APOLLO 12

CSM 108 AND SUBSEQUENT

APOLLO OPERATIONS HANDBOOK

COMMAND AND SERVICE MODULES

Volume 2
Operational Procedures

Contract NAS 9-150
EXHIBIT I, PARAGRAPH 10.3

This publication supersedes SM2A-03-Block II-(2)
dated 16 June 1969

Published under authority of
THE NATIONAL AERONAUTICS AND SPACE ADMINISTRATION
SPACECRAFT SYSTEMS BRANCH / FLIGHT CREW SUPPORT DIVISION

SD 69-57

13 AUGUST 1969

LIST OF EFFECTIVE PAGES

INSERT LATEST CHANGED PAGES. DESTROY SUPERSEDED PAGES.

NOTE: Pages which are usable only on a single Block II vehicle or specific series of vehicles are identified by including the spacecraft number or spacecraft number and letter S parenthetically as a part of the page number. The "S" indicates the page is applicable to the spacecraft number shown and to subsequent vehicles as well. Common pages (pages with no spacecraft identification in the page number) are used for all Block II spacecraft.

TOTAL NUMBER OF PAGES IN THIS PUBLICATION IS 945, CONSISTING OF THE FOLLOWING:

Page	Issue	Spacecraft 108	Spacecraft 109S
Title	Basic	X	X
A thru C	Basic	X	X
i thru xiv	Basic	X	X
4-1 thru 4-4	Basic	X	X
4-5(108)	Basic	X	
4-5(109S)	Basic		X
4-6 thru 4-66	Basic	X	X
4-67(108)	Basic	X	
4-67(109S)	Basic		X
4-68 thru 4-261	Basic	X	X
4-262(108)	Basic	X	
4-262(109S)	Basic		X
4-263 thru 4-267	Basic	X	X
4-268(108)	Basic	X	
4-268(109S)	Basic		X
4-269(108)	Basic	X	
4-269(109S)	Basic		X
4-270 thru 4-272	Basic	X	X
4-273(108)	Basic	X	
4-273(109S)	Basic		X
4-274	Basic	X	X
4-275(108)	Basic	X	
4-275(109S)	Basic		X
4-276(108)	Basic	X	
4-276(109S)	Basic		X
4-277 thru 4-625	Basic	X	X
4-626(108)	Basic	X	
4-626(109S)	Basic		X
4-627 thru 4-660	Basic	X	X

*The asterisk indicates pages changed, added, or deleted by the current change.

Manuals will be distributed as directed by the NASA Apollo Project Office. All requests for manuals should be directed to the NASA Apollo Spacecraft Project Office at Houston, Texas.

LIST OF EFFECTIVE PAGES

INSERT LATEST CHANGED PAGES. DESTROY SUPERSEDED PAGES.

NOTE: Pages which are usable only on a single Block II vehicle or specific series of vehicles are identified by including the spacecraft number or spacecraft number and letter S parenthetically as a part of the page number. The "S" indicates the page is applicable to the spacecraft number shown and to subsequent vehicles as well. Common pages (pages with no spacecraft identification in the page number) are used for all Block II spacecraft.

Page	Issue	Spacecraft 108	Spacecraft 109S
4-661(108)	Basic	X	
4-661(109S)	Basic		X
4-662 thru 4-692	Basic	X	X
5-1 thru 5-136	Basic	X	X
5-137(108)	Basic	X	
5-137(109S)	Basic		X
5-138 thru 5-145	Basic	X	X
5-146(108)	Basic	X	
5-146(109S)	Basic		X
5-147(108)	Basic	X	
5-147(109S)	Basic		X
5-148 thru 5-156	Basic	X	X
B-1 thru B-49	Basic	X	X
B-50(108)	Basic	X	
B-50(109S)	Basic		X
B-51 thru B-58	Basic	X	X
C-1 thru C-6	Basic	X	X

*The asterisk indicates pages changed, added, or deleted by the current change.

Manuals will be distributed as directed by the NASA Apollo Project Office. All requests for manuals should be directed to the NASA Apollo Spacecraft Project Office at Houston, Texas.

LIST OF CREW PROCEDURE CHANGES

The following Crew Procedure Changes have been incorporated, as applicable, in this issue of the Apollo Operations Handbook. Unless otherwise indicated numbers listed refer to NASA controlled Apollo "CSM" changes.

Section 4.1: 1459A, 1462A, 1468A, 2839A, 2881, 2884, 2902.

Section 4.2: 1456A, 1471A, 2880, 2886.

Section 4.3: 1462A, 2841A, 2885, 2887, 2888, 2893, 2894, 2896A.

Section 4.4: 1453, 2887.

Section 4.5: 2778, 2860, 2879, 2899, 2900.

Section 4.6: 2878.

Section 4.7: 1450, 1459A, 1460, 1461, 1462A, 2839A, 2842, 2848, 2857, 2906.

Section 4.8: 2877, 2882.

Section 4.9: None.

Section 4.10: 1466B.

Section 4.11: None.

Section 4.12: 2876.

Section 4.13: 2906.

Section 4.14: 2841A, 2861.

Section 4.15: 2841A, 2861.

Section 4.16: 2839A, 2906.

Section 4.17: 1455, 2841A, 2856, 2877.

Section 4.18: 1455, 2841A, 2856.

Section 4.19: 2868, 2890, 2891.

Section 4.20: None.

Section 4.21: None.

Section 5.1: 2868, 2880, 2890, 2891.

Section 5.2: 1470, 2840, 2845, 2859.

Section 5.3: 2868, 2895

Appendix B: 1459A, 2839A, 2869A, 2880, 2881, 2884, 2902.

TABLE OF CONTENTS

Section	Title	Page
4	NORMAL/BACKUP PROCEDURES	4-1
4.1	Backup Crew Prelaunch Checks	4-3
4.1.1	Ingress and Status Checks	4-3
4.1.2	EMS Prelaunch Tests	4-14
4.1.3	ORDEAL Prelaunch Switch Position Check	4-18
4.1.4	Panel Configuration Checks	4-19
4.1.4.1	LH Couch	4-19
4.1.4.2	Center Couch	4-22
4.1.4.3	RH Couch	4-24
4.1.4.4	Equipment Bays	4-26
4.1.5	Communications Check	4-28
4.1.6	Pre-Egress Procedures	4-30
4.1.7	Prime Crew Pre-Ingress Procedure	4-32
4.2	Prime Crew Prelaunch Checks	4-35
4.2.1	Ingress and Status Checks	4-35
4.2.2	G&C Verification	4-43
4.2.3	Launch Preparation	4-49
4.3	Boost and Insertion	4-53
4.3.1	Boost	4-53
4.3.2	Postorbital Insertion Check	4-63
4.3.2.1	Status Checklist	4-63
4.3.2.2	SCS Attitude Reference Comparison Check	4-65
4.3.2.3	SCT/SXT Dust Cover Jett Procedure	4-65
4.3.2.4	ECS Post Insertion Configuration	4-66
4.3.2.5	Systems Verification and Monitoring	4-67
4.3.2.6	Cabin Atmosphere Verification	4-68
4.4	Injections	4-71
4.4.1	Translunar Injection (TLI)	4-71
4.4.1.1	Thrusting Preparation	4-71
4.4.1.2	TLI Thrusting	4-77
4.4.1.3	Post-TLI Activities	4-78
4.4.2	Lunar Orbit Injection (LOI)	4-79
4.4.3	Transearth Injection (TEI)	4-79
4.5	LM Interface	4-81
4.5.1	Maneuvers	4-81
4.5.1.1	CSM/SLA Separation and Transposition	4-81
4.5.1.2	Formation Flight With LM/SIVB (General)	4-87
4.5.1.3	Docking With LM/SIVB	4-87

Section		Title	Page
	4.5.1.4	LM Ejection From SLA	4-92
	4.5.1.5	LM Undocking From CSM	4-94
	4.5.1.6	LM Active Docking With CSM	4-97
	4.5.1.7	CSM Active Docking With LM	4-100
	4.5.1.8	LM Jettison and Separation	4-103
	4.5.2	IVT	4-106
	4.5.2.1	Preparation for LM Ejection	4-106
	4.5.2.2	IVT to LM	4-108
	4.5.2.3	IVT to CSM	4-111
	4.5.2.4	Preparation for Manned LM Separation	4-116
	4.5.3	Extravehicular Activity	4-121
	4.5.4	Tunnel Mechanical Systems	4-125
	4.5.4.1	Docking Probe Removal (CM side)	4-125
	4.5.4.2	Docking Probe Removal (LM side)	4-129
	4.5.4.3	Docking Probe Installation (CM side)	4-130
	4.5.4.4	Docking Drogue Removal (CM side)	4-134
	4.5.4.5	Docking Drogue Removal (LM side)	4-135
	4.5.4.6	Docking Drogue Installation (CM side)	4-136
	4.5.4.7	Probe Preload Operation	4-137
	4.5.4.8	Tunnel Latch Operations	4-138
	4.6	Rendezvous	4-141
	4.6.1	TPI Search (P17)	4-141
	4.6.2	CSM Rendezvous Navigation (P20)	4-144
	4.6.3	Co-elliptic Sequence Initiation (P32)	4-151
	4.6.4	Constant Delta Altitude (P33)	4-157
	4.6.5	Transfer Phase Initiation (P34)	4-161
	4.6.6	Transfer Phase Midcourse (P35)	4-166
	4.6.7	Stable Orbit Rendezvous (P38)	4-169
	4.6.8	Stable Orbit Midcourse (P39)	4-174
	4.6.9	LM Co-elliptic Sequence Initiation Targeting (P72)	4-177
	4.6.10	LM Constant Delta Altitude Targeting (P73)	4-183
	4.6.11	LM TPI Targeting (P74)	4-186
	4.6.12	LM Transfer Phase Midcourse Targeting (P75)	4-191
	4.6.13	LM TPI Search (P77)	4-194
	4.6.14	LM Stable Orbit Rendezvous Targeting (P78)	4-198
	4.6.15	LM Stable Orbit Midcourse Targeting (P79)	4-203
	4.6.16	Rendezvous Parameter Display #1 (R31)	4-205
	4.6.17	Target Delta V (P76)	4-206
	4.6.18	Rendezvous Parameter Display #2 (R34)	4-208
	4.6.19	Rendezvous Out of Plane Display (R36)	4-209
	4.6.20	Rendezvous Final Attitude (R63)	4-211

Section	Title	Page
4.7	Systems Management	4-215
4.7.1	Systems Test Indicator Readouts	4-215
4.7.2	Propulsion Systems	4-219
4.7.2.1	SPS Monitoring Check	4-219
4.7.2.2	SM RCS Monitoring Check	4-220
4.7.2.3	CM RCS Monitoring Check	4-221
4.7.3	Electrical Power System	4-223
4.7.3.1	Cryogenic Pressure-Quantity Check	4-226
4.7.3.2	FC Power Plant Check	4-226
4.7.3.3	D-C Voltage-Amperage Check	4-227
4.7.3.4	A-C Voltage Check	4-228
4.7.3.5	Battery Charging	4-228
4.7.3.6	Fuel Cell Power Plant Purging	4-229
4.7.3.7	H2 or O2 Quantity Balance Correction	4-230
4.7.3.8	Fuel Cell Load Disconnect	4-230
4.7.3.9	Inverter Changeover	4-233
4.7.3.10	Cryo O2 and H2 Manual Fan Operation	4-236
4.7.4	Environmental Control System	4-237
4.7.4.1	ECS Monitoring Check	4-239
4.7.4.2	ECS Redundant Component Check	4-241
4.7.4.3	CO2 Absorber Filter Replacement	4-246
4.7.4.4	Debris Screen Check	4-247
4.7.4.5	Potable Water Chlorination	4-248
4.7.4.6	PGA Mode Changes	4-250
4.7.4.7	Waste Management Procedures	4-255
4.7.4.8	CM Repressurization	4-262
4.7.4.9	Pressure Suit Circuit and PGA Check at 5.0 psia	4-263
4.7.4.10	CM O2 Supply Refill	4-267
4.7.4.11	CM Pressure Dump	4-268
4.7.4.12	Suit Circuit Purge of H2	4-270
4.7.4.13	Cabin Cold-Soak Operation	4-270
4.7.4.14	CM/LM Pressure Equalization	4-272
4.7.4.15	Operation of Emergency O2 Masks	4-277
4.7.4.16	Waste Water Tank Drain	4-277
4.7.4.17	H2/H2O Separator Servicing	4-278
4.7.5	Caution and Warning System	4-280
4.7.5.1	C&WS Operational Check	4-280
4.7.5.2	Dark Adaptation Adjustment	4-281
4.7.5.3	Acknowledge/Reset Master Alarm Indication	4-281
4.7.5.4	Master Alarm Tone Headset Control	4-282
4.7.5.5	Stowable Caution and Warning Tone Booster	4-283
4.7.6	Telecommunications	4-284
4.7.6.1	Basic Switch Configuration	4-285
4.7.6.2	High Gain Antenna Operation	4-287

Section	Title	Page
4.7.6.3	S-Band Xponder Modes	4-289
4.7.6.4	FM Xmtr Modes	4-290
4.7.6.5	VHF/AM Modes	4-293
4.7.6.6	VHF AM Ranging Mode	4-294
4.7.6.7	DSE Record Modes	4-295
4.7.6.8	Relay Mode (LM Voice to MSFN)	4-296
4.7.6.9	Rendezvous Transponder Activation and Self Test	4-297
4.7.6.10	Backup Modes	4-298
4.7.6.11	Pad Communications	4-298
4.7.7	Mechanical Systems	4-300
4.7.7.1	Opening Side Hatch for EVT	4-300
4.7.7.2	Closing Side Hatch for EVT	4-305
4.7.7.3	Side Hatch Counterbalance Operation	4-309
4.7.7.4	Opening Fwd Hatch	4-310
4.7.7.5	Closing Fwd Hatch	4-312
4.7.8	Floodlight Operating Modes	4-313
4.7.8.1	Primary Floodlight Mode	4-313
4.7.8.2	Secondary Floodlight Mode	4-313
4.7.9	Limited Use Circuit Breakers	4-314
4.8	G&C Reference Data	4-317
4.8.1	SCS Rate, Deadband and Jet Select Logic	4-317
4.8.2	RCS Engines, Vent and Radiator Locations	4-323
4.8.3	SCS Logic Bus Power Distribution	4-323
4.8.3.1	SCS Logic Bus 1 and 4 Power Distribution	4-323
4.8.3.2	SCS Logic Bus 2 and 3 Power Distribution	4-323
4.8.4	Limited Use Controls	4-326
4.8.5	G&N Operations	4-326
4.8.5.1	CSS/ISS Interface	4-326
4.8.5.2	DSKY Operations	4-326
4.8.5.3	Optics Mechanization	4-333
4.8.6	Verb List	4-334
4.8.7	Noun List	4-338
4.8.8	Star List	4-349
4.8.9	Checklist Reference Codes (V50 N25)	4-350
4.8.10	Option Codes (V04 N06 or V04 N12)	4-351
4.8.11	Alarm Codes (V05 N09)	4-352
4.8.12	CMC Program - Routine Index	4-361
4.8.12.1	Programs	4-361
4.8.12.2	Routines	4-364
4.8.13	CMC Program - Flag Listing	4-366
4.8.13.1	Flag Word - Memory Location Correlation	4-366
4.8.13.2	Flag - Program Listing	4-367

Section	Title	Page
4.9	G&C Reference Modes	4-371
4.9.1	Attitude Control	4-371
4.9.1.1	SCS Channel Selection	4-371
4.9.1.2	SCS Minimum Impulse	4-372
4.9.1.3	SCS Acceleration Command	4-373
4.9.1.4	SCS Attitude Hold/Rate Command	4-374
4.9.1.5	CMC Acceleration CMD/Minimum Impulse	4-375
4.9.1.6	CMC Attitude Control - Auto/Hold	4-375
4.9.1.7	SIVB Attitude Control	4-376
4.9.2	Dynamic Display Monitor	4-377
4.9.2.1	Rate Display	4-377
4.9.2.2	Attitude Error Display - BMAG Source	4-378
4.9.2.3	Attitude Error Display - CMC Source	4-379
4.9.2.4	Attitude Error Display - Attitude Set Source	4-379
4.9.2.5	Total Attitude	4-380
4.9.2.6	ORDEAL - Local Horizontal Attitude	4-383
4.9.3	GDC Align	4-383
4.9.4	SPS Thrusting	4-384
4.9.4.1	TVC Initialization	4-384
4.9.4.2	SPS Gimbal Control	4-384
4.9.4.3	Thrust On-Off Control	4-388
4.9.5	Optics Control	4-389
4.9.5.1	Auto Optics Positioning	4-389
4.9.5.2	Manual Optics Control	4-390
4.9.5.3	Manual Optics Drive	4-391
4.9.6	Entry Monitor System (EMS)	4-391
4.9.6.1	ΔV Test and Null Bias Check	4-391
4.9.6.2	ΔV Setup	4-393
4.9.6.3	RSI Test and Alignment	4-393
4.9.6.4	Entry Test	4-394
4.9.6.5	Entry Setup	4-396
4.10	G&C General Procedures	4-397
4.10.1	G&N General	4-398
4.10.1.1	CMC Idling Program (P00)	4-398
4.10.1.2	Startup Procedure	4-398
4.10.1.3	CMC/IMU Power Down Procedures	4-399
4.10.1.4	Optics Power Control	4-400
4.10.1.5	CSM - CMC Update (P27)	4-401
4.10.1.6	CSM - DAP Data Load Procedure (R03)	4-405
4.10.1.7	RCS DAP Attitude Deadband Increase Procedure	4-406
4.10.1.8	DAP Activation	4-407
4.10.1.9	CSM Crew Defined Maneuver (R62)	4-408

Section		Title	Page
	4.10.1.10	CMC Self-Check Procedure	4-410
	4.10.1.11	DSKY Condition Light Test	4-411
	4.10.1.12	Measurement and Loading of PIPA Bias	4-412
	4.10.1.13	Torque Gyros Extended Verb (42)	4-413
	4.10.1.14	Load FDAI Error Needles Extended Verb (43)	4-414
	4.10.1.15	Initialize Erasable Dump Via Downlink Extended Verb (74)	4-415
	4.10.1.16	CMC/LGC Clock Sync Routine (R33)	4-415
	4.10.1.17	S Band Antenna Routine (R05)	4-416
	4.10.1.18	ΔR and ΔV Threshold Change Procedure	4-417
	4.10.1.19	A or B Erasable Value Change Procedure	4-418
	4.10.1.20	Start W-Matrix RSS Error Display Extended Verb (67)	4-419
	4.10.1.21	Saturn Rate Change	4-421
	4.10.1.22	G&N Thrusting Monitor Program (P47)	4-421
	4.10.1.23	P22 Raw Data Readout	4-423
	4.10.1.24	Flagword Monitor and Change Procedure	4-424
	4.10.1.25	RCS DAP Orbital Rate Procedure	4-425
	4.10.1.26	G&N Passive Thermal Control Procedure	4-431
	4.10.1.27	(V79) Orbrate/PTC (BBQ Mode - R64)	4-433
	4.10.2	SCS General	4-436
	4.10.2.1	SCS Power Down	4-436
	4.10.2.2	SCS Power Up	4-437
	4.10.2.3	Drift Rate Adjust	4-438
	4.10.2.4	Minimum Power SCS Attitude Hold (Three or Two Axes)	4-440
	4.10.2.5	SCS Attitude Maneuver	4-441
	4.10.2.6	GDC Alignment to IMU Gimbal Angles	4-442
	4.10.2.7	Attitude Reference System Comparison	4-443
	4.10.2.8	ORDEAL Initialization	4-445
	4.10.2.9	SCS Passive Thermal Control Using Wobble Mode	4-447
	4.10.2.10	SCS Passive Thermal Control Using BAR-B-Q Minimum Power Mode	4-449
	4.11	Alignments	4-451
	4.11.1	IMU Orientation Determination (P51)	4-451
	4.11.2	IMU Realign (P52)	4-454
	4.11.3	Alternate LOS IMU Orientation Determination (P53)	4-463
	4.11.4	Alternate LOS IMU Realign (P54)	4-466
	4.11.5	Alternate SC Inertial Attitude Determination and GDC Alignment	4-474
	4.11.6	Backup GDC and/or IMU Alignment	4-476
	4.11.7	Inflight COAS Calibration	4-479
	4.11.8	Inplane GDC Alignment	4-482

Section		Title	Page
	4.11.9	Zero ICDU Extended Verb (V40 N20)	4-484
	4.11.10	Coarse Align ICDU Extended Verb (V41 N20)	4-485
	4.11.11	Coarse Align OCDU Extended Verb (V41 N91)	4-486
	4.11.12	Backup GDC Alignment With COAS	4-487
	4.12	Coasting	4-491
	4.12.1	Ground Track Determination (P21)	4-491
	4.12.2	Orbital Navigation (P22)	4-493
	4.12.3	Cislunar Midcourse Navigation (P23)	4-503
	4.12.4	Orbit Parameter Display (R30)	4-513
	4.13	Orbit Change Vehicle Preparation	4-515
	4.13.1	Orbit Change General System Management	4-515
	4.13.2	EMS Orbit Change Test	4-516
	4.14	G&N Orbit Change	4-517
	4.14.1	G&N Orbit Change External Delta V Prethrusting (P30)	4-517
	4.14.2	Lambert Aim Point Guidance Program (P31)	4-520
	4.14.3	G&N/SPS Orbit Change Thrusting (P40)	4-523
	4.14.4	G&N SM RCS Orbit Change Thrusting (P41)	4-544
	4.15	SCS Orbit Change	4-551
	4.15.1	SCS/SPS Orbit Change Thrusting	4-551
	4.15.2	SCS/SM RCS Orbit Change Thrusting	4-564
	4.16	Deorbit and Entry or Lunar Return Entry Vehicle Preparation	4-569
	4.16.1	Deorbit and Entry Vehicle Preparation	4-569
	4.16.1.1	Deorbit General System Management	4-569
	4.16.1.2	EMS Deorbit and Entry Test	4-571
	4.16.1.3	Deorbit System Preparation	4-573
	4.16.2	Lunar Return Vehicle Preparation	4-576
	4.16.2.1	Lunar Return Entry Vehicle Preparation	4-576
	4.16.2.2	EMS Entry Test	4-578
	4.16.2.3	Entry Systems Preparation	4-580
	4.17	G&N Deorbit and Entry	4-585
	4.17.1	G&N Return to Earth Program (P37)	4-585
	4.17.2	G&N/SPS Deorbit Thrusting (P40)	4-592
	4.17.3	G&N/SM-RCS Deorbit Thrusting (P41)	4-610
	4.17.4	G&N/Hybrid Deorbit Thrusting	4-617
	4.17.5	G&N CM/SM Separation	4-626
	4.17.6	Entry Preparation (P61)	4-630
	4.17.7	G&N Entry	4-634

Section		Title	Page
	4.18	SCS Deorbit and Entry	4-643
	4.18.1	SCS/SPS Deorbit Thrusting	4-643
	4.18.2	SCS/SM RCS Deorbit Thrusting	4-653
	4.18.3	SCS Hybrid Deorbit Thrusting	4-656
	4.18.4	SCS CM/SM Separation	4-661
	4.18.5	SCS Entry	4-665
	4.19	Earth Landing Phase (<50K')	4-669
	4.20	Postlanding	4-677
	4.20.1	Postlanding Stabilization	4-677
	4.20.2	Post Stabilization and Ventilation	4-680
	4.20.3	Postlanding Communications	4-683
	4.20.3.1	Normal Postlanding Communications	4-683
	4.20.3.2	Survival Transceiver Communications	4-684
	4.20.3.3	Communications Low Power Procedures	4-685
	4.20.4	Unaided Egress Procedures	4-685
	4.20.4.1	Egress Preparation	4-685
	4.20.4.2	Stable I Water Egress	4-686
	4.20.4.3	Stable II Water Egress	4-688
	4.20.4.4	Rough Sea Side Hatch Operations	4-689
	4.21	Mission Test Requirements	4-691
5		CONTINGENCY PROCEDURES	5-1
	5.1	Abort Procedures	5-2
	5.1.1	LES Abort Modes	5-2
	5.1.1.1	Mode 1A LES Abort (00:00 - 00:42)	5-5
	5.1.1.2	Mode 1B LES Abort (00:42 - 01:56)	5-13
	5.1.1.3	Mode 1C LES Abort (01:56 - 03:17)	5-23
	5.1.2	SPS Abort Modes	5-35
	5.1.2.1	Mode II SPS Abort (03:17 to 10:08)	5-36
	5.1.2.2	Mode III SPS Abort (10:08 to Insertion)	5-41
	5.1.2.3	Mode IV SPS Abort (09:00 to Insertion)	5-46
	5.2	Malfunction Procedures	5-51
	5.2.1	Guidance and Control	5-53
	5.2.1.1	Guidance and Control	5-53
	5.2.1.2	Stabilization Control System	5-53
	5.2.1.3	Guidance and Navigation	5-53
	5.2.2	Service Propulsion System	5-54
	5.2.3	Reaction Control System	5-54
	5.2.3.1	SM RCS	5-54
	5.2.3.2	CM RCS	5-54

Section	Title	Page
5.2.4	Electrical Power System	5-54
5.2.4.1	Cryogenics	5-54
5.2.4.2	Fuel Cells	5-55
5.2.4.3	Power Distribution	5-55
5.2.4.4	Bus Failure Effects - Non Transferable Loads	5-55
5.2.5	Telecommunications System	5-56
5.2.6	Environmental Control System	5-56
5.2.7	Entry Monitor System	5-57
5.2.8	Miscellaneous Malfunctions	5-58
5.2.8.1	Docking	5-58
5.2.8.2	Hatch	5-58
5.3	Emergency Procedures	5-135
5.3.1	Pad Emergency Procedures	5-135
5.3.1.1	Rapid Hatch Opening	5-135
5.3.2	Flight Emergency Procedures	5-136
5.3.2.1	Fire/Smoke in CM During Boost	5-136
5.3.2.2	Fire/Smoke in CM - Orbital Operations	5-137
5.3.2.3	Fire/Smoke in CM During Entry	5-140
5.3.2.4	Contamination in CM	5-142
5.3.2.5	Contamination in Suit (Suited Crewman)	5-143
5.3.2.6	LET Fails to Jettison	5-143
5.3.2.7	Forward Hatch Cannot be Re-installed	5-144
5.3.2.8	Emergency Safe of Apex Cover Jett	5-152
5.3.2.9	One Y Strut Will Not Fully Extend and Lock	5-154
5.3.2.10	CM RCS Fails to Pressurize or Feed Propellant	5-154
5.3.3	Postlanding Emergency Procedures	5-155
5.3.3.1	Fire/Smoke in CM During Postlanding	5-155
	APPENDIX B	B-1
	APPENDIX C	C-1

FOREWORD

This handbook contains the flight crew operational procedures for all active Block II spacecraft.

Volume II constitutes the crew Normal/Backup, Abort, Malfunction and Emergency procedures. Normal procedures are defined as those used if all systems are operating normally. Backup procedures are those used to accomplish the objective of the normal procedures when system failure or some other anomaly prevents use of the normal procedures. Malfunction and Emergency procedures encompass the recognition, diagnosis, and corrective action for system malfunctions or failure.

Spacecraft Page Identification

Pages of this handbook which are usable only on a single Block II vehicle are identified by including the spacecraft number parenthetically as a part of the page number.

Pages applicable to a specific series of vehicles are identified by including the spacecraft number and the letter S parenthetically as a part of the page number. The "S" indicates the page is applicable to the spacecraft number shown and to subsequent vehicles as well.

Common pages (pages with no spacecraft identification in the page number) are used for all Block II spacecraft.

Some pages have been repeated in order to satisfy page requirements for all spacecraft covered by the current handbook.

Utilization and Updates

This handbook concept requires the use of specific pages to provide specific vehicle coverage. It is suggested that the list of effective pages in the front of the handbook be used when changes to the book are made or to verify a specific vehicle configuration of the manual.

To prepare the manual for use on a particular vehicle, select the pages listed in the matrix column for that vehicle. The "X" in the column identifies each page, in sequence, that is required for the vehicle selected.

When all pages identified as applicable only to other vehicles have been removed in preparation of a manual for a specific vehicle, redundant pages will have been eliminated. Do not discard the removed pages. These pages are current for other vehicles until superseded by subsequent change.

Volume 1 - Spacecraft Description, SM2A-03-BLOCK II-(1), is bound separately and contains the description portion of the spacecraft systems and equipment.

Comments or suggested change to this handbook should be addressed to the Spacecraft Systems Branch, FCSD, MSC, Office Code CF22, Telephone HU3-5558.

STA/T STEP	PROCEDURE	PANEL	REMARKS

SECTION 4

NORMAL/BACKUP PROCEDURES

INTRODUCTION

Procedural steps in this section are presented in tabular form and in numerical sequence. Steps are further organized by subgroups into related functions. Column headings of the Normal/Backup procedures consist of STATION/TIME (STA/T), STEP, PROCEDURE, PANEL and REMARKS. An explanation of each of these column headings is provided as follows:

STA/T — The station is equivalent to the crewmember assigned to the spacecraft location where a procedure or step is performed. Station CDR (commander), CMP (command module pilot) and LMP (lunar module pilot) correspond to the left, middle, and right crew couch positions, respectively. The CMP also pertains to the lower equipment bays inaccessible to the other crewmembers. The time column (T) will contain mission time, event time or altitudes.

STEP — The step is the numerical indication of the elements to be followed and their sequence in performing a complete procedure.

PROCEDURE — The procedure is a group of steps or overall task involved in performing a complete function or operation. If a perimeter of Xs are around a procedure, it constitutes a backup procedure relative to the preceding step.

PANEL — The panel location is the location of a particular control or display by panel number. The main display console (MDC) panels are numbered 1 through 12; the lower equipment bay (LEB), 100 through 164; the right-hand equipment bay (RHEB), 225 through 278; the left-hand equipment bay (LHEB), 325 through 382; the left-hand forward equipment bay (LHFEB), 300 through 306; and the upper equipment bay (UEB), 600 through 602 and 13 - ORDEAL BOX. (See figure B-1 for panel locations.)

STA/T STEP	PROCEDURE	PANEL	REMARKS

REMARKS

This column provides the rationale supporting the adjacent step and the operational procedure. Rationale will grow in scope as the operational procedures are refined through continued application by the Flight Crew as applied during mission simulation using Apollo evaluators and simulators. As the Flight Crew becomes more familiar with the spacecraft and increases its proficiency, the Abbreviated Checklist is expected to diminish in overall coverage. Volume 2, however, with its supporting rationale will become a repository of comprehensive data providing a reference baseline to the Abbreviated Checklist and for use by support personnel more recently assigned to the program.

Spacecraft controls and displays and their relative positions and indications are called out by their respective placard titles. Exceptions have been taken, where titles are lengthy by adoption of short-form nomenclature.

Whenever a designated callout refers to a control or display, it is identified by one of the following:

Light	lt
Switch	sw
Rotary type switch	sel
Circuit breaker	cb
Talkback indicator	tb
Valve	vlv
Indicator	ind
Push button	pb
Potentiometer or rheostat	cont
Thumbwheel	tw

For Symbols and Definitions, refer to Appendix A in the Apollo Operations Handbook, Block II Spacecraft, Volume 1 - Spacecraft Description (SM2A-03-BLOCK II-(1)).

STA/T STEP	PROCEDURE	PANEL	REMARKS
	4.1 BACKUP CREW PRELAUNCH CHECKS		
	Prelaunch procedures consist of operational and configuration checks performed by backup flight crew prior to ingress of prime crew. It is assumed that a complete prelaunch checkout, including loose gear stowage, has been performed by ground support personnel, prior to backup crew ingress into command module, and that all systems are in an active configuration as required at time of ingress. Spacecraft suit circuit shall have been purged and oxygen content verified to be 95% minimum. Backup crew will utilize facility headsets until service structure is clear of vehicle, as there will be no VHF AM or S BAND transmission until that time. Refer to Appendix B for cabin switch/control position prior to backup crew cabin ingress.		
	4.1.1 INGRESS AND STATUS CHECKS		
	1 Verify/set controls		
CDR	SECS PYRO ARM (2) - SAFE	8	Lever lock with key locked guard.
CMP	CSM/LM FNL SEP (both) - off (down)	2	Guarded.
	CM/SM SEP (both) - off (down)		Guarded.
	SIVB/LM SEP - off (down)		Guarded.
	PL VENT VLV - push (lock)		
CDR,LMP	FLOOD LTS - OFF (CCW)	5,8	
	FLOOD LTS DIM - 1		
	FLOOD LTS FIXED - OFF		
CDR	NUMERICS LTS - as desired	8	
CDR,LMP	FLOOD LTS - OFF, full dim, or full BRT	5,8	Center range of floodlight rheostat may cause light flicker.
	INTGL LTS - as desired		
	2 C&WS Status Check		
CMP	C/W NORM - NORM	2	
	C/W CSM - CSM		
	C/W PWR - 2 (pause at off (ctr) at least 1 sec)		Excessive switching speed will cause temporary loss of both power supplies, and alarm reset capability.
ALL	MASTER ALARM pb/lt (3) - on, push	1,3,122	

STA/T	STEP	PROCEDURE	PANEL	REMARKS
CMP		C/W PWR - 1 (pause at off (ctr) at least 1 sec)	2	Excessive switching speed will cause temporary loss of both power supplies, and alarm reset capability.
ALL		MASTER ALARM pb/lt (3) - on, push	1,3,122	
CMP		C/W LAMP TEST - 1 (hold)	2	1 position is momentary.
CDR		MASTER ALARM pb/lt - on	1	
CMP		lh C/W lt (15) - on	2	
		C/W NORM - BOOST		
CDR		MASTER ALARM pb/lt - out	1	
CMP		C/W NORM - NORM	2	
CDR		MASTER ALARM pb/lt - on	1	
CMP		C/W LAMP TEST - 2 (hold)	2	2 position is momentary.
CDR		MASTER ALARM pb/lt - out	1	
CMP		lh C/W lt (15) - out	2	
LMP		MASTER ALARM pb/lt - on	3	
CMP		rh C/W lt (20) - on	2	
		C/W LAMP TEST - rel		
LMP		MASTER ALARM pb/lt - out	3	
CMP		rh C/W lt (19) - out	2	SUIT COMPR C/W light will remain on until compressor is activated.
		C/W NORM - BOOST		Inhibits master alarm light on MDC-1.
	3	ECS Valve Status Check		
LMP		EMER 02 - CLOSE	600	
		REPRESS 02 RELF - open (CW)	602	
CDR		REPRESS 02 - CLOSE	601	Guarded.
		SRG TK RELF vlv - open (CW)	375	
		PLVC sw - NORM	376	
		DEMAND REG sel - BOTH	380	
		SUIT TEST vlv - OFF		
		SUIT RETURN vlv - close (push)		
		PRIM GLY TO RAD - NORM	325	

STA/T	STEP	PROCEDURE	PANEL	REMARKS
CDR		CAB PRESS RELF vlv (2) - BOOST/ENTR (safety latch off)	325	For ground checks, CAB PRESS is the equivalent of flight term CAB PRESS RELF.
		GLY RSVR IN vlv - OPEN	326	
		GLY RSVR OUT vlv - OPEN		
		GLY RSVR BYP vlv - CLOSE		
		SM 02 SUP vlv - ON		
		SRG TK 02 vlv - ON		
		Verify CM 02 supply		Includes surge tank and repress/emergency tanks.
		REPRESS pkg vlv - FILL		
CMP		02 PRESS IND sw - SURGE TK	2	
		CRYO 02 PRESS 1 ind - 865-935 psia		Nominal CM 02 supply pressure.
		02 PRESS IND sw - TK 1		
CDR		REPRESS pkg vlv - ON	326	
LMP		REPRESS 02 ind - >865 psia	602	
CDR		DIRECT 02 vlv - partially OPEN (CCW)	7	Valve previously adjusted by ground support personnel for 0.2 lb/hr flow (off the peg) to assure suit circuit 02 purity of 95%.
CMP		PRESS EQUAL vlv - CLOSE	Fwd hatch	
		TUNL VENT vlv - LM/CM ΔP	12	
		LM/CM ΔP ind - 0.0 psid		
		SUIT FLOW vlv (3) - FULL FLOW	300,301,302	
		Cabin ht exch louvers - ctr	303	
		PRIM CAB TEMP vlv - COLD (CW)		
		SEC CAB TEMP vlv - MAX COOL (CW)		
		DRINK H20 SUP vlv - OFF	304	Drinking water unavailable during launch hold periods.
		FOOD PREP H20 vlv (2) - rel	305	
		GLY TO RAD SEC vlv - NORM	377	
		PRIM ACCUM FILL vlv - OFF	379	
		PRIM GLY ACCUM vlv - open (CCW)	378	
		Open coolant control attenuation panel		Covers panel 382. Y-Y strut to be retracted to provide panel access.
		SUIT HT EXCH PRIM GLY - FLOW (CCW)	382	

STA/T	STEP	PROCEDURE	PANEL	REMARKS
CDR		CAB PRESS RELF vlv (2) - BOOST/ENTR (safety latch off)	325	For ground checks, CAB PRESS is the equivalent of flight term CAB PRESS RELF.
		GLY RSVR IN vlv - OPEN	326	
		GLY RSVR OUT vlv - OPEN		
		GLY RSVR BYP vlv - CLOSE		
		SM 02 SUP vlv - ON		
		SRG TK 02 vlv - ON		
		Verify CM 02 supply		Includes surge tank and repress/emergency tanks.
		REPRESS PKG vlv - FILL		
CMP		02 PRESS IND sw - SURGE TK	2	
		CRYO 02 PRESS 1 ind - 865-935 psia		Nominal CM 02 supply pressure.
		02 PRESS IND sw - TK 1		
CDR		REPRESS PKG vlv - ON	326	
LMP		REPRESS 02 ind - >865 psia	602	
CDR		DIRECT 02 vlv - partially OPEN (CCW)	7	Valve previously adjusted by ground support personnel for 0.2 lb/hr flow (off the peg) to assure suit circuit 02 purity of 95%.
CMP		PRESS EQUAL vlv - CLOSE	Fwd hatch	
		TUNL VENT vlv - LM/CM ΔP	12	
		LM/CM ΔP ind - 0.0 psid		
		SUIT FLOW vlv (3) - FULL FLOW	300,301,302	
		Cabin ht exch louvers - ctr	303	
		PRIM CAB TEMP vlv - COLD (CW)		
		SEC CAB TEMP vlv - MAX COOL (CW)		
		DRINK H2O SUP vlv - OFF	304	Drinking water unavailable during launch hold periods.
		FOOD PREP H2O vlv (2) - rel	305	
		GLY TO RAD SEC vlv - NORM	377	
		PRIM ACCUM FILL vlv - OFF	379	
		PRIM GLY ACCUM vlv - open (CCW)	378	
		Open coolant control attenuation panel		Covers panel 382. Y-Y strut to be retracted to provide panel access.
		SUIT HT EXCH PRIM GLY - FLOW (CCW)	382	

STA/T	STEP	PROCEDURE	PANEL	REMARKS
		WARNING		
		SUIT FLOW RELF valve must remain OFF throughout mission or swelling of CO2-odor absorber filters may result.	382	
CMP		SUIT FLOW RELF vlv - OFF		
		GLY EVAP IN TEMP vlv - MIN (CCW)		
		SUIT HT EXCH SEC GLY - FLOW		
		EVAP H2O CONT (2) - AUTO		
		H2O ACCUM (both) - RMTE		
		Close coolant control attenuation panel		
		Open CO2 canister attenuation panel		Covers CO2 canisters.
		CO2 CSTR DIVERT vlv - ctr	350	
		Close CO2 canister attenuation panel		
		MN REG (2) - open	351	
		H2O/GLY TK sel (2) - BOTH		
		EMER CAB PRESS sel - OFF		
		CAB REPRESS vlv - OFF (CCW)		
		WASTE TK SERV vlv - CLOSE	352	Servicing fitting is plugged.
		PRESS RELF sel - 2		
		POT TK IN vlv - CLOSE		Potable water chlorination port capped.
		WASTE TK IN vlv - AUTO		
	4	ECS/Cryogenic Status Check		
		SUIT CAB ΔP ind - >+2.0 in. H2O	2	
		O2 FLOW ind - 0.2 lb/hr (not pegged)		DIRECT O2 valve partially open.
		CRYO H2 PRESS ind (both) - 225-260 psia		

STA/T STEP	PROCEDURE	PANEL	REMARKS
CMP	CRYO 02 PRESS ind (both) - 865-935 psia	2	
	02 PRESS IND sw - SURGE TK		
	CRYO H2 QTY ind (both) - 100%		28 lbs nominal at 100 percent (each tank).
	CRYO 02 QTY ind (both) - 100%		320 lbs nominal at 100 percent (each tank).
	CAB FAN (both) - on (up)		
	H2 HTRS (both) - AUTO		
	02 HTRS (both) - AUTO		
	H2 FANS (both) - AUTO		
	02 FANS (both) - AUTO		
	ECS IND sel - PRIM		
	RAD PRIM IN TEMP ind - 60-97°F		
	RAD PRIM OUT TEMP ind - 35°-50°F		
	PRIM GLY EVAP OUT TEMP ind - 35°-50°F		
	PRIM GLY EVAP STM PRESS ind - 0.25 psia (pegged)		
	PRIM GLY DISCH PRESS ind - 60 psig max		
	SUIT TEMP ind - 45-55°F		
	CAB TEMP ind - 70-80°F		
	SUIT PRESS ind - approx 14.9 psia		
	CAB PRESS ind - approx 14.7 psia		
	CO2 PP ind - 0.0 mm Hg		
	RAD FLOW CONT AUTO - AUTO		
	ECS RAD tb - gray		Gray indicates No. 1 flow proportioning valve controlling flow.
	RAD FLOW CONT PWR - off (ctr)		
	RAD MAN SEL - RAD 1		When switch is powered, by placing the RAD FLOW CONT PWR switch to MAN SEL, center position will close all isolation valves.

STA/T	STEP	PROCEDURE	PANEL	REMARKS
CMP		RAD PRIM HTR - off (ctr)	2	
		RAD SEC HTR - OFF		
		SUIT COMPR ΔP ind - 0.0 psid		SUIT COMPR C/W light remains on as long as compressors are not operating.
		PRIM ACCUM QTY ind - 25-50% min		
		H2O QTY IND sw - WASTE		
		WASTE H2O QTY ind - <80%		
		H2O QTY IND sw - POT		
		POT H2O QTY ind - >80%		
		POT H2O HTR - OFF		
		SUIT H2O ACCUM AUTO - ctr		
		SUIT HT EXCH - ON for 20 sec then off (ctr)		Unless SUIT HT EXCH control switch is positioned to off (ctr), continuous power will be applied to motor valve.
		SEC COOL EVAP - RSET for 58 sec min, then off (ctr)		Assures secondary loop steam pressure valve is closed.
		SEC COOL PUMP - off (ctr)		
		GLY EVAP IN TEMP - MAN		
		Position prim loop steam press valve		
		GLY EVAP STM AUTO - MAN		
		GLY EVAP STM INCR - INCR for 58 sec min, then DECR for 8.5±0.5 sec		INCR and DECR positions are momentary. Steam pressure valve requires 58 seconds from full close to full open.
		GLY EVAP H2O FLOW - off (ctr)		
		CAB TEMP - MAN		
		CAB TEMP tw - max decr		
	5	EPS Status Checks		
LMP		FC RAD (all) - NORM	3	NORM position is momentary.
		FC RAD tb (all) - gray		Gray indicates FC radiator panels are not bypassing flow.

STA/T STEP	PROCEDURE	PANEL	REMARKS
LMP	FC HTRS (all) - on (up)	3	
	FC PURG (all) - OFF		
	FC REACS (all) - on (up)		On position is momentary.
	FC REACS tb (all) - gray		Gray indicates FC reactants valves are open.
	FC MNA (3) - 1 & 2 ctr, 3 OFF		
	FC MNA tb (3) - 1 & 2 gray, 3 bp		Gray indicates FC connected to bus, barber pole indicates FC disconnected from bus.
	MNA RSET - RSET		RSET position is momentary.
	FC MNB (3) - 1 OFF, 2 & 3 ctr		
	FC MNB tb (3) - 1 bp, 2 & 3 gray		Gray indicates FC connected to bus, barber pole indicates FC disconnected from bus.
	MNB RSET - RSET		RSET position is momentary.
	FC IND sel - 1, 2, 3		
	FC H2 FLOW ind - 0.01-0.05 lb/hr		Flow limits are proportional to individual FC currents and can be approximated by FC H2 flow ≈(amps x 2.5)/1000, and FC 02 flow ≈(amps x 2.0)/100. GSE is supplying most of the SC power.
	FC 02 FLOW ind - 0.1-0.4 lb/hr		
	FC SKIN TEMP ind - 390-450°F		
	FC COND EXH TEMP ind - 150-175°F		
	FC tb (2) - gray		Gray displays indicate normal pH factor and normal FC radiator temperature.
	FC IND sel - 2		
	BAT CHG - OFF		
	DC IND sel - FC 1, 2, 3		
	DC AMPS ind - 5-20 amps		
	DC IND sel - MN A, B		
	DC VOLTS ind - 26.5-31 vdc		
	DC IND sel - BAT BUS A, B, BAT C		
	DC VOLTS ind - 35-37.5 vdc		
	DC AMPS ind - <3.0 amps		

STA/T STEP	PROCEDURE	PANEL	REMARKS
	CAUTION Do not leave DC IND sel at PYRO BAT A (B) position any longer than required to read DC VOLTS, or PYRO battery charge will be depleted.	3	
LMP	DC IND sel - PYRO BAT A, B DC VOLTS ind - 36.0-37.5 vdc DC IND sel - MN A		
	Dual Inverter Status Check INV 1 - MNA INV 2 - MNB INV 3 - OFF INV 1 AC1 - on (up) INV 2 AC1 - OFF INV 3 AC1 - OFF INV 1 AC2 - OFF INV 2 AC2 - on (up) INV 3 AC2 - OFF AC IND sel - BUS 1 & 2, ϕA, B, C AC VOLTS ind - 113-117 vac		Switch position verification only. If switch positions must be changed, refer to para 4.7.3.9, step a.
	Standby Inverter (No. 3) Check AC2 RSET - OFF		

STA/T STEP	PROCEDURE	PANEL	REMARKS
LMP	INV 3 - MNB	3	
	INV 2 AC2 - OFF		
	INV 3 AC2 - on (up)		Rapid performance of inverter switching sequence may initiate MASTER ALARM pb/lt when alternate inverter is connected to bus.
	AC2 RSET - RSET		RSET position is momentary. Positioning AC1 or 2 RSET switches ensures a MASTER ALARM light and tone. Positioning AC1 or 2 RSET switches to ctr will cause random activation of MASTER ALARM lights and tone.
CMP,LMP	MASTER ALARM pb/lt (2) - on (push)	3,122	
CMP	C/W lts (34) - out	2	
LMP	AC IND sel - BUS 2, ϕA, B, C	3	
	AC VOLTS ind - 113-117 vac		
	AC2 RSET - OFF		
	INV 3 AC2 - OFF		
	INV 2 AC2 - on (up)		Rapid performance of inverter switching sequence may initiate MASTER ALARM pb/lt when alternate inverter is connected to bus.
	AC2 RSET - RSET		RSET position is momentary. Positioning AC1 or 2 RSET switches ensures a MASTER ALARM light and tone. Positioning AC1 or 2 RSET switches to ctr will cause random activation of MASTER ALARM lights and tone.
CMP,LMP	MASTER ALARM pb/lt (2) - on (push)	3,122	
CMP	C/W lts (34) - out	2	
LMP	INV 3 - OFF	3	Inverter 1 powering a-c bus No. 1 and inverter 2 powering a-c bus No. 2.

NORMAL BACKUP

STA/T STEP	PROCEDURE	PANEL	REMARKS
LMP	AC IND sel - BUS 1 & 2, ϕA, B, C AC VOLTS ind - 113-117 vac	3	
6	SPS Status Checks SPS PRPLNT TEMP ind - 100°F max		Normal operating temperature is +45° to +75°F. Redline is +27 and +100°F.
	SPS FUEL PRESS ind - 170-195 psia		Normal operating pressure after fuel and oxidizer tank is pressurized with He (after He valve is actuated) is 170-195 psia. GSE servicing pressure is 110 psia.
	SPS OXID PRESS ind - 170-195 psia SPS PRESS IND sw - He, N2A, N2B SPS He PRESS ind - 3300-3900 psia SPS N2 PRESS ind - 2200-2800 psia		GSE servicing pressure is 3600±50 psia.
	SPS INJ VLV ind (4) - CLOSE SPS OXID VLV tb (2) - gray		Gray indicates propellant utilization valve positioned for normal flow.
	OXID FLOW VLV INCR - NORM OXID FLOW VLV PRIM - PRIM PUG MODE - NORM SPS He VLV tb (both) - bp		Barber pole indicates both helium isolation valves are closed.
	SPS He VLV (both) - AUTO SPS LINE HTRS - off (ctr) SPS PRESS IND sw - He		

STA/T	STEP	PROCEDURE	PANEL	REMARKS
	7	RCS Status Check		
CMP		SM RCS He 1 tb (4) - bp	2	Barber pole indicates helium isolation valves for system 1 are closed.
		SM RCS He 2 tb (4) - bp		Barber pole indicates helium isolation valves for system 2 are closed.
		SM RCS PRIM PRPLNT tb (4) - bp		Barber pole indicates at least one primary propellant isolation valve (fuel or oxidizer) in each quad is closed.
		SM RCS SEC PRPLNT tb (4) - bp		Barber pole indicates at least one secondary propellant isolation valve (fuel or oxidizer) in each quad is closed.
		SM RCS SEC FUEL PRESS (4) - OPEN		OPEN position is momentary. There is no position indicator talkback. Valve opening can be confirmed by ACE.
		RCS IND sel - SM A, B, C, D SM RCS PKG TEMP ind - amb		SM RCS heaters are not operated on pad and during ascent to reduce effects of boost heating on package temperature. Ambient temperature <75° or >205°F will illuminate SM RCS status lights.
		SM RCS He PRESS ind - 4000-4350 psia		Nominal He load is 4150 psig at 70°F. Pressure and temperature excursions are due to ambient conditions.
		SM RCS MANF PRESS ind - 192-207 psia SM RCS IND sw - He TK TEMP SM RCS He TK TEMP ind - 60-80°F		

NORMAL/BACKUP

STA/T STEP	PROCEDURE	PANEL	REMARKS
CMP	SM RCS IND sw - PRPLNT QTY	2	
	SM RCS PRPLNT QTY ind - 100%		
	CM RCS PRPLNT (both) - on (up)		On position is momentary.
	CM RCS PRPLNT tb (both) - gray		Gray indicates propellant isolation valves are open.
	RCS IND sel - CM 1, CM 2		
	CM RCS He TEMP ind - 60-90°F		
	CM RCS He PRESS ind - 4000-4450 psia		
	CM RCS MANF PRESS ind - 25-105 psia		Pressure monitored is GSE servicing pressure on fuel and oxidizer tanks. Servicing pressure is 30±2 psia at 68°F. Pressure excursions are a function of temperature and ullage variations. If manifold pressure drops suddenly, which is an indication of a ruptured burst diaphragm, perform procedure for preheating appropriate RCS for 15 minutes after orbit insertion. This will vent any propellant trapped between isolation valves and engines by energizing engine valve direct coils.
	4.1.2 EMS PRELAUNCH TESTS		
	1 Initial EMS Preparation		
CDR	Open EMS GTA cover	1	A 5/32-in. hex driver is required.
	GTA sw - on (up)		GTA switch is used during ground operations only. Setting switch on (up) allows EMS calibration for zero G condition. Switch must be set off (down) and door closed before flight.
	EMS FUNC - OFF		
	CAUTION If SPS THRUST light comes on, there is a ground on one or both ΔV THRUST switches.		

STA/T	STEP	PROCEDURE	PANEL	REMARKS
LMP CDR		Verify cb EPS GRP 4 (both) - close cb EMS (2) - close EMS MODE - STBY	229 8 1	
	2	EMS FUNC - ΔV Adjust alphanumeric brightness (option) Wait 5 seconds		
	3	GTA Null Adjust EMS MODE - NORM Adjust GTA null adj until ΔV/RNG least significant digit changes <1 per 10 sec		
	4	EMS FUNC - ΔV SET Slew ΔV ind to +1586.8		ΔV/EMS SET switch used both for slewing G-V scroll and for setting ΔV/RNG indicator. Slew speeds executed by ΔV/EMS SET switch are as follows:

	G-V Display Ft/Sec 1827 Ft/Sec = 1 In. of Scroll	ΔV/RNG Indicator Ft/Sec or Nautical Miles
Slow (soft stop) INCR or DECR	30 ft/sec/sec = 0.0164 in./sec	0.25/sec
Fast (hard stop) INCR or DECR	480 ft/sec/sec = 0.263 in./sec	127.5/sec

For negative numbers ΔV/RNG indicator will display a minus sign. No sign will appear for positive numbers.

STA/T	STEP	PROCEDURE	PANEL	REMARKS
CDR	5	EMS FUNC - ΔV TEST SPS THRUST lt - on ΔV ind - decr (10 sec) SPS THRUST lt - out (at ΔV -0.1 fps) ΔV ind - stops at -20.8±20.7 fps EMS MODE - STBY	1	
	6	EMS FUNC - EMS TEST 1 (wait 5 sec)		Test 1 checks lower trip point of .05 G comparator. Ten seconds should be allowed to verify no malfunctions.
		EMS MODE - NORM (wait 10 sec)		No other light should come on before or after 10 seconds.
		.05 G lt - out SPS THRUST lt - out Lift vector dn lt - out Lift vector up lt - out RNG ind - 0.0 NM		
		Slew scroll until display index is superimposed upon notch at the start of next self-test pattern		EMS scroll reverse slew capability is limited to one inch.
	7	EMS FUNC - EMS TEST 2		Test 2 checks upper trip point of .05 G comparator. No other light should come on before or after 10 seconds.
		Wait 10 sec .05 G lt - on (all others out)		

STA/T	STEP	PROCEDURE	PANEL	REMARKS
CDR	8	EMS FUNC - EMS TEST 3	1	Test 3 checks corridor verification circuitry associated with lift vector down light (G <.2).
		.05 G lt - on Lift vector dn lt - on (10 sec after .05 G lt) Set RNG ind to 58.0±0.0 NM		For negative numbers RNG indicator will display a minus sign in most significant digit. No sign will appear for positive numbers.
	9	EMS FUNC - EMS TEST 4		Test 4 checks range-to-go integrator circuits, range-to-go indicator, G-servo circuits, and G-V plotter.
		.05 G lt - on (all others out) G-V trace (during 10-sec period) within test pattern After 10 sec, G-V trace stops at lower right corner of test pattern RNG ind (during 10-sec period) counts toward zero After 10 sec stops at 0.0±0.2		
	10	EMS FUNC - EMS TEST 5		Test 5 checks corridor verification circuitry associated with lift vector up light (G >.2). Enables slewing scroll to start of entry pattern. After scroll is set to <37K fps, it is not permissible to return EMS FUNC to EMS TEST 5 position (range integrator and scroll sync would be lost).
		.05 G lt - on Lift vector up lt - on (10 sec after .05 G lt) RNG ind - resets to 0.0 NM		

STA/T STEP	PROCEDURE	PANEL	REMARKS
CDR	Scribe traces vertical line ≈9 G to 0.22±0.1 G and stops (trace within test pattern)	1	
11	EMS FUNC - RNG SET EMS MODE - STBY Scribe traces vertical line from 0.22 G to 0.0±0.1 G and stops All lt - out		
12	EMS FUNC - OFF		
	WARNING GTA switch is used for ground tests only and must be set off (down) and door closed for proper flight operation of EMS.		
	GTA sw - off (down) Close GTA cover		A 5/32-in. hex driver is required.
4.1.3	ORDEAL PRELAUNCH SWITCH POSITION CHECK		This procedure assumes that ORDEAL box has been interconnected between FDAIs and EDA during installation, and that prime or backup crews will not be required to connect or disconnect ORDEAL cables to stow or unstow ORDEAL.

STA/T STEP	PROCEDURE	PANEL	REMARKS
CDR	EARTH/LUNAR - PWR OFF	13	
	CAUTION Before ORDEAL is stowed, or when not being used (whether EARTH/LUNAR switch in PWR OFF or not), FDAI 1 & 2 switches must be at INRTL. Otherwise, pitch inertial attitude cannot be displayed by FDAI ball.		
	FDAI sw (both) - INRTL ALT SET - as desired		This value to be determined from planned nominal insertion altitudes for each particular mission.
	LTG - OFF MODE - HOLD/FAST SLEW - off (ctr)		
	4.1.4 PANEL CONFIGURATION CHECKS		
	4.1.4.1 LH Couch		
	1 THC - LOCKED		It is possible to actuate THC clockwise or counter-clockwise while locked.
	2 RHC - LOCKED		

NORMAL BACKUP

STA/T	STEP	PROCEDURE	PANEL	REMARKS
CDR	3	MDC Side Panels		
		COAS PWR - OFF	15	
		UTIL PWR - OFF		Connector covered.
		PL BCN LT - off (ctr)		
		DYE MARKER - off (down)		Guarded.
		PL VENT - OFF		
		AUTO RCS (16) - OFF	8	
		cb panel 8 - all closed except		
		cb SECS ARM (2) - open		
		cb SECS LOGIC (2) - open		
		cb SPS PITCH 1 BAT A - open		
		cb SPS YAW 1 BAT A - open		
		cb CM RCS HTRS (both) - open		
		FLOAT BAG (all) - VENT		Lever lock.
		SECS LOGIC (both) - OFF		Lever lock.
		EDS PWR - OFF	7	
		CAUTION		
		More than 1 hour of continuous on-time for TVC SERVO PWR switches may be detrimental to SPS gimbal actuators.		
		TVC SERVO PWR (both) - OFF		
		FDAI/GPI PWR - BOTH		
		LOGIC 2/3 PWR - on (up)		
		ELEC PWR - GDC/ECA		
		SIG CONDR/DR BIAS PWR (both) - AC1 or AC2		Powers RJEC -4 vdc bias power supplies. To provide increased reliability, switches should not be set on same bus.
		BMAG PWR (both) - WARM UP		

STA/T	STEP	PROCEDURE	PANEL	REMARKS
CDR	4	Main Display Console		
		Set ALT index	1	Value obtained from LCC.
		CMC ATT - IMU		
		ACCEL - check (+1 G)		
		FDAI SCALE - 5/1		
		FDAI SEL - 1		
		FDAI SOURCE - CMC		
		ATT SET - GDC		
		FDAI error and rate ind (3) - zero		
		FDAI 1 - R 162°, P 90°, Y 0°		These are nominal angles for a 72° launch azimuth and agree with prelaunch TCP. Only roll is affected by a variable launch azimuth.
		EVNT TMR ind - 00:00		
		MAN ATT ROLL - RATE CMD		
		MAN ATT PITCH - ACCEL CMD		
		MAN ATT YAW - RATE CMD		
		LIM CYCLE - OFF		
		ATT DBD - MIN		
		RATE - HI		
		TRANS CONTR PWR - on (up)		
		ROT CONTR PWR NORM (both) - AC/DC		
		ROT CONTR PWR DIR (both) - OFF		
		SC CONT - SCS		
		CMC MODE - FREE		
		α/Pc IND sw - α		
		α/Pc ind - zero		
		LV IND/GPI sw - SII/SIVB		
		SII FUEL/SIVB OXID PRESS ind (2) - ____		Quantity indication will be compared with booster telemetry. SII fuel tank pressure is displayed until SII/SIVB staging. SIVB OXID tank pressure is displayed after SII/SIVB staging.
		SIVB FUEL PRESS ind (2) - ____		Quantity indication will be compared with booster telemetry.

NORMAL/BACKUP

STA/T STEP	PROCEDURE	PANEL	REMARKS
CDR	BMAG MODE (3) - RATE 2	1	
	SPS THRUST - NORM		Lever lock.
	ΔV THRUST (2) - OFF		Guarded.
	SCS TVC (2) - AUTO		
	SPS GMBL MOT (4) - OFF		
	ΔV CG - CSM		
	ELS LOGIC - OFF		Guarded.
	ELS AUTO - AUTO		
	CM RCS LOGIC - OFF		
	CM PRPLNT DUMP - OFF		Guarded.
	CM PRPLNT PURG - off (down)		Guarded.
	IMU CAGE - off (down)		Guarded.
	EMS ROLL - OFF		
	.05 G sw - OFF		
	LV IND/GPI sw - GPI		
	TVC GMBL DR (2) - AUTO		
	EVNT TMR START - ctr		
	EVNT TMR RSET - (up, ctr)		
4.1.4.2 Center Couch			
CMP 1	RHC - LOCKED		
2	Main Display Console		
	PROBE EXTD/REL tb (2) - gray	2	Gray indicates probe fully extended or fully retracted.
	PROBE (3) - OFF		PROBE EXTD/REL switch guarded.
	EXT RUN/EVA LT - OFF		
	EXT RNDZ LT - off (ctr)		

STA/T STEP	PROCEDURE	PANEL	REMARKS
CMP	TUNL LT - OFF	2	
	LM PWR - OFF		
	MSN TMR ind - zero		
	MSN TMR - START		Will reset to zero and count up at lift-off, but not abort initiation.
	MSN TMR ind - verify counting up		
	UP TLM CM - BLOCK		UP TLM CM and UP TLM IU switches should be placed to ACPT only as required during updates.
	UP TLM IU - BLOCK		
	CM RCS PRESS - off (down)		Guarded.
	SM RCS HTRS (4) - OFF		
	RCS TRNFR - SM		SM position is momentary.
	EDS AUTO - OFF		
	PRPLNT DUMP - AUTO		
	2 ENG OUT sw - AUTO		
	LV RATES sw - AUTO		
	TWR JETT (both) - AUTO		Guarded.
	LV GUID sw - IU		Guarded.
	LV STAGE - OFF		Guarded.
	XLUNAR INJECT - INJECT		
	MN REL - off (down)		Guarded.
	HI GAIN ANT TRACK - AUTO		
	HI GAIN ANT BEAM - WIDE		
	HI GAIN ANT PITCH ind - +90°		Power off indicator reading.
	S BD ANT ind - no deflection		
	HI GAIN ANT YAW ind - 0°		Power off indicator reading.
	HI GAIN ANT PITCH cont - 0°		Stow position.
	HI GAIN ANT YAW cont - 180°		Stow position.
	HI GAIN ANT PWR - OFF		
	HI GAIN ANT SERVO - PRIM		

NORMAL BACKUP

STA/T	STEP	PROCEDURE	PANEL	REMARKS
		4.1.4.3 RH Couch		
		1 Main Display Console		
LMP		VHF ANT - SM LEFT	3	
		S BD XPNDR - OFF		
		S BD PWR AMPL PRIM - PRIM		
		S BD PWR AMPL HI - off (ctr)		
		PWR AMPL tb - bp		Barber pole indicates power is not applied to S-band power amplifier.
		S BD MODE VOICE - VOICE		
		S BD MODE PCM - PCM		
		S BD MODE RNG - RNG		
		S BD AUX TAPE - ctr		
		S BD AUX TV - ctr		
		UP TLM DATA - DATA		
		UP TLM CMD - RSET, then OFF		
		TAPE MOTION tb - bp		Barber pole indicates no tape motion.
		S BD ANT OMNI A - B		
		S BD ANT OMNI - OMNI		
		VHF AM SQLCH tw (2) - noise +1		
		VHF AM (2) - off (ctr)		
		VHF AM RCV - off (ctr)		
		VHF BCN - OFF		
		VHF RNG - OFF		
		S BD SQLCH - ENBL		
		FC REAC VLV - NORM		
		H2 PURG LINE HTR - OFF		
		TAPE RCDR FWD - REWIND		Allow tape to completely rewind before proceeding. TAPE MOTION tb is gray when tape is in motion.
		TAPE RCDR PCM - PCM/ANLG		

STA/T STEP	PROCEDURE	PANEL	REMARKS
LMP	TAPE RCDR RCD - RCD	3	Power to switch is provided by the up-data link or the TAPE RCDR FWD switch in FWD position.
	TAPE RCDR FWD - off (ctr)		
	SCE PWR - NORM		
	PMP PWR - NORM		
	PCM BIT RATE - HI		
	2 MDC Side Panels		
	FC 1 PUMPS - AC1	5	
	FC 2 & 3 PUMPS - AC2		
	G/N PWR - AC1		
	MN BUS TIE (2) - OFF		
	BAT CHGR - AC1		
	NONESS BUS - OFF		
	cb panel 5 - all closed except		
	cb SCI EQUIP (3) - open		
	cb WASTE DUMP HTRS (2) - open		
	cb NONESS INST - open		
	SPS GAUGING - AC1	4	
	TELCOM GRP 1 - AC1		
	TELCOM GRP 2 - AC2		
	GLY PUMPS - OFF		
	SUIT COMPR (both) - OFF		
	cb panel 4 - all closed		
	DOCK TRGT - OFF	16	Connector covered.
	UTIL PWR - OFF		Connector covered.
	COAS PWR - OFF		
	cb panel 229 - all closed except	229	
	cb MN REL (2) - open		
	cb VAC ION PUMPS (2) - open		

NORMAL/BACKUP

STA/T	STEP	PROCEDURE	PANEL	REMARKS
LMP	3	RHEB		
		SCI PWR - OFF	227	Connector covered.
		cb panel 275 - all closed except	275	
		cb MNA & B BAT C (2) - open		
		cb FLT/PL BAT BUS A, B, BAT C (3) - open		
		cb panel 276 - all closed	276	
		cb panel 278 - all closed except	278	
		cb UPR SYS COMPR (both) - open		
		4.1.4.4 Equipment Bays		
	1	Fwd Equipment Bay		
CMP		MSN TMR ind - zero	306	
		MSN TMR - START		Mission timer will reset to zero and count up at launch.
		MSN TMR ind - verify counting up		
		EVNT TMR ind - zero		
		EVNT TMR START - ctr		
		EVNT TMR RSET - UP (ctr)		
	2	LEB		
		UTIL PWR - OFF	100	Connector covered.
		FLOOD LTS - OFF (CCW)		
		FLOOD LTS DIM - 1		
		FLOOD LTS FIXED - OFF		
		NUMERICS LTS - as desired		
		FLOOD LTS - OFF, full dim, or full BRT		Center range of floodlight rheostat may cause light flicker.
		INTGL LTS - as desired		
		OPT PWR - OFF		
		IMU PWR - on (up)		
		RNDZ XPNDR - OFF		
		SYS TEST (2) - 5A	101	

STA/T	STEP	PROCEDURE	PANEL	REMARKS
CMP		SYS TEST ind - 1.1-1.9 vdc	101	Equivalent to +45° to +75°F nominal SPS oxidizer engine feedline temperature.
		SYS TEST (2) - 4B RNDZ XPNDR - OPR CM RCS HTRS - OFF WASTE H2O DUMP - HTR A URINE DUMP - HTR A		
		CAUTION OPT ZERO switch must not be moved during prelaunch or inadvertent jettison of optics covers could occur.	122	
		OPT ZERO - ZERO OPT MODE - MAN OPT SPEED - LO OPT COUPLING - DIRECT OPT TELTRUN - SLAVE TO SXT COND LAMPS - ON UP TLM - ACPT		
		SCI/UTIL PWR - OFF	163	Switches are located behind closeout panel and will be set at panel closeout.
		SCI PWR - OFF	162	
	3	RHEB		
		cb panel 225 - all closed except cb HI GAIN ANT (2) - open	225	
		cb panel 226 - all closed except cb FC REACS (3) - open	226	FC reactant valve circuit breakers are opened after FC start-up to preclude inadvertent valve closure.
		cb COAS/TUNL LTG MNB - open		

NORMAL/BACKUP

STA/T STEP	PROCEDURE	PANEL	REMARKS
CMP	cb panel 250 - all closed except	250	
	CAUTION cb PYRO A&B BAT BUS A&B (2) should never be closed when cb PYRO A&B/ SEQ A&B (2) are closed. Loss of pyro battery power could result.		
	cb PYRO A BAT BUS A - open cb PYRO B BAT BUS B - open cb BAT BUS A, B BAT C (2) - open		
	WASTE MGMT DRAIN vlv - OFF	251	
	BAT VENT vlv - CLOSE	252	
	WASTE STOW vlv - VENT		
	4.1.5 COMMUNICATIONS CHECK		
	1 Verify/set controls		
ALL	PWR (3) - OFF	9,10,6	
	SUIT PWR (3) - OFF		
	AUDIO CONT (3) - NORM		
	2 Remove facility headsets		
	3 Connect CM headsets to comm control head		
	4 Audio Panel Intercom Check MODE (3) - INTERCOM/PTT		

STA/T STEP	PROCEDURE	PANEL	REMARKS
ALL	INTERCOM (3) - T/R	9,10,6	
	INTERCOM VOL tw (3) - 5		
	MASTER VOL tw (3) - 5		
	Perform intercom check		
	VOX SENS tw (3) - 5		
	PAD COMM - T/R		
	PAD COMM VOL tw - 5		
	S BD (3) - T/R		
	S BD VOL tw (3) - 5		
	VHF AM (3) - OFF		
	VHF AM VOL tw (3) - 5		
CDR	VHF RNG - NORM	9	
5	S Band and VHF AM Checks		
LMP	S BD XPNDR - PRIM	3	
	S BD PWR AMPL HI - HI		
	PWR AMPL tb - gray (after 90 sec)		Gray indicates power is applied to S-Band power amplifier.
	UP TLM CMD - RSET, then NORM		
	VHF AM B - DUPLEX		
CDR	Perform S band voice check	9	
	VHF AM - T/R		
	S BD - OFF		
	Perform VHF AM voice check		
	S BD - T/R		
CMP	Perform S band voice check	10	
	VHF AM - T/R		
	S BD - OFF		
	Perform VHF AM voice check		
	S BD - T/R		

NORMAL/BACKUP

STA/T	STEP	PROCEDURE	PANEL	REMARKS
LMP		Perform S band voice check	6	
		VHF AM - T/R		
		S BD - OFF		
		Perform VHF AM voice check		
		S BD - T/R		
		4.1.6 PRE-EGRESS PROCEDURES		
	1	Secondary Glycol Loop Check		
		ECS IND sel - SEC	2	
		SEC COOL PUMP - AC1		
		RAD SEC IN TEMP ind - 60-97°F		
		RAD SEC OUT TEMP ind - 60-70°F (pegged)		
		SEC GLY EVAP OUT TEMP ind - 60-75°F (pegged)		
		SEC GLY EVAP STM PRESS ind - 0.25 psia (pegged)		
		SEC GLY DISCH PRESS ind - 39-51 psig		
		SEC ACCUM QTY ind - 30-50%		
		SEC COOL PUMP - AC2		
		SEC GLY DISCH PRESS ind - 39-51 psig		
		SEC COOL PUMP - off (ctr)		
		ECS IND sel - PRIM		
CMP		GLY TO RAD SEC vlv - BYP	377	
	2	Primary Glycol Loop Activation		
LMP		GLY PUMPS - 2 AC1	4	
		PRIM GLY DISCH PRESS ind - 37-50 psig	2	GSE flow must be temporarily interrupted (3 minutes max) for this check.
		PRIM ACCUM QTY ind - 25-50%		

STA/T	STEP	PROCEDURE	PANEL	REMARKS
LMP		GLY PUMPS - 1 AC1	4	
		PRIM GLY DISCH PRESS ind - 37-50 psig	2	
		RAD FLOW CONT PWR - PWR		
		RAD FLOW CONT AUTO - 2		
		ECS RAD tb - 2		2 indicates No. 2 flow proportioning valve controlling flow.
		RAD FLOW CONT AUTO - AUTO		
		ECS RAD tb - gray		Gray indicates No. 1 flow proportioning valve controlling flow.
		RAD FLOW CONT PWR - off (ctr)		
	3	FC Radiator Check		
		FC RAD (all) - NORM	3	NORM position is momentary.
		FC RAD tb (all) - gray		Gray indicates FC radiator panels are not bypassing flow.
CMP		cb FC RAD (all) - open	226	Prevent inadvertent FC radiator effective area reduction.
	4	Verify/set controls		
ALL		PWR (3) - OFF	9,10,6	
		SUIT PWR (3) - OFF		
	5	Disconnect CM headsets and adapter from comm control head (3)		
	6	Verify Couch Configuration		
		MDC assist bar - extended and locked		
		Headrests - soft suit position		

STA/T	STEP	PROCEDURE	PANEL	REMARKS
ALL		THC armrest in launch position and locked Inboard arm rests - stowed and controller locked Couches - launch/entry position (Y-Y struts extended and locked) Seat pans - 85° position and locked 02/comm umbilicals - stowed Harnesses and restraints - extended and laid aside Couch stabilization brace - stowed		
	4.1.7	PRIME CREW PRE-INGRESS PROCEDURE		Performed by backup crew CMP following launch vehicle propellant loading.
		Perform Potable Water Chlorination		
CMP		POT TK IN vlv - OPEN	352	
		Attach needle assy to inject port		Use carry on sterilization kit for chlorination.
		Insert chlorine ampoule into casing		
		Connect knob assembly and rotate (CW) until piston contacts ampoule		
		Install ampoule assembly on needle assembly (push and turn CW)		
		Rotate knob (CW) until ampoule is empty (piston bottoms out)		Requires approximately 5-1/2 turns.
		Disconnect ampoule assembly from needle assembly (push and turn CCW)		
		Rotate knob (CCW), remove used ampoule		

STA/T STEP	PROCEDURE	PANEL	REMARKS
CMP	Repeat chlorine injection steps using buffer ampoule (do not remove empty ampoule after injection)	352	Needle assembly to remain on inject port.
	Wait 10 minutes. Then rotate injector barrel (CCW) four turns while holding bayonet section in locked position (CW)		Withdraws 1 ampoule of water.
	Rotate knob (CCW), remove filled ampoule		
	Remove needle assembly from inject port		
	Wait 30-45 minutes, then withdraw water as follows:		
	Attach H2O sampling container to food prep unit H2O probe	305	
	FOOD PREP HOT H2O vlv - push until 40 oz water withdrawn, rel		
	FOOD PREP COLD H2O vlv - push until 20 oz water withdrawn, rel		
	Remove H2O sampling container from food prep unit and attach to drink gun nozzle		
	DRINK H2O SUP vlv - ON	304	
	Actuate drink gun control until 2-4 oz water withdrawn		
	DRINK H2O SUP vlv - OFF		
	Remove H2O sampling container from drink gun nozzle		
	Remove sterilization kit from CM		

STA/T	STEP	PROCEDURE	PANEL	REMARKS
CMP		SECS PYRO ARM (2) - SAFE (unlocked)	8	Pad safety officer provides key to remove guard from lever lock SECS PYRO ARM switches.
		DIRECT 02 vlv - OPEN (CCW)	7	Valve adjusted to regulate 02 flow to 0.6 lb/hr for increased volume with prime crew in loop.
		02 FLOW ind - 0.6 lb/hr	2	

BACKUP CREW PRELAUNCH CHECKS

STA/T	STEP	PROCEDURE	PANEL	REMARKS
		4.2 PRIME CREW PRELAUNCH CHECKS		
		4.2.1 INGRESS AND STATUS CHECKS		
		1 CDR CM Ingress		
CDR		Ingress left couch (aided by suit tech)		
		SUIT PWR - OFF	9	
		PWR - OFF		
		AUDIO CONT - NORM		
Suit tech		CDR comm umbilical - connect to PGA		
CDR		SUIT PWR - on (up)		
		PWR - AUDIO/TONE		
		MODE - as desired		
		S BD - T/R		
		INTERCOM - T/R		
		PAD COMM - T/R		
		VHF AM - T/R		
		INTERCOM VOL tw - as req		
		PAD COMM VOL tw - as req		
		MASTER VOL tw - as req		
		Control head sw - XMIT		
		Establish VHF AM voice comm		Facility S BD transmission and reception must be disabled.
		VHF AM VOL tw - as req		
		Control head sw - XMIT		
		Establish S BD voice comm		Facility VHF AM transmission and reception must be disabled.
		S BD VOL tw - as req		
		VHF RNG - NORM		
		SUIT H20 ACCUM AUTO - 1	2	
Suit tech		1h SUIT FLOW vlv - OFF	301	
		CDR 02 umbilicals - connect to PGA		Suit hose interconnect removed from CM.

NORMAL BACKUP

STA/T	STEP	PROCEDURE	PANEL	REMARKS
Suit tech	1h	SUIT FLOW vlv - FULL FLOW	301	
		SUIT COMPR 1 - AC1	4	
CDR		SUIT COMPR lt - out	2	
Suit tech		CDR portable 02 ventilator - shut off and disconnect		PGA gas connector plugs installed. Ventilator removed from CM.
CDR		SUIT COMPR ΔP ind - 0.7-0.9 psid		
		SUIT CAB ΔP ind - >+2.0 in. H20		
Suit tech		Assist CDR in position; connections and adjustments completed		Restraints connected and tightened, and armrests, torso and life vest adjusted. Helmet protector removed from CM.
	2	LMP CM Ingress		
LMP		Ingress right couch (aided by suit tech)		
		SUIT PWR - OFF	6	
		PWR - OFF		
		AUDIO CONT - NORM		
Suit tech		LMP comm umbilical - connect to PGA		
LMP		SUIT PWR - on (up)		
		PWR - AUDIO/TONE		
		MODE - as desired		
		S BD - T/R		
		INTERCOM - T/R		
		PAD COMM - T/R		
		VHF AM - T/R		
		INTERCOM VOL tw - as req		
		PAD COMM VOL tw - as req		
		Control head sw - XMIT		
		Establish VHF AM voice comm		Facility S BD transmission and reception must be disabled.
		VHF AM VOL tw - as req		
		Control head sw - XMIT		
		Establish S BD voice comm		Facility VHF AM transmission and reception must be disabled.

STA/T	STEP	PROCEDURE	PANEL	REMARKS
LMP		S BD VOL tw - as req	6	
Suit tech		rh SUIT FLOW vlv - OFF	300	Suit hose interconnect removed from CM.
		LMP 02 umbilicals - connect to PGA		
		rh SUIT FLOW vlv - FULL FLOW		PGA gas connector plugs installed. Ventilator removed from CM.
		LMP portable 02 ventilator - shut off and disconnect		
CDR		SUIT COMPR ΔP ind - 0.7-0.9 psid	2	
		SUIT CAB ΔP ind - >+2.0 in. H20		
Suit tech		Assist LMP in position; connections and adjustments completed		Restraints connected and tightened, and armrests, torso and life vest adjusted. Helmet protector removed from CM.
	3	CMP CM Ingress		
CMP		Ingress center couch (aided by suit tech)		
Suit tech		Headrest - raise and lock		
		SUIT PWR - OFF	10	
		PWR - OFF		
		AUDIO CONT - NORM		
		CMP comm umbilical - connect to PGA		
		SUIT PWR - on (up)		
		PWR - AUDIO/TONE		
		MODE - as desired		
		S BD - T/R		
		INTERCOM - T/R		
		PAD COMM - T/R		
		VHF AM - T/R		
		INTERCOM VOL tw - as req		
		PAD COMM VOL tw - as req		

NORMAL/BACKUP

STA/T	STEP	PROCEDURE	PANEL	REMARKS
Suit tech		MASTER VOL tw - as req S BD VOL tw - as req Control head sw - XMIT	10	
CMP		Establish VHF AM voice comm		Facility S BD reception must be disabled.
Suit tech		VHF AM VOL tw - as req ctr SUIT FLOW vlv - OFF	302	
		CMP portable 02 ventilator - shut off and disconnect		PGA gas connector plugs installed. Ventilator removed from CM.
		CMP 02 umbilicals - connect to PGA ctr SUIT FLOW vlv - FULL FLOW		Suit hose interconnect removed from CM.
CMP		SUIT COMPR ΔP ind - 0.7-0.9 psid SUIT CAB ΔP ind - >+2.0 in. H20	2	
Suit tech		Assist CMP in position; connections and adjustments completed		Restraints connected and tightened, and arm rests, torso and life vest adjusted. Helmet protector removed from CM.
	4	Perform final crew verification		Helmets, umbilicals, PGA diverter valves, and wrist disconnects, foot restraints, and life vests rechecked.
		PAD COMM - OFF	10	PAD COMM can be used after launch for intercom backup with PAD COMM VOL tw decreased.
		Technician egress CM		
CMP	5	SEC COOL PUMP - AC1, if req for crew comfort	2	The activation of secondary loop will warm suit circuit ≈10-15°F. The secondary pump may be selected on or off at option of flight crew for their comfort. Crew may be cold as vehicle is being prechilled by GSE coolant at this time.

PRIME CREW PRELAUNCH CHECKS

STA/T	STEP	PROCEDURE	PANEL	REMARKS
CMP	6	Cabin closeout		
		Side hatch closing	Side hatch	
		Verify external tool stowed on outside of hatch (technician)		
		Remove hatch seal protector (technician)		
		Verify safety pin has been removed from actr handle sel (technician)		
		Gear box sel - N (neutral) (technician)		
		Actr handle sel - N (neutral) (technician)		
		Verify piston chamber pressurized		
		xxxxxxxxxxxxxxxxxxxxxxxxxxxxxxxxxxxx		
		If piston chamber not pressurized:		
		GN2 charge knob 1 - CW (technician)		
		GN2 vlv handle - push (outboard) (technician)		Squeeze handle to unlock.
		xxxxxxxxxxxxxxxxxxxxxxxxxxxxxxxxxxxx		
		Hatch open lock - rel (technician)		
		Push hatch to near closed position (technician)		
		Lock pin rel knob - UNLOCK (verify)		

NORMAL BACKUP

STA/T STEP	PROCEDURE	PANEL	REMARKS
CMP	Hold hatch closed Insert tool B (handle in 9 o'clock position) into external hatch actuation socket, rotate CW to stops and hold (technician) Press and hold LOCK PIN reset Relax torque and remove tool B LOCK PIN reset - rel LOCK PIN ind - not extended (rh couch) and/or white ind is opposite white mark (ctr and lh couch) xxxxxxxxxxxxxxxxxxxxxxxxxxxxxxxxxxx If lock pin is not engaged: Insert tool B into external hatch actuation socket and slowly rotate CCW until LMP verifies lock pin engagement (technician) xxxxxxxxxxxxxxxxxxxxxxxxxxxxxxxxxxx NOTE If RED lock pin is extended ≈0.5 inch, lock pin has been sheared. GN2 press ind - green (verify)	Side hatch	Obtains lock pin engagement. Mechanism should rotate approximately 14° because of spring pressure.

STA/T STEP	PROCEDURE	PANEL	REMARKS
CMP	Configure hatch for rapid egress Gear box sel - UNLATCH Actr handle sel - U (unlatch) BPC JETT knob - arrow on knob pointing to BPC JETT decal	Side hatch	
	If rapid hatch opening required, refer to para 5.3.1.1		
	Strut unlock lanyard (2) - unstow and attach handle ends to MDC		
	Ground performs cabin purge and hatch leak test Cabin purge to 60% 02/40% N2 (launch atmosphere)		
CDR	rh CAB PRESS RELF vlv - DUMP (safety latch off)	325	
	Verify composition at 60% 02/40% N2		GSE verifies 60/40 ratio.
	rh CAB PRESS RELF vlv - BOOST/ ENTR (safety latch off)		
	Ground performs hatch leak test		Requires ≈20 minutes.
	CAUTION During this check, established SUIT/CAB ΔP should be maintained by DIRECT 02 valve.	7	

NORMAL/BACKUP

STA/T	STEP	PROCEDURE	PANEL	REMARKS
-90:00				
CDR	7	EDS Checkout and Countdown Test		Crew participation in EDS test is directed by ground personnel. Test requires ≈30 minutes.
		Verify/set controls after test		
		EDS PWR - OFF	7	
CMP		EDS AUTO - OFF	2	
		2 ENG OUT sw - AUTO		
		LV RATES sw - AUTO		
	8	RCS Status Check		
		RCS IND sel - SM A, B, C, D		
		SM RCS PKG TEMP ind - ambient		SM RCS heaters are not operated on pad or during ascent to reduce effects of boost heating on package temperature. Ambient temperature <75° or >205°F will cause SM RCS status lights to come on.
		SM RCS He PRESS ind - 4000-4350 psia		Nominal He load 4150 psig at 70°F. Pressure and temperature excursions are due to ambient conditions.
		SM RCS MANF PRESS ind - 192-207 psia		Primary fuel pressure initially shown for each quad until momentary OPEN position of RCS SEC FUEL PRESS A (B, C, D) switch selected.
		SM RCS IND sw - He TK TEMP		
		SM RCS He TK TEMP ind - 60-80°F		
		SM RCS IND sw - PRPLNT QTY		
		SM RCS PRPLNT QTY ind - 100%		
		RCS IND sel - CM 1, 2		
		CM RCS He TEMP ind - 60-90°F		
		CM RCS He PRESS ind - 4000-4450 psia		

STA/T	STEP	PROCEDURE	PANEL	REMARKS
CMP		CM RCS MANF PRESS ind - 25-105 psia	2	Pressure monitored is GSE servicing pressure on fuel and oxidizer tanks. Servicing pressure is 30±2 psig at 68°F. Pressure excursions are a function of temperature.
-60:00		4.2.2 G&C VERIFICATION		
	1	Gyro Powerup		
CDR		ELEC PWR - GDC/ECA	7	
CMP		BMAG TEMP lt (both) - out	2	
CDR		FDAI/GPI PWR - OFF	7	If FDAIs are powered when BMAGs come up to speed, rate needles will oscillate full scale.
		BMAG PWR (both) - ON		
		FDAI/GPI PWR - BOTH		
	2	GDC Alignment		
		FDAI SEL - 1	1	
		FDAI SOURCE - ATT SET		
		ATT SET tw (3) - R 162°, P 90°, Y 0°		These are nominal angles for a 72° launch azimuth and agree with prelaunch TCP. Only roll is affected by a variable launch azimuth.
		GDC ALIGN pb - push		
		FDAI 1 - errors null		
		ATT SET tw (3) - R 167°, P 85°, Y 355°,		
		FDAI 1 - verify errors full scale R right, P up, Y right		
		FDAI SEL - 2		
CMP		FDAI 2 - verify same ind as FDAI 1	2	
CDR		GDC ALIGN pb - push	1	
CMP		FDAI 2 - errors null	2	

STA/T STEP	PROCEDURE	PANEL	REMARKS
CDR	ATT SET tw (3) - R 162°, P 90°, Y 0°	1	
CMP	FDAI 2 - verify errors full scale R left, P down, Y left	2	
CDR	FDAI SEL - 1	1	
	FDAI 1 - verify same ind as FDAI 2		
	GDC ALIGN pb - push		
	FDAI 1 - verify total att R 162°, P 90°, Y 0°		
	WARNING Sequencers in SECS should be deactivated to preclude an inadvertent abort.		
	SECS PYRO ARM (2) - SAFE	8	Lever lock.
	SECS LOGIC (both) - OFF		Lever lock.
3	Gimbal Drive and Trim Check		Verifies trim control and manual (MTVC) control capability of primary and secondary gimbal control system. SPS gimbal angle settings based on CSM c.g. and vary with propellant loading. PITCH and YAW GMBL caution/warning lights (panel 2) indicate overcurrent to gimbal motors. Otherwise, no indication to crew, except for switch selection, that a gimbal motor not operating or auto switchover (THC-CW) has taken place.

STA/T	STEP	PROCEDURE	PANEL	REMARKS
				GMBL POS indicator response opposite to RHC commands as follows: RHC: + Pitch / - Pitch / + Yaw / - Yaw IND: - Pitch / + Pitch / - Yaw / + Yaw
		Initialization		
CDR		cb SPS PITCH 1 BAT A - close	8	
		cb SPS YAW 1 BAT A - close		
		SC CONT - SCS (verify)	1	
		SCS TVC (2) - RATE CMD		
		TVC GMBL DR (2) - AUTO (verify)		
LMP		MN BUS TIE (2) - on (up)	5	
CDR		TVC SERVO PWR 1 - AC1/MNA	7	
		TVC SERVO PWR 2 - AC2/MNB		
		LV IND/GPI sw - GPI	1	
		RHC 2 - ARMED		
		Primary TVC Check		
		GMBL MOT PITCH 1 - START		START position is momentary. Start SPS gimbal motors sequentially at ≈1 second intervals to avoid power surge.
		GMBL MOT YAW 1 - START		
		Confirm trim control on indicators SPS GMBL tw (2) - + and -		Gimbals drive in response to SPS pitch and yaw thumbwheel movement. Verifies primary gimbal trim control.
		RHC 2 - perform MTVC check		Gimbals drive in response to RHC movement, and return to set-in values when RHC is neutral. Verifies primary MTVC loops.

NORMAL/BACKUP

STA/T STEP	PROCEDURE	PANEL	REMARKS
	Secondary TVC Check		
CDR	SCS TVC (2) - AUTO	1	
	GMBL MOT PITCH 2 - START		
	GMBL MOT YAW 2 - START		
	THC - CW		
	Confirm trim control on indicators		
	SPS GMBL tw (2) - + and -		Verifies secondary gimbal trim control.
	RHC 2 - perform MTVC check		Verifies secondary MTVC loops.
	Auto Switchover Check		
	GMBL MOT PITCH 2 - OFF		Shut off gimbal motors sequentially to avoid a power surge.
	GMBL MOT YAW 2 - OFF		
	Verify no MTVC		
	THC - neutral		
	SPS GMBL tw (2) - P___°, Y___°		Gimbals are trimmed to thrusting values. These values are derived from Operational Trajectory, Table VIIIa, and include gimbal offset of _____ in pitch and _____ in yaw from spacecraft axis.
	GMBL MOT PITCH 1 - OFF		
	GMBL MOT YAW 1 - OFF		
	RHC - LOCKED		
LMP	MN BUS TIE (2) - OFF, then AUTO	5	
CDR	TVC SERVO PWR (both) - OFF	7	
	LV IND/GPI sw - SII/SIVB	1	
	SCS TVC (2) - RATE CMD		
-45:00			
4	RSI Test and Setup		For ground checks, EMS RAI is the equivalent of flight term RSI.
	EMS ROLL - on (up)		
	GDC ALIGN pb - push and hold		

STA/T	STEP	PROCEDURE	PANEL	REMARKS
CDR		ATT SET YAW tw - adjust through 45° angle, observe RSI tracks ≈45°, then adjust until RSI points up GDC ALIGN pb - rel EMS ROLL - OFF	1	Avoid FDAI gimbal lock region.
	5	Align GDC to IMU		Ensures that GDC is aligned to actual IMU angles, rather than calculated values. Attitude reference comparison (in orbit) will be more accurate.
		FDAI SEL - 1 FDAI SOURCE - ATT SET		Constraint: If CMC is on, an overload in IMU resolver circuitry may cause an ICDU oscillation and trigger ISS warning light. (Reference ICD MH01-01325-216.) FDAI must be used as a null meter in this mode of operation. If not, large errors will result because of impedance mismatch.
		ATT SET - IMU ATT SET tw (3) - null FDAI 1 errors ATT SET - GDC GDC ALIGN pb - push FDAI SOURCE - CMC FDAI SEL - 1/2		
	6	EMS Preparation Set EMS ΔV EMS FUNC - ΔV SET Set ΔV ind - 6999.9 fps Verify EMS MODE - STBY EMS FUNC - ΔV GDC ALIGN pb - push		

NORMAL BACKUP

STA/T	STEP	PROCEDURE	PANEL	REMARKS
-30:00				
CDR	7	Pad Abort Enable		
		WARNING After pad abort enable, operation of THC - CCW will initiate an abort.		
		EDS PWR - on (up)	7	
ALL		Shoulder harness - locked		
CDR		cb SECS ARM (2) - close	8	
		cb SECS LOGIC (2) - close		
		CM RCS LOGIC - on (up)	1	
		SECS LOGIC (both) - on (up)	8	Lever lock.
		Report logic arm		
		After GO from STC SECS PYRO ARM (2) - on (up)		Both lever lock pyro arm switches must be operated. LES pad abort capability enabled; SECS LOGIC and PYRO buses are armed.
CMP		H2 FANS (both) - off (ctr)	2	
		O2 FANS (both) - off (ctr)		
-20:00				
	8	SM RCS Activation		
		SM RCS He 1 (4) - OPEN		OPEN position is momentary.
		SM RCS He 1 tb (4) - gray		He isolation valves open.
		SM RCS He 2 (4) - OPEN		OPEN position is momentary.

STA/T	STEP	PROCEDURE	PANEL	REMARKS
CMP		SM RCS He 2 tb (4) - gray RCS IND sel - SM A, B, C, D SM RCS MANF PRESS ind - 192-207 psia	2	He isolation valves open. Check pressure with RCS IND selector positioned at SM A, B, C, and D (in turn).
		SM RCS SEC FUEL PRESS (4) - CLOSE		CLOSE position is momentary. There is no position indicator talkback. Valve closing can be confirmed by ACE.
		SM RCS PRPLNT (4) - OPEN		OPEN position is momentary.
		SM RCS PRIM PRPLNT tb (4) - gray		Primary fuel and oxidizer isolation valves for all quads are open.
		SM RCS SEC PRPLNT tb (4) - gray		Secondary fuel and oxidizer isolation valves for all quads are open.
	4.2.3	LAUNCH PREPARATION		
-15:00				
		LCC Confirm Launch Ready		
LMP		Gear box sel - LATCH Actr handle sel - U (unlatch) (verify)	Side hatch	
CDR		FDAI SCALE - 5/5	1	Roll attitude error is scaled in P11 assuming FDAI is in 50/15/50/10 position. Until this position is selected at +01:50, roll full scale deflection will be 20°, not 5° as position indicates.

NORMAL/BACKUP

STA/T STEP	PROCEDURE	PANEL	REMARKS
CDR	Launch azimuth change (if necessary)	1	
	Key V78E		
	FL V06 N29		
	X SM launch azimuth XXX.XX DEG		
	Key V21E, load new azimuth		
	PRO		
	Perform GDC Align, para 4.9.3		FDAI 2 is drifting as a function of earth rate.
	FDAI 1 - total att		
	R 162°, P 90°, Y 0°		This position provides the most reliable configuration in the event a rate gyro fails during boost.
	BMAG MODE (3) - RATE 1		
	RATE - HI		
	THC - LOCKED (verify)		
	ROT CONTR PWR DIR (both) - MNA/MNB		
	AUTO RCS B/D ROLL B1 - MNA	8	
	AUTO RCS B/D ROLL D1 - MNB		
	AUTO RCS B/D ROLL B2 - MNA		
	AUTO RCS B/D ROLL D2 - MNB		
	AUTO RCS PITCH A3 - MNB		
	AUTO RCS PITCH C3 - MNA		
	AUTO RCS PITCH A4 - MNA		
	AUTO RCS PITCH C4 - MNB		
	AUTO RCS YAW B3 - MNA		
	AUTO RCS YAW D3 - MNB		
	AUTO RCS YAW B4 - MNB		
	AUTO RCS YAW D4 - MNA		
	CMC MODE - FREE	1	
	TVC SERVO PWR 1 - AC1/MNA	7	
	TVC SERVO PWR 2 - AC2/MNB		

STA/T STEP	PROCEDURE	PANEL	REMARKS
CDR,LMP	PAD COMM (2) - OFF	6,9	PAD COMM can be used after launch for intercom backup with PAD COMM VOL tw decreased.
LMP	VHF AM - OFF	6	
	Perform S BD air-to-ground voice check with MCCH		
	VHF AM - T/R		
	S BD - OFF		
	Perform VHF air-to-ground voice check with MCCH		
	S BD - T/R		
CDR	SPS THRUST - NORM	1	Lever lock.
	ΔV THRUST (2) - OFF		Guarded.
	α/Pc IND sw - α		
CMP	EDS AUTO - on (up)	2	
	LV RATES sw - AUTO		
	2 ENG OUT sw - AUTO		
	RCS CMD - OFF		OFF position is momentary.
LMP	FC REAC VLVS - LATCH	3	
-08:00	Systems status report		
-06:00	Systems GO/NO GO for launch		
-05:00			
CMP	SEC COOL PUMP - off (ctr)	2	Crew option may have been exercised to turn SEC COOL PUMP on for crew comfort.
-04:00			
CDR	LV ENG lts (5) - on	1	
-03:00			
CMP	Verify P02		

NORMAL/BACKUP

STA/T STEP	PROCEDURE	PANEL	REMARKS
	CAUTION Do not press ENTR after keying V75. If ENTR is pressed, G&C system will receive incorrect liftoff time.		
CMP	Key V75	1	
LMP	TAPE RCDR FWD - FWD	3	
	TAPE MOTION tb - gray		Gray display indicates tape is in motion.
-02:15			
CDR	PRIM GLY TO RAD - BYP (pull)	325	Accomplished immediately after GSE water-glycol pump is deactivated (T -02:15).
-01:00			
CMP	PRIM GLY DISCH PRESS ind - 37-50 psig	2	
	PRIM ACCUM QTY ind - 25-50%		
LMP	MN BUS TIE (2) - on (up)	5	
-00:45			
CDR	GDC ALIGN pb - push, hold	1	
CMP	FDAI 2 total att - no motion	2	
CDR	GDC ALIGN pb - rel	1	
	READY FOR IGNITION Refer to Appendix B for cabin switch/ control position at vehicle liftoff.		

STA/T	STEP	PROCEDURE	PANEL	REMARKS
		4.3 BOOST AND INSERTION		
		4.3.1 BOOST		
-00:09		Ignition		LV engines lights (5) go on at T -4 min when S-IC indicating circuits are armed.
CDR -00:01		LV ENG lts (5) - out	1	Indicates all five engines have achieved over 90% of rated thrust.
00:00		LIFT OFF lt - on and NO AUTO ABORT lt - out	00:00 ↑ MODE 1A	Additional lift-off cues: Event Timer start Voice communications from MSFN DSKY displays Program 11
		WARNING Do not press the LIFT OFF/NO AUTO ABORT pb if LV RATE or any LV ENG lts on.		Manual abort initiation may be required. (Refer to mission rules.)
		When lift-off verified LIFT OFF/NO AUTO ABORT pb - push		Guarded.
CDR, CMP		Verify EVNT TMR ind resets to zero and starts counting up	RATES ±4°/sec P,Y ±20°/sec R	

NORMAL/BACKUP

STA/T	STEP	PROCEDURE	PANEL	REMARKS
		xxxxxxxxxxxxxxxxxxx x x EVNT TMR START - START x x xxxxxxxxxxxxxxxxxxx		
CDR			1	START position is momentary.
CMP		Verify MSN TMR ind resets to zero and starts counting up	2	
		xxxxxxxxxxxxxxxxxx x x MSN TMR - START x x xxxxxxxxxxxxxxxxxx		
		Verify P11 (auto)		
		xxxxxxxxxxxxxxxxxxxx x x No P11 - Key ENTR x x xxxxxxxxxxxxxxxxxxxx	MODE 1A	V75 inserted in P02 prior to lift-off.
		V06 N62 VI XXXXX. FPS H dot XXXXX. FPS H pad XXXX.X NM		These parameters will be displayed throughout ascent. VI = Inertial velocity. H dot = Altitude rate. H pad = Altitude above pad radius.
CDR		If LV RATE and LV GUID lts - on, from T +0 to T +2 min	1	

STA/T STEP	PROCEDURE		PANEL	REMARKS
CMP	LV GUID sw - CMC If manual control required Key 46E		2	Activates RCS DAP; RHC provides steering commands to the IU for booster control. These stick commands are discrete rate commands. The attitude error needles are not designed to provide meaningful "fly to" information in the manual mode.
CDR +00:12	Roll program report Pitch program - report			
+00:30	Roll program - complete ELS AUTO - MAN		1	
CMP +00:42	PRPLNT DUMP - RCS CMD MODE 1B - report	00:42 MODE 1B	2	
CDR +00:50	Monitor α/Pc ind to T +02:00	RATES ±4°/sec P,Y ±20°/sec R	1	
LMP 13K' to 15K'	CAB PRESS ind - starts decrease		2	Relieves high CM-to-atmosphere ΔP. Assuming that cabin pressure at lift-off is 14.47 to 14.87 psia, the cabin pressure relief valve could begin modulating at 13K'.
	xxxxxxxxxxxxxxxxxxxxxxxx If no decrease by 25K'	ATT ERROR ±5° P,Y		

NORMAL/BACKUP

STA/T STEP	PROCEDURE	PANEL	REMARKS
CDR	rh CAB PRESS RELF vlv - DUMP (safety latch off) until CAB PRESS ind - 8 psia, then NORM (safety latch on)	MODE 1B 325 2	
CMP	If still no decrease CAB PRESS DUMP vlv - open (CCW) until CAB PRESS ind - 8 psia, then close (CW)	Side hatch 2	
	xxxxxxxxxxxxxxxxxxxxxxx	MODE 1B	
+01:17	MAX Q	100% AOA 5° ROLL error	
CDR +01:56	MODE 1C - report (R3 = 16.5 NM)	01:56 MODE 1C	
CMP +02:00	EDS AUTO - OFF 2 ENG OUT - OFF LV RATES - OFF		

STA/T	STEP	PROCEDURE	PANEL	REMARKS
CDR		α/Pc IND sw - Pc	1	
		LV RATE lt disabled as platform failure cue and limits changed to 9.2° in P&Y		
	+02:10	Report GO/NO GO for staging (Deleted)		
	+02:15	CECO (LV ENG 5 lt - on)	MODE 1C	Center engine cutoff.
		LIFT OFF lt - out (CECO +0.6 sec)		
	+02:40	OECO (LV ENG 1, 2, 3 & 4 lts - on)		Outboard engine cutoff.
	+02:41	All engine lts - out		S-IC/SII separation.
		SII/SIVB staging capability armed (OECO +1.4 sec)		
		xxxxxxxxxxxxxxxxxxxxxxxxxxxxxx		
		If early SII/SIVB staging required, LV STAGE - on (up)		
CMP			2	
		xxxxxxxxxxxxxxxxxxxxxxxxxxxxxx		
CDR				
	+02:42	LV ENG 1, 2, 3, 4 & 5 lts - on	1	SII engine ignition.
		SII SEP lt - on		SII 2nd plane separation circuitry armed.
	+02:44	All engine lts - out		SII engines 65% rated thrust.
			MODE 1C	

NORMAL/BACKUP

STA/T	STEP	PROCEDURE		PANEL	REMARKS
CMP		GLY EVAP STM AUTO - AUTO GLY EVAP H2O FLOW - AUTO		2	
CDR					
+03:12		SII SEP lt - out		1	SII interstage jettisoned.
CMP					
+03:17		TWR JETT (both) - on (up) (TFF >1+20) TWR JETT and MODE II report	03:17 MODE II	2	Guarded. On position is momentary.
		xxxxxxxxxxxxxxxxxxxxxxxxxxxxxx x x No tower jettison Go to EMERGENCY PROCEDURES, para 5.3.2.6 x x xxxxxxxxxxxxxxxxxxxxxxxxxxxxxx			
		If LV GUID sw - CMC Key V46E for manual control			Activates RCS DAP; provides steering commands to the IU for booster control. These stick commands are discrete rate commands. The attitude error needles are not designed to provide meaningful "fly to" information in the manual mode.
CDR		MAN ATT PITCH - RATE CMD LV guidance initiate (OECO +41 sec)	MODE II	1	
+03:53		Guidance good			
+04:00		Report status			

STA/T STEP	PROCEDURE	PANEL	REMARKS
LMP			
+05:00	Report status		
+05:50	SIVB to orbit capability		
CDR			
+06:00	Report status LV IND/GPI sw - GPI		
CMP	Monitor main bus voltages during gmbl motor start	3	
CDR	GMBL MOT PITCH 1 - START GMBL MOT YAW 1 - START GMBL MOT PITCH 2 - START GMBL MOT YAW 2 - START If LV GUID - CMC GMBL MOT (4) - OFF LV IND/GPI sw - SII/SIVB (Deleted)	1	START position is momentary. Start SPS gimbal motors sequentially at ≈1 second intervals to avoid power surge.
LMP			
+06:15	S BD ANT OMNI A - D (if AZ <96°)	3	
CMP			
+07:00	Report status		
+07:40	CECO (LV ENG 5 lt - on)	1	SII center engine cutoff.
LMP			
+08:00	Report status		
CDR			
+09:00	MODE IV report		
+09:13	OECO (LV ENG 1, 2, 3 & 4 lts - on)		SII outboard engines cutoff.
+09:14	All engine lts - out		SII/SIVB separation.

09:00
MODE IV

NORMAL BACKUP

STA/T	STEP	PROCEDURE	PANEL	REMARKS
		xxxxxxxxxxxxxxxxxxxxxxxxxxxxxx		
		If no SII/SIVB staging		
CMP		LV STAGE - on (up)	2	Guarded.
		xxxxxxxxxxxxxxxxxxxxxxxxxxxxxx		
CDR				
+09:17		LV ENG 1 lt - on	1	SIVB ignition.
+09:19		LV ENG 1 lt - out	MODE II	SIVB thrust to 65%.
CMP				
+10:00		Report/confirm COI	10:08	
		MODE IV	MODE III	
+11:00		Report status		
			MODE IV	
CDR				
+11:43		SECO		SIVB engine cutoff (auto).
		LV ENG 1 lt - on		
CMP		Begin time base 5		
+TBD		or if LV GUID sw - CMC	2	If CMC takeover exercised during boost, SIVB cutoff must be manually initiated at a TBD time calculated during the boost.
		LV STAGE - on (up)		
CDR		SECO		
		LV ENG 1 lt - on	1	
		Begin time base 5		

STA/T STEP	PROCEDURE	PANEL	REMARKS
	CAUTION If no SECO, go to backup. THC must be returned from CCW position before 3.0 sec or CSM/SIVB separation will occur.	MODE IV MODE III	
	xxxxxxxxxxxxxxxxxxxxxxx		
CMP	LV STAGE - on (up) If still no SECO THC - CCW - return within 1 second	2	Guarded. Positioning the THC counterclockwise for SIVB cutoff makes SIVB restart for TLI very difficult due to reconfiguration necessary.
	xxxxxxxxxxxxxxxxxxxxxxx		
CDR +11:53	INSERTION	INSERTION	
CMP	LV ENG 1 lt - out (SECO +10 sec)	1	
	Record from DSKY	2	
	VI XXXXX. FPS		VI = Inertial velocity.
	H dot XXXXX. FPS		H dot = Altitude rate.
	H pad XXXX.X NM		H pad = Altitude above pad radius. V82 should not be selected during P02 or P11 within 5 seconds of liftoff time (This applies to any extended verb which sets bit 1 of flagword 4).

NORMAL/BACKUP

STA/T STEP	PROCEDURE		PANEL	REMARKS
	(R30, Orbital Parameters)			Displays orbital parameters (N44). A meaningful display of N32 and N50 is available only during R30.
CMP	Key V82E		2	
	FL V16 N44			
	Ha	XXXX.X NM		Ha = Apogee altitude.
	Hp	XXXX.X NM		Hp = Perigee altitude.
	TFF	XXBXX MIN-SEC		TFF = Time of free fall to 49.4 NM (300,000 ft).
	Key N50E			
	Splash error	XXXX.X NM		Negative for undershoot, positive for overshoot.
	Hp	XXXX.X NM		
	TFF	XXBXX MIN-SEC		
	KEY REL			
	FL V16 N44			
	Ha	XXXX.X NM		
	Hp	XXXX.X NM		
	TFF	XXBXX MIN-SEC		If TFF = -59B59, TF perigee is available by keying N32E.
	PRO			
	V06 N62			
	VI	XXXXX. FPS		
	H dot	XXXXX. FPS		
	H pad	XXXX.X NM		
	SAFE ORBIT			
	Key V37E 00E			

STA/T	STEP	PROCEDURE	PANEL	REMARKS
		4.3.2 POSTORBITAL INSERTION CHECK		
		4.3.2.1 Status Checklist		
		(Deleted)		
CDR		GMBL MOT PITCH 2 - OFF	1	Shut off gimbal motors sequentially to avoid power surge. Setting servo 2 off first minimizes switching in the logic.
		GMBL MOT YAW 2 - OFF		
		GMBL MOT PITCH 1 - OFF		
		GMBL MOT YAW 1 - OFF		
LMP		MN BUS TIE (2) - OFF	5	
CDR		ΔV THRUST (2) - OFF	1	Guarded.
		ROT CONTR PWR DIR (both) - OFF		
		ELS AUTO - MAN (verify)		
		CM RCS LOGIC - OFF		
		cb ELS (2) - open	8	
		cb FLOAT BAG (all) - open		
		SECS PYRO ARM (2) - SAFE		Lever lock.
		SECS LOGIC (both) - OFF		Lever lock.
		cb SECS ARM (2) - open		
		AUTO RCS (16) - OFF		
		EDS PWR - OFF	7	
		TVC SERVO PWR (both) - OFF		
LMP		cb FC REACS (3) - open (verify)	226	
		cb COAS/TUNL LTG MNB - close		
		cb 02 VAC ION PUMPS (2) - close	229	
		PCM BIT RATE - LO	3	
		FC REACS VLVS - NORM		Setting switch to NORM removes holding voltage from open side of FC reactant valves.
CMP		UP TLM IU - as required	2	
		SM RCS HTRS (4) - PRIM		
		CM RCS PRPLNT (both) - OFF		

NORMAL/BACKUP

STA/T	STEP	PROCEDURE	PANEL	REMARKS
CMP		CM RCS PRPLNT tb (both) - bp	2	Barber pole indicates at least one valve (fuel or oxidizer) is closed in the particular system, 1 or 2. If there has been a sudden drop in CM RCS manifold pressure, indicative of a ruptured burst diaphragm, perform procedure for preheating the appropriate RCS system (para 4.16.1.3 or 4.16.2.3) for 15 minutes. This will vent any propellant trapped between the propellant isolation valves and RCS jets by energizing the RCS jet direct coils.
		C/W NORM - NORM		
		WARNING If the BPC JETT knob can not be positioned 180° away from the BPC JETT position before opening the side hatch, a pin in the plunger may be sheared possibly allowing the pressure seal to be broken. Cabin repressurization may not be possible due to overboard venting around the BPC plunger.		
		BPC JETT knob - Turn arrow on knob 180° away from BPC JETT decal	Side hatch	Disarms boost cover hatch release mechanism, preventing BPC JETT plunger from actuating during inflight operation of hatch.
		Actr handle sel - N (neutral)		

STA/T	STEP	PROCEDURE	PANEL	REMARKS
CMP		Vent piston chamber GN2 handle - pull (inboard) GN2 press ind - minimum	Side hatch	
ALL		MODE (3) - as desired	9,10,6	
CMP		Crew couch strut unlock lanyards (2) - stow Couch to docking position Record 2-1 data from the ground Lat_____ Long_____ GETI_____ ΔV_____		This data defines landing site and thrusting parameters for a first orbit, deorbit and entry.
CDR		Monitor LV TK PRESS ind (4) from orbit insertion to CSM/SIVB sep for the following limits ΔP <36 psid (oxid > fuel) ΔP <26 psid (fuel over oxid) LV TK PRESS >50 psia	1	Refer to mission rules concerning SIVB fuel and oxid tank pressures.
	4.3.2.2	SCS Attitude Reference Comparison Check, para 4.10.2.7		Check must be performed as near to orbit injection as possible to prevent additional drift in attitude reference systems.
	4.3.2.3	SCT/SXT Dust Cover Jett Procedure WARNING Until the optics are to be used, the OPT ZERO (panel 122), should be kept at ZERO to prevent inadvertent jettison of the optics covers.		

NORMAL/BACKUP

STA/T	STEP	PROCEDURE	PANEL	REMARKS
CMP	1	OPT PWR - on (up)	100	
		OPT ZERO - OFF	122	Optics zero switch to OFF enables function of OPT MODE and OPT SPEED switches.
		OPT MODE - MAN		
		OPT COUPLING - DIRECT		
		OPT SPEED - HI		
	2	OHC - max right		
		Observe ejection through optics		
		4.3.2.4 ECS Post Insertion Configuration		
		Secondary radiator leak check		
		Monitor SEC ACCUM QTY ind	2	
		GLY TO RAD SEC vlv - NORM for 30 sec, then BYPASS	377	
CDR		cb PL VENT FLT/PL - open	8	Prevents inadvertent opening of postlanding vent valves.
		CAB PRESS RELF vlv (2) - NORM (safety latch on)	325	
LMP		PRIM GLY EVAP STM PRESS ind - 0.10-0.15 psia	2	
		PRIM GLY EVAP OUT TEMP ind - 40-43°F		
		Initiate radiator flow		Water-glycol flow through primary loop radiators to commence no sooner than T +30:00 or later than T +55:00. After 2-1/2 minutes of flow, radiator outlet temp should be less than inlet temp.
CDR		GLY RSVR BYP vlv - OPEN	326	
		GLY RSVR OUT vlv - CLOSE		
		GLY RSVR IN vlv - CLOSE		

STA/T	STEP	PROCEDURE	PANEL	REMARKS
LMP		PRIM ACCUM QTY ind - 25-50%	2	
CMP,LMP		PRIM ACCUM FILL vlv - ON, until 50-55% is reached	379,2	The primary accumulator quantity reading must be increased by at least 8% to provide ullage in the glycol reservoir for temperature excursion.
LMP		RAD FLOW CONT PWR - PWR	2	
CDR		PRIM GLY TO RAD - normal (push)	325	
LMP		CAB TEMP - AUTO RAD PRIM HTR - 1 RAD PRIM OUT TEMP ind - below RAD PRIM TEMP IN ind	2	
		xxxxxxxxxxxxxxxxxxxxxxxxxxxxxxxxxxxx Outlet temp higher than inlet		
CDR		PRIM GLY TO RAD - BYP (pull), recheck in 10 minutes	325	ECS primary loop radiators again isolated. In 10 minutes, flow through radiators is attempted once more by repeating procedure.
		xxxxxxxxxxxxxxxxxxxxxxxxxxxxxxxxxxxx		
CMP		DRINK H2O SUP vlv - ON (CCW)	304	
LMP		ECS RAD tb - gray	2	Gray indicates No. 1 flow proportioning valve controlling flow.
		POT H2O HTR - MNA GLY EVAP IN TEMP - AUTO		
		cb WASTE DUMP HTRS (2) - close	5	
CDR		REPRESS pkg vlv - OFF	326	
	4.3.2.5	Systems Verification and Monitoring		
	1	Mount ORDEAL BOX Perform ORDEAL Initialization, para 4.10.2.8		

NORMAL BACKUP

STA/T	STEP	PROCEDURE	PANEL	REMARKS
LMP		PRIM ACCUM QTY ind - 25-50%	2	
CMP,LMP		PRIM ACCUM FILL vlv - ON, until 50-55% is reached	379,2	The primary accumulator quantity reading must be increased by at least 8% to provide ullage in the glycol reservoir for temperature excursion.
LMP		RAD FLOW CONT PWR - PWR	2	
CDR		PRIM GLY TO RAD - normal (push)	325	
LMP		CAB TEMP - AUTO RAD PRIM HTR - 1 RAD PRIM OUT TEMP ind - below RAD PRIM TEMP IN ind	2	
		xxxxxxxxxxxxxxxxxxxxxxxxxxxxxxxxxxx Outlet temp higher than inlet		
CDR		PRIM GLY TO RAD - BYP (pull), recheck in 10 minutes	325	ECS primary loop radiators again isolated. In 10 minutes, flow through radiators is attempted once more by repeating procedure.
		xxxxxxxxxxxxxxxxxxxxxxxxxxxxxxxxxxx		
CMP		DRINK H2O SUP vlv - ON (CCW)	304	
LMP		ECS RAD tb - gray	2	Gray indicates No. 1 flow proportioning valve controlling flow.
		POT H2O HTR - MNA GLY EVAP IN TEMP - AUTO cb WASTE DUMP HTRS (2) - close	5	
CDR		REPRESS PKG vlv - OFF	326	
	4.3.2.5	Systems Verification and Monitoring		
	1	Mount ORDEAL BOX Perform ORDEAL Initialization, para 4.10.2.8		

NORMAL/BACKUP

STA/T	STEP	PROCEDURE	PANEL	REMARKS
CMP	2	Perform C&WS Operational Check, para 4.7.5.1		
	3	Perform SM RCS Monitoring Check, para 4.7.2.2		
	4	Perform CM RCS Monitoring Check, para 4.7.2.3		
CMP, LMP	5	Perform EPS Checks, para 4.7.3.1 through 4.7.3.4	2,101,3,5	
	6	Perform ECS Monitoring Check, para 4.7.4.1	379,2	
LMP	7	Perform SPS Monitoring Check, para 4.7.2.1	3	
		4.3.2.6 Cabin Atmosphere Verification		
	1	CAB PRESS ind - 5.6-6.2 psia and decreasing	2	Cabin pressure will be 5.6-6.2 psia after launch and continuously decrease until the cabin pressure regulator activates and controls pressure to 4.7-5.3 psia.
CDR	2	DIRECT 02 vlv - close (CW)	7	
LMP	3	02 FLOW ind - 0.2 lb/hr	2	
CMP	4	EMER CAB PRESS sel - BOTH	351	
	5	SUIT RETURN vlv - open (pull)	380	

STA/T	STEP	PROCEDURE	PANEL	REMARKS
ALL	6	Gloves and helmet removed		
LMP	7	When CAB PRESS ind <5.3 psia 02 FLOW ind - 1.0 lb/hr 02 FLOW HI lt - on	2	After 16-second time delay.
ALL		MASTER ALARM pb/lt - on, push	1,3,122	
		CAUTION Opening cb ECS PRESS XDUCER 2 MNB to extinguish 02 FLOW HI lt is a crew option. If exercised, the following redundant functions will be lost. CO2 PP ind and C/W circuit CAB PRESS ind 02 reg out press (PCM only) GLY EVAP STM PRESS ind 02 FLOW ind		
LMP	8	cb ECS PRESS XDUCER 2 MNB - open	5	
	9	60/40 cabin purge complete at 8 hours after LM isolation following transposition and docking. For 24 hours after LM isolation following T & D, the LM pressure will be monitored at approximately 8-hour intervals using the tunnel vent valve in the LM/CM ΔP position. At 24 hours after LM isolation, it will be determined if a delta cabin purge is required and the length of this purge		

NORMAL BACKUP

STA/T STEP	PROCEDURE	PANEL	REMARKS
CMP	WASTE STOW vlv - CLOSE	252	
LMP	cb ECS PRESS XDUCER 2 MNB - close	5	
	02 FLOW HI lt - out	2	

STA/T	STEP	PROCEDURE	PANEL	REMARKS
		4.4 INJECTIONS		
		4.4.1 TRANSLUNAR INJECTION (TLI)		
		4.4.1.1 Thrusting Preparation		
		CMC - on (desired), para 4.10.1.2 ISS - on and orientation known (required), para 4.10.1.2 & 4.11 SCS - on (required), para 4.10.2.2 DAP - load and activate (desired), para 4.10.1.6 & 8 Comm Mode - as desired		Circuit breakers assumed closed except as defined in LIMITED USE CIRCUIT BREAKER list, para 4.7.8. Alignment to pad orientation unless discrepancy between SIVB IU data and CSM G/N data.
CMP	1	XLUNAR INJECT - INJECT (verify) If TLI inhibit desired XLUNAR INJECT - SAFE	2	TLI inhibit at this point will prevent start of Time Base 6. (TB6)
	2	If SIVB attitude control desired, perform para 4.9.1.7		SIVB attitude control not affected by TLI inhibit signal.
	3	Receive IU ground update - _____ UP TLM IU - as req		
	4	If required, IMU REALIGN (P52), para 4.11.2		
CDR	5	LM Docking System Probe Extension and Status Check Extend probe		

NORMAL/BACKUP

STA/T STEP	PROCEDURE	PANEL	REMARKS
CDR	cb DOCK PROBE (2) - close (verify)	8	
	CAUTION PROBE EXTD/REL should not be held in EXTD/REL position longer than 20 sec if probe has not extended. Capability of capture latch release motors may be degraded.		
CMP	PROBE EXTD/REL - EXTD/REL and hold until probe fully extended	2	Momentary up and guarded. Probe is extended by a compression spring and attenuator airhead forces. Crew should readily sense by auditory cues that probe has extended when probe bangs against the stops. May not see talkbacks go to barber pole due to rapid motion of probe. Barber pole indicates power to tb through the probe circuitry. Return to gray indicates full extension of probe.
	PROBE EXTD/REL tb (2) - gray to bp to gray		
	PROBE RETR (2) - OFF (verify)		
	PROBE EXTD/REL - RETR		Guarded.
	PROBE EXTD/REL tb (2) - gray (verify)		Verifies capture latches are not locked and that probe has started to extend.

PROBE POSITION	PROBE EXTD/REL sw & tb positions	
	EXTD/REL	RETR
FULL EXTD	gray	gray
FULL RETR	bp	bp
PARTIAL EXTD	bp	gray

STA/T STEP	PROCEDURE	PANEL	REMARKS
	6 Perform Attitude Error Display - Attitude Set Source, para 4.9.2.4		
CDR	FDAI/GPI PWR - BOTH	7	
	7 Perform EMS ΔV Test and Null Bias Check, para 4.9.6.1 and EMS ΔV Setup, para 4.9.6.2		
	8 Set up for CSM/SIVB separation capability Verify/set controls		This step is essentially a return to G&C lift-off configuration for an abort capability.
CDR,CMP	RHC (both) - ARM		
CDR	cb SECS ARM (2) - close	8	
	After MSFN AOS		
	SECS LOGIC (both) - on (up)		Lever lock.
	Report logic arm after GO from MSFN		
	SECS PYRO ARM (2) - on (up)		Lever lock.
	EDS PWR - on (up)	7	
CMP	BMAG TEMP lt (2) - out	2	
CDR	BMAG PWR (both) - ON	7	
	FDAI SCALE - 5/5	1	
	FDAI SEL - 1/2		
	TRANS CONTR PWR - on (up)		
	ROT CONTR PWR NORM (both) - AC/DC		
	ROT CONTR PWR DIR (both) - MNA/MNB		
	BMAG MODE (3) - RATE 1		
	SC CONT - SCS		
	AUTO RCS A/C ROLL (4) - OFF	8	
	AUTO RCS B/D ROLL (4) - MNA		
	AUTO RCS PITCH (4) - MNA		
	AUTO RCS YAW (4) - MNA		

NORMAL BACKUP

STA/T	STEP	PROCEDURE	PANEL	REMARKS
CDR		LV IND/GPI sw - SII/SIVB	1	
CMP		LV GUID sw - IU	2	
		UP TLM CM - BLOCK		
		UP TLM IU - as req		
CDR		Monitor LV TK PRESS ind (4)	1	
		ΔP <36 psid (oxid > fuel)		Refer to mission rules concerning SIVB fuel and oxid tank pressure.
		ΔP <26 psid (fuel > oxid)		
		LV TK PRESS >50 psia		
	2:40:00	Begin monitor for SIVB TB6		TB6 may begin after GET 2:41:02.
		EVNT TMR START - STOP		Prepares Event Timer to count up.
		Set event timer to 50:59		
		SII SEP lt - on (TIG -9 min 38 sec)		Indicates start of TB6.
		If TLI inhibit desired		
CMP		XLUNAR INJECT - SAFE	2	If switching is done between start of TB6 and TB6 +41 sec. Switching after TB6 +41 sec will be honored at TB6 +8 min 17 sec. Inhibiting will cause recycle back into TB5 for countdown to point of second opportunity.
		CAUTION		State of XLUNAR INJECT switch automatically transfers from SAFE to INJECT at CSM/SIVB separation.
		If emergency CSM/SIVB separation is desired after start of TB6, without restart of SIVB, XLUNAR INJECT switch must be in SAFE and read by the LVDC at either TB6 +41 sec or at anytime from TB6 +8 min 17 sec to TB6 +9 min 20 sec before physical CSM/SIVB separation.		

STA/T	STEP	PROCEDURE	PANEL	REMARKS
CDR 50:59		SII SEP lt - out (TIG -9 min 1 sec) EVNT TMR START - START	1	
	9	Perform GDC ALIGN, para 4.9.3 Perform Cryo 02 and H2 Manual Fan Operation, para 4.7.3.10		
LMP		PCM BIT RATE - HI TAPE RCDR FWD - FWD UP TLM CMD - RSET	3	
CMP 58:00		Select P47 (If CMC on) Key V37E 47E (thrust monitor) DSKY - P47	2	
		Poss PROG alarm Key V05 N09E (to verify alarm) 00210 (ISS not on) or 00220 (IMU orientation unknown) FL V37 Key XXE		
		FL V16 N83 ΔVX, Y, Z (cont) XXXX.X FPS		
	10	Key N62E VI XXXXX. FPS H dot XXXXX. FPS H pad XXXX.X NM		

NORMAL/BACKUP

STA/T	STEP	PROCEDURE	PANEL	REMARKS
CDR				
58:36		SII SEP lt - on (TIG -1 min 24 sec)	1	
58:38		SIVB ullage begins (TIG -1 min 22 sec)		
		WARNING TLI inhibit signals will not be honored after 59:42 (TB6 +9 min 20 sec).		
59:16		If TLI inhibit desired		
CMP		XLUNAR INJECT - SAFE	2	TLI inhibit signals received between TB6 +8 min 17 sec and TB6 +9 min 20 sec will be honored approximately 1 sec after receipt. If an inhibit signal is received during this time, a recycle back into TB5 will occur and countdown to point of second opportunity will commence.
	11	Activate TVC		
CDR		TVC SERVO PWR 1 - AC1/MNA	7	
59:42		SII SEP lt - out (TIG -18 sec)	1	SII SEP light off at this point indicates 18 seconds from SIVB restart. TLI inhibit is ignored from this point on.
		WARNING If emergency CSM/SIVB separation is performed after SII SEP lt - out (59:42), TB6 will continue to run with SIVB restart occurring at 00:00.		

STA/T	STEP	PROCEDURE	PANEL	REMARKS
ALL	12	Ready for TLI		
CDR	13	EMS MODE - NORM	1	
59:52		SIVB Fuel Lead		
59:55		SIVB ullage discontinues		
59:59		LV ENG 1 lt - on		
		4.4.1.2 TLI Thrusting		
00:00		SIVB restart (TB6 +9 min 38 sec)		SIVB engine ignition.
00:02		LV ENG 1 lt - out Monitor SIVB burn LV TK PRESS ind (4) ΔP <36 psid (oxid > fuel) ΔP <26 psid (fuel > oxid)		SIVB engine 65% rated thrust.
05:17		Monitor SIVB C/O LV ENG 1 lt - on Report cutoff		SIVB cutoff. TB7 begins.
		WARNING If late SIVB C/O, go to backup. THC must be returned from CCW position within 3.0 sec or CSM/SLA separation will occur.		

STA/T	STEP	PROCEDURE		PANEL	REMARKS
		xxxxxxxxxxxxxxxxxxxxxxxxxxxxxxxxxxxx			
		Late SIVB C/O			
CDR		THC - CCW, return within 1 sec			
		If still no SECO			
CMP		LV STAGE - on (up)		2	Guarded.
		xxxxxxxxxxxxxxxxxxxxxxxxxxxxxxxxxxxx			
		4.4.1.3 Post-TLI Activities			
CDR	1	EMS MODE - STBY		1	
CMP	2	Record ΔV			
CDR	3	EMS FUNC - OFF			
LMP	4	TAPE RCDR FWD - off (ctr)		3	
		PCM BIT RATE - LO			
	5	Check orbital parameters (R30)			
CMP		Key V82E		2	
		FL V16 N44			
		Ha	XXXX.X NM		Altitude above launch pad radius.
		Hp	XXXX.X NM		
		TFF	XXBXX MIN-SEC		TFF = Time of free fall to 49.4 NM (300,000 ft) above launch pad radius.
		PRO (exit R30)			

STA/T	STEP	PROCEDURE	PANEL	REMARKS
CMP	6	FL V16 N83 ΔVX, Y, Z (cont) XXXX.X FPS PRO FL V37 Key XXE	2	P47 display. To exit P47 when desired.
	7	Perform Postorbital Insertion Check, Status Checklist, para 4.3.2.1		
		4.4.2 LUNAR ORBIT INJECTION (LOI) For LOI go to Orbit Change Vehicle Preparation, para 4.13		
		4.4.3 TRANSEARTH INJECTION (TEI) For TEI go to Orbit Change Vehicle Preparation, para 4.13		

NORMAL/BACKUP

STA/T STEP	PROCEDURE	PANEL	REMARKS
	4.5 LM INTERFACE		
	4.5.1 MANEUVERS		Provides integrated system procedures developed by engineering analyses.
	4.5.1.1 CSM/SLA Separation and Transposition		
	1 The following are required CMC - on, para 4.10.1.2 COAS - installed and calibrated, para 4.11.7 LM Docking System Probe Extension and Status Check, para 4.4.1.1, step 5 SCS - on, para 4.10.2.2 ISS - on and orientation known, para 4.10.1.2 & 4.11 RCS DAP load and activate, para 4.10.1.6 & 8 R1 - 111XX, R2 - X1111 } Noun 46 Display		Provides G&N control capability. Provides SCS control capability.
	SIVB mnvrs to sep attitude		Establishes G&N control capability as follows: CSM configuration, 4 quad translation (quads A, B, C, D - on). CSM maneuver should be performed in the following attitude and rate deadbands in either the CMC or SCS control modes to simplify the control task during separation.
CMP	Key V16 N20E (N20) R_____ P_____ Y_____ -60° +180° + to - (N22) R____° P____° Y____° Load N22 (Docking attitude)	2	

	CMC	SCS
ATT DBD	±0.5° (R03)	±0.2° (MIN)
RATE DBD	+0.2°/sec (fixed)	±0.2°/sec (LO)
RATE CMD (RHC)	+0.5°/sec (R03)	±0.65°/sec

STA/T	STEP	PROCEDURE	PANEL	REMARKS
		Panel configuration per para 4.3.2.1		Postorbital insertion status checklist.
	2	PNL reconfiguration and sep prep		
		DSKY operations		
CMP		Key V60E	2	Nulls FDAI 1 error needles, N17 = N20.
		Key V63E		Permits display of error between present and astronaut loaded gimbal angles on FDAI 1, N20 and N17.
		Verify SM RCS activation		
		SM RCS PRPLNT tb (8) - gray		
		Set panel 1 SCS attitude controls		
CDR		TRANS CONTR PWR - on (up)	1	
		ROT CONTR PWR DIR (both) - MNA/MNB		Enables direct RCS coils for contingency takeover.
		ROT CONTR PWR NORM (both) - AC/DC		
		SC CONT - SCS		
		CMC MODE - FREE		
		BMAG MODE (3) - RATE 2		Cages the BMAGs and prevents attitude maneuver signals from causing them to hit their stops.
		ATT DBD - MIN		
		RATE - LO		
		LIM CYCLE - OFF		
		LV IND/GPI - GPI		
		AUTO RCS (16) - MNA or MNB	8	Jets enabled on MN bus A & B should be selected so that command will be maintained for the most critical maneuvers in case of either dc bus failure.
		MAN ATT (3) - MIN IMP	1	Establishes proportional manual control with rate damping for SCS backup.
		TVC SERVO PWR 1 - AC1/MNA	7	
		Establish separation performance cues		
		Perform EMS ΔV Test and Null Bias check, para 4.9.6.1, and EMS ΔV Setup, para 4.9.6.2, except set ΔV ind at -100 to avoid operation around the 0.0 fps settings		
		GDC - align, para 4.10.2.6		

STA/T	STEP	PROCEDURE	PANEL	REMARKS
CDR		Establish displays		
		FDAI SEL - 1/2	1	Enables G&N on FDAI 1, SCS on FDAI 2.
CDR,CMP		Key V37E 00E	2	Integrates state vector forward.
CDR		EVNT TMR RSET - RSET	1	Momentary.
		EVNT TMR ind - 00:00		
	3	Enable sequencer logic		Provides power to sequencer and pyro circuits for separation.
		cb SECS ARM (2) - close	8	
		After MSFN AOS		
		SECS LOGIC (both) - on (up)		Lever lock.
		Report logic arm		
		After GO from MSFN		
		SECS PYRO ARM (2) - on (up)		Lever lock.
		Perform final preseparation functions		
CMP		V66E	2	Transfer CSM state vector to LM storage.
		Key V37E 47E (thrust monitor)		Permits display of velocity change during thrusting on DSKY.
		DSKY - P47		Perform ≈60 sec prior to separation to minimize effective PIPA bias.
		FL V16 N83		
		ΔVX, Y, Z (cont) XXXX.X FPS		
		RHC 2 - ARMED		
		RCS CMD - ON		ON position is momentary. Enables RCS latching relay in SECS. This function also accomplished automatically by SECS.

NORMAL BACKUP

STA/T	STEP	PROCEDURE	PANEL	REMARKS
CDR		RHC RCS check (audible) SC CONT - CMC MAN ATT (3) - RATE CMD	1	
	4	Separation EMS MODE - NORM CMC MODE - HOLD or AUTO THC - ARMED		Perform ≈30 sec prior to separation to minimize effective EMS drift.
		THC - +X and hold 3 sec prior to separation		Initiates preseparation tension.
00:00		CSM/LV SEP pb - push and hold Start Event Timer LV TK PRESS/SPS GMBL POS ind (4) - 0 LV ENG 1 lt - out CSM/LV SEP pb - rel		Guarded. Indicates physical separation.
		xxxxxxxxxxxxxxxxxxxxxxxxxxxxxxxxxxxx		
		No separation THC - CCW (leave in detent)		Activates automatic SECS separation and direct RCS ullage.
00:00		Event Timer reset and counting up (auto) Auto RCS direct ullage		SECS delays separation for 3 seconds.
00:03		LV TK PRESS/SPS GMBL POS ind (4) - 0 LV ENG 1 lt - out		Indicates physical separation.
00:07 max		THC - neutral Auto RCS direct ullage terminated Confirm ΔV ≈1 fps		Terminates automatic direct RCS ullage.
		xxxxxxxxxxxxxxxxxxxxxxxxxxxxxxxxxxxx		

STA/T STEP	PROCEDURE	PANEL	REMARKS
CDR			
00:04 max	THC - neutral	1	After ≈4 seconds of free thrusting.
	ΔV ≈-100.8 fps		Based on CSM weight of 65,150 lb an average separation ΔV as follows: In 4.4 sec ΔV = -100.8 fps In 5.0 sec ΔV = -100.9 fps Either EMS and/or DSKY may be used to read ΔV = -100.8 fps which should be observed in 4.5±0.5 seconds. ΔV and time should be monitored concurrently to determine which cue will prevail. The EMS should provide primary cue.
5	Postseparation panel configuration		During coast to transposition. Provides normal, safe, formation flight configuration.
	EDS PWR - OFF	7	
	TVC SERVO PWR 1 - OFF		
	SECS PYRO ARM (2) - SAFE	8	Lever lock.
	SECS LOGIC (both) - OFF		Lever lock.
	cb SECS ARM (2) - open		
	cb RCS LOGIC (2) - open		
	cb EDS (all) - open		
6	Transposition		
	xxxxxxxxxxxxxxxxxxxxxxxxxxxxxxxxxxxx		
	No TLI or propulsive venting not inhibited		If TLI not performed or propulsive venting not inhibited, minimum separation distance at completion of pitch maneuver will be ≈ 65 feet.
	Do NOT perform -X translation at 00:35		
	xxxxxxxxxxxxxxxxxxxxxxxxxxxxxxxxxxxx		

NORMAL/BACKUP

STA/T STEP	PROCEDURE	PANEL	REMARKS
CDR 00:35	THC -X to ΔV = -100.3 fps MAN ATT PITCH & YAW - ACCEL CMD RHC - pitch up ≈2°/sec Visually acquire SIVB and null pitch rate	1	Positive pitch at 2°/sec followed by a negative pitch command to null rates at a total pitch maneuver of 180°. At completion of pitch maneuver, minimum separation distance will be ≈55 feet.
CMP	V62E	2	Permits display of error between present and docking attitude on FDAI 1, N20 and N22.
CDR	MAN ATT PITCH & YAW - RATE CMD RHC, THC - Null translation errors and rates Perform auto roll maneuver to docking attitude, para 4.10.1.9	1	
or	Perform man roll maneuver to docking attitude MAN ATT (3) - MIN IMP SC CONT - SCS RHC - Roll left 60° to null error needles SC CONT - CMC MAN ATT (3) - RATE CMD		
7	Adjust closing rate for formation flight at minimum distance of 15 feet or perform docking, para 4.5.1.3		Thrusting should be completed within 15 feet to avoid unnecessary plume impingement on LM.
8	High gain antenna operation, para 4.7.6.2		

STA/T STEP	PROCEDURE	PANEL	REMARKS
	4.5.1.2 Formation Flight With LM/SIVB (General)		The purpose of this procedure is to provide options for establishing and maintaining range and range rate and the desired relative or inertial attitude control.
1	The following are required SCS - on, para 4.10.2.2 CMC - on, para 4.10.1.2 ISS - on and orientation known, para 4.10.1.2 & 4.11		
2	Select desired attitude control, para 4.9.1		
3	Select desired displays, para 4.9.2		
4	RHC, THC - maintain desired position and relative velocity		
5	Monitor LM/SIVB as required		Per mission requirements and flight plan.
	4.5.1.3 Docking With LM/SIVB		This procedure may be performed subsequent to step 6 in para 4.5.1.1. At initiation of procedure, CSM should be ±15 to 50 feet from SIVB, properly aligned and in formation flight.
1	The following are required CMC - on, para 4.10.1.2 SCS - on, para 4.10.2.2 ISS - on and orientation known, para 4.10.1.2 & 4.11		Provides G&N control capability. Provides SCS control capability.

NORMAL BACKUP

STA/T STEP	PROCEDURE	PANEL	REMARKS
	RCS DAP load and activate, para 4.10.1.6 & 8 R1 - 111XX R2 - X1111 — Noun 46 display		CSM configuration, 4 quad translation (quads A, B, C, D - on). This maneuver should be performed in the following attitude and rate deadbands in either the CMC or SCS control modes to simplify the control task during docking.
CDR	Set panel 1 SCS attitude controls TRANS CONTR PWR - on (up) ROT CONTR PWR DIR (both) - MNA/MNB CMC MODE - FREE ATT DBD - MIN RATE - LO LIM CYCLE - OFF BMAG MODE (3) - ATT 1/RATE 2 SC CONT - SCS	1	

	CMC	SCS
ATT DBD	±0.5° (R03)	±0.2° (MIN)
RATE DBD	+0.2°/sec (fixed)	±0.2°/sec (LO)
RATE CMD (RHC)	+0.5°/sec (R03)	±0.65°/sec

STA/T	STEP	PROCEDURE	PANEL	REMARKS
	2	Verify control status for docking		
CDR		COAS PWR - on (up)	15	
CMP		EXT RNDZ LT - SPOT	2	
CDR		cb DOCK PROBE (2) - close	8	
		cb SECS ARM (2) - close		
		After MSFN AOS		
		SECS LOGIC (both) - on (up)		Lever lock.
		Report logic arm		
		After GO from MSFN		
		SECS PYRO ARM (2) - on (up)		Lever lock.
CMP	3	PROBE EXTD/REL - RETR (verify)	2	Guarded.
		PROBE EXTD/REL tb (2) - gray (verify)		Verifies capture latches not locked.
	4	Initiate capture latch		
CDR		THC - initiate to close at 0.25 to 0.5 fps maintain minimum lateral velocity		Rate established visually. Use COAS and docking target for alignment cues.
		RHC - maintain minimum relative alignment angles with SIVB		
		At contact, apply +X thrust as required		Contact will be indicated by audio cues, a slight disturbance in motion, and/or COAS observation.
CMP		PROBE EXTD/REL tb (2) - bp		Talkbacks barber pole indicate capture. Only one talkback required for indication. Failure to capture will also be indicated by no noticeable rebound tension load (deceleration) and separation from SIVB. If retraction initiated, it will not occur until capture.
CDR		SC CONT - CMC	1	

NORMAL/BACKUP

STA/T	STEP	PROCEDURE	PANEL	REMARKS
		xxxxxxxxxxxxxxxxxxxxxxxxxxxxxxxxxxxxxxxxxxxx		
CMP		Positive indication of no capture or divergent oscillations or abnormal motions		
		PROBE EXTD/REL - EXTD/REL	2	EXTD/REL position is momentary.
CDR		SC CONT - SCS	1	
		THC - -X withdraw to formation flight distance		
CMP		PROBE EXTD/REL - EXTD/REL for 5 sec	2	
		PROBE EXTD/REL - RETR		
		PROBE EXTD/REL tb - gray (verify)		
		Attempt redock as before		
		(Deleted)		
		xxxxxxxxxxxxxxxxxxxxxxxxxxxxxxxxxxxxxxxxxxxx		
CDR		THC - null pitch and yaw alignment error to within $\pm 3^\circ$ (minimum possible)		Alignment determined using COAS and docking target. Up to 10 seconds should be allowed for motion to be damped before initiating this step. Retraction loads may cause docking ring damage. Loads are minimum at zero misalignment during retraction.
		RHC - null roll alignment error to within $\pm 10^\circ$		Docking with roll angles $>\pm 10^\circ$ may prohibit LM umbilical connection.
	5	Initiate retraction and docking latch closure		
CMP		PROBE RETR PRIM - 1		When capture latch alignment satisfactory.
		Observe retraction movement between the two vehicles		10-inch retraction stroke should take ≈10 seconds.
		PROBE EXTD/REL tb (2) - gray		Talkback A will indicate only if docking latches 1, 5, and 9 close. Talkback B will indicate only if latches 3, 7, and 11 close. Audio and tactile cues will also indicate docking latch closure.

LM INTERFACE

STA/T	STEP	PROCEDURE	PANEL	REMARKS
		xxxxxxxxxxxxxxxxxxxxxxxxxxxxxxxxxxxxxx		
CMP		PROBE EXTD/REL tb (2) - remain bp and docking latch closure cues (auditory and tactile) unsatisfactory PROBE RETR SEC - 1 If auditory and tactile cues still unsatisfactory PROBE RETR (2) - 2 (simultaneously)	2	
		xxxxxxxxxxxxxxxxxxxxxxxxxxxxxxxxxxxxxx		
	6	Safe docking system		
CDR		SECS PYRO ARM (2) - SAFE	8	Lever lock.
		SECS LOGIC (both) - OFF		Lever lock.
		cb SECS ARM (2) - open		
		cb DOCK PROBE (2) - open		
CMP		PROBE EXTD/REL - OFF	2	Guarded.
		PROBE RETR (2) - OFF		
		EXT RUN/EVA LT -OFF		
		EXT RNDZ LT - off (ctr)		
	7	Postdocking panel configuration		
CDR		RATE - HI	1	
CMP		PRO	2	
		FL V37		
		Key 00E		
		DSKY - P00		
CDR		COAS PWR - OFF	15	
		EMS MODE - STBY	1	

NORMAL BACKUP

STA/T STEP	PROCEDURE	PANEL	REMARKS
CDR	EMS FUNC - OFF	1	
	BMAG MODE (3) - RATE 2		
CMP	TUNL LT - on (up)	2	
	Key V83E		Checks state vector.
	Key V47E		Moves LM state vector into CM state vector.
	4.5.1.4 LM Ejection From SLA		
	1 The following are required		
	Preparation for LM withdrawal completed, para 4.5.2.1		
	CMC - on, para 4.10.1.2		
	SCS - on, para 4.10.2.2		
	ISS - on and orientation known, para 4.10.1.2 & 4.11		
	RCS DAP load and activated, para 4.10.1.6 & 8		
	R1 - 21102		
	R2 - X1111		
	2 Pre-LM ejection		
CDR	cb DOCK PROBE (2) - close	8	
	Set Event Timer 00:00	1	
	cb SECS ARM (2) - close	8	
	After MSFN AOS		
	SECS LOGIC (both) - on (up)		
	Report logic arm		
	After GO from MSFN		
	SECS PYRO ARM (2) - on (up)		

STA/T	STEP	PROCEDURE	PANEL	REMARKS
	3	Perform ejection		
LMP		cb SIVB/LM SEP (2) - close (verify)	278	
CDR		TVC SERVO PWR 1 - AC1/MNA	7	
		EMS FUNC - ΔV SET	1	
		SLEW ΔV ind - -100.0		
		EMS FUNC - ΔV		
		EMS MODE - NORM		Perform ≈30 seconds prior to ejection to minimize EMS drift error.
00:00		SIVB/LM SEP - on (up)	2	Guarded.
		Start Event Timer		Spring system will provide a minimum separation velocity of ≈0.7 fps (assumes four actuators operated).
00:05		THC -X and hold		
00:08		THC - neutral		Provides a minimum separation velocity of ≈1.44 fps and a minimum separation distance of 15 feet in 14 seconds after separation. If TLI not performed or propulsive venting not inhibited, would provide a minimum separation velocity of ≈1.38 fps and a minimum separation distance of 15 feet in 15 seconds after separation. SIVB propulsive venting will cause recontact if no preventive maneuvers are performed. SM RCS lateral translation or SIVB APS pitch maneuver may be used to prevent recontact.
00:14		CMC MODE - AUTO		
	4	Postejection		
CDR		SECS PYRO ARM (2) - SAFE	8	Lever lock.
		SECS LOGIC (both) - OFF		Lever lock.
		cb SECS ARM (2) - open		
LMP		cb SIVB/LM SEP (2) - open	278	

NORMAL/BACKUP

STA/T STEP	PROCEDURE	PANEL	REMARKS
CDR	CMC MODE - FREE	1	When clear of SIVB.
	MAN ATT (3) - MIN IMP		
	SC CONT - SCS		
	Reload DAP	2	
	N46, R1 = 21111		
	EMS MODE - STBY	1	
	EMS FUNC - OFF		
	TRANS CONTR PWR - OFF		
	ROT CONTR PWR DIR (both) - OFF		
	TVC SERVO PWR 1 - OFF	7	
	cb SPS PITCH 1 BAT A - open	8	
	cb SPS YAW 1 BAT A - open		
	4.5.1.5 LM Undocking From CSM		This procedure describes CSM activities required each time LM separates from CSM after docking except for final LM separation. These procedures as written are incomplete until properly integrated with corresponding LM procedures.
	1 Perform preparation for manned LM separation, para 4.5.2.4		
	2 Perform systems preparation		
	SCS - on, para 4.10.2.2		
	Select desired displays, para 4.9.2		
	Select SCS rate damping only, para 4.9.1.4		
	cb DOCK PROBE (2) - close		
CMP	PROBE EXTD/REL - RETR	2	Guarded.
	PROBE EXTD/REL tb (2) - bp (verify)		Verifies redundant probe retract capability.
	PROBE EXTD/REL - OFF		

STA/T STEP	PROCEDURE	PANEL	REMARKS
CDR	MAN ATT (3) - RATE CMD ATT DBD - MAX RATE - HI TRANS CONTR PWR - on (up) ROT CONTR PWR NORM (both) - AC/DC ROT CONTR PWR DIR (both) - MNA/MNB RHC, THC - ARMED SC CONT - SCS BMAG MODE (3) - RATE 2	1	
3	Verify spacecraft status with LM		CDR, LMP verify spacecraft status with CSM.
4	Maneuver to separation attitude		Per flight plan. Either vehicle may maintain attitude control.
5	Perform final preparation panel operations Set Event Timers EVNT TMR RSET - DOWN		Timer will be set up to reach 00:00 at separation.
-XX:XX	EVNT TMR START - START (on signal from CDR)		START position is momentary.
6	Separation		CDR will count down to separation time.
	CAUTION		
	PROBE EXTD/REL should not be held in EXTD/REL position longer than 20 sec if probe has not extended. Capability of capture latch release motors may be degraded.	2	

NORMAL/BACKUP

STA/T	STEP	PROCEDURE	PANEL	REMARKS
CMP				
00:00		PROBE EXTD/REL - EXTD/REL and hold until 5 sec after LM separation	2	Momentary up and guarded. Probe is extended by a compression spring and attentuator airhead forces. The 10-inch extension stroke working against CSM/LM inertia takes ≈5 seconds.
		PROBE EXTD/REL tb (2) - gray to bp to gray		Barber pole indicates power to talkback through the probe circuitry. Return to gray indicates full extension of probe.
		Monitor LM separation		CDR will monitor CSM separation.
				The CSM and LM should attain a separation distance of 15 feet in 27 seconds with a separation velocity of 0.65 fps. Subsequent to 15-foot separation the LM may execute maneuvers with each vehicle configured as desired for attitude control.
	7	Postundocking reconfiguration PROBE EXTD/REL - RETR		Guarded. Required to provide capture latch talkback signal during subsequent docking.
		PROBE EXTD/REL tb (2) - gray (verify)		Verifies capture latches cocked.
		PROBE EXTD/REL - OFF		Guarded.
CDR		cb DOCK PROBE (2) - open	8	
		Prepare for contingency redocking		
CMP		EXT RUN/EVA LT - on (up) (verify)	2	
		EXT RNDZ LT - RNDZ (verify)		If required.
		Activate rendezvous transponder, para 4.7.6.9		

STA/T	STEP	PROCEDURE	PANEL	REMARKS
		4.5.1.6 LM Active Docking With CSM		This procedure describes CSM activities required each time LM docks with CSM. These procedures as written are incomplete until properly integrated with corresponding LM procedures.
	1	The following are required		
CMP		COAS - installed and calibrated, para 4.11.7		
		Docking target - installed and on		
	2	Configure spacecraft for docking		
CDR		TRANS CONTR PWR - on (up)	1	
		ROT CONTR PWR DIR (both) - MNA/MNB		
		SC CONT - CMC		
		CMC MODE - HOLD		
		BMAG MODE (3) - RATE 2		
		AUTO RCS (16) - MNA or MNB	8	
		MAN ATT (3) - RATE CMD	1	
		THC - ARMED		
CDR,CMP		RHC (both) - ARMED		
CDR		ATT DBD - MIN		
		RATE - LO		
		EXT RUN/EVA LT - on (up) (verify)	2	If required.
		COAS PWR - on (up)	15	
		cb DOCK PROBE (2) - close	8	
		PROBE RETR (2) - OFF	2	
		cb SECS ARM (2) - close	8	
		After MSFN AOS		
		SECS LOGIC (both) - on (up)		Lever lock.
		Report logic arm		
		After GO from MSFN		
		SECS PYRO ARM (2) - on (up) (verify)		Lever lock.
		Confirm spacecraft status with LM		

NORMAL/BACKUP

STA/T	STEP	PROCEDURE	PANEL	REMARKS
CDR		PROBE EXTD/REL - RETR (verify) PROBE EXTD/REL tb (2) - gray (verify)	2	Guarded. Verifies capture latches are not locked.
		xxxxxxxxxxxxxxxxxxxxxxxxxxxxxxxxxx If PROBE EXTD/REL tb - bp PROBE EXTD/REL - EXTD/REL for 5 sec PROBE EXTD/REL - RETR PROBE EXTD/REL tb (2) - gray (verify) xxxxxxxxxxxxxxxxxxxxxxxxxxxxxxxxxx		EXTD/REL position is momentary.
	3	Monitor LM closing maneuvers		LM will make final approach along +X axis at closing rates of 0.25 to 0.5 fps.
	4	Initiation of capture latch & retraction PROBE EXTD/REL tb (2) - monitor PROBE EXTD/REL tb (2) - bp		Talkbacks barberpole indicates capture. Only one talkback is required for indication. Failure to capture will also be indicated by separation from the LM. If retraction is initiated it will not occur until capture.
		xxxxxxxxxxxxxxxxxxxxxxxxxxxxxxxxxx Positive indication of no capture Advise LM no capture THC - -X withdraw to formation flight distance PROBE EXTD/REL - EXTD/REL for 5 sec PROBE EXTD/REL - RETR PROBE EXTD/REL tb (2) - gray (verify) Attempt redock as before xxxxxxxxxxxxxxxxxxxxxxxxxxxxxxxxxx		Guarded and EXTD/REL position is momentary.

STA/T	STEP	PROCEDURE	PANEL	REMARKS
CDR		Confirm capture latch to LM		
		CMC MODE - FREE	1	
		When LM aligned within ±3°		
		PROBE RETR SEC - 1	2	Initiates probe retraction. The 10-inch retraction stroke should require ≈5 seconds.
		PROBE EXTD/REL tb (2) - gray		Talkback A will indicate only if docking latches 1, 5, and 9 close. Talkback B will indicate only if latches 3, 7, and 11 close. Audio and tactile cues also indicate docking latch closure.
		xxxxxxxxxxxxxxxxxxxxxxxxxxxxxxxxxxxx		
		PROBE EXTD/REL tb (2) - remain bp and docking latch closure cues (auditory and tactile) unsatisfactory		
		PROBE RETR PRIM - 2		
		xxxxxxxxxxxxxxxxxxxxxxxxxxxxxxxxxxxx		
	5	Safe docking system		
		PROBE EXTD/REL - OFF		Guarded.
		PROBE RETR (2) - OFF		
		EXT RUN/EVA LT - OFF		
		EXT RNDZ LT - off (ctr)		
		COAS PWR - OFF	15	
		cb DOCK PROBE (2) - open	8	
		SECS PYRO ARM (2) - SAFE		Lever lock.
		SECS LOGIC (both) - OFF		Lever lock.
		cb SECS ARM (2) - open		

NORMAL BACKUP

STA/T	STEP	PROCEDURE	PANEL	REMARKS
CDR	6	Post docking operations prior to IVT		LM will configure for inactive control status.
		CMC MODE - HOLD	1	
		4.5.1.7 CSM Active Docking With LM		This procedure describes CSM activities required each time CSM docks with LM. These procedures as written are incomplete until properly integrated with corresponding LM procedures.
	1	The following is required		Range and range rate must be within docking limits.
		COAS - installed and calibrated, para 4.11.7		
	2	Configure CSM for docking		SCS functions are for backup operation.
		TRANS CONTR PWR - on (up)		
		ROT CONTR PWR DIR (both) - MNA/MNB		
		SC CONT - SCS		
		CMC MODE - FREE		
		AUTO RCS (16) - MNA or MNB	8	
		MAN ATT (3) - RATE CMD	1	
		BMAG MODE (3) - ATT 1/RATE 2		Establishes SCS attitude hold.
		THC - ARMED		
		RHC (both) - ARMED		
		LIM CYCLE - OFF		
		ATT DBD - MIN		
		RATE - LO		
		EXT RUN/EVA LT - on (up) verify	2	
		COAS PWR - on (up)	15	
		cb DOCK PROBE (2) - close	8	
		PROBE RETR (2) - OFF	2	
		cb SECS ARM (2) - close	8	

STA/T	STEP	PROCEDURE	PANEL	REMARKS
CDR		After MSFN AOS		
		SECS LOGIC (both) - on (up)	8	Lever lock.
		Report logic arm		
		After GO from MSFN		
		SECS PYRO ARM (2) - on (up)		Lever lock.
		PROBE EXTD/REL - RETR (verify)	2	
		PROBE EXTD/REL tb (2) - gray (verify)		Verifies capture latches not locked.
		xxxxxxxxxxxxxxxxxxxxxxxxxxxxxxxxxxxx		
		PROBE EXTD/REL tb (2) - bp		
		PROBE EXTD/REL - EXTD/REL for 5 sec		
		PROBE EXTD/REL - RETR		
		PROBE EXTD/REL tb (2) - gray		
		xxxxxxxxxxxxxxxxxxxxxxxxxxxxxxxxxxxx		
	3	Initiate capture latches and retraction		
		RHC, THC - align COAS with LM target		
		THC - initiate +X to close at 0.25 to 0.5 fps		Rate established visually. Use COAS and docking target for alignment cues.
		THC - maintain minimum lateral velocity		Contact will be indicated by audio cues, slight disturbance in motion and/or COAS observation.
		RHC - maintain minimum relative alignment angles with LM		
		At contact, provide cue to LM for thrusting		LM will apply +X thrusting as required on cue from CSM or by tactile cue at contact.

NORMAL/BACKUP

STA/T STEP	PROCEDURE	PANEL	REMARKS
CDR	PROBE EXTD/REL tb A and/or B - bp	2	Talkbacks barberpole indicate capture. Only one talkback required for indication. Failure to capture will also be indicated by separation from LM. If retraction initiated it will not occur until capture.
	xxxxxxxxxxxxxxxxxxxxxxxxxxxxxxxxxxxxxxx Positive indication of no capture THC - -X withdraw to formation flight distance PROBE EXTD/REL - EXTD/REL for 5 sec PROBE EXTD/REL - RETR PROBE EXTD/REL tb - gray (verify) Attempt redock as before xxxxxxxxxxxxxxxxxxxxxxxxxxxxxxxxxxxxxxx		Guarded and EXTD/REL position is momentary.
	SC CONT - CMC	1	
	THC - null pitch and yaw alignment to within $\pm 3^{\circ}$		Alignment determined using COAS and docking target.
	PROBE RETR SEC - 1	2	Initiates probe retraction. 10-inch retraction should require ≈5 seconds.
	Observe retraction movement between the two vehicles		
	PROBE EXTD/REL tb (2) - gray		Talkback A will indicate only if docking latches 1, 5, and 9 close. Talkback B will indicate only if latches 3, 7, and 11 close. Audio and tactile cues will also indicate docking latch closure.

STA/T STEP	PROCEDURE	PANEL	REMARKS
	xxxxxxxxxxxxxxxxxxxxxxxxxxxxxxxxxxxx x x		
CDR	PROBE EXTD/REL tb (2) - remain bp and docking latch closure cues (auditory and tactile) unsatisfactory	2	
	PROBE RETR PRIM - 2		
	x xxxxxxxxxxxxxxxxxxxxxxxxxxxxxxxxxxx x		
4	Safe docking system		
	PROBE EXTD/REL - OFF		Guarded.
	PROBE RETR (2) - OFF		
	EXT RUN/EVA LT - OFF		
	EXT RNDZ LT - off (ctr)		
	COAS PWR - OFF	15	
	cb DOCK PROBE (2) - open	8	
	SECS PYRO ARM (2) - SAFE		Lever lock.
	SECS LOGIC (both) - OFF		Lever lock.
	cb SECS ARM (2) - open		
5	Postdocking operations prior to IVT		
	CMC MODE - HOLD	1	
4.5.1.8	LM Jettison and Separation		
1	Perform final IVT to CSM, para 4.5.2.3		
2	Perform auto maneuver to jettison attitude, para 4.10.1.9		R62.
or	Perform SCS attitude maneuver to jettison attitude, para 4.10.2.5		

NORMAL BACKUP

STA/T	STEP	PROCEDURE	PANEL	REMARKS
CDR	3	Perform tunnel depressurization and fwd hatch seat integrity check, para 4.5.2.4, step 5		
	4	Perform LM jettison preparation		
		LM PWR - OFF (verify)	2	
		cb SECS ARM (2) - close	8	
		After MSFN AOS		
		SECS LOGIC (both) - on (up)		Lever lock.
		Report logic arm		
		After GO from MSFN		
		SECS PYRO ARM (2) - on (up)		Lever lock.
		At jettison attitude		
		BMAG MODE (3) - ATT 1/RATE 2	1	
		SC CONT - SCS		
CMP		RCS DAP - load and actuate, para 4.10.1.6 & 8		
		R1-11102 (N46 display)	2	
	5	LM jettison		
		CSM/LM FNL SEP (both) - on (up)		Guarded and momentary. Provides jettison of docking ring, with probe and LM attached, from CSM. Separation velocity of 0.4 ft/sec will be obtained with the use of the docking ring pyrotechnic separation device only (CM/LM tunnel depressurized). If four quads RCS firing is used to augment ΔV, 1.44 lb of propellants are used for every second of firing. Any pressure in CM/LM tunnel at time of separation will impart an additional ΔV up to a maximum of 1.9 ft/sec.

STA/T	STEP	PROCEDURE	PANEL	REMARKS
	6	Postjettison panel reconfiguration		
CDR		SECS PYRO ARM (2) - SAFE	8	Lever lock.
		SECS LOGIC (both) - OFF		Lever lock.
		cb SECS ARM (2) - open		
	7	Separation		
		Perform SCS attitude maneuver to separation attitude, para 4.10.2.5		
	or	Perform auto maneuver to separation attitude, para 4.10.1.9		R62.
		Monitor G&N thrusting, para 4.10.1.21		P47.
		EMS MODE - NORM	1	
		THC - -X (4 jet) for 2.0 fps ΔV		

NORMAL/BACKUP

STA/T	STEP	PROCEDURE	PANEL	REMARKS
		4.5.2 IVT		
		This section provides data which apply to all intervehicular crew transfers during the CSM mission. Because a transfer to the LM or to the CM is basically the same, only a few procedures are provided to cover all the intervehicular transfers involved in the mission. As is the practice throughout the Vol II AOH, the column heading STA/T refers to the spacecraft location where a procedure or step is performed except for those times when a crewman has transferred to the LM. In this case, the STA/T heading is used to refer directly to the corresponding crewman and not to the spacecraft location.		
		4.5.2.1 Preparation for LM Ejection		
ALL CMP	1	Configure PGAs, para 4.7.4.6b Retrieve and don helmet protective shield		
	2	Configure couches as required		
	3	Configure control panel LM PWR - OFF (verify) TUNL LT - on (up)	2	
	4	Perform docking tunnel operations Equalize CM/LM pressure, para 4.7.4.14 Remove fwd hatch, para 4.7.7.4a Verify docking latches Pull latch handle of each latch to ensure hook is engaged Verify power bungee parallel to +X axis		Tunnel pressure integrity incorporated in CM/LM pressure equalization procedure. Latch indicator button (red) may protrude through hole in latch handle if latch is not engaged.

STA/T STEP	PROCEDURE	PANEL	REMARKS
	xxxxxxxxxxxxxxxxxxxxxxxxxxxxxxxxxxxx x x		
CMP	If hook(s) not engaged Attempt to engage latch handle prior to recocking latch If power bungee not parallel to +X axis Push on top of bungee fairing to obtain final preload If hook(s) cannot be engaged or power bungee parallel to +X axis not attained Recock latch(es) and manually trigger, para 4.5.4.8, steps 2 & 4		
	x x xxxxxxxxxxxxxxxxxxxxxxxxxxxxxxxxxxxx		
	Depress GN2 bleed button (red) at aft end of probe body and hold for 10 sec		Required to bleed probe retract gas system for subsequent operation.
	Connect LM umbilical connectors (2) Open docking ring connector fairings (2) (orange) Disengage one connector from stowage receptacle in LM tunnel		One at a time.
	Pull umbilical across docking interface Align index marks Push LM umbilical connector into power receptacle in docking ring and rotate CW to lock		

NORMAL BACKUP

STA/T	STEP	PROCEDURE	PANEL	REMARKS
CMP		Route LM umbilical through slot in back of receptacle assembly and close fairing (orange)		Fairing must be closed to install hatch.
		Repeat for second umbilical		
		LM PWR - CSM	2	
		SYS TEST (2) - 4D	101	Test for integrity of electrical umbilical connection.
		SYS TEST ind - 0.5-3.2 vdc (1-6.4 amps)		
		Reinstall fwd hatch, para 4.7.7.5		
ALL	5	Reconfigure couches as required		
		4.5.2.2 IVT to LM		Procedure describes general requirements for crew transfer to LM under normal conditions. Not all steps included here are necessarily required for every IVT; utilization depends on particular time in mission when transfer occurs. Procedures as written are incomplete until properly integrated with corresponding LM procedures.
	1	The following are required		
CDR,LMP		PGAs configured, para 4.7.4.6d		
CMP		PGA - configured, para 4.7.4.6b		
		Retrieve and don helmet protective shield		
		Couches configured as required		
	2	Clear tunnel		
		TUNL LT - on (up)	2	
		Equalize CM/LM pressure, para 4.7.4.14		Tunnel pressure integrity check included as part of CM/LM pressure equalization procedure.
		Remove forward hatch, para 4.7.7.4a		
		Remove docking probe, para 4.5.4.1		
		Remove docking drogue, para 4.5.4.4		

STA/T	STEP	PROCEDURE	PANEL	REMARKS
	3	Crew Transfer		LMP umbilical hoses used as transfer hoses. Transfer umbilical hoses must be hooked up to left PGA connectors before transferring.
LMP		Connect transfer 02 hose to left PGA connectors		Red to red, blue to blue.
		rh SUIT FLOW vlv - FULL FLOW	300	
		Connect protective plugs to right PGA connectors		
		Transfer to LM head first entering LM cabin facing forward		
CMP		Set audio switches as desired by LMP	6	
				LMP will perform initial entry status check, partial activation of systems and checkout.
CDR		LM PWR - OFF (upon coordination with LMP)	2	
CMP		rh SUIT FLOW vlv - OFF (upon request from LMP)	300	LMP will connect to LM ECS and perform VHF activation and checkout.
		Upon request from LMP		
		PWR - OFF	6	
		SUIT PWR - OFF		
		AUDIO CONT - NORM		
				LMP will disconnect transfer umbilicals.
CDR		Obtain umbilicals from LMP		
CMP		ctr SUIT FLOW vlv - CAB FLOW	302	
CDR		Connect 02 transfer umbilical to left PGA connectors		Red to red, blue to blue.
		rh SUIT FLOW vlv - FULL FLOW	300	

NORMAL/BACKUP

STA/T	STEP	PROCEDURE	PANEL	REMARKS
CDR		Disconnect 02 hose from right PGA connectors		
		Connect protective plugs to right PGA connectors		
		Install interconnect on 02 hose (CDR's)		
CMP		PWR - OFF	9	
		SUIT PWR - OFF		
		AUDIO CONT - NORM		
CDR		Remove CCU from PGA connector		
CMP		Verify PWR and SUIT PWR switches on LMP's audio panel are in OFF position	6	
CDR		Connect transfer CCU to PGA		
CMP		Audio panel switches - as desired by CDR		
CDR		Transfer to LM head first entering LM cabin facing forward		
		Upon request from CDR		CDR will hook up 02 umbilical.
CMP		rh SUIT FLOW vlv - OFF	300	CDR will verify 02 flow to PGA from LM ARS and perform VHF activation and checkout.
		PWR - OFF	6	
		SUIT PWR - OFF		CDR will disconnect transfer umbilical comm cable from PGA and connect LM comm cable to PGA when headset sounds cease.
		Obtain transfer umbilicals		
		Install suit hose interconnect on 02 hoses		
		Stow transfer umbilicals		

STA/T	STEP	PROCEDURE	PANEL	REMARKS
	4	Close tunnel (docking hardware stowage)		Step to be performed when other than temporary stowage in CM cabin required, for mission phases such as DPS, docked burn, and EVA.
CMP		Install docking drogue, para 4.5.4.6 Install docking probe, para 4.5.4.3 Install fwd hatch, para 4.7.7.5 TUNL VENT vlv - LM/CM ΔP	12	
	4.5.2.3	IVT to CSM		
	1	The following are required		
ALL		PGAs configured as required		
CMP		Retrieve and don helmet protective shield if required		
		Couches configured as required		
	2	Clear tunnel		
		a. Prior to LOD		This is the normal procedure for returning to the CSM prior to LOD.
		CM/LM Pressure Equalization, para 4.7.4.14 Remove fwd hatch, para 4.7.7.4a Remove docking probe, para 4.5.4.1 Remove docking drogue, para 4.5.4.4 Equalize tunnel/LM pressure and open LM hatch		
		b. After LOD or emergency		Normal procedure for returning to CSM after LOD and would be used for an emergency return without assistance from CSM.
		Equalize LM/tunnel pressure from LM Remove docking drogue, para 4.5.4.5 Remove docking probe, para 4.5.4.2		

NORMAL/BACKUP

STA/T	STEP	PROCEDURE	PANEL	REMARKS
CMP		Stow probe and drogue in LM as required		
		CM/LM Pressure Equalization, para 4.7.4.14, if required		
		Remove fwd hatch, para 4.7.7.4		Procedure of para 4.7.7.4b would be performed only if CMP could not perform para 4.7.7.4a.
	3	Crew Transfer		
		a. From LM ECS		The procedure as written assumes that CDR normally makes transfer first. If LMP transfers first, it will be necessary for LMP and CDR to trade umbilicals.
		Verify/set rh SUIT FLOW vlv - as desired	300	
		Verify/connect hose interconnect to transfer umbilicals		
		Verify/set PWR - OFF	6	
		Verify/set SUIT PWR - OFF		
		Verify/set AUDIO CONT - NORM		
		Pass transfer umbilicals to LM		LM crewman will connect transfer 02 and comm umbilicals to PGA.
		Upon request from LM crewman (via VHF)		
		rh SUIT FLOW vlv - FULL FLOW	300	
		PWR - AUDIO/TONE	6	
		SUIT PWR - on (up)		
CDR,LMP		Transfer to CSM		
		Remove protective plugs from right PGA connectors		

STA/T STEP	PROCEDURE	PANEL	REMARKS
CDR,LMP	Remove suit hose interconnect from 02 hoses (CDR's)		
	Connect 02 umbilical (CDR's) to right PGA connectors		Red to red, blue to blue.
	lh SUIT FLOW vlv - FULL FLOW	301	
	rh SUIT FLOW vlv - OFF	300	
	Disconnect LMP's 02 hose from left PGA connectors		
	Connect protective plugs to left PGA connectors		
	Install suit hose interconnect on 02 hoses (trnfr)		
CMP	PWR - OFF	6	
	SUIT PWR - OFF		
	Verify/set AUDIO CONT - NORM		
CDR,LMP	Remove transfer CCU from PGA connector		
CMP	Verify PWR and SUIT PWR switches on CDR's audio panel are in OFF position and AUDIO CONT switch in NORM position	9	
CDR,LMP	Connect CDR's (left) CCU to PGA		
CMP	Audio panel switches - as desired		
CDR,LMP	Verify/set rh SUIT FLOW vlv - OFF	300	
	Verify/connect hose interconnect to transfer umbilicals		
CMP	Verify/set PWR - OFF	6	
	Verify/set SUIT PWR - OFF		
	Verify/set AUDIO CONT - NORM		
			LM crewman will connect transfer 02 and CCU umbilicals to PGA.

NORMAL/BACKUP

STA/T STEP	PROCEDURE	PANEL	REMARKS
CDR,LMP	Pass transfer umbilicals to LM Upon request from LMP/CDR		
CMP	rh SUIT FLOW vlv - FULL FLOW	300	
	PWR - AUDIO/TONE	6	
	SUIT PWR - on (up)		
			LM vehicle power down.
	LM/CSM power transfer		If required.
	Upon request from LMP		
	LM PWR - CSM	2	
LMP,CDR	Transfer to CSM		
	b. From PLSS/OPS and LM ECS		CDR and LMP are in LM, one crewman on LM ECS, one crewman on PLSS/OPS. LMP transferred first in these procedures because of operational considerations (i.e., amount of oxygen available in PLSS/OPS, etc.). It will be necessary for LMP and CDR to trade umbilicals once transfer completed.
CMP	Verify/set rh SUIT FLOW vlv - OFF	300	
	Verify/set PWR - OFF	6	
	Verify/set SUIT PWR - OFF		
	Verify AUDIO CONT - NORM		
			LM crewman will open LM hatch and secure.
	Pass transfer umbilicals to LM		
			LM crewman on PLSS/OPS will connect transfer 02 and comm umbilicals to PGA.
	rh SUIT FLOW vlv - as desired by LM crewman	300	
	Upon request from LM (via VHF)	6	
	PWR - AUDIO/TONE		
	SUIT PWR - on (up)		
			LM crewman will transfer through tunnel to CM.

STA/T STEP	PROCEDURE	PANEL	REMARKS
LMP,CDR	Verify/set lh SUIT FLOW vlv - OFF	301	
	Remove protective plugs from left PGA connectors		
	Connect 02 umbilical (CDR's) to left PGA connectors		Red to red, blue to blue.
	lh SUIT FLOW vlv - FULL FLOW		
	rh SUIT FLOW vlv - OFF	300	
	Disconnect 02 transfer umbilicals from right PGA connectors		
	Connect protective plugs to right PGA connectors		
	Install interconnect on 02 hose		
	PWR - OFF	6	
	SUIT PWR - OFF		
	Verify/set AUDIO CONT - NORM		
	Verify/set PWR - OFF	9	
	Verify/set SUIT PWR - OFF		
	Verify/set AUDIO CONT - NORM		
	Remove transfer CCU from PGA		
	Audio panel switches - as desired		
	Verify/set rh SUIT FLOW vlv - OFF	300	
	Verify/connect hose interconnect to transfer umbilicals		
CMP	Verify/set PWR - OFF	6	
	Verify/set SUIT PWR - OFF		
	Verify/set AUDIO CONT - NORM		
	Pass transfer umbilicals to LM		LM crewman will connect transfer 02 and CCU umbilicals to PGA.

NORMAL/BACKUP

STA/T	STEP	PROCEDURE	PANEL	REMARKS
		Upon request from CDR/LMP		
LMP,CDR		rh SUIT FLOW vlv - FULL FLOW	300	
CMP		PWR - AUDIO/TONE	6	
		SUIT PWR - on (up)		
				LM vehicle power down.
		LM/CSM power transfer		If required.
		Upon request from LM crewman		
		LM PWR - CSM	2	
CDR,LMP		Transfer to CSM		
		Install docking drogue, para 4.5.4.5 or 4.5.4.6		If required.
		Install docking probe, para 4.5.4.1		If required.
		Install forward hatch, para 4.7.7.5		
	6	Close tunnel (docking hardware stowage), prior to LOD only		
CMP		Install docking drogue, para 4.5.4.6		
		Install docking probe, para 4.5.4.3		
		Install fwd hatch, para 4.7.7.5		
		TUNL VENT vlv - LM PRESS	12	
	4.5.2.4	Preparation for Manned LM Separation		
	1	Complete crew transfer to LM, para 4.5.2.2		
	2	Remove LM umbilicals		
		LM PWR - OFF	2	
		Open docking ring connector fairings (2) (orange)		
		Pull connector shell inboard and rotate CCW to unlock		

STA/T	STEP	PROCEDURE	PANEL	REMARKS
CMP		Pull connector inboard to disengage from receptacle Repeat for second umbilical Close docking ring connector fairings (2) (orange) Pull lanyard on LM end of umbilical		Connector lanyard located behind flat panel near LM hatch.
		Remove umbilical from tunnel and stow in CM		
	3	Install tunnel hardware Install docking drogue, para 4.5.4.6 Install docking probe, para 4.5.4.3		
	4	Preload probe and disengage docking latches Preload docking probe, para 4.5.4.7		
		CAUTION Verify that CSM RCS roll commands are inhibited before disengaging docking latches. Roll commands may be initiated after cabin/tunnel $\Delta P \geq 3.5$ psid.		Firing the RCS roll thrusters with latches disengaged and cabin/tunnel $\Delta P < 3.5$ psid may result in docking interface slippage.
		Disengage docking latches, para 4.5.4.8, steps 1 through 3		

STA/T	STEP	PROCEDURE	PANEL	REMARKS
		xxxxxxxxxxxxxxxxxxxxxxxxxxxxxxxxxxxxxxxxxxx		
CMP		Master alarm tone sounds		
		Re-engage/verify 3 docking latches ≈120° apart are engaged, para 4.5.4.8, step 4		
		Determine O_2 FLOW HI lt - on		
		MASTER ALARM pb/lt - on (push)	122	
		Use tool F to drive hex fitting on aft end of preload handle 180° maximum in the CW direction		
		Torque preload handle CW until load limiter releases		
		Cock engaged docking latches, para 4.5.4.8 steps 1-3		
		Master alarm tone does not sound		
		Proceed with the procedure (step 5)		
		or Master alarm tone sounds		Suit may balloon.
		Install fwd hatch, para 4.7.7.5		
		Proceed with the procedure deleting step 5 (secure tunnel hatches and check integrity)		
		xxxxxxxxxxxxxxxxxxxxxxxxxxxxxxxxxxxxxxxxxxx		
	5	Secure tunnel hatches and check integrity		
		Install fwd hatch, para 4.7.7.5		
		Verify LM hatch is closed and valve properly set		LM function.

STA/T STEP	PROCEDURE	PANEL	REMARKS
CMP	Verify CAB PRESS ind - 4.8-5.2 psia	2	
	Read O_2 FLOW ind		
	TUNL VENT vlv - TUNL VENT for 30 sec	12	
	TUNL VENT vlv - LM/CM ΔP and check ΔP increase		
	TUNL VENT vlv - TUNL VENT until ΔP >3.5 psi		
	Verify LM/CM ΔP ind remains constant within ±0.2 psi at last value read for 2 min		
	Verify 02 FLOW ind - no increase	2	
	xxxxxxxxxxxxxxxxxxxxxxxxxxxxxxxxxxxxxxxxxx		
	02 FLOW ind - increases and/or LM/CM ΔP ind - pressure differential decreases	12	
	02 FLOW ind remains stable, LM hatch is probably not integral - advise LM crew	2	
	02 FLOW ind increases, the CM fwd hatch is probably not integral		
	Pressurize tunnel using PRESS EQUAL vlv	Fwd hatch	
	Open fwd hatch, para 4.7.7.4a		
	Check for foreign object(s) jammed in tunnel/hatch seal interface or hatch seal damage		

NORMAL BACKUP

STA/T	STEP	PROCEDURE	PANEL	REMARKS
CMP		Close fwd hatch, para 4.7.7.5	Fwd hatch	
		Reinitiate step 5 (secure tunnel hatches and check integrity)		
x		xxxxxxxxxxxxxxxxxxxxxxxxxxxxxxxxxxxxxxxxxx	x	
		TUNL VENT vlv - TUNL VENT for at least 10 min (undocking only)	12	Required to vent the tunnel pressure to zero to allow LM RCS 4-jet yaw or CSM RCS 4-jet roll maneuvers. During LM RCS jet test firings, the CSM roll attitude control will be disabled.
		TUNL VENT vlv - LM/CM ΔP		
		LM/CM ΔP ind - >4 psid (pegged)		
		TUNL VENT vlv - OFF		
		TUNL LT - OFF	2	
		For jettison only		
		TUNL VENT vlv - TUNL VENT for at least 10 min	12	
		TUNL LT - OFF	2	
	6	Configure cabin for separation		
		Remove center couch and stow		
		Install docking target and receive alignment verification from LM		
		Configure side hatch for unaided ingress		
		Actr handle sel - N (neutral)		
		Vent counterbalance piston chamber		
		GN2 vlv handle - pull (inboard)		
		GN2 press ind - minimum		

STA/T STEP	PROCEDURE	PANEL	REMARKS
	4.5.3 EXTRAVEHICULAR ACTIVITY		
	1 CSM Preparation		
	Configure PGA as desired, para 4.7.4.6		
	Configure couches as required		
	Disable desired RCS jets (Quad A)		
CMP	AUTO RCS	8	
	A/C ROLL A1, A2 - OFF		
	B/D ROLL (4) - OFF		
	PITCH A3, A4 - OFF		
	YAW B3, D4 - OFF		
	Verify side hatch counterbalance mechanism is disengaged, para 4.7.7.3a (if desired)		
	Reconfigure PGA, para 4.7.4.6b		
	Perform PLSS comm check if required on request by LM		
	VHF AM A - DUPLEX	2	
	VHF AM B - off (ctr) (verify)		
	VHF RNG - OFF (verify)		
	Verify comm with		
	2 PLSS - CDR (EVCS #1) and LMP (EVCS #2)		
	or 1 PLSS - EVCS #1 or EVCS #2		
	Perform suit circuit and PGA integrity check, para 4.7.4.9a		
	Dump CM pressure, para 4.7.4.11		

NORMAL/BACKUP

STA/T	STEP	PROCEDURE	PANEL	REMARKS
	2	Side Hatch Operation		
		WARNING The hatch should not remain in the open position and exposed to worst conditions for longer than 60 minutes as warpage may occur and make the hatch difficult to close.		
	a.	From CM Interior		The particular method and crewmen involved in opening the hatch is optional (by crew coordination per the flight plan).
CMP		Open side hatch, para 4.7.7.1a or b Close side hatch, para 4.7.7.2a		
	or b.	From CM Exterior		
LMP		Open side hatch, para 4.7.7.1c		
	or c.	From CM Interior/Exterior		
CMP,LMP		Close side hatch, para 4.7.7.2b		
	3	Vacuum Transfer to CSM ECS		
	a.	From LM ECS Perform transfer per para 4.5.2.3-6		
	b.	From OPS and PLSS/OPS		All crewmen are in CM, the CDR is on OPS, the LMP is on PLSS/OPS. Although these procedures are written sequentially, the actual transfers of the CDR and LMP to the CSM ECS may be performed concurrently depending upon operational considerations (i.e., the amount of oxygen remaining in the OPS and PLSS/OPS, other time constraints, etc.). CDR and LMP assist each other as required.

STA/T	STEP	PROCEDURE	PANEL	REMARKS
CDR		Verify/set lh SUIT FLOW vlv - OFF	301	
CMP		Verify/set PWR - OFF	9	
		Verify/set SUIT PWR - OFF		
		Verify/set AUDIO CONT - NORM		
CDR		Remove PGA connector thermal covers		
		Connect 02 umbilical (CDR's) to right PGA connectors		Red to red, blue to blue.
		lh SUIT FLOW vlv - FULL FLOW	301	
		OPS 02 shutoff valve - close		
		Close purge valve in left PGA outlet connector		
		Connect CCU (CDR's) to PGA		
		Audio panel switches - as desired	9	
LMP		Verify/set rh SUIT FLOW vlv - OFF	300	CDR is positioned nearest suit flow valves.
CMP		Verify/set PWR - OFF	6	LMP may perform these operations depending upon his position in the CM.
		Verify/set SUIT PWR - OFF		
		Verify/set AUDIO CONT - NORM		
LMP		Remove PGA connector thermal covers		
		Remove purge valve from right PGA outlet connector		This operation should be deferred until the CM is repressurized if operationally feasible.
		OPS 02 shutoff valve - close		
		Disconnect OPS 02 hose from right PGA inlet connector		
		Connect 02 umbilical (LMP's) to right PGA connectors		Red to red, blue to blue.
CDR		rh SUIT FLOW vlv - FULL FLOW	300	

NORMAL BACKUP

STA/T	STEP	PROCEDURE	PANEL	REMARKS
LMP		PLSS FAN sw - OFF	PLSS	
		PLSS O2 SHUTOFF vlv - CLOSE		
		PLSS PUMP sw - OFF		
		PLSS MODE SELECTOR sw - OFF (position 3)		
		Disconnect PLSS electrical umbilical from PGA		
		Connect CCU (LMP's) to PGA		
		Audio panel switches - as desired	6	
ALL	4	CSM POST-EVA Reconfiguration		
		Repressurize CM, para 4.7.4.8a or 4.7.4.8b		
		Reconfigure couches as required		

STA/T	STEP	PROCEDURE	PANEL	REMARKS
		4.5.4 TUNNEL MECHANICAL SYSTEMS		
		4.5.4.1 Docking Probe Removal (CM side)		
CMP	1	Panel and tunnel configuration PROBE (3) - OFF cb DOCK PROBE (2) - open Fwd hatch removed, para 4.7.7.4 Auto docking latches engaged (at least 3 engaged latches ≈120° apart)	2 8 tunl	PROBE EXTD/REL switch is guarded.
	2	Verify extend latch engaged, indicator (red) not visible		If probe is being removed after previously being installed for stowage, it will not be necessary to perform steps 2, 3, and 4. Step 2 should be performed only after TLD.
		xxxxxxxxxxxxxxxxxxxxxxxxxxxxxxxxxxxx If extend latch is not engaged, indicator (red) not flush with latch housing Preload sel lever - rotate CW (away from orange stripe) Preload handle - torque CCW until extend latch engages, indicator (red) not visible xxxxxxxxxxxxxxxxxxxxxxxxxxxxxxxxxxxx		

NORMAL/BACKUP

STA/T STEP	PROCEDURE	PANEL	REMARKS
	GN2 bleed button (red) - press and hold for 10 sec	tunl	GN2 bleed button (red) located under pyro components cover, depressurizes probe retract system when depressed.
	Preload sel lever - rotate CCW (parallel to orange stripe) Preload handle - torque CW until load is removed from support beams		Support beams may become loose in docking ring sockets.
3	Preload sel lever - rotate CW (away from orange stripe) Preload handle - torque CCW until extend latch engages, indicator (red) not visible GN2 bleed button (red) - press and hold for 10 sec		Step 3 should be performed only after LOD. GN2 bleed button (red), located under pyro components cover, depressurizes probe retract system when depressed.
4	Disconnect and stow probe umbilicals Pull connector shell (yellow) and rotate CCW to unlock Pull connector to remove, align yellow mark with stowage connector (yellow) and push to engage Rotate connector shell CW to lock Repeat for second probe umbilical (yellow) Close probe umbilical connector covers (2) (yellow) Position preload handle against stowed probe umbilical Preload sel lever - place to mid-position		Stowage connector located on aft side of support beams.

STA/T STEP	PROCEDURE	PANEL	REMARKS
	5 Fold probe		
	Pull installation strut from clip on support beam, rotate foot 180° and position against tunnel wall between yellow marks		
	Rotate capture latch release handle lock CCW to unlock (orange stripe visible)		
	Depress ratchet handle rel button (gray) and pull ratchet handle aft to full extension		Ratchet handle rel button (gray) is on aft end of ratchet handle.
	Depress ratchet handle rel button (gray) and push ratchet handle to first detent (red band only visible)		
	Push ratchet handle outboard 30° and hold allowing probe to fold		Probe fully folded when Teflon block on Z-support beam within 1/4 inch of ratchet housing.
	xxxxxxxxxxxxxxxxxxxxxxxxxxxxxxxxxxxxxxxxxxxx		
	Probe will not fold		
	Using tool F, rotate jam nut and hex bolt (ratchet handle stop) CCW to remove bolt		
	Push ratchet handle outboard until probe releases and hold until probe folds		
	(Subsequent installations of probe must be done very carefully to avoid releasing the ratchet and folding the probe while attempting to install it)		
	xxxxxxxxxxxxxxxxxxxxxxxxxxxxxxxxxxxxxxxxxxxx		

NORMAL BACKUP

STA/T STEP	PROCEDURE	PANEL	REMARKS
	Depress ratchet handle rel button (gray) and pull ratchet handle aft to full extension Push ratchet handle outboard 25° for one stroke only Depress ratchet handle rel button (gray) and with ratchet handle held inboard, push fully fwd to stow position Rotate installation strut foot 180° to stow position and restow installation strut in clip on support beam		
6	Release probe from drogue Pull capture latch rel handle from recess, rotate 180° CW and push fwd into recess Grasp probe support handle and pull aft to rel probe from drogue		≈25 pounds pull required to release probe.
	xxxxxxxxxxxxxxxxxxxxxxxxxxxxxxxxxxxxxxxxxx If probe will not release from drogue Pull installation strut from clip on support beam, rotate foot 180° and position against tunnel wall between yellow marks Depress ratchet handle rel button (gray) and pull ratchet handle aft to full extension		

STA/T	STEP	PROCEDURE	PANEL	REMARKS
		Push ratchet handle outboard 25° to stop and repeat until support beams engage docking ring sockets		
		Rotate preload sel lever CCW (parallel to orange stripe)		
		Rotate capture latch rel handle 180° CW and hold		
		Torque preload handle CW until capture latches release from drogue		
		Fold probe, step 5		
		xxxxxxxxxxxxxxxxxxxxxxxxxxxxxxxxxxxxxxxxxx		
		Remove probe from tunnel and stow as required		Temporary stowage provided on lh couch.
		4.5.4.2 Docking Probe Removal (LM side)		Steps 1 and 3 only are required if probe previously installed for stowage.
CMP CDR	1	Panel and tunnel configuration PROBE (3) - OFF cb DOCK PROBE (2) - open Drogue removed, para 4.5.4.5	2 8	PROBE EXTD/REL switch guarded.
CMP	2	Disconnect probe umbilicals (2) Pull connector shell (yellow) inboard and rotate CCW to unlock Pull connector inboard to remove Repeat for second probe umbilical (yellow) Close probe umbilical connector covers (2) (yellow)		

STA/T	STEP	PROCEDURE	PANEL	REMARKS
CMP	3	Fold probe		
		Depress ratchet handle rel button (gray) and push ratchet handle toward CM, 1 inch to first detent		Ratchet handle rel button (gray) on CM end of ratchet handle. An alternate method to release ratchet shaft is to pull release trigger (blue) on LM end of shaft.
		Unstow LM side rel handle (blue) by sliding handle toward LM to clear locking tang and rotate toward LM to stop		
		Push LM side rel handle outboard 30° and hold, allowing probe to fold		This action could take up to 70 pounds of handle force. Precaution should be taken to restrain probe since folding action may push probe toward LM.
		Remove probe from tunnel and stow as required		Stowage for LM jettison provided in LM.
		4.5.4.3 Docking Probe Installation (CM side)		Steps 1 through 6 are required to install probe for stowage. Step 5 is required only for probe stowage.
	1	Panel and tunnel configuration		
		PROBE (3) - OFF (verify)	2	PROBE EXTD/REL switch guarded.
		cb DOCK PROBE (2) - open	8	
		Fwd hatch removed, para 4.7.7.4		
		Drogue installed, para 4.5.4.6		
	2	Remove probe from stowage		Temporary stowage provided on lh couch.
		Pull capture latch rel handle from recess and rotate 150° CCW to cock capture latches		Orange arrow on pyro cover should align with orange end at capture latch release handle. Do not force handle.
		Move probe into tunnel		

STA/T	STEP	PROCEDURE	PANEL	REMARKS
CMP	3	Engage capture latches Push probe head into drogue until capture latches engage and lock		A slight pull in aft direction will disengage capture latches if not fully engaged.
		Rotate capture latch release handle CCW 30° to lock capture latches and push fwd into recess		Colored ends of capture latch release handle should match colors on probe collar. Do not force handle.
		Verify probe capture latch rel (LM side) button protrudes above probe head		LM crewman must make this verification. Probe capture latch release button is on LM side of drogue when capture latches are engaged.
	4	Engage probe in docking ring Pull installation strut from clip on support beam, rotate foot 180° and position against tunnel wall between yellow marks		Yellow marks are located on -Z axis. Probe support beam and corresponding docking ring socket are color-coded yellow.
		Depress ratchet handle rel button (gray) and pull ratchet handle aft to full extension (green and red bands visible)		Ratchet handle release button (gray) is on aft end of ratchet handle.
		Push ratchet handle outboard 25° to stop and repeat until probe support beams (3) engage in docking ring sockets		From this point ≈19 strokes are required to install probe. An orange hash mark on collar conduit becomes visible when fully installed. Care should be exercised to ensure probe support beams (3) align with docking ring sockets and end of pitch arms do not interfere with docking latch fairings.
		xxxxxxxxxxxxxxxxxxxxxxxxxxxxxxxxxxxxxxxxxxxxxxx		
		If pushing ratchet handle outboard does not advance support beams to engage docking ring sockets		

NORMAL BACKUP

STA/T STEP	PROCEDURE	PANEL	REMARKS
CMP	Depress ratchet handle rel button (gray) and push ratchet handle fwd to first detent (red band only visible) Slowly push ratchet handle outboard ≈25° until ratchet pawl engages (audible click) and repeat until 3 probe support beams engage in docking ring sockets (If ratchet handle is pushed outboard past point of pawl engagement, probe will release) xxxxxxxxxxxxxxxxxxxxxxxxxxxxxxxxxxxxxxxxxx Verify ratchet pawl ind (red) is flush with ratchet housing xxxxxxxxxxxxxxxxxxxxxxxxxxxxxxxxxxxxxx If ratchet pawl ind is protruding above ratchet housing Push ratchet handle outboard 25° to stop and hold Press ratchet pawl ind (red) to seat pawl (ind flush) Return ratchet handle to full inboard position xxxxxxxxxxxxxxxxxxxxxxxxxxxxxxxxxxxxxx		If ratchet pawl not audible, watch action of ratchet pawl indicator (red).

STA/T	STEP	PROCEDURE	PANEL	REMARKS
CMP		Depress ratchet handle rel button (gray) and with ratchet handle held inboard, push fully fwd to stow position Rotate installation strut foot 180° to stow position and restow installation strut in clip on support beam		
	5	Adjust preload handle in direction required to maintain support beams in an unloaded condition		This step required only if probe installed in tunnel for stowage. Support beams may become loose in docking ring sockets. Rotate preload sel lever CCW (parallel to orange stripe) to move extend latch aft (compress probe) and CW (away from orange stripe) to move extend latch fwd (expand probe).
		Position preload handle at a 45° angle to support beam (either side)		Position provides clearance with fwd hatch actuator handle.
	6	Push preload shaft fwd into detent Push capture latch rel handle fwd into detent Rotate capture latch rel handle lock CW to lock (orange stripe not visible)		
	7	Connect probe umbilicals		This step is not required when installing probe for stowage.
		Pull probe umbilicals covers (2) (yellow) inboard and rotate fwd to open		Probe umbilical covers are located in docking ring.

NORMAL/BACKUP

STA/T	STEP	PROCEDURE	PANEL	REMARKS
CMP		Pull connector shell (yellow) aft and rotate CCW to unlock Pull connector to remove, align with docking ring connector (yellow) and push to engage Rotate connector shell CW to lock Repeat for second probe umbilical (yellow)		Probe umbilical connectors are stowed on probe support beams.
	4.5.4.4	Docking Drogue Removal (CM side)		Normally accomplished when all three crewmen are in CM prior to an IVT to LM and normally follows probe removal.
		Docking probe removal, para 4.5.4.1		
		Pull and rotate (CCW) drogue lock lever until flush against tunnel wall	tunl	
		Remove drogue		Drogue outer ring should be grasped with both hands at opposite sides. Drogue lugs must move to left end of support fitting before drogue can be pushed free. Care must be taken not to strike LM hatch.
		Rotate (CW) and push until 3 drogue lugs clear support fittings Rotate toward CM and grasp any 2 handles		
		Maneuver drogue past support fittings and stow in CM		Drogue must be canted and rotated to clear tunnel. Drogue stowed under LMP couch.

STA/T STEP	PROCEDURE	PANEL	REMARKS
	4.5.4.5 Docking Drogue Removal (LM side)		
1	Verify auto docking latches engaged (at least 3 engaged latches ≈120° apart)	tunl	Step 1 should be performed only after LOD. This could be visual verification or tactile verification using tool B if required.
	Push probe capture latch rel button with tool B		Releases three probe capture latches and extend latch will engage automatically to prevent probe from re-extending.
	Verify that probe head retracts from drogue		
	xxxxxxxxxxxxxxxxxxxxxxxxxxxxxxxxxxxx If probe head does not retract from drogue Remove probe from CM side, para 4.5.4.1 Remove drogue, steps 2 and 4 or para 4.5.4.4 xxxxxxxxxxxxxxxxxxxxxxxxxxxxxxxxxxxx		
	xxxxxxxxxxxxxxxxxxxxxxxxxxxxxxxxxxxxxxx If capture latches will not release Release probe, para 4.5.4.1, steps 1, 3, 2, 4, and 5 Release drogue, step 2 Remove probe and drogue connected, and stow in LM xxxxxxxxxxxxxxxxxxxxxxxxxxxxxxxxxxxxxxx		This procedure requires a crewman in both LM and CM.

NORMAL BACKUP

STA/T STEP	PROCEDURE	PANEL	REMARKS
	2 Remove drogue Rotate drogue lock lever inboard 90° Push drogue lock lever and rotate 90° CW to unlock drogue Rotate drogue CCW until drogue lugs (3) clear tunnel drogue supports (3)		
	3 Depress capture latch rel button with tool B and hold Pull on drogue handle to release capture latches		Step 3 should be performed only when probe and drogue were previously installed for stowage.
	xxxx

STA/T STEP	PROCEDURE	PANEL	REMARKS
	Maneuver past support fitting in LM tunnel		Drogue must be canted and rotated to clear support fittings in tunnel. Limited clearance between LM hatch and support fittings requires care in maneuvering drogue if closed. Handles should be used for support.
	Align drogue lugs (3) with support fittings in LM tunnel		Drogue must be held along outer diameter at opposite sides adjacent to drogue lugs. At this point drogue handles are facing LM hatch.
	Pull drogue lugs into support fittings and rotate (CCW) until lugs hit stops in support fittings		Ramps on support fittings will guide drogue lugs into support fitting recesses.
	Push and rotate drogue latch lever 90° (CW)		This locks drogue latch mechanism.
	4.5.4.7 Probe Preload Operation		
	Rotate preload select lever CCW (parallel to orange stripe)		
	Torque preload handle CW until load limiter releases		Preload handle extension may be telescoped outboard to provide additional leverage if required.
	xxxxxxxxxxxxxxxxxxxxxxxxxxxxxxxxxxxxx		
	If preload handle will not drive Use tool F to drive hex fitting on aft end preload shaft in CW direction. Apply an estimated 30 to 40 lb on tool F handle		
	xxxxxxxxxxxxxxxxxxxxxxxxxxxxxxxxxxxxx		

NORMAL/BACKUP

STA/T STEP	PROCEDURE	PANEL	REMARKS
	Verify capture latch release button protudes above probe head		LM crewman must make this verification. Capture latch release button on LM side of drogue when capture latches are engaged.
	Push preload handle inboard to detent and position at 45° angle to support beam (either side) Rotate preload sel lever to mid-position Verify capture latch rel handle lock is in the locked position (orange stripe not visible)		Position provides clearance with fwd hatch handle.
	4.5.4.8 Tunnel Latch Operations		
1	Verify probe is preloaded, para 4.5.4.7		
2	Cocking of latches		Any suitable tool may be used to trigger release lever if desired.
	WARNING To avoid possible injury to fingers or damage to the PGA, care must be taken not to place fingers under or near a latch while cocking, nor under or near the latch hook of a cocked latch.		
	Depress rel button behind handle latch grip and pull latch handle down two complete strokes		This procedure disengages and cocks latch. It may take only one complete stroke to cock each latch.

STA/T STEP	PROCEDURE	PANEL	REMARKS
	xxxxxxxxxxxxxxxxxxxxxxxxxxxxxxxxxxxxxxxxxx		
	If latch handle cannot be pulled		
	While pulling handle, depress rh no-back pawl on bottom until it disengages from ratchet tooth		
	If latch handle pulls free, remove pressure from rh no-back pawl and complete cocking procedures		
	If latch handle still cannot be pulled		
	While pulling handle, depress lh no-back pawl through fairing covering hole with tools E and R until ratchet tooth disengages and latch handle pulls free		
	Remove pressure from lh no-back pawl and complete cocking procedure		
	If latch handle still cannot be pulled		
	Remove fairing covering lh no-back pawl (using tools E and R)		
	While pulling handle, depress both no-back pawls on the bottom until ratchet teeth are disengaged and latch handle pulls free		
	Remove pressure from both no-back pawls and complete cocking procedure		
	xxxxxxxxxxxxxxxxxxxxxxxxxxxxxxxxxxxxxxxxxx		

STA/T	STEP	PROCEDURE	PANEL	REMARKS
		Verify hook rotates inboard to clear LM ring		
		xxxxxxxxxxxxxxxxxxxxxxxxxxxxxxxxxxxxx x x If latch hook does not release from LM ring on first stroke Push top of AUX REL (yellow) button and proceed with second stroke x x xxxxxxxxxxxxxxxxxxxxxxxxxxxxxxxxxxxxx		
		Verify/push latch handle outboard against latch hook		Prevents latch handle sticking inboard which could prevent the latch primary trigger from resetting after undocking.
	3	Repeat step 2 until all 12 latches are disengaged and cocked		Latches are reset for subsequent docking operations.
	4	Manual triggering of latches Push manual release lever at side of latches		This procedure engages latch. Manual release lever located at lower right side of latch handle. Use tool L to push manual release lever.

STA/T	STEP	PROCEDURE	PANEL	REMARKS
		4.6 RENDEZVOUS		
		4.6.1 TPI SEARCH (P17)		The purpose of this procedure is to: • Compute parameters associated with minimum energy, safe periapsis transfer maneuver and resultant intercept if GETI (TPI) provided by DSKY input. • Provide Astronaut with option of defining to CMC initial transfer trajectory search sector for central angles either > or <180° from position of active vehicle (CSM) at GETI (TPI). • Display parameters associated with transfer (TPI and intercept). This procedure may be performed concurrently with P20 or independently. If P20 is operating, sighting marks on LM may be initiated by keying V57E (R21) or V54E (R23). For sighting mark procedures, refer to para 4.6.2, steps 5-7 or 8-10, respectively. In addition, if P20 is operating, a VHF ranging data state vector update may be initiated by keying V87E.
		CMC - on (required), para 4.10.1.2		
CMP	1	Key V37E 17E DSKY - P17	2,140	
	2	FL V06 N37 GETI (TPI)	00XXX. HRS 000XX. MIN 0XX.XX SEC	

NORMAL/BACKUP

STA/T	STEP	PROCEDURE		PANEL	REMARKS
CMP		Accept	Record GETI (TPI) PRO	2,140	
		Reject	Key V25E Load desired GETI (TPI)		
	3	FL V06 N72			
		Δ ang (TPI)	XXX.XX DEG		Δ ang (TPI) - Central angle between vehicles at GETI (TPI). +, CSM ahead; -, CSM behind.
		Δ alt (TPI)	XXXX.X NM		Δ alt (TPI) - Magnitude of altitude difference. +, LM above; -, LM below.
		Search option	0000X.		Search option - 00001, seach for central angle <180°; 00002, search for central angle >180° (from CSM at GETI (TPI) to intercept).
		Accept	Record data PRO		
			Poss FL V05 N09 00124 (alarm code) Key V32E Return to step 2		If no solution exists. To adjust GETI (TPI) and/or search option.
		Reject	Key V32E Return to step 2 to adjust GETI (TPI)		
		or	Key V23E Load desired search option		

STA/T	STEP	PROCEDURE	PANEL	REMARKS
CMP	4	FL V06 N58	2,140	
		Hp XXXX.X NM		Hp - Perigee altitude above launch pad radius for earth orbit, or perilune altitude above landing site radius for lunar orbit, after TPI maneuver. If Hp >9999.9 NM this display will become meaningless.
		ΔV (TPI) XXXX.X FPS		ΔV (TPI) - Required impulsive ΔV to accomplish the TPI maneuver at GETI (TPI).
		ΔV (TPF) XXXX.X FPS		ΔV (TPF) - Required impulsive ΔV to accomplish intercept maneuver (TPF) at calculated time of intercept. +, CSM ascending; -, CSM descending.
		Accept Record data PRO		
		Reject Key V32E Return to step 2 to adjust GETI (TPI) and/or search option		
	5	FL V06 N55		
		R1 NN 0000X.		Per code - 00001, perigee/perilune between TPI and TPF. 00002, perigee/perilune after TPF.
		R3 CENTANG XXX.XX DEG		CENTANG - Central angle of LM from GETI (TPI) to time of intercept.
		Accept Record data PRO		
		Reject Key V32E Return to step 2 to adjust GETI (TPI) and/or search option		
	6	FL V37 Key XXE		ROO.

NORMAL BACKUP

STA/T STEP	PROCEDURE	PANEL	REMARKS
	4.6.2 CSM RENDEZVOUS NAVIGATION (P20)		The purpose of this procedure is to: • Control CSM attitude and optics to acquire LM in SXT FOV and to point CSM transponder at LM or to control CSM attitude to acquire LM along CSM +X axis depending on option selected by crew. • To update either LM or CSM state vector depending on crew selection. Update is based on optical tracking or VHF ranging data. The uplink activity lt indicates R61 is requesting an automatic maneuver during rendezvous. For rendezvous navigation the W-matrix should not be initialized to magnitudes >328 fps and 51,647 ft (N99 display).
	CMC - on (required), para 4.10.1.2 ISS - on and orientation known (required), para 4.10.1.2 & 4.11 SCS - on (desired), para 4.10.2.2 Optics - powered up (required), para 4.10.1.4 VHF AM ranging mode selected (required), para 4.7.6.6		Provides total attitude and rate monitoring. Not required for VHF update. Not required for optical update.
CDR	CMC ATT - IMU	1	
	LOGIC 2/3 PWR - on (up)	7	Required for control and display functions if SCS - on option is not selected.
	Key V93E (if necessary)		If an hour or more has elapsed since W-matrix initialization or if state vector has not been updated via P27.
1	Select Total Attitude display, para 4.9.2.5		

STA/T	STEP	PROCEDURE	PANEL	REMARKS
	2	Select Attitude Control mode (desired), para 4.9.1		
CMP	3	Key V37E 20E DSKY - P20	2,140	Selection of P20 automatically selects preferred tracking attitude option and LM state vector update option. Crew may exercise control of these options through use of the following extended verbs. V76E - Selects preferred tracking attitude. V77E - Selects +X axis tracking attitude. V80E - Selects LM state vector update. V81E - Selects CSM state vector update. V87E - Allow R22 to accept VHF range data. V88E - Inhibit acceptance of VHF range data.
		Poss PROG alarm Key V05 N09E (to verify alarm) 00210 (ISS not on) or 00220 (IMU orientation unknown)		
		FL V37 Key XXE		
		(Attitude Maneuver Routine, R60)		Provides for maneuver (auto or manual) to attitude specified by option selected. R60 is called only if maneuver >10° (in any axis) is required. Otherwise maneuver performed by R61.
	4	Poss FL V50 N18 (auto mnvr request) (2 sec priority) If required GMBL angle change >10°		DAP will point the preferred or the X-axis at the LM but will not constrain roll about the tracking axis. The maximum roll drift is ≈0.07 deg/sec in 0.5 deg DB and 0.6 deg/sec in 5.0 deg DB. If required maneuver is <10°, maneuver is performed by R61.
		R, P, Y XXX.XX DEG		Required gimbal angles.
CDR		Accept SC CONT - CMC CMC MODE - AUTO	1	

STA/T STEP	PROCEDURE	PANEL	REMARKS
CMP	PRO	2,140	This may be performed second time as attitude trim.
	V06 N18 R, P, Y XXX.XX DEG Monitor auto mnvr on FDAI		Priority display. At completion of maneuver, display will revert to FL V50 N18.
Reject	Key V62E RHC - null FDAI error needles Recycle step 4		Provides reference for manual maneuver.
CDR or	SC CONT - SCS (or CMC mode ≠ auto)	1	To update display without performing maneuver.
CMP	PRO Recycle step 4	2,140	
When attitude is satisfactory ENTR			Terminates Attitude Maneuver Routine, R60. (Routine R61 will continue to compute and maintain selected attitude (option) as long as SC control is CMC AUTO and RHC is not moved out of detent.) The UPLINK ACTY light will be lit if the stick flag is set and tracking angles >10 deg.
a. If optics sighting marks are desired, go to step 5			
or b. If backup optics (COAS) sighting marks are desired, go to step 8			
or c. If VHF ranging data update is desired, Key V87E Go to step 11			If the preferred tracking attitude has been selected, it is possible for the program alarm in step 5 to occur. However, this alarm will have no effect on the operation.

STA/T	STEP	PROCEDURE	PANEL	REMARKS
		(Automatic Optics Positioning, R52)		
CMP	5	OPT ZERO - OFF OPT MODE - CMC	122	
		Poss PROG alarm Key V05 N09 (to verify alarm) 00407 (TA >50°)	2,140	
		a. RHC - manually mnvr to selected tracking attitude		Key V16 N22 for desired gimbal angles. Key V16 N92 for desired optics angles.
CDR		or b. SC CONT - CMC CMC MODE - AUTO	1	
CMP		Key V58E if RHC moved from detent	2,140	
		(Rendezvous Tracking Sighting Mark Routine, R21)		To perform sighting marks on LM.
	6	Key V57E		
	7	FL V51 (please mark) OPT MODE - MAN OHC - ctr LM in SXT MARK pb - push	122	
		Accept Repeat mark procedure		If more marks are desired.

NORMAL BACKUP

STA/T STEP	PROCEDURE	PANEL	REMARKS
CMP or	PRO OPT MODE - CMC Go to step 11	2,140 122	If sufficient marks have been made. To ensure processing of the last mark, wait 15 seconds before proceeding. This allows for the previous mark to be processed. If PRO is done too soon, one of the last two marks may be ignored.
Reject	MARK REJ pb - push Repeat mark procedure		
(Backup Rendezvous Tracking Sighting Mark Routine, R23)			To perform sighting marks on LM using backup optics (COAS).
8 Key V54E		2,140	
9 FL V06 N94 SA XXX.XX DEG TA XX.XXX DEG			SA - Shaft angle (nominal = 00000). TA - Trunnion angle (nominal = 57470).
Accept	PRO		
Reject	Key V24E Load desired data		
10 FL V53 (request alt LOS mark) RHC - Align LM in COAS ENTR			Alternate LOS mark.
Accept	Repeat mark procedure		If more marks are desired.

STA/T STEP	PROCEDURE	PANEL	REMARKS
CMP	or PRO	2,140	If sufficient marks have been made. To ensure processing of the last mark, wait until the computer activity light goes on before proceeding. The light indicates the previous mark is being processed. If PRO is done too soon, one of the last two marks may be ignored.
	Reject V86E Repeat mark procedure		Rejects previous mark.
	(Rendezvous Tracking Data Processing Routine, R22)		
	11 Poss FL V06 N49 (2 sec priority) ΔR XXXX.X NM ΔV XXXX.X FPS		Excessive update parameters. To change ΔR and ΔV threshold values, refer to para 4.10.1.18.
	Source code 0000X.		00001 = Optics (CMC does not differentiate between SXT and COAS marks). 00002 = VHF ranging
	Wait 2 sec		Priority display. Will not respond to DSKY input until after 2 seconds.
	Accept PRO		Incorporates update data.
	Reject Key V32E		Does not incorporate update data. (V32E will erase mark data from positions 1, 2, and 3 if R3 = 00001.)

NORMAL/BACKUP

STA/T	STEP	PROCEDURE	PANEL	REMARKS
CMP	12	To terminate P20 and all other programs running Key V37E 00E DSKY - P00	2,140	
	or	To terminate P20 only Key V56E		If V56 is keyed in during a computation in P31/P35, these computations will be restarted from the beginning.
		Poss FL V37 Key XXE		FL V37 only if no other program active.
	13	Set optics controls OPT ZERO - ZERO OPT PWR - OFF RETCL BRT tw - DIM	 122 100 122	

STA/T STEP	PROCEDURE	PANEL	REMARKS
	4.6.3 CO-ELLIPTIC SEQUENCE INITIATION (P32)		Purpose: To calculate parameters associated with the Co-elliptic Sequence Initiation (CSI) and the Constant Delta Altitude (CDH) ΔV Maneuvers. Successful completion of this program is dependent upon the following assumptions: • A prescribed angle (E) exists at a selected GETI (TPI). • GETI (CDH) -GETI (CSI) >10 minutes. • GETI (TPI) -GETI (CDH) >10 minutes. • CDH maneuver minimizes ΔH variations. • CSI burn is impulsive and in CSM horizontal plane • Resulting Hp ≥5.8 NM (>85 NM for EO). • CSI burn is parallel to LM orbital plane. (This may be modified by crew.) • Computed variables may be stored for later verification by MSFN. This procedure may be performed concurrently with P20 or independently. If P20 is operating, optical sighting marks on LM may be initiated by keying V57E (R21) or V54E (R23). For optical sighting mark procedures, refer to para 4.6.2, steps 5-7 and 8-10.



STA/T	STEP	PROCEDURE	PANEL	REMARKS
				respectively. In addition, if P20 is operating, a VHF ranging data state vector update may be initiated by configuring for VHF AM Ranging Mode, para 4.7.6.6, and keying V87E. This procedure may be terminated by keying V34E at any flashing display.
		CMC - on (required), para 4.10.1.2 ISS - on and orientation known (desired), para 4.10.1.2 & 4.11		Required for a meaningful display of MGA during final display of N45 in step 8.
CMP	1	Key V37E 32E DSKY P32	2,140	
	2	FL V06 N11 GETI (CSI) 00XXX. HRS 000XX. MIN 0XX.XX SEC Accept Record GETI (CSI) PRO Reject Key V25E Load desired GETI (CSI)		
	3	FL V06 N55 N 0000X		N - Future CSM apsidal crossing (perilune or apolune). Should be loaded to define to the CMC the number of the future crossing at which the CDH maneuver should occur; e.g., 00001 = first, 00002 = second, etc.

STA/T STEP	PROCEDURE	PANEL	REMARKS
CMP	E XXX.XX DEG	2,140	E - Elevation angle at GETI (TPI).
	CENTANG 00000		CENTANG - Initially 00000 (except for recycle from step 5) and is used by the CMC as an option code. If any nonzero value is loaded in R3, the CMC will calculate the CDH parameters for a GETI (CDH) at N (180°) from the CSI maneuver where N is specified by the value set in R1.
	Accept Record data PRO Reject Key V25E Load desired data		
4	FL V06 N37 GETI (TPI) 00XXX. HRS 000XX. MIN 0XX.XX SEC		
	Accept Record GETI (TPI) PRO Go to step 8 Reject Key V25E Load desired GETI (TPI)		
5	CMC Computes CSI and CDH parameters Poss FL V05 N09 00600 No solution of LOS at TPI 00601 Post CSI Hp <5.8 NM (<85 NM for EO)		

NORMAL/BACKUP

STA/T STEP	PROCEDURE	PANEL	REMARKS
CMP	00602 Post CDH Hp <5.8 NM (<85 NM for EO) 00603 CDH -CSI <10 min 00604 TPI -CDH <10 min or Computed GETI (CDH) >input GETI (TPI) in step 4 00605 No solution and CMC iterations >15 00606 CSI ΔV >1000 fps (for two consecutive iterations) Key V32E Return to step 2	2,140	To adjust input parameters.
	FL V06 N75 Δ Alt (CDH) XXXX.X NM ΔT (CDH -CSI) XXBXX MIN-SEC ΔT (TPI -CDH) XXBXX MIN-SEC Record values PRO		Maximum reading (displayed) in R2 and R3 is 59B59. Only minutes and seconds are displayed although time computation is done in hours, minutes, and seconds. The computed CDH and TPI times can be determined by calling N13 and N37 respectively.
6	FL V06 N81 ΔVX, Y, Z (LV) XXXX.X FPS Accept Record values PRO		CMC calculated components of ΔV (in local vertical coordinates) for CSI.

STA/T STEP	PROCEDURE	PANEL	REMARKS
CMP	Reject Key V25E Load desired values	2,140	To modify ΔV (local vertical) to correct for out of planeness key V90E (R36). Use data obtained from R36 to determine desired ΔV (local vertical). This modification will not impact N82 of step 7.
7	FL V06 N82 ΔVX, Y, Z (LV) XXXX.X FPS Record values PRO		This display of CDH velocity components is based on original CSI values of step 6, and cannot be written over.
8	FL V16 N45 Marks XXBXX MKS		Marks - Number of marks processed by Rendezvous Data Processing Routine, R22. a. Two most significant digits - VHF ranging marks. b. Two least significant digits - Optics marks (either SXT or backup optics (COAS) marks).
	TF GETI (CSI) XXBXX MIN-SEC		TF GETI (CSI) - Time from CSI ignition. Maximum reading is 59B59. -, before; +, after.
	MGA -0000X or +XXX.XX DEG		MGA - Middle gimbal angle (yaw). -00001 for other than final pass. -00002 for final pass and IMU not aligned. +XXX.XX DEG for final pass and IMU aligned.
	a. To continue mark process Key V32E Return to step 5		

NORMAL BACKUP

STA/T	STEP	PROCEDURE	PANEL	REMARKS
CMP	or b.	To terminate mark process and do final pass through program PRO Return to step 5	2,140	
	or c.	After final pass through program PRO		
	9	FL V37 Key XXE		R00.

STA/T STEP	PROCEDURE	PANEL	REMARKS
	4.6.4 CONSTANT DELTA ALTITUDE (P33)		Purpose: To compute the parameters associated with the CDH maneuver. Successful completion of this procedure is dependent upon the prior completion of P32. This procedure may be performed concurrently with P20 or independently. If P20 is operating, optical sighting marks on LM may be initiated by keying V57E (R21) or V54E (R23). For optical sighting mark procedures, refer to para 4.6.2, steps 5-7 and 8-10, respectively. In addition, if P20 is operating, a VHF ranging data state vector update may be initiated by configuring for VHF AM Ranging Mode (para 4.7.6.6) and keying V87E. This procedure may be terminated by keying V34E at any flashing display.
	CMC - on (required), para 4.10.1.2 ISS - on and orientation known (desired), para 4.10.1.2 & 4.11 P32 completed		Required for a meaningful display of MGA during final display of N45 in step 5.
CMP 1	Key V37E 33E DSKY - P33	2,140	Computations in this program are based upon GETI (TPI), and elevation angle (E) defined in P32.
2	FL V06 N13 GETI (CDH) 00XXX. HRS 000XX. MIN 0XX.XX SEC		

NORMAL BACKUP

STA/T	STEP	PROCEDURE	PANEL	REMARKS
CMP		Accept Record GETI (CDH)		
		PRO	2,140	
		Go to step 5		
		Reject Key V25E		
		Load desired GETI (CDH)		
	3	CMC computes CDH parameters		
		Poss FL V05 N09		
		00611 (No GETI for given E)		
		PRO, go to FL V06 N75		To force GETI (CDH) solution.
		or Key V32E, return to step 2		To adjust input parameters.
		FL V06 N75		Maximum reading (displayed) in R2 and R3 is 59B59. Only minutes and seconds are displayed, although time computation is done in hours, minutes, and seconds. The computed CDH time can be determined by calling N13.
		Δ Alt (CDH) XXXX.X NM		
		ΔT (TPI -CDH) XXBXX MIN-SEC		
		ΔT (TPI -TPI) XXBXX MIN-SEC		TPI computed minus TPI computed in P32. TPI time, computed in P33, can be determined by calling N37.
		Record values		
		PRO		
	4	FL V06 N81		CMC calculated components of ΔV (in local vertical coordinates) for CDH.
		ΔVX, Y, Z (LV) XXXX.X FPS		
		Accept Record values		
		PRO		

STA/T STEP	PROCEDURE	PANEL	REMARKS
CMP	Reject Key V25E Load desired values	2,140	To modify ΔV (local vertical) to correct for out of planeness, key V90E (R36). Use data obtained from R36 to determine desired ΔV (local vertical).
	5 FL V16 N45		
	Marks XXBXX MKS		Marks - Number of marks processed by Rendezvous Data Processing Routine, R22. a. Two most significant digits - VHF ranging marks. b. Two least significant digits - Optics marks (either SXT or backup optics (COAS) marks).
	TF GETI (CDH) XXBXX MIN-SEC		TF GETI (CDH) - Time from CDH ignition. Maximum reading is 59B59. -, before; +, after.
	MGA -0000X or +XXX.XX DEG		MGA - Middle gimbal angle (yaw). -00001 for other than final pass. -00002 for final pass and IMU not aligned. +XXX.XX DEG for final pass and IMU aligned.
	a. To continue mark process Key V32E Return to step 3		
	or b. To terminate mark process and do final pass through program PRO Return to step 3		

NORMAL BACKUP

STA/T	STEP	PROCEDURE	PANEL	REMARKS
CMP	or c.	After final pass through program PRO	2,140	
	6	FL V37 Key XXE		R00.

STA/T STEP	PROCEDURE	PANEL	REMARKS
	4.6.5 TRANSFER PHASE INITIATION (P34)		The purpose of this procedure is to: • Calculate required ΔV and other initial conditions required by CMC for CSM execution of TPI maneuver, given: a. Time of ignition, GETI (TPI), or elevation angle (E) of CSM/LM LOS at GETI (TPI). b. Central angle of transfer (CENTANG) of passive vehicle (LM) from GETI (TPI) to time of intercept. • Calculate GETI (TPI) given E or E given GETI (TPI). This procedure may be performed concurrently with P20 or independently. If P20 is operating, sighting marks on LM may be initiated by keying V57E (R21) or V54E (R23). For sighting mark procedures, refer to para 4.6.2, steps 5-7 and 8-10 respectively. In addition, if P20 is operating, a VHF ranging data state vector update may be initiated by keying V87E. Required for meaningful display of MGA during final display of N45 (step 8).
	CMC - on (required), para 4.10.1.2 ISS - on and orientation known (desired), para 4.10.1.2 & 4.11		
CMP 1	Key V37E 34E DSKY - P34	2,140	

NORMAL/BACKUP

STA/T	STEP	PROCEDURE		PANEL	REMARKS
CMP	2	FL V06 N37		2,140	
		GETI (TPI)	00XXX. HRS 000XX. MIN 0XX.XX SEC		
		Key V25E Load desired GETI (TPI) Record GETI (TPI) PRO			Load desired GETI (TPI) if CMC computation of E is desired. If it is desired that E be specified and CMC compute GETI (TPI), load an initial value for GETI (TPI). This value should be within 30 minutes of actual.
	3	FL V06 N55			
		NN	0000X.		Integration method and number of precision offset computations desired. NN is initially 0.
		E	XXX.XX DEG		E - Elevation angle.
		CENTANG	XXX.XX DEG		CENTANG - Central angle of passive vehicle (LM) from GETI (TPI) to time of intercept.
		Accept Record CENTANG and E PRO Go to step 8			
		Reject Key V25E Load desired data			Load desired NN in R1: NN = 0 is conic integrating. NN = X is precision integration with (X) target offset. Desired E in R2, CMC computes GETI (TPI). +00000 in R2, CMC computes E.

STA/T	STEP	PROCEDURE	PANEL	REMARKS
CMP	4	If E specified (CMC computes GETI)		
		Poss FL V05 N09	2,140	
		00611 (no GETI for given E)		
		PRO		
		Go to step 2 (adjust input parameters)		
		FL V06 N37		
		GETI (TPI) 00XXX. HRS 000XX. MIN 0XX.XX SEC		
		Record GETI (TPI)		
		PRO		
		Go to step 5		
	or	If +00000 specified for E (CMC computes E)		
		FL V06 N55		
		NN 0000X.		Integration method and number of precision offset computations desired. CMC computed E.
		E XXX.XX DEG		
		CENTANG XXX.XX DEG		
		Record E		
		PRO		
	5	FL V06 N58		
		Hp XXXX.X NM		Hp - Perigee altitude above launch pad radius for earth orbit, or perilune altitude above landing site radius for lunar orbit, after TPI maneuvers. If Hp >9999.9 NM this display will become meaningless.

NORMAL/BACKUP

STA/T	STEP	PROCEDURE		PANEL	REMARKS
CMP		ΔV (TPI)	XXXX.X FPS	2,140	ΔV (TPI) - Required impulsive ΔV to accomplish TPI maneuver at GETI (TPI).
		ΔV (TPF)	XXXX.X FPS		ΔV (TPF) - Required impulsive ΔV to accomplish intercept maneuver (TPF) at calculated time of intercept.
		Record data PRO If not final pass, go to step 7			To obtain central angle of active vehicle (CSM), key V06 N52.
	6	FL V06 N81 (final pass only) ΔVX, Y, Z (lcl vert)	XXXX.X FPS		ΔV (lcl vert) - Components of required impulsive ΔV in active vehicle (CSM) local vertical coordinates.
		Accept Record ΔV (lcl vert) PRO Reject Key V25E Load desired ΔV (lcl vert)			To modify ΔV (lcl vert) to correct for out of planeness key V90E (R36). Use data obtained from R36 to determine desired ΔV (lcl vert).
	7	FL V06 N59 ΔV 1, 2, 3 (LOS) Record ΔV (LOS) PRO	XXXX.X FPS		ΔV (LOS) - Components of required impulsive ΔV in an orthogonal coordinate system oriented along CSM to LM LOS. (For complete definition, refer to section 5.4.2.2 of R577.)
	8	FL V16 N45 Marks	XXBXX MKS		Marks - Number of marks processed by Rendezvous Data Processing Routine, R22. a. Two most significant digits - VHF ranging marks b. Two least significant digits - Optics marks (either SXT or backup optics (COAS) marks).
		TF GETI (TPI)	XXBXX MIN-SEC		TF GETI (TPI) - Time from ignition. Max reading is 59B59. -, before; +, after.

STA/T STEP	PROCEDURE	PANEL	REMARKS
CMP	MGA -0000X or +XXX.XX DEG		MGA - Middle gimbal angle (yaw). -00001 for other than final pass. -00002 for final pass and IMU not aligned. +XXX.XX DEG for final pass and IMU aligned.
	a. To continue mark process Key V32E Return to step 4	2,140	
	or b. To terminate mark process and do final pass through program PRO Return to step 4		
	or c. After final pass through program PRO		
	9 FL V37 Key XXE		ROO.

NORMAL/BACKUP

STA/T	STEP	PROCEDURE	PANEL	REMARKS
		4.6.6 TRANSFER PHASE MIDCOURSE (P35)		The purpose of this procedure is to calculate required ΔV and other initial conditions required by CMC for CSM execution of next midcourse correction of transfer phase. This procedure may be performed concurrently with P20 or independently. If P20 is operating, sighting marks on LM may be initiated by keying V57E (R21) or V54E (R23). For sighting mark procedures, refer to para 4.6.2, steps 5-7 and 8-10 respectively. In addition, if P20 is operating, a VHF ranging data state vector update may be initiated by keying V87E.
		CMC - on (required), para 4.10.1.2 Program P34 - (completed), para 4.6.5		Time of intercept (computed and stored by P34) is required for computations in P35.
		ISS - on and orientation known (desired), para 4.10.1.2 & 4.11		Required for meaningful display of MGA during final display of N45 (step 4).
CMP	1	Key V37E 35E DSKY - P35 Go to step 4	2,140	Type of integration (conic or precision) and number of offsets will be as determined by computations in P34.
	2	FL V06 N81 (final pass only) ΔV X, Y, Z (lcl vert) XXXX.X FPS		ΔV (lcl vert) - Components of required ΔV in active vehicle (CSM) local vertical coordinates.
		Accept Record ΔV (lcl vert) PRO		
		Reject Key V25E Load desired ΔV (lcl vert)		To modify ΔV (lcl vert) to correct for out of plane-ness key V90E (R36). Use data obtained from R36 to determine desired ΔV (lcl vert).

STA/T	STEP	PROCEDURE		PANEL	REMARKS
CMP	3	FL V06 N59		2,140	
		ΔV 1, 2, 3 (LOS)	XXXX.X FPS		ΔV (LOS) - Components of required impulse ΔV in an orthogonal coordinate system oriented along the CSM to LM LOS. (For complete definition refer to GSOP section 5.4.2.3 of R577.)
		Record ΔV (LOS) PRO			To obtain central angle of active vehicle (CSM) key V06 N52.
	4	FL V16 N45			
		Marks	XXBXX MKS		Marks - Number of marks processed by Rendezvous Data Processing Routine, R22. a. Two most significant digits - VHF ranging marks b. Two least significant digits - Optics marks (either SXT or backup optics (COAS) marks).
		TF GETI (TPM)	XXBXX MIN-SEC		TF GETI (TPM) - Time from ignition (update at 1-second intervals). Max reading is 59B59. -, before; +, after. GETI (TPM) is recomputed as Tnow +A for each recycle and again when final pass is selected (PRO). The value of A is stored in erasable memory and may be changed using procedure, para 4.10.1.19 by P27 update, or prelaunch erasable load.
		MGA	-0000X		MGA - Middle gimbal angle (yaw). -00001 for other than final pass. -00002 for final pass and IMU not aligned.
			or +XXX.XX DEG		+XXX.XX DEG for final pass and IMU aligned.
		a. To continue mark process Key V32E Return to step 3			

NORMAL BACKUP

STA/T	STEP	PROCEDURE	PANEL	REMARKS
CMP	or b.	To terminate mark procedure and do final pass through program PRO Return to step 2	2,140	
	or c.	After final pass through program PRO		
	5	FL V37 Key XXE		R00.

STA/T STEP	PROCEDURE	PANEL	REMARKS
4.6.7	STABLE ORBIT RENDEZVOUS (P38)		The purpose of this procedure is to: • Calculate and display required ΔV and other initial conditions required by CMC for CSM execution of first phase of stable orbit rendezvous (SOR) maneuver, given: a. GETI (SOR) b. CENTANG - Angle of transfer of passive vehicle c. Offset of stable orbit point specified as distance (ΔR, step 5) along passive vehicle (LM) orbit. • Calculate and display required ΔV and other initial conditions required by CMC for CSM execution of second phase of SOR maneuver, given: a. A respecification of GETI (SOR) based on TPF and any midcourse corrections performed in program P39. b. An optional respecification of CENTANG. • Store SOR phase 1 and 2 target parameters for use by desired thrusting program. This procedure may be performed concurrently with P20 or independently. If P20 is operating, sighting marks on LM may be initiated by keying V57E (R21) or V54E (R23). For sighting mark procedures, refer to para 4.6.2, steps 5-7 and 8-10 respectively. In addition, if P20 is operating, a VHF ranging data state vector update may be initiated by keying V87E.

NORMAL BACKUP

STA/T	STEP	PROCEDURE	PANEL	REMARKS
		CMC - on (required), para 4.10.1.2 ISS - on and orientation known (desired), para 4.10.1.2 & 4.11		Required for meaningful display of MGA during final display of N45 (step 9).
CMP	1	Key V37E 38E DSKY - P38	2,140	
	2	FL V06 N33 GETI (SOR) 00XXX. HRS 000XX. MIN 0XX.XX SEC Accept Record GETI (SOR) PRO Reject Key V25E Load desired GETI (SOR)		
	3	FL V06 N55 R3 CENTANG XXX.XX DEG Accept Record CENTANG PRO Reject Key V23E Load desired CENTANG		CENTANG - Central angle of passive vehicle (LM) from GETI (SOR) to time of intercept.

STA/T	STEP	PROCEDURE	PANEL	REMARKS
CMP	4	FL V04 N06 00005 (specify phase option) 0000X (1 - phase 1; 2 - phase 2) Accept PRO If option 2 specified, go to step 9 Reject Key V22E Load desired option	2,140	**Phase 2 requires prior completion of phase 1.**
	5	FL V06 N57 ΔR (SOR) XXXX.X NM Accept Record ΔR (SOR) PRO Reject Key V21E Load desired ΔR (SOR)		ΔR (SOR) - The offset of the stable orbit point, specified as distance along passive vehicle (LM) orbit. +, SOR point behind LM; -, SOR point ahead of LM.
	6	FL V06 N34 GET (FINAL) 00XXX. HRS 000XX. MIN 0XX.XX SEC Record GET (FINAL) PRO Go to step 9		GET (FINAL) - Ground elapse time of arrival at stable orbit.

NORMAL BACKUP

STA/T	STEP	PROCEDURE		PANEL	REMARKS
CMP	7	FL V06 N58		2,140	
		Hp (SOR)	XXXX.X NM		Hp (SOR) - Perigee altitude above launch pad radius for earth orbit, or perilune altitude above landing site radius for lunar orbit, after SOR maneuver. If Hp >9999.9 NM this display will become meaningless.
		ΔV (SOR)	XXXX.X FPS		ΔV (SOR) - Required impulsive ΔV to accomplish SOR maneuver at GETI (SOR).
		ΔV (SOR-FINAL)	XXXX.X FPS		ΔV (SOR-FINAL) - Required impulsive ΔV to accomplish SOR maneuver at time of intercept.
		Record Data PRO			To obtain CSM central angle of transfer key V06 N52. If CSM central angle is between 170-190 degrees, reassess input targeting parameters based on ΔV and GETI.
	8	FL V06 N81			
		ΔV X, Y, Z (lcl vert)	XXXX.X FPS		ΔV (lcl vert) - Components of required impulsive ΔV in CSM local vertical coordinates.
		Record ΔV (lcl vert) PRO			
	9	FL V16 N45			
		Marks	XXBXX MKS		Marks - Number of marks processed by Rendezvous Data Processing Routine, R22. a. Two most significant digits - VHF marks b. Two least significant digits - Optics marks (these marks may be either SXT or backup optics marks).

STA/T STEP	PROCEDURE	PANEL	REMARKS
CMP	TF GETI (SOR) XXBXX MIN-SEC	2,140	TF GETI (SOR) - Time from ignition. Max reading 59B59. -, before; +, after.
	MGA -0000X. or +XXX.XX DEG		MGA - Middle gimbal angle (yaw). -00001 for other than final pass through P38. -00002 for final pass and IMU not aligned. +XXX.XX DEG for final pass and IMU aligned.
	a. To continue mark process Key V32E Return to step 7		
	or b. To terminate mark process and do final pass through program PRO Return to step 7		
	or c. After final pass through program PRO		
10	FL V37 Key XXE		R00.

NORMAL BACKUP

STA/T	STEP	PROCEDURE	PANEL	REMARKS
		4.6.8 STABLE ORBIT MIDCOURSE (P39)		The purpose of this procedure is to: • Calculate required ΔV and other initial conditions required by CMC for CSM execution of next possible midcourse correction of stable orbit transfer phase. • Compute and display suitable information to enable crew to enter final rendezvous phase at correct time to complete required thrusting maneuver. This procedure may be performed concurrently with P20 or independently. If P20 is operating, sighting marks on LM may be initiated by keying V57E (R21) or V54E (R23). For sighting mark procedures, refer to para 4.6.2, steps 5-7 and 8-10 respectively. In addition, if P20 is operating, a VHF ranging data state vector update may be initiated by keying V87E. To obtain CMC central angle of transfer, key V06 N52. Required for meaningful display of MGA during final display of N45. Time of intercept (computed and stored by P38) is required for computations in P39.
		CMC - on (required), para 4.10.1.2 ISS - on and orientation known (desired), para 4.10.1.2 & 4.11 Program P38 - phase 1 completed, para 4.6.7		
CMP	1	Key V37E 39E DSKY - P39 Go to step 3	2,140	

STA/T	STEP	PROCEDURE		PANEL	REMARKS
CMP	2	FL V06 N81		2,140	
		ΔV X, Y, Z (lcl vert)	XXXX.X FPS		ΔV (lcl vert) - Components of required impulsive ΔV in CSM local vertical coordinates.
		Record ΔV (lcl vert)			
		PRO			
	3	FL V16 N45			
		Marks	XXBXX MKS		Marks - Number of marks processed by R22. a. Two most significant digits - VHF marks b. Two least significant digits - Optics marks (these marks may be either SXT or backup optics marks).
		TF GETI (MID)	XXBXX MIN-SEC		TF GETI (MID) - Time from ignition (updated at 1-second intervals). Max reading is 59B59. -, before; +, after. GETI (MID) is recomputed as Tnow +A for each recycle and again when final pass is selected (PRO). The value of A is stored in erasable memory and may be changed using procedure, para 4.10.1.19, by P27 update, or prelaunch erasable load.
		MGA	-0000X		MGA - Middle gimbal angle -00001 for other than final pass through P39. -00002 for final pass and IMU not aligned.
			or +XXX.XX DEG		+XXX.XX DEG for final pass and IMU aligned.
		a. To continue mark process Key V32E Return to step 2			

NORMAL BACKUP

STA/T	STEP	PROCEDURE	PANEL	REMARKS
CMP	or b.	To terminate mark process and do final pass through program PRO Return to step 2	2,140	
	or c.	After final pass through program PRO		
	4	FL V37 Key XXE		R00.

STA/T STEP	PROCEDURE	PANEL	REMARKS
4.6.9	LM CO-ELLIPTIC SEQUENCE INITIATION TARGETING (P72)		Purpose: To calculate parameters associated with the LM Co-elliptic Sequence Initiation (CSI) and the Constant Delta Altitude (CDH) ΔV maneuvers. Successful completion of this program is dependent upon the following assumptions: • A prescribed angle (E) exists at a selected GETI (TPI). • GETI (CDH) -GETI (CSI) >10 minutes. • GETI (TPI) -GETI (CDH) >10 minutes. • CDH maneuver minimizes ΔH variations. • CSI burn is impulsive and in LM horizontal plane. • Resulting Hp >5.8 NM (>85 NM for EO). • CSI burn is parallel to CSM orbital plane. (This may be modified by crew.) • Computed variables may be stored for later verification by MSFN. This procedure may be performed concurrently with P20 or independently. If P20 is operating, optical sighting marks on LM may be initiated by keying V57E (R21) or V54E (R23). For optical sighting mark

NORMAL/BACKUP

STA/T	STEP	PROCEDURE	PANEL	REMARKS
				procedures, refer to para 4.6.2, steps 5-7 and 8-10, respectively. In addition, if P20 is operating, a VHF ranging data state vector update may be initiated by configuring for VHF AM Ranging Mode, para 4.7.6.6, and keying V87E. This procedure may be terminated by keying V34E at any flashing display.
		CMC - on (required), para 4.10.1.2 ISS - on and orientation known (desired), para 4.10.1.2 & 4.11		If P20 running, ISS on is required.
CMP	1	Key V37E 72E DSKY P72	2,140	
	2	FL V06 N11 GETI (CSI) 00XXX. HRS 000XX. MIN 0XX.XX SEC Accept Record GETI (CSI) PRO Reject Key V25E Load desired GETI (CSI)		
	3	FL V06 N55 N 0000X		N - Future LM apsidal crossing (perilune or apolune). Should be loaded to define to the CMC the number of the future crossing at which the CDH maneuver should occur; e.g., 00001 = first, 00002 = second, etc.

STA/T	STEP	PROCEDURE		PANEL	REMARKS
CMP		E	XXX.XX DEG	2,140	E - Elevation angle at GETI (TPI).
		CENTANG	00000		CENTANG - Initially 00000 and is used by the CMC as an option code. If any nonzero value is loaded in R3, the CMC will calculate the CDH parameters for a GETI (CDH) at N (180°) from the CSI maneuver where N is specified by the value set in R1.
		Accept Record data PRO			
		Reject Key V25E Load desired data			
	4	FL V06 N37			
		GETI (TPI)	00XXX. HRS 000XX. MIN 0XX.XX SEC		
		Accept Record GETI (TPI) PRO Go to step 8			
		Reject Key V25E Load desired GETI (TPI)			
	5	CMC computes CSI and CDH parameters			
		Poss FL V05 N09 00600 No solution of LOS at TPI 00601 Post CSI Hp <5.8 NM (<85 NM for EO)			

NORMAL BACKUP

STA/T STEP	PROCEDURE	PANEL	REMARKS
CMP	00602 Post CDH Hp <5.8 NM (<85 NM for EO) 00603 CDH -CSI <10 min 00604 TPI -CDH <10 min or Computed GETI (CDH) >input GETI (TPI) in step 4 00605 No solution and CMC iterations >15 00606 CSI ΔV >1000 fps (for two consecutive iterations) Key V32E Return to step 2	2,140	To adjust input parameters.
	FL V06 N75 Δ Alt (CDH) XXXX.X NM ΔT (CDH -CSI) XXBXX MIN-SEC ΔT (TPI -CDH) XXBXX MIN-SEC Record values PRO		Maximum reading (displayed) in R2 and R3 is 59B59. Only minutes and seconds are displayed, although time computation is done in hours, minutes, and seconds. The computed CDH and TPI times can be determined by calling N13 and N37 respectively.
6	FL V06 N81 ΔVX, Y, Z (LV) XXXX.X FPS		CMC calculated components of ΔV (in local vertical coordinates) for CSI for LM active maneuver.

STA/T	STEP	PROCEDURE		PANEL	REMARKS
CMP		Accept Record values PRO		2,140	
		Reject Key V25E Load desired values			To modify ΔV (local vertical) to correct for out of planeness key V90E (R36). Use data obtained from R36 to determine desired ΔV (local vertical). This modification will not impact N82 of step 7.
	7	FL V06 N82			
		ΔVX, Y, Z (LV)	XXXX.X FPS		This display of CDH velocity components is based on original CSI values of step 6, and cannot be written over.
		Record values PRO			
	8	FL V16 N45			
		Marks	XXBXX MKS		Marks - Number of marks processed by Rendezvous Data Processing Routine, R22. a. Two most significant digits - VHF ranging marks. b. Two least significant digits - Optics marks (either SXT or backup optics (COAS) marks).
		TF GETI (CSI)	XXBXX MIN-SEC		TF GETI (CSI) - Time from CSI ignition. Maximum reading is 59B59. -, before; +, after.
		MGA	-0000X		MGA - Middle gimbal angle (yaw). -00001 for other than final pass. -00002 for final pass.

NORMAL/BACKUP

STA/T STEP	PROCEDURE	PANEL	REMARKS
CMP	a. To continue mark process Key V32E Return to step 5	2,140	
	or b. To terminate mark process and do final pass through program PRO Return to step 5		
	or c. After final pass through program PRO		
	9 FL V37 Key XXE		R00.

STA/T	STEP	PROCEDURE	PANEL	REMARKS
	4.6.10	LM CONSTANT DELTA ALTITUDE TARGETING (P73)		Purpose: To compute the parameters associated with the LM CDH maneuver. Successful completion of this procedure is dependent upon the prior completion of P72. This procedure may be performed concurrently with P20 or independently. If P20 is operating, optical sighting marks on LM may be initiated by keying V57E (R21) or V54E (R23). For optical sighting mark procedures, refer to para 4.6.2, steps 5-7 and 8-10, respectively. In addition, if P20 is operating, a VHF ranging data state vector update may be initiated by configuring for VHF AM Ranging Mode (para 4.7.6.6) and keying V87E. This procedure may be terminated by keying V34E at any flashing display. If P20 running, ISS on is required. Computations in this program are based upon GETI (TPI), and elevation angle (E) defined in P72.
		CMC - on (required), para 4.10.1.2 ISS - on and orientation known (desired), para 4.10.1.2 & 4.11 P72 completed		
CMP	1	Key V37E 73E DSKY - P73	2,140	
	2	FL V06 N13 GETI (CDH) 00XXX. HRS 000XX. MIN 0XX.XX SEC		

NORMAL BACKUP

STA/T STEP	PROCEDURE	PANEL	REMARKS
CMP	Accept Record GETI (CDH)	2,140	
	PRO		
	Go to step 5		
	Reject Key V25E		
	Load desired GETI (CDH)		
3	CMC computes CDH parameters		
	Poss FL V05 N09		
	00611 (No GETI for given E)		
	PRO, go to FL V06 N75		To force GETI (CDH) solution.
	or Key V32E, return to step 2		To adjust input parameters.
	FL V06 N75		
	Δ Alt (CDH) XXXX.X NM		Maximum reading (displayed) in R2 and R3 is 59B59. Only minutes and seconds are displayed, although time computation is done in hours, minutes, and seconds. The computed CDH time can be determined by calling N13.
	ΔT (TPI -CDH) XXBXX MIN-SEC		
	ΔT (TPI -TPI) XXBXX MIN-SEC		TPI computed minus TPI computed in P72. TPI time, computed in P73, can be determined by calling N37.
	Record values		
	PRO		
4	FL V06 N81		
	ΔVX, Y, Z (LV) XXXX.X FPS		CMC calculated components of ΔV (in local vertical coordinates) for CDH (LM active maneuver).
	Accept Record values		
	PRO		
	Reject Key V25E		To modify ΔV (local vertical) to correct for out of planeness, key V90E (R36). Use data obtained from R36 to determine desired ΔV (local vertical).
	Load desired values		

STA/T STEP	PROCEDURE	PANEL	REMARKS
CMP 5	FL V16 N45	2,140	
	Marks XXBXX MKS		Marks - Number of marks processed by Rendezvous Data Processing Routine, R22. a. Two most significant digits - VHF ranging marks. b. Two least significant digits - Optics marks (either SXT or backup optics (COAS) marks).
	TF GETI (CDH) XXBXX MIN-SEC		TF GETI (CDH) - Time from CDH ignition. Maximum reading is 59B59. -, before; +, after.
	MGA -0000X		MGA - Middle gimbal angle (yaw). -00001 for other than final pass. -00002 for final pass.
	a. To continue mark process Key V32E Return to step 3		
	or b. To terminate mark process and do final pass through program PRO Return to step 3		
	or c. After final pass through program PRO		
6	FL V37 Key XXE		R00.

NORMAL BACKUP

STA/T	STEP	PROCEDURE	PANEL	REMARKS
		4.6.11 LM TPI TARGETING (P74)		The purpose of this procedure is to: • Calculate required ΔV and other initial conditions required by the LGC for LM execution of TPI maneuver, given: a. Time of ignition, GETI (TPI), or the elevation angle (E) of LM/CSM LOS at GETI (TPI). b. Central angle of transfer (CENTANG) of passive vehicle (CSM) from GETI (TPI) to time of intercept. • Calculate GETI (TPI) given E or E given GETI (TPI). This procedure may be performed concurrently with P20 or independently. If P20 is operating, sighting marks on the LM may be initiated by keying V57E (R21) or V54E (R23). For sighting mark procedures, refer to para 4.6.2, steps 5-7 and 8-10 respectively. In addition if P20 is operating, a VHF ranging data state vector update may be initiated by keying V87E. If P20 running, ISS on is required.
		CMC - on (required), para 4.10.1.2 ISS - on and orientation known (desired), para 4.10.1.2 & 4.11		
CMP	1	Key V37E 74E DSKY - P74	2,140	

STA/T	STEP	PROCEDURE		PANEL	REMARKS
CMP	2	FL V06 N37		2,140	
		GETI (TPI)	00XXX. HRS 000XX. MIN 0XX.XX SEC		
		Key V25E Load desired GETI (TPI) Record GETI (TPI) PRO			Load desired GETI (TPI) if CMC computation of E is desired. If it is desired that E be specified and CMC compute GETI (TPI), load an initial value for GETI (TPI). This value should be within 30 minutes of actual.
	3	FL V06 N55			
		NN	0000X.		Integration method and number of precision offset computations desired. NN is initially 0.
		E	XXX.XX DEG		E - Elevation angle.
		CENTANG	XXX.XX DEG		CENTANG - central angle of passive vehicle (CSM) from GETI (TPI) to time of intercept.
		Accept Record CENTANG and E PRO Go to step 8 Reject Key V25E Load desired data			Load desired NN in R1: NN = 0 is conic integration; NN = X is precision integration with (X) target offsets. Desired E in R2, CMC computes GETI (TPI). +00000 in R2, CMC computes E.
	4	If E specified (CMC computes GETI) Poss FL V05 N09 00611 (no GETI for given E) PRO Go to step 2 (adjust input parameters)			

NORMAL BACKUP

STA/T STEP	PROCEDURE		PANEL	REMARKS
CMP	FL V06 N37		2,140	
	GETI (TPI)	00XXX. HRS 000XX. MIN 0XX.XX SEC		
	Record GETI (TPI)			
	PRO			
	Go to step 5			
or	If +00000 specified for E (CMC computes E)			
	FL V06 N55			
	NN	0000X.		Integration method and number of precision offset computations desired. CMC computed E.
	E	XXX.XX DEG		
	CENTANG	XXX.XX DEG		
	Record E			
	PRO			
5	FL V06 N58			
	Hp	XXXX.X NM		Hp - Perigee altitude above launch pad radius for earth orbit, or perilune altitude above landing site radius for lunar orbit, after TPI maneuver. If Hp >9999.9 NM this display will become meaningless.
	ΔV (TPI)	XXXX.X FPS		ΔV (TPI) - Required impulsive ΔV to accomplish TPI maneuver at GETI (TPI).
	ΔV (TPF)	XXXX.X FPS		ΔV (TPF) - Required impulsive ΔV to accomplish intercept maneuver (TPF) at calculated time of intercept.
	Record data			
	PRO			
	If not final pass, go to step 7			To obtain central angle of active vehicle (LM), key V06 N52.

STA/T	STEP	PROCEDURE	PANEL	REMARKS
CMP	6	FL V06 N81 (final pass only) ΔV X, Y, Z (lcl vert) XXXX.X FPS Accept Record ΔV (lcl vert) PRO Reject Key V25E Load desired ΔV (lcl vert)	2,140	ΔV (lcl vert) - Components of required impulsive ΔV in active vehicle (LM) local vertical coordinates. To modify ΔV (lcl vert) to correct for out of planeness key V90E (R36).
	7	FL V06 N59 ΔV 1, 2, 3 (LOS) XXXX.X FPS Record ΔV (LOS) PRO		ΔV (LOS) - Components of required impulsive ΔV in an orthogonal coordinate system oriented along the LM to CSM LOS. (For complete definition refer to GSOP, section 5.4.2.2 of R577.)
	8	FL V16 N45 Marks XXBXX MKS TF GETI (TPI) XXBXX MIN-SEC MGA -0000X		Marks - Number of marks processed by Rendezvous Data Processing Routine, R22. a. Two most significant digits - VHF ranging marks b. Two least significant digits - Optics marks (either SXT or backup optics (COAS) marks). TF GETI (TPI) - Time from ignition. Max reading is 59B59. -, before; +, after. MGA - Middle gimbal angle (yaw). -00001 for other than final pass. -00002 for final pass.

ORIGINAL BACK

STA/T STEP	PROCEDURE	PANEL	REMARKS
CMP	a. To continue mark process Key V32E Return to step 4	2,140	
	or b. To terminate mark process and do final pass through program PRO Return to step 4		
	or c. After final pass through program PRO Transmit all maneuver parameters to LM		
9	FL V37 Key XXE		R00.

STA/T STEP	PROCEDURE	PANEL	REMARKS
	4.6.12 LM TRANSFER PHASE MIDCOURSE TARGETING (P75)		The purpose of this procedure is to calculate required ΔV and other initial conditions required by LGC for LM execution of next midcourse correction of transfer phase. This procedure may be performed concurrently with P20 or independently. If P20 is operating, sighting marks on LM may be initiated by keying V57E (R21) or V54E (R23). For sighting mark procedures refer to para 4.6.2, steps 5-7 and 8-10 respectively. In addition, if P20 is operating, a VHF ranging data state vector update may be initiated by keying V87E.
	CMC - on (required), para 4.10.1.2 ISS - on and orientation known (desired), para 4.10.1.2 & 4.11 Program P74 - completed, para 4.6.11		If P20 running, ISS on is required. Time of intercept (computed and stored by P74) is required for computations in P75. Type of integration (conic or precision) and number of offsets will be as determined by computations in P74.
CMP	1 Key V37E 75E DSKY - P75 Go to step 4	2,140	
	2 FL V06 N81 (final pass only) ΔVX, Y, Z (lcl vert) XXXX.X FPS		ΔV (lcl vert) - Components of required ΔV in active vehicle (LM) local vertical coordinates.
	Accept Record ΔV (lcl vert) PRO		
	Reject Key V25E Load desired ΔV (lcl vert)		To modify ΔV (lcl vert) to correct for out of planeness key V90E (R36).

NORMAL/BACKUP

STA/T	STEP	PROCEDURE		PANEL	REMARKS
CMP	3	FL V06 N59		2,140	
		ΔV 1, 2, 3 (LOS)	XXXX.X FPS		ΔV (LOS) - Components of required impulsive ΔV in an orthogonal coordinate system oriented along LM to CSM LOS. (For complete definition refer to GSOP section 5.4.2.3 of R577.)
		Record ΔV (LOS)			
		PRO			To obtain central angle of active vehicle (LM), key V06 N52.
	4	FL V16 N45			
		Marks	XXBXX MKS		Marks - Number of marks processed by Rendezvous Data Processing Routine, R22. a. Two most significant digits - VHF ranging marks b. Two least significant digits - Optics marks (either SXT or backup optics (COAS) marks).
		TF GETI (TPM)	XXBXX MIN-SEC		TF GETI (TPM) - Time from ignition (updated at 1-second intervals). Max reading is 59B59. -, before; +, after. GETI (TPM) is recomputed as Tnow +B for each recycle and again when final pass is selected (PRO). The value of B is stored in erasable memory and may be changed using procedure, para 4.10.1.19, by P27 update, or prelaunch erasable load.
		MGA	-0000X		MGA - Middle gimbal angle (yaw). -00001 for other than final pass. -00002 for final pass.
		a. To continue mark process Key V32E Return to step 3			

STA/T	STEP	PROCEDURE	PANEL	REMARKS
CMP	or b.	To terminate mark procedure and do final pass through program PRO Return to step 2	2,140	
	or c.	After final pass through program PRO Transmit all maneuver parameters to LM		
	5	FL V37 Key XXE		R00.

NORMAL BACKUP

STA/T STEP	PROCEDURE	PANEL	REMARKS
	4.6.13 LM TPI SEARCH (P77) CMC - on (required), para 4.10.1.2		The purpose of this procedure is to: • Compute parameters associated with a minimum energy, safe periapsis transfer maneuver, and the resultant intercept, provided a GETI (TPI) by DSKY input. • Provide Astronaut with option of defining to CMC initial transfer trajectory search sector for central angle either > or <180° from position of active vehicle (LM) to GETI (TPI). • Display parameters associated with transfer (TPI and intercept). This procedure may be performed concurrently with P20 or independently. If P20 is operating, sighting marks on LM may be initiated by keying V57E (R21) or V54E (R23). For sighting mark procedures, refer to para 4.6.2, steps 5-7 and 8-10 respectively. In addition, if P20 is operating, a VHF ranging data state vector update may be initiated by keying V87E.
CMP 1	Key V37E 77E DSKY - P77	2,140	
2	FL V06 N37 GETI (TPI) 00XXX. HRS 000XX. MIN 0XX.XX SEC		

STA/T STEP	PROCEDURE	PANEL	REMARKS
CMP	Accept Record GETI (TPI) PRO	2,140	
	Reject Key V25E Load desired GETI (TPI)		
3	FL V06 N72		
	Δ ang (TPI) XXX.XX DEG		Δ ang (TPI) - Central angle between vehicles at GETI (TPI). +, LM ahead; -, LM behind.
	Δ alt (TPI) XXXX.X NM		Δ alt (TPI) - Magnitude of the altitude difference. +, CSM above; -, CSM below.
	Search option 0000X.		Search option - 00001 search for central angle <180°; 00002 search for central angle >180° (from LM at GETI (TPI) to intercept).
	Accept Record data PRO		
	Poss FL V05 N09 00124 (alarm code) Key V32E Return to step 2		If no solution exists.
	Reject Key V32E Return to step 2 (to adjust GETI (TPI)		To adjust GETI (TPI) and/or search option.
	or Key V23E Load desired search option		

NORMAL BACKUP

STA/T	STEP	PROCEDURE		PANEL	REMARKS
CMP	4	FL V06 N58		2,140	
		Hp	XXXX.X NM		Hp - Perigee altitude above launch pad radius for earth orbit, or perilune altitude above landing site radius for lunar orbit, after TPI maneuver. If Hp >9999.9 NM this display will become meaningless.
		ΔV (TPI)	XXXX.X FPS		ΔV (TPI) - Required impulsive ΔV to accomplish TPI maneuver at GETI (TPI).
		ΔV (TPF)	XXXX.X FPS		ΔV (TPF) - Required impulsive ΔV to accomplish intercept maneuver (TPF) at calculated time of intercept. +, LM ascending; -, LM descending.
		Accept	Record data PRO		
		Reject	Key V32E Return to step 2 (to adjust GETI (TPI) and/or search option)		
	5	FL V06 N55			
		R1 Per code	0000X		Per code - 00001, perigee/perilune between TPI and TPF. 00002, perigee/perilune after TPF.
		R3 CENTANG	XXX.XX DEG		CENTANG - Central angle of CSM from GETI (TPI) to time of intercept.

STA/T	STEP	PROCEDURE	PANEL	REMARKS
CMP		Accept Record data PRO Reject Key V32E Return to step 2 (adjust GETI (TPI) and/or search option)	2,140	
	6	FL V37 Key XXE		R00.

NORMAL BACKUP

STA/T STEP	PROCEDURE	PANEL	REMARKS
4.6.14	LM STABLE ORBIT RENDEZVOUS TARGETING (P78)		The purpose of this procedure is to: • Calculate and display required ΔV and other initial conditions required by LGC for LM execution of first phase of stable orbit rendezvous (SOR) maneuver, given: a. GETI (SOR) b. CENTANG - Angle of Transfer of passive vehicle c. The offset of the stable orbit point specified as a distance (ΔR, step 5) along passive vehicle (CSM) orbit. • Calculate and display required ΔV and other initial conditions required by the LGC for LM execution of second phase of the SOR maneuver, given: a. A respecification of GETI (SOR) based on TPF and any midcourse corrections performed in program 79 b. An optional respecification of CENTANG. • Store SOR phases 1 and 2 target parameters for use by desired thrusting program. This procedure may be performed concurrently with P20 or independently. If P20 is operating, sighting marks on LM may be initiated by keying V57E (R21) or V54E (R23). For sighting mark procedures refer to para 4.6.2, steps 5-7 and 8-10 respectively. In addition, if P20 is operating, a VHF ranging data state vector update may be initiated by keying V87E.

STA/T	STEP	PROCEDURE	PANEL	REMARKS
		CMC - on (required), para 4.10.1.2 ISS - on and orientation known (desired), para 4.10.1.2 & 4.11		If P20 running, ISS on is required.
CMP	1	Key V37E 78E DSKY - P78	2,140	
	2	FL V06 N33 GETI (SOR) 00XXX. HRS 000XX. MIN 0XX.XX SEC Accept Record GETI (SOR) PRO Reject Key V25E Load desired GETI (SOR)		
	3	FL V06 N55 R3 CENTANG XXX.XX DEG Accept Record CENTANG PRO Reject Key V23E Load desired CENTANG		CENTANG - Central angle of passive vehicle (CSM) from GETI (SOR) to time of intercept.
	4	FL V04 N06 00005 (specify phase option) 0000X (1 - phase 1; 2 - phase 2)		Phase 2 requires prior completion of phase 1.

NORMAL BACKUP

STA/T	STEP	PROCEDURE		PANEL	REMARKS
CMP		Accept PRO If option 2 specified, go to step 9 Reject Key V22E Load desired option		2,140	
	5	FL V06 N57 ΔR (SOR)	XXXX.X NM		ΔR (SOR) - Offset of stable orbit point, specified as distance along passive vehicle (CSM) orbit. +, SOR point behind CSM; -, SOR point ahead of CSM.
		Accept Record ΔR (SOR) PRO Reject Key V21E Load desired ΔR (SOR)			
	6	FL V06 N34 GET (FINAL)	00XXX. HRS 000XX. MIN 0XX.XX SEC		GET (FINAL) - Ground elapse time of arrival at stable orbit.
		Record GET (FINAL) PRO Go to step 9			
	7	FL V06 N58 Hp (SOR)	XXXX.X NM		Hp (SOR) - Perigee altitude above launch pad radius for earth orbit, or perilune altitude above landing site radius for lunar orbit, after SOR maneuver. If Hp >9999.9 NM this display will become meaningless.
		ΔV (SOR)	XXXX.X FPS		ΔV (SOR) - Required impulsive ΔV to accomplish SOR maneuver at GETI (SOR).

STA/T	STEP	PROCEDURE		PANEL	REMARKS
CMP		ΔV (SOR-FINAL)	XXXX.X FPS	2,140	ΔV (SOR-FINAL) - Required impulsive ΔV to accomplish SOR maneuver at time of intercept.
		Record data PRO			To obtain LM central angle of transfer key V06 N52. If between 170-190 degrees, reassess input targeting parameters based on ΔV and GETI.
	8	FL V06 N81 ΔVX, Y, Z (lcl vert)	XXXX.X FPS		ΔV (lcl vert) - Components of required impulsive ΔV in LM local vertical coordinates.
		Record ΔV (lcl vert) PRO			
	9	FL V16 N45 Marks	XXBXX MKS		Marks - Number of marks processed by Rendezvous Data Processing Routine, R22. a. Two most significant digits - VHF marks b. Two least significant digits - Optics marks (these marks may be either SXT or backup optics marks).
		TF GETI (SOR)	XXBXX MIN-SEC		TF GETI (SOR) - Time from ignition. Max reading 59B59. -, before; +, after.
		MGA	-0000X		MGA - Middle gimbal angle (yaw). -00001 for other than final pass. -00002 for final pass.
		a. To continue mark process Key V32E Return to step 7			

NORMAL/BACKUP

STA/T	STEP	PROCEDURE	PANEL	REMARKS
CMP	or b.	To terminate mark process and do final pass through program PRO Return to step 7	2,140	
	or c.	After final pass through program PRO Transmit all maneuver parameters to LM		
	10	FL V37 Key XXE		R00.

STA/T STEP	PROCEDURE	PANEL	REMARKS
	4.6.15 LM STABLE ORBIT MIDCOURSE TARGETING (P79)		The purpose of this procedure is to: • Calculate required ΔV and other initial conditions required by LGC for LM execution of next possible midcourse correction of stable orbit transfer phase. • Compute and display suitable information to enable crew to enter final rendezvous phase at correct time to complete required thrusting maneuver. This procedure may be performed concurrently with P20 or independently. If P20 is operating, sighting marks on LM may be initiated by keying V57E (R21) or V54E (R23). For sighting mark procedures refer to para 4.6.2, steps 5-7 and 8-10 respectively. In addition, if P20 is operating, a VHF ranging data state vector update may be initiated by keying V87E. To obtain LM central angle of transfer, key V06 N52.
	CMC - on (required), para 4.10.1.2 ISS - on orientation known (desired), para 4.10.1.2 & 4.11 Program P78 - phase 1 completed, para 4.6.14		**If P20 running, ISS on is required.** Time of intercept (computed and stored by P78) is required for computations in P79.
CMP 1	Key V37E 79E DSKY - P79 Go to step 3	2,140	
2	FL V06 N81 ΔVX, Y, Z (lcl vert) XXXX.X FPS Record ΔV (lcl vert) PRO		ΔV (lcl vert) = Components of required impulsive ΔV in LM local vertical coordinates.

NORMAL/BACKUP

STA/T	STEP	PROCEDURE		PANEL	REMARKS
CMP	3	FL V16 N45		2,140	
		Marks	XXBXX MKS		Marks - Number of marks processed by R22. a. Two most significant digits - VHF marks b. Two least significant digits - Optics marks (these marks may be either SXT or backup optics marks).
		TF GETI (MID)	XXBXX MIN-SEC		TF GETI (MID) - Time from ignition (updated at 1-second intervals). Max reading is 59B59. -, before; +, after. GETI (MID) is recomputed as Tnow +B for each recycle and again when final pass is selected (PRO). The value of B is stored in erasable memory and may be changed using procedure, para 4.10.1.19, by P27 update, or prelaunch erasable load.
		MGA	-0000X		MGA - Middle gimbal angle -00001, for other than final pass. -00002, for final pass.
		a. To continue mark process Key V32E Return to step 2			
	or	b. To terminate mark process and do final pass through program PRO Return to step 2			
	or	c. After final pass through program PRO Transmit all maneuver parameters to LM			
	4	FL V37 Key XXE			ROO.

STA/T	STEP	PROCEDURE	PANEL	REMARKS
		4.6.16 RENDEZVOUS PARAMETER DISPLAY #1 (R31)		The purpose of this procedure is to display CMC calculated rendezvous parameters (range, range rate, and theta).
		CMC - on (required), para 4.10.1.2 ISS - on and orientation known (required), para 4.10.1.2 & 4.11		Required for meaningful display of theta.
CMP	1	Key V83E	2,140	
		Poss OPR ERR		If another extended verb active.
	2	FL V16 N54		Display is updated at 2-second intervals.
		Range XXX.XX NM		Range and range rate are based on stored state vectors. The range and range rate displays may degrade considerably at ranges below ≈0.3 to 0.5 NM depending on marking schedules and resultant CMC navigation accuracy. Once this routine has started, changes to state vector caused by optics mark, or VHF sample, will not be reflected in displayed parameters.
		Range rate XXXX.X FPS		(-) range rate indicates closing. This calculation is not sufficiently accurate for reliable terminal closing values. It should not be utilized without good visual cues.
		Theta (lcl horiz/ CSM +X) XXX.XX DEG		Theta - Angle included between +Xsc axis and local horizontal. Angle in range 0° to 180° indicates +Xsc axis is above local horizontal plane. Total range: 0° to 360°.
		PRO Return to program in progress		

NORMAL/BACKUP

STA/T	STEP	PROCEDURE	PANEL	REMARKS
		4.6.17 TARGET DELTA V (P76)		This procedure provides a means of inputting LM maneuver parameters to enable CMC to update its knowledge of LM state vector. This procedure may be performed concurrently with P20 or independently. If P20 is operating, discontinue marking and ensure data incorporation complete in P20 by reviewing N45 mark counters prior to incorporation of state vector changes via this procedure. If this procedure is completed prior to the LM burn, do not update state vectors via P20 until after LM has executed its maneuver.
		CMC - on (required), para 4.10.1.2		
CMP	1	Key V37E 76E DSKY - P76	2,140	
	2	FL V06 N33 GETI 00XXX. HRS 000XX. MIN 0XX.XX SEC Accept PRO Reject Key V25E Load desired GETI		CMC updates LM state vector and zeros mark counters.
	3	FL V06 N84 ΔVX, Y, Z (LM Lcl Vert) XXXX.X FPS		

STA/T	STEP	PROCEDURE	PANEL	REMARKS
CMP		Accept PRO Reject Key V25E Load desired data	2,140	
	4	FL V37 Key XXE		ROO.

NORMAL BACK UP

STA/T	STEP	PROCEDURE	PANEL	REMARKS
		4.6.18 RENDEZVOUS PARAMETER DISPLAY #2 (R34)		The purpose of this procedure is to display CMC calculated rendezvous parameters (range, range rate, and phi).
		CMC - on (required), para 4.10.1.2 ISS - on and orientation known (required), para 4.10.1.2 & 4.11 Optics - powered up (required), para 4.10.1.4		Required for a meaningful display of phi. Required for a meaningful display of phi.
CMP	1	Key V85E	2,140	
		Poss OPR ERR		If another extended verb active.
	2	FL V16 N53		Display is updated at 2-second intervals.
		Range XXX.XX NM Range rate XXXX.X FPS		Range and range rate are computed based on stored LM and CSM state vectors. (-) range rate indicates closing. The range and range rate displays may degrade considerably at ranges below ≈0.3 to 0.5 NM depending on marking schedules and resultant CMC navigation accuracy. Once this routine has started, changes to state vector caused by optics mark or VHF sample will not be reflected in displayed parameters.
		Phi (lcl horiz/ SLOS) XXX.XX DEG		Phi - Angle included between optics starline of sight and a local horizontal. Angle in range 0° to 180° indicates SLOS is above local horizontal plane. Total range: 0° to 360°.
		PRO Return to program in progress		

STA/T	STEP	PROCEDURE	PANEL	REMARKS
		4.6.19 RENDEZVOUS OUT OF PLANE DISPLAY (R36)		Displays CMC calculated rendezvous out of plane parameters (Y, Ydot, Psi) for vehicles selected in **step 2.**
		CMC - on (required), para 4.10.1.2		
CMP	1	Key V90E	2,140	
		Poss OPR ERR Exit R36		If another extended verb is active.
	2	FL V04 N12 Option code 00002 CMC assumed option 0000X (1 = CSM active; 2 = LM active)		
		Accept PRO Reject V22E (load desired option)		
	3	FL V06 N16 GET event 00XXX. HRS 000XX. MIN 0XX.XX SEC		GET event - GET for which out of plane parameters are desired. (Present time is indicated by all zeros.)
		Accept PRO Reject Key V25E Load desired GET event		

NORMAL BACKUP

STA/T	STEP	PROCEDURE	PANEL	REMARKS
CMP	4	FL V06 N90 (rndz out of plane param)	2,140	
		Y XXX.XX NM		Y - Distance along V x R of passive vehicle.
		Ydot XXXX.X FPS		Ydot = Rate of change of Y. +, increasing; -, decreasing.
		Psi XXX.XX DEG		Psi - Angle between active vehicle orbital plane and the LOS to the passive vehicle projected into the horizontal plane. Range: 0° to 360°.
		Accept PRO Exit R36		
		Reject Key V32E Return to step 3 (adjust GET event)		To obtain an additional data point.

STA/T	STEP	PROCEDURE	PANEL	REMARKS
		4.6.20 RENDEZVOUS FINAL ATTITUDE (R63) CMC - on (required), para 4.10.1.2 ISS - on and orientation known (required), para 4.10.1.2 & 4.11 SCS - on (desired), para 4.10.2.2 RCS DAP - load and activate (required), para 4.10.1.6 & 8		The purpose of this procedure is to: • Calculate final gimbal angles required to point either CSM +X axis or preferred tracking axis at LM. • Provides auto maneuver to selected attitude by calling R60.
CMP	1	Key V37E 00E DSKY - P00	2,140	R63 may be selected from P00 only.
	2	Select ISS Total Attitude display, para 4.9.2.5		Both FDAIs are recommended so that either reference system (IMU or GDC) may be monitored. (CMC attitude error and rate display are available.)
	3	Key V89E Poss PROG alarm Key V05 N09E (to verify alarm) 00210 (ISS not on) or 00220 (IMU orientation unknown) FL V37 Key XXE		Alarm occurs only if ISS not on or IMU orientation not known (R02). Reselect R63 when ISS powered up and/or IMU orientation program complete.

NORMAL BACKUP

STA/T	STEP	PROCEDURE	PANEL	REMARKS
CMP	4	FL V04 N06	2,140	
		Option code 00003		
		CMC assumed option 0000X		
		(00001 - Preferred; 00002 - +X axis)		
		Accept PRO		
		Reject Key V22E		
		Load desired option		
	5	FL V06 N18 (computed GMBL angles)		
		R, P, Y XXX.XX DEG		Computed required gimbal angles at selected tracking attitude (preferred or +X axis) if present IMU orientation is maintained.
		Accept PRO		
		Reject Key V32E (to update display)		
		or Key V34E (to terminate routine)		
		(Attitude Maneuver Routine, R60)		Provides maneuver (automatic or manual) to attitude selected in step 4.
	6	FL V50 N18 (CMC auto request)		
		R, P, Y XXX.XX DEG		Required gimbal angles.
CDR		Accept SC CONT - CMC	1	
		CMC MODE - AUTO		
CMP		PRO	2,140	
		Go to step 7		
		Reject Key V62E		Provides reference for manual maneuver.
		RHC - null FDAI error needles		

STA/T STEP		PROCEDURE	PANEL	REMARKS
CDR	or	SC CONT - SCS (or CMC MODE other than AUTO)	1	Recomputes desired attitude without performing auto maneuver.
CMP		PRO (to update display) Recycle to step 6	2,140	
	or	ENTR Exit R60		Terminates R60.
7		V06 N18 (auto mnvr) R, P, Y XXX.XX DEG Monitor auto mnvr on FDAI Return to step 6		

NORMAL BACKUP

STA/T STEP	PROCEDURE	PANEL	REMARKS

4.7 SYSTEMS MANAGEMENT

Systems management is a compilation of procedures that are common to more than one mission phase. The procedures involve system monitoring, periodic checks, and unique functions of the following systems only: SPS, RCS, EPS, ECS, C&WS, T/C and Mechanical. Systems integrated procedures for the pre-launch through postlanding phases will repeatedly reference the material contained in systems management.

4.7.1 SYSTEMS TEST INDICATOR READOUTS

A SYS TEST indicator and two selector switches (LEB-101) provide the crew with the capability of monitoring some of the systems measurements telemetered to MSFN. A chart (figure 4.7-1) for converting the SYS TEST indicator readings to measurement parameters is included in this paragraph. The measurements consist of the following:

- Fuel cells 1, 2, and 3 regulated N2, O2, and H2 pressures
- Fuel cells 1, 2, and 3 radiator outlet temperatures
- Battery compartment manifold pressure
- Battery relay bus voltage
- CSM to LM current
- SPS oxidizer line temperature
- CM/RCS engine injector temperature
- Rendezvous radar transponder voltages and frequency lockup.

The systems test indicator conversion chart (figure 4.7-1) lists the positions of the SYS TEST switches (2), and the pertinent data available for each indicator readout.

NORMAL BACKUP

SYS TEST Selector Switches (2) Position	SYS TEST Indicator				
	System			Nominal Range	
	Function	Measurement No.	Sensor Range	System	Display (Volts)
1A	FC 1 N2 REG PRESS	SC 2060 P	Zero/75 psia	49 - 58 psia	3.3 - 3.9
1B	FC 2 N2 REG PRESS	SC 2061 P	Zero/75 psia	49 - 58 psia	3.3 - 3.9
1C	FC 3 N2 REG PRESS	SC 2062 P	Zero/75 psia	49 - 58 psia	3.3 - 3.9
1D	FC 1 02 REG PRESS	SC 2066 P	Zero/75 psia	57 - 69 psia	3.8 - 4.6
2A	FC 2 02 REG PRESS	SC 2067 P	Zero/75 psia	57 - 69 psia	3.8 - 4.6
2B	FC 3 02 REG PRESS	SC 2068 P	Zero/75 psia	57 - 69 psia	3.8 - 4.6
2C	FC 1 H2 REG PRESS	SC 2069 P	Zero/75 psia	56 - 68 psia	3.7 - 4.55
2D	FC 2 H2 REG PRESS	SC 2070 P	Zero/75 psia	56 - 68 psia	3.7 - 4.55
3A	FC 3 H2 REG PRESS	SC 2071 P	Zero/75 psia	56 - 68 psia	3.7 - 4.55
3B	FC 1 RAD OUT TEMP	SC 2087 T	-50/+300°F	-10 - +90°F	0.6 - 2.0
3C	FC 2 RAD OUT TEMP	SC 2088 T	-50/+300°F	-10 - +90°F	0.6 - 2.0
3D	FC 3 RAD OUT TEMP	SC 2089 T	-50/+300°F	-10 - +90°F	0.6 - 2.0
4A	BAT COMPT MANF PRESS	CC 0188 P	Zero/20 psia	<1 psia	<0.2
4B	BAT RELAY BUS VOLT	CC 0232 V	Zero/+45 vdc	25 - 36.5 vdc	3.7 - 4.1
4C	OPEN	NONE			
4D	CSM TO LM CURRENT	CC 2962 C	Zero/10 amp	1.0 - 6.4 amps	0.5 - 3.2
5A	SPS OXID LINE TEMP	SP 0049 T	Zero/+200°F	+45 - +75°F	1.1 - 1.9

Figure 4.7-1. Systems Test Indicator Conversion Chart (Sheet 1 of 3)

SYS TEST Selector Switches (2) Position	SYS TEST Indicator				
	System			Nominal Range	
	Function	Measurement No.	Sensor Range	System	Display (Volts)
5B	OPEN	NONE			
5C	CM RCS 24 INJ TEMP	CR 2110 T	-50/+50°F	≥28°	≥3.9
5D	CM RCS 25 INJ TEMP	CR 2116 T	-50/+50°F	≥28°	≥3.9
6A	CM RCS 12 INJ TEMP	CR 2114 T	-50/+50°F	≥28°	≥3.9
6B	CM RCS 14 INJ TEMP	CR 2100 T	-50/+50°F	≥28°	≥3.9
6C	CM RCS 16 INJ TEMP	CR 2103 T	-50/+50°F	≥28°	≥3.9
6D	CM RCS 21 INJ TEMP	CR 2119 T	-50/+50°F	≥28°	≥3.9
XPNDR A	PWR OUTPUT	ST 0711 V	0 - 0.48W	>0.24W	>1.0
XPNDR B	AGC SIGNAL	ST 0710 V	STIMULUS -115 -25DBM	TEST OPERATE	>1.0 0.0 - 4.5
XPNDR C	PHASE LOCKUP	ST 0712 X	4.0 - 5.0V 0.0 - 0.8V	LOCKED UNLOCKED	>4.0 < 0.8
XPNDR D	OPEN	NONE			

Figure 4.7-1. Systems Test Indicator Conversion Chart (Sheet 2 of 3)

NORMAL/BACKUP

SYSTEMS TEST Indicator Display	N2, O2, H2 Pressure (psia)	EPS Radiator Outlet Temperature (°F)	CM-RCS Oxidizer Valve Temperature (°F)	LM Power (amps)	SPS Temperature (°F)	Battery Compartment Manifold Pressure (psia)	Battery Relay Bus (vdc)
0.0	0	-50	-50	0	0	0.00	0
0.2	3	-36	-46	0.4	8	0.80	1.8
0.4	6	-22	-42	0.8	16	1.60	3.6
0.6	9	-8	-38	1.2	24	2.40	5.4
0.8	12	+6	-34	1.6	32	3.20	7.2
1.0	15	+20	-30	2.0	40	4.00	9.0
1.2	18	+34	-26	2.4	48	4.80	10.8
1.4	21	+48	-22	2.8	56	5.60	12.6
1.6	24	+62	-18	3.2	64	6.40	14.4
1.8	27	+76	-14	3.6	72	7.20	16.2
2.0	30	+90	-10	4.0	80	8.00	18.0
2.2	33	+104	-6	4.4	88	8.80	19.8
2.4	36	+118	-4	4.8	96	9.60	21.6
2.6	39	+132	0	5.2	104	10.40	23.4
2.8	42	+146	+4	5.6	112	11.20	25.2
3.0	45	+160	+10	6.0	120	12.00	27.0
3.2	48	+174	+14	6.4	128	12.80	28.8
3.4	51	+188	+18	6.8	136	13.60	30.6
3.6	54	+202	+22	7.2	144	14.40	32.4
3.8	57	+216	+26	7.6	152	15.20	34.2
4.0	60	+230	+30	8.0	160	16.00	36.0
4.2	63	+244	+34	8.4	168	16.80	37.8
4.4	66	+258	+38	8.8	176	17.60	39.6
4.6	69	+272	+42	9.2	184	18.40	41.4
4.8	72	+286	+46	9.6	192	19.20	43.2
5.0	75	+300	+50	10.0	200	20.00	45.0

Figure 4.7-1. Systems Test Indicator Conversion Chart (Sheet 3 of 3)

STA/T STEP	PROCEDURE	PANEL	REMARKS
	4.7.2 PROPULSION SYSTEMS Specific functions of the SPS and the two RCS subsystems must be monitored to assure operational readiness and capability. Functions requiring monitoring include helium tank pressures, temperature indications, propellant tank ullage pressures, and event indicator displays. The SPS and SM RCS monitoring checks will be performed at 4-hour intervals and after each SPS burn. In addition, the SM RCS monitoring check will be performed prior to each SPS burn. The CM RCS monitoring check will be performed at 12-hour intervals and prior to entry.		
	4.7.2.1 SPS Monitoring Check		
LMP	SPS PRPLNT TEMP ind - +45 to +75°F If <45°F, SPS LINE HTRS - A If >75°F, SPS LINE HTRS - off (ctr)	3	Use A/B position if double heater operation is required for temperature control.
	SPS PRESS IND sw - He, N2A, and N2B SPS He/N2 PRESS ind SPS He PRESS - 3900 psia max SPS N2 A PRESS - 2900 psia max SPS N2 B PRESS - 2900 psia max		3600±50 psia at launch, decreases with each burn. 2900 psia at 130°F, decreases with each burn. 2900 psia at 130°F, decreases with each burn.
	SPS PRESS IND sw - He SPS FUEL PRESS ind - 170-195 psia SPS OXID PRESS ind - 170-195 psia		Fuel and oxidizer tanks are pressurized with helium prior to launch.
	CAUTION If ΔP between fuel and oxid is >20 psi prior to a critical SPS burn, repressurize propellant tanks manually by placing SPS He VLV (both) - ON. ΔP between tanks >20 psi during a burn may result in degraded performance, rough combustion, and/or engine failure. Refer to SPS malfunction symptom, para 5.2.2.		

NORMAL BACKUP

STA/T	STEP	PROCEDURE	PANEL	REMARKS
LMP		SPS INJ VLV ind (4) - CLOSE	3	Close indication signifies that the eight propellant ball valves are closed.
		SPS OXID QTY ind - record SPS FUEL QTY ind - record SPS OXID UNBAL ind - record OXID FLOW VLV PRIM - PRIM		These quantity and unbalance indications may not be accurate subsequent to SPS burns of less than 25 seconds.
		CAUTION Do not switch to secondary oxid flow valve with primary valve functioning properly. Failure of secondary valve could result in loss of propellant management capability. If the OXID FLOW VLV PRIM switch is inadvertently set to SEC when no failure exists, return to PRIM before repositioning the OXID FLOW VLV INCR switch.		
		SPS He VLV (both) - AUTO SPS He VLV tb (both) - bp		Barber pole display indicates helium isolation valve closed.
	4.7.2.2	SM RCS Monitoring Check		In addition to normal monitoring checks, all helium and propellant tbs (16) should be verified gray after any mechanical shock to CSM.
CMP		SM RCS He tb (8) - gray	2	Gray display indicates helium systems 1 & 2 isolation valves open.

STA/T STEP	PROCEDURE	PANEL	REMARKS
CMP	SM RCS PRIM PRPLNT tb (4) - gray	2	Gray displays indicate primary and secondary fuel and oxidizer isolation valves open.
	SM RCS SEC PRPLNT tb (4) - gray		
	RCS IND sel - SM A, B, C, D		
	Check Quads A, B, C, D		
	SM RCS PKG TEMP ind - 105-195°F		Temperature is maintained by thermostatically controlled heaters. Thermostat on-off nominal range is 115 to 134°F.
	SM RCS He PRESS ind - record		
	SM RCS IND sw - He TK TEMP		
	SM RCS He TK TEMP ind - record		
	SM RCS IND sw - PRPLNT QTY		
	SM RCS PRPLNT QTY ind - record		
	SM RCS MANF PRESS ind - 178-192 psia (192-207 psia until jets fired after orbit insertion)		Primary fuel pressure readout for each quad until momentary OPEN position of RCS SEC FUEL PRESS A (B,C,D) switch selected.
	When SM RCS MANF PRESS ind <150 psia		
	RCS SEC FUEL PRESS A (B,C,D) - OPEN		Decrease in fuel pressure indicates primary fuel low. OPEN position is momentary.
	4.7.2.3 CM RCS Monitoring Check		
	CM RCS PRPLNT tb (both) - bp (until Deorbit and Entry or Lunar Return Entry Vehicle preparation, para 4.16)		Barber pole display indicates at least one valve (fuel or oxidizer) closed in the particular system 1 or 2.
	RCS IND sel - CM 1, 2		
	CM RCS He TEMP ind - 60-90°F		
	Prior to CM RCS activation		
	CM RCS He PRESS ind - 4100-4200 psia		

NORMAL/BACKUP

STA/T STEP	PROCEDURE	PANEL	REMARKS
CMP	CM RCS MANF PRESS ind - 25-105 psia	2	GSE servicing pressure will be monitored until system activated. Pressure excursions are a function of temperature and ullage variations. If there has been a sudden drop in CM RCS manifold pressure, indicative of a ruptured burst diaphragm, perform procedure for preheating appropriate RCS system (para 4.16.1.3 or 4.16.2.3) for 15 minutes. This will vent any propellant trapped between propellant isolation valves and engines by energizing engine valve direct coils.
	After CM RCS activation CM RCS He PRESS ind - Stabilizes at 3300-3500 psia ≈15 min after activation CM RCS MANF PRESS ind - 287-302 psia		

STA/T STEP	PROCEDURE	PANEL	REMARKS

4.7.3 ELECTRICAL POWER SYSTEM

EPS Management

The normal EPS configuration will be with two fuel cells on each main bus, e.g., FC 1 on MNA, FC 2 on MN A&B, and FC 3 on MNB. If one fuel cell is to be removed from the buses, one of two configurations may be assumed. The prime configuration is one fuel cell per bus; for example, fuel cell 1 to main bus A and fuel cell 3 to main bus B. This configuration requires a dual inverter configuration and subsequent load balancing after fuel cell configuration has been established. The second configuration is to have the two fuel cells paralleled to the buses. This configuration should not be assumed unless equipment malfunction does not permit load balancing or one of the remaining fuel cells performance is degraded.

Standby operation (in-line heaters, reactants and pumps remain on) may be used when powering down the spacecraft, as a corrective action for fuel cell malfunctions, or in the event it is desired to hold a fuel cell in reserve for future use. Batteries and the remaining fuel cells should be normal when a fuel cell is placed on standby operation (open circuit). Inline heaters and pumps should not be turned off unless the fuel cell is to be shut down. If, during the mission, it becomes necessary to conserve cryogenics, electrical loads should be reduced which will in turn decrease the flow of cryogenics to the fuel cells. In an emergency situation, consideration may be given to deactivate a fuel cell (inline heaters, pumps, and loads off) to conserve cryogenics. During the deactive period, continuous monitoring of the fuel cell system will not necessarily assure a reactivation capability and there exists a possibility of complete loss of the fuel cell.

The prime inverter configuration is to have inverter 1 powering ac bus 1 and inverter 2 powering ac bus 2, with inverter 3 as backup. This configuration permits optimum bus isolation; however, reliability of the inverter permits single inverter operation to both ac buses if cryogenics are to be conserved.

NORMAL/BACKUP

STA/T STEP	PROCEDURE	PANEL	REMARKS

Entry batteries A and B will normally supply main bus A and main bus B respectively with battery C as backup. The batteries (2) should be on during countdown, lift-off, and all delta V maneuvers. Battery C will supply the buses prior to the deorbit burn and as required throughout the mission.

Battery C will be connected to the buses as required to provide two-battery configuration for delta V maneuvers. All three batteries are to be used during the final deorbit burn.

The battery charging cycle should be terminated when either the battery bus voltage indicated on PCM exceeds 39.5 vdc or when 100 percent of the expended energy has been replaced. This presumes charger current PCM data availability, and integration of the charge current on the ground with MSFN advice to the crew when 100 percent of the charge is returned. If the PCM link is lost, voice readouts of the onboard charger DC AMPS indicator will be required at intervals of 20 to 30 minutes for integration on the ground. Charging may be resumed if interrupted before achieving the terminal conditions previously listed. Normal practice is to continue any charge to completion.

Batteries will be checked prior to each GO/NO-GO flight decision, prior to the deorbit burn, and in routine periodic checks as required.

The onboard readout will be the prime readout throughout the EPS checks.

Fuel cell periodic verification consists of updating onboard data and comparing the respective fuel cell performance for a particular phase, with the established history of the powerplant.

Normal fuel cell purge requirements will be established in flight on the basis of prelaunch purity tests and elapsed amp-hours since previous purge. Purging will also be required just prior to GO/NO-GO flight decisions. Purging is accomplished by sequentially purging O2 (for 120 seconds) then H2 (for 80 seconds).

The time required for the H2 vent line heater activation prior to H2 purge has been set at 20 minutes. This time is flexible in that a purge may be attempted with less heater time (for example, a contingency corrective action) with no immediate adverse effect on the powerplant.

STA/T STEP	PROCEDURE	PANEL	REMARKS

Cryogenic System Operational Regions

There are four basic cryogenic system operational regions based on control requirements. Quantity balance should be obtained by the end of Region I to assure optimum fluid quantity remaining in Regions III and IV. These regions and their respective quantity balance requirements are:

Region I - Automatic Control Region

Quantity balance correction is to be implemented at a 3-percent differential for hydrogen and for oxygen a differential from 2 percent to 4 percent. Unbalanced conditions of 5 percent for O2 and 4 percent for H2 should be avoided.

Region II - Minimum dq/dm Region

Quantity balancing procedures should not be implemented in this region.

Region III - Post Minimum dq/dm Region

Quantity balancing correction should be implemented on the same basis as in Region I. Heater switches may be in either manual or AUTO and fan switches should be operated manually, depending on balancing requirements.

Region IV - Terminal Region

Quantity balancing procedures should not be implemented.

NORMAL BACKUP

STA/T	STEP	PROCEDURE	PANEL	REMARKS
		4.7.3.1 Cryogenic Pressure-Quantity Check		
CMP		CRYO H2 PRESS ind (both) - 225-260 psia	2	Indicates H2 tank 1 and 2 pressure.
		O2 PRESS IND sw - SURGE TK		
		CRYO O2 PRESS 1 ind - 865-935 psia		Indicates surge tank O2 pressure.
		O2 PRESS IND sw - TK 1		
		CRYO O2 PRESS ind (both) - 865-935 psia		Indicates O2 tank 1 and 2 pressure.
		CRYO H2 QTY ind (both) - record		Nominal per mission profile curve, 100% maximum indicates full tank (28 lbs each tank).
		CRYO O2 QTY ind (both) - record		Nominal per mission profile curve, 100% maximum indicates full tank (320 lbs each tank).
		4.7.3.2 FC Power Plant Check		
LMP		FC HTRS (all) - on (up)	3	Enables electronic switches which automatically apply or remove power to FC heaters.
		FC REACS tb (all) - gray		Gray displays indicate FC reactant valves are open.
		FC IND sel - 1, 2, 3		
		FC H2 FLOW ind - 0.03-0.15 lb/hr		Flow limits are proportional to individual FC currents and can be approximated by FC O2 flow ≈(amps x 2.0)/100, and FC H2 flow ≈(amps x 2.5)/1000.
		FC O2 FLOW ind - 0.25-1.2 lb/hr		
		FC SKIN TEMP ind - 390-450°F		
		FC COND EXH TEMP ind - 150-175°F		
		FC pH HI tb - gray		Gray display indicates pH factor is normal.
		FC RAD TEMP LO tb - gray		Gray display indicates FC radiator temperatures are normal.

STA/T STEP	PROCEDURE	PANEL	REMARKS
	4.7.3.3 D-C Voltage-Amperage Check		
LMP	MN BUS TIE (2) - OFF	5	
	FC 1 & 2 MNA tb (2) - gray	3	Gray displays indicate fuel cells 1 and 2 are connected to main bus A. Barber pole indicates FC 3 is disconnected from main bus A.
	FC 3 MNA tb - bp		
	FC 1 MNB tb - bp		Barber pole display indicates fuel cell 1 is disconnected from main bus B. Gray displays indicate fuel cells 2 and 3 are connected to main bus B.
	FC 2 & 3 MNB tb (2) - gray		
	DC IND sel - FC 1, 2, 3		Record dc amps for each FC.
	DC AMPS ind - record		
	DC IND sel - MNA, B		Record dc volts for main buses A and B.
	DC VOLTS ind - 26.5-31 vdc (record)		
	DC IND sel - BAT BUS A, B, & BAT C		
	DC VOLTS ind - 34-38 vdc		Voltage indication may be different than shown when charging battery.
	DC AMPS ind - <3.0 amps		
CMP	SYS TEST (2) - 4B	101	Verifies battery relay bus voltage 25 to 36.5 vdc and verifies system test indicator. Perform if convenient.
	SYS TEST ind - 3.7-4.1 vdc		
	CAUTION Do not leave DC IND sel at PYRO BAT A (B) position any longer than required to read DC VOLTS ind, or pyro battery charge will be depleted.		

NORMAL BACKUP

STA/T	STEP	PROCEDURE	PANEL	REMARKS
LMP		DC IND sel - PYRO BAT A, B	3	Check pyro batteries A and B once every 24 hours.
		DC VOLTS ind - 37.0-37.5 vdc		
		DC IND sel - MNA		
	4.7.3.4	A-C Voltage Check		
		AC IND sel - BUS 1, 2, ϕA, B, C		
		AC VOLTS ind - 113-117 vac		
	4.7.3.5	Battery Charging		
		MN BUS TIE (2) - OFF	5	Placing MN BUS TIE switches at OFF completes circuit from charger to selected battery and disconnects battery from main bus.
		cb PYRO A BAT BUS A - open	250	
		cb PYRO B BAT BUS B - open		
		cb BAT BUS A BAT C - open		
		cb BAT BUS B BAT C - open		
		cb BAT RLY BUS BAT A (B) - open	5	
		DC IND sel - BAT CHGR	3	
		BAT CHG - A, B, or C		
		CAUTION		
		If battery charge is started immediately after discharge, charger current may be high and/or charger voltage may be low. Current and voltage should be within specified limits 45 minutes after initiation of charge, otherwise transfer charger to remaining batteries. After remaining batteries are charged, return charger to affected battery.		

STA/T	STEP	PROCEDURE	PANEL	REMARKS
LMP		DC VOLTS ind - 37.5-39.5 vdc	3	
		BAT CHG - OFF (at MSFN request or when DC VOLTS ind reads 39.5 vdc for bat bus A, B or bat C)		
		cb BAT RLY BUS BAT A (B) - close	5	
		DC IND sel - MNA	3	
CMP		SYS TEST (2) - 4A	101	
		SYS TEST ind - <1.5 vdc (After sea level ambient press ≈14 psia has been vented)		
		If >1.5 vdc		Battery vent manifold pressure >6 psia (1.5 vdc) indicates a gross battery malfunction which should have become apparent prior to manifold pressure increase. If manifold pressure ≈cabin pressure, leakage into battery case(s) is indicated which will have no effect on battery performance.
		BAT VENT vlv - VENT (for 5 sec) then CLOSE	252	
		SYS TEST (2) - 4B	101	
		4.7.3.6 Fuel Cell Power Plant Purging		
LMP	1	02 purging		Refer to purge information at beginning of para 4.7.3. Purging is performed as determined by real time decision.
		FC IND sel - 1, 2, or 3	3	
		FC 1, 2, or 3 PURG - 02 (2 min)		
		FC 02 FLOW ind - flow increases 0.6 lb/hr		02 flow rate will increase by 0.6 lb/hr. This may cause FC 02 FLOW indicator to exceed its normal limits and activate MASTER ALARM pb/lt (3) and FC 1 (2 or 3) lt. Alarm limits may be checked by monitoring FC 02 FLOW indicator at the moment C/W lt comes on. • If normal 02 flow is at lowest limits, purging 02 side of fuel cell will not cause MASTER ALARM pb/lt to come on.

NORMAL BACK P

STA/T	STEP	PROCEDURE	PANEL	REMARKS
LMP		FC 1, 2, or 3 PURG - OFF	3	
	2	H2 purging H2 PURG LINE HTR - on (up), 20 min prior to purge FC IND sel - 1, 2, or 3 FC 1, 2, or 3 PURG - H2 (1 min, 20 sec) FC H2 FLOW ind - flow increases 0.67 lb/hr		Refer to purge information at beginning of para 4.7.3. Purging is performed as determined by real time decision. H2 flow rate will increase by 0.67 lb/hr. This will cause FC H2 FLOW indicator to exceed its normal limits, and activate MASTER ALARM pb/lt (3) and FC 1 (2 or 3) lt.
ALL		MASTER ALARM pb/lt (3) - on MASTER ALARM pb/lt - push MASTER ALARM pb/lt (3) - out	1,3,122	
CMP		FC 1, 2, or 3 lt - on (until normal flow restored)	2	
LMP		FC 1, 2, or 3 PURG - OFF After ≈10 min H2 PURG LINE HTR - OFF	3	
	4.7.3.7	H2 or 02 Quantity Balance Correction		Refer to quantity balance information at beginning of para 4.7.3.
CMP		On low quantity tank H2 or 02 HTRS 1 (2) - off (ctr) When tank quantity balanced H2 or 02 HTRS 1 (2) - AUTO	2	
	4.7.3.8	Fuel Cell Load Disconnect (Example using FC 2)		This procedure is presented with the following assumptions: FC 1 is powering dc main bus A. FC 2 is powering dc main buses A & B. FC 3 is powering dc main bus B.
		a. Prior to Disconnect		
LMP		Insure that at least one fuel cell is powering each main bus		

STA/T STEP	PROCEDURE	PANEL	REMARKS
	Fuel cell disconnect		
	(1) Prime configuration		Requires load balancing.
LMP	FC 2 MNA - OFF	3	
	FC 2 MNB - OFF		FC 2 is now disconnected from both dc main buses.
	FC 2 MNA & B tb (2) - bp		FC 1 is powering dc main bus A, and FC 3 is powering dc main bus B. Barber poles indicate FC 2 is disconnected from main bus A and main bus B.
	FC 1 MNA tb - gray		Gray display indicates fuel cell 1 is connected to main bus A.
	FC 1 MNB tb - bp		Barber pole indicates fuel cell 1 is disconnected from main bus B.
	FC 3 MNA tb - bp		Barber pole indicates fuel cell 3 is disconnected from main bus A.
	FC 3 MNB tb - gray		Gray display indicates fuel cell 3 is connected to main bus B.
	(2) Secondary configuration		This configuration is assumed if load balancing cannot be obtained.
	FC 1 MNB - on (up)		On position is momentary. When fuel cell main bus switches placed from OFF to momentary on position, MASTER ALARM and FC BUS DISCONNECT lights are energized.
	FC 3 MNA - on (up)		

NORMAL BACKUP

STA/T STEP	PROCEDURE	PANEL	REMARKS
LMP	FC 2 MNA - OFF FC 2 MNB - OFF	3	FC 2 is disconnected from both dc main buses. FC 1 and FC 3 are paralleled to both dc main buses.
ALL CMP	MASTER ALARM pb/lt (3) - on FC BUS DISCONNECT lt - on (momentary)	1,3,122 2	
ALL	MASTER ALARM pb/lt - push, out	1,3,122	
CMP	C/W lt (all) - out	2	
LMP	FC 1 MNA & B tb (2) - gray	3	Gray displays indicate fuel cell 1 is connected to main bus A and B.
	FC 3 MNA & B tb (2) - gray		Gray displays indicate fuel cell 3 is connected to main bus A and B.
	FC 2 MNA & B tb (2) - bp		Barber poles indicate fuel cell 2 is disconnected from main bus A and B.
	b. Connect Desired FC to Desired Main Bus Fuel cell to bus connection		
	FC 2 MNB - on (up) FC 2 MNA - on (up)		On position is momentary. When fuel cell main bus switches placed from OFF to momentary on position, MASTER ALARM and FC BUS DISCONNECT lights are energized.
	FC 1 MNB - OFF FC 3 MNA - OFF		Fuel cells returned to normal configuration (FC 1 powering dc main bus A, FC 2 powering dc main bus A & B, and FC 3 powering dc main bus B).

STA/T STEP	PROCEDURE	PANEL	REMARKS
ALL	MASTER ALARM pb/lt (3) - on	1,3,122	
CMP	FC BUS DISCONNECT lt - on (momentary)	2	
ALL	MASTER ALARM pb/lt - push, out	1,3,122	
CMP	C/W lts (all) - out	2	
LMP	FC 2 MNA & B tb (2) - gray	3	Gray displays indicate fuel cell 2 is connected to main bus A and B.
	FC 1 MNA tb - gray		Gray display indicates fuel cell 1 is connected to main bus A.
	FC 1 MNB tb - bp		Barber pole indicates fuel cell 1 is disconnected from main bus B.
	FC 3 MNA tb - bp		Barber pole indicates fuel cell 3 is disconnected from main bus A.
	FC 3 MNB tb - gray		Gray indicates fuel cell 3 is connected to main bus B.
4.7.3.9	Inverter Changeover		Normal operation throughout mission will be with 2 inverters operating. During drifting flight, a single inverter is adequate to power both ac buses; however, two-inverter operation is assumed, providing maximum bus isolation.
	WARNING Insure at least one inverter on each ac bus at all times (if available).		If 3 inverters are switched onto one ac bus, loss of ac power to that bus will result.

STA/T STEP	PROCEDURE	PANEL	REMARKS
LMP	a. Dual Inverter (No. 1 and 2) Operation AC2 RSET - OFF	3	This procedure is presented with the assumption that inverter 1 is powering ac bus 1 and 2.
	INV 2 - MNB		During dual inverter operation, inverter connected to dc main bus A should always power ac bus 1 and inverter connected to dc main bus B should always power ac bus 2, to preclude loss of all ac and dc power to SCS in event of single dc main bus failure.
	INV 1 AC2 - OFF		S-band phaselock will be lost upon switching inverters.
	INV 2 AC2 - on (up)		Rapid performance of inverter switching sequence may initiate MASTER ALARM pb/lt when inverter is connected to bus.
	AC2 RSET - RSET		RSET position is momentary.
ALL	MASTER ALARM pb/lt (3) - on MASTER ALARM pb/lt - push MASTER ALARM pb/lt (3) - out	1,3,122	Placing AC1 or 2 RSET switch to RSET and releasing insures a MASTER ALARM pb/lt - on. Placing AC1 or 2 RSET to ctr will cause random activation of MASTER ALARM pb/lt.
CMP	C/W lts (all) - out	2	
			Inverter 1 now powering ac bus 1 and inverter 2 powering ac bus 2.
LMP	Perform AC voltage check, para 4.7.3.4		
	b. Single Inverter Operation AC2 RSET - OFF	3	This procedure is presented with the assumption that inverter 1 is powering ac bus 1 and inverter 2 is powering ac bus 2.
	INV 2 - OFF		

STA/T STEP	PROCEDURE	PANEL	REMARKS
LMP	INV 2 AC2 - OFF	3	S-band phaselock will be lost upon switching inverters.
	INV 1 AC2 - on (up)		Rapid performance of inverter switching sequence may initiate MASTER ALARM pb/lt when inverter is connected to bus.
	AC2 RSET - RSET		RSET position is momentary.
ALL	MASTER ALARM pb/lt (3) - on MASTER ALARM pb/lt - push MASTER ALARM pb/lt (3) - out	1,3,122	Placing AC1 or 2 RSET switch to RSET and releasing insures a MASTER ALARM pb/lt - on. Placing AC1 or 2 RSET to ctr will cause random activation of MASTER ALARM pb/lt.
CMP	C/W lts (all) - out	2	
			Inverter 1 now powering ac bus 1 and ac bus 2.
LMP	Perform AC Voltage Check, para 4.7.3.4		
	c. Standby Inverter (No. 3) Check or Operation		This procedure is presented with the assumption that inverter 1 is powering ac bus 1 and inverter 2 is powering ac bus 2. If switching inverter 3 from one main dc bus to the other, pause momentarily in the OFF position.
	AC2 RSET - OFF INV 2 - OFF	3	
	INV 3 - MNB		
	INV 2 AC2 - OFF		S-band phaselock will be lost upon switching inverters.
	INV 3 AC2 - on (up)		Rapid performance of inverter switching sequence may initiate MASTER ALARM pb/lt when inverter is connected to bus.

NORMAL BACKUP

STA/T	STEP	PROCEDURE	PANEL	REMARKS
LMP		AC2 RSET - RSET	3	RSET position is momentary.
ALL		MASTER ALARM pb/lt (3) - on MASTER ALARM pb/lt - push MASTER ALARM pb/lt (3) - out	1,3,122	Placing AC1 or 2 RSET switch to RSET and releasing insures a MASTER ALARM pb/lt - on. Placing AC1 or 2 RSET to ctr will cause random activation of MASTER ALARM pb/lt.
CMP		C/W lts (all) - out	2	
LMP		Perform AC Voltage Check, para 4.7.3.4 If standby inverter check Go to dual inverter (No. 1 and 2) operation, para 4.7.3.9a, and set INV 3 - OFF	3	Standby inverter (No. 3) check should be performed every 24 hours.
	4.7.3.10	Cryo O2 and H2 Manual Fan Operation		Manual fan operation should be used during flight to prevent possible cryo pressure control motor switch arcing, which may cause a-c inverter-a-c bus disconnect.
		CAUTION In the following step, if CRYO PRESS light illuminates, do not set H2 and O2 FANS - off (ctr) or proceed to next step until light extinguishes.		
CMP		H2 and O2 FANS (4) - ON sequentially for 1 minute each, per the following a. Cycle prior to every SPS or SIVB ΔV b. If quantity between 80% and 100%, cycle every 4 hours c. If quantity between 50% and 80%, cycle every 8 hours d. If quantity less than 50%, periodic cycling not required	2	

STA/T STEP	PROCEDURE	PANEL	REMARKS

4.7.4 ENVIRONMENTAL CONTROL SYSTEM

ECS systems management procedures are divided into two categories. The first category consists of five procedures, described in steps 1 through 5, that are conducted at specific time intervals.

1. An ECS monitoring check is recommended every hour from the time the S/C attains orbit until CSM separation. This check provides the crew with the latest status of the ECS.

2. A redundant component check is accomplished at 24-hour intervals to determine the operational status of certain ECS redundant components and the secondary water-glycol loop. The test will reveal any inoperative or malfunctioning components that might have been selected for use later in the mission. Several redundant components are not checked, however, because of excessive use of oxygen, a means of selection not incorporated, or lack of direct indication.

3. Replacement of one CO2-odor absorber filter is required on an alternate basis, at 12-hour intervals, for the ECS to remain within the prescribed metabolic limit. Filters are also changed if CO2 partial pressure exceeds 7.6 mm Hg.

4. It is recommended that at 24-hour intervals the debris screens on the suit circuit return valve and at the inlet to the cabin heat exchanger be checked and cleaned as necessary.

5. It is recommended that chlorine and a buffer chemical be individually injected into the potable water supply every 24 hours to maintain potability. There is a 10-ampoule supply of each chemical on the CM. Should a condition exist where either glycol evaporator is in use and the waste water tank is empty, the chlorine and buffer injections should be postponed.

NORMAL BACKUP

STA/T STEP	PROCEDURE	PANEL	REMARKS

The second category consists of procedures, described in steps 1 through 11, that are accomplished at random intervals or only as required.

1. PGA/shirtsleeve mode changes require certain precautions to be taken regarding suit power switch settings, communication functions and ECS adjustments. This applies whether the mode change is from PGA-to-shirtsleeve, shirtsleeve-to-PGA, or full PGA to partially suited mode. Also specified is a configuration for extravehicular and intravehicular transfer (EVT/IVT).

2. Waste management procedures provide the steps necessary for the collection, removal, and disposition of waste products (except perspiration and respiration) resulting from normal body functions. Collection and disposition of emesis within the CM is also covered.

3. Procedures are provided to repressurize the CM cabin to 5 psia following depressurization for any reason.

4. A verification of the PGA is carried out each time a crewman dons his suit. Although only one crewman may be returning to the suited mode, all those already suited will be subjected to the PGA verification. The verification is also performed prior to S-IVB separation, SPS burns, cabin pressure dumping, EVT, IVT, and deorbit.

5. The CM oxygen supply, represented by the surge tank and the repressurization tanks (3), requires replenishment after cabin repressurization.

6. The CM pressure dump procedure is utilized for extravehicular transfer (EVT).

7. The suit circuit, when isolated from the cabin, will be purged of accumulated hydrogen at the discretion of the flight crew.

STA/T STEP	PROCEDURE	PANEL	REMARKS
	8. The cabin cold-soak operation is recommended for any period for which a cooler cabin is desirable, provided water consumption is compatible with water management, and radiator outlet temperature is greater than 0°F. The procedure may commence 8 to 12 hours prior to entry if a safety margin for entry is deemed advisable. Primary and secondary radiator loops are not to be operated simultaneously.		
	9. The CM/LM pressure equalization procedure will normally be performed to support initial hard docking and LM withdrawal, and intravehicular crew transfer from either the CM or LM.		
	10. A procedure is provided for the donning and doffing of the emergency oxygen masks.		
	11. A procedure is provided to manually dump waste water overboard. This procedure is required approximately once per day to maintain the waste water tank quantity level between 85 and 25 percent.		
	4.7.4.1 ECS Monitoring Check		
LMP	SUIT CAB ΔP ind - -1.0 to -3.5 in. H20	2	
	02 FLOW ind - 0.2-0.45 lb/hr		02 flow may be as high as 1.0 lb/hr (pegged) prior to completion of cabin purge.
	02 PRESS IND sw - SURGE TK		
	CRYO 02 PRESS 1 ind - 865-935 psia		
	02 PRESS IND sw - TK 1		
CMP	REPRESS 02 PRESS ind - >865 psia	602	
LMP	ECS RAD tb - gray	2	Gray indicates No. 1 flow proportioning valve is controlling flow.
	xxxxxxxxxxxxxxxxxxxxxxxxxxxxxxxxxxxxxxxxxx		
	If ECS RAD tb - 2 RAD FLOW CONT AUTO - 1 until tb gray, then AUTO		Attempt resetting tb before assuming radiator proportioning malfunction.

NORMAL BACKUP

STA/T STEP	PROCEDURE	PANEL	REMARKS
LMP	If tb cannot be reset RAD FLOW CONT AUTO - 1	2	
	RAD PRIM OUT TEMP ind - within correct range		Correct range indicates tb malfunction only, with both proportioning systems and failure detection circuit operable.
	RAD FLOW CONT AUTO - AUTO RAD PRIM OUT TEMP ind - outside correct range		
	Refer to ECS Malfunction Procedures, PRIM ECS RAD OUT TEMP HIGH, Symptom 15		
	xxxxxxxxxxxxxxxxxxxxxxxxxxxxxxxxxxxxxxxxxx		
	ECS IND sel - PRIM		
	RAD PRIM IN TEMP ind - 67-97°F		
	RAD PRIM OUT TEMP ind - -20 to 63°F (-20 to 97°F for lunar orbit)		
	PRIM GLY EVAP OUT TEMP ind - 40-50.5°F		
	PRIM GLY EVAP STM PRESS ind - 0.10-0.15 psia (when boiling) or >0.16 psia (not boiling)		
	PRIM GLY DISCH PRESS ind - 40-52 psig		
	SUIT TEMP ind - 45-55°F		
	CAB TEMP ind - 70-80°F		
	CAB TEMP tw - incr/decr as req		Thumbwheel will require readjustment with any significant change in CSM power load or attitude.
	SUIT PRESS ind - *CAB PRESS ind		
	CAB PRESS ind - 4.7-5.3 psia		Cabin pressure will be 5.6 to 6.2 psia after launch and continuously decrease until the cabin pressure regulator activates and controls to 4.7 to 5.3 psia.

STA/T	STEP	PROCEDURE	PANEL	REMARKS
LMP		CO2 PP ind - <7.6 mm Hg	2	
		SUIT COMPR ΔP ind - 0.3-0.4 psid		
		PRIM ACCUM QTY ind - 30-65%		
		If quantity <30%		
CMP,LMP		PRIM ACCUM FILL vlv - ON until 40-55% is reached	379,2	
LMP		H2O QTY IND sw - POT	2	
		POT H2O QTY ind - 10-100%		
		(Deleted)		
		H2O QTY IND sw - WASTE		
		WASTE H2O QTY ind - 25-85%		
		4.7.4.2 ECS Redundant Component Check		
	1	Suit compressor		
		SUIT COMPR (both) - redundant compressor	4	
		SUIT COMPR ΔP ind - 0.3-0.4 psid	2	
	2	Suit demand regulators		
CDR		DEMAND REG sel - 1	380	
		Close demand reg cabin bleed port with finger		Obstruct bleed flow only long enough to obtain momentary high flow.
LMP		O2 FLOW ind - momentary increase	2	
CDR		DEMAND REG sel - 2	380	
		Close demand reg cabin bleed port with finger		Obstruct bleed flow only long enough to obtain momentary high flow.
LMP		O2 FLOW ind - momentary increase	2	
CDR		DEMAND REG sel - BOTH	380	

NORMAL/BACKUP

STA/T	STEP	PROCEDURE	PANEL	REMARKS
	3	Main 02 regulators		
CMP		MN REG B - close	351	
		EMER CAB PRESS sel - 1		
		EMER CAB PRESS TEST pb - push		Press-to-test pushbutton held only long enough to obtain momentary high flow.
LMP		02 FLOW ind - pegged high	2	
CMP		MN REG B - OPEN	351	
		MN REG A - close		
		EMER CAB PRESS sel - 2		
		EMER CAB PRESS TEST pb - push		Press-to-test pushbutton held only long enough to obtain momentary high flow.
LMP		02 FLOW ind - pegged high	2	
CMP		MN REG A - OPEN	351	
		EMER CAB PRESS sel - BOTH (OFF if all crewmen suited)		
	4	H20 accumulators		
LMP		SUIT H20 ACCUM AUTO - redundant accum	2	
		02 FLOW ind - monitor for momentary (10 sec) increase		Allow up to 10 minutes for accumulator stroking.
	5	Urine dump nozzle heaters		
CMP		WASTE H20 DUMP - redundant heater	101	
		URINE DUMP - redundant heater		
		MSFN reports no significant change in urine and water dump nozzle temperatures		Nozzle temperatures are telemetered only. Temperature decrease indicates heater failure; however, if nozzles are facing sun, decrease may not be immediate.

STA/T	STEP	PROCEDURE	PANEL	REMARKS
CMP	6	Open coolant control attenuation panel		Covers panel 382. **Opened to perform part of** secondary glycol loop check.
		WARNING		
		SUIT FLOW RELF valve must remain OFF throughout mission or swelling of CO2 odor absorber filters may result.	382	
	7	Secondary glycol loop		Coldplates are not provided in the secondary glycol loop for DSE and G&N. Usage time for noncoldplated items is as follows: DSE: 2 hours ON, 1 hour OFF. G&N: 1.9 hours ON, 9.2 hours OFF.
		CAUTION		
		Simultaneous operation of cryo 02 heaters and secondary loop radiator heaters will result in low main bus voltage (<26.5 vdc). This will be precluded if the following precautions are observed.		
LMP		If RAD PRIM OUT TEMP ind - ≤48°F preceding sec loop activation, or if RAD SEC OUT TEMP ind ≤45°F following sec loop activation:	2	
		• Inhibit cryo 02 heaters whenever cryo tank press <900 psia (02 HTRS (both) - off (ctr)). Enable cryo heaters when RAD SEC OUT TEMP ind >48°F.		

NORMAL BACK

STA/T	STEP	PROCEDURE	PANEL	REMARKS
		• Enable sec loop rad heaters when main bus A and B ≥28.25 vdc with 3 F/C operation or ≥28.5 vdc with 2 F/C operation.		
CMP		SEC EVAP H2O CONT - AUTO	382	
LMP		ECS IND sel - SEC	2	
		GLY EVAP STM AUTO - MAN		
		GLY EVAP STM INCR - INCR for 58 sec min		Steam pressure valve requires 58 seconds from full open to full closed. INCR position is momentary.
CMP		GLY TO RAD SEC vlv - NORM	377	
LMP		RAD PRIM HTR - off (ctr)	2	
		GLY PUMPS - OFF	4	
		SEC COOL PUMP - AC1	2	
		SEC GLY DISCH PRESS ind - 39-51 psig		
		SEC ACCUM QTY ind - 30-55%		
		RAD SEC HTR - on (up)		
		SEC COOL EVAP - EVAP		
		After 20-30 minutes		**Allow 20 to 30 minutes of glycol circulation before reading temperature indicators.**
		RAD SEC IN TEMP ind - 60-97°F		
		RAD SEC OUT TEMP ind - 40-70°F (pegged)		75°F (actual) with high loads and worst case orientation, or >75°F (actual) during the subsolar point of lunar orbit.
		SEC GLY EVAP OUT TEMP ind - 40-50.5°F		
		SEC COOL PUMP - AC2		
		SEC GLY DISCH PRESS ind - 39-51 psig		
		SEC COOL EVAP - RSET for 58 sec min, then off (ctr)		RSET closes steam pressure control valve. Steam pressure valve requires 58 seconds from full open to full close.
		RAD SEC HTR - OFF		
CMP		GLY TO RAD SEC vlv - BYP	377	

STA/T	STEP	PROCEDURE	PANEL	REMARKS
LMP		ECS IND sel - PRIM	2	
		SEC COOL PUMP - off (ctr)		
CMP		SEC EVAP H2O CONT - OFF	382	
	8	Close coolant control attenuation panel		Covers panel 382.
	9	Primary glycol pumps		
LMP		GLY PUMPS - redundant pump	4	Switch to pump opposite that on at beginning of test. This verifies primary loop pump operation.
		PRIM GLY DISCH PRESS ind - 40-52 psig	2	
		PRIM ACCUM QTY ind - 30-65%		
		GLY EVAP STM AUTO - AUTO		
	10	Radiator heaters		
		RAD PRIM HTR - redundant heater		Switch to heater opposite that on at beginning of test. "On" time of heater is function of radiator outlet temperature and is cyclic in nature. Verification requires radiator outlet temperature at -15°F.

NORMAL/BACKUP

STA/T STEP	PROCEDURE	PANEL	REMARKS
	4.7.4.3 CO2 Absorber Filter Replacement		
	CAUTION Connect ground wire when removing or replacing filter from canister or stowage.		
CMP	Obtain unused filter		

Filter No.	Stowage Container	Filter No.	Stowage Container
1	Canister A	12	A3
2	Canister B	13	A3
3	B5	14	A3
4	B5	15	A4
5	B5	16	A4
6	B5	17	A4
7	B6	18	A4
8	B6	19	A6
9	B6	20	A6
10	B6		
11	A3		

	Open CO2 canister attenuation panel CO2 CSTR DIVERT vlv - up (or dn) CAUTION Apply pressure to latching handle to allow pressure interlock pin to withdraw, otherwise latching handle may not disengage.	350	Handle placed up for canister B filter change, down for canister A filter change.

STA/T	STEP	PROCEDURE	PANEL	REMARKS
CMP		Canister manual bleed valve - press		
		Cover latching handle - unlock		
		Replace used filter		
		Cover latching handle - lock		
		CO2 CSTR DIVERT vlv - ctr	350	
		Close CO2 canister attenuation panel		
		Stow used filter		
		Stow excess shims in volume B5 or B6		Space is available for four shims at each end of volume B5 and B6.
	4.7.4.4	Debris Screen Check		Lint or other debris on screens may reduce flow substantially.
		Check cabin ht exch inlet screen		
		Open coolant control attenuation panel		Covers panel 382 and SUIT RETURN vlv screen.
		WARNING		
		SUIT FLOW RELF valve must remain OFF throughout mission or swelling of CO2 odor absorber filters may result.	382	
CDR		Check SUIT RETURN vlv screen	380	
		If debris is present		
LMP		CAB FAN (both) - OFF	2	
CDR		SUIT RETURN vlv - close (push)	380	
CMP		Clean screens		
CDR		SUIT RETURN vlv - open (pull)		
LMP		CAB FAN (both) - on (up)	2	
CMP		Close coolant control attenuation panel		

NORMAL BACKUP

STA/T	STEP	PROCEDURE	PANEL	REMARKS
	4.7.4.5	Potable Water Chlorination		Chlorine concentration must not exceed 6 ppm.
		CAUTION • If waste water quantity is approaching empty (reads ≤15%) and either glycol evaporator is in operation, chlorination procedure will not be performed, as impairment of evaporator efficiency may result. • If potable water quantity is >90%, 8 oz of water must be withdrawn for ullage before performing chlorination procedure.		
ALL	1	Retrieve chlorination unit		Stowed in compartment B4.
	2	Attach needle assembly to inject port		Needle assembly to remain on inject port until Deorbit and Entry Vehicle Preparation, para 4.16.1.1, step 6, or Lunar Return Entry Vehicle Preparation, para 4.16.2.1, step 6. Access to camera equipment compartment B8 requires removal/installation of needle assembly.
	3	Insert chlorine ampoule into casing		Chlorine ampoules color-coded red.
	4	Connect knob assembly and rotate (CW) until piston contacts ampoule		

STA/T	STEP	PROCEDURE	PANEL	REMARKS
ALL	5	Install ampoule assembly on needle assembly (push and turn CW) CAUTION If potable water quantity is <50%, inject half the contents of each ampoule (chlorine and buffer) by rotating knob three turns (CW).	352	
	6	Rotate knob (CW) until ampoule is empty (piston bottoms out)		Requires approximately 5-1/2 turns.
	7	Disconnect ampoule assembly from needle assembly (push and turn CCW)		
	8	Rotate knob (CCW), remove and stow used ampoule		Place used ampoule in chlorination unit stowage bag.
	9	Repeat steps 3 through 6 using buffer ampoule		Buffer ampoules color-coded brown.
	10	Wait 10 minutes. Rotate injector barrel (CCW) four turns while holding bayonet section in locked position (CW).		
	11	Rotate knob (CCW), remove and stow used ampoule		

NORMAL/BACKUP

STA/T	STEP	PROCEDURE	PANEL	REMARKS
ALL	12	Stow chlorination unit		
		CAUTION Wait 20 minutes after completion of step 10 before withdrawing water from the water use ports.		
		4.7.4.6 PGA Mode Changes		
		a. PGA to Shirtsleeve		Two flow paths exist for returning cabin atmosphere to suit circuit for scrubbing.
CMP		CAB PRESS ind - >4.7 psia (verify)	2	
		EMER CAB PRESS sel - BOTH	351	
ALL		Doff and stow gloves and helmet		
		If suit return valve is used		
CDR		SUIT RETURN vlv - open (pull)	380	
ALL		Retrieve inflight coveralls		
		SUIT PWR - OFF	9,10,6	
		PWR - OFF		
		AUDIO CONT - NORM		
		WARNING If the comm umbilical is to be disconnected at the bulkhead or control head, the VHF AM switch on the associated panel must be placed OFF and the S BD MODE PCM switch must be in PCM or ctr.		
		Disconnect O2 and comm umbilicals at PGA and insert interconnect in O2 return hose		

STA/T STEP	PROCEDURE	PANEL	REMARKS
ALL	If suit return valve is not used Retrieve inflight coveralls SUIT PWR - OFF PWR - OFF AUDIO CONT - NORM	9,10,6	
CDR	DEMAND REG sel - OFF	380	Screens plus hose causes increased pressure drop in suit circuit causing 02 demand flow.
	WARNING If the comm umbilical is to be disconnected at the bulkhead or control head, the VHF AM switch on the associated panel must be placed OFF and the S BD MODE PCM switch must be in PCM or ctr.		
ALL	Disconnect 02 and comm umbilicals at PGA and install suit return hose screen cap		Suit donning and suit loop isolation requires additional time for repositioning suit flow valves (inaccessible from couches) in addition to normal suiting time.
	SUIT FLOW vlv - CAB FLOW (for unsuited crewmen)	300,301,302	Adjust suit flow valve between CAB FLOW and FULL FLOW to maintain adequate flow for suited crewman.
	Disconnect UTCA, comm and biomed connectors Doff and stow UTCA and PGA Don inflight coveralls Retrieve and connect CWG adapter to comm and biomed connectors Audio panel switches - as desired	9,10,6	Comm and biomed integrity should be verified.

NORMAL/BACKUP

STA/T	STEP	PROCEDURE	PANEL	REMARKS
ALL	b.	Shirtsleeve to PGA		Two flow paths exist for returning cabin atmosphere to the suit circuit for scrubbing.
		SUIT PWR - OFF PWR - OFF AUDIO CONT - NORM	9,10,6	
		WARNING If the comm umbilical is to be disconnected at the bulkhead or control head, the VHF AM switch on the associated panel must be placed OFF and the S BD MODE PCM switch must be in PCM or ctr.		
		Disconnect and stow CWG adapter Doff and stow inflight coveralls Retrieve and don UTCA and PGA, connecting UTCA, comm and biomed connectors If suit return valve is used Remove O2 umbilical interconnect and connect O2 and comm umbilicals to PGA		
CDR		SUIT RETURN vlv - close (push) (if all suited)	380	
ALL		If suit return valve is not used Remove suit circuit return hose screen cap and connect O2 and comm umbilicals		Suit donning and suit loop isolation requires additional time for repositioning suit flow valves (inaccessible from couches) in addition to normal suiting time.

STA/T	STEP	PROCEDURE	PANEL	REMARKS
CDR		DEMAND REG sel - BOTH	380	
ALL		SUIT FLOW vlv - FULL FLOW (for suited crewman)	300,301,302	
		Audio panel switches - as desired	9,10,6	Comm and biomed integrity should be verified.
		Retrieve and don helmet and gloves		
CMP		EMER CAB PRESS sel - OFF (if all suited)	351	
	c.	PGA to Partial PGA		Two flow paths exist for returning cabin atmosphere to suit circuit for scrubbing.
		CAB PRESS ind - >4.7 psia (verify)	2	
		EMER CAB PRESS sel - BOTH		
ALL		Doff and stow gloves and helmet		
		If suit return valve is used		
CDR		SUIT RETURN vlv - open (pull)	380	
ALL		Reverse 02 umbilical connections at PGA		02 umbilicals reversed for optimum flow distribution within PGA.
		Supply hose to outlet connector		
		Return hose to inlet connector		
		If suit return valve is <u>not</u> used		
CDR		DEMAND REG sel - OFF		Screens plus hose cause increased pressure drop in suit circuit causing 02 demand flow.
ALL		Disconnect return hose from PGA and install suit return hose screen cap		
		Connect supply hose to outlet connector		

NORMAL/BACKUP

STA/T STEP	PROCEDURE	PANEL	REMARKS
	d. Shirtsleeve to EVT/IVT		Two flow paths exist for returning cabin atmosphere to suit circuit for scrubbing.
CDR,LMP	SUIT PWR - OFF PWR - OFF AUDIO CONT - NORM	9,6	
	WARNING If the comm umbilical is to be disconnected at the bulkhead or control head, the VHF AM switch on the associated panel must be placed OFF and the S BD MODE PCM switch must be in PCM or ctr.		
	Disconnect and stow CWG adapter Doff and stow inflight coveralls Doff CWG		Stow LMP CWG.
	Don fecal containment system		
CDR	Don CWG		
LMP	Retrieve and don LCG		
CDR,LMP	Don communications carrier/moulded earpiece adapters Retrieve and don UCTA and PGA, connecting UCTA, comm, and bio-med connectors If suit return vlv is used Remove O2 umbilical interconnect and connect O2 and comm umbilicals		

STA/T STEP	PROCEDURE	PANEL	REMARKS
CDR	SUIT RETURN vlv - close (push) (if all suited)	380	
	If suit return vlv is not used		
CDR,LMP	Remove suit return hose screen cap and connect 02 and comm umbilicals		Suit donning and suit loop isolation requires additional time for repositioning suit flow valves (inaccessible from couches) in addition to normal suiting time.
	SUIT FLOW vlv (2) - FULL FLOW	300,301	
	Audio panel switches - as desired	9,6	Comm and bio-med integrity should be verified.
	Retrieve and don helmet and gloves		
CMP	EMER CAB PRESS sel - OFF (if all suited)	351	

4.7.4.7 Waste Management Procedures

WARNING

If germicide pouch is accidently ruptured, proceed as follows:

- Germicide on CM surface or hardware; wipe up with tissue.
- Germicide on crewman's skin; blot with tissue and flush with water.
- Germicide in crewman's eyes; irrigate with water from water gun or soaked tissue.

...continued

NORMAL BACKUP

STA/T STEP	PROCEDURE	PANEL	REMARKS
	• Germicide ingested; take magnesium compound and/or high protein food - do not induce vomiting.		
	a. Urine Dump Modes		
ALL	(1) PGA urine collection bag Connect urine line filter to urine transfer hose		Filter stowed in R-5, hose under A-6.
	Connect urine transfer hose/ filter to urine/feces QD		
	Remove cap from PGA thigh QD and stow		Temporary stowage.
	Connect urine transfer hose/ filter QD to thigh QD		
	WASTE MGMT DRAIN vlv - DUMP	251	
	When PGA bag empty, disconnect urine transfer hose/filter QD at PGA thigh QD		

STA/T STEP	PROCEDURE	PANEL	REMARKS
ALL	Replace cap on PGA thigh QD		
	Connect UTS to urine transfer hose/filter QD		Stowed in R-11.
	UTS vlv - open		
	Purge until particles cease exhausting vent line (1 to 2 min), then WASTE MGMT DRAIN vlv - OFF	251	
	UTS vlv - close		
	Disconnect UTS from urine transfer hose and stow		Stowed in R-11.
	Disconnect urine transfer hose from urine/feces QD and stow		Stow filter in R-5, hose under A-6.
(2)	UTS (collection)		Used when inconvenient for simultaneous urination and overboard dumping.
	Obtain UTS and verify vlv closed		Stowed in R-11.
	Roll cuff - affixed		
	UTS vlv - open		
	Perform task		Six spare-roll on cuffs stowed in medical accessory kit (B2), and one spare receiver assembly stowed in R-11.
	UTS vlv - close		
	Roll cuff - removed		
	Free urine in cuff absorbed with tissue		
	UTS - stow (temporary)		
	When convenient, dump urine by UTS (dump) procedure		

NORMAL/BACKUP

STA/T STEP	PROCEDURE	PANEL	REMARKS
ALL	(3) UTS (dump)		
	Connect urine line filter to urine transfer hose		Filter in R-5, hose under A-6.
	Connect urine transfer hose/ filter to urine/feces QD		
	Obtain UTS and verify vlv closed		Stowed in R-11.
	Attach UTS to urine transfer hose		
	Perform UTS (collection) (if required), para 4.7.4.7a (2)		
	WASTE MGMT DRAIN vlv - DUMP	251	
	When UTS bag empty, UTS vlv - open		
	Purge 30 sec (min), then WASTE MGMT DRAIN vlv - OFF		
	UTS vlv - close		
	Disconnect UTS from urine transfer hose and stow		Stow in R-11.
	Disconnect urine transfer hose from urine/feces QD and stow		Stow filter in R-5, hose under A-6.
	(4) Urine Receptacle Assy (URA)		
	Connect urine line filter to urine transfer hose		
	Connect urine transfer hose/ filter to urine feces QD		
	Connect urine receptacle/ plenum assy to urine transfer hose		Stowed in A-8.
	Remove diaphram cover and stow		
	WASTE MGMT DRAIN vlv - DUMP		
	URA vlv - OPEN (CCW)		

STA/T STEP	PROCEDURE	PANEL	REMARKS
ALL	Perform task		
	Purge line until particles cease exhausting vent line (1 to 2 min)		
	URA vlv - CLOSE (CW)		
	WASTE MGMT DRAIN vlv - CLOSE	251	
	Attach diaphragm cover		
	Stow urine receptacle/plenum assy		Stow in A-8.
	b. Defecation		
	Remove fecal collection assembly from stowage		Assemblies stowed in compartment R-10.
	Obtain defecation collection device from assembly		
	Remove germicide pouch		
	Insert germicide pouch (protective cover removed) into inner fecal bag		
	Remove protective covering from lip of inner fecal bag and place into bag		Lip of inner fecal bag covered with adhesive.
	Affix inner fecal bag		
	Perform task		
	Seal inner fecal bag		Remove air prior to sealing.
	Rupture germicide pouch		
	Knead contents for 4 min		
	Insert into outer fecal bag		
	Only subsequent to initial odor detection will waste stowage compartment be vented prior to each waste deposit		

NORMAL BACKUP

STA/T	STEP	PROCEDURE	PANEL	REMARKS
ALL		WASTE STOW vlv - VENT for 30 sec, then CLOSE	252	
		Stow fecal bag		Fecal matter stowed in waste stowage compartment.
	c.	Emesis		
		Obtain fecal/emesis (F/E) bag		
		Perform task		
		Insert germicide pouch (protective cover removed) into inner F/E bag		
		Seal inner F/E bag		
		Rupture germicide pouch		
		Insert inner F/E bag into outer F/E bag and seal		
		Only subsequent to initial odor detection will waste stowage compartment be vented prior to each waste deposit		
		WASTE STOW vlv - VENT for 30 sec, then CLOSE		
		Stow outer F/E bag		
	d.	Side Hatch Urine/Water Dump		Cable and QDs stowed in Volume R-10.
CMP		Remove dump nozzle connector cover	Side hatch	Use tool E. Rotate cover as necessary to permit removal of electrical connector. Connector lock pins must be aligned with slots (3) in threaded portion of cover.
		Remove plug and stow		Use tool E. Plug stowed in Volume R-10.
		Withdraw wire guard and wires from slot		Wire guard to hang loose on wiring.

STA/T STEP	PROCEDURE	PANEL	REMARKS
CMP	Install male QD on dump nozzle (finger-tight)	Side hatch	
	Connect cable to heater connector (if required)		The side hatch dump nozzle heater need not be connected (crew option). CM orientation and previous cold soak should be considered when electing not to connect the heater. If the nozzle freezes, connect and use heater to thaw the nozzle.
	UTIL PWR - OFF	16	
	Connect cable to outlet		
	UTIL PWR - on (up)		
	If urine overboard dump required		
	Connect urine dump hose to dump nozzle QD		Cabin to ambient ΔP will provide for urine flow.
	If waste H20 overboard dump required		
	Install female QD on waste H20 servicing connector	352	Use tool F to remove connector cap.
	Connect urine dump hose to servicing connector and dump nozzle		
LMP	H20 QTY IND sw - WASTE	2	
CMP	WASTE TK SERV vlv - OPEN until WASTE H20 QTY ind ≈25% then CLOSE	352	
	e. Water Collection		
	Connect urine transfer hose-filter to urine/feces QD	251	
	Connect cabin purge QD to urine transfer hose		

STA/T	STEP	PROCEDURE	PANEL	REMARKS
CMP		WASTE MGMT DRAIN vlv - DUMP	251	
		Collect water		
		After collection is complete		
		Purge until particles cease exhausting vent line (1 to 2 min)		
		WASTE MGMT DRAIN vlv - CLOSE		
	4.7.4.8	CM Repressurization		
	a.	Normal Mode (time ≈30 min)		
CDR		CAB PRESS RELF vlv (2) - NORM (safety latch on)	325	
CMP		CAB PRESS DUMP vlv - close (CW) (verify)	Side hatch	
LMP		O2 PRESS IND sw - SURGE TK	2	
CDR		REPRESS pkg vlv - FILL	326	
		REPRESS O2 - OPEN	601	Guarded.
LMP		CRYO O2 PRESS 1 ind - 150 psia min	2	Minimum surge tank pressure.
CDR		REPRESS pkg vlv - OFF	326	
LMP		CAB PRESS ind - 3.0 psia (in 1 min)	2	
		REPRESS O2 PRESS ind - 0.0 psig	602	
CDR		REPRESS O2 - CLOSE	601	Guarded.
CMP		CAB REPRESS vlv - open (CW)	351	Maintain 150 psia minimum in surge tank.
LMP		CAB PRESS ind - 4.7-5.3 psia	2	
		CAB FAN (both) - on (up)		
		O2 PRESS IND sw - TK 1		
CMP		CAB REPRESS vlv - OFF (CCW)	351	

STA/T STEP	PROCEDURE	PANEL	REMARKS
CMP	WASTE MGMT DRAIN vlv - DUMP	251	
	Collect water		
	After collection is complete		
	Purge until particles cease exhausting vent line (1 to 2 min)		
	WASTE MGMT DRAIN vlv - CLOSE		
	4.7.4.8 CM Repressurization		
	a. Normal Mode (time ≈30 min)		
CDR	CAB PRESS RELF vlv (2) - NORM (safety latch on)	325	
CMP	CAB PRESS DUMP vlv - close (CW) (verify)	Side hatch	
LMP	O2 PRESS IND sw - SURGE TK	2	
CDR	REPRESS PKG vlv - FILL	326	
	REPRESS O2 - OPEN	601	Guarded.
LMP	CRYO O2 PRESS 1 ind - 150 psia min	2	Minimum surge tank pressure.
CDR	REPRESS PKG vlv - OFF	326	
LMP	CAB PRESS ind - 3.0 psia (in 1 min)	2	
	REPRESS O2 PRESS ind - 0.0 psig	602	
CDR	REPRESS O2 - CLOSE	601	Guarded.
CMP	CAB REPRESS vlv - open (CW)	351	Maintain 150 psia minimum in surge tank.
LMP	CAB PRESS ind - 4.7-5.3 psia	2	
	CAB FAN (both) - on (up)		
	O2 PRESS IND sw - TK 1		
CMP	CAB REPRESS vlv - OFF (CCW)	351	

STA/T	STEP	PROCEDURE	PANEL	REMARKS
		b. Alternate Mode (time ≈52 min)		
CDR		CAB PRESS RELF vlv (2) - NORM (safety latch on)	325	
CMP		CAB PRESS DUMP vlv - close (CW) (verify)	Side hatch	
		EMER CAB PRESS sel - BOTH	351	
		CAB REPRESS vlv - open (CW)		
LMP		O2 PRESS IND sw - SURGE TK	2	
		CRYO O2 PRESS 1 ind - 150 psia min		Minimum surge tank pressure.
CMP		EMER CAB PRESS sel - OFF	351	
		CAB REPRESS vlv - adjust to 150 psia min		
LMP		CAB PRESS ind - 4.7-5.3 psia	2	
		CAB FAN (both) - on (up)		
		O2 PRESS IND sw - TK 1		
CMP		CAB REPRESS vlv - OFF (CCW)	351	
	4.7.4.9	Pressure Suit Circuit and PGA Check at 5.0 psia		
		a. Gross Suit Circuit Verification		This procedure may be used in lieu of step b, PGA Check Only, to ascertain complete suit loop integrity.
CDR		DIRECT O2 vlv - close (CW)	7	
CMP		SUIT PRESS ind - 4.7-5.3 psia	2	
		O2 FLOW ind - 0.2-0.4 lb/hr		

NORMAL/BACKUP

STA/T STEP	PROCEDURE	PANEL	REMARKS
	CAUTION • SUIT TEST valve should remain in PRESS position until suit circuit pressure is stabilized to preclude seal scarring. • If repositioning of SUIT TEST vlv from PRESS is required prior to suit pressure stabilization, perform the following:		
CDR	a. DEMAND REG sel - OFF	380	
	b. Allow 15 sec (min) stabilization time		
	c. Reposition SUIT TEST vlv - DEPRESS or OFF as applicable		
	d. When suit pressure stabilized, DEMAND REG sel - BOTH		
	SUIT TEST vlv - PRESS		All crewmen exercise PGA joints during pressurization period. DIRECT 02 valve may be slightly opened to reduce suit loop pressurization time, but must be fully closed (CW) at 4.0 psig suit pressure.
CMP	02 FLOW ind - 1.0 lb/hr (pegged)	2	
	02 FLOW HI lt - on		After 16-second delay.
ALL	MASTER ALARM pb/lt (3) - on, push	1,3,122	

STA/T	STEP	PROCEDURE	PANEL	REMARKS
CDR		Cycle SUIT RETURN vlv - open (pull) and close (push) when PGA press ind - 1.5-2.0 psig	380	Continue suit circuit pressurization until 02 flow starts to decrease.
CMP		SUIT PRESS ind - 8.8-9.8 psia	2	Crewmen remain inactive while monitoring suit circuit pressure and 02 flow indicator to preclude fluctuations in 02 flow. Monitoring should not be scheduled during H20 accumulator stroking (or 30 seconds thereafter), or the accumulators should be temporarily disabled during test (SUIT H20 ACCUM AUTO - ctr, then back to previous position).
ALL		PGA press ind (3) - 4.1-4.5 psig	PGA	
CMP		02 FLOW HI lt - out	2	
		02 FLOW ind - stabilize for 15 sec, and remain <0.8 lb/hr for 30 sec after stabilization		
CDR		SUIT TEST vlv - DEPRESS	380	
CMP		02 FLOW ind - 0.2-0.4 lb/hr	2	
		SUIT PRESS ind - slightly >CAB PRESS ind		In ≈75 seconds.
CDR		SUIT TEST vlv - OFF	380	
		DEMAND REG sel - BOTH (verify)		
	b.	PGA Check Only		This procedure is performed only if individual or collective PGA verification is required.
		DIRECT 02 vlv - close (CW)	7	
CMP		SUIT PRESS ind - 4.7-5.3 psia	2	
		02 FLOW ind - 0.2-0.4 lb/hr		
		CAUTION SUIT TEST valve should remain in PRESS position until suit circuit pressure is stabilized to preclude seal scarring.		

NORMAL BACKUP

STA/T	STEP	PROCEDURE	PANEL	REMARKS
CDR		SUIT TEST vlv - PRESS	380	All crewmen exercise PGA joints during pressurization period. DIRECT O2 valve may be slightly opened to reduce suit loop pressurization time, but must be fully closed (CW) at 4.0 psig suit pressure.
CMP		O2 FLOW ind - 1.0 lb/hr (pegged) O2 FLOW HI lt - on	2	
ALL		MASTER ALARM pb/lt (3) - on, push	1,3,122	
CMP		SUIT PRESS ind - 8.8-9.8 psia	2	After ≈75 seconds.
ALL		PGA press ind (3) - 4.1-4.5 psig	PGA	
		WARNING Suit flow valve(s) may remain in OFF position for no longer than one minute or asphyxiation may result.		
		CAUTION If all suit flow valves are closed simultaneously the suit compressors must be shut off to prevent compressor damage because of deadheading of the suit loop.		
CMP		SUIT FLOW vlv (suited crewmen) - OFF	300,301,302	
		PGA press ind (suited crewmen) - <0.5 psi/min pressure decay	PGA	Crewmen hold breath and remain inactive while monitoring PGA pressure decay to preclude pressure drop or fluctuation on PGA pressure indicators.

STA/T STEP	PROCEDURE	PANEL	REMARKS
CMP	SUIT FLOW vlv (suited crewmen) - FULL FLOW	300,301,302	
	CAUTION If repositioning of SUIT TEST vlv from PRESS is required prior to suit pressure stabilization, perform the following:		
CDR	a. DEMAND REG sel - OFF	380	
	b. Allow 15 sec (min) stabilization time		
	c. Reposition SUIT TEST vlv - DEPRESS or OFF as applicable		
	d. When suit pressure stabilized, DEMAND REG sel - BOTH		
	SUIT TEST vlv - DEPRESS		
CMP	02 FLOW HI lt - out	2	
	02 FLOW ind - 0.2-0.4 lb/hr		
	SUIT PRESS ind - slightly >CAB PRESS ind		In ≈75 seconds.
CDR	SUIT TEST vlv - OFF	380	
4.7.4.10	CM 02 Supply Refill		
LMP	02 PRESS IND sw - SURGE TK	2	
	CRYO 02 PRESS 1 ind - 500 psia		

NORMAL BACKUP

STA/T	STEP	PROCEDURE	PANEL	REMARKS
CMP		CAB REPRESS vlv - OFF (CCW)	351	
CDR		REPRESS O2 - CLOSE	601	Guarded.
		REPRESS pkg vlv - FILL	326	
CMP		CRYO O2 PRESS 1 ind - 865-935 psia	2	Monitor pressure to assure no decrease below 150 psia. Upon completing refill operation.
		O2 PRESS IND sw - TK 1		
CDR		REPRESS pkg vlv - OFF	326	
	4.7.4.11	CM Pressure Dump		
	a.	Using Cabin Pressure Relief Valve		
CMP		CAB FAN (both) - OFF	2	
CDR		DIRECT O2 vlv - close (CW)	7	
		rh CAB PRESS RELF vlv - DUMP (safety latch off)	325	Valve in DUMP position long enough for cabin pressure to decrease to ≈3.25 psia.
CMP		CAB PRESS ind - 3.0-3.25 psia	2	
CDR		rh CAB PRESS RELF vlv - BOOST/ENTR	325	
CMP		O2 FLOW ind - ≈0.24 lb/hr	2	Verifies cabin pressure regulator lockout.
		SUIT PRESS ind - 3.5-4.0 psia		Verifies suit demand pressure regulator aneroid function.
CDR		rh CAB PRESS RELF vlv - DUMP	325	
CMP		CAB PRESS ind - 0.0 psia (within 6 min)	2	Cabin at 0.01 psia within 4.5 minutes.
CDR		CAB PRESS RELF vlv (2) - NORM (safety latch on)	325	
	b.	Using Side Hatch Cab Press Dump Valve		
LMP		CAB FAN (both) - OFF	2	

STA/T	STEP	PROCEDURE	PANEL	REMARKS
CMP		CAB REPRESS vlv - OFF (CCW)	351	
CDR		REPRESS O2 - CLOSE	601	Guarded.
		REPRESS PKG vlv - FILL	326	
CMP		CRYO O2 PRESS 1 ind - 865-935 psia	2	Monitor pressure to assure no decrease below 150 psia. Upon completing refill operation.
		O2 PRESS IND sw - TK 1		
CDR		REPRESS PKG vlv - OFF	326	
	4.7.4.11	CM Pressure Dump		
	a.	Using Cabin Pressure Relief Valve		
CMP		CAB FAN (both) - OFF	2	
CDR		DIRECT O2 vlv - close (CW)	7	
		rh CAB PRESS RELF vlv - DUMP (safety latch off)	325	Valve in DUMP position long enough for cabin pressure to decrease to ≈3.25 psia.
CMP		CAB PRESS ind - 3.0-3.25 psia	2	
CDR		rh CAB PRESS RELF vlv - BOOST/ENTR	325	
CMP		O2 FLOW ind - ≈0.24 lb/hr	2	Verifies cabin pressure regulator lockout.
		SUIT PRESS ind - 3.5-4.0 psia		Verifies suit demand pressure regulator aneroid function.
CDR		rh CAB PRESS RELF vlv - DUMP	325	
CMP		CAB PRESS ind - 0.0 psia (within 6 min)	2	Cabin at 0.01 psia within 4.5 minutes.
CDR		CAB PRESS RELF vlv (2) - NORM (safety latch on)	325	
	b.	Using Side Hatch Cab Press Dump Valve		
LMP		CAB FAN (both) - OFF	2	

STA/T STEP	PROCEDURE	PANEL	REMARKS
CMP CDR	EMER CAB PRESS sel - OFF REPRESS pkg vlv - OFF	351 326	
	If lone crewman operation REPRESS pkg vlv - FILL		REPRESS pkg valve should be in the FILL position for lone crewman activities, as leaving the valve in OFF reduces immediate repressurization capability to ≈1.8 psia, less than the amount required to sustain life if suit ruptures.
LMP	REPRESS O2 vlv - CLOSE	601	
CDR	DIRECT O2 vlv - close (CW) (verify)	7	
LMP	CAB PRESS DUMP vlv - open (CCW - one turn) CAB PRESS ind - 3.0-3.25 psia	Side hatch 2	Valve in open position long enough for cabin pressure to decrease to ≈3.25 psia.
	CAB PRESS DUMP vlv - close (CW) O2 FLOW ind - <0.5 lb/hr	Side hatch 2	Verifies cabin pressure regulator lockout and that EMER CAB PRESS sel is OFF.
	SUIT PRESS ind - 3.5-4.0 psia		Verifies suit demand pressure regulator aneroid function.
	CAB PRESS DUMP vlv - open (CCW) CAB PRESS ind - ≈0 psia	Side hatch 2	Full open.
	CAB PRESS DUMP vlv - close (CW)	Side hatch	

NORMAL BACKUP

STA/T STEP	PROCEDURE	PANEL	REMARKS
CMP	EMER CAB PRESS sel - OFF	351	
CDR	REPRESS PKG vlv - OFF	326	
	If lone crewman operation REPRESS PKG vlv - FILL		**REPRESS PKG valve should be in the FILL position for lone crewman activities, as leaving the valve in OFF** reduces immediate repressurization capability to ≈1.8 psia, less than the amount required to sustain life if suit ruptures.
LMP	REPRESS O2 vlv - CLOSE	601	
CDR	DIRECT O2 vlv - close (CW) (verify)	7	
LMP	CAB PRESS DUMP vlv - open (CCW - one turn)	Side **hatch**	Valve in open position long enough for cabin pressure to decrease to ≈3.25 psia.
	CAB PRESS ind - 3.0-3.25 psia	2	
	CAB PRESS DUMP vlv - close (CW)	Side **hatch**	
	O2 FLOW ind - <0.5 lb/hr	2	Verifies cabin pressure regulator lockout and that EMER CAB PRESS sel is OFF.
	SUIT PRESS ind - 3.5-4.0 psia		Verifies suit demand pressure regulator aneroid function.
	CAB PRESS DUMP vlv - open (CCW)	Side **hatch**	Full open.
	CAB PRESS ind - ≈0 psia	2	
	CAB PRESS DUMP vlv - close (CW)	Side **hatch**	

NORMAL BACKUP

STA/T	STEP	PROCEDURE	PANEL	REMARKS
		4.7.4.12 Suit Circuit Purge of H2		
CDR		DIRECT O2 vlv - OPEN (CCW) for 1 min	7	Suit circuit pressure relief valve dumps hydrogen into the cabin.
CMP		O2 FLOW ind - 1.0 lb/hr (pegged)	2	
		O2 FLOW HI lt - on		After 16-second time delay.
ALL		MASTER ALARM pb/lt (3) - on, push	1,3,122	
CDR		DIRECT O2 vlv - close (CW)	7	
CMP		O2 FLOW HI lt - out	2	
		O2 FLOW ind - 0.2 lb/hr (pegged)		
		4.7.4.13 Cabin Cold-Soak Operation		Secondary glycol loop placed in evaporative cooling mode, and routed only to suit circuit heat exchanger.
	a.	Activate Cold Soak		
		Open coolant control attenuation panel		Covers panel 382.
		WARNING		
		SUIT FLOW RELF valve must remain OFF throughout mission or swelling of CO2 odor absorber filters may result.	382	
		SUIT HT EXCH SEC GLY - FLOW		
		SEC EVAP H2O CONT vlv - AUTO		
		Close coolant control attenuation panel		

STA/T STEP	PROCEDURE	PANEL	REMARKS
LMP	CAB TEMP - MAN	2	
CMP	PRIM CAB TEMP vlv - COLD (CW)	303	Max cold position.
	SEC CAB TEMP vlv - OFF (CCW)		Bypass cabin heat exchanger.
LMP	SUIT HT EXCH - BYP for 20 sec, then off (ctr)	2	
	ECS IND sel - SEC		
	SEC COOL PUMP - AC1		
	SEC GLY DISCH PRESS ind - 39-51 psig		After initiating cold-soak operation, periodic ECS monitoring check should include readings from the following secondary loop indicators: SEC GLY EVAP OUT TEMP, SEC GLY EVAP STM PRESS, SEC GLY DISCH PRESS, and SEC ACCUM QTY.
	SEC ACCUM QTY ind - 30-55%		
	SEC COOL EVAP - EVAP		
	SEC GLY EVAP OUT TEMP ind - 40-50.5°F		
	SEC GLY EVAP STM PRESS ind - 0.10-0.15 psia (when boiling) or >0.16 psia (not boiling)		
	ECS IND sel - PRIM		
	RAD PRIM OUT TEMP ind - >-20°F		
	If <-20°F		Cold soak operation is stopped until RAD PRIM OUT TEMP >0°F.
	SEC COOL EVAP - RSET for 58 sec min, then off (ctr)		
	SEC COOL PUMP - off (ctr)		
	SUIT HT EXCH - ON for 20 sec, then off (ctr)		
	b. Deactivate Cold Soak		
CMP	SEC CAB TEMP vlv - MAX COOL (CW)	303	

NORMAL BACKUP

STA/T	STEP	PROCEDURE	PANEL	REMARKS
LMP		CAB TEMP - AUTO	2	
		SUIT HT EXCH - ON for 20 sec, then off (ctr)		
		SEC COOL EVAP - RSET for 58 sec min, then off (ctr)		RSET closes steam pressure control valve. Steam pressure valve requires 58 seconds from full open to full close.
		SEC COOL PUMP - off (ctr)		
CMP		Open coolant control attenuation panel		
		WARNING		
		SUIT FLOW RELF valve must remain OFF throughout mission or swelling of CO2 odor absorber filters may result.	382	
		SEC EVAP H20 CONT vlv - OFF		
		Close coolant control attenuation panel		
	4.7.4.14	CM/LM Pressure Equalization		
ALL	a.	Vented LM		LM overhead hatch pressure dump valve open at launch.
		PGAs donned and checked (refer to PGA Mode Changes, para 4.7.4.6, and Pressure Suit Circuit and PGA Check at 5.0 psia, para 4.7.4.9)		This procedure requires ≈30 min to complete.
CMP		WASTE STOW vlv - CLOSE	252	Required for transposition, docking, and LM ejection only.

STA/T	STEP	PROCEDURE	PANEL	REMARKS
LMP		O2 PRESS IND sw - SURGE TK Verify CRYO O2 PRESS 1 ind and REPRESS O2 PRESS ind - 865-935 psia	2	
CMP		Verify EMER CAB PRESS sel - OFF	351	At reduced cabin pressure, unnecessary O2 consumption will occur if EMER CAB PRESS selector is not OFF.
CDR		REPRESS pkg vlv - OFF	326	
		CAUTION Do not exceed cabin pressure of 5.7 psia or cabin pressure relief valve will actuate.		
		DIRECT O2 vlv - OPEN (CCW)	7	
LMP		O2 FLOW ind - 1.0 lb/hr (pegged) O2 FLOW HI lt - on	2	
ALL		MASTER ALARM pb/lt (3) - on, push	1,3,122	
LMP		SUIT CAB ΔP ind - >+2.0 in. H2O CAB PRESS ind - ≈5.7 psia	2	
CDR		DIRECT O2 vlv - close (CW)	7	Cabin pressure should increase to ≈5.7 psia in ≈2 min. Surge tank pressure will decrease to ≈550 psia.
CMP		Verify TUNL VENT vlv - LM/CM ΔP LM/CM ΔP ind - +4 psid (pegged) after 27.5 min	12	
LMP		CRYO O2 PRESS ind - 850 psia	2	Surge tank pressure will increase from 550 psia to 850 psia in ≈27.5 minutes after the DIRECT O2 vlv is closed.
CMP		PRESS EQUAL vlv - OPEN	Fwd hatch	

NORMAL BACKUP

STA/T	STEP	PROCEDURE	PANEL	REMARKS
LMP		O2 PRESS IND sw - SURGE TK Verify CRYO O2 PRESS 1 ind and REPRESS O2 PRESS ind - 865-935 psia	2	
CMP		Verify EMER CAB PRESS sel - OFF	351	At reduced cabin pressure, unnecessary O2 consumption will occur if EMER CAB PRESS selector is not OFF.
CDR		REPRESS PKG vlv - OFF	326	
		CAUTION Do not exceed cabin pressure of 5.7 psia or cabin pressure relief valve will actuate.		
		DIRECT O2 vlv - OPEN (CCW)	7	
LMP		O2 FLOW ind - 1.0 lb/hr (pegged) O2 FLOW HI lt - on	2	
ALL		MASTER ALARM pb/lt (3) - on, push	1,3,122	
LMP		SUIT CAB ΔP ind - >+2.0 in. H20 CAB PRESS ind - ≈5.7 psia	2	
CDR		DIRECT O2 vlv - close (CW)	7	Cabin pressure should increase to ≈5.7 psia in ≈2 min. Surge tank pressure will decrease to ≈550 psia.
CMP		Verify TUNL VENT vlv - LM/CM ΔP LM/CM ΔP ind - +4 psid (pegged) after 27.5 min	12	
LMP		CRYO O2 PRESS ind - 850 psia	2	Surge tank pressure will increase from 550 psia to 850 psia in ≈27.5 minutes after the DIRECT O2 vlv is closed.
CMP		PRESS EQUAL vlv - OPEN	Fwd hatch	

NORMAL BACKUP

STA/T	STEP	PROCEDURE	PANEL	REMARKS
		xxxxxxxxxxxxxxxxxxxxxxxxxxxxxxxxxxxxxxxxx		
CMP		If unable to open PRESS EQUAL vlv, inform MSFN	Fwd hatch	Applicable to transposition, docking, and LM ejection. SIVB life limit does not permit alternate pressure equalization through TUNL VENT vlv.
		CM Pressure Dump, para 4.7.4.11a		
		Continue preparation for LM ejection using pressurized PGAs		
		CM Repressurization, para 4.7.4.8a		
		or TUNL VENT vlv - LM PRESS	12	TUNL VENT valve requires ≈10 hours to pressurize tunnel and LM.
		xxxxxxxxxxxxxxxxxxxxxxxxxxxxxxxxxxxxxxxxx		
LMP		CAB PRESS ind - 4.5 psia	2	
		PRESS EQUAL vlv - CLOSE	Fwd hatch	
CMP		LM/CM ΔP ind - ≈3.1 psid	12	
		Monitor LM/CM ΔP ind for 3 min and verify ΔP stable		
LMP		PRESS EQUAL vlv - OPEN	Fwd hatch	
		CAB PRESS ind - 4.0 psia	2	
CMP		REPRESS O2 - OPEN	601	
LMP		CAB PRESS ind - 5.7 psia (max)	2	Anticipated cabin pressure will be ≈5.0 psia.
CMP		Cycle REPRESS O2 as required between 4.0 and 5.7 psia limits until REPRESS O2 PRESS ind ≈0.0 psia	601	
		REPRESS O2 - CLOSE		LM and CM cabin should be equalized in pressure when REPRESS O2 bottles are empty. If not, excessive tunnel or LM cabin leakage is indicated.

STA/T	STEP	PROCEDURE	PANEL	REMARKS
LMP CMP		CAB PRESS ind - ≥4.0 psia LM/CM ΔP ind - ≈0.0 psid	2 12	Permissible to proceed with hatch removal.
		xxxxxxxxxxxxxxxxxxxxxxxxxxxxxxxxxxxxxxxxxx		
LMP CMP		CAB PRESS ind does not stabilize above 4.0 psia and LM/CM ΔP ind ≥0.0 psid PRESS EQUAL vlv - CLOSE PRESS EQUAL vlv opened periodically as CM pressure increases through the cabin pressure regulator until pressure is equalized at or above 4.0 psia	2 Fwd hatch	Pressure will continue to increase automatically through the cabin pressure regulator.
		xxxxxxxxxxxxxxxxxxxxxxxxxxxxxxxxxxxxxxxxxx		
LMP CDR LMP CMP CDR EMER CAB PRESS sel - BOTH		CAB PRESS ind - 5.0 psia REPRESS pkg vlv - FILL until; CRYO O2 PRESS 1 ind and REPRESS O2 PRESS ind - 865-935 psia REPRESS pkg vlv - OFF	2 326 2 602 326 351	
		CAUTION TUNL VENT valve should not be inadvertently left in the LM PRESS position when the CM and LM are separated, as O2 would be vented to ambient through a 1/4-inch line.		

NORMAL BACKUP

STA/T	STEP	PROCEDURE	PANEL	REMARKS
LMP		CAB PRESS ind - ≥4.0 psia	2	
CMP		LM/CM ΔP ind - ≈0.0 psid	12	Permissible to proceed with hatch removal.
		xxxxxxxxxxxxxxxxxxxxxxxxxxxxxxxxxxxxxxxxxx		
LMP		CAB PRESS ind does not stabilize above 4.0 psia and LM/CM ΔP ind ≥0.0 psid	2	Pressure will continue to increase automatically through the cabin pressure regulator.
CMP		PRESS EQUAL vlv - CLOSE	Fwd hatch	
		PRESS EQUAL vlv opened periodically as CM pressure increases through the cabin pressure regulator until pressure is equalized at or above 4.0 psia		
		xxxxxxxxxxxxxxxxxxxxxxxxxxxxxxxxxxxxxxxxxx		
LMP		CAB PRESS ind - 5.0 psia	2	
CDR		REPRESS PKG vlv - FILL until;	326	
LMP		CRYO O2 PRESS 1 ind and	2	
CMP		REPRESS O2 PRESS ind - 865-935 psia	602	
CDR		REPRESS PKG vlv - OFF	326	
		EMER CAB PRESS sel - BOTH	351	
		CAUTION TUNL VENT valve should not be inadvertently left in the LM PRESS position when the CM and LM are separated, as O2 would be vented to ambient through a 1/4-inch line.		

NORMAL BACKUP

STA/T	STEP	PROCEDURE	PANEL	REMARKS
CMP		TUNL VENT vlv - OFF	12	
		WASTE STOW vlv - VENT	252	Required for transposition, docking, and LM ejection only.
	b.	Pressurized LM		Coordinated procedure with LM. Tunnel pressurized from LM.
		PGA donned and checked (refer to PGA Modes Changes, para 4.7.4.6, and Pressure Suit Circuit and PGA Check at 5.0 psia, para 4.7.4.9)		
LMP		O2 PRESS IND sw - SURGE TK	2	
		Verify CRYO O2 PRESS 1 ind - >600 psia		
CMP		Verify EMER CAB PRESS sel - OFF	352	At reduced cabin pressure, unnecessary O2 consumption will occur if EMER CAB PRESS selector is not OFF.
CDR		REPRESS pkg vlv - FILL	326	
CMP		Verify TUNL VENT vlv - LM/CM ΔP	12	LM overhead hatch pressure equalization valve is opened by the LM crew after rendezvous to equalize LM cabin and tunnel pressure, which requires ≈11 seconds.
		Monitor LM/CM ΔP ind and advise LM when ΔP <1.0 psid		
		Verify ΔP increase <1.0 psid for 3 min		LM should be isolated from tunnel.
		PRESS EQUAL vlv - OPEN	Fwd hatch	Pressure is equalized between CM cabin and the LM cabin in ≈10 seconds.
		xxxxxxxxxxxxxxxxxxxxxxxxxxxxxxxxxxxxxx		
		If unable to open PRESS EQUAL vlv		
		TUNL VENT vlv - LM PRESS	12	
		xxxxxxxxxxxxxxxxxxxxxxxxxxxxxxxxxxxxxx		

STA/T	STEP	PROCEDURE	PANEL	REMARKS
CMP		TUNL VENT vlv - OFF	12	
		WASTE STOW vlv - VENT	252	Required for transpcsition, docking, and LM ejection only.
	b.	Pressurized LM		Coordinated procedure with LM. Tunnel pressurized from LM.
		PGA donned and checked (refer to PGA Modes Changes, para 4.7.4.6, and Pressure Suit Circuit and PGA Check at 5.0 psia, para 4.7.4.9)	-	
LMP		02 PRESS IND sw - SURGE TK	2	
		Verify CRYO 02 PRESS 1 ind - >600 psia		
CMP		Verify EMER CAB PRESS sel - OFF	352	At reduced cabin pressure, unnecessary 02 consumption will occur if EMER CAB PRESS selector is not OFF.
CDR		REPRESS PKG vlv - FILL	326	
CMP		Verify TUNL VENT vlv - LM/CM ΔP	12	LM overhead hatch pressure equalization valve is opened by the LM crew after rendezvous to equalize LM cabin and tunnel pressure, which requires ≈11 seconds.
		Monitor LM/CM ΔP ind and advise LM when ΔP <1.0 psid		
		Verify ΔP increase <1.0 psid for 3 min		LM should be isolated from tunnel.
		PRESS EQUAL vlv - OPEN	Fwd hatch	Pressure is equalized between CM cabin and the LM cabin in ≈10 seconds.
		xxxxxxxxxxxxxxxxxxxxxxxxxxxxxxxxxxxxx		
		If unable to open PRESS EQUAL vlv TUNL VENT vlv - LM PRESS	12	
		xxxxxxxxxxxxxxxxxxxxxxxxxxxxxxxxxxxxx		

STA/T	STEP	PROCEDURE	PANEL	REMARKS
CMP		LM/CM ΔP ind - 0.0 psid	12	
		PRESS EQUAL vlv - CLOSE	Fwd hatch	
		EMER CAB PRESS sel - BOTH	351	
		CAUTION TUNL VENT valve should not be inadvertently left in the LM PRESS position when the CM and LM are separated, as 02 would be vented to ambient through a 1/4-inch line.		
		TUNL VENT vlv - OFF	12	
	4.7.4.15	Operation of Emergency 02 Masks		
LMP		EMER 02 - OPEN	600	Masks stowed on aft bulkhead aft of emergency 02 unit.
ALL		Don emer 02 masks	AESB	Push mask pushbutton for continuous flow, otherwise mask is demand flow.
		Doff emer 02 masks		
LMP		EMER 02 - CLOSE	600	
	4.7.4.16	Waste Water Tank Drain		
		H20 QTY IND sw - WASTE	2	
CMP		POT TK IN vlv - CLOSE	352	
		PRESS RELF sel - DUMP A		

NORMAL BACKUP

STA/T	STEP	PROCEDURE	PANEL	REMARKS
LMP		Monitor WASTE H2O QTY ind - decr	2	
		WASTE H2O QTY ind - *25%		
CMP		PRESS RELF sel - 2	352	
		POT TK IN vlv - OPEN		
		4.7.4.17 H2/H2O Separator Servicing		
	a.	Remove separators from stowage		Stowed in compartment A1.
	b.	Attach a separator to water pistol		Female port of separator will fit on water pistol probe.
	c.	Trigger water pistol in short pulses until water is observed at separator outlet port		
	d.	Wait 10 minutes		Allow 10 minutes for membrane wetting.
		If water is visible on white membrane exterior		
		Remove separator drying adapter from stowage		Stowed in compartment A1.
		Install cap on separator outlet port		
		Wipe separator exterior		Use hand towel to absorb free water.
		CAUTION		
		White membrane can be damaged by pencils, screwdrivers, and other pointed objects.		

STA/T STEP	PROCEDURE	PANEL	REMARKS
CMP	Open lower door on Waste Management panel	252	
	Remove cap from male QD		
	Mate drying adapter QD to panel 252 QD		
	Mate separator female port to drying adapter male port		
	Wait 10 minutes		Allow 10 minutes of flow for drying.
	Disconnect separator from drying adapter		
	Disconnect drying adapter from panel 252 QD		
	Replace panel 252 QD cap and close lower door on Waste Management panel		
	Stow drying adapter and service separator starting at step b		Stow in compartment A1.
	e. Remove separator from water pistol and place on food preparation unit outlet port.		
	f. Lock separator in place		Use bayonet key.
	g. Perform steps b through d for second separator		

NORMAL BACKUP

STA/T STEP	PROCEDURE	PANEL	REMARKS
	4.7.5 CAUTION AND WARNING SYSTEM		
	CAUTION Any or all of the system status lights should not be left illuminated for more than 10 min or overheating of the matrix will occur.		
	System management procedures for the C&WS consist of the following: 1. A procedure is provided for an operational test of the detection unit, system status lights, and the MASTER ALARM pb/lt and tone. The test may be conducted at any time during the mission at the discretion of the crew. 2. An adjustment may be made at each orbital sunset to facilitate dark adaptation during the period of orbital darkness. 3. Acknowledgement of system status light illumination and resetting of the master alarm circuit is required. The procedures apply during prelaunch or any flight phase of the mission. 4. A procedure is provided for inhibiting the master alarm tone in each headset, at the discretion of the crew. 5. If one or more of the C&WS status lights are illuminated for more than 10 minutes, the status light matrix will become hot to the touch. The Acknowledge Mode may be used to prevent excessive on-time of the status lights.		
	4.7.5.1 C&WS Operational Check		
CMP	C/W LAMP TEST - 1 (hold)	2	Position 1 is momentary. Lamp test of MASTER ALARM light on MDC-122 is accomplished when G&N condition lights on that panel are tested. Master alarm tone not activated by this test.

STA/T	STEP	PROCEDURE	PANEL	REMARKS
CDR		MASTER ALARM pb/lt - on	1	
CMP		lh C/W lts (15) - on	2	
		C/W LAMP TEST - 2 (hold)		Position 2 is momentary.
CDR		MASTER ALARM pb/lt - out	1	
CMP		lh C/W lts (15) - out	2	
LMP		MASTER ALARM pb/lt - on	3	
CMP		rh C/W lts (20) - on	2	
		C/W LAMP TEST - rel		
LMP		MASTER ALARM pb/lt - out	3	
CMP		rh C/W lts (20) - out	2	
		C/W CSM - CM		Master alarm tone activated by this test.
		CM RCS lt (both) - on		Systems 1 and 2 status lights.
ALL		MASTER ALARM pb/lt (3) and tone - on	1,3,122	MASTER ALARM light on MDC-1 will not come on if C/W NORM switch is in BOOST position.
		MASTER ALARM pb/lt - push		
		MASTER ALARM pb/lt (3) and tone - out		
CMP		C/W CSM - CSM	2	
		CM RCS lt (both) - out		
	4.7.5.2	Dark Adaptation Adjustment		
		C/W NORM - ACK (at sunset)		
		C/W NORM - NORM (at sunrise)		
	4.7.5.3	Acknowledge/Reset Master Alarm Indication		
		a. Normal Mode		
ALL		MASTER ALARM pb/lt (3) and tone - on	1,3,122	

NORMAL BACKUP

STA/T STEP	PROCEDURE	PANEL	REMARKS
ALL	MASTER ALARM pb/lt (3) - push	1,3,122	All MASTER ALARM lights have reset capability. Pushing any light will reset alarm circuit unless C/W NORM switch in BOOST position. In this case, there is no reset capability with MASTER ALARM light on MDC-1.
	MASTER ALARM pb/lt (3) and tone - out		
CMP	Applicable C/W lt - remains on	2	C/W light remains on until malfunction corrected.
	b. Acknowledge Mode (C/W NORM in ACK)		
ALL	MASTER ALARM pb/lt (3) and tone - on	1,3,122	
CDR,LMP	MASTER ALARM pb/lt (2) - push and hold	1,3	MASTER ALARM light on LEB-122 does not have acknowledge capability.
ALL	MASTER ALARM pb/lt (3) and tone - out	1,3,122	
CMP	Applicable C/W light - on, for malfunction indication	2	
CDR,LMP	MASTER ALARM pb/lt (2) - rel	1,3	
CMP	Applicable C/W light - out	2	Light may be recalled by again holding MASTER ALARM light on MDC-1 or MDC-3.
	4.7.5.4 Master Alarm Tone Headset Control		
	a. Inhibit Tone		
ALL	PWR (3) - AUDIO	9,10,6	Inhibit function may be selected individually or in any combination.
	b. Permit Tone		
	PWR (3) - AUDIO/TONE		

STA/T STEP	PROCEDURE	PANEL	REMARKS
4.7.5.5	Stowable Caution and Warning Tone Booster		Provided for crew use during sleep cycle and is stowed during Boost and Entry under locker A3.
	a. Installation		
CDR,LMP	UTIL PWR - OFF	15,16	Removes power from connector on panel 15(16).
	Install connector of tone booster		
	Place light sensor over MASTER ALARM lt	1,3	Velcro attached.
	UTIL PWR - on (up)		
	Install tone beeper on LH (RH) girth shelf as required		Velcro attached.
	b. Operational Check		
CMP	C/W LAMP TEST - 1(2) (hold, rel)	2	Activates tone beeper as long as switch is held in position 1(2).

STA/T STEP	PROCEDURE	PANEL	REMARKS

4.7.6 TELECOMMUNICATIONS

The T/C system will be in operation throughout the entire mission. The information and procedures included here consist of normal and backup procedures that will be utilized to accomplish mission requirements and satisfy test objectives. Some of these procedures will only be required during tests or contingencies.

Most orbital paths will involve passage over several MSFN ground stations within acceptable slant ranges for S-band voice and data communications. Equipment necessary for voice communications, PCM, and TLM transmission will be activated and operating at all times. The UDL will also remain activated and capable of receiving up-data when required.

Action required of the crew for voice communications and transmission of real-time PCM TLM will be to ensure optimum radiation and reception of RF signals, either by maintaining SC attitude such that the selected antenna is directed toward the MSFN station or by changing antennas or antenna attitude with the S-band antenna controls. Also, the audio control panels (MDC-6, -9, and -10) must be set up in accordance with the requirements of the individual crewman for control of voice transmission and reception.

The reception of up-data for updating the CTE and receiving real-time commands (RTCs) will require no action on the part of the crew since the UDL will normally remain activated and will utilize the same antenna as that used for S-band voice and data operations. For updating the command module computer, however, the up-telemetry switches (panels 2 and 122) must be set to the ACPT position.

The following procedures are presented with the assumption that the appropriate electrical buses are powered and that the proper circuit breakers are closed.

STA/T	STEP	PROCEDURE	PANEL	REMARKS
		4.7.6.1 Basic Switch Configuration		
LMP	1	Apply A-C power TELCOM GRP 1 - AC1 TELCOM GRP 2 - AC2	4	
ALL	2	Audio panel (3) MODE (3) - INTERCOM/PTT S BD (3) - T/R SUIT PWR (3) - on (up) AUDIO CONT (3) - NORM PWR (3) - AUDIO/TONE VHF AM (3) - T/R INTERCOM (3) - T/R PAD COMM (3) - OFF	9,10,6	Each crewman's individual audio panel must be activated to enable him to receive or transmit voice signals. T/R position enables voice transmission and reception over selected audio channel. RCV position permits reception only.
CDR		VHF RNG - NORM	9	
LMP	3	S band normal S BD XPNDR - PRIM	3	Whenever S BD XPNDR sw positioned from PRIM to SEC or from SEC to PRIM, hesitate momentarily in OFF position to allow relay actuation to follow switch action. S-band phaselock will be lost upon switching to alternate xpndr. Phaselock must be re-established.
		S BD PWR AMPL PRIM - PRIM S BD PWR AMPL HI - HI S BD MODE VOICE - VOICE S BD MODE PCM - PCM S BD MODE RNG - RNG		
	4	S band aux S BD AUX TAPE - off (ctr) S BD AUX TV - off (ctr)		

NORMAL BACKUP

STA/T	STEP	PROCEDURE	PANEL	REMARKS
	5	Up TLM		
LMP		UP TLM DATA - DATA	3	
		UP TLM CMD - NORM		
		PWR AMPL tb - gray		Gray display indicates power applied to S-band power amplifier.
		TAPE MOTION tb - gray		Gray indicates tape in motion.
	6	S Band antenna		
		S BD ANT OMNI A - A		
		S BD ANT OMNI - OMNI		
	7	VHF AM		
		VHF AM A - SIMPLEX		
		VHF AM B - off (ctr)		
		VHF AM RCV - off (ctr)		
	8	VHF BCN - OFF		
		VHF RNG - OFF		
	9	Tape recorder		
		TAPE RCDR PCM - PCM/ANLG		
		TAPE RCDR RCD - RCD		
		TAPE RCDR FWD - FWD		
	10	Power		
		SCE PWR - NORM		
		PMP PWR - NORM		
	11	TLM inputs		
		PCM BIT RATE - LO		Do not change PCM BIT RATE switch while tape recorder operating.

STA/T	STEP	PROCEDURE	PANEL	REMARKS
LMP	12	VHF ANT - SM LEFT	3	
CMP	13	RNDZ XPNDR - OFF	100	
	14	RNDZ XPNDR - OPR	101	
LMP	15	S BD SQLCH - ENBL	3	
		4.7.6.2 High Gain Antenna Operation		
CMP		cb HI GAIN ANT (2) - close	225	
		HI GAIN ANT TRACK - MAN	2	
		HI GAIN ANT SERVO - PRIM		
		HI GAIN ANT BEAM - WIDE		
		HI GAIN ANT PWR - on (up)		
		Determine required antenna coordinates If IMU aligned, para 4.10.1.17 If G&N not available, trial and error method must be used		
		Verify that required coordinates are within the full coverage region		Refer to CSM DATA BOOK, section 4.7, HGA Scan and Warning Limit, Yaw-Pitch Coordinates. Reliable acquisition can be accomplished with YAW-PITCH coordinates in the full coverage region. In the CSM skin interference zone, RF reflections will cause no problems when operating in MANUAL, AUTO or REACQ mode, when in WIDE BEAM. After acquisition, the antenna will track through the CSM skin interference zone and scan limit zone while in NARROW beam and in either AUTO or REACQ modes without incurring an interference problem.

NORMAL BACKUP

STA/T	STEP	PROCEDURE	PANEL	REMARKS
				Should acquisition be attempted in the CSM skin interference zone in either NARROW or MEDIUM beam while in AUTO or REACQ mode, acquisition problems may be encountered. MSFN and SC will experience (a) low signal strength indicating lockup on a side lobe or (b) varying signal strength caused by antenna alternately switching between wide and narrow beamwidth. SC antenna pitch and yaw indicator will also provide visual indication of condition (b). Other indicators of the interference condition include noise or loss of voice or track loss. Upon detection of this situation, attempt one of the following. a. Change CSM attitude to provide antenna coordinates in the full coverage region. b. Allow up to 60 seconds for the expected CSM attitude variation to alleviate the condition. c. In attitude hold condition, operate in wide beam mode. d. Transfer to narrow beam and acquire earth manually.
CMP		HI GAIN ANT PITCH & YAW POS (2) - set in required coordinates	2	
		If in earth orbit		
LMP		S BD PWR AMPL HI - off (ctr)	3	
		S BD ANT OMNI - HI GAIN		
CMP		S BD ANT ind - >1/2 scale	2	
		HI GAIN ANT TRACK - AUTO or REACQ		With TRACK sw in REACQ, antenna will reposition to position control settings when the antenna reaches the scan limit. To prevent acquisition problems, predicted earth-rise should be set in the full coverage region.

STA/T	STEP	PROCEDURE	PANEL	REMARKS
CMP		HI GAIN ANT BEAM - as desired	2	
		S BD ANT ind - >1/2 scale		
		When omni antenna operation is desired;		
		HI GAIN ANT TRACK - MAN		
		HI GAIN ANT PITCH POS - -52°		
		HI GAIN ANT YAW POS - 270°		
	4.7.6.3	S-Band Xponder Modes		
		Voice, RT-HBR Data, Ranging		
LMP		Select BASIC except		
		PCM BIT RATE - HI	3	
		Voice, RT-LBR Data, Ranging		
		Select BASIC		
		Voice, RT-HBR Data		
		Select BASIC except		
		S BD MODE RNG - OFF		
		PCM BIT RATE - HI		
		Voice, RT-LBR Data		
		Select BASIC except		
		S BD MODE RNG - OFF		
		Voice and Ranging		
		Select BASIC except		
		S BD MODE PCM - ctr		

NORMAL BACKUP

STA/T STEP	PROCEDURE	PANEL	REMARKS
	Voice		
LMP	Select BASIC except		
	S BD MODE PCM - ctr	3	
	S BD MODE RNG - OFF		
	Voice and LBR PCM with Apollo/Recovery Instrumented Aircraft (A/RIA)		
	Select BASIC except		
	S BD MODE RNG - OFF		
	4.7.6.4 FM Xmtr Modes		
	Dump PCM/Analog		
	Select BASIC except		
	TAPE RCDR FWD - REWIND		
	S BD AUX TAPE - TAPE		
	TAPE RCDR RCD - PLAY		
	TAPE RCDR FWD - FWD (after rewind complete)		
	TAPE MOTION tb - gray		Gray display indicates tape is in motion.
	Rewind and return to BASIC		
	Dump LM PCM		
	Select BASIC except		
	TAPE RCDR FWD - REWIND		
	S BD AUX TAPE - TAPE		
	TAPE RCDR PCM - LM PCM		
	TAPE RCDR RCD - PLAY		
	TAPE RCDR FWD - FWD (after rewind complete)		
	TAPE MOTION tb - gray		Gray display indicates tape is in motion.
	Rewind and return to BASIC		

STA/T	STEP	PROCEDURE	PANEL	REMARKS
		TV Camera Operation (Black & White)		
		WARNING Insure that S BD AUX TV switch is off (ctr) prior to connecting or disconnecting the TV camera.		
LMP		Unstow camera, optical sight, lens, light attenuator, and cables		
		S BD AUX TAPE - ctr, or DN VOICE BU	3	Positioning S BD AUX TAPE - TAPE, disables TV function.
		S BD AUX TV - off (ctr)		
		Connect power and RF cables		
		Install proper lens (telephoto out of focus at <143 ft) (wide angle out of focus at <18 in.)		Camera is stowed with wide angle lens attached.
		Attach light attenuator to camera lens (attenuator clamps around barrel)		
		Install optical ring sight in top or side mount as desired		
		S BD AUX TV - TV		There will be a 90-second delay for PA warmup before FM transmission commences.
		ALC (camera) - IN (normally), OUT (when detail on dim objects in presence of bright objects is desired)		
		Power (camera) - ON		
		Adjust light attenuator as required (lower numbers have less attenuation)		

NORMAL BACKUP

STA/T	STEP	PROCEDURE	PANEL	REMARKS
		When TV operation is completed		
LMP		Power (camera) - OFF		
		S BD AUX TV - off (ctr)	3	
		Disassemble and stow equipment as desired		
		TV Camera Operation (Color)		
CMP		Unstow TV camera, monitor, & cables		
		Install camera & monitor in mounts		
LMP		TAPE RCDR FWD - off (ctr)		
		Verify TAPE MOTION tb - bp		
		xxxxxxxxxxxxxxxxxxxxxxxxxxxxxxxxxxxx		
		If gray, notify MSFN to reset all tape recorder RTCs		
		xxxxxxxxxxxxxxxxxxxxxxxxxxxxxxxxxxxx		
CMP		cb S BD XMTR/DSE ac GRP 1 - open	225	
		Monitor pwr sw - OFF		
		Camera auto light control sw - INSIDE		
		Adjust camera		
		Focus - 4 ft		
		Zoom - 12.5mm		
		Aperture - f/22		
		Connect camera-to-monitor cable (arrow-to-arrow)		

STA/T	STEP	PROCEDURE	PANEL	REMARKS
LMP		S BD AUX TAPE - ctr, or DN VOICE BU	3	
		S BD AUX TV - ctr		
		Connect camera pwr & RF cable		
		S BD AUX TV - TV		
		Monitor pwr sw - on (up)		
		Adjust monitor controls for best image (VER, HOR, BRT & CONT control knobs)		
		Adjust cabin lighting to max		
ALL		FLOOD LTS - OFF (CCW)	5,8,100	
		FLOOD LTS DIM - 1		
		FLOOD LTS FIXED - OFF		
		FLOOD LTS - full BRT (CW)		
		Using monitor, adjust camera controls		
		Lens aperture		
		Zoom control		
		Focus control		
		To xmit to MSFN		
CMP		cb S BD XMTR/DSE ac GRP 1 - close	225	Transmission will begin immediately.
		When TV operation is complete		
LMP		S BD AUX TV - ctr	3	
		Disassemble and stow camera, monitor, and cables		
ALL		Adjust cabin lighting as desired (para 4.7.8)		
	4.7.6.5	VHF/AM Modes		BASIC switch configuration provides CSM-MSFN voice, CSM-LM voice, and CM-recovery voice.
		Simplex A		
		Select BASIC		

NORMAL BACKUP

STA/T STEP	PROCEDURE	PANEL	REMARKS
	Duplex A		PLSS operation. Should not be used until after CSM/SIVB separation as transmission on VHF AM B will interfere with booster TM.
LMP	Select BASIC except		
	VHF AM A - DUPLEX	3	
	Simplex B		CM-recovery backup voice. Should not be used until after CSM/SIVB separation as transmission on VHF AM B will interfere with booster TM.
	Select BASIC except		
	VHF AM B - SIMPLEX		
	VHF AM A - off (ctr)		
	Duplex B		PLSS backup operation.
	Select BASIC except		
	VHF AM B - DUPLEX		
	VHF AM A - off (ctr)		
	RCV ONLY A		Provides the capability to monitor recovery VHF voice transmissions.
	Select BASIC except		
	VHF AM RCV - A		
	VHF AM A - off (ctr)		
4.7.6.6	VHF AM Ranging Mode		
	VHF AM A - off (ctr)		
	VHF AM B - DUPLEX		
	VHF RNG - on (up)		
	If P20 operating and VHF AM ranging option selected		
CMP	TRACKER lt - on	2,140	The CMC will activate the TRACKER lt and wait for a "data good" signal from the digital ranging generator.
CDR	EMS FUNC - VHF RNG	1	
	EMS MODE - VHF RNG		

STA/T STEP	PROCEDURE	PANEL	REMARKS
	CAUTION There must be no VHF AM voice transmission by LM, CSM or MSFN for ≈12 sec after VHF RNG - RSET.	9	Voice transmission at this time could interfere with the accuracy of the ranging signal.
CDR	VHF RNG - RSET (1 sec min) RNG ind - B00000	1	Momentary up, hold for 1 sec minimum. When the VHF RNG switch is placed to RSET, the RNG ind will count down to zero, and the operator will hear the mid tone (4.197 kHz) and then the low tone (3.95 kHz).
	If P20 operating and VHF AM ranging option selected		
CMP CDR	TRACKER lt - out RNG ind - B0XXXX	2,140 1	TRACKER lt - out (no OCDU failure) and RNG ind starts counting up ≈4 seconds after termination of the low tone. RANGE IND is interpreted as range in nautical miles to nearest .XX NM.
	4.7.6.7 DSE Record Modes		Under nominal conditions MSFN will control tape recorder operation.
	Record HBR CM Data, CM/IC, LM/IC, LM/PCM Select BASIC except		In order to dump LM PCM when recorded with CM PCM, two dumps are required.
LMP	PCM BIT RATE - HI VHF AM RCV - B DATA	3	
	Record LBR CM Data, CM/IC, LM/PCM, EVA/LM/IC Select BASIC except VHF AM RCV - B DATA		In order to dump LM PCM when recorded with CM PCM, two dumps are required.

NORMAL/BACKUP

STA/T STEP	PROCEDURE	PANEL	REMARKS
	Record HBR CM Data, EVA/LM/IC, CM/IC		
LMP	Select BASIC except		
	VHF AM A or B - DUPLEX	3	
	PCM BIT RATE - HI		
	Record LBR CM Data, EVA/LM/IC, CM/IC		
	Select BASIC except		
	VHF AM A or B - DUPLEX		
	4.7.6.8 Relay Mode (LM Voice to MSFN)		
	Voice Relay (With VHF Ranging)		
	Select BASIC except		
CMP	MODE - VOX	10	
	VOX SENS tw - 5		
	S BD - OFF		
	INTERCOM - OFF		
	AUDIO CONT - BU		
CDR	MODE - VOX	9	When operating in VOX mode, LM reply should be delayed 2 seconds to allow for VOX release time.
	VOX SENS tw - as req		
LMP	S BD MODE VOICE - RELAY	3	
	VHF AM A - off (ctr)		
	VHF AM B - DUPLEX		
	VHF RNG - on (up)		
	Voice Relay (With LM LBR PCM record)		
	Select BASIC except		
CMP	MODE - VOX	10	
	VOX SENS tw - 5		

STA/T STEP	PROCEDURE	PANEL	REMARKS
CMP	S BD - OFF	10	
	INTERCOM - OFF		
	AUDIO CONT - BU		
CDR	MODE - VOX	9	When operating in VOX mode, LM reply should be delayed 2 seconds to allow for VOX release time.
	VOX SENS tw - as req		
LMP	S BD MODE VOICE - RELAY	3	
	VHF AM RCV - B DATA		
	4.7.6.9 Rendezvous Transponder Activation and Self Test		
	RNDZ XPNDR - HTR for 24 min, then to PWR	100	One minute warmup is required if self-test only is to be performed.
	SYS TEST (LH) - XPNDR	101	
	SYS TEST (RH) - A (RRT XMTR OUT PWR)		
	SYS TEST ind - >1.0 vdc		
	SYS TEST (RH) - B (RRT AGC SIG)		
	RNDZ XPNDR - TEST		TEST position is momentary.
	SYS TEST ind - >1.0 vdc (self-test)		
	RNDZ XPNDR - OPR		
	SYS TEST ind - 0-4.5 vdc (operate)		Indicates relative received signal strength, (preferred position during rendezvous).
	SYS TEST (RH) - C (RRT FREQ LOCK)		
	SYS TEST ind - <0.8 vdc (unlocked)		
	or - >4.0 vdc (locked)		RF lockup indicated by 4.0 vdc in OPR with LM interrogation.
	SYS TEST (RH) - B (RRT AGC SIG operate)		

NORMAL BACKUP

STA/T STEP	PROCEDURE	PANEL	REMARKS
	4.7.6.10 Backup Modes		
	Up Voice Backup		Requires coordination with MSFN. Updata signal (noise) will be present in headsets until MSFN reconfigures for this mode.
LMP	Select BASIC except		
	UP TLM DATA - UP VOICE BU	3	
	Down Voice Backup		
	Select BASIC except		
	S BD MODE PCM - ctr		
	S BD AUX TAPE - DN VOICE BU		
	S BD MODE RNG - OFF		
	PCM BIT RATE - HI		
	Down Voice and LBR RT Data Backup		
	Select BASIC except		
	S BD AUX TAPE - DN VOICE BU		
	S BD MODE RNG - OFF		
	Key		
	Select BASIC except		
	S BD MODE PCM - KEY		
	S BD MODE RNG - OFF		
	Down Data Backup		
	Select BASIC except		
	PMP PWR - AUX		
	4.7.6.11 Pad Communications		
	Select BASIC except		
	TAPE RCDR FWD - off (ctr)		
	Prior to launch		

STA/T STEP	PROCEDURE	PANEL	REMARKS
ALL	PAD COMM (3) - T/R (or RCV) PAD COMM VOL tw (3) - as req Launch -10:00 PAD COMM (3) - OFF	9,10,6	PAD COMM switch can be used after launch for intercom backup with PAD COMM VOL tw - decr.

NORMAL BACKUP

STA/T	STEP	PROCEDURE	PANEL	REMARKS
		4.7.7 MECHANICAL SYSTEMS		
		Procedures for opening and closing the side and forward hatches are presented in the following paragraphs, as well as the procedure for the operation of the side hatch counterbalance mechanism. The procedures include operational performance from the interior and exterior of the CM.		
		4.7.7.1 Opening Side Hatch for EVT		
		a. Opening Side Hatch From CM Interior Without Utilizing Counterbalance Mechanism		
ALL		PGAs donned and checked, para 4.7.4.9		
LMP		Procure tether and tool B and fasten to arm		Tool B stowed in location A1.
CMP		Dump CM pressure, para 4.7.4.11		
		WARNING Counterbalance piston chamber must be vented prior to opening hatch in zero G.		
		Deactivate counterbalance mechanism, para 4.7.7.3, step a		
		CAUTION To prevent shearing lock pin, set lock pin rel knob to UNLOCK prior to operating actr handle.		

STA/T STEP	PROCEDURE	PANEL	REMARKS
CMP	Lock pin rel knob - UNLOCK (Check that red shear pin is extended ≈0.5 inch (rh couch) and/or white ind is opposite yellow mark (ctr/lh couch))		Pin can be sheared if left in LOCK position.
	Gear box sel - UNLATCH		
	Actr handle sel - U (unlatch)		
	Actr handle rel - push or squeeze		Push (button) or squeeze (bar) releases actuator handle for operation.
	Actr handle - operate (until hatch can be opened)		
	CAUTION If hatch does not open normally and there are no crewmen EVA, do not proceed with attempt to open hatch.		
	If unable to open hatch and crewmen are EVA		
	Recheck position of controls		
	Insure no foreign objects caught in hatch assemblies (latches latch linkage, gear box linkage or hinges)		
	Actr handle - operate (increase load)		
	If still unable to open hatch		
	Remove clevis pins (4 places) with tool B		
	Move latches to unlatch position with tool F		Wrench flats are on each latch assembly.

NORMAL BACKUP

STA/T STEP	PROCEDURE	PANEL	REMARKS
	b. Open Side Hatch From CM Interior Using Counterbalance Mechanism		
ALL	PGAs donned and checked, para 4.7.4.9	Side hatch	
CMP	Dump CM pressure, para 4.7.4.11		
	Vent piston chamber		
	GN2 vlv handle - pull (inboard)		
	GN2 press ind - minimum		
	CAUTION To prevent shearing lock pin, set lock pin rel knob to UNLOCK prior to operating actr handle.		
	Lock pin rel knob - UNLOCK (Check that red shear pin extended ≈0.5 inch (rh couch) and/or white ind opposite yellow mark (ctr/lh couch))		Pin can be sheared if left in LOCK position.
	Gear box sel - UNLATCH		
	Actr handle sel - U (unlatch)		
	Actr handle rel - push or squeeze		Push (button) or squeeze (bar) releases actuator handle for operation.
	Actr handle - operate (until hatch latches are unlatched)		
	CAUTION If latches do not open normally, do not proceed with attempt to open hatch.		

STA/T STEP	PROCEDURE	PANEL	REMARKS
	xxxxxxxxxxxxxxxxxxxxxxxxxxxxxxxxxxxxxxxxxx		
CMP	If unable to open latches and return transfer cannot be performed through CM/LM tunnel	Side hatch	
	Recheck position of controls		
	Vent piston chamber		
	GN2 vlv handle - pull (inboard)		
	GN2 press ind - minimum		
	Insure no foreign objects caught in hatch assemblies (latches, latch linkage, gear box linkage)		
	Actr handle - operate (increase load)		
	If still unable to open hatch		
	Remove clevis pins (4 places) with tool B		
	Move latches to unlatch position with tool F		Wrench flats are on each latch assembly.
	xxxxxxxxxxxxxxxxxxxxxxxxxxxxxxxxxxxxxxxxxx		
	Gear box sel - LATCH		Prepares hatch for closing.
	Actr handle sel - L		
	CAUTION Do not puncture second pressure bottle to open hatch. This pressure bottle is in reserve for postlanding.		

NORMAL BACKUP

STA/T STEP	PROCEDURE	PANEL	REMARKS
CMP	Pressurize piston chamber GN2 vlv handle - push slowly until hatch is open and locked	Side hatch	
	xxxxxxxxxxxxxxxxxxxxxxxxxxxxxxxxxxxx x x If unable to open hatch Insure no foreign objects caught in hatch hinges or counter- balance mechanism x x xxxxxxxxxxxxxxxxxxxxxxxxxxxxxxxxxxxx		
	CAUTION Do not disconnect hatch bell- crank with hatch in the open position.		
	Depressurize piston chamber GN2 vlv handle - pull inboard until GN2 press ind - minimum		
	xxxxxxxxxxxxxxxxxxxxxxxxxxxxxxxxxxxxxx x x If piston chamber will not vent Disengage counterbalance Tool B - insert into counterbalance locking pin Rotate tool B (CCW) to stop (4-1/2 turns) x x xxxxxxxxxxxxxxxxxxxxxxxxxxxxxxxxxxxxxx		Disengages piston bellcrank. Tool F may also be used. Counterbalance assist of hatch opening will not be available for postlanding.
	c. Opening Side Hatch From CM Exterior PGAs donned and checked, para 4.7.4.9		

STA/T STEP	PROCEDURE	PANEL	REMARKS
CMP	Dump CM pressure	Side hatch	
	CAB PRESS DUMP vlv - insert tool B, depress and rotate (CW) to stop		Depressing pressure equalization valve with tool B will release inside actuating handle from stowed position, and rotating to stop will open valve.
	WARNING Counterbalance piston chamber must be vented prior to opening hatch in zero G.		
	Deactivate counterbalance mechanism, para 4.7.7.3, step a		
	Wait 70 sec min, then insert tool B in hatch actuation socket		
	Rotate CCW (368°) until hatch can be opened		Releases hatch latches.
4.7.7.2	Closing Side Hatch for EVT		
	a. Closing Side Hatch From CM Interior		
	Check EVT equipment clear of hatch and hatch frame.		
	Actr handle sel - L (latch)		
	Gear box sel - LATCH		
	Open door rel handle - pull		D-ring.
	Verify latches are in open position		
	Close hatch		
	Open door rel handle - stow		
	Actr handle rel - push or squeeze		
	Actr handle - operate (while holding hatch closed)		
	Verify hatch fully latched		

NORMAL BACKUP

STA/T STEP	PROCEDURE	PANEL	REMARKS
	xxxxxxxxxxxxxxxxxxxxxxxxxxxxxxxxxxxxxxxxxx		
CMP	If hatch does not latch	Side hatch	
	Recheck position of controls		
	Check latches for unlatch position		
	Insure hatch is closed sufficiently for latches to engage		
	Insure no foreign objects caught in hatch assemblies		
	Actr handle - operate (increase load)		
	If hatch still does not latch		
	Install jackscrews (3) to restrain hatch in closed position		
	Disconnect gearbox from linkage		Left bank of latches (looking outboard) cannot be closed if gearbox fails in extreme open position but can be closed if actr handle can be operated for one complete stroke towards closure.
	Remove clevis pins (4 places) with tool B		
	Move latches to latch position with tool F		Wrench flats are on each latch assembly.
	Install (2) clevis pins in threaded holes in linkage bell cranks of upper gearbox side and lower hinge side (clevis pins installed when approx half the threads are visible)		

STA/T STEP	PROCEDURE	PANEL	REMARKS
CMP	If hatch still will not latch, tighten jackscrews (3) to close hatch	Side hatch	Four latches have kickers to force latch open during unlatch cycle. If one is jammed open, jackscrews will not close hatch to pressure seal and there will be ≈0.6 inch between hatch and seal. Latch must be unjammed or removed (using torque set screwdriver) to close hatch completely.
	Lock pin rel knob - LOCK (automatically)		Verifies lock pin has automatically engaged.
	LOCK PIN ind - not extended (rh couch) and/or that white ind is opposite white mark (ctr/lh couch)		Indicates lock pin is engaged.
CMP	If hatch was opened from CM exterior and lock pin rel knob does not lock, LOCK PIN rset - RSET (push)	Side hatch	
	Actr handle - stowed position		
	Actr handle sel - N (neutral)		
	Repressurize CM, para 4.7.4.8		
	b. Closing Side Hatch From CM Exterior		
	Check EVT equipment clear of hatch and hatch frame		

NORMAL BACKUP

STA/T STEP	PROCEDURE	PANEL	REMARKS
CMP	Actr handle sel - N (neutral) Side hatch		
	Gear box sel - N (neutral)		
	Open door rel handle - pull		D-ring.
LMP	Close hatch		
CMP	Open door rel handle - stow		
LMP	Hatch actuation socket - insert tool B		
	Rotate CW (382°) to stop		Engages hatch latches.
	Tool B - remove from socket		
CMP	LOCK PIN rset - RSET (push)		Engages lock pin. Mechanism will automatically return 14° (CCW) when tool B is removed.
	If mechanism does not automatically return 14° (CCW) when tool B is removed, reinsert tool B and manually rotate 14° (CCW)		
	Lock pin rel knob - LOCK		
	LOCK PIN ind - not extended (rh couch) and/or white ind opposite white mark (ctr/lh couch)		
LMP	If PRESS EQUAL VLV is open		
	PRESS EQUAL VLV - insert tool B and rotate (CCW) to stop		Seals CM pressure equalization valve.
	Remove tool B		
	Repressurize CM, para 4.7.4.8		

STA/T STEP	PROCEDURE	PANEL	REMARKS
	4.7.7.3 Side Hatch Counterbalance Operation		
	a. Deactivate Counterbalance Mechanism		
CMP	1. Vent piston chamber	Side hatch	
	GN2 vlv handle - pull (inboard)		Squeeze handle to unlock.
	GN2 press ind - minimum		
	2. Disengage counterbalance (crew option)		Use either the pip pin or counterbalance locking pin to disengage the counterbalance. Do not use both methods.
	(A) Counterbalance locking pin		
	Tool B - insert into counterbalance locking pin		
	Rotate tool B (CCW) to stop (4-1/2 turns)		Disengages piston bellcrank from hatch bellcrank. Tool F may also be used.
	or (B) Pip pin on counterbalance arm		
	Pull pip pin connecting roller track fitting and bell crank		
	Stow pip pin	R-10	
	Push roller track fitting to end of track and check if roller will come off - stow roller(s) that can be removed		
	b. Activate Counterbalance Mechanism		
	1. Engage counterbalance (if disengaged)		Engage the counterbalance by the method used to disengage the counterbalance: pip pin or counterbalance locking pin.
	(A) Counterbalance locking pin		
	Tool B - insert into counterbalance locking pin		
	Rotate tool B (CW) to stop (4-1/2 turns)		

NORMAL BACKUP

STA/T STEP	PROCEDURE	PANEL	REMARKS
CMP	or (B) Pip pin on counterbalance arm Remove roller(s) from stowage (if removed) and re-install on track fitting Remove pip pin from stowage Connect counterbalance to track fitting with pip pin	Side hatch	
	2. Pressurize piston chamber GN2 vlv handle - push (outboard)		Squeeze handle to unlock.
LMP	GN2 press ind - green	Side hatch	GN2 press ind will display charge bottle pressure when GN2 vlv handle in charge position (outboard). To provide maximum assist, GN2 vlv handle will be left in charge position through time counterbalance activated.
	xxxxxxxxxxxxxxxxxxxxxxxxxxxxxxxxxx If GN2 press ind - below green GN2 ratchet handle - operate xxxxxxxxxxxxxxxxxxxxxxxxxxxxxxxxxx		
	4.7.7.4 Opening Fwd Hatch		
	a. Opening Fwd Hatch From CM Interior Equalize CM/LM pressure, para 4.7.4.14		If required. Tunnel pressure integrity check is incorporated into these procedures.
	Actr handle rel - PULL & ROTATE	tunl	To free actr handle for operation, release is rotated to stop.

STA/T	STEP	PROCEDURE	PANEL	REMARKS
LMP		Actr handle - pull to stop		Actr handle should move ≈80°.
		Actr handle sel - U (unlatch)		
		Actr handle - push to stop		Actr handle should move ≈60° to release latches.
		Gearbox disconnect socket - U (verify)		
		Actr handle sel - STOW		
		Actr handle - push to stowed position		Actr handle rel automatically locks handle in stowed position.
		Remove and stow fwd hatch		Hatch should be stowed in LHEB.
	b.	Opening Fwd Hatch From CM Exterior		
ALL		PGAs donned and checked, para 4.7.4.9		
CDR		PRESS EQUAL VLV - OPEN	Fwd hatch	
		Tool B - insert, hold depressed and rotate (CW)		
CMP		TUNL VENT vlv - LM/CM ΔP	12	
		LM/CM ΔP ind - 0.0 psid		Report indication to CDR. Accuracy of gauge is ±0.1 psi at -1.0 to +1.0 psid and 70°F, ±0.2 psi at +1.0 to +4.0 psid and 70°F.
		xxxxxxxxxxxxxxxxxxxxxxxxxxxxxxxxxxxxxxxxx		
		If CMP is unable to monitor the LM/CM ΔP ind when the PRESS EQUAL VLV is positioned to OPEN, wait minimum of 60 sec before attempting to operate the hatch actuation socket		LM pressure is normally 0.2 psia below that of the CM.
		xxxxxxxxxxxxxxxxxxxxxxxxxxxxxxxxxxxxxxxxx		
CDR		Hatch actuation socket - insert tool B and rotate (CCW)	tunl	Disconnects gear box and releases hatch latches.
		Remove and stow fwd hatch in LHEB		

NORMAL BACKUP

STA/T STEP	PROCEDURE	PANEL	REMARKS
	4.7.7.5 Closing Fwd Hatch		
LMP or CMP	Closing Fwd Hatch From CM Interior		Performed by LMP or CMP.
	Obtain fwd hatch from stowage	Fwd hatch	Fwd hatch stowed in LHEB.
	Position hatch against sealing surface		Align equivalent colored arrows.
	Actr handle rel - PULL & ROTATE		To free actr handle for operation, release rotated to stop.
	Actr handle - pull to stop		Actr handle should move ≈80°.
	Actr handle sel - L (latch)		
	Actr handle - push to stop		Actr handle should move ≈60° to engage latches.
	Verify gearbox disconnect socket is opposite the L mark on the hatch		
	Actr handle sel - STOW		
	Actr handle - push to stowed position		Actr handle rel automatically locks handle in stowed position.
	Push manual gearbox lock (chrome tab)		Verifies that gear box lock is engaged.
CDR	PRESS EQUAL VLV - CLOSE (CW)		Yellow indicator pin must be in the green zone and valve handle must be in yellow-band area (indicates valve is fully closed).
	xxxxxxxxxxxxxxxxxxxxxxxxxxxxxxxxxxxxxxxx		
	Cannot close PRESS EQUAL vlv		
	Remove forward hatch, para 4.7.7.4		
	Insert Tool B in external tool interface for additional leverage, hold depressed and rotate (CCW)		
	Install forward hatch		
	xxxxxxxxxxxxxxxxxxxxxxxxxxxxxxxxxxxxxxxx		
	Repressurize CM, para 4.7.4.8		

STA/T	STEP	PROCEDURE	PANEL	REMARKS
		4.7.8 FLOODLIGHT OPERATING MODES		
		4.7.8.1 Primary Floodlight Mode		
ALL		FLOOD LTS - OFF (CCW) FLOOD LTS DIM - 1 FLOOD LTS - full dim or full BRT	5,8,100	
		4.7.8.2 Secondary Floodlight Mode		Operation in the secondary mode is a backup only to be used in the event of DIM-1 circuitry in-flight failure. The DIM-2, dimmed floodlight predicted operating life is ≈100 hrs.
		FLOOD LTS - OFF (CCW) FLOOD LTS DIM - 2 FLOOD LTS - full BRT (CW)		

NORMAL BACKUP

STA/T STEP	PROCEDURE	PANEL	REMARKS

4.7.9 LIMITED USE CIRCUIT BREAKERS

The following list defines circuit breakers which will be open during major portions of flight time. Primary considerations are to maintain maximum crew safety, reduce consumable usage, and increase equipment reliability.

Circuit Breakers	Panel Location	When Opened	When Closed	Remarks
PYRO A&B BAT BUS A&B (2)	250	Prelaunch	Only when required, if pyro bats indicate <35 vdc during bat check	Connects battery buses to pyro buses in event of pyro battery(s) failure.
BAT BUS A&B BAT C (2)	250	Prelaunch	When required to connect bat C to bat bus A or B	Connected when bat C is used to back up failed bat A or B.
MN A&B BAT C (2)	275	Prelaunch	Prior to deorbit and as required for bat A or B backup	Opened to isolate bat C from main buses.
FLT/PL BAT BUS A&B & BAT C (3)	275	Prelaunch	Prior to splashdown	Opened to isolate bat bus A & B and bat C from the flight and post-landing bus.
SECS ARM (2)	8	Postorbital insertion check	During prelaunch, launch, docking, deorbit and entry procedures	Opened to ensure against inadvertent activation of SECS functions.
RCS LOGIC (2)	8	Post S-IVB separation check	During prelaunch, launch, deorbit, and entry procedures	Opened to ensure against inadvert-ent CM/SM RCS transfer and/or CM RCS activation.

Circuit Breakers	Panel Location	When Opened	When Closed	Remarks
FC 1, 2, & 3 REACS (3)	226	Prelaunch after FC startup	Only when required to shut down fuel cell	Opened to ensure against inadvertent fuel cell shutdown.
FC 1, 2, & 3 RAD (all)	226	Prelaunch	Only when required to activate FC radiator bypass function	Bypass is only used in event of fuel cell failure.
ELS BAT (2)	8	Postorbital insertion check	Prior to deorbit and entry	Opened to isolate ELS until needed.
PL VENT FLT/PL	8	Postorbital insertion check	After splashdown	Opened to ensure against inadvertent activation of postlanding vents.
FLOAT BAG (3)	8	Postorbital insertion check	After splashdown	Opened to ensure against inadvertent activation of float bag compressors.
EDS (all)	8	Post separation panel configuration (CSM/SLA separation)	Prelaunch	No further use after CSM/SLA separation.
SPS PITCH 1 BAT A	8	When SCS powered down	During SCS powered up	Opened to prevent power drain through SCS TVC fail sensor.
SPS YAW 1 BAT A	8	When SCS powered down	During SCS powered up	Opened to prevent power drain through SCS TVC fail sensor.
CM RCS HTRS (both)	8	Prelaunch	Prior to deorbit and entry if heating required	Opened to ensure against inadvertant CM RCS activation. Heating probably not required.

NORMAL/BACKUP

Circuit Breakers	Panel Location	When Opened	When Closed	Remarks
MAIN REL PYRO (2)	229	Prelaunch	Only after splashdown	Opened to prevent premature main parachute release.
NONESS INST	5	Prelaunch	When required	No requirements are defined for use of this cb at the present time.
02 VAC-ION PUMPS (2)	229	Prelaunch	Postorbital insertion	Opened to prevent possible corona arcing during boost.
SIVB/LM SEP (2)	278	Following LM extraction	Prelaunch	No further use after LM is extracted from SIVB.

STA/T STEP	PROCEDURE	PANEL	REMARKS

4.8 G&C REFERENCE DATA

This section provides data which generally apply to all G&C procedures in sections 4.4, 4.6, and 4.9 through 4.17. The data do not include procedures but contain information which may be referenced in various procedures, may constrain the application of procedures, or may be helpful in applying the procedures.

4.8.1 SCS RATE, DEADBAND AND JET SELECT LOGIC

When attitude control is mechanized for SCS modes, para 4.9.1, rate and deadband performance is established by the positioning of the ATT DBD switch and the RATE switch. (See figure 4.8-1.) (For FDAI scaling, see figure 4.8-2.)

Jet select logic is established on MDC-8 by the position of 16 AUTO RCS switches and by the engagement of 10 circuit breakers. Each switch is for a single engine. There are 4 switch groups titled A/C ROLL, B/D ROLL, PITCH and YAW with 4 switches each. The panel nomenclature for the AUTO RCS switches summarizes the jet characteristics for both SM and CM RCS jets. The nomenclature code is provided in figure 4.8-3.

For ullage, the switch setup is provided in figure 4.8-4. Ullage mechanization is shown with and without attitude control. Normally, the setup should include attitude control.

SM and CM RCS engine locations are depicted in figure 4.8-5.

In order to prevent inadvertent firings of the RCS engines when powering up the SCS, the BMAGs should be caged.

The pseudo rate function, which is controlled only by the LIM CYCLE switch, is used only during SCS attitude hold mode to conserve RCS propellants. The switch does not function when in computer (CMC) mode. Manual SCS maneuvers should not be performed with the LIM CYCLE switch on. Excessive RCS injector valve cycling and increased propellant consumption will result from the performance of manual SCS maneuvers with the LIM CYCLE switch on.

NORMAL BACKUP

Control Parameter		SWITCH POSITIONS			
		RATE - LOW*		RATE - HIGH	
		ATT DBD:		ATT DBD:	
		MIN	MAX*	MIN	MAX
Attitude Deadband		±0.2°	±4.2°	±4.0°	±8.0°
Commanded Rates	Pitch & Yaw	±0.7°/sec		±7.0°/sec	
	Roll			±20.0°/sec	
Rate Deadband		±0.2°/sec		±2.0°/sec	

*Recommended position to minimize fuel consumption during attitude hold.

Figure 4.8-1. SCS Rate and Deadband Select Logic

FDAI SCALE SW POS	FLIGHT PHASE	ATT ERROR		SCS RATES
		CMC	SCS	
5/1	Boost & entry	R 20° P&Y 5°	RP&Y 5°	RP&Y 1°/sec
	All other	RP&Y 5°	RP&Y 5°	RP&Y 1°/sec
5/5	Boost & entry	R 20° P&Y 5°	RP&Y 5°	RP&Y 5°/sec
	All other	RP&Y 5°	RP&Y 5°	RP&Y 5°/sec
50/15, 50/10	Boost & entry	R 50°	R 50°	R 50°/sec
		P&Y 15°	P&Y 15°	P&Y 10°/sec
	All other	R 12.5°	R 50°	R 50°/sec
		P&Y 15°	P&Y 15°	P&Y 10°/sec

Figure 4.8-2. FDAI Scaling

NORMAL BACKUP

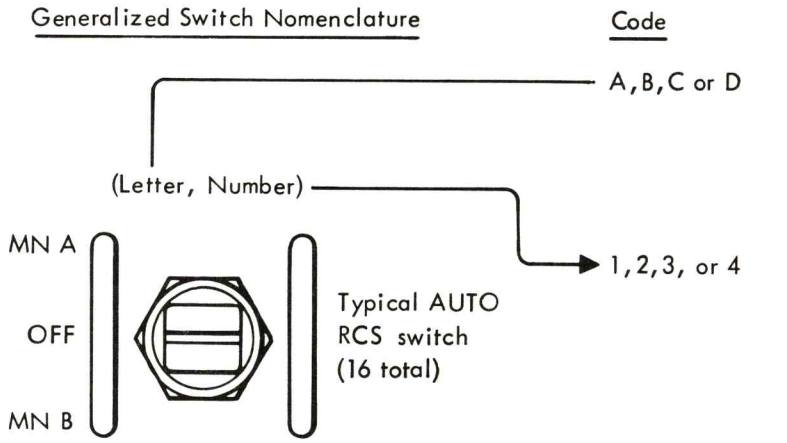

Generalized Switch Nomenclature	Code	Description
(Letter, Number)	A, B, C or D	SM RCS Quad Designation A is -Z Quad B is +Y Quad C is +Z Quad D is -Y Quad
	1, 2, 3, or 4	Individual SM RCS Engine Designation 1 and 2 are roll engines 3 and 4 are quad A/C pitch engines or quad B/D yaw engines Odd nos. (1 and 3) indicate + rotation Even nos. (2 and 4) indicate - rotation
(+ or - sign, Letter)	±X, ±Y, ±Z	Translation Axis and Direction Designation
(Number, * Number*)	1 or 2	CM RCS System Designation 1 is primary system 2 is backup system
	1, 2, 3, 4, 5 or 6	Individual CM RCS Engine Designation 1 and 2 are roll engines 3 and 4 are pitch engines 5 and 6 are yaw engines Odd nos. (1, 3 and 5) indicate positive rotation Even nos. (2, 4 and 6) indicate negative rotation

*No number means the engine is not applicable to the CM RCS system; applies only to A/C ROLL engines

SM-2A-1428B

Figure 4.8-3. SCS Jet Select Logic: MDC-8 Nomenclature

Type of Ullage Desired		Required AUTO RCS Switch Positions (Engines Firing*)								RCS Engines* Providing Attitude Hold Capability	
		Pitch				Yaw					
		A3	C3	A4	C4	B3	D3	B4	D4	Pitch	Yaw
2 Jet-Quad A/C Pitch Engines C3 and A4	Without Attitude Control	OFF	MNA or MNB	MNA or MNB	OFF	MNA or MNB	OFF	OFF	MNA or MNB	None	B3 and D4
	With Attitude Control	MNA or MNB	MNA or MNB	MNA or MNB	MNA or MNB	MNA or MNB	OFF	OFF	MNA or MNB	A3 and C4	B3 and D4
2 Jet - Quad B/D Yaw Engines D3 and B4	Without Attitude Control	MNA or MNB	OFF	OFF	MNA or MNB	OFF	MNA or MNB	MNA or MNB	OFF	A3 and C4	None
	With Attitude Control	MNA or MNB	OFF	OFF	MNA or MNB	MNA or MNB	MNA or MNB	MNA or MNB	MNA or MNB	A3 and C4	B3 and D4
4 Jet - Quad ABCD Engines A4, B4, C3, D3	Without Attitude Control	OFF	MNA or MNB	MNA or MNB	OFF	OFF	MNA or MNB	MNA or MNB	OFF	None	None
	With Attitude Control	MNA or MNB	MNA or MNB	MNA or MNB	MNA or MNB	MNA or MNB	MNA or MNB	MNA or MNB	MNA or MNB	A3 and C4	B3 and D4

*See figure 4.8-5 for explanation of engine code.

Figure 4.8-4. SCS Ullage Setup

NO MICROFILM BACKUP

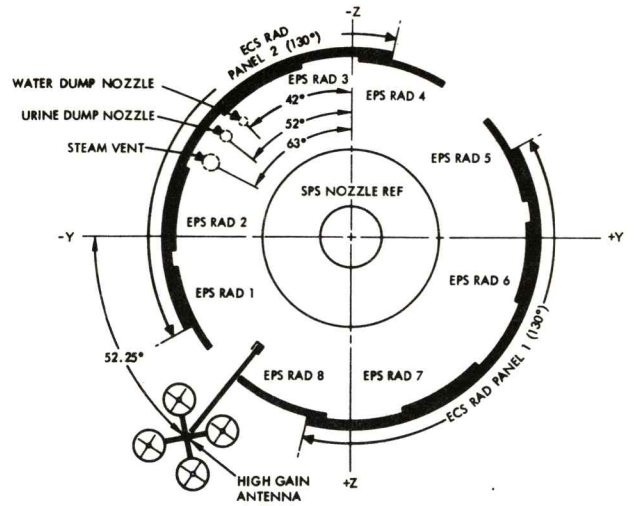

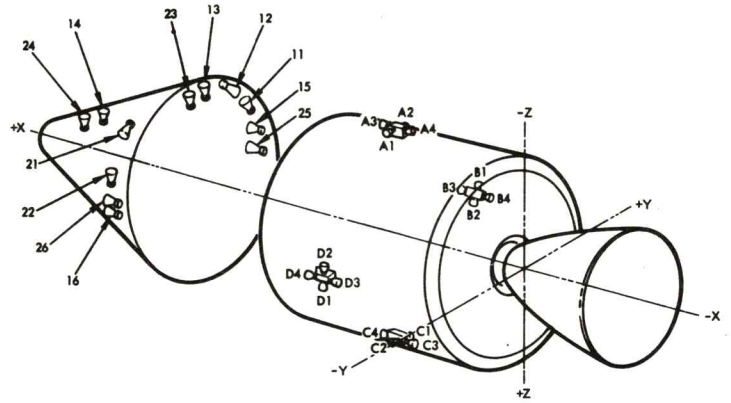

CM RCS CODE

FIRST DIGIT: SYSTEM (1 OR 2)
SECOND DIGIT: 1, 2 (+, -ROLL) 3, 4 (+, -PITCH) 5, 6 (+, -YAW)

SM RCS CODE

1 AND 2 ARE ROLL ENGINES
3 AND 4 ARE A/C PITCH OR B/D YAW ENGINES
1 AND 3 = + ROTATION, 2 AND 4 = - ROTATION

SM-2A-1818

Figure 4.8-5. RCS Engines, Vent, and Radiator Location

STA/T STEP	PROCEDURE	PANEL	REMARKS

4.8.2 RCS ENGINES, VENT AND RADIATOR LOCATIONS

See figure 4.8-5.

4.8.3 SCS LOGIC BUS POWER DISTRIBUTION

Figure 4.8-6 describes power distribution to the SCS controls (pushbuttons, functions and switches). The SCS logic bus circuit breakers on panel 8 provide MNA and MNB power to the four SCS logic buses. The power source for each control is also shown.

Do not remove SCS logic bus power from CMC ATT sw if (1) pitch or yaw rate is >5°/sec, or (2) GDC yaw Euler angle is >80° and <280°. GDC damage will result if this is done.

4.8.3.1 SCS Logic Bus 1 and 4 Power Distribution

The power to SCS logic buses 1 and 4 is controlled only by the SCS logic bus circuit breakers on panel 8. The controls on these two buses have an open circuit or nonpower position for logic bus 1 or 4. Logic bus 1 or 4 loads can only be removed by selecting the open circuit or nonpower position of each control.

4.8.3.2 SCS Logic Bus 2 and 3 Power Distribution

The power to SCS logic buses 2 and 3 is controlled by the LOGIC 2/3 PWR switch on panel 7. The switches powered by these two buses have no open circuit or power off position. Power is removed from these switches by placing the LOGIC 2/3 PWR switch to OFF. Some control loads can be removed from logic bus 2 or 3 by selecting switch positions not powered by logic bus 2 or 3.

NORMAL BACKUP

CONTROLS		POWER SOURCE				POWER OFF	
TITLE	POSITIONS	BUS 1 (cb direct)	BUS 2 (LOGIC 2/3 PWR sw)	BUS 3 (LOGIC 2/3 PWR sw)	BUS 4 (cb direct)	OPEN CIRCUIT	SWITCHED OFF BY
CMC ATT	IMU	X			X		cb SCS LOGIC 1/2, 1/4, & 3/4
	GDC					X	
FDAI SCALE	5/1					X	
	5/5		X				LOGIC 2/3 PWR
	50/15/50/10				X		cb SCS LOGIC 1/4 & 3/4
FDAI SEL	1/2				X		cb SCS LOGIC 1/4 & 3/4
	1			X			LOGIC 2/3 PWR
	2			X			LOGIC 2/3 PWR
FDAI SOURCE	CMC		X				LOGIC 2/3 PWR
	ATT SET			X			LOGIC 2/3 PWR
	GDC			X			LOGIC 2/3 PWR
ATT SET	IMU		X				LOGIC 2/3 PWR
	GDC				X		cb SCS LOGIC 1/4 & 3/4
MAN ATT (3)	ACCEL CMD	X					cb SCS LOGIC 1/2 & 1/4
	RATE CMD					X	
	MIN IMP	X					cb SCS LOGIC 1/2 & 1/4
LIM CYCLE	on (up)					X	
	OFF	X					cb SCS LOGIC 1/2 & 1/4
ATT DBD	MAX					X	
	MIN	X					cb SCS LOGIC 1/2 & 1/4
RATE	HI	X					cb SCS LOGIC 1/2 & 1/4
	LO					X	

Figure 4.8-6. SCS Logic Bus Power Distribution (Sheet 1 of 2)

CONTROLS		POWER SOURCE				POWER OFF	
TITLE	POSITIONS	BUS 1 (cb direct)	BUS 2 (LOGIC 2/3 PWR sw)	BUS 3 (LOGIC 2/3 PWR sw)	BUS 4 (cb direct)	OPEN CIRCUIT	SWITCHED OFF BY
SC CONT	CMC		X				LOGIC 2/3 PWR
	SCS			X			LOGIC 2/3 PWR
BMAG MODE	RATE 2		(R)	(P & Y)			LOGIC 2/3 PWR
	ATT 1 RATE 2		(R)	(P & Y)			LOGIC 2/3 PWR
	RATE 1	(R,P,Y)					cb SCS LOGIC 1/2 & 1/4
DIR ULL	pb	X					cb SCS LOGIC 1/2 & 1/4
THRUST ON	pb	X					cb SCS LOGIC 1/2 & 1/4
GDC ALIGN	pb				X		cb SCS LOGIC 1/4 & 3/4
SCS TVC (2)	AUTO			X			LOGIC 2/3 PWR
	RATE CMD			X			LOGIC 2/3 PWR
	ACCEL CMD			X			LOGIC 2/3 PWR
ΔV CG	LM/CSM			X			LOGIC 2/3 PWR
	CSM					X	LOGIC 2/3 PWR
EMS ROLL	on (up)				X		cb SCS LOGIC 1/4 & 3/4
	OFF					X	
.05 G sw	on (up)				X		cb SCS LOGIC 1/4 & 3/4
	OFF		X				LOGIC 2/3 PWR
TVC GMBL DR (2)	1					X	
	AUTO	X					cb SCS LOGIC 1/2 & 1/4
	2			X			LOGIC 2/3 PWR
THC	CW sw		X				LOGIC 2/3 PWR

Figure 4.8-6. SCS Logic Bus Power Distribution (Sheet 2 of 2)

NORMAL BACK

STA/T STEP	PROCEDURE	PANEL	REMARKS

4.8.4 LIMITED USE CONTROLS

The G&C circuit breakers, required for G&C operation, are to be closed during the entire mission except in the event of malfunctions. (See figure 4.8-7.) If a malfunction occurs, some circuit breakers may be operated in order to isolate problem areas. Refer to malfunction procedures, section 5.2.

Figure 4.8-8 defines switches which will remain in the same position during the major portion of orbital flight time because of functional requirements. Other considerations are to maintain maximum crew safety, increase equipment reliability and minimize power consumption.

4.8.5 G&N OPERATIONS

4.8.5.1 CSS/ISS Interface

Normally the CMC must be ON before the IMU can be operated. The IMU may be powered up while the CMC is at STBY. In this condition, the IMU is caged (if powered up) and remains in a coarse align mode. Caging is accomplished internally and does not require any panel switching. However, if the CMC is at STBY, the IMU can be uncaged by placing the IMU CAGE switch to on (up) for *5 sec. V37 should not be called for 15 seconds after NO ATT light goes out. If it is PIPA FAIL bit will not be reset and a PIPA FAIL will go undetected.

4.8.5.2 DSKY Operations

DSKY operations (MDC-2 and LEB-140) require certain restrictions to operation, loading of data, and display of data which are necessary to proper operation. Some general restrictions are listed below. Detailed information relative to DSKY operations is contained in MIT Report E-2129, "Keyboard and Display Program and Operation."

1. For display verbs (01-07), monitor verbs (11-17), and for all load verbs (21-25), the number of components of the verb must not exceed the number of components of the noun being used beginning with noun 04. Noun 01, 02, and 03 may be used with any verb regardless of number of components. If an attempt is made to violate this restriction the OPR ERR indicator will illuminate when ENTR is pressed to execute the verb/noun action.

STA/T STEP	PROCEDURE	PANEL	REMARKS

The G&C circuit breakers listed in this chart must be closed throughout the mission except when necessary to correct a malfunction.

Panel 8
- SCS
  - TVC AC1
  - AC (both)
  - ECA/TVC AC2
  - DIR ULL (2)
  - CONTR DIR (4)
  - CONTR AUTO (2)
  - LOGIC (all)
  - SYS (2)
  - A/C ROLL (2)
  - B/D ROLL (2)
  - PITCH (2)
  - YAW (2)
- ORDEAL (2)
- EMS (2)
- RCS
  - SM HTRS (4)
  - PRPLNT (2)
- SPS (12)

Panel 5
- G/N
  - PWR AC (both)
  - IMU (2)
  - IMU HTR (2)
  - CMPTR (2)
  - OPT (2)

Panel 229
- EPS
  - GRP 1 (both)
  - GRP 2 (both)
  - GRP 3 (both)
  - GRP 4 (both)
  - GRP 5 (both)

Figure 4.8-7. Limited Use G&C Circuit Breakers

NORMAL BACKUP

Switch	Location	Position Major Portion of Mission	When Required	Remarks
CMC ATT	MDC-1	IMU	Normally not touched	Selection of GDC position causes total attitude display to be lost on both balls. Must not be moved to GDC position if (1) pitch or yaw rate is >5°/sec, or (2) GDC yaw Euler angle is >80° and <280°. GDC damage will result if this is done.
IMU CAGE (guarded)	MDC-1	off (down)	To establish an inertial reference in event of CSS failure or IMU tumbling.	Cage mode zeros the IMU gimbals in a coarse alignment.
EMS ROLL	MDC-1	OFF	Prior to entry	Refer to Entry and Entry Preparation Procedures.
.05 G sw	MDC-1	OFF	At .05 G during entry preparation	
α/Pc IND sw	MDC-1	Pc	Following launch tower jettison	Left in Pc position after tower jettison.
LV IND/GPI sw	MDC-1	GPI	After separation from SIVB	Placed in SII/SIVB position during Postorbital Insertion check.
LV GUID	MDC-2	IU	If manual inputs to the SIVB control system are required.	Nonfunctional after separation from SIVB.
UP TLM	LEB-122	ACPT	Not normally changed	Both UP TLM switches (MDC-2, LEB 122) must be in accept position for CMC to accept telem data. MDC-2 switch is normally used as control.

Figure 4.8-8. Limited Use Controls

STA/T STEP	PROCEDURE	PANEL	REMARKS

2. No mixing of octal and decimal data will be allowed for loads having more than one component. If an attempt is made to violate this restriction, the OPR ERR indicator will illuminate when ENTR is pressed for the last entry.

3. Loading decimal data requires that each complete entry be made with a sign (+,-), followed by five digits. If the desired data load does not contain five significant digits, zeros (0) must be entered ahead of the most significant digit. (E.g., for a data load of +925, the entry will be made by pressing DSKY keys, +, 0, 0, 9, 2, 5, ENTR.) Octal data loads only require that the significant digits be pressed.

4. Machine addresses must be loaded in octal.

5. If an attempt is made to load a data word which is too large in magnitude for the noun being used, the OPR ERR indicator will illuminate.

6. Verify all data loads before pressing ENTR key for the last register being loaded. (The CLR key has no effect after last ENTR is pressed.) If any of the data is incorrect, the register may be cleared by pressing the CLR key. Each successive pressing of the CLR key will clear the preceding register until the first register is cleared. (This backing up action will only operate on components called by the load verb used.)

7. All VERB/NOUN flashes require operator action and the program in progress is halted until appropriate action is taken.

8. When loading decimal data, ENTR sometimes changes last digit of loaded value.

9. KEY REL pb and KEY REL lt:

   <u>KEY REL lt - on</u>

   a. When internal display comes up while operator has DSKY.

STA/T STEP	PROCEDURE	PANEL	REMARKS

b. When internal flashing display is currently on DSKY and keystroke is made except for PRO, ENTR, and ERR RSET.

c. Suspended monitor: When operator makes keystroke on top of (his own) monitor verbs (verbs 11-17).

d. Remains on after V37 until new program is started. Operator should not use keyboard until KEY REL lt is out and new program number is displayed.

KEY REL lt - out

a. When operator relinquishes DSKY by pressing KEY REL.

b. When operator terminates his current sequence normally by:

- Final ENTR of load sequence.
- ENTR, after a response to a flashing display (V34E).
- ENTR, after an extended verb request (V49E).

Special cases of KEY REL

a. If operator selects a nonmonitor verb display on top of his own previously selected monitor verb, the KEY REL lt will flash. Pressing KEY REL will bring back (unsuspend) the monitor and extinguish light. However, if these sequences are performed on top of an internal display, the KEY REL lt will not go out when KEY REL is pressed. One more KEY REL operation (total of two) is required to extinguish KEY REL lt, and bring back the internal display.

STA/T STEP	PROCEDURE	PANEL	REMARKS

b. If operator selects a verb-noun combination (i.e., V16 monitor) on top of an internal flashing display, the internal display can still be answered with V32E, PRO or V34E, which wipes everything from the DSKY until the next internal display. However, an operator-selected monitor should, as a rule, never be terminated with V34E. V34E may not be the desired response to the internal flashing display. KEY REL should be used instead. KEY REL need not be used if a data load is interrupted by a priority display.

10. At times when program selection is not allowable by astronaut action (V37E XXE), R00 will issue a program alarm (01520) and interrupted activity will resume. Attempts to select nonexistent programs will result in an operator error light and return to interrupted program activity and display.

11. V96E may cause significant loss of W-matrix correlation if keyed in:

    a. After a V37E XXE from a program using average G and before the XX appears in the PROG lights

    b. During a permanent state vector integration in P20 during mark processing.

    To recover, key V93E at some time prior to next navigation marks or VHF range input. In all other cases, use of V96E will cause no ill effects providing next program selected is P00.

12. After V82E, meaningful information in N50 (splash error) is available only during P11 and P00.

13. Extended verbs are not restart-protected. If RESTART light goes on during an extended verb, the verb should be reselected.

14. VG or ΔV displays in control coordinates, N85 or N83, are based on reading accelerometers every 2 seconds. Displays, however, are asynchronous one-second monitors. Result is a possible 1/2- to 1-1/2-second delay between application of ΔV and visible result.

NORMAL BACKUP

STA/T STEP	PROCEDURE	PANEL	REMARKS

15. Any program can be terminated at a flashing display via V34E except:

    a. When P20 is running in background of another program, a V34E on a P20 display (R60 or N49 in R22) will terminate P20 only. Conversely, a V34E on a prethrust program will turn off that program but not P20

    b. V34E with an extended verb running will terminate the extended verb only

    c. V34E is ignored in P06.

16. VEC POINT routine (all CMC auto maneuvers except R62) may compute a large OGA (Roll) required when +X must be rotated approximately 180°. The sensitivity to such changes gets greater as the magnitude increases toward 180°. If desired, manually maneuver in pitch approximately 30° and then have solution recomputed by keying PRO on FL V50 N18 while not in CMC and AUTO.

17. A PRO key input is rejected if verb windows show a V21, V22, or V23. V33E must be used for these cases, e.g., a V21 PRO (or V25E PRO) will be rejected; a V25 PRO will not. For the V21, V22, V23 and PRO cases, PRO lights OPR ERR lt.

STA/T STEP	PROCEDURE	PANEL	REMARKS

4.8.5.3 Optics Mechanization

Operation of the SCT and SXT requires adherence to certain constraints which are described as follows:

1. To avoid sun interference, the sun position must be more than 10 degrees from the optics shaft-drive axis and more than 15 degrees from the star LOS for the SXT, and more than 55 degrees from the shaft-drive axis for the SCT. Within these limits it is possible to use the SXT even when the sun position is between the SLOS and LLOS. The constraints given, however, do not take into account light scattering which can occur from the actual spacecraft configuration (such as with LM in the docked position).

2. An adequate portion of the star field must be visible through the SCT in order that navigational stars can be recognized. The optics shaft-drive axis thus must be pointed at least 30 degrees above local sunlit earth horizon and at least 20 degrees above local dark earth horizon.

3. Maximum SXT LOS drive rates are 10 deg/sec for the trunnion and 19.5 deg/sec for the shaft, with a $\pm$20 percent tolerance. During landmark tracking from a 100-nautical mile earth orbit, in order to be able to maintain the optics LOS within the capability of the shaft-drive rate, the optics LOS to the landmark must be > 8.5 degrees from the optics shaft-drive axis ground track at the closest point of approach of the landmark to the shaft-drive-axis ground track. Within this constraint, landmarks on the spacecraft ground track can be used by simply rolling the SC so that the optic LOS is > 8.5 degrees from the optics shaft-drive-axis LOS.

4. The TRACKER caution light should be ignored during TVC. Optics CDU fail during TVC sets the TRACKER light which will stay on (even with fail removed) until end of TVC or keying RSET.

NORMAL BACKUP

STA/T STEP	PROCEDURE	PANEL	REMARKS

5. During auto optics, computation lag between sampling IMU CDUs and driving optics causes optics to lag behind target. Amount of offset is proportional to SC angular rate. At usual rate of 4°/minute, maximum offset would be 0.133°. This will not cause an error during manual tracking and marking.

6. After a fresh start, optics must be taken out of zero and returned to zero to perform an optics zero since it is not position of switch but change to zero position that triggers zeroing program.

4.8.6 VERB LIST

Regular Verbs

01 Disp oct compnt 1 (R1)
02 Disp oct compnt 2 (R1)
03 Disp oct compnt 3 (R1)
04 Disp oct compnt 1, 2 (R1, R2)
05 Disp oct compnt 1, 2, 3 (R1, R2, R3)
06 Disp dec (R1 or R1, R2 or R1, R2, R3)
07 Disp DP dec - test only (R1, R2)
11 Mon oct compnt 1 (R1)
12 Mon oct compnt 2 (R1)
13 Mon oct compnt 3 (R1)
14 Mon oct compnt 1, 2 (R1, R2)
15 Mon oct compnt 1, 2, 3 (R1, R2, R3)
16 Mon dec (R1 or R1, R2 or R1, R2, R3)

STA/T STEP	PROCEDURE	PANEL	REMARKS
	17 Mon DP dec - test only (R1, R2)		
	21 Load compnt 1 (R1)		V33E must be used for accept option when V21, V22, or V23 is in verb window. PRO is not accepted and turns on OPR ERR lt.
	22 Load compnt 2 (R2)		
	23 Load compnt 3 (R3)		
	24 Load compnt 1, 2 (R1, R2)		
	25 Load compnt 1, 2, 3 (R1, R2, R3)		
	27 Disp fixed memory		
	30 Request executive		Use in P00 only.
	31 Request waitlist		Use in P00 only.
	32 Recycle		
	33 Proceed		
	34 Terminate		
	35 Test lights		Use in P00 only.
	36 Request fresh strt		Blanks DSKY displays. May compromise stored state vector requiring a P27 update and IMU orientation determination.
	Extended Verbs		
	*40 Zero CDU (with N20)		Insures sync between ISS CDU counters and CDU counters in CMC. Terminates coarse align and enters fine align.
	41 Coarse align CDU (with N20 & N91)		N20 - Aligns IMU to gimbal angles specified by crew. To coarse align to 0, 0, 0 when GMBL LOCK and coarse align. N91 - To drive optics to shaft and trunnion angles specified by crew.
	*Callable with another extended verb in use and does not lock out other extended verbs.		

NORMAL/BACKUP

STA/T STEP	PROCEDURE	PANEL	REMARKS
42	Pulse torque gyro		Fine align IMU.
43	Load FDAI att err needles (test only)		P00 only.
*44	Set surface flag		
*45	Rset surface flag		
*46	Activate DAP		
*47	Set LM state vctr into CSM state vctr		
48	Strt DAP data load (R03)		Calls up routine 03.
49	Strt crew defined mnvr (R62)		P00 only.
50	Please perform		
51	Please mark		
*52	Marked on offset ldg site (P22)		
53	Please mark alternate LOS		
54	Strt rndz backup sighting mark (R23)		
55	Increment CMC time (dec)		
*56	Terminate tracking (P20)		
57	Strt rndz sighting mark (R21)		
*58	Rset stick flag, set V50N18 flag		Allows auto maneuvers.
59	Please mark (opt calib)		
*60	Set att err ref to present att		
*61	Select mode 1 (disp DAP att err)		Mode 1. FDAI error needles show difference between current and DAP commanded ICDU angles.
*62	Select mode 2 (disp tot att err)		Mode 2. Display difference between desired final ICDUs (N22) and present ICDUs (N20) resolved into CSM control axes.
*63	Disp tot astronaut att err		Mode 3. Display difference between astronaut total attitude (N17) and present ICDUs (N20) resolved into CSM control axes.

*Callable with another extended verb in use and does not lock out other extended verbs.

STA/T STEP	PROCEDURE	PANEL	REMARKS
64	Strt S-bd ant routine (R05)		
*65	Strt opt verif of prelaunch align - P03		V65E calls for P03 (during P02 only).
*66	Set CSM state vctr into LM state vctr		
67	Strt W matrix RSS err disp		
*68	CSM stroke test on		Stroke test initiated by keying V68E. Once stroke test is started it may be stopped by keying V69E (causes restart which terminates stroking, but allows continuation of P40 burn), V37E XXE, or by switching to SCS. Test effective for LM-on only.
*69	Restrt		
70	Strt CMC update - liftoff time (P27)		V70 through V73 are allowed only during P00 or P02.
71	Strt CMC update - block ADR (P27)		
72	Strt CMC update - single ADR (P27)		
73	Strt CMC update - CMC time (P27)		
*74	Initialize erasable dump via downlink		
*75	Backup liftoff		
*76	Set preferred att flag		
*77	Rset preferred att flag		
*78	Update prelaunch azimuth		
79	Request orbrate/PTC (BBQ mode - R64)		
*80	Enbl LM state vctr update		
*81	Enbl CSM state vctr update		
82	Request orb param disp (R30)		V82E calls R30.
83	Request rndz param disp #1 (R31)		V83E calls R31. V83 and V85 displays will be meaningless at altitudes >432 NM for both earth and moon if exercised during periods of precision vector integration.

*Callable with another extended verb in use and does not lock out other extended verbs.

NORMAL BACKUP

STA/T STEP	PROCEDURE	PANEL	REMARKS
85	Request rndz param disp #2 (R34)		V85E calls R34.
*86	Reject rndz backup sighting mark		
*87	Set VHF range flag		
*88	Rset VHF range flag		
89	Strt rndz fnl att routine (R63)		V89E calls R63 from P00 only.
90	Request rndz out of plane disp (R36)		V90E calls R36.
91	Banksum		P00 only.
*92	Strt IMU perform test (P07)		P00 only (Ground use).
*93	Enbl W matrix initialization		
*94	Enbl CISLUNAR tracking recycle (P23)		
*96	Terminate integration and go to P00		
97	SPS thrust fail (R40)		
99	Enbl eng ign		
	*Callable with another extended verb in use and does not lock out other extended verbs.		
4.8.7	NOUN LIST		All nouns may be loaded via DSKY entry. However, registers containing units of XXBXX cannot be loaded and nouns containing such registers cannot be loaded by V24 or V25.
01	Specify address (fract)	.XXXXX .XXXXX .XXXXX	
02	Specify address (whole)	XXXXX. XXXXX. XXXXX.	

STA/T STEP	PROCEDURE		PANEL	REMARKS
03	Specify address (deg)		XXX.XX	
			XXX.XX	
			XXX.XX	
+05	Angular err/diff		XXX.XX DEG	
+06	Option code ID		OCTAL	
	Option code		OCTAL	
+07	Flagword	ECADR	OCTAL	
		BIT ID	OCTAL	
		ACTION	OCTAL	
08	Alarm data	ADRES	OCTAL	
		BBCON	OCTAL	
		ERCOUNT	OCTAL	
09	Alarm codes	FIRST	OCTAL	
		SECOND	OCTAL	
		LAST	OCTAL	
10	Chan to be specified		OCTAL	
11	GETI (CSI)		00XXX. HRS	
			000XX. MIN	
			0XX.XX SEC	
+12	Option code		OCTAL	Used only with extended verbs.
			OCTAL	
13	GETI (CDH)		00XXX. HRS	
			000XX. MIN	
			0XX.XX SEC	
15	Increment address		OCTAL	Used with N01, N02, and N03.

+Nouns not manually callable with valid data at any time.

STA/T STEP	PROCEDURE		PANEL	REMARKS
+16	Time of event		00XXX. HRS 000XX. MIN 0XX.XX SEC	Used by extended verb only.
17	Astronaut tot att	R P Y	XXX.XX DEG XXX.XX DEG XXX.XX DEG	Used in Mode 3 needles (V63).
18	Auto mnvr	R P Y	XXX.XX DEG XXX.XX DEG XXX.XX DEG	
19	New ICDU angles	OG-Roll IG-Pitch MG-Yaw	XXX.XX DEG XXX.XX DEG XXX.XX DEG	Not displayed by program.
20	ICDU angles	OG-Roll IG-Pitch MG-Yaw	XXX.XX DEG XXX.XX DEG XXX.XX DEG	
21	PIPAS	X Y Z	XXXXX. Pulses XXXXX. Pulses XXXXX. Pulses	
22	New ICDU angles	OG-Roll IG-Pitch MG-Yaw	XXX.XX DEG XXX.XX DEG XXX.XX DEG	
+24	Δ time for CMC clock		00XXX. HRS 000XX. MIN 0XX.XX SEC	V25 N24 display initiated by V55E.
+25	Checklist		XXXXX.	Used with V50.
+26	Prio/delay ADRES BBCON		OCTAL OCTAL OCTAL	Used with V30, V31.

+Nouns not manually callable with valid data at any time.

STA/T STEP	PROCEDURE	PANEL	REMARKS
27	Self-test on/off sw	XXXXX.	
+29	X SM launch azimuth	XXX.XX DEG	
+30	Trgt code (gyro compassing verif)	XXXXX. XXXXX. XXXXX.	
+31	Time of event (N34)	00XXX. HRS 000XX. MIN 0XX.XX SEC	Not displayed by program.
32	TF perigee	00XXX. HRS 000XX. MIN 0XX.XX SEC	Time from perigee/perilune.
33	GETI	00XXX. HRS 000XX. MIN 0XX.XX SEC	GETI - ground elapsed time of ignition.
+34	Time of event	00XXX. HRS 000XX. MIN 0XX.XX SEC	
35	Time from event	00XXX. HRS 000XX. MIN 0XX.XX SEC	
36	Time of CMC clock	00XXX. HRS 000XX. MIN 0XX.XX SEC	
37	GETI (TPI)	00XXX. HRS 000XX. MIN 0XX.XX SEC	
38	Time of state vctr	00XXX. HRS 000XX. MIN 0XX.XX SEC	

+Nouns not manually callable with valid data at any time.

NORMAL BACKUP

STA/T STEP	PROCEDURE		PANEL	REMARKS
39	ΔT for trnfr		00XXX. HRS 000XX. MIN 0XX.XX SEC	
40	TF GETI/TFC		XXBXX MIN-SEC	This is a no load noun (OPR ERR).
	VG		XXXX.X FPS	
	ΔV (accum)		XXXX.X FPS	
+41	Trgt	Azimuth	XXX.XX DEG	N41 - 2 component noun.
		Elevation	XX.XXX DEG	
		Identifier	0000X.	
42	Ha		XXXX.X NM	Apogee/apolune altitude.
	Hp		XXXX.X NM	Perigee/perilune altitude.
	ΔV (required)		XXXX.X FPS	
43	Lat (+North)		XXX.XX DEG	
	Long (+East)		XXX.XX DEG	
	Alt		XXXX.X NM	
44	Ha		XXXX.X NM	Apogee altitude. This is a no load noun (OPR ERR).
	Hp		XXXX.X NM	Perigee altitude.
	TFF		XXBXX MIN-SEC	Time of freefall to 49.4 NM (300,000 ft) above launch pad radius for earth orbit, or for lunar orbit, 5.8 NM (35,000 ft) above lunar radius at most recently defined lunar landing site.
45	Marks (VHF/opt)		XXBXX MKS	This is a no load noun (OPR ERR).
	TF GETI (next burn)		XXBXX MIN-SEC	
	MGA		XXX.XX DEG	
46	DAP config		OCTAL OCTAL	Loads configuration for use by RCS DAP.

+Nouns not manually callable with valid data at any time.

STA/T STEP	PROCEDURE	PANEL	REMARKS
47	CSM weight	XXXXX. LB	Loads vehicle weights for use by DAPs.
	LM weight	XXXXX. LB	
48	Pitch trim	XXX.XX DEG	Loads pitch and yaw trim angles.
	Yaw trim	XXX.XX DEG	
49	ΔR	XXXX.X NM	
	ΔV	XXXX.X FPS	
	Code	0000X.	
50	Splash err	XXXX.X NM	Negative for undershoot, positive for overshoot. This is a no load noun (OPR ERR).
	Hp	XXXX.X NM	
	TFF	XXBXX MIN-SEC	Time of freefall.
51	Rho	XXX.XX DEG	
	Gamma	XXX.XX DEG	
52	CENTANG (active veh)	XXX.XX DEG	Central angle of active vehicle.
53	Range	XXX.XX NM	
	Range rate	XXXX.X FPS	
	Phi (lcl horiz/SLOS)	XXX.XX DEG	0 to 180° = SLOS above plane.
54	Range	XXX.XX NM	Range to LM.
	Range rate	XXXX.X FPS	
	Theta (lcl horiz/ CSM +X)	XXX.XX DEG	0 to 180° = +X above plane.
55	NN	0000X.	Display definition depends on using program/routine.
	E	XXX.XX DEG	Elevation.
	CENTANG (passive veh)	XXX.XX DEG	Central angle of passive vehicle.
56	Reentry angle	XXX.XX DEG	
	ΔV	XXXXX. FPS	
57	ΔR offset (SOR)	XXXX.X NM	(+ passive vehicle leads)
58	Hp (post TPI)	XXXX.X NM	Perigee alt (post TPI)
	ΔV (TPI)	XXXX.X FPS	
	ΔV (TPF)	XXXX.X FPS	

NORMAL/BACKUP

STA/T STEP	PROCEDURE	PANEL	REMARKS
59	ΔV LOS 1	XXXX.X FPS	
	ΔV LOS 2	XXXX.X FPS	
	ΔV LOS 3	XXXX.X FPS	
60	G max	XXX.XX G	
	V pred	XXXXX. FPS	
	Gamma EI [lcl horiz/VI (+up)]	XXX.XX DEG	
61	Impact Lat (+North)	XXX.XX DEG	
	Impact Long (+East)	XXX.XX DEG	
	Hds up/down (+Hds up)	+/-00001.	
62	VI	XXXXX. FPS	Inertial velocity.
	H dot	XXXXX. FPS	Altitude rate.
	H pad	XXXX.X NM	Altitude above pad radius (earth orbit) or landing site radius (lunar orbit).
63	RTOGO (.05 G to splash)	XXXX.X NM	One shot display, should always be positive. .05 G represents pad loaded altitude. This is a no load noun (OPR ERR).
	VIO (at .05 G)	XXXXX. FPS	Predicted inertial velocity.
	TFE (time from .05 G)	XXBXX MIN-SEC	
64	Drag accel	XXX.XX G	
	VI	XXXXX. FPS	Inertial velocity.
	Range to splash	XXXX.X NM	Negative and counting down when approaching target; positive and counting up when leaving target.

STA/T STEP	PROCEDURE	PANEL	REMARKS
65	Sampled CMC time	00XXX. HRS 000XX. MIN 0XX.XX SEC	Fetched in interrupt.
66	Beta	XXX.XX DEG	Commanded bank angle.
	CRSRNG ERR	XXXX.X NM	Positive to right of plane (LATANG +South); negative to left of plane (-North).
	DNRNG ERR	XXXX.X NM	Negative for undershoot (PREDANGLE -θ); positive for overshoot.
67	Range to splash	XXXX.X NM	Negative counting down for approaching target; positive counting up for leaving target.
	Lat [Present position (+North)]	XXX.XX DEG	
	Long [Present position (+East)]	XXX.XX DEG	
68	Beta	XXX.XX DEG	Commanded bank angle.
	VI	XXXXX. FPS	Inertial velocity.
	H dot	XXXXX. FPS	Altitude rate.
69	Beta	XXX.XX DEG	Beta - commanded bank angle.
	DL	XXX.XX G	DL - drag acceleration at end of up-control.
	VL	XXXXX. FPS	VL - velocity at end of up-control.
70	Star code (before mark)	OCTAL	
	LMK data	OCTAL	
	Horiz data	OCTAL	
71	Star code (after mark)	OCTAL	
	LMK data	OCTAL	
	Horiz data	OCTAL	

NORMAL BACKUP

STA/T STEP	PROCEDURE	PANEL	REMARKS
+72	Δ ang	XXX.XX DEG	(+ = active vehicle leads)
	Δ alt	XXXX.X NM	(+ = passive vehicle above)
	Search option	XXXXX.	
73	Alt/10	XXXXX. NM	On call in P21.
	VI	XXXXX. FPS	
	Gamma	XXX.XX DEG	
74	Beta	XXX.XX DEG	
	VI	XXXXX. FPS	
	Drag accel	XXX.XX G	
75	Δ alt (CDH)	XXXX.X NM	
	ΔT (CDH -CSI or TPI -CDH)	XXBXX MIN-SEC	
	ΔT (TPI -CDH or TPI -NOM TPI)	XXBXX MIN-SEC	
79	Rate	X.XXXX DEG/SEC	Used with V79.
	DBD	XXX.XX DEG	
	Axis option (X or Y)	XXXXX.	-X = (PTC), Y = (orbrate).
80	Time to ign (cutoff)	XXBXX MIN-SEC	
	VG	XXXXX. FPS	
	ΔV (accum)	XXXXX. FPS	
81	ΔVX (lcl vert)	XXXX.X FPS	(ΔV components)
	ΔVY (lcl vert)	XXXX.X FPS	
	ΔVZ (lcl vert)	XXXX.X FPS	
82	ΔVX (lcl vert)	XXXX.X FPS	
	ΔVY (lcl vert)	XXXX.X FPS	
	ΔVZ (lcl vert)	XXXX.X FPS	
83	ΔVX (cont)	XXXX.X FPS	(ΔV components) control = CSM control axes.
	ΔVY (cont)	XXXX.X FPS	
	ΔVZ (cont)	XXXX.X FPS	
84	ΔVX (other veh)	XXXX.X FPS	(ΔV components)
	ΔVY (other veh)	XXXX.X FPS	
	ΔVZ (other veh)	XXXX.X FPS	

+Nouns not manually callable with valid data at any time.

STA/T STEP	PROCEDURE		PANEL	REMARKS
85	VGX (cont)		XXXX.X FPS	(VG vector components) control = CSM control axes.
	VGY (cont)		XXXX.X FPS	
	VGZ (cont)		XXXX.X FPS	
86	ΔVX (lcl vert)		XXXXX. FPS	
	ΔVY (lcl vert)		XXXXX. FPS	
	ΔVZ (lcl vert)		XXXXX. FPS	
87	Mark data	Shaft	XXX.XX DEG	
		Trun	XX.XXX DEG	
88	Planet	X	.XXXXX	Unit position vector.
		Y	.XXXXX	
		Z	.XXXXX	
89	LMK	Lat (+North)	XX.XXX DEG	
		Long/2 (+East)	XX.XXX DEG	
		Alt	XXX.XX NM	
90	Rndz out of plane param	Y	XXX.XX NM	
		Y DOT	XXXX.X FPS	
		Psi	XXX.XX DEG	
91	Present OCDU angles	Shaft	XXX.XX DEG	
		Trun	XX.XXX DEG	
92	New OCDU angles	Shaft	XXX.XX DEG	
		Trun	XX.XXX DEG	
93	Δ gyro angles	X Gyro	XX.XXX DEG	
		Y Gyro	XX.XXX DEG	
		Z Gyro	XX.XXX DEG	
94	Alternate LOS	Shaft	XXX.XX DEG	
		Trun	XX.XXX DEG	

NORMAL BACKUP

STA/T STEP	PROCEDURE	PANEL	REMARKS
95 Pref att (FDAI angles)	Roll	XXX.XX DEG	Preferred tracking attitude ICDU angles.
	Pitch	XXX.XX DEG	
	Yaw	XXX.XX DEG	
96 +X axis att (FDAI angles)	Roll	XXX.XX DEG	
	Pitch	XXX.XX DEG	
	Yaw	XXX.XX DEG	
+97 Sys test inputs		XXXXX.	
		XXXXX.	
		XXXXX.	
+98 Sys test results and inputs		XXXXX.	
		.XXXXX	
		XXXXX.	
99 POS ERR		XXXXX. FT	RSS value of position error.
VEL ERR		XXXX.X FPS	RSS value of velocity error.
Option code		0000X	Option code: 00001 - Rendezvous 00002 - Orbital 00003 - Cislunar

+Nouns not manually callable with valid data at any time.

STA/T STEP	PROCEDURE	PANEL	REMARKS

4.8.8 STAR LIST

NO.	STAR NAME (Numerical)	STAR NAME (Alphabetical)	NO.
1	Alpheratz	Acamar	6
2	Diphda	Achernar	4
3	Navi	Acrux	25
4	Achernar	Aldebaran	11
5	Polaris	Alkaid	27
6	Acamar	Alphard	21
7	Menkar	Alphecca	32
10	Mirfak	Alpheratz	1
11	Aldebaran	Altair	40
12	Rigel	Antares	33
13	Capella	Arcturus	31
14	Canopus	Atria	34
15	Sirius	Canopus	14
16	Procyon	Capella	13
17	Regor	Dabih	41
20	Dnoces	Deneb	43
21	Alphard	Denebola	23
22	Regulus	Diphda	2
23	Denebola	Dnoces	20
24	Gienah	Enif	44
25	Acrux	Fomalhaut	45
26	Spica	Gienah	24
27	Alkaid	Menkar	7

Vis Mag, Right Ascension and Declination data are relative to the numerical list.

	Right Ascension			Declination		
Vis Mag	(hr)	(min)	(sec)	(deg)	(min)	(sec)
2.1	0	06	49.9	+28	55	29
2.2	0	42	05.0	-18	09	04
Var	0	54	53.0	+60	33	17
0.6	1	36	35.9	-57	23	20
2.1	2	03	18.9	+89	07	34
3.4	2	57	07.4	-40	25	27
2.8	3	00	42.5	+03	58	23
1.9	3	22	10.3	+49	45	21
1.1	4	34	11.8	+16	27	01
0.3	5	13	05.7	-08	14	06
0.2	5	14	28.2	+45	58	10
-0.9	6	23	17.1	-52	40	44
-1.6	6	43	49.6	-16	40	25
0.5	7	37	43.9	+05	18	11
1.9	8	08	36.4	-47	14	51
3.1	8	57	09.7	+48	09	38
2.2	9	26	06.8	-08	31	40
1.3	10	06	46.5	+12	06	52
2.2	11	47	31.8	+14	44	23
2.8	12	14	15.6	-17	22	32
1.0	12	24	54.9	-62	55	59
1.2	13	23	36.6	-11	00	19
1.9	13	46	21.6	+49	27	45

NORMAL BACK OF

STA/T STEP	PROCEDURE	PANEL	REMARKS

NO.	STAR NAME (Numerical)	STAR NAME (Alphabetical)	NO.
30	Menkent	Menkent	30
31	Arcturus	Mirfak	10
32	Alphecca	Navi	3
33	Antares	Nunki	37
34	Atria	Peacock	42
35	Rasalhague	Polaris	5
36	Vega	Procyon	16
37	Nunki	Rasalhague	35
40	Altair	Regor	17
41	Dabih	Regulus	22
42	Peacock	Rigel	12
43	Deneb	Sirius	15
44	Enif	Spica	26
45	Fomalhaut	Vega	36

	Right Ascension			Declination		
Vis Mag	(hr)	(min)	(sec)	(deg)	(min)	(sec)
2.3	14	04	54.6	-36	13	23
0.2	14	14	17.5	+19	20	16
2.3	15	33	25.0	+26	48	53
1.2	16	27	33.9	-26	22	01
1.9	16	45	28.3	-68	58	31
2.1	17	33	32.4	+12	34	50
0.1	18	35	55.3	+38	45	17
2.1	18	53	24.3	-26	20	08
0.9	19	49	19.1	+08	47	16
3.2	20	19	19.6	-14	52	38
2.1	20	23	17.0	-56	49	58
1.3	20	40	24.4	+45	10	21
2.5	21	42	42.7	+09	44	12
1.3	22	55	59.7	-29	46	54

4.8.9 CHECKLIST REFERENCE CODES (V50 N25)

R1 Code	ACTION	FUNCTION
00013	Perform	Coarse align or pulse torque
00014	Perform	Fine align option
00015	Perform	Trgt acquisition
00016	Key in	Terminate mark seq
00041	Switch	CM/SM sep to up
00062	Switch	CMC pwr down

Target (celestial body) acquisition - Used in conjunction with N70, N71 and the following celestial body codes:

00 - Planet (any planet except Earth)
01 to 45 - Star
46 - Sun
47 - Earth
50 - Moon

STA/T STEP	PROCEDURE	PANEL	REMARKS
00202	Perform G&N auto mnvr		
00204	Perform Enbl gmbl trim option		

4.8.10 OPTION CODES (V04 N06 or V04 N12)

R1 Code	Purpose	Input for R2
00001	Specify IMU orientation	1 = PREF 2 = NOM 3 = REFSMMAT 4 = Ldg site
00002	Specify veh	1 = This veh 2 = Other veh
00003	Specify tracking att	1 = PREF 2 = +X axis
00005	Specify SOR phase	1 = First 2 = Sec
00007	Specify propul sys	1 = SPS 2 = RCS

Specified option codes will be flashed in R1 in conjunction with V04 N06 or V04 N12. Requests desired option be loaded into R2.

STA/T STEP	PROCEDURE	PANEL	REMARKS
	4.8.11 ALARM CODES (V05 N09)		Alarms for V05 N09 (ERR RSET zeros R1 and R2; leaves R3 alone) R1 - first alarm to occur R2 - second alarm to occur R3 - last alarm to occur (There is no indication as to whether 3, or more than 3, alarms have occurred)
	Codes starting with 2 signifies POODOO routine: generates software restart (if average G running, same as BAILOUT; if not, goes to ROO). Will not turn on RESTART light.		
	Codes starting with 3 signifies BAILOUT routine: generates software restart (returns to interrupted program). Does not turn on RESTART light.		
	00110 Mark reject has been entered but ignored (continue)		Either no marks have been received or there have been no marks since last mark reject.
	00112 Mark reject with no marks being acptd (continue)		
	00113 No inbits (chan 16) (continue)		If alarm recurs, use MDC DSKY.
	00114 More marks made than desired (continue)		
	00115 V41 N91 keyed with OPT MODE not in CMC		Set OPT MODE - CMC and OPT ZERO - OFF. OPR ERR also lights.
	00116 Opt sw altered before 15 sec zero time elapsed		Set OPT ZERO - ZERO (≈15 sec to zero).
	00117 V41 N91 keyed but CMC has reserved OCDU		V41 N91 not yet available. May occur from start of drive test until end of burn.
	00120 Opt torque has been requested but opt have not been zeroed since last FRESH START or RESTART		Set OPT ZERO - OFF then ZERO (≈15 sec to zero).
	00121 SC att rates of ≥ two-thirds deg per sec will result in auto reject of sighting marks.		Repeat mark.

STA/T STEP	PROCEDURE	PANEL	REMARKS
00122 00124	Marking not called for (continue) P17/P77 TPI search unsuccessful		Refer to pages 4-142 and 4-195. CMC cannot find an acceptable solution based on existing CSM/LM relative positions at selected TPI time.
00205	PIPA saturated		Use SCS control. Refer to G&N malfunction procedures, symptom 12. While thrusting navigation (average G) is operating, a PIPA output in excess of 6399 pulses in a 2-second period has been detected.
00206	IMU zero routine has been entered with both GMBL LOCK lt and NO ATT lt on		Coarse align to 0, 0, 0. Reselect V40 N20E. IMU Mode switching.
00207	ISS turn-on request not present for 90 sec		Redo IMU turn on. Refer to G&N malfunction procedures, symptom 12.
00210	ISS not on		Redo IMU turn on. If alarm recurs, perform fresh start (V36E). Consult MSFN. Refer to malfunction procedures, symptom 12. Used by IMU zero routine, R02, P51, and P53.
00211	Coarse align err		If P51, 53/P52, 54 in progress, record gyro torquing angles and perform fine align check in P52, 54. Otherwise, refer to page 4-486. Also refer to G&N malfunction procedures, symptom 12. Following coarse align, an ICDU is found not to be within 2° of its desired value.
00212	PIPA fail, but PIPA is not being used		PIPA BIAS check. Refer to G&N malfunction procedures, symptoms 6 and 8. A PIPA fail signal has been received by CMC but PIPAs are not being used (average G not on); or CMC has just finished with PIPAs and finds a PIPA fail signal. For latter case, ISS warning light is extinguished.

NORMAL BACKUP

STA/T STEP	PROCEDURE	PANEL	REMARKS
00213	IMU not operating with turn-on request		Refer to 00210. CMC has detected an ISS turn-on request but finds ISS operate not present.
00214	IMU not in use		Refer to 00210 or exit program. IMU not in use (IMUSEFLG reset). IMU in use (IMUSEFLG set).
00217	IMU coarse align or pulse torque difficulty has occurred		Reinitiate current program. If alarm recurs, terminate use of ISS. Refer to G&N malfunction procedures, symptom 12. This alarm is issued in alignment program, P5X, if coarse align or gyro torquing is attempted during IMU turn-on, while a cage command is present or while IMU zeroing is taking place. It is also issued if coarse align failure has occurred (code 211) or if CMC detects ISS warning light on at end of a "successful" coarse alignment or gyro torquing process.
00220	IMU orientation unknown		Align or if aligned, set REFSMMAT flag.
00401	Desired middle gmbl angle is excessive		Call N22 - maneuver if MGA <85° or realign IMU. Alarm will be generated if MGA >60° is calculated during: a. Realignment in P52/54 b. Entry attitude in P62, P66 display, and P64 (if velocity is <27K FPS at .05 G point).
00404	Trgt out of view (90 deg test)		**Refer to pages 4-459, 4-498 and 4-508. A trunnion angle >90° is required to acquire star or landmark. This is a priority alarm and will be displayed by CMC with a flashing V05 N09.**

STA/T STEP	PROCEDURE	PANEL	REMARKS
00405	Acceptable star pair not available		Refer to pages 4-458 and 4-470. In P52 and P54, CMC searches for pair of nav stars which are not <30° and not >76° apart. In addition, neither star may be occulted by earth, sun or moon, and each star must be within 38° of optics shaft axis. If no such pair can be found, alarm is displayed automatically by computer with a flashing V05 N09.
00406	Rndz nav not operating		Select P20 or continue. V54 or V57 has been entered but rendezvous tracking is not operating. CMC ignores request for marks and reinstates interrupted display, if any.
00407	Trgt out of view (50° test)		Refer to pages 4-147, 4-460, 4-498 and 4-508. Required trunnion angle exceeds 50°. Optics will be driven in shaft only while this condition exists.
00421	W-matrix overflow		Notify MSFN but continue. W-matrix automatically reinitialized at next mark.
20430	Orb integration		Notify MSFN. Probable state vector uplink required. This may happen if CMC attempts to integrate a state vector that intersects earth or moon. A state vector update may be required.
00600	Imaginary roots on 1st iteration		Refer to pages 4-153 and 4-179. P32, P72.
00601	Post CSI Hp <5.8 NM (85 NM for E.O.)		Refer to pages 4-153 and 4-179. P32, P72
00602	Post CDH Hp <5.8 NM (85 NM for E.O.)		Refer to pages 4-154 and 4-180. P32, P72.
00603	CDH -CSI <10 min		Refer to pages 4-154 and 4-180. P32, P72.
00604	TPI -CDH <10 min		Refer to pages 4-154 and 4-180. P32, P72.

STA/T STEP	PROCEDURE	PANEL	REMARKS
00605	Number of iterations exceeds loop max		Refer to pages 4-154, 4-180, 4-587 and 4-589.
00606	ΔV exceeds max		Refer to pages 4-154 and 4-180. P32, P72.
20607	No solution from time θ or time radius		Reselect program. Vehicle will be in a hyperbolic orbit, or entry angle is too steep.
20610	Lambda <unity		Reselect P37 and decrease TIG. Selected GETI yields a radius < entry interface radius.
00611	No TIG for given ELEV angle		Refer to pages 4-158, 4-163, 4-184 and 4-187. P33, P34, P73, P74.
00612	State vctr in wrong sphere of influence		Refer to page 4-587.
00613	Re-entry angle out of limits		Refer to page 4-589.
00777	ISS warning caused by PIPA fail		Refer to G&N malfunction procedures, symptom 6.
01102	CMC self test err		Refer to page 4-410. Self check.
21103	Unused CCS branch executed		Copy N08, notify MSFN. Initiate V36 recovery. CMC has branched to an illogical point in its instruction sequence.
31104	Delay routine busy		Reselect extended verb or continue with program. Notify MSFN. An internal routine (DELAYJOB) used by CMC to cause variable time delays, has received requests from more than 4 jobs.
01105	Downlink too fast		Rset. If alarm recurs, DOWNLINK FAILURE. Refer to G&N malfunction procedures, symptom 12.

STA/T STEP	PROCEDURE	PANEL	REMARKS
01106	Uplink too fast		Rset. If alarm recurs, UPLINK FAILURE. Refer to G&N malfunction procedures, symptom 12.
01107	Phase table failure - assume erasable memory is destroyed		Perform: 1. V74 CMC DOWNLINK 2. P27 as necessary 3. V48 as necessary (V46) 4. Re-establish REFSMMAT via P51 as necessary. If FRESH START recurs, CMC FAILURE. Refer to malfunction procedures, symptom SSR-3. During CMC restart, a phase table disagreement was found. CMC will perform an automatic fresh start if this condition exists.
31201	Executive overflow - no vac. area		Reselect extended verb and/or continue program.
31202	Executive overflow - no core sets		Refer to 31201.
31203	Waitlist overflow - too many tasks		Refer to 31201.
21204	Neg or zero waitlist call		If average G on, continue. Otherwise reselect program.
21206	Second job attempts to go to sleep via keyboard and disp prog		Refer to 21204.
31207	No vac. area for marks		Rset. Reselect program. If alarm recurs, consult MSFN.
21210	Second attempt is made to stall		Reselect program. Do not attempt use of device while CMC is using it. While performing certain IMU mode switching functions or while performing automatic attitude maneuvers CMC begins a function or maneuver and then "stalls" until appropriate job has been completed. If a second attempt is made to stall for the same reason (i.e., IMU mode switch or attitude maneuver), this alarm is generated.

NORMAL BACKUP

STA/T STEP	PROCEDURE	PANEL	REMARKS
31211	Illegal interrupt of extended verb		Reselect extended verb after optics marking is completed. If an internal request for marks (SXTMARK or R57) is made, CMC tests to see if mark system is already busy or if an extended verb is active. If either condition is discovered, alarm is generated.
01301	Arcsin or arccos input >1		Copy N08, notify MSFN, continue.
21302	SQRT called with neg argument		Refer to 21103.
01407	VG increasing		Refer to pages 4-534 and 4-603. Refer to G&N malfunction procedures, symptom 12. CMC has determined that the last measured value of ΔV was in such a direction as to cause VG to increase rather than decrease. As long as this condition exists, the value of time to go to cutoff is not recalculated (although R1 of N40 will continue to count down) and an automatic engine-off command will not be sent by CMC.
01426	IMU unsatisfactory		Realign or use SCS. Neither +Y stable member axis nor -Y stable member axis is within 30° of $\underline{V} \times \underline{R}$ where $\underline{V}$ and $\underline{R}$ are present vehicle velocity and position vectors respectively. The test for this condition is performed at beginning of P61 and P62.
01427	IMU reversed		Note FDAI operation is inverted. The -Y stable member axis is within 30° of $\underline{V} \times \underline{R}$ (cf. code 1426).
21501	Keyboard and disp alarm during internal use (NVSUB).		Refer to 21103.
21502	Illegal flashing disp		Refer to 21103.

STA/T STEP	PROCEDURE	PANEL	REMARKS
01520	V37 request not permitted at this time		Wait until COMP ACTY lt not on continuously, reselect V37 or if P62/P67, select P00 and then desired program. Alarm will be generated if a V37 request is made with IMU as follows: a. In its 90 sec turn on period b. Being caged c. Being zeroed. It will also be generated if V37 request is made for a program other than P00 after entry DAP has been started in P62, during P00 integration, and in P06.
21521	P01 or P07 illegally selected		Refer to 21204.
01600	Overflow in drift test		This is gnd test alarm only.
01601	Bad IMU torque abort		**Refer to 01600. Generated in P01, P02, or P07.**
01602	Bad opt during verif		Refer to 01600. This alarm cannot be operated by the CMC.
01703	Insufficient time for integration		Refer to pages 4-532, 4-548, 4-601, 4-614 and 4-621. P40, P41. Will occur between TIG -42.5 and TIG -35 seconds.
03777	ISS warning caused by ICDU fail		Refer to G&N malfunction procedures, symptom 6.
04777	ISS warning caused by ICDU and PIPA fail		Refer to G&N malfunction procedures, symptom 6.
07777	ISS warning caused by IMU fail		Refer to G&N malfunction procedures, symptom 6.
10777	ISS warning caused by IMU and PIPA fail		Refer to G&N malfunction procedures, symptom 6.
13777	ISS warning caused by IMU and ICDU fail		Refer to G&N malfunction procedures, symptom 6.

NORMAL BACKUP

STA/T STEP	PROCEDURE	PANEL	REMARKS
14777	ISS warning caused by IMU, ICDU, and PIPA fail		Refer to G&N malfunction procedures, symptom 6. The following list shows the general numbering logic for alarm codes excluding interfaces and exceptions: 00100-00200 Optics subsystem 00200-00300 IMU subsystem 00400-00600 Rendezvous 01100-01200 Computer hardware malfunctions 01200-01300 List overflows (all aborts) 01300-01400 Interpreter errors 01400-01500 Display alarms 01500-01600 Keyboard and display programs 01600-01700 System test alarms 01700-01800 DAP display alarms

STA/T STEP	PROCEDURE	PANEL	REMARKS

4.8.12 CMC PROGRAM - ROUTINE INDEX

4.8.12.1 Programs

Phase	Program No.	Program Title	Contains Crew Interface Routines
Pre-Launch and Service	00	CMC idling	None
	01	Prelaunch or service initialization	None
	02	Prelaunch or service gyro compassing	None
	03	Prelaunch or service opt verif of gyro compassing	None
	06	CMC pwr down	R00
	07	Sys test	
Boost	11	Earth orb insertion mon	None
	17	TPI search	R00
Coast	20	Rndz nav	R02,R61,R52, R00,R22,R21
	21	Grd track determination	R00
	22	Orb nav	R02,R53,R52, R00
	23	Cislunar midcourse nav	R00,R53,R52
	27	CMC update	None

Do not select the following program sequences:

a. P3X - P7X - P40/P41
   P3X - P17 - P40/P41
   P3X - P23 - P40/P41
   (P3X computations are overwritten)
   Redo P3X and then P40 or P41

b. P40/P41 - P27 - P52
   (P27 overwrites preferred attitude computations)
   Redo P40/P41 up to V50 N18, then reselect P52, reload REFSMMAT from grd

NORMAL BACKUP

STA/T STEP	PROCEDURE		PANEL	REMARKS
Phase	Program No.	Program Title	Contains Crew Interface Routines	
Pre-Thrusting	30	External ΔV	R00	
	31	General lambert mnvr	R00	
	32	Co-elliptic seq initiation (CSI)	R00	
	33	Constant Δalt (CDH)	R00	
	34	Trnfr phase initiation (TPI)	R00,R22,R21	
	35	Trnfr phase (midcourse)	R00,R22,R21	
	37	Ret to Earth	R00	
	38	Stable orb rndz (SOR)	R00	
	39	Stable orb midcourse (SOM)	R00	
Thrusting	40	SPS	R02,R60,R00	
	41	RCS	R02,R60,R00	
	47	Thrust mon	R02,R00	
Align-ment	51	IMU orientation determination	R53,R54,R00	
	52	IMU realign	R02,R50,R00 R52,R53, R54,R55	
	53	Back-up IMU orientation determination	R56,R54,R00	
	54	Back-up IMU realign	R02,R50,R00 R56,R54, R55	

STA/T STEP	PROCEDURE		PANEL	REMARKS
Phase	Program No.	Program Title	Contains Crew Interface Routines	
Entry	61	Entry prep	R02	
	62	CM/SM sep and pre-entry mnvr	R02	
	63	Entry initialization	None	
	64	Post 0.05 G	None	
	65	Entry upcontrol	None	
	66	Ballistic entry	None	
	67	Fnl phase	R00	
Abort	72	LM co-elliptic seq trgting (CSI)	R00	
	73	LM constant Δalt trgting (CDH)	R00	
	74	LM trnfr phase initiation (TPI) trgting	R22,R00,R21	
	75	LM trnfr phase (midcourse) trgting	R22,R00,R21	
	76	Trgt ΔV	R00	
	77	LM TPI search	R00	
	78	LM stable orb rndz (SOR) trgting	R00	
	79	LM stable orb midcourse (SOM) trgting	R00	

NORMAL BACKUP

STA/T STEP	PROCEDURE	PANEL	REMARKS
4.8.12.2 Routines			
Routine	Routine Title		
00	Fnl auto request terminate		
02	IMU stat check		
03	DAP data load		Manually selected by crew (V48E).
05	S bd ant		Manually selected by crew (V64E).
21	Rndz tracking sighting mark		Manually selected by crew (V57E).
22	Rndz tracking data processing		
23	Backup rndz tracking sighting mark		Manually selected by crew (V54E).
30	Orb param disp		May be called by crew (V82E).
31	Rndz param disp routine No. 1		Displays range, range rate, and the angle between CSM +X axis and local horizontal (theta). Selected by crew (V83E).
33	CMC/LGC clock sync		V06 N65.
34	Rndz param disp routine No. 2		Displays range, range rate, and the angle between optics star line of sight and local horizontal (phi). Selected by crew (V85E).
36	Rndz out of plane disp		Selected by V90E.
40	SPS thrust fail		
41	State vctr integration (mid to ave)		
50	Coarse align		

STA/T STEP	PROCEDURE	PANEL	REMARKS
Routine	Routine Title		
52	Auto opt positioning		Automatically selected by P20, P22, P23 or P52. It is self-perpetuating and is terminated by R53 for star or landmark sightings.
53	Sighting mark		
54	Sighting data disp		
55	Gyro torquing		
56	Alternate LOS sighting mark		Used to perform sighting marks for backup alignment programs P53 and P54.
57	Opt calib		
60	Att mnvr		
61	Tracking att		Orients CSM properly with respect to target vehicle during rendezvous tracking.
62	Crew defined mnvr		Selectedby (V49E) via P00 only.
63	Rndz fnl att		Selected by (V89E) via P00 only.
64	Orbrate/PTC (BBQ mode - R64)		Selected by (V79E).

NORMAL BACKUP

STA/T STEP	PROCEDURE	PANEL	REMARKS

4.8.13 CMC PROGRAM - FLAG LISTING

The flags which are applicable to colossus programs are summarized in this section for information purposes only. Paragraph 4.8.13.1 shows the correlation between flag word numbers and erasable memory addresses while paragraph 4.8.13.2 lists the relationship between flags and programs.

4.8.13.1 Flag Word - Memory Location Correlation

Flag Word	Memory Address
0	00074
1	00075
2	00076
3	00077
4	00100
5	00101
6	00102
7	00103
8	00104
9	00105
10	00106
11	00107

STA/T STEP	PROCEDURE	PANEL	REMARKS

4.8.13.2 Flag - Program Listing

No.	Title	Code	Flag Word	Bit	When Set	When Reset
FLAGS						
1	Rendezvous	RNDVZFLG	0	7	P20 initiated	P20 terminated
2	Update	UPDATFLG	1	7	State vector updating by marks allowed	State vector updating by marks not allowed
3	Track	TRACKFLG	1	5	Rendezvous tracking allowed	Rendezvous tracking not allowed
4	Preferred att	PFRATFLG	2	4	Preferred SC attitude computed	Preferred SC attitude not computed
5	Steer	STEERSW	2	11	Steering to be done	Steering omitted
6	IMU orientation known (REFSMMAT)	REFSMFLG	3	13	REFSMMAT good	REFSMMAT not good
7	IMU	IMUSE	0	8	IMU in use	IMU not in use
8	State vctr	VEHUPFLG	1	8	CSM state vector updated	LM state vector updated

NORMAL/BACKUP

STA/T STEP	PROCEDURE		PANEL		REMARKS	
No.	Title	Code	Flag Word	Bit	When Set	When Reset
9	Terminate	TERMIFLG	7	15	Terminate R21 and R22	Do not terminate
10	Trunnion drive	TRUNFLAG	0	4	Enables CMC control of optic trunnion	CMC control of optics trunnion not enabled
11	Trgt 1	TARG1FLG	1	10	Sighting LM	Not sighting LM
12	Trgt 2	TARG2FLG	1	9	Sighting landmark	Sighting star
13	W matrix (rndz nav)	RENDWFLG	5	1	W matrix for rendezvous navigation is valid	W matrix for rendezvous navigation is invalid
14	3 axis	3AXISFLG	5	6	Maneuver specified by 3 axes	Maneuver specified by 1 axis
15	External delta V	XDELVFLG	2	8	External delta V VG computations	Lambert VG computations
16	Active vehicle	AVFLAG	2	5	LM active	CSM active
17	Final computation	FINALFLG	2	6	Final pass through rendezvous program computations	Interim pass through rendezvous program computations

STA/T STEP	PROCEDURE		PANEL		REMARKS	
No.	Title	Code	Flag Word	Bit	When Set	When Reset
18	Sighting mark	R53FLAG	0	6	V51 initiated	V51 not initiated
19	Stick flag	STIKFLAG	1	14	RHC out of detent (auto maneuver not enabled)	RHC in detent (auto maneuver enabled)
20	Surface	SURFFLAG	8	8	LM on Lunar surface	LM not on Lunar surface
21	LM sphere	LMOONFLG	8	11	Permanent LM state in Lunar sphere	Permanent LM state in Earth sphere
22	CM sphere	CMOONFLG	8	12	Permanent CSM state in Lunar sphere	Permanent CSM state in Earth sphere
NON-FLAGS						
1	Mark	MARKSTAT	1330*	10	After sighting mark	After mark reject
2	ISS zero	IMODES30	1320*	9	IMU operate bit present (set to 0)	IMU operate bit not present (reset to 1)

*Memory address

NORMAL BACKUP

STA/T STEP	PROCEDURE	PANEL	REMARKS
	4.9 G&C REFERENCE MODES		
	This section provides information about basic G&C functions by defining them in terms of system operating prerequisites and switch positions which together represent reference modes. Their scope is limited to independent system functions. These reference modes are repeatable and are applicable to all G&C procedures and thus are referenced in all subsequent sections of G&C procedures. The modes, however, are NOT intended to be complete or self-contained procedures.		
	Wherever a step in one of these G&C reference modes references another mode, the title and paragraph number of the referenced mode is shown and the recommended options in the mode, if any, are specified. Only those switches which are required to be in unique positions are shown in the affected step after the mode is referenced.		
	During time-critical mission phases, reference to other sections of the AOH cannot be accommodated, and, therefore, all time-critical operations are self-contained. Modes similar to those shown in this section, however, are contained or repeated within the time-critical procedures.		
	4.9.1 ATTITUDE CONTROL		
	4.9.1.1 SCS Channel Selection		Provides methods for enabling RCS auto coils without undesirable jet firings.
	1 Set power switches		
CDR	LOGIC 2/3 PWR - on (up)	7	Supplies 28 vdc to SC CONT switch, THC CW switch and ATT 1 RATE 2 and RATE 2 positions of BMAG MODE switches.
	SIG CONDR/DR BIAS PWR (both) - AC1 or AC2		Powers RJEC -4 vdc bias power supplies. To provide increased reliability, switches should not be set on same bus.

NORMAL/BACKUP

STA/T	STEP	PROCEDURE	PANEL	REMARKS
	2	Enable auto coils		
		For CMC control		
CDR		SC CONT - CMC CMC MODE - FREE	1	BMAGs should be caged to prevent them from hitting their stops if a CMC maneuver >17° is planned. For post CM/SM separation, AUTO RCS A/C ROLL switches should be OFF, and DAP configured for B/D roll.
		MAN ATT (3) - MIN IMP or RATE CMD		ACCEL CMD inhibits CMC outputs to jets.
		AUTO RCS (16) - MNA or MNB or OFF (correspond to RCS DAP configuration)		Configure AUTO RCS roll enable to agree with RCS DAP load, to reduce SPS propellant slosh during ΔV thrusting in the event of a failed-on roll jet.
		For SCS control		
		a. SC CONT - SCS		
		or SC CONT - CMC THC - CW		
		b. BMAG MODE (3) - RATE 2		BMAG MODE or MAN ATT switching cages BMAGs and prevents attitude error signals from causing jet firings.
		or MAN ATT (3) - MIN IMP or ACCEL CMD		
		c. AUTO RCS (16) - MNA or MNB	8	For SCS control, switches should be set by quad and rotation axis, as desired. Only one roll quad should be enabled for SCS control to optimize RCS fuel consumption. One exception is 3-axis translation when all quads are required.
	4.9.1.2	SCS Minimum Impulse		
	1	Set power switches ELEC PWR - GDC/ECA or ECA	7	Either position is required for minimum impulse generator.

STA/T	STEP	PROCEDURE	PANEL	REMARKS
CDR		LOGIC 2/3 PWR - on (up)	7	Supplies 28 vdc to SC CONT switch, and THC CW switch.
		SIG CONDR/DR BIAS PWR (both) - AC1 or AC2 ROT CONTR PWR NORM (both) - AC/DC	1	Powers RJEC -4 vdc bias power supplies. To provide increased reliability, switches should not be set on same bus.
	2	Select minimum impulse control MAN ATT - MIN IMP SC CONT - SCS		Switches should be set by axis as desired.
	or	SC CONT - CMC THC - CW		
	3	Enable auto coils, para 4.9.1.1		
		4.9.1.3 SCS Acceleration Command		
	1	Set power switches LOGIC 2/3 PWR - on (up)	7	Supplies 28 vdc to SC CONT switch.
		SIG CONDR/DR BIAS PWR (both) - AC1 or AC2 ROT CONTR PWR NORM (both) - AC/DC	1	Powers RJEC -4 vdc bias power supplies. To provide increased reliability, switches should not be set on same bus.
	2	Select acceleration command control MAN ATT - ACCEL CMD		Switches should be set by axis as desired.
	3	Enable auto coils, para 4.9.1.1		Either CMC or SCS control is permissible.

NORMAL/BACKUP

STA/T	STEP	PROCEDURE	PANEL	REMARKS
		4.9.1.4 SCS Attitude Hold/Rate Command		
CDR	1	Set power switches LOGIC 2/3 PWR - on (up)	7	Supplies 28 vdc to SC CONT switch.
		ELEC PWR - GDC/ECA or ECA SIG CONDR/DR BIAS PWR 1 - AC1 or AC2		Powers RJEC -4 vdc bias power supplies, and provides SCS signal conditioner power for RHC proportional rate command TLM. To provide increased reliability, switches should not be set on same bus.
		BMAG PWR (both) - ON		If rate damping only is desired, BMAG 1 need not be turned ON but should be set to WARMUP.
		ROT CONTR PWR NORM (1, 2 or BOTH) - AC/DC	1	If manual override of attitude hold is desired.
	2	Enable auto coils, para 4.9.1.1		The BMAGs should be caged to prevent them from hitting their stops if a CMC maneuver >17° is planned.
	3	Establish attitude hold MAN ATT - RATE CMD SC CONT - SCS		Switches may be set by axis as desired. The LIM CYCLE switch should be configured as follows in order to conserve RCS propellant: OFF - Manual proportional rate command. OFF - Automatic rate damping. on (up) - Attitude hold.
	or	SC CONT - CMC THC - CW		
		BMAG MODE - ATT 1 RATE 2		

STA/T	STEP	PROCEDURE	PANEL	REMARKS
		4.9.1.5 CMC Acceleration CMD/Minimum Impulse		
	1	The following are required CMC - on, para 4.10.1.2 RCS DAP - load and activate, para 4.10.1.6 & 8		CMC, ISS, and RCS DAP enable autopilot control. Minimum impulse controller, located on panel 122 in LEB, will provide minimum impulse commands in this mode. RHC will provide normal acceleration commands.
		ISS - on (desired), para 4.10.1.2		For display of ISS total attitude and errors.
	2	Set power switches		
CDR		LOGIC 2/3 PWR - on (up)	7	Supplies 28 vdc to SC CONT switch.
		SIG CONDR/DR BIAS PWR (both) - AC1 or AC2		Powers RJEC -4 vdc bias power supplies. To provide increased reliability, switches should not be set on same bus.
		ROT CONTR PWR NORM (both) - AC/DC	1	
	3	Establish CMC Control SC CONT - CMC CMC MODE - FREE MAN ATT (3) - MIN IMP		ACCEL CMD position cannot be used because it inhibits CMC outputs to jets.
	or	MAN ATT (3) - RATE CMD BMAG MODE (3) - RATE 2		
	4	Enable Auto Coils, para 4.9.1.1		
		4.9.1.6 CMC Attitude Control - Auto/Hold		
	1	The following are required CMC - on, para 4.10.1.2 ISS - on, para 4.10.1.2 RCS DAP - load and activate, para 4.10.1.6 & 8		CMC, ISS, and RCS DAP enable autopilot control.

NORMAL/BACKUP

STA/T	STEP	PROCEDURE	PANEL	REMARKS
CDR	2	Set power switches LOGIC 2/3 PWR - on (up)	7	Supplies 28 vdc to SC CONT switch.
		SIG CONDR/DR BIAS PWR (both) - AC1 or AC2		Powers RJEC -4 vdc bias power supplies. To provide increased reliability, switches should not be set on same bus.
	3	Enable auto coils, para 4.9.1.1		
	4	Establish attitude control MAN ATT (3) - RATE CMD or MIN IMP	1	
		SC CONT - CMC		
		CMC MODE - HOLD or AUTO		AUTO position must be selected when CMC automatic maneuver desired.
		4.9.1.7 SIVB Attitude Control		Describes condition required to enable RHC rate control of SIVB.
	1	The following are required CMC - on, para 4.10.1.2		
		LOGIC 2/3 PWR - on (up)	7	Supplies power for caging BMAGs via BMAG MODE switches.
		ISS - on (desired), para 4.10.1.2		For display of ISS total attitude and errors.
	2	Enable att control		
CMP		Saturn DAP activated, para 4.10.1.8	2,140	Load 3 in configuration option of DAP activation procedure. BMAGs should be caged during SIVB maneuvers to prevent them from hitting their stops. AUTO RCS switches should be off to prevent SM jet firing.

STA/T STEP	PROCEDURE	PANEL	REMARKS
CMP	LV GUID - CMC		
	4.9.2 DYNAMIC DISPLAY MONITOR		
	4.9.2.1 Rate Display		Provides methods for displaying rate information on rate needles of FDAI 1 or FDAI 2, or both, as desired.
	1 Set power switches		
CDR	FDAI/GPI PWR - 1, 2 or BOTH	7	Provides power for display electronics. Position chosen depends on which FDAI(s) desired.
	LOGIC 2/3 PWR - on (up)		Provides 28 vdc source (Logic bus 2) for OFF position of .05 G switch.
	BMAG 2 PWR - ON (required if BMAG 2 desired) BMAG 1 PWR - ON (required if BMAG 1 desired)		Either BMAG 1 or BMAG 2 may be selected to provide information. BMAG 2 is normally used and BMAG 1 provides backup capability.
	2 Select desired rate source		Switches should be set by axis as desired.
	BMAG MODE - RATE 2 or ATT 1 RATE 2	1	Selects BMAG 2.
or	BMAG MODE - RATE 1		Selects BMAG 1.
	3 Select display configuration		
	FDAI SEL - 1		Displays rate from BMAG 1 or 2 on FDAI 1 only.
or	FDAI SEL - 2		Displays rate from BMAG 1 or 2 on FDAI 2 only.
or	FDAI SEL - 1/2		Displays rate from BMAG 1 or 2 on both FDAIs.

NORMAL/BACKUP

STA/T	STEP	PROCEDURE	PANEL	REMARKS
		4.9.2.2 Attitude Error Display - BMAG Source		Provides methods for displaying BMAG 1 attitude error information on attitude error needles of FDAI 1 or FDAI 2. Needles display attitude excursion from point at which BMAGs are uncaged up to a maximum of 17°.
CDR	1	Set power switches FDAI/GPI PWR - 1, 2 or BOTH	7	Provides power for display electronics. Position chosen depends on which FDAI(s) desired.
		LOGIC 2/3 PWR - on (up)		Supplies power for caging BMAGs via BMAG MODE switches.
		BMAG 1 PWR - ON		Powers BMAGs in gyro assembly 1, the only BMAGs capable of providing attitude error information.
	2	Provide attitude error information MAN ATT - RATE CMD	1	Switches should be set by axis as desired. RATE CMD position is required to uncage BMAG 1. However, RHC breakout and MAN ATT switches are overridden by IGN 2 logic signal during thrusting to uncage BMAGs.
		BMAG MODE - ATT 1 RATE 2		
		.05 G sw - OFF		On (up) position is not desirable (cage BMAGs).
		RHC - neutral		If RHC breakout switches are activated, BMAGs are caged (by axis) and attitude hold is lost.
	3	Select display configuration		
		a. FDAI SEL - 1/2		Displays attitude error from BMAG 1 on FDAI 2.
or		b. FDAI SEL - 1 or 2 FDAI SOURCE - GDC		Displays attitude error from BMAG 1 on FDAI 1 or 2. This position required when only one FDAI is selected.

STA/T	STEP	PROCEDURE	PANEL	REMARKS
		4.9.2.3 Attitude Error Display - CMC Source		Provides a G&N computed attitude error in the control axes. Information is meaningful only when computer program defines desired attitude.
	1	The following are required CMC - on, para 4.10.1.2 ISS - on, para 4.10.1.2		Required to compute error and mode CDUs. Required for attitude information.
CDR	2	Set power switches FDAI/GPI PWR - 1, 2 or BOTH	7	Provides power for display electronics. Position chosen depends on which FDAI(s) desired.
		LOGIC 2/3 PWR - on (up)		Provides power for FDAI switches.
	3	Select display scaling FDAI SCALE 5/5 or 5/1	1	Positions provide for compatible scaling between CMC and display electronics in roll axis during orbital flight. If 50/15, 50/10 position is chosen, roll scaling is 12.5° full scale.
	4	Select display configuration		
		a. FDAI SEL - 1/2		Displays attitude error from CDUs on FDAI 1.
or		b. FDAI SEL - 1 or 2 FDAI SOURCE - CMC		Displays attitude error from CDUs on FDAI 1 or 2. This position required when only one FDAI is selected.
		4.9.2.4 Attitude Error Display - Attitude Set Source		Provides methods for displaying the attitude difference between the attitude set indicators and the GDC (body error) or IMU gimbal angles (Euler error). A polarity reversal occurs when ATT SET - IMU option is selected and roll gimbal angle > ±90°. The pitch and yaw attitude error needles become "fly from" indicators rather than "fly to" indicators in this instance.

NORMAL/BACKUP

STA/T	STEP	PROCEDURE	PANEL	REMARKS
CDR	1	Set power switches and display logic		
		FDAI/GPI PWR - 1, 2 or BOTH	7	Provides power for the display electronics. The position depends on which FDAI is desired.
		LOGIC 2/3 PWR - on (up)		
		FDAI SEL - 1 or 2	1	Display not available at 1/2 position.
		FDAI SOURCE - ATT SET		Required to enable the attitude set input to the FDAI.
		.05 G sw - OFF		The on (up) position is not desirable (cages BMAGs).
	2	Select attitude reference		
		a. SCS		
		ELEC PWR - GDC/ECA	7	Provides power to GDC electronics.
		BMAG 2 PWR - ON		
		ATT SET - GDC	1	
		BMAG MODE - RATE 2 or ATT 1 RATE 2		Switches should be set by axis as desired.
		b. ISS		
		ISS - on, para 4.10.1.2		Constraint: If CMC is on, an overload in IMU resolver circuitry may cause an ICDU oscillation and trigger ISS warning light. (Reference ICD MH01-01325-216). FDAI must be used only as a null meter in this mode of operation. If not, large errors will result because of impedance mismatch. ATT SET switch should be left at GDC when not in use.
		ATT SET - IMU		
		4.9.2.5 Total Attitude		Provides methods for displaying Euler angles on FDAI ball from GDC or IMU.
	1	Set power switches and enable FDAI		
		FDAI/GPI PWR - 1, 2 or BOTH	7	Provides power for display electronics. Position depends on which FDAI(s) desired.

STA/T	STEP	PROCEDURE	PANEL	REMARKS
CDR		LOGIC 2/3 PWR - on (up)	7	Supplies power for FDAI, BMAG MODE switches and ATT SET switch (IMU position).
		CMC ATT - IMU	1	GDC position will cause loss of total attitude on FDAI(s).
	2	Select display and display source		
		a. ISS display ISS - on, para 4.10.1.2 FDAI 1 display		Enables IMU resolver outputs to FDAI 1 ball drive. There are three possible switch combinations.
		FDAI SEL - 1/2		This position also enables GDC total attitude to FDAI No. 2.
		or FDAI SEL - 1 FDAI SOURCE - CMC		
		or FDAI SOURCE - ATT SET ATT SET - IMU		Constraint: If CMC is on an overload in IMU resolver circuitry may cause an ICDU oscillation and trigger ISS warning light. (Reference ICD MH01-01325-216). FDAI must be used only as a null meter in this mode of operation. If not, large errors will result because of impedance mismatch. ATT SET switch should be left at GDC when not in use.
		FDAI 2 display FDAI SEL - 2 FDAI SOURCE - CMC		Enables IMU resolver outputs to FDAI 2 ball drive. There are two possible switch combinations.

NORMAL/BACKUP

STA/T STEP	PROCEDURE	PANEL	REMARKS
CDR	or FDAI SOURCE - ATT SET ATT SET - IMU	1	Constraint: If CMC is on, an overload in IMU resolver circuitry may cause an ICDU oscillation and trigger ISS warning light (Reference ICD MH01-01325-216). FDAI must be used as a null meter in this mode of operation. If not, large errors will result because of impedance mismatch. ATT SET switch should be left at GDC when not in use.
	b. GDC display		
	ELEC PWR - GDC/ECA	7	Provides power to GDC electronics.
	BMAG 2 PWR - ON		
	BMAG MODE - RATE 2 or ATT 1 RATE 2	1	Switches should be set by axis as desired.
	xxxxxxxxxxxxxxxxxxxxxxxxxxxxxxxxxxxx x x		
	BMAG 1 PWR - ON (if BMAG 2 fails)	7	
	BMAG MODE - RATE 1	1	
	x x xxxxxxxxxxxxxxxxxxxxxxxxxxxxxxxxxxxx		
	FDAI 2 display FDAI SEL - 1/2		Enables GDC resolver outputs to FDAI 2 ball drive. There are three possible switch combinations.
	or FDAI SEL - 2 FDAI SOURCE - GDC		
	or FDAI SOURCE - ATT SET ATT SET - GDC		
	FDAI 1 display FDAI SEL - 1 FDAI SOURCE - GDC		Enables GDC resolver outputs to FDAI 1 ball drive. There are two possible switch combinations.
	or FDAI SOURCE - ATT SET ATT SET - GDC		

STA/T	STEP	PROCEDURE	PANEL	REMARKS
		4.9.2.6 ORDEAL - Local Horizontal Attitude		Provides methods for displaying local horizontal reference established by ORDEAL on FDAI 1 and/or FDAI 2 balls. Only pitch axis is affected.
	1	Set power switches		
CDR		FDAI/GPI PWR - 1, 2 or BOTH	7	Provides power for display electronics. Position chosen depends on which FDAI(s) is desired.
		EARTH/LUNAR - EARTH or LUNAR	13	
		LTG - BRT or DIM		
	2	Select display configuration		Reference system may be GDC or IMU, para 4.9.2.5
		FDAI 1 display		
		FDAI SEL - 1 or 1/2	1	
		FDAI 1 sw - ORB RATE	13	
		FDAI 2 display		
		FDAI SEL - 2 or 1/2	1	
		FDAI 2 sw - ORB RATE	13	
		FDAI 1 & 2 display		
		FDAI SEL - 1/2	1	
		FDAI sw (both) - ORB RATE	13	
		4.9.3 GDC ALIGN		Permits GDC to be aligned to ATT SET thumbwheels.
		ELEC PWR - GDC/ECA	7	Supplies power to GDC electronics.
		ATT SET - GDC	1	Enables att set inputs to GDC.
		GDC ALIGN pb - push		Enables att set inputs to GDC and disables BMAG inputs.

NORMAL BACKUP

STA/T	STEP	PROCEDURE	PANEL	REMARKS
	4.9.4	SPS THRUSTING		
	4.9.4.1	TVC Initialization		Defines safe switch configuration required before initiation of thrusting procedures.
CDR		LOGIC 2/3 PWR - on (up)	7	Provides power to SCS TVC switches.
		SIG CONDR/DR BIAS PWR (both) - AC1 or AC2		Required for RCS jet on-off and MTVC TLM.
		SPS THRUST - NORM	1	
		SCS TVC (2) - RATE CMD (if burn is G&N or MTVC)		
	or	SCS TVC (2) - AUTO (SCS burn)		
		TVC GMBL DR (2) - AUTO		The 1 or 2 positions may be used as a backup if required.
		ΔV CG - LM/CSM or CSM		Required only for SCS/SPS auto thrusting. Position depends on whether LM is attached or not.
		FDAI/GPI PWR - 1, 2 or BOTH	7	Position chosen depends on whether redundant GPI displays are desired. To enable redundant GPI indicators, FDAI/GPI PWR switch must be set to BOTH.
		LV IND/GPI sw - GPI	1	
	4.9.4.2	SPS Gimbal Control		
	1	CMC Control		
		ISS - on (required), para 4.10.1.2		Provides attitude information and power to ECDUs.
		CMC - on (required), para 4.10.1.2		
		Servo loop activated (step 4)		
		Gimbal motors on		Operating time is limited depending on operating conditions. MN BUS TIE (2) must be on before gimbal motors are started.
		SC CONT - CMC		

STA/T	STEP	PROCEDURE	PANEL	REMARKS
CDR		LOGIC 2/3 PWR - on (up) THC - neutral	7	Supplies power to SC CONT switch.
	2	SCS Control - AUTO Servo loop activated (step 4) Gimbal motors on	1	Operating time is limited depending on operating conditions. MN BUS TIE (2) must be on before gimbal motors are started.
		LOGIC 2/3 PWR - on (up)	7	Supplies power to SC CONT, BMAG MODE, SCS TVC, .05 G sw (OFF) position and THC CW switches.
		ELEC PWR - ECA or GDC/ECA BMAG PWR (both) - ON		Supplies power to the control electronics. Rate and attitude sensors required.
		BMAG MODE - ATT 1 RATE 2	1	BMAGs in gyro assembly 1 will uncage if MAN ATT switches are at RATE CMD. If not, uncaging will occur when IGN 2 logic signal is present.
		.05 G sw - OFF		On (up) position is not desirable (cages BMAGs).
		SCS TVC (2) - AUTO IGN 2 logic signal present		Provided by thrust control logic at engine on until 1 second after engine off.
		SC CONT - SCS THC - neutral		
	or	SC CONT - CMC THC - CW		

STA/T	STEP	PROCEDURE	PANEL	REMARKS
CDR	3	MTVC control - RATE CMD/ACCEL CMD	1	Stick integrator is enabled when IGN 2 logic signal is present. The IGN 2 logic signal present at SPS on until 1 sec after SPS - off, is provided by thrust control electronics.
		Servo loop activated (step 4) Gimbal motors on		Operating time is limited depending on operating conditions. MN BUS TIE (2) must be on before gimbal motors are started.
		LOGIC 2/3 PWR - on (up)	7	Provides power for SC CONT, BMAG MODE, SCS TVC and THC - CW switches.
		SIG CONDR/DR BIAS PWR (both) - AC1 or AC2		Required for RCS jet on-off and MTVC TLM.
		ELEC PWR - ECA or GDC/ECA		Supplies power to RHCs and control electronics.
		BMAG 2 PWR - ON (for RATE CMD)		Rate information required for RATE CMD MTVC.
		BMAG MODE (3) - ATT 1 RATE 2 or RATE 2	1	
		ROT CONTR PWR NORM (both) - AC/DC		
		Rate Cmd		
		a. SCS TVC (2) - AUTO SC CONT - SCS THC - CW		
or		b. SCS TVC (2) - RATE CMD SC CONT - SCS		
		or SC CONT - CMC THC - CW		

STA/T STEP	PROCEDURE	PANEL	REMARKS
	Accel Cmd		
CDR	a. SCS TVC (2) - ACCEL CMD SC CONT - SCS	1	
	or SC CONT - CMC THC - CW		
4	Servo Loop Activation		
	a. Servo loop No. 1 TVC SERVO PWR 1 - AC1/MNA	7	Provides power to clutches and servo drive electronics. The alternate position of this switch (AC2/MNB) should be used only in the event of an AC1 bus failure to provide additional redundaucy. The AC1/MNA position should be used in all other cases to be compatible with d-c power source for gimbal motors (DC MNA bus power).
	TVC GMBL DR (2) - 1	1	
	or TVC GMBL DR (2) - AUTO THC - neutral GMBL MOT 1 - operating		No. 1 gimbal motor must be on with no overcurrent failure sensed.
	or TVC SERVO PWR 2 - OFF	7	
	b. Servo loop No. 2 TVC SERVO PWR 2 - AC2/MNB		The alternate position of this switch (AC1/MNA) should be used only in the event of an AC2 bus failure to provide additional redundancy. The AC2/MNB position should be used in all other cases to be compatible with the d-c power source for gimbal motors (DC MNB bus power).
	TVC GMBL DR (2) - 2	1	
	or TVC GMBL DR (2) - AUTO LOGIC 2/3 PWR - on (up) THC - CW	7	Provides power to THC - CW switch.

NORMAL/BACKUP

STA/T STEP	PROCEDURE	PANEL	REMARKS
CDR	or TVC GMBL DR (2) - AUTO GMBL MOT 1 - not operating	1	If No. 1 gimbal motor is off or an overcurrent is sensed, control is transferred to No. 2 servo loop.
	4.9.4.3 Thrust On-Off Control		
	1 CMC Control		
	ISS - on (required), para 4.10.1.2		
	CMC - on (required), para 4.10.1.2		
	SPS Gimbal Control (desired), para 4.9.4.2		
	SC CONT - CMC		To satisfy CMC control, THC must not be CW.
	LOGIC 2/3 PWR - on (up)	7	Supplies 28 vdc to SC CONT switch.
	SPS THRUST - NORM	1	DIR ON will override CMC thrust-on control.
	ΔV THRUST A(B) - NORM		
	Thrust on CMC engine on command (P40)		
	Thrust off CMC engine off command (P40)		
	or ΔV THRUST A and/or B - OFF		
	2 SCS Control		
	SPS Gimbal Control (desired), para 4.9.4.2		
	SC CONT - SCS		
	or SC CONT - CMC THC - CW		This option may establish SCS MTVC mode depending on position of SCS TVC switches.
	LOGIC 2/3 PWR - on (up)	7	Supplies 28 vdc to SC CONT switch.
	SPS THRUST - NORM	1	DIR ON will override SPS thrust control.
	ΔV THRUST A(B) - NORM		

STA/T	STEP	PROCEDURE	PANEL	REMARKS
CDR		Thrust on ΔV ind - not zero THC - +X	1	Required only if EMS FUNC is in ΔV or ΔV TEST.
		or DIR ULL pb - push		
		THRUST ON pb - push		
		Thrust off EMS FUNC - ΔV ΔV ind - zero		
		or ΔV THRUST A and/or B - OFF		
	3	Direct Control SPS Gimbal Control (desired), para 4.9.4.2		
		Thrust on ΔV THRUST A and/or B - NORM SPS THRUST - DIR ON		
		Thrust off ΔV THRUST A and/or B - OFF		
	4.9.5	OPTICS CONTROL		
	4.9.5.1	Auto Optics Positioning		This procedure permits CMC control of optics.
	1	The following are required ISS - on, and orientation known, para 4.10.1.2 & 4.11		

STA/T	STEP	PROCEDURE	PANEL	REMARKS
		CMC - on, para 4.10.1.2 Optics - on, para 4.10.1.4		
CMP	2	Establish CMC control OPT ZERO - OFF OPT TELTRUN - SLAVE TO SXT OPT MODE - CMC	122	Required for SCT trunnion drive.
		4.9.5.2 Manual Optics Control		Permits manual control of optics using optics hand control (OHC).
	1	The following are required Optics - on, para 4.10.1.4		
	2	Establish manual control and sighting options OPT ZERO - OFF OPT COUPLING - DIRECT or RSLV OPT MODE - MAN		Permits desired image motion in FOV. In DIRECT mode, OHC left, right motion drives optics shaft, while up, down motion drives trunnion. RSLV mode provides motion resolved into SC body coordinates. Motion appears to be target motion corresponding to direction of OHC movement.
		OPT TELTRUN - SLAVE TO SXT		Required for proper landmark tracking.
		or 0°		Provides zeroing of SCT trunnion axis.
		or 25°		Provides greater scanning capability for star sightings.
		OPT SPEED - HI, MED or LO		Set as desired.

STA/T	STEP	PROCEDURE	PANEL	REMARKS
		4.9.5.3 Manual Optics Drive		Permits manual optics operation (no power) using optics tool.
	1	The following are required		
LMP		G/N PWR - AC1 or AC2	5	Supplies power for condition lamps and reticle.
CMP		OPT PWR - OFF	100	
	2	Obtain optics tool from tool kit		
	3	Perform manual optics drive		
		RETCL BRT tw - as req	122	
		SHAFT - as desired	121	
		TRUN - as desired		
		4.9.6 ENTRY MONITOR SYSTEM (EMS)		
		4.9.6.1 ΔV Test & Null Bias Check		
	1	Initial EMS preparation		
CDR		Verify EMS FUNC - OFF	1	
		cb EMS (2) - close	8	
		EMS MODE - STBY	1	
	2	EMS FUNC - ΔV SET		Enables slewing of ΔV ind.
		Adjust alphanumeric brightness (option)		
		EMS MODE - NORM		Buildup of ΔV indicator errors, caused by accelerometer bias, minimized if set to NORM <30 seconds prior to thrusting.
		Set ΔV ind to +1586.8 fps		
	3	EMS FUNC - ΔV TEST		ΔV TEST checks ΔV circuitry.
		SPS thrust lt - on		
		ΔV ind decreases (10 sec)		

NORMAL BACKUP

STA/T	STEP	PROCEDURE	PANEL	REMARKS
CDR		SPS thrust lt - out ≈-0.1 fps on ΔV ind ΔV ind stops at -20.8±20.7 fps	1	
	4	EMS MODE - STBY		
	5	EMS FUNC - ΔV SET Slew ΔV ind to -100.0 fps		The ΔV ind is zeroed to start accelerometer null bias check.
	6	EMS FUNC - ΔV (wait 5 sec)		
T-0	7	EMS MODE - NORM		
T-100 sec	8	EMS MODE - STBY Record ΔV ind		
		If ΔV drift ≤1 fps, do not bias counter		Acceleration ≤0.01 fps2.
		If ΔV drift >1 fps but <10 fps bias if desired		Acceleration ≥0.01 fps2 but <0.1 fps2. Counter bias not required for SPS ΔV.
		If ΔV drift >10 fps, EMS is no-go for all functions		Acceleration >0.1 fps2.
		CAUTION Do not turn EMS FUNC - OFF prior to ΔV, or null bias will be invalid.		

STA/T	STEP	PROCEDURE	PANEL	REMARKS
		4.9.6.2 ΔV Setup		Specifies required steps necessary to initialize EMS for monitoring ΔVs and to generate the SPS engine cutoff signal for SCS controlled SPS ΔVs.
		ΔV TEST & NULL BIAS CHECK (desired), para 4.9.6.1		
CDR		cb EMS (2) - close	8	
	1	EMS MODE - STBY EMS FUNC - ΔV SET	1	
	2	Set ΔV ind - req ΔV		
	3	EMS FUNC - ΔV		10 to 30 sec prior to ullage initiation, EMS MODE should be placed to NORM. This will minimize buildup of ΔV ind error because of accelerometer bias.
		4.9.6.3 RSI Test and Alignment		Permits testing RSI and positioning to desired orientation for entry.
		ELEC PWR - GDC/ECA	7	
		ATT SET - GDC	1	
	1	EMS ROLL - on (up) GDC ALIGN pb - push, hold ATT SET YAW tw - Adjust through 45° angle, observe RSI tracks ≈ 45°, then position RSI GDC ALIGN pb - rel EMS ROLL - OFF		Avoid FDAI gimbal lock region.
	2	ATT SET YAW tw - reset GDC ALIGN pb - push (32 sec max)		This step is required only if GDC had been aligned and realignment is required.

STA/T	STEP	PROCEDURE	PANEL	REMARKS
		4.9.6.4 Entry Test		The lift vector up lt (G >.2) and lift vector dn lt (G <.2) are relevant to entry from a lunar mission.
CDR	1	Initial EMS preparation Verify EMS FUNC - OFF cb EMS (2) - close EMS MODE - STBY	 8 1	
	2	EMS FUNC - EMS TEST 1 Adjust alphanumeric brightness (option) Wait 5 seconds		Test 1 checks lower trip point of 0.05 G comparator. The ΔV/EMS SET switch is used both for slewing G/V scroll and for setting RNG ind.
	3	EMS MODE - NORM (wait 10 sec minimum) All EMS lts - out RNG ind - 0.0 Slew G/V scroll until hairline is superimposed on notch in next self-test pattern.		EMS considered stable after 10 seconds. No light should come on before or after 10 seconds. EMS scroll reverse slew capability is limited to one inch.
	4	EMS FUNC - EMS TEST 2 Wait 10 seconds .05 G lt - on (all others out)		Test 2 checks upper trip point of 0.05 G comparator. No other light shall come on before or after 10 seconds.
	5	EMS FUNC - EMS TEST 3 .05 G lt - on		Test 3 checks corridor verification circuitry associated with lift vector dn lt (G <.2).

STA/T	STEP	PROCEDURE	PANEL	REMARKS
CDR		Lift vector dn lt - on (10 sec after .05 G lt)	1	No other light should come on before or after 10 seconds.
		Set RNG ind to 58.0±0.0		For negative numbers, RNG ind will display a minus sign in most significant digit. No sign will appear for positive numbers.
	6	EMS FUNC - EMS TEST 4 .05 G lt - on (all others out) G/V trace (during 10-sec period) within test pattern After 10 sec, G/V trace stops at lower right corner of test pattern at ≈9 G RNG ind (during 10-sec period) counts toward zero. After 10 sec, stops at ≈0.0±0.2		Test 4 checks range-to-go integrator circuits, range-to-go indicator, G-servo circuit, and G/V plotter.
	7	EMS FUNC - EMS TEST 5 .05 G lt - on Lift vector up lt - on (10 sec after .05 G lt) RNG ind - 0.0 G/V stylus traces vertical line ≈9 G to 0.22±0.1 and stops (trace within test pattern)		Test 5 checks corridor verification circuitry associated with lift vector up lt (G >.2). Enables slewing of scroll to start of entry pattern. After scroll is set to <37K fps, it is not permissible to return EMS FUNC to EMS TEST 5 position (range integrator and scroll sync would be lost).
		Align scroll to entry pattern (hairline on 37K fps line)		

NORMAL/BACKUP

STA/T	STEP	PROCEDURE	PANEL	REMARKS
CDR	8	EMS MODE - STBY EMS FUNC - RNG SET G/V traces vertical line at ≈0.22 G to 0±0.1 and stops	1	
		4.9.6.5 Entry Setup		Provides for initialization of EMS range-to-go display and scroll to inertial entry velocity prior to entry.
		EMS DEORBIT & ENTRY TEST (required), para 4.16.1.2		Test 5 of EMS Deorbit and Entry test and/or EMS entry test initializes system.
		or EMS Entry Test (required), para 4.16.2.2		If Lunar return.
	1	EMS MODE - STBY EMS FUNC - RNG SET		
	2	Set RNG ind - desired range to go		
	3	EMS FUNC - Vo SET Slew scroll - until display index (arrow) is aligned to predicted entry velocity		Scroll can be slewed only one inch in reverse. In Vo SET position, both initial velocity in range integrator and scroll velocity are changed simultaneously.
	4	EMS FUNC - ENTRY		EMS MODE switch will be placed to NORM after CM/SM SEP and vehicle stabilization at entry attitude.

STA/T STEP	PROCEDURE	PANEL	REMARKS

4.10 G&C GENERAL PROCEDURES

The procedures in this section involve both the G&N and SCS and are used most frequently during the orbital phase. Because they are fundamental to G&C operation, they are included or referenced in various forms in the more complex G&C procedures contained in sections 4.5, 4.6 and 4.11 through 4.18.

Applicable G&C Reference Modes, para 4.9, have been referenced throughout these procedures.

NORMAL/BACKUP

STA/T	STEP	PROCEDURE	PANEL	REMARKS
		4.10.1 G&N GENERAL		
		4.10.1.1 CMC Idling Program (P00)		Indicates that CMC is in operate condition but not performing control or computation operations requiring coordination with other crew tasks. Maintains CMC in readiness for entry into most programs. CSM and LM state vectors and W-matrices (orbital and rendezvous) are updated. (Refer to para 5.6.12 of R-577, section 5.)
CMP		Key V37E 00E DSKY - P00	2,140	
		4.10.1.2 Startup Procedure		Transfers ISS/CMC from standby to operate condition. Startup procedure will be first procedure selected after returning from standby, since time 2/time 1 is invalid until this is done.
		CMC Startup		
		PRO - (push until STBY lt out) Poss CMC warning lt (20 sec max) Poss RESTART lt - on Poss PROG alarm RSET DSKY - P06		When PRO released, CMC may revert to STBY mode. Repeat PRO until STBY lt out. These alarms should be ignored if they can be reset.
		FL V37 Key 00E		

STA/T	STEP	PROCEDURE	PANEL	REMARKS
		If state vector update		
CMP		Key V96E	2,140	V96E suspends state vector integration.
		Perform CSM - CMC Update (P27), para 4.10.1.5		
		Key V37E 00E		Reenables P00 integration suspended by V96E.
		Key V37E XXE		
		ISS Startup		
		If CMC on		
		IMU PWR - on (up)	100	
		NO ATT lt - on (90 sec)	2,140	
		NO ATT lt - out (wait 15 sec)		
		Key V37E XXE		Select IMU alignment program desired.
		If CMC not on		
		IMU PWR - on (up)	100	IMU drives to 0, 0, 0.
		Wait 90 sec		
CDR		IMU CAGE - on (up) ≈ 5 sec then off (down)	1	Guarded. Releases IMU.
	4.10.1.3	CMC/IMU Power Down Procedures		
		CMC Power Down (P06)		Transfers CMC from operate to standby. V69E may be used to recover from an inadvertent entrance into P06. Otherwise, when P06 selected, CMC must be powered down to standby.
CMP	1	Key V37E 06E	2,140	
		DSKY - P06		

NORMAL BACKUP

STA/T	STEP	PROCEDURE	PANEL	REMARKS
CMP	2	FL V50 N25 00062 (CMC pwr down) PRO (push till STBY lt - on) CMC blanks DSKY displays	2,140	
		IMU Power Down		Transfers IMU from operate to standby.
CDR	1	CMC MODE - FREE	1	
	2	IMU PWR - OFF	100	Loss of IRIG wheel power will send IMU FAIL discrete to CMC.
	3	If CMC operating Key V37E XXE	2,140	Select program not requiring IMU.
		CAUTION Only in case of emergency shall IMU be powered down beyond standby:		If standby power is removed for more than 20 minutes, ISS calibration is no longer valid.
LMP		cb IMU HTR (2) - open	5	
	4.10.1.4	Optics Power Control		
	1	Optics power up G/N PWR - ACl or AC2		Provides power to reticle and condition lts in LEB.
CMP		OPT PWR - on (up)	100	

STA/T	STEP	PROCEDURE	PANEL	REMARKS
CMP		OPT ZERO - OFF	122	OPT ZERO switch should be left at ZERO until optics use is required. It is not the position of this switch, but the change to ZERO position that triggers the zeroing routine.
		OPT ZERO - ZERO (≈15 sec to zero)		
		COND LAMPS - ON		
		RETCL BRT tw - adjust		
	2	Optics power down		
		OPT ZERO - ZERO		
		OPT PWR - OFF	100	
LMP		G/N PWR - OFF	5	Removes power from reticle and condition lts in LEB.
	4.10.1.5	CSM - CMC Update (P27)		P27 may be entered only from P00, P02. All uplinked or keyed in ΔVs and target vectors must be in the same sphere of influence as the CMC determined state at TIG and TIG -30.
		CMC - on (required), para 4.10.1.2		
CMP		Key V37E 00E	2,140	
		DSKY - P00		
		Auto Update		
	1	UP TLM CM - ACCEPT	2	
		UP TLM - ACCEPT	122	
		UPLINK ACTY lt - on		
	2	Update complete		
		UPLINK ACTY lt - out	2,122	PROG window on DSKY displays 00 or 02.
		UP TLM CM - BLOCK	2	
	or	UP TLM - BLOCK	122	

NORMAL/BACKUP

STA/T	STEP	PROCEDURE	PANEL	REMARKS
		Voice Transmission Update		
CMP	1	Liftoff time - V70E	2,140	
	or	Load data block - V71E		
	or	Load singular data - V72E		
	or	Octal time increment - V73E		
		Poss OPR ERR		If another extended verb active.
	2	DSKY - P27		P27 may be terminated by responding to flashing display with V34E. Data will not be incorporated for use by CMC.
	3	FL V21 N01 R1 Blank R2 Unchanged R3 AAAAA		
		Key in update data, XXXXXE (R1) CMC increments R3 by 1		
		Repeat step 3 until all data loaded		
	4	FL V21 N02 R1 Blank R2 Unchanged R3 00330		
		Accept update V33E P00 or P02 - selected automatically If V96 previously keyed, Key V37E 00E		PRO not accepted if V21 through V23 in verb windows. Data is transferred from buffer storage to appropriate cells. Reinstates periodic P00 integration.

STA/T STEP	PROCEDURE	PANEL	REMARKS
CMP	Reject update Load Octal Identifier (XXE) of word to be corrected Return to step 3	2,140	
	Time Update (Decimal)		
1	Key V55E		
	Poss OPR ERR		If another extended verb active.
2	FL V21 N24 (V25) Δ time (CMC clock)	00XXX. HRS 000XX. MIN 0XX.XX SEC	Delta time change must all be provided in decimal.
	Accept Load ΔT		Updates clocktime.
	Reject V33E		PRO is not accepted if V21 through V23 in verb windows. V33E or V34E does not update clocktime.
	or V34E		
3	Check Updated CMC Time Key V06 N65E Key V37E 00E		DSKY displays R1, R2, R3 for crew verification. CMC returns to P00.
	Erasable Memory Update		
1	Key V37E 00E		

NORMAL BACKUP

STA/T	STEP	PROCEDURE		PANEL	REMARKS
CMP	2	For Sequential Address			
		V21 N01E		2,140	
		Load first address	XXXXE		
		Load first data word	XXXXXE		
		N15E Verify CMC increments address by one (R1)			
		Load second data word	XXXXXE,E		
		Load third data word	XXXXXE,E		
		Continue until last address in sequence filled			
	3	For Non-sequential Address			
		V21 N01E			
		Load first address	XXXXE		
		Load first data word	XXXXXE,E		
		Load second address	XXXXE		
		Load second data word	XXXXXE,E		
	4	To Verify Data Loaded in Seq Address			
		V01 N01E			
		Load first address	XXXXE		
		Check first data word in R1			
		N15E			
		Check second data word in R1			
		ENTR			
		Check third data word in R1			
		ENTR			

STA/T STEP	PROCEDURE	PANEL	REMARKS
	4.10.1.6 CSM - DAP Data Load Procedure (R03)		For CMC control modes, DAP data load procedure is used to select rate, deadband, and quads. When under computer control, operating program will establish S/C rates and attitude error deadbands, or crew may select other desired error deadbands via DSKY. In addition, crew has capability of selecting RCS quads for computer command of manual translation, attitude hold, or automatic and manual maneuvers.
	CMC - on (required), para 4.10.1.2		
CMP 1	Key V48E	2,140	Extended verb 48 program calls DAP data 1, 2, and 3 in sequential order. DAP data 1, 2, or 3 may also be displayed individually by using the respective verb/ noun combinations, i.e., V04 N46, V06 N47, or V06 N48.
	(Bit A of R1 configures TVC DAP for LM on-off)		
2	FL V04 N46 R1 - A B C D E R2 - A B C D E		
	Accept PRO Reject V24E load desired data		If quads A/C and B/D (4 jets) are desired for +X translation, R1-B and R1-C may be set to 0,0, or 1,1.

	Vehicle Config.	Quad A/C for $\ddot{X}$	Quad B/D for $\ddot{X}$	Err Deadband	Rate Select
R1	0 = No Dap 1 = CSM 2 = CSM & LM 3 = CSM & SIVB 6 = CSM & LM (Ascent Stg only)	0 = Fail A/C 1 = Use A/C	0 = Fail B/D 1 = Use B/D	0 = ± 0.5° 1 = ± 5.0°	0 = 0.05°/sec 1 = 0.2°/sec 2 = 0.5°/sec 3 = 2.0°/sec
	Roll Quad Select	**Quad A**	**Quad B**	**Quad C**	**Quad D**
R2	0 = Use B/D 1 = Use A/C	0 = Fail 1 = Use	0 = Fail 1 = Use	0 = Fail 1 = Use	0 = Fail 1 = Use

If A is failed, CMC assumes C is good. If B is failed, CMC assumes D is good.

NORMAL/BACKUP

STA/T	STEP	PROCEDURE	PANEL	REMARKS
CMP	3	FL V06 N47 CSM weight XXXXX. LBS LM weight XXXXX. LBS Accept PRO Reject Key V21E, V22E or V24E Load correct data	2,140	Value of mass used in non-DAP coding is not updated unless vehicle configuration bit is 1, 2, or 6. During P40, TVC DAP reduces value for weight linearly, as a function of SPS maneuver time. Maneuvers performed without using P40 could cause CMC's knowledge of weight to be compromised.
	4	FL V06 N48 P Trim XXX.XX DEG Y Trim XXX.XX DEG Accept PRO Return to program in progress Reject Key V21E, V22E or V24E Load correct data		If burn >0.42 sec, trim values will be updated by CMC during burn. Do not load engine gimbal trim angles >9°.
	4.10.1.7	RCS DAP Attitude Deadband Increase Procedure CMC - on (required), para 4.10.1.2 ISS - on and orientation known (required), para 4.10.1.2 & 4.11 RCS DAP - activate (required), para 4.10.1.8 SCS - on (desired), para 4.10.2.2		This procedure will increase RCS DAP att deadband to ±2.5, 10, 15, 20, 25 or 30°.
	1	Select CMC Attitude Control - auto, para 4.9.1.6		

STA/T	STEP	PROCEDURE	PANEL	REMARKS
CMP	2	Select 5.0° deadband in RCS DAP, para 4.10.1.6	2,140	
	3	Key V21 N01E 3255E Load D Band (see table)		
	4	To return to 5.0° D BD THC - CW, then neutral		Center of deadband is shifted.
		or Key V48E PRO PRO PRO		Center of deadband not affected.
		4.10.1.8 DAP Activation (To be done first time DAP started or after fresh start)		
CDR	1	CMC MODE - FREE	1	Prevents inadvertent jet firings.

Desired D BD	D Band
±2.5°	0343E
±10°	1616E
±15°	2525E
±20°	3434E
±25°	4343E
±30°	5252E

STA/T	STEP	PROCEDURE	PANEL	REMARKS
CMP	2	Key V48E Insure left digit is 0 No DAP 1 CSM 2 CSM & LM 3 CSM & SIVB 6 CSM & LM (Ascent stg only) PRO PRO PRO	2,140	Establishes SC configuration.
	3	Key V46E		Activates DAP.
		4.10.1.9 <u>CSM Crew Defined Maneuver (R62)</u>		Provides method of performing CMC controlled maneuver to crew defined attitude.
		CMC - on (required), para 4.10.1.2 ISS - on and orientation known (required), para 4.10.1.2 & 4.11 SCS - on (required), para 4.10.2.2		
CDR		CMC ATT - IMU .05 G sw - OFF	1	
CMP	1	Key V37E 00E DSKY - P00	2,140	Routine R62 may be called from P00 only.
	2	Select Total Attitude (ISS) Display, para 4.9.2.5		Both FDAIs are recommended so either reference system (IMU or GDC) may be monitored. (CMC attitude error and rate displays available.)

STA/T	STEP	PROCEDURE	PANEL	REMARKS
CMP	3	Key V49E	2,140	
		Poss OPR ERR		If another extended verb active.
	4	FL V06 N22 (final gimbal angles) R, P, Y XXX.XX DEG		
		Accept PRO Reject V25E load desired gimbal angles		
		(Attitude Maneuver Routine, R60)		Provides for maneuver (automatically or manually) to specified attitude.
	5	FL V50 N18 (auto maneuver request) R, P, Y XXX.XX DEG		Required gimbal angles.
CDR		Accept BMAG MODE (3) - RATE 2 Select CMC Attitude Control Auto, para 4.9.1.6	1	
CMP		PRO	2,140	May be performed second time as attitude trim.
		V06 N18 R, P, Y XXX.XX DEG Monitor auto maneuver on FDAI		Static display until completion of auto manuever and reverts to FL V50 N18.
		Reject Key V62E		Selects Mode 2, total attitude error on FDAI needles.
		RHC - Null FDAI needles		Any input from RHC (RHC out of detent) will be interpreted by CMC as a manual override and will cause immediate termination of auto maneuver calculation.
		When attitude is satisfactory ENTR		

NOR[illegible]

STA/T	STEP	PROCEDURE	PANEL	REMARKS
	4.10.1.10	CMC Self-Check Procedure		Procedure used to check CMC's ability to write into and read out of erasable memory and performs internal fixed memory bank sum.
		CMC - on (required), para 4.10.1.2		
CMP	1	Key V25 N01E 1365E E, E, E	2,140	Zero self-check cells: ERCOUNT, SCOUNT, SCOUNT +1.
	2	Key V15 N01E - establish monitor of self-check 1365E		Begin monitor of self-check cells.
	3	Key V21 N27E 10E - starts self-check KEY REL		Starts complete self-check. Returns monitor.
	4	Monitor R2 and PROG lt		
		a. R2 becomes ≥ 3 Self-check has been successfully completed at least once Key V21 N27E 0E terminates self-check		Turns off self-check.
		b. If PROG lt comes on Coordinate with MSFN and/or perform malfunction procedure SSR-1		

STA/T	STEP	PROCEDURE	PANEL	REMARKS
		4.10.1.11 DSKY Condition Light Test		Procedure designed to test CMC/caution and warning, DSKY interface.
		CMC - on (required), para 4.10.1.2		
CMP	1	Key V37E 00E (required) DSKY - P00	2,140	This procedure should be performed in P00.
	2	Key V35E		
	3	Monitor the following events		
		a. All DSKY condition lts - on		
		b. ISS warning lt - on CMC warning lt - on		
		c. All DSKY numerical windows display 8 Sign positions in R1, R2, R3 show + V, N windows flash		
		Wait 5 sec		
		d. All DSKY warning lts - out		NO ATT will be left on if coarse align occurring.
		e. ISS lt - out CMC lt - out		
		f. Old PROG number will be displayed Interrupted display (if any) will be restarted		
		g. (Deleted)		

STA/T	STEP	PROCEDURE	PANEL	REMARKS
		4.10.1.12 Measurement and Loading of PIPA Bias		
CMP		CMC - on (required), para 4.10.1.2 ISS - on and orientation known (required), para 4.10.1.2 & 4.11		ISS should be on at least one hour prior to performing this procedure to allow PIPAs to stabilize.
		SCS - on (desired), para 4.10.2.2		Provides display and SCS control capability.
CDR		CMC ATT - IMU	1	
		.05 G sw - OFF		
		LOGIC 2/3 PWR - on (up)	7	Powers .05 G sw (OFF) position.
	1	Set Event Timer 00:00	1	
	2	Select Attitude Control desired, para 4.9.1 Maintain SC Rates <0.1°/sec		
CDR, CMP				
00:00	3	Key V25 N21E, E, E, E/start Event Timer	2,140	Zeros noun 21 cells.
	4	Key V16 N21E		
04:16	5	Key VERB		Freezes display.
	6	Record PIPA counts (X)R1____(Y)R2____(Z)R3____ XXXAB		
CMP	7	Key V21 N01E (adjust PIPA bias) Load 1452E (calculated X bias) ±ABXXXE, E 1454E (calculated Y bias) ±ABXXXE, E 1456E (calculated Z bias) ±ABXXXE		

STA/T STEP	PROCEDURE	PANEL	REMARKS
CMP	(If AB >99, CMC incapable of adjusting 2,140 PIPA bias)		
8	Key V37E 00E DSKY - P00		
4.10.1.13	Torque Gyros Extended Verb (42)		Fine aligns stable member by torquing gyros. (Primarily for ground use.)
	CMC - on (required), para 4.10.1.2 ISS - on and orientation known (required), para 4.10.1.2 & 4.11		
1	Key V37E 00E		
2	For Load <100 deg Key V42E		
	Poss OPR ERR		If another extended verb active, or IMU stall routine in use.
or	For Load >99.999 deg Key V21 N02E 2757E XXXXXE N15E XXXXXEE YYYYYEE YYYYYEE ZZZZZEE ZZZZZE Key V42E		Load >90 deg should not be performed during flight.
	Poss OPR ERR		If another extended verb active, or IMU stall routine in use.

STA/T	STEP	PROCEDURE	PANEL	REMARKS
CMP	3	FL V21 N93 (request load) Δ Gyro X, Y, Z XX.XXX DEG Accept Load desired data DSKY displays V42 NO ATT lt - out Reject V33E DSKY displays V42 NO ATT lt - out	2,140	If SC CONT at CMC and CMC MODE at AUTO or HOLD, the DAP will maneuver vehicle to follow the platform as it moves. Registers initially blank. Key V33E if gyro torquing registers loaded prior to keying V42E. PRO not accepted if V21 through V23 in verb windows.
	4.10.1.14	Load FDAI Error Needles Extended Verb (43) CMC - on (required), para 4.10.1.2 ISS - on (required), para 4.10.1.2		Loads crew specified angles into FDAI error needles. (Primarily for ground use).
	1	Key V37E 00E DSKY - P00		V43E can be executed only from P00.
	2	Key V43E Poss OPR ERR		V43E cannot be executed if: CMC not in P00, IMU in coarse align or zero ICDU mode, or if another extended verb active. (Latter is constraint after liftoff.)
	3	FL V21 N22 (request load) R, P, Y XXX.XX DEG Load desired error angles		Registers initially blank. Maximum effective angle which may be loaded is ±16.88 deg.

STA/T	STEP	PROCEDURE	PANEL	REMARKS
		4.10.1.15 Initialize Erasable Dump Via Downlink Extended Verb (74)		Dumps all eight banks of erasable memory via downlink.
		CMC - on (required), para 4.10.1.2		
CMP	1	Key V74E (V74 will deliver two complete dumps)	2,140	
		4.10.1.16 CMC/LGC Clock Sync Routine (R33)		Provides onboard method of determining difference between LGC and CMC clock time (ΔT).
		CMC - on (required), para 4.10.1.2		
	1	Key V06 N65		
	2	Confirm selection of this routine in LM		
	3	Perform countdown with LM crew ENTR (simultaneously with LM)		
	4	V06 N65 CM clock time 00XXX. HRS 000XX. MIN 0XX.XX SEC		
		Record this time Obtain from LM the LM clock time of ENTR		If precise LGC/CMC clock ΔT supplied by ground, perform Increment CMC Time Extended Verb, V55E (para 4.10.1.5).

NORMAL BACKUP

STA/T STEP	PROCEDURE	PANEL	REMARKS
CMP	Compute ΔT	2,140	
	If more data required, return to step 3		
	Compute average of ΔTs		
	5 To incorporate ΔT into CMC clock Key V55E		
	Poss OPR ERR		If another extended verb active.
	FL V21 N24 Δtime (CMC clock) 00XXX. HRS 000XX. MIN 0XX.XX SEC		All registers initially blank.
	Accept Load ΔT Reject V33E		CMC adds ΔT to CMC clock time. PRO not accepted if V21 through V23 in verb windows.
	or Key V34E		
	4.10.1.17 S Band Antenna Routine (R05)		Computes and displays the two steerable S-band antenna gimbal angles required to point antenna toward center of earth.
	CMC - on (required), para 4.10.1.2 ISS - on and orientation known (required), para 4.10.1.2 & 4.11		Required for valid angle displays.
	1 Key V64E		Selects R05. Uses permanent state vector for calculations and therefore, will be based on old values if average G on.

STA/T STEP	PROCEDURE	PANEL	REMARKS
CMP	Poss OPR ERR	2,140	If another extended verb active.
	2 FL V06 N51 Rho XXX.XX DEG Gamma XXX.XX DEG		S Band required gimbal angles. Rho - Pitch gimbal angle. Gamma - Yaw gimbal angle.
	Accept Record angles PRO Reject Select Attitude Control mode desired, para 4.9.1 Maneuver SC as required		A spacecraft maneuver will be required only if displayed angles do not provide an unobstructed view of earth. (Ref CSM Data Book, section 4.7, HGA Scan and Warning Limit, Yaw - Pitch Coord.)
4.10.1.18 ΔR and ΔV Threshold Change Procedure			
	CMC - on (required), para 4.10.1.2		
	Key V21 N01E Key 2002E		
	Load erasable value for desired ΔR (from following table)		

NORMAL/BACKUP

STA/T STEP	PROCEDURE	PANEL	REMARKS
CMP	Key N15E R3 2003	2,140	
	Load erasable value for desired ΔV (from following table)		

Desired ΔR NM	Erasable Value	Desired ΔV FPS	Erasable Value
0.00	77776	0.00	77776
0.001	0	0.0001	0
0.1	6	2.5	1
0.2	14	5.12	2
0.3	21	7.68	3
0.4	27	10.24	4
0.5	35		

4.10.1.19 A or B Erasable Value Change Procedure

CMC - on (required), para 4.10.1.2
P35, P39, P75, & P79 not operating

Procedure ineffective if programs currently running.

Key V21 N01E
Key 2021E (2023E for B)

Addresses 2021 and 2023 are used by programs (P35 and P39) and (P75 and P79) respectively.

Load 00000E (1:30 to 2:30)
Load 00003E (10:00)
Load 00004E (11:00 & 12:00)
Key N15E
R3 2022 (2024 for B)

Addresses 2022 and 2024 are used by programs (P35 and P39) and (P75 and P79) respectively.

STA/T STEP	PROCEDURE	PANEL	REMARKS
CMP	Load desired value (from following 2022/2024 table)	2,140	

Desired A or B	2022/2024
1:30	21450
1:45	24404
2:00	27340
2:15	32274
2:30	35230
10:00	25140
11:00	00720
12:00	14500

4.10.1.20 Start W-Matrix RSS Error Display Extended Verb (67)

Provides display of RSS position and velocity errors, and the opportunity to load new initialization values. However, initialization will not take place until next opportunity.

CMC - on (required), para 4.10.1.2

1 Key V67E

Poss OPR ERR
Exit

If another extended verb in process.

2 FL V06 N99

POS ERR	XXXXX. FT	RSS value of position error.
VEL ERR	XXXX.X FPS	RSS value of velocity error.
Option code	0000X	Option code: (initially 00000) 00001 - Rendezvous 00002 - Orbital 00003 - Cislunar

NORMAL BACKUP

STA/T STEP	PROCEDURE	PANEL	REMARKS
CMP	Accept PRO Reject Key V25E Load desired data (per following table)	2,140	R3 must be loaded for desired option. Otherwise, reinitialization will not occur. Bypasses reinitialization, if R3 = 00000. To initialize at new values. Initialization occurs the next time a measurement is made. N99 values to be loaded to obtain desired POS ERR and VEL ERR elements with corresponding octal values for erasable.

W-MATRIX TABLE (V67)

WRENDPOS	2000-P20	WRENDVEL	2001-P20
WORBPOS	2004-P22	WORBVEL	2005-P22
WMID POS	3000-P23	WMIDVEL	3001-P23

N99 R1	1000ft	OCTAL	N99 R2	fps	OCTAL
10000	10	137	10	10	762
08000	8	114	8	8	620
06000	6	71	6	6	453
04000	4	46	4	4	307
02000	2	23	2	2	144
01000	1	11	1	1	61
00800	.8	7	.8	.8	50
00600	.6	5	.6	.6	34
00400	.4	3	.4	.4	24
00200	.2	2	.2	.2	10
00100	.1	1	.1	.1	5

STA/T STEP	PROCEDURE	PANEL	REMARKS
	4.10.1.21 Saturn Rate Change		
	CMC - on (required), para 4.10.1.2		
CMP 1	Key V24 N01E 3322E XXXE YYYYYE		

SIVB RATE	SAT RATE +1 (3322) XXX	SAT RATE +2 (3323) YYYYY
0.05°/sec RPY	161	77616
0.1°/sec RPY	210	77567
0.2°/sec RPY	266	77511
*0.3°/sec RPY	344	77433
0.5°/sec R, 0.3°/sec PY	476	77301

	*Use for TLI		
	4.10.1.22 G&N Thrusting Monitor Program (P47)		Monitors vehicle acceleration during non-G&N controlled thrusting maneuvers, and displays ΔV applied to vehicle by the thrusting maneuver.
	CMC - on (required), para 4.10.1.2 ISS - on and aligned (required), para 4.10.1.2 & 4.11		
CDR	CMC ATT - IMU	1	

NORMAL/BACKUP

STA/T	STEP	PROCEDURE	PANEL	REMARKS
CMP	1	Key V37E 47E DSKY - P47 Poss PROG alarm Key V05 N09E (to verify alarm) 00210 (ISS not on) or 00220 (IMU orientation unknown) FL V37 Key XXE	2	G&N monitor of ΔV is highly desirable, if available, but not a requirement. P47 should be called just prior to thrusting and terminated as soon as possible thereafter in order to minimize errors of bias and average G. P47 is also normally used during rendezvous final phase. Any ΔV under G&N control during that phase would require P34, P40, or P41. Range, range rate, and theta may be displayed by calling R31. Range, range rate, and phi may be displayed during P47 by calling R34. Orbital parameters may be displayed by calling R30. Also, an SCS orbit change can be monitored by P40 if properly combined with G&N Pre-thrusting and Thrusting Procedures, para 4.14. RSET and KEY REL pressed when nature of problem determined. When CMC regains control, program cycles through R00, which may set or reset RNDZ, TRACK, and UPDATE flags, depending on which programs are in progress or are called.
	2	FL V16 N83 ΔVX, Y, Z (cont) XXXX.X FPS		Displayed when average G turned on. CMC requires 12.5 seconds per time step to turn on average G. Time step - 240 seconds (earth orbit) or 350 seconds (lunar orbit).

STA/T STEP	PROCEDURE	PANEL	REMARKS
CMP	(To rezero registers - V32E)	2	Provides capability to monitor another burn without going through R00.
	Monitor for burn completion Record ΔV PRO (exit P47)		When P47 termination desired.
3	FL V37 Key XXE		If average G on, R00 turns off average G, zeros rendezvous optics mark and VHF ranging mark counters. Otherwise, counters are not zeroed. It also sets or resets RNDZ, TRACK, and UPDATE flags, depending on which programs are in progress or are called. It may also recycle into P20.
4.10.1.23	P22 Raw Data Readout		Used to manually read raw, octal, landmark mark data (time plus CDUs for up to 5 marks).
	CMC - on and holding at V06 N49 flash in P22, para 4.12.2, step 11		
1	Key V01 N01E Key 3537E Record R1	2,140	
	Key N15E Record R1 ENTR Record R1		

NORMAL BACKUP

STA/T STEP	PROCEDURE	PANEL	REMARKS
	2 Repeat last two lines of step 1 until 7 pieces of data for each mark have been recorded		When all data is recorded, R3 should read as follows: No. Marks / R3 1 / 3545 2 / 3554 3 / 3563 4 / 3572 5 / 3601
	3 KEY REL Return to interrupted display		
	4.10.1.24 Flagword Monitor and Change Procedure		
	Flagword Monitor		
	Key V11 N01E Key XXXE (flagword address)		Refer to para 4.8.13.1 for flagword addresses.
	R1 XXXXX (flag bit) R3 00XXX (flagword address)		
	Check flag bit in R1 KEY REL		

STA/T STEP	PROCEDURE	PANEL	REMARKS
	Flagword Change		
CMP	Key V25 N07E Key XXXE (flagword address) Key XXXXXE (bit ID) Key 1 or 0 (1 = set flag bit, 0 = reset flag bit)	2,140	Load code for bit to be changed as follows: A: Bit 15 14 13, Code 4 2 1 B: Bit 12 11 10, Code 4 2 1 C: Bit 9 8 7, Code 4 2 1 D: Bit 6 5 4, Code 4 2 1 E: Bit 3 2 1, Code 4 2 1
	Example: To set REFSMMAT FLG (flagword 3, bit 13) Key V25 N07E 77E 10000E 1E		
	4.10.1.25 RCS DAP Orbital Rate Procedure		
	CMC - on (required), para 4.10.1.2 ISS - on and orientation known (required), para 4.10.1.2 & 4.11 SCS - on (desired), para 4.10.2.2 RCS DAP - load and activate (required), para 4.10.1.6 & 8 (Use R03 to disable 2 adjacent RCS quads) Ysm aligned to V X R (If R X V, complement numbers for ZZZZZ)		To minimize RCS propellant consumption.

NORMAL/BACKUP

STA/T	STEP	PROCEDURE	PANEL	REMARKS
CMP	1	Perform R62, para 4.10.1.9 Load gimbal angles for initialization of orbital rate	2,140	Gimbal angles loaded, are those that are to be at initiation of orbital rate rotation. MGA should be zero.
	2	If desired Key V37E XXE (non-attitude control program)		
	3	Establish orbital rate For rates 0.1°/sec or less, load octal numbers corresponding to desired maneuver rate from following table For rate 0.5°/sec, go to step 5 Key V24 N01E 3127E VVVVVE WWWWWE Key V24E 3131E XXXXXE YYYYYE Key V21E 3200E ZZZZZE Maneuver in progress		Final ENTR initiates maneuver.
	4	To terminate maneuver, go to step 8		

STA/T STEP	PROCEDURE	PANEL	REMARKS

	CDUX			
ORBRATE deg/sec	0 deg	+90 deg	+180 deg	+270 deg
-0.100	VVVVV = 77774 WWWWW = 54300 XXXXX = 00000 YYYYY = 61300 ZZZZZ = 42676	00000 61300 00003 23500 42676	00003 23500 00000 16500 42676	00000 16500 77774 54300 42676
-0.095	VVVVV = 77774 WWWWW = 62200 XXXXX = 00000 YYYYY = 62000 ZZZZZ = 44250	00000 62000 00003 15600 44250	00003 15600 00000 16000 44250	00000 16000 77774 62200 44250
-0.090	VVVVV = 77774 WWWWW = 70000 XXXXX = 00000 YYYYY = 62600 ZZZZZ = 45622	00000 62600 00003 10000 45622	00003 10000 00000 15200 45622	00000 15200 77774 70000 45622
-0.085	VVVVV = 77774 WWWWW = 75600 XXXXX = 00000 YYYYY = 63400 ZZZZZ = 47173	00000 63400 00003 02200 47173	00003 02200 00000 14400 47173	00000 14400 77774 75600 47173

...continued

NORMAL BACKUP

STA/T STEP	PROCEDURE	PANEL	REMARKS

	CDUX			
ORBRATE deg/sec	0 deg	+90 deg	+180 deg	+270 deg
-0.080	VVVVV = 77775 WWWWW = 43400 XXXXX = 00000 YYYYY = 64100 ZZZZZ = 50545	00000 64100 00002 34400 50545	00002 34400 00000 13700 50545	00000 13700 77775 43400 50545
-0.075	VVVVV = 77775 WWWWW = 51300 XXXXX = 00000 YYYYY = 64700 ZZZZZ = 52117	00000 64700 00002 26500 52117	00002 26500 00000 13100 52117	00000 13100 77775 51300 52117
-0.070	VVVVV = 77775 WWWWW = 57100 XXXXX = 00000 YYYYY = 65500 ZZZZZ = 53467	00000 65500 00002 20700 53467	00002 20700 00000 12300 53467	00000 12300 77775 57100 53467
-0.065	VVVVV = 77775 WWWWW = 64700 XXXXX = 00000 YYYYY = 66300 ZZZZZ = 55041	00000 66300 00002 13100 55041	00002 13100 00000 11500 55041	00000 11500 77775 64700 55041

...continued

STA/T STEP	PROCEDURE	PANEL	REMARKS

	CDUX			
ORBRATE deg/sec	0 deg	+90 deg	+180 deg	+270 deg
-0.060	VVVVV = 77775	00000	00002	00000
	WWWWW = 72500	67100	05300	10700
	XXXXX = 00000	00002	00000	77775
	YYYYY = 67100	05300	10700	72500
	ZZZZZ = 56413	56413	56413	56413
-0.055	VVVVV = 77776	00000	00001	00000
	WWWWW = 40300	67600	37400	10200
	XXXXX = 00000	00001	00000	77776
	YYYYY = 67600	37400	10200	40300
	ZZZZZ = 57765	57765	57765	57765
-0.050	VVVVV = 77776	00000	00001	00000
	WWWWW = 46200	70400	31600	07400
	XXXXX = 00000	00001	00000	77776
	YYYYY = 70400	31600	07400	46200
	ZZZZZ = 61337	61337	61337	61337

CMP 5 Ysm aligned to V X R 2,140
(If R X V, complement numbers for AAAAA and ZZZZZ)

6 Key V21 N01E
1332E, E (set HOLD FLG zero)

NAVAL BACKUP

STA/T STEP	PROCEDURE	PANEL	REMARKS

CMP 7 Establish orbital rate (0.5°/sec)
Load octal numbers corresponding to maneuver rate from following table

Key V24E 2,140
3127E
VVVVVE
WWWWWE

Key V24E
3131E
XXXXXE
YYYYYE

Key V24E
AAAAAE
ZZZZZE

Key V21E
1331E
70000E (set HOLD FLG negative)

	CDUX			
	0°	180°	7.25°	187.25°
VVVVV	77755	00022	77722	00022
WWWWW	76077	01700	71351	06426
XXXXX	77775	00002	---	---
YYYYY	66367	11410	---	---
AAAAA	77773	77773	77773	77773
ZZZZZ	56272	56272	56272	56272

STA/T	STEP	PROCEDURE	PANEL	REMARKS
CDR	8	To terminate maneuver CMC MODE - HOLD	1	
CMP		or Key V49E, return to step 1	2,140	
		or Key V46E		
		or RHC - out of detent		
		or Key V37E		
		4.10.1.26 G&N Passive Thermal Control Procedure		For SCS passive thermal control procedures, refer to para 4.10.2.9 and 4.10.2.10.
		CMC - on (required), para 4.10.1.2		
		ISS - on and orientation known (required), para 4.10.1.2 & 4.11		
		RCS DAP - Load and activate (required), para 4.10.1.6 & 8		0.5° deadband and 0.2°/sec rate are recommended.
	1	Perform R62 (V49E), para 4.10.1.9 (PRO on auto maneuver request, FLV50 N18)		This option is required to ensure erasable memory is properly set up.
CDR CMP	2	Disable two adjacent RCS quads Attitude hold for 20 minutes	8	Provides fuel conservation and lower rates (panel 8 switches or R03 may be used to disable engines).

STA/T	STEP	PROCEDURE	PANEL	REMARKS
CDR CMP	3	MAN ATT (P&Y) - ACCEL CMD Enables all RCS jets	1 8	
CMP	4	Set att hold Key V21 N01E 1332E 00000E		Inhibits rotations until maneuver rate load is complete.
		Establish desired rate		
	5	Start roll maneuver Key V21 N01E 1332E 70000E	1	Initiates maneuver.
CDR	6	MAN ATT (roll) - accel CMD		Disables roll jets for duration of PTC.

+0.1°/sec	-0.1°/sec	+0.3°/sec	-0.3°/sec
V24 N01E	V24 N01E	V24 N01E	V24 N01E
3125E	3125E	3125E	3125E
3E	77774E	12E	77765E
24400E	53400E	35400E	42400E
V21E	V21E	V24E	V24E
3176E	3176E	3175E	3175E
35101E	42676E	2E	77775E
		27303E	50474E

STA/T	STEP	PROCEDURE	PANEL	REMARKS
CMP	7	Perform RCS DAP Attitude Deadband Increase Procedure, para 4.10.1.7		±30° deadband is recommended.
CDR	8	MAN ATT (P&Y) - RATE CMD		
	9	AUTO RCS (16) - OFF		
	10	To terminate PTC		
CMP		Key V37E XXE	2,140	Re-establishes attitude hold within the attitude deadband selected in R03.
CDR		MAN ATT (roll) - RATE CMD	1	
		4.10.1.27 (V79) Orbrate/PTC (BBQ Mode - R64)		Allows orbital rate or PTC maneuver by astronaut selection of rate, deadband, and X or Y axis and sets DAP parameters to maintain chosen rate. For SCS passive thermal control procedures, refer to para 4.10.2.9 and 4.10.2.10.
		CMC - on (required), para 4.10.1.2		
		ISS - on and orientation known (required), para 4.10.1.2 & 4.11 (For orbital rate, Ysm aligned to V X R)		
		SCS - on (desired), para 4.10.2.2		Provides display and SCS control capability. 0.5° deadband and 0.2°/sec rate are recommended.
		RCS DAP - Load and activate (required), para 4.10.1.6		
		CMC ATT - IMU		
		.05 G sw - OFF		
		LOGIC 2/3 PWR - on (up)	7	Powers .05 G sw (OFF) position.
	1	Perform R62 (V49E), para 4.10.1.9 Load gimbal angles for initialization of maneuver (orbital rate or PTC)		For orbital rate, roll angle (OGA) is constrained to 7.25° (quad offset). MGA should be zero for both cases.

NORMAL BACKUP

STA/T	STEP	PROCEDURE	PANEL	REMARKS
CDR	2	Disable two adjacent RCS quads		Provides fuel conservation and lower rates (panel 8 switches or R03 may be used to disable engines).
		For PTC, Attitude hold for 20 minutes		To damp existing vehicle rates.
CMP	3	Key V79E	2,140	
		Poss OPR ERR		If another extended verb active.
	4	FL V06 N79 Rate X.XXXX DEG/SEC DBD XXX.XX DEG Axis option (X or Y) XXXXX. (0=X axis, 1=Y axis)		+ for increasing CDU angles; - for decreasing CDU angles. X axis (PTC), Y axis (orbrate).
		Accept SC CONT - CMC CMC MODE - AUTO PRO		Initiates pitch rate (orbrate), or roll rate (PTC), as determined by N79 load.
		Reject Key V25E Load desired data		
CDR	5	For PTC, AUTO RCS (16) - OFF (Re-enable jets, as required, to maintain desired rates)	8	

STA/T STEP	PROCEDURE	PANEL	REMARKS
	6 To terminate maneuver		
CMP	Key V46E	2,140	Sets last specified R03 parameters in RCS DAP. In addition, the DAP established by this routine will be altered according to the following table:

SWITCHING FUNCTION	ZEROS COMMANDED RATES	RETURNS TO (R03) SPECIFIED DEADBAND	ZEROS DAP ATTITUDE ERROR
V46E	X	X	X
SC CONT - Cycled, CMC/SCS/CMC	X	X	X
CMC MODE - HOLD	X		X
RHC - out of detent	X		X
V37E XXE	X	X	
KALCMANU	*		X

*KALCMANU generates new commanded rates.

NOMINAL BAC

STA/T	STEP	PROCEDURE	PANEL	REMARKS
		4.10.2 SCS GENERAL		
		4.10.2.1 SCS Power Down		Describes safe power-down configuration.
CDR	1	Provide Safe System Configuration EMS FUNC - OFF EMS MODE - STBY AUTO RCS (16) - OFF BMAG MODE (3) - RATE 2 SPS THRUST - NORM	1	Normal position selected to prevent inadvertent SPS firing.
	2	Remove SCS Power TVC SERVO PWR (both) - OFF FDAI/GPI PWR - OFF LOGIC 2/3 PWR - OFF ELEC PWR - OFF SIG CONDR/DR BIAS PWR (both) - OFF BMAG PWR (both) - WARMUP ROT CONTR PWR NORM (both) - OFF	7 1	
		xxxxxxxxxxxxxxxxxxxxxxx For total power down BMAG 1 PWR - OFF xxxxxxxxxxxxxxxxxxxxxxx	7	When BMAG switches set to OFF, 40-minute warmup may be required (BMAG 1 and 2 TEMP lights extinguish when operating temperature is reached) before normal operation of BMAGs. If set from ON to WARMUP, BMAG TEMP lights should remain out.

STA/T	STEP	PROCEDURE	PANEL	REMARKS
	3	Power Down ORDEAL		
CDR		FDAI sw (both) - INRTL	13	INRTL position bypasses ORDEAL resolver.
		EARTH/LUNAR - PWR OFF		
		LTG - OFF		
	4	Power Down COAS		
LMP		COAS PWR (2) - OFF	15,16	
CDR, CMP	5	Miscellaneous		
		THC - neutral, LOCKED		
		RHC (both) - LOCKED		
	6	Remove Logic Switching Power		An optional step to place panel 1 switches on logic buses in their OFF position. Relationship between switch positions and logic buses described in para 4.8.4.
CDR		FDAI SCALE - 5/1	1	
		FDAI SEL - 1 or 2		
		ATT SET - IMU		
		MAN ATT (3) - RATE CMD		
		LIM CYCLE - on (up)		
		ATT DBD - MAX		
		RATE - LO		
		EMS ROLL - OFF		
		.05 G sw - OFF		
		TVC GMBL DR (2) - 1		
	4.10.2.2	SCS Power Up		Used to power up display and control electronics of SCS.
	1	Provide Safe System Configuration		
		AUTO RCS (16) - OFF		
		BMAG MODE (3) - RATE 2		Cages BMAGs and prevents attitude error signal, if any, from causing jet firings when RCS enabled.

NORMAL BACKUP

STA/T	STEP	PROCEDURE	PANEL	REMARKS
	2	Set Power Switches		
CDR		LOGIC 2/3 PWR - on (up)	7	Configures G&C for future command/control functions. Provides power for control and GDC electronics.
		ELEC PWR - GDC/ECA		
		SIG CONDR/DR BIAS PWR (both) - AC1 or AC2		Powers RJEC -4 vdc bias power supplies. Switch 1 also provides SCS signal conditioner power for the following TLM functions: rate and attitude error, SCS auto TVC, MTVC, gimbal position transducer and RHC proportional rate commands. Switch 2 provides SCS signal conditioner power for TVC pitch and yaw differential clutch current TLM. For increased reliability, switches should not be set on same bus.
CMP		BMAG TEMP lt (2) - out	2	
CDR		FDAI/GPI PWR - OFF	7	If FDAIs are powered when BMAGs come up to speed, rate needles will oscillate full scale.
		BMAG PWR (both) - ON		Provides rate and attitude source for control and display functions.
		FDAI/GPI PWR - BOTH		Provides power for display electronics.
		ROT CONTR PWR NORM (both) - AC/DC	1	Provides power to RHC for manual control functions if needed.
	4.10.2.3	Drift Rate Adjust		Permits periodic adjustment of finite drift rates of less than 1 degree/sec. It is intended for use during long periods of drift such as in thermal control where high power consumption is undesirable.
	1	Set Up Power Switches		
		LOGIC 2/3 PWR - on (up)	7	Powers panel 1 controls for command/control functions. Powers control electronics.
		ELEC PWR - ECA		

STA/T STEP	PROCEDURE	PANEL	REMARKS
CMP	BMAG TEMP lt (2) - out	2	
CDR	FDAI/GPI PWR - OFF	7	If FDAIs are powered when BMAGs come up to speed, rate needles will oscillate full scale.
	BMAG 2 PWR - ON		Provides rate source for control and display functions.
	FDAI/GPI PWR - 1		Provides power for display electronics.
	SIG CONDR/DR BIAS PWR (both) - AC1 or AC2		Powers RJEC -4 vdc bias power supplies. To provide increased reliability, switches should not be set on same bus.
	ROT CONTR PWR NORM (both) - AC/DC	1	
2	Establish Rate Display for Ball 1, para 4.9.2.1		
	FDAI SEL - 1		
	BMAG MODE - RATE 2		
	.05 G sw - OFF		
3	Establish SCS Minimum Impulse, para 4.9.1.2		
	MAN ATT (3) - MIN IMP		
	SC CONT - SCS		
	AUTO RCS - MNA or MNB		Single jet control in each axis is preferred to allow fuel conservation.
4	Adjust Vehicle Rates		FDAI SCALE - 5/1 is recommended since expected rates will be <1°/sec.
	RHC - ARMED		
	Adjust rates using FDAI 1		
	RHC - LOCKED		

NORMAL BACKUP

STA/T STEP	PROCEDURE	PANEL	REMARKS
	4.10.2.4 Minimum Power SCS Attitude Hold (Three or Two Axes)		Provides attitude hold in two or three axes, as desired, for prolonged periods using low power consumption.
	1 Set Power Switches		
CDR	LOGIC 2/3 PWR - on (up)	7	
	ELEC PWR - ECA		If total attitude display is desired, select GDC/ECA.
CMP	BMAG TEMP lt (2) - out	2	
CDR	FDAI/GPI PWR - OFF	7	If FDAIs powered when BMAGs come up to speed, rate needles will oscillate full scale.
	SIG CONDR/DR BIAS PWR (both) - AC1 or AC2		Powers RJEC -4 vdc bias power supplies. To provide increased reliability, switches should not be set on same bus.
	BMAG PWR (both) - ON		
	FDAI/GPI PWR - 1		Provides power for display electronics.
	2 Establish SCS Att Hold/Rate Command, para 4.9.1.4		
	MAN ATT (3 or 2) - RATE CMD	1	Selection by axis using these switches will determine the axes in which attitude hold is enabled.
	LIM CYCLE - on (up)		
	ATT DBD - MAX		
	RATE - LO		
	SC CONT - SCS		
	BMAG MODE (3) - RATE 2		
	AUTO RCS - MNA or MNB		Single jet control in each axis is preferred to allow fuel conservation.
	BMAG MODE (3 or 2) - ATT 1 RATE 2		

STA/T	STEP	PROCEDURE	PANEL	REMARKS
CDR	3	Select Displays, para 4.9.2.1 & 2 FDAI SEL - 1 FDAI SOURCE - GDC .05 G sw - OFF	1	
	4	Monitor FDAI 1 att error during limit cycling		
	4.10.2.5	SCS Attitude Maneuver		Provides options for performing an SCS attitude maneuver during normal orbital operations or to satisfy specific mission requirements. It permits easy correlation to the G&C Reference Modes, para 4.9, and other G&C General Procedures, para 4.10.
	1	The following are required ISS - on and orientation known, for step 3a, para 4.10.1.2 & 4.11 SCS - on, para 4.10.2.2 CMC ATT - IMU .05 G sw - OFF		
	2	Obtain maneuver data from MSFN		
		a. Final maneuver angles R___°, P___°, Y___°		
	or	b. External reference cues		

NORMAL/BACKUP

STA/T STEP	PROCEDURE	PANEL	REMARKS
	3 Maneuver		Select FDAI display as required. The LIM CYCLE should be configured as follows in order to conserve RCS propellant: OFF - Manual proportional rate command. OFF - Automatic rate damping. on (up) - Attitude hold.
CDR	a. To specified maneuver angles If ISS available Perform GDC alignment to IMU gimbal angles, para 4.10.2.6 If ISS not available Perform alternate SC Inertial Attitude Determination, para 4.11.5 Set ATT SET tw - to desired values (step 2) Select attitude control mode, para 4.9.1	1	
	RHC - maneuver		Mode should be compatible with magnitude of maneuver - e.g., rate command, accel command or minimum impulse and desired rates.
	or b. To external reference Select attitude control mode, para 4.9.1 RHC - maneuver		Use total attitude and/or attitude error displays as required to obtain final gimbal angles. Null rates at desired orientation.
	4.10.2.6 GDC Alignment to IMU Gimbal Angles		Provides two methods for aligning GDC to IMU.
	1 The following are required CMC - on for step 3b, para 4.10.1.2 ISS - on and orientation known para 4.10.1.2 & 4.11 SCS - on, para 4.10.2.2 CMC ATT - IMU .05 G sw - OFF FDAI 1 sw - INRTL (desired)	13	Provides easy comparison between FDAI and ATT SET values.
	2 Establish Attitude Control, para 4.9.1 Damp vehicle rates		Selected to prevent drift error during alignment process.

STA/T	STEP	PROCEDURE	PANEL	REMARKS
CDR	3	Perform Attitude Error Display - ISS Attitude Set Source, para 4.9.2.4		Constraint: If CMC is on, an overload in IMU resolver circuitry may cause an ICDU oscillation and trigger ISS warning light. (Reference ICD MH01-01325-216). FDAI must be used only as a null meter in this mode of operation. If not, large errors will result because of impedance mismatch. ATT SET switch should be left at GDC when not in use.
		a. FDAI SOURCE - ATT SET ATT SET - IMU FDAI SEL - 1 ATT SET tw - Null FDAI 1 errors	1	Verify that ATT SET and FDAI 1 indicate same total attitude because false nulling of error needles could occur 180° from desired attitude.
CMP CDR	or	b. V16 N20E ATT SET tw - Adjust to IMU gimbal angles on DSKY	2,140 1	
	or	c. ATT SET tw - Adjust to IMU gimbal angles as indicated on FDAI		
	4	Align GDC, para 4.9.3 ATT SET - GDC GDC ALIGN pb - push, hold FDAI SEL - 1/2		Verify both FDAIs indicate same total attitude.
	4.10.2.7	Attitude Reference System Comparison		
	1	The following are required ISS - on and orientation known para 4.10.1.2 & 4.11		

NORMAL BACKUP

STA/T	STEP	PROCEDURE	PANEL	REMARKS
		CMC - on, para 4.10.1.2 SCS - on, para 4.10.2.2		
CDR		CMC ATT - IMU .05 G sw - OFF	1	
CMP	2	Key V37E 00E DSKY - P00	2,140	
	3	Establish Attitude Control, para 4.9.1 Damp vehicle rates		
	4	Key V06 N20E (ICDU angles) R, P, Y XXX.XX DEG		Required to allow rough ATT SET adjustment to IMU gimbal angles prior to nulling operation.
	5	Perform ATT SET/IMU comparison, para 4.9.2.4		
CDR		FDAI SEL - 1 FDAI SOURCE - ATT SET ATT SET - IMU	1	Constraint: If CMC is on, an overload in IMU resolver circuitry may cause an ICDU oscillation and trigger ISS warning light. (Reference ICD MH01-01325-216). FDAI must be used only as a null meter in this mode of operation. If not, large errors will result because of impedance mismatch. ATT SET switch should be left at GDC when not in use.
		ATT SET tw (3) - Set approx to DSKY values, null FDAI 1 att errors		
CMP		ENTR (when nulled) Record DSKY values R___°, P___°, Y___° Record ATT SET values R___°, P___°, Y___°	2,140 1	Error needle bias, if any, is determined and may be subtracted from GDC drift in step 6 (postflight).

STA/T	STEP	PROCEDURE	PANEL	REMARKS
	6	Perform ATT SET/GDC comparison		
CDR		ATT SET - GDC	1	
		ATT SET tw (3) - null FDAI 1 att errors		
CMP		ENTR (when nulled)	2,140	
		Record DSKY values		
		R___°, P___°, Y___°		
		Record ATT SET values	1	
		R___°, P___°, Y___°		
	4.10.2.8	ORDEAL Initialization		Aligns one or both FDAIs to local vertical coordinates.
	1	The following are required		
		CMC - on (for 3a & 6a), para 4.10.1.2		
		ISS - on and aligned, nominal option (for 6a), para 4.10.1.2 & 4.11		IMU and/or SCS attitude reference system must be aligned with +Y axis of reference along ($\underline{V}$ x $\underline{R}$), where V is velocity vector and R is position vector from center of earth.
		SCS - on, para 4.10.2.2		
CDR		CMC ATT - IMU		
		.05 G sw - OFF		
	2	Select Total Attitude Display, para 4.9.2.5		
	3	Set ORDEAL controls, para 4.9.2.6	13	
		FDAI 2 or 1 sw - ORB RATE		Either or both FDAIs may be driven by ORDEAL.
		EARTH/LUNAR - EARTH		
		MODE - HOLD/FAST		

NORMAL BACKUP

STA/T	STEP	PROCEDURE	PANEL	REMARKS
	4	Obtain altitude setting		
		a. Orbit parameter display routine (R30)		
CMP		Key V82E	2,140	
		Record Ha and Hp		
		Calculate average		
	or	b. Ground track determination program (P21)		
		Key V37E 21E		
		Record alt for 10-min intervals of present orbit		
		Calculate average		
	or	c. MSFN		
		If CMC in STBY, obtain alt setting from MSFN		
CDR	5	ALT SET - adjust to proper alt	13	
	6	Select attitude control mode, para 4.9.1, and maneuver to place +Xsc in orbital plane (0° yaw)		
	7	Obtain θ - pitch angle to lcl horiz		θ is the angle included between +Xsc and local horizontal. Angle in range 0° to 180° indicates +Xsc is above local horizontal plane. Total range: 0° to 360°.
		a. Rendezvous Parameter Display Routine (R31)		
CMP		Key V83E	2,140	

STA/T	STEP	PROCEDURE	PANEL	REMARKS
CDR or CMP	b.	MSFN If CMC in STBY, obtain θ from MSFN based on +Xsc pointed at horiz Maneuver to point +Xsc at horiz, para 4.10.2.5	13	θ based on +Xsc pointed at horizon is dependent on present altitude.
	8	Slew FDAI to θ		The CMC display of θ is from 0° to 360°.
	9	MODE - OPR/SLOW Slew/adjust FDAI precisely		FDAI may be more accurately adjusted using 1° marks, if yaw angle is 0° and roll angle 0° or 180°. When momentary SLEW switch is released, ORDEAL is in operate mode.
	10	Repeat steps 7 through 9 as required		FDAI sw (both) must be at INRTL (pwr OFF or not) to display pitch inertial attitude.
	4.10.2.9	SCS Passive Thermal Control Using Wobble Mode		For G&N Passive Thermal Control Procedure, refer to para 4.10.1.25.
	1	Set up power switches LOGIC 2/3 PWR - on (up) ELEC PWR - ECA	7	If total attitude display is desired, select GDC/ECA.
CMP		BMAG TEMP lt (2) - out	2	
CDR		FDAI/GPI PWR - OFF BMAG PWR (both) - ON FDAI/GPI PWR - 1	7	If FDAIs are powered when BMAGs come up to speed, rate needles will oscillate full scale.

NORMAL BACKUP

STA/T	STEP	PROCEDURE	PANEL	REMARKS
CDR		SIG CONDR/DR BIAS PWR (both) - AC1 or AC2	7	Powers RJEC -4 vdc bias power supplies. To provide increased reliability, switches should not be set on same bus.
		ROT CONTR PWR NORM (both) - AC/DC	1	
	2	Establish SCS att hold/rate command MAN ATT (3) - RATE CMD LIM CYCLE - on (up) ATT DBD - MIN		This switching assumes RCS is not enabled or attitude error needles are nulled before this switching is performed.
		RATE - LO SC CONT - SCS BMAG MODE (3) - RATE 2 AUTO RCS A/C ROLL or B/D ROLL (4) - MNA or MNB	8	Only one pair of roll quads should be enabled.
		AUTO RCS PITCH & YAW - set for single jet operation		Single jet control in PITCH and YAW provides reduced RCS authority for attainment of minimum rates.
		BMAG MODE (3) - ATT 1 RATE 2	1	
	3	Select Displays FDAI SEL - 1 FDAI SOURCE - GDC .05 G sw - OFF		
	4	Maneuver SC to desired attitude		Maneuver should place desired wobble axis in CSM -Z+Y quadrant, _____° from X axis.
	5	Achieve pitch up & yaw right rates of 0.01-0.02°/sec		Allow CSM to deadband to these rates. Rate may be obtained manually if minimum impulse control is used.

STA/T	STEP	PROCEDURE	PANEL	REMARKS
CDR	6	MAN ATT ROLL - ACCEL CMD	1	
		LIM CYCLE - OFF		
		ATT DBD - MAX		
		RATE - HI		
		BMAG MODE (3) - RATE 2		
		AUTO RCS ROLL (8) - MNA or MNB		
		Initiate _____°/sec roll rate		Full roll authority can be used to establish this rate with one RHC action.
		AUTO RCS (16) - OFF		
	4.10.2.10	SCS Passive Thermal Control Using BAR-B-Q Minimum Power Mode		For G&N Passive Thermal Control Procedure, refer to para 4.10.1.25.
	1	Set up power switches		
		LOGIC 2/3 PWR - on (up)	7	
		SCS ELEC PWR - ECA		If total attitude display is desired, select GDC/ECA.
CMP		BMAG TEMP lt (2) - out	2	
CDR		FDAI/GPI PWR - OFF	7	If FDAIs are powered when BMAGs come up to speed, rate needles will oscillate full scale.
		BMAG PWR (both) - ON		
		FDAI/GPI PWR - 1		
		SIG CONDR/DR BIAS PWR (both) - AC1 or AC2		Powers RJEC -4 vdc bias power supplies. To provide increased reliability, switches should not be set on same bus.
		ROT CONTR PWR NORM (both) - AC/DC	1	
	2	Select Displays		
		FDAI SEL - 1		
		FDAI SOURCE - GDC		
		.05 G sw - OFF		

NORMAL BAC

STA/T	STEP	PROCEDURE	PANEL	REMARKS
CDR	3	Maneuver SC to desired attitude		
	4	Establish 2 axis SCS att hold/rate command MAN ATT PITCH & YAW - RATE CMD	1	
		MAN ATT ROLL - ACCEL CMD LIM CYCLE - on (up) or MIN IMP ATT DBD - MAX RATE - HI SC CONT - SCS AUTO RCS PITCH & YAW - set for single jet operation		Engine combinations available for single jet control are:
		AUTO RCS A/C ROLL or B/D ROLL (4) - MNA or MNB	8	
		BMAG MODE (3) - ATT 1 RATE 2	1	
	5	Initiate 0.1°/sec roll rate		
	6	Monitor FDAI 1 att error during limit cycling		

SINGLE JET CONTROL				
PITCH	A3-A4	C3-C4	A3-C4	C3-A4
YAW	B3-B4	D3-D4	B3-D4	D3-B4

STA/T	STEP	PROCEDURE	PANEL	REMARKS
		4.11 ALIGNMENTS		
		4.11.1 IMU ORIENTATION DETERMINATION (P51)		Determines inertial orientation of IMU.
		CMC - on (required), para 4.10.1.2		
		ISS - on (required), para 4.10.1.2		
		SCS - on (desired), para 4.10.2.2		Provides total attitude monitoring and attitude control capability.
CDR		CMC ATT - IMU	1	
		LOGIC 2/3 PWR - on (up)	7	Required for control and display functions, if SCS-on option not selected.
	1	Optics Power Up, para 4.10.1.4		
LMP		G/N PWR - AC1 or AC2	5	Provides power to reticle and condition lamps (LEB).
CMP		OPT PWR - on (up)		
		OPT ZERO - OFF	122	
		OPT ZERO - ZERO (≈15 sec to zero)		
	2	Select Total Attitude Display, para 4.9.2.5		Both ISS and GDC attitude displays are recommended for monitoring of IMU coarse align and SC motion.
	3	Key V37E 51E	2,140	
		DSKY - P51		
		Poss PROG alarm		Alarm will occur only if ISS not on.
		FL V37		
		Key V05 N09E (to verify alarm)		
		00210 (ISS not on)		
		Perform ISS turn on		Return to P51 at completion of ISS turn on.
		Key 51E		

NORMAL BACKUP

STA/T	STEP	PROCEDURE	PANEL	REMARKS
CMP	4	FL V50 N25 00015 (target acquisition)	2,140	Targets (celestial bodies).
		a. Select desired attitude control mode, para 4.9.1 Maneuver to acquire targets, if necessary PRO		V16 N20 may be keyed in to monitor for impending gimbal lock if operating from LEB where no FDAI is available.
		or b. To coarse align IMU to SC axes ENTR (when att acceptable)		Time and RCS fuel may be saved and subsequent IMU alignment decisions greatly simplified if IMU is left inertially stabilized as close as possible to orientation required for future CMC programs.
		V41 N22 (coarse align) R, P, Y 000.00 DEG		
		NO ATT lt - on, then out Recycle step 4		
		(Sighting Mark Routine, R53)		
	5	FL V51 (please mark) OPT ZERO - OFF OPT MODE - MAN Center target in SXT MARK (on target)	122	SCT may be used if reduced accuracy is acceptable.
	6	FL V50 N25 00016 (terminate marks)	2,140	An unsatisfactory mark may be rejected by pressing MARK REJ pb anytime prior to terminating marking sequence. Possible program alarms if marks are rejected without prior marks or if surplus marks are made.
		Accept PRO Reject MARK REJ pb - push Return to step 5	122	

STA/T	STEP	PROCEDURE	PANEL	REMARKS
CMP	7	FL V01 N71	2,140	
		Target code 00XX		Target codes: 00 - Planet (any planet except Earth) 01 to 45 - Star 46 - Sun 47 - Earth 50 - Moon
		Accept PRO		
		Poss OPR ERR Recycles display		Target code negative or >50.
		Reject Key V21E Load target code		
		If target code is other than 00 Return to step 5 for target No. 2		
	8	FL V06 N88 (planet only)		This flash will occur only if marks were made on a planet. X, Y, Z - Components of planet unit position vector at present time.
		X, Y, Z .XXXXX		
		Accept PRO Reject Key V25E Load desired data		Use on-board tables to determine planet position vector at present time.
		Return to step 5 for target No. 2		
		(Sighting Data Display Routine, R54)		Tests accuracy of pair of celestial body sightings.
	9	FL V06 N05		
		Sighting angle diff XXX.XX DEG		

NORMAL/BACKUP

STA/T	STEP	PROCEDURE	PANEL	REMARKS
CMP		Accept PRO	2,140	CMC calculates and stores IMU orientation as REFSMMAT.
		Reject Key V32E Return to step 4		
	10	FL V37 Key XXE		ROO
	11	Optics Power Down, para 4.10.1.4		If P52 selected, this step should be bypassed.
		OPT ZERO - ZERO	122	
		OPT PWR - OFF	100	
LMP		G/N PWR - OFF	5	
	4.11.2	IMU REALIGN (P52)		Aligns IMU from known orientation to one of four orientations selected by crew. Orientation options available are: • Preferred • Nominal • REFSMMAT • Landing site
		CMC - on (required), para 4.10.1.2		
		ISS - on and orientation known (required), para 4.10.1.2 & 4.11		
		SCS - on (desired), para 4.10.2.2		Provides total attitude monitoring and attitude control capability.
CDR		CMC ATT - IMU	1	
		LOGIC 2/3 - on (up)	7	Required for control and display functions, if SCS - on option not selected.

STA/T	STEP	PROCEDURE	PANEL	REMARKS
	1	Optics Power Up, para 4.10.1.4		
LMP		G/N PWR - AC1 or AC2	5	Provides power to reticle and condition lamps (LEB).
CMP		OPT PWR - on (up)	100	
		OPT ZERO - OFF	122	
		OPT ZERO - ZERO (≈15 sec to zero)		
	2	Select Total Attitude Display, para 4.9.2.5		Both ISS and GDC attitude displays are recommended for monitoring of IMU coarse align and SC motion.
	3	Key V37E 52E	2,140	
		DSKY - P52		
		Poss PROG alarm Key V05 N09E (to verify alarm) 00210 (ISS not on)		
		or 00220 (IMU orientation unknown)		
		FL V37 Key XXE		Perform ISS turn-on procedure and/or IMU orientation determination.
	4	FL V04 N06		If preferred orientation defined, R2 = 00001. Otherwise R2 = 00003.
		Option code 00001 Option 0000X		Options available are: 00001 - Preferred (operator ensures preferred orientation defined) 00002 - Nominal 00003 - REFSMMAT 00004 - Landing site
		Accept PRO Reject Key V22E Load desired option		

NORMAL BACKUP

STA/T	STEP	PROCEDURE	PANEL	REMARKS
CMP		a. If 00001 selected, go to step 7	2,140	
	or	b. If 00002 or 00004 selected, go to step 5		
	or	c. If 00003 selected, go to step 10		
	5	FL V06 N34		GET align - Time at which nominal or landing site orientation defined. Display initially 0, 0, 0. If this value accepted, nominal or landing site orientation will be defined for GET align automatically selected as present time.
		GET align OOXXX. HRS 000XX. MIN 0XX.XX SEC		
		Accept PRO If option 2, go to step 7		
		Reject Key V25E Load desired GET align		
	6	FL V06 N89		Stored landing site coordinates.
		Lat (+North) XX.XXX DEG Long/2 (+East) XX.XXX DEG Alt XXX.XX NM		
		Accept PRO		
		Reject Key V25E Load correct coordinates		
	7	FL V06 N22		
		R, P, Y XXX.XX DEG		

STA/T STEP	PROCEDURE	PANEL	REMARKS
CMP	Accept PRO	2,140	
	Reject Select desired attitude control mode, para 4.9.1		
	Maneuver SC		To obtain acceptable MGA.
	Key V32E		V32E recycles to update gimbal angle display.
	or Key V37E XXE		
	Exit P52		
8	FL V50 N25 00013 (coarse align or pulse torque)		
	Accept PRO		Selects coarse align R50 and allows auto optics positioning.
	Go to step 9		
	Reject ENTR		To pulse torque gyros. Bypasses R50 and auto optics positioning.
	V16 N20 (present gimbal angles) R,P,Y XXX.XX DEG		If it appears that IMU will be torqued into gimbal lock, maneuver should be performed to avoid condition.
	Go to step 20		
	(Coarse Align Routine, R50)		
9	Verify coarse align complete NO ATT lt - on, then out Monitor ball motion		If required gimbal angle changes <1 degree, IMU will not be coarse-aligned. If SC CONT at CMC and CMC MODE at AUTO or HOLD, the DAP will maneuver vehicle to follow the platform as it moves.

NORMAL/BACKUP

STA/T STEP	PROCEDURE	PANEL	REMARKS
CMP 10	FL V50 N25 00015 (target acquisition)	2,140	
	a. For CMC assistance in selection Select desired attitude control mode, para 4.9.1 Maneuver to acquire target		After target acquisition, SCS minimum impulse operation is desirable for minimum fuel consumption and reduction of vehicle rates to minimum.
	PRO		CMC performs target selection routine.
	Poss FL V05 N09 00405 (acceptable pair not available) Maneuver until suitable target acquired PRO Go to step 11		
	or Key V32E Recycle step 10		
	or b. To bypass CMC selection ENTR		Crew manually acquires target.
11	FL V01 N70 Target code 000XX		Target codes: 00 - Planet (any planet except Earth) 01 to 45 - Star 46 - Sun 47 - Earth 50 - Moon
	Accept OPT ZERO - OFF	122	
	OPT MODE - as desired		
	PRO	2,140	

STA/T STEP	PROCEDURE	PANEL	REMARKS
CMP	Poss OPR ERR Recycles display	2,140	Target code negative or >50.
	Reject Key V21E Load desired code		
	If target not a planet and OPT MODE - MAN, go to step 14	122	
	or OPT MODE - CMC, go to step 13		
12	FL V06 N88 (planet only) X, Y, Z .XXXXX	2,140	X, Y, Z - Components of planet unit position vector at present time.
	Accept PRO If OPT MODE - MAN, go to step 12	122	
	Reject Key V25E Load desired data	2,140	Use on-board tables to determine planet position at present time.
	(Auto Optics Positioning Routine, R52)		Points SLOS of optics at selected target.
13	V06 N92 (desired optics angles) SA XXX.XX DEG TA XX.XXX DEG		Optics will drive to acquire selected target. No display if R52 reselected after R53 called.
	Poss FL V05 N09 (2 sec priority) 00404 (TA >90°)		

NORMAL BACKUP

STA/T STEP	PROCEDURE	PANEL	REMARKS
CMP	a. Select desired attitude control mode, para 4.9.1		
	Maneuver to reduce TA	2,140	If required optics angles are not being displayed, key V16 N92E to obtain display.
	PRO		
	or b. Key V34E (to exit R52)		
	FL V37		R00
	Key XXE		
	Poss PROG alarm		
	Key V05 N09E (to verify alarm)		
	00407 (TA >50°)		
	Select desired attitude control mode, para 4.9.1		
	KEY REL		
	Maneuver to reduce TA		If required optics angles are not being displayed, key V16 N92E to obtain display.
When sighting marks are desired			
OPT MODE - MAN		122	Calls R53. To regain auto optics positioning, select OPT MODE - CMC (prior to completion of R53).
(Sighting Mark Routine, R53)			
14 FL V51 (please mark)		2,140	
Center target in SXT		122	SCT may be used if reduced accuracy is acceptable.
MARK (on target)			

STA/T	STEP	PROCEDURE	PANEL	REMARKS
CMP	15	FL V50 N25 00016 (terminate marks) Accept PRO Reject MARK REJ pb - push Return to step 14	2,140 122	
	16	FL V01 N71 Target code 000XX Accept PRO Poss OPR ERR Recycles display Reject Key V21E Load target code If target code other than 00, return to step 11 for target No. 2	2,140	Target codes: 00 - Planet (any planet except Earth) 01 to 45 - Star 46 - Sun 47 - Earth 50 - Moon Target code negative or >50.
	17	FL V06 N88 (planet only) X, Y, Z .XXXXX Accept PRO Reject Key V25E Load desired data Return to step 11 for target No. 2		This flash will occur only if marks were made on a planet. X, Y, Z - Components of planet unit position vector at present time. Use on-board tables to determine planet position vector at present time.

STA/T	STEP	PROCEDURE	PANEL	REMARKS
		(Sighting Data Display Routine, R54)		Tests accuracy of pair of target sightings.
	18	FL V06 N05		
CMP		Sighting angle diff XXX.XX DEG	2,140	
		Accept PRO		
		Reject Key V32E		
		Go to step 20		
		(Gyro Torquing Routine, R55)		Calculate and display gyro torquing angles for final (fine) alignment of inertial platform and to torque gyros.
	19	FL V06 N93 (Δ gyro angles)		
		X, Y, Z XX.XXX DEG		X, Y, Z Gyro - Angle through which each gyro must be torqued to complete fine alignment. Once this step is complete, CMC will reset preferred orientation flag. If CMC MODE switch is at AUTO or HOLD during R55, the DAP will maneuver CSM to follow platform as it moves.
		Accept PRO (gyros torqued)		Pulse IRIGS through desired angle.
		Reject Key V32E, go to step 20		Do not torque gyros.
		or Key V37E 00E, go to step 22		
	20	FL V50 N25		
		00014 (fine align check)		
		Accept PRO		To repeat target sightings (R52 & R53), sighting data test (R54), and gyro torquing (R55) to verify accuracy of alignment.
		Return to step 10		
		Reject ENTR		

STA/T	STEP	PROCEDURE	PANEL	REMARKS
CMP	21	FL V37 Key XXE	2,140	R00.
	22	Optics Power Down, para 4.10.1.4		
		OPT ZERO - ZERO	122	
		OPT PWR - OFF	100	
LMP		G/N PWR - OFF	5	
	4.11.3	ALTERNATE LOS IMU ORIENTATION DETERMINATION (P53)		Determines inertial orientation of IMU using backup optical device (COAS). May also be used with failed optics or mark pb.
		CMC - on (required), para 4.10.1.2		
		ISS - on (required), para 4.10.1.2		
		SCS - on (required), para 4.10.2.2		Provides total attitude monitoring and attitude control capability.
CDR		CMC ATT - IMU	1	
		COAS - calibrated (required), para 4.11.7		
	1	Select Total Attitude Display, para 4.9.2.5		Both ISS and GDC attitude displays recommended for monitoring of IMU coarse align and SC motion.
CMP	2	Key V37E 53E DSKY - P53	2,140	
		Poss PROG alarm FL V37 Key V05 N09E (to verify alarm) 00210 (ISS not on) Perform ISS turn on Key 53E		Alarm will occur only if ISS not on. Return to P53 at completion of ISS turn on.

NORMAL BACKUP

STA/T	STEP	PROCEDURE	PANEL	REMARKS
CMP	3	FL V50 N25 00015 (target acquisition)	2,140	
		a. Select desired attitude control mode, para 4.9.1 Maneuver to acquire targets, if necessary PRO		V16 N20 may be keyed in to monitor for impending gimbal lock if operating from LEB where no FDAI is available.
		or b. To coarse align IMU to SC axes ENTR (when att acceptable)		Time and RCS fuel may be saved and subsequent IMU alignment decisions greatly simplified if IMU is left inertially stabilized as close as possible to the orientation required for future CMC programs.
		V41 N22 (coarse align) R, P, Y 000.00 DEG		
		NO ATT lt - on, then out Recycle step 3		
		(Alternate LOS Sighting Mark Routine, R56)		
	4	FL V06 N94 SA XXX.XX DEG TA XX.XXX DEG		
		Accept PRO Reject Key V24E Load desired SA & TA		Values obtained from COAS Calibration, para 4.11.7. Nominal SA and TA for COAS sightings are: SA - 000.00 DEG TA - 57.470 DEG

STA/T	STEP	PROCEDURE	PANEL	REMARKS
CMP	5	FL V53 (please mark) RHC - center target in COAS reticle ENTR	2,140	SCS minimum impulse mode is recommended. CMC interprets ENTR as a mark. An inadvertent PRO instead of ENTR will recycle FL V53.
	6	FL V50 N25 00016 (terminate marks) Accept PRO Reject ENTR Return to step 5		 CMC interprets ENTR as a mark reject.
	7	FL V01 N71 Target code 000XX Accept PRO Poss OPR ERR Recycles display Reject Key V21E Load target code If target code other than 00 Return to step 4 for target No. 2		Celestial body code: 00 - Planet (any planet except Earth) 01 to 45 - Star 46 - Sun 47 - Earth 50 - Moon Target code negative or >50.

NORMAL/BACKUP

STA/T	STEP	PROCEDURE	PANEL	REMARKS
CMP	8	FL V06 N88 (planet only) X, Y, Z .XXXXX Accept PRO Reject Key V25E Load desired data Return to step 4 for target 2 (Sighting Data Display Routine, R54)	2,140	This flash will occur if marks were made on a planet. X, Y, Z - Components of planet unit position vector at present time. Use on-board tables to determine planet position vector at present time. Tests accuracy of pair of target (celestial body) sightings.
	9	FL V06 N05 Sighting angle diff XXX.XX DEG Accept PRO Reject Key V32E Return to step 3		CMC calculates and stores IMU orientation as REFSMMAT.
	10	FL V37 Key XXE		ROO
	4.11.4	ALTERNATE LOS IMU REALIGN (P54)		Aligns IMU from a known orientation to one of four orientations selected by crew using sightings on two targets (celestial bodies) with COAS. Orientation options available are: • Preferred • Nominal • REFSMMAT • Landing site

STA/T	STEP	PROCEDURE	PANEL	REMARKS
CMP		CMC - on (required), para 4.10.1.2 ISS - on and orientation known (required), para 4.10.1.2 & 4.11 SCS - on (required), para 4.10.2.2 COAS - calibrated (required), para 4.11.7	2,140	Provides total attitude monitoring and attitude control capability. Minimum impulse control using RHC available for alignment of target for sighting marks.
CDR		CMC ATT - IMU	1	
	1	Select Total Attitude Display, para 4.9.2.5		Both ISS and GDC attitude displays recommended for monitoring IMU coarse align and SC motion.
	2	Select desired Attitude Control Mode, para 4.9.1		
CMP	3	Key V37E 54E DSKY - P54 Poss PROG alarm Key V05 N09E (to verify alarm) 00210 (ISS not on) or 00220 (IMU orientation unknown) FL V37 Key XXE	2,140	Perform ISS turn-on procedure and/or IMU orientation determination.
	4	FL V04 N06		If preferred orientation defined, R2 = 00001. Otherwise R2 = 00003.

NORMAL BACK

STA/T STEP	PROCEDURE		PANEL	REMARKS
CMP	Option code	00001	2,140	
	Option	0000X		Options available are: 00001 - Preferred 00002 - Nominal 00003 - REFSMMAT 00004 - Landing site
	Accept PRO Reject Key V22E Load desired option			
	a. If 00001 selected, go to step 7			
or	b. If 00002 or 00004 selected, go to step 5			
or	c. If 00003 selected, go to step 10			
5	FL V06 N34			
	GET align	00XXX. HRS 000XX. MIN 0XX.XX SEC		GET align - Time at which nominal or landing site orientation defined. Display initially 0, 0, 0. If this value accepted, nominal or landing site orientation will be defined for GET align automatically selected as present time.
	Accept PRO If option 2, go to step 7 Reject Key V25E Load desired GET align			
6	FL V06 N89			
	Lat (+North)	XX.XXX DEG		Stored landing site coordinates.
	Long/2 (+East)	XX.XXX DEG		
	Alt	XXX.XX NM		

STA/T	STEP	PROCEDURE	PANEL	REMARKS
CMP		Accept PRO	2,140	
		Reject Key V25E		
		Load correct coordinates		
	7	FL V06 N22		
		R, P, Y XXX.XX DEG		
		Accept PRO		
		Reject Select desired attitude control mode, para 4.9.1		
		Maneuver SC		To obtain an acceptable MGA.
		Key V32E		V32E recycles to update gimbal angle display.
		or Key V37E XXE		
		Exit P54		
	8	FL V50 N25		
		00013 (coarse align or pulse torque)		
		Accept PRO		Selects coarse align R50 and allows auto optics positioning.
		Go to step 9		
		Reject ENTR		To pulse torque gyros. Bypasses R50 auto optics positioning.
		V16 N20 (present gimbal angles)		If it appears that IMU will be torqued into gimbal lock, maneuver should be performed to avoid this condition.
		R,P,Y XXX.XX DEG		
		Go to step 20		

NORMAL/BACKUP

STA/T	STEP	PROCEDURE	PANEL	REMARKS
		(Coarse Align Routine, R50)		
CMP	9	Verify coarse align complete NO ATT lt - on, then out Monitor ball motion	2,140	If required gimbal angle changes <1 degree, IMU will not be coarse-aligned. If SC CONT at CMC and CMC MODE at AUTO or HOLD, the DAP will maneuver vehicle to follow the platform as it moves.
	10	FL V50 N25 00015 (target acquisition)		
		a. For CMC assistance in selection		
		Select desired attitude control mode, para 4.9.1 Maneuver SC PRO		CMC performs target selection routine. However, since primary optics are not being used, selected stars may not be acceptable for backup optics sightings.
		Poss FL V05 N09 00405 (acceptable pair not available) Maneuver SC until suitable target acquired PRO Go to step 11		
		or Key V32E Recycle step 10		

STA/T STEP	PROCEDURE	PANEL	REMARKS
CMP or	b. To bypass CMC selection ENTR	2,140	Crew manually acquires target.
	11 FL V01 N70 Target code 00XX Accept PRO Poss OPR ERR Recycles display Reject Key V21E Load desired code If target code other than 00, go to step 13		Target codes: 00 - Planet (any planet except Earth) 01 to 45 - Star 46 - Sun 47 - Earth 50 - Moon If target code negative or >50.
	12 FL V06 N88 (planet only) X, Y, Z .XXXXX Accept PRO Reject Key V25E Load desired data (Alternate LOS Sighting Mark Routine, R56)		X, Y, Z - Components of planet unit position vector at present time. Use on-board tables to determine planet position at present time. To perform sighting marks using COAS.
	13 FL V06 N94 SA XXX.XX DEG TA XX.XXX DEG		

NORMAL/BACKUP

STA/T STEP	PROCEDURE	PANEL	REMARKS
CMP	Accept PRO Reject Key V24E Load desired SA & TA	2,140	Values obtained from COAS Calibration, para 4.11.7. Nominal SA & TA for COAS sightings are: SA - 000.00 DEG TA - 57.470 DEG
14	FL V53 (please mark) RHC - center target in COAS reticle ENTR		SCS minimum impulse mode recommended. CMC interprets ENTR as a mark. An inadvertent PRO instead of ENTR will recycle FL V53.
15	FL V50 N25 00016 (terminate marks) Accept PRO Reject ENTR Return to step 14		 CMC interprets ENTR as a mark reject.
16	FL V01 N71 Target code 000XX Accept PRO Poss OPR ERR Recycles display Reject Key V21E Load target code If target code other than 00, Return to step 11 for target No. 2		Target codes: 00 - Planet (any planet except Earth) 01 to 45 - Star 46 - Sun 47 - Earth 50 - Moon If target code negative or >50.

STA/T	STEP	PROCEDURE	PANEL	REMARKS
CMP	17	FL V06 N88 (Planet only) X, Y, Z .XXXXX Accept PRO Reject Key V25E Load desired data Return to step 11 for target No. 2 (Sighting Data Display Routine, R54)	2,140	Flash will occur only if marks were made on a planet. X, Y, Z - Components of planet unit position vector at present time. Use on-board tables to determine planet position vector at present time. Tests accuracy of pair of target sightings.
	18	FL V06 N05 Sighting angle diff XXX.XX DEG Accept PRO Reject Key V32E Go to step 20 (Gyro Torquing Routine, R55)		To calculate and display gyro torquing angles for final (fine) alignment of inertial platform and to torque gyros.
	19	FL V06 N93 (Δ gyro angles) X, Y, Z XX.XXX DEG Accept PRO Reject Key V32E		X, Y, Z Gyro - Angle through which each gyro must be torqued to complete fine alignment. Once this step is complete, CMC will reset preferred orientation flag. If CMC MODE switch is at AUTO or HOLD during R55, the DAP will maneuver CSM to follow platform as it moves. Pulse IRIGS through desired angle. Do not torque gyros.

NORMAL/BACKUP

STA/T	STEP	PROCEDURE	PANEL	REMARKS
CMP	20	FL V50 N25 00014 (perform fine alignment)	2,140	
		Accept PRO Return to step 10		PRO repeats target sightings (R56), sighting data test (R54), and gyro torquing (R55) to verify accuracy of alignment.
		Reject ENTR		
	21	FL V37 Key XXE		
		4.11.5 ALTERNATE SC INERTIAL ATTITUDE DETERMINATION AND GDC ALIGNMENT		
		The following are required SCS - on (required), para 4.10.2.2		
CDR		CMC ATT - IMU .05 G sw - OFF	1	
	1	Optics Power Up, para 4.10.1.4		
LMP		G/N PWR - AC1 or AC2	5	
CMP		OPT PWR - on (up)	100	
	2	Select Total Attitude, Attitude Error and Rate Display for SCS, para 4.9.2		If IMU off, only FDAI 1 need be powered or selected.
	3	Select SCS Attitude Hold/Rate Command, para 4.9.1.4		Max deadband preferred until stars are obtained for fuel conservation.

STA/T	STEP	PROCEDURE	PANEL	REMARKS
CMP	4	Obtain 2 stars in SCT	121	
		Select Optics Control, para 4.9.5		
		OHC - center star on R-line		OHC - Optics hand control.
		OHC - center star in FOV		
		Hold star 1 in center of FOV		Final adjustment required OPT COUPLING - DIRECT.
		Hold star 2 on R line		Minimum impulse control can be used to allow positioning of the stars on the R line.
CDR	5	BMAG MODE (3) - RATE 2	1	Stars must be kept aligned while BMAGs are caged.
		ATT DBD - MIN		
		BMAG MODE (3) - ATT 1 RATE 2		
CMP	6	Read and record angles on trun and shaft ind(s) and transmit with star data to MSFN	121	
	7	Obtain inertial att values for ATT SET tw from MSFN		
	8	Align GDC, para 4.9.3		
CDR		ATT SET tw (3) - set to MSFN values	1	
		ATT SET - GDC		
		GDC ALIGN pb - push		
	9	Optics Power Down, para 4.10.1.4		
CMP		OPT ZERO - ZERO	122	
		OPT PWR - OFF	100	
LMP		G/N PWR - OFF	5	

NORMAL/BACKUP

STA/T	STEP	PROCEDURE	PANEL	REMARKS
		4.11.6 BACKUP GDC AND/OR IMU ALIGNMENT		Aligns GDC and/or IMU without CMC.
		The following are required SCS - on, para 4.10.2.2 CMC - off or STBY (for step 3a)		
CDR		.05 G sw - OFF CMC ATT - IMU	1	
CMP	1	Record following data from MSFN R ALIGN_____, P ALIGN_____ Y ALIGN_____, (step 8)		
		SXTS data (step 10) SXTS_____ SHAFT_____° TRUN_____°		SXTS - Sextant star.
		Boresight star data (step 4) Boresight star_____ SPA_____° SXP_____°		SPA - Sight pitch angle. SXP - Star X position. 0° and 0° allows SC to be rolled about boresight star in step 7.
		Nav stars (step 7) Primary star_____(50° mark on R line of SCT reticle) Secondary star_____(R line)		

STA/T	STEP	PROCEDURE	PANEL	REMARKS
	2	Iss att set, para 4.9.2.4		
CDR		FDAI SEL - 1 FDAI SOURCE - ATT SET ATT SET - IMU	1	Constraint: If CMC is on, an overload in IMU resolver circuitry may cause an ICDU oscillation and trigger ISS warning light (Reference ICD MH01-01325-216). FDAI must be used only as a null meter in this mode of operation. If not, large errors will result because of impedance mismatch. ATT SET switch should be left at GDC when not in use.
CMP	3	Cage IMU		This step is bypassed, if only GDC aligned.
		If IMU in standby IMU PWR - on (up) (IMU automatically cages)	100	Occurs only if CMC off, or in STBY.
		If IMU powered up		
		a. IMU PWR - OFF Wait 5 min for gyros to run down IMU PWR - on (up)		
CDR	or	b. ATT SET tw - set to 0°, 0°, 0° Maneuver SC to 0°, 0°, 0° and null FDAI 1 errors IMU CAGE - on (up) and hold until step 11	1	IMU gimbal angles should be 0±5° before caging to avoid damaging gyros.

NORMAL/BACKUP

STA/T	STEP	PROCEDURE	PANEL	REMARKS
CDR	4	Select desired SCS Attitude Control Mode, para 4.9.1, and maneuver to position boresight star in COAS		
	5	Optics Power Up, para 4.10.1.4		
LMP		G/N PWR - AC1 or AC2	5	Provides power to reticle and condition lamps (LEB).
CMP		OPT PWR - on (up)	100	
	6	Set optics shaft to 180° and trunnion to 7.5°, para 4.9.5		180° shaft and 7.5° trunnion places 50° mark of SCT reticle along +Zsc axis.
		OPT SPEED - LO		Minimizes optics drift.
	7	Maneuver to position stars in SCT		Roll SC around boresight star to acquire navigation stars. After positioning primary star on 50° mark, SC may be yawed about this star to place secondary star on R line.
	8	Align GDC, para 4.9.3		
CDR		ATT SET tw - set to R, P, Y ALIGN	1	
		ATT SET - GDC		
		GDC ALIGN pb - push when stars positioned, until errors null on FDAI 1		
	9	Maneuver to ΔV attitude		
		ATT SET tw - set to ΔV attitude		
		Maneuver to ΔV attitude		
		Null errors on FDAI 1		
	10	Perform SXTS check and adjust SC attitude if necessary		With optics set to proper shaft and trunnion angles, and SC at ΔV attitude, specified star should appear in SXT.

STA/T	STEP	PROCEDURE	PANEL	REMARKS
CDR	11	Uncage IMU IMU CAGE - on (up) and rel If step 3b was used IMU CAGE - rel	1	This frees IMU at 0°, 0°, 0°. (For deorbit, GDC will be at 180°, 180°, 0°.)
	12	Optics Power Down, para 4.10.1.4		
CMP		OPT ZERO - ZERO	122	
		OPT PWR - OFF	100	
LMP		G/N PWR - OFF	5	
	4.11.7	INFLIGHT COAS CALIBRATION		Provides method for in-flight calibration of COAS (i.e., equivalent shaft and trunnion angles). Spare COAS light bulbs (2) are stowed in volume U3. When installing COAS on window mount, align (rotate COAS barrel to detent) as indicated by arrow on decal.
		The following are required ISS - on and orientation known, para 4.10.1.2 & 4.11 CMC - on, para 4.10.1.2 SCS - on, para 4.10.2.2		
CDR		CMC ATT - IMU .05 G sw - OFF COAS filter installed	1	Filter is used to reduce glare of reticle image when sighting on low intensity targets.
	1	Optics Power Up, para 4.10.1.4		
LMP		G/N PWR - AC1 or AC2	5	Provides power to reticle and condition lamps (LEB).
CMP		OPT PWR - on (up)	100	
		OPT ZERO - OFF	122	
		OPT ZERO - ZERO (≈15 sec to zero)		

NORMAL B

STA/T	STEP	PROCEDURE	PANEL	REMARKS
CMP	2	Select Total Attitude Display, para 4.9.2.5		
	3	Key V37E 52E DSKY - P52	2,140	
		Poss PROG alarm Key V05 N09E (to verify alarm) 00210 (ISS not on) or 00220 (IMU orientation unknown)		
		FL V37 Key XXE		Perform ISS turn on procedure and/or IMU orientation determination.
	4	FL V04 N06 Option code	00001	If preferred alignment flag is set, R2 will display 00001. Otherwise, R2 will display 00003 (nominal alignment).
		Option	0000X	Options available are: 00001 - Preferred (operator ensures preferred orientation defined) 00002 - Nominal 00003 - REFSMMAT 00004 - Landing site
		Select REFSMMAT orientation (V22E, 3E) PRO		
	5	FL V50 N25 00015 (target acquisition)		Target (celestial bodies).

STA/T STEP	PROCEDURE	PANEL	REMARKS
CMP	Select Attitude Control Mode, para 4.9.1		
	Maneuver to acquire target in COAS		
	ENTR	2,140	
6	FL V01 N70		
	Target code 000XX		Target codes: 00 - Planet (any planet except Earth) 01 to 45 - Star 46 - Sun 47 - Earth 50 - Moon
	OPT ZERO - OFF	122	
	OPT MODE - CMC		
	Key V21E	2,140	
	Load target code of target centered in COAS		
	PRO		
	Poss OPR ERR Recycles display		Target code negative or >50.
	If target not a planet, go to step 8		
7	FL V06 N88 (planet only)		
	X, Y, Z .XXXXX		X, Y, Z - Components of **planet unit position vector at present time.**
	Accept PRO Reject Key V25E Load desired data		
	(Auto Optics Positioning Routine, R52)		
8	V06 N92		Display will be updated every ≈0.5 second.
	SA XXX.XX DEG		
	TA XX.XXX DEG		
	PROG alarm - should be on (Indicates desired TA >50°)		

NORMAL BACKUP

STA/T	STEP	PROCEDURE	PANEL	REMARKS
		When target is centered in COAS and SA and TA are relatively constant		
CMP		Key VERB (to freeze display)	2,140	
		Accept Record SA & TA for use in P53/P54 Reject KEY REL Repeat step 8		
	9	Optics Power Down, para 4.10.1.4		
		OPT ZERO - ZERO	122	
		OPT PWR - OFF	100	
LMP		G/N PWR - OFF	5	
	10	Select new program		
		4.11.8 INPLANE GDC ALIGNMENT		Provides a method for aligning SCS attitude reference system in orbital plane (+Y axis of reference along $\underline{V} \times \underline{R}$). This allows use of ORDEAL on FDAI 2 with IMU out of plane.
		CMC - on (required), para 4.10.1.2		
		ISS - on and orientation known (required), para 4.10.1.2 & 4.11		
		SCS - on (required), para 4.10.2.2		
CDR		CMC ATT - IMU	1	
	1	Select Total Attitude Display, para 4.9.2.5 FDAI SEL - 1/2		
CMP	2	Key V37E 52E DSKY - P52	2,140	

STA/T STEP	PROCEDURE	PANEL	REMARKS
CMP	Poss PROG alarm Key V05 N09E (to verify alarm) 00210 (ISS not on) or 00220 (IMU orientation unknown) FL V37 Key XXE	2,140	Perform ISS turn on procedure and/or IMU orientation determination.
3	FL V04 N06 Option code 00001 Option 0000X Select nominal option Key V22E 2E PRO		Options available are: 00001 - Preferred (operator ensures preferred orientation defined) 00002 - Nominal 00003 - REFSMMAT 00004 - Landing site
4	FL V06 N34 GET align 00XXX. HRS 000XX. MIN 0XX.XX SEC Key V25E Load present time plus 10 min		GET align - Time at which vehicle position and velocity vectors are selected to define IMU local vertical orientation.

NORMAL BACKUP

STA/T	STEP	PROCEDURE	PANEL	REMARKS
CMP	5	Establish Attitude Control, para 4.9.1		Selected to prevent drift between gimbal angle calculation and GDC alignment.
		Damp vehicle rates		
		PRO	2,140	
	6	FL V06 N22 R, P, Y XXX.XX DEG		Gimbal angles for present SC/desired IMU.
CDR	7	ATT SET tw - adjust to Euler angles displayed on DSKY	1	
	8	Align GDC, para 4.9.3 ATT SET - GDC GDC ALIGN pb - push and hold		
	9	Select new program		
		4.11.9 ZERO ICDU EXTENDED VERB (V40 N20)		• Insures synchronization between ISS CDU counters and CDU counters in CMC.
		CMC - on (required), para 4.10.1.2 ISS - on (required), para 4.10.1.2		• Terminates IMU coarse align mode and enters fine align mode (inertial IMU).
CMP	1	Key V40 N20E NO ATT lt - OFF Wait 15 sec	2,140	
		Poss OPR ERR		If IMU stall routine in use.

STA/T STEP	PROCEDURE	PANEL	REMARKS
CMP	Poss PROG alarm Exit routine Key V05 N09E (to verify alarm) 00206 (zero encode not allowed) Key V41 N20E, para 4.11.10	2,140	If ISS is in coarse align mode with gimbal lock.
4.11.10	COARSE ALIGN ICDU EXTENDED VERB (V41 N20)		• Coarse aligns IMU to gimbal angles specified by crew.
	CMC - on (required), para 4.10.1.2 ISS - on (required), para 4.10.1.2		
1	Key V41 N20E		
	Poss OPR ERR Exit coarse align		Occurs if another extended verb active, or if IMU stall routine in use.
2	FL V21 N22 (load CDU angles) R, P, Y XXX.XX DEG		Registers initially blank.
	Accept Load desired angles Reject V33E		PRO not accepted if V21 through V23 in verb display.
	DSKY - V41 NO ATT lt - on		NO ATT lt will remain on even after gimbals have been driven to specified angles.

NORMAL/BACKUP

STA/T STEP	PROCEDURE	PANEL	REMARKS
CMP	Poss PROG alarm Key V05 N09E (to verify alarm) 00211 (error >2°)	2,140	Present and specified gimbal angles may be compared by keying V16 N20E and V16 N22E. Alternate method is to key V62E (Mode 2) to display difference between N20 and N22 on FDAI error needles.
	To repeat coarse align Key V41 N20E		
3	To extinguish NO ATT lt and terminate coarse align Key V40 N20E Wait 15 sec		Zero ICDU extended verb, para 4.11.9.
	or V42E		Torque gyros extended verb, para 4.10.1.13.
	4.11.11 COARSE ALIGN OCDU EXTENDED VERB (V41 N91)		Drive optics to shaft and trunnion angles specified by crew. Not permitted from start of drive test until end of burn. (Ref note opposite 00117 alarm, step 3.)
	CMC - on (required), para 4.10.1.2		
1	Optics Power Up, para 4.10.1.4		
LMP	G/N PWR - AC1 or AC2	5	
CMP	OPT PWR - on (up)	100	
	OPT ZERO - OFF	122	
	OPT ZERO - ZERO (≈15 sec to zero)		
2	OPT ZERO - OFF OPT MODE - CMC		
3	Key V41 N91E	2,140	
	Poss OPR ERR Exit coarse align OCDUs		Occurs if another extended verb active.

STA/T	STEP	PROCEDURE	PANEL	REMARKS
CMP		Poss PROG alarm	2,140	
		Key V05 N09E (to verify alarm)		
		00115 (OPT MODE not CMC)		OPR ERR lt on.
		OPT MODE - CMC	122	
	or	00117 (OPT not available)	2,140	This alarm code indicates that OCDUs are being used by TVC DAP or gimbal drive test and that this procedure cannot be performed. May occur from start of drive test until end of burn.
		Exit coarse align		
	4	FL V21 N92 (Load OCDUs)		
		SA XXX.XX DEG		Registers initially blank.
		TA XX.XXX DEG		
		Accept Load desired SA & TA		
		Reject V33E		PRO not accepted if V21 through V23 in verb display.
	5	DSKY - V41		Key V16 N91E to monitor optics angles.
	6	Optics Power Down, para 4.10.1.4		
		OPT ZERO - ZERO	122	
		OPT PWR - OFF	100	
LMP		G/N PWR - OFF	5	
	4.11.12	BACKUP GDC ALIGNMENT WITH COAS		Aligns GDC without IMU, CMC or optics.
		The following are required		
		SCS - on, para 4.10.2.2		A more accurate alignment can be performed if the COAS calibration procedure, para 4.11.7, has been performed earlier and the calibration information provided to MSFN for use in computation of R, P and Y ALIGN.
		CMC - off or STBY		
CDR		.05 G sw - OFF	1	
		CMC ATT - IMU		

NORMAL BACK UP

STA/T	STEP	PROCEDURE	PANEL	REMARKS
CMP	1	Record following data from MSFN R ALIGN ____, P ALIGN ____ Y ALIGN ____, (step 2) Boresight star data (step 13) Boresight star SPA ____° SXP ____° Nav stars Primary star ____ (step 5) Second star ____ (step 8) Star difference angle ____° (step 7)		SPA - Sight pitch angle SXP - Star X position Star difference angle cannot exceed 35° since this is maximum COAS field of view in pitch.
CDR	2	SCS att set, para 4.9.2.4 FDAI SEL - 1 FDAI SOURCE - ATT SET ATT SET - GDC ATT SET tw - set R, P, Y ALIGN	1	
	3	Install COAS and set reticle to 0° pitch		
	4	Select SCS attitude control mode, para 4.9.1		
	5	Maneuver to position primary star on crosshairs of COAS reticle		
	6	Establish attitude hold with min deadband in pitch and yaw		

STA/T	STEP	PROCEDURE	PANEL	REMARKS
CDR	7	Pitch COAS reticle up Star Angle Difference value		
	8	Roll S/C to place second star on pitch axis of COAS reticle		
	9	Establish attitude hold with min deadband in roll		
	10	Repeat steps 3 through 9 as necessary		
	11	Align GDC, para 4.9.3 GDC ALIGN pb - push, when stars positioned, until errors null on FDAI 1		
	12	Maneuver to ΔV attitude ATT SET tw - set to ΔV attitude Maneuver to ΔV attitude Null errors on FDAI		
	13	Perform Boresight Star check		

NORMAL/BACKUP

STA/T	STEP	PROCEDURE		PANEL	REMARKS
	4.12	COASTING			
	4.12.1	GROUND TRACK DETERMINATION (P21)			Provides crew ground track data for either CSM or LM, based on time loaded in step 3.
		CMC - on (required), para 4.10.1.2			
CMP	1	Key V37E 21E DSKY - P21		2,140	
	2	FL V04 N06			
		Option code	00002		
		CMC assumed option (00001 = CSM, 00002 = LM)	0000X		
		Accept PRO			
		Reject V22E (load desired option)			
	3	FL V06 N34			Initial display will contain zeros (present time). If not changed by astronaut, P21 calculations will be based on present time.
		GET lat long	00XXX. HRS 000XX. MIN 0XX.XX SEC		GET at desired position of selected vehicle.
		Accept PRO			
		Reject V25E (load desired T-lat long)			
	4	FL V06 N43			
		Lat (+North)	XXX.XX DEG		Selected vehicle latitude at T-lat long.
		Long (+East)	XXX.XX DEG		Selected vehicle longitude at T-lat long.
		Alt	XXXX.X NM		Selected vehicle altitude above launch pad radius for earth orbit, or above lunar radius at most recently defined landing site for lunar orbit, at T-lat long.

NORMAL/BACKUP

STA/T STEP	PROCEDURE	PANEL	REMARKS
CMP	If desired Key N73 Alt/10 XXXXX. NM VI XXXXX. FPS Gamma XXX.XX DEG	2,140	Provides altitude display with scale compatible with altitudes associated with lunar mission.
	To increment T-lat long by 10 min Key V32E Return to step 3		For V32E, program keeps previous state vector for use in starting next iteration without, however, ensuring that subsequent integrations are precision. If times reasonably close, V32E should be used; if far apart, would be quicker to reselect P21.
5	PRO (terminates P21) FL V37 Key XXE		R00

STA/T STEP	PROCEDURE	PANEL	REMARKS
4.12.2	ORBITAL NAVIGATION (P22)		Purpose: • Locate, track and mark on a lmk suitable for navigation. • Calculate orbital parameter changes generated by lmk sightings marks. • Display orbital parameter changes generated by first lmk sighting mark for crew/MSFN verification prior to state vector update. • Update known lmk coordinates. • Provide unknown lmk coordinates. • Track a preloaded landing site. • Provide coordinates of a new landing site (treated as an unknown lmk). • Provide coordinates of an offset landing site. • Point optics along an advanced orbit ground track to track and map a new landing site. Lmks may be known or unknown. Known lmk - Made known to CMC by Lat, Long/2 and Alt.

NORMAL BACKUP

STA/T	STEP	PROCEDURE	PANEL	REMARKS
				Unknown lmk - Identified to CMC as unknown lmk. There are two types of landing site mapping: • Landing site determination - Track and mark an unknown lmk and store coordinates in lmk ID 01. • Landing site offset - To store offset landing site coordinates in lmk ID 01. The only legitimate values of the lmk ID in N70 and N71 are: 00 - known lmk loaded by N89 01 - landing site 50-57 advanced orbit option where the units digit is the number of orbits ahead. (N70 only) Ground Track Determination Program (P21) is available to aid in selection of lmks. For orbital navigation, W-matrix should not be initialized to magnitudes >328 fps and 51,647 ft (N99 display).
		CMC - on (required), para 4.10.1.2 ISS - on and orientation known (required), para 4.10.1.2 & 4.11 Optics Power Up (required), para 4.10.1.4		
CMP		OPT ZERO - OFF OPT MODE - CMC	122	

STA/T	STEP	PROCEDURE	PANEL	REMARKS
CDR		CMC ATT - IMU .05 G sw - OFF SCS - on (required), para 4.10.2.2	1	Provides monitoring and alternate control capability.
	1	Select Total Attitude Display, para 4.9.2.5		
	2	Select Attitude Control mode desired, para 4.9.1		
CMP	3	Key V37E 22E DSKY - P22	2,140	
		Poss PROG alarm Key V05 N09E (to verify alarm) 00210 (ISS not on)		R02.
		or 00220 (IMU orientation unknown)		R02.
		FL V37 Key XXE		
	4	FL V06 N45 R3 - max MGA if X-axis inplane XXX.XX DEG		MGA is maximum possible middle gimbal angle if CSM X-axis is held in orbital plane.
CDR		If IMU alignment satisfactory Perform ORDEAL Initialization, para 4.10.2.8		

NORMAL BACKUP

STA/T STEP	PROCEDURE	PANEL	REMARKS
CDR	Maneuver to sighting att and establish orb rate Select FDAI display & att control mode desired, para 4.9.1 & 4.9.2 RHC - position Xsc axis ≈20° above lcl horiz, SEF heads up; as lmk approaches, pitch slowly to ≈20° below horiz (put COAS LOS on horiz or use ORDEAL FDAI) RHC or ATT IMP - pitch to offset orb rate, roll to avoid shaft axis ≈10° of lmk, if known		Initial sighting attitude should position optics shaft axis inplane and ≈50° ahead of local vertical. This provides an optics cone of view which extends ≈90° ahead of local vertical at beginning of sighting. As lmk approaches, pitch CSM down ≈20° below horizon. Now cone of view extends from ≈50° ahead to ≈30° aft of local vertical. Sighting attitude should be adjusted by a small roll maneuver, if necessary, to prevent optics shaft axis from passing within 10° of target lmk. The 10° separation of lmk LOS and shaft axis ensures optics drive rates are not exceeded because of optics shaft reversal to avoid trunnion stop at -5°.
CMP	PRO (If earth orbit, go to step 6)	2,140	
or	If realignment desired Key V37E XXE		Select IMU realignment procedure. Reselect P22 at completion of realignment procedure.
5	FL V05 N70 (lunar orbit only) R2 - lmk code ABCDE A 1 (known lmk), 2 (unknown lmk) B Index of offset designator C Not used DE lmk ID Reject Key V22E Load desired lmk code Accept If A = 2 OPT MODE - MAN 122 PRO 2,140 Go to step 8		

STA/T STEP	PROCEDURE	PANEL	REMARKS
CMP	or If A = 1 & DE = 01 or 50-57 PRO Go to step 7	2,140	The PROG alarm (00404 & 00407) may occur at this point.
	or If A = 1 & DE = 00 PRO		
	Poss OPR ERR A = 0 or >2, B >5, or DE ≠ 00, 01 or 50-57 Recycle step 5		
6	FL V06 N89 (lmk data)		
	Lat (+North) XX.XXX DEG		Lmk latitude.
	Long/2 (+East) XX.XXX DEG		Lmk longitude divided by 2.
	Alt XXX.XX NM		Lmk altitude above Fischer ellipsoid for earth orbit, or above mean lunar radius for lunar orbit.
	Reject V25E Load desired data Accept PRO		
	Poss OPR ERR R1 or R2 >90° Recycle step 6		
	(Auto Optics Positioning Routine, R52)		Points optics SLOS to selected lmk automatically. If in lunar orbit and a lmk code (DE) of 50 through 57 loaded in step 5 (E defining desired number of orbits ahead), CMC points optics 60° ahead of CSM along advanced orbit.

NORMAL BACKUP

STA/T STEP	PROCEDURE	PANEL	REMARKS
CMP	Poss FL V05 N09 00404 (TA >90°)	2,140	PROG alarm lt on.
	Maneuver CSM until optics can acquire lmk PRO		PRO recomputes required optics angles.
	or V34E (terminates program) FL V37 Key XXE		R00
	Poss PROG alarm (TA >50°) Key V05 N09E (to verify alarm) 00407 (is stored)		If alarm occurs, optics will be driven in shaft only.
	Maneuver to reduce desired trun angle		Key V16 N92E for display of required optics angles if not presently displayed.
7	V06 N92 (new OCDU angles) SA XXX.XX DEG TA XX.XXX DEG		No display if OPT MODE - MAN or if R52 reselected after R53 called, see next remark.
	To mark, OPT MODE - MAN	122	Selects R53. To regain auto optics positioning, select OPT MODE - CMC (prior to completion of R53). CSM attitude rates ≥two-thirds degree/second will result in rejection of sighting marks; indicated by PROG alarm.

STA/T	STEP	PROCEDURE	PANEL	REMARKS
		(Sighting Mark Routine, R53)		
CMP	8	FL V51 (please mark)	2,140	
		Center lmk in optics	121	Known or unknown lmk in SCT. If mark is made on an offset lmk (landing site), key V52E (after offset mark) or use N71 in step 9 to identify the offset mark. If only one mark is made, it should not be identified as the offset landing site. If more than one mark is made, any mark (except first mark) may be used (and identified) as the offset landing site mark. If desirable to terminate lmk tracking without making marks, key V34E or V37E XXE.
		MARK pb - push	122	
		Accept Repeat mark procedure		If more marks desired.
		or PRO	2,140	If sufficent marks made. At least one unrejected mark must be made before keying PRO. Otherwise, V51 is reinstated. If desirable to terminate lmk tracking without making marks, key V34E or V37E XXE.
		Reject MARK REJ pb - push	122	
		Repeat mark procedure		
		If 5 marks made		
		FL V50 N25	2,140	
		00016 (terminate marks)		
		Accept PRO		
		Reject MARK REJ pb - push	122	Rejects last (5th) mark.
		Repeat mark procedure		

STA/T STEP	PROCEDURE	PANEL	REMARKS
CMP	OPT ZERO - ZERO (≈15 sec to zero) OPT ZERO - OFF OPT MODE - CMC Exit R53 & R52	122	
9	FL V05 N71 (lmk data) R2 - lmk code ABCDE A 1 (known lmk), 2 (unknown lmk) B Index of offset designator C Not used DE Lmk ID Reject V22E Load correct data in R2 Accept PRO If A is 2 (or A is 1 & DE = 01) Go to step 11 Poss OPR ERR A = 0 or >2, B >5 or DE ≠ 00 or 01	2,140	If a mark was made on an offset landing site, ensure that B corresponds to the mark. If no offset landing mark was made ensure B = 0.
10	FL V06 N89 (lmk coordinates) Lat (+North) XX.XXX DEG Long/2 (+East) XX.XXX DEG Alt XXX.XX NM Reject V25E (load desired data) Accept PRO		If auto optics positioning was performed, this data will be identical to the N89 data loaded in step 6.

STA/T STEP	PROCEDURE	PANEL	REMARKS
CMP	Poss OPR ERR R1 or R2 >90° Recycle step 10	2,140	
11	FL V06 N49		Refer to para 4.10.1.22 for procedure to manually read raw data during FL V06 N49.
	ΔR XXXX.X NM ΔV XXXX.X FPS		Position vector change magnitude. Velocity vector change magnitude.
	Accept PRO Reject V32E E.O. - return to step 6		If in earth orbit.
	or L.O. - return to step 5		If in lunar orbit.
12	FL V06 N89 Lat (+North) XX.XXX DEG Long/2 (+East) XX.XXX DEG Alt XXX.XX NM		If offset landing site mark was made and identified to the CMC, display is offset landing site coordinates. Otherwise, display is coordinates of the lmk on which marks were taken.
	Accept PRO (lunar orbit only) Return to step 5		Stores coordinates in CMC memory as the landing site (lmk ID 01). Previously stored landing site coordinates are erased.
	Reject V32E E.O. - return to step 6		Does not store coordinates.
	or L.O. - return to step 5		

NORMAL/BACKUP

STA/T	STEP	PROCEDURE	PANEL	REMARKS
CMP	13	Key V34E (to terminate P22) FL V37 Key XXE	2,140	V34E at any flashing display terminates P22. R00.
	14	Set optic controls		
		OPT ZERO - ZERO	122	
		OPT PWR - OFF	100	
		RETCL BRT tw - DIM	122	

STA/T	STEP	PROCEDURE	PANEL	REMARKS
		4.12.3 CISLUNAR MIDCOURSE NAVIGATION (P23)		Accomplishes midcourse navigation by incorporating star/earth and star/moon optical measurements.
		CMC - on (required), para 4.10.1.2 ISS - on and orientation known (desired), para 4.10.1.2 & 4.11		Permits auto maneuver to tracking attitude and auto optics positioning, if desired. Optics should be on for 15 min prior to marking.
		SCS - on (required), para 4.10.2.2		Provides monitoring displays and alternate control capability.
		RCS DAP - Load and activate (desired), para, 4.10.1.6 & 4.10.1.8		Required if automatic attitude maneuver desired. For cislunar navigation, W-matrix should not be initialized to magnitudes >328 fps and 99999. ft (N99 display).
		Optics power up (required), para 4.10.1.4		
CDR		CMC ATT - IMU .05 G sw - OFF	1	
	1	Select Total Attitude Display, para 4.9.2.5		
	2	Select Attitude Control mode desired, para 4.9.1		

NORMAL/BACKUP

STA/T	STEP	PROCEDURE	PANEL	REMARKS
CMP	3	Key V37E 23E DSKY - P23	2,140	If an hour or more elapsed between performing first pointing vector routine and first mark since initializing the W-matrix, key V93E.
		If IMU orientation unknown RHC - maneuver to acquire star/lunar or earth disc in SXT FOV Go to step 9		Select a suitable star/lunar or earth disc for use by Optics Calibration Routine, R57.
	or	IMU orientation known Go to step 4		
	4	FL V05 N70 Star ID 00ODE Lmk code ABCDE Horiz ID 00CDO		
		Reject Key V25E (load desired data)		Either R2 or R3 should be 00000, but not both.
		R1 - 00 for planet 01-45 for star R2 - AB not used C 1 (earth lmk), 2 (moon lmk) DE not used		
	or	R2 - 00000 for horizon measurement		
		R3 - horizon identification C 1 (earth horizon), 2 (moon horizon) D 1 (near horizon), 2 (far horizon)		
	or	R3 - 00000 for lmk measurement		

STA/T STEP	PROCEDURE	PANEL	REMARKS
CMP	Accept Record data PRO	2,140	
	If sighting on planet/horiz, go to step 6 If sighting on star/horiz, go to step 7		
	Poss OPR ERR R1 <0 or >45		
	or R2 ≠ 1 or 2		
	or R2 & R3 0		
	or R3 (C) 1 or 2 & (D) ≠ 1 or 2		
	Recycle step 4		
5	FL V06 N89 Lat (+North) XX.XXX DEG Long/2 (+East) XX.XXX DEG Alt XXX.XX NM		If planet or star and either earth or moon landmark sighting. Above Fischer ellipsoid for earth orbit, or above mean lunar radius for lunar orbit.
	Accept PRO If planet not specified, go to step 7 Reject V25E (load desired data)		
	Poss OPR ERR R1 or R2 >90° Recycle step 5		

STA/T	STEP	PROCEDURE	PANEL	REMARKS
CMP	6	FL V06 N88 (planet only) X, Y, Z .XXXXX Accept PRO Reject V25E (load desired data)	2,140	
	7	FL V50 N25 00202 (request auto maneuver) Accept PRO Reject ENTR RHC - maneuver to acquire star/ lunar or earth disc in SXT Go to step 9 (Attitude Maneuver Routine, R60)		Calls R60 to perform the automatic maneuver. Select a suitable star/lunar or earth disc for use by Optics Calibration Routine, R57. Provides for maneuver (auto or manual) to attitude calculated by vecpoint routine.
	8	FL V50 N18 (CMC auto request) R, P, Y XXX.XX DEG		Required gimbal angles.
CDR		Accept SC CONT - CMC	1	
		CMC MODE - AUTO		
CMP		PRO	2,140	
		V06 N18 R, P, Y XXX.XX DEG		Static display until completion of auto maneuver and then reverts to FL V50 N18.
		Monitor auto maneuver on FDAI Recycle step 8		
		Reject V62E RHC - null FDAI error needles Recycle step 8		Provides error needle reference for manual maneuver.

STA/T STEP	PROCEDURE	PANEL	REMARKS
CDR	or SC CONT - SCS (or CMC MODE - ≠ AUTO)	1	
CMP	PRO (updates display)	2,140	Recomputes desired attitude without performing auto maneuver.
	Recycle step 8		
	or ENTR (terminates R60)		When attitude satisfactory.
	(Optics Calibration Routine, R57)		Measures effect of solar radiation on SXT trunnion angle and stores measured trunnion bias for P23.
9	FL V59 (perform calib mark)		
	Accept Center desired calibration feature or star in SXT		
	OPT ZERO - OFF	122	
	OPT SPEED - LO		
	OPT MODE - MAN		
	OPT TELTRUN - SLAVE TO SXT		
	OPT COUPLING - DIRECT		
	Superimpose SLOS and LLOS		Trunnion bias angle is a function of angle between LLOS and sun and is a constant if sun is outside cone ±15 deg from LLOS.
	MARK pb - push		
	Go to step 10		
	Reject If IMU orientation unknown		If optics were calibrated with sun outside cone defined in the preceding remark and are used outside cone during future marks, recalibration is not necessary. If sun is within cone, calibration should be performed each time through P23.
	OPT MODE - MAN		
	ENTR	2,140	
	Go to step 13		
	If IMU orientation known		
	OPT MODE - CMC	122	
	ENTR	2,140	PROG alarm (00404 & 00407) may occur at this point.
	Go to step 11		

NORMAL/BACKUP

STA/T STEP	PROCEDURE	PANEL	REMARKS
CMP 10	FL V06 N87	2,140	Scaling of N87 is such that a small negative angle will appear as a positive angle approaching 90°. (Actual angle is equal to 90° minus displayed value.)
	R2 - trun bias XX.XXX DEG		
	Accept If IMU orientation known		
	OPT MODE - CMC	122	
	PRO	2,140	CMC stores calibration angle.
	If IMU orientation is unknown		
	PRO		
	Go to step 13		
	Reject V32E		CMC erases mark data and recycles for new mark.
	Return to step 9		
	(Automatic Optics Positioning Routine, R52)		Points SLOS of the optics at selected star.
	Poss FL V05 N09		
	00404 (TA >90°)		
	Maneuver to reduce TA		
	PRO		
	or V34E (exit R52)		
	FL V37		R00.
	Key XXE		
	Poss PROG alarm		
	Key V05 N09E (to verify alarm)		
	00407 (TA >50°)		
	Maneuver to reduce TA		
	KEY REL		

STA/T	STEP	PROCEDURE	PANEL	REMARKS
CMP	11	V06 N92 (desired optics angles) SA XXX.XX DEG TA XX.XXX DEG (Sighting Mark Routine, R53)	2,140	Optics will drive to acquire selected star or planet.
	12	OPT MODE - MAN	122	
	13	FL V51 (please mark) Check star & lmk are in SXT FOV OPT COUPLING - RSLV OPT SPEED - LO RHC - Position lmk near center of SXT FOV OHC - Superimpose star and lmk images MARK pb - push	2,140 122	If CMC aid in reacquiring lmk/horiz is desired, key V94E and place OPT MODE switch to CMC. V94 terminates R52 and R53, starts R60 going again, recalculates required optics vector, reselects R52 and positions optics. V94 usable only in P23 from R52 callup through R53 to mark accept (PRO in step 14).
	14	FL V50 N25 00016 (terminate marks) Accept PRO Reject MARK REJ pb - push Return to step 13	2,140 122	
	15	FL V05 N71 Star ID 000DE Lmk code ABCDE Horiz ID 00CD0	2,140	Refer to step 4 for codes.

NORMAL/BACKUP

STA/T STEP	PROCEDURE	PANEL	REMARKS
CMP	Reject V25E Load desired data Accept Record data PRO Poss OPR ERR Either R2 or R3 must be zero (but not both) If sighting on planet/horiz Go to step 17 If sighting on star/horiz Go to step 18 Poss OPR ERR R1 <0 or >45 or R2 ≠ 1 or 2 or R2 & R3 0 or R3 (C) 1 or 2 & (D) ≠ 1 or 2 Recycle step 15	2,140	
16	FL V06 N89 Lat XX.XXX DEG Long/2 XX.XXX DEG Alt XXX.XX NM		Altitude above Fischer ellipsoid for earth orbit, or above mean lunar radius for lunar orbit.

STA/T STEP	PROCEDURE	PANEL	REMARKS
CMP	Accept PRO If planet not specified, go to step 18 Reject V25E Load desired data Poss OPR ERR R1 or R2 >90° Recycle step 16	2,140	
17	FL V06 N88 (planet only) X, Y, Z .XXXXX Accept PRO Reject V25E (load desired data)		
18	FL V06 N49 ΔR XXXX.X NM ΔV XXXX.X FPS Accept PRO Reject Reselect V37E 23E, return to step 3 or V32E (go to step 19)		Magnitude of position vector change. Magnitude of velocity vector change. Updates state vector. No state vector update if reject option selection.
19	FL V37 Key XXE		

NORMAL/BACKUP

STA/T	STEP	PROCEDURE	PANEL	REMARKS
CMP	20	Key V93E (if necessary)	2,140	If state vector update via P27 has not occurred. Enables W-matrix initialization.
	21	Set optic controls		
		OPT ZERO - ZERO	122	
		OPT PWR - OFF	100	
		RETCL BRT tw - DIM	122	

STA/T	STEP	PROCEDURE	PANEL	REMARKS
		4.12.4 ORBIT PARAMETER DISPLAY (R30)		Provides crew with CMC computed orbital parameters. Time from perigee/perilune (TF perigee) available via N32 if Hp >49.4 NM (300,000 ft) for earth orbit or >5.8 NM (35,000 ft) for lunar orbit. If P00 or P11 running, ΔR (miss distance) is available via N50.
		CMC - on (required), para 4.10.1.2		
CMP	1	Key V82E If average G routine on, go to step 4	2,140	V82 computations are based on two-body conic equations and may give erroneous results during transearth/lunar coasting. TFF display may be incorrect if return trajectory is hyperbolic.
	2	FL V04 N12 Option code 00002 CMC assumed option 0000X (1 = CSM, 2 = LM) Accept PRO Reject V22E (load desired option)		
	3	FL V06 N16 GET event 00XXX. HRS 000XX. MIN 0XX.XX SEC Accept PRO Reject Key V25E Load desired time		Time for state vector integration. TFF and N32 continue to be measured from present time (N16). CMC sets time option initially to zero, meaning present time.
	4	FL V16 N44 Ha XXXX.X NM Hp XXXX.X NM		If average G on, display updates every 2 seconds. Above launch pad radius for earth orbit or above landing site radius for lunar orbit. Calculations are subject to the limitations of two-body approximation and yield reasonable results if vehicle is close to earth or moon.

NORMAL BACKUP

STA/T	STEP	PROCEDURE	PANEL	REMARKS
CMP		TFF XXBXX MIN-SEC 2,140		Time of free fall to 49.4 NM (300,000 ft) for earth orbit, or 5.8 NM (35,000 ft) for lunar orbit. TFF reads -59B59 if Hp >49.4/5.8 NM; under these conditions, time from perigee/perilune available by keying N32. If average G off and Hp <49.4/5.8 NM, TFF counts down. For N32, if average G off and Hp >49.4/5.8 NM, time from perigee/perilune counts down.
		Accept PRO Reject V32E Recycle to step 3		Recalculates orbital parameters. (Valid only if average G off.)

STA/T	STEP	PROCEDURE	PANEL	REMARKS
		4.13 ORBIT CHANGE VEHICLE PREPARATION		
		4.13.1 ORBIT CHANGE GENERAL SYSTEM MANAGEMENT		
		(Procedures in this para not designated as "required" are optional)		
	1	Obtain update from MSFN		
CMP	2	H_2/H_2O Separator Preparation (required) Remove separator from the water pistol and stow temporarily in LEB stowage bag Assure that separator on food preparation unit is secured with bayonet locks Install outlet cap on food preparation unit separator		
CMP, LMP	3	Propulsion Systems Checks, para 4.7.2.1 and 4.7.2.2		The following steps contain those system and subsystem verifications necessary to ensure operational status of the S/C prior to commencing thrust procedures.
	4	EPS DC and AC Checks, para 4.7.3.3 and 4.7.3.4		
ALL	5	Pressure Suit Circuit and PGA Check at 5.0 psia, para 4.7.4.9 (if required)		
	6	C&WS Operational Check, para 4.7.5.1		

NORMAL/BACKUP

STA/T	STEP	PROCEDURE	PANEL	REMARKS
CMP	7	CMC Self Check, para 4.10.1.10		
	8	DSKY Condition Light Test, para 4.10.1.11		
LMP	9	If SPS or SIVB ΔV, perform Cryo 02 and H2 Manual Fan Operation, para 4.7.3.10		
		4.13.2 EMS ORBIT CHANGE TEST		In-flight verification of X-axis accelerometer output, ΔV ind, the SPS THRUST light, and thrust cutoff relay in EMS.
CDR		EMS ΔV Test and Null Bias Check, para 4.9.6.1		

STA/T	STEP	PROCEDURE	PANEL	REMARKS
	4.14	G&N ORBIT CHANGE		If Lambert Aim Point Guidance Program (P31) desired, go to para 4.14.2. If Return to Earth Program (P37) desired, go to para 4.17.1.
	4.14.1	G&N ORBIT CHANGE EXTERNAL DELTA V PRETHRUSTING (P30)		The purpose of P30 is to accept targeting parameters from sources external to CMC and compute therefrom required velocity and other initial conditions required by CMC for execution of ΔV maneuver. Targeting parameters are impulsive ΔV along CSM local vertical axes at TIG and time of ignition (TIG). P30 displays, to flight crew and ground, certain specific dependent variables associated with desired maneuver for approval by flight crew/ground.
		CMC - on (required), para 4.10.1.2 ISS - on and orientation known (desired), para 4.10.1.2 & 4.11		ISS must be on and its orientation known to obtain middle gimbal display (step 5).
CMP	1	Key V37E 30E DSKY - P30	2,140	At this point, P30 sets TRACK and UPDATE flags.
	2	FL V06 N33 GETI, stored OOXXX. HRS OOOXX. MIN OXX.XX SEC Accept Record GETI PRO Reject V25E, load desired GETI		

NORMAL BACKUP

STA/T	STEP	PROCEDURE	PANEL	REMARKS
CMP	3	FL V06 N81 (ΔV components)	2,140	Stored components of ΔV along local vertical axes at GETI. If P30 is used to estimate perilune, load N81 as follows: +00000 +00010 +00000
		ΔVX, Y, Z (lcl vert at GETI) XXXX.X FPS		
		Accept PRO		PRO option resets UPDATE flag and sets external ΔV flag.
		Reject V25E, load desired data		
	4	FL V06 N42 (calculated thrust parameters) Ha XXXX.X NM Hp XXXX.X NM ΔV (required) XXXX.X FPS		Apogee and perigee altitude is measured above launch pad radius (earth orbit) or, for apolune and perilune, altitudes are measured above lunar radius at most recently defined landing site. Measurements are limited to 9999.9 NM. Calculated Ha and Hp in P30 will be considerably in error for long burns and should be ignored since the parameters are computed at time of ignition along CSM local vertical axis assuming an impulsive ΔV. ΔV is the magnitude of the impulsive ΔV vector at GETI.
		Coordinate parameters with MSFN (if avail)		
		Accept PRO Reject Reselect P30 or P27, load new parameters		

STA/T	STEP	PROCEDURE		PANEL	REMARKS
CMP	5	FL V16 N45		2,140	
		Marks (VHF/optics)	XXBXX MKS		Marks - Number of marks processed by R22. The two most significant digits display VHF ranging marks. The two least significant digits display optics mark counter. Optics mark counter does not distinguish between backup and primary marks.
-59:59		TF GETI (next burn)	XXBXX MIN-SEC		Constraint - R2 cannot be >59B59 at this point. If TF GETI >59 min 59 sec, display is limited. N35 may be used to get full time to ignition.
		MGA (next burn)	XXX.XX DEG		MGA will be displayed as -00002 at this point if IMU not on and orientation known (REFSMMAT flag reset). Otherwise, display is MGA at GETI if +X axis of CSM is aligned with initial thrust direction.
		Record values PRO Align GDC to IMU, para 4.10.2.6			
	6	FL V37 Key XXE			If average G on, R00 turns off average G, and zeros rendezvous mark and VHF ranging mark counters. Otherwise, counters are not zeroed. It also sets or resets RNDZ, TRACK, and UPDATE flags, depending on which programs are in progress or are called. It may recycle into P20 under certain conditions.
		Go to G&N/SPS Orbit Change (P40), para 4.14.3			These are thrusting options available.

NORMAL BACKUP

STA/T STEP	PROCEDURE	PANEL	REMARKS
CMP	or G&N/SM RCS Orbit Change (P41), para 4.14.4	2,140	
	or SCS Orbit Change, para 4.15		
	or IMU Realign (P52), para 4.11.2		IMU realign should be selected, if MGA is unsatisfactory in step 5.
	or G&N/SPS Deorbit Thrusting (P40), para 4.17.2		
	or G&N SM RCS Deorbit Thrusting (P41), para 4.17.3		
	or SCS Deorbit Thrusting, para 4.18		
	4.14.2 Lambert Aim Point Guidance Program (P31)		The purpose of this procedure is to accept targeting parameters from sources external to CMC and compute therefrom required velocity and other initial conditions required by CMC for execution of desired maneuver. The target parameters (GETI, target vector, ECSTEER, and ΔT transfer) are provided to the CMC via a previous execution of P27.
	CMC - on (required), para 4.10.1.2 ISS - on and orientation known (desired), para 4.10.1.2 & 4.11 P27 completed (required), para 4.10.1.5		
	1 Key V37E 31E DSKY - P31		At this point, P31 sets TRACK and UPDATE flags.
	2 FL V06 N33 GETI 00XXX. HRS 000XX. MIN 0XX.XX SEC		

G&N ORBIT CHANGE PRETHRUSTING (P31)

STA/T STEP	PROCEDURE	PANEL	REMARKS
CMP	Confirm value with MSFN (if available) 2,140		
	Accept Record GETI PRO		Resets UPDATE flag.
3	FL V06 N81 ΔVX, Y, Z (LV) XXXX.X FPS Confirm value with MSFN (if available) PRO		
4	FL V06 N42 Ha XXXX.X NM Hp XXXX.X NM ΔV XXXX.X FPS Coordinate with MSFN (if available)		Apogee and perigee altitude is measured above launch pad radius (earth orbit) or, for apolune and perilune, altitudes are measured above lunar radius at most recently defined landing site. ΔV is the magnitude of the impulsive ΔV vector at GETI. Measurements are limited to 9999.9 NM.
	Accept PRO Reject Key V37E XXE		Select either P27 to load new aim parameters or exit P31 and perform backup procedures.
5	FL V16 N45 Marks (VHF/optics) XXBXX MKS		Marks - number of marks processed by R22. The two most significant digits display VHF ranging marks. The two least significant digits display optics mark counter. Optics mark counter does not distinguish between backup and primary marks.

NORMAL BACKUP

STA/T STEP	PROCEDURE	PANEL	REMARKS
CMP	TF GETI MGA	XXBXX MIN-SEC 2,140 XXX.XX DEG	IMU on and orientation known.
		or - 00002	IMU not on or orientation unknown.
	PRO		
6	FL V37 Key XXE		Select desired thrusting program.

G&N ORBIT CHANGE PRETHRUSTING (P31)

STA/T STEP	PROCEDURE	PANEL	REMARKS
	4.14.3 G&N/SPS ORBIT CHANGE THRUSTING (P40)		The purpose of this procedure is: • To compute a preferred CSM attitude and IMU orientation for an SPS thrusting maneuver. • To calculate and display gimbal angles which would result if present IMU orientation is used for thrusting in the preferred vehicle attitude (function of R60 computations). Crew then decides whether to thrust at present IMU orientation or to reorient the IMU using P52 or P54. • To maneuver CSM to thrusting attitude (R60). • To control GNCS during SPS thrust countdown, ignition, thrusting, and thrust termination. • To allow trimming of residual steering errors.
	CMC - on (required), para 4.10.1.2 ISS - on with orientation known (required), para 4.10.1.2 & 4.11 SCS - on (required), para 4.10.2.2		All AUTO RCS switches must be OFF prior to SCS - on. G&C circuit breakers on all panels should be closed except as defined in Limited Use Controls, para 4.8.4.
	Orbit Change Vehicle Preparation (required), para 4.13		
CDR	CMC ATT - IMU .05 G sw - OFF	1	

NORMAL/BACKUP

STA/T	STEP	PROCEDURE	PANEL	REMARKS
CDR	1	Test C/W lamps EMS MODE - STBY EMS FUNC - ΔV SET Set ΔV ind EMS FUNC - ΔV RCS DAP - load and activate, including ullage selection, para 4.10.1.6 & 8	1	Since SPS trim values are used at beginning of P40 for computing preferred IMU orientation and final vehicle attitude, they should be reviewed at this time. SPS trim values will be updated during CMC-controlled burn. If a roll jet fails on during SPS thrust, an appreciable roll excursion (30°) may occur. The pitch-yaw DAP will continue to function properly.
CMP	2	Key V37E 00E DSKY - P00	2	P00 updates state vector periodically.
	3	Key V37E 40E DSKY - P40		P40 should be preceded by a complete prethrust program.
		Poss PROG alarm Key V05 N09E (to verify alarm) 00210 (ISS not on) or 00220 (IMU orientation unknown)		

STA/T STEP	PROCEDURE	PANEL	REMARKS
CMP	FL V37 Key XXE	2	When control is returned to CMC, program cycles through R00. R00 resets 3-AXIS flag and may set, or reset, RNDZ, TRACK and UPDATE flags, depending on which programs are in progress or are called. If alarms do not occur, at this point (after R02 exited), CMC uses initial thrust direction and engine bell trim angles, to compute preferred IMU orientation at preferred vehicle attitude for CSM position radius vector at TIG, and sets PREFERRED attitude flag. Final attitude will be computed (VECPOINT) during R60, and will point engine bell in initial thrust direction. The 0.5-degree deadband is set in RCS DAP, and R60 is automatically called.
4	If VG display desired Key V06 N81E VG X, Y, Z XXXX.X FPS (lcl vert at GETI)		Display is available until average G turned on (GETI -30 sec).
	(R60 - Attitude Maneuver)		Maneuvers CSM to final attitude based on attitude specified and stored in P40. The maneuver is performed automatically by the G&N, or manually with an optional final automatic G&N controlled trim maneuver.
5	FL V50 N18 (select CMC - auto) R, P, Y XXX.XX DEG		Display desired final gimbal angles.

NORMAL BACKUP

STA/T	STEP	PROCEDURE	PANEL	REMARKS
CMP		Establish Total Attitude display, para 4.9.2.5	2	Both FDAIs should be selected to provide redundant displays.
CDR		Accept BMAG MODE (3) - RATE 2 CMC attitude control - auto, para 4.9.1.6	1	Prevents BMAGs from hitting stops during maneuvers.
CMP		PRO	2	Initiates auto maneuver without review of final gimbal angles. If review of final gimbal angles is desired prior to auto maneuver, reject option should be selected. If desired, att set control panel can then be set to final gimbal angles in order to provide attitude error information for completion of maneuver manually in event of G&N failure.
		Reject Select desired attitude control mode, para 4.9.1 Maneuver to thrusting attitude ENTR - go to step 7		
	6	Auto maneuver V06 N18 (final attitude) R, P, Y XXX.XX DEG		These angles are obtained from a VECPOINT calculation. Maneuver rate will be as last defined by DAP load.
CDR,CMP		Monitor FDAIs (If RHC used or SCS selected, go to step 7)		CSM begins maneuver to final attitude when PRO keyed in step 5. CMC will monitor for RHC inputs, which will be interpreted as a manual override and will terminate auto maneuver.
CMP	7	FL V50 N18 (att trim enable) R, P, Y XXX.XX DEG		Final trim maneuver should be considered essential to SPS ΔV attitudes. Display of final gimbal angles remains in registers. Final attitude trim maneuver performed after Gimbal Drive and Trim Check.
LMP		Ignition preparation		Sets up nontime-critical switching required for thrusting.

STA/T STEP	PROCEDURE	PANEL	REMARKS
LMP	MN BUS TIE BAT A/C - on (up) Verify bat bus A current increase and/or bat voltage decrease MN BUS TIE BAT B/C - on (up) Verify bat bus B current increase and/or bat voltage decrease CAUTION If bat bus A (B) current fails to increase after cycling MN BUS TIE BAT A/C (B/C) switch, operate switch to OFF. Leave MN BUS TIE BAT B/C (A/C) switch on. Remove bat bus B (A) from mn bus B (A) as required by opening cb MNB(A) BAT BUS B(A) on pnl 275. Modify bat charging procedures to permit charging without reconfiguring main bus tie motor switches.	5	Verification of current increase for appropriate bat bus via DC AMPS ind (panel 3) assures successful operation of main bus tie motor switches.
	SPS He VLV tb (both) - bp SPS He VLV (both) - AUTO	3	
CDR	ROT CONTR PWR DIR (both) - OFF SC CONT - CMC CMC MODE - AUTO SCS TVC (2) - RATE CMD BMAG MODE (3) - ATT 1 RATE 2 RATE - LO ATT DBD - MIN	1	Provides rate damped TVC as backup to G&N when THC - CW. SCS auto or MTVC acceleration command are optional but less desirable backup modes.

NORMAL/BACKUP

STA/T STEP	PROCEDURE	PANEL	REMARKS
CDR	LV IND/GPI sw - GPI TVC GMBL DR (2) - AUTO	1	
05:00	Gimbal drive and trim check		PITCH and YAW GMBL caution/warning lights (panel 2) will not illuminate unless there is an actual overcurrent sensed.
	cb SPS PITCH 1 BAT A - close cb SPS YAW 1 BAT A - close	8	
	TVC SERVO PWR 1 - AC1/MNA TVC SERVO PWR 2 - AC2/MNB	7	
	TRANS CONTR PWR - on (up) ROT CONTR PWR NORM 2 - AC RHC 2 - ARMED	1	Opens RHC 2 (CDR's) breakout switches (dc) to prevent attitude maneuvers through CMC during MTVC checks. During a burn, RCS DAP is disabled at SPS ignition (TFI = 0).
	GMBL MOT PITCH 1 - START GMBL MOT YAW 1 - START		START position is momentary. Start motors sequentially at ≈1-second intervals to avoid electrical overload.
	Auto switchover check THC - CW RHC - verify no MTVC control GMBL POS (4) - no motion		Enables MTVC and switches TVC to channel 2. Verifies TVC control switches from channel 1 to 2 (which is off) when THC CW selected.

STA/T	STEP	PROCEDURE	PANEL	REMARKS
		Secondary TVC check		
CDR		GMBL MOT PITCH 2 - START	1	START position is momentary. Start motors sequentially at ≈ 1-second intervals.
		GMBL MOT YAW 2 - START		
		Confirm & set trim control		Verifies secondary gimbal trim control.
		SPS GMBL tw (2) - + & -		
		Set to CG trim values		The CG trim values can be obtained from DAP Data Load, para 4.10.1.6, or MSFN.
		RHC 2 - Verify MTVC		Gimbals drive in response to RHC movement, and return to set-in values when RHC neutral. Verifies control of secondary MTVC loops through RHC. Gimbal will move proportional to RHC deflection since MTVC integrator is not enabled until engine ignition.
		THC - neutral		
		ROT CONTR PWR NORM 2 - AC/DC		
	Accept	Complete auto att trim		Accept and reject options are relative to FL V50 N18 (att trim enable).
		BMAG MODE (3) - RATE 2		
		Align SC in roll		
		CMC attitude control - auto, para 4.9.1.6		
CMP		PRO	2	
		Return to V06 N18 display of step 6		This does not imply that any of the previous checks need be repeated for each trim enable.
CDR	Reject	Select Attitude Control desired, para 4.9.1		
		Verify/maneuver to thrust attitude		
CMP		(V62E for total att error display)		

NORMAL BACKUP

STA/T STEP	PROCEDURE	PANEL	REMARKS
CDR	ROT CONTR PWR DIR (both) - MNA/MNB MAN ATT (3) - RATE CMD RATE - HI	1	Enables manual direct RCS for overriding an auto RCS roll failure during SPS thrusting. If MTVC required, RATE - HIGH bypasses noise problem in SCS gyro assemblies because of thrusting vibration levels, which can cause spurious RCS roll jet firings.
	BMAG MODE (3) - ATT 1 RATE 2		
	or If RATE 1 ΔV planned BMAG MODE PITCH - RATE 1 BMAG MODE YAW - RATE 1		RATE 1 ΔV should be used for Lambert steering burns where angular change >15° or if gyro assembly 2 failed.
	or BMAG MODE (in axis) - RATE 1		
	Align GDC to IMU, para 4.10.2.6 (if necessary)		DSKY display option recommended because of its availability. All that need be done is set ATT SET tw to DSKY values and defer alignment until just prior to thrust.
	Check boresight star		
CMP	ENTR (exit R60)	2	
8	FL V50 N25 00204 (CMC GMBL drive test)		A manual drive, trim and MTVC check performed before CMC gimbal drive test enabled (PRO keyed).

STA/T STEP	PROCEDURE	PANEL	REMARKS
CMP	Accept PRO Monitor GMBL drive sequence	2	Enables CMC gimbal drive test.
	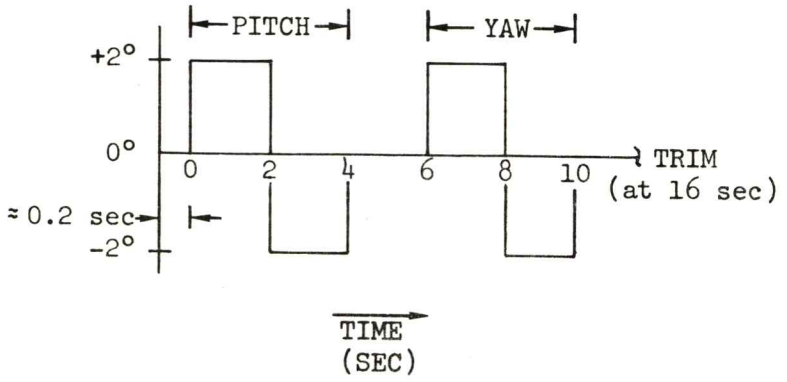		
	Reject ENTR GMBLs drive to trim position (after 4 sec)		If gimbal test sequence not desired, gimbals will drive to trim 4 seconds after ENTR keyed.
9	V06 N40 TF GETI XXBXX MIN-SEC VG XXXX.X FPS ΔV (accum) XXXX.X FPS		TF GETI - Max reading is 59B59. Sign is minus before nominal GETI, plus after. Event Timer will not agree with R1 if GETI was slipped.
CDR 10 02:00	2 minute countdown Report TFI GETI = 2 min FDAI SCALE - 5/5 (Deleted) ΔV THRUST A(B) - NORM THC - ARMED	1	Guarded.

NORMAL/BACKUP

STA/T STEP	PROCEDURE	PANEL	REMARKS
CDR,CMP	RHC (both) - ARMED		
	(State Vector Integration, R41)		
CMP			
00:40	If PROG alarm lt - on, CMC has slipped TIG DSKY R1 continues count to former TIG DSKY clears at new TIG -35 sec COMP ACTY lt - out (exit R41)	2	PROG alarm may illuminate between TIG -42.5 seconds and TIG -35 seconds. Delta amount TIG is slipped will be as required by CMC to complete state vector integration.
00:35	DSKY clears		
00:30	V06 N40 (ave G on)		Static display with COMP ACTY lt flash every 2 seconds.
	Check ΔV (accum) for PIPA bias R3 ≤0002.0 fps		G&N controlled burns will be unreliable if R3 >0002.0 fps.
00:25			
CDR	EMS MODE - NORM	1	Buildup of ΔV indicator errors, caused by accelerometer bias, minimized if set to NORM <30 seconds prior to thrusting.
00:29 to 00:06	Perform ullage (if required)		No ullage required if SPS sump tanks full. 2 or 4 jet ullage times for CSM/LM or CSM burns are defined in CSM Data Book, Vol I, SNA-8-D-027. THC +X for ≈1 second after ignition. Exact velocity change is not critical for ullage; there must have been a steady ullage to settle SPS propellants.

G&N SPS ORBIT CHANGE THRUSTING (P40)

STA/T STEP	PROCEDURE	PANEL	REMARKS
	xxxxxxxxxxxxxxxxxxxxxxxxxxx x x No ullage		
CDR	DIR ULL pb - push RHC - control attitude	1	Direct ullage inhibits P&Y auto RCS. Maintain attitude within deadband limits.
	x x xxxxxxxxxxxxxxxxxxxxxxxxxxx		
CMP 00:05 11	FL V99 N40 (Engine Enable)	2	CMC changes V06 to V99, but retains previous display in registers. Do not exercise extended verb or monitor displays for extended periods during TVC. These displays can override a FL V97 N40 (low thrust) display, which indicates CMC thinks engine is off, steering has stopped (including cutoff computations), and attitude hold is established.
	TF GETI XXBXX MIN-SEC VG XXXX.X FPS ΔV (accum) XXXX.X FPS		
	Accept PRO Go to step 12		
	Reject ENTR Go to step 15 Manual trim with RCS		If ENTR option selected, post SPS burn switching in step 14 must be accomplished.
	or V34E FL V37 Key XXE		If average G on, R00 turns off average G, zeros rendezvous optics mark and VHF ranging mark counters. Otherwise, counters are not zeroed. It also sets or resets RNDZ, TRACK, and UPDATE flags, depending on which programs are in progress or are called. It may also recycle into P20.

NORMAL BACKUP

STA/T STEP	PROCEDURE	PANEL	REMARKS
CDR 12 00:00	Ignition SPS THRUST lt - on	1	If LM off, CMC will not accept V46 or V48 during TVC. If LM on, CMC will accept V46 as cue for low bandwidth mode.
CMP	V06 N40 TFC XXBXX MIN-SEC VG (decr) XXXX.X FPS ΔV accum (incr) XXXX.X FPS	2	Time from engine cutoff. Sign (-) before cutoff, (+) thereafter. TFC display is discontinuous for 4 to 5 seconds after ignition.
CDR	ΔV ind - decreasing	1	
CMP	Poss PROG alarm Key V05 N09E (to verify alarm) 01407 (VG increasing)	2	
CDR IGN +1 sec	Discontinue ullage		RCS X-axis translation is discontinued by program 2 seconds after engine on command. RCS DAP is disabled at ignition.
IGN +2-5 sec	ΔV THRUST (2) - NORM (if desired)	1	For dual bank operation.
	xxxxxxxxxxxxxxxxxxxxxxxxxxxxxxxxxxxxxxxxxx If no ignition or premature shutdown		Engine restart should not be attempted within 5 seconds from initial ignition in order to avoid undesirable helium pressure excursions.
CDR	Continue ullage ΔV THRUST (2) - NORM Recycle step 12		Guarded.

STA/T STEP	PROCEDURE	PANEL	REMARKS
CMP	or If FL V97 N40 (R40) PRO - If thrust back on	2	If at any time during a non-impulsive thrusting period, thrust failure is detected by the CMC, thrust failure routine (R40) is called. If thrust decreases to some low level, VG and ΔV displays will continue changing. If thrust actually terminates prematurely, VG and ΔV displays will become static. For Lambert burns VG may not become static.
CDR	or ΔV THRUST (2) - NORM Reorient to thrust attitude	1	
CMP	ENTR - Recycle to step 11	2	If ENTR response to FL V97 N40, R1 (TFC) is set to 59B59.
	or Key V34E FL V37 Key XXE		Terminates P40 and R40.
	or Select SCS option		
CDR	or Discontinue ullage SC CONT - SCS ΔV THRUST (2) - NORM SCS TVC (2) - AUTO Initiate ullage THRUST ON pb - push	1	Depending on duration of burn, prior to failure, a motion transient could result if c.g. has shifted significantly from GMBL tw values.
	or SPS THRUST - DIR ON		Lever lock.
IGN +1 sec	Discontinue ullage		
	or Terminate maneuver		
	xxxxxxxxxxxxxxxxxxxxxxxxxxxxxxxxxxxxxxxxxx		

NORMAL/BACKUP

STA/T	STEP	PROCEDURE	PANEL	REMARKS
	13	Monitor SPS operation		
CDR		Pc ind - 95-105 psi	1	Green range on indicator is 65 to 125% (corresponds to psia). Normal Pc range is 95-105 psia.
LMP		SPS INJ VLV ind (4) - OPEN	3	
		SPS He VLV tb (both) - gray		Gray indicates valves open.
		SPS FUEL & OXID PRESS ind (2) - 170-195 psia		
		SPS OXID UNBAL ind - monitor		Oxidizer flow valve will be used to control OXID/FUEL mixture ratio to maintain oxidizer unbalance at ±0.0 lb throughout thrusting period. SPS OXID UNBAL and SPS FUEL and OXID QTY ind should not be relied upon for flow adjust until 25 seconds after SPS ignition.
		xxxx

STA/T STEP	PROCEDURE	PANEL	REMARKS
LMP	If SPS FUEL or OXID QTY ind is erratic, pegged or failed stationary in prim or aux modes PUG MODE - NORM	3	Probable loss of PUGS data.
	xxxxxxxxxxxxxxxxxxxxxxxxxxxxxxxxxxxxxxxxxx		
	OXID FLOW VLV INCR - as reqd SPS OXID VLV tb - verify		Switch position determined by SPS oxid unbalance. Continue SPS OXID UNBAL ind - monitor.
	xxxxxxxxxxxxxxxxxxxxxxxxxxxxxxxxxxxxxxxxxx		
	If no response of SPS OXID VLV tb during flow adjust OXID FLOW VLV INCR - NORM Wait 6 seconds OXID FLOW VLV PRIM - SEC OXID FLOW VLV INCR - as reqd OXID FLOW VLV tb - verify		Continue to monitor SPS OXID UNBAL ind and control oxid flow with OXID FLOW VLV PRIM sw in SEC position. Complete thrusting with OXID FLOW VLV PRIM sw in SEC position.
	If no response of SPS OXID VLV tb during flow, adjust in primary and secondary modes		Probable SPS OXID VLV tb failure.

NORMAL/BACKUP

STA/T STEP	PROCEDURE	PANEL	REMARKS
	CAUTION		
LMP	Do not use secondary oxid flow valve with primary valve functioning properly. Failure of secondary valve could result in loss of propellant management capability.		
	OXID FLOW VLV INCR - NORM Wait 6 seconds OXID FLOW VLV PRIM - PRIM OXID FLOW VLV INCR - as reqd	3	SPS OXID UNBAL ind trend may be used to confirm valve position.
	CAUTION		
CDR	If noncritical burn & ΔP >20 psi ΔV THRUST (2) - OFF	1	ΔP between F & OX should not exceed 20 psi during burn or degraded performance, rough combustion, and/or engine failure may result.
	FDAI - monitor errors & rates		Monitor for errors and/or rates which would require MTVC takeover.
	MTVC takeover THC - CW Maintain attitude control manually		

STA/T STEP	PROCEDURE	PANEL	REMARKS
CDR	or ΔV THRUST (2) - OFF	1	Guarded.
	Damp rates to IMU ball or out window		
	Reorient and hold thrusting attitude		
	THC - CW		
	ΔV THRUST A(B) - NORM		Guarded.
	Initiate ullage		
	THRUST ON pb - push		
	or SPS THRUST - DIR ON		Lever lock.
	Fly MTVC (RATE CMD)		
IGN +2-5 sec	ΔV THRUST B(A) - NORM (if desired)		For dual bank operation.
	Initiate ullage		Ullage and THRUST ON pb required to satisfy SCS logic for second bank operation.
	THRUST ON pb - push		
	or SPS THRUST - DIR ON		
	or Terminate maneuver		
	xxxxxxxxxxxxxxxxxxxxxxxxxxxxxxxxxxxxxxxxxxxx		
	xxxxxxxxxxxxxxxxxxxxxxxxxxxxxxxx		
	Roll att control failure		
CDR	MAN ATT ROLL - ACCEL CMD		ACCEL CMD position inhibits CMC roll commands and allows accel control of RCS auto coils with RHC.
	or AUTO RCS ROLL (8) - OFF		
	Use direct control		
	xxxxxxxxxxxxxxxxxxxxxxxxxxxxxxxx		

NORMAL BACK

STA/T STEP	PROCEDURE	PANEL	REMARKS
	14 Monitor SPS engine cutoff		
CDR	SPS THRUST lt - out	1	
CMP	FL V16 N40 (engine cutoff)	2	
	TFC (static at 2.5 sec from cutoff) XXBXX MIN-SEC		TFC - Time from cutoff. At cutoff +2.5 sec, CMC sets wide deadband in RCS DAP, and switches from TVC DAP to RCS DAP at cutoff +3.1 seconds.
	VG XXXX.X FPS		
	ΔV (accum) XXXX.X FPS		
CDR	Event Timer = 59:59 (-) thrust duration	1	Timer will normally count down from 59:59.
C/O+1 sec	ΔV THRUST (2) - OFF		Guarded.
	SPS THRUST - NORM (verify)		
	Report engine off		
	Pc = 0		
LMP	SPS INJ VLV ind (4) - CLOSE	3	
	SPS He VLV tb (both) - bp		Barber pole indicates valves closed.
C/O+2.5 sec	SPS GMBLs return to servo null		CMC removes TVC enable discrete (C/O indicated by TFC sign change, and VG → 0).
	For free drift		
CDR	BMAG MODE (3) - RATE 2	1	
	CMC MODE - FREE		
	(Deleted)		
	GMBL MOT PITCH 2 - OFF		Turn GMBL MOT switches OFF sequentially to avoid power surge. Turning servo 2 off first minimizes switching in the logic.
	GMBL MOT YAW 2 - OFF		
	GMBL MOT PITCH 1 - OFF		
	GMBL MOT YAW 1 - OFF		
	THC - neutral (if MTVC)		To prevent possibility of reignition, it is mandatory that ΔV THRUST sws be placed at OFF sometime prior to this step.

STA/T	STEP	PROCEDURE	PANEL	REMARKS
CDR		TVC SERVO PWR 2 - OFF	7	
		TVC SERVO PWR 1 - OFF		
		cb SPS PITCH 1 BAT A - open	8	
		cb SPS YAW 1 BAT A - open		
		EMS MODE - STBY	1	Buildup of ΔV indicator errors caused by accelerometer bias, minimized if set to STBY immediately after thrusting. Otherwise, ΔV indicator continues counting.
		Record ΔV ind		
CMP		PRO	2	At this point, CMC sets minimum deadband in RCS DAP.
	15	FL V16 N85 (VG vector components)		
		VGX, Y, Z (cont) XXXX.X FPS		Velocity to be gained resolved along CSM X, Y, and Z control axes. The VG vector is updated each computation cycle.
CDR		If VG component to be nulled		Optional. All AUTO RCS switches must be on for nulling residuals in 3 axes.
		Verify CMC MODE - AUTO or HOLD	1	
		RHC/THC - null out VG components		
		THC - neutral, LOCKED		
		RHC - LOCKED		
		If R30 desired		
CMP		Key V82E, go to step 16	2	
		To terminate P40		
		PRO, go to step 17		CMC sets last specified R03 deadband in RCS DAP.

NORMAL BACK

STA/T STEP	PROCEDURE	PANEL	REMARKS
	(R30 - Orbital Parameter Display)		R30 displays will be automatically updated at 2-second intervals if called at this point, since average G is still on.
CMP 16	FL V16 N44 (orbital parameters)	2	
	Ha XXXX.X NM		Ha = altitude of apogee above launch pad radius (earth orbit) or of apolune above the lunar radius at most recently defined lunar landing site (lunar orbit). These calculations are subject to the limitations of two-body approximations, and yield reasonable results if vehicle is close to earth or moon.
	Hp XXXX.X NM		Hp = altitude of perigee above the launch pad radius (earth orbit) or of perilune above lunar radius at most recently defined lunar landing site (lunar orbit).
	TFF XXBXX MIN-SEC		TFF = time of free fall to 49.4 NM (300,000 ft) above launch pad radius (earth orbit) or 5.8 NM (35,000 ft) above lunar radius at most recently defined lunar landing site (lunar orbit).
	If Hp >49.4 NM/5.8 NM		Hp for earth orbit or lunar orbit respectively.
	R3 = -59B59		If TFF = -59B59, time from perigee/perilune available via N32E.
	PRO (exit R30)		
	Return to step 15		

STA/T	STEP	PROCEDURE	PANEL	REMARKS
CMP	17	FL V37 Key XXE	2	If average G on, R00 turns off average G, and zeros rendezvous mark and VHF ranging mark counters. Otherwise counters are not zeroed. It also sets, or resets, RNDZ, TRACK, and UPDATE flags, depending on which programs are in progress or are called. Under certain conditions, it may recycle into P20.
	18	Set controls after tailoff		Monitor main bus voltage for maximum allowable (31 vdc) during power down sequence.
LMP CMP		MN BUS TIE (2) - OFF Record burn data	5	Recorded burn data should include the following: ΔV accomplished SPS propellant quantity remaining.
CDR		EMS FUNC - OFF TRANS CONTR PWR - OFF ROT CONTR PWR DIR (both) - OFF	1	
LMP	19	Charge batteries	3	
		If last MCC and lunar return, or TLI abort, go to Lunar Return Vehicle Preparation, para 4.16.2		To be performed prior to entry.

NORMAL BACKUP

STA/T	STEP	PROCEDURE	PANEL	REMARKS
	4.14.4	G&N SM RCS ORBIT CHANGE THRUSTING (P41)		Purpose:
		CMC - on (required), para 4.10.1.2 ISS - on with orientation known (required), para 4.10.1.2 & 4.11		To compute preferred CSM attitude and preferred IMU orientation for RCS thrusting maneuver and to maneuver CSM to thrusting attitude (R60).
		SCS - on (required), para 4.10.2.2		All AUTO RCS switches must be OFF prior to SCS - on. G&C circuit breakers on all panels are closed except as defined in Limited Use Controls, para 4.8.4.
CDR		CMC ATT - IMU .05 G sw - OFF Orbit Change Vehicle Preparation (required), para 4.13	1	
		Test C/W Lamps Load and Activate DAP, para 4.10.1.6 & 8		
CMP	1	Set Event Timer to read 00:00 at GETI		
		Key V37E 00E DSKY - P00	2	P00 updates state vector periodically.
	2	Select P41 Key V37E 41E		P41 should have been preceded by a complete prethrust program. Small Lambert maneuvers may have initial thrust attitude errors of up to 5° (at 140° transfer) or up to 30° (at 30° transfer). The angular error is approximately inversely proportional to burn magnitude. Maximum cross-axis velocity introduced would be $<\pi/6$ fps.
		Poss PROG alarm Key V05 N09E (to verify alarm) 00210 (ISS not on)		

STA/T STEP	PROCEDURE	PANEL	REMARKS
CMP	or 00220 (IMU orientation unknown)	2	
	FL V37 Key XXE		When control is returned to CMC, program cycles through R00. R00 resets 3-AXIS flag and may set, or reset, RNDZ, TRACK, and UPDATE flags, depending on which programs are in progress or are called. If alarms do not occur, at this point (after R02 exited), CMC computes initial thrust direction and initial value of VG (local vertical), computes preferred IMU orientation, sets PREFERRED attitude flag, and stores desired attitude for use in R60. Final attitude will be computed during R60 and the 0.5-degree deadband is set in RCS DAP.
3	If VG display desired Key V06 N81E VGX, Y, Z XXXX.X FPS (lcl vert at GETI)		Display is available until average G turned on (GETI -30 seconds).
	(R60 - Attitude Maneuver)		Maneuvers CSM to an attitude specified in P41. Maneuver is performed automatically by G&N, or manually, with an optional final automatic G&N controlled trim maneuver.
4	FL V50 N18 (select CMC - auto) R, P, Y XXX.XX DEG		Display desired final gimbal angles.
	Establish Total Attitude displays, para 4.9.2.5		Both FDAIs should be selected to provide redundant displays.

NORVAL BACK

STA/T	STEP	PROCEDURE	PANEL	REMARKS
CDR		Accept BMAG MODE (3) - RATE 2 CMC Attitude Control - auto, para 4.9.1.6	1	Prevents BMAGs from hitting stops during maneuvers.
CMP		PRO	2	Initiates auto maneuver without a review of final gimbal angles.
		Reject Select Attitude Control desired, para 4.9.1 Maneuver to thrusting attitude ENTR, go to step 7		All RCS channels should be enabled for nulling VGs in all 3 axes.
	5	Auto maneuver V06 N18 (final attitude) R, P, Y XXX.XX DEG		
		Monitor FDAIs		SC begins maneuver to final attitude when PRO keyed in step 4. Maneuver rate will be as last defined by DAP load. ICDU drives to achieve final gimbal angles. CMC will monitor for RHC inputs, which will be interpreted as a manual override and will terminate auto maneuver.
		If RHC used or SCS selected, go to step 6		
	6	FL V50 N18 (att trim enable)		This step should be completed prior to TIG -2 minutes.
		R, P, Y XXX.XX DEG		Display of final gimbal angles in registers.
CDR		Accept BMAG MODE (3) - RATE 2 CMC Attitude Control - auto, para 4.9.1.6	1	

STA/T STEP	PROCEDURE	PANEL	REMARKS
CMP	PRO, return to V06 N18 display of step 5	2	This does not imply that any of the previous checks need be repeated for each trim enable.
Reject	Select Attitude Control desired, para 4.9.1 Verify maneuver to thrusting attitude V62E for total attitude error display		
CDR	MAN ATT (3) - RATE CMD BMAG MODE (3) - ATT 1 RATE 2 Align GDC to IMU, para 4.10.2.6 (if necessary)	1	The DSKY display option is recommended because of its availability - all that need be done is set ATT SET tw to DSKY values and defer alignment until just prior to thrust.
CMP	ENTR (exit R60)	2	
7	Monitor VG display V06 N85 (VG vector components) VGX, Y, Z (cont) XXXX.X FPS		Vector components resolved along CSM control axes, and updated at 1-second intervals.
05:00 8	Ignition preparation		Sets up nontime-critical switching required for thrusting.
CDR	Check boresight star		
	For X Axis Thrusting TRANS CONTR PWR - on (up) Perform EMS ΔV Test and Null Bias Check, para 4.9.6.1 EMS MODE - STBY EMS FUNC - ΔV SET Set ΔV ind to reqd ΔV EMS FUNC - ΔV	1	Set to ΔV obtained from charts, in P30 and/or MSFN.

NORMAL BACKUP

STA/T STEP	PROCEDURE	PANEL	REMARKS
	(State Vector Integration, R41)		
CMP			
00:40	If PROG alarm lt - on, CMC has slipped TIG DSKY R1 continues count to former TIG DSKY clears at new TIG -35 sec COMP ACTY lt - out (exit R41)	2	PROG alarm may illuminate between TIG -42.5 seconds and TIG -35 seconds. Delta amount TIG is slipped will be as required by CMC to complete state vector integration.
00:35	DSKY clears		
00:30 9	V16 N85 (avg G on)		Static display, with COMP ACTY lt flash every 2 seconds.
CDR,CMP	RHC (both) - ARMED		
CDR	THC - ARMED		
	LIM CYCLE - OFF	1	For SCS translations.
	EMS MODE - NORM		Buildup of ΔV indicator errors, caused by accelerometer bias, minimized if set to NORM <30 seconds prior to thrusting.
CMP 10	RCS burn		
00:00	FL V16 N85 (request null VG) VGX, Y, Z (cont) XXXX.X FPS	2	Event Timer not valid if GETI slipped.
CDR	Manually null VG		Command manual translations and rotations to null VG components.
	If R30 desired		
CMP	Key V82E, go to step 11		
	To terminate P41		
	PRO, go to step 12		CMC sets last specified R03 deadband in RCS DAP.

G&N SM RCS ORBIT CHANGE THRUSTING (P41)

STA/T	STEP	PROCEDURE	PANEL	REMARKS
		(R30 - Orbital Parameter Display)		R30 displays will be automatically updated at 2-second intervals if called at this point, since average G is still on.
CMP	11	FL V16 N44 (orbital parameters)	2	
		Ha XXXX.X NM		Ha = altitude apogee above launch pad radius (earth orbit) or of apolune above lunar radius at most recently defined lunar landing site (lunar orbit).
		Hp XXXX.X NM		Hp = altitude of perigee above launch pad radius (earth orbit) or of perilune above lunar radius at most recently defined lunar landing site (lunar orbit).
		TFF XXBXX MIN-SEC		TFF = time of free fall to 49.4 NM (300,000 ft) above launch pad radius (earth orbit) or 5.8 NM (35,000 ft) above lunar radius at most recently defined lunar landing site (lunar orbit).
		If Hp >49.4 NM/5.8 NM		Hp for earth orbit and lunar orbit respectively.
		R3 = -59B59		If TFF = -59B59, time from perigee/perilune available via N32E.
		PRO (exit R30)		
		Return to step 10		
	12	Burn complete		
CDR		EMS MODE - STBY	1	Buildup of ΔV indicator errors, caused by accelerometer bias, minimized if set to STBY immediately after thrusting. Otherwise, ΔV indicator continues counting.
		Record ΔV ind		
		EMS FUNC - OFF		
		TRANS CONTR PWR - OFF		
		THC - neutral LOCKED		
CDR,CMP		RHC (both) - LOCKED		

NORMAL BACKUP

STA/T	STEP	PROCEDURE	PANEL	REMARKS
CMP	13	FL V37 Key XXE	2	If average G on, ROO turns off average G, and zeros rendezvous mark and VHF ranging mark counters. Otherwise counters are not zeroed. It also sets, or resets, RNDZ, TRACK, and UPDATE flags, depending on which programs are in progress or are called. Under certain conditions, it may recycle into P20.
		If last MCC and lunar return, or TLI abort, go to Lunar Return Vehicle Preparation, para 4.16.2		To be performed prior to entry.

STA/T	STEP	PROCEDURE	PANEL	REMARKS
		4.15 SCS ORBIT CHANGE		
		4.15.1 SCS/SPS ORBIT CHANGE THRUSTING		
		CMC - on (desired), para 4.10.1.2 ISS - on and orientation known (desired), para 4.10.1.2 Orbit Change Vehicle Preparation **(required), para 4.13** SCS - on (required), para 4.10.2.2		CMC and ISS on, and orientation known, necessary for P47 monitor. All AUTO RCS switches must be at OFF prior to SCS - on. G&C circuit breakers on all panels should be closed except as defined in Limited Use Controls, para 4.8.4.
CDR		CMC ATT - IMU .05 G sw - OFF	1	
ALL	1	Perform C&WS Operational Check, para 4.7.5.1		
CDR		EMS MODE - STBY EMS FUNC - ΔV SET Set ΔV ind EMS FUNC - ΔV		
CMP	2	Key V37E 00E	2	P00 updates state vector periodically.

NORMAL BACKUP

STA/T	STEP	PROCEDURE	PANEL	REMARKS
CDR	3	Establish Total Attitude displays, para 4.9.2.5		FDAI SEL switch must be in 1 or 2 position (with SCS displays) to obtain telemetry on BMAG attitude error.
	4	SCS Attitude Maneuver to thrusting attitude, para 4.10.2.5		
	5	Establish SCS Attitude Hold, para 4.9.1.4 Check boresight star		Limit cycle, max deadband and low rate should be selected for fuel conservation.
	6	Ignition preparation		Sets up the non-time critical switching required for thrusting.
LMP		SPS He VLV tb (both) - bp	3	Barber pole indicates valves are closed.
		SPS He VLV (both) - AUTO		
		MN BUS TIE BAT A/C - on (up)	5	
		Verify bat bus A current increase and/or bat voltage decrease	3	Verification of current increase for appropriate bat bus via DC AMPS ind (pnl 3) assures successful operation of main bus tie motor switches.
		MN BUS TIE BAT B/C - on (up)	5	
		Verify bat bus B current increase and/or bat voltage decrease	3	
		CAUTION If bat bus A(B) current fails to increase after cycling MN BUS TIE BAT A/C (B/C) switch, operate switch to OFF. Leave MN BUS TIE BAT B/C (A/C) switch on. Remove bat bus B(A) from main bus B(A) as required by opening cb MNB(A) BAT BUS B(A) on pnl 275. Modify bat charging procedures to permit charging without reconfiguring main bus tie motor switches.		

STA/T	STEP	PROCEDURE	PANEL	REMARKS
CDR		LV IND/GPI sw - GPI ROT CONTR PWR DIR (both) - OFF SCS TVC (2) - AUTO TVC GMBL DR (2) - AUTO ΔV CG - LM/CSM or CSM Establish ullage select, para 4.8.1	1	
CMP	7	If P47 for thrust monitor Key V37E 47E DSKY - P47	2	G&N monitor of ΔV is highly desirable, if available, but not a requirement. P47 should be called just prior to thrusting and terminated as soon as possible thereafter in order to minimize errors of bias and average G. P47 is normally used during rendezvous final phase. Any ΔV under G&N control during that phase would require P34, P40, or P41. Range, range rate, and theta may be displayed during P47 by calling R31. Range, range rate, and phi may be displayed during P47 by calling R34. Orbital parameters may be displayed by calling R30. Also, an SCS orbit change can be monitored by P40 if properly combined with G&N Prethrusting and Thrusting procedures, para 4.14.1 and 4.14.2.
		Poss PROG alarm Key V05 N09E (to verify alarm) 00210 (ISS not on) or 00220 (IMU orientation unknown)		N62 is callable during P47.
		FL V37 Key XXE		RSET and KEY REL pressed when nature of problem determined. When CMC regains control, program cycles through R00, which may set or reset RENDEZVOUS, TRACK and UPDATE flags, depending on which programs are in progress or are called.

STA/T	STEP	PROCEDURE	PANEL	REMARKS
CMP		FL V16 N83	2	
		ΔVX, Y, Z (cont) XXXX.X FPS		Displayed when average G turned on. CMC requires 12.5 seconds per time step to turn on average G. Time step = 240 seconds (earth orbit) or 350 seconds (lunar orbit).
05:00				
	8	Gimbal drive and trim check		PITCH and YAW GMBL caution/warning lights (panel 2) indicate overcurrent to actuator motors.
CDR		cb SPS PITCH 1 BAT A - close	8	
		cb SPS YAW 1 BAT A - close		
		TVC SERVO PWR 1 - AC1/MNA	7	
		TVC SERVO PWR 2 - AC2/MNB		
		TRANS CONTR PWR - on (up)	1	
		ROT CONTR PWR NORM 2 - AC		Opens RHC 2 (commander's) breakout switch dc circuits to prevent loss of attitude reference. Prevents RCS jets from firing when RHC is used for MTVC check. Normally IGN 1 signal disables RCS pitch and yaw channels 1 second after SPS engine ignition.
		RHC 2 - ARMED		
		Primary TVC check		Start motors sequentially at ≈1 second intervals to avoid electrical overload.
		GMBL MOT PITCH 1 - START		START position is momentary.
		GMBL MOT YAW 1 - START		
		Confirm trim control on indicators		Gimbals drive in response to thumbwheel movement. Verifies primary gimbal trim control.

STA/T STEP	PROCEDURE	PANEL	REMARKS
	Auto switchover check		
CDR	THC - CW		
	RHC 2 - verify no MTVC		
	GMBL POS ind (4) - no motion	1	Verifies TVC control switches from channel 1 to channel 2 (which is off) when THC - CW is selected.
	Secondary TVC check		
	GMBL MOT PITCH 2 - START		START position is momentary.
	GMBL MOT YAW 2 - START		
	Verify trim control		Verifies secondary gimbal trim control.
	Verify MTVC control		Gimbals drive in response to RHC movement, and return to set-in values when RHC is neutral. Verifies control of secondary MTVC loops through the RHC.
	THC - neutral		
	SPS GMBL tw (2) - set and confirm final desired gimbal position		Gimbals are trimmed in primary channel to thrusting values (SCS modes).
9	ROT CONTR PWR DIR (both) - MNA/MNB		Enables manual direct RCS override of a roll auto RCS failure during thrusting.
	RHC 2 - null att errors		Needles can be used as an error null reference during an MTVC contingency takeover from an automatic ΔV mode.
	ATT DBD - MIN		Set to MIN as errors are nulled.
	ROT CONTR PWR NORM (both) - AC/DC		
	Check boresight star		

NORMAL BACK

STA/T STEP	PROCEDURE	PANEL	REMARKS
CMP 10 -02:00 CDR	2-minute countdown Report TF GETI = 2 minutes FDAI SCALE - 5/5 (Deleted)	2 1	
	ΔV THRUST A(B) - NORM THC - ARMED LIM CYCLE - OFF		Guarded.
-00:30	EMS MODE - NORM		Buildup of ΔV indicator errors, caused by accelerometer bias, minimized if set to NORM <30 seconds prior to thrusting.
-00:29 to -00:06	Perform ullage (if required)		No ullage required if SPS sump tanks full. 2 or 4 jet ullage times are defined in SNA-8-D-027 CSM Data Book, Vol. I. Exact velocity change is not critical - only a steady ullage to settle SPS propellants.
	No ullage DIR ULL pb - push, hold RHC 2 - control attitude		Direct ullage inhibits pitch and yaw auto RCS control. Attitude should be maintained manually.

STA/T STEP	PROCEDURE	PANEL	REMARKS
CDR 11	Ignition		Engine restart should not be attempted within 5 seconds from initial ignition in order to avoid undesirable He pressure excursions.
00:00	If ullage is present THRUST ON pb - push	1	
	If no ullage is present THC - +X, hold THRUST ON pb - push		Provides ullage discrete to SCS.
	SPS THRUST lt - on		
IGN+1 sec	RATE - HI		Bypasses noise problem in SCS gyro assemblies because of thrusting vibration levels and provides backup to auto selection of high rate in pitch and yaw TVC.
	Discontinue ullage		
IGN +2-5 sec	ΔV THRUST (2) - NORM (if desired)		For dual bank operation.
	Initiate ullage THRUST ON pb - push		Ullage and THRUST ON pb required to satisfy SCS logic for second bank operation.
	If no ignition, or premature shutdown ΔV THRUST (2) - NORM Recycle step 11		
	or SPS THRUST - DIR ON Recycle step 11		Lever lock.
	or Terminate maneuver		

NORMAL BACKUP

STA/T	STEP	PROCEDURE	PANEL	REMARKS
	12	Monitor SPS operation		
CDR		Pc ind - 95-105 psia	1	
LMP		SPS INJ VLV ind (4) - OPEN	3	
		SPS He VLV tb (both) - gray		Gray indicates valves open.
		SPS FUEL & OXID PRESS ind (2) - 170-195 psia		
		SPS OXID UNBAL ind - monitor		The oxidizer flow valve will be used to control oxid/fuel mixture ratio to maintain oxidizer unbalance at 0.0 lbs throughout thrusting period. SPS OXID UNBAL and SPS FUEL and OXID indicators should not be relied upon for flow adjust until 25 seconds after SPS ignition.
		xxxxxxxxxxxxxxxxxxxxxxxxxxxxxxxxxxxxxx		
		If SPS OXID UNBAL ind is erratic, pegged or failed stationary PUG MODE - AUX		Use auxiliary PUGS for SPS OXID UNBAL indication.
		If SPS OXID UNBAL ind is erratic, pegged or failed in primary and auxiliary modes PUG MODE - NORM SPS FUEL & OXID QTY ind - monitor		Oxid flow valve will be used to control oxid/fuel mixture ratio to maintain SPS OXID QTY indicator within ±0.4% of SPS FUEL QTY indicator.
		If SPS FUEL or OXID QTY ind is erratic, pegged or failed stationary PUG MODE - AUX		

STA/T	STEP	PROCEDURE	PANEL	REMARKS
LMP		If SPS FUEL or OXID QTY ind is erratic, pegged or failed stationary in PRIM and AUX modes PUG MODE - NORM	3	Probable loss of PUGS data.
		xxxxxxxxxxxxxxxxxxxxxxxxxxxxxxxxxxxx		
		OXID FLOW VLV INCR - as req SPS OXID VLV tb - verify		Switch position determined by SPS oxid unbalance. Continue to monitor SPS OXID UNBAL indicator.
		xxxxxxxxxxxxxxxxxxxxxxxxxxxxxxxxxxxx		
		If no response of SPS OXID VLV tb during flow adjust OXID FLOW VLV INCR - NORM Wait 6 seconds OXID FLOW VLV PRIM - SEC OXID FLOW VLV INCR - as req OXID FLOW VLV tb - verify		Continue to monitor SPS OXID UNBAL indicator and control oxid flow with OXID FLOW VLV PRIM switch in SEC position. Complete thrusting with OXID FLOW VLV PRIM switch in SEC position.
		If no response of SPS OXID VLV tb during flow adjust in primary and secondary modes		Probable SPS OXID VLV tb failure.
		CAUTION Do not use secondary oxid flow valve with primary valve functioning properly. Failure of secondary valve could result in loss of propellant management capability.		

NORMAL BACKUP

STA/T	STEP	PROCEDURE	PANEL	REMARKS
LMP		OXID FLOW VLV INCR - NORM Wait 6 seconds OXID FLOW VLV PRIM - PRIM OXID FLOW VLV INCR - as req	3	SPS OXID UNBAL indicator trend may be used to confirm valve position.
		xxxxxxxxxxxxxxxxxxxxxxxxxxxxxxxxxxxx		
		CAUTION If noncritical burn & ΔP >20 psi,		ΔP between FUEL & OXID should not exceed 20 psi during a burn or degraded performance, rough combustion and/or engine failure may result.
CDR		ΔV THRUST (2) - OFF	1	Guarded.
CDR or CMP		FDAI - monitor att error & rates	1,2	
		xxxxxxxxxxxxxxxxxxxxxxxxxxxxxxxxxxxx		
CDR		MTVC takeover If pitch and yaw errors and rates abnormal ΔV THRUST (2) - OFF Damp rates to IMU ball or out window with RHC	1	Backup procedure bypasses maximum possible failure modes, thereby providing an alternate means of completing burn without troubleshooting.
		If no response Use direct RCS and disable affected channel If rate needle(s) abnormal BMAG MODE - RATE 1		Since a failure causing abnormal TVC and RCS attitude control would not be a failed-on jet, RCS disabling should be done with MAN ATT switch to ACCEL CMD rather than AUTO RCS switches OFF, thereby providing auto RCS control for reorientation.

STA/T STEP	PROCEDURE	PANEL	REMARKS
CDR	Reorient to thrusting attitude THC - CW ΔV THRUST A(B) - NORM Initiate ullage THRUST ON pb - push	1	Guarded.
	or SPS THRUST - DIR ON		Lever lock.
	Fly MTVC (RATE CMD)		
IGN+2-5 sec	ΔV THRUST B(A) - NORM (if desired) Initiate ullage THRUST ON pb - push		For dual bank operation. Ullage and THRUST ON pb required to satisfy SCS logic for second bank operation.
	or SPS THRUST - DIR ON		Lever lock.
	or Terminate maneuver		
	xxxxxxxxxxxxxxxxxxxxxxxxxxxxxxxxxxxxxxxx		
	xxxxxxxxxxxxxxxxxxxxxxxxxxxxxxxxxxxxxxxx Roll errors and rates abnormal and no roll att control MAN ATT ROLL - ACCEL CMD RHC - control roll rates		
	or AUTO RCS (16) - OFF Control roll using direct	8	
	xxxxxxxxxxxxxxxxxxxxxxxxxxxxxxxxxxxxxxxx		

NORMAL/BACKUP

STA/T	STEP	PROCEDURE	PANEL	REMARKS
CDR	13	Monitor SPS Engine Cutoff		
		SPS THRUST lt - out	1	SPS THRUST lt is turned off and thrust terminated when ΔV ind goes through ≈-0.1. Timer normally counts down from 59:59.
		EVNT TMR ind - 59:59 minus thrust duration		
		ΔV THRUST (2) - OFF		Guarded. Time-critical backup to normal SPS thrust cutoff.
		SPS THRUST - NORM		Lever lock.
		For free drift		
		MAN ATT (3) - ACCEL CMD		
		Report engine cutoff		
		Pc = 0		
LMP		SPS INJ VLV ind (4) - CLOSE	3	
		SPS He VLV tb (both) - bp		Barber pole indicates valves are closed.
	14	Set controls after tailoff		
		(Deleted)		
CDR		GMBL MOT PITCH 2 - OFF	1	Turning off servo 2 first minimizes switching in the logic. Set GMBL MOT switches OFF at one second intervals to avoid electrical overload.
		GMBL MOT YAW 2 - OFF		
		GMBL MOT PITCH 1 - OFF		
		GMBL MOT YAW 1 - OFF		
		EMS MODE - STBY		Buildup of ΔV indicator errors, caused by accelerometer bias, minimized if set to STBY immediately after thrusting. Otherwise, ΔV indicator continues counting.
CMP		Record ΔV ind		
CDR		TVC SERVO PWR (both) - OFF	7	
		cb SPS PITCH 1 BAT A - open	8	
		cb SPS YAW 1 BAT A - open		
		ATT DBD - MAX	1	
CDR,CMP		THC, RHC - LOCKED		
CDR		ROT CONTR PWR DIR (both) - OFF		
CMP		(To re-zero registers, V32E)	2	Provides capability to monitor another burn without going through R00.

STA/T	STEP	PROCEDURE	PANEL	REMARKS
CMP	15	PRO (exit P47)	2	When P47 termination desired.
	16	FL V37 Key XXE		If average G on, R00 turns off average G, zeros rendezvous optics mark and VHF ranging mark counters. Otherwise, counters not zeroed. It also sets or resets RNDZ, TRACK, and UPDATE flags, depending on which programs in progress or called. If may also recycle into P20.
LMP		MN BUS TIE (2) - OFF	5	
CDR		EMS FUNC - OFF	1	
LMP		Charge batteries, para 4.7.3.5		
		If last MCC and lunar return, or TLI abort, go to Lunar Return Vehicle Preparation, para 4.16.2		**To be performed prior to entry.**

NORMAL BACKUP

STA/T	STEP	PROCEDURE	PANEL	REMARKS
		4.15.2 SCS/SM RCS ORBIT CHANGE THRUSTING		
		CMC - on (desired), para 4.10.1.2 ISS - on and orientation known (desired), para 4.10.1.2 Orbit Change Vehicle Preparation (required), para 4.13 SCS - on (required), para 4.10.2.2		CMC and ISS on, and orientation known, necessary for P47 monitor.
CDR		CMC ATT - IMU .05 G sw - OFF	1	
CMP	1	Key V37E 00E	2	P00 updates state vector periodically.
CDR	2	Establish Total Attitude display, para 4.9.2.5		
	3	Select Attitude Control desired, para 4.9.1 Maneuver to thrusting attitude		
	4	Establish SCS Attitude Hold, para 4.9.1.4		Limit cycle, maximum deadband and low rate should be selected for fuel conservation.
-05:00				
	5	Check boresight star		
	6	For X-axis thrusting Perform EMS ΔV Test & Null Bias check, para 4.9.6.1 EMS MODE - STBY EMS FUNC - ΔV SET Set ΔV ind EMS FUNC - ΔV	1	

STA/T	STEP	PROCEDURE	PANEL	REMARKS
CMP	7	If P47 for thrust monitor Key V37E 47E DSKY - P47	2	G&N monitor of ΔV is highly desirable, if available, but not a requirement. P47 should be called just prior to thrusting and terminated as soon as possible thereafter in order to minimize errors of bias and average G. P47 is normally used during rendezvous final phase. Any ΔV under G&N control during that phase would require P34, P40, or P41. Range, range rate, and theta may be displayed during P47 by calling R31. Range, range rate, and phi may be displayed during P47 by calling R34. Orbital parameters may be displayed by calling R30. Also, an SCS orbit change can be monitored by P40 if properly combined with G&N Prethrusting and Thrusting procedures, para 4.14.1 and 4.14.2.
		Poss PROG alarm Key V05 N09E (to verify alarm) 00210 (ISS not on) or 00220 (IMU orientation unknown)		N62 is callable during P47.
		FL V37 Key XXE		RSET and KEY REL pressed when nature of problem determined. When CMC regains control, program cycles through R00, which may set or reset RENDEZVOUS, TRACK, and UPDATE flags, depending on which programs are in progress or are called. It may recycle into P20 under certain conditions.
		FL V16 N83 ΔVX, Y, Z (cont) XXXX.X FPS		Displayed when average G turned on. CMC requires 12.5 seconds per time step to turn on average G. Time step = 240 seconds (earth orbit) or 350 seconds (lunar orbit).

NORMAL/BACKUP

STA/T	STEP	PROCEDURE	PANEL	REMARKS
-00:30				
CDR,				
CMP	8	RHC (both) - ARMED		
CDR		THC - ARMED		
		ATT DBD - MIN	1	
		LIM CYCLE - OFF		
		EMS MODE - NORM		Buildup of ΔV indicator errors, caused by accelerometer bias, minimized if set to NORM <30 seconds prior to thrusting.
00:00				
CDR	9	RCS burn Manually null VG		
	10	EMS MODE - STBY		Buildup of ΔV indicator errors, caused by accelerometer bias, minimized if set to STBY immediately after thrusting. Otherwise ΔV indicator continues counting.
		Record ΔV components		
		EMS FUNC - OFF		
		THC - neutral, LOCKED		
CDR,CMP		RHC (both) - LOCKED		
CMP		(To re-zero registers, V32E)	2	Provides capability to monitor another burn without going through R00.
	11	PRO (exit P47)		When termination desired.
	12	FL V37 Key XXE		If average G on, R00 turns off average G, zeros rendezvous optics mark and VHF ranging mark counters. Otherwise, counters not zeroed. It also sets or resets RNDZ, TRACK, and UPDATE flags, depending on which programs in progress or called. It may also recycle into P20.

STA/T STEP	PROCEDURE	PANEL	REMARKS
CMP	If last MCC and lunar return, or TLI abort, go to Lunar Return Vehicle Preparation, para 4.16.2		To be performed prior to entry.

NORMAL BACKUP

STA/T	STEP	PROCEDURE	PANEL	REMARKS
		4.16 DEORBIT AND ENTRY OR LUNAR RETURN ENTRY VEHICLE PREPARATION		
		4.16.1 DEORBIT AND ENTRY VEHICLE PREPARATION		This section applies to any deorbit: SPS or RCS, pure or hybrid, whether G&N, SCS or manually controlled.
		(Procedures in this para not designated as "required" are optional)		
		4.16.1.1 Deorbit General System Management		
		Cabin Cold-Soak Operation (GETI minus 8 to 12 Hrs), para 4.7.4.13		Provides cabin heat-sink during entry.
		If cold-soak option not exercised		
CMP		SEC EVAP H2O CONT - AUTO (required)	382	
	1	Obtain update from MSFN		Para 4.16.1.1 through 4.16.1.3 should be performed prior to deorbit burn to minimize crew workload between deorbit and entry.
LMP	2	Configure TLM (required) TAPE RCDR FWD - off (ctr) PCM BIT RATE - HI UP TLM CMD - RSET, then NORM	3	MSFN will dump and rewind tape recorder and return control of DSE to crew at last MSFN contact prior to deorbit burn. At this time, TAPE RCDR switches will be placed to RCD and off (ctr) and PCM BIT RATE switch to HI in preparation for DSE operation during deorbit SPS burn, entry and earth landing phases.
CMP, LMP	3	Perform Propulsion Systems checks, para 4.7.2.1 and 4.7.2.3		Steps 3 through 11 contain those system and subsystem verifications necessary to ensure operational status of the spacecraft prior to commencing thrust and entry procedures.

NORMAL BACKUP

STA/T	STEP	PROCEDURE	PANEL	REMARKS
CMP, LMP	4	Perform EPS DC and AC checks, para 4.7.3.3 and 4.7.3.4 Verify PYRO BAT A(B) >35 vdc		
		xxxxxxxxxxxxxxxxxxxxxxxxxxxxxxxxxxxxxxx If PYRO BAT A(B) <35 vdc cb PYRO A(B)/SEQ A(B) - open cb PYRO A(B) BAT BUS A(B) - close xxxxxxxxxxxxxxxxxxxxxxxxxxxxxxxxxxxxxxx	250	
	5	Perform ECS Monitoring Check, para 4.7.4.1		
	6	Remove needle assembly from inject port and stow (required)	352	Water chlorination needle assembly must be removed and stowed in volume B4 prior to opening or closing camera equipment compartment B8.
	7	Stow H2/H20 Separators (required) Remove separator bags from stowage Disconnect separators from water pistol and food preparation unit Place separators in stowage bags Stow separators		Stowed in compartment A1. Stow in compartment A1.
	8	Stow loose gear (required)		
	9	Perform CMC Self-Check Procedure, para 4.10.1.10		
LMP	10	Perform DSKY Condition Light Test, para 4.10.1.11		

STA/T	STEP	PROCEDURE	PANEL	REMARKS
LMP	11	Perform C&WS Operational Check, para 4.7.5.1	352	
	12	Perform P52 IMU Alignment, para 4.11.2		
		4.16.1.2 EMS Deorbit and Entry Test		Lift vector up lt and lift vector dn lt are relevant to entry from a lunar mission. Illumination of lights other than those listed is a malfunction indication. ΔV/EMS SET switch is used both for slewing G-V scroll and for setting RNG indicator.
	1	Initial EMS preparation		
CDR		Verify EMS FUNC - OFF	1	
		cb EMS (2) - close	8	
		EMS MODE - STBY	1	
	2	EMS FUNC - EMS TEST 1		Test 1 checks lower trip-point of .05 G comparator.
		Adjust alphanumeric brightness (option)		
		Wait 5 sec		
	3	EMS MODE - NORM (wait 10 sec min)		Ten seconds should be allowed to verify no malfunctions. No light should come on before or after 10 seconds.
		Check ind lts - out		
		RNG ind - 0.0		
		Slew scroll until hairline is superimposed on notch in next self-test pattern		EMS scroll can be slewed only one inch in reverse.
	4	EMS FUNC - EMS TEST 2		Test 2 checks upper trip-point of .05 G comparator. No other light should come on before or after 10 seconds.
		Wait 10 sec		
		.05 G lt - on (all others out)		

NORMAL/BACKUP

STA/T	STEP	PROCEDURE	PANEL	REMARKS
CDR	5	EMS FUNC - EMS TEST 3	1	Test 3 checks corridor verification circuitry associated with lift vector dn lt.
		.05 G lt - on Lift vector dn lt - on (10 sec after .05 G lt)		(G <.2). No other light should come on before or after 10 seconds.
		Set RNG ind to 58.0 NM ±0.0		For negative numbers RNG indicator will display minus sign in most significant digit. No sign will appear for positive numbers.
	6	EMS FUNC - EMS TEST 4 .05 G lt - on (all others out) G-V trace (during 10 sec period) within test pattern After 10 sec, G-V trace stops at lower right corner of test pattern at ≈9 G RNG ind (during 10 sec period) counts toward zero. After 10 sec, stops at ≈0.0±0.2		Test 4 checks range-to-go integrator circuits, range-to-go indicator, G-V servo circuits, and G-V plotter.
	7	EMS FUNC - EMS TEST 5 .05 G lt - on Lift vector up lt - on (10 sec after .05 G lt) RNG ind - 0.0 Scribe traces vertical line ≈9 G to 0.22±0.1 and stops (trace within test pattern) Align G-V scroll to entry pattern (hairline on 37K fps line)		Test 5 checks the corridor verification circuitry associated with the lift vector up lt. Enables slewing of scroll to start of entry pattern. After scroll is set to less than 37K fps, it is not permissible to return to function switch position EMS TEST 5 (range integrator and scroll synchronization would be lost).

STA/T	STEP	PROCEDURE	PANEL	REMARKS
CDR	8	EMS FUNC - RNG SET G-V traces vertical line ≈0.22 G to 0.0±0.1 and stops	1	
	9	EMS FUNC - Vo SET Slew scroll until display index (arrow) is aligned to predicted entry velocity		Scroll can be slewed only one inch in reverse. In Vo SET position, both initial velocity in range integrator and scroll velocity are simultaneously changed.
	10	EMS ΔV Test and Null Bias Check, para 4.9.6.1		
		4.16.1.3 Deorbit System Preparation		
		If suited		
ALL		Perform Pressure Suit Circuit and PGA Check at 5.0 psia, para 4.7.4.9		
		Mae Wests - donned		
CMP		EMER CAB PRESS sel - OFF	351	
-1:00:00				
	1	CM RCS temperature check		
		SYS TEST (2) - 5C, 5D, 6A, 6B, 6C, and 6D	101	
		If lowest reading is <3.9 vdc (28°F), preheat CM RCS		
CDR		cb CM RCS HTRS (both) - close	8	
		cb RCS LOGIC (2) - close		
		CM RCS LOGIC - on (up)	1	
CMP		CM RCS HTRS - on (up) (for 20 min)	101	

NORMAL BACKUP

STA/T	STEP	PROCEDURE	PANEL	REMARKS
CMP	2	URINE DUMP - OFF	101	
	3	WASTE H20 DUMP - OFF		
	4	Align RSI and GDC, para 4.9.6.3		
CDR	5	Set FDAI 2 on ORB RATE & restow, para 4.10.2.8		
CMP -40:00	6	CM RCS heating completion (if performed) CM RCS HTRS - OFF		
	7	Configure entry batteries (required) cb MNA BAT C - close cb MNB BAT C - close	275	
	8	If SPS ΔV perform Cryo 02 and H2 Manual Fan Operation, para 4.7.3.10		
CDR	9	Panel 8 - all cb closed except (required) cb PL VENT FLT/PL - open cb FLOAT BAG (all) - open cb EDS (3) - open cb CM RCS HTRS (both) - open	8	
	10	Sequencer test and CM RCS activation (required) After MSFN AOS SECS LOGIC (both) - on (up) Report Logic Arm ELS AUTO - AUTO ELS LOGIC - on (up)	 1	 Lever lock.

STA/T	STEP	PROCEDURE	PANEL	REMARKS
		After GO from MSFN		
CDR		ELS AUTO - MAN	1	
		ELS LOGIC - OFF		
		SECS PYRO ARM (2) - on (up)	8	Lever lock.
CMP		CM RCS PRPLNT (both) - on (up)	2	On position is momentary.
		CM RCS PRPLNT tb (both) - gray		Indicates propellant isolation valves are open.
		CM RCS PRESS - on (up)		Guarded. On position is momentary.
		RCS IND sel - CM 1, then 2		
		RCS He PRESS ind - stabilizes at 3300-3500 psia ≈15 min after activation		Immediately after pressurization, He pressure is <3300-3500 psia.
		RCS MANF PRESS ind - 287-302 psia		
		If docking ring still in place		
		CSM/LM FNL SEP (both) - on (up)		Guarded. On position is momentary. Jettisons docking ring.
CDR		SECS PYRO ARM (2) - SAFE	8	
		SECS LOGIC (both) - OFF		
CMP	11	If SCS - select P00	2	
	12	Activate counterbalance mechanism, para 4.7.7.3, step b (required)	Side hatch	If deactivated for EVA.
	13	Strut unlock lanyard (2) - unstow and attach handle ends to MDC (required)		
		Go to G&N DEORBIT AND ENTRY, para 4.17		
		or SCS DEORBIT AND ENTRY, para 4.18		

NORMAL BACKUP

STA/T	STEP	PROCEDURE	PANEL	REMARKS
		4.16.2 LUNAR RETURN VEHICLE PREPARATION		
		(Procedures in this para not designated as "required" are optional)		
		4.16.2.1 Lunar Return Entry Vehicle Preparation		Performed during period of coast prior to SM jettison. It is assumed that a final MCC has been accomplished prior to entering this procedure.
		Cabin Cold-Soak Operation (EI Minus 8 to 12 Hrs), para 4.7.4.13		EI (Entry Interface) ≈400,000 feet.
		If cold-soak option not exercised		
CMP		SEC EVAP H20 CONT - AUTO (required)	382	
		CMC - on, para 4.10.1.2 ISS - on and orientation known, para 4.10.1.2 and 4.11 SCS - on (required), para 4.10.2.2 DAP Data Load - complete, para 4.10.1.6 and 4.10.1.8		
	1	Obtain update and entry data from MSFN		
LMP	2	Configure TLM (required) TAPE RCDR FWD - off (ctr) PCM BIT RATE - HI UP TLM CMD - RSET, then NORM	2	MSFN will dump and rewind tape recorder and return control of DSE to crew at last MSFN **contact prior** to EI. At this time, TAPE RCDR switches will be placed to RCD and off (ctr) and PCM BIT RATE switch to HI in preparation for DSE operation during entry and earth landing phases.

STA/T	STEP	PROCEDURE	PANEL	REMARKS
CMP, LMP	3	Perform Propulsion Systems checks, para 4.7.2.2 and 4.7.2.3		Steps 3 through 11 contain those system and subsystem verifications necessary to ensure operational status of spacecraft prior to commencing entry procedures.
	4	Perform EPS DC and AC checks, para 4.7.3.3 and 4.7.3.4		
		Verify PYRO BAT A(B) >35 vdc	3	
		xxxxxxxxxxxxxxxxxxxxxxxxxxxxxxxxxxxxxx		
		If PYRO BAT A(B) <35 vdc		
LMP		cb PYRO A(B)/SEQ A(B) - open	250	
		cb PYRO A(B) BAT BUS A(B) - close		
		xxxxxxxxxxxxxxxxxxxxxxxxxxxxxxxxxxxxxx		
CMP, LMP	5	Perform ECS Monitoring check, para 4.7.4.1		
	6	Remove needle assembly from inject port and stow (required)	352	Water chlorination needle assembly must be removed and stowed in volume B4 prior to opening or closing camera equipment compartment B8.
	7	Stow H2/H2O Separators (required)		
		Remove separator bags from stowage		Stowed in compartment A1.
		Disconnect separators from water pistol and food preparation unit		
		Place separators in stowage bags		
		Stow separators		Stow in compartment A1.
	8	Stow loose gear (required)		
	9	Perform CMC Self-Check procedure, para 4.10.1.10		

NORMAL BACKGROUND

STA/T	STEP	PROCEDURE	PANEL	REMARKS
CMP, LMP	10	Perform DSKY Condition Light test, para 4.10.1.11		
	11	Perform C&WS Operational check, para 4.7.5.1		
	12	Perform P52 IMU Alignment, para 4.11.2		
		4.16.2.2 EMS Entry Test		Lift vector up lt and lift vector dn lt are relevant to entry from a lunar mission. Illumination of lights other than those listed is a malfunction indication. ΔV/EMS SET switch is used both for slewing G-V scroll and for setting RNG indicator.
	1	Initial EMS preparation		
CDR		Verify EMS FUNC - OFF	1	
		cb EMS (2) - close	8	
		EMS MODE - STBY	1	
	2	EMS FUNC - EMS TEST 1		Test 1 checks lower trip-point of .05 G comparator.
		Adjust alphanumeric brightness (option)		
		Wait 5 sec		
	3	EMS MODE - NORM (wait 10 sec min)		Ten seconds should be allowed to verify no malfunctions. No light should come on before or after 10 seconds.
		Check ind lts - out		
		RNG ind - 0.0		
		Slew scroll until hairline is superimposed on notch in next self-test pattern		EMS scroll can be slewed only one inch in reverse.

STA/T	STEP	PROCEDURE	PANEL	REMARKS
CDR	4	EMS FUNC - EMS TEST 2 Wait 10 sec .05 G lt - on (all others out)	1	Test 2 checks upper trip-point of .05 G comparator. No other light should come on before or after 10 seconds.
	5	EMS FUNC - EMS TEST 3 .05 G lt - on		Test 3 checks corridor verification circuitry associated with lift vector dn lt.
		Lift vector dn lt - on (10 sec after .05 G lt)		(G<.2). No other light should come on, before or after 10 seconds.
		Set RNG ind to 58.0 NM ±0.0		For negative numbers RNG indicator will display a minus sign in most significant digit. No sign will appear for positive numbers.
	6	EMS FUNC - EMS TEST 4 .05 G lt - on (all others out) G-V trace (during 10 sec period) within test pattern After 10 sec, G-V trace stops at lower right corner of test pattern at ≈9 G RNG ind (during 10 sec period) counts toward zero. After 10 sec, stops at ≈0.0±0.2		Test 4 checks range-to-go integrator circuits, range-to-go indicator, G-V servo circuits, and G-V plotter.
	7	EMS FUNC - EMS TEST 5 .05 G lt - on Lift vector up lt - on (10 sec after .05 G lt) RNG ind - 0.0 Scribe traces vertical line ≈9 G to 0.22±0.1 and stops (trace within test pattern) Align scroll to entry pattern (hairline on 37K fps line)		Test 5 checks corridor verification circuitry associated with lift vector up lt. Enables slewing of scroll to start of entry pattern. After scroll is set to less than 37K fps, it is not permissible to return to function switch position EMS TEST 5 (range integrator and scroll synchronization would be lost).

NORMAL BACKUP

STA/T	STEP	PROCEDURE	PANEL	REMARKS
CDR	8	EMS FUNC - RNG SET G-V traces vertical line ≈0.22 G to 0.0±0.1 and stops	1	
	9	Slew RNG ind to predicted RTOGO from .05 G		
	10	EMS FUNC - Vo SET Slew scroll until display index (arrow) is aligned to predicted entry velocity If entry velocity >37,000 FPS Slew scroll (incr) until value under +2K velocity plus 2000 FPS = Vo CAUTION Never slew scroll in (incr) direction more than 1500 FPS so that range integrator remains slaved to the scroll velocity.		Scroll can be slewed only one inch in reverse. In Vo SET position, both initial velocity in range integrator and scroll velocity are simultaneously changed. Example: Entry velocity Vo = 38,200 FPS Value under +2K index = 36,200 FPS.
	11	EMS ΔV Test and Null Bias Check, para 4.9.6.1		
		4.16.2.3 Entry Systems Preparation		
		If suited		
ALL		Perform Pressure Suit Circuit and PGA check at 5.0 psia, para 4.7.4.9		
		Mae Wests - donned		
CMP		EMER CAB PRESS sel - OFF	351	

STA/T	STEP	PROCEDURE	PANEL	REMARKS
EI 1:00:00	1	CM RCS Temperature Check SYS TEST (2) - 5C, 5D, 6A, 6B, 6C, and 6D If lowest reading is <3.9 vdc (28°F), preheat CM RCS	101	
CDR		cb CM RCS HTRS (both) - close	8	
		cb RCS LOGIC (2) - close		
		CM RCS LOGIC - on (up)	1	
CMP		CM RCS HTRS - on (up) (for 20 min)	101	
	2	URINE DUMP - OFF		
	3	WASTE H2O DUMP - OFF		
	4	Align RSI and GDC, para 4.9.6.3		
	5	CM RCS heating completion (if performed)		
EI -40:00		CM RCS HTRS - OFF		
	6	Configure Entry Batteries (required)		
LMP		cb MNA BAT C - close	275	
		cb MNB BAT C - close		

NORTH AMERICAN ROCKWELL

STA/T	STEP	PROCEDURE	PANEL	REMARKS
CDR	7	Panel 8 - all cb closed except (required)	8	
		cb PL VENT FLT/PL - open		
		cb FLOAT BAG (3) - open		
		cb EDS (3) - open		
		cb CM RCS HTRS (both) - open		
		cb SPS PITCH (both) - open		
		cb SPS YAW (both) - open		
	8	Sequencer Test, CM RCS Activation and Check (required)		
		After MSFN AOS		
		SECS LOGIC (both) - on (up)		Lever lock.
		Report Logic Arm		
		ELS AUTO - AUTO	1	
		ELS LOGIC - on (up)		
		After GO from MSFN		
		ELS AUTO - MAN		
		ELS LOGIC - OFF		
		SECS PYRO ARM (2) - on (up)	8	Lever lock.
CMP		CM RCS PRPLNT (both) - on (up)	2	On position is momentary.
		CM RCS PRPLNT tb (both) - gray		Indicates propellant isolation valves are open.
		CM RCS PRESS - on (up)		Guarded. On position is momentary.
		RCS IND sel - CM 1, then 2		
		RCS He PRESS ind - stabilizes at 3300-3500 psia ≈15 min after activation		Immediately after pressurization, He pressure is <3300-3500 psia.
		RCS MANF PRESS ind - 287-302 psia		
		If docking ring still in place		
		CSM/LM FNL SEP (both) - on (up)		Guarded. On position is momentary. Jettisons docking ring.

STA/T	STEP	PROCEDURE	PANEL	REMARKS
CDR		SECS PYRO ARM (2) - SAFE	8	
		SECS LOGIC (both) - OFF		
		cb SECS ARM (2) - open		
		SC CONT - SCS	1	
CMP		RCS TRNFR - CM	2	CM position is momentary.
CDR		AUTO RCS CM 2 (6) - OFF	8	
		AUTO RCS CM 1 (6) - ON		
		Test ring 1 jets		
		AUTO RCS CM 1 (6) - OFF		
		AUTO RCS CM 2 (6) - ON		
		Test ring 2 jets		
		AUTO RCS CM 1 (6) - ON		
CMP		RCS TRNFR - SM	2	SM position is momentary.
CDR		SC CONT - CMC	1	
CMP	9	Activate counterbalance mechanism, para 4.7.7.3, step b (required)	Side hatch	If deactivated in flight.
	10	Strut unlock lanyard (2) - Unstow and attach handle ends to MDC (required)		
		Go to G&N CM/SM SEPARATION, para 4.17.5		
	or	If SCS, select P00 and go to SCS CM/SM SEPARATION, para 4.18.4		

NORMAL BACKUP

STA/T STEP	PROCEDURE	PANEL	REMARKS

4.17 G&N DEORBIT AND ENTRY

This section applies to any G&N-controlled deorbit, regardless of the propulsion method. If External ΔV Prethrusting program (P30) desired, go to para 4.14.1.

4.17.1 G&N RETURN TO EARTH PROGRAM (P37)

Purpose of P37 is to compute a return-to-earth trajectory for CSM from outside lunar sphere of influence at TIG. P37 computes and displays preliminary series of parameters based on conic trajectory and crew-specified time of ignition, maximum change in velocity, and entry angle. Upon acceptance, program computes and stores target parameters for use by P40 or P41. P37 assumes no MSFN contact required.

Two modes of operation are provided: fuel critical and nonfuel critical. The nonfuel critical mode can be used to move landing site by adjusting maximum change in velocity.

P37 is not restart protected. If a restart occurs, P37 must be reselected.

CMC - on (required), para 4.10.1.2
ISS - on and orientation known (desired), para 4.10.1.2 and 4.11
SCS - on (desired), para 4.10.2.2
DAP Data Load - complete (required), para 4.10.1.6 & 8

Desired to provide MGA display (step 10).

NOT VALID BACK

STA/T	STEP	PROCEDURE	PANEL	REMARKS
CMP	1	Key V37E 37E DSKY - P37	2	
	2	FL V06 N33 (GETI) 00XXX. HRS 000XX. MIN 0XX.XX SEC		Ground elapsed time of ignition.
		Accept Record GETI PRO		
		Reject V25E, load desired values		
	3	FL V06 N60 Blank		R2 and R3 initially 00000.
		V Pred XXXXX. FPS		Maximum allowable change in velocity. To compute fuel critical trajectory, zeros should be loaded in R2. If slowdown desired, load negative value.
		Gamma EI XXX.XX DEG		Flight path angle between inertial velocity vector and lcl horiz at entry interface altitude, 65.8 NM (400,000 ft). Minus indicates flight path below horizontal plane. If zero-loaded in R3, computation is solved to hit center of entry corridor. Otherwise, computation is solved to hit angle entered.
		Accept PRO		Record R2 for subsequent use. Both the input scaler (desired ΔV) and output scaler (entry velocity) use VPRED register of N60. Therefore, the original ΔV input is no longer in N60. R2 of N56 contains magnitude of original input.
		Reject V22E, V23E, or V25E Load desired values		

STA/T STEP	PROCEDURE	PANEL	REMARKS
CMP	Poss PROG alarm (computation problem) FL V05 N09 00605 (solution does not converge; excessive iterations) 00612 (state vector at TIG in lunar sphere of influence) V32E RSET, return to step 2 or FL V37 Key V05 N09E (to verify alarm) 20607 (no solution from time theta or time radius routine) 20610 (state vector at TIG <400K feet) 37E, return to step 2	2	
4	FL V06 N61 (entry data) Impact Lat (+North) XXX.XX DEG Impact Long (+East) XXX.XX DEG Blank		

NORMAL BACKUP

STA/T STEP	PROCEDURE		PANEL	REMARKS
CMP	Accept Record values PRO		2	
	Reject V32E, return to step 2			
5	FL V06 N39			
	ΔT Trans	00XXX. HRS 000XX. MIN 0XX.XX SEC		Time required for transfer from GETI to time of entry at 65.8 NM (400,000 ft) above Fischer ellipsoid.
	Accept Record values PRO			
	Reject V32E, return to step 2			
6	FL V06 N60			
	Blank			
	V Pred	XXXXX. FPS		
	Gamma EI	XXX.XX DEG		
	Accept Record values PRO			
	Reject V32E, return to step 2			
7	FL V06 N81 (ΔV components)			
	ΔVX, Y, Z (Lcl Vert at GETI)	XXXX.X FPS		
	Crew option			
	Key N40E			
	TF GETI	XXBXX MIN-SEC		
	VG	XXXX.X FPS		
	ΔV (accum)	XXXX.X FPS		

STA/T STEP	PROCEDURE	PANEL	REMARKS
CMP	Record VG (lcl vert vel to be gained) KEY REL	2	
	Accept Record N81 values PRO If first pass, recycle to step 4		
	Poss PROG alarm (computation problem) Key V05 N09E (to verify alarm) 00605 (solution does not converge; excessive iterations) or 00613 (re-entry angle out of limits) Key V32E, recycle to step 2		
8	FL V04 N06 (propulsion code) 00007 (option code) 0000X (CMC assumed option) Blank		CMC initially sets R2 00001. 00001 in R2 indicates data intended for SPS thrust (P40). 00002 indicates RCS (P41). DAP Data Load should be complete before PRO.
	Accept PRO Go to step 9 Reject V22E, load desired option Recycle step 8		

NORMAL/BACKUP

STA/T	STEP	PROCEDURE		PANEL	REMARKS
CMP	9	FL V06 N33		2	
		GETI	00XXX. HRS 000XX. MIN 0XX.XX SEC		
		Record data			
		PRO			External ΔV flag reset at this point.
	10	FL V16 N45 (maneuver data)			
		Marks (VHF/optics)	XXBXX MKS		Marks (VHF/optics) - not meaningful to this program.
		TF GETI	XXBXX MIN-SEC		
		MGA	XXX.XX DEG		MGA is (+) at TIG if CSM +X axis aligned with initial thrust direction.
		If IMU not aligned R3 -00002			
		PRO			
	11	FL V37 Key XXE			If average G on, R00 turns off average G and zeros rendezvous mark and VHF ranging mark counters. Otherwise, counters are not zeroed. It also sets or resets RNDZ, TRACK and UPDATE flags, depending on which programs are in progress or are called. It may recycle into P20 under certain conditions.
		Go to G&N/SPS Deorbit Thrusting (P40), para 4.17.2			Select one of the last three options for a midcourse correction (MCC).

STA/T STEP	PROCEDURE	PANEL	REMARKS
or	G&N/SM-RCS Deorbit Thrusting (P41), para 4.17.3		
or	G&N CM/SM Separation, para 4.17.5 (If G&N Hybrid Deorbit Thrusting desired)		
or	SCS Deorbit and Entry, para 4.18		
or	G&N/SPS Orbit Change (P40), para 4.14.2 (MCC)		
or	G&N/SM RCS Orbit Change (P41), para 4.14.3 (MCC)		
or	SCS Orbit Change, para 4.15 (MCC)		

NORMAL BACKUP

STA/T	STEP	PROCEDURE	PANEL	REMARKS
		4.17.2 G&N/SPS DEORBIT THRUSTING (P40)		Purpose: • To compute a preferred CSM attitude and IMU orientation for an SPS thrusting maneuver. • To calculate and display gimbal angles which would result if present IMU orientation is used for thrusting in the preferred vehicle attitude (function of R60 computations). The crew then decides whether to thrust at present IMU orientation or to reorient the IMU using P52/P54. • To maneuver CSM to thrusting attitude (R60). • To control GNCS during SPS thrust countdown, ignition, thrusting, and thrust termination. • To allow trimming of residual steering errors.
		CMC - on (required), para 4.10.1.2 ISS - on and orientation known (required), para 4.10.1.2 and 4.11 SCS - on (required), para 4.10.2.2		All AUTO RCS switches must be at OFF prior to SCS - on. G&C circuit breakers on all panels should be closed except as defined in Limited Use Controls, para 4.8.4.
CDR		Deorbit & Entry Vehicle Preparation (required), para 4.16.1 CMC ATT - IMU .05 G sw - OFF	1	

STA/T	STEP	PROCEDURE	PANEL	REMARKS
CDR	1	Test C/W lamps EMS MODE - STBY EMS FUNC - ΔV SET Set ΔV ind EMS FUNC - ΔV	1	
CMP		RCS DAP - load and activate, including ullage selection para 4.10.1.6 & 8	2	Since SPS trim values are used at beginning of P40 for computing preferred IMU orientation and final vehicle attitude, they should be reviewed now. SPS trim values are updated during CMC-controlled burn. If a roll jet fails on during SPS thrust, an appreciable roll excursion ≈30° may occur. The PITCH-YAW DAP will continue to function properly.
	2	Key V37E 00E DSKY - P00		P00 updates state vector periodically.
	3	Key V37E 40E DSKY - P40		P40 should be preceded by a complete prethrust program.
		Poss PROG alarm Key V05 N09E (to verify alarm) 00210 (ISS not on) or 00220 (IMU orientation unknown)		

NORMAL BACKUP

STA/T STEP	PROCEDURE	PANEL	REMARKS
CMP	FL V37 Key XXE	2	When CMC regains control, program cycles through R00. R00 resets 3-AXIS flag and may set or reset RNDZ, TRACK, and UPDATE flags, depending on which programs are in progress or are called. If alarms do not occur, at this point (after R02 exited) CMC uses initial thrust direction and SPS gimbal angles to compute preferred IMU orientation at preferred vehicle attitude for CSM position radius vector at TIG, and sets PREFERRED ORIENTATION flag. Final attitude is computed (VEC POINT) in R60 and gimbals trimmed for initial thrust. The 0.5-degree deadband is set in RCS DAP, and R60 is automatically called.
4 If VG display desired Key V06 N81E VGX, Y & Z (lcl vert XXXX.X FPS at GETI)			Display is available until average G turned on (GETI minus 30 sec).
	(R60 - Attitude Maneuver)		Maneuvers CSM to a final attitude based on attitude specified and stored in P40. The maneuver is performed automatically by the G&N or manually, with an optional final automatic G&N-controlled trim maneuver.
5 FL V50 N18 (select CMC - auto) R, P, Y XXX.XX DEG			Desired final gimbal angles.

G&N SPS DEORBIT THRUSTING (P40)

STA/T	STEP	PROCEDURE	PANEL	REMARKS
CMP		Establish Total Attitude display, para 4.9.2.5		Both FDAIs should be selected to provide redundant displays.
CDR		Accept BMAG MODE (3) - RATE 2	1	Prevents BMAGs from hitting stops during maneuvers.
		CMC Attitude Control - Auto, para 4.9.1.6		
CMP		PRO	2	Initiates auto maneuver without reviewing final gimbal angles. If review desired prior to auto maneuver, reject option should be selected. If desired, attitude set control panel can then be set to final gimbal angles to provide attitude error information for completion of maneuver manually if G&N fails.
		Reject Select desired Attitude Control mode, para 4.9.1		
		Maneuver to thrusting attitude		
		ENTR - Go to step 7		
	6	Auto maneuver		
		V06 N18 (final attitude)		
		R, P, Y XXX.XX DEG		Angles obtained from a VECPOINT calculation. Maneuver rate is as last defined by DAP load.
CDR,CMP		Monitor FDAIs	1,2	CSM began maneuver to final attitude when PRO keyed in step 5. RHC inputs are interpreted as a manual override and CMC will terminate auto maneuver.
		If RHC used or SCS selected, go to step 7		

NORMAL BACKUP

STA/T	STEP	PROCEDURE	PANEL	REMARKS
CMP	7	FL V50 N18 (att trim enable) R, P, Y XXX.XX DEG	2	Final trim maneuver should be considered essential to SPS ΔV attitudes. Display of final gimbal angles remains in registers. Final attitude trim maneuver performed after gimbal drive and trim check.
		Ignition preparation		Sets up nontime-critical switching required for thrusting. If necessary, MSFN dumps and rewinds tape recorder, and changes to HBR.
-10:00				
LMP		MN BUS TIE BAT A/C - on (up)	5	
		Verify bat bus A current increase and/or bat voltage decrease	3	Verification of current increase for appropriate bat bus via DC AMPS ind (pnl 3) assures successful operation of main bus tie motor switches.
		MN BUS TIE BAT B/C - on (up)	5	Both MN BUS TIE switches at on provides 3 batteries on line for deorbit and entry if cbs MNA BAT C and MNB BAT C are closed (pnl 275).
		Verify bat bus B current increase and/or bat voltage decrease	3	
		CAUTION If either bat bus A(B) current fails to increase after cycling respective MN BUS TIE switch, configure bats to main buses using cb BAT BUS A BAT C (cb BAT BUS B BAT C).	250	

STA/T STEP	PROCEDURE	PANEL	REMARKS
LMP	SPS He VLV tb (both) - bp	3	Barber pole indicates valves are closed.
	SPS He VLV (both) - AUTO		
CDR	ROT CONTR PWR DIR (both) - OFF	1	
	SC CONT - CMC		
	CMC MODE - AUTO		
	SCS TVC (2) - RATE CMD		Provides rate damped manual TVC as a backup to G&N, if THC - CW. SCS auto or MTVC acceleration command are optional, but less desirable backup modes.
	BMAG MODE (3) - ATT 1 RATE 2		
	RATE - LO		
	ATT DBD - MIN		
	LV IND/GPI sw - GPI		
	TVC GMBL DR (2) - AUTO		
	Gimbal drive and trim check		PITCH and YAW GMBL caution/warning lights (panel 2) indicate an overcurrent to actuator motors.
	TVC SERVO PWR 1 - AC1/MNA	7	
	TVC SERVO PWR 2 - AC2/MNB		
	TRANS CONTR PWR - on (up)	1	
	ROT CONTR PWR NORM 2 - AC		Opens RHC 2 (CDR's) breakout switches (dc) to prevent attitude maneuvers through CMC during MTVC checks. During a burn, RCS DAP is disabled at SPS engine ignition (TFI = 0).
	RHC 2 - ARMED		
-05:00	GMBL MOT PITCH 1 - START		START position is momentary. Start motors sequentially at 1-second intervals to avoid electrical overload.
	GMBL MOT YAW 1 - START		

NORMAL/BACKUP

STA/T STEP	PROCEDURE	PANEL	REMARKS
	Auto switchover check		
CDR	THC - CW		Enables MTVC and switches TVC to channel 2.
	RHC - verify no MTVC control		
	GMBL POS ind (4) - no motion	1	Verifies TVC switches from channel 1 to channel 2 (which is off) when THC CW selected.
	Secondary TVC check		
	GMBL MOT PITCH 2 - START		START position is momentary.
	GMBL MOT YAW 2 - START		
	Confirm and set trim control		Verifies secondary gimbal trim control.
	SPS GMBL tw (2) - + and -		
	Set to c.g. trim values		The c.g. trim values can be obtained from DAP Data Load, para 4.10.1.6, or MSFN.
	RHC 2 - Verify MTVC control		Gimbals drive in response to RHC movement and return to set-in values when RHC neutral. Verifies control of secondary MTVC loops through RHC. Gimbals move proportional to RHC deflection since MTVC integrator not enabled until engine ignition.
	THC - neutral		
	ROT CONTR PWR NORM 2 - AC/DC		
Accept	Complete auto att trim		Accept and reject options refer to attitude trim enable flash at step 7.
	BMAG MODE (3) - RATE 2		
	Align CSM in roll		
	CMC attitude control - auto, para 4.9.1.6		
CMP	PRO	2	
	Returns to V06 N18 display of step 6		This does not imply that any of the previous checks need be repeated for each trim enable.

STA/T	STEP	PROCEDURE	PANEL	REMARKS
CMP	Reject	Select Attitude Control desired, para 4.9.1 Verify/maneuver to thrusting attitude (V62E for total att error display)	2	
CDR		ROT CONTR PWR DIR (both) - MNA/MNB MAN ATT (3) - RATE CMD RATE - HI	1	Enables manual direct RCS for overriding an auto RCS roll failure during thrusting. If MTVC required, RATE - HI bypasses noise problem in SCS gyro assemblies because of thrusting vibration levels, which can cause spurious RCS roll jet firings.
		BMAG MODE (3) - ATT 1 RATE 2		
	or	If RATE 1 ΔV planned BMAG MODE PITCH - RATE 1 BMAG MODE YAW - RATE 1		RATE 1 ΔV should be used for Lambert steering burns where angular change >15° or if gyro assembly 2 failed.
		or BMAG MODE (in axis) - RATE 1		
		Align GDC to IMU, para 4.10.2.6 (if necessary)		DSKY display option is recommended because of its availability - only need to set ATT SET tw to DSKY values and defer alignment until just prior to thrust.
		Check boresight star		
CMP		ENTR (exit R60)	2	
8	FL V50 N25 00204 (CMC GMBL drive test)			A manual drive, trim and MTVC check is accomplished before CMC gimbal drive test is enabled (PRO keyed).
	Accept	PRO Monitor GMBL drive sequence		

NORMAL/BACKUP

STA/T STEP	PROCEDURE	PANEL	REMARKS
	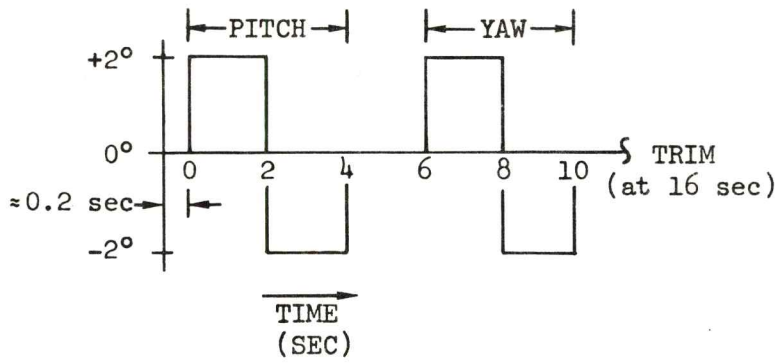		
CMP	Reject ENTR GMBLs drive to trim position (after 4 sec)	2	If gimbal test sequence not desired, gimbals drive to trim 4 seconds after ENTR keyed.
9	V06 N40 TF GETI XXBXX MIN-SEC VG XXXX.X FPS ΔV (accum) XXXX.X FPS		TF GETI max reading is 59B59. Sign is minus before nominal GETI, plus after. Event Timer will not agree with R1 if GETI was slipped.
CDR 10 -02:00	2-minute countdown Report TF GETI = 2 min FDAI SCALE - 5/5 (Deleted) ΔV THRUST A(B) - NORM THC - ARMED	1	Guarded.
CDR,CMP	RHC (both) - ARMED		

STA/T STEP	PROCEDURE	PANEL	REMARKS
	(R41 - State Vector Integration)		
-00:40 CMP	If PROG lt - on, CMC has slipped TIG	2	May illuminate between TIG -42.5 seconds and TIG -35 seconds. Delta amount TIG slipped is as required by CMC to complete state vector integration.
	DSKY R1 continues counting to former TIG DSKY clears at new TIG -35 sec COMP ACTY lt - out (exit R41)		
-00:35	DSKY clears		
-00:30	V06 N40 (average G on)		Static display, with COMP ACTY lt flash every 2 seconds.
	Check ΔV (accum) for PIPA bias R3 ≤0002.0 FPS		G&N controlled burns will be unreliable if R3 >0002.0 FPS.
-00:25 LMP	TAPE RCDR FWD - FWD	3	
CDR	EMS MODE - NORM	1	Buildup of ΔV indicator errors, caused by accelerometer bias, minimized if set to NORM <30 seconds prior to thrusting.
-00:29 to -00:06	Perform ullage if required		No ullage required if sump tanks full. 2 or 4 jet ullage times are defined in SNA-8-D-027 CSM Data Book, Vol I. Retain for ≈1 second after ignition. Exact velocity change is not critical - only a steady ullage to settle SPS propellants.

NORMAL BACKUP

STA/T STEP	PROCEDURE	PANEL	REMARKS
	xxxxxxxxxxxxxxxxxxxxxxxxxxxx x x No ullage		
CDR	DIR ULL pb - push RHC - control attitude	1	Direct ullage inhibits pitch and yaw auto RCS. Maintain attitude within deadband limits.
	x x xxxxxxxxxxxxxxxxxxxxxxxxxxxx		
-00:05 CMP 11	FL V99 N40 (engine enable) TF GETI XXBXX MIN-SEC VG XXXX.X FPS ΔV (accum) XXXX.X FPS	2	CMC changes V06 to V99, but retains previous display in registers. Do not exercise extended verb or monitor displays for extended periods during TVC. These displays can override a FL V97 N40 (low thrust) display, which indicates CMC thinks engine is off, steering has stopped (including cutoff computations), and attitude hold is established.
	Accept PRO Go to step 12 Reject ENTR, go to step 15 Manual trim with RCS		If ENTR option selected, post SPS burn switching in step 14 must be accomplished.
	or V34E FL V37 Key XXE		If average G on, R00 turns off average G, zeros rendezvous mark and VHF ranging mark counters. Otherwise counters are not zeroed. It also sets or resets RNDZ, TRACK, and UPDATE flags, depending on which programs are in progress or are called.
CDR 12 00:00	Ignition SPS THRUST lt - on	1	The CMC will not accept V46 or V48 during TVC.

STA/T STEP	PROCEDURE	PANEL	REMARKS
CMP	V06 N40 TFC XXBXX MIN-SEC	2	Time from engine cutoff. Sign (-) before cutoff, (+) thereafter. TFC display is discontinuous for 4 to 5 seconds after ignition.
	VG (decr) XXXX.X FPS ΔV accum (incr) XXXX.X FPS		
CDR	ΔV ind - decreasing	1	
CMP	Poss PROG alarm Key V05 N09E (to verify alarm) 01407 (VG increasing)	2	
IGN+1 sec CDR	Discontinue ullage		RCS X-axis translation is discontinued by program 2 seconds after engine-on command. RCS DAP is disabled at ignition.
IGN+2-5 sec	ΔV THRUST (2) - NORM	1	Guarded. For dual bank operation.
	xxxxxxxxxxxxxxxxxxxxxxxxxxxxxxxxxxxxxxxxxxxx		
	If no ignition or premature shutdown		Engine restart should not be attempted within 5 seconds from initial ignition in order to avoid undesirable helium pressure excursions.
	Continue ullage ΔV THRUST (2) - NORM Recycle step 12		Guarded.
CMP	or If FL V97 N40 (R40) PRO - If thrust back on	2	If at any time during a non-impulsive thrusting period, thrust failure is detected by the CMC, thrust failure routine (R40) is called. If thrust decreases

NORMAL BACKUP

STA/T STEP	PROCEDURE	PANEL	REMARKS
CDR	or ΔV THRUST (2) - NORM Reorient to thrust attitude	1	to some low level, VG and ΔV displays will continue changing. If thrust actually terminates prematurely, VG and ΔV displays will become static. For Lambert burns VG may not become static.
CMP	ENTR - Recycle to step 11	2	If ENTR response to FL V97 N40, R1 (TFC) is set to 59B59.
	or Key V34E FL V37 Key XXE		Terminates P40 and R40.
	or Select SCS option		
CDR	or Discontinue ullage SC CONT - SCS ΔV THRUST (2) - NORM SCS TVC (2) - AUTO	1	SCS ΔV is selected to bypass as many failure modes as possible and provide minimum engine delay. Depending on duration of burn, prior to failure, a motion transient could result if c.g. has shifted significantly from GMBL tw values.
	Initiate ullage THRUST ON pb - push		Ullage and THRUST ON pb required to satisfy SCS logic.
	or SPS THRUST - DIR ON		Lever lock.
IGN+1 sec	Discontinue ullage		
	or Terminate maneuver		
	xxxxxxxxxxxxxxxxxxxxxxxxxxxxxxxxxxxxxxxxxx		

STA/T	STEP	PROCEDURE	PANEL	REMARKS
	13	Monitor SPS operation		SPS OXID unbalance indicator is erratic for about 25 seconds after ignition.
CDR		Pc ind - 95-105 psia	1	Green range on indicator is 65 to 125% (corresponds to psia). Normal Pc range is 95-105 psia.
LMP		SPS INJ VLV ind (4) - OPEN SPS He VLV tb (both) - gray SPS FUEL & OXID PRESS ind (2) - 170-195 psia	3	All four injector valves open in dual-bank SPS ΔVs. Gray indicates valves open.
CDR		FDAI - monitor errors & rates	1	Monitoring for possibly required MTVC takeover.
		xxxxxxxxxxxxxxxxxxxxxxxxxxxxxxxxxxxxxxxxxxxxxxx		
		MTVC takeover THC - CW Maintain attitude control manually		
		or ΔV THRUST (2) - OFF Damp rates to IMU ball or out window Reorient and hold thrusting attitude THC - CW ΔV THRUST A(B) - NORM Initiate ullage THRUST ON pb - push		Guarded. Guarded.
		or SPS THRUST - DIR ON Fly MTVC (RATE CMD)		Lever lock.
IGN+2.5 sec		ΔV THRUST B(A) - NORM Initiate ullage THRUST ON pb - push		Guarded. Ullage and THRUST ON pb required to satisfy SCS logic for second bank operation.

NORMAL BACKUP

STA/T	STEP	PROCEDURE	PANEL	REMARKS
CDR		or SPS THRUST - DIR ON	1	Lever lock.
		or Terminate maneuver		
		xxxxxxxxxxxxxxxxxxxxxxxxxxxxxxxxxxxxxxxxxxxxxxx		
		xxxxxxxxxxxxxxxxxxxxxxxxxxxxxxxxxxxx Roll att control failure MAN ATT ROLL - ACCEL CMD		ACCEL CMD position inhibits CMC roll commands and allows acceleration control of RCS auto coils with RHC.
		or AUTO RCS ROLL (8) - OFF Use direct control	8	
		xxxxxxxxxxxxxxxxxxxxxxxxxxxxxxxxxxxx		
	14	Monitor SPS engine cutoff		
		SPS THRUST lt - out	1	
CMP		FL V16 N40 (engine cutoff)	2	
		TFC (static at 2.5 sec from cutoff) XXBXX MIN-SEC		Time from cutoff. At cutoff +2.5 seconds, CMC sets wide deadband in RCS DAP. Then CMC switches from TVC DAP to RCS DAP at cutoff +3.1 seconds.
		VG XXXX.X FPS		
		ΔV (accum) XXXX.X FPS		
CDR		EVNT TMR ind - 59:59 (-) thrust duration	1	Timer will normally count down from 59:59.
C/O+1 sec		ΔV THRUST (2) - OFF		Guarded.
		SPS THRUST - NORM (verify)		Lever lock.
		Report engine off Pc = 0		

STA/T STEP	PROCEDURE	PANEL	REMARKS
LMP	SPS INJ VLV ind (4) - CLOSE	3	
	SPS He VLV tb (both) - bp		Barber pole indicates valves closed.
C/O			
+2.5 sec			
CDR	GMBL POS ind (4) - servo null	1	CMC removes TVC enable discrete (C/O indicated by TFC sign change and VG → 0).
	(Deleted)		
	GMBL MOT PITCH 2 - OFF		Turning off servo 2 first minimizes switching in logic. Sets gimbal motors off sequentially to avoid power surge.
	GMBL MOT YAW 2 - OFF		
	GMBL MOT PITCH 1 - OFF		
	GMBL MOT YAW 1 - OFF		
	If MTVC		
	THC - neutral		To prevent possible reignition (if G&N thrust-on command still present), ΔV THRUST switches must be OFF prior to THC - neutral.
	TVC SERVO PWR (both) - OFF	7	
	cb SPS PITCH (both) - open	8	
	cb SPS YAW (both) - open		
	EMS MODE - STBY	1	Buildup of ΔV indicator errors, caused by accelerometer bias, minimized if set to STBY immediately after thrusting. Otherwise, ΔV indicator continues counting.
	Record ΔV ind		
CMP	PRO	2	CMC sets minimum deadband in RCS DAP.
15	FL V16 N85 (VG vector components)		Velocity to be gained resolved along CSM X, Y, and Z control axes (updated each computation cycle).
	VGX, Y, Z (cont) XXXX.X FPS		
	If VG component to be nulled		Optional. All AUTO RCS switches must be on for nulling residuals in 3 axis.

NORMAL

STA/T	STEP	PROCEDURE	PANEL	REMARKS
CDR		CMC MODE - AUTO or HOLD RHC/THC - null out VG components THC - neutral, LOCKED	1	
CMP		If R30 desired Key V82E Go to step 16	2	
		To terminate P40 PRO Go to step 17		CMC sets last specified R03 deadband in RCS DAP.
		(R30 - Orbital Parameter Display)		
	16	FL V16 N44		
		Ha XXXX.X NM Hp XXXX.X NM		Altitudes above launch pad radius. Calculations are subject to the limitations of two-body approximation and yield reasonable results if vehicle close to earth.
		TFF XXBXX MIN-SEC		Time of free fall to 49.4 NM (300,000 ft) above launch pad radius.
		If Hp >49.4 NM R3 = -59B59		If TFF = -59B59, time from perigee available via N32E.
		PRO (exit R30) Return to step 15		
	17	FL V37 Record burn data		Recorded burn data should include ΔV accomplished.

G&N SPS DEORBIT THRUSTING (P40)

STA/T STEP	PROCEDURE	PANEL	REMARKS
CMP 18	Call P61 Key 61E DSKY - P61 Go to G&N CM/SM Separation, para 4.17.5	2	If average G on, R00 turns off average G, zeros rendezvous mark and VHF ranging mark counters. Otherwise counters are not zeroed. It also sets or resets RNDZ, TRACK, and UPDATE flags, depending on which programs are in progress or are called.

NORMAL/BACKUP

STA/T	STEP	PROCEDURE	PANEL	REMARKS
		4.17.3 G&N/SM-RCS DEORBIT THRUSTING (P41)		Purpose: To compute a preferred CSM attitude and a preferred IMU orientation for an RCS thrusting maneuver, and to maneuver CSM to thrusting attitude (R60).
		CMC - on (required), para 4.10.1.2 ISS - on and orientation known (required), para 4.10.1.2 and 4.11 SCS - on (required), para 4.10.2.2		
CDR		CMC ATT - IMU .05 G sw - OFF Deorbit & Entry Vehicle Preparation (required), para 4.16.1 Test C/W lts	1	G&C circuit breakers on all panels are closed except as defined in Limited Use Controls, para 4.8.4.
CMP		Load and Activate DAP, para 4.10.1.6 & 8	2	
	1	Set EVNT TMR to read 00:00 at GETI	1	
	2	Select P41 Key V37E 41E	2	P41 should be preceded by a complete prethrust program. P41 small Lambert maneuvers may have initial thrust attitude errors of up to 5 deg (at 140° transfer) or up to 30 deg (at 30° transfer). The angular error is approximately inversely proportional to burn magnitude. Maximum cross axis velocity introduced would be $<\pi/6$ fps.
		Poss PROG alarm Key V05 N09E (to verify alarm) 00210 (ISS not on) or 00220 (IMU orientation unknown)		

STA/T STEP	PROCEDURE	PANEL	REMARKS
CMP	FL V37 Key XXE	2	When CMC regains control, program cycles through R00. R00 resets 3-AXIS flag and may set or reset **RNDZ**, TRACK, and UPDATE flags, depending on which programs are in progress or are called. If alarms do not occur, at this point (after R02 **exited) CMC computes initial thrust direction** and initial value of VG (local vertical), computes preferred IMU orientation, sets **PREFERRED ATTITUDE** flag, and stores desired attitude for use in R60. Final attitude is computed in R60, and the 0.5 degree deadband is set in RCS DAP.
3 If VG display desired Key V06 N81E VGX, Y, Z XXXX.X FPS (Lcl vert at GETI)			Display is available until average G is turned on (GETI minus 30 sec).
	(R60 - Attitude Maneuver)		Maneuvers CSM to an attitude specified in P41. Maneuver is performed automatically by G&N, or manually with an optional final automatic G&N controlled trim maneuver.
4 FL V50 N18 (Select CMC - auto) R, P, Y XXX.XX DEG			
Establish Total Attitude **displays**, para 4.9.2.5			Both FDAIs should be selected to provide redundant displays.

NORMAL BACKUP

STA/T	STEP	PROCEDURE	PANEL	REMARKS
CDR		Accept BMAG MODE (3) - RATE 2 CMC attitude control - auto, para 4.9.1.6	1	Prevents BMAGs from hitting stops during maneuvers.
CMP		PRO	2	Initiates auto maneuver without a review of final gimbal angles.
CDR		Reject Select Attitude Control desired, para 4.9.1 Maneuver to thrusting attitude		
CMP		ENTR, go to step 7		
	5	Auto maneuver V06 N18 (final attitude) R, P, Y XXX.XX DEG		
CDR,CMP		Monitor FDAIs	1,2	CSM began maneuver to final attitude when PRO keyed in step 4. ICDU drives to achieve final gimbal angles. RHC inputs are interpreted as a manual override and CMC will terminate auto maneuver.
		If RHC used or SCS selected, go to step 6		
	6	FL V50 N18 (att trim enable)		This step should be completed prior to TIG -2 minutes.
		R, P, Y XXX.XX DEG		Display of final gimbal angles in registers.
CDR		Accept BMAG MODE (3) - RATE 2 CMC attitude control - auto, para 4.9.1.6	1	
CMP		PRO, return to V06 N18 display of step 5	2	This does not imply that any previous checks need be repeated for each trim enable.

STA/T	STEP	PROCEDURE	PANEL	REMARKS
CMP		Reject Select Attitude Control desired, para 4.9.1		
		Verify maneuver to thrusting attitude		All RCS channels required for 3-axis translation.
		V62E for total att error display	2	
CDR		MAN ATT (3) - RATE CMD	1	
		BMAG MODE (3) - ATT 1 RATE 2		
		Align GDC to IMU if necessary, para 4.10.2.6		DSKY display option is recommended because of its availability - only need to set ATT SET tws to DSKY values and defer alignment until just prior to thrust.
CMP		ENTR (exit R60)	2	
	7	Monitor VG display		
		V06 N85 (VG vector components)		
		VGX, Y, Z (cont) XXXX.X FS		Components resolved along CSM axes, and updated at 1-second intervals.
-05:00				
	8	Ignition preparation		Sets up nontime-critical switching required for thrusting.
CDR		Check boresight star	1	
		For X axis thrusting		
		TRANS CONTR PWR - on (up)		
		EMS MODE - STBY		
		EMS FUNC - ΔV SET		
		Set ΔV ind to reqd ΔV		Set to ΔV obtained from charts, P30, and/or MSFN.
		EMS FUNC - ΔV		

NORMAL BACKUP

STA/T STEP	PROCEDURE	PANEL	REMARKS
	(R41 - State Vector Integration)		
-00:40			
CMP 9	If PROG alarm, CMC has slipped TIG DSKY R1 continues counting to former TIG DSKY will clear at new TIG -35 sec COMP ACTY lt - out (exit R41)	2	PROG alarm may illuminate between TIG -42.5 seconds and TIG -35 seconds. Delta amount TIG is slipped will be as required by CMC to complete state vector integration.
-00:35	DSKY clears		
-00:30			
10	V16 N85 (avg G on)		Static display with COMP ACTY lt flash every 2 seconds.
-00:25			
CDR	THC - ARMED		
CDR,CMP	RHC (both) - ARMED		
CDR	LIM CYCLE - OFF	1	For SCS translations.
LMP	TAPE RCDR FWD - FWD	3	
CDR	EMS MODE - NORM	1	Buildup of ΔV indicator errors, caused by accelerometer bias, minimized if set to NORM <30 seconds prior to thrusting.
00:00			
11	RCS burn		
CMP	FL V16 N85 (requests null VG) VGX, Y, Z (cont) XXXX.X FPS	2	Event Timer not valid if GETI slipped.
CDR	Manually null VG		Command manual translations and rotations to null VG components.

STA/T	STEP	PROCEDURE	PANEL	REMARKS
		If R30 desired		
CMP		Key V82E	2	
		Go to step 12		
		To terminate P41		
		PRO		
		Go to step 13		CMC sets last specified RO3 deadband in RCS DAP.
		(R30 - Orbital Parameter Display)		R30 displays are automatically updated at 2-second intervals if called because average G is still on.
	12	FL V16 N44		
		Ha XXXX.X NM		Altitudes above launch pad radius.
		Hp XXXX.X NM		
		TFF XXBXX MIN-SEC		Time of free fall to 49.4 NM (300,000 ft) above launch pad radius.
		If Hp >49.4 NM		
		R3 = -59B59		If TFF = -59B59, time from perigee available via N32E.
		PRO (exit R30)		
		Return to step 11		
	13	Burn complete		
CDR		EMS MODE - STBY	1	Buildup of ΔV indicator errors, caused by accelerometer bias, minimized if set to STBY immediately after thrusting. Otherwise, ΔV indicator continues counting.
		Record ΔV ind		
LMP		TAPE RCDR FWD - off (ctr)	3	
CDR		THC - neutral, LOCKED		

NORMAL BACKUP

STA/T	STEP	PROCEDURE	PANEL	REMARKS
CMP	14	FL V37 Key 61E Go to G&N CM/SM Separation, para 4.17.5 or If G&N Hybrid Deorbit Go to G&N CM/SM Separation, para 4.17.5	2	 This option bypasses P61.

G&N SM RCS DEORBIT THRUSTING (P41)

STA/T	STEP	PROCEDURE	PANEL	REMARKS
		4.17.4 G&N/HYBRID DEORBIT THRUSTING		Purpose: To compute a preferred CSM attitude and a preferred IMU orientation for an RCS thrusting maneuver. To maneuver CSM to thrusting attitude (R60), and to provide sufficient displays for cutoff of both an SM RCS burn followed by a CM RCS deorbit burn.
		CMC - on (required), para 4.10.1.2 ISS - on and orientation known (required), para 4.10.1.2 and 4.11 SCS - on (required), para 4.10.2.2		
CDR		CMC ATT - IMU .05 G sw - OFF Deorbit & Entry Vehicle Preparation (required), para 4.16.1 Test C/W lts	1	G&C circuit breakers on all panels are closed except as defined in Limited Use Controls, para 4.8.4.
CMP		Load and Activate DAP, para 4.10.1.6 & 8	2	
CDR	1	Set EVNT TMR to read 00:00 at GETI	1	
CMP	2	Select P41 Key V37E 41E	2	P41 should be preceded by a complete prethrust program.
		Poss PROG alarm Key V05 N09E (to verify alarm) 00210 (ISS not on) or 00220 (IMU orientation unknown)		

NORMAL/BACKUP

STA/T	STEP	PROCEDURE	PANEL	REMARKS
CMP		FL V37 Key XXE	2	When CMC regains control, program cycles through R00, which may set or reset RNDZ, TRACK, and UPDATE flags, depending on which programs are in progress or are called.
	3	If VG display desired Key V06 N81E VGX, Y, Z XXXX.X FPS (lcl vert at GETI)		Display is available until average G is turned on (GETI minus 30 sec).
		(R60 - Attitude Maneuver)		Maneuvers CSM to an attitude specified in P41. Maneuver is performed automatically by G&N, or manually with an optional final automatic G&N controlled trim maneuver.
	4	FL V50 N18 (select CMC - auto) R, P, Y XXX.XX DEG		
		Establish Total Attitude displays, para 4.9.2.5		Both FDAIs should be selected to provide redundant displays.
CDR		Accept BMAG MODE (3) - RATE 2	1	Prevents BMAGs from hitting stops during maneuvers.
		CMC Attitude Control - Auto, para 4.9.1.6		
CMP		PRO	2	Initiates auto maneuver without a review of final gimbal angles.
CDR		Reject Select Attitude Control desired, para 4.9.1		
CMP		ENTR, go to step 7		

G&N HYBRID DEORBIT THRUSTING

STA/T	STEP	PROCEDURE	PANEL	REMARKS
CMP	5	Auto maneuver V06 N18 (final attitude) R, P, Y XXX.XX DEG	2	
CDR,CMP		Monitor FDAIs If RHC used or SCS selected, go to step 6	1,2	CSM began maneuver to final attitude when PRO keyed in step 4. ICDU drives to achieve final gimbal angles. RHC inputs are interpreted as a manual override and CMC will terminate auto maneuver.
	6	FL V50 N18 (att trim enable) R, P, Y XXX.XX DEG		This step should be completed prior to TIG -2 minutes. Display of final gimbal angles in registers.
CDR		Accept BMAG MODE (3) - RATE 2 CMC Attitude Control - Auto, para 4.9.1.6	1	
CMP		PRO, return to step 5	2	
		Reject Select Attitude Control desired, para 4.9.1 Verify maneuver to thrusting attitude V62E for total att error display		
CDR		MAN ATT (3) - RATE CMD BMAG MODE (3) - ATT 1 RATE 2	1	DSKY display option is recommended because of its availability - only need to set ATT SET tws to DSKY values and defer alignment until just prior to thrust.
CMP		ENTR (exit R60)	2	

NORMAL/BACKUP

STA/T	STEP	PROCEDURE	PANEL	REMARKS
CMP	7	Monitor VG display V06 N85 (VG vector components) VGX, Y, Z (cont) XXXX.X FPS	2	Components resolved along CSM axes and updated at 1-second intervals.
LMP -10:00	8	Configure and preload batteries MN BUS TIE BAT A/C - on (up) Verify bat bus A current increase and/or bat voltage decrease MN BUS TIE BAT B/C - on (up) Verify bat bus B current increase and/or bat voltage decrease	5 3 5 3	Prepares for battery preloading prior to CM/SM separation and verifies batteries transferred to main buses.
		CAUTION If either bat bus A(B) current fails to increase after cycling respective MN BUS TIE switch, configure bats to main buses using cb BAT BUS A BAT C (cb BAT BUS B BAT C).	250	
-05:00 CDR	9	Ignition preparation TRANS CONTR PWR - on (up) EMS MODE - STBY EMS FUNC - ΔV SET Set ΔV ind to reqd ΔV EMS FUNC - ΔV	1	Sets up nontime-critical switching required for thrusting. Set to ΔV obtained from charts, P30, and/or MSFN.

STA/T STEP	PROCEDURE	PANEL	REMARKS
	(R41 - State Vector Integration)		
-00:40			
CMP 10	If PROG alarm, CMC has slipped TIG DSKY R1 continues counting to former TIG DSKY will clear at new TIG -35 sec COMP ACTY lt - out (exit R41)	2	PROG alarm may illuminate between TIG -42.5 seconds and TIG -35 seconds. Delta amount TIG is slipped will be as required by CMC to complete state vector.
-00:35	DSKY clears		
-00:30			
11	V16 N85 (average G on)		Static display with COMP ACTY lt blinking every 2 seconds.
-00:25			
CDR,CMP	RHC (both) - ARMED		
CDR	THC - ARMED		
	LIM CYCLE - OFF	1	For SCS translations.
LMP	TAPE RCDR FWD - FWD	3	
CDR	EMS MODE - NORM	1	Buildup of ΔV indicator errors, caused by accelerometer bias, minimized if set to NORM <30 seconds prior to thrusting.
00:00			
CMP 12	RCS burn FL V16 N85 (request null VG) VGX, Y, Z (cont) XXXX.X FPS	2	Event Timer not valid if GETI slipped.
CDR	Manually null VG Monitor DSKY, ΔV ind, and EVNT TMR	1,2	Command manual translation and rotation to null VG components.

STA/T	STEP	PROCEDURE	PANEL	REMARKS
CMP		Crew options V83 - R, R dot, θ V82 - Ha, Hp, TFF	2	
	13	Burn complete		
CDR		EMS MODE - STBY	1	Buildup of ΔV indicator errors, caused by accelerometer bias, minimized if set to STBY immediately after thrusting. Otherwise, ΔV indicator continues counting. EMS FUNC should not be changed so as to continue to monitor CM RCS deorbit.
CMP		Record DSKY, ΔV ind, and EVNT TMR values	1,2	
CDR		Reset EVNT TMR THC - neutral, LOCKED	1	
	14	Select SCS Attitude Control mode, para 4.9.1		Separation follows immediately, preventing proper G&N DAP operation until entry DAP selected in P62.
	15	Perform Separation procedure, para 4.17.5		Only one minute is allowed between end of SM RCS burn and start of CM RCS. Therefore, separation should be performed at SM deorbit attitude.
	16	Verify/maneuver to retro attitude R_____, P_____, Y_____ MAN ATT YAW, ROLL - RATE CMD MAN ATT PITCH - ACCEL CMD RATE - HI ATT DBD - MIN		Both RCS systems should be enabled for CM RCS deorbit burn. The CM RCS portion of burn is complete, with +X axis ≈70° below velocity vector (apex down and forward). This is a ≈110° +pitch maneuver from heads down SM RCS portion of deorbit.

G&N HYBRID DEORBIT THRUSTING

STA/T	STEP	PROCEDURE		PANEL	REMARKS
CDR,CMP		RHC (both) - ARMED			
CDR		FDAI SCALE - 5/5		1	
CMP	17	Key V82E		2	
		FL V16 N44			
		Ha	XXXX.X NM		Apogee altitude above launch pad radius.
		Hp	XXXX.X NM		Perigee altitude above launch pad radius.
		TFF	XXBXX MIN-SEC		Time of free fall to 49.4 NM (300,000 ft) above launch pad radius.
CDR	18	Start EVNT TMR		1	60 sec from completion of SM RCS burn start CM RCS burn.
		EMS MODE - NORM			Buildup of ΔV indicator errors, caused by accelerometer bias, minimized if set to NORM <30 seconds prior to thrusting.
CMP		RHC 1 - initiate continuous negative pitch			
CDR		RHC 2 - pulse to maintain attitude in pitch axis			Negative pitch engines have approximately 25 to 30% less authority than positive engines because of engine location and thrust direction relative to CM c.g.
		Monitor FDAI			
		xxxxxxxxxxxxxxxxxxxxxxxxxxxxxxxxxxxxxxx			
		If only 1 RHC			
		Pulse RHC + and - in pitch ≈±5° from pitch retro attitude maintaining rates under ±3°/sec			
		xxxxxxxxxxxxxxxxxxxxxxxxxxxxxxxxxxxxxxx			

NORMAL/BACKUP

STA/T	STEP	PROCEDURE	PANEL	REMARKS
CMP	19	Monitor Hp & TFF on DSKY	2	Monitor Event Timer for duration of burn no greater than 02:10 for either single or dual system. Prevent use of RCS propellant reserves, 30 lb each system for entry. ΔV ind cutoff cue must be adjusted to account for the EMS sensing axis (along X) being reversed from that of SM RCS deorbit burn and biased off ≈70° from CM RCS velocity vector. (ΔVems = ΔVcm Cos 70°).
	20	PRO FL V16 N85 VGX, Y, Z (cont) XXXX.X FPS		
	21	Burn complete, ΔV ind = _____ or EVNT TMR = _____	1	
		PRO	2	
CDR		MAN ATT (3) - RATE CMD	1	
		Record ΔV ind, DSKY, EVNT TMR	1,2	
LMP		TAPE RCDR FWD - off (ctr)	3	
CDR		ATT DBD - MAX	1	
CMP	22	FL V37	2	
CDR		EMS MODE - STBY	1	Buildup of ΔV indicator errors, caused by accelerometer bias, minimized if set to STBY immediately after thrusting. Otherwise, ΔV indicator continues counting.
CDR,CMP		RHC (both) - LOCKED		
	23	Select Attitude Control mode, para 4.9.1 Maneuver to entry attitude R_____, P_____, Y_____		

STA/T	STEP	PROCEDURE	PANEL	REMARKS
	24	Set up for CM RCS sys 1		
CDR		AUTO RCS A/C ROLL (4) - OFF	8	
		AUTO RCS CM 1 (6) - MNA or MNB		
		AUTO RCS CM 2 (6) - OFF		
ALL	25	Go to G&N Entry, para 4.17.7		

STA/T	STEP	PROCEDURE	PANEL	REMARKS
		4.17.5 G&N CM/SM SEPARATION		
LMP	1	If lunar return or SM RCS deorbit		Prepares for battery preloading prior to CM/SM separation and verifies batteries transferred to main buses. (Previously configured in SPS or Hybrid Deorbit Thrusting, para 4.17.2, 4.17.4, 4.18.1 or 4.18.3.)
-12:00		MN BUS TIE BAT A/C - on (up)	5	
		Verify bat bus A current increase and/or bat voltage decrease	3	
		MN BUS TIE BAT B/C - on (up)	5	
		Verify bat bus B current increase and/or bat voltage decrease	3	
		CAUTION If either bat bus A(B) current fails to increase after cycling respective MN BUS TIE switch, configure bats to main buses using cb BAT BUS A BAT C (cb BAT BUS B BAT C).	250	
CDR	2	Prepare ECS		
		PRIM GLY TO RAD - BYP (pull)	325	
		REPRESS pkg vlv - FILL	326	Assures CM 02 supply is full before CM/SM separation.
CMP		02 PRESS IND sw - SURGE TK	2	
		CRYO 02 PRESS 1 ind - 865-935 psia		
CDR		REPRESS pkg vlv - ON	326	
		SM 02 SUP vlv - OFF		
		CAB PRESS RELF vlv (2) - BOOST/ENTR (safety latch on)	325	

STA/T STEP	PROCEDURE	PANEL	REMARKS
	4.17.5 G&N CM/SM SEPARATION		
LMP 1 -12:00	If lunar return or SM RCS deorbit MN BUS TIE BAT A/C - on (up) Verify bat bus A current increase and/or bat voltage decrease MN BUS TIE BAT B/C - on (up) Verify bat bus B current increase and/or bat voltage decrease	 5 3 5 3	Prepares for battery preloading prior to CM/SM separation and verifies batteries transferred to main buses. (Previously configured in SPS or Hybrid Deorbit Thrusting, para 4.17.2, 4.17.4, 4.18.1 or 4.18.3.)
	CAUTION If either bat bus A(B) current fails to increase after cycling respective MN BUS TIE switch, configure bats to main buses using cb BAT BUS A BAT C (cb BAT BUS B BAT C).	 250	
CDR 2	Prepare ECS PRIM GLY TO RAD - BYP (pull) REPRESS PKG vlv - FILL	 325 326	 Assures CM 02 supply is full before CM/SM separation.
CMP	02 PRESS IND sw - SURGE TK CRYO 02 PRESS 1 ind - 865-935 psia	2	
CDR	REPRESS PKG vlv - ON SM 02 SUP vlv - OFF CAB PRESS RELF vlv (2) - BOOST/ENTR (safety latch on)	326 325	

STA/T	STEP	PROCEDURE	PANEL	REMARKS
CDR	3	Configure RCS for separation AUTO RCS B/D ROLL B1 & B2 - MNA AUTO RCS B/D ROLL D1 & D2 - MNB AUTO RCS PITCH A3 & C4 - MNB AUTO RCS PITCH C3 & A4 - MNA AUTO RCS YAW B3 & D4 - MNA AUTO RCS YAW D3 & B4 - MNB	8	Assumes desired Attitude Control mode, para 4.9.1, previously selected.
	4	Maneuver to separation attitude		Separation attitude is nominally deorbit burn attitude plus a 45° yaw out of plane.
		If CMC control SC CONT - SCS	1	During separation, CSM RCS DAP acting upon CM would produce undesirable rates.
		or CMC MODE - FREE		
CMP	5	If earth orbit mission RCS TRNFR - CM Test jets RCS TRNFR - SM	2	If lunar mission, jets test fired in Entry System Preparation, para 4.16.2.3.
CDR	6	ATT DBD - MAX RATE - HI	1	Conserves propellant between separation and .05 G.
LMP	7	Configure telecom VHF AM (2) - off (ctr) S BD ANT OMNI A - C S BD OMNI - OMNI If RCS deorbit TAPE RCDR FWD - FWD	3	
CMP	8	Ready SM RCS SM RCS PRPLNT (4) - OPEN	2	OPEN position is momentary. Opens 8 isolation valves. All propellant should be utilized at separation.

NORMAL/BACKUP

STA/T	STEP	PROCEDURE	PANEL	REMARKS
CMP		SM RCS PRPLNT tb (8) - gray	2	Gray indicates fuel and oxidizer isolation valves open.
		SM RCS SEC FUEL PRESS (4) - OPEN		OPEN position is momentary. No talkbacks.
LMP	9	Preload batteries		
-08:00		FC2 MNA - OFF	3	
		FC2 MNB - OFF		
		FC2 MNA & MNB tb (2) - bp		Barber pole indicates fuel cell not connected to bus.
-05:00		FC PUMPS (all) - OFF	5	
CMP		HI GAIN ANT PWR - OFF	2	
	10	Configure ECS		
LMP		cb ECS RAD CONT/HTR (2) - open	5	
		cb WASTE H2O/URINE DUMP HTRS (2) - open		
		cb RAD HTRS OVLD (2) - open		
CMP		POT H2O HTR - OFF	2	
CDR	11	Arm SECS		
		After MSFN AOS		
		SECS LOGIC (both) - on (up)	8	SECS LOGIC and SECS PYRO lever lock switches provide enabling power for separation events.
		Report logic arm		
		After go from MSFN		
		SECS PYRO ARM (2) - on (up)		
CMP	12	PRPLNT DUMP - RCS CMD (verify)	2	Was set to RCS CMD 42 seconds after lift-off. CM RCS activated in para 4.16.1.3 or 4.16.2.3.

STA/T	STEP	PROCEDURE	PANEL	REMARKS
CDR		EMS MODE - STBY (verify)	1	EMS MODE switch should remain at STBY until just prior to entry interface to preclude false .05 G sensing.
CMP	13	Separate from SM		
00:00		CM/SM SEP (both) - on (up)	2	Guarded. On position is momentary.
		SM C/W lts - on		Low limit SM system lights on at separation.
		C/W CSM - CM		
CDR		MASTER ALARM pb/lt - on, push	1	
CMP		SM C/W lts - out	2	
		RCS TRNFR - CM		Backup to automatic RCS transfer.
CDR		CM RCS LOGIC - OFF	1	Should be turned on when on main chutes to power CM PRPLNT DUMP and CM PRPLNT PURGE switches.
	14	Select Attitude Control mode, para 4.9.1		Entry DAP not turned on.
		Maneuver to entry attitude (or to SM RCS deorbit if Hybrid deorbit)		
		R ____, P ____, Y ____		
	15	Set up for CM/RCS sys 1 (omit for Hybrid deorbit)		G&N entry DAP will function with either one or both CM/RCS systems enabled.
		AUTO RCS A/C ROLL (4) - OFF	8	Electrically isolates system 2 for entry. If a problem develops in system 1, disable the affected channel and use direct RCS control.
		AUTO RCS CM 1 (6) - MNA or MNB		
		AUTO RCS CM 2 (6) - OFF		
	16	Go to Entry Preparation (P61), para 4.17.6		
or		If G&N Hybrid Deorbit, go to para 4.17.4 (step 16)		

NORMAL BACKUP

STA/T	STEP	PROCEDURE	PANEL	REMARKS
		4.17.6 ENTRY PREPARATION (P61)		Predicted entry interface parameters are displayed and EMS initialization parameters are obtained for comparison with MSFN values.
		Required CMC - on, para 4.10.1.2 ISS - on and orientation known, para 4.10.1.2 & 4.11 SCS - on, para 4.10.2.2		
CDR		CMC ATT - IMU	1	
		.05 G sw - OFF		
CMP	1	DSKY - P61 (selected at end of deorbit burn)	2	
		or Key V37E 61E DSKY - P61		
		Poss PROG alarm Key V05 N09E (to verify alarm) 00210 (ISS not on)		
		or 00220 (IMU orientation unknown)		
		FL V37 Key XXE		
		(R41 - State Vector Integration)		
		COMP ACTY lt - on (R41)		Indicates state vector integration in process.

STA/T STEP	PROCEDURE	PANEL	REMARKS
CMP	COMP ACTY lt - flashes every 2 sec (ave G on)	2	Indicates integration complete, and average G on.
	Poss PROG alarm V05 N09 (10 sec) 01427 (IMU reversed)		Zero roll on FDAI is lift-down. -Ysm is within 30° of V x R. Alarm 01427 will always be displayed following a P40 or P41 deorbit maneuver if platform is aligned to preferred orientation computed in P40 or P41.
	or 01426 (IMU unsatisfactory for entry)		Neither +Ysm or -Ysm within 30° of V x R.
2	FL V06 N61		
	Impact Lat (+North) XXX.XX DEG		Latitude of desired impact point.
	Impact Long (+East) XXX.XX DEG		Longitude of desired impact point.
	Hds Up/Dn (+up) +/-00001		Heads up/down defines entry roll attitude.
	Accept PRO		
	Reject V25E, load desired values		Normally, these values would have been loaded prior to deorbit.
3	FL V06 N60 (entry data)		
	G max XXX.XX G		Predicted maximum G level for an entry at nominal bank angle (L/D = 0.18)
	V pred XXXXX. FPS		Predicted inertial velocity at entry interface 65.8 NM (400,000 ft) above Fischer ellipsoid.

NORMAL BACKUP

STA/T	STEP	PROCEDURE		PANEL	REMARKS
CMP		Gamma EI	XXX.XX DEG	2	Flight path angle (between inertial velocity vector and local horizontal) at 65.8 NM (400,000 ft) above Fischer ellipsoid. Minus indicates flight path is below horizontal plane.
		Record values			
		PRO			
	4	FL V16 N63			Display is relative to an erasable preloaded altitude value above Fischer ellipsoid.
		RTOGO (.05 G to splash)	XXXX.X NM		Range to go from a preloaded erasable altitude value to splash.
		VIO (at .05 G)	XXXXX. FPS		Predicted inertial velocity at a preloaded altitude value.
		TFE (time from .05 G)	XXBXX MIN-SEC		Time from now to a preloaded altitude value (updated every 2 seconds). This prediction will be about 3 minutes longer than actual following a hybrid maneuver when called a half hour before .05 G. Error will vary, depending on how early after deorbit P61 is called. 59B59 is maximum reading (-above, +below).
		Record and compare with MSFN			
CDR		EMS MODE - STBY EMS FUNC - RNG SET (CW)		1	Do not go through EMS TEST positions.
		Set RNG ind - RTOGO from .05 G (MSFN value)			Range to go from a preloaded value to splashdown.

STA/T STEP	PROCEDURE	PANEL	REMARKS
CDR	Align scroll Vo to exact entry velocity (if required)		Predicted entry velocity was preset in para 4.16.1.2, EMS Deorbit and Entry Test. Scroll can be slewed only one inch in reverse. In Vo SET position, both initial velocity in range integrator and scroll velocity are simultaneously changed.
	EMS FUNC - ENTRY	1	
CMP	Accept PRO (Exit P61) P61 calls P62 Go to G&N Entry, para 4.17.7	2	
	Reject V32E, recycle to step 3		Obtains new state vector and updated N60.

NORMAL BACK

STA/T STEP	PROCEDURE	PANEL	REMARKS
	4.17.7 G&N ENTRY		
	Required CMC - on, para 4.10.1.2 ISS - on and orientation known, para 4.10.1.2 & 4.11 SCS - on, para 4.10.2.2		
CDR	CMC ATT - IMU .05 G sw - OFF	1	
CMP 1	DSKY - P62 Auto select by P61 (bypasses state vector extrapolation reqt)	2	
or	If FL V37 Key 62E		
or	Key V37E 62E DSKY - P62 (average G reinitiated)		
	Poss PROG alarm Key V05 N09E (to verify alarm) 00210 (ISS not on)		
	or 00220 (IMU orientation unknown)		
	FL V37 Key XXE		

STA/T STEP	PROCEDURE	PANEL	REMARKS
	(R41 - State Vector Integration)		R41 bypassed if P62 was called by P61.
CMP	COMP ACTY lt - on (R41)	2	Indicates integration in process.
	COMP ACTY lt - flash every 2 sec (ave G on)		Indicates integration complete, and average G on.
	Poss PROG alarm V05 N09 (10 sec) 01427 (IMU reversed)		Zero roll on FDAI is lift-down. -Ysm is within 30° of $\underline{V} \times \underline{R}$. Alarm 01427 will always be displayed following a P40 or P41 deorbit maneuver if platform is aligned to preferred orientation computed in P40 or P41.
	or 01426 (IMU unsatisfactory for entry)		Neither +Ysm or -Ysm within 30° of $\underline{V} \times \underline{R}$.
2	FL V50 N25 00041 (request CM/SM separation)		If CM and SM not separated prior to this step, separation should be accomplished now per para 4.17.5. V37s are inhibited after a response to this display except for a request to perform P00. If another program is desired, select P00 then select desired program. P62 should be reselected before entry into atmosphere since average G terminates by going to P00. Any program not requiring DAP control may be selected from P00.
3	PRO		Starts entry DAP. Roll attitude error scaling is changed in G&N for compatibility with 50/15/50/10 FDAI scale position. After PRO and until 50/15/50/10 selected, full scale roll error is 20°, not 5°.

NORMAL/BACKUP

STA/T	STEP	PROCEDURE	PANEL	REMARKS
CMP	4	FL V06 N61	2	
		Impact lat (+North) XXX.XX DEG		Latitude of desired impact point.
		Impact long (+East) XXX.XX DEG		Longitude of desired impact point.
		Hds up/down (+Hds up) +/-00001		Defines entry roll attitude.
		Accept PRO		
		If α <45° - DSKY P63		If α within 45° of (-) velocity vector, P63 is automatically called.
		Reject V25E load new data		
	5	V06 N22 (monitor)		
		R, P, Y XXX.XX DEG		Final gimbal angles at EI. Display may be bypassed and P63 called if α within 45°.
		If α >45° - 21 sec after α <45°, DSKY P63		
	6	ORDEAL Pitch - ___° (Hds up)		A nominal entry will have IMU inertial attitude on FDAI 1 and ORDEAL local vertical attitude on FDAI 2.
		ORDEAL Pitch - ___° (Hds down)		
	7	DSKY - P63		
CDR	8	After CM/SM separation and CM stabilization at entry attitude		
		EMS MODE - NORM	1	Left in STBY until after separation and stabilization; buildup of ΔV indicator errors, caused by accelerometer bias, minimized if set to NORM <30 seconds prior to thrusting. If no postburn update, and for RCS deorbit, start EMS by positioning EMS MODE from STBY to BU at MSFN supplied value of RET .05 G.
		ATT DBD - MAX		
		RATE - HI		
		FDAI SCALE - as desired		

STA/T	STEP	PROCEDURE	PANEL	REMARKS
CDR,CMP		Monitor FDAIs and RSI	1,2	
		xxxxxxxxxxxxxxxxxxxxxxxxxxxxxxxxxxxxxxxxx		
CDR		If abnormal vehicle dynamics Damp rates with direct RCS ROT CONTR PWR DIR (both) - OFF	1	This procedure sequence minimizes failure isolation time. (Another functionally acceptable method disables AUTO RCS switches first, then RHC direct power.)
		If abnormal vehicle dynamics continue ROT CONTR PWR DIR (both) - MNA/MNB Damp rates with direct RCS AUTO RCS (affected axis) - OFF Continue with DIRECT RCS (affected axis)	8	
		xxxxxxxxxxxxxxxxxxxxxxxxxxxxxxxxxxxxxxxxx		
CMP	9	V06 N64 (monitor) Drag accel XXX.XX G VI XXXXX. FPS	2	N68 and N74 available if desired.
		Range to splash (+ overshoot) XXXX.X NM		Inertial velocity (nominal). Range to go to desired splashpoint located at calculated impact time (decreasing). Display is bypassed on first 2-second cycle.
CDR		BMAG MODE (3) - RATE 2	1	Cages attitude BMAGs. Prevents SCS-driven FDAI roll stability indicator from jumping when GA1 BMAGs automatically cage at .05 G.
		MAN ATT (3) - RATE CMD SC CONT - CMC		Configuration required for auto G&N entry and normally selected at last status check prior to .05 G.
		CMC MODE - AUTO, HOLD, or FREE		Entry DAP does not look at CMC MODE switch.

NORMAL BACKUP

STA/T	STEP	PROCEDURE	PANEL	REMARKS
CMP		DSKY - P64 (at .05 G)	2	CMC changes Entry DAP from att hold in alpha and beta to rate damping in pitch and yaw (roll unchanged).
CDR		.05 G sw - on (up) EMS ROLL - on (up)	1	.05 G and EMS ROLL switches should be placed on simultaneously to minimize EMS error.
		.05 G lt - on		.05 G lt will not necessarily occur simultaneously with P64 on DSKY.
		xxxxxxxxxxxxxxxxxxxxxxxxxxxxxxxxxxxxxxx If no .05 G indication by RET .05 G +3 sec EMS MODE - BU xxxxxxxxxxxxxxxxxxxxxxxxxxxxxxxxxxxxxxx		At .05 G +10 sec, one lift vector light will come on; disregard light.
		Scroll slews to left RNG ind decreases		
CMP	10	DSKY - P64 V06 N74 (monitor) Beta XXX.XX DEG VI XXXXX. FPS Drag accel XXX.XX G	2	N64 and N68 available if desired. Commanded bank angle. Inertial velocity (decreasing). Drag accel (increasing).
CDR		Compare RSI & ball for lift vector G-V plot within limits	1	Violation of an EMS G onset ray should be followed by an orientation to lift vector up. Violation of an EMS G offset ray should be followed by an orientation to lift vector down. If at point of tangency, G&N is not commanding lift-up or lift-down, manually orient CM and terminate G&N steering.

STA/T	STEP	PROCEDURE	PANEL	REMARKS
CMP	11	If DSKY - P67 Go to step 18	2	P64 calls P67 at .2 G if VI at .05 G (step 10) <27K fps. Entry velocities ≥27K fps are possible from RCS deorbit modes.
	12	DSKY - P65 (entry up-control) Indicates VI ≥27K fps and constant drag control has brought range prediction to within 25 NM of desired range		P65 not applicable to low earth orbital mission. Purpose: • Execute entry up-control guidance which steers CM to a calculated reference trajectory. • Establish entry up-control displays for crew use with EMS to determine whether backup procedures should be implemented. • Select entry-ballistic phase program (P66) if exit (drag acceleration <Q7 fps squared) is sensed, or selects final phase program (P67) if drag acceleration >Q7 fps squared is sensed, R dot negative, and V sufficiently low.
CDR		EMS displays - approach DSKY display DL & VL	1	
CMP	13	FL V16 N69 (computed exit conditions) Beta XXX.XX DEG DL XXX.XX G VL XXXXX. FPS Record data for later use with EMS	2	Commanded bank angle. Drag acceleration at end of up control. Velocity at end of up control.

NORMAL/BACKUP

STA/T STEP	PROCEDURE	PANEL	REMARKS
CMP	PRO	2	N69 may be terminated by PRO, or selection of either P66 or P67 by entry guidance provides automatic termination.
	FDAI att errors _____deg rates _____deg/sec		
14	V06 N74 Beta XXX.XX DEG VI XXXXX. FPS Drag accel XXX.XX G		N64 and N68 available if desired.
15	If DSKY - P67 Go to step 18		P67 occurs if drag >DL, R dot negative, and V sufficiently low.
16	DSKY - P66 (entry-ballistic)		Automatically selected by P65 when D <DL (≈0.196 G). Not applicable to low earth orbit mission. N64, N68, N74 available if desired. Purpose: Maintains CM attitude during ballistic (skipout) phase for atmospheric re-entry and selects P67 when re-entry (drag acceleration builds up to Q7F +0.5 fps squared, ≈0.2 G) sensed.
17	V06 N22 (desired gimbal angles) R, P, Y XXX.XX DEG Check FDAI total attitude = DSKY values FDAI att errors <_____deg rates <_____deg/sec. (Three-axis DAP control was regained when less than .05 G was sensed, and will be relinquished when .05 G is again sensed)		

STA/T	STEP	PROCEDURE	PANEL	REMARKS
0.2 G				
CMP	18	DSKY - P67	2	P67 continues entry guidance from ≈0.2 G until termination of steering when the CM velocity with respect to earth = 1000 ft/sec (≈10.7 NM altitude). N64, N68, N74 available if desired.
CDR		EMS - 0.2 G (if 10 sec since .05 G)	1	
CMP	19	V06 N66 (monitor)	2	
		Beta XXX.XX DEG		Commanded bank angle (-command will correct for + cross range error).
		CRSRNG ERR XXXX.X NM		CMC solution for cross range error (+ target south of direction of motion).
		DWNRNG ERR XXXX.X NM		CMC solution for down range error (decreasing); + is overshoot. Will be 9999.9 after overshoot of target.
		Key VERB (freeze displays) Compare DWNRNG ERR to pad data (DWNRNG ERR within 100 NM of pad data)		
		xxxxxxxxxxxxxxxxxxxxxxxxxxxxxxxxxxxx		
CMP		If DWNRNG ERR not within 100 NM		
CDR		Maintain BBA entry		
		xxxxxxxxxxxxxxxxxxxxxxxxxxxxxxxxxxxx		
CMP		KEY REL (reinstates V06 N66 monitor)		
CDR		Fly roll cmd	1	
		Monitor lift vector on RSI & ball		

NORMAL BACKUP

STA/T	STEP	PROCEDURE	PANEL	REMARKS
CMP	20	FL V16 N67 (monitor)	2	
		Range to splash XXXX.X NM (+ ovsht)		Range to go to desired splashpoint (+ is overshoot).
		Lat present position XXX.XX DEG (+ north)		Latitude of present position (+ is north).
		Long present position XXX.XX DEG (+ east)		Longitude of present position (+ is east).
		(V REL = 1000 fps at ≈65K')		
		If R1 = -, lift-up; +, lift-down		
CDR		Monitor altimeter	1	
		Record lat, long, & voice to RECY at 10K'		
		Record EMS RTOGO EMS MODE - STBY EMS FUNC - OFF		
		Go to Earth Landing Phase (<50K'), para 4.19		

STA/T	STEP	PROCEDURE	PANEL	REMARKS
		4.18 SCS DEORBIT AND ENTRY		
		4.18.1 SCS/SPS DEORBIT THRUSTING		
		CMC - on (desired), para 4.10.1.2 ISS - on and orientation known (desired), para 4.10.1.2 Deorbit & Entry Vehicle Preparation (required), para 4.16.1		CMC and ISS on, and orientation known, necessary for P47 monitor.
		SCS - on (required), para 4.10.2.2		All AUTO RCS switches must be at OFF prior to SCS - on. G&C circuit breakers on all panels should be closed except as defined in Limited Use Controls, para 4.8.4.
CDR		CMC ATT - IMU .05 G sw - OFF	1	
	1	ΔV setup EMS MODE - STBY EMS FUNC - ΔV SET Set ΔV ind EMS FUNC - ΔV		
CMP	2	Key V37E 00E DSKY - P00	2	P00 updates state vector periodically.
CDR	3	Establish Total Attitude displays, para 4.9.2.5		To obtain telemetry on BMAG attitude error, FDAI SEL switch must be in 1 or 2 position (with SCS displays).
	4	SCS Attitude Maneuver to thrusting attitude, para 4.10.2.5		

NORMAL BACKUP

STA/T	STEP	PROCEDURE	PANEL	REMARKS
CDR	5	Establish SCS Attitude Hold, para 4.9.1.4 Check boresight star		Limit cycle, max deadband and low rate should be selected for fuel conservation.
	6	Ignition preparation		Sets up non-time critical switching required for thrusting.
LMP		SPS He VLV tb (both) - bp SPS He VLV (both) - AUTO	3	Barber pole indicates valves are closed.
-10:00		MN BUS TIE BAT A/C - on (up)	5	
		Verify bat bus A current increase and/or bat voltage decrease	3	Verification of current increase for appropriate bat bus via DC AMPS ind (pnl 3) assures successful operation of main bus tie motor switches.
		MN BUS TIE BAT B/C - on (up)	5	Both MN BUS TIE switches at on provides 3 batteries on line for deorbit and entry if cbs MNA BAT C and MNB BAT C are closed (panel 275).
		Verify bat bus B current increase and/or bat voltage decrease	3	
		CAUTION If either bat bus A(B) current fails to increase after cycling respective MN BUS TIE switch, configure bats to main buses using cb BAT BUS A BAT C (cb BAT BUS B BAT C).	250	

STA/T	STEP	PROCEDURE	PANEL	REMARKS
CDR		LV IND/GPI sw - GPI ROT CONTR PWR DIR (both) - OFF SCS TVC (2) - AUTO TVC GMBL DR (2) - AUTO ΔV CG - CSM Establish Ullage Select, para 4.8.1	1	
CMP	7	If P47 for thrust monitor Key V37E 47E DSKY - P47	2	G&N monitoring is highly desirable, if available, but not required. P40 can also be utilized for monitoring by properly combining this procedure with G&N Prethrusting and Thrusting procedures, para 4.14.1 and 4.14.2. N62 is callable during P47.
		Poss PROG alarm Key V05 N09E (to verify alarm) 00210 (ISS not on) or 00220 (IMU orientation unknown)		
		FL V37 Key XXE		When CMC regains control, program cycles through R00 which turns off average G.
		FL V16 N83 ΔVX, Y, Z (cont) XXXX.X FPS		Displayed when average G turned on. CMC requires 12.5 seconds per time step to turn on average G. Time step = 240 seconds.

NORMAL BACKUP

STA/T	STEP	PROCEDURE	PANEL	REMARKS
	8	Gimbal drive and trim check		PITCH and YAW GMBL caution/warning lights (panel 2) indicate overcurrent to actuator motors.
CDR		TVC SERVO PWR 1 - AC1/MNA	7	
		TVC SERVO PWR 2 - AC2/MNB		
		TRANS CONTR PWR - on (up)	1	
		ROT CONTR PWR NORM 2 - AC		Opens RHC 2 (commander's) breakout switch dc circuits to prevent loss of attitude reference. Prevents RCS jets from firing when RHC is used for MTVC check. Normally IGN 1 signal disables RCS pitch and yaw channels 1 second after SPS engine ignition.
		RHC 2 - ARMED		
		Primary TVC check		Start motors sequentially at ≈1 second intervals to avoid electrical overload.
-05:00		GMBL MOT PITCH 1 - START		START position is momentary.
		GMBL MOT YAW 1 - START		
		Confirm trim control on indicators		Gimbals drive in response to thumbwheel movement. Verifies primary gimbal trim control.
		Auto switchover check		
		THC - CW		
		RHC 2 - verify no MTVC		
		GMBL POS ind (4) - no motion		Verifies TVC control switches from channel 1 to channel 2 (which is off) when THC - CW is selected.
		Secondary TVC check		
		GMBL MOT PITCH 2 - START		START position is momentary.
		GMBL MOT YAW 2 - START		
		Verify trim control		Verifies secondary gimbal trim control.

STA/T	STEP	PROCEDURE	PANEL	REMARKS
CDR		Verify MTVC control		Gimbals drive in response to RHC movement, and return to set-in values when RHC is neutral. Verifies control of secondary MTVC loops through RHC.
		THC - neutral SPS GMBL tw (2) - set and confirm final desired gimbal position	1	Gimbals are trimmed in primary channel to thrusting values (SCS modes).
	9	ROT CONTR PWR DIR (both) - MNA/MNB		Enables manual direct RCS for overriding a roll auto RCS failure during thrusting.
		RHC 2 - null att errors		Needles can be used as an error null reference during an MTVC contingency takeover from an automatic ΔV mode.
		ATT DBD - MIN ROT CONTR PWR NORM (both) - AC/DC Check boresight star		Set to MIN as errors are nulled.
CMP	10	2-minute countdown		
-02:00		Report TF GETI = 2 minutes	2	
CDR		FDAI SCALE - 5/5	1	
		(Deleted)		
		ΔV THRUST A(B) - NORM		Guarded.
		THC - ARMED		
		LIM CYCLE - OFF		
-00:30				
LMP		TAPE RCDR FWD - FWD	3	

NORMAL/BACKUP

STA/T STEP	PROCEDURE	PANEL	REMARKS
CDR	EMS MODE - NORM	1	Buildup of ΔV indicator errors, caused by accelerometer bias, minimized if set to NORM <30 seconds prior to thrusting.
-00:29 to -00:06	Perform ullage (if required)		No ullage required if SPS sump tanks are full. 2 or 4 jet ullage times are defined in SNA-8-D-027 CSM Data Book, Vol I. Exact velocity change is not critical - only a steady ullage to settle SPS propellants.
	xxxxxxxxxxxxxxxxxxxxxxxxxxxxxx x x No ullage DIR ULL pb - push, hold RHC 2 - control attitude x x xxxxxxxxxxxxxxxxxxxxxxxxxxxxxx		Direct ullage inhibits pitch and yaw auto RCS control. Attitude should be maintained manually.
11 00:00	Ignition SPS THRUST - DIR ON		Engine restart should not be attempted within 5 seconds from initial ignition to avoid undesirable He pressure excursions.
IGN+1 sec	SPS THRUST lt - on RATE - HI		Bypasses noise problem in SCS gyro assemblies because of thrusting vibration levels and provides backup to auto selection of high rate in pitch and yaw TVC.

STA/T	STEP	PROCEDURE	PANEL	REMARKS
		xxxxxxxxxxxxxxxxxxxxxxxxxxxxxx		
		If no ignition		
CDR		ΔV THRUST (2) - NORM	1	Guarded.
		Recycle step 11		
		or Terminate maneuver		
		xxxxxxxxxxxxxxxxxxxxxxxxxxxxxx		
		Discontinue ullage		
IGN +2-5 sec		ΔV THRUST (2) - NORM		Guarded.
	12	Monitor SPS operation		SPS OXID UNBAL indicator is erratic for about 25 seconds after ignition.
		Pc ind - 95-105 psia		
LMP		SPS INJ VLV ind (4) - OPEN	3	
		SPS He VLV tb (both) - gray		Gray indicates valves open.
		SPS FUEL & OXID PRESS ind (2) - 170-195 psia		
CDR or CMP		FDAI - monitor att error & rates	1,2	
		xxxxxxxxxxxxxxxxxxxxxxxxxxxxxxxxxxxxxxxxxx		
CDR		MTVC takeover		
		If errors and rates abnormal		This backup procedure bypasses maximum possible failure modes, thereby providing an alternate means of completing burn without troubleshooting.
		ΔV THRUST (2) - OFF	1	
		Damp rates to IMU ball or out-the-window with RHC		
		SPS THRUST - NORM		Lever lock.

NORMAL/BACKUP

STA/T STEP	PROCEDURE	PANEL	REMARKS
CDR	If no response Use direct RCS and disable affected channel If rate needle(s) abnormal BMAG MODE - RATE 1	1	Since a failure causing abnormal TVC and RCS attitude control would not be a failed-on jet, RCS disabling should be done with MAN ATT switch to ACCEL CMD rather than AUTO RCS switches - OFF, thereby providing auto RCS control for reorientation.
	Reorient to thrusting attitude		
	THC - CW		
	ΔV THRUST A(B) - NORM		Guarded.
	Initiate ullage		
	SPS THRUST - DIR ON		Lever lock.
	Fly MTVC (rate cmd)		
IGN+2-5 sec	ΔV THRUST (2) - NORM		Guarded.
	or Terminate maneuver		
	xxxxxxxxxxxxxxxxxxxxxxxxxxxxxxxxxxxxxxxxxx		
	xxxxxxxxxxxxxxxxxxxxxxxxxxxxxxxxxx		
	No roll att control MAN ATT ROLL - ACCEL CMD RHC - control roll rates		
	or AUTO RCS (16) - OFF Control roll using direct	8	
	xxxxxxxxxxxxxxxxxxxxxxxxxxxxxxxxxx		

STA/T	STEP	PROCEDURE	PANEL	REMARKS
CDR	13	Monitor for SPS engine cutoff cue ΔV ind - goes through -0.1 and/or EVNT TMR ind - 59:59 (-) thrust duration	1	For suspected ΔV indicator failures, utilize Event Timer to terminate SPS thrust manually. Timer normally counts down from 59:59.
		ΔV THRUST (2) - OFF SPS THRUST - NORM SPS THRUST lt - out Report engine cutoff Pc = 0		Guarded. Lever lock.
LMP		SPS INJ VLV ind (4) - CLOSE SPS He VLV tb (both) - bp	3	Barber pole indicates valves closed.
CDR	14	Set controls after tailoff (Deleted) GMBL MOT PITCH 2 - OFF GMBL MOT YAW 2 - OFF GMBL MOT PITCH 1 - OFF GMBL MOT YAW 1 - OFF EMS MODE - STBY	1	Turning off servo 2 first minimizes switching in logic. Sets gimbal motors off sequentially to avoid power surge. Buildup of ΔV indicator errors, caused by accelerometer bias, minimized if set to STBY immediately after thrusting. Otherwise, ΔV indicator continues counting.
CMP		Record ΔV ind		

NORMAL BACKUP

STA/T	STEP	PROCEDURE	PANEL	REMARKS
CDR		TVC SERVO PWR (both) - OFF	7	
		cb SPS PITCH (both) - open	8	
		CB SPS YAW (both) - open		
		ATT DBD - MAX	1	
		THC - LOCKED		
CMP		(To re-zero registers, V32E)	2	Provides capability to monitor another burn without going through R00.
	15	PRO (exit P47)		When P47 termination desired.
	16	FL V37 Key XXE Go to SCS CM/SM Separation, para 4.18.4		

STA/T	STEP	PROCEDURE	PANEL	REMARKS
		4.18.2 SCS/SM RCS DEORBIT THRUSTING		
		CMC - on (desired), para 4.10.1.2 ISS - on and orientation known (desired), para 4.10.1.2 SCS - on (required), para 4.10.2.2 Deorbit & Entry Vehicle Preparation (required), para 4.16.1		CMC and ISS on, and orientation known, necessary for P47 monitor.
CDR		CMC ATT - IMU .05 G sw - OFF	1	
CMP	1	Key V37E 00E	2	P00 updates state vector periodically.
	2	Establish Total Attitude display, para 4.9.2.5		
	3	Select Attitude Control desired, para 4.9.1 Maneuver to thrusting attitude		All RCS channels required for 3-axis thrusting.
	4	Establish SCS Attitude Hold, para 4.9.1.4		Limit cycle, max deadband and low rate should be selected for fuel conservation until prior to thrusting.
-05:00				
	5	For X-axis thrusting		EMS can monitor only Xsc axis thrusting.
CDR		EMS MODE - STBY EMS FUNC - ΔV SET Set ΔV ind EMS FUNC - ΔV	1	

NORMAL BACKUP

STA/T	STEP	PROCEDURE	PANEL	REMARKS
CMP	6	If P47 for thrust monitor Key V37E 47E DSKY - P47	2	G&N monitoring is highly desirable, if available, but not required. P47 should be called just prior to thrusting and terminated ASAP thereafter to minimize errors of bias and average G. Orbital parameters may by displayed by calling R30. Also, P40 can be utilized for monitoring by properly combining this procedure with G&N Prethrusting and Thrusting procedures, para 4.14.1 and 4.14.2.
		Poss PROG alarm Key V05 N09E (to verify alarm) 00210 (ISS not on) or 00220 (IMU orientation unknown)		
		FL V37 Key XXE		When CMC regains control, program cycles through R00 which turns off average G.
		FL V16 N83 ΔVX, Y, Z (cont) XXXX.X FPS		Displayed when average G turned on. CMC requires 12.5 seconds per time step to turn on average G. Time step = 240 seconds.
-00:30 CDR,CMP	7	RHC (both) - ARMED THC - ARMED ATT DBD - MIN LIM CYCLE - OFF	1	

STA/T	STEP	PROCEDURE	PANEL	REMARKS
LMP		TAPE RCDR FWD - FWD	3	
CDR		EMS MODE - NORM	1	Buildup of ΔV indicator errors, caused by accelerometer bias, minimized if set to NORM <30 seconds prior to thrusting.
00:00				
	8	Perform thrusting by manually nulling ΔV ind		
	9	EMS MODE - STBY		Buildup of ΔV indicator errors, caused by accelerometer bias, minimized if set to STBY immediately after thrusting. Otherwise, ΔV indicator continues counting.
		Record ΔV components THC - neutral, LOCKED		
LMP		TAPE RCDR FWD - off (ctr)	3	
CMP		(To re-zero registers, V32E)	2	Provides capability to monitor another burn without going through R00.
	10	PRO (exit P47)		
	11	FL V37 Key XXE Go to SCS CM/SM Separation, para 4.18.4		R00 turns off average G.

NORMAL JACKET

STA/T	STEP	PROCEDURE	PANEL	REMARKS
		4.18.3 SCS HYBRID DEORBIT THRUSTING		This procedure can be utilized for a pure CM RCS deorbit by omitting steps 10 and 11.
		CMC - on (desired), para 4.10.1.2 ISS - on and orientation known (desired), para 4.10.1.2 SCS - on (required), para 4.10.2.2 Deorbit & Entry Vehicle Preparation (required), para 4.16.1		CMC and ISS on, and orientation known, necessary for P47 monitor.
CDR		CMC ATT - IMU .05 G sw - OFF	1	
CMP	1	Key V37E 00E	2	P00 updates state vector periodically.
	2	Establish Total Attitude display, para 4.9.2.5		
	3	Select Attitude Control desired, para 4.9.1 Maneuver to thrusting attitude R_____, P_____, Y_____		Thrusting attitude for SM RCS portion of hybrid burn is nominally a retrograde +X translation with heads down - BEF.
	4	Establish SCS Attitude Hold, para 4.9.1.4		Limit cycle, maximum deadband, and low rate should be selected for fuel conservation until prior to thrusting.

STA/T	STEP	PROCEDURE	PANEL	REMARKS
LMP -10:00	5	Configure and preload batteries MN BUS TIE BAT A/C - on (up) Verify bat bus A current increase and/or bat voltage decrease MN BUS TIE BAT B/C - on (up) Verify bat bus B current increase and/or bat voltage decrease	5 3 5 3	Prepares for battery preloading prior to CM/SM separation and verifies batteries transferred to main buses.
		CAUTION If either bat bus A(B) current fails to increase after cycling respective MN BUS TIE switch, configure bats to main buses using cb BAT BUS A BAT C (cb BAT BUS B BAT C).	250	
-05:00 CDR	6	Check boresight star		
	7	For X-axis thrusting EMS MODE - STBY EMS FUNC - ΔV SET Set ΔV ind EMS FUNC - ΔV	1	If G&N is inoperative, X axis is only direction ΔV can be measured.

NORMAL BACKUP

STA/T	STEP	PROCEDURE	PANEL	REMARKS
CMP	8	If P47 for thrust monitor Key V37E 47E DSKY - P47	2	G&N monitor of ΔV is desirable if available, but not required.
		Poss PROG alarm Key V05 N09E (to verify alarm) 00210 (ISS not on) or 00220 (IMU orientation unknown)		
		FL V37 Key XXE		When CMC regains control, program cycles through R00 which turns off average G.
		FL V16 N83 ΔVX, Y, Z (cont) XXXX.X FPS		Displayed when average G turned on. CMC requires 12.5 seconds per time step to turn on average G. Time step = 240 seconds.
-00:30				
CDR,CMP	9	RHC (both) - ARMED		
CDR		THC - ARMED ATT DBD - MIN	1	
		LIM CYCLE - OFF		
LMP		TAPE RCDR FWD - FWD	3	
CDR		EMS MODE - NORM	1	Buildup of ΔV indicator errors, caused by accelerometer bias, minimized if set to NORM <30 seconds prior to thrusting.
00:00				
	10	Perform thrusting Monitor ΔV ind or EVNT TMR ind		

SCS HYBRID DEORBIT THRUSTING

STA/T	STEP	PROCEDURE	PANEL	REMARKS
	11	Burn complete		
CDR		EMS MODE - STBY	1	Buildup of ΔV indicator errors, caused by accelerometer bias, minimized if set to STBY immediately after thrusting. Otherwise, ΔV indicator continues counting.
		Record ΔV ind, EVNT TMR ind		
	12	Select SCS Attitude Control mode, para 4.9.1		
	13	Perform Separation procedure, para 4.18.4		Separation should be performed at deorbit attitude to save time because of short interval (one minute) between burns.
	14	Maneuver to CM RCS deorbit attitude R_____, P_____, Y_____ Verify using external visual cues MAN ATT ROLL, YAW - RATE CMD MAN ATT PITCH - ACCEL CMD RATE - HI FDAI SCALE - 5/5		Both CM RCS systems should be enabled for CM RCS burn. CM RCS portion of burn is completed with +X axis ≈70° below velocity vector (apex down and forward). This is ≈110° +pitch maneuver from heads down SM RCS portion of deorbit.
	15	EVNT TMR ind - SM RCS C/O +1 min EMS MODE - NORM		Buildup of ΔV indicator errors, caused by accelerometer bias, minimized if set to NORM <30 seconds prior to thrusting.
CMP		RHC 1 - initiate continuous negative pitch		Negative pitch engines have approximately 25 to 30% less authority than positive engines because of engine location and thrust direction relative to CM c.g.
CDR		RHC 2 - pulse plus pitch to maintain attitude in 3 axes		

NORMAL/BACKUP

STA/T	STEP	PROCEDURE	PANEL	REMARKS
		xxxxxxxxxxxxxxxxxxxxxxxxxxxxxxxxxxxxxx If only 1 RHC		
CDR		Pulse RHC + and - in pitch ≈±5° either side of pitch retro attitude maintaining rates under ±3°/sec		
		xxxxxxxxxxxxxxxxxxxxxxxxxxxxxxxxxxxxxx		
	16	Monitor ΔV ind or EVNT TMR ind for required value	1	The ΔV ind cutoff cue must be adjusted to account for EMS sensing axis (along X) being reversed from that of the SM RCS burn and biased off ≈70° from CM RCS velocity vector. (ΔVems = ΔVcm Cos 70°).
	17	Terminate CM RCS deorbit burn MAN ATT (3) - RATE CMD or ACCEL CMD EMS MODE - STBY		Buildup of ΔV indicator errors, caused by accelerometer bias, minimized if set to STBY immediately after thrusting. Otherwise, ΔV indicator continues counting.
		Record ΔV ind THC - LOCKED		
	18	Set up for CM RCS Sys 1 AUTO RCS A/C ROLL (4) - OFF AUTO RCS CM 1 (6) - MNA or MNB AUTO RCS CM 2 (6) - OFF	8	Electrically isolates system 2 for entry. If a problem develops in system 1, disable affected channel and use direct RCS control.
CMP	19	PRO (exit P47)	2	
	20	FL V37 Key XXE Go to SCS Entry, para 4.18.5		

SCS HYBRID DEORBIT THRUSTING

STA/T	STEP	PROCEDURE	PANEL	REMARKS
		4.18.4 SCS CM/SM SEPARATION		
LMP	1	If lunar return or SM RCS deorbit		Prepares for battery preloading prior to CM/SM separation and verifies batteries transferred to main buses. (Previously configured in SPS or Hybrid Deorbit Thrusting, para 4.17.2, 4.17.4, 4.18.1 or 4.18.3.)
-12:00		MN BUS TIE BAT A/C - on (up)	5	
		Verify bat bus A current increase and/or bat voltage decrease	3	
		MN BUS TIE BAT B/C - on (up)	5	
		Verify bat bus B current increase and/or bat voltage decrease	3	
		CAUTION If either bat bus A(B) current fails to increase after cycling respective MN BUS TIE switch, configure bats to main buses using cb BAT BUS A BAT C (cb BAT BUS B BAT C).	250	
CDR	2	Prepare ECS		
		PRIM GLY TO RAD - BYP (pull)	325	
		REPRESS pkg vlv - FILL	326	Assures CM O2 supply is full before CM/SM separation.
CMP		O2 PRESS IND sw - SURGE TK	2	
		CRYO O2 PRESS 1 ind - 865-935 psia		
CDR		REPRESS pkg vlv - ON	326	
		SM O2 SUP vlv - OFF		
		CAB PRESS RELF vlv (2) - BOOST/ENTR (safety latch on)	325	

STA/T	STEP	PROCEDURE	PANEL	REMARKS
		4.18.4 SCS CM/SM SEPARATION		
LMP -12:00	1	If lunar return or SM RCS deorbit MN BUS TIE BAT A/C - on (up) Verify bat bus A current increase and/or bat voltage decrease MN BUS TIE BAT B/C - on (up) Verify bat bus B current increase and/or bat voltage decrease	 5 3 5 3	Prepares for battery preloading prior to CM/SM separation and verifies batteries transferred to main buses. (Previously configured in SPS or Hybrid Deorbit Thrusting, para 4.17.2, 4.17.4, 4.18.1 or 4.18.3.)
		CAUTION If either bat bus A(B) current fails to increase after cycling respective MN BUS TIE switch, configure bats to main buses using cb BAT BUS A BAT C (cb BAT BUS B BAT C).	250	
CDR	2	Prepare ECS PRIM GLY TO RAD - BYP (pull) REPRESS PKG vlv - FILL	 325 326	Assures CM O2 supply is full before CM/SM separation.
CMP		O2 PRESS IND sw - SURGE TK CRYO O2 PRESS 1 ind - 865-935 psia	2	
CDR		REPRESS PKG vlv - ON SM O2 SUP vlv - OFF CAB PRESS RELF vlv (2) - BOOST/ENTR (safety latch on)	326 325	

NORMAL BACKUP

STA/T	STEP	PROCEDURE	PANEL	REMARKS
	3	Configure RCS for separation		Assumes desired attitude control mode, para 4.9.1, previously selected.
CDR		AUTO RCS B/D ROLL B1 & B2 - MNA AUTO RCS B/D ROLL D1 & D2 - MNB	8	
		AUTO RCS PITCH A3 & C4 - MNB AUTO RCS PITCH C3 & A4 - MNA		
		AUTO RCS YAW B3 & D4 - MNA AUTO RCS YAW D3 & B4 - MNB		
	4	Maneuver to separation attitude		Separation attitude is nominally deorbit burn attitude plus 45° out of plane.
CMP	5	If earth orbit mission RCS TRNFR - CM Test jets RCS TRNFR - SM	2	If lunar mission, jets test fired in Entry System Preparation, para 4.16.2.3.
CDR	6	ATT DBD - MAX RATE - HI	1	Conserves propellant between separation and .05 G.
LMP	7	Configure telecom VHF AM (2) - off (ctr) S BD ANT OMNI A - C S BD ANT OMNI - OMNI If RCS deorbit TAPE RCDR FWD - FWD	3	

STA/T	STEP	PROCEDURE	PANEL	REMARKS
CMP	8	Ready SM RCS		
		SM RCS PRPLNT (4) - OPEN	2	OPEN position is momentary. Opens 8 isolation valves. All propellant should be utilized at separation.
		SM RCS PRPLNT tb (8) - gray		Gray indicates fuel and oxidizer isolation valves open.
		SM RCS SEC FUEL PRESS (4) - OPEN		OPEN position is momentary. No talkbacks.
LMP	9	Preload batteries		
-08:00		FC 2 MNA - OFF	3	
		FC 2 MNB - OFF		
		FC 2 MNA & MNB tb (2) - bp		Barber pole indicates fuel cell not connected to bus.
-05:00		FC PUMPS (all) - OFF	5	
CMP		HI GAIN ANT PWR - OFF	2	
LMP	10	Configure ECS		
		cb ECS RAD CONT/HTRS (2) - open	5	
		cb WASTE H2O/URINE DUMP HTRS (2) - open		
		cb RAD HTRS OVLD (2) - open		
		POT H2O HTR - OFF	2	
CDR	11	Arm SECS		
		After MSFN AOS		
		SECS LOGIC (both) - on (up)	8	SECS LOGIC and SECS PYRO ARM lever lock switches provide power for CM/SM separation.
		Report logic arm		
		After GO from MSFN		
		SECS PYRO ARM (2) - on (up)		
CMP	12	PRPLNT DUMP - RCS CMD (verify)	2	Was set to RCS CMD 42 seconds after lift-off. CM RCS activated in para 4.16.1.3 or 4.16.2.3.

NORMAL

STA/T	STEP	PROCEDURE	PANEL	REMARKS
CDR		EMS MODE - STBY (verify)	1	EMS MODE switch should remain at STBY until just prior to entry interface to preclude false .05 G sensing.
CMP	13	Separate from SM		
00:00		CM/SM SEP (both) - on (up)	2	Guarded. On position is momentary.
		SM C/W lts - on		Low limit SM system lights on at separation.
		C/W CSM - CM		
CDR		MASTER ALARM pb/lt - on, push	1	
CMP		SM C/W lts - out	2	
		RCS TRNFR - CM		CM position is momentary. Backup to automatic RCS transfer.
CDR		CM RCS LOGIC - OFF	1	Should be turned on when on main chutes to power CM PRPLNT DUMP and CM PRPLNT PURG switches.
	14	Select Attitude Control mode, para 4.9.1		
		Maneuver to entry attitude		
		R ____, P ____, Y ____		
	15	Set up for CM RCS Sys 1 (omit for Hybrid Deorbit)		
		AUTO RCS A/C ROLL (4) - OFF	8	Electrically isolates system 2 for entry. If a problem develops in system 1, disable affected channel and use direct RCS control.
		AUTO RCS CM 1 (6) - MNA or MNB		
		AUTO RCS CM 2 (6) - OFF		
	16	Go to SCS Entry, para 4.18.5		
	or	Go to SCS Hybrid Deorbit, para 4.18.3 (step 14)		

SCS CM/SM SEPARATION

STA/T	STEP	PROCEDURE	PANEL	REMARKS
	4.18.5	SCS ENTRY		Assumes CM and SM separated. During entry, do not "fly to" a pegged rate needle. For this contingency, control to operational attitude ball or out-the-window visual cues.
		CMC - on (desired), para 4.10.1.2 ISS - on and orientation known (desired), para 4.10.1.2 SCS - on (required), para 4.10.2.2		
CDR		CMC ATT - IMU .05 G sw - OFF RSI aligned, para 4.9.6.3	1	
	1	Verify/maneuver to entry attitude		SCS acceleration command is recommended until .05 G for failure takeover considerations.
		EMS Deorbit and Entry Test (required), para 4.16.1.2		
	2	EMS MODE - STBY		
		EMS FUNC - RNG SET (CW)		Do not go through EMS TEST positions. The following steps to be done as soon as possible after deorbit ΔV.
		Set RNG ind - RTGO from .05 G (MSFN value)		
	3	EMS FUNC - Vo SET Realign scroll Vo to exact entry velocity (if required)		Predicted entry velocity was preset in EMS Deorbit and Entry Test, para 4.16.1.2. Scroll can be slewed only one inch in reverse. In Vo SET position, both initial velocity in range integrator and scroll velocity are simultaneously changed.

NORMAL BACKUP

STA/T	STEP	PROCEDURE	PANEL	REMARKS
CDR	4	EMS FUNC - ENTRY	1	
	5	Align RSI to desired angle (if necessary)		This alignment may be performed prior to launch or prior to deorbit.
		ATT SET - GDC		
		EMS ROLL - on (up)		
		GDC ALIGN pb - push, hold		
		ATT SET YAW tw - position RSI		Roll stability indicator alignment provides indication of backup bank angle (BBA).
		GDC ALIGN pb - rel		
		EMS ROLL - OFF		
		ATT SET YAW tw - reset		
		GDC ALIGN pb - push (32 sec max)		
	6	After CM SM separation and CM stabilization at entry attitude		
		EMS MODE - NORM		Left in STBY until after separation and stabilization; buildup of ΔV indicator errors, caused by accelerometer bias, minimized if set to NORM <30 seconds prior to thrusting. If no post-burn update, and for RCS deorbit, start EMS by positioning MODE switch from STBY to BU at MSFN supplied value of RET .05 G.
		ATT DBD - MAX		
		RATE - HI		
		FDAI SCALE - 50/15/50/10		
		BMAG MODE (3) - RATE 2		Cages attitude BMAGs, preventing SCS-driven FDAI roll stability indicator jumping at .05 G when GA 1 attitude BMAGs are automatically caged to furnish rate information for SCS-driven FDAI roll stability indicator. This configuration can be delayed, as close to .05 G as convenient, for fuel conservation.
		MAN ATT ROLL - ACCEL CMD		
		MAN ATT PITCH & YAW - RATE CMD		

STA/T	STEP	PROCEDURE	PANEL	REMARKS
CDR,CMP		Monitor FDAIs and RSI	1,2	
		xxxxxxxxxxxxxxxxxxxxxxxxxxxxxxxxxxxxxxxxx		
CDR		If abnormal vehicle dynamics Damp rates with direct RCS ROT CONTR PWR DIR (both) - OFF	1	This procedure sequence minimizes failure isolation time. (Another functionally acceptable method disables AUTO RCS switches first, then RHC direct power.)
		If abnormal vehicle dynamics continue ROT CONTR PWR DIR (both) - MNA/MNB Damp rates with direct RCS AUTO RCS (affected axis) - OFF	8	
		Continue with direct RCS (affected axis)		
		xxxxxxxxxxxxxxxxxxxxxxxxxxxxxxxxxxxxxxxxx		
	7	EVNT TMR ind - monitor for .05 G time .05 G lt - on	1	
		xxxxxxxxxxxxxxxxxxxxxxxxxxxxxxxxxxxxxxxxx		
		If no .05 G lt by RET .05 G +3 sec		Backup cue may be obtained from MSFN or CMC.
		EMS MODE - BU		Lift vector lts do not function in EMS BU mode. If RNG ind not decreasing, EMS ranging capability lost.
		xxxxxxxxxxxxxxxxxxxxxxxxxxxxxxxxxxxxxxxxx		

STA/T	STEP	PROCEDURE	PANEL	REMARKS
CDR		.05 G sw - on (up)	1	At .05 G +10 sec, one lift vector lt will come on; disregard lt.
		EMS ROLL - on (up)		.05 G and EMS ROLL switches should be placed to on simultaneously to minimize roll attitude error.
		Scroll slews to left, RNG ind decreases		If scroll slews in one axis (V or G), that axis is usable.
		Maneuver to BBA and maintain until range potential guidelines can be interpreted, then null range error using range potential guidelines and EMS RNG indicator. While nulling range errors, avoid tangency to the G on-set lines. Reverse bank angle at RETRB to null lateral range error.		BBA is backup bank angle. Disregard corridor lamps (as corridor verification cues) for entry from earth orbit (entry velocity <35K fps). RETRB is retrofire elapsed time to reverse bank.
	8	Go to Earth Landing Phase (<50K'), para 4.19		

STA/T STEP	PROCEDURE	PANEL	REMARKS
	4.19 EARTH LANDING PHASE (<50K')		
CDR 50K'	Report CM stable		
	xxxxxxxxxxxxxxxxxxxxxxxxxxxxxxxxxxxx x x CM unstable		
CMP 40K'	RCS CMD - OFF	2	OFF position is momentary.
CDR	APEX COVER JETT pb - push	1	Guarded.
	DROG DPLY pb - push		Guarded.
	(2 sec after apex cover jett)		
	x x xxxxxxxxxxxxxxxxxxxxxxxxxxxxxxxxxxxx		
30K'	ELS LOGIC - on (up)		Guarded.
	ELS AUTO - AUTO		
CMP	SEC COOL EVAP - off (ctr)	2	Required only if secondary loop is in operation.
	GLY EVAP H2O FLOW - off (ctr)		
24K'	SCS RCS disable (auto)		
	xxxxxxxxxxxxxxxxx x x RCS CMD - OFF		OFF position is momentary.
	x x xxxxxxxxxxxxxxxxx		
	Apex cover jett (auto)		The apex cover will be jettisoned at 24K feet plus 0.4 sec.

NORMAL BACKUP

STA/T	STEP	PROCEDURE	PANEL	REMARKS
		xxxxxxxxxxxxxxxxxxxxxxxxxxxxxx		
CDR		APEX COVER JETT pb - push	1	Guarded.
		xxxxxxxxxxxxxxxxxxxxxxxxxxxxxx		
		Drogue parachutes deployed (auto)		Drogue parachutes deployed at 24K feet plus 2.0 sec. The CM may be very unstable until the drogue chutes disreef in ≈11 seconds.
		xxxxxxxxxxxxxxxxxxxxxx		
		DROG DPLY pb - push		Guarded.
		xxxxxxxxxxxxxxxxxxxxxx		
		xxxxxxxxxxxxxxxxxxxxxxxxxxxxxxxxxxxxxx		
		If no drogue deployment ELS AUTO - MAN Stabilize CM with direct RCS		
		5K' MN DPLY pb - push ELS AUTO - AUTO		Guarded.
		xxxxxxxxxxxxxxxxxxxxxxxxxxxxxxxxxxxxxx		
CMP				
23.5K'		Monitor CAB PRESS ind - starts increase	2	No increase indicates cabin pressure relief valve failure.
		xxxxxxxxxxxxxxxxxxxxxxxxxxxxx		
CMP		If no increase by 17K' rh CAB PRESS RELF vlv - DUMP (safety latch off)	325	RH valve has four positions.

EARTH LANDING PHASE (<50K')

STA/T	STEP	PROCEDURE	PANEL	REMARKS
CMP		If still no increase CAB PRESS DUMP vlv - open (CCW)	Side hatch	
		xxxxxxxxxxxxxxxxxxxxxxxxxxxxxx		
10K'		Main parachutes and VHF recovery antenna deploy (auto)		Auto deployment occurs between 10,950 and 9,100 feet. Parachutes disreef in ≈15 seconds after pilot mortars fire.
		MN DPLY pb - push (within 1 sec)	1	Guarded. MN DPLY pushbutton should be pushed within 1 second after pilot mortars fire to ensure simultaneous deployment of main parachutes.
LMP		Set up entry communications VHF ANT - RECY VHF AM A - SIMPLEX VHF BCN - ON	3	If VHF AM B SIMPLEX or VHF AM A DUPLEX is required, turn off beacon during period of communication.
CDR		Transmit voice (VHF AM) reporting Position Main chutes disreefed Splash error Crew status		Continue voice transmission until touchdown.
CMP		Crew couch struts (4) - unlock		
		Deleted		

STA/T	STEP	PROCEDURE	PANEL	REMARKS
CDR		CM RCS LOGIC - on (up)	1	Must be on to power CM PRPLNT DUMP switch.
		CAUTION CM PRPLNT DUMP should be initiated immediately after main chute disreefing.		
		CAB PRESS RELF vlv (2) - CLOSE (safety latch off)	325	
		xxxxxxxxxxxxxxxxxxxxxxxxxxxxxxxxx		
CMP		If CAB PRESS DUMP valve used to equalize ΔP, CAB PRESS DUMP vlv - close (CW)	Side hatch	
		xxxxxxxxxxxxxxxxxxxxxxxxxxxxxxxxx		
CDR		CM PRPLNT DUMP - on (up) (dump burn is audible)		Guarded.
CMP		RCS IND sel - CM 1 RCS He PRESS ind - decreasing	2	
		xxxxxxxxxxxxxxxxxxxxxxxxxxxxxxxxxxxxxxx		
		RCS IND sel - CM 2 RCS He PRESS ind - decreasing		
		If not decreasing or RCS jets not firing		

STA/T	STEP	PROCEDURE	PANEL	REMARKS
CDR,CMP		RHC (both) - fire all RCS jets (except plus pitch) until propellants are depleted	2	One RHC is positioned to command plus yaw and roll (excluding plus pitch) and the other RHC positioned to command minus yaw, pitch, and roll.
		When propellant dump burn completed		
CDR		CM PRPLNT PURG - on (up) (purge is audible)	1	Guarded. Both CM RCS LOGIC and CM PRPLNT DUMP switches must be on (up) to power CM PRPLNT PURG switch. Visible fire from RCS engine nozzle extension surfaces, after burn to depletion and during purge, is expected and normal.
		CM RCS He DUMP pb - push		Guarded. CM RCS He DUMP pushbutton should be used to initiate purge following a normal dump operation if CM PRPLNT PURG switch fails to initiate purge.
CDR,CMP		If RHC (both) used for propellant dump burn		
		RHC (both) - fire all jets (except plus pitch)		One RHC is positioned to command plus yaw and roll (excluding plus pitch) and the other RHC is positioned to command minus yaw, pitch and roll.
CDR		CAB PRESS RELF vlv (2) - BOOST/ENTR (safety latch off)	325	
CMP		If CAB PRESS DUMP vlv used to equalize ΔP, CAB PRESS DUMP vlv - open (CCW)	Side hatch	

NORMAL/BACKUP

STA/T	STEP	PROCEDURE	PANEL	REMARKS
		If night landing		
CDR		cb FLOAT BAG (all) - close	8	
		PL BCN LT - HI	15	
LMP		cb FLT/PL BAT BUS A, B & BAT C (3) - close	275	Connects battery bus A, B, and battery C to flight and postlanding bus.
		cb FLT/PL MNA - open		
		cb FLT/PL MNB - open		
		cb RAD HTRS OVLD (2) - open	5	
CDR		cb SPS PITCH (2) - open	8	
		cb SPS YAW (2) - open		
3K'		rh CAB PRESS RELF vlv - DUMP (safety latch off)	325	Assures minimum cabin-to-ambient negative ΔP for landing impact.
		FLOOD LTS FIXED - POST LDG	8	Provides power from flight and postlanding bus to one floodlight in LH couch area and one floodlight in center couch area. Minimize floodlight use during postlanding. Maximum utilization should be 9.6 hours per 48-hour period.
		FLOOD LTS DIM - 1 or 2		Position 1 provides power to two secondary floodlights and position 2 provides power to two primary floodlights when FLOOD LTS FIXED switch is in POST LDG position after dc main buses are deactivated.
800'		CAB PRESS RELF vlv (2) - CLOSE (safety latch off)	325	Valves must be closed prior to touchdown to prevent water from entering CM.
		xxxxxxxxxxxxxxxxxxxxxxxxxxxxxx		
CMP		If CAB PRESS DUMP vlv used to equalize ΔP, CAB PRESS DUMP vlv - close (CW)	Side hatch	
		xxxxxxxxxxxxxxxxxxxxxxxxxxxxxx		

EARTH LANDING PHASE (<50K')

STA/T	STEP	PROCEDURE	PANEL	REMARKS
CDR		ELS - AUTO (verify)	1	
		ELS LOGIC - on (up) (verify)		Guarded.
CMP		CM RCS PRPLNT (both) - OFF	2	
		CM RCS PRPLNT tb (both) - bp		Barber pole indicates at least one valve closed in each system.
CDR		DIRECT 02 vlv - OPEN (CCW)	7	
LMP		MN BUS TIE (2) - OFF	5	Removes battery power from dc main buses.
		CAUTION MN BUS TIE switches must be left in the OFF position to ensure that batteries A, B, and C are used to power the postlanding bus only, and to prevent battery shorting caused by water entering the CM feed-through connectors.		
LMP		cb BAT RLY BUS (2) - open		
		Postlanding Check, para 4.20		

NORMAL BACKUP

STA/T	STEP	PROCEDURE	PANEL	REMARKS
		4.20 POSTLANDING		
		4.20.1 POSTLANDING STABILIZATION		
LMP		cb MN REL (2) - close	229	
CMP		MN REL - on (up)	2	Guarded. On position is momentary. Releases main parachutes.
		xxxxxxxxxxxxxxxxxxxxxxxxxxxxxxxxxxxx		
		If no main chute release		
CDR		ELS AUTO - AUTO (verify)	1	Switch should have been on at least 14 seconds to allow timer to time out and enable MN REL switch.
		ELS LOGIC - on (up) (verify)		Guarded.
CMP		MN REL - on (up)	2	
		xxxxxxxxxxxxxxxxxxxxxxxxxxxxxxxxxxxx		
		WARNING		
		If fire or smoke after impact, refer to Fire/Smoke in CM During Postlanding, para 5.3.3.1.		
CDR		DIRECT O2 vlv - close (CW)	7	Conserve remaining O2 and enable use of water gun.
		SECS PYRO ARM (2) - SAFE	8	Lever lock.
		SECS LOGIC (both) - OFF		Lever lock.

NORMAL/BACKUP

STA/T	STEP	PROCEDURE	PANEL	REMARKS
		If not in contact with recovery forces		
ALL		VHF AM (3) - RCV	9,10,6	
LMP		VHF AM A - off (ctr)	3	
		VHF AM RCV - A		
CDR		cb PL VENT FLT/PL - close	8	
		cb FLOAT BAG (all) - close		
LMP		cb UPR SYS COMPR (both) - close	278	
		If floating upright		
		CAUTION Wait 10 minutes prior to initiating bag fill. This allows the ablator to cool sufficiently prior to inflation. Heat can destroy bags.		
CDR		FLOAT BAG (all) - FILL for 7 minutes, then OFF	8	Lever lock. Wait 15 minutes prior to running compressors again.
		xxxxxxxxxxxxxxxxxxxxxxxxxxxxxxxxxxxxxxxxxx		
		If floating inverted		
		FLOAT BAG (all) - FILL		Lever lock.
LMP		VHF BCN - OFF	3	
		VHF AM A - off (ctr)		
		Two min after upright		
CDR		FLOAT BAG (all) - OFF	8	Lever lock.
LMP		VHF BCN - ON	3	

STA/T STEP	PROCEDURE	PANEL	REMARKS
	If in contact with recovery forces prior to floating inverted		
LMP	VHF AM A - SIMPLEX	3	If VHF AM B SIMPLEX or VHF AM A DUPLEX is required, turn off beacon during period of communication.
	If CM fails to upright in 7 minutes and CM rolls CW		Crew reposition procedures may be required if uprighting does not occur in 7 minutes and sea state is minimal.
CDR	FLOAT BAG 2 R - OFF (Continue uprighting for 8 additional minutes)	8	Lever lock.
CMP,LMP	If uprighting does not occur in 3 minutes, reposition to area behind CDR's couch and CMP's couch as near as possible to B3 stowage locker		
or	CM rolls CCW		
CDR	FLOAT BAG 1 L - OFF (Continue uprighting for 8 additional minutes)		Lever lock.
CDR,CMP	If uprighting does not occur in 3 minutes, reposition to area behind LMP's couch and CMP's couch		

STA/T	STEP	PROCEDURE	PANEL	REMARKS
		or No roll		
CDR		FLOAT BAG 3 CTR - OFF (Continue uprighting for 8 additional minutes)	8	Lever lock.
CMP,LMP		If uprighting does not occur in 3 minutes, reposition to area on top of or along lower equipment bay canisters		
		WARNING		
		If CM still does not upright, prepare to egress within 15 minutes (because of environmental conditions) after completing above uprighting procedure. Refer to Stable II Water Egress Procedure, para 4.20.4.3		
		xxxxxxxxxxxxxxxxxxxxxxxxxxxxxxxxxxxxxxxxxxxxxxx		
		4.20.2 POST STABILIZATION AND VENTILATION		
ALL		Release footstraps Release restraint harness		
LMP		cb MNA BAT BUS A & BAT C (2) - open cb MNB BAT BUS B & BAT C (2) - open cb FLT/PL BAT C - open	275	Battery C held in reserve for use after depletion of battery A and B charge.

STA/T	STEP	PROCEDURE	PANEL	REMARKS
LMP		cb PYRO A/SEQ A - open	250	
		cb PYRO B/SEQ B - open		
		DC IND sel - BAT BUS A,B	3	
		DC VOLTS ind - >27.5 vdc		
		xxxxxxxxxxxxxxxxxxxxxxxxxxxxxxxxxxxxxxxxx		
		If BAT BUS A(B) <27.5 vdc		
		cb FLT/PL BAT BUS A(B) - open	275	
		Go to Comm Low Pwr Procedures, para 4.20.3.3		
		If BAT BUS A & B (2) <27.5 vdc		
		cb FLT/PL BAT BUS A & B (2) - open		
		cb FLT/PL BAT C - close		
		Go to Comm Low Pwr Procedures, para 4.20.3.3, and monitor BAT C voltage		
		xxxxxxxxxxxxxxxxxxxxxxxxxxxxxxxxxxxxxxxxx		
CMP		PLV distribution duct (3) - unstow and install		Stowed in aft bulkhead stowage area.
		Remove debris trap from left X-X head strut at MDC		Allows cabin air to flow to PL valve exhaust port on forward bulkhead.
		PL VENT VLV - PULL (unlock)	2	
CDR		PL VENT - HI or LO	15	PLV fan can operate in high flow for 12 hours maximum. During periods of no PLV fan operation, cycle PLV 5 minutes every half hour. If RCS fumes are noticed, prepare to egress immediately. PL VENT should be cycled from HI to LO prior to using manual backup procedure.

NORMAL BACKUP

STA/T	STEP	PROCEDURE	PANEL	REMARKS
		xxxxxxxxxxxxxxxxxxxxxxxxxxxxxx		
CDR		If no PLV operation		
		To initially open valves		
		PLVC sw - OPEN	376	Prepare to egress CM in 30 minutes after landing if valves cannot be opened.
		To close valves		
		PL VENT - OFF	15	
		To reopen valves		
		PL VENT - HI or LO		
		xxxxxxxxxxxxxxxxxxxxxxxxxxxxxx		
		PL BCN LT - LO		After dark only. Place switch at HI only at request of recovery forces.
		xxxxxxxxxxxxxxxxxxxxxxxxxxxxxxxx		
		If no flashing light		Perform backup duty cycle at request of recovery forces.
		FLOOD LTS FIXED - POST LDG	8	
		for 1/2 minute		
		OFF for 1/2 minute		
		xxxxxxxxxxxxxxxxxxxxxxxxxxxxxx		
		Deploy dye marker and swimmer umbilical		
		DYE MARKER - on (up)	15	Guarded. On (up) position is momentary.
ALL		INTERCOM (3) - T/R (verify)	9,10,6	Required for swimmer umbilical operation.

STA/T	STEP	PROCEDURE	PANEL	REMARKS
CDR		Deploy line grappling hook (if required) CAB PRESS DUMP vlv - remove Side hatch Grappling hook and line - deploy through valve opening Cover plate - secure		Grappling hook is deployed at request of recovery forces. It is located in aft bulkhead stowage area and is for snagging sea anchors deployed by recovery forces. Adapter E and driver R tools are required to remove cabin pressure dump valve and secure cover plate on side hatch (over valve opening).
		Desalt drinking water (if required) Sea water pump - snake pump hose through steam line vent boss into the sea		15 lbs of potable water in survival kit is available for drinking and food reconstitution purposes. Desalting kit and sea water pump are used thereafter. Sea water pump is located in aft bulkhead stowage area.
	4.20.3	POSTLANDING COMMUNICATIONS		
	4.20.3.1	Normal Postlanding Communications		
LMP		VHF BCN - ON (verify) VHF ANT - RECY (verify)	3	
		If no contact with recovery forces VHF AM B - SIMPLEX Monitor for VHF beacon 1000 Hz tone (2 sec on, 3 sec off) VHF AM B - off (ctr) If VHF beacon not audible Remove survival transceiver from stowage and mount antenna Select VOICE on transceiver Monitor VHF beacon for 1000 Hz tone (2 sec on, 3 sec off)		Government-furnished survival transceiver is stowed in RHFEB.

NORMAL BACKUP

STA/T	STEP	PROCEDURE	PANEL	REMARKS
LMP		If VHF beacon operating Turn off survival transceiver Stow transceiver in RHFEB		
		xxxxxxxxxxxxxxxxxxxxxxxxxxxxxxxxxxxx If no VHF beacon signal, turn off transceiver, remove antenna, and connect transceiver to spacecraft antenna per para 4.20.3.2 Select BCN on transceiver Monitor VHF AM for comm initiated by recovery aircraft xxxxxxxxxxxxxxxxxxxxxxxxxxxxxxxxxxxx		
	4.20.3.2	Survival Transceiver Communications		
		VHF BCN - OFF (if no contact after 24 hours)	3	Conserve spacecraft power for terminal phase of recovery operations.
		Survival transceiver - connect to VHF BCN antenna cable		
		Remove survival transceiver from stowage		Transceiver is stowed in RHFEB.
		Unlatch and open VHF antenna access door		A 5/32" hex wrench, for opening two hex fasteners on antenna cable access door, is stowed in aft bulkhead stowage area.
		Disconnect P112 connector from beacon		An adjustable wrench, stowed in aft bulkhead stowage area, is used to loosen 5/8" hex on coax connector.

STA/T	STEP	PROCEDURE	PANEL	REMARKS
LMP		Attach transceiver cable P1 connector to transceiver (verify)		
		Connect transceiver cable J1 connector to P112 connector		
		Select BCN on transceiver		
		4.20.3.3 Communications Low Power Procedures		
		VHF BCN - OFF	3	
CDR		FLOOD LTS FIXED - OFF	8	Turns off postlanding floodlights.
LMP		VHF AM A - off (ctr)	3	
		VHF AM RCV - A		
CDR		PL VENT sys - minimize use		
		Survival transceiver - connect to VHF BCN antenna cable (Refer to Survival Transceiver Communications, para 4.20.3.2)		
		Spacecraft power down		
		PL VENT - OFF	15	
LMP		cb ENTRY/PL BAT A, B, C (3) - open	250	
		4.20.4 UNAIDED EGRESS PROCEDURES		
		4.20.4.1 Egress Preparation		
ALL		Disconnect umbilicals (if suited)		
		Neck dams on (if suited)		
		Configure couch seat pans		
		Center couch - 270° position		
		L & R couch - 270° position (if stable two egress is anticipated)		

NORMAL/BACKUP

STA/T	STEP	PROCEDURE	PANEL	REMARKS
CDR,LMP		Armrests folded (stowed)		
ALL		If unsuited, transfer scissors from suit to coveralls		Scissors may be required to cut mooring lanyard in an emergency.
		Tape flight penlight to wrist (night egress)		
LMP		Survival kits removed from stowage	R-4	
		Remove lanyards from rucksack kit No. 2 and reclose rucksack		
CMP		Connect liferaft mooring line (olive drab) to CM		
		Connect lanyard titled (attach to first crewman out) to suit (if unsuited attach to buckle on life vest)		
LMP		Connect lanyard titled (attach to second crewman out) to suit (if unsuited attach to buckle on life vest)		
CDR		Connect lanyard titled (attach to third crewman out) to suit (if unsuited attach to buckle on life vest)		
	4.20.4.2	Stable I Water Egress		
CMP		PL VENT - OFF	15	
LMP		cb ENTRY/PL BAT A, B, C (3) - open	250	
CMP		Charge hatch counterbalance	Side hatch	
		GN2 ratchet handle - operate		
		GN2 vlv handle - unlock and push outboard		
		Open side hatch		

STA/T	STEP	PROCEDURE	PANEL	REMARKS
		xxxxxxxxxxxxxxxxxxxxxxxxxxxxxxxxxxxxxxxxx		
CMP		If side hatch was closed by backup procedure in para 4.7.7.2, loosen jackscrews by screwing wing nuts CCW	Side hatch	
		Disengage hooks from catches on hatch		
		Disengage jackscrew lever from hatch frame		
		If any hatch latches are latched, complete side hatch opening procedure; if not, open hatch		
		xxxxxxxxxxxxxxxxxxxxxxxxxxxxxxxxxxxxxxxxx		
		Lock pin rel knob - UNLOCK		
		Gear box sel - UNLATCH		
		Actr handle sel - U (unlatch)		
		Actr handle rel - push or squeeze		Push button or squeeze for release on actuator handle for operation.
		Actr handle - operate (until hatch can be opened)		
		Push hatch open		
		Actr handle sel - N (neutral)		
CDR		Remove life raft from rucksack kit No. 2		
		Simultaneously throw life raft overboard and pull inflation lanyard		
		Throw rucksacks No. 1 & 2 overboard		
		Egress, inflate life vest, board raft		
LMP		Egress, inflate life vest, board raft		
CMP		Egress, inflate life vest, board raft		

NORMAL BACKUP

STA/T	STEP	PROCEDURE	PANEL	REMARKS
		4.20.4.3 Stable II Water Egress		
		cb VHF/CREW AUDIO (3) - open	225	
		PWR (3) - OFF	6,9,10	
		SUIT PWR (3) - OFF		
CMP		PRESS EQUAL vlv - OPEN	Fwd hatch	Pull detent knob on end of handle, then pivot up 90°. Rotate crank ≈3 turns CCW to fully open valve. This will flood the tunnel prior to opening the hatch.
		WARNING To prevent injury to crew members, do not unlock hatch until flooding stops and pressure equalizes in CM.		
		Actr handle rel - pull and rotate		To free actuator handle for operation, release is rotated to mechanical stop.
		Actr handle - pull to stop		Actuator handle should move ≈80°.
		Actr handle sel - U (unlatch) (CCW 90°)		
		Actr handle - push to stop		Actuator handle should move 60° to release hatch.
		Actr handle sel - stow (CW 90°)		
		Actr handle - push to stowed position		
CMP,LMP		Remove and stow fwd hatch		Forward hatch weighs ≈85 lbs and is stowed in LHEB.
CMP		Put survival rucksacks down tunnel		
		Exit feet first; when clear of CM, inflate water wings		
LMP		Exit feet first; when clear of CM, inflate water wings		
CMP,LMP		Remove life raft from rucksack No. 2 and inflate raft		

STA/T	STEP	PROCEDURE	PANEL	REMARKS
CDR		Disconnect life raft mooring line (olive drab) from CM and return end of line (CDR's discretion)		
		Exit feet first; when clear of CM inflate water wings		
		Reconnect life raft mooring line (olive drab) to SC exterior - sea anchor hardpoint or EVA handles (CDR's discretion)		
	4.20.4.4	Rough Sea Side Hatch Operations		
CMP		Close side hatch	Side hatch	
		GN2 vlv handle - pull (inboard)		Vents counterbalance piston chamber. Squeeze handle to unlock.
		GN2 press ind - minimum		
		Open door rel handle - pull		D-ring.
		Verify latches are in open position		
		Close hatch		
		Actr handle sel - L (latch)		
		Gear box sel - LATCH		
		Open door rel handle - stow		
		Actr handle rel - push or squeeze		
		Actr handle - operate (while holding hatch closed)		
		Lock pin rel knob - LOCK (automatically)		Verify lock pin has automatically engaged.
		LOCK PIN ind - not extended		Indicates lock pin engaged.
		Actr handle - stowed		

NORMAL/BACKUP

STA/T	STEP	PROCEDURE	PANEL	REMARKS
CMP		Re-open side hatch	Side hatch	
		Lock pin rel knob - UNLOCK		Pin can be sheared if left in LOCK position.
		Gear box sel - UNLATCH		
		Actr handle sel - U (unlatch)		
		Actr handle rel - push or squeeze		Push button or squeeze (bar) releases actuator handle for operation.
		GN2 vlv handle - push (outboard)		
		GN2 press ind - green		
		Actr handle - operate (until hatch can be opened)		Actuator handle should not be operated until immediately prior to egress.

STA/T STEP	PROCEDURE	PANEL	REMARKS
	4.21 MISSION TEST REQUIREMENTS (None identified)		

NORMAL BACKUP

STA/T STEP	PROCEDURE	PANEL	REMARKS

SECTION 5
CONTINGENCY PROCEDURES

INTRODUCTION

Contingency procedures consist of operational and trajectory analysis for situations other than normal that may occur during all mission phases. This will provide the crew with decision-making guidance as to aborting the mission, selecting and implementing an alternate mission, or continuing the mission under degraded conditions. The procedures include the corrective action that must be taken and the limitations that may be imposed. Contingency procedures consist of the following:

- Abort procedures. These procedures may be considered as a specialized form of backup procedures which involve early mission termination.
- Malfunction procedures. These procedures encompass the recognition, diagnosis, and corrective action for system malfunctions.
- Emergency procedures. These procedures are another form of backup procedures where safety of the flight crew requires instant action (other than an abort).

STA/T STEP	PROCEDURE	PANEL	REMARKS

5.1 ABORT PROCEDURES

During the ascent phase, an abort can be accomplished in an LES or SPS mode. An abort in the LES mode is accomplished by utilizing the launch escape system, which has solid propellant motors mounted on a tower above the command module. During a normal mission, the launch escape tower is jettisoned approximately 35 seconds after second-stage booster ignition. After the launch escape tower is jettisoned, an abort can be accomplished in the SPS mode by utilizing the service propulsion engine in the service module or the service module RCS jets.

5.1.1 LES ABORT MODES

An abort may be initiated automatically by the emergency detection system (EDS) when two L/V engines fail, L/V excessive rates detected, breakup between IU and CM, or manually when the commander's translation control is rotated to the full CCW position. Upon receipt of an abort signal, regardless of its source, the booster is cut off (if after T +30 seconds), the CM is separated from the SM, and simultaneous ignition of the launch escape and pitch control motors takes place. Firing of the pitch control motor is inhibited 42 seconds after lift-off. Cutoff of the booster engines is inhibited for the first 30 seconds after lift-off by circuitry in IU because of range safety restrictions. The LES motors provide thrust to propel the command module away from the launch pad or trajectory of the launch vehicle.

Certain events that occur during an abort are controlled automatically by controllers in the sequential events control system (SECS). The earth landing sequence controller (ELSC) contains high-altitude and low-altitude baroswitches. The opening of these baroswitches inhibit ELS operations and the closing initiates the operations. The high-altitude baroswitch controls automatic LES tower jettison, apex cover jettison, and drogue parachute mortar fire. The high-altitude baroswitch is designed to open at 38,500 feet and close at 24,000 feet. Because of venting lag, the high-altitude baroswitch will not open until 40,500 feet during ascent. On an abort initiated under 30,000 feet (low part of abort mode I-B), the 24K feet baroswitch will remain closed and allow automatic LES tower jettison, apex cover jettison, and drogue parachute and main parachute

STA/T STEP	PROCEDURE	PANEL	REMARKS

deployment on a timed sequence controlled by time-delay relays. On an abort initiated between 30,000 feet and 3 minutes 17 seconds, automatic LES tower jettison, apex cover jettison, and drogue parachute deployment are delayed until the command module descends to the closing altitude of the high-altitude baroswitch (24,900 to 21,500 feet).

The low-altitude (10K') baroswitch is closed at 10,000 feet, open at 18,000 feet. Opening of the low-altitude baroswitch will delay automatic deployment of the pilot-main parachutes until the command module descends to the closing altitude (10,950 to 9100 feet).

The LES abort is divided into three different modes as follows:

- Mode 1-A (launch pad to 42 seconds)
- Mode 1-B (42 seconds to 1 minute 56 seconds)
- Mode 1-C (1 minute 56 seconds to LES tower jettison)

During a Mode 1-A abort, the RCS oxidizer will be automatically dumped overboard through a hole in the aft heat shield. The RCS fuel will be automatically dumped through another hole in the aft heat shield 5 seconds after oxidizer dump started. The oxidizer dump time is approximately 11 seconds. Helium dump is automatically initiated 13 seconds after fuel dump initiation. During a Mode 1-B or Mode 1-C abort, the CM RCS propellants are burned through 10 RCS engines after the main parachutes disreef, and then the system is purged. The two engines out, LV rates, and auto abort capability is switched off prior to S-1C/S-II staging, and the crew must be ready to manually initiate an abort if these conditions arise. During a Mode 1-C abort (over 100K'), it is possible to jettison the LET and accomplish a normal entry provided certain conditions prevail. There must be sufficient TFF (100 sec) to perform the entry maneuver, a reliable attitude reference, and launch escape vehicle (LEV) rates must be within tolerance. If any of these conditions are not met, the LET must be retained to insure capture of the LEV with the heat shield oriented forward.

5.1.1 LES ABORT MODES

STA/T STEP	PROCEDURE	PANEL	REMARKS

The altitude and velocity of the LEV is such that a possibility exists that it could enter the atmosphere canard and escape tower forward. The LEV would remain in this condition until descending below 100,000 feet and Mach 3.8. At this time a fast turnaround would occur which would be detrimental to crew safety. The crew will prevent canard forward capture by manual intervention shortly after abort initiation. A positive pitch rate of over 5° per second will be commanded and maintained until the canard starts trailing the CM upon descending to an altitude under 100,000 feet. Escape tower jettison and ELS activation will automatically occur at approximately 24,000 ft provided that the ELS AUTO sw is in the AUTO position.

The ELS decelerates the CM to a safe touchdown speed. Crew couch attenuators reduce the touchdown impact and start operating at approximately 15 G when they are unlocked. If they are not unlocked, a pin will shear in the lock at approximately 21 G and allow them to operate.

STA/T	STEP	PROCEDURE	PANEL	REMARKS
		5.1.1.1 Mode 1A LES Abort (00:00 - 00:42)		
CDR	1	Abort initiation	X	If manual backup is required for any auto event after abort initiation it must be performed after LE motor burnout (abort T +00:05) due to the high G environment during LE motor burn.
		auto or manual	X	
		THC - CCW	X	
			X	
			X	
		XXXXXXXXXXXXXXXXXXXXXXXXXX		
		X		
		X CM/SM SEP (both) - on	>	Guarded. On position is momentary. If the abort is initiated with the CM/SM SEP switches, subsequent events may require manual initiation and must be performed after LE motor burnout.
		X (up)		
		X		
		XXXXXXXXXXXXXXXXXXXXXXXXXX		
			X	
		BECO (auto after	X	Request ground
		T +00:30)	X	command BECO
			X	
00:00		Event Timer reset and	X >	
		counting up (auto)	X	
			X	
		CM/SM deadface (auto)	X	
			X	
		SM C/W lts - on	X	Because of switching transients, the AC BUS 1 and 2 C/W lights will go on and the MN BUS A and MN BUS B UV lights might go on if the abort is initiated prior to T -01:15.
			X	
			X	
			X	
		MASTER ALARM pb/lt -	X	
		on	X	

STA/T STEP	PROCEDURE	PANEL	REMARKS
CDR	CM RCS pressurize (auto)	X X X	MN BUS TIE switches are set to AUTO by T -30:00 and then to ON at T -01:00. **DC main buses must be** energized to provide power for RCS transfer, propellant dump, and purge.
	RCS control transfer (auto)	X X X	
	Entry batteries to main buses (auto if abort initiated prior to T -01:00)	X X X X X	
	CM RCS oxidizer dump (auto)	X X X	
	CM RCS isolation valves close (auto)	X X X	
00:00.1	CM/SM separation (auto)	X X X	
	LE and PC motors fire (auto)	X X X	
00:01.8	CM/SM separation pyro deadface (auto)	X X X	
00:05	CM RCS fuel dump (auto)	X X	

STA/T	STEP	PROCEDURE	PANEL	REMARKS
		XXXXXXXXXXXXXXXXXXXXXXXXX X X If abort initiated with X CM/SM SEP (both) X or backup required X for any auto event X		
CDR		X EVNT TMR RSET - RSET X		RSET position is momentary.
		X EVNT TMR START - START X		START position is momentary.
CMP		X CM RCS PRESS - on (up) X		Guarded. On position is momentary.
		X RCS TRNFR - CM X		CM position is momentary.
LMP		X MN BUS TIE (2) - on (up) X		
CMP		X **Verify PRPLNT DUMP -** X **AUTO** X		
		X CM RCS PRPLNT (both) - OFF X		OFF position is momentary.
CDR		X LES MOT FIRE pb - push X		Guarded. Pitch control motor will not fire if LES MOT FIRE pushbutton used as backup 1.8 sec after abort initiation.
		XXXXXXXXXXXXXXXXXXXXXXXXX X		
	00:11	Canard deploy (auto) X X X X	X No backup required X on Mode 1A	CNRD DPLY pushbutton should not be used as backup on Mode 1A. Since adverse attitudes and critical timing is involved, canard deployment at wrong time could be detrimental to crew safety. Launch escape vehicle will operate satisfactorily without canard deployment.

STA/T	STEP	PROCEDURE	PANEL	REMARKS
CMP	2	C/W CSM - CM	X X	Extinguishes all SM C/W lights and enables CM RCS C/W lights.
	3	MASTER ALARM pb/lt - push	X X	
CDR 00:14	4	ELS AUTO - AUTO	X X	This switch will already be in AUTO until T +00:30 at which time it is positioned to MAN.
		ELS logic arm (auto)	X X	
	5	ELS LOGIC - on (up)	X X	Guarded.
		LES TWR jett (auto)	X X	
CMP		a. Docking ring sep	X CSM/LM FNL SEP X (both) - on (up) X	Guarded. On position is momentary.
		b. TWR attach nuts detonate	X TWR JETT X (both) - on (up) X	Guarded. On position is momentary.
		c. SCS RCS disable	X RCS CMD - OFF X	OFF position is momentary.
		d. TWR jett motor fire	X X X	
CDR 00:14.4		Apex cover jett (auto)	X APEX COVER JETT X pb - push X	Guarded.
00:16		Drogue parachutes deploy (auto)	X DROG DPLY pb - X push (2 sec X after apex cover X jett)	Guarded.

LES ABORT MODES

STA/T	STEP	PROCEDURE	PANEL	REMARKS
		WARNING	X	
			X	
		Below alidade	X Altitude = 0.4 NM	
		marker on altimeter,	X	
CDR		**MN DPLY pb - push**	X	
			X	
00:18		CM RCS helium purge	X CM RCS He DUMP	Guarded.
		(auto)	X pb - push	
			X CM PRPLNT DUMP -	Guarded. The CM PRPLNT DUMP and PURG switches
			X on (up)	provided alternate means of initiating He dump.
			X	
			X CM PRPLNT PURG -	Guarded.
			X on (up)	
			X	
>10K'		Main parachutes and	X	Main parachutes disreef in approximately 15 sec.
		VHF recovery antenna	X	
		deploy (auto)	X	
			X	
	6	MN DPLY pb - push	X	Guarded. **MN** DPLY pushbutton should be pushed
		(within 1 sec)	X	within 1 sec after pilot chute mortars fire to
			X	insure simultaneous deployment of main parachutes.
			X	
LMP	7	Set up entry	X	
		communications	X	
		VHF ANT - RECY	X	
		VHF AM A - SIMPLEX	X	If VHF AM B SIMPLEX or VHF AM A DUPLEX is required,
		VHF BCN - ON	X	turn off beacon during period of communication.

STA/T	STEP	PROCEDURE	PANEL	REMARKS
CDR		Transmit voice (VHF AM) reporting Position Main chutes disreefed Splash error Crew status	X X X X X X X X	Continue voice transmission until touchdown.
CMP	8	Crew couch struts (4) - unlock	X X X X	
LMP	9	cb FLT/PL BAT BUS A, B and BAT C (3) - close	X X X X	Connects battery bus A, B, and battery C to flight and postlanding bus.
	10	cb FLT/PL MNA - open	X X	
	11	cb FLT/PL MNB - open	X X	
	12	cb RAD HTRS OVLD (2) - open	X X X	
CDR	13	cb SPS PITCH (2) - open	X X	
	14	cb SPS YAW (2) - open	X X	
3K'	15	rh CAB PRESS RELF vlv - DUMP (safety latch off)	X X X	Assures minimum cabin-to-ambient negative ΔP for landing impact.

STA/T	STEP	PROCEDURE	PANEL	REMARKS
CDR	16	FLOOD LTS FIXED - POST LDG	X X X X	Provides power from flight and postlanding bus to one floodlight in LH couch area and one floodlight in center couch area.
	17	FLOOD LTS DIM - 1 or 2	X X X X X	Position 1 provides power to two secondary floodlights, and position 2 provides power to two primary floodlights when FLOOD LTS FIXED switch is in POST LDG position and dc main buses are deactivated.
CMP	18	Verify RCS IND sel - CM 1	X X X	Provides means of monitoring He pressure.
CDR 800'	19	CAB PRESS RELF vlv (2) - CLOSE (safety latch off)	X X X X	Valves must be closed prior to touchdown to prevent water from entering CM.
	20	ELS - AUTO (verify) ELS LOGIC - on (up) (verify)	X X X X	
CMP	21	CM RCS PRPLNT (both) - OFF	X X X	OFF position is momentary.
		CM RCS PRPLNT tb (both) - bp	X X X	Barber pole indicates at least one valve closed in each system.
CDR	22	DIRECT O2 vlv - OPEN (CCW)	X X X	
LMP	23	MN BUS TIE (2) - OFF	X	Removes battery power from dc main buses.

STA/T	STEP	PROCEDURE	PANEL	REMARKS
		CAUTION	X	
			X	
		Switches must be left	X	
		in OFF position to	X	
		insure that batteries	X	
		A, B and C are used	X	
		to power the post-	X	
		landing systems only,	X	
		and to prevent battery	X	
		shorting caused by	X	
		water entering the CM	X	
		feed-through connectors.	X	
			X	
LMP	24	cb BAT RLY BUS (2) -	X	
		open	X	
			X	
	25	Postlanding check,	X	
		para 4.20	X	

STA/T	STEP	PROCEDURE	PANEL	REMARKS
		5.1.1.2 Mode 1B LES Abort (00:42 - 01:56)		
CDR	1	Abort initiation	X	If manual backup is required for any auto event after abort initiation, it must be performed after LE motor burnout (abort T +00:05) due to the high G environment during LE motor burn.
		auto or manual	X	
		THC - CCW	X	
			X	
			X	
		XXXXXXXXXXXXXXXXXXXXXXXXX		
		X		
		X CM/SM SEP (both) - on	X>	Guarded. On position is momentary. If abort is initiated with CM/SM SEP switches, subsequent events may require manual initiation and must be performed after LE motor burnout.
		X (up)	X	
		X		
		XXXXXXXXXXXXXXXXXXXXXXXXX		
			X	
		BECO (auto)	X	Request ground command BECO
			X	
			X	
00:00		Event Timer reset and	X>	
		counting up (auto)	X	
			X	
		CM/SM deadface (auto)	X	
			X	
		SM C/W lts - on	X	
			X	
LMP		MASTER ALARM pb/lt -	X	
		on	X	
			X	
CDR		CM RCS pressurize	X>	
		(auto)	X	

STA/T STEP	PROCEDURE	PANEL	REMARKS
CDR	RCS control transfer (auto)	X	
00:00.1	CM/SM separation (auto)	X	
	LE motor fire (auto)	X	
00:01	SCS/RCS enable (auto)	X	
00:01.8	CM/SM separation pyro deadface (auto)	X	
00:05	If abort initiated with CM/SM SEP (both) or backup required for any auto event	X	
CDR	EVNT TMR RSET - RSET	X	RSET position is momentary.
	EVNT TMR START - START	X	START position is momentary.
CMP	CM RCS PRESS - on (up)	X	Guarded. On position is momentary.
	RCS TRNFR - CM	X	CM position is momentary.
CDR	LES MOT FIRE pb - push	X	Guarded.
CMP	RCS CMD - ON	X	ON position is momentary.

LES ABORT MODES

STA/T	STEP	PROCEDURE	PANEL	REMARKS
CDR			X	
00:11		Canard deploy (auto)	X CNRD DPLY pb - push	Guarded.
			X	
CMP	2	C/W CSM - CM	X	Extinguishes all SM C/W lights and enables CM RCS lights.
			X	
			X	
LMP	3	MASTER ALARM pb/lt -	X	
		push	X	
			X	
CDR			X	
00:14	4	ELS AUTO - AUTO	X	
			X	
		ELS logic arm (auto)	X ELS LOGIC - on (up)	Guarded.
			X	
24K'		LES TWR jett (auto)	X	
			X	
		a. Docking ring sep	X CSM/LM FNL SEP	Guarded. On position is momentary.
			X (both) - on (up)	
			X	
		b. TWR attach nuts	X TWR JETT	Guarded. On position is momentary.
		detonate	X (both) - on (up)	
			X	
		c. SCS RCS disable	X RCS CMD - OFF	OFF position is momentary.
			X	
		d. TWR jett motor fire	X	
			X	
		Apex cover jett (auto)	X APEX COVER JETT	Guarded.
			X pb - push	
			X	
		Drogue parachutes	X DROG DPLY pb - push	Guarded.
		deploy (auto)	X (2 sec after	
			X apex cover jett)	

STA/T	STEP	PROCEDURE	PANEL	REMARKS
CDR			X	
23.5K'	5	Monitor CAB PRESS ind - starts increase	X If not increasing by 17K' rh CAB PRESS RELF vlv - DUMP (safety latch off)	No increase indicates cabin pressure relief valve failure.
			X If still no increase	
CMP			X CAB PRESS DUMP vlv - open (CCW)	
			X	
10K'		Main parachutes and VHF recovery antenna deploy (auto)	X	Auto deployment occurs between 10,950 feet and 9,100 feet. Parachutes disreef in approximately 15 sec.
	6	MN DPLY pb - push (within 1 sec)	X	Guarded. MN DPLY pushbutton should be pushed within one second after pilot chute mortars fire to insure simultaneous deployment of main parachutes.
		CAUTION	X	
		CM PRPLNT DUMP should be initiated immediately after main chute disreefing.	X	
CDR	7	CAB PRESS RELF vlv (2) -	X	
CMP		CLOSE (safety latch off)	X If CAB PRESS DUMP vlv used to equalize ΔP, CAB PRESS DUMP vlv - close (CW)	

STA/T	STEP	PROCEDURE	PANEL		REMARKS
CDR	8	CM PRPLNT DUMP - on (up)	X		Guarded.
		(dump burn is audible)	X		
			X		
CMP	9	RCS IND sel - CM 1	X	RCS IND sel - CM 2	
		CM RCS He PRESS ind -	X	CM RCS He PRESS	
		decreasing	X	ind - decreasing.	
			X	If not decreas-	
			X	ing or RCS jets	
			X	not firing	
CDR,CMP			X	RHC (both) -	One RHC is positioned to command plus yaw and roll (excluding plus pitch) and the other RHC is positioned to command minus yaw, pitch and roll.
			X	Fire all RCS	
			X	jets (except	
			X	plus pitch)	
			X	until	
			X	propellants	
			X	are depleted	
			X		
LMP	10	Set up entry	X		
		communication	X		
		VHF ANT - RECY	X		
		VHF AM A - SIMPLEX	X		If VHF AM B SIMPLEX or VHF AM A DUPLEX is required, turn off beacon during period of communication.
		VHF BCN - ON	X		
			X		
CDR		Transmit voice	X		Continue voice transmission until touchdown.
		(VHF AM) reporting	X		
		Position	X		
		Main chutes	X		
		disreefed	X		
		Splash error	X		
		Crew status	X		

STA/T	STEP	PROCEDURE	PANEL	REMARKS
CMP	11	Crew couch struts (4) - unlock	X	
	12	Ground track determination	X	
		a. Key V37E 21E	X	
		DSKY - P21	X	
		b. FL V04 N06	X	
		Option code 00002	X	
		CMC assumed option 0000X	X	
		(00001 - CSM; 00002 - LM)	X	
		Accept PRO	X	
		Reject Key V22E	X	
		Load desired option	X	
		c. FL V06 N34	X	Initial display will contain (present time) zeros. If not changed by astronaut, calculations will be based on present time.
		GET Lat Long	X	
		00XXX. HRS	X	
		000XX. MIN	X	
		0XX.XX SEC	X	

STA/T	STEP	PROCEDURE	PANEL	REMARKS
CMP		Accept PRO Reject Key V25E Load desired GET Lat Long	X X X X X X	
	d.	FL V06 N43 Lat (+North) XXX.XX DEG Long (+East) XXX.XX DEG Alt XXXX.X NM	X X X X X X	Altitude is above launch pad radius. At this point, alt/10, VI, and gamma is available by keying N73E.
		(Deleted)	X	
CDR	13	When propellant dump burn completed, CM PRPLNT PURG - on (up) (purge is audible)	X X X X	Both CM RCS LOGIC and CM PRPLNT DUMP switches must be on to power the CM PRPLNT PURG switch. Guarded. CM RCS He DUMP pb should be used to initiate purge following a normal dump operation if CM PRPLNT PURG switch fails to initiate purge. Visual fire from RCS engine nozzle extension surfaces, after burn to depletion and during purge, is expected and normal.
CDR,CMP			X CM RCS He DUMP pb - X push X If RHC (both) used X for propellant X dump burn X RHC (both) - X Fire all jets X (except plus X pitch) X	One RHC is positioned to command plus yaw and roll (excluding plus pitch) and the other RHC is positioned to command minus yaw, pitch and roll.

STA/T	STEP	PROCEDURE	PANEL	REMARKS
CDR CMP	14	CAB PRESS RELF vlv (2) - BOOST/ENTR (safety latch off)	If CAB PRESS DUMP vlv used to equalize ΔP, CAB PRESS DUMP vlv - open (CCW)	
LMP	15	cb FLT/PL BAT BUS A, B & BAT C (3) - close		Connects battery bus A, B, and battery C to flight and postlanding bus.
	16	cb FLT/PL MNA - open		
	17	cb FLT/PL MNB - open		
	18	cb RAD HTRS OVLD (2) - open		
CDR	19	cb SPS PITCH (2) - open		
	20	cb SPS YAW (2) - open		
3K'	21	rh CAB PRESS RELF vlv - DUMP (safety latch off)		Ensures minimum cabin-to-ambient negative ΔP for landing impact.
	22	FLOOD LTS FIXED - POST LDG		Provides power from flight and postlanding bus to one floodlight in the LH couch area and one floodlight in center couch area.

STA/T	STEP	PROCEDURE	PANEL	REMARKS
CDR			X	
3K'	23	FLOOD LTS DIM - 1 or 2	X	Position 1 provides power to two secondary floodlights and position 2 provides power to two primary floodlights when FLOOD LTS FIXED switch is in POST LDG position after dc main buses are deactivated.
			X	
			X	
			X	
			X	
800'	24	CAB PRESS RELF vlv (2) -	X	
CMP		CLOSE (safety latch	X	If CAB PRESS DUMP vlv used to equalize ΔP, CAB PRESS DUMP vlv - close (CW)
		off)	X	Valves must be closed prior to touchdown to prevent water from entering CM.
			X	
			X	
			X	
			X	
CDR	25	ELS - AUTO (verify)	X	
		ELS LOGIC - on (up)	X	Guarded.
		(verify)	X	
			X	
CMP	26	CM RCS PRPLNT (both) -	X	
		OFF	X	
		CM RCS PRPLNT tb	X	Barber pole indicates at least one valve closed in each system.
		(both) - bp	X	
			X	
CDR	27	DIRECT O2 vlv - OPEN	X	
		(CCW)	X	
			X	
LMP	28	MN BUS TIE (2) - OFF	X	Removes battery power from dc main buses.

ABORT

STA/T	STEP	PROCEDURE	PANEL	REMARKS
		CAUTION	X	
			X	
		MN BUS TIE switches must	X	
		be left in OFF position	X	
		to ensure that batteries	X	
		A, B, & C are used to	X	
		power the postlanding	X	
		systems only, and to	X	
		prevent battery shorting	X	
		caused by water entering	X	
		the CM feed-through	X	
		connectors.	X	
			X	
LMP	29	cb BAT RLY BUS (2) -	X	
		open	X	
			X	
	30	Postlanding check,	X	
		para 4.20	X	

STA/T	STEP	PROCEDURE	PANEL	REMARKS
		5.1.1.3 Mode 1C LES Abort (01:56 - 03:17)		
CDR	1	Abort initiation (auto or manual) THC - CCW	X X X X X	If manual backup is required for any auto event after abort initiation it must be performed after LE motor burnout (abort T +00:05) because of the high G environment during LE motor burn.
		XXXXXXXXXXXXXXXXXXXXXXXXX X CM/SM SEP (both) - on (up) X XXXXXXXXXXXXXXXXXXXXXXXXX		Guarded. On position is momentary. If abort is initiated with CM/SM SEP switches, subsequent events may require manual initiation and must be performed after LE motor burnout.
		BECO (auto)	X Request ground X command BECO X	
00:00		Event Timer reset and counting up (auto)	X X X	
		CM/SM deadface (auto)	X X	
		SM C/W lts - on	X X	
LMP		MASTER ALARM pb/lt - on	X X X	
CDR		CM RCS pressurize (auto)	X X	

STA/T STEP	PROCEDURE	PANEL	REMARKS
CDR	RCS control transfer (auto)	X	
00:00.1	CM/SM separation (auto)	X	
	LE motor fire (auto)	X	
00:01	SCS/RCS enable (auto)	X	
00:01.8	CM/SM separation pyro deadface (auto)	X	
00:05	XXXXXXXXXXXXXXXXXXXXXXXXX	X	
	If abort initiated with CM/SM SEP (both) or backup required for any auto event	X	
00:00	EVNT TMR RSET - RSET	X	RSET position is momentary.
	EVNT TMR START - START	X	START position is momentary.
CMP	CM RCS PRESS - on (up)	X	Guarded. On position is momentary.
	RCS TRNFR - CM	X	CM position is momentary.
CDR	LES MOT FIRE pb - push	X	Guarded.

LES ABORT MODES

STA/T	STEP	PROCEDURE	PANEL	REMARKS
CMP		X RCS CMD - ON X XXXXXXXXXXXXXXXXXXXXXXXXX		ON position is momentary.
CDR			X	
00:11		Canard deploy (auto)	X CNRD DPLY pb - push	Guarded.
CMP	2	C/W CSM - CM	X	Extinguishes all SM C/W lights and enables CM RCS lights.
LMP	3	MASTER ALARM pb/lt - push	X	
CMP	4	Monitor LEV status GMBL LOCK lt - out Abort apogee >30 NM IMU gimbal lock can be avoided during manual control FDAIs agree If all above conditions are met, proceed to step 5; otherwise proceed to step 18	X	

STA/T	STEP	PROCEDURE		PANEL	REMARKS
CMP	5	TWR JETT (both) - on (up)	X X X		Guarded. On position is momentary.
		a. Docking ring sep	X X X	CSM/LM FNL SEP (both) - on (up)	Guarded. On position is momentary.
		b. TWR attach nuts detonate	X X X		
		c. TWR jett motor fire	X X		
CDR	6	Damp rates	X X		
	7	Maneuver to entry attitude R 0°, P 135°, Y 0°	X X X X		
	8	BMAG MODE (3) - ATT 1/ RATE 2	X X X		
	9	ATT DBD - MAX	X X		
	10	Set up for CM RCS sys 1	X		
		AUTO RCS SEL CM 1 (6) - MNA/MNB	X X X		
		AUTO RCS SEL CM 2 (6) - OFF	X X		

STA/T	STEP	PROCEDURE	PANEL	REMARKS
CDR	11	BMAG MODE (3) - RATE 2	X	Prevents FDAI roll bug jump.
			X	
	12	EMS FUNC - ENTRY	X	
			X	
	13	EMS MODE - NORM	X	
			X	
	14	When .05 G lt - on	X	
		.05 G sw - on	X	
			X	
	15	EMS ROLL - on (up)	X	
			X	
	16	Maintain full lift	X	
			X	
50K'	17	Proceed to Earth	X	
		Landing Phase,	X	
		para 4.19	X	
		(LET descent from step 4)		
	18	Establish and maintain	X	Pitchup rate of at least 5°/sec should be maintained until canard and LET begin trailing CM upon descending below entry interface. SCS ATT mode is rate command in all three axes at this time and RHC maximum command is 7°/sec.
		minimum 5 to 10°/sec	X	
		+ pitch rate with RHC	X	
			X	
			X	
			X	
CMP			X	
24K'	19	ELS AUTO - AUTO	X	
			X	
		LES TWR jett (auto)	X	
			X	
		a. Docking ring sep	X	CSM/LM FNL SEP
			X	(both) - on (up)

STA/T	STEP	PROCEDURE	PANEL	REMARKS
CMP	b.	TWR attach nuts detonate	X TWR JETT X (both) - on (up) X	Guarded. On position is momentary.
	c.	SCS RCS disable	X RCS CMD - OFF X	OFF position is momentary.
	d.	TWR jett motor fire	X X	
CDR		Apex cover jett (auto)	X APEX COVER JETT X pb - push X	Guarded.
		Drogue parachutes deploy (auto)	X DROG DPLY pb - X push (2 sec after X apex cover jett) X	Guarded.
23.5K'			X	
20		Monitor CAB PRESS ind - starts increase	X If not increasing X by 17K' X rh CAB PRESS X RELF vlv - X DUMP (safety X latch off) X If still no X increase	No increase indicates cabin pressure relief valve failure.
CMP			X CAB PRESS DUMP X vlv - open X (CCW) X	
10K'		Main parachutes and VHF recovery antenna deploy (auto)	X X X	Auto deployment occurs between 10,950 feet and 9,100 feet. Parachutes disreef in approximately 15 sec.

STA/T		STEP	PROCEDURE	PANEL	REMARKS
CDR	21		MN DPLY pb - push (within 1 sec)	X	MN DPLY pushbutton should be pushed within one second after pilot chute mortars fire to insure simultaneous deployment of main parachutes.
			CAUTION	X	
			CM PRPLNT DUMP should be initiated immediately after main chute disreefing.	X	
	22		CAB PRESS RELF vlv (2) - CLOSE (safety latch off)	X	
CMP				X	If CAB PRESS DUMP vlv used to equalize ΔP, CAB PRESS DUMP vlv - close (CW)
CDR	23		CM PRPLNT DUMP - on (up) (dump burn is audible)	X	Guarded.
CMP	24		RCS IND sel - CM 1	X	RCS IND sel - CM 2
			CM RCS He PRESS ind - decreasing	X	CM RCS He PRESS ind - decreasing
				X	If not decreasing or RCS jets not firing
CDR,CMP				X	RHC (both) - Fire all RCS jets (except plus pitch) until propellants are depleted	One RHC is positioned to command plus yaw and roll (excluding plus pitch) and the other RHC is positioned to command minus yaw, pitch, and roll.

STA/T	STEP	PROCEDURE	PANEL	REMARKS
LMP	25	Set up entry communications VHF ANT - RECY VHF AM A - SIMPLEX VHF BCN - ON	X X X X X	If VHF AM B SIMPLEX or VHF AM A DUPLEX is required, turn off beacon during period of communication.
CDR		Transmit voice (VHF AM) reporting Position Main chute disreefed Splash error Crew status	X X X X X X	Continue voice transmission until touchdown.
CMP	26	Crew couch struts (4) - unlock	X X X	
	27	Ground track determination	X X X	
		a. Key V37E 21E DSKY - P21	X X X	
		b. FL V04 N06 Option code 00002 CMC assumed option 0000X (00001 - CSM; 00002 - LM)	X X X X X X	

STA/T STEP	PROCEDURE	PANEL	REMARKS
CMP	Accept PRO	X	
	Reject Key V22E	X	
	Load	X	
	desired	X	
	option	X	
		X	
	c. FL V06 N34	X	Initial display will contain (present time) zeros. If not changed by astronaut, calculations will be based on present time.
	GET Lat Long	X	
	OOXXX. HRS	X	
	OOOXX. MIN	X	
	OXX.XX SEC	X	
		X	
	Accept PRO	X	
	Reject Key V25E	X	
	Load	X	
	desired	X	
	GET Lat	X	
	Long	X	
		X	
	d. FL V06 N43	X	
	Lat (+North)	X	
	XXX.XX DEG	X	
	Long (+East)	X	
	XXX.XX DEG	X	
	Alt XXXX.X NM	X	Altitude is above launch pad radius. At this point, Alt/10, VI, and gamma is available by keying N73E.
		X	
	(Deleted)	X	

STA/T	STEP	PROCEDURE	PANEL	REMARKS
	28	When propellant dump burn completed	X X	
CDR		CM PRPLNT PURG - on (up) (purge is audible)	X X X	Both CM RCS LOGIC and CM PRPLNT DUMP switches must be on to power CM PRPLNT PURG switch.
			X CM RCS He DUMP X pb - push	Guarded pb. CM RCS He DUMP pb should be used to initiate purge following a normal dump operation if CM PRPLNT PURG switch fails to initiate purge. Visual fire from RCS engine nozzle extension surfaces, after burn to depletion and during purge, is expected and normal.
CDR,CMP			X If RHC (both) used X for propellant X dump burn	
			X X X RHC (both) - X Fire all jets X (except plus X pitch) X	One RHC is positioned to command plus yaw and roll (excluding plus pitch) and other RHC positioned to command minus yaw, pitch, and roll.
CDR CMP	29	CAB PRESS RELF vlv (2) - BOOST/ENTR (safety latch off)	X X If CAB PRESS DUMP X vlv used to X equalize ΔP, CAB X PRESS DUMP vlv - X open (CCW) X	
LMP	30	cb FLT/PL BAT BUS A, B & BAT C (3) - close	X X X	Connects battery bus A, B, and battery C to the flight and postlanding bus.
	31	cb FLT/PL MNA - open	X	

STA/T	STEP	PROCEDURE	PANEL	REMARKS
LMP	32	cb FLT/PL MNB - open	X	
			X	
	33	cb RAD HTRS OVLD (2) - open	X	
			X	
			X	
CDR	34	cb SPS PITCH (2) - open	X	
			X	
	35	cb SPS YAW (2) - open	X	
			X	
3K'	36	rh CAB PRESS RELF vlv - DUMP (safety latch off)	X	Ensures minimum cabin-to-ambient negative ΔP for CM impact.
			X	
			X	
			X	
	37	FLOOD LTS FIXED - POST LDG	X	Provides power from flight and postlanding bus to one floodlight in LH couch area and one floodlight in center couch area.
			X	
			X	
			X	
	38	FLOOD LTS DIM - 1 or 2	X	Position 1 provides power to two secondary floodlights, and position 2 provides power to two primary floodlights when FLOOD LTS FIXED switch is in POST LDG position and dc main buses are deactivated.
			X	
			X	
			X	
			X	
800' CMP	39	CAB PRESS RELF vlv (2) - CLOSE (safety latch off)	X	Valves must be closed prior to touchdown to prevent water from entering CM.
			X	If CAB PRESS DUMP vlv used to equalize ΔP, CAB PRESS DUMP vlv - close (CW)
			X	
			X	
			X	

STA/T	STEP	PROCEDURE	PANEL	REMARKS
CDR	40	ELS - AUTO (verify)	X	
		ELS LOGIC - on (up) (verify)	X	Guarded.
CMP	41	CM RCS PRPLNT (both) - OFF	X	
		CM RCS PRPLNT tb (both) - bp	X	Barber pole indicates at least one valve closed in each system.
CDR	42	DIRECT 02 vlv - OPEN (CCW)	X	
LMP	43	MN BUS TIE (2) - OFF	X	Removes battery power from dc main buses.
		CAUTION MN BUS TIE switches must be left in OFF position to ensure that batteries A, B, & C are used to power the postlanding systems only, and to prevent battery shorting caused by water entering the CM feed-through connectors.	X	
	44	cb BAT RLY BUS (2) - open	X	
	45	Postlanding check, para 4.20	X	

STA/T STEP	PROCEDURE	PANEL	REMARKS

5.1.2 SPS ABORT MODES

An abort in the SPS mode is accomplished by utilizing the SM RCS or the SPS engine. Separation and a short +X translation to increase separation distance will be manually initiated. After S-IVB separation and spacecraft stabilization, the abort possibilities separate into three general types of abort.

- CM/SM separation and coast-to-landing site (MODE II).
- Shaped trajectory abort in which the SPS is used for a variable ΔV maneuver to correct the trajectory for the desired landing site in the Atlantic Recovery Area (MODE III).
- Abort-to-earth-orbit in which the SPS is used to attain earth orbital altitude and speed (MODE IV).

STA/T	STEP	PROCEDURE	PANEL	REMARKS
		5.1.2.1 Mode II SPS Abort (03:17 to 10:08)		
CDR	1	THC - CCW (4.0 sec minimum)	X X X X X	Direct ullage is commanded when THC placed CCW. THC must be left in CCW detent for 4.0 sec to allow 3.0 sec timer (adapter separation) and 0.8 sec timer (RCS enable) to operate.
00:00		Event Timer reset and counting up (auto)	X EVNT TMR RSET - X RSET X EVNT TMR START - X START	RSET position is momentary. START position is momentary.
		BECO (auto) SII Stage - LV ENG 1, 2, 3, 4 & 5 lts - on SIVB Stage - LV ENG 1 lt - on	X Request ground X command BECO X X X	
		Direct ullage started (auto)	X DIR ULL pb - push X	
00:03		Adapter separation (auto) All LV ENG lts - out	X CSM/LV SEP pb - X push X X	Guarded.
CMP			X	
00:03.8		RCS/SCS enable (auto)	X RCS CMD - ON	ON position is momentary.
		Key V82E	X	Calls R30 for meaningful display of N50.
		FL V16 N44	X	
		Ha XXXX.X NM	X	Apogee altitude.
		Hp XXXX.X NM	X	Perigee altitude.
		TFF XXBXX MIN-SEC	X	Time of free fall to 49.4 NM (300,000 ft).

STA/T	STEP	PROCEDURE	PANEL	REMARKS
CDR	2	THC - ARMED, ctr and +X translation	X DIR ULL pb - push X X	Automatic direct ullage terminated when THC returned to center.
CMP	3	Key N50E	X X	
		Splash error	X	
		XXXX.X NM	X	Negative for undershoot, positive for overshoot.
		Hp XXXX.X NM	X	
		TFF XXBXX MIN-SEC	X X X	If TFF <100 seconds, maneuver to entry attitude must be initiated immediately and separation performed at entry attitude.
		If TFF <100 sec, go to step 9	X X X	
CDR			X	
00:24	4	Terminate +X translation	X X	
	5	Start yaw mnvr to sep attitude Y 45°	X X X	
		Start R&P mnvr to entry attitude R 0°, P 126°	X X X X	
	6	Yaw mnvr to sep attitude complete Y 45°	X X X	
		BMAG MODE (3) - ATT 1/ RATE 2	X X	

STA/T	STEP	PROCEDURE		PANEL	REMARKS
CMP	7	CSM/LM FNL SEP (both) - on (up)	X X X		Guarded. On position is momentary. Jettisons docking ring.
	8	CM/SM SEP (both) - on (up)	X X		Guarded. On position is momentary. CM/SM umbilical and tension ties are severed.
		CM/SM deadface (auto)	X		
		SM C/W lt (10) - on	X		
LMP		MASTER ALARM pb/lts - on	X X		
CDR		CM RCS pressurize (auto)	X X	CM RCS PRESS - on (up)	Guarded. On position is momentary.
CMP		RCS control trnfr - (auto)	X X	RCS TRNFR - CM	CM position is momentary.
		CM/SM separation (auto)	X		
		C/W CSM - CM	X X		Extinguishes all SM C/W lights and enables CM RCS C/W lights.
LMP		MASTER ALARM pb/lt - push	X X		
		For TFF <100 sec, go to step 13	X X X		
CDR	9	Start yaw mnvr to entry attitude Y 0°	X X X X		
		For TFF <100 sec, terminate +X translation and mnvr to entry attitude R 0°, P 126°, Y 0°	X X X X X		

STA/T	STEP	PROCEDURE	PANEL	REMARKS
CDR	10	ATT DBD - MAX	X	
			X	
	11	Note TFF	X	Maneuver-to-entry attitude must be completed prior to TFF ≈0 sec.
			X	
			X	
01:40			X	
	12	Maneuver to entry	X	BEF, heads down, full lift.
		attitude complete	X	
		R 0°, P 126°, Y 0°	X	
		BMAG MODE (3) - ATT 1/	X	
		RATE 2	X	
			X	
		For TFF >100 sec, go to	X	
		step 13	X	
		For TFF <100 sec, return	X	
		to step 7	X	
			X	
	13	Set up for CM RCS sys 1	X	
		AUTO RCS SEL CM 1	X	
		(6) - MNA or MNB	X	
		AUTO RCS SEL CM 2	X	
		(6) - OFF	X	
			X	
	14	BMAG MODE (3) - RATE 2	X	Prevents roll bug jump when .05 G switch set to on.
			X	
	15	EMS FUNC - ENTRY	X	
			X	
	16	EMS MODE - NORM	X	
			X	
	17	When .05 G lt - on,	X	
		.05 G sw - on (up)	X	

ABORT

STA/T	STEP	PROCEDURE	PANEL	REMARKS
CDR	18	EMS ROLL - on (up)	X	
			X	
	19	Maintain full lift	X	
			X	
	20	Proceed to Earth Landing Phase, para 4.19	X	
			X	
			X	

STA/T	STEP	PROCEDURE	PANEL	REMARKS
		5.1.2.2 Mode III SPS Abort (10:08 to Insertion)		
CDR	1	THC - CCW (4.0 sec minimum)	X X X X X	Direct ullage is commanded when THC placed CCW. THC must be left in CCW detent for 4.0 sec to allow 3.0 sec timer (adapter separation) and 0.8 sec timer (RCS enable) to operate.
00:00		Event Timer reset and counting up (auto)	X EVNT TMR RSET - X RSET X EVNT TMR START - X START	RSET position is momentary. START position is momentary.
		BECO (auto)	X Request ground X command SIVB X BECO	
		LV ENG 1 lt - on	X	
		Direct ullage started (auto)	X DIR ULL pb - push X	
00:03		Adapter separation (auto)	X CSM/LV SEP pb - X push	Guarded.
		LV ENG 1 lt - out	X	
CMP			X	
00:03.8		RCS/SCS enable (auto)	X RCS CMD - ON X	ON position is momentary.
		Key V82E	X	Calls R30 for meaningful display of N50.
		FL V16 N44	X	
		Ha XXXX.X NM	X	Apogee altitude.
		Hp XXXX.X NM	X	Perigee altitude.
		TFF XXBXX MIN-SEC	X	Time of free fall to 49.4 NM (300,000 ft).
			X	
CDR	2	LV IND/GPI sw - GPI	X	

STA/T	STEP	PROCEDURE	PANEL	REMARKS
CDR	3	THC - ARMED, ctr and +X translation	DIR ULL pb - push	Automatic direct ullage terminated when THC returned to center.
CMP	4	Key N50E		
		Splash error XXXX.X NM		Negative for undershoot, positive for overshoot.
		Hp XXXX.X NM		
		TFF XXBXX MIN-SEC		If TFF <100 seconds, maneuver to entry attitude immediately.
CDR				
00:24	5	Terminate +X translation		
	6	Maneuver to retro attitude R 180°, P 200°, Y 0°		BEF, heads up.
	7	Obtain retro update		
	8	BMAG MODE (3) - ATT 1/ RATE 2		
	9	RATE - LO		
	10	Verify SPS GMBL ind (2) = SPS GMBL tw (2) settings		
	11	SCS TVC (2) - AUTO		
	12	EMS MODE - NORM		

STA/T	STEP	PROCEDURE	PANEL	REMARKS
CDR				
01:50			X	
	13	Start ullage	X	
			X	
	14	ΔV THRUST A - NORM	X	Guarded.
			X	
02:05			X	
	15	SPS THRUST - DIR ON	X	Lever lock.
			X	
		If no SPS IGN	X	
		ΔV THRUST B - NORM	X	
		If still no SPS IGN	X	
		THRUST ON pb - push	X	
			X	
	16	RATE - HI	X	Bypasses noise problem in SCS gyro assemblies because of thrusting vibration levels and provides backup to auto selection high rate in pitch and yaw TVC.
			X	
			X	
	17	Terminate ullage - IGN +1 sec	X	
			X	
			X	
	18	ΔV ind = desired value or ΔR = 0	X	
			X	
			X	
		WARNING	X	
			X	
		If TFF ≤100 sec thrusting must be terminated and separation maneuver performed.	X	
			X	
			X	
	19	ΔV THRUST (2) - OFF	X	Guarded.

STA/T	STEP	PROCEDURE		PANEL	REMARKS
CDR	20	EMS MODE - STBY	X		
			X		
	21	Start maneuver to entry attitude	X		
			X		
		R 300°, P 120°, Y 17°	X		
			X		
CMP	22	CSM/LM FNL SEP (both) - on (up)	X		Guarded. On position is momentary. Jettisons docking ring.
			X		
			X		
	23	CM/SM SEP (both) - on (up)	X		Guarded. On position is momentary. CM/SM umbilical and tension ties are severed.
			X		
		CM/SM deadface (auto)	X		
		SM C/W lt (10) - on	X		
		MASTER ALARM pb/lt - on	X		
		CM RCS pressurize (auto)	X	CM RCS PRESS - on	Guarded. On position is momentary.
			X	(up)	
		RCS control transfer (auto)	X	RCS TRNFR - CM	CM position is momentary.
			X		
		CM/SM separation (auto)	X		
			X		
	24	C/W CSM - CM	X		Extinguishes all SM C/W lights and enables CM RCS C/W lights.
			X		
LMP	25	MASTER ALARM pb/lt - push	X		
			X		
			X		
CDR	26	ATT DBD - MAX	X		
			X		
	27	Note TFF	X		Maneuver-to-entry attitude must be completed prior to TFF = 0 seconds.
			X		

STA/T	STEP	PROCEDURE	PANEL	REMARKS
CDR	28	Complete maneuver to entry attitude	X X X	BEF, heads down, full lift.
	29	Set up for CM RCS sys 1 AUTO RCS SEL CM 1 (6) - MNA OR MNB AUTO RCS SEL CM 2 (6) - OFF	X X X X X X	
	30	BMAG MODE (3) - RATE 2	X X	Prevents roll bug jump when .05 G switch is set to on.
	31	EMS FUNC - ENTRY	X X	
	32	EMS MODE - NORM	X X	
	33	Maintain full lift to .05 G	X X X	
	34	When .05 G lt - on, .05 G sw - on (up)	X X X	
	35	EMS ROLL - on (up)	X X	
	36	Maintain half lift	X X	
50K'	37	Proceed to Earth Landing Phase, para 4.19	X X X	



STA/T	STEP	PROCEDURE	PANEL	REMARKS
		5.1.2.3 Mode IV SPS Abort (09:00 to Insertion)		
CDR	1	THC - CCW (4.0 sec minimum)	X X X X X	Direct ullage is commanded when THC placed CCW. THC must be left in CCW detent for 4.0 sec to allow 3.0 sec timer (adapter separation) and 0.8 sec timer (RCS enable) to operate.
00:00		Event Timer reset and counting up (auto)	X EVNT TMR RSET - X RSET X EVNT TMR START - X START	RSET position is momentary. START position is momentary.
		BECO (auto)	X Request ground X command SIVB BECO	
		LV ENG 1 lt - on	X	
		Direct ullage started (auto)	X DIR ULL pb - X push	
00:03		Adapter separation (auto)	X CSM/LV SEP pb - X push	Guarded.
		LV ENG 1 lt - out	X	
CMP			X	
00:03.8		RCS/SCS enable (auto)	X RCS CMD - ON X	ON position is momentary.
CDR	2	LV IND/GPI sw - GPI	X X	
	3	THC - ARMED, ctr and +X translation	X DIR ULL pb - push X	Automatic direct ullage terminated when THC returned to center.

STA/T	STEP	PROCEDURE	PANEL	REMARKS
CMP	4	Key V82E	X	
		FL V16 N44	X	
		Ha XXXX.X NM	X	
		Hp XXXX.X NM	X	
		TFF XXBXX MIN-SEC	X	
			X	
CDR			X	
00:24	5	Terminate +X translation	X	
			X	
	6	Maneuver to insertion attitude	X	
			X	
		R 180°, P 350°, Y 0°	X	SEF, heads down.
			X	
	7	Obtain insertion update	X	
			X	
	8	BMAG MODE (3) - ATT 1/ RATE 2	X	
			X	
	9	RATE - LO	X	
			X	
	10	Verify SPS GMBL ind (2) = SPS GMBL tw (2) settings	X	
			X	
			X	
	11	EMS MODE - AUTO	X	
			X	
01:00			X	
	12	Start ullage	X	

STA/T	STEP	PROCEDURE	PANEL	REMARKS
CDR	13	ΔV THRUST A - NORM	X	Guarded.
			X	
02:05			X	
	14	SPS THRUST - DIR ON	X	Lever lock.
			X	
		If no SPS IGN	X	
		ΔV THRUST B - NORM	X	
			X	
		If still no SPS IGN	X	
		THRUST ON pb - push	X	
			X	
	15	RATE - HI	X	Bypasses noise problem in SCS gyro assemblies because of thrusting vibration levels and provides backup to auto selection of high rate in pitch and yaw TVC.
			X	
			X	
			X	
	16	Terminate ullage - IGN	X	
		+1 sec	X	
			X	
	17	ΔV ind = desired value	X	
		Hp ≥75 NM	X	
			X	
	18	ΔV THRUST (2) - OFF	X	
			X	
	19	SPS THRUST - NORM	X	Lever lock.
			X	
	20	EMS MODE - STBY	X	
		SECO +40 sec	X	
		Status from ground	X	

SPS ABORT MODES

STA/T	STEP	PROCEDURE	PANEL	REMARKS
	21	SAFE ORBIT	X	
CMP		PRO (exit R30)	X	
		Key V37E 00E	X	
			X	
	22	Postorbital Insertion	X	
		Check, para 4.3.2	X	

5.2 MALFUNCTION PROCEDURES

INTRODUCTION

Malfunction procedures encompass the recognition, diagnosis, and corrective action for system malfunctions. In most cases, the crew is alerted to a malfunction condition by C&WS lights and indicators, or by the absence of a scheduled function or event. The crew will then locate, correct, or isolate the malfunction and determine its effect on the scheduled mission. In general, the procedures cover significant single failures. Double unrelated failures are not covered to prevent procedures from becoming complex and unmanageable.

The malfunction procedures are presented in logic flow diagram format and arranged by symptom routines. The symptom routines contain the primary malfunction procedures and are backed up by special subroutines and system reconfiguration routines where necessary. A three column format is used for symptom routine logic flow diagrams. A description and use of each of these columns is as follows:

Symptom Column. The primary purpose of the symptom column is to allow entry into the malfunction procedures. Two types of symptom logic blocks are used in this column. These are the "C/W Status Light" and "Other Symptom" blocks. These two blocks, along with the supporting information under each block, explain and qualify the situation so the reader fully understands the symptom or condition that exists. All symptoms are arranged by systems, i.e., G&C, SPS, RCS, EPS, etc., and are numbered in sequence starting with number 1 for each system. A subsymptom that is directly related to a major symptom is identified by using the same number followed by a lower case letter, 1a, 1b, 1c, etc.

Procedure Column. The procedure column presents a step-by-step logic flow diagram of actions and decisions used to isolate or correct a malfunction symptom. This information is presented with several types of logic blocks. These blocks contain the procedures, decisions, and actions to locate and isolate the failure. Caution and Warning blocks alert the crew to situations which, if not corrected, may degrade the operational integrity of the SC systems or may have critical crew safety consequences. Remote event symbols are used to reference items in the Remarks column or to refer to other procedural steps.

Remarks Column. This column will include the following information:

a. Amplifying additional remarks related to the symptom, i.e., relief valve vents at ____ psia, burst disc ruptures at ____ psia, or to notify the user of the urgency that he must treat a particular symptom, etc.

b. Amplifying remarks which relate to a decision and/or action items (e.g., why a step is taken, possible system time lag, etc.).

c. Explain resultant system status or operational capability after a failure has been identified, i.e., how subsystem is degraded, can degraded subsystem support primary mission, early termination of mission, etc.

d. Cautions or Warnings, as necessary, to cover conditions that may exist because of a failure.

Procedure Changes. Malfunction procedures that have been added or changed in this issue are identified by a change bar in the margin of the malfunction procedure index.

Symptom	Number	Page
5.2.1 GUIDANCE AND CONTROL		
5.2.1.1 Guidance and Control		
Abnormal Vehicle Dynamics During SPS Thrusting	1	5-59
FDAI ATT Error Abnormal	2	5-61
FDAI Rate Ind Abnormal	3	5-61
FDAI Total Attitude Display Abnormal	4	5-62
FDAI Fails to Slew With Ordeal	5	5-62
FDAI Total ATT Does Not Respond to GDC Align	6	5-63
GPI/Fuel Press Ind(s) Pegged or Zero	7	5-63
BMAG 1 (2) TEMP lt - on	8	5-63
Abnormal Vehicle Dynamics (Non-SPS Thrusting LM - Inactive)	A	5-64
5.2.1.2 Stabilization Control System		
RCS Failed On	1	5-65
Accel CMD Troubleshooting Routine	2	5-68
Suspected Reduced RCS Authority	2a	5-68
Rate CMD Troubleshooting Routine	3	5-69
CSM Drifts Out of Deadband	3a	5-70
Min Imp Troubleshooting Routine	4	5-71
Suspected Reduced RCS Authority	4a	5-72
Direct RCS Troubleshooting Routine	5	5-73
Vehicle Dynamics Oscillating & Diverging	6	5-73
Abnormal Vehicle Dynamics During Translation	7	5-74
5.2.1.3 Guidance and Navigation		
RCS Failed On	1	5-76
RHC Troubleshooting Routine	2	5-77
CMC Auto Troubleshooting Routine	2a	5-77
Suspected Reduced RCS Authority	2b	5-77
THC Troubleshooting Routine	3	5-78
Min Imp Cont Troubleshooting Routine	4	5-78
CMC lt - on	5	5-79
ISS lt - on	6	5-79
GIMBAL LOCK lt - on	7	5-79
TEMP lt - on	8	5-80
RESTART lt - on	9	5-80
TRACKER lt - on	10	5-80
PROG lt - on	11	5-81
Alarm Codes	12	5-81

Special Sub Routines

CMC Test	SSR-1	5-82
CMC Jet Re-Config	SSR-2	5-83
Fresh Start	SSR-3	5-83

Symptom	Number	Page
5.2.2 SERVICE PROPULSION SYSTEM		
SPS PRESS lt - on	1	5-85
Fuel and/or Oxid Press High	1a	5-85
Fuel and/or Oxid Press Low	1b	5-85
Fuel and Oxid ΔP >20 psi	1c	5-85
Pitch (Yaw) Gmbl 1 (2) lt - on	2	5-86
SPS Premature Shutdown	3	5-86
No SPS Ignition	3a	5-86
SPS Eng Does Not Shut Down Automatically	4	5-87
SPS Thrust lt on - Non Thrusting	4a	5-87
SPS Pc Abnormal	5	5-87
SPS He Vlv tb - Abnormal	6	5-87
He Press Low or Decr	7	5-88
GN2 A (B) Press Low	8	5-88
SPS Inj Vlv Partially Open	8a	5-88
SPS Inj Vlv Ind Abnormal	9	5-88
No Prplnt Temp Control	10	5-88
No Response of SPS Oxid Vlv tb During Flow Adjust	11	5-89
SPS Oxid Unbal Ind Erratic or Pegged	12	5-89
SPS Oxid (Fuel) Qty Ind Readout Abnormal	13	5-89
5.2.3 REACTION CONTROL SYSTEM		
5.2.3.1 SM RCS		
SM RCS A (B,C,D) lt - on	1	5-91
SM RCS Pkg Temp Low	1a	5-91
SM RCS Pkg Temp High	1b	5-91
SM RCS Manf Press Low	1c	5-91
SM RCS Manf Press High	1d	5-91
SM RCS He Press Low or Decr	2	5-92
SM RCS Prplnt Qty Low or Decr	2a	5-92
5.2.3.2 CM RCS		
CM RCS 1 (2) lt - on	3	5-92
CM RCS Manf Press High	3a	5-92
CM RCS Manf Press Low	3b	5-92
CM RCS He Press Low or Decr	4	5-92
CM RCS Eng Temp Fails to Incr	5	5-92
5.2.4 ELECTRICAL POWER SYSTEM		
5.2.4.1 Cryogenics		
CRYO PRESS lt - on	1	5-93
O2 (H2) Cryo Press Hi	1a	5-93
O2 (H2) Cryo Press Low	1b	5-93

Symptom	Number	Page
5.2.4.2 Fuel Cells		
FC 1 (2, 3) lt - on	1	5-94
FC 1 (2, 3) Skin Temp Hi	1a	5-94
FC 1 (2, 3) Skin Temp Low	1b	5-94
FC 1 (2, 3) Mod Cond Exh Temp Hi	1c	5-95
FC 1 (2, 3) Cond Exh Temp Low	1d	5-95
FC 1 (2, 3) Rad Temp Low tb - bp	1e	5-95
FC 1 (2, 3) pH HI tb - bp	1f	5-96
FC 1 (2, 3) O2 (H2) Flow Hi	1g	5-96
FC 1 (2, 3) O2 (H2) Flow Low	2	5-96
FC Reg O2 (H2) Out Press Hi	3	5-96
cb FC 1 (2, 3) PUMPS AC - Open	4	5-97
FC 1 (2, 3) V-I-T Performance Low	5	5-97
5.2.4.3 Power Distribution		
MN BUS A (B) UNDERVOLT lt - on	1	5-98
AC BUS 1 (2) lt - on	1a	5-98
AC BUS 1 (2) Overload lt - on	1b	5-98
MN BUS A (B) Indicates <26 vdc	1c	5-98
AC BUS 1 (2) Voltage Low	1d	5-99
AC BUS 1 (2) Voltage High	1e	5-99
INV 1 (2, 3) TEMP HI lt - on	2	5-99
FC BUS DISCONNECT lt - on	3	5-100
Suspected Hi Current For CSM Config	4	5-100
Bat Chgr Current Zero	5	5-101
Bat Bus A (B) Current >1.0 With MN BUS TIE (2) - OFF	6	5-101
FC tbs All Gray	6a	5-101
Pyro Bat Voltage <35 vdc	7	5-101
Special Sub Routine		
Fuel Cell Shutdown	SSR-1	5-101
Bus Short Isolation	SSR-2	5-102
5.2.4.4 Bus Failure Effects - Non Transferable Loads		
Main DC Bus A		5-102
Main DC Bus B		5-102
AC Bus 1		5-102
AC Bus 2		5-102
Battery Bus A		5-102
Battery Bus B		5-102
Battery Relay Bus		5-102

Symptom	Number	Page
5.2.5 TELECOMMUNICATIONS SYSTEM		
One Crewman Has No Intercom Capability	1	5-103
Loss of Intercom (All Crewmen)	2	5-103
One Crewman Has Unselected Hot Mike Condition	3	5-103
Loss of VHF Comm With MSFN	4	5-104
Loss of VHF Comm With LM	5	5-105
EMS Range Display Abnormal	6	5-105
Loss of S BD Voice Comm (MSFN within VHF range)	7	5-106
Loss of S BD Voice Comm (MSFN not within VHF range)	8	5-107
MSFN Reports Loss of Ranging	9	5-108
MSFN Reports Loss of Real Time PCM	10	5-108
Hi Gain Antenna Does Not Respond Properly to Pointing Commands	11	5-108
Cannot Acquire or Maintain Phaselock With High Gain Antenna	12	5-109
Cannot Acquire Phaselock With OmniAntennas	13	5-109
5.2.6 ENVIRONMENTAL CONTROL SYSTEM		
O2 FLOW HI lt - on	1	5-111
O2 Flow High	1a	5-111
O2 Flow Low	2	5-112
Surge Tank Press High	3	5-112
Cabin Press High or Increasing	4	5-112
Surge Tank Press Low	5	5-113
Cabin Press Low or Decreasing	6	5-113
Crew Uncomfortable In Cabin	7	5-114
Cabin Humidity High	7a	5-114
Clinging Suit	8	5-114
SUIT COMPRESSOR lt - on	9	5-115
Suit Compr ΔP Low	9a	5-115
Ballooned PGA's	10	5-115
Crew Uncomfortable in Suit Loop	11	5-116
Suit Ckt Humidity High	11a	5-116
CO2 PP HI lt - on	12	5-116
CO2 Part Press High	12a	5-116
CO2 Part Press Low	12b	5-116
CO2 Filter Seizure Within Canister	13	5-117
GLYCOL TEMP LOW lt - on	14	5-117
Prim ECS Rad Out Temp Low	14a	5-117
Prim ECS Rad Out Temp High	15	5-117
Prim Gly Evap Out Temp High	16	5-118
Prim Steam Press Low	16a	5-118
Prim Gly Evap Out Temp Low	17	5-119
Prim Gly Accum Qty High	18	5-119
Prim Gly Disch Press High	18a	5-119
Prim Gly Accum Qty Low or Decreasing	19	5-120
Prim Gly Disch Press Low	20	5-120

Symptom	Number	Page
Sec Gly Evap Out Temp High	21	5-121
Sec Steam Press Low	21a	5-121
Sec Gly Evap Out Temp Low	22	5-121
Sec ECS Rad Out Temp High	23	5-122
Sec ECS Rad Out Temp Low	24	5-122
Sec Gly Accum Qty High	25	5-122
Sec Gly Accum Qty Decreasing	26	5-122
Sec Gly Disch Press Low	27	5-123
Potable H2O Quantity Decreasing Rapidly	28	5-123
Waste H2O Quantity Decreasing Rapidly	28a	5-123
Food Prep Water Temp Low	29	5-123
Entrapped Gas in Potable H2O	30	5-123
Urine Ovbd Dump Not Draining	31	5-124
Waste H2O Overboard Dump Not Draining	31a	5-124
Inadequate Ventilation After Landing	32	5-124
Water Inflow After Landing	33	5-124
Special Sub Routine		
Secondary Loop Activation	SSR-1	5-125
Frozen Steam Duct	SSR-2	5-125
Symptom		
5.2.7 ENTRY MONITOR SYSTEM		
.05 G lt on (TEST 1)	1	5-127
G/V Scroll Assy Does Not Slew (TEST 1)	2	5-127
.05 G lt out (TEST 2)	3	5-127
Lift Vector Dn Lt Will Not Come On (TEST 3)	4	5-128
Rng Ind Will Not Slew (TEST 3)	4a	5-128
V-Axis Only or Multiple Displays Abnormal (TEST 4)	5	5-129
Rng Ind Only Abnormal (TEST 4)	6	5-129
G-Axis Only Abnormal (TEST 4)	7	5-129
Lift Vector Up Lt Not On (TEST 5)	8	5-130
G-Axis Does Not Drive (TEST 5)	8a	5-130
Rng Ind Does Not Slew in RNG SET	9	5-130
G-Axis Does Not Zero in RNG SET	9a	5-130
V-Axis Does Not Slew in Vo SET	10	5-130
ΔV/Rng Ind Abnormal in ΔV TEST	11	5-131
SPS Thrust Lt Not On in ΔV TEST	12	5-131
ΔV Ind Does Not Slew in ΔV SET	13	5-131
ΔV/Rng Ind Fails to Count During ΔV's	14	5-131
Either Lift Vector Lt On After 2 G	15	5-131

Symptom	Number	Page
5.2.8 MISCELLANEOUS MALFUNCTIONS		
5.2.8.1 Docking		
Both Docking Probe tb's Abnormal During Extension Cycle	1	5-133
Dock Probe Will Not Fold	2	5-133
Dock Probe Extd/Rel tb A (B) Remains Gray After Capture (TLD only)	3	5-133
5.2.8.2 Hatch		
Fwd Hatch Will Not Unlatch	1	5-134
Fwd Hatch Will Not Latch	2	5-134

SYMPTOM	PROCEDURE	REMARKS

G&C

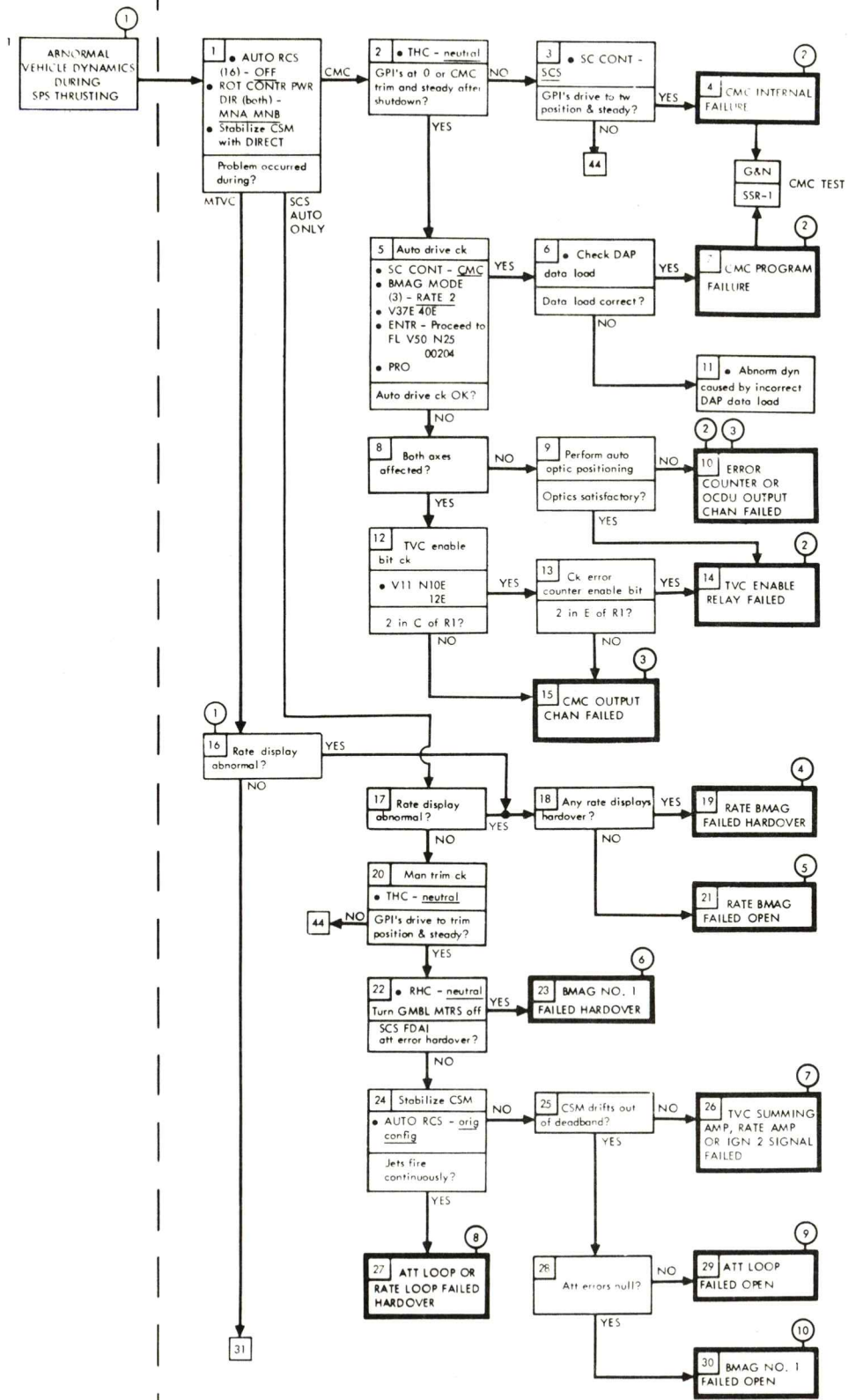

1. Thrust is shut off and system returned to configuration at failure. If gmbl motors are off, they must be turned on before starting this procedure.
2. CMC SPS control capability lost.
3. Auto optics lost
4. SCS auto ΔV lost. MTVC possible if redundant BMAG placed in RATE position.
5. An open rate BMAG may be confirmed by null rate displays. SCS ball drive lost in axis unless alternate rate BMAG used. If YAW or ROLL: If BMAG 1, after .05G, SCS roll att erroneous. If BMAG 2, after .05 G, EMS RSI erroneous unless in RATE 1. Rate damping and SCS auto ΔV lost. For MTVC, use alternate rate BMAG.
6. SCS auto ΔV lost if pitch or yaw. If roll, control attitude with Direct or ACCEL CMD.
7. SCS auto ΔV capability lost.
8. SCS RATE CMD, att hold, and proportional control lost for affected axis. SC auto ΔV lost if pitch or yaw. Translations without att hold possible in MIN IMP. Further troubleshooting not recommended.
9. Att hold capability lost in affected axis. SCS auto ΔV lost if pitch or yaw.
10. For affected axis: In ATT 1 RATE 2, att hold and att error display lost. After .05 G, SCS FDAI roll att erroneous if yaw or roll.

SYMPTOM	PROCEDURE	REMARKS
G&C 1 (Cont)	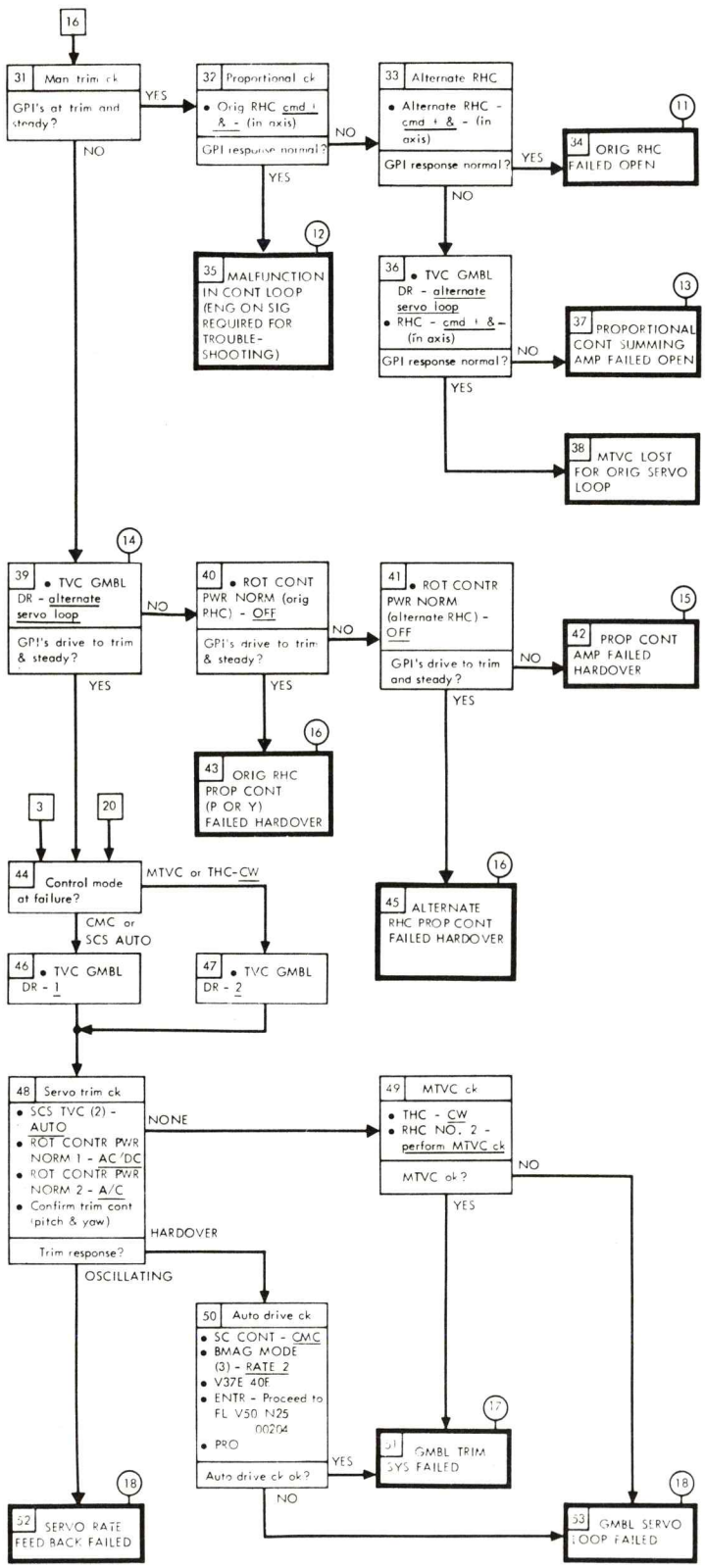	(11) SCS proportional control and MTVC lost for failed RHC. (12) One probable failure could be loss of MTVC integrator in which case during MTVC the gimbal position directly follows the stick position. (13) SCS proportional control and MTVC lost for both RHC's. (14) If THC - CW at time of failure, servo #2 being used, select servo #1. (15) No MTVC capability. RATE CMD lost in affected axis. Att hold possible if RHC's locked for neutral) or ROT CONTR PWR NORM (2) - OFF. Disable affected axis if direct used. (16) MTVC and proportional cont available with unaffected RHC if affected RHC ROT CONT PWR NORM sw is OFF or RHC locked. (17) CMC ΔV unaffected. On affected servo, SCS auto ΔV and THC lost, but MTVC without trim remains. (18) Affected servo lost for all ΔV's.

SYMPTOM	PROCEDURE	REMARKS

G&C

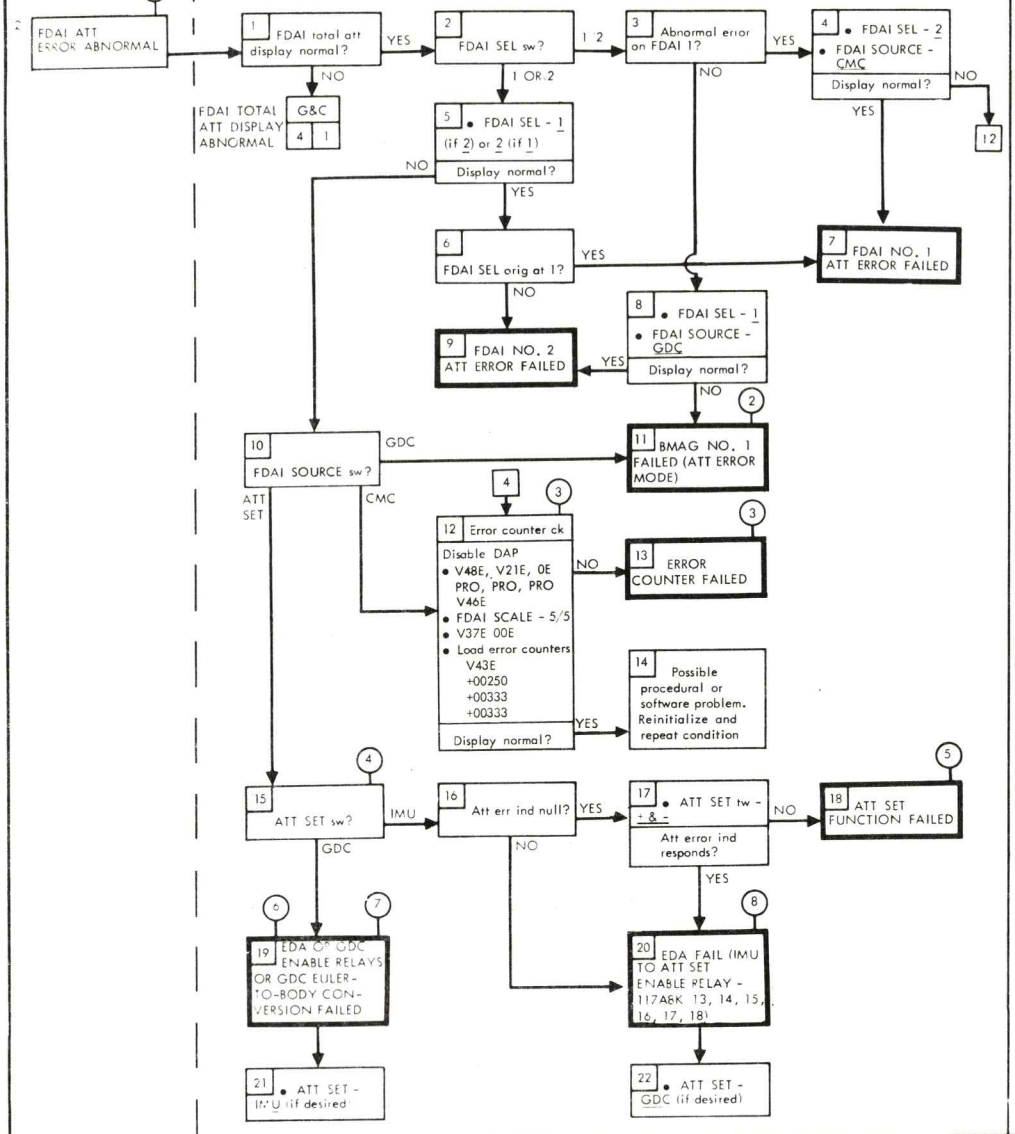

1. May be single or multi axis.
2. RATE 1 operation from this BMAG may not be available.
3. CMC attitude error, coarse align and SIVB attitude control lost for axis that showed abnormal in error counter check.
4. Cycling ATT SET sw may free sticking relays.
5. Attitude error functions are inoperative when FDAI SOURCE switch at ATT SET.
6. Failure of GDC enable relays will be determined by an inability to align GDC by GDC ALIGN pb.
7. SCS att set error display lost. If ATT SET - IMU, attitude errors displayed will be Euler angles.
8. IMU function of ATT SET sw lost.

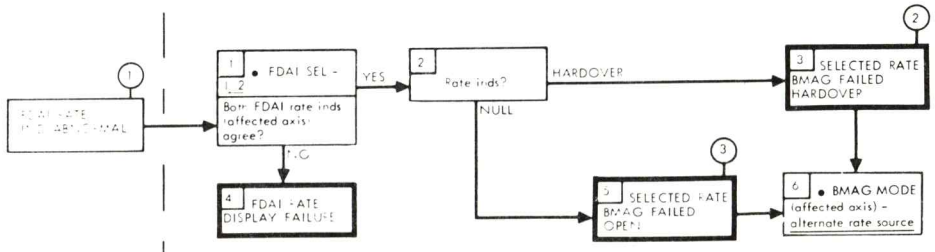

1. May be single or multiple axes.
2. Attitude error display and attitude hold capability lost. SCS auto ΔV lost if pitch or yaw for roll place MAN ATT ROLL - ACCEL CMD and control roll manually. If failure is No. 1 roll or yaw BMAG after .05 G, No. 2 FDAI roll ind will spin up.
3. If BMAG No. 2 failed: SCS auto ΔV lost unless in roll, then place BMAG MODE ROLL - ATT 1 RATE 2 and LIM CYCLE - on (up). RCS attitude hold available in all axes with BMAG MODE (3) - ATT 1 RATE 2 and LIM CYCLE on (up). If roll or yaw BMAG No. 1 failed, No. 2 FDAI roll ind erroneous after .05 G.

SYMPTOM	PROCEDURE	REMARKS

G&C

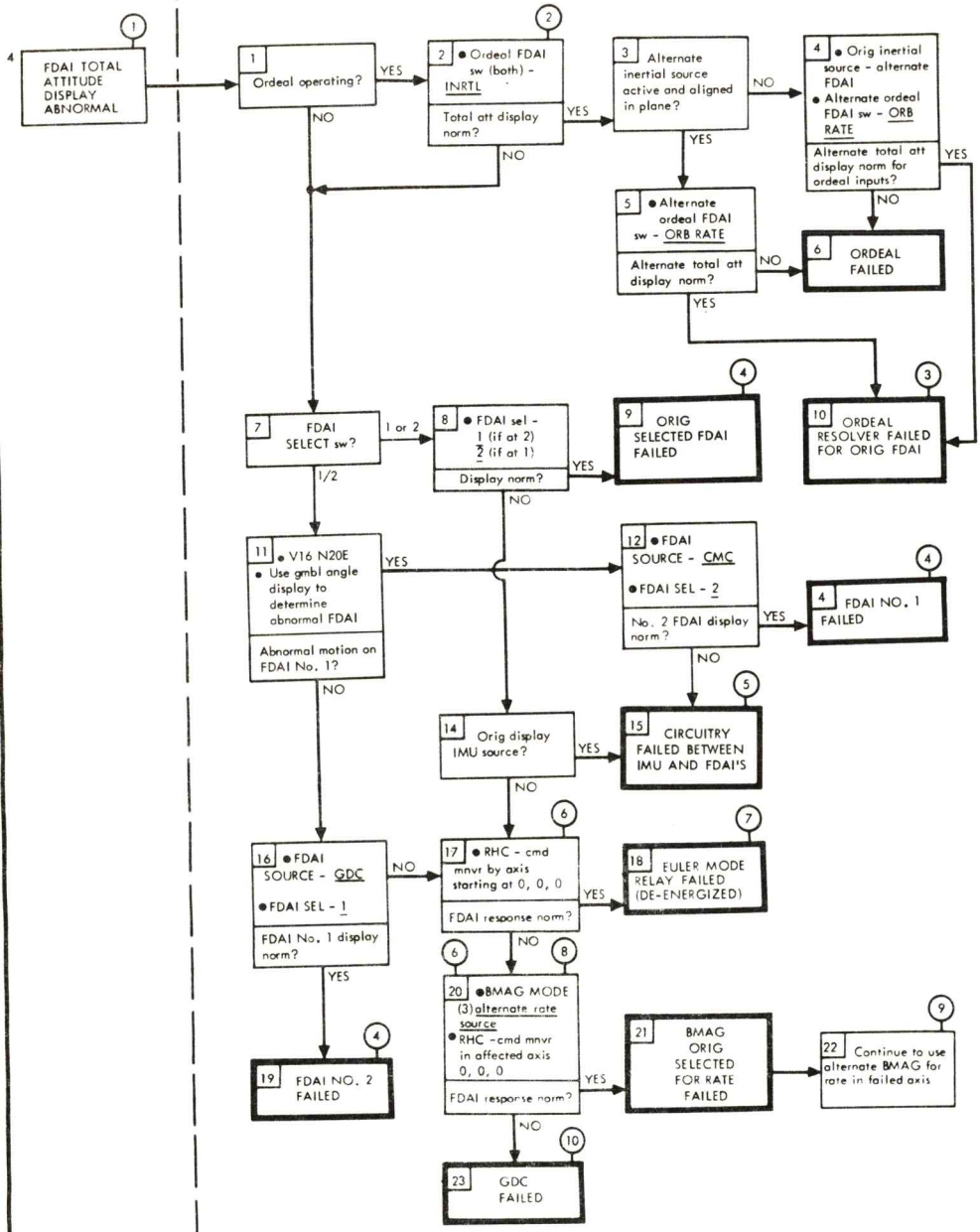

(1) For GDC FDAI total attitude, if rate display(s) also hardover, enter "FDAI Rate Ind Abnormal" procedure.

(2) Assumes inertial reference for orbital rate FDAI is aligned in plane.

(3) Use alternate FDAI for subsequent orbital rate displays.

(4) Confirm FDAI failure by placing alternate inertial source on affected FDAI. Normal total attitude with alternate inertial source indicative of Golden G relay failure.

(5) Any failure of IMU itself would have been indicated by ISS light.

(6) The FDAI can be aligned to 0, 0, 0 by the GDC align pb.

(7) Attempt only single-axis maneuvers in order pitch, yaw and roll. This failure has no effect after .05 G since Euler mode relays are disabled.

(8) Assumes alternate rate source operable.

(9) After .05 G, if BMAG NO. 1 fails in yaw or roll, FDAI Roll Att will be erroneous; if BMAG No. 2 fails in yaw or roll, EMS RSI attitude will be erroneous unless RATE 1 selected.

(10) Entry capability can be determined from GDC FDAI roll ind and EMS RSI response when a yaw maneuver is commanded with .05 G sw and EMS ROLL sw - on (up).

Total attitude capability lost for affected axis. After .05 G, if failure axis is:
YAW - EMS RSI invalid
ROLL - No. 2 FDAI roll ind invalid.

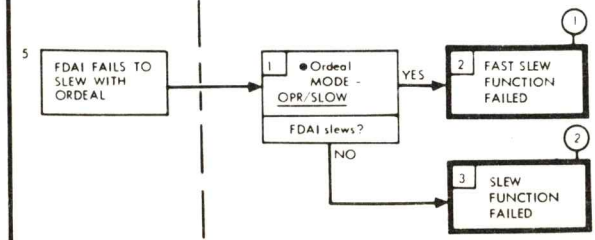

(1) Slew FDAI at slow rate.

(2) With an in-plane GDC alignment, FDAI pitch angle may be set by pressing GDC align pb and slewing pitch att set tw.

SYMPTOM	PROCEDURE	REMARKS

G&C

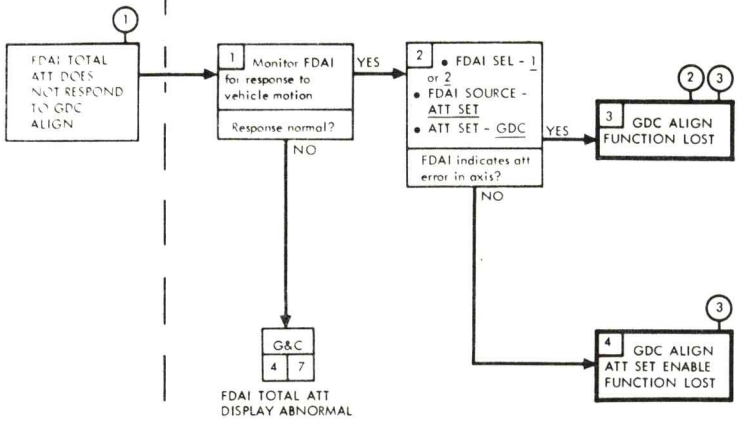

(1) May be single or multiple axes.

(2) Att set error displays still operational.

(3) GDC can be aligned to an arbitrary position by:
- a. Fly CSM to indicated attitude to which GDC is to be aligned.
- b. Disable GDC.
- c. Fly CSM to prescribed inertial attitude (star or visual reference).
- d. Re-enable GDC.

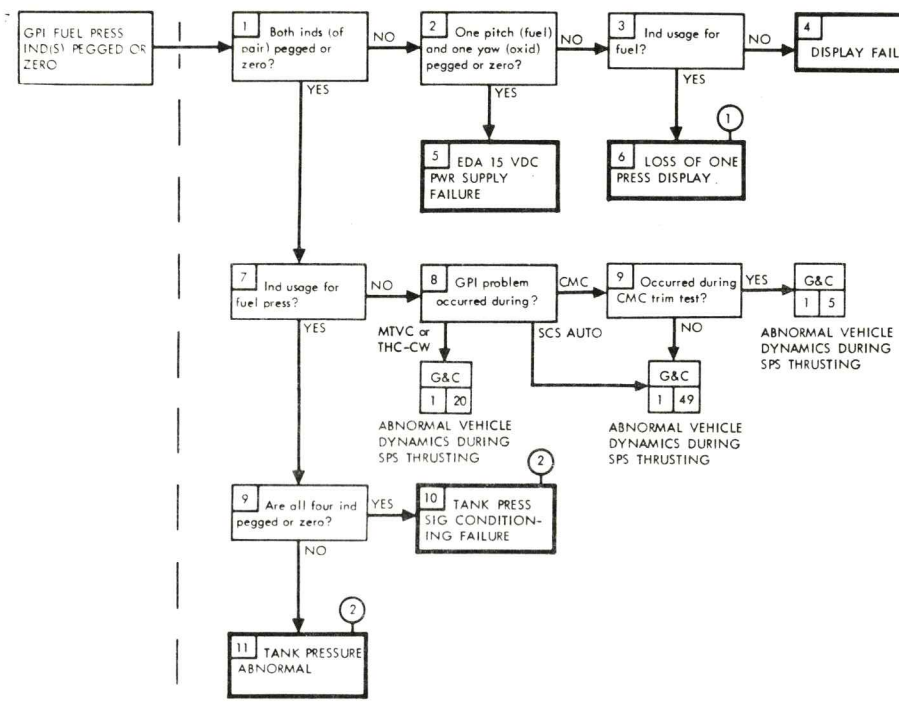

(1) Check GPI operation during first gimbal drive and trim check.

(2) Utilize MSFN to monitor tank press.

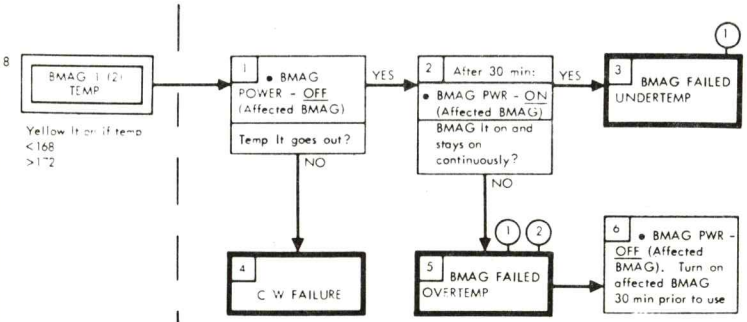

(1) BMAG rate information relatively unaffected by temperature out-of-tolerance. However attitude error information degrades ~4% per degree out of tolerance.

(2) Time that the BMAG TEMP lt is off is an indication of the temperature rate increase and period of accuracy for subsequent BMAG use.

SYMPTOM

A ABNORMAL VEHICLE DYNAMICS (NON-SPS THRUSTING LM - INACTIVE) (1)

PROCEDURE

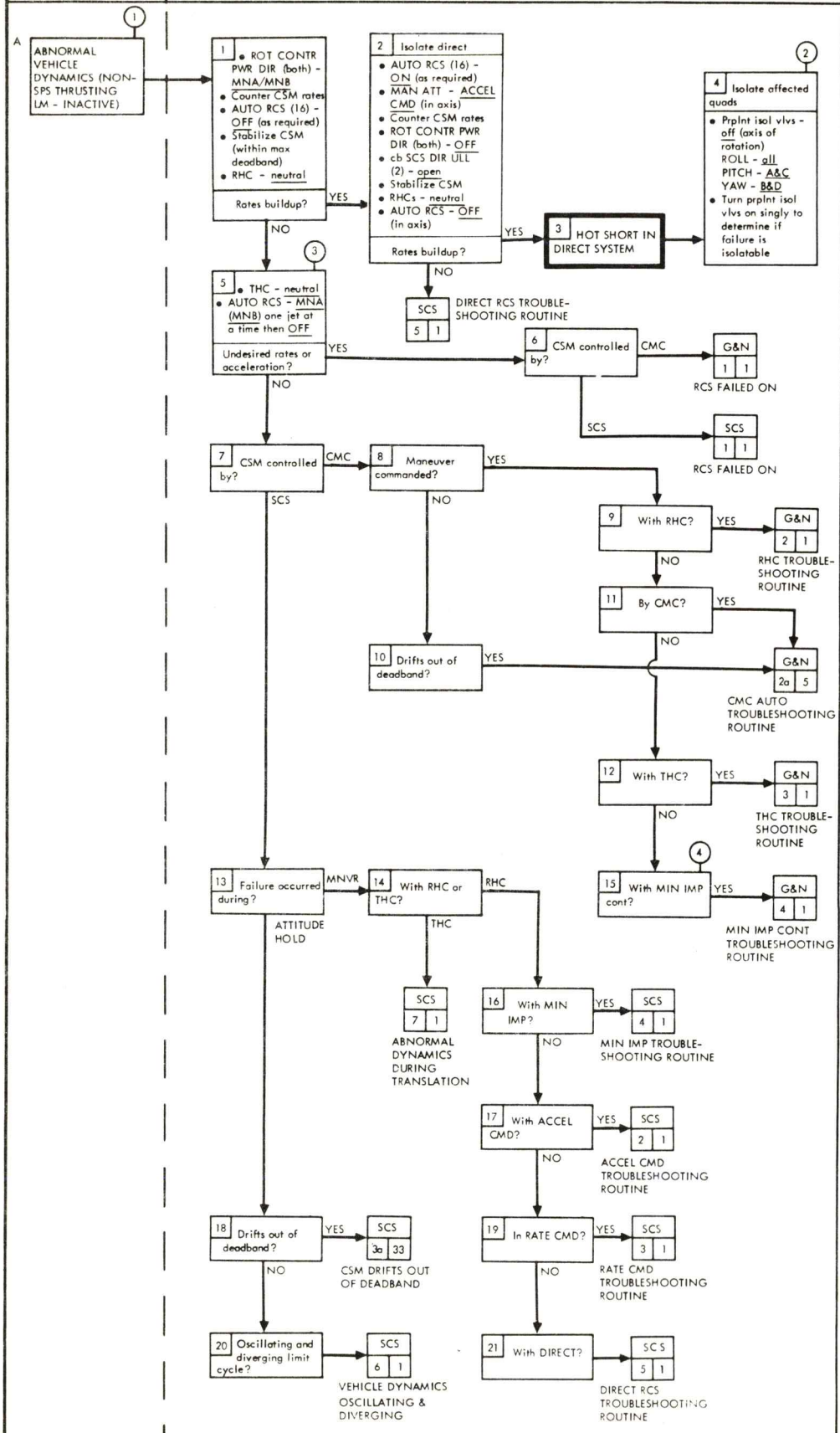

REMARKS

(1) Abnormal dynamics is defined to mean undesired rates or accelerations during uncommanded maneuvers or abnormal response during commanded maneuvers.

(2) Auto RCS switches for all jets on affected quad should be placed to off position before quad isolation.

(3) CSM should be stabilized within the attitude deadband (if in an attitude hold mode) to preclude normal jet firings resulting from being outside rate or attitude deadbands.

(4) Would occur in FREE mode only.

SYMPTOM	PROCEDURE	REMARKS

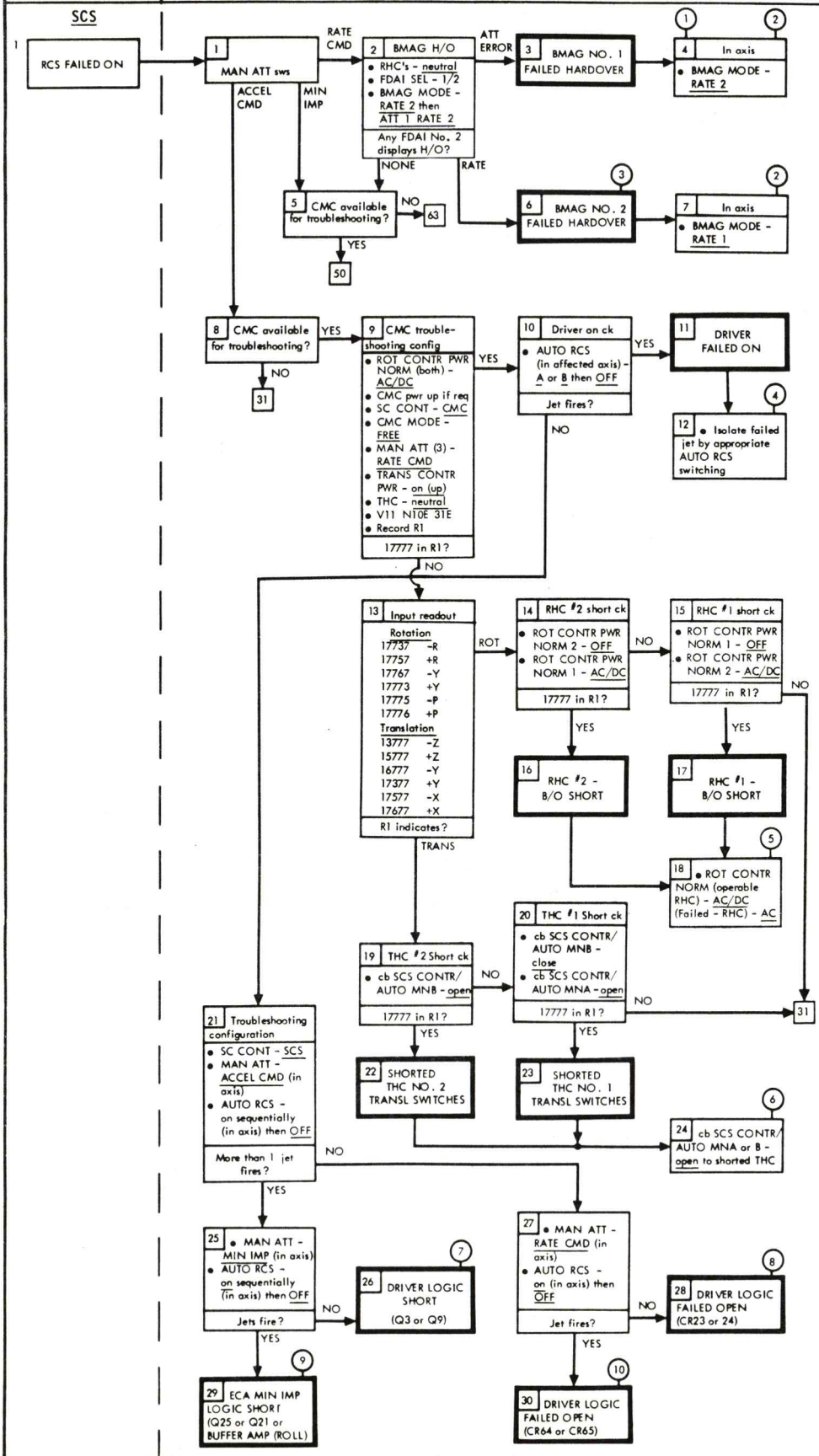

1. If failure is in roll or yaw after 0.05G, GDC driven ball will spin up.
2. Attitude hold lost in affected axis. SCS auto ΔV lost if pitch or yaw. If roll, control attitude by direct or ACCEL CMD.
3. BMAG No. 2 hardover will cause FDAI No. 2 total attitude to drive randomly in Euler modes.
4. Affected thruster lost for all auto coil operation. Direct mode unaffected.
5. Direct sws in affected RHC still functional. Affected RHC lost for SCS and G/N attitude control. If RHC 2, swap RHC 1 to CDRs position and leave RHC 2 off. For ΔV's replace RHC 2 to CDR's position and leave in AC only.
6. Still have translation capability through redundant switches in THC. Select operable enable bus with AUTO RCS.
7. ACCEL CMD lost in pitch or yaw.
8. ACCEL CMD lost for that jet.
9. All SCS RCS (auto coils) lost for affected axis. Disable affected jets with AUTO RCS sws and use direct.
10. SCS auto RCS coil modes lost for affected jet. If affected jet is in roll, loss of either +Y or Z translation. If affected jet is in pitch or yaw loss of 4 jet + or -X trans.

SM-2A-1944E

FORM 2997-E New 11-67

SYMPTOM	PROCEDURE	REMARKS
SCS	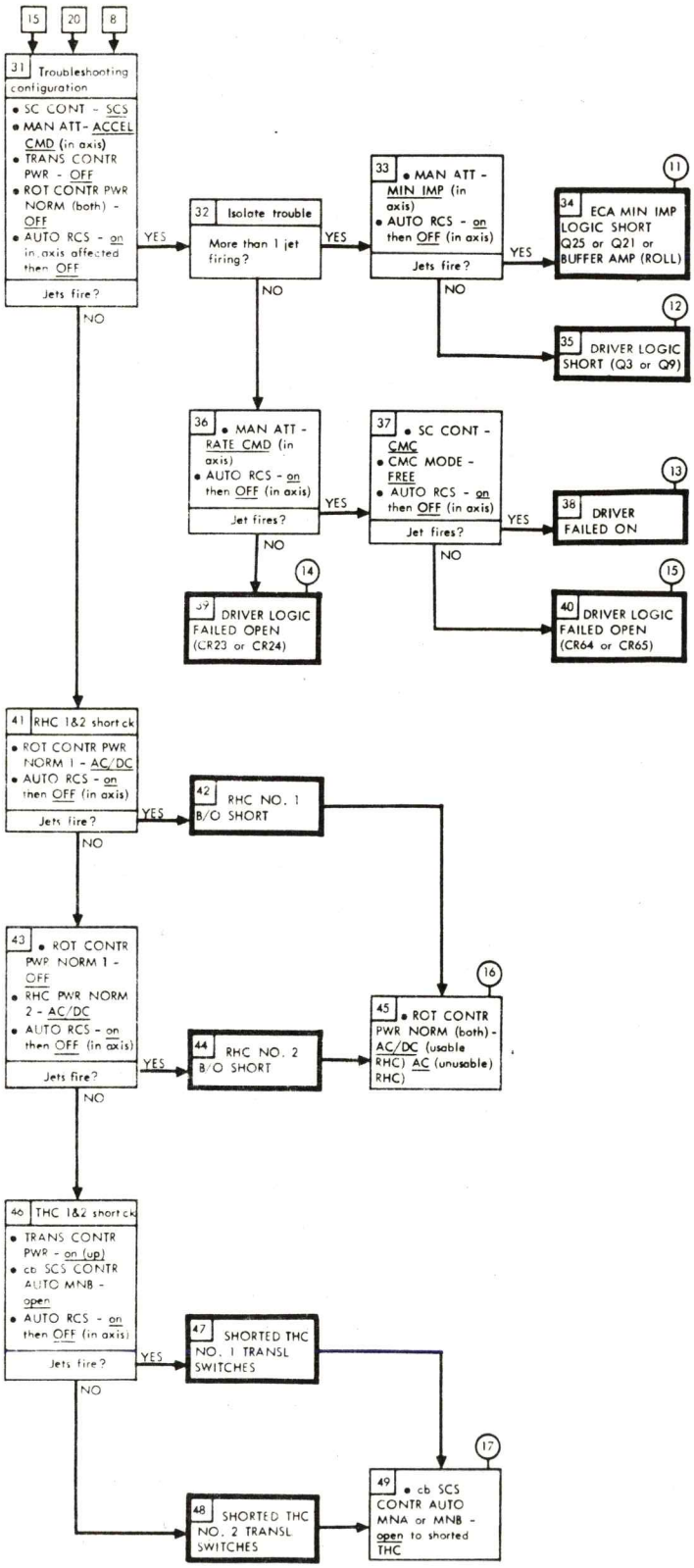	(11) All SCS RCS (auto coils) lost for affected axis. Disable affected jets with AUTO RCS sws and use direct control. (12) ACCEL CMD lost in pitch or yaw. Use alternate quad pair for roll. (13) This jet lost for all SCS & G/N control modes. Disable jet with AUTO RCS sws and use direct control. (14) ACCEL CMD lost for this jet. (15) SCS AUTO RCS coil modes lost for affected jet. If affected jet is in roll loss of either ±Y or Z trans. If affected jet is in pitch or yaw, loss of 4 jet + or -X trans. (16) Direct sws in affected RHC still functional. Affected RHC lost for SCS and G/N attitude control. If RHC 2, swap RHC 1 to CDR's position and leave RHC 2 off. For ΔV's replace RHC 2 to CDR's position and leave in AC only. (17) Still have translation capability through redundant sws in THC. Select operable enable bus with AUTO RCS.

SYMPTOM	PROCEDURE	REMARKS

SCS

1 cont

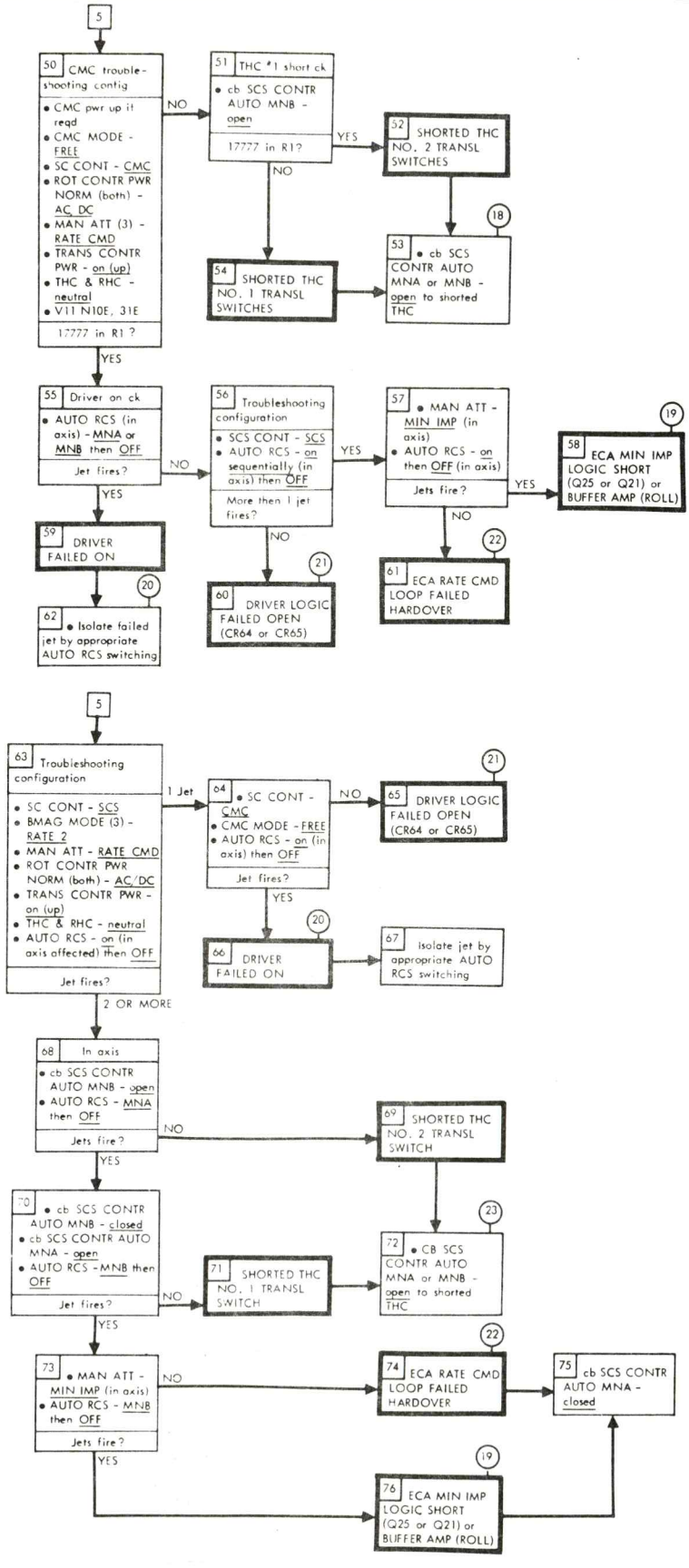

(18) Still have translation capability through redundant sws in THC. Select operable enable bus with AUTO RCS.

(19) All SCS RCS (auto coils) lost for affected axis. Disable affected jets with AUTO RCS sws and use direct control.

(20) This jet lost for SCS & G&N control modes. Use direct control in affected axis.

(21) SCS AUTO RCS coil modes lost for affected jet. If affected jet is in roll loss of either ±Y or Z trans. If affected jet is in pitch or yaw loss of 4 jet + or -X trans.

(22) SCS RATE CMD, attitude hold & prop cont lost for affected jet. SCS auto ΔV lost if pitch or yaw but operable in roll in ACCEL CMD. Translation without attitude hold possible in MIN IMP or ACCEL CMD.

(23) Still have translation capability through redundant sws in THC.

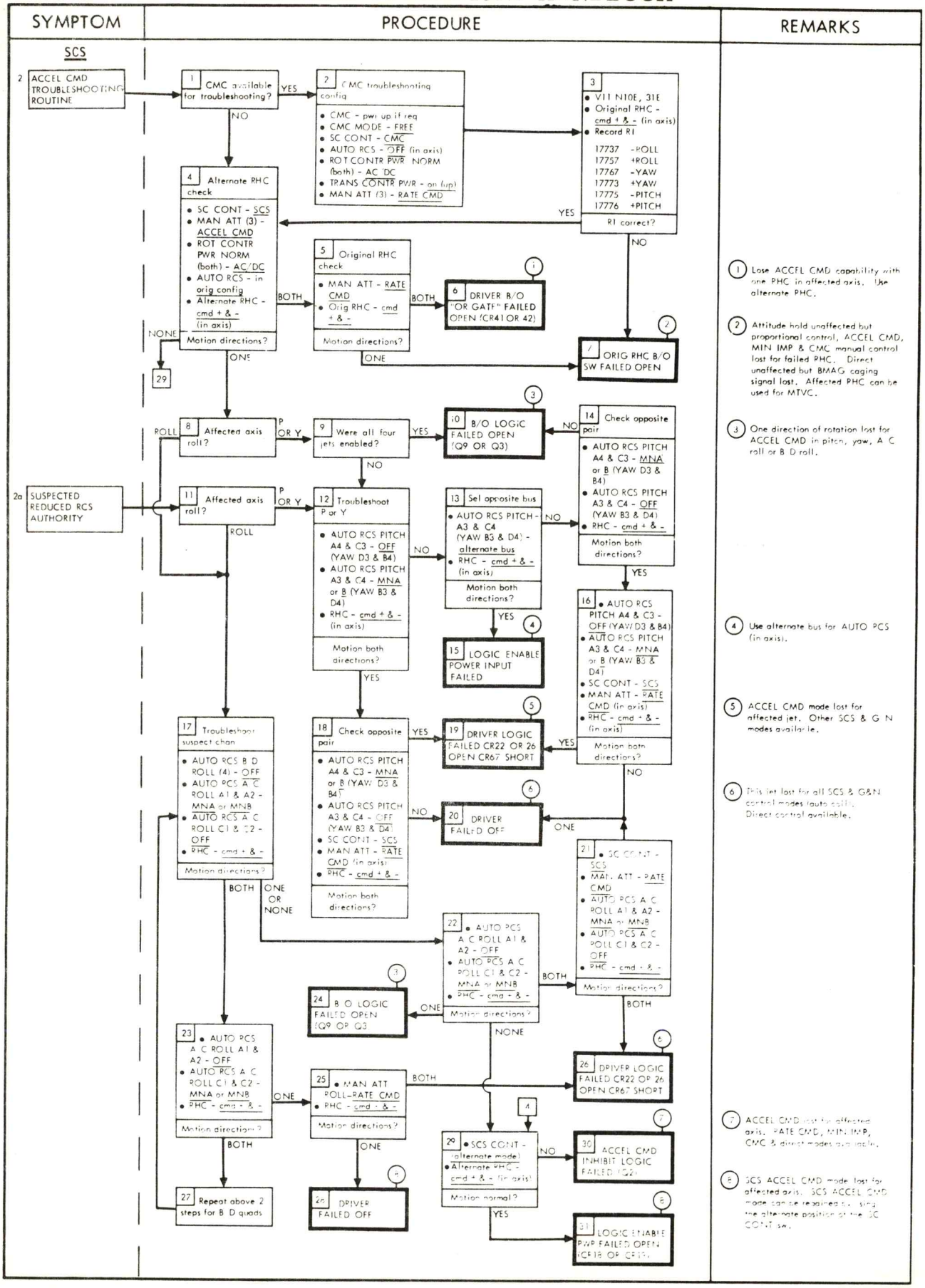
SYMPTOM
PROCEDURE
REMARKS
SCS
2 ACCEL CMD TROUBLESHOOTING ROUTINE
1 CMC available for troubleshooting?
YES
NO
2 CMC troubleshooting config
• CMC - pwr up if req
• CMC MODE - FREE
• SC CONT - CMC
• AUTO RCS - OFF (in axis)
• ROT CONTR PWR NORM (both) - AC DC
• TRANS CONTR PWR - on (up)
• MAN ATT (3) - RATE CMD
3
• V11 N10E, 31E
• Original RHC - cmd + & - (in axis)
• Record R1
17737 -ROLL
17757 +ROLL
17767 -YAW
17773 +YAW
17775 -PITCH
17776 +PITCH
R1 correct?
YES
NO
4 Alternate RHC check
• SC CONT - SCS
• MAN ATT (3) - ACCEL CMD
• ROT CONTR PWR NORM (both) - AC/DC
• AUTO RCS - in orig config
• Alternate RHC - cmd + & - (in axis)
Motion directions?
BOTH
NONE
ONE
5 Original RHC check
• MAN ATT - RATE CMD
• Orig RHC - cmd + & -
Motion directions?
BOTH
ONE
6 DRIVER B/O "OR GATE" FAILED OPEN (CR41 OR 42)
7 ORIG RHC B/O SW FAILED OPEN
29
2a SUSPECTED REDUCED RCS AUTHORITY
8 Affected axis roll?
ROLL
P OR Y
9 Were all four jets enabled?
YES
NO
10 B/O LOGIC FAILED OPEN (Q9 OR Q3)
14 Check opposite pair
• AUTO RCS PITCH A4 & C3 - MNA or B (YAW D3 & B4)
• AUTO RCS PITCH A3 & C4 - OFF (YAW B3 & D4)
• RHC - cmd + & -
Motion both directions?
11 Affected axis roll?
12 Troubleshoot P or Y
• AUTO RCS PITCH A4 & C3 - OFF (YAW D3 & B4)
• AUTO RCS PITCH A3 & C4 - MNA or B (YAW B3 & D4)
• RHC - cmd + & - (in axis)
Motion both directions?
13 Sel opposite bus
• AUTO RCS PITCH - A3 & C4 (YAW B3 & D4) - alternate bus
• RHC - cmd + & - (in axis)
Motion both directions?
15 LOGIC ENABLE POWER INPUT FAILED
16
• AUTO RCS PITCH A4 & C3 - OFF (YAW D3 & B4)
• AUTO RCS PITCH A3 & C4 - MNA or B (YAW B3 & D4)
• SC CONT - SCS
• MAN ATT - RATE CMD (in axis)
• RHC - cmd + & - (in axis)
Motion both directions?
17 Troubleshoot suspect chan
• AUTO RCS B D ROLL (4) - OFF
• AUTO RCS A C ROLL A1 & A2 - MNA or MNB
• AUTO RCS A C ROLL C1 & C2 - OFF
• RHC - cmd + & -
Motion directions?
18 Check opposite pair
• AUTO RCS PITCH A4 & C3 - MNA or B (YAW D3 & B4)
• AUTO RCS PITCH A3 & C4 - OFF (YAW B3 & D4)
• SC CONT - SCS
• MAN ATT - RATE CMD (in axis)
• RHC - cmd + & -
Motion both directions?
19 DRIVER LOGIC FAILED CR22 OR 26 OPEN CR67 SHORT
20 DRIVER FAILED OFF
21
• SC CONT - SCS
• MAN ATT - RATE CMD
• AUTO RCS A C ROLL A1 & A2 - MNA or MNB
• AUTO RCS A C ROLL C1 & C2 - OFF
• RHC - cmd + & -
Motion directions?
22
• AUTO RCS A C ROLL A1 & A2 - OFF
• AUTO RCS A C ROLL C1 & C2 - MNA or MNB
• RHC - cmd + & -
Motion directions?
24 B O LOGIC FAILED OPEN (Q9 OR Q3)
23
• AUTO RCS A C ROLL A1 & A2 - OFF
• AUTO RCS A C ROLL C1 & C2 - MNA or MNB
• RHC - cmd + & -
Motion directions?
25
• MAN ATT ROLL-RATE CMD
• RHC - cmd + & -
Motion directions?
26 DRIVER LOGIC FAILED CR22 OR 26 OPEN CR67 SHORT
26 DRIVER FAILED OFF
27 Repeat above 2 steps for B D quads
29
• SCS CONT - (alternate mode)
• Alternate RHC - cmd + & - (in axis)
Motion normal?
30 ACCEL CMD INHIBIT LOGIC FAILED (Q2)
31 LOGIC ENABLE PWR FAILED OPEN (CR18 OR CR19)
1 Lose ACCEL CMD capability with one RHC in affected axis. Use alternate RHC.
2 Attitude hold unaffected but proportional control, ACCEL CMD, MIN IMP & CMC manual control lost for failed RHC. Direct unaffected but BMAG caging signal lost. Affected RHC can be used for MTVC.
3 One direction of rotation lost for ACCEL CMD in pitch, yaw, A C roll or B D roll.
4 Use alternate bus for AUTO RCS (in axis).
5 ACCEL CMD mode lost for affected jet. Other SCS & G N modes available.
6 This jet lost for all SCS & G&N control modes (auto only). Direct control available.
7 ACCEL CMD lost in affected axis. RATE CMD, MIN IMP, CMC & direct modes available.
8 SCS ACCEL CMD mode lost for affected axis. SCS ACCEL CMD mode can be regained by using the alternate position of the SC CONT sw.

SYMPTOM	PROCEDURE	REMARKS

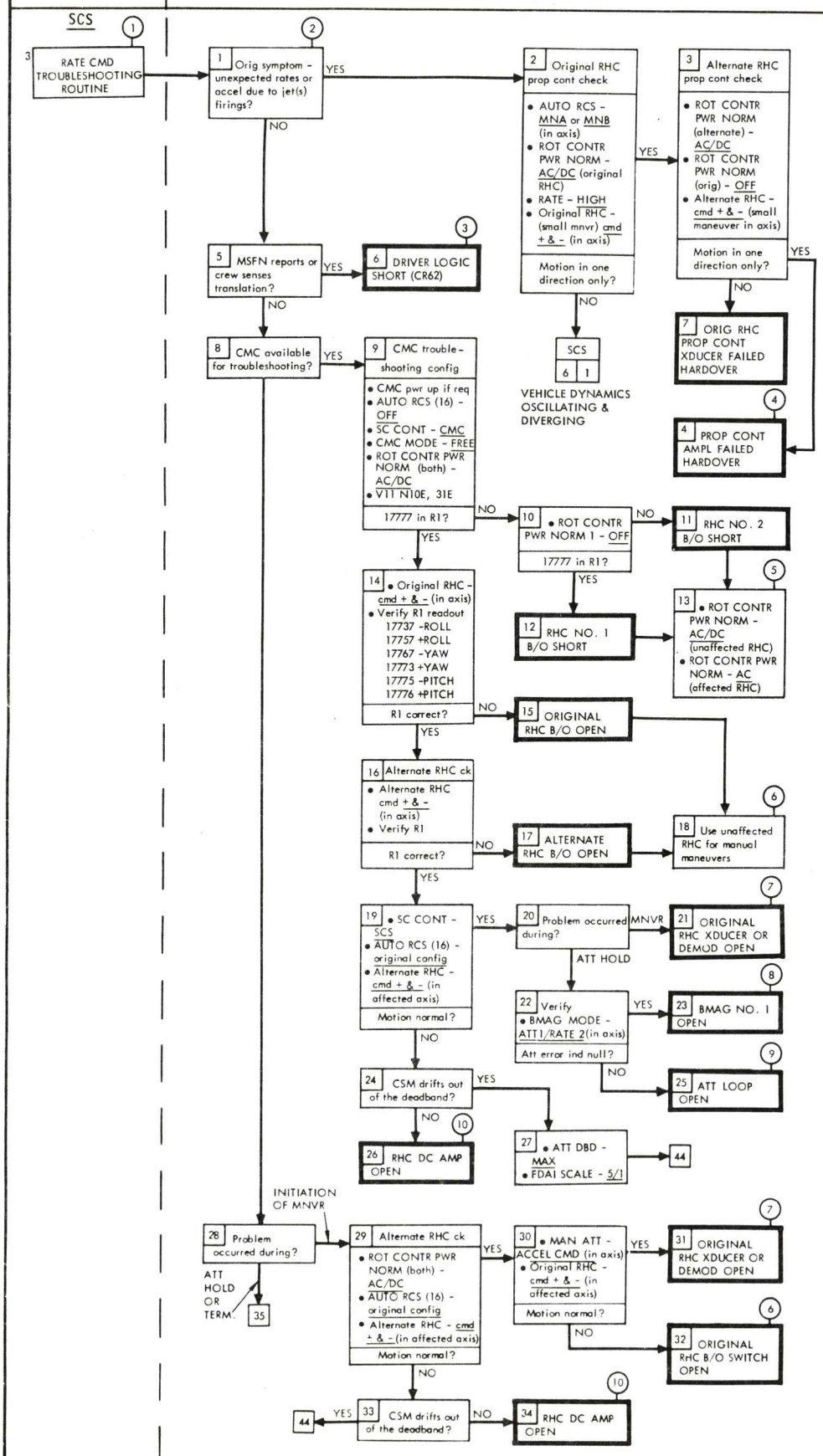

1. Assumes full thruster operation except in roll.
2. Assumes RCS thrusters fail on where identified in the "A" flow.
3. Failure causes translation when rotation cmds given. Attitude hold RATE CMD & MIN IMP lost in one direction for affected axis (pitch, yaw, A/C roll, B/D roll). Translation without attitude hold possible with MAN ATT - MIN IMP.
4. For PROP CONT AMP failed hardover, MTVC and RATE CMD lost in affected axis. Attitude hold possible if RHC's locked (or neutral) or if ROT CONTR PWR NORM (both) - OFF. Disable thrusters in affected axis if direct used.
5. Direct sws in affected RHC still functional. One RHC lost; however, RATE CMD mode in failed RHC still possible when breakout switches closed in same axis by operable RHC. MTVC ok when ROT CONTR PWR NORM (affected RHC) is at AC
6. Attitude hold unaffected but prop cont, ACCEL CMD, MIN IMP & CMC man cont lost for failed RHC. Direct unaffected but BMAG caging signal lost. Affected RHC can be used for MTVC.
7. SCS prop cont & MTVC lost for failed RHC.
8. For affected axis: In ATT 1 RATE 2, att hold & att error display lost. SCS auto ΔV possible if roll, by controlling attitude manually. After .05 G, SCS FDAI roll attitude erroneous if yaw or roll.
9. Attitude hold capability lost in affected axis. SCS auto ΔV lost if pitch or yaw, but possible if roll by placing MAN ATT ROLL - ACCEL CMD.
10. SCS prop cont & MTVC lost for both RHCs.

SYMPTOM	PROCEDURE	REMARKS

SCS

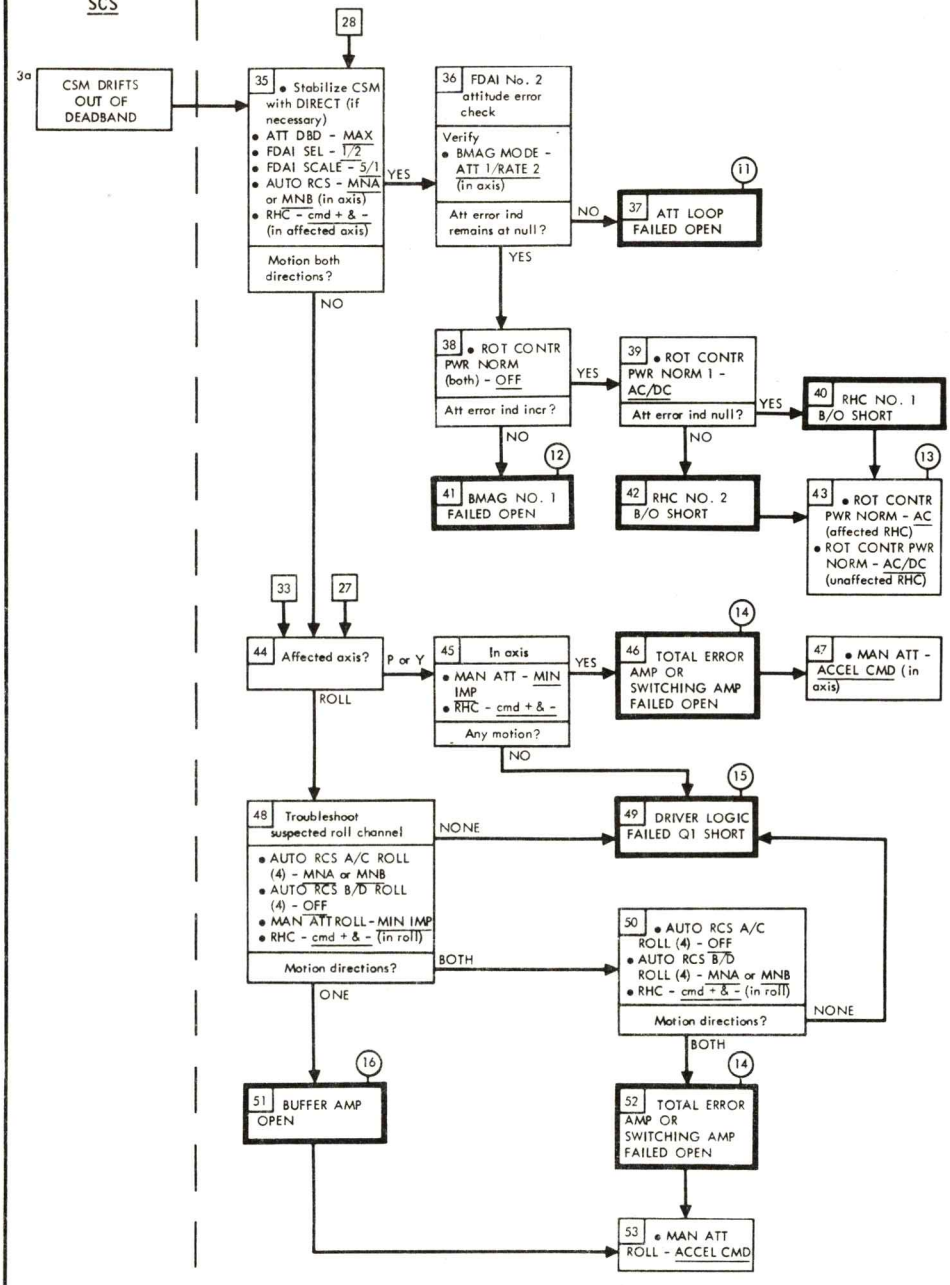

(11) Attitude hold capability lost in affected axis. SCS auto ΔV lost if pitch or yaw, but possible if roll by placing MAN ATT ROLL - ACCEL CMD.

(12) For affected axis: In ATT 1 RATE 2, att hold & att error display lost. SCS auto ΔV possible if roll, by controlling att manually. After .05 G, SCS FDAI roll attitude erroneous if yaw or roll.

(13) Direct sws in affected RHC still functional. One RHC lost; however, RATE CMD mode in failed RHC still possible when breakout switches closed in same axis by operable RHC. MTVC ok when ROT CONTR PWR NORM (affected RHC) is at AC.

(14) All RATE CMD & attitude hold capability lost for affected axis. Translation possible with MAN ATT sw in RATE CMD & attitude control in affected axis by direct or MIN IMP.

(15) Lose all SCS modes except ACCEL CMD. No Translation on affected axis. Direct control available.

(16) One polarity lost in RATE CMD & MIN IMP. Translation capability remains but attitude hold lost.

SYMPTOM	PROCEDURE	REMARKS

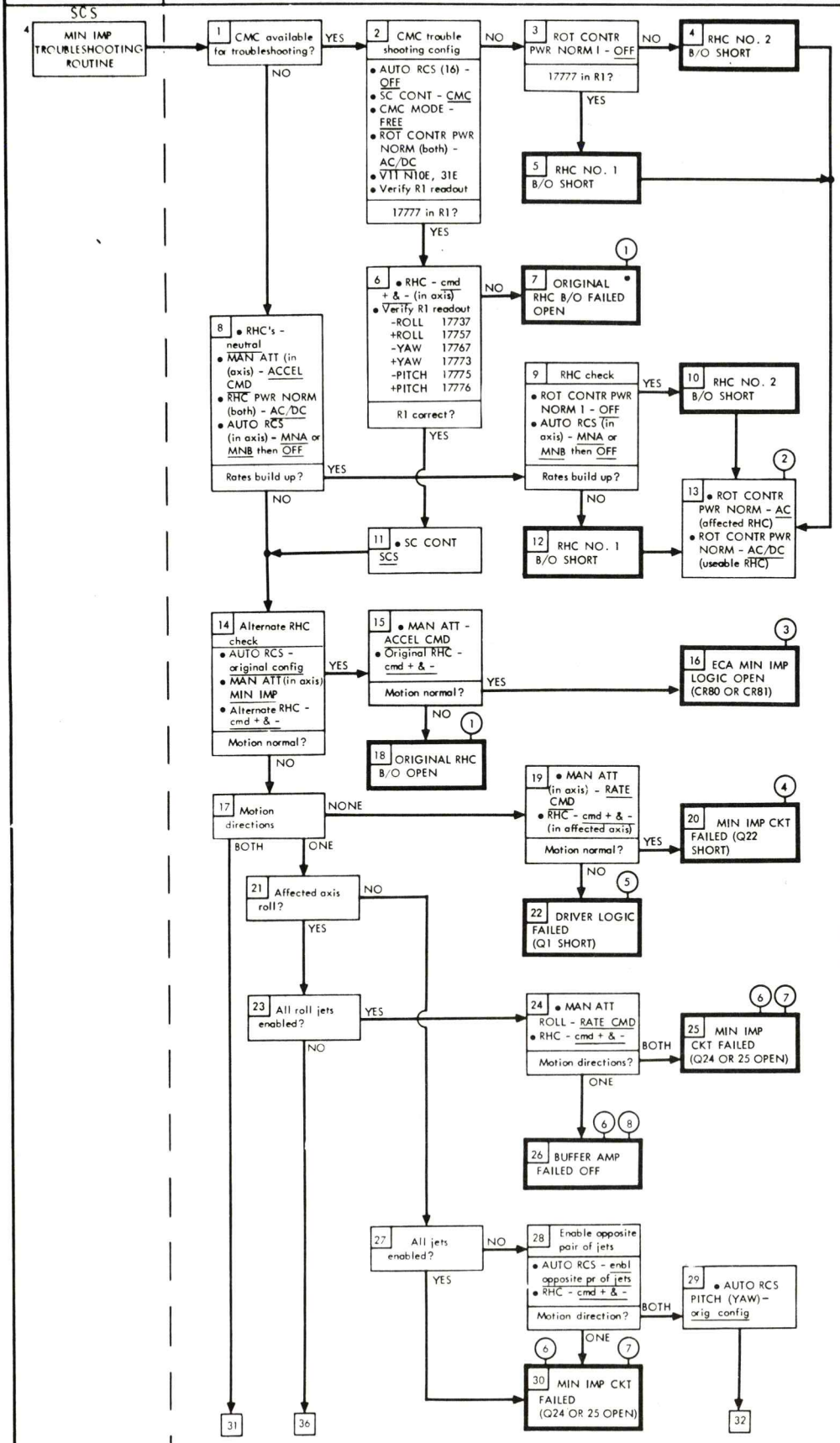

(1) Lose prop cont ACCEL CMD, MIN IMP & CMC MAN CONT for failed RHC. Direct unaffected but BMAG caging signal lost. Affected RHC can be used for MTVC. Attitude hold unaffected.

(2) Direct sw's in affected RHC still functional. Affected RHC lost for SCS and G/N attitude control. If RHC 2 swap RHC 1 to CDR's position and leave RHC 2 off. For ΔV's replace RHC 2 to CDR's position and leave in AC only.

(3) Loss of MIN IMP cont in one direction of affected axis. RATE CMD & ACCEL CMD still available. BMAG cage function still operational.

(4) Lose MIN IMP in both directions of affected axis. RATE CMD & ACCEL CMD still available.

(5) RATE CMD and MIN IMP lost for affected axis (pitch, yaw, A/C roll or B/D roll). SCS translation capability from affected thrusters lost except by DIR ULL. ACCEL CMD and G/N modes unaffected.

(6) Min engine on time protection lost for RATE CMD & ACCEL CMD.

(7) Lose MIN IMP in one direction of affected axis. RATE CMD & ACCEL CMD available. Translation unaffected.

(8) Lose MIN IMP & RATE CMD in one direction of roll axis. ACCEL CMD available. Roll attitude hold lost. SCS auto ΔV unaffected but control roll attitude manually with ACCEL CMD.

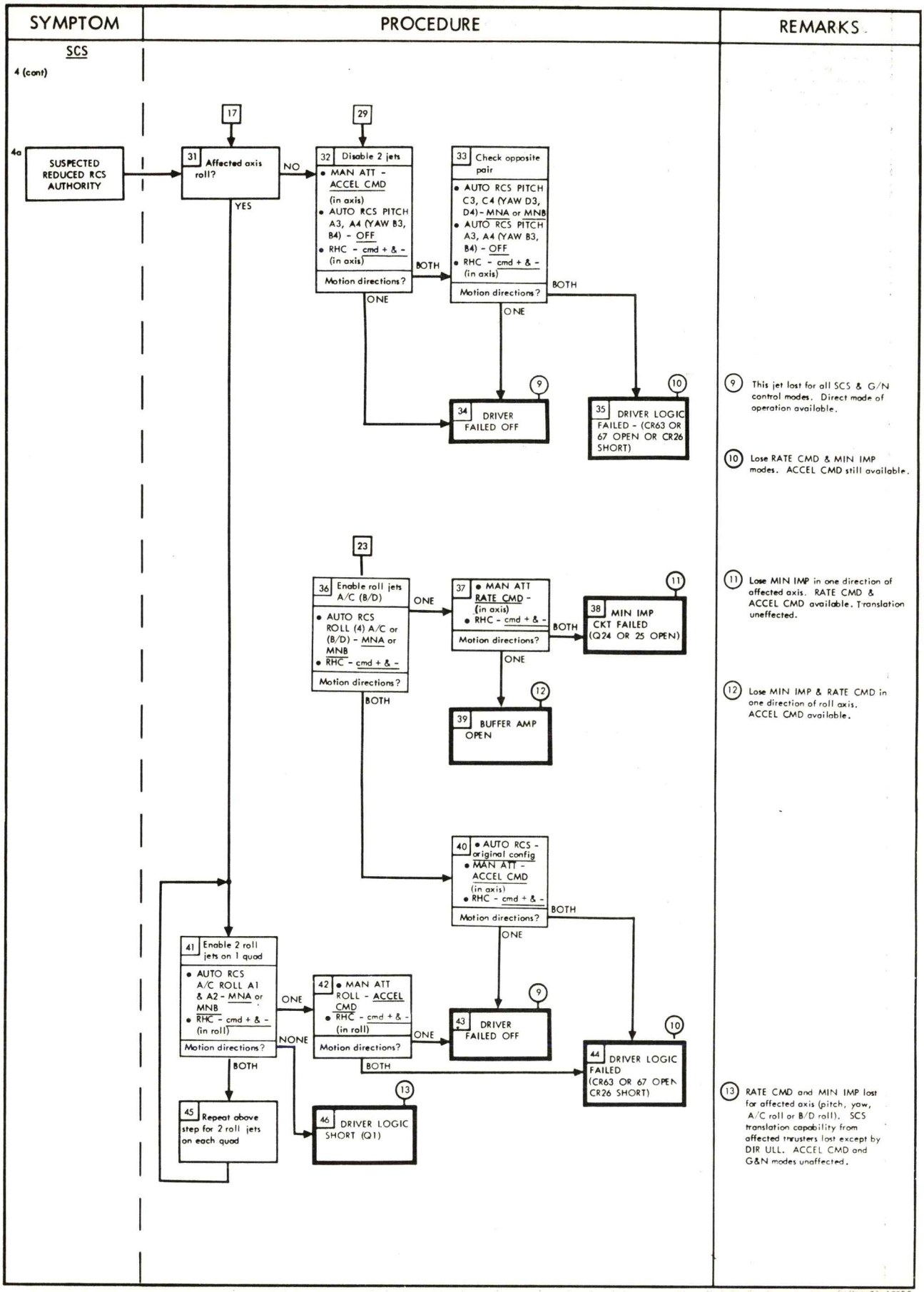

SM-2A-1953C

FORM 2997-E New 11-67

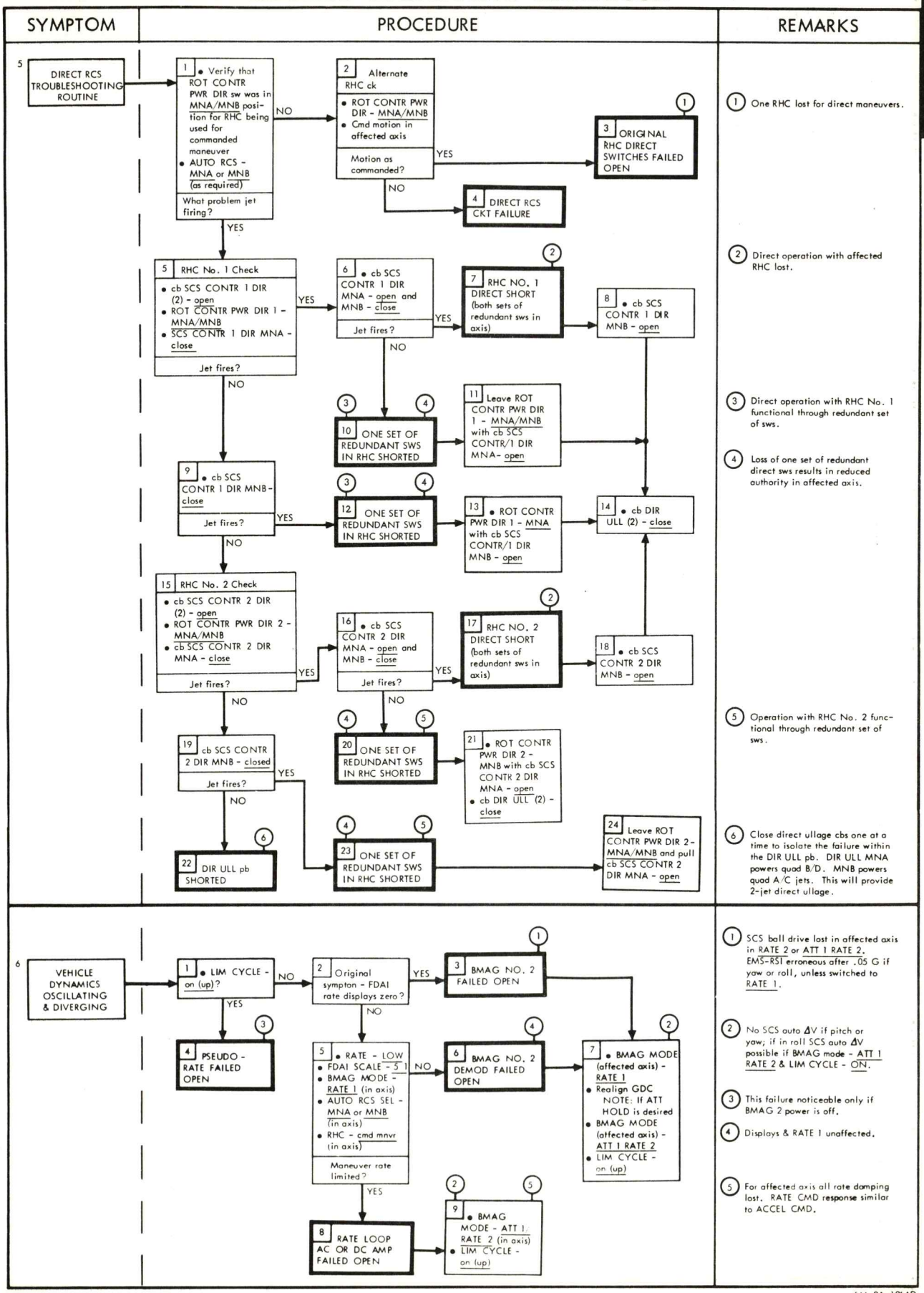
SYMPTOM
PROCEDURE
REMARKS
5 DIRECT RCS TROUBLESHOOTING ROUTINE
1 • Verify that ROT CONTR PWR DIR sw was in MNA/MNB position for RHC being used for commanded maneuver
• AUTO RCS - MNA or MNB (as required)
What problem jet firing?
NO
YES
2 Alternate RHC ck
• ROT CONTR PWR DIR - MNA/MNB
• Cmd motion in affected axis
Motion as commanded?
YES
NO
3 ORIGINAL RHC DIRECT SWITCHES FAILED OPEN
4 DIRECT RCS CKT FAILURE
5 RHC No. 1 Check
• cb SCS CONTR 1 DIR (2) - open
• ROT CONTR PWR DIR 1 - MNA/MNB
• SCS CONTR 1 DIR MNA - close
Jet fires?
6 • cb SCS CONTR 1 DIR MNA - open and MNB - close
Jet fires?
7 RHC NO. 1 DIRECT SHORT (both sets of redundant sws in axis)
8 • cb SCS CONTR 1 DIR MNB - open
10 ONE SET OF REDUNDANT SWS IN RHC SHORTED
11 Leave ROT CONTR PWR DIR 1 - MNA/MNB with cb SCS CONTR/1 DIR MNA - open
9 • cb SCS CONTR 1 DIR MNB - close
Jet fires?
12 ONE SET OF REDUNDANT SWS IN RHC SHORTED
13 • ROT CONTR PWR DIR 1 - MNA with cb SCS CONTR/1 DIR MNB - open
14 • cb DIR ULL (2) - close
15 RHC No. 2 Check
• cb SCS CONTR 2 DIR (2) - open
• ROT CONTR PWR DIR 2 - MNA/MNB
• cb SCS CONTR 2 DIR MNA - close
Jet fires?
16 • cb SCS CONTR 2 DIR MNA - open and MNB - close
Jet fires?
17 RHC NO. 2 DIRECT SHORT (both sets of redundant sws in axis)
18 • cb SCS CONTR 2 DIR MNB - open
19 cb SCS CONTR 2 DIR MNB - closed
Jet fires?
20 ONE SET OF REDUNDANT SWS IN RHC SHORTED
21 • ROT CONTR PWR DIR 2 - MNB with cb SCS CONTR 2 DIR MNA - open
• cb DIR ULL (2) - close
22 DIR ULL pb SHORTED
23 ONE SET OF REDUNDANT SWS IN RHC SHORTED
24 Leave ROT CONTR PWR DIR 2 - MNA/MNB and pull cb SCS CONTR 2 DIR MNA - open
1 One RHC lost for direct maneuvers.
2 Direct operation with affected RHC lost.
3 Direct operation with RHC No. 1 functional through redundant set of sws.
4 Loss of one set of redundant direct sws results in reduced authority in affected axis.
5 Operation with RHC No. 2 functional through redundant set of sws.
6 Close direct ullage cbs one at a time to isolate the failure within the DIR ULL pb. DIR ULL MNA powers quad B/D. MNB powers quad A/C jets. This will provide 2-jet direct ullage.
6 VEHICLE DYNAMICS OSCILLATING & DIVERGING
1 • LIM CYCLE - on (up)?
NO
YES
2 Original sympton - FDAI rate displays zero?
YES
NO
3 BMAG NO. 2 FAILED OPEN
4 PSEUDO - RATE FAILED OPEN
5 • RATE - LOW
• FDAI SCALE - 5 1
• BMAG MODE - RATE 1 (in axis)
• AUTO RCS SEL - MNA or MNB (in axis)
• RHC - cmd mnvr (in axis)
Maneuver rate limited?
NO
YES
6 BMAG NO. 2 DEMOD FAILED OPEN
7 • BMAG MODE (affected axis) - RATE 1
• Realign GDC NOTE: If ATT HOLD is desired
• BMAG MODE (affected axis) - ATT 1 RATE 2
• LIM CYCLE - on (up)
8 RATE LOOP AC OR DC AMP FAILED OPEN
9 • BMAG MODE - ATT 1 RATE 2 (in axis)
• LIM CYCLE - on (up)
1 SCS ball drive lost in affected axis in RATE 2 or ATT 1 RATE 2. EMS-RSI erroneous after .05 G if yaw or roll, unless switched to RATE 1.
2 No SCS auto ΔV if pitch or yaw; if in roll SCS auto ΔV possible if BMAG mode - ATT 1 RATE 2 & LIM CYCLE - ON.
3 This failure noticeable only if BMAG 2 power is off.
4 Displays & RATE 1 unaffected.
5 For affected axis all rate damping lost. RATE CMD response similar to ACCEL CMD.

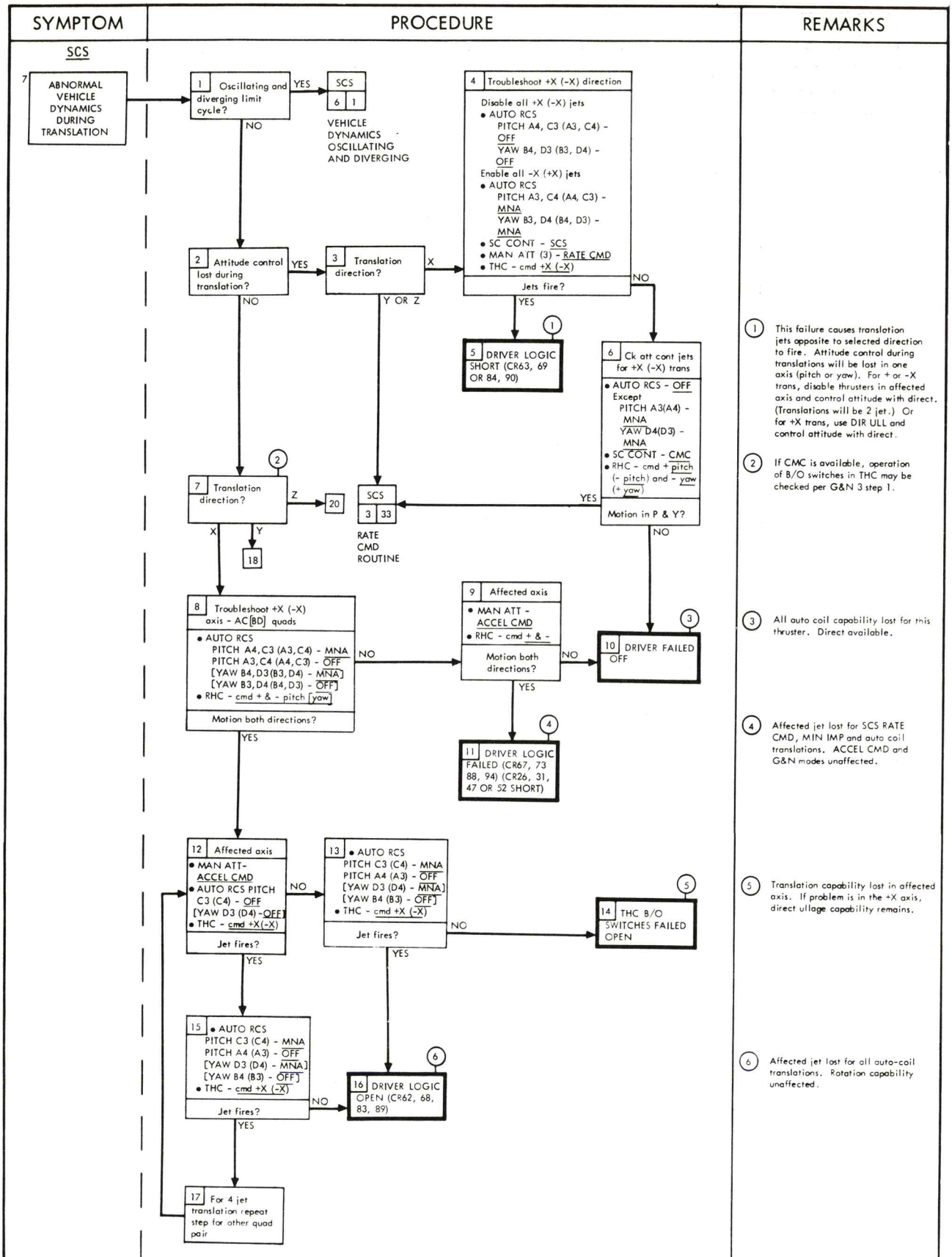
SYMPTOM
PROCEDURE
REMARKS
SCS
7 ABNORMAL VEHICLE DYNAMICS DURING TRANSLATION
1 Oscillating and diverging limit cycle?
YES
SCS 6 1
VEHICLE DYNAMICS OSCILLATING AND DIVERGING
NO
2 Attitude control lost during translation?
YES
3 Translation direction?
X
Y OR Z
NO
4 Troubleshoot +X (-X) direction
Disable all +X (-X) jets
• AUTO RCS
PITCH A4, C3 (A3, C4) - OFF
YAW B4, D3 (B3, D4) - OFF
Enable all -X (+X) jets
• AUTO RCS
PITCH A3, C4 (A4, C3) - MNA
YAW B3, D4 (B4, D3) - MNA
• SC CONT - SCS
• MAN ATT (3) - RATE CMD
• THC - cmd +X (-X)
Jets fire?
NO
YES
1
5 DRIVER LOGIC SHORT (CR63, 69 OR 84, 90)
6 Ck att cont jets for +X (-X) trans
• AUTO RCS - OFF
Except
PITCH A3(A4) - MNA
YAW D4(D3) - MNA
• SC CONT - CMC
• RHC - cmd + pitch (- pitch) and - yaw (+ yaw)
Motion in P & Y?
YES
NO
2
7 Translation direction?
Z
20
SCS 3 33
RATE CMD ROUTINE
X
Y
18
8 Troubleshoot +X (-X) axis - AC [BD] quads
• AUTO RCS
PITCH A4, C3 (A3, C4) - MNA
PITCH A3, C4 (A4, C3) - OFF
[YAW B4, D3 (B3, D4) - MNA]
[YAW B3, D4 (B4, D3) - OFF]
• RHC - cmd + & - pitch [yaw]
Motion both directions?
NO
YES
9 Affected axis
• MAN ATT - ACCEL CMD
• RHC - cmd + & -
Motion both directions?
NO
YES
3
10 DRIVER FAILED OFF
4
11 DRIVER LOGIC FAILED (CR67, 73 88, 94) (CR26, 31, 47 OR 52 SHORT)
12 Affected axis
• MAN ATT - ACCEL CMD
• AUTO RCS PITCH C3 (C4) - OFF
[YAW D3 (D4) - OFF]
• THC - cmd +X (-X)
Jet fires?
NO
YES
13 • AUTO RCS
PITCH C3 (C4) - MNA
PITCH A4 (A3) - OFF
[YAW D3 (D4) - MNA]
[YAW B4 (B3) - OFF]
• THC - cmd +X (-X)
Jet fires?
NO
YES
5
14 THC B/O SWITCHES FAILED OPEN
15 • AUTO RCS
PITCH C3 (C4) - MNA
PITCH A4 (A3) - OFF
[YAW D3 (D4) - MNA]
[YAW B4 (B3) - OFF]
• THC - cmd +X (-X)
Jet fires?
NO
YES
6
16 DRIVER LOGIC OPEN (CR62, 68, 83, 89)
17 For 4 jet translation repeat step for other quad pair
1 This failure causes translation jets opposite to selected direction to fire. Attitude control during translations will be lost in one axis (pitch or yaw). For + or -X trans, disable thrusters in affected axis and control attitude with direct. (Translations will be 2 jet.) Or for +X trans, use DIR ULL and control attitude with direct.
2 If CMC is available, operation of B/O switches in THC may be checked per G&N 3 step 1.
3 All auto coil capability lost for this thruster. Direct available.
4 Affected jet lost for SCS RATE CMD, MIN IMP and auto coil translations. ACCEL CMD and G&N modes unaffected.
5 Translation capability lost in affected axis. If problem is in the +X axis, direct ullage capability remains.
6 Affected jet lost for all auto-coil translations. Rotation capability unaffected.

SYMPTOM	PROCEDURE	REMARKS
SCS		
7 (Cont)	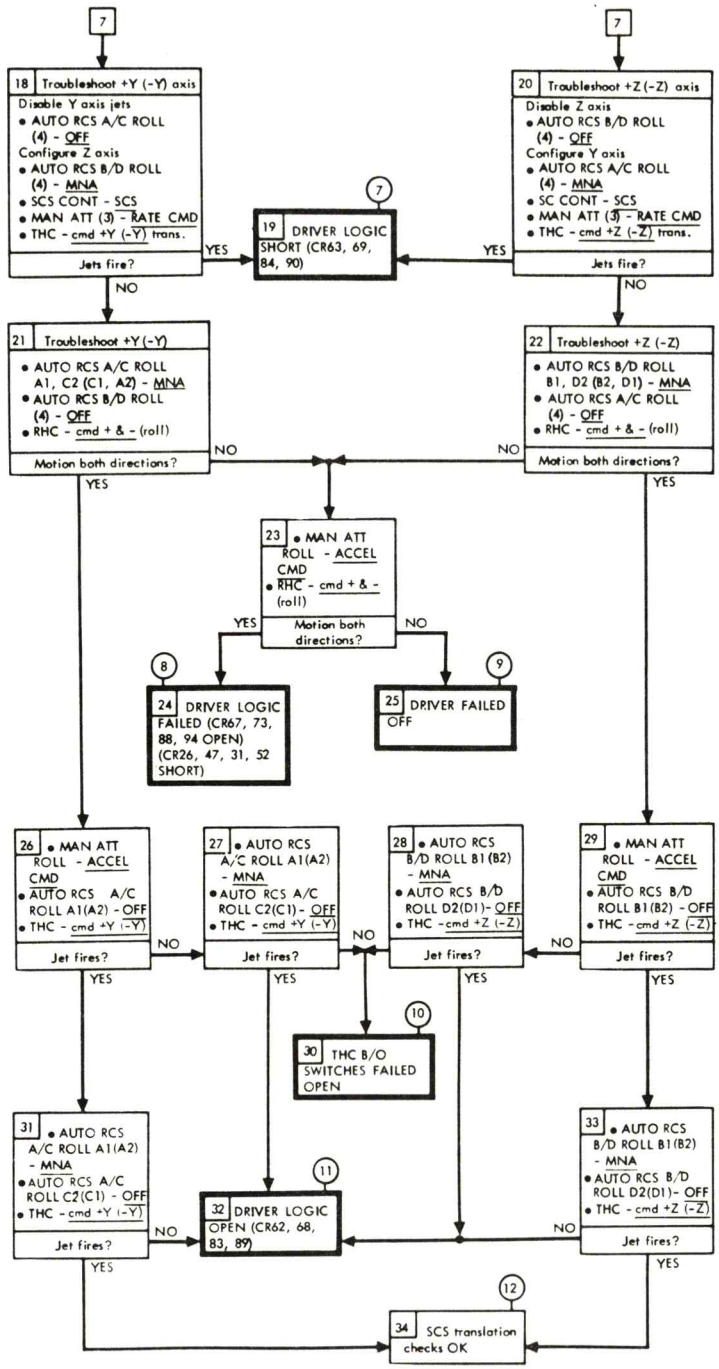	(7) One direction of Y or Z translation lost. (8) Affected jet lost for SCS RATE CMD, MIN IMP and auto coil translations. ACCEL CMD and G/N modes unaffected. (9) All auto coil capability lost for this thruster. Direct available. (10) Translation capability lost in affected axis. If problem is in the +X axis, direct ullage capability remains. (11) Affected jet lost for all auto-coil translations. Rotation capability unaffected. (12) Abnormal dynamics may be due to thruster degradation.

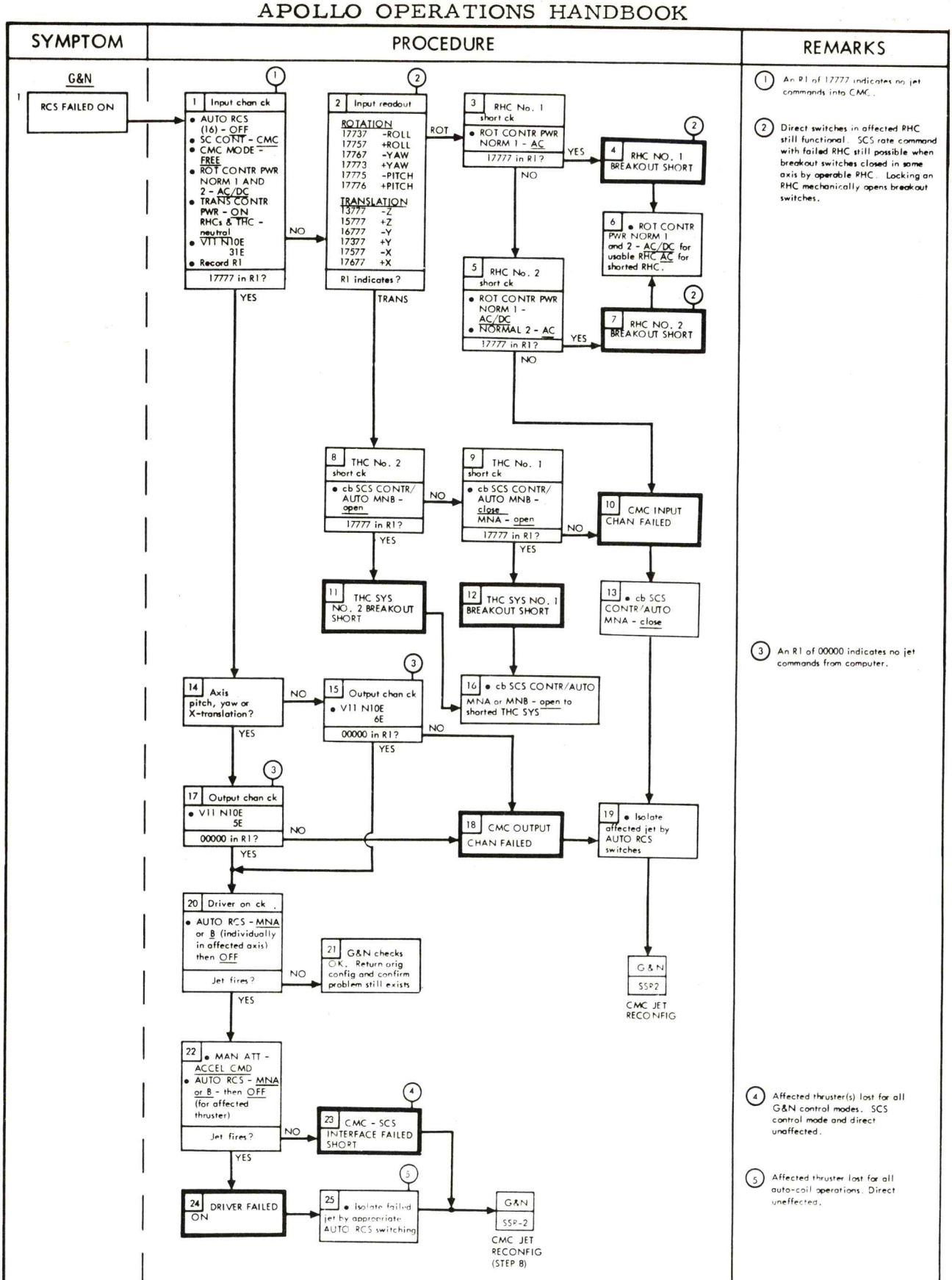
SYMPTOM
PROCEDURE
REMARKS
G&N
1 RCS FAILED ON
1 Input chan ck
• AUTO RCS (16) - OFF
• SC CONT - CMC
• CMC MODE - FREE
• ROT CONTR PWR NORM 1 AND 2 - AC/DC
• TRANS CONTR PWR - ON RHCs & THC - neutral
• V11 N10E 31E
• Record R1
17777 in R1?
NO
YES
2 Input readout
ROTATION
17737 -ROLL
17757 +ROLL
17767 -YAW
17773 +YAW
17775 -PITCH
17776 +PITCH
TRANSLATION
17777 -Z
15777 +Z
16777 -Y
17377 +Y
17577 -X
17677 +X
R1 indicates?
ROT
TRANS
3 RHC No. 1 short ck
• ROT CONTR PWR NORM 1 - AC
17777 in R1?
YES
NO
4 RHC NO. 1 BREAKOUT SHORT
5 RHC No. 2 short ck
• ROT CONTR PWR NORM 1 - AC/DC
• NORMAL 2 - AC
17777 in R1?
YES
NO
6 • ROT CONTR PWR NORM 1 and 2 - AC/DC for usable RHC AC for shorted RHC.
7 RHC NO. 2 BREAKOUT SHORT
8 THC No. 2 short ck
• cb SCS CONTR/AUTO MNB - open
17777 in R1?
NO
YES
9 THC No. 1 short ck
• cb SCS CONTR/AUTO MNB - close
MNA - open
17777 in R1?
NO
YES
10 CMC INPUT CHAN FAILED
11 THC SYS NO. 2 BREAKOUT SHORT
12 THC SYS NO. 1 BREAKOUT SHORT
13 • cb SCS CONTR/AUTO MNA - close
14 Axis pitch, yaw or X-translation?
NO
YES
15 Output chan ck
• V11 N10E 6E
00000 in R1?
NO
YES
16 • cb SCS CONTR/AUTO MNA or MNB - open to shorted THC SYS
17 Output chan ck
• V11 N10E 5E
00000 in R1?
NO
YES
18 CMC OUTPUT CHAN FAILED
19 • Isolate affected jet by AUTO RCS switches
20 Driver on ck
• AUTO RCS - MNA or B (individually in affected axis) then OFF
Jet fires?
NO
YES
21 G&N checks OK. Return orig config and confirm problem still exists
G&N SSR2
CMC JET RECONFIG
22 • MAN ATT - ACCEL CMD
• AUTO RCS - MNA or B - then OFF (for affected thruster)
Jet fires?
NO
YES
23 CMC - SCS INTERFACE FAILED SHORT
24 DRIVER FAILED ON
25 • Isolate failed jet by appropriate AUTO RCS switching
G&N SSR-2
CMC JET RECONFIG (STEP 8)
1 An R1 of 17777 indicates no jet commands into CMC.
2 Direct switches in affected RHC still functional. SCS rate command with failed RHC still possible when breakout switches closed in some axis by operable RHC. Locking an RHC mechanically opens breakout switches.
3 An R1 of 00000 indicates no jet commands from computer.
4 Affected thruster(s) lost for all G&N control modes. SCS control mode and direct unaffected.
5 Affected thruster lost for all auto-coil operations. Direct uneffected.

SYMPTOM

G&N (1)

2 RHC TROUBLESHOOTING ROUTINE

2a CMC AUTO TROUBLESHOOTING ROUTINE

2b SUSPECTED REDUCED RCS AUTHORITY

PROCEDURE

1 Input chan ck (2)
- AUTO RCS (16) - OFF
- SC CONT - CMC
- CMC MODE - FREE
- ROT CONTR PWR NORM (2) - AC/DC
- V11 N10E, 31E
- RHC - cmd + & - (in axis)
- Verify R1 readout

-ROLL	17737
+ROLL	17757
-YAW	17767
+YAW	17773
-PITCH	17775
+PITCH	17776

R1 Correct?

NO → **2 Alternate RHC ck** (2)
- RHC - cmd + & - (in axis)
- Verify R1 readout

R1 Correct?

YES → **3 ORIGINAL RHC B/O SWITCH FAILED OPEN** (3)

NO → **4 CMC INPUT FAILED OPEN** (4)

YES → **5 Output chan ck**
- AUTO RCS (16) - OFF
- SC CONT - CMC
- CMC MODE - FREE
- MAN ATT (3) - RATE CMD or MIN IMP
- V11 N10E, 5E (pitch & yaw) 6E (roll)
- RHC - cmd + & - (in axis)
- Verify R1 readout

+PITCH	00005	+ROLL (AC)	00120
-PITCH	00012	+ROLL (BD)	00005
+YAW	00120	-ROLL (AC)	00240
-YAW	00240	-ROLL (BD)	00012

R1 Correct for all axes?

NO → **6 CMC OUTPUT CHAN FAILED OPEN** (5) → G&N SSR-2 → CMC JET RECONFIG

YES → **7 Turn on jets pitch axis**
- AUTO RCS FITCH (4) - MNA or MNB
- RHC - cmd + & - (in pitch)

Motion directions

NONE → **8 DRIVER LOGIC SHORT (CR18)** (6)

BOTH → **9 Affected axis?**

ROLL → **11 Troubleshoot AC (BD) roll**
- AUTO RCS ROLL BD (AC) - OFF
- AUTO RCS ROLL A1 & A2 (B1 & B2) - MNA or B
- AUTO RCS ROLL C1 & C2 (D1 & D2) - OFF
- RHC - cmd + & - (roll)

Motion directions?

ONE → 13 In Axis

BOTH → 14 Ck opposite pr of Jets
- AUTO RCS ROLL C1 & C2 (D1 & D2) - MNA or B
- AUTO RCS ROLL A1 & A2 (B1 & B2) - OFF
- RHC - cmd + & - (roll)

Motion directions

ONE → 13 In Axis

BOTH → 16 4 quad roll enabled?

YES → 15 Repeat above 2 steps for quad B/D

NO → 18 RCS logic checks OK (7)

PITCH OR YAW → **10 Troubleshoot P or Y**
- AUTO RCS PITCH A3 & C4 (YAW B3 & D4) - MNA or B
- AUTO RCS PITCH A4 & C3 (YAW B4 & D3) - OFF
- RHC - cmd + & - (in axis)

Motion directions

ONE → 13 In Axis

BOTH → 12 Ck opposite pr of Jets
- AUTO RCS PITCH A4 & C3 (YAW B4 & D3) - MNA or B
- AUTO RCS PITCH A3 & C4 (YAW B3 & D4) - OFF
- RHC - cmd + & - (in axis)

Motion directions

ONE → 13 In Axis
- MAN ATT - ACCEL CMD
- RHC - cmd + & -

Motion directions

BOTH → 17 CMC-SCS INTERFACE (5)

ONE → 20 DRIVER FAILED FF (8) → G&N SSR 2 → CMC JET RECONFIG STEP 8)

14 RCS checks OK (7)

REMARKS

(1) Assumes DAP data load has been verified.

(2) Command RCS maneuvers within soft stop region.

(3) Use alternate RHC. For failed RHC, attitude hold unaffected, but prop cont, ACCEL CMD, MIN IMP and CMC manual control lost. Direct unaffected but BMAG caging signal lost.

(4) RHC control (G&N) of affected thruster lost. CMC AUTO and MIC modes unaffected.

(5) All CMC cont to affected thruster lost. SCS modes and direct unaffected.

(6) All CMC modes lost when SC CONT - CMC. SCS modes and direct unaffected.

(7) Reduced authority may be caused by thruster degradation.

(8) Affected thruster lost for all SCS and CMC modes. Direct mode unaffected.

SYMPTOM	PROCEDURE	REMARKS

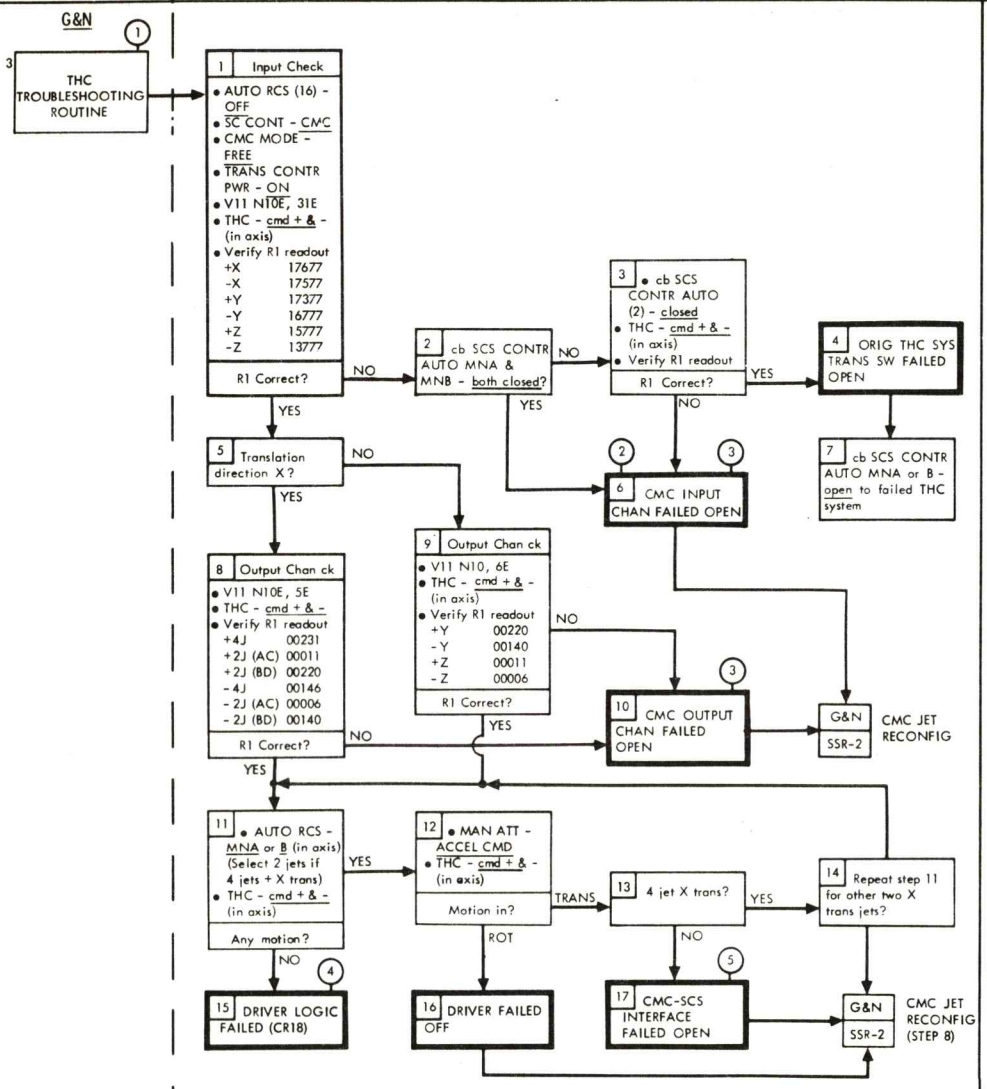

(1) Assumes DAP data load has been verified.

(2) The remote possibility of both THC system translation switches failed open can be determined with the SC CONT - SCS.

(3) Translation lost in CMC modes for affected directions.

(4) All CMC modes lost when SC CONT - CMC. SCS modes and direct unaffected.

(5) All CMC control to affected thruster lost. SCS modes and direct unaffected.

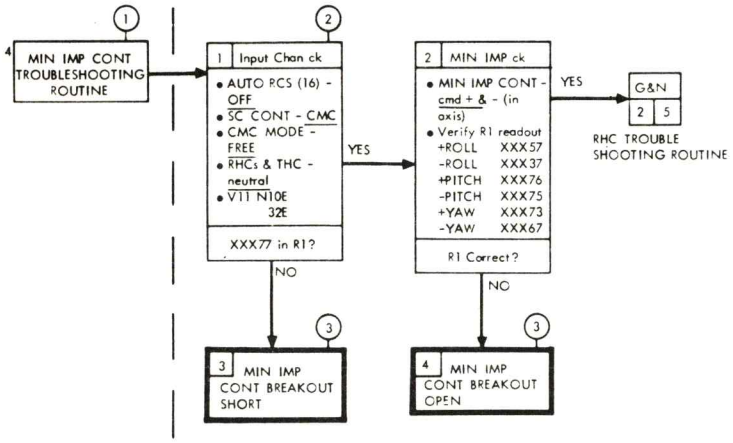

(1) Assumes DAP Data Load has been verified.

(2) An R1 of XXX77 indicates no input commands to CMC.

(3) CMC MIN IMP lost SCS MIN IMP available with RHC in LEB.

SYMPTOM	PROCEDURE	REMARKS

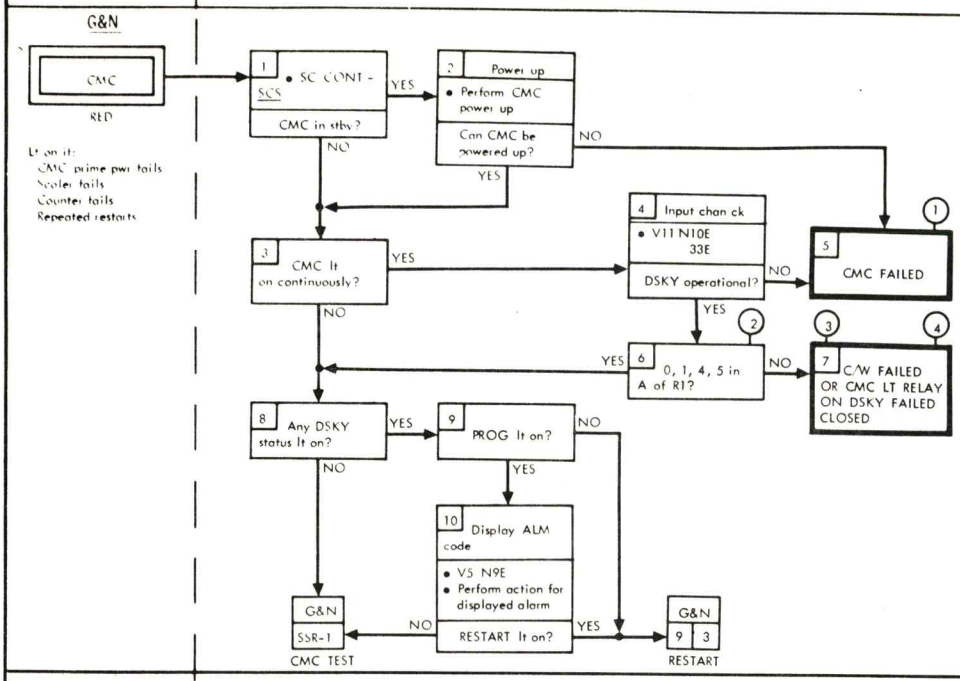

1. All CMC functions lost.
2. The R1 readout indicates a CMC FAIL signal to CMC.
3. Subsequent CMC malfunction indication from unaffected CMC light.
4. If the LEB CMC lt is on, all gyro torquing and PIPA capability lost. CMC monitor and control of both TVC and entry lost.

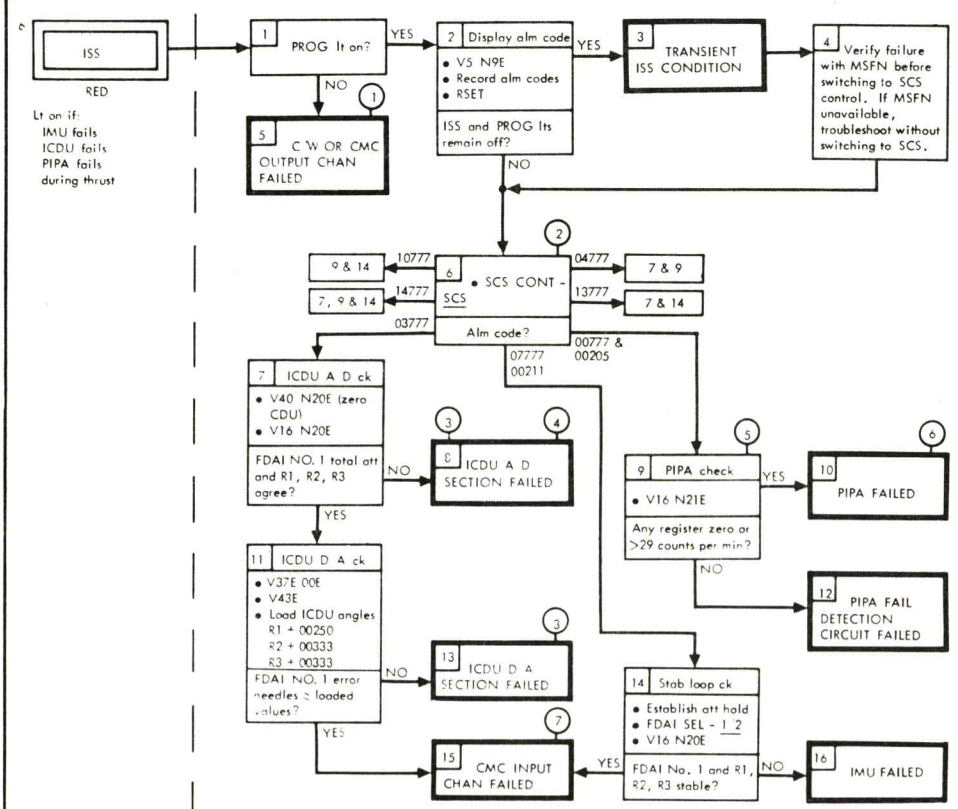

1. Subsequent ISS malfunction indications from unaffected ISS lt.
2. The following alarm codes are generated by the listed failures (or by transient fail discretes):
   - 00777 - PIPA fail
   - 04777 - PIPA and ICDU fail
   - 10777 - PIPA and IMU fail
   - 13777 - IMU and ICDU fail
   - 14777 - PIPA, IMU and ICDU fail

   If any of these alarm codes occur, proceed sequentially to each of the steps indicated. A "no" answer to each step is indicative that a transient fail discrete has been generated.
3.

Function Remaining	A/D Failure	D/A Failure
Fine align	NO	YES
Coarse align	NO	NO
Att err signal	NO	NO
Total att to FDAI	YES	YES
Gmbl angles to CMC	NO	YES
IMU stabilization loop	YES	YES
Cage mode	YES	YES
IMU fail detect ckt	YES	YES
Coarse align in gmbl lock	NO	YES

4. CMC can perform functions not requiring IMU inputs. After each maneuver, state vectors must be updated via P27.
5. If PIPA counts per minute are between 6 and 29 perform PIPA bias check; if less than 6, no further action is necessary.
6. CMC monitor and control of both TVC and entry lost.
7. Affects assurance of an ISS command. Subsequent indicator of an ISS failure loss.

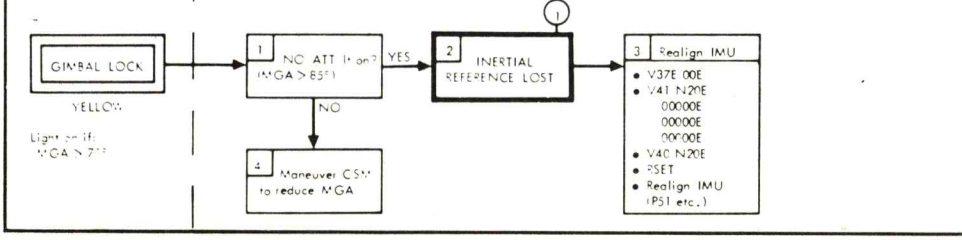

1. IMU in coarse align and must be realigned to a new inertial reference.

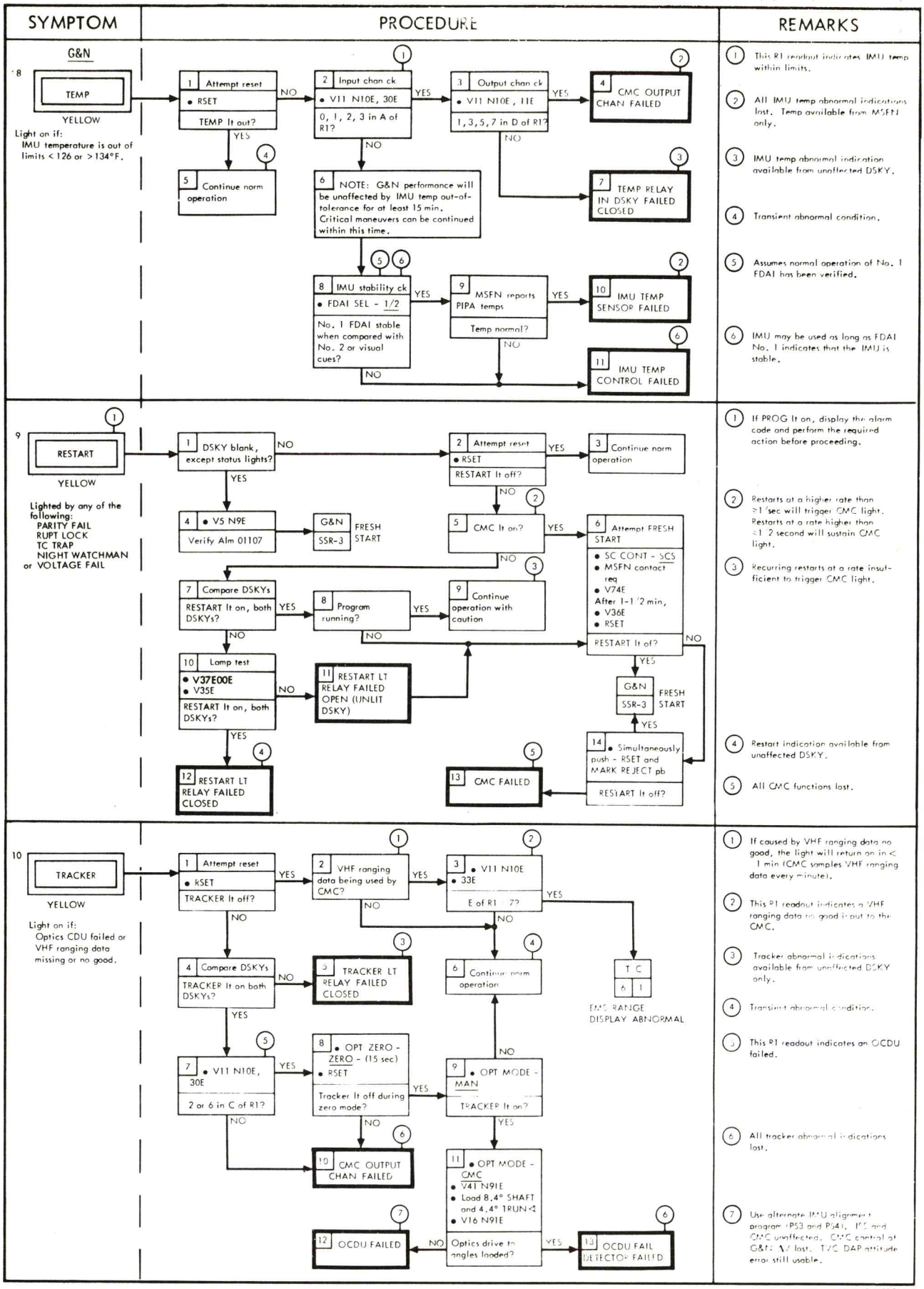
SYMPTOM
PROCEDURE
REMARKS
G&N
8
TEMP
YELLOW
Light on if:
IMU temperature is out of limits < 126 or > 134°F.
1 Attempt reset
• RSET
TEMP lt out?
NO
YES
2 Input chan ck
• V11 N10E, 30E
0, 1, 2, 3 in A of R1?
YES
3 Output chan ck
• V11 N10E, 11E
1, 3, 5, 7 in D of R1?
YES
4 CMC OUTPUT CHAN FAILED
NO
7 TEMP RELAY IN DSKY FAILED CLOSED
5 Continue norm operation
6 NOTE: G&N performance will be unaffected by IMU temp out-of-tolerance for at least 15 min. Critical maneuvers can be continued within this time.
8 IMU stability ck
• FDAI SEL - 1/2
No. 1 FDAI stable when compared with No. 2 or visual cues?
YES
9 MSFN reports PIPA temps
Temp normal?
YES
10 IMU TEMP SENSOR FAILED
NO
11 IMU TEMP CONTROL FAILED
1 This R1 readout indicates IMU temp within limits.
2 All IMU temp abnormal indications lost. Temp available from MSFN only.
3 IMU temp abnormal indication available from unaffected DSKY.
4 Transient abnormal condition.
5 Assumes normal operation of No. 1 FDAI has been verified.
6 IMU may be used as long as FDAI No. 1 indicates that the IMU is stable.
9
RESTART
YELLOW
Lighted by any of the following:
PARITY FAIL
RUPT LOCK
TC TRAP
NIGHT WATCHMAN
or VOLTAGE FAIL
1 DSKY blank, except status lights?
NO
YES
2 Attempt reset
• RSET
RESTART lt off?
YES
3 Continue norm operation
NO
4 • V5 N9E
Verify Alm 01107
G&N SSR-3 FRESH START
5 CMC lt on?
YES
6 Attempt FRESH START
• SC CONT - SCS
• MSFN contact req
• V74E
After 1-1/2 min,
• V36E
• RSET
RESTART lt off?
NO
YES
G&N SSR-3 FRESH START
7 Compare DSKYs
RESTART lt on, both DSKYs?
YES
8 Program running?
YES
9 Continue operation with caution
NO
10 Lamp test
• V37E00E
• V35E
RESTART lt on, both DSKYs?
NO
11 RESTART LT RELAY FAILED OPEN (UNLIT DSKY)
YES
12 RESTART LT RELAY FAILED CLOSED
13 CMC FAILED
14 • Simultaneously push - RSET and MARK REJECT pb
RESTART lt off?
1 If PROG lt on, display the alarm code and perform the required action before proceeding.
2 Restarts at a higher rate than ≤1/sec will trigger CMC light. Restarts at a rate higher than ≤1/2 second will sustain CMC light.
3 Recurring restarts at a rate insufficient to trigger CMC light.
4 Restart indication available from unaffected DSKY.
5 All CMC functions lost.
10
TRACKER
YELLOW
Light on if:
Optics CDU failed or VHF ranging data missing or no good.
1 Attempt reset
• RSET
TRACKER lt off?
YES
2 VHF ranging data being used by CMC?
YES
3 • V11 N10E
• 33E
E of R1 = 77
YES
NO
NO
4 Compare DSKYs
TRACKER lt on both DSKYs?
NO
5 TRACKER LT RELAY FAILED CLOSED
6 Continue norm operation
T C
6 1
EMS RANGE DISPLAY ABNORMAL
YES
5
7 • V11 N10E, 30E
2 or 6 in C of R1?
YES
8 • OPT ZERO - ZERO - (15 sec)
• RSET
Tracker lt off during zero mode?
YES
9 • OPT MODE - MAN
TRACKER lt on?
YES
NO
NO
6
10 CMC OUTPUT CHAN FAILED
11 • OPT MODE - CMC
• V41 N91E
• Load 8.4° SHAFT and 4.4° TRUN
• V16 N91E
7
12 OCDU FAILED
NO
Optics drive to angles loaded?
YES
6
13 OCDU FAIL DETECTOR FAILED
1 If caused by VHF ranging data no good, the light will return on in ≤ 1 min (CMC samples VHF ranging data every minute).
2 This R1 readout indicates a VHF ranging data no good input to the CMC.
3 Tracker abnormal indications available from unaffected DSKY only.
4 Transient abnormal condition.
5 This R1 readout indicates an OCDU failed.
6 All tracker abnormal indications lost.
7 Use alternate IMU alignment program (P53 and P54). IMU and CMC unaffected. CMC control of G&N lost. TVC DAP attitude error still usable.

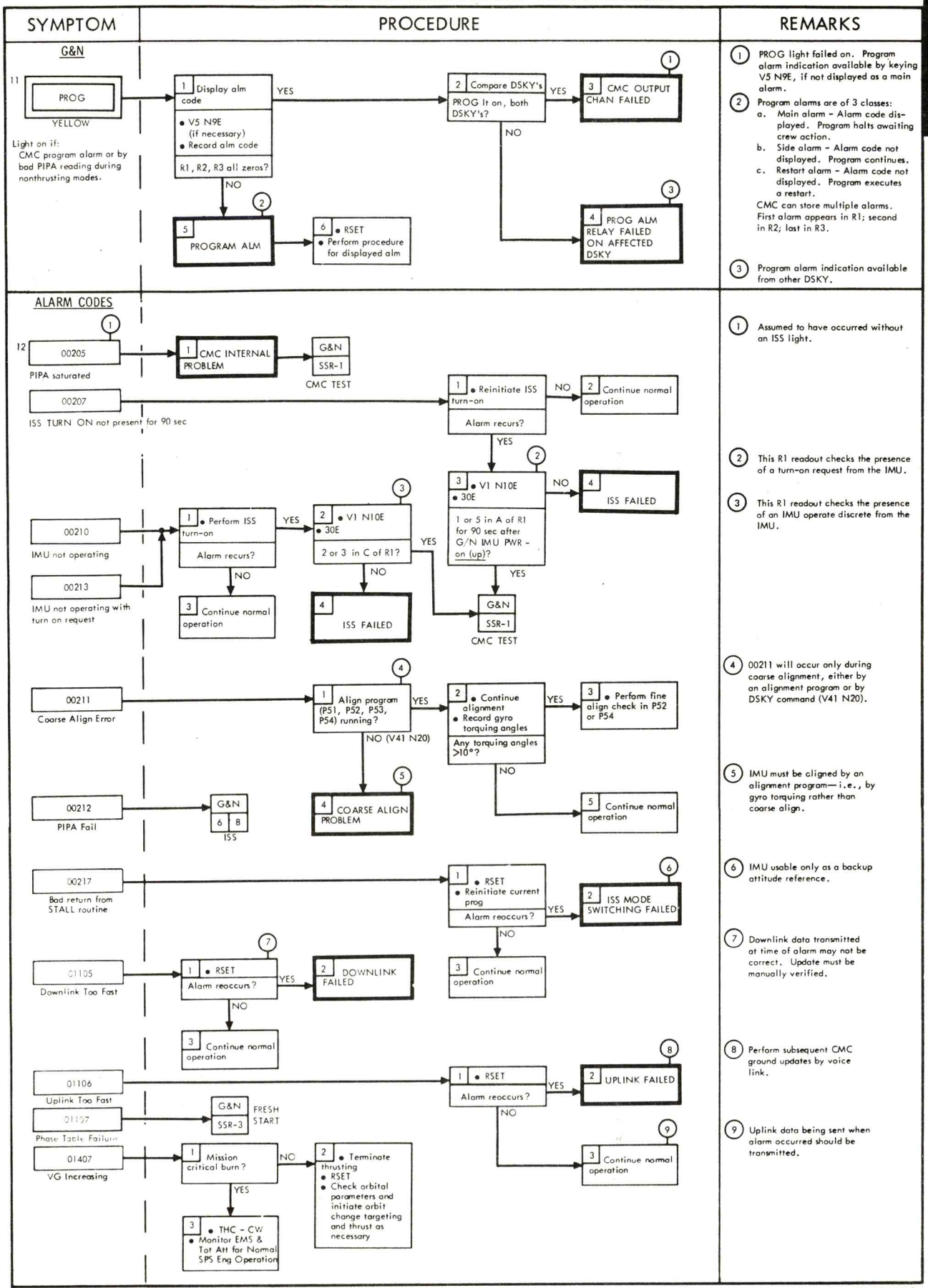
SYMPTOM
PROCEDURE
REMARKS
G&N
11
PROG
YELLOW
Light on if:
CMC program alarm or by bad PIPA reading during nonthrusting modes.
1 Display alm code
• V5 N9E (if necessary)
• Record alm code
R1, R2, R3 all zeros?
YES
NO
2 Compare DSKY's
PROG lt on, both DSKY's?
YES
NO
3 CMC OUTPUT CHAN FAILED
4 PROG ALM RELAY FAILED ON AFFECTED DSKY
5 PROGRAM ALM
6 • RSET
• Perform procedure for displayed alm
1 PROG light failed on. Program alarm indication available by keying V5 N9E, if not displayed as a main alarm.
2 Program alarms are of 3 classes:
a. Main alarm - Alarm code displayed. Program halts awaiting crew action.
b. Side alarm - Alarm code not displayed. Program continues.
c. Restart alarm - Alarm code not displayed. Program executes a restart.
CMC can store multiple alarms. First alarm appears in R1; second in R2; last in R3.
3 Program alarm indication available from other DSKY.
ALARM CODES
12
00205
PIPA saturated
1 CMC INTERNAL PROBLEM
G&N SSR-1
CMC TEST
00207
ISS TURN ON not present for 90 sec
1 • Reinitiate ISS turn-on
Alarm recurs?
NO
2 Continue normal operation
YES
3 • V1 N10E
• 30E
1 or 5 in A of R1 for 90 sec after G/N IMU PWR - on (up)?
NO
4 ISS FAILED
YES
00210
IMU not operating
00213
IMU not operating with turn on request
1 • Perform ISS turn-on
Alarm recurs?
YES
NO
3 Continue normal operation
2 • V1 N10E
• 30E
2 or 3 in C of R1?
YES
NO
4 ISS FAILED
G&N SSR-1
CMC TEST
00211
Coarse Align Error
1 Align program (P51, P52, P53, P54) running?
YES
NO (V41 N20)
2 • Continue alignment
• Record gyro torquing angles
Any torquing angles >10°?
YES
NO
3 • Perform fine align check in P52 or P54
5 Continue normal operation
4 COARSE ALIGN PROBLEM
00212
PIPA Fail
G&N 6 8 ISS
00217
Bad return from STALL routine
1 • RSET
• Reinitiate current prog
Alarm reoccurs?
YES
NO
2 ISS MODE SWITCHING FAILED
3 Continue normal operation
01105
Downlink Too Fast
1 • RSET
Alarm reoccurs?
YES
NO
2 DOWNLINK FAILED
3 Continue normal operation
01106
Uplink Too Fast
01107
Phase Table Failure
01407
VG Increasing
G&N SSR-3
FRESH START
1 Mission critical burn?
YES
NO
2 • Terminate thrusting
• RSET
• Check orbital parameters and initiate orbit change targeting and thrust as necessary
3 • THC - CW
• Monitor EMS & Tot Att for Normal SPS Eng Operation
1 • RSET
Alarm reoccurs?
YES
NO
2 UPLINK FAILED
3 Continue normal operation
1 Assumed to have occurred without an ISS light.
2 This R1 readout checks the presence of a turn-on request from the IMU.
3 This R1 readout checks the presence of an IMU operate discrete from the IMU.
4 00211 will occur only during coarse alignment, either by an alignment program or by DSKY command (V41 N20).
5 IMU must be aligned by an alignment program—i.e., by gyro torquing rather than coarse align.
6 IMU usable only as a backup attitude reference.
7 Downlink data transmitted at time of alarm may not be correct. Update must be manually verified.
8 Perform subsequent CMC ground updates by voice link.
9 Uplink data being sent when alarm occurred should be transmitted.

SYMPTOM	PROCEDURE	REMARKS
SPECIAL SUB ROUTINES		

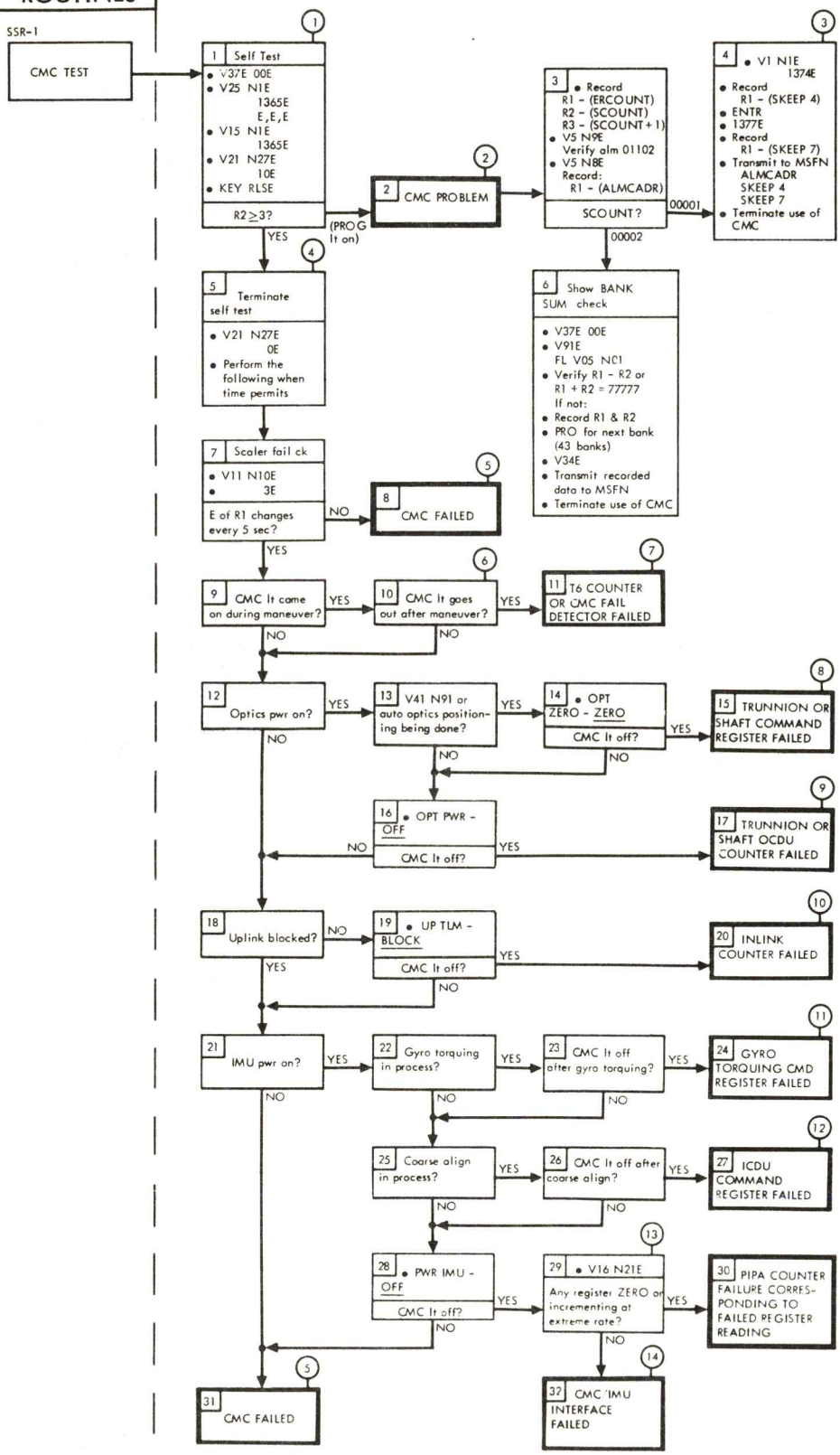

(1) R2 00001 for 7 SEC
R2 00002 for 43 SEC

(2) Subsequent use of CMC dependent on MSFN evaluation (via downlink) of the succeeding steps in self-test.

(3) Problem is in erasable memory.

(4) CMC self check tests only erasable and fixed memory. Other internal problems cannot be determined by self check.

(5) All CMC functions lost.

(6) Do not use CMC control for attitude maneuvers.

(7) RCS DAP unusable since T6 counter controls DAP jet firing times.

(8) TVC DAP and auto optics positioning lost.

(9) Optics CMC interface lost. Use alternate LOS marking routine (P53, P54).

(10) CMC uplink unusable.

(11) IMU cannot be fine aligned.

(12) IMU cannot be coarse aligned. Align by caging and or fine align. CMC attitude error display lost in axis. CMC control of SIVB lost.

(13) CMC TVC and entry control lost.

(14) IMU usable at attitude reference only.

SPECIAL SUB ROUTINES

PROCEDURE

SSR-2

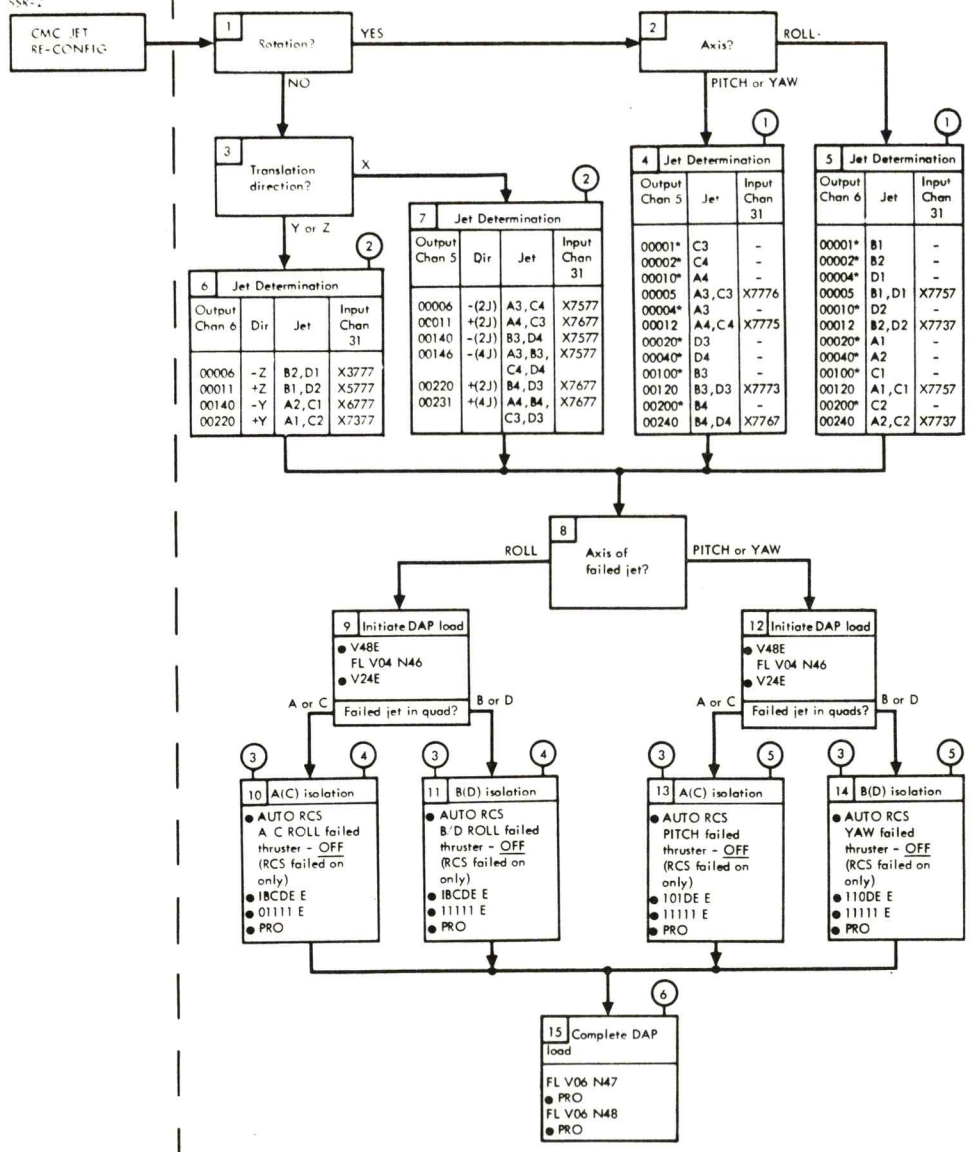

SSR-3

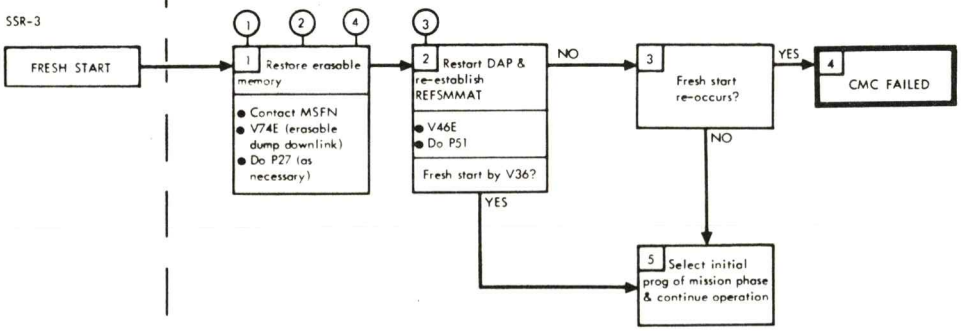

REMARKS

(1) Starred (*) outputs are single jet commands. For RCS failed on, the failed jet is the indicated jet. For output channel failed open, the failed jet is the corresponding jet in the rotational couple.

(2) If R1 (output chan) contains a number not listed, determine the failed jet from the R1 (output) readout when a rotation command is given.

(3) In R1, B is quad A/C for X translation:
0 - FAIL A/C
1 - USE A/C
In R1, C is quad B/D for X translation:
0 - FAIL B/D
1 - USE B/D
In R1, D is DAP deadband
0 - 0.5°
1 - 5.0°
E is the DAP rate
0 - 0.05°/sec
1 - 0.20°/sec
2 - 0.5°/sec
3 - 2.0°/sec
In R2, A is roll selection
0 - Use B/D
1 - Use A/C

(4) Translation (Y or Z) will be single jet and result in excessive RCS prplnt consumption.

(5) Rotations (pitch or yaw) will be single jet. X translations will be 2 jet.

(6) N47 and N48 display other DAP parameters assumed to be correct.

(1) State vector and CMC time should be updated. All nonpad-loaded parameters, except time & state vector, will be properly updated by CMC programs in their proper sequence as if CMC had just been turned on when fresh start occurred.

(2) Extended V74 permits MSFN to examine all pertinent erasable locations to determine if any parameters need reloading.

(3) DAP is shut off by fresh start & must be re-initiated by V46.

(4) REFSMMAT, SURF FLAG, LMOONFLG, CMOONFLG, and NODOPO1FLAG are not changed by a fresh start. All other flagwords are reset by fresh start. DRIFTFLG (bit 15, flagword 2) should be set by:
V25 N7E
76E
40000E
1E
For all others proper flags are set again by performance of CMC programs in normal sequence.

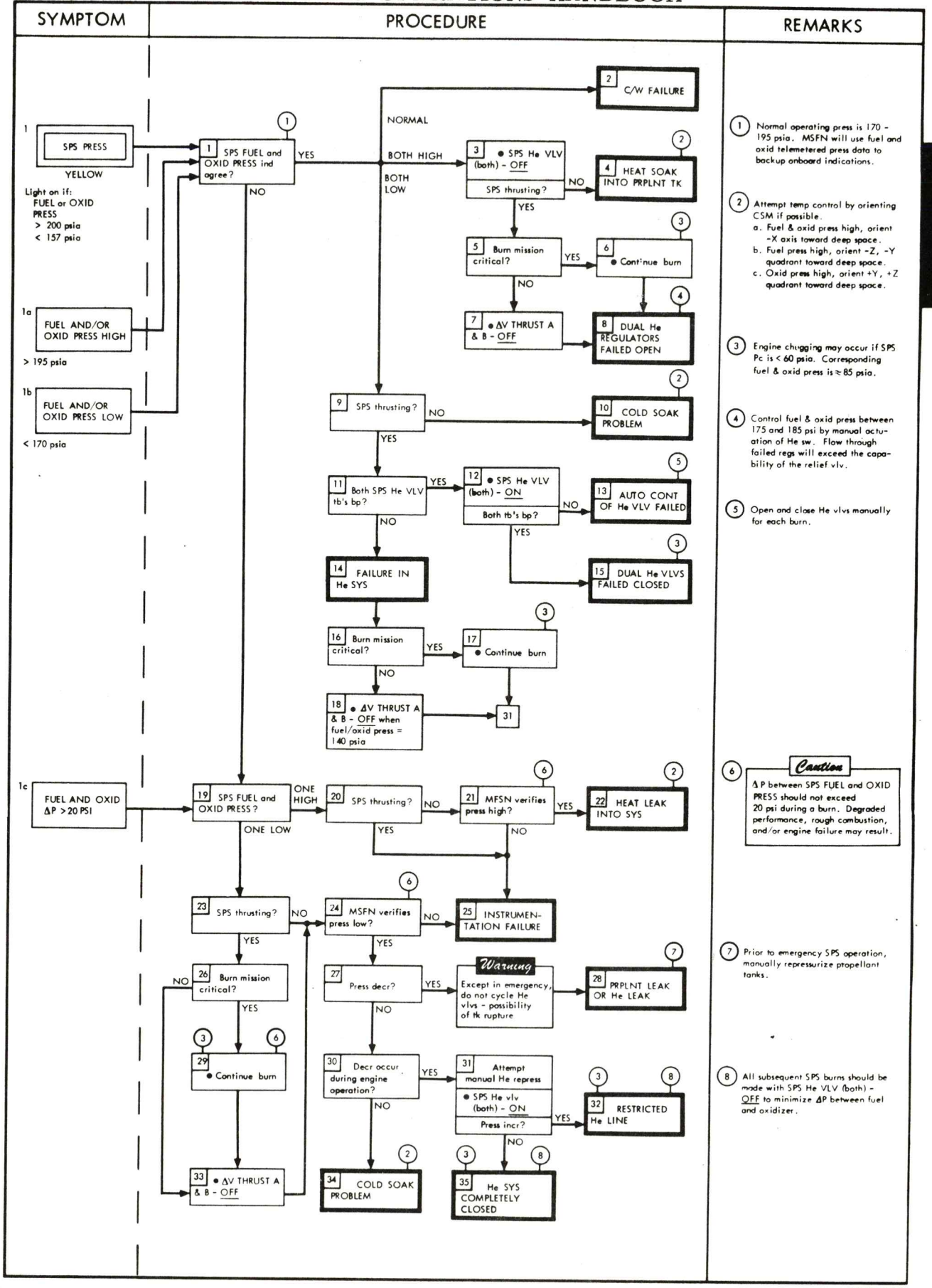
SYMPTOM
PROCEDURE
REMARKS
1 SPS PRESS
YELLOW
Light on if:
FUEL or OXID PRESS
> 200 psia
< 157 psia
1a FUEL AND/OR OXID PRESS HIGH
> 195 psia
1b FUEL AND/OR OXID PRESS LOW
< 170 psia
1c FUEL AND OXID ΔP >20 PSI
1 SPS FUEL and OXID PRESS ind agree?
YES
NO
NORMAL
BOTH HIGH
BOTH LOW
2 C/W FAILURE
3 • SPS He VLV (both) - OFF
SPS thrusting?
NO
YES
4 HEAT SOAK INTO PRPLNT TK
5 Burn mission critical?
YES
NO
6 • Continue burn
7 • ΔV THRUST A & B - OFF
8 DUAL He REGULATORS FAILED OPEN
9 SPS thrusting?
NO
YES
10 COLD SOAK PROBLEM
11 Both SPS He VLV tb's bp?
YES
NO
12 • SPS He VLV (both) - ON
Both tb's bp?
NO
YES
13 AUTO CONT OF He VLV FAILED
14 FAILURE IN He SYS
15 DUAL He VLVS FAILED CLOSED
16 Burn mission critical?
YES
NO
17 • Continue burn
18 • ΔV THRUST A & B - OFF when fuel/oxid press = 140 psia
31
19 SPS FUEL and OXID PRESS?
ONE HIGH
ONE LOW
20 SPS thrusting?
NO
YES
21 MFSN verifies press high?
YES
NO
22 HEAT LEAK INTO SYS
23 SPS thrusting?
NO
YES
24 MSFN verifies press low?
NO
YES
25 INSTRUMENTATION FAILURE
26 Burn mission critical?
NO
YES
27 Press decr?
YES
NO
Warning
Except in emergency, do not cycle He vlvs - possibility of tk rupture
28 PRPLNT LEAK OR He LEAK
29 • Continue burn
30 Decr occur during engine operation?
YES
NO
31 Attempt manual He repress
• SPS He vlv (both) - ON
Press incr?
YES
NO
32 RESTRICTED He LINE
33 • ΔV THRUST A & B - OFF
34 COLD SOAK PROBLEM
35 He SYS COMPLETELY CLOSED
(1) Normal operating press is 170 - 195 psia. MSFN will use fuel and oxid telemetered press data to backup onboard indications.
(2) Attempt temp control by orienting CSM if possible.
a. Fuel & oxid press high, orient -X axis toward deep space.
b. Fuel press high, orient -Z, -Y quadrant toward deep space.
c. Oxid press high, orient +Y, +Z quadrant toward deep space.
(3) Engine chugging may occur if SPS Pc is < 60 psia. Corresponding fuel & oxid press is ≈ 85 psia.
(4) Control fuel & oxid press between 175 and 185 psi by manual actuation of He sw. Flow through failed regs will exceed the capability of the relief vlv.
(5) Open and close He vlvs manually for each burn.
(6) Caution
ΔP between SPS FUEL and OXID PRESS should not exceed 20 psi during a burn. Degraded performance, rough combustion, and/or engine failure may result.
(7) Prior to emergency SPS operation, manually repressurize propellant tanks.
(8) All subsequent SPS burns should be made with SPS He VLV (both) - OFF to minimize ΔP between fuel and oxidizer.

SYMPTOM	PROCEDURE	REMARKS

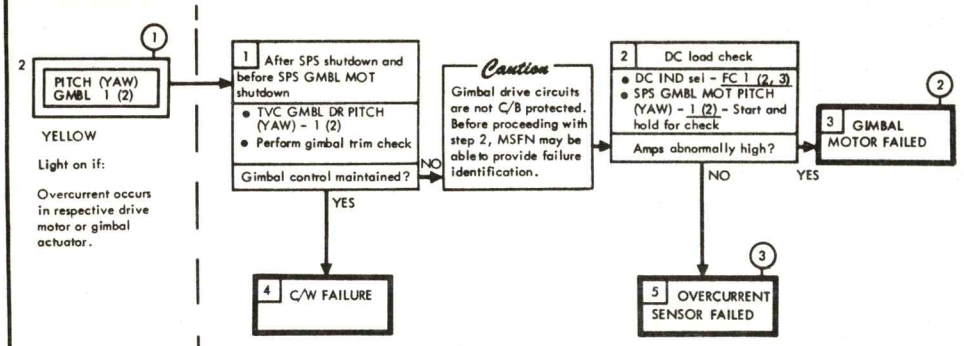

(1) Automatic transfer from the primary system to secondary occurs with an overcurrent provided the TVC GMBL DR switch is at AUTO.

(2) For subsequent ΔV's, place TVC GMBL DR sw to alternate servo position in affected axis.

(3) Selected gimbal motor is operational when SPS Pitch (Yaw) 1 (2) cb is opened while affected gimbal motor switch is held at START. However, overcurrent protection and switch-over capability will not be available. Close the cb to turn off the gimbal motor.

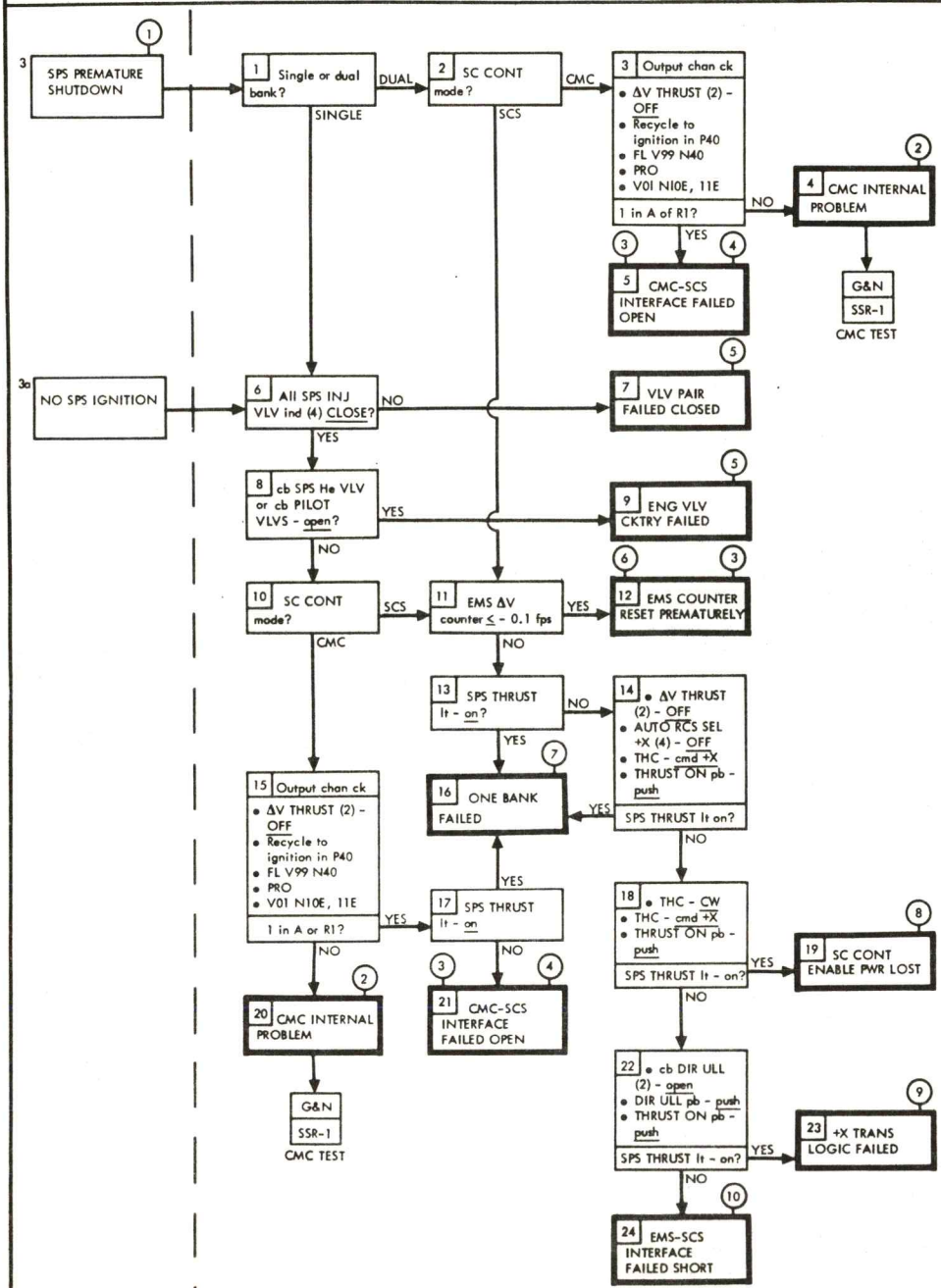

(1) Troubleshooting assumes original switch positions at time of shutdown.

(2) All G&N SPS capability lost.

(3) Manual on-off procedure
a. At TIG -1 min, SPS THRUST - DIR ON
b. At TIG, ΔV THRUST A(B) - NORM
c. At TIG +3 sec, ΔV THRUST B(A) - NORM (if dual bank)
d. Terminate burn on ΔV or time by ΔV THRUST (2) - OFF.

(4) G&N SPS on-off control lost. TVC DAP unaffected.

(5) ΔV capability lost for affected bank.

(6) Perform EMS ΔV test and if OK, use ΔV counter to monitor burn. Use manual on-off procedure (Remark 3).

(7) Affected bank may still be available using SPS THRUST - DIR ON. Alternate bank unaffected.

(8) THC must be CW for SCS ΔV capability. SCS auto ΔV lost.

(9) For SCS ΔV use DIR ULL pb for eng on initiation (+X TRANS logic function lost).

(10) CMC ΔV capability unaffected. SCS ΔV auto on-off lost. For SCS ΔV use manual on-off procedure (Remark 3).

SYMPTOM	PROCEDURE	REMARKS

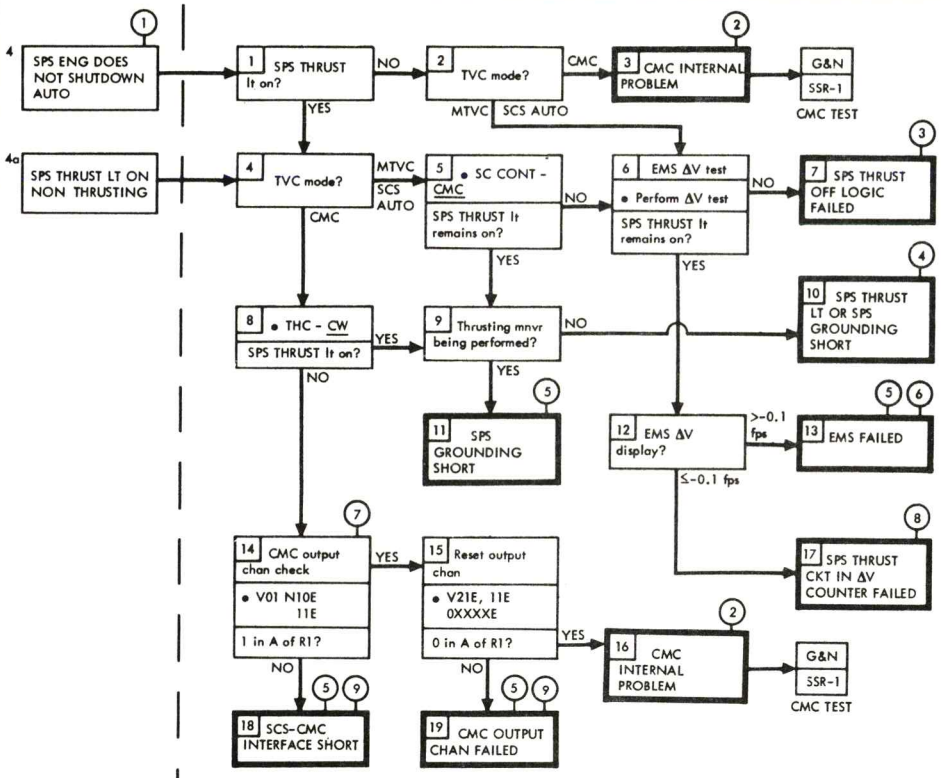

1. Assumes SPS engine was shut down with the ΔV thrust switches.
2. All G&N SPS capability lost.
3. SCS auto cutoff lost, use manual thrust on-off procedure presented in Remark 5.
4. Since failure could be SPS thrust lt on only, for ΔV's perform single bank ignition per Remark 5.
5. Auto thrust on-off lost for one and possibly both banks. Use manual on-off procedure:
   a. At TIG -1 min, SPS THRUST - DIR ON
   b. at TIG, ΔV THRUST A(B) - NORM
   c. At TIG +3 sec, ΔV THRUST B(A) - NORM (if dual bank)
   d. Terminate burn on ΔV or time by ΔV THRUST (2) - OFF

   or for single bank operation:
   At TIG -2 sec, ΔV THRUST (alt bank) - NORM
   a. If SPS lts, auto thrust on-off lost for both banks, use manual on-off procedure above.
   b. If no SPS ign, auto on-off remains for alt bank.
6. SCS ΔV capability remains but must terminate burn with time. Perform entry self test to determine EMS capability for entry.
7. This step must be done while still in P40. After check has been made exit P40 to terminate average G.
8. SCS auto cutoff lost. Manual cutoff required.
9. G&N auto eng on-off control lost only.

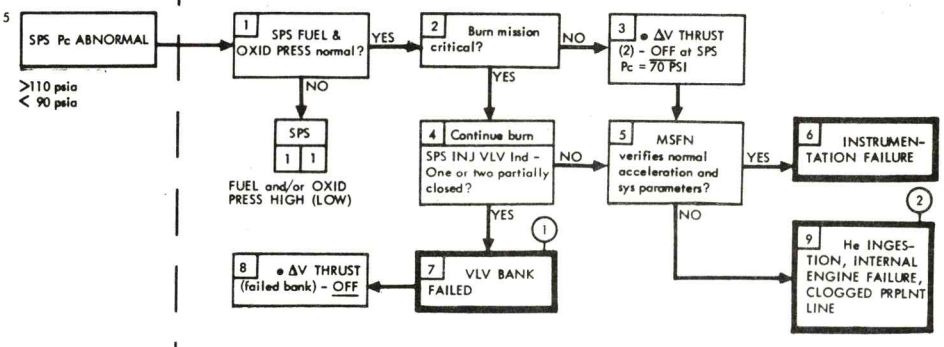

1. Failed bank should not be used except in an emergency.
2. SPS engine operable until engine indications require shutdown. Engine chugging may occur if SPS Pc is <60 psi.

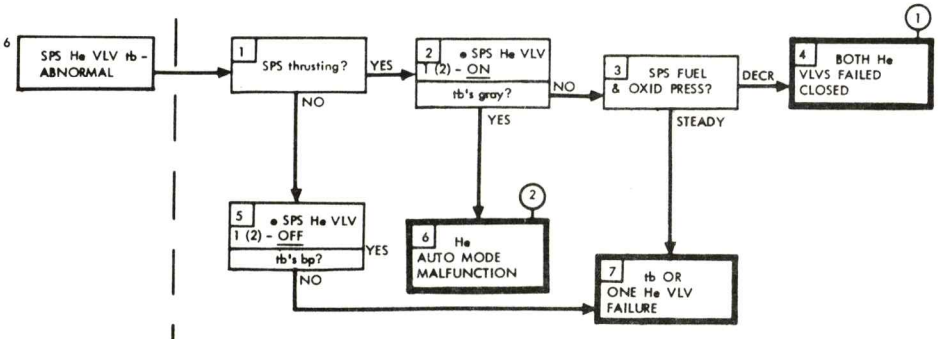

1. SPS engine operable until engine indications require shutdown. Engine chugging may occur if Pc is <60 psi. Corresponding fuel & oxid pressure is ≈85 psia.
2. Open and close He valves manually for each burn.

SYMPTOM	PROCEDURE	REMARKS
He PRESS LOW OR DECR	1 MSFN verifies SPS He PRESS low or decr? (1) YES → 2 LEAK IN He SUPPLY (2); NO → 3 He INSTRUMENTATION FAILURE	(1) MSFN will monitor redundant He press instrumentation. (2) He depletion imminent. SPS engine operable until engine indications require shutdown. Engine chugging may occur if SPS Pc is <60 psi. Corresponding fuel & oxid pressure is ≈85 psia.
8 GN2 A (B) PRESS LOW ~400 PSI 8a SPS INJ VLV PARTIALLY OPEN	1 Ind check • SPS PRESS IND sw – N2A, (N2B), He Press normal? NO → 2 IND FAILED; YES → 3 GN_2 A (B) LEAK OR FAILED SNSR (1) → 4 • Operate engine on alternate bank	(1) Operation at <350 psi results in partially open ball vlvs and hazardous engine operation.
9 SPS INJ VLV IND ABNORMAL One open during non-thrusting One or two closed during burn period (or burn attempt)	1 SPS thrusting? YES → 2 Double or single bank operation? DOUBLE → 3 • Continue burn MSFN verifies vlv closed? YES → 4 ONE PAIR OF BALL VLVS FAILED CLOSED (1); NO → 6 INSTRUMENTATION FAILURE; SINGLE → 5 INSTRUMENTATION FAILURE NO → 7 MFSN verifies vlv open? YES → 8 ONE PAIR OF BALL VLVS FAILED OPEN (1) → 10 • ΔV THRUST (Failed bank) – OFF (2); NO → 9 INSTRUMENTATION FAILURE	(1) SPS operable on redundant bank if one bank failed. (2) Failed bank should not be used except in an emergency.
10 NO PRPLNT TEMP CONTROL (1)	1 SPS PRPLNT TEMP ind? LOW AND DECR → 2 • SYS TEST (2) – 5A SPS oxid line temp low? NO → 3 INSTRUMENTATION FAILURE (3); YES → 6 • SPS LINE HTRS – A/B Temp incr? YES → 7 SPS LINE HTRS A INSUFFICIENT OR FAILED OFF; NO → 10 SPS LINE HTRS A & A/B FAILED OFF (4) HIGH AND INCR → 4 • SYS TEST (2) – 5A SPS oxid line temp high? (2) YES → 5 SPS LINE HTRS FAILED ON → 9 • cb SPS HTRS (2) – open; NO → 8 INSTRUMENTATION FAILURE (3)	(1) Normal range 45-75°F. (2) Assumes CSM not in inertial hold mode which might normally result in differences between SPS prplnt temp and SPS oxid line temp. (3) Use oxid line temp for SPS prplnt temp. (4) Prplnt temp may be incr by CSM orientation or by firing SPS engine. At 27°F the propellants become slushy and the fuel & oxid ratio becomes unpredictable.

SYMPTOM	PROCEDURE	REMARKS
11 NO RESPONSE OF SPS OXID VLV tb DURING FLOW ADJUST (OXID FLOW VLV PRIM - PRIM)	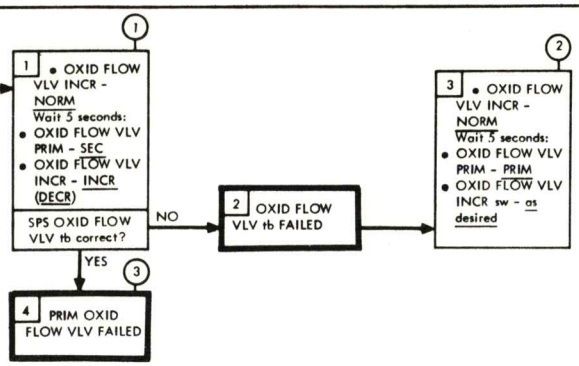	(1) OXID FLOW VLV INCR sw cannot operate unless power applied through a thrust on signal or through the SPS QTY TEST sw. If flow vlv position was changed by the SPS QTY TEST sw, % FUEL & % OXID quantity readouts must be returned to original values. (2) The secondary sliding gate vlv must be in the nominal flow position (rather than INCR or DECR) before switching to the prim oxid flow vlv or misalignment of the secondary vlv could make the primary vlv inoperative. (3) Sec vlv has sufficient range to compensate for prim vlv failure in any position and still provide vlv openings for INCR, NORM or DECR oxid flow.
12 SPS OXID UNBAL IND ERRATIC OR PEGGED	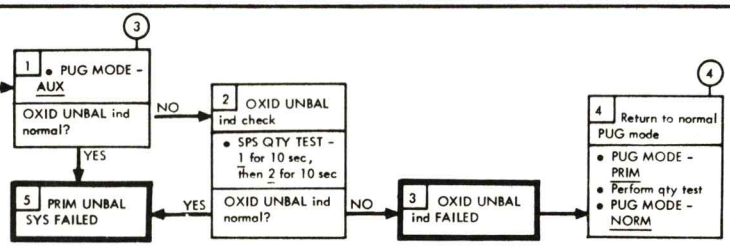	(1) Assumes qty indicating sys normal. (2) The unbalance meter will behave erratically for approximately 25 seconds after engine ignition. This is caused by propellant dynamics. (3) Assumes CSM is still thrusting. If thrust has terminated, proceed with step 2. (4) Actuation of SPS QTY TEST sw here will realign digital display to prim sys.
13 SPS OXID (FUEL) QTY IND READOUT ABNORMAL	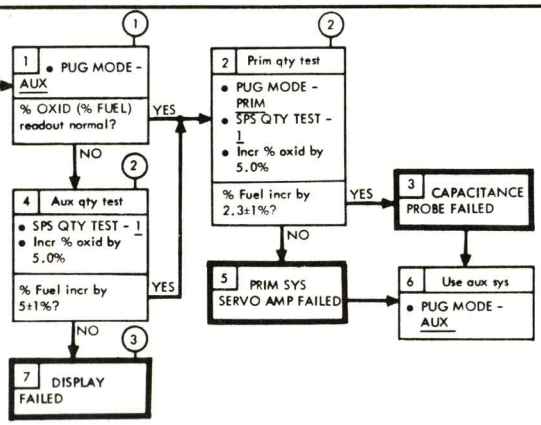	(1) Assumes SPS is still thrusting. If thrusting terminated before step 1 is complete, proceed to step 4. (2) Complete thrusting prior to qty test. (3) MSFN must now supply any prplnt quantity data.

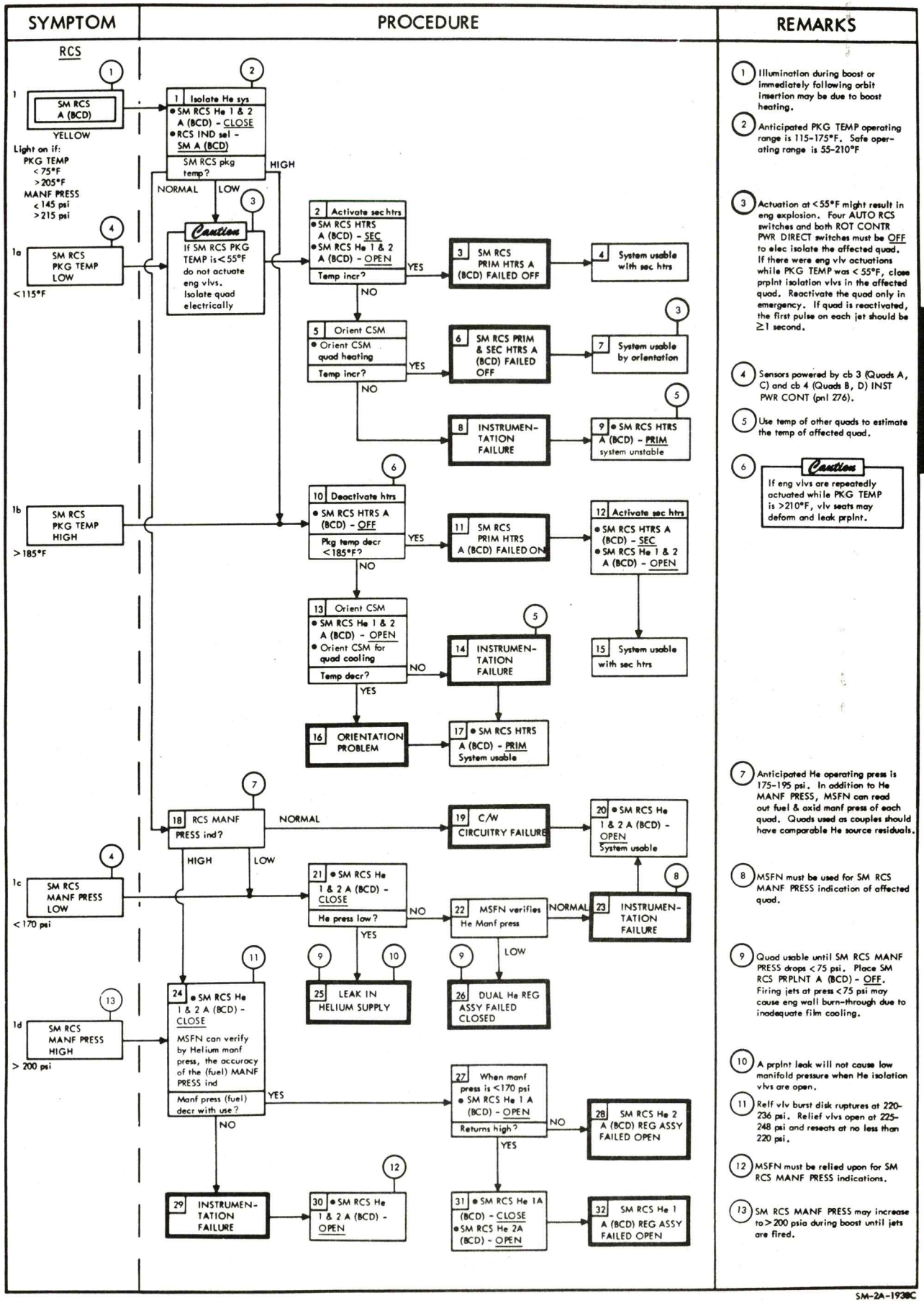
SYMPTOM
PROCEDURE
REMARKS
RCS
1
SM RCS A (BCD)
YELLOW
Light on if:
PKG TEMP
< 75°F
> 205°F
MANF PRESS
< 145 psi
> 215 psi
1a
SM RCS PKG TEMP LOW
< 115°F
1b
SM RCS PKG TEMP HIGH
> 185°F
1c
SM RCS MANF PRESS LOW
< 170 psi
1d
SM RCS MANF PRESS HIGH
> 200 psi
1 Isolate He sys
• SM RCS He 1 & 2 A (BCD) - CLOSE
• RCS IND sel - SM A (BCD)
SM RCS pkg temp?
HIGH
NORMAL
LOW
Caution
If SM RCS PKG TEMP is < 55°F do not actuate eng vlvs. Isolate quad electrically
2 Activate sec htrs
• SM RCS HTRS A (BCD) - SEC
• SM RCS He 1 & 2 A (BCD) - OPEN
Temp incr?
YES
NO
3 SM RCS PRIM HTRS A (BCD) FAILED OFF
4 System usable with sec htrs
5 Orient CSM
• Orient CSM quad heating
Temp incr?
YES
NO
6 SM RCS PRIM & SEC HTRS A (BCD) FAILED OFF
7 System usable by orientation
8 INSTRUMENTATION FAILURE
9 • SM RCS HTRS A (BCD) - PRIM system unstable
10 Deactivate htrs
• SM RCS HTRS A (BCD) - OFF
Pkg temp decr < 185°F?
YES
NO
11 SM RCS PRIM HTRS A (BCD) FAILED ON
12 Activate sec htrs
• SM RCS HTRS A (BCD) - SEC
• SM RCS He 1 & 2 A (BCD) - OPEN
13 Orient CSM
• SM RCS He 1 & 2 A (BCD) - OPEN
• Orient CSM for quad cooling
Temp decr?
NO
YES
14 INSTRUMENTATION FAILURE
15 System usable with sec htrs
16 ORIENTATION PROBLEM
17 • SM RCS HTRS A (BCD) - PRIM System usable
18 RCS MANF PRESS ind?
NORMAL
HIGH
LOW
19 C/W CIRCUITRY FAILURE
20 • SM RCS He 1 & 2 A (BCD) - OPEN System usable
21 • SM RCS He 1 & 2 A (BCD) - CLOSE
He press low?
NO
YES
22 MSFN verifies He Manf press
NORMAL
LOW
23 INSTRUMENTATION FAILURE
25 LEAK IN HELIUM SUPPLY
26 DUAL He REG ASSY FAILED CLOSED
24 • SM RCS He 1 & 2 A (BCD) - CLOSE
MSFN can verify by Helium manf press, the accuracy of the (fuel) MANF PRESS ind
Manf press (fuel) decr with use?
YES
NO
27 When manf press is < 170 psi
• SM RCS He 1 A (BCD) - OPEN
Returns high?
NO
YES
28 SM RCS He 2 A (BCD) REG ASSY FAILED OPEN
29 INSTRUMENTATION FAILURE
30 • SM RCS He 1 & 2 A (BCD) - OPEN
31 • SM RCS He 1A (BCD) - CLOSE
• SM RCS He 2A (BCD) - OPEN
32 SM RCS He 1 A (BCD) REG ASSY FAILED OPEN
1 Illumination during boost or immediately following orbit insertion may be due to boost heating.
2 Anticipated PKG TEMP operating range is 115-175°F. Safe operating range is 55-210°F
3 Actuation at < 55°F might result in eng explosion. Four AUTO RCS switches and both ROT CONTR PWR DIRECT switches must be OFF to elec isolate the affected quad. If there were eng vlv actuations while PKG TEMP was < 55°F, close prplnt isolation vlvs in the affected quad. Reactivate the quad only in emergency. If quad is reactivated, the first pulse on each jet should be ≥1 second.
4 Sensors powered by cb 3 (Quads A, C) and cb 4 (Quads B, D) INST PWR CONT (pnl 276).
5 Use temp of other quads to estimate the temp of affected quad.
6 Caution
If eng vlvs are repeatedly actuated while PKG TEMP is > 210°F, vlv seats may deform and leak prplnt.
7 Anticipated He operating press is 175-195 psi. In addition to He MANF PRESS, MSFN can read out fuel & oxid manf press of each quad. Quads used as couples should have comparable He source residuals.
8 MSFN must be used for SM RCS MANF PRESS indication of affected quad.
9 Quad usable until SM RCS MANF PRESS drops < 75 psi. Place SM RCS PRPLNT A (BCD) - OFF. Firing jets at press < 75 psi may cause eng wall burn-through due to inadequate film cooling.
10 A prplnt leak will not cause low manifold pressure when He isolation vlvs are open.
11 Relf vlv burst disk ruptures at 220-236 psi. Relief vlvs open at 225-248 psi and reseats at no less than 220 psi.
12 MSFN must be relied upon for SM RCS MANF PRESS indications.
13 SM RCS MANF PRESS may increase to > 200 psia during boost until jets are fired.

SYMPTOM	PROCEDURE	REMARKS

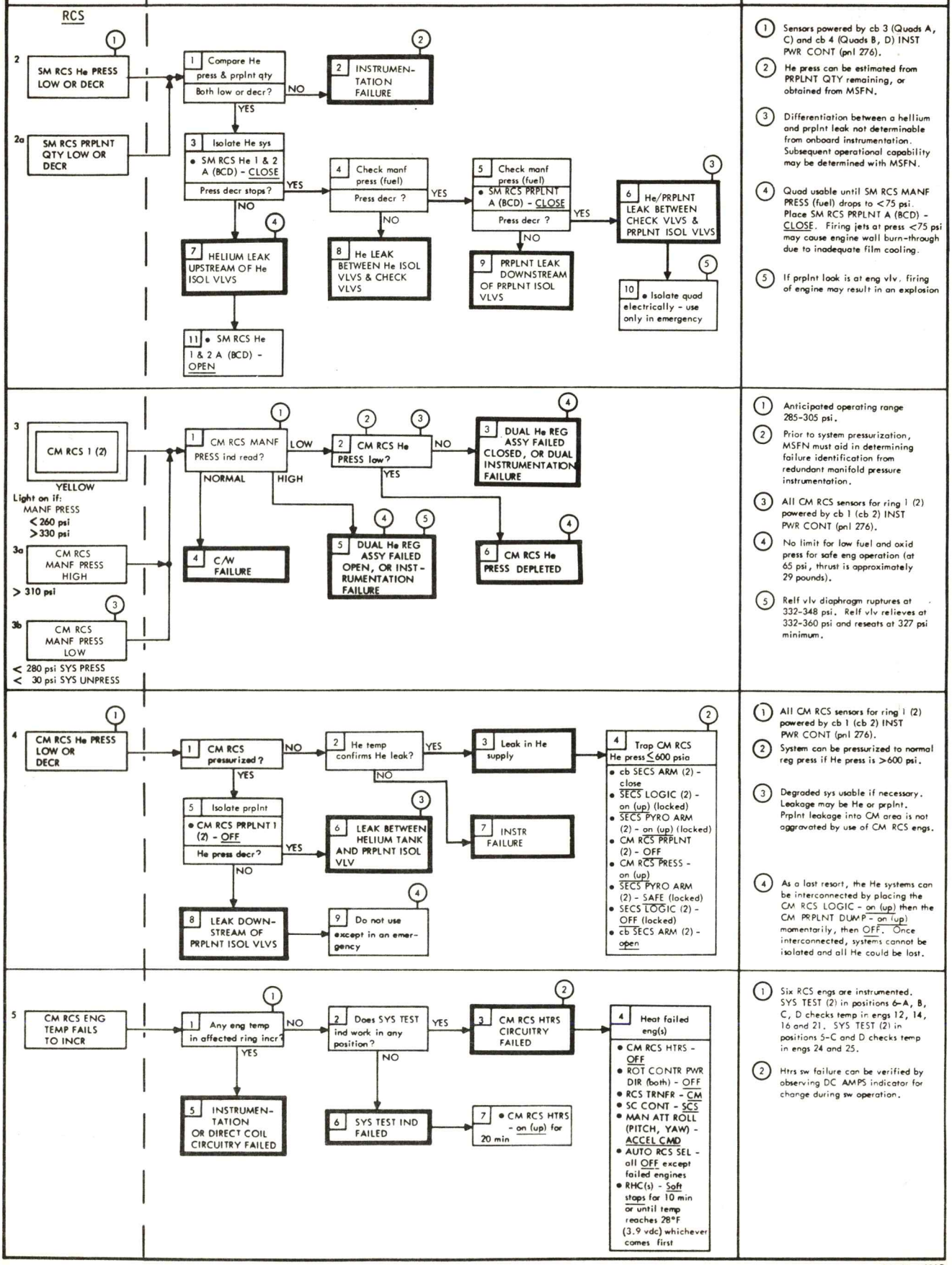

1. Sensors powered by cb 3 (Quads A, C) and cb 4 (Quads B, D) INST PWR CONT (pnl 276).
2. He press can be estimated from PRPLNT QTY remaining, or obtained from MSFN.
3. Differentiation between a hellium and prplnt leak not determinable from onboard instrumentation. Subsequent operational capability may be determined with MSFN.
4. Quad usable until SM RCS MANF PRESS (fuel) drops to <75 psi. Place SM RCS PRPLNT A (BCD) - CLOSE. Firing jets at press <75 psi may cause engine wall burn-through due to inadequate film cooling.
5. If prplnt look is at eng vlv, firing of engine may result in an explosion

1. Anticipated operating range 285-305 psi.
2. Prior to system pressurization, MSFN must aid in determining failure identification from redundant manifold pressure instrumentation.
3. All CM RCS sensors for ring 1 (2) powered by cb 1 (cb 2) INST PWR CONT (pnl 276).
4. No limit for low fuel and oxid press for safe eng operation (at 65 psi, thrust is approximately 29 pounds).
5. Relf vlv diaphragm ruptures at 332-348 psi. Relf vlv relieves at 332-360 psi and reseats at 327 psi minimum.

1. All CM RCS sensors for ring 1 (2) powered by cb 1 (cb 2) INST PWR CONT (pnl 276).
2. System can be pressurized to normal reg press if He press is >600 psi.
3. Degraded sys usable if necessary. Leakage may be He or prplnt. Prplnt leakage into CM area is not aggravated by use of CM RCS engs.
4. As a last resort, the He systems can be interconnected by placing the CM RCS LOGIC - on (up) then the CM PRPLNT DUMP - on (up) momentarily, then OFF. Once interconnected, systems cannot be isolated and all He could be lost.

1. Six RCS engs are instrumented. SYS TEST (2) in positions 6-A, B, C, D checks temp in engs 12, 14, 16 and 21. SYS TEST (2) in positions 5-C and D checks temp in engs 24 and 25.
2. Htrs sw failure can be verified by observing DC AMPS indicator for change during sw operation.

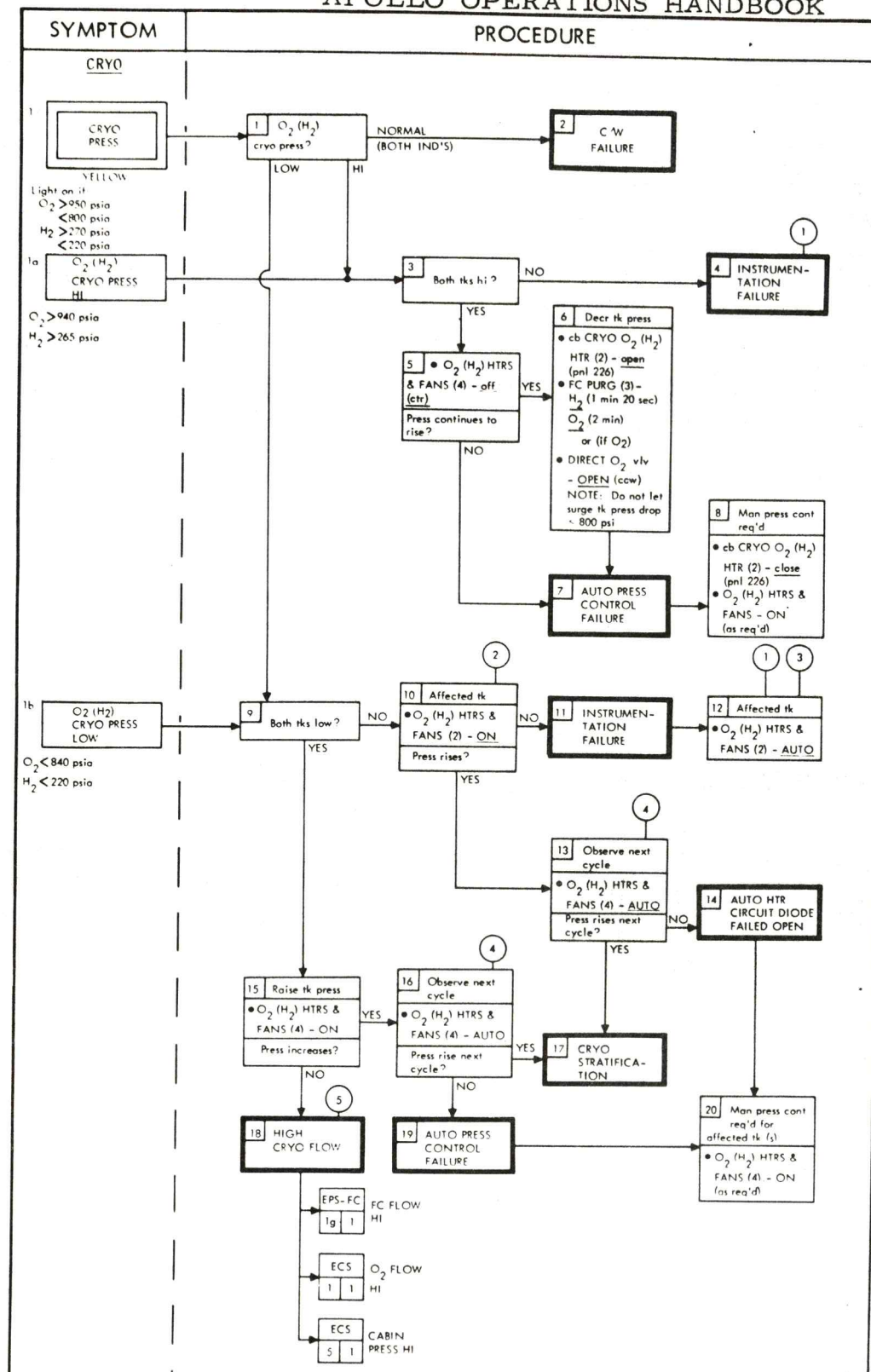
SYMPTOM
PROCEDURE
REMARKS
CRYO
1 CRYO PRESS YELLOW
Light on if
O_2 >950 psia
<800 psia
H_2 >270 psia
<220 psia
1a O_2 (H_2) CRYO PRESS HI
O_2 >940 psia
H_2 >265 psia
1b O2 (H2) CRYO PRESS LOW
O_2 <840 psia
H_2 <220 psia
1 O_2 (H_2) cryo press?
NORMAL (BOTH IND'S)
LOW
HI
2 C/W FAILURE
3 Both tks hi?
NO
YES
4 INSTRUMENTATION FAILURE
5 • O_2 (H_2) HTRS & FANS (4) - off (ctr)
Press continues to rise?
YES
NO
6 Decr tk press
• cb CRYO O_2 (H_2) HTR (2) - open (pnl 226)
• FC PURG (3) - H_2 (1 min 20 sec) O_2 (2 min) or (if O_2)
• DIRECT O_2 vlv - OPEN (ccw)
NOTE: Do not let surge tk press drop < 800 psi
7 AUTO PRESS CONTROL FAILURE
8 Man press cont req'd
• cb CRYO O_2 (H_2) HTR (2) - close (pnl 226)
• O_2 (H_2) HTRS & FANS - ON (as req'd)
9 Both tks low?
NO
YES
10 Affected tk
• O_2 (H_2) HTRS & FANS (2) - ON
Press rises?
NO
YES
11 INSTRUMENTATION FAILURE
12 Affected tk
• O_2 (H_2) HTRS & FANS (2) - AUTO
13 Observe next cycle
• O_2 (H_2) HTRS & FANS (4) - AUTO
Press rises next cycle?
NO
YES
14 AUTO HTR CIRCUIT DIODE FAILED OPEN
15 Raise tk press
• O_2 (H_2) HTRS & FANS (4) - ON
Press increases?
YES
NO
16 Observe next cycle
• O_2 (H_2) HTRS & FANS (4) - AUTO
Press rise next cycle?
YES
NO
17 CRYO STRATIFICATION
18 HIGH CRYO FLOW
19 AUTO PRESS CONTROL FAILURE
20 Man press cont req'd for affected tk (s)
• O_2 (H_2) HTRS & FANS (4) - ON (as req'd)
EPS-FC 1g 1 FC FLOW HI
ECS 1 1 O_2 FLOW HI
ECS 5 1 CABIN PRESS HI
1 MSFN may have valid press signal. If O_2, a check of surge tk press will validate cryo tk press within limits.
2 An immediate drop in press upon htr operation is indicative of stratification. Allow sufficient time for press rise indication.
3 Use unaffected tk to estimate cryo press.
4 Observation of more than one cycle may be necessary.
5 Resultant flow rate will be detectable in other systems.

SYMPTOM	PROCEDURE	REMARKS

FUEL CELL

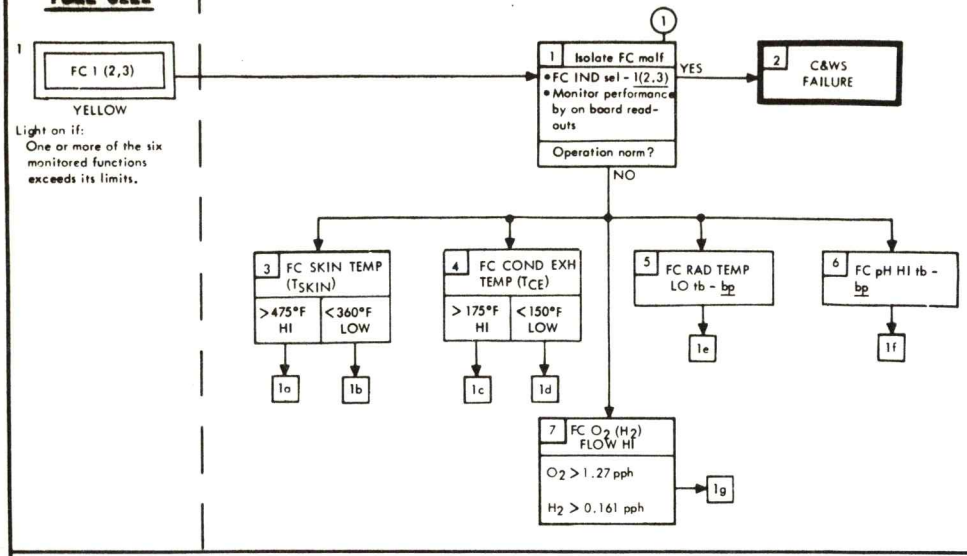

(1) FC pump cb's, O_2 and H_2 flow low, O_2 and H_2 reg out press. and sys performance are part of sys verification, but are not monitored by Caution and Warning sys.

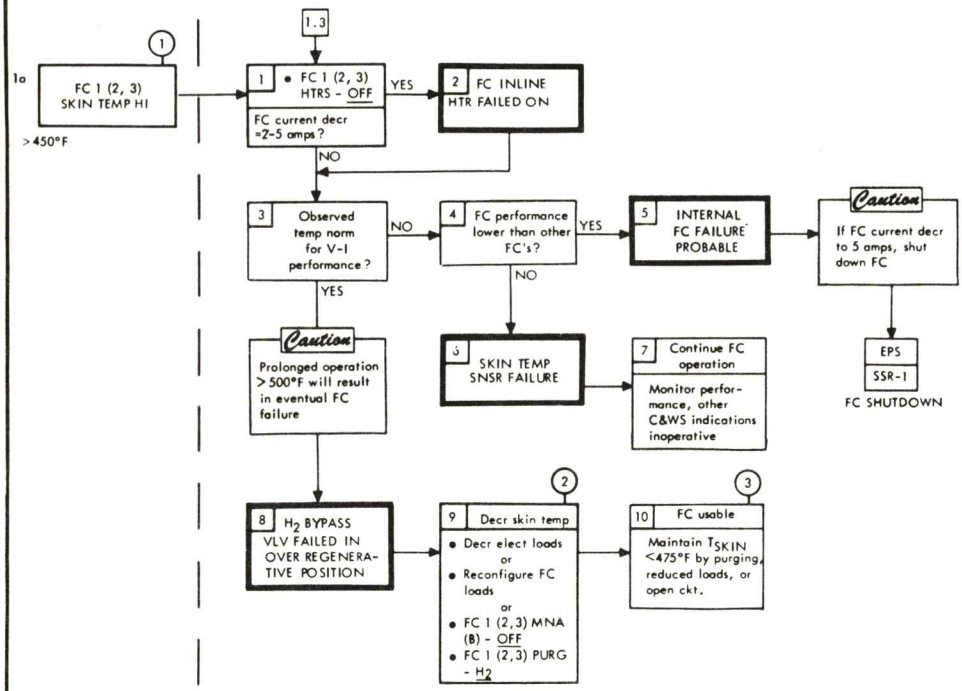

(1) If T_{CE} also abnormal, enter appropriate T_{CE} procedure (1c or 1d).

(2) Open circuit will retain FC residual capacity through FC inline htrs, preventing KOH solidification.

Purging H_2 will tend to reduce FC temp. H_2 purge flow is 0.7 pph.

H_2 purge should be preceded whenever possible by ≈ 20 min of H_2 purge line htr operation. Criticality of operation above 500°F may preclude this operation.

(3) Reactivate inline htr on open circuit F C.

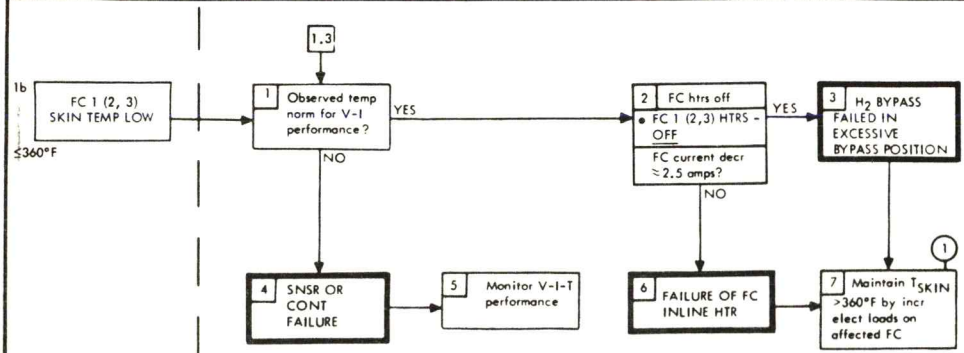

(1) If T_{SKIN} continues to decr, FC operation may continue until ≈330°F with degraded output.

SYMPTOM / PROCEDURE / REMARKS

1c — FC1 (2,3) MOD COND EXH TEMP HI >175°F

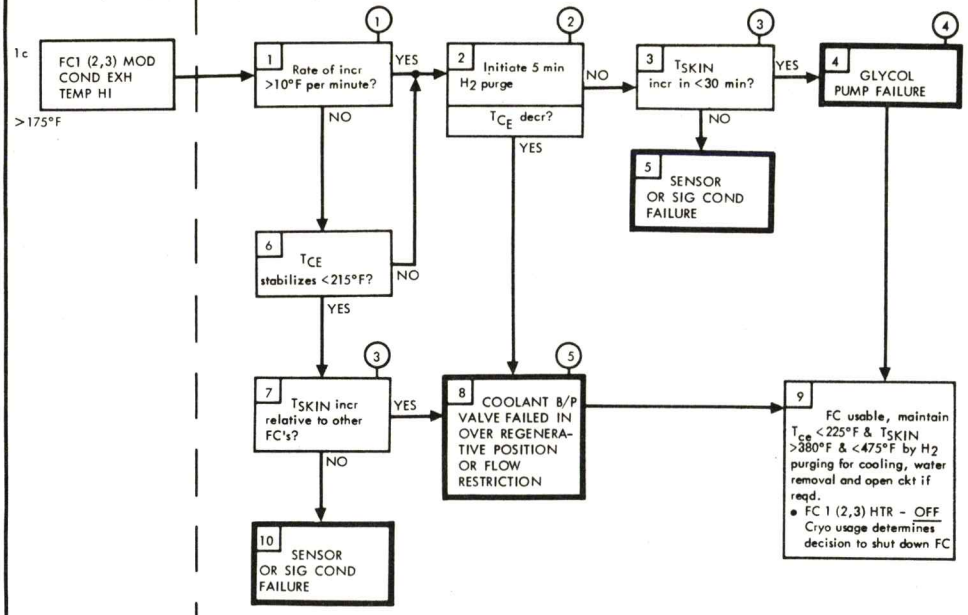

1. Cyclic overheats to 250°F may be tolerated. Use FC purge to prevent steady state T_{ce} from exceeding 225°F.
2. If possible, H_2 PURGE LINE HTR should be ON (up) 20 min prior to purge.
3. FC load changes may affect rates of temperature change.
4. If coolant pump failure is confirmed by MSFN reporting rad in and rad out temps converging, turn FC PUMPS - OFF for affected FC.
5. MSFN can determine if reduced flow condition exists.

1d — FC 1 (2, 3) COND EXH TEMP LOW <150°F

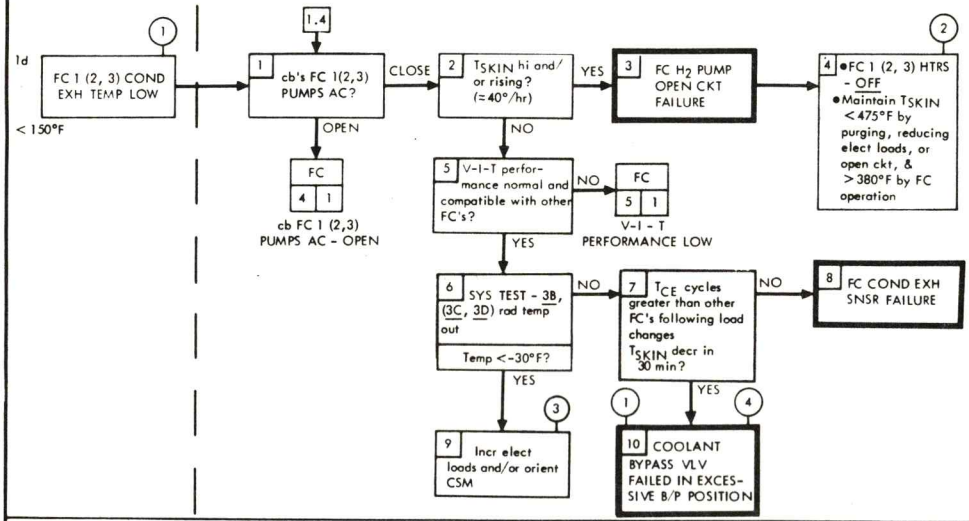

1. Low T_{CE} is no restriction to FC operation if rad out and T_{SKIN} are maintained within limits.
2. If H_2 pump is not running, inline htr will burn out if used. If possible H_2 PURG LINE HTR should be on (up) 20 min prior to purge.
3. Since continuous operation with rad out temp <-30°F may result in rad freezing or high pressure drop and pump stall, consideration may be given to rad bypass. However, this procedure may be an irreversible action.
4. Performance may be improved due to electrolyte dehydration. Voltage should be maintained within limits.

1e — FC 1 (2, 3) RAD TEMP LOW tb - bp <-30°F

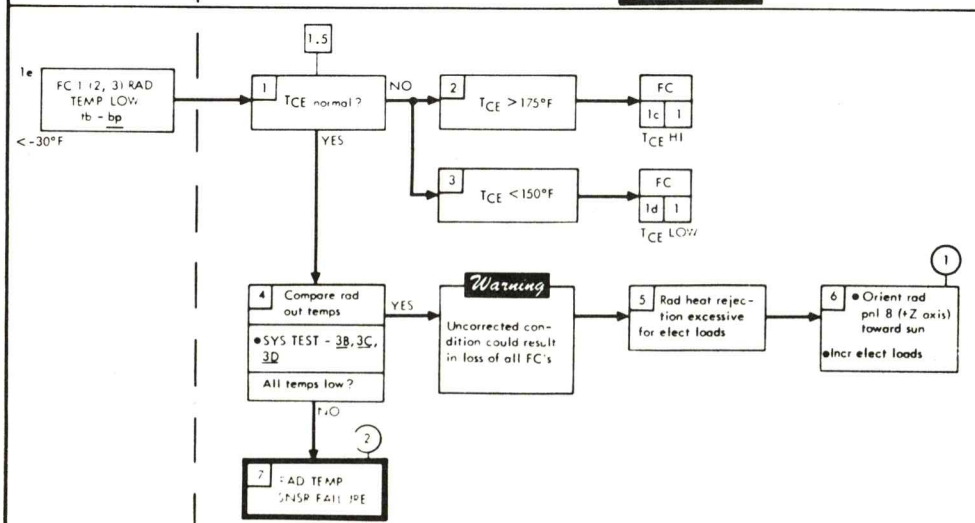

1. Since continuous operation with rad out temp <-30°F may result in rad freezing or high pressure drop and pump stall, consideration may be given to rad bypass. However, this procedure may be an irreversible action.
2. Use other FC rad out temp's for confirmation or MSFN can confirm snsr failure from FC rad inlet temp's.

SYMPTOM	PROCEDURE	REMARKS

FUEL CELL

1f — FC 1 (2, 3) pH HI tb - bp

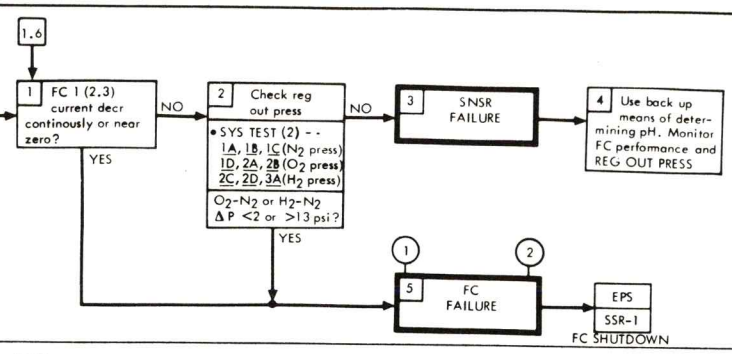

1. **Caution** — Do not purge FC if flooding is suspected. Plugging of common vent line may result.
2. **Warning** — Isolate potable H_2O tk for 60 min to direct contaminated H_2O to waste tk.

1g — FC 1 (2, 3) O_2 (H_2) FLOW HI (1)

O_2 > 0.8 prh
H_2 > 0.1 pph

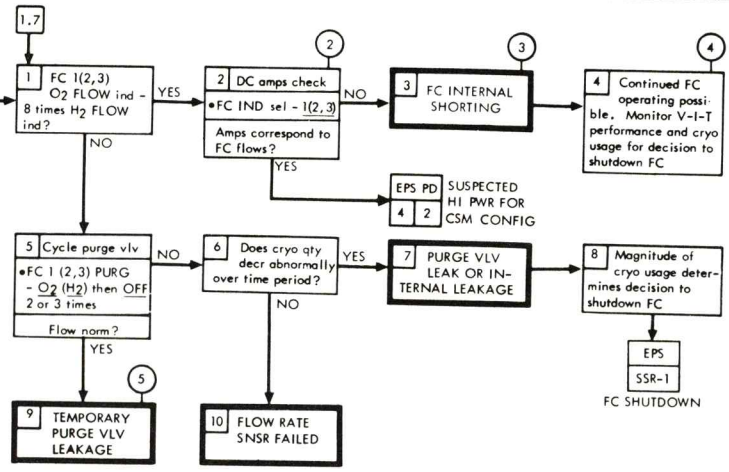

1. H_2 purging will result and O_2 purging may result in FC C&WS alarm.
2. FC O_2 FLOW = $\frac{\text{amps} \times 2}{100}$

   FC H_2 FLOW = $\frac{\text{amps} \times 2.5}{1000}$
3. An accurate magnitude of the internal short can be determined from the reactant flows when the FC is on open ckt.
4. FC reactant conversion efficiency will continue to degrade with time.
5. Future purges may result in high flow.

2 — FC 1 (2, 3) O_2 (H_2) FLOW LOW (1)

O_2 < 0.3 pph
H_2 < 0.04 pph

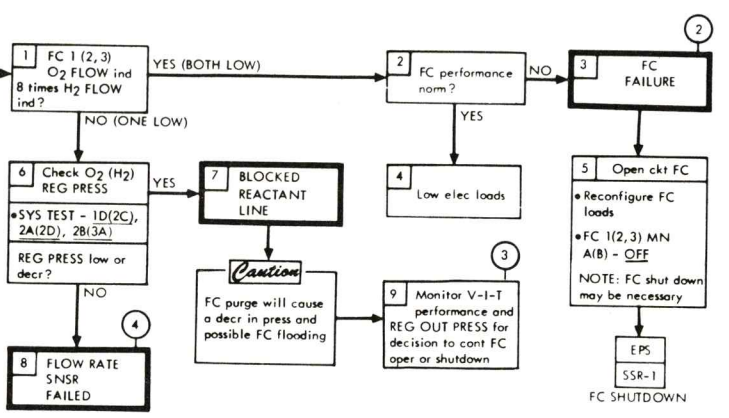

1. FC flow and press instrumentation powered by INST PWR CONT cb's (pnl 276).
2. Flooding is most probable cause. Isolate potable tank to direct possible contaminated H_2O to waste tank until FC condition is positively determined.
3. If reactant ΔP drops to less than 2 psi above N_2, shut down FC to avoid flooding.
4. Other reactant indicator may be used for affected flow indication.

3 — FC REG O_2 (H_2) OUT PRESS HI

>70 psi

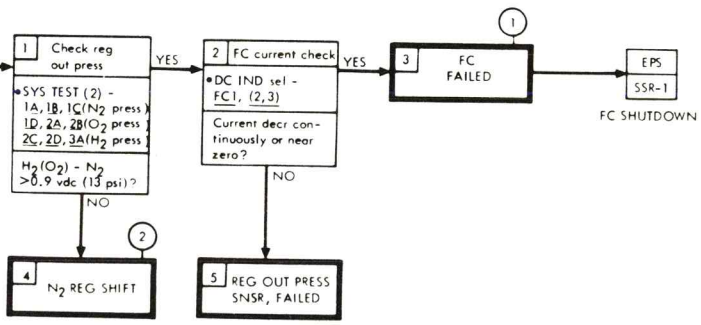

1. pH HI tb may indicate bp. If so, isolate potable H_2O tank for 60 min. to direct contaminated H_2O to waste tank.
2. Failure of N_2 regulator will raise H_2, O_2, and N_2 press but not dangerously. FC should continue to operate at new press with slight performance change. Heat transfer will not be affected by incr in accumulator press.

SYMPTOM	PROCEDURE	REMARKS

FUEL CELL

4 cb FC 1 (2, 3) PUMPS AC - OPEN (1)

1 Attempt reset
- cb FC 1(2,3) PUMPS AC - close
- cb reset?

NO → 2 FC PUMP (H_2 OR GLY) FAILURE (2) → 3 FC usable maintain T_{SKIN} >380°F by FC operation and <475°F by open ckt. Use continuous H_2 purge whenever FC on load for cooling and H_2O removal. (3)
- FC 1(2,3) HTRS - OFF

YES → 4 Continue FC operation
- Transient caused cb to open

5 FC 1 (2, 3) V-I-T PERFORMANCE LOW

1 Compare V-I-T performance of all FC's
- Record V-I-T for each FC
- Compare with V-I-T curves

Performance low on all FC's?

YES → 2 Potable & waste tanks full? (1)

YES → ECS 31a 10
WASTE H_2O OVERBOARD DUMP NOT DRAINING

NO → 3 Purge all FC (2)
- H_2 PURGE LINE HTR - on (up), 20 min prior to purge
- FC 1, 2, 3 PURG - O_2 for 2 min then - OFF
- FC 1, 2, 3 PURG - H_2 for 1 min 20 sec then OFF

Performance improved on all FC's?

YES → 4 Repeat purge
- Continue purging as long as improved performance results

YES → 5 CONTAMINATION IN REACTANTS OR PURGE INEFFICIENCY

NO (1 FC LOW) → 6 Purge 1 FC (2)
- H_2 PURG LINE HTR - on (up) 20 min prior to purge
- FC 1, (2,3) PURG - O_2 for 2 min then - OFF
- FC 1, (2,3) PURG - H_2 for 1 min 20 sec, then OFF

Performance improved?

YES → 7 TEMPORARY DEGRADATION IN FC PERFORMANCE
- 10 Repeat purge: Continue purging as long as improved performance results

NO → 8 DC volt check
- DC IND sel - BAT C

Voltage 34-38V?

YES → 9 DC AMPS IND FAILURE (3)
- 12 Monitor performance by comparing with other FC's. MSFN provides V&I information for V-I-T check

NO → 11 DC VOLTS IND FAILURE

NO → 13 Affected FC current output much lower than other FC's and T_{SKIN} ≈ or lower? (4)

YES → 14 Currents correspond to FC flow? (3)

YES → 15 INTERNAL FC FAILURE
- Caution: If FC current decr to 5 amps, shut down FC
- EPS SSR-L
- FC SHUTODWN

NO → 16 T_{SKIN} SNSR FAILURE

NO → 17 Open ckt affected FC
- FC HTR 1, (2, 3) - OFF
- DC IND SEL - FC 1 (2, 3)
- Open ckt affected FC (momentarily)

FC flow>0?

NO → 18 AMMETER CIRCUITRY SHIFT (5)

YES → 19 INTERNAL FC SHORT (≈FC FLOW)

REMARKS

(1) This condition will result in low T_{CE} and/or high T_{SKIN}.

(2) pH snsr lost since power is common to pumps.

(3) With continuous purge, sustained operation is limited to 1100 watts. H_2 purge flow is 0.7 pph. If possible H_2 PURG LINE HTR should be on (up) 20 min prior to purge.

(1) If both potable & waste H_2O tanks are full, possible freezing of waste H_2O dump line may be cause.

(2) Verify purge flow by incr in reactant flow.

(3) Ammeter accuracy can be verified by FC reactant flow

FC O_2 flow = $\frac{\text{amps} \times 2}{100}$

FC H_2 flow = $\frac{\text{amps} \times 2.5}{1000}$

(4) If only 2 FC's are in operation, both FC's should be tied to both buses for this check. Time must be allowed for T_{SKIN} to stabilize.

(5) Use reactant flow rates to estimate current.

EPS MALFUNCTION

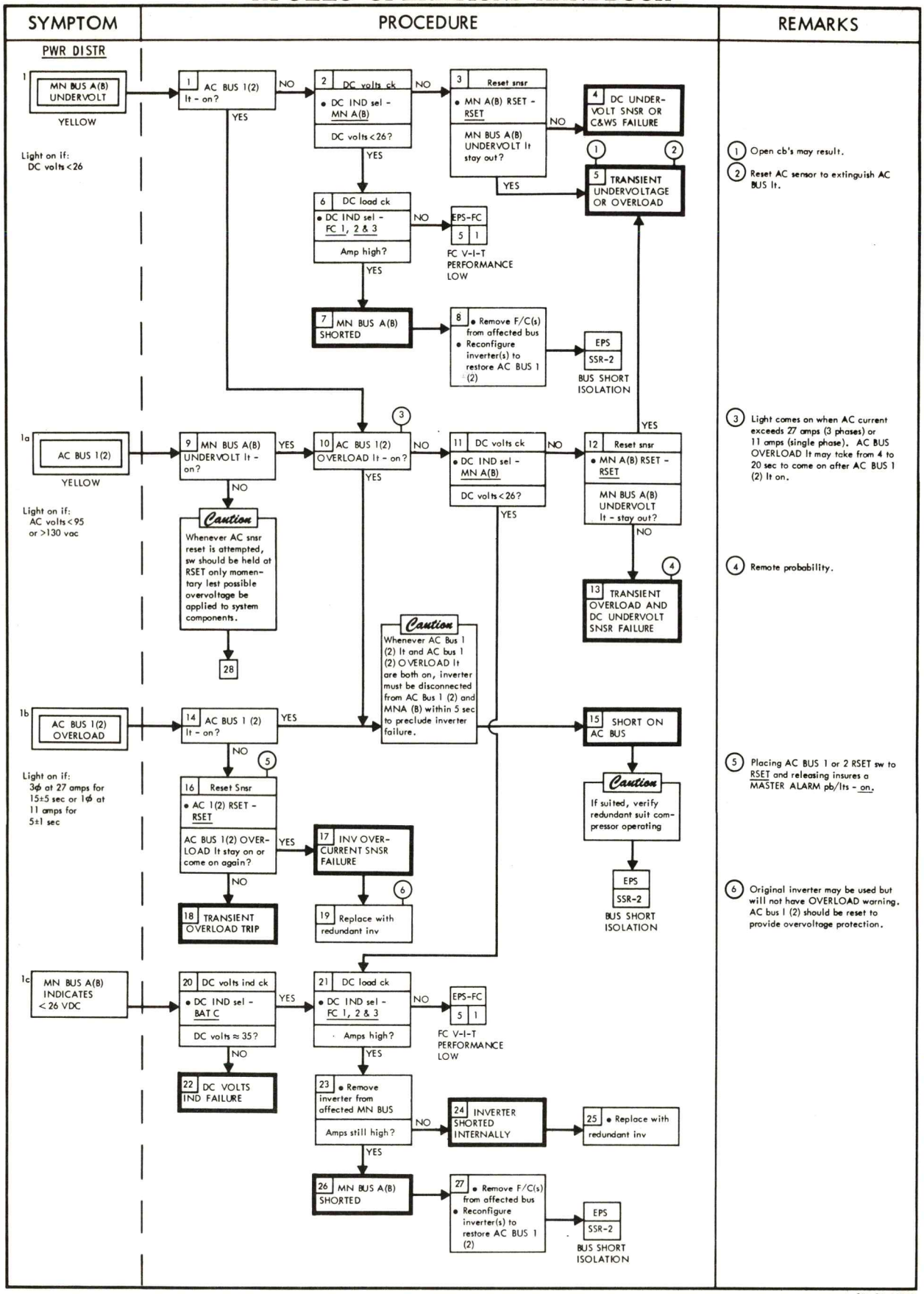
SYMPTOM
PROCEDURE
REMARKS
PWR DISTR
1 MN BUS A(B) UNDERVOLT
YELLOW
Light on if: DC volts < 26
1 AC BUS 1(2) lt - on?
NO
YES
2 DC volts ck
• DC IND sel - MN A(B)
DC volts < 26?
3 Reset snsr
• MN A(B) RSET - RSET
MN BUS A(B) UNDERVOLT lt stay out?
4 DC UNDERVOLT SNSR OR C&WS FAILURE
5 TRANSIENT UNDERVOLTAGE OR OVERLOAD
6 DC load ck
• DC IND sel - FC 1, 2 & 3
Amp high?
EPS-FC 5 1
FC V-I-T PERFORMANCE LOW
7 MN BUS A(B) SHORTED
8 • Remove F/C(s) from affected bus
• Reconfigure inverter(s) to restore AC BUS 1 (2)
EPS SSR-2
BUS SHORT ISOLATION
1a AC BUS 1(2)
YELLOW
Light on if: AC volts < 95 or > 130 vac
9 MN BUS A(B) UNDERVOLT lt - on?
10 AC BUS 1(2) OVERLOAD lt - on?
11 DC volts ck
• DC IND sel - MN A(B)
DC volts < 26?
12 Reset snsr
• MN A(B) RSET - RSET
MN BUS A(B) UNDERVOLT lt - stay out?
13 TRANSIENT OVERLOAD AND DC UNDERVOLT SNSR FAILURE
Caution
Whenever AC snsr reset is attempted, sw should be held at RSET only momentary lest possible overvoltage be applied to system components.
28
Caution
Whenever AC Bus 1 (2) lt and AC bus 1 (2) OVERLOAD lt are both on, inverter must be disconnected from AC Bus 1 (2) and MNA (B) within 5 sec to preclude inverter failure.
1b AC BUS 1(2) OVERLOAD
Light on if: 3ϕ at 27 amps for 15±5 sec or 1ϕ at 11 amps for 5±1 sec
14 AC BUS 1 (2) lt - on?
15 SHORT ON AC BUS
Caution
If suited, verify redundant suit compressor operating
EPS SSR-2
BUS SHORT ISOLATION
16 Reset Snsr
• AC 1(2) RSET - RSET
AC BUS 1(2) OVERLOAD lt stay on or come on again?
17 INV OVERCURRENT SNSR FAILURE
18 TRANSIENT OVERLOAD TRIP
19 Replace with redundant inv
1c MN BUS A(B) INDICATES < 26 VDC
20 DC volts ind ck
• DC IND sel - BAT C
DC volts ≈ 35?
21 DC load ck
• DC IND sel - FC 1, 2 & 3
Amps high?
EPS-FC 5 1
FC V-I-T PERFORMANCE LOW
22 DC VOLTS IND FAILURE
23 • Remove inverter from affected MN BUS
Amps still high?
24 INVERTER SHORTED INTERNALLY
25 • Replace with redundant inv
26 MN BUS A(B) SHORTED
27 • Remove F/C(s) from affected bus
• Reconfigure inverter(s) to restore AC BUS 1 (2)
EPS SSR-2
BUS SHORT ISOLATION
1 Open cb's may result.
2 Reset AC sensor to extinguish AC BUS lt.
3 Light comes on when AC current exceeds 27 amps (3 phases) or 11 amps (single phase). AC BUS OVERLOAD lt may take from 4 to 20 sec to come on after AC BUS 1 (2) lt on.
4 Remote probability.
5 Placing AC BUS 1 or 2 RSET sw to RSET and releasing insures a MASTER ALARM pb/lts - on.
6 Original inverter may be used but will not have OVERLOAD warning. AC bus 1 (2) should be reset to provide overvoltage protection.

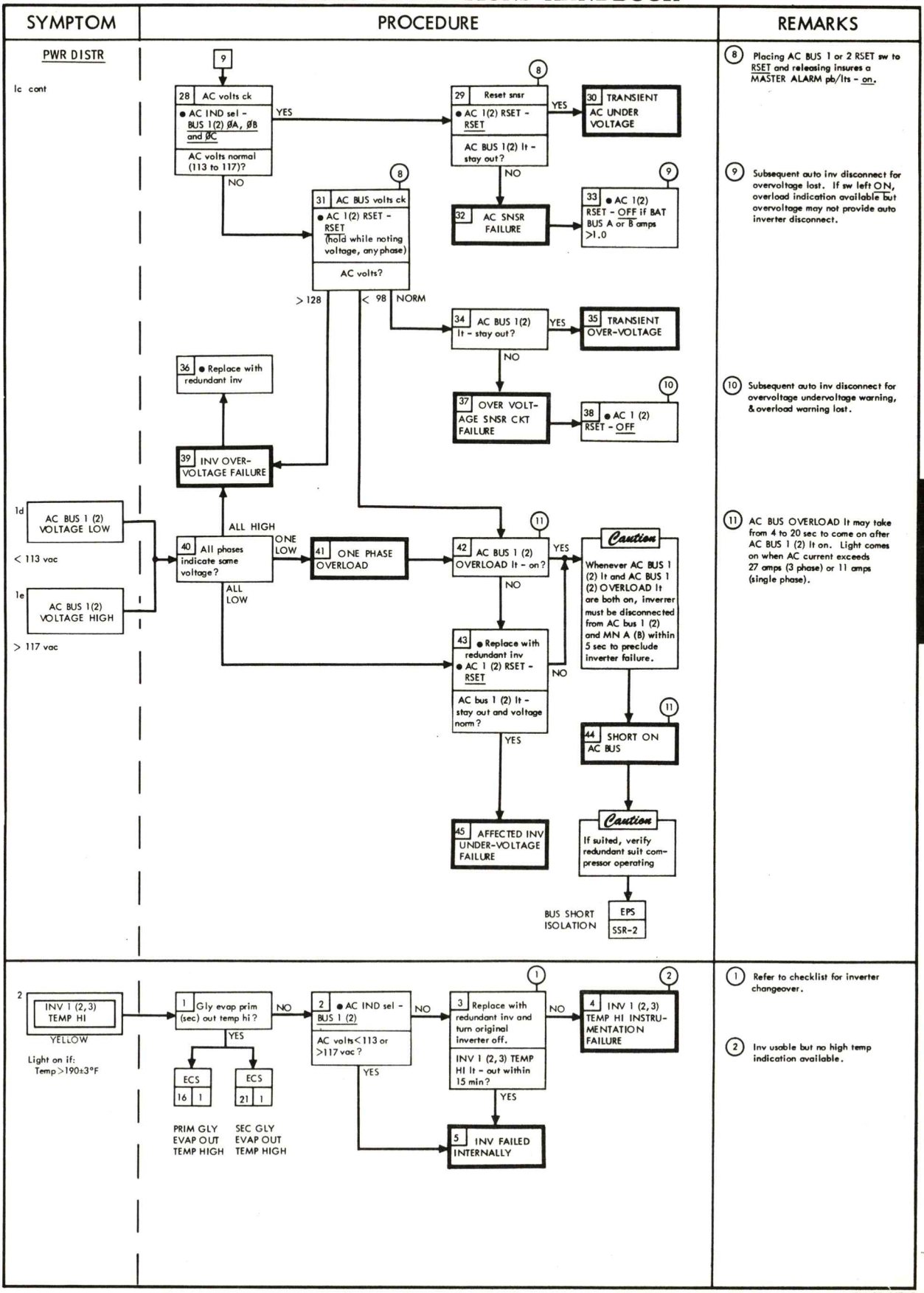
SYMPTOM
PROCEDURE
REMARKS
PWR DISTR
1c cont
9
28 AC volts ck
● AC IND sel - BUS 1(2) ØA, ØB and ØC
AC volts normal (113 to 117)?
YES
NO
8
29 Reset snsr
● AC 1(2) RSET - RSET
AC BUS 1(2) lt - stay out?
YES
30 TRANSIENT AC UNDER VOLTAGE
NO
32 AC SNSR FAILURE
9
33 ● AC 1(2) RSET - OFF if BAT BUS A or B amps >1.0
8
31 AC BUS volts ck
● AC 1(2) RSET - RSET (hold while noting voltage, any phase)
AC volts?
> 128
< 98 NORM
34 AC BUS 1(2) lt - stay out?
YES
35 TRANSIENT OVER-VOLTAGE
NO
37 OVER VOLTAGE SNSR CKT FAILURE
10
38 ● AC 1 (2) RSET - OFF
36 ● Replace with redundant inv
39 INV OVER-VOLTAGE FAILURE
1d
AC BUS 1 (2) VOLTAGE LOW
< 113 vac
1e
AC BUS 1(2) VOLTAGE HIGH
> 117 vac
ALL HIGH
40 All phases indicate same voltage?
ONE LOW
ALL LOW
41 ONE PHASE OVERLOAD
11
42 AC BUS 1 (2) OVERLOAD lt - on?
YES
NO
Caution
Whenever AC BUS 1 (2) lt and AC BUS 1 (2) OVERLOAD lt are both on, inverrer must be disconnected from AC bus 1 (2) and MN A (8) within 5 sec to preclude inverter failure.
43 ● Replace with redundant inv
● AC 1 (2) RSET - RSET
AC bus 1 (2) lt - stay out and voltage norm?
YES
NO
11
44 SHORT ON AC BUS
Caution
If suited, verify redundant suit compressor operating
45 AFFECTED INV UNDER-VOLTAGE FAILURE
BUS SHORT ISOLATION
EPS SSR-2
2
INV 1 (2,3) TEMP HI
YELLOW
Light on if: Temp>190±3°F
1 Gly evap prim (sec) out temp hi?
NO
YES
ECS 16 1
PRIM GLY EVAP OUT TEMP HIGH
ECS 21 1
SEC GLY EVAP OUT TEMP HIGH
2 ● AC IND sel - BUS 1 (2)
AC volts<113 or >117 vac?
NO
YES
1
3 Replace with redundant inv and turn original inverter off.
INV 1 (2, 3) TEMP HI lt - out within 15 min?
NO
YES
2
4 INV 1 (2,3) TEMP HI INSTRUMENTATION FAILURE
5 INV FAILED INTERNALLY
8 Placing AC BUS 1 or 2 RSET sw to RSET and releasing insures a MASTER ALARM pb/lts - on.
9 Subsequent auto inv disconnect for overvoltage lost. If sw left ON, overload indication available but overvoltage may not provide auto inverter disconnect.
10 Subsequent auto inv disconnect for overvoltage undervoltage warning, & overload warning lost.
11 AC BUS OVERLOAD lt may take from 4 to 20 sec to come on after AC BUS 1 (2) lt on. Light comes on when AC current exceeds 27 amps (3 phase) or 11 amps (single phase).
1 Refer to checklist for inverter changeover.
2 Inv usable but no high temp indication available.

SYMPTOM	PROCEDURE	REMARKS

PWR DISTR

3 FC BUS DISCONNECT

YELLOW

Light on if:

Overload >75 amps
Reverse current > 4 amps

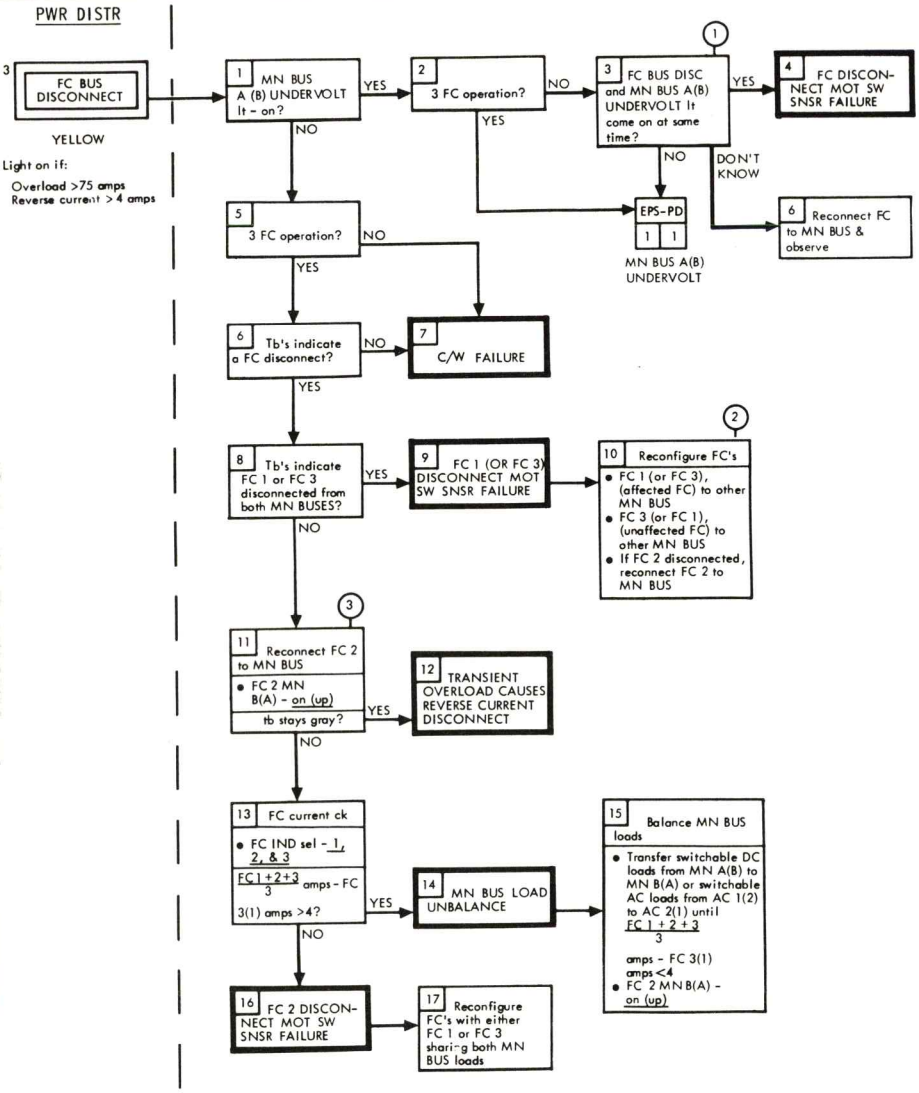

(1) During actual overloads, the MN BUS UNDERVOLT lt may be on for as long as 20 sec before the FC BUS DISC lt.

(2) A disconnect of the shared FC may occur if a load unbalance exists.

(3) Assumes 3 FC operation normally configured to MN BUSES. Alter procedure accordingly if FC 2 is not the shared FC.

4 SUSPECTED HI CURRENT FOR CSM CONFIG

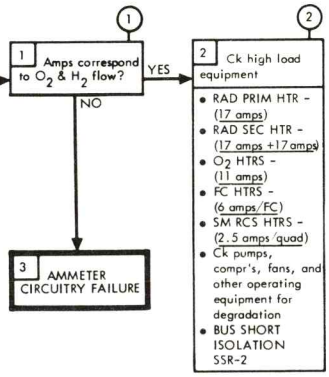

(1) O_2 FLOW $\approx \frac{\text{amps} \times 2}{100}$

H_2 FLOW $\approx \frac{\text{amps} \times 2.5}{1000}$

(2) a. ECS rad htrs operate:

RAD PRIM OUT TEMP <-15°F

RAD SEC OUT TEMP < +45°F

b. Cryo htrs & fans operate:

O_2 < 865 psia

H_2 < 225 psia

c. FC htrs operate:

T_{SKIN} < 380°F

d. SM RCS htrs operate at pkg temp:

PRIM < 115°F

SEC < 115°F

SYMPTOM	PROCEDURE	REMARKS
PWR DISTR	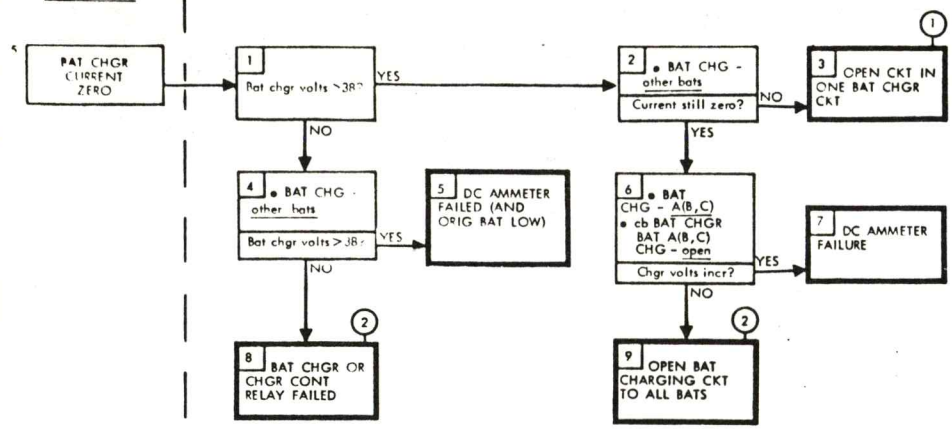	(1) Affected battery might still be charged throught BAT TIE cb's (2) Battery charging capability lost.
A	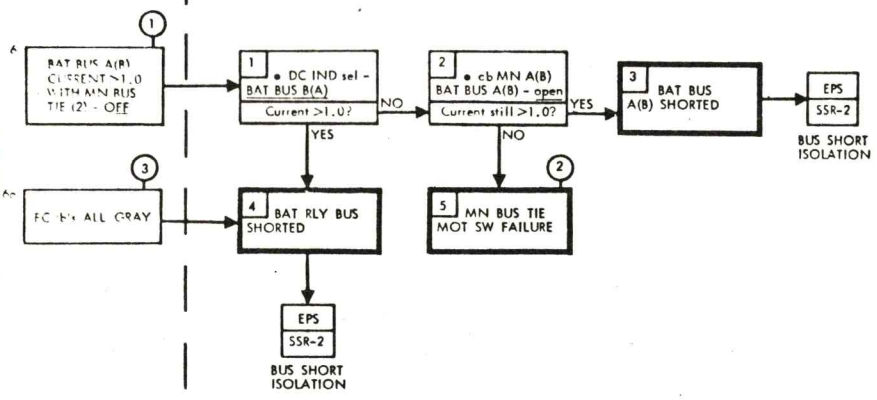	(1) Bat bus current will be <1.0 amps for all mission phases except: a. Prelaunch (<3.0 amps) b. Boost & insertion c. ΔV maneuvers d. Deorbit & entry. (2) If a, b & c batts on MN buses, cycling MN bus tie switches may correct the problem. If not, MN bus tie will have to be accomplished by cb action. May have to change battery through other battery bus. (3) Not valid after CM/SM separation.
7	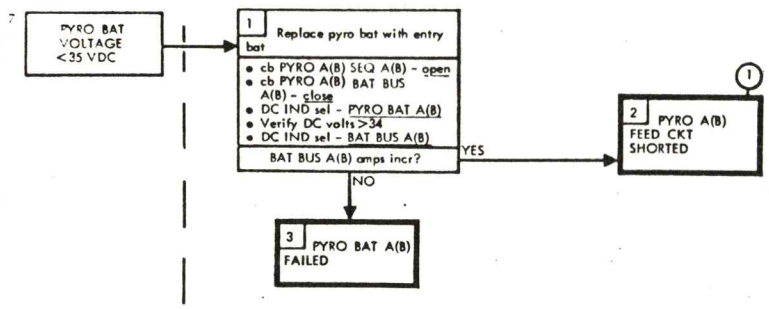	(1) It is crew option to leave a main battery connected to a known short to retain redundant pyro circuit capability. If dc amps >30, expect cb PYRO A(B) BAT BUS A(B) to open within 1 to 5 min and loss of redundant pyro circuit.
SPECIAL SUB ROUTINE SSR-1	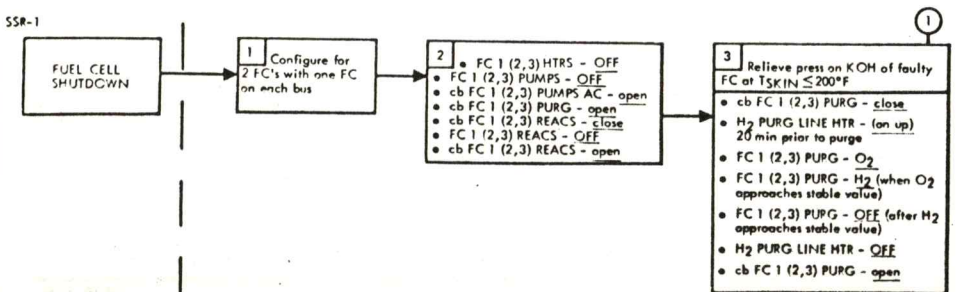	(1) FC will not reach T_{SKIN} - 200°F for approximately 24 hours. KOH will be solidified at $T_{SKIN} \leq 200°F$. The press is relieved to reduce the possibility of corrosive fluid leaking into the SM and to insure sealing of the check vlv, isolating the potable water from the FC.

SPECIAL SUB ROUTINE — SSR-2

PROCEDURE

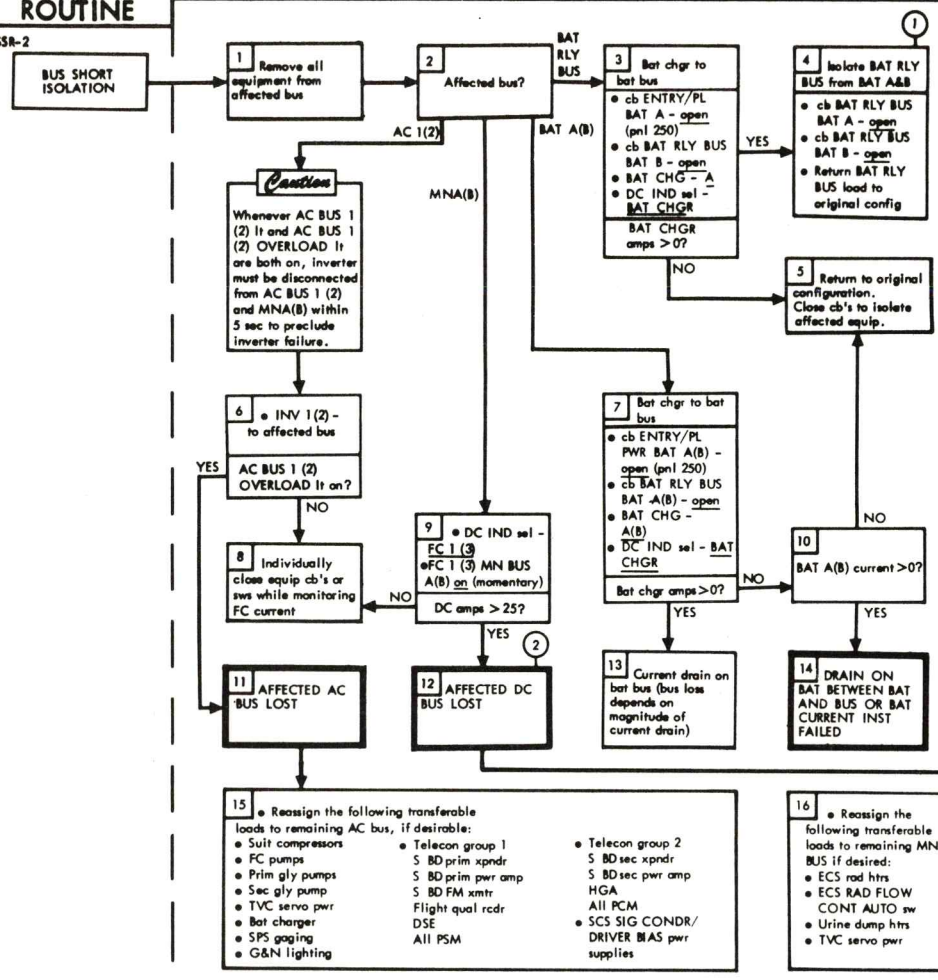

REMARKS

(1) If short circuit amps < 2.0, it is a crew option to maintain Bat relay bus powered to retain AC Bus sensors and FC overcurrent/reverse current protection functions. Increased battery recharge cycle may be required. If short circuit > 2.0 amps, close Bat relay bat A or bat B cb's only when required to operate equipment connected to Bat relay bus.

(2) Place two batteries on remaining bus for SPS maneuvers.

Bus Failure Effects - non transferable loads

Main DC BUS A

SCS FDAI No. 1 Total Attitude
- PITCH & ROLL Outputs of GDC
- BMAG No. 1 Htrs & TEMP It
- 1/2 DIRECT authority from RHC No. 1
- DIRECT ULLAGE Jets A4, & C3
- COAS - LH
- ROLL to YAW Cross Coupling for FDAI No. 1

RCS Transfer - SM/CM (CM 1 Auto & Man)
- PROP ISO vlvs (SM B&D, CM 1)
- SM RCS Htrs - Prim & Sec (SM B&D)
- CM RCS Htrs - CM 1
- CM 1 RCS Purge
- Interconnect Oxidizer
- Fuel He interconnect

SPS Gaging Pri
- Ball vlv - A
- Htrs - A

ECS CO_2 SNSR
- H_2O Accum No. 1 (Auto & Man)
- RAD PROP vlv - Sys 1
- RAD HTRS PRI 2
- RAD HTRS SEC
- Stm Duct & Urine Dump Line Htr SYS A
- RAD OUT SEC ind - RAD IN PRI & SEC ind
- Waste H_2O Dump Line Htr SYS A

EPS Inverter No. 1 Power
- CRYO tks 1 (H_2&O_2) Htrs

Main DC BUS B

SCS FDAI No. 2 Total Attitude
- GDC output to FDAI
- BMAG No. 2 Htrs & TEMP It
- 1/2 DIRECT authority from RHC No. 2
- ORDEAL
- DIRECT ULLAGE Jets B3 & D4
- COAS - RH
- SCS Min Imp to 42 ms
- Roll to YAW Cross Coupling to RSI

RCS Transfer - SM/CM (CM 2 Auto & Man)
- PROP ISO vlvs (SM A & C, CM 2)
- SM RCS Htrs - Prim & Sec (SM A & C)
- CM RCS Htrs - CM 2
- CM 2 Purge
- Interconnect Fuel
- Oxidizer He interconnect

SPS Gaging aux
- Ball vlv - B
- Htrs - B

ECS H_2O Accum No. 2 (Auto & Man)
- O_2 Flow warning It
- RAD PROP vlv - SYS 2
- RAD HTRS PRI 1
- Stm Duct & Urine Dump Line Htr SYS B
- Waste H_2O Dump Line Htr SYS B

EPS Inverter No. 2 Power
- CRYO tks 2 (H_2&O_2) Htrs
- Portable Floodlight

AC BUS 1

SCS FDAI No. 1
- SII FUEL/SIVB OXID/PITCH GPI 1
- SIVB FUEL/YAW GPI 1
- GDC Ref voltage
- SCS RATE CMD
- SCS MIN IMPULSE
- BMAG No. 1
- SCS Analog T/M
- RHC No. 1 for MTVC
- Integral lighting

ECS CABIN FAN No. 1
- Suit Heat ex Glycol Bypass vlv
- Back Press vlv Pri (man)
- Sec EVAP Temp Cont
- RAD PROP vlv - SYS 1
- Sec 240 cont

EPS CRYO tks 1 (H_2&O_2)
- Qty and Temp ind
- Fans

Battery BUS A

- SPS Pri Gmbl Control
- SECS & ELS Logic Seq A
- Upright Sys Comp No. 1
- RCS CHAN A Enable (if prior to SIVB sep)

Float Bag No. 1
- Main Bus Tie BAT A/C
- RCS Trnfr CM1 AUTO

AC BUS 2

SCS FDAI No. 2
- SII FUEL/SIVB OXID PITCH GPI 2
- SIVB FUEL/YAW GPI 2
- RSI
- GDC REF voltage
- Man Prop Attitude Control
- MTVC
- BMAG No. 2
- ORDEAL

ECS Cabin Temp Control
- Cabin Fan No. 2
- 2.40 Control Pri
- RAD PROP vlv - SYS 2

EPS CRYO tks 2 (H_2&O_2)
- Qty & Temp ind
- Fans

Battery BUS B

- Float Bag No. 2
- SPS AUX Gmbl Control
- SECS & ELS Logic Seq B
- Uprighting Sys Comp No. 2
- RCS CHAN B Enable (if prior to SIVB sep)
- Main BUS Tie BAT B/C
- RCS Tmfr CM2 AUTO

Battery Relay BUS

- FC Rad control
- FC Reactant Shutoff vlv
- FC to Bus Control
- DC Voltage Sensing
- AC Voltage Sensing
- Inv Control

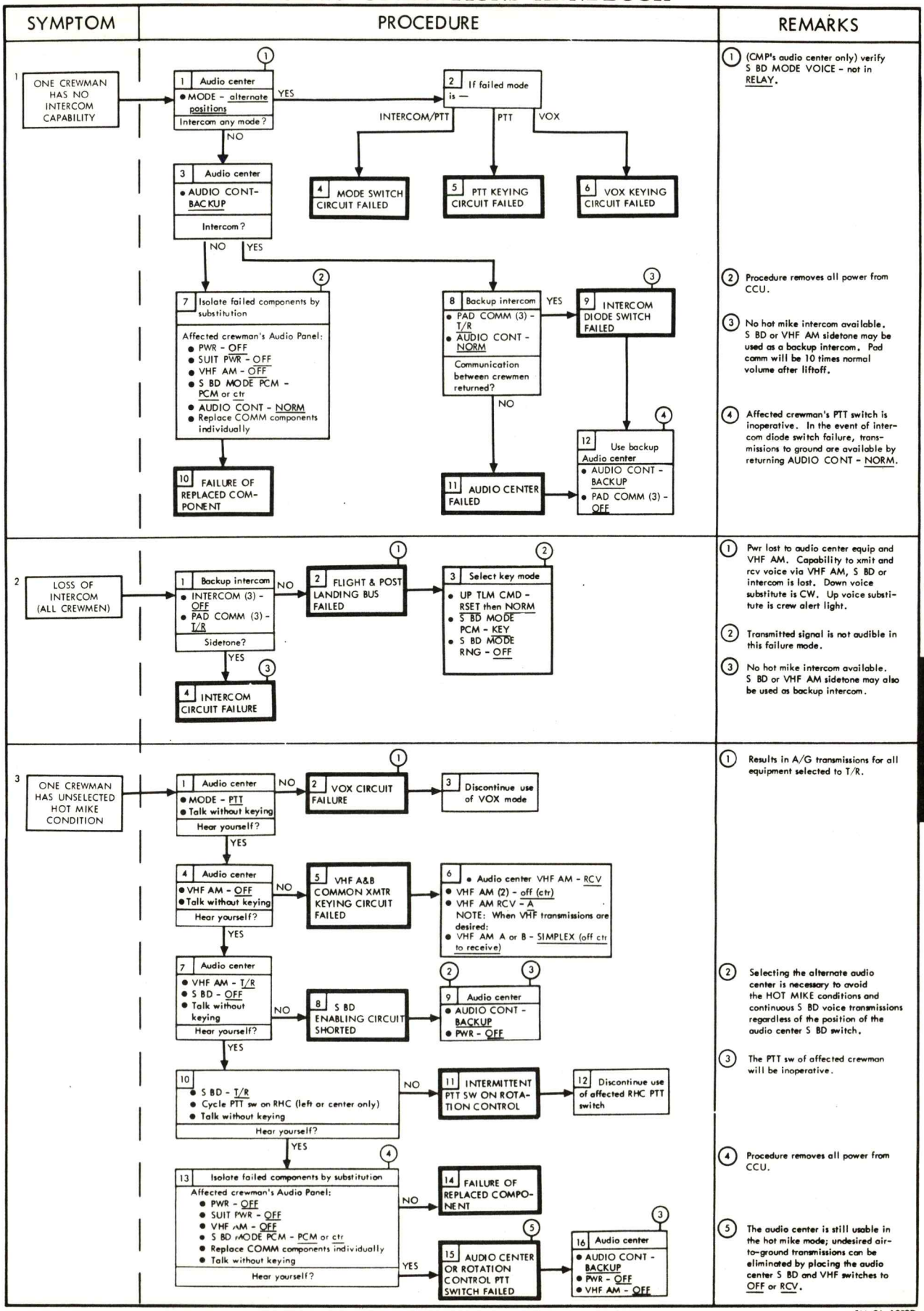

T C MALFUNCTION

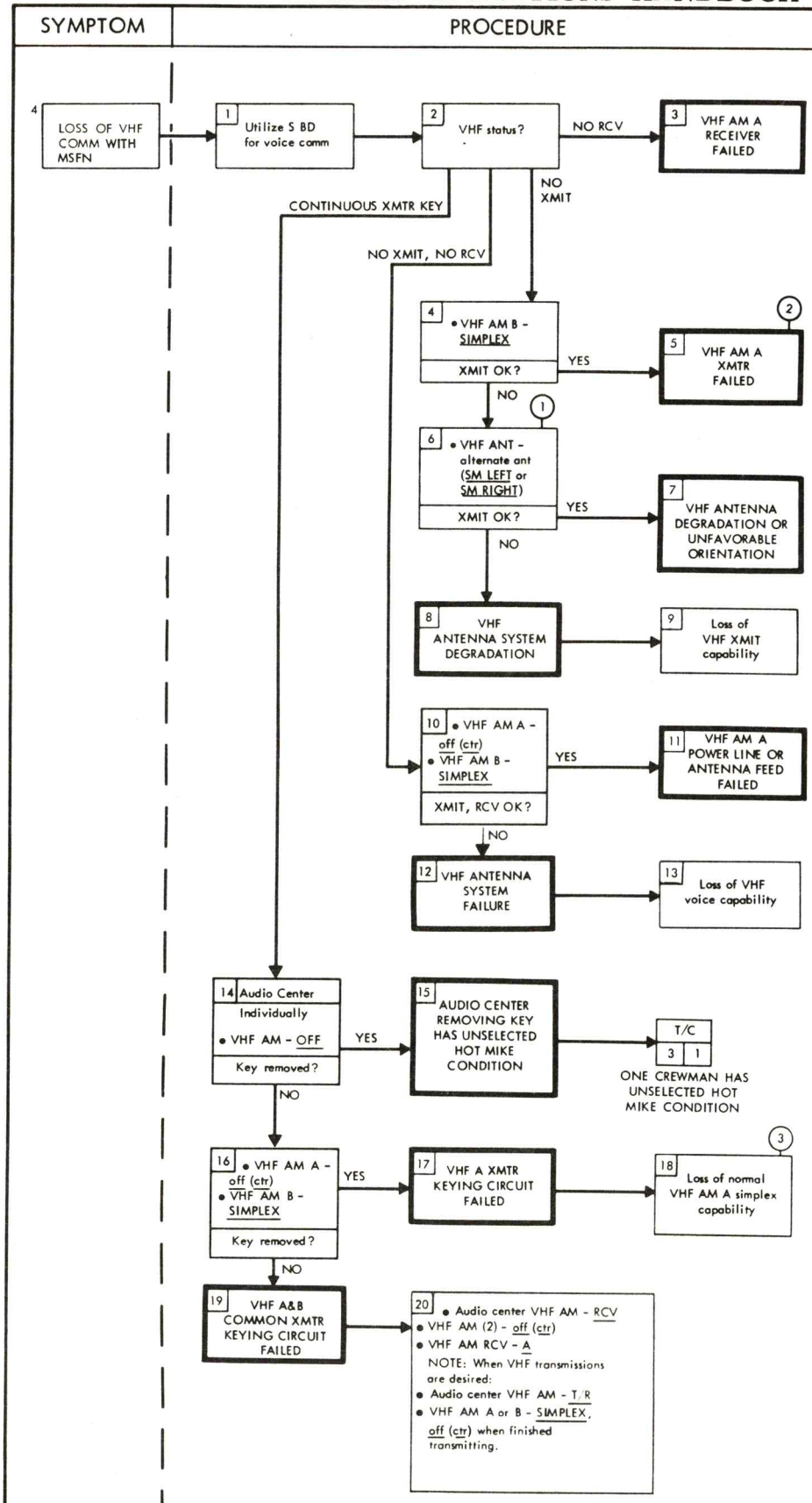
SYMPTOM
PROCEDURE
REMARKS
4 LOSS OF VHF COMM WITH MSFN
1 Utilize S BD for voice comm
2 VHF status?
NO RCV
3 VHF AM A RECEIVER FAILED
CONTINUOUS XMTR KEY
NO XMIT
NO XMIT, NO RCV
4 • VHF AM B - SIMPLEX
XMIT OK?
YES
5 VHF AM A XMTR FAILED
NO
6 • VHF ANT - alternate ant (SM LEFT or SM RIGHT)
XMIT OK?
YES
7 VHF ANTENNA DEGRADATION OR UNFAVORABLE ORIENTATION
NO
8 VHF ANTENNA SYSTEM DEGRADATION
9 Loss of VHF XMIT capability
10 • VHF AM A - off (ctr)
• VHF AM B - SIMPLEX
XMIT, RCV OK?
YES
11 VHF AM A POWER LINE OR ANTENNA FEED FAILED
NO
12 VHF ANTENNA SYSTEM FAILURE
13 Loss of VHF voice capability
14 Audio Center Individually
• VHF AM - OFF
Key removed?
YES
15 AUDIO CENTER REMOVING KEY HAS UNSELECTED HOT MIKE CONDITION
T/C 3 1
ONE CREWMAN HAS UNSELECTED HOT MIKE CONDITION
NO
16 • VHF AM A - off (ctr)
• VHF AM B - SIMPLEX
Key removed?
YES
17 VHF A XMTR KEYING CIRCUIT FAILED
18 Loss of normal VHF AM A simplex capability
NO
19 VHF A&B COMMON XMTR KEYING CIRCUIT FAILED
20 • Audio center VHF AM - RCV
• VHF AM (2) - off (ctr)
• VHF AM RCV - A
NOTE: When VHF transmissions are desired:
• Audio center VHF AM - T/R
• VHF AM A or B - SIMPLEX, off (ctr) when finished transmitting.
1 When operating with MSFN, uplink circuit margin is greater than down- link circuit margin. Antenna system degradation can therefore disable transmission while allowing reception.
2 Duplex B is available.
3 Simplex operation of VHF AM A may be restored by placing VHF AM A - off (ctr) and VHF AM - A. Transmission is accomplished by placing VHF AM A - SIMPLEX, off (ctr) when finished transmitting.

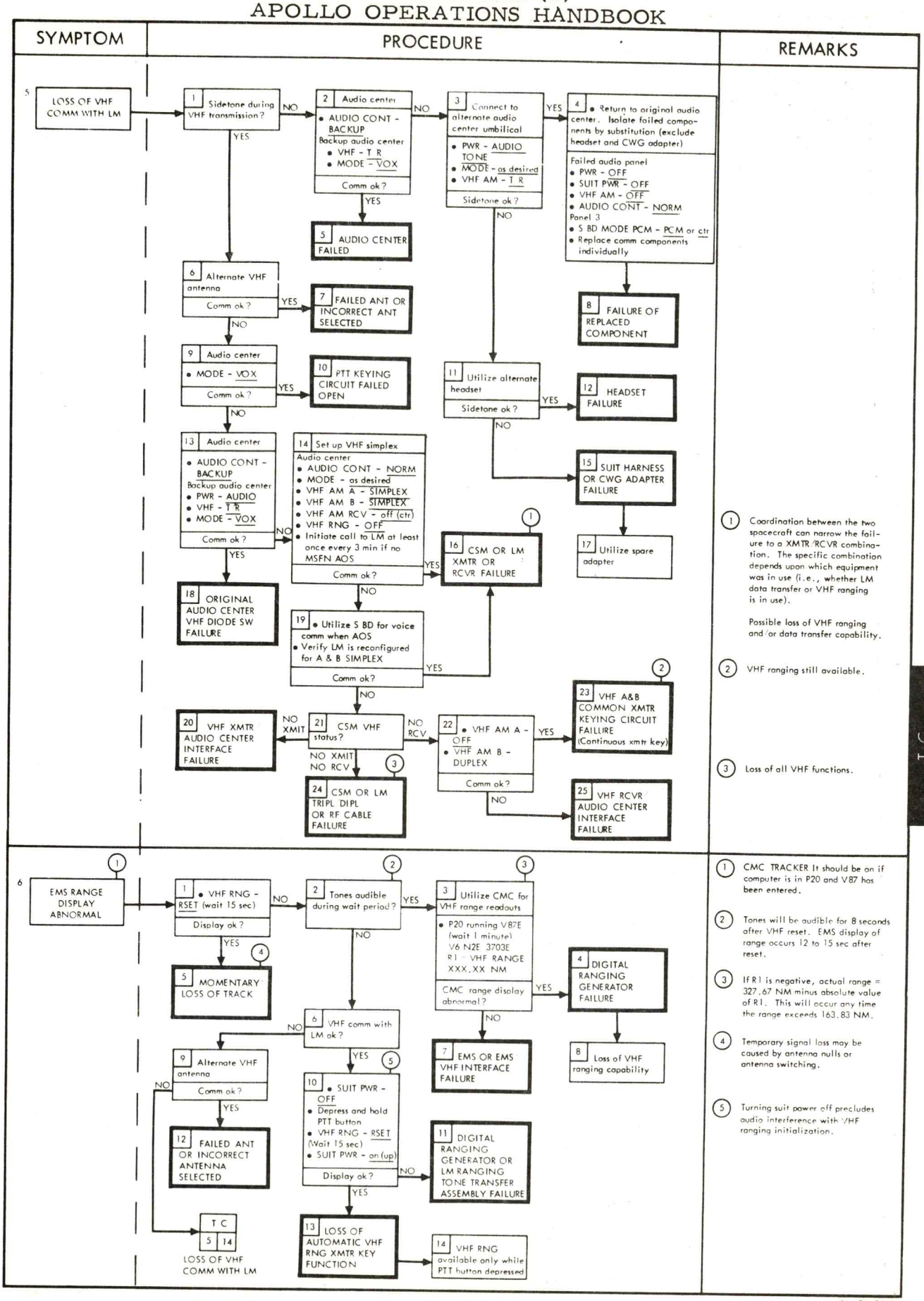
SYMPTOM
PROCEDURE
REMARKS
5 LOSS OF VHF COMM WITH LM
1 Sidetone during VHF transmission?
NO
YES
2 Audio center
• AUDIO CONT - BACKUP
Backup audio center
• VHF - T R
• MODE - VOX
Comm ok?
NO
YES
5 AUDIO CENTER FAILED
3 Connect to alternate audio center umbilical
• PWR - AUDIO TONE
• MODE - as desired
• VHF AM - T R
Sidetone ok?
YES
NO
4 • Return to original audio center. Isolate failed components by substitution (exclude headset and CWG adapter)
Failed audio panel
• PWR - OFF
• SUIT PWR - OFF
• VHF AM - OFF
• AUDIO CONT - NORM
Panel 3
• S BD MODE PCM - PCM or ctr
• Replace comm components individually
8 FAILURE OF REPLACED COMPONENT
6 Alternate VHF antenna
Comm ok?
YES
NO
7 FAILED ANT OR INCORRECT ANT SELECTED
9 Audio center
• MODE - VOX
Comm ok?
YES
NO
10 PTT KEYING CIRCUIT FAILED OPEN
11 Utilize alternate headset
Sidetone ok?
YES
NO
12 HEADSET FAILURE
15 SUIT HARNESS OR CWG ADAPTER FAILURE
17 Utilize spare adapter
13 Audio center
• AUDIO CONT - BACKUP
Backup audio center
• PWR - AUDIO
• VHF - T R
• MODE - VOX
Comm ok?
NO
YES
14 Set up VHF simplex
Audio center
• AUDIO CONT - NORM
• MODE - as desired
• VHF AM A - SIMPLEX
• VHF AM B - SIMPLEX
• VHF AM RCV - off (ctr)
• VHF RNG - OFF
• Initiate call to LM at least once every 3 min if no MSFN AOS
Comm ok?
YES
NO
1
16 CSM OR LM XMTR OR RCVR FAILURE
18 ORIGINAL AUDIO CENTER VHF DIODE SW FAILURE
19 • Utilize S BD for voice comm when AOS
• Verify LM is reconfigured for A & B SIMPLEX
Comm ok?
YES
NO
2
23 VHF A&B COMMON XMTR KEYING CIRCUIT FAILURE (Continuous xmtr key)
20 VHF XMTR AUDIO CENTER INTERFACE FAILURE
NO XMIT
21 CSM VHF status?
NO RCV
NO XMIT NO RCV
3
24 CSM OR LM TRIPL DIPL OR RF CABLE FAILURE
22 • VHF AM A - OFF
• VHF AM B - DUPLEX
Comm ok?
YES
NO
25 VHF RCVR AUDIO CENTER INTERFACE FAILURE
1 Coordination between the two spacecraft can narrow the failure to a XMTR/RCVR combination. The specific combination depends upon which equipment was in use (i.e., whether LM data transfer or VHF ranging is in use).
Possible loss of VHF ranging and/or data transfer capability.
2 VHF ranging still available.
3 Loss of all VHF functions.
T C MALFUNCTION
6 EMS RANGE DISPLAY ABNORMAL
1
1 • VHF RNG - RSET (wait 15 sec)
Display ok?
NO
YES
4
5 MOMENTARY LOSS OF TRACK
2 Tones audible during wait period?
2
NO
YES
6 VHF comm with LM ok?
NO
YES
5
9 Alternate VHF antenna
Comm ok?
NO
YES
12 FAILED ANT OR INCORRECT ANTENNA SELECTED
T C 5 14
LOSS OF VHF COMM WITH LM
10 • SUIT PWR - OFF
• Depress and hold PTT button
• VHF RNG - RSET (Wait 15 sec)
• SUIT PWR - on (up)
Display ok?
NO
YES
11 DIGITAL RANGING GENERATOR OR LM RANGING TONE TRANSFER ASSEMBLY FAILURE
13 LOSS OF AUTOMATIC VHF RNG XMTR KEY FUNCTION
14 VHF RNG available only while PTT button depressed
3 Utilize CMC for VHF range readouts
• P20 running V87E (wait 1 minute) V6 N2E 3703E R1 = VHF RANGE XXX.XX NM
CMC range display abnormal?
YES
NO
4 DIGITAL RANGING GENERATOR FAILURE
8 Loss of VHF ranging capability
7 EMS OR EMS VHF INTERFACE FAILURE
1 CMC TRACKER It should be on if computer is in P20 and V87 has been entered.
2 Tones will be audible for 8 seconds after VHF reset. EMS display of range occurs 12 to 15 sec after reset.
3 If R1 is negative, actual range = 327.67 NM minus absolute value of R1. This will occur any time the range exceeds 163.83 NM.
4 Temporary signal loss may be caused by antenna nulls or antenna switching.
5 Turning suit power off precludes audio interference with VHF ranging initialization.

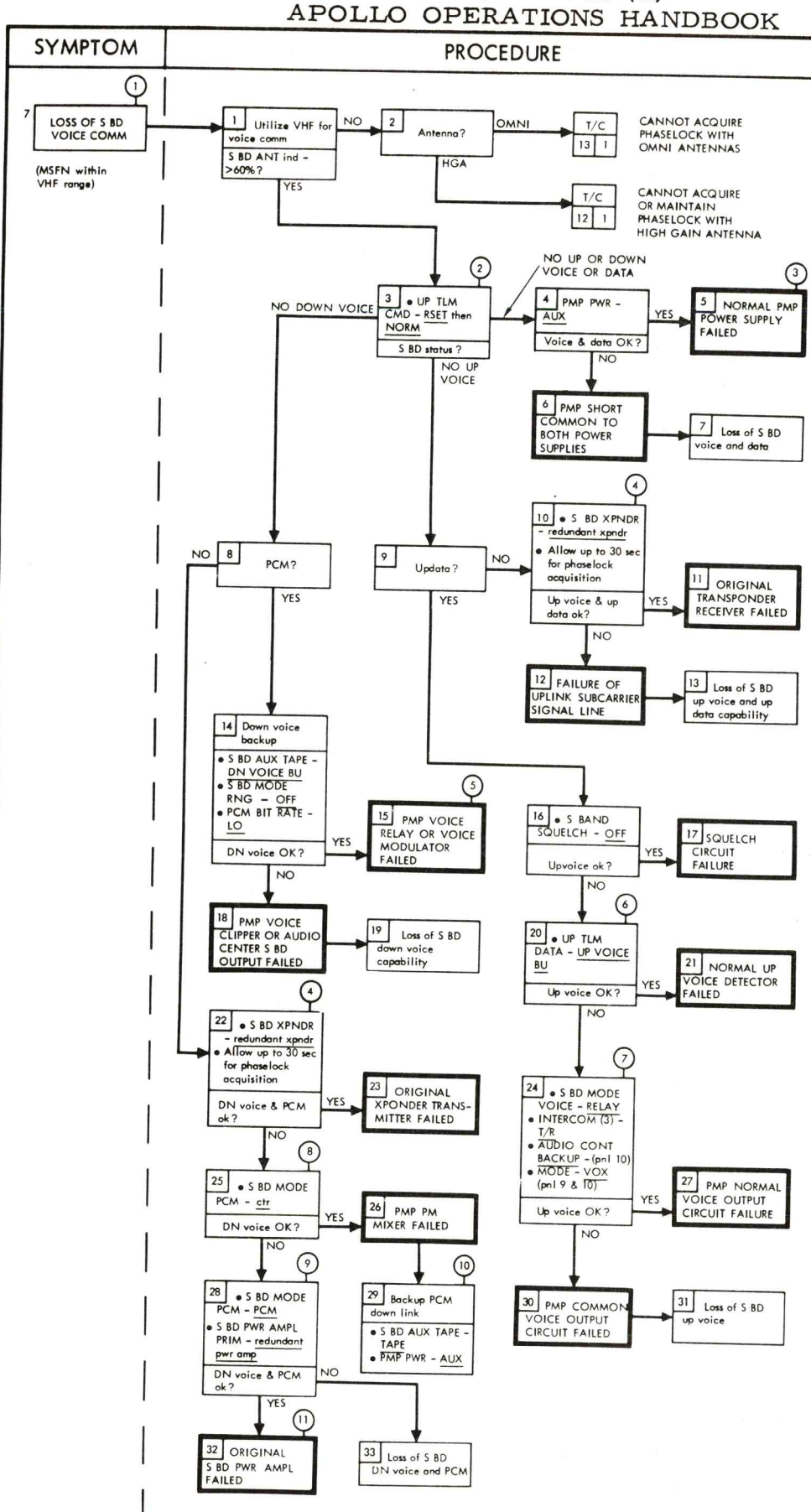
SYMPTOM
PROCEDURE
REMARKS
7 LOSS OF S BD VOICE COMM
(MSFN within VHF range)
1 Utilize VHF for voice comm
S BD ANT ind - >60%?
NO
YES
2 Antenna?
OMNI
HGA
T/C 13 1
CANNOT ACQUIRE PHASELOCK WITH OMNI ANTENNAS
T/C 12 1
CANNOT ACQUIRE OR MAINTAIN PHASELOCK WITH HIGH GAIN ANTENNA
NO UP OR DOWN VOICE OR DATA
NO DOWN VOICE
3 • UP TLM CMD - RSET then NORM
S BD status ?
NO UP VOICE
4 PMP PWR - AUX
Voice & data OK?
YES
NO
5 NORMAL PMP POWER SUPPLY FAILED
6 PMP SHORT COMMON TO BOTH POWER SUPPLIES
7 Loss of S BD voice and data
8 PCM?
NO
YES
9 Updata?
NO
YES
10 • S BD XPNDR - redundant xpndr
• Allow up to 30 sec for phaselock acquisition
Up voice & up data ok?
YES
NO
11 ORIGINAL TRANSPONDER RECEIVER FAILED
12 FAILURE OF UPLINK SUBCARRIER SIGNAL LINE
13 Loss of S BD up voice and up data capability
14 Down voice backup
• S BD AUX TAPE - DN VOICE BU
• S BD MODE RNG - OFF
• PCM BIT RATE - LO
DN voice OK?
YES
NO
15 PMP VOICE RELAY OR VOICE MODULATOR FAILED
16 • S BAND SQUELCH - OFF
Upvoice ok?
YES
NO
17 SQUELCH CIRCUIT FAILURE
18 PMP VOICE CLIPPER OR AUDIO CENTER S BD OUTPUT FAILED
19 Loss of S BD down voice capability
20 • UP TLM DATA - UP VOICE BU
Up voice OK?
YES
NO
21 NORMAL UP VOICE DETECTOR FAILED
22 • S BD XPNDR - redundant xpndr
• Allow up to 30 sec for phaselock acquisition
DN voice & PCM ok?
YES
NO
23 ORIGINAL XPONDER TRANSMITTER FAILED
24 • S BD MODE VOICE - RELAY
• INTERCOM (3) - T/R
• AUDIO CONT BACKUP - (pnl 10)
• MODE - VOX (pnl 9 & 10)
Up voice OK?
YES
NO
27 PMP NORMAL VOICE OUTPUT CIRCUIT FAILURE
25 • S BD MODE PCM - ctr
DN voice OK?
YES
NO
26 PMP PM MIXER FAILED
28 • S BD MODE PCM - PCM
• S BD PWR AMPL PRIM - redundant pwr amp
DN voice & PCM ok?
NO
YES
29 Backup PCM down link
• S BD AUX TAPE - TAPE
• PMP PWR - AUX
30 PMP COMMON VOICE OUTPUT CIRCUIT FAILED
31 Loss of S BD up voice
32 ORIGINAL S BD PWR AMPL FAILED
33 Loss of S BD DN voice and PCM
(1) Loss or near loss of upvoice is indicated by S BD ant ind <60% (approx), and noise in headset if S BD SQUELCH - OFF. Loss of normal downvoice should be anticipated if S BD ant ind 80% (approx).
(2) Notify MSFN of UP TLM reset action.
(3) The capability is lost to transmit recorded PCM.
(4) When S BD XPNDR - redundant xpndr, hesitate momentarily in OFF.
(5) Loss of capability of simultaneous transmission of down voice and HBR PCM.
(6) Notify MSFN to transmit voice on the up data subcarrier. Backup up voice and up data transmission must be time shared. Action will result in 1-2 KHz tone in headset until MSFN configures for up voice backup.
(7) CMP PTT switch will be inoperative. S BD reception will be via intercom bus.
(8) Provides an alternate voice circuit, but no PCM capability.
(9) The power amplifier requires a 90 sec warmup period.
(10) S BD AUX TAPE - TAPE activates the FM transmitter and the alternate power amplifier which requires a 90 sec warmup period. It is crew option to transmit real time PCM, recorded data, or TV via the FM transmitter.
(11) With one of the power amplifiers failed the capability is lost to transmit FM (recorded data or TV) simultaneously with PM transmission of real time PCM and voice.

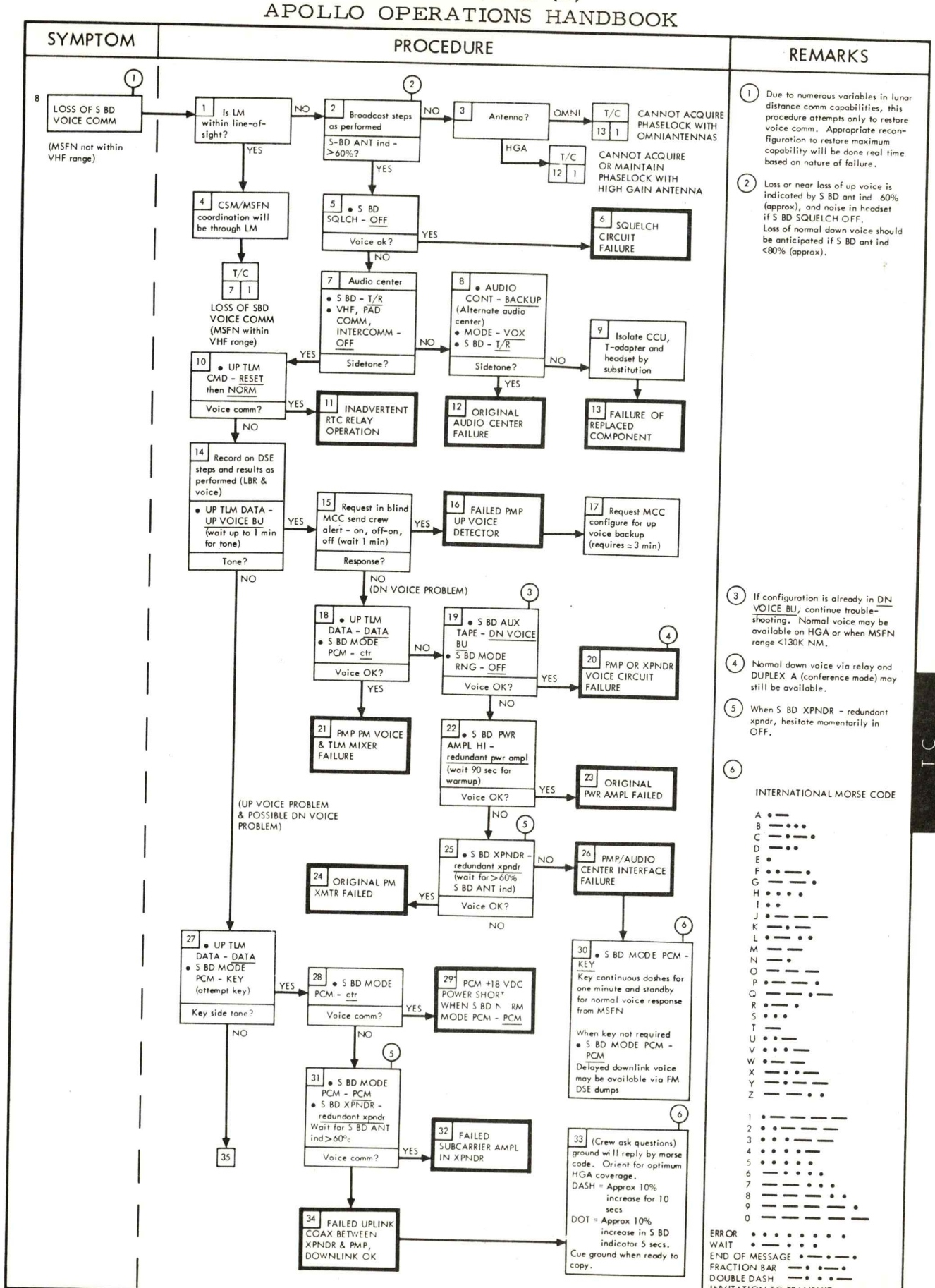

T C MALFUNCTION

SYMPTOM	PROCEDURE	REMARKS
8 (Cont)	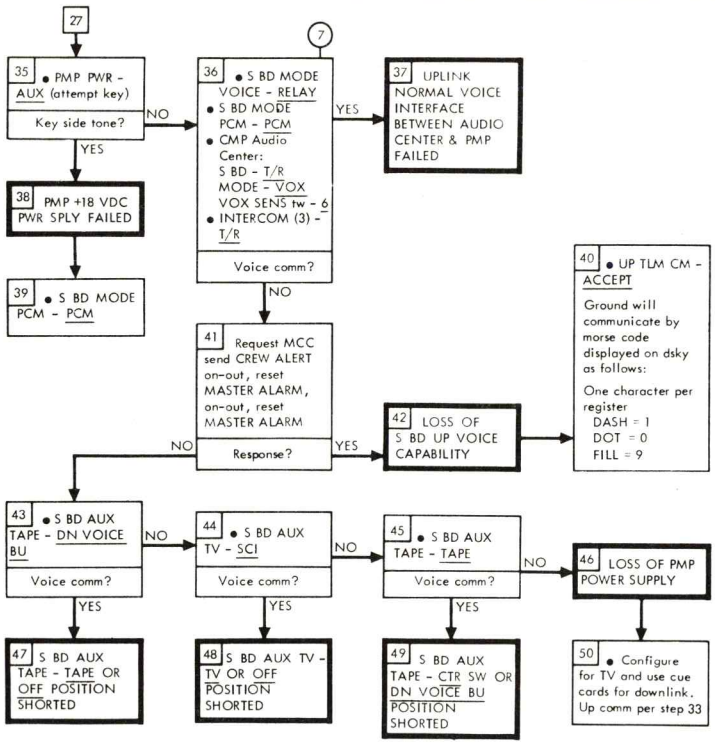	(7) In relay mode for UP VOICE, CMP audio center DN VOICE not available. CMP select backup audio center. CDR and LMP use sidetone to copy up voice.
9 MSFN REPORTS LOSS OF RANGING	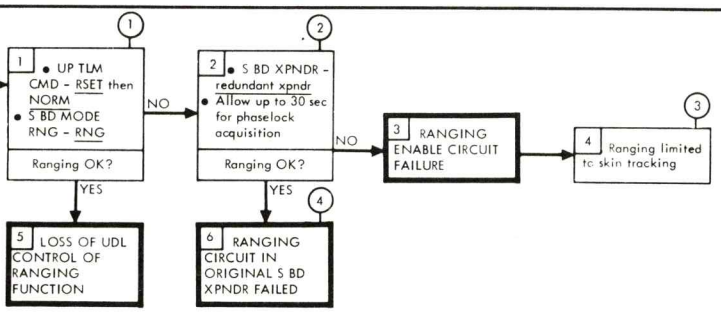	(1) Coordinate with MSFN (2) When SBD XPNDR-redundant xpndr, hesitate momentarily in OFF. (3) Skin tracking performed by ground radar; no crew action required. (4) Original XPNDR is usable for all functions except ranging.
10 MSFN REPORTS LOSS OF REAL TIME PCM	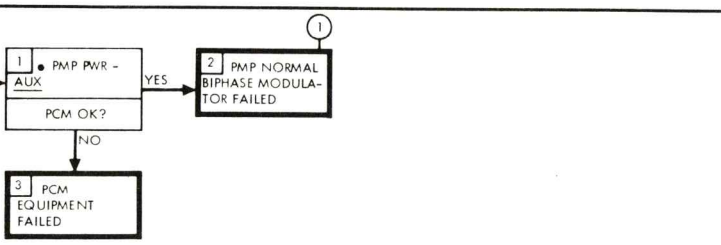	(1) The capability is lost to transmit recorded PCM simultaneously with real time PCM.
11 HI GAIN ANTENNA DOES NOT RESPOND PROPERLY TO POINTING COMMANDS	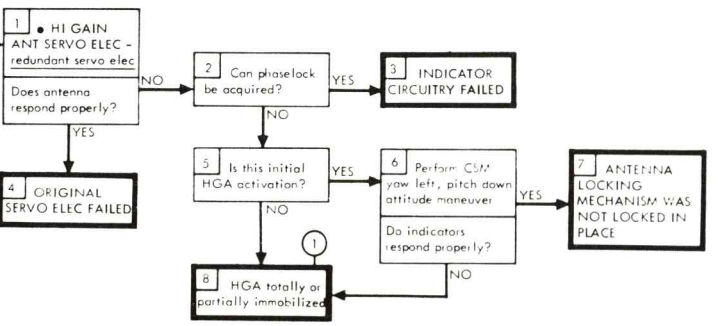	(1) Indicators will display actual antenna position. If look angle is outside shadow area HGA may be utilized when CSM attitude permits.

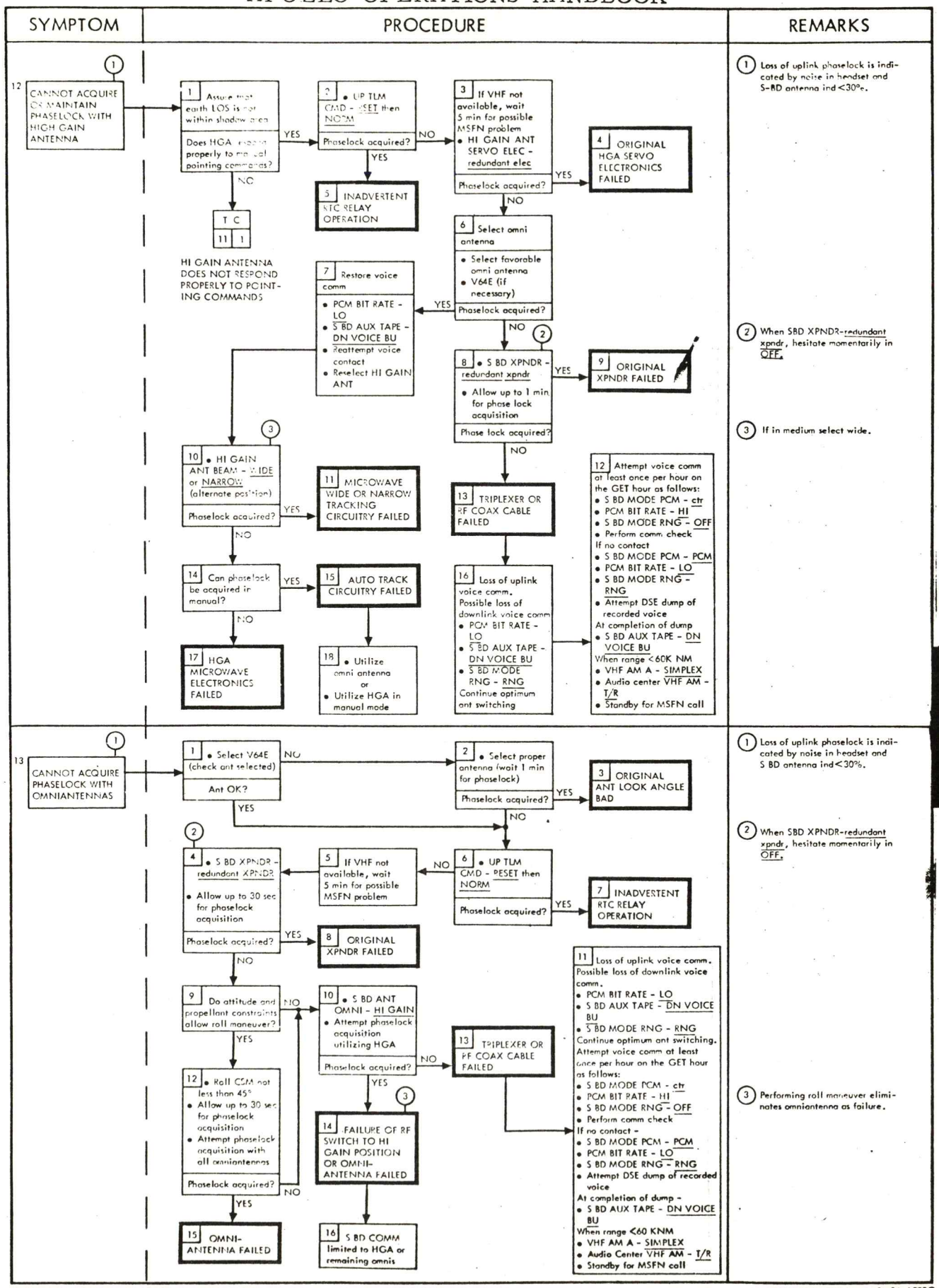

SM2A-1903G

FORM 2997-E New 11-67

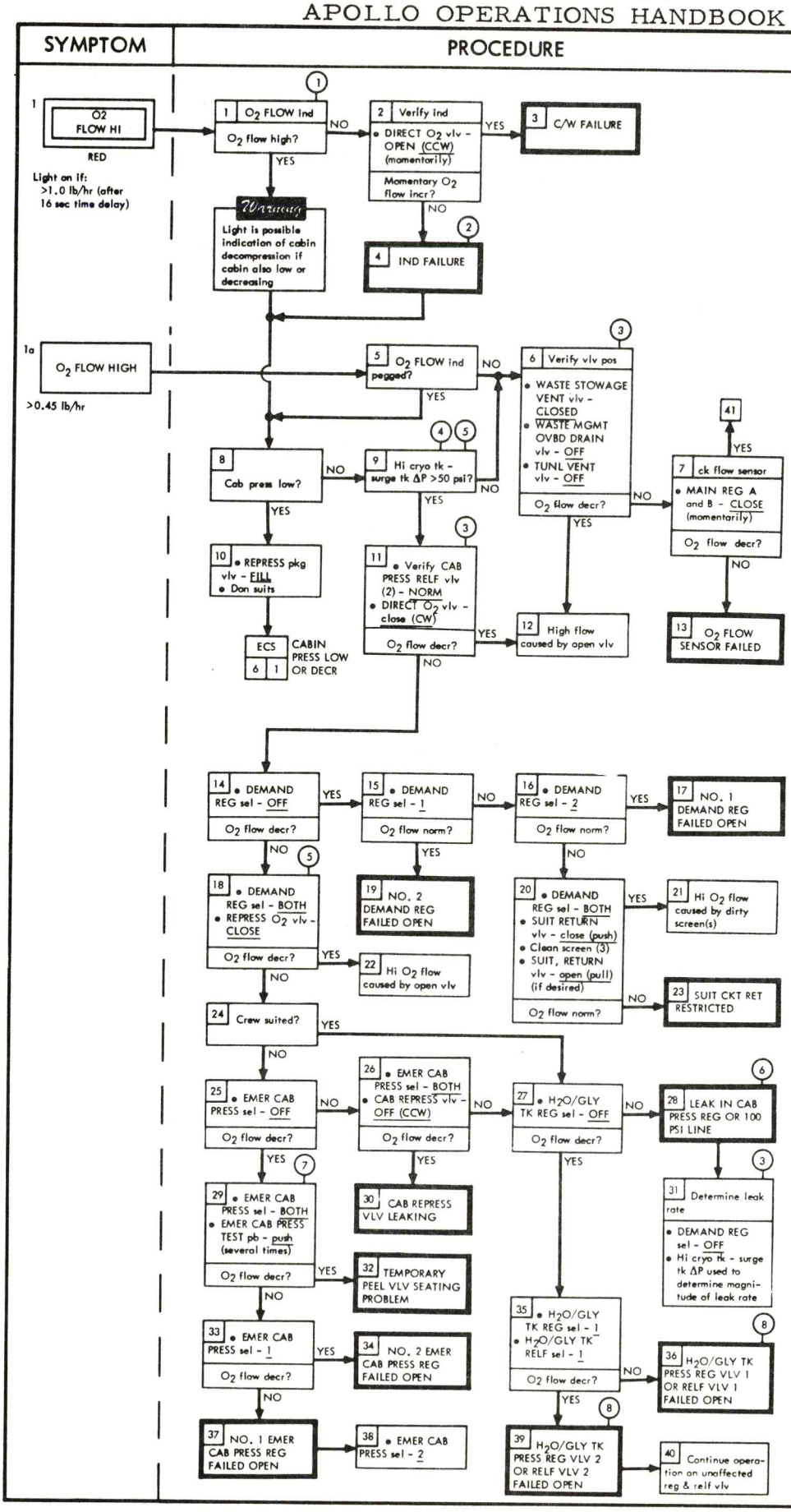
SYMPTOM
PROCEDURE
REMARKS
1 O2 FLOW HI
RED
Light on if: >1.0 lb/hr (after 16 sec time delay)
1a O2 FLOW HIGH
>0.45 lb/hr
1 O2 FLOW ind
O2 flow high?
NO
YES
2 Verify ind
• DIRECT O2 vlv - OPEN (CCW) (momentarily)
Momentary O2 flow incr?
NO
YES
3 C/W FAILURE
Warning
Light is possible indication of cabin decompression if cabin also low or decreasing
4 IND FAILURE
5 O2 FLOW ind pegged?
NO
YES
6 Verify vlv pos
• WASTE STOWAGE VENT vlv - CLOSED
• WASTE MGMT OVBD DRAIN vlv - OFF
• TUNL VENT vlv - OFF
O2 flow decr?
NO
YES
41
7 ck flow sensor
• MAIN REG A and B - CLOSE (momentarily)
O2 flow decr?
NO
YES
13 O2 FLOW SENSOR FAILED
8 Cab press low?
NO
YES
9 Hi cryo tk - surge tk ΔP >50 psi?
NO
YES
10 • REPRESS pkg vlv - FILL
• Don suits
ECS 6 1 CABIN PRESS LOW OR DECR
11 • Verify CAB PRESS RELF vlv (2) - NORM
• DIRECT O2 vlv - close (CW)
O2 flow decr?
YES
NO
12 High flow caused by open vlv
14 • DEMAND REG sel - OFF
O2 flow decr?
YES
NO
15 • DEMAND REG sel - 1
O2 flow norm?
NO
YES
16 • DEMAND REG sel - 2
O2 flow norm?
YES
NO
17 NO. 1 DEMAND REG FAILED OPEN
18 • DEMAND REG sel - BOTH
• REPRESS O2 vlv - CLOSE
O2 flow decr?
YES
NO
19 NO. 2 DEMAND REG FAILED OPEN
20 • DEMAND REG sel - BOTH
• SUIT RETURN vlv - close (push)
• Clean screen (3)
• SUIT, RETURN vlv - open (pull) (if desired)
O2 flow norm?
YES
NO
21 Hi O2 flow caused by dirty screen(s)
22 Hi O2 flow caused by open vlv
23 SUIT CKT RET RESTRICTED
24 Crew suited?
YES
NO
25 • EMER CAB PRESS sel - OFF
O2 flow decr?
NO
YES
26 • EMER CAB PRESS sel - BOTH
• CAB REPRESS vlv - OFF (CCW)
O2 flow decr?
NO
YES
27 • H2O/GLY TK REG sel - OFF
O2 flow decr?
NO
YES
28 LEAK IN CAB PRESS REG OR 100 PSI LINE
29 • EMER CAB PRESS sel - BOTH
• EMER CAB PRESS TEST pb - push (several times)
O2 flow decr?
YES
NO
30 CAB REPRESS VLV LEAKING
31 Determine leak rate
• DEMAND REG sel - OFF
• Hi cryo tk - surge tk ΔP used to determine magnitude of leak rate
32 TEMPORARY PEEL VLV SEATING PROBLEM
33 • EMER CAB PRESS sel - 1
O2 flow decr?
YES
NO
34 NO. 2 EMER CAB PRESS REG FAILED OPEN
35 • H2O/GLY TK REG sel - 1
• H2O/GLY TK RELF sel - 1
O2 flow decr?
NO
YES
36 H2O/GLY TK PRESS REG VLV 1 OR RELF VLV 1 FAILED OPEN
37 NO. 1 EMER CAB PRESS REG FAILED OPEN
38 • EMER CAB PRESS sel - 2
39 H2O/GLY TK PRESS REG VLV 2 OR RELF VLV 2 FAILED OPEN
40 Continue operation on unaffected reg & relf vlv
(1) Normal range 0.25 to 0.45 lb/hr.
(2) Continue with O2 Flow Hi procedure and use C/W lt and surge tank bleed down as indication of O2 flow.
(3) This action verifies that inadvertently opened valve has not caused increased O2 flow. However, high O2 flow normal during cabin gas changeover.
(4) Typical HI CRYO TK-SURGE TK ΔP:
50 PSI≈1.0 lb/hr
100 PSI≈2.5 lb/hr
150 PSI≈3.5 lb/hr
400 PSI≈5.5 lb/hr
(5) Placing the MAIN REG A & B - CLOSED and noting a decrease in O2 flow will validate the sensor indication.
(6) If leak is not isolated and O2 flow remains high, mission time may be extended by shutting off the main O2 regulators, re-opening them when necessary to maintain cabin pressure and for actuation of the of the cyclic accumulators. Placing the WASTE STOWAGE VENT valve to VENT may prevent the cabin relief valve from actuating.
(7) PRESS-TO-TEST operation may reseal leaky peel valve.
(8) MSFN can distinguish between these two failures by reporting tank bladder pressure.

SYMPTOM	PROCEDURE	REMARKS

1(Cont)

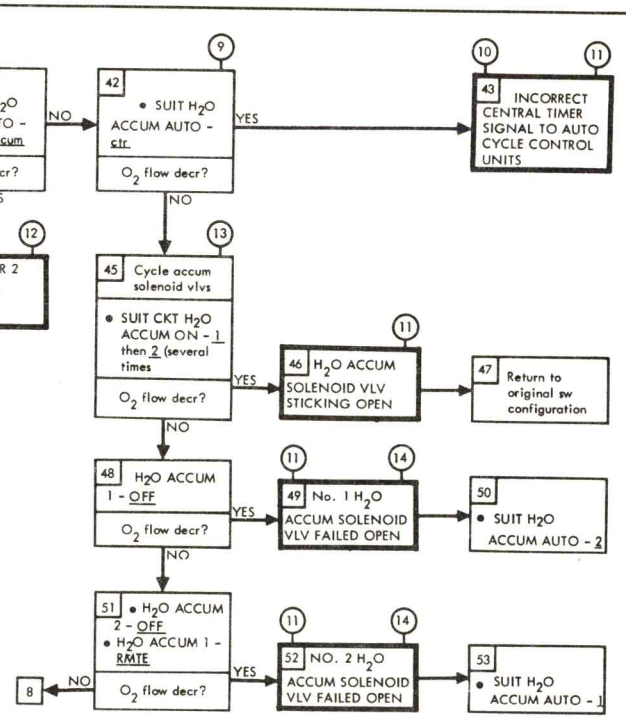

(9) Removes power from H_2O accumulator.

(10) H_2O accumulator can be manually operated.

(11) Max O_2 bleed into suit loop will be 0.55 lb/hr (from which metabolic use and cabin leakage will be taken).

(12) This failure does not necessarily preclude manual operation of the affected H_2O accumulator.

(13) Cycling operation may free sticking valve.

(14) Loss of electrical cyclic control of affected H_2O accumulator. Periodic manual valve operation the only means of actuating H_2O accumulator.

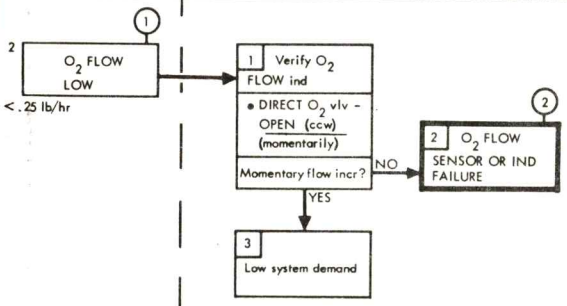

(1) Normal range 0.25 - 0.45 lb/hr.

(2) MSFN can distinguish between these two failures.

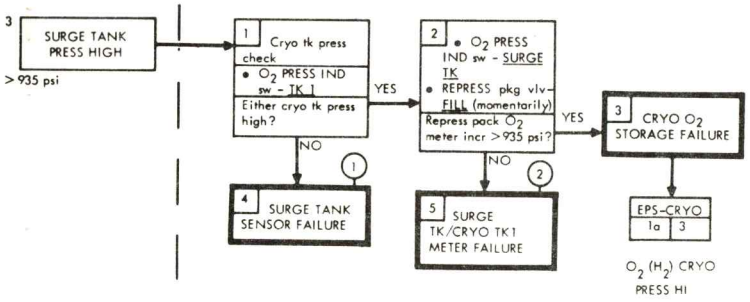

(1) Use highest cryo tank indication to estimate surge tank pressure.

(2) Surge tank pressure may be determined by momentarily positioning REPRESS pkg vlv - FILL and read repress pack press meter after stabilization.

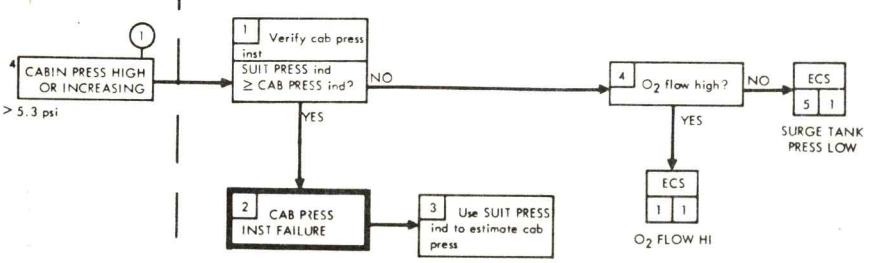

(1) Cabin pressure > 5.3 psi is normal after insertion. Normal range is 4.7 to 5.3 psi.

SYMPTOM	PROCEDURE	REMARKS

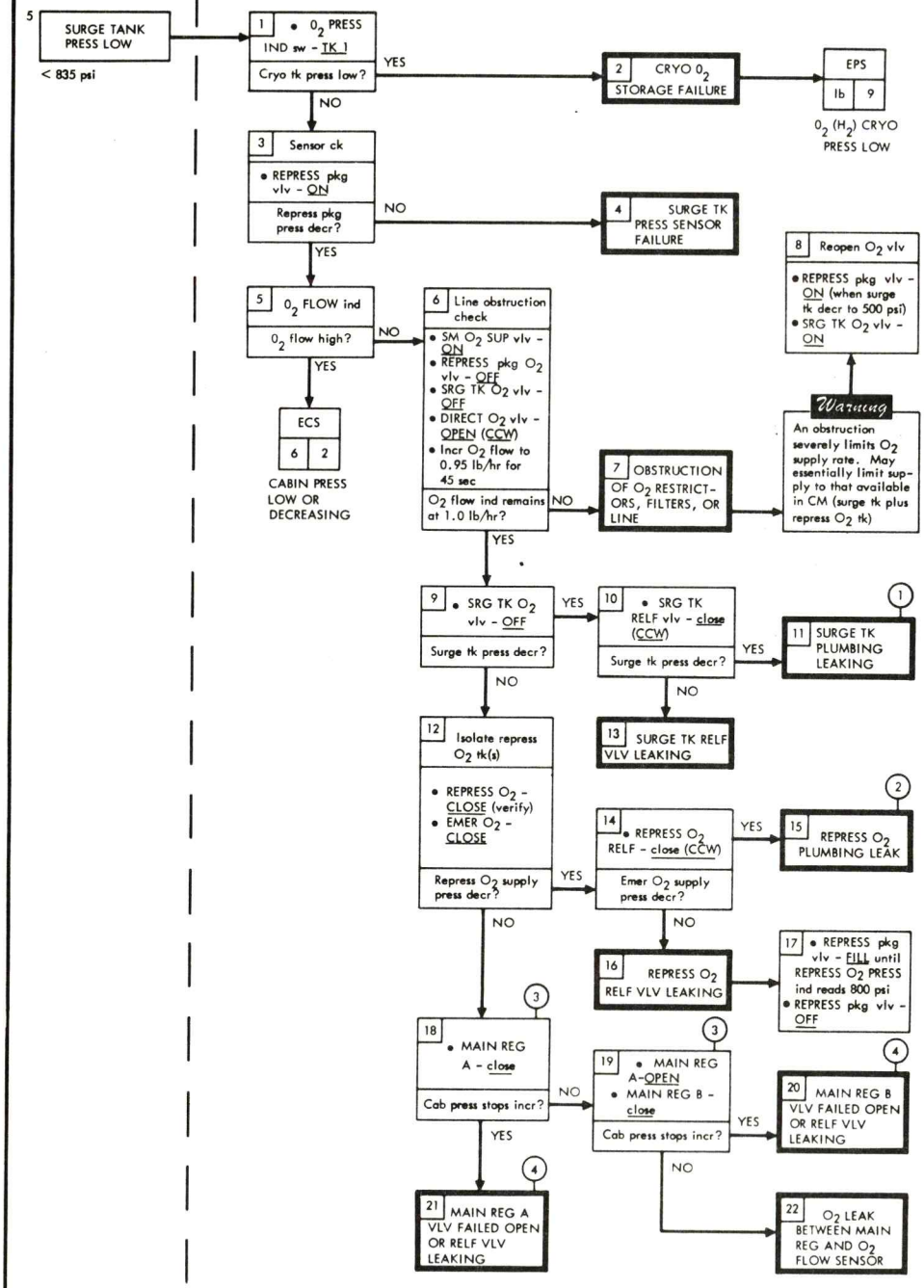

(1) REPRESS pkg vlv - FILL; repress O_2 supply to perform surge tank function.

(2) If subsequent O_2 mask use is necessary, position REPRESS pkg vlv to FILL. Excessive O_2 consumption results.

(3) This step may require considerable time.

(4) MSFN can distinguish between these two failures by reporting O_2 system pressure.

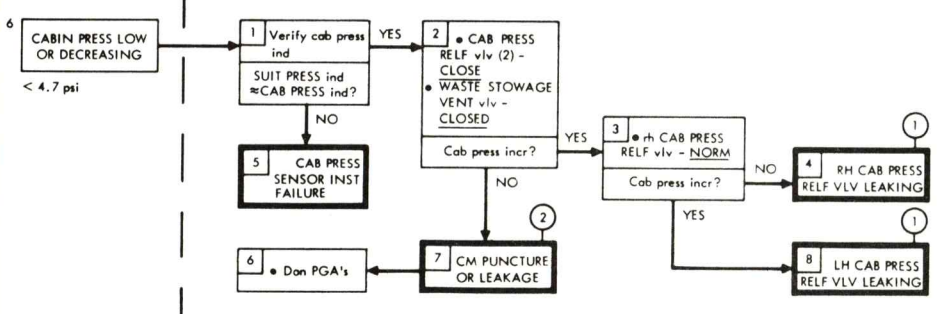

(1) Maintain close position on leaking valve. Cabin pressure relief valve redundancy lost.

(2) Maintain fully suited mode. Excessive O_2 consumption if cabin pressure is maintained. The suit circuit should be purged to eliminate accumulated H_2 as follows:
a. Periodic purge (every 6 hours) - DIRECT O_2 vlv-open (fully) for one minute then closed.
b. After use of water gun for drinking provided O_2 supply permits-DIRECT O_2 vlv-open (fully) for 8 seconds then closed.

SYMPTOM	PROCEDURE	REMARKS

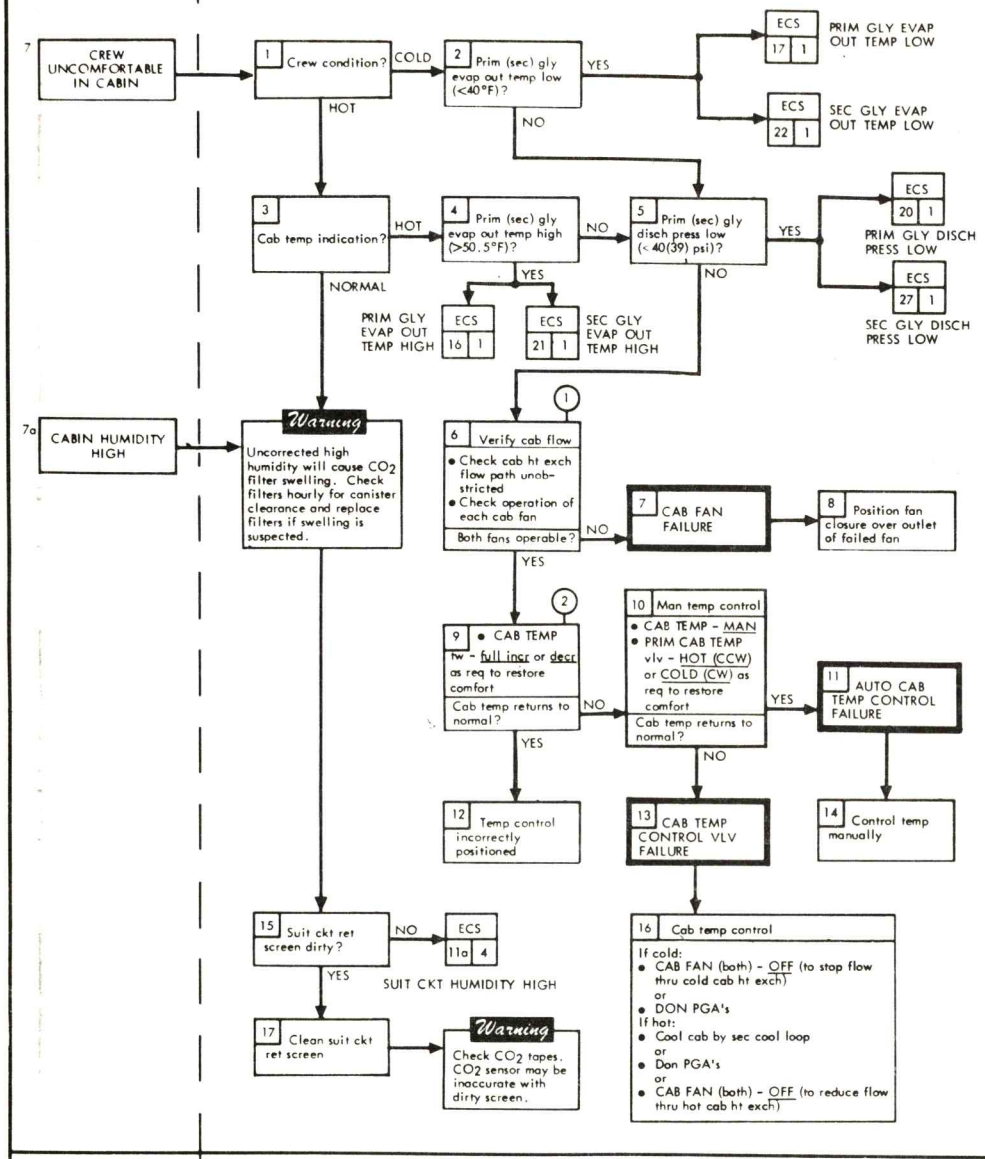

(1) If secondary glycol system is flowing through cabin heat exchanger, temperature control is obtained by manually positioning secondary cabin temperature control valve.

(2) Cabin temperature changes are slow reacting. If uncomfortable condition is severe, proceed directly to step 10.

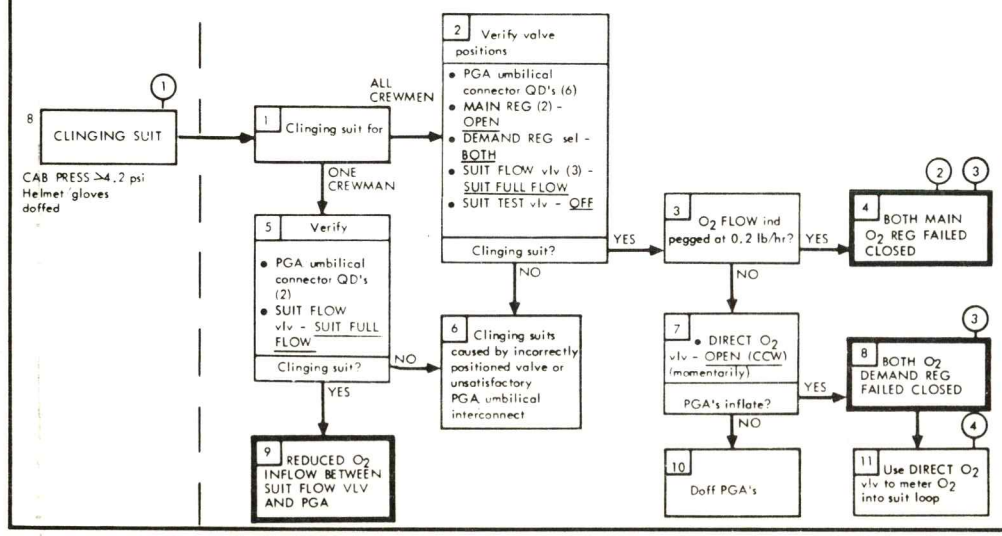

(1) Valid only for non-reversed hose configuration.

(2) MSFN can verify loss of 100 psi circuit. Open/close REPRESS vlv to maintain≥5 psia cabin press.

(3) Doff PGA's closed suit operations are lost.

(4) Metabolic requirement per crewman is approximately 0.1 lb/hr.

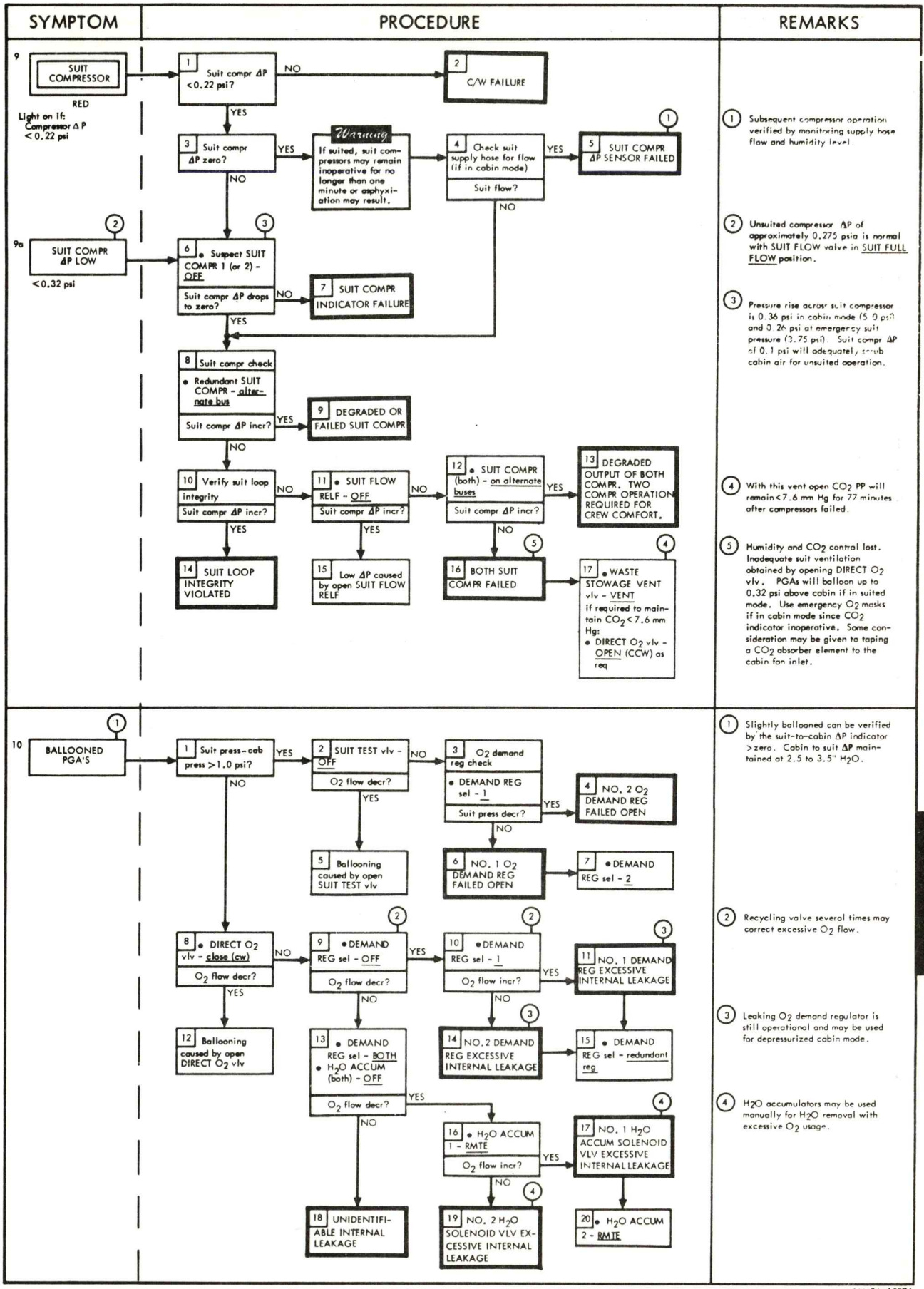
SYMPTOM
PROCEDURE
REMARKS
9
SUIT COMPRESSOR
RED
Light on if: Compressor ΔP < 0.22 psi
1 Suit compr ΔP <0.22 psi?
NO
2 C/W FAILURE
YES
3 Suit compr ΔP zero?
YES
Warning
If suited, suit compressors may remain inoperative for no longer than one minute or asphyxiation may result.
4 Check suit supply hose for flow (if in cabin mode)
Suit flow?
YES
5 SUIT COMPR ΔP SENSOR FAILED
NO
9a
SUIT COMPR ΔP LOW
<0.32 psi
6 • Suspect SUIT COMPR 1 (or 2) - OFF
Suit compr ΔP drops to zero?
NO
7 SUIT COMPR INDICATOR FAILURE
YES
8 Suit compr check
• Redundant SUIT COMPR - alternate bus
Suit compr ΔP incr?
YES
9 DEGRADED OR FAILED SUIT COMPR
NO
10 Verify suit loop integrity
Suit compr ΔP incr?
NO
11 • SUIT FLOW RELF - OFF
Suit compr ΔP incr?
NO
12 • SUIT COMPR (both) - on alternate buses
Suit compr ΔP incr?
YES
13 DEGRADED OUTPUT OF BOTH COMPR. TWO COMPR OPERATION REQUIRED FOR CREW COMFORT.
YES
14 SUIT LOOP INTEGRITY VIOLATED
YES
15 Low ΔP caused by open SUIT FLOW RELF
NO
16 BOTH SUIT COMPR FAILED
17 • WASTE STOWAGE VENT vlv - VENT if required to maintain CO_2 <7.6 mm Hg:
• DIRECT O_2 vlv - OPEN (CCW) as req
10
BALLOONED PGA'S
1 Suit press-cab press >1.0 psi?
YES
2 SUIT TEST vlv - OFF
O_2 flow decr?
NO
3 O_2 demand reg check
• DEMAND REG sel - 1
Suit press decr?
YES
4 NO. 2 O_2 DEMAND REG FAILED OPEN
NO
5 Ballooning caused by open SUIT TEST vlv
YES
6 NO. 1 O_2 DEMAND REG FAILED OPEN
7 • DEMAND REG sel - 2
NO
8 • DIRECT O_2 vlv - close (cw)
O_2 flow decr?
NO
9 • DEMAND REG sel - OFF
O_2 flow decr?
YES
10 • DEMAND REG sel - 1
O_2 flow incr?
YES
11 NO. 1 DEMAND REG EXCESSIVE INTERNAL LEAKAGE
YES
12 Ballooning caused by open DIRECT O_2 vlv
NO
13 • DEMAND REG sel - BOTH
• H_2O ACCUM (both) - OFF
O_2 flow decr?
NO
14 NO. 2 DEMAND REG EXCESSIVE INTERNAL LEAKAGE
15 • DEMAND REG sel - redundant reg
YES
16 • H_2O ACCUM 1 - RMTE
O_2 flow incr?
YES
17 NO. 1 H_2O ACCUM SOLENOID VLV EXCESSIVE INTERNAL LEAKAGE
NO
18 UNIDENTIFIABLE INTERNAL LEAKAGE
19 NO. 2 H_2O SOLENOID VLV EXCESSIVE INTERNAL LEAKAGE
20 • H_2O ACCUM 2 - RMTE
1 Subsequent compressor operation verified by monitoring supply hose flow and humidity level.
2 Unsuited compressor ΔP of approximately 0.275 psia is normal with SUIT FLOW valve in SUIT FULL FLOW position.
3 Pressure rise across suit compressor is 0.36 psi in cabin mode (5.0 psi) and 0.26 psi at emergency suit pressure (3.75 psi). Suit compr ΔP of 0.1 psi will adequately scrub cabin air for unsuited operation.
4 With this vent open CO_2 PP will remain <7.6 mm Hg for 77 minutes after compressors failed.
5 Humidity and CO_2 control lost. Inadequate suit ventilation obtained by opening DIRECT O_2 vlv. PGAs will balloon up to 0.32 psi above cabin if in suited mode. Use emergency O_2 masks if in cabin mode since CO_2 indicator inoperative. Some consideration may be given to taping a CO_2 absorber element to the cabin fan inlet.
1 Slightly ballooned can be verified by the suit-to-cabin ΔP indicator >zero. Cabin to suit ΔP maintained at 2.5 to 3.5" H_2O.
2 Recycling valve several times may correct excessive O_2 flow.
3 Leaking O_2 demand regulator is still operational and may be used for depressurized cabin mode.
4 H_2O accumulators may be used manually for H_2O removal with excessive O_2 usage.

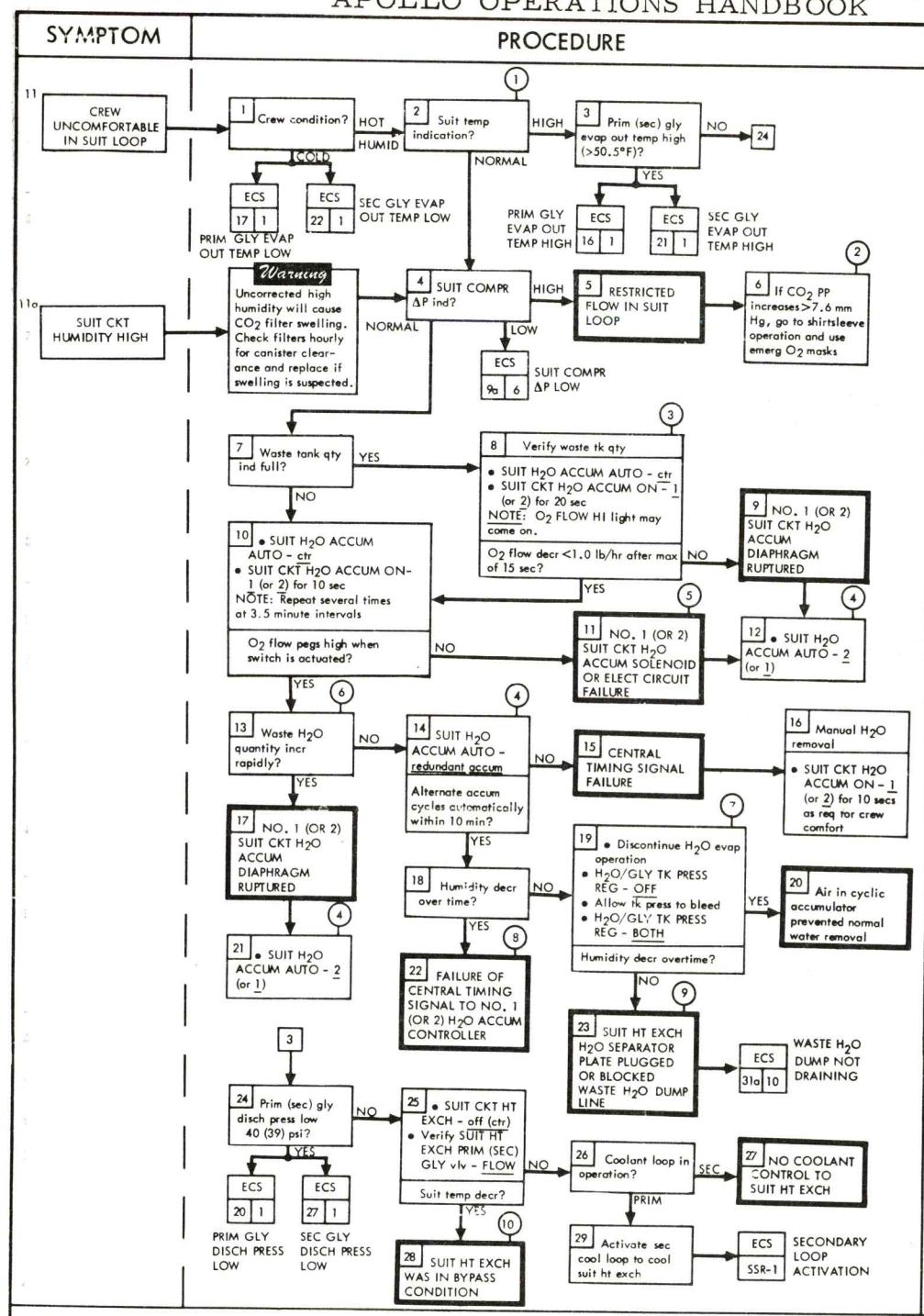
SYMPTOM
PROCEDURE
11 CREW UNCOMFORTABLE IN SUIT LOOP
1 Crew condition?
HOT HUMID
COLD
2 Suit temp indication?
HIGH
NORMAL
3 Prim (sec) gly evap out temp high (>50.5°F)?
NO
24
YES
ECS 17 1 PRIM GLY EVAP OUT TEMP LOW
ECS 22 1 SEC GLY EVAP OUT TEMP LOW
PRIM GLY EVAP OUT TEMP HIGH
ECS 16 1
ECS 21 1 SEC GLY EVAP OUT TEMP HIGH
11a SUIT CKT HUMIDITY HIGH
Warning
Uncorrected high humidity will cause CO2 filter swelling. Check filters hourly for canister clearance and replace if swelling is suspected.
4 SUIT COMPR ΔP ind?
HIGH
NORMAL
LOW
5 RESTRICTED FLOW IN SUIT LOOP
6 If CO2 PP increases >7.6 mm Hg, go to shirtsleeve operation and use emerg O2 masks
ECS 9a 6 SUIT COMPR ΔP LOW
7 Waste tank qty ind full?
YES
NO
8 Verify waste tk qty
• SUIT H2O ACCUM AUTO - ctr
• SUIT CKT H2O ACCUM ON - 1 (or 2) for 20 sec
NOTE: O2 FLOW HI light may come on.
O2 flow decr <1.0 lb/hr after max of 15 sec?
NO
9 NO. 1 (OR 2) SUIT CKT H2O ACCUM DIAPHRAGM RUPTURED
YES
10 • SUIT H2O ACCUM AUTO - ctr
• SUIT CKT H2O ACCUM ON - 1 (or 2) for 10 sec
NOTE: Repeat several times at 3.5 minute intervals
O2 flow pegs high when switch is actuated?
NO
11 NO. 1 (OR 2) SUIT CKT H2O ACCUM SOLENOID OR ELECT CIRCUIT FAILURE
12 • SUIT H2O ACCUM AUTO - 2 (or 1)
YES
13 Waste H2O quantity incr rapidly?
NO
14 SUIT H2O ACCUM AUTO - redundant accum
Alternate accum cycles automatically within 10 min?
NO
15 CENTRAL TIMING SIGNAL FAILURE
16 Manual H2O removal
• SUIT CKT H2O ACCUM ON - 1 (or 2) for 10 secs as req for crew comfort
YES
17 NO. 1 (OR 2) SUIT CKT H2O ACCUM DIAPHRAGM RUPTURED
21 • SUIT H2O ACCUM AUTO - 2 (or 1)
YES
18 Humidity decr over time?
NO
19 • Discontinue H2O evap operation
• H2O/GLY TK PRESS REG - OFF
• Allow tk press to bleed
• H2O/GLY TK PRESS REG - BOTH
Humidity decr overtime?
YES
20 Air in cyclic accumulator prevented normal water removal
NO
22 FAILURE OF CENTRAL TIMING SIGNAL TO NO. 1 (OR 2) H2O ACCUM CONTROLLER
23 SUIT HT EXCH H2O SEPARATOR PLATE PLUGGED OR BLOCKED WASTE H2O DUMP LINE
ECS 31a 10 WASTE H2O DUMP NOT DRAINING
3
24 Prim (sec) gly disch press low 40 (39) psi?
NO
YES
25 • SUIT CKT HT EXCH - off (ctr)
• Verify SUIT HT EXCH PRIM (SEC) GLY vlv - FLOW
Suit temp decr?
YES
26 Coolant loop in operation?
SEC
PRIM
27 NO COOLANT CONTROL TO SUIT HT EXCH
ECS 20 1 PRIM GLY DISCH PRESS LOW
ECS 27 1 SEC GLY DISCH PRESS LOW
28 SUIT HT EXCH WAS IN BYPASS CONDITION
29 Activate sec cool loop to cool suit ht exch
ECS SSR-1 SECONDARY LOOP ACTIVATION
12 CO2 PP HI
YELLOW
Light on if: CO2 PP > 7.6 mm hg
1 CO2 part press ind >7.6 mm Hg?
NO
2 C/W FAILURE
YES
12a CO2 PART PRESS HIGH
>7.6 mm Hg
4 Purge CO2 sensor
• DIRECT O2 vlv - OPEN (CCW) for 10 sec
CO2 PP still high?
NO
YES
5 CO2 PP returns high?
YES
NO
3 Ck CO2 absorber filters
• Position CO2 canister diverter vlv handle alternately to A and B to obtain stabilized CO2 PP readings
• Change canister with highest CO2 reading
CO2 PP decr?
YES
NO
12b CO2 PART PRESS LOW
<1.0 mm Hg continually
6 CO2 PP SENSOR FAILURE
7 High CO2 PP caused by stagnant CO2 near sensor
8 • Change other CO2 filter
CO2 PP high?
YES
NO
9 EXPENDED OR FAULTY CO2 FILTER
REMARKS
1 Assumes SUIT FLOW RELF valve is OFF.
2 Backup CO2 tapes should be used to confirm CO2 PP indication accuracy.
3 Quantity verification is valid only if O2 flow rate is <0.45 lb/hr before test.
4 Operation is verified by O2 FLOW indicator pegging high within a ten minute period.
5 Operation of No. 1 (or 2) H2O accumulator may still be possible. This can be verified by placing H2O ACCUM 1 (or 2) valve to MAN for 10 sec and then OFF noting a high O2 flow while valve is in MAN position.
6 If a rapid increase in waste water quantity is noted, release SUIT CKT H2O ACCUM ON switch.
7 Humidity and water coming out of suit supply hose should be greater than that caused by condensation from cold structure before proceeding to this step. This removes air from suit ckt H2O accum. However, time for tank bleed-down is dependent upon the following waste H2O tk quantities:
80% 1 hr
50% 3 hrs
20% 5 hrs
(MSFN reads H2O gly tank press)
8 Operation of No. 1 (or 2) H2O accumulator still operable by manual actuation of solenoid switch.
9 A blocked waste H2O dump line can be concluded if the waste H2O tank qty were verified full in step 8.
10 Suit heat exchanger must be bypassed manually for future use. In the primary ht exchanger mode, this failure could be caused by a motor or control switch failure.
1 The CO2 PP HI warning light may be extinguished by pulling the ECS PRESS XDUCER 2 MNA cb. However, this eliminates redundant MN bus pwr sources to the following sensors:
• Cabin press ind
• O2 flow ind
• Gly stm press ind (Pri)
• O2 manifold press (MSFN).
2 Manual CO2 partial pressure control can be accomplished by use of DIRECT O2 vlv operation, or emergency O2 masks can be used.

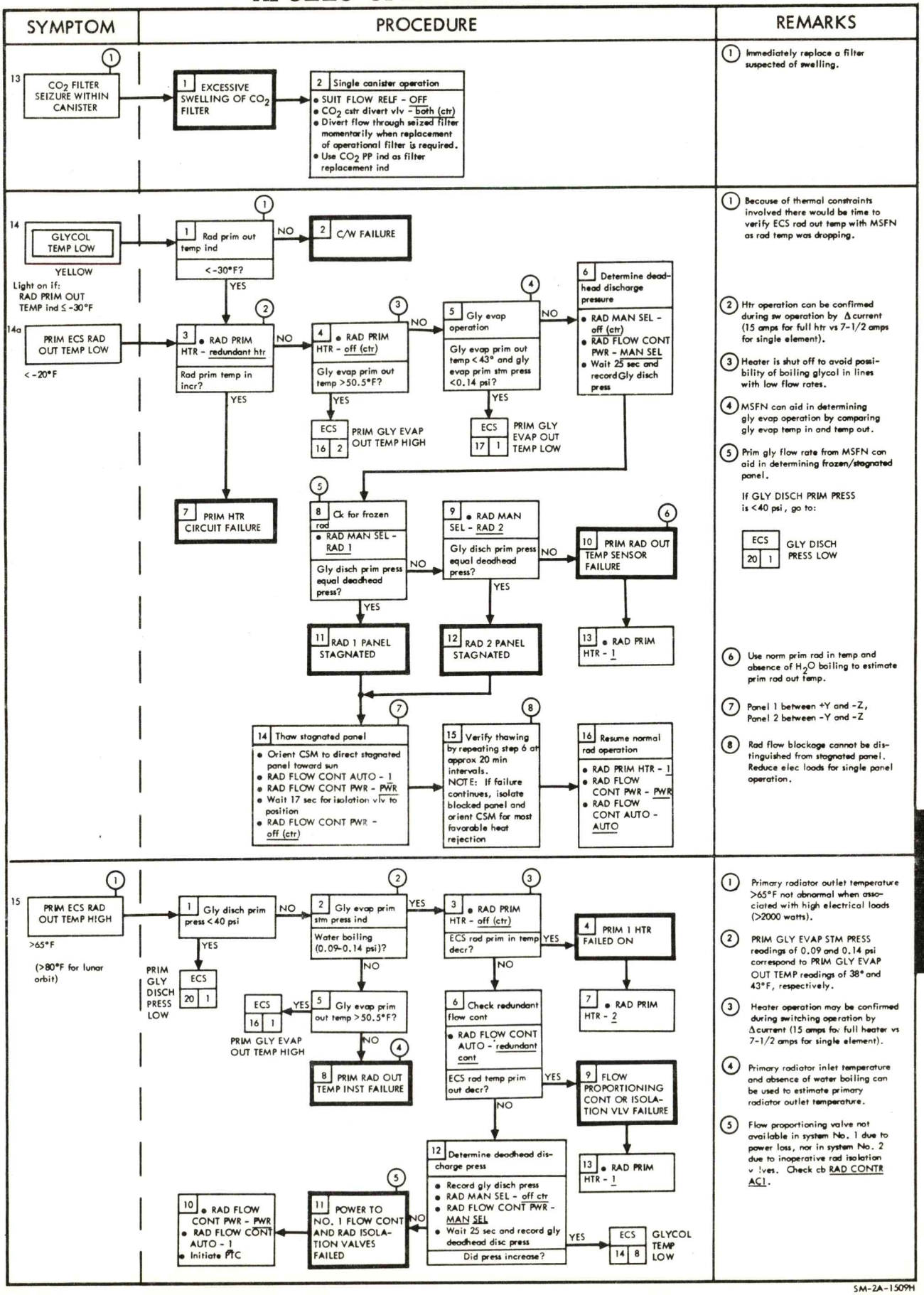

FORM 2992-E Rev 11-67

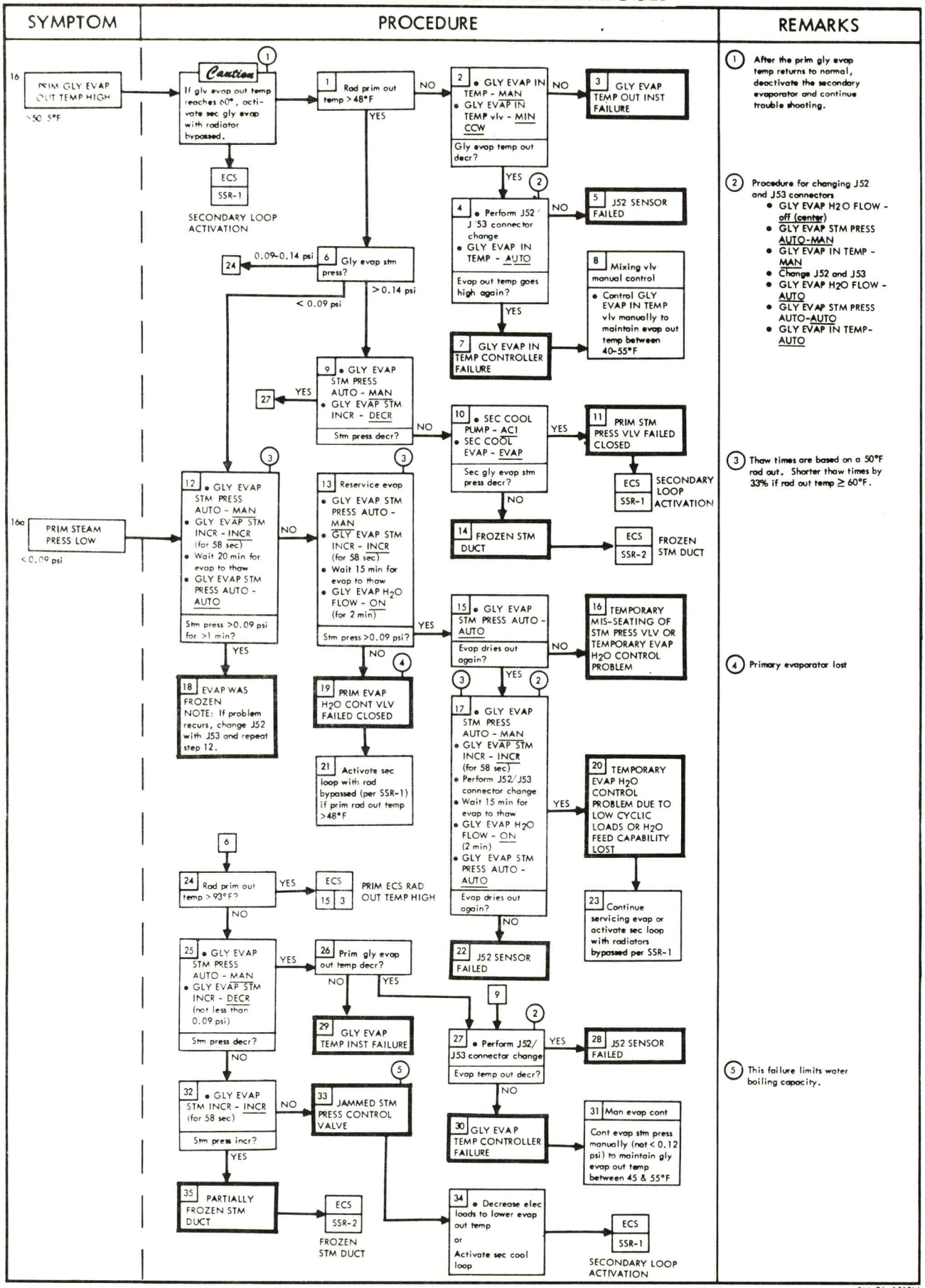
SYMPTOM
PROCEDURE
REMARKS
16 PRIM GLY EVAP OUT TEMP HIGH
>50 °F
Caution
If gly evap out temp reaches 60°, activate sec gly evap with radiator bypassed.
1 Rad prim out temp > 48°F
NO
2 • GLY EVAP IN TEMP - MAN • GLY EVAP IN TEMP vlv - MIN CCW
Gly evap temp out decr?
NO
3 GLY EVAP TEMP OUT INST FAILURE
YES
ECS SSR-1
SECONDARY LOOP ACTIVATION
YES
4 • Perform J52/J53 connector change • GLY EVAP IN TEMP - AUTO
Evap out temp goes high again?
NO
5 J52 SENSOR FAILED
YES
7 GLY EVAP IN TEMP CONTROLLER FAILURE
8 Mixing vlv manual control
• Control GLY EVAP IN TEMP vlv manually to maintain evap out temp between 40-55°F
24
0.09-0.14 psi
6 Gly evap stm press?
>0.14 psi
< 0.09 psi
9 • GLY EVAP STM PRESS AUTO - MAN • GLY EVAP STM INCR - DECR
Stm press decr?
YES
27
NO
10 • SEC COOL PUMP - AC1 • SEC COOL EVAP - EVAP
Sec gly evap stm press decr?
YES
11 PRIM STM PRESS VLV FAILED CLOSED
ECS SSR-1 SECONDARY LOOP ACTIVATION
NO
14 FROZEN STM DUCT
ECS SSR-2 FROZEN STM DUCT
16a PRIM STEAM PRESS LOW
<0.09 psi
12 • GLY EVAP STM PRESS AUTO - MAN • GLY EVAP STM INCR - INCR (for 58 sec) • Wait 20 min for evap to thaw • GLY EVAP STM PRESS AUTO - AUTO
Stm press >0.09 psi for >1 min?
NO
YES
18 EVAP WAS FROZEN NOTE: If problem recurs, change J52 with J53 and repeat step 12.
13 Reservice evap • GLY EVAP STM PRESS AUTO - MAN • GLY EVAP STM INCR - INCR (for 58 sec) • Wait 15 min for evap to thaw • GLY EVAP H_2O FLOW - ON (for 2 min)
Stm press >0.09 psi?
YES
NO
19 PRIM EVAP H_2O CONT VLV FAILED CLOSED
21 Activate sec loop with rad bypassed (per SSR-1) if prim rad out temp >48°F
15 • GLY EVAP STM PRESS AUTO - AUTO
Evap dries out again?
NO
16 TEMPORARY MIS-SEATING OF STM PRESS VLV OR TEMPORARY EVAP H_2O CONTROL PROBLEM
YES
17 • GLY EVAP STM PRESS AUTO - MAN • GLY EVAP STM INCR - INCR (for 58 sec) • Perform J52/J53 connector change • Wait 15 min for evap to thaw • GLY EVAP H_2O FLOW - ON (2 min) • GLY EVAP STM PRESS AUTO - AUTO
Evap dries out again?
YES
20 TEMPORARY EVAP H_2O CONTROL PROBLEM DUE TO LOW CYCLIC LOADS OR H_2O FEED CAPABILITY LOST
23 Continue servicing evap or activate sec loop with radiators bypassed per SSR-1
NO
22 J52 SENSOR FAILED
6
24 Rad prim out temp > 93°F?
YES
ECS 15 3 PRIM ECS RAD OUT TEMP HIGH
NO
25 • GLY EVAP STM PRESS AUTO - MAN • GLY EVAP STM INCR - DECR (not less than 0.09 psi)
Stm press decr?
YES
26 Prim gly evap out temp decr?
NO
YES
29 GLY EVAP TEMP INST FAILURE
9
27 • Perform J52/J53 connector change
Evap temp out decr?
YES
28 J52 SENSOR FAILED
NO
30 GLY EVAP TEMP CONTROLLER FAILURE
31 Man evap cont
Cont evap stm press manually (not < 0.12 psi) to maintain gly evap out temp between 45 & 55°F
NO
32 • GLY EVAP STM INCR - INCR (for 58 sec)
Stm press incr?
NO
YES
33 JAMMED STM PRESS CONTROL VALVE
35 PARTIALLY FROZEN STM DUCT
ECS SSR-2 FROZEN STM DUCT
34 • Decrease elec loads to lower evap out temp or Activate sec cool loop
ECS SSR-1 SECONDARY LOOP ACTIVATION
1 After the prim gly evap temp returns to normal, deactivate the secondary evaporator and continue trouble shooting.
2 Procedure for changing J52 and J53 connectors
• GLY EVAP H_2O FLOW - off (center)
• GLY EVAP STM PRESS AUTO-MAN
• GLY EVAP IN TEMP - MAN
• Change J52 and J53
• GLY EVAP H_2O FLOW - AUTO
• GLY EVAP STM PRESS AUTO-AUTO
• GLY EVAP IN TEMP-AUTO
3 Thaw times are based on a 50°F rad out. Shorter thaw times by 33% if rad out temp ≥ 60°F.
4 Primary evaporator lost
5 This failure limits water boiling capacity.

SYMPTOM	PROCEDURE	REMARKS

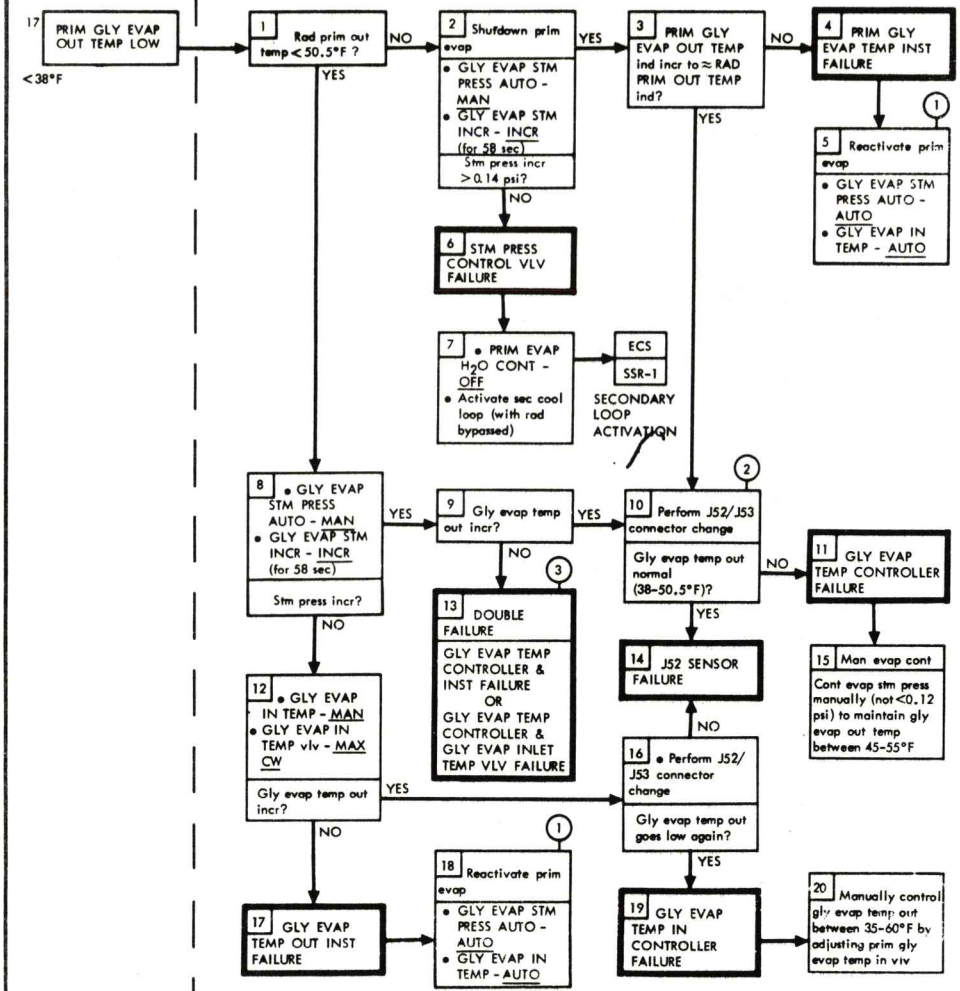

(1) An estimate of gly evap out temp can be made from steam press conversion and/or suit temp-5°F (unsuited); -10°F (suited).

(2) Procedure for connector change
- GLY EVAP H_2O FLOW - off (center)
- GLY EVAP STM PRESS AUTO - MAN
- GLY EVAP IN TEMP - MAN
- Change J52 with J53
- GLY EVAP H_2O FLOW - AUTO
- GLY EVAP STM PRESS AUTO - AUTO
- GLY EVAP IN TEMP - AUTO

(3) Changing J52 and J53 may possibly correct the glycol evap control problem.

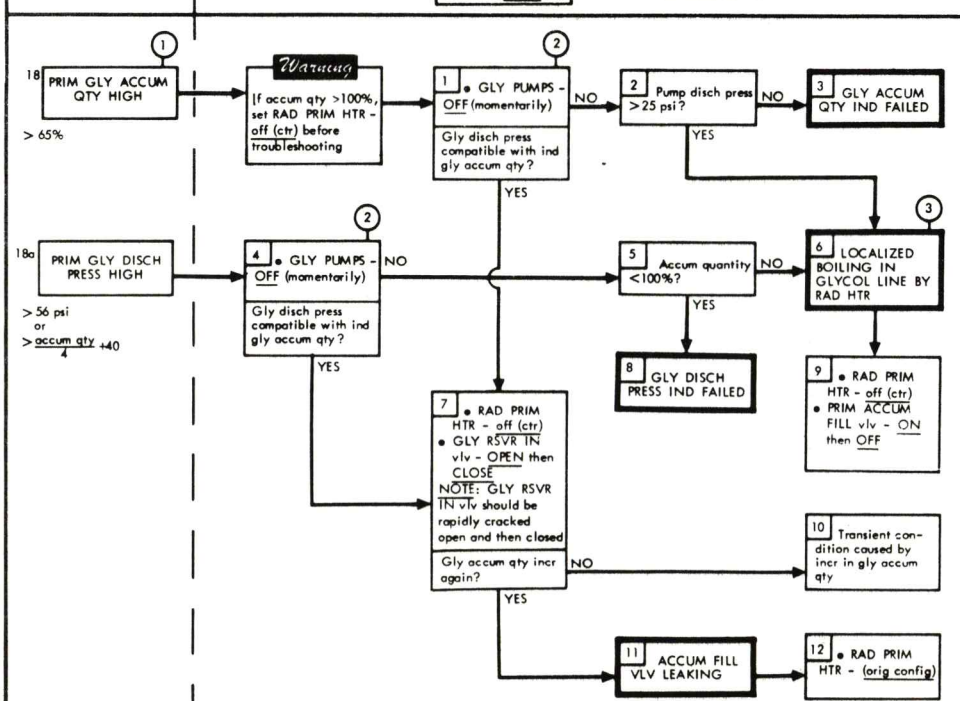

(1) PRIM ACCUM QTY ind >65% may result in accum bellows sticking. If sticking occurs, cycle ECS prim glycol pumps.

(2) With GLY PUMPS - OFF, PRIM GLY DISCH PRESS should be 1/4 accum quantity.

(3) Localized boiling could have been caused by a reduction in glycol flow due to failed radiator isolation valve or a frozen radiator, or due to incorrect positioning of:
GLY RSVR vlv (3)
PRIM GLY TO RAD vlv
SUIT HT EXCH PRIM GLY vlv
Radiator restrictions can be determined by 4 to 6 psi drop in PRIM GLY DISCH PRESS when the radiators are bypassed.

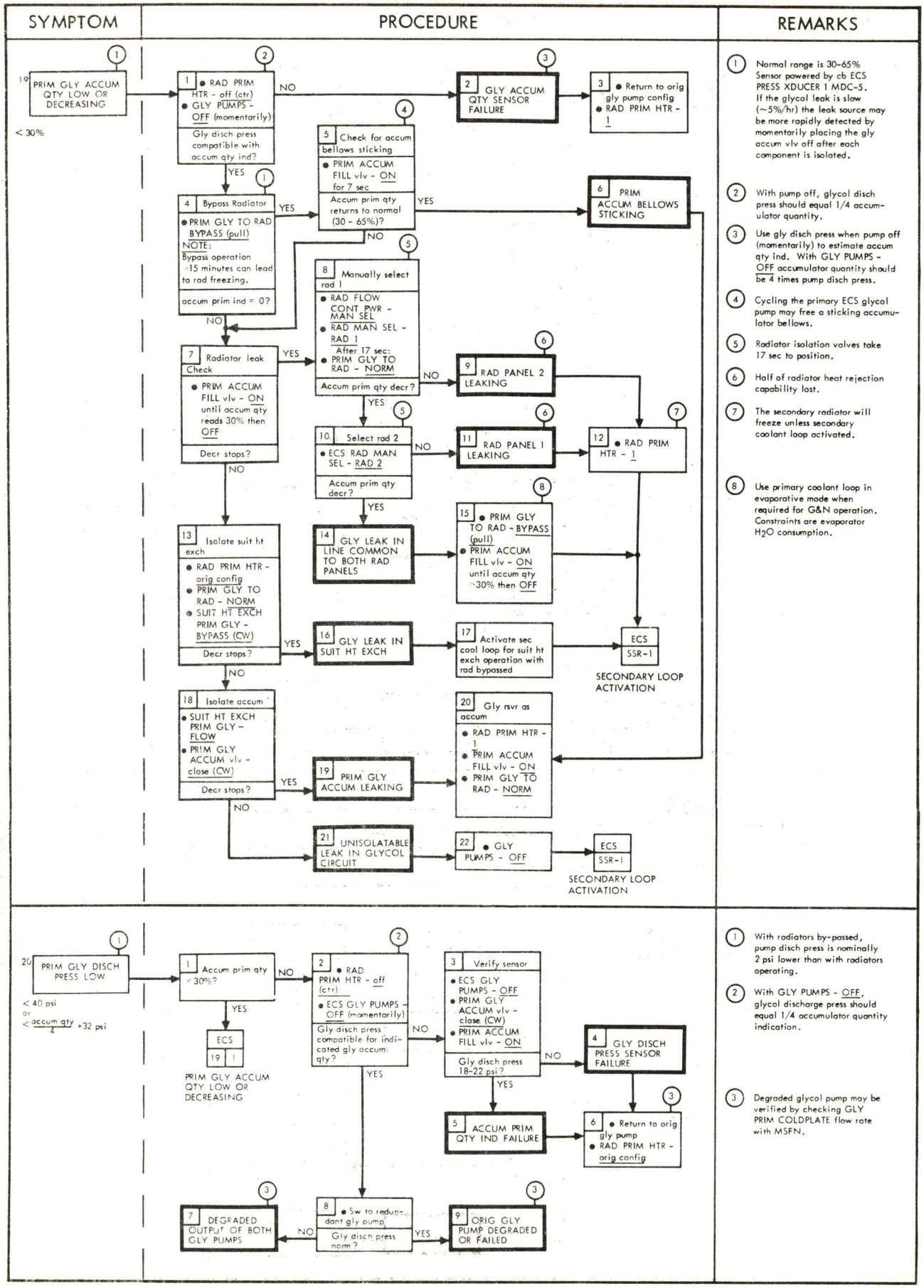
SYMPTOM
PROCEDURE
REMARKS
19 PRIM GLY ACCUM QTY LOW OR DECREASING
< 30%
1 • RAD PRIM HTR - off (ctr) • GLY PUMPS - OFF (momentarily) Gly disch press compatible with accum qty ind?
NO
2 GLY ACCUM QTY SENSOR FAILURE
3 • Return to orig gly pump config • RAD PRIM HTR - 1
YES
4 Bypass Radiator • PRIM GLY TO RAD BYPASS (pull) NOTE: Bypass operation >15 minutes can lead to rad freezing. accum prim ind = 0?
YES
5 Check for accum bellows sticking • PRIM ACCUM FILL vlv - ON for 7 sec Accum prim qty returns to normal (30 - 65%)?
YES
6 PRIM ACCUM BELLOWS STICKING
NO
8 Manually select rad 1 • RAD FLOW CONT PWR - MAN SEL • RAD MAN SEL - RAD 1 After 17 sec: • PRIM GLY TO RAD - NORM Accum prim qty decr?
NO
9 RAD PANEL 2 LEAKING
YES
7 Radiator leak Check • PRIM ACCUM FILL vlv - ON until accum qty reads 30% then OFF Decr stops?
YES
10 Select rad 2 • ECS RAD MAN SEL - RAD 2 Accum prim qty decr?
NO
11 RAD PANEL 1 LEAKING
12 • RAD PRIM HTR - 1
NO
YES
13 Isolate suit ht exch • RAD PRIM HTR - orig config • PRIM GLY TO RAD - NORM • SUIT HT EXCH PRIM GLY - BYPASS (CW) Decr stops?
14 GLY LEAK IN LINE COMMON TO BOTH RAD PANELS
15 • PRIM GLY TO RAD - BYPASS (pull) • PRIM ACCUM FILL vlv - ON until accum qty ~30% then OFF
YES
16 GLY LEAK IN SUIT HT EXCH
17 Activate sec cool loop for suit ht exch operation with rad bypassed
ECS SSR-1
SECONDARY LOOP ACTIVATION
NO
18 Isolate accum • SUIT HT EXCH PRIM GLY - FLOW • PRIM GLY ACCUM vlv - close (CW) Decr stops?
20 Gly rsvr as accum • RAD PRIM HTR - 1 • PRIM ACCUM FILL vlv - ON • PRIM GLY TO RAD - NORM
YES
19 PRIM GLY ACCUM LEAKING
NO
21 UNISOLATABLE LEAK IN GLYCOL CIRCUIT
22 • GLY PUMPS - OFF
ECS SSR-1
SECONDARY LOOP ACTIVATION
1 Normal range is 30-65% Sensor powered by cb ECS PRESS XDUCER 1 MDC-5. If the glycol leak is slow (~5%/hr) the leak source may be more rapidly detected by momentarily placing the gly accum vlv off after each component is isolated.
2 With pump off, glycol disch press should equal 1/4 accumulator quantity.
3 Use gly disch press when pump off (momentarily) to estimate accum qty ind. With GLY PUMPS - OFF accumulator quantity should be 4 times pump disch press.
4 Cycling the primary ECS glycol pump may free a sticking accumulator bellows.
5 Radiator isolation valves take 17 sec to position.
6 Half of radiator heat rejection capability lost.
7 The secondary radiator will freeze unless secondary coolant loop activated.
8 Use primary coolant loop in evaporative mode when required for G&N operation. Constraints are evaporator H2O consumption.
20 PRIM GLY DISCH PRESS LOW
< 40 psi or < accum qty / 4 + 32 psi
1 Accum prim qty < 30%?
YES
ECS 19 1
PRIM GLY ACCUM QTY LOW OR DECREASING
NO
2 • RAD PRIM HTR - off (ctr) • ECS GLY PUMPS - OFF (momentarily) Gly disch press compatible for indicated gly accum qty?
NO
3 Verify sensor • ECS GLY PUMPS - OFF • PRIM GLY ACCUM vlv - close (CW) • PRIM ACCUM FILL vlv - ON Gly disch press 18-22 psi?
NO
4 GLY DISCH PRESS SENSOR FAILURE
YES
5 ACCUM PRIM QTY IND FAILURE
6 • Return to orig gly pump • RAD PRIM HTR - orig config
YES
7 DEGRADED OUTPUT OF BOTH GLY PUMPS
8 • Sw to redundant gly pump Gly disch press norm?
NO
YES
9 ORIG GLY PUMP DEGRADED OR FAILED
1 With radiators by-passed, pump disch press is nominally 2 psi lower than with radiators operating.
2 With GLY PUMPS - OFF, glycol discharge press should equal 1/4 accumulator quantity indication.
3 Degraded glycol pump may be verified by checking GLY PRIM COLDPLATE flow rate with MSFN.

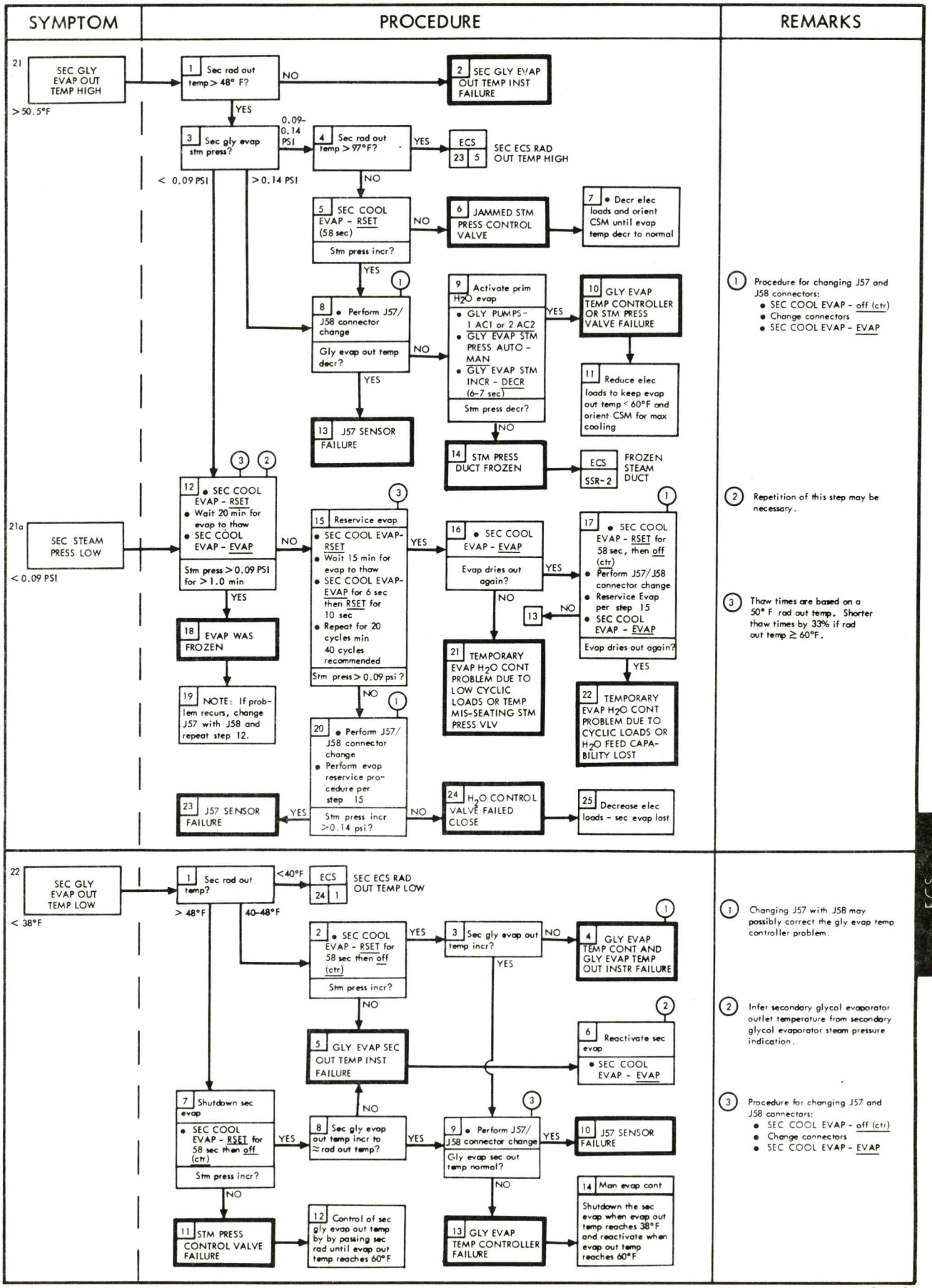
SYMPTOM
PROCEDURE
REMARKS
21 SEC GLY EVAP OUT TEMP HIGH
> 50.5°F
1 Sec rad out temp > 48° F?
NO
2 SEC GLY EVAP OUT TEMP INST FAILURE
YES
3 Sec gly evap stm press?
0.09-0.14 PSI
< 0.09 PSI
> 0.14 PSI
4 Sec rad out temp > 97°F?
YES
ECS 23 5 SEC ECS RAD OUT TEMP HIGH
NO
5 SEC COOL EVAP - RSET (58 sec)
Stm press incr?
NO
6 JAMMED STM PRESS CONTROL VALVE
7 • Decr elec loads and orient CSM until evap temp decr to normal
YES
8 • Perform J57/J58 connector change
Gly evap out temp decr?
NO
9 Activate prim H2O evap
• GLY PUMPS - 1 AC1 or 2 AC2
• GLY EVAP STM PRESS AUTO - MAN
• GLY EVAP STM INCR - DECR (6-7 sec)
Stm press decr?
YES
10 GLY EVAP TEMP CONTROLLER OR STM PRESS VALVE FAILURE
11 Reduce elec loads to keep evap out temp < 60°F and orient CSM for max cooling
YES
13 J57 SENSOR FAILURE
NO
14 STM PRESS DUCT FROZEN
ECS SSR-2 FROZEN STEAM DUCT
21a SEC STEAM PRESS LOW
< 0.09 PSI
12 • SEC COOL EVAP - RSET
• Wait 20 min for evap to thaw
• SEC COOL EVAP - EVAP
Stm press > 0.09 PSI for > 1.0 min
NO
15 Reservice evap
• SEC COOL EVAP - RSET
• Wait 15 min for evap to thaw
• SEC COOL EVAP - EVAP for 6 sec then RSET for 10 sec
• Repeat for 20 cycles min 40 cycles recommended
Stm press > 0.09 psi?
YES
16 • SEC COOL EVAP - EVAP
Evap dries out again?
YES
17 • SEC COOL EVAP - RSET for 58 sec, then off (ctr)
• Perform J57/J58 connector change
• Reservice Evap per step 15
• SEC COOL EVAP - EVAP
Evap dries out again?
NO
13
NO
21 TEMPORARY EVAP H2O CONT PROBLEM DUE TO LOW CYCLIC LOADS OR TEMP MIS-SEATING STM PRESS VLV
YES
22 TEMPORARY EVAP H2O CONT PROBLEM DUE TO CYCLIC LOADS OR H2O FEED CAPABILITY LOST
YES
18 EVAP WAS FROZEN
19 NOTE: If problem recurs, change J57 with J58 and repeat step 12.
NO
20 • Perform J57/J58 connector change
• Perform evap reservice procedure per step 15
Stm press incr > 0.14 psi?
NO
24 H2O CONTROL VALVE FAILED CLOSE
25 Decrease elec loads - sec evap lost
YES
23 J57 SENSOR FAILURE
22 SEC GLY EVAP OUT TEMP LOW
< 38°F
1 Sec rad out temp?
< 40°F
ECS 24 1 SEC ECS RAD OUT TEMP LOW
> 48°F
40-48°F
2 • SEC COOL EVAP - RSET for 58 sec then off (ctr)
Stm press incr?
YES
3 Sec gly evap out temp incr?
NO
4 GLY EVAP TEMP CONT AND GLY EVAP TEMP OUT INSTR FAILURE
NO
5 GLY EVAP SEC OUT TEMP INST FAILURE
YES
6 Reactivate sec evap
• SEC COOL EVAP - EVAP
7 Shutdown sec evap
• SEC COOL EVAP - RSET for 58 sec then off (ctr)
Stm press incr?
YES
8 Sec gly evap out temp incr to ≈ rad out temp?
NO
YES
9 • Perform J57/J58 connector change
Gly evap sec out temp normal?
YES
10 J57 SENSOR FAILURE
NO
11 STM PRESS CONTROL VALVE FAILURE
12 Control of sec gly evap out temp by by passing sec rad until evap out temp reaches 60°F
13 GLY EVAP TEMP CONTROLLER FAILURE
14 Man evap cont
Shutdown the sec evap when evap out temp reaches 38°F and reactivate when evap out temp reaches 60°F
1 Procedure for changing J57 and J58 connectors:
• SEC COOL EVAP - off (ctr)
• Change connectors
• SEC COOL EVAP - EVAP
2 Repetition of this step may be necessary.
3 Thaw times are based on a 50° F rad out temp. Shorter thaw times by 33% if rad out temp ≥ 60°F.
1 Changing J57 with J58 may possibly correct the gly evap temp controller problem.
2 Infer secondary glycol evaporator outlet temperature from secondary glycol evaporator steam pressure indication.
3 Procedure for changing J57 and J58 connectors:
• SEC COOL EVAP - off (ctr)
• Change connectors
• SEC COOL EVAP - EVAP

SYMPTOM	PROCEDURE	REMARKS
23 SEC ECS RAD OUT TEMP HIGH > 70°F (except for Lunar Orbit)	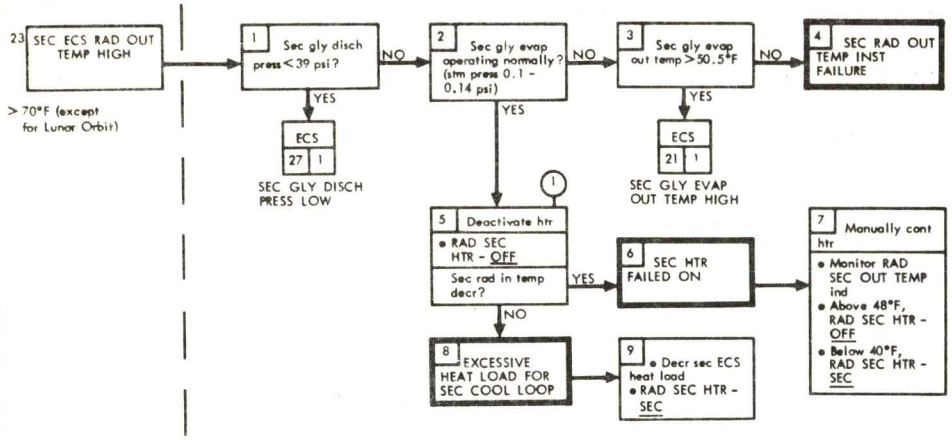	(1) Heater operation can be confirmed by ammeter change during switching operation. Δ current will be: 30 amp - both operating 15 amp - one operating
24 SEC ECS RAD OUT TEMP LOW < 38°F	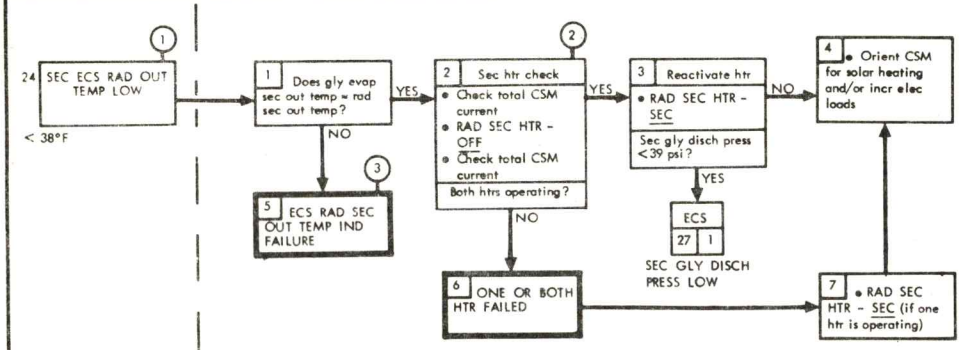	(1) Assumes secondary loop is in operation. Sensor is powered by cb ECS RAD CONT/HTRS MNA (MDC-5). (2) Heater operation can be confirmed by ammeter change during switching operation. Δ current will be: 30 amp - both operating 15 amp - one operating (3) Use SEC GLY EVAP OUT TEMP indicator with ECS RAD SEC IN TEMP indicator to estimate secondary radiator outlet temperature.
25 SEC GLY ACCUM QTY HIGH > 55%	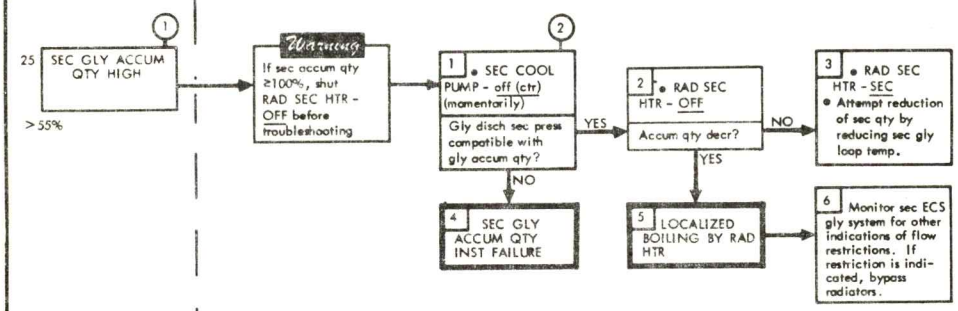	(1) Normal range 30-55%. (2) With glycol pump off, glycol discharge press should equal 1/4 accumulator quantity.
26 SEC GLY ACCUM QTY DECREASING	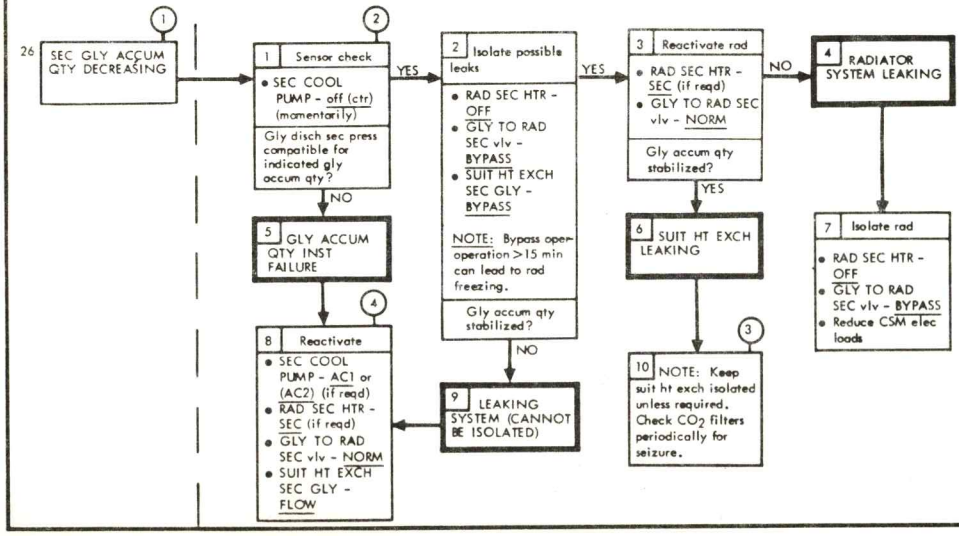	(1) This symptom is also valid when secondary glycol loop is not in operation. Accum qty and disch press sensors powered by cb SEC COOL XDUCER (MDC-5). Normal range is 30-55%. (2) With pump off, glycol discharge pressure should equal 1/4 gly accum quantity. (3) Humidity control and suit loop cooling not available from secondary loop when suit ht exch is bypassed. A glycol leak will exist whenever the secondary suit ht exch is used and could result in glycol contamination in the suit loop. (4) If leak is determined, temporary deactivation of pump may conserve glycol for future use. Radiator heater to be OFF when pump is OFF.

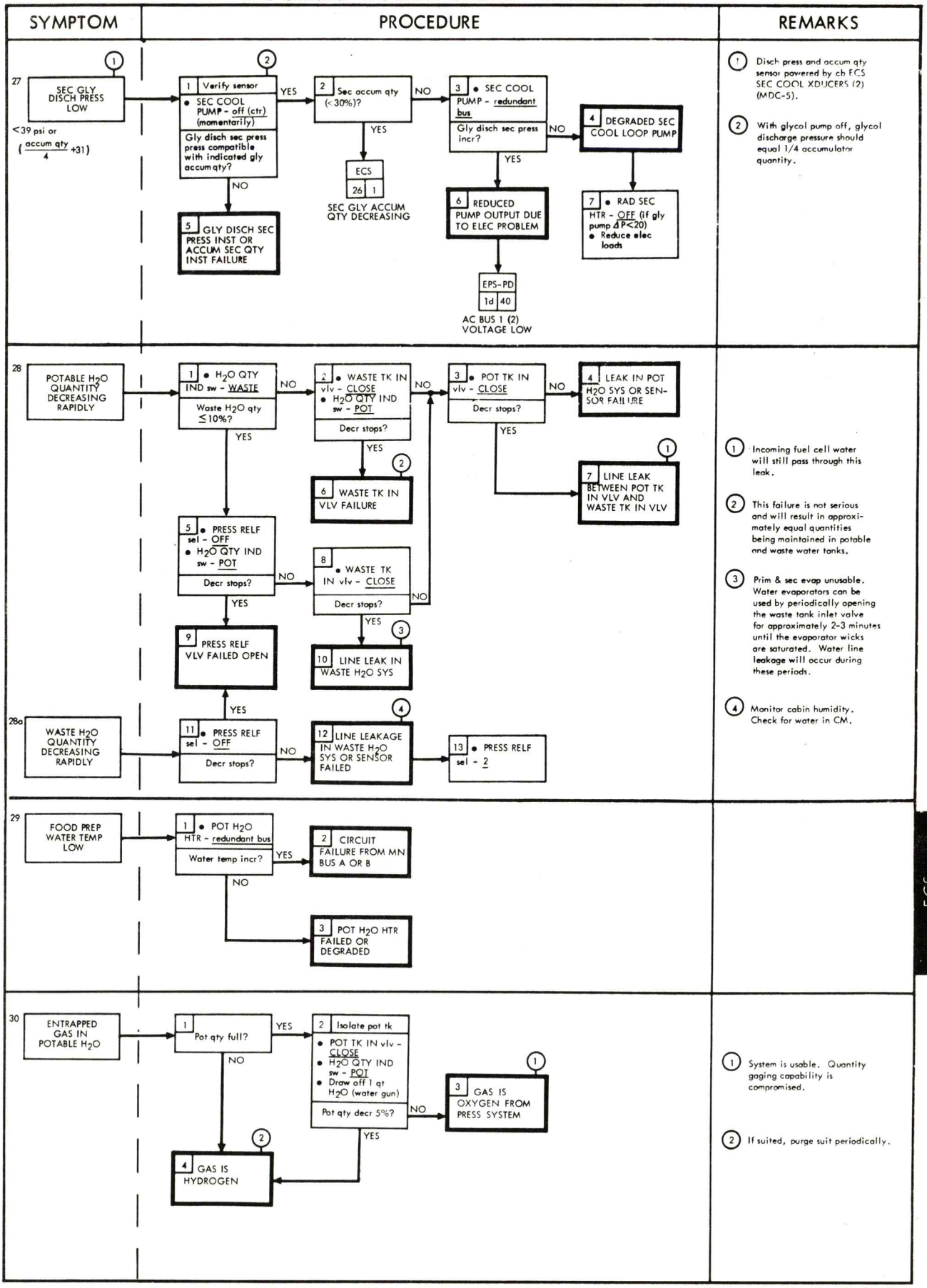
SYMPTOM
PROCEDURE
REMARKS
27
SEC GLY DISCH PRESS LOW
<39 psi or (accum qty/4 +31)
1 Verify sensor
• SEC COOL PUMP - off (ctr) (momentarily)
Gly disch sec press press compatible with indicated gly accum qty?
YES
NO
2 Sec accum qty (< 30%)?
YES
NO
ECS 26 1
SEC GLY ACCUM QTY DECREASING
3 • SEC COOL PUMP - redundant bus
Gly disch sec press incr?
YES
NO
4 DEGRADED SEC COOL LOOP PUMP
5 GLY DISCH SEC PRESS INST OR ACCUM SEC QTY INST FAILURE
6 REDUCED PUMP OUTPUT DUE TO ELEC PROBLEM
7 • RAD SEC HTR - OFF (if gly pump ΔP<20)
• Reduce elec loads
EPS-PD 1d 40
AC BUS 1 (2) VOLTAGE LOW
1 Disch press and accum qty sensor powered by ch FCS SEC COOL XDUCERS (2) (MDC-5).
2 With glycol pump off, glycol discharge pressure should equal 1/4 accumulator quantity.
28
POTABLE H2O QUANTITY DECREASING RAPIDLY
1 • H2O QTY IND sw - WASTE
Waste H2O qty ≤10%?
NO
YES
2 • WASTE TK IN vlv - CLOSE
• H2O QTY IND sw - POT
Decr stops?
NO
YES
6 WASTE TK IN VLV FAILURE
3 • POT TK IN vlv - CLOSE
Decr stops?
NO
YES
4 LEAK IN POT H2O SYS OR SENSOR FAILURE
7 LINE LEAK BETWEEN POT TK IN VLV AND WASTE TK IN VLV
5 • PRESS RELF sel - OFF
• H2O QTY IND sw - POT
Decr stops?
NO
YES
8 • WASTE TK IN vlv - CLOSE
Decr stops?
NO
YES
9 PRESS RELF VLV FAILED OPEN
10 LINE LEAK IN WASTE H2O SYS
28a
WASTE H2O QUANTITY DECREASING RAPIDLY
11 • PRESS RELF sel - OFF
Decr stops?
NO
YES
12 LINE LEAKAGE IN WASTE H2O SYS OR SENSOR FAILED
13 • PRESS RELF sel - 2
1 Incoming fuel cell water will still pass through this leak.
2 This failure is not serious and will result in approximately equal quantities being maintained in potable and waste water tanks.
3 Prim & sec evap unusable. Water evaporators can be used by periodically opening the waste tank inlet valve for approximately 2-3 minutes until the evaporator wicks are saturated. Water line leakage will occur during these periods.
4 Monitor cabin humidity. Check for water in CM.
29
FOOD PREP WATER TEMP LOW
1 • POT H2O HTR - redundant bus
Water temp incr?
YES
NO
2 CIRCUIT FAILURE FROM MN BUS A OR B
3 POT H2O HTR FAILED OR DEGRADED
30
ENTRAPPED GAS IN POTABLE H2O
1 Pot qty full?
YES
NO
2 • POT TK IN vlv - CLOSE
• H2O QTY IND sw - POT
• Draw off 1 qt H2O (water gun)
Pot qty decr 5%?
NO
YES
3 GAS IS OXYGEN FROM PRESS SYSTEM
4 GAS IS HYDROGEN
1 System is usable. Quantity gaging capability is compromised.
2 If suited, purge suit periodically.

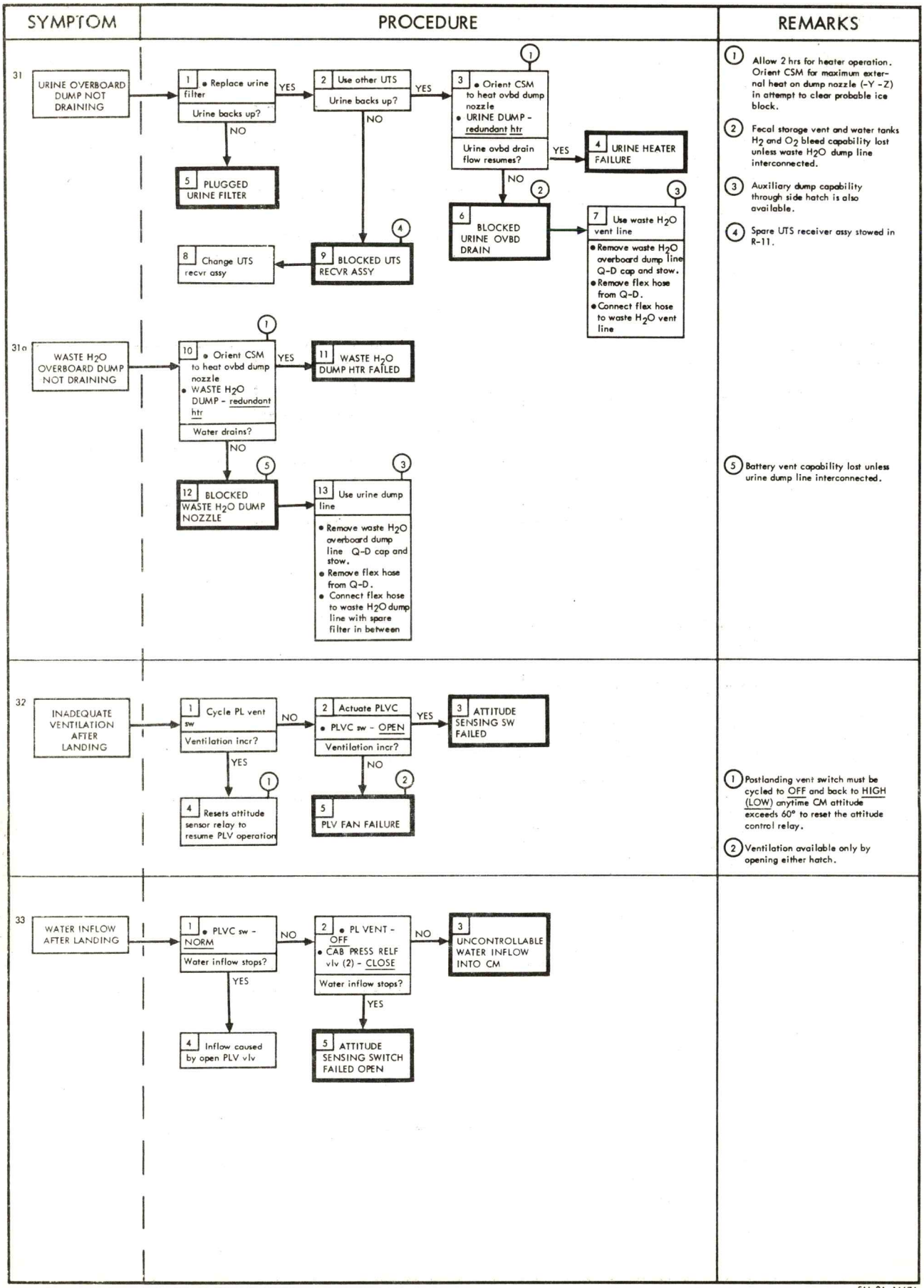
SYMPTOM
PROCEDURE
REMARKS
31
URINE OVERBOARD DUMP NOT DRAINING
1 • Replace urine filter
Urine backs up?
YES
NO
2 Use other UTS
Urine backs up?
YES
NO
3 • Orient CSM to heat ovbd dump nozzle
• URINE DUMP - redundant htr
Urine ovbd drain flow resumes?
YES
NO
4 URINE HEATER FAILURE
5 PLUGGED URINE FILTER
6 BLOCKED URINE OVBD DRAIN
7 Use waste H2O vent line
• Remove waste H2O overboard dump line Q-D cap and stow.
• Remove flex hose from Q-D.
• Connect flex hose to waste H2O vent line
8 Change UTS recvr assy
9 BLOCKED UTS RECVR ASSY
31a
WASTE H2O OVERBOARD DUMP NOT DRAINING
10 • Orient CSM to heat ovbd dump nozzle
• WASTE H2O DUMP - redundant htr
Water drains?
YES
NO
11 WASTE H2O DUMP HTR FAILED
12 BLOCKED WASTE H2O DUMP NOZZLE
13 Use urine dump line
• Remove waste H2O overboard dump line Q-D cap and stow.
• Remove flex hose from Q-D.
• Connect flex hose to waste H2O dump line with spare filter in between
1 Allow 2 hrs for heater operation. Orient CSM for maximum external heat on dump nozzle (-Y -Z) in attempt to clear probable ice block.
2 Fecal storage vent and water tanks H2 and O2 bleed capability lost unless waste H2O dump line interconnected.
3 Auxiliary dump capability through side hatch is also available.
4 Spare UTS receiver assy stowed in R-11.
5 Battery vent capability lost unless urine dump line interconnected.
32
INADEQUATE VENTILATION AFTER LANDING
1 Cycle PL vent sw
Ventilation incr?
NO
YES
2 Actuate PLVC
• PLVC sw - OPEN
Ventilation incr?
YES
NO
3 ATTITUDE SENSING SW FAILED
4 Resets attitude sensor relay to resume PLV operation
5 PLV FAN FAILURE
1 Postlanding vent switch must be cycled to OFF and back to HIGH (LOW) anytime CM attitude exceeds 60° to reset the attitude control relay.
2 Ventilation available only by opening either hatch.
33
WATER INFLOW AFTER LANDING
1 • PLVC sw - NORM
Water inflow stops?
NO
YES
2 • PL VENT - OFF
• CAB PRESS RELF vlv (2) - CLOSE
Water inflow stops?
NO
YES
3 UNCONTROLLABLE WATER INFLOW INTO CM
4 Inflow caused by open PLV vlv
5 ATTITUDE SENSING SWITCH FAILED OPEN

SPECIAL SUB ROUTINES	PROCEDURE	REMARKS

SSR-1

SECONDARY LOOP ACTIVATION

1 Simultaneous prim and sec loop operation desired?

YES

① Caution ②

For simultaneous cool loop operation only rad of one cool loop should be used. For loop bypassing rad:
- PRIM/(SEC) GLY TO RAD vlv - BYPASS
- PRIM/(SEC) RAD HTR - OFF

NO

3 Deactivate prim loop
- PRIM EVAP H_2O CONT vlv - OFF
- ECS RAD PRIM HTR - off (ctr)
- GLY EVAP STM PRESS AUTO - MAN
- GLY EVAP STM INCR - INCR for 58 sec
- GLY PUMPS - OFF

2 Activate sec loop
- ECS IND sel - SEC
- GLY TO RAD SEC vlv - NORM (rad open)
- SEC COOL PUMP - AC1 (or AC2)
- SEC GLY DISCH PRESS ind - >39 psi
- RAD SEC HTR - SEC (rad open)
- SEC EVAP H_2O CONT vlv - AUTO
- SEC COOL EVAP - EVAP
- SEC GLY EVAP OUT TEMP ind - 40-50.5°F
- SUIT HT EXCH SEC GLY vlv - FLOW (if reqd)

4 If a return to prim operation is desired, proceed as follows:

5 Deactivate sec loop
- RAD SEC HTR - OFF
- SEC COOL EVAP - RESET for 58 sec then off (ctr)
- SEC COOL PUMP - off (ctr)
- SEC EVAP H_2O CONT vlv - OFF

6 Activate prim loop
- ECS IND sel - PRIM
- PRIM GLY TO RAD vlv - NORM
- GLY PUMPS - 1 AC1
- PRIM GLY DISCH PRESS ind - >40 psi
- RAD PRIM HTR - 1
- GLY EVAP IN TEMP - AUTO
- PRIM EVAP H_2O CONT vlv - AUTO
- GLY EVAP STM PRESS AUTO - AUTO
- PRIM GLY EVAP OUT TEMP ind - 40-50°F
- SUIT CKT HT EXH - ON for 30 secs then off (ctr)
- CAB TEMP - AUTO

① If one panel of the primary radiator is lost, the secondary radiator should be used, otherwise the secondary radiator will be lost due to freezing.

② Operation of both coolant loops simultaneously may result in low rad out temp. To preclude rad freezing, terminate evap operation if possible.

③ G&N, DSE, and Signal Conditioners are not coldplated on secondary loop. Usage limits for this equipment are as follows:

G&N 17% duty cycle with max on time of 1 hr 55 min.

DSE 66% duty cycle with max on time of 2 hrs.

SSR-2

FROZEN STEAM DUCT

1 Initiate manual operation
- Orient steam vent outlet to sun (-Y, -Z)
- GLY EVAP STM AUTO - MAN
- GLY EVAP STM INCR - INCR (58 sec)
- GLY EVAP IN TEMP - MAN
- GLY EVAP H_2O FLOW - off (ctr)
- GLY EVAP IN TEMP vlv - adjust (to obtain prim evap out temp ~60°)
- GLY EVAP STM INCR - DECR (6-7 sec)

ECS rad prim out temp <-30°F?

YES

NO

2 Stm press changes (decr) from stabilized value within 15 min?

YES

NO

3 Service evap when stm press >0.14 psi.
- GLY EVAP H_2O FLOW - ON (2 min) then off (ctr)

Gly evap temp out <47°F

YES

NO

4 Activate sec coolant loop
- SEC COOL EVAP - off (ctr)
- SEC COOL PUMP - AC1 or AC2
- RAD SEC HTR - SEC
- RAD PRIM HTR - off (ctr)
- PRIM GLY TO RAD - BYPASS (pull)

5 Cycle H_2O
- GLY EVAP H_2O FLOW - ON 1 min - off (ctr) 15 min

Gly evap temp out <47°F

NO

YES

6 Resume norm opr
- GLY EVAP STM PRESS AUTO - AUTO
- GLY EVAP H_2O FLOW - AUTO
- GLY EVAP IN TEMP - AUTO
- PRIM GLY TO RAD vlv - NORM
- RAD PRIM HTR - PRIM 1
- RAD SEC HTR - OFF
- SEC COOL PUMP - off (ctr)

① Primary glycol evaporator temperature inlet can be approximated by secondary radiator inlet temperature.

EC MALF INCTION

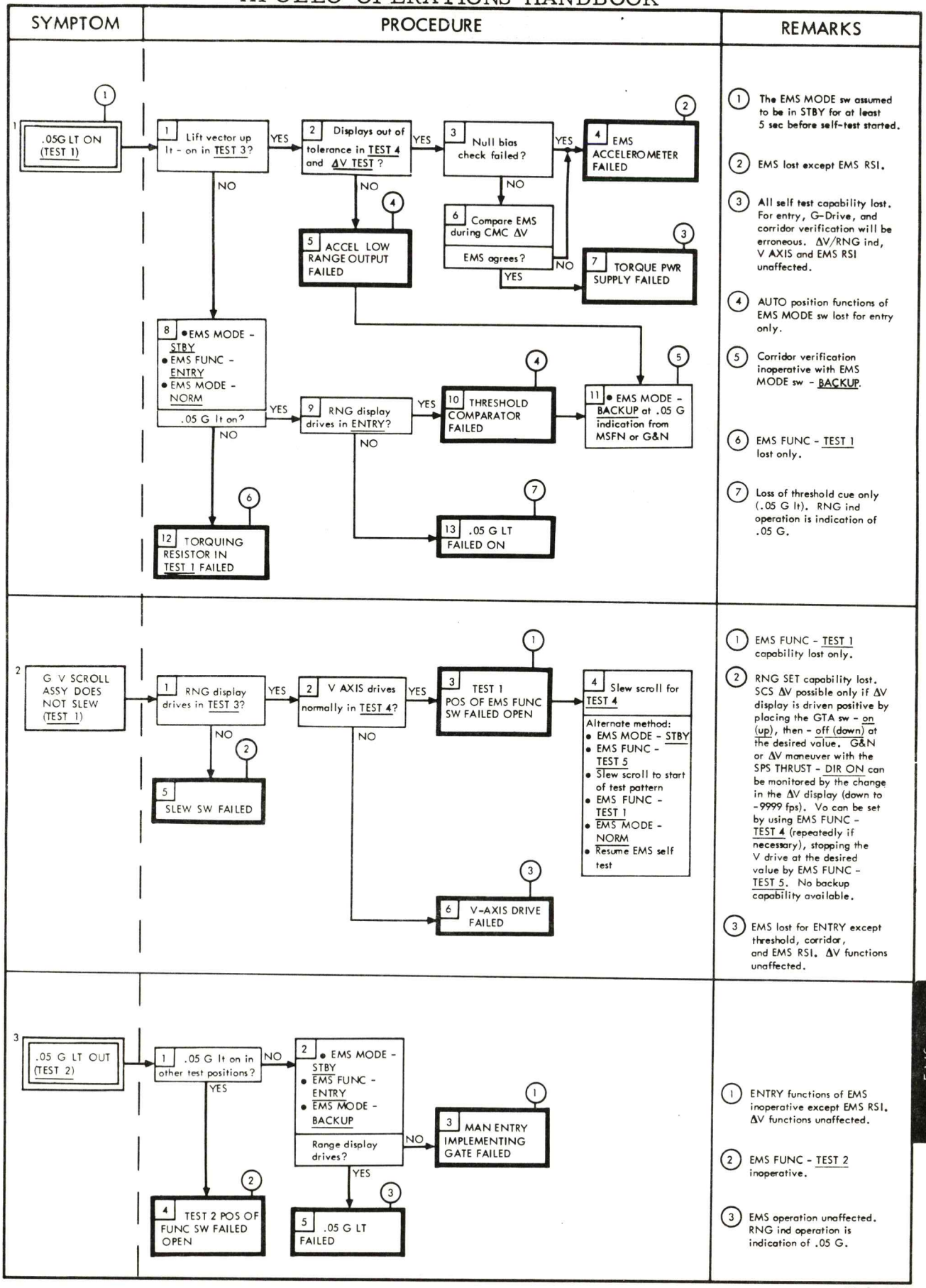
SYMPTOM
PROCEDURE
REMARKS
1
.05G LT ON (TEST 1)
1 Lift vector up lt - on in TEST 3?
YES
2 Displays out of tolerance in TEST 4 and ΔV TEST ?
YES
3 Null bias check failed?
YES
4 EMS ACCELEROMETER FAILED
NO
NO
NO
5 ACCEL LOW RANGE OUTPUT FAILED
6 Compare EMS during CMC ΔV
EMS agrees?
NO
YES
7 TORQUE PWR SUPPLY FAILED
8 • EMS MODE - STBY • EMS FUNC - ENTRY • EMS MODE - NORM
.05 G lt on?
YES
NO
9 RNG display drives in ENTRY?
YES
NO
10 THRESHOLD COMPARATOR FAILED
11 • EMS MODE - BACKUP at .05 G indication from MSFN or G&N
12 TORQUING RESISTOR IN TEST 1 FAILED
13 .05 G LT FAILED ON
1 The EMS MODE sw assumed to be in STBY for at least 5 sec before self-test started.
2 EMS lost except EMS RSI.
3 All self test capability lost. For entry, G-Drive, and corridor verification will be erroneous. ΔV/RNG ind, V AXIS and EMS RSI unaffected.
4 AUTO position functions of EMS MODE sw lost for entry only.
5 Corridor verification inoperative with EMS MODE sw - BACKUP.
6 EMS FUNC - TEST 1 lost only.
7 Loss of threshold cue only (.05 G lt). RNG ind operation is indication of .05 G.
2
G V SCROLL ASSY DOES NOT SLEW (TEST 1)
1 RNG display drives in TEST 3?
YES
2 V AXIS drives normally in TEST 4?
YES
3 TEST 1 POS OF EMS FUNC SW FAILED OPEN
4 Slew scroll for TEST 4
Alternate method:
• EMS MODE - STBY
• EMS FUNC - TEST 5
• Slew scroll to start of test pattern
• EMS FUNC - TEST 1
• EMS MODE - NORM
• Resume EMS self test
NO
NO
5 SLEW SW FAILED
6 V-AXIS DRIVE FAILED
1 EMS FUNC - TEST 1 capability lost only.
2 RNG SET capability lost. SCS ΔV possible only if ΔV display is driven positive by placing the GTA sw - on (up), then - off (down) at the desired value. G&N or ΔV maneuver with the SPS THRUST - DIR ON can be monitored by the change in the ΔV display (down to -9999 fps). Vo can be set by using EMS FUNC - TEST 4 (repeatedly if necessary), stopping the V drive at the desired value by EMS FUNC - TEST 5. No backup capability available.
3 EMS lost for ENTRY except threshold, corridor, and EMS RSI. ΔV functions unaffected.
3
.05 G LT OUT (TEST 2)
1 .05 G lt on in other test positions?
NO
YES
2 • EMS MODE - STBY • EMS FUNC - ENTRY • EMS MODE - BACKUP
Range display drives?
NO
YES
3 MAN ENTRY IMPLEMENTING GATE FAILED
4 TEST 2 POS OF FUNC SW FAILED OPEN
5 .05 G LT FAILED
1 ENTRY functions of EMS inoperative except EMS RSI. ΔV functions unaffected.
2 EMS FUNC - TEST 2 inoperative.
3 EMS operation unaffected. RNG ind operation is indication of .05 G.

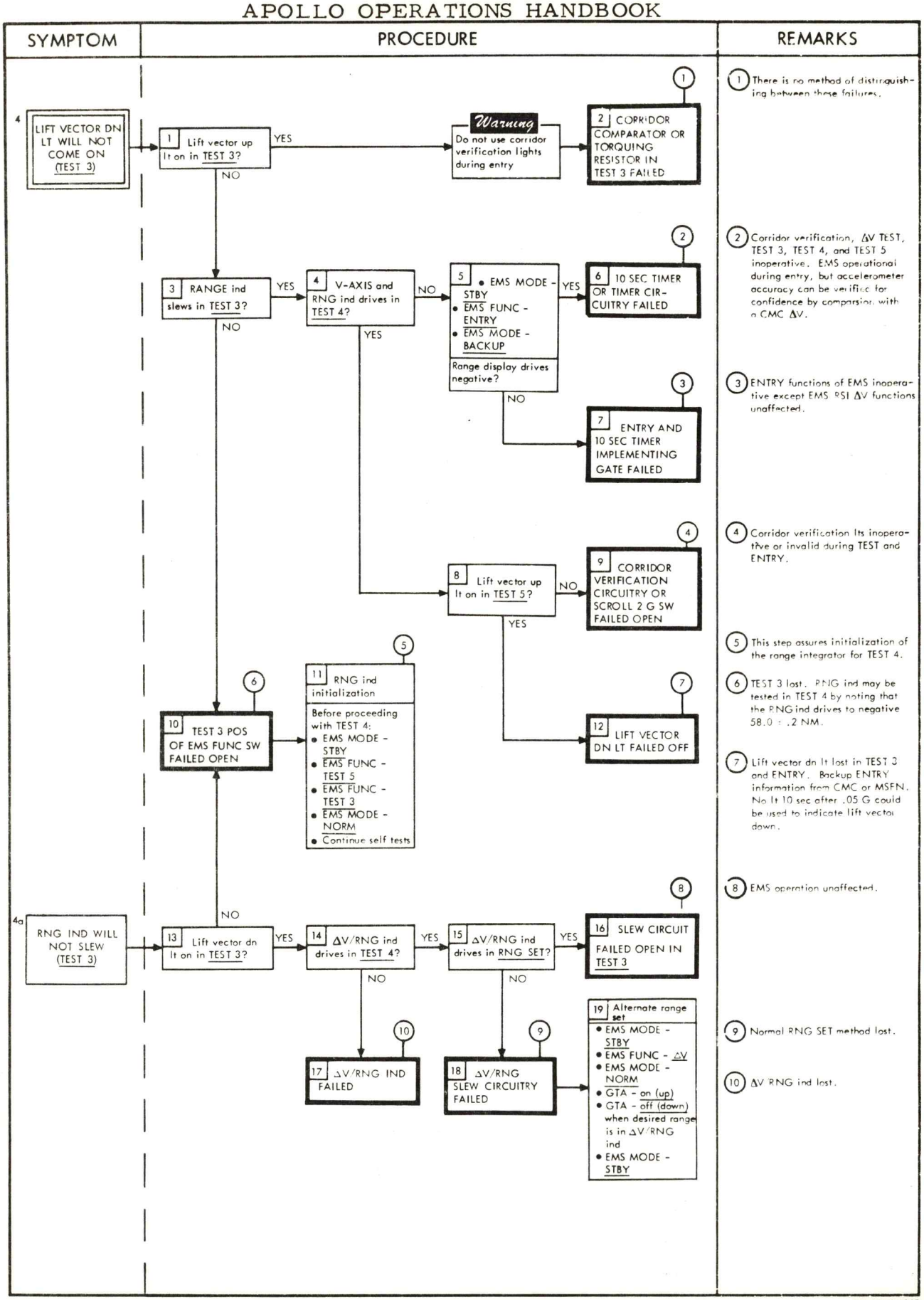
SYMPTOM
PROCEDURE
REMARKS
4 LIFT VECTOR DN LT WILL NOT COME ON (TEST 3)
1 Lift vector up lt on in TEST 3?
YES
NO
Warning
Do not use corridor verification lights during entry
2 CORRIDOR COMPARATOR OR TORQUING RESISTOR IN TEST 3 FAILED
3 RANGE ind slews in TEST 3?
YES
NO
4 V-AXIS and RNG ind drives in TEST 4?
NO
YES
5 • EMS MODE - STBY
• EMS FUNC - ENTRY
• EMS MODE - BACKUP
Range display drives negative?
YES
NO
6 10 SEC TIMER OR TIMER CIRCUITRY FAILED
7 ENTRY AND 10 SEC TIMER IMPLEMENTING GATE FAILED
8 Lift vector up lt on in TEST 5?
NO
YES
9 CORRIDOR VERIFICATION CIRCUITRY OR SCROLL 2 G SW FAILED OPEN
10 TEST 3 POS OF EMS FUNC SW FAILED OPEN
11 RNG ind initialization
Before proceeding with TEST 4:
• EMS MODE - STBY
• EMS FUNC - TEST 5
• EMS FUNC - TEST 3
• EMS MODE - NORM
• Continue self tests
12 LIFT VECTOR DN LT FAILED OFF
4a RNG IND WILL NOT SLEW (TEST 3)
13 Lift vector dn lt on in TEST 3?
YES
NO
14 ΔV/RNG ind drives in TEST 4?
YES
NO
15 ΔV/RNG ind drives in RNG SET?
YES
NO
16 SLEW CIRCUIT FAILED OPEN IN TEST 3
17 ΔV/RNG IND FAILED
18 ΔV/RNG SLEW CIRCUITRY FAILED
19 Alternate range set
• EMS MODE - STBY
• EMS FUNC - ΔV
• EMS MODE - NORM
• GTA - on (up)
• GTA - off (down) when desired range is in ΔV/RNG ind
• EMS MODE - STBY
1 There is no method of distinguishing between these failures.
2 Corridor verification, ΔV TEST, TEST 3, TEST 4, and TEST 5 inoperative. EMS operational during entry, but accelerometer accuracy can be verified for confidence by comparsion with a CMC ΔV.
3 ENTRY functions of EMS inoperative except EMS PSI ΔV functions unaffected.
4 Corridor verification lts inoperative or invalid during TEST and ENTRY.
5 This step assures initialization of the range integrator for TEST 4.
6 TEST 3 lost. RNG ind may be tested in TEST 4 by noting that the RNG ind drives to negative 58.0 ± .2 NM.
7 Lift vector dn lt lost in TEST 3 and ENTRY. Backup ENTRY information from CMC or MSFN. No lt 10 sec after .05 G could be used to indicate lift vector down.
8 EMS operation unaffected.
9 Normal RNG SET method lost.
10 ΔV RNG ind lost.

SYMPTOM	PROCEDURE	REMARKS

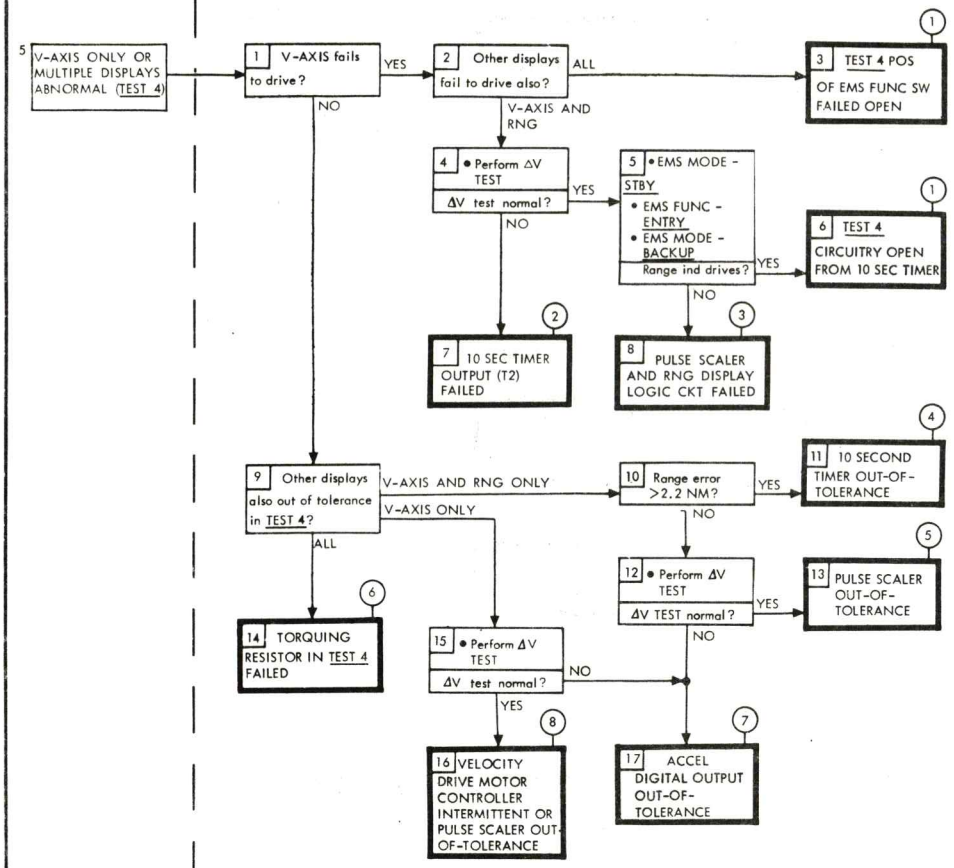

(1) EMS FUNC - TEST 4 capability lost. EMS operational but accelerometer accuracy can be verified only by performing a ΔV TEST.

(2) TEST 4 and ΔV TEST only lost.

(3) V-axis and range display lost.

(4) This failure will invalidate the ΔV TEST and TEST 4, except the G-axis display. EMS should be operational but corridor verification erroneous during entry.

(5) V AXIS and RNG information erroneous only.

(6) EMS FUNC - TEST 4 lost but EMS operation during entry should be normal.

(7) V AXIS, ΔV and RNG information erroneous. Other EMS information unaffected. MSFN may be able to supply a correction factor for this error.

(8) There is no method of distinguishing between these two failures. Scroll velocity information will be erroneous. Range readout of uncertain validity.

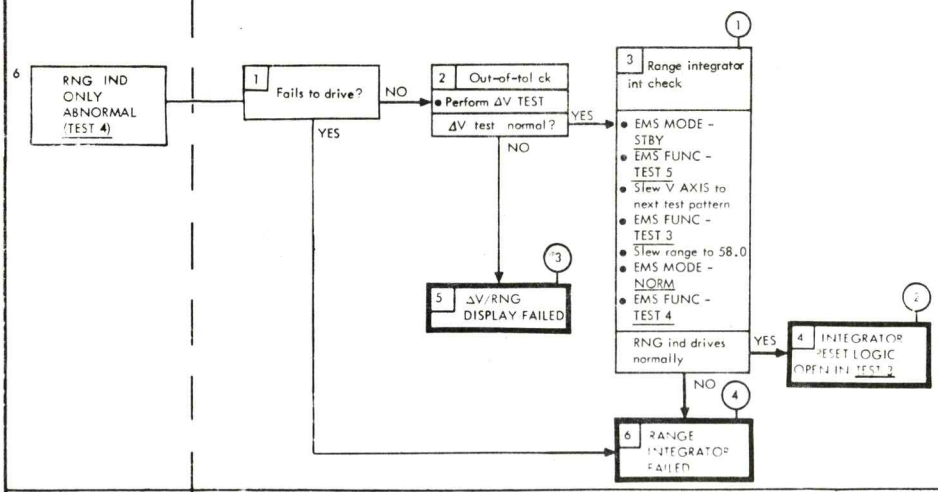

(1) This check constrained by test pattern availability.

(2) EMS ENTRY and ΔV functions unaffected.

(3) RNG and ΔV displays lost.

(4) RNG display lost.

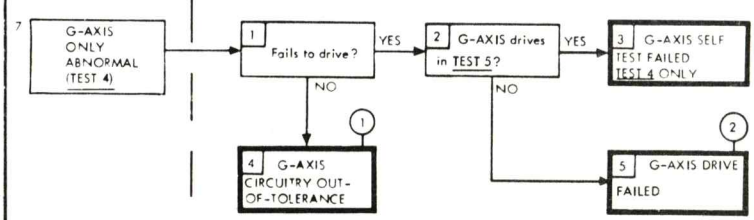

(1) Scroll G display erroneous.

(2) Scroll G display lost. Backup G information from CMC or G meter.

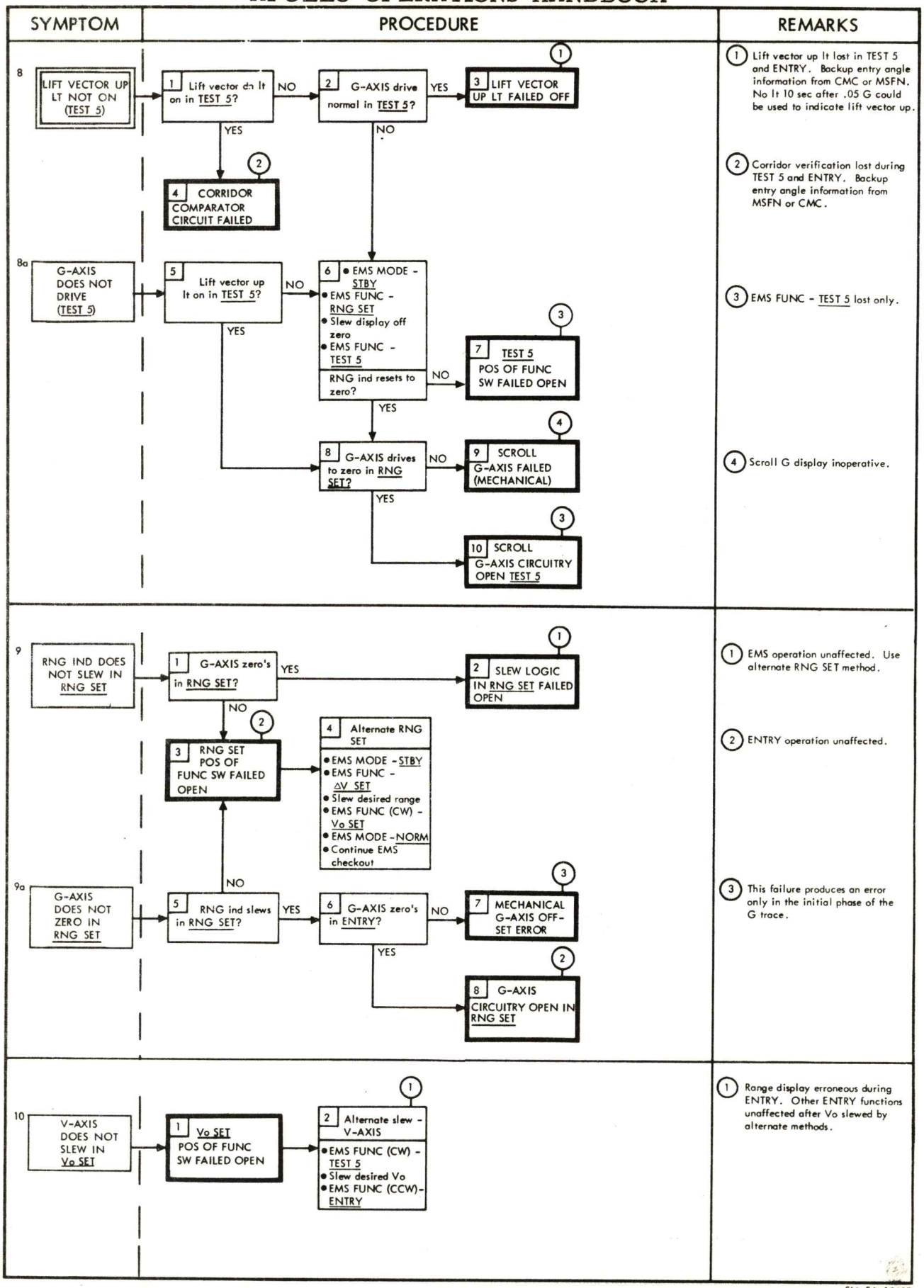
SYMPTOM
PROCEDURE
REMARKS
8
LIFT VECTOR UP LT NOT ON (TEST 5)
1 Lift vector dn lt on in TEST 5?
NO
2 G-AXIS drive normal in TEST 5?
YES
3 LIFT VECTOR UP LT FAILED OFF
YES
NO
4 CORRIDOR COMPARATOR CIRCUIT FAILED
8a
G-AXIS DOES NOT DRIVE (TEST 5)
5 Lift vector up lt on in TEST 5?
NO
6 • EMS MODE - STBY • EMS FUNC - RNG SET • Slew display off zero • EMS FUNC - TEST 5
RNG ind resets to zero?
NO
7 TEST 5 POS OF FUNC SW FAILED OPEN
YES
8 G-AXIS drives to zero in RNG SET?
NO
9 SCROLL G-AXIS FAILED (MECHANICAL)
YES
10 SCROLL G-AXIS CIRCUITRY OPEN TEST 5
1 Lift vector up lt lost in TEST 5 and ENTRY. Backup entry angle information from CMC or MSFN. No lt 10 sec after .05 G could be used to indicate lift vector up.
2 Corridor verification lost during TEST 5 and ENTRY. Backup entry angle information from MSFN or CMC.
3 EMS FUNC - TEST 5 lost only.
4 Scroll G display inoperative.
9
RNG IND DOES NOT SLEW IN RNG SET
1 G-AXIS zero's in RNG SET?
YES
2 SLEW LOGIC IN RNG SET FAILED OPEN
NO
3 RNG SET POS OF FUNC SW FAILED OPEN
4 Alternate RNG SET
• EMS MODE - STBY • EMS FUNC - ΔV SET • Slew desired range • EMS FUNC (CW) - Vo SET • EMS MODE - NORM • Continue EMS checkout
9a
G-AXIS DOES NOT ZERO IN RNG SET
NO
5 RNG ind slews in RNG SET?
YES
6 G-AXIS zero's in ENTRY?
NO
7 MECHANICAL G-AXIS OFF-SET ERROR
YES
8 G-AXIS CIRCUITRY OPEN IN RNG SET
1 EMS operation unaffected. Use alternate RNG SET method.
2 ENTRY operation unaffected.
3 This failure produces an error only in the initial phase of the G trace.
10
V-AXIS DOES NOT SLEW IN Vo SET
1 Vo SET POS OF FUNC SW FAILED OPEN
2 Alternate slew - V-AXIS
• EMS FUNC (CW) - TEST 5 • Slew desired Vo • EMS FUNC (CCW) - ENTRY
1 Range display erroneous during ENTRY. Other ENTRY functions unaffected after Vo slewed by alternate methods.

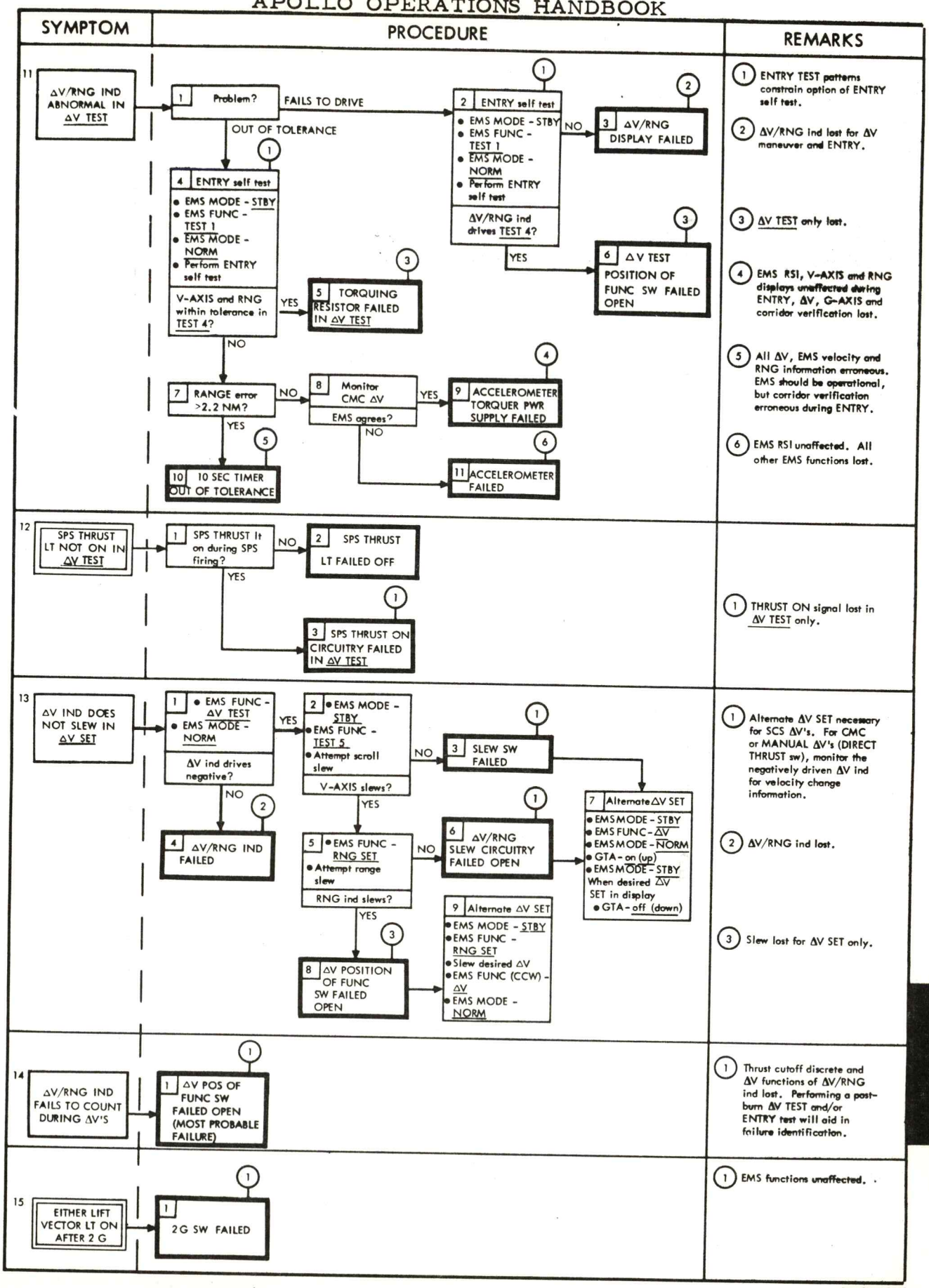
SYMPTOM
PROCEDURE
REMARKS
11
ΔV/RNG IND ABNORMAL IN ΔV TEST
1 Problem?
FAILS TO DRIVE
OUT OF TOLERANCE
2 ENTRY self test
• EMS MODE - STBY
• EMS FUNC - TEST 1
• EMS MODE - NORM
• Perform ENTRY self test
ΔV/RNG ind drives TEST 4?
NO
YES
3 ΔV/RNG DISPLAY FAILED
4 ENTRY self test
• EMS MODE - STBY
• EMS FUNC - TEST 1
• EMS MODE - NORM
• Perform ENTRY self test
V-AXIS and RNG within tolerance in TEST 4?
YES
5 TORQUING RESISTOR FAILED IN ΔV TEST
6 ΔV TEST POSITION OF FUNC SW FAILED OPEN
NO
7 RANGE error >2.2 NM?
NO
8 Monitor CMC ΔV
EMS agrees?
YES
NO
9 ACCELEROMETER TORQUER PWR SUPPLY FAILED
11 ACCELEROMETER FAILED
YES
10 10 SEC TIMER OUT OF TOLERANCE
1 ENTRY TEST patterns constrain option of ENTRY self test.
2 ΔV/RNG ind lost for ΔV maneuver and ENTRY.
3 ΔV TEST only lost.
4 EMS RSI, V-AXIS and RNG displays unaffected during ENTRY, ΔV, G-AXIS and corridor verification lost.
5 All ΔV, EMS velocity and RNG information erroneous. EMS should be operational, but corridor verification erroneous during ENTRY.
6 EMS RSI unaffected. All other EMS functions lost.
12
SPS THRUST LT NOT ON IN ΔV TEST
1 SPS THRUST lt on during SPS firing?
NO
2 SPS THRUST LT FAILED OFF
YES
3 SPS THRUST ON CIRCUITRY FAILED IN ΔV TEST
1 THRUST ON signal lost in ΔV TEST only.
13
ΔV IND DOES NOT SLEW IN ΔV SET
1 • EMS FUNC - ΔV TEST
• EMS MODE - NORM
ΔV ind drives negative?
YES
NO
2 • EMS MODE - STBY
• EMS FUNC - TEST 5
• Attempt scroll slew
V-AXIS slews?
NO
YES
3 SLEW SW FAILED
4 ΔV/RNG IND FAILED
5 • EMS FUNC - RNG SET
• Attempt range slew
RNG ind slews?
NO
YES
6 ΔV/RNG SLEW CIRCUITRY FAILED OPEN
7 Alternate ΔV SET
• EMS MODE - STBY
• EMS FUNC - ΔV
• EMS MODE - NORM
• GTA - on (up)
• EMS MODE - STBY
When desired ΔV SET in display
• GTA - off (down)
8 ΔV POSITION OF FUNC SW FAILED OPEN
9 Alternate ΔV SET
• EMS MODE - STBY
• EMS FUNC - RNG SET
• Slew desired ΔV
• EMS FUNC (CCW) - ΔV
• EMS MODE - NORM
1 Alternate ΔV SET necessary for SCS ΔV's. For CMC or MANUAL ΔV's (DIRECT THRUST sw), monitor the negatively driven ΔV ind for velocity change information.
2 ΔV/RNG ind lost.
3 Slew lost for ΔV SET only.
14
ΔV/RNG IND FAILS TO COUNT DURING ΔV'S
1 ΔV POS OF FUNC SW FAILED OPEN (MOST PROBABLE FAILURE)
1 Thrust cutoff discrete and ΔV functions of ΔV/RNG ind lost. Performing a post-burn ΔV TEST and/or ENTRY test will aid in failure identification.
15
EITHER LIFT VECTOR LT ON AFTER 2 G
1 2G SW FAILED
1 EMS functions unaffected.

SYMPTOM	PROCEDURE	REMARKS
DOCKING	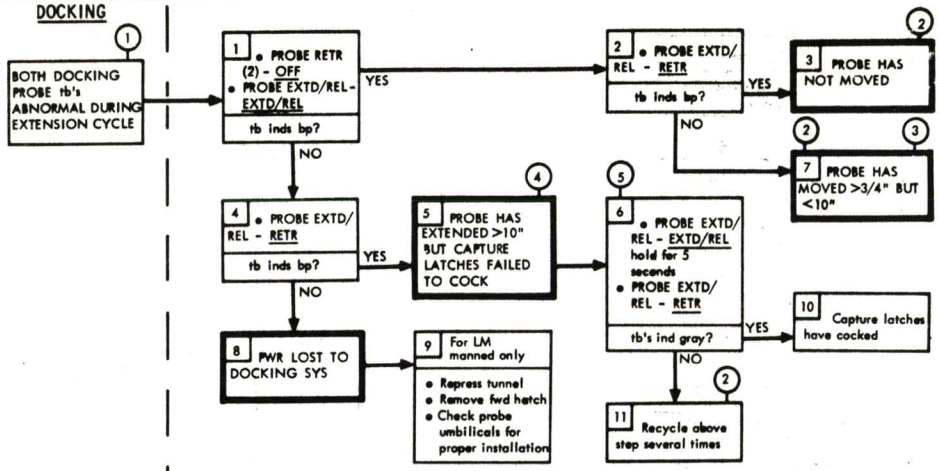	(1) If one tb abnormal, continue with docking sequence (2) Attempt docking if in accordance with mission rules. (3) Capture latches will have unlocked and probe travel will probably be at least 6 inches. (4) Should have been accompanied by an audible sound during initial extension attempt. (5) If CSM docked with LM, thrust -X while holding PROBE EXTD/REL switch to aid release of capture latches.
2 DOCK PROBE WILL NOT FOLD	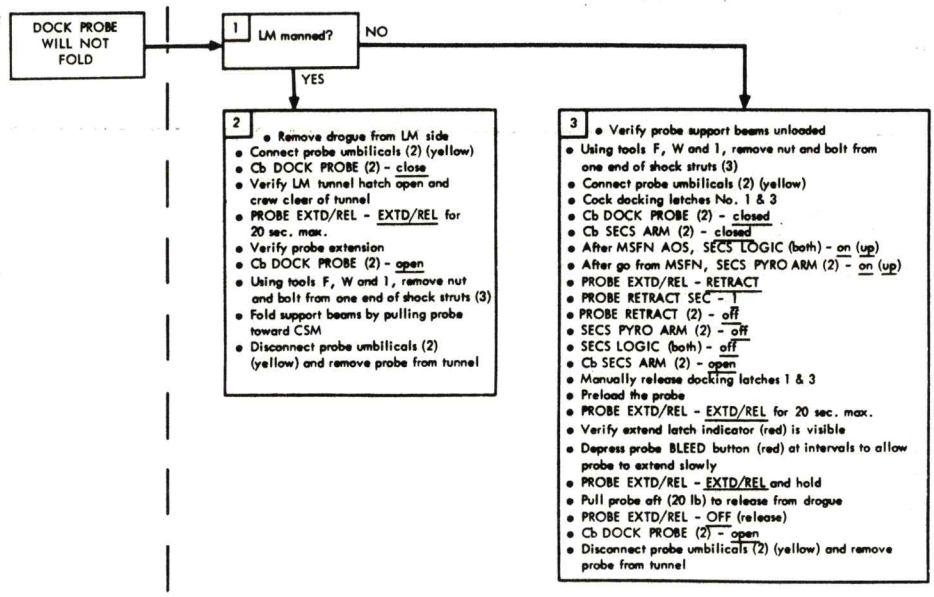	
3 DOCK PROBE EXTD/REL tb A(B) REMAINS GRAY AFTER CAPTURE (TLD only)	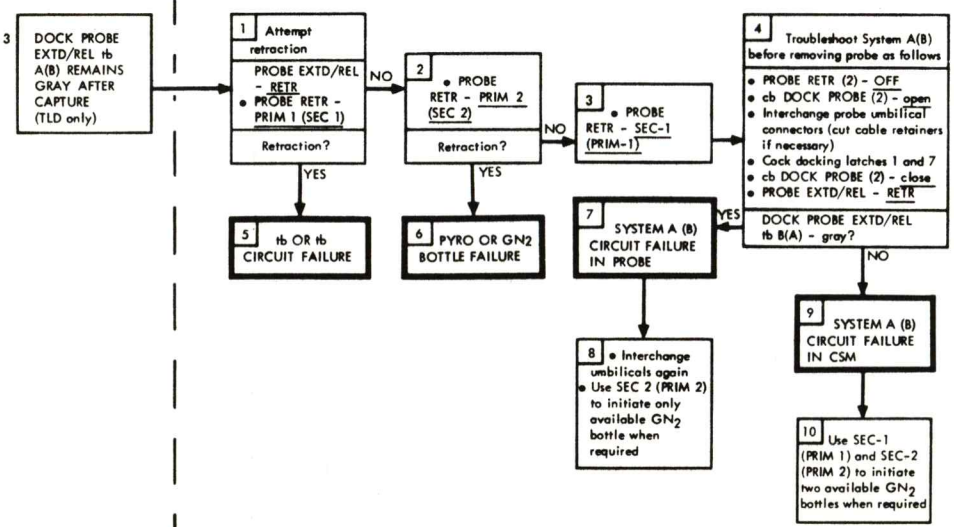	

SYMPTOM	PROCEDURE	REMARKS

HATCH

1 FWD HATCH WILL NOT UNLATCH

1 Does actr handle drive clutch engage gearbox? NO → 2 Assume failure of actr handle to engage and drive gearbox

YES → 3 Assume failure is frozen gearbox.

2 Assume failure of actr handle to engage and drive gearbox → 4
- Unstow actr handle and push to stop to unlock gearbox
- AUX LATCH DRIVE - rotate 113° (use tool B)
- Remove tool B and verify hatch unlatch

3 Assume failure is frozen gearbox. → 5
- Remove gearbox mounting screws (3) and spacers (use tools Wand 4)
- Unstow actr handle and rotate away from hatch approx 30°
- Push actr handle outboard rotating gearbox approx 40° CCW to release latches
- Remove hatch from tunnel

5 → 6 To reinstall hatch
- Align hatch in tunnel
- Rotate gearbox approx 40° CW and reinstall gearbox mounting screws (3)

2 FWD HATCH WILL NOT LATCH

1
- Remove hatch to CM cabin
- Attempt to latch mechanism

Does actr handle drive gearbox? NO → 2 Gearbox frozen
- Gearbox disconnect - 180° CCW (tool B)
- Position hatch in tunnel
- AUX LATCH DRIVE - LATCH (113° CW - tool B)
- Verify hatch latched, remove tool B (cannot remove hatch from LM side)

YES → 3 Frozen latch
- Inspect to identify frozen latch(es)
- Remove dome nuts from long pivot screws of frozen latch. (Use tools F, W, 2 and 4)
- Remove long pivot screws and rotate latch dog to clear striker plate
- Unlatch mechanism
- Install hatch

STA/T	STEP	PROCEDURE	PANEL	REMARKS
		5.3 EMERGENCY PROCEDURES		
		INTRODUCTION		
		Emergency procedures provide the crew with the necessary steps to quickly alleviate situations that have (or will) become both crew-hazardous and time-critical. These procedures require instant reaction on the part of the crew to prevent the conditions from becoming worse. In most instances the conditions are physically sensed by the crew rather than brought to their attention by the caution and warning system or voice communication from MSFN.		
		5.3.1 PAD EMERGENCY PROCEDURES		
		5.3.1.1 Rapid Hatch Opening		To accomplish rapid hatch opening after engaging latches, the hatch must be configured for rapid egress as shown in para 4.2.1, step 6, Cabin Closeout.
CMP	1	Gear box sel - UNLATCH (verify)	Side hatch	
	2	Actr handle rel - push or squeeze		
	3	Actr handle - operate (until hatch is unlatched)		Lock pin will be sheared. About 5 cycles of actuator operation will open hatch.
		xxxxxxxxxxxxxxxxxxxxxxxxxxxxxxxxxx x x If hatch fails to open GN2 ratchet handle - operate GN2 vlv handle - unlock and push (outboard) x x xxxxxxxxxxxxxxxxxxxxxxxxxxxxxxxxxx		

E E CE Y

STA/T	STEP	PROCEDURE	PANEL	REMARKS
		5.3.2 FLIGHT EMERGENCY PROCEDURES		
		5.3.2.1 Fire/Smoke in CM During Boost		
LMP	1	CAB FAN (both) - OFF	2	
	2	Monitor EPS indicators for excessive current. Immediately remove power from affected bus to prevent further damage to critical systems		
	3	If in abort mode I or II SUIT COMPR 1 (or 2) - on good ac bus	4	
	4	If in abort mode III and affected bus is MNA (or B)		
CDR		TVC GMBL DR (2) - 2 (or 1)	1	
LMP		INV 1 (or 2) ACl (or 2) - OFF INV 2 (or 1) ACl (or 2) - on (up)	3	Powers both ac buses with inverter from good main bus.
CDR	5	rh CAB PRESS RELF vlv - DUMP (safety latch off)	325	
	6	Continue appropriate abort		

STA/T	STEP	PROCEDURE	PANEL	REMARKS
		5.3.2.2 Fire/Smoke in CM - Orbital Operations		
		a. Suited Crew		
LMP		CAB FAN (both) - OFF	2	
		Monitor EPS indicators for excessive current. Immediately remove power from affected bus to prevent further damage to critical systems		
		SUIT COMPR 1 (or 2) - on good ac bus	4	
		Fire extinguisher - use as appropriate		
		Fire is out		
		WARNING		
		Combustion products may be toxic. Smoke should be removed from cabin per Contamination in CM, para 5.3.2.4, step 3b, before removing helmets.		
		Fire persists		
		Dump cabin as follows		
CDR		Verify SUIT RETURN vlv - close (push)	380	
CMP		Verify EMER CAB PRESS sel - OFF	351	
CDR		Verify REPRESS pkg vlv - OFF	326	
ALL		PGA - visually check integrity		

STA/T	STEP	PROCEDURE	PANEL	REMARKS
		5.3.2.2 Fire/Smoke in CM - Orbital Operations		
		a. Suited Crew		
LMP		CAB FAN (both) - OFF	2	
		Monitor EPS indicators for excessive current. Immediately remove power from affected bus to prevent further damage to critical systems		
		SUIT COMPR 1 (or 2) - on good ac bus	4	
		Fire extinguisher - use as appropriate		
		Fire is out		
		WARNING		
		Combustion products may be toxic. Smoke should be removed from cabin per Contamination in CM, para 5.3.2.4, step 3b, before removing helmets.		
		Fire persists		
		Dump cabin as follows		
CDR		Verify SUIT RETURN vlv - close (push)	380	
CMP		Verify EMER CAB PRESS sel - OFF	351	
CDR		Verify REPRESS PKG vlv - OFF	326	
ALL		PGA - visually check integrity		

STA/T STEP	PROCEDURE	PANEL	REMARKS
CDR,LMP	rh CAB PRESS RELF vlv - DUMP (safety latch off) until CAB PRESS ind 3.0 psia, then to BOOST/ENTR	325 2	Provides controlled cabin dump until suit circuit pressure is verified.
LMP	Verify SUIT PRESS ind holding >3.5 psia		
CDR,LMP	rh CAB PRESS RELF vlv - DUMP and/or CAB PRESS DUMP vlv - Side hatch open (CCW)	325	
LMP	CAB PRESS ind - 0.0 psia for 6 min	2	Time period is a function of equipment oxygen exposure and saturation level.
CDR,LMP	rh CAB PRESS RELF vlv - NORM (safety latch on) and CAB PRESS DUMP vlv - Side hatch close (CW)	325	
	WARNING Do not repressurize cabin until fire source is removed. Reignition may occur with additional damage. If condition lasts longer than 10 minutes, glycol circulation and temperature control must be re-established.		
	b. Unsuited or Partially Suited Crew		
ALL	Don emer O2 mask (refer to Operation of Emergency O2 Masks, para 4.7.4.15)		

STA/T	STEP	PROCEDURE	PANEL	REMARKS
LMP		CAB FAN (both) - OFF	2	
		SUIT COMPR (both) - OFF	4	
		Monitor EPS indicators for excessive current. Immediately remove power from affected bus to prevent further damage to critical systems		
		Fire extinguisher - use as appropriate		
		Fire is out		
		WARNING Combustion products may be toxic. Smoke should be removed from cabin per Contamination in CM, para 5.3.2.4, step 3b, before removing helmets.		
		Fire persists		
ALL		Don PGA except helmet (refer to PGA Mode Changes, para 4.7.4.6)		02 connections red-to-red and blue-to-blue. Use 02 masks as long as possible.
CDR		DIRECT 02 vlv - OPEN (CCW)	7	Purges suit inlet manifold, suit hoses, and PGA portion of suit circuit.
ALL		Remove emer 02 mask and don helmet		
CMP		SUIT FLOW vlv (3) - FULL FLOW	300,301,302	
LMP		SUIT COMPR 1 (or 2) - AC1 (or AC2)	4	
CDR		DIRECT 02 vlv - close (CW)	7	

STA/T	STEP	PROCEDURE	PANEL	REMARKS
CMP		EMER CAB PRESS sel - OFF	351	
ALL		PGA - visually check integrity		
CDR,LMP		rh CAB PRESS RELF vlv - DUMP (safety latch off) until CAB PRESS ind 3.0 psia, then to BOOST/ENTR	325 2	Provides controlled cabin dump until suit circuit pressure is verified.
LMP		Verify SUIT PRESS ind holding >3.5 psia		
CDR,LMP		rh CAB PRESS RELF vlv - DUMP and/or CAB PRESS DUMP vlv - open (CCW)	325 Side hatch	
LMP		CAB PRESS ind - 0.0 psia for 6 min	2	Time period is a function of equipment oxygen exposure and saturation level.
CDR,LMP		rh CAB PRESS RELF vlv - NORM (safety latch on) and CAB PRESS DUMP vlv - close (CW)	325 Side hatch	
		WARNING Do not repressurize cabin until fire source is removed. Reignition may occur with additional damage. If condition lasts longer than 10 minutes, glycol circulation and temperature control must be re-established.		
	5.3.2.3	Fire/Smoke in CM During Entry		
CMP	1	CAB FAN (both) - OFF	2	

STA/T	STEP	PROCEDURE	PANEL	REMARKS
LMP	2	Monitor EPS indicators for excessive current. Immediately remove power from affected bus to prevent further damage to critical systems	3	
CDR	3	ROT CONTR PWR DIR (both) - MNA/MNB, and maintain attitude if required	1	
	4	If affected bus is MNA		
LMP		INV 1 AC1 - OFF INV 2 AC1 - on (up)	3	Powers both ac buses with inverter being powered from good dc main bus, providing ac power for suit compressors and SCS.
		Set up for CM/RCS sys 2		System 1 is normal and system 2 is redundant.
CDR		AUTO RCS A/C ROLL (4) - OFF AUTO RCS CM 1 (6) - OFF AUTO RCS CM 2 (6) - MNB	8	
		RCS will dump fuel rich		
	5	If affected bus is MNB		
LMP		INV 2 AC2 - OFF INV 1 AC2 - on (up)	3	Powers both ac buses with inverter being powered from good dc main bus, providing ac power for suit compressors and SCS.
		RCS will dump oxidizer rich		
CDR	6	rh CAB PRESS RELF vlv - DUMP (safety latch off)	325	
	7	Continue entry		

EMERGENCY

STA/T	STEP	PROCEDURE	PANEL	REMARKS
		5.3.2.4 Contamination in CM		Types, sources, and amount of contamination are not defined. The very existence of contamination in CM is treated as an emergency.
ALL	1	Don emer 02 mask and/or PGA immediately (refer to Operation of Emergency 02 Masks, para 4.7.4.15 and PGA Mode Changes, para 4.7.4.6)		
	2	Evaluate contamination level, and isolate or correct source of contamination		
	3	If contamination persists		
		a. Accept Contamination Level in Cabin		Slow removal of contamination accomplished with WASTE STOW valve (panel 252) in VENT position.
		Retain 02 mask or remain in PGA		
CDR,CMP		Adjust DIRECT 02 vlv for SUIT CAB ΔP >2 in. H20	7,2	
		b. Dump and Repress Cabin		
ALL		Retain or don PGA (refer to PGA Mode Changes, para 4.7.4.6)		
		PGA - visually check integrity		
		Perform CM Pressure Dump, para 4.7.4.11		
		Perform CM Repressurization, para 4.7.4.8a		

STA/T	STEP	PROCEDURE	PANEL	REMARKS
		5.3.2.5 Contamination in Suit (Suited Crewman)		Contamination originates within the suit circuit if, after purging with oxygen, contamination is still present.
LMP	1	SUIT COMPR 2 - ACl	4	
	2	SUIT COMPR 1 - OFF		
CDR	3	DIRECT 02 vlv - OPEN (CCW) for 1 min, then close (CW)	7	
	4	If condition persists		
LMP		SUIT COMPR 2 - OFF	4	
CDR		DIRECT 02 vlv - close (CW)	7	
ALL		Doff helmet		
		Don emer 02 mask (refer to Operation of Emergency 02 Masks, para 4.7.4.15)		
		Determine contamination cause		
		5.3.2.6 LET Fails to Jettison		
		a. Tower Legs Cut/No Jettison Motor Ignition		
CDR		LES MOT FIRE pb - push	1	Guarded.
		If tower jettison successful		
CMP		TWR JETT (both) - OFF (ctr)		
		Continue mission		
		If tower jettison unsuccessful		
		TWR JETT (both) - OFF (ctr)	2	
		Report to MSFN and go for orbit		

STA/T	STEP	PROCEDURE	PANEL	REMARKS
		b. No Response To TWR JETT Switches		
		Verify the following		
CDR		cb SECS ARM (2) - close	8	
		cb SECS LOGIC (2) - close		
		cb EDS (all) - close		
		SECS LOGIC (both) - on (up)		Lever lock.
		SECS PYRO ARM (2) - on (up)		Lever lock.
		EDS PWR - on (up)	7	
CMP		TWR JETT (both) - on (up)	2	Guarded. On (up) position is momentary.
		If tower jettison successful		
		TWR JETT (both) - OFF (ctr)		
		Continue mission		
		If tower jettison unsuccessful		
		TWR JETT (both) - OFF (ctr)		
		Report to MSFN and go for orbit		
	5.3.2.7	Forward Hatch Cannot Be Re-installed		
	1	Position hatch and depress tunl		
		Don PGA (para 4.7.4.6), thermal gloves, and check suit circuit, para 4.7.4.9		
		Verify CAB PRESS ind - 4.8-5.2 psia		
		Verify O2 FLOW ind - 0.4-0.6 lb/hr		

STA/T	STEP	PROCEDURE	PANEL	REMARKS
CMP		Position fwd hatch against tunl hatch seal interface misaligning the hatch indicator arrows by 30° in either direction		
		While pushing hatch firmly against tunl hatch seal interface		
		TUNL VENT vlv - TUNL VENT	12	
		Wait one minute, then place TUNL VENT vlv - LM/CM ΔP		
		Monitor LM/CM ΔP ind and verify ΔP ≈2.5 psid. If ΔP ≠2.5 psid, recycle TUNL VENT vlv until ΔP indication is ≈2.5 psid		When LM/CM ΔP ind indicates ≈2.5 psid, the hatch should be held immobile against the seal by the ΔP.
		Continue monitoring LM/CM ΔP ind for 1 min after reaching ≈2.5 psid and verify no detectable change in ΔP indication		This constitutes a hatch seal integrity check.
		xxxxxxxxxxxxxxxxxxxxxxxxxxxxxxxxxxxxxxxxxxx		
		LM/CM ΔP ind - pressure differential decreases		
		Monitor CAB PRESS ind and O2 FLOW ind	2	
		If CAB PRESS ind and O2 FLOW ind remains stable, the LM hatch is probably not integral		If this condition occurs, further action is dependent upon LM documentation.

STA/T STEP	PROCEDURE	PANEL	REMARKS
CMP	If CAB PRESS ind decreases and O2 FLOW ind increases, the CM fwd hatch is probably not integral	2	
	Pressurize tunl using PRESS EQUAL vlv	Fwd hatch	
	Open fwd hatch, para 4.7.7.4a		
	Check for foreign object(s) jammed in tunl/hatch, seal interface, or hatch seal damage		
	Reposition fwd hatch against hatch seal interface		
	Reinitiate tunl depress and hatch seal integrity check		
	xxxxxxxxxxxxxxxxxxxxxxxxxxxxxxxxxxxxxxxxxxxx		
2	Perform LM Jettison, para 4.5.1.8		
3	Perform the following ≈1 hr prior to CM/SM separation to raise CM pressure to the maximum design pressure of 8.6 psid		
	CAB PRESS RELF vlv (2) - CLOSE	325	
	REPRESS pkg vlv - OFF	326	

STA/T	STEP	PROCEDURE	PANEL	REMARKS
CMP		If CAB PRESS ind decreases and 02 FLOW ind increases, the CM fwd hatch is probably not integral	2	
		Pressurize tunl using PRESS EQUAL vlv	Fwd hatch	
		Open fwd hatch, para 4.7.7.4a		
		Check for foreign object(s) jammed in tunl/hatch, seal interface, or hatch seal damage		
		Reposition fwd hatch against hatch seal interface		
		Reinitiate tunl depress and hatch seal integrity check		
		xxxxxxxxxxxxxxxxxxxxxxxxxxxxxxxxxxxxxxxxxx		
	2	Perform LM Jettison, para 4.5.1.8		
	3	Perform the following ≈1 hr prior to CM/SM separation to raise CM pressure to the maximum design pressure of 8.6 psid		
		CAB PRESS RELF vlv (2) - CLOSE	325	
		REPRESS PKG vlv - OFF	326	

STA/T	STEP	PROCEDURE	PANEL	REMARKS
CMP		EMER CAB PRESS sel - OFF	351	
		CAB REPRESS vlv - open (CW)		
		REPRESS 02 - CLOSE	601	
		When CAB PRESS ind - 8.6 psia	2	
		CAB REPRESS vlv - OFF (CCW)	351	
		REPRESS pkg vlv - FILL	326	
	4	Begin entry prep, para 4.16		
60K'		REPRESS 02 - OPEN	601	Provides an additional 3 psia in ≈1 minute period.
CDR 50K'		Report CM stable		
		xxxxxxxxxxxxxxxxxxxxxxxxxxxxxxxxxxxxx		
		CM unstable		
CMP		RCS CMD - OFF	2	OFF position is momentary.
CDR 40K'		APEX COVER JETT pb - push	1	Guarded.
		DROG DPLY pb - push		Guarded.
		(2 sec after apex cover jett)		
		xxxxxxxxxxxxxxxxxxxxxxxxxxxxxxxxxxxxx		
30K'		ELS LOGIC - on (up)		Guarded.
		ELS AUTO - AUTO		
CMP 24K'		SCS RCS disable (auto)		

EMERGENCY

STA/T	STEP	PROCEDURE	PANEL	REMARKS
CMP		EMER CAB PRESS sel - OFF	351	
		CAB REPRESS vlv - open (CW)		
		REPRESS 02 - CLOSE	601	
		When CAB PRESS ind - 8.6 psia	2	
		CAB REPRESS vlv - OFF (CCW)	351	
		REPRESS PKG vlv - FILL	326	
	4	Begin **entry prep, para 4.16**		
60K'		REPRESS 02 - OPEN	601	Provides an additional 3 psia in ≈1 minute period.
CDR 50K'		Report CM stable		
		xxxxxxxxxxxxxxxxxxxxxxxxxxxxxxxxxxxx x x		
		CM unstable		
CMP		RCS CMD - OFF	2	OFF position is momentary.
CDR 40K'		APEX COVER JETT pb - push	1	Guarded.
		DROG DPLY pb - push		Guarded.
		(2 sec after apex cover jett)		
		x x xxxxxxxxxxxxxxxxxxxxxxxxxxxxxxxxxxxx		
30K'		ELS LOGIC - on (up)		Guarded.
		ELS AUTO - AUTO		
CMP 24K'		SCS RCS disable (auto)		

STA/T	STEP	PROCEDURE	PANEL	REMARKS
		xxxxxxxxxxxxxxxxx		
CMP		RCS CMD - OFF	2	OFF position is momentary.
		xxxxxxxxxxxxxxxxx		
		Apex cover jett (auto)		The apex cover will be jettisoned at 24K feet plus 0.4 second.
		xxxxxxxxxxxxxxxxxxxxxxxxxxxxxx		
CDR		APEX COVER JETT pb - push	1	Guarded.
		xxxxxxxxxxxxxxxxxxxxxxxxxxxxxx		
		Drogue parachutes deployed (auto)		Drogue parachutes deployed at 24K feet plus 2.0 seconds. The CM may be very unstable until the drogue chutes disreef in ≈11 seconds.
		xxxxxxxxxxxxxxxxxxxxx		
		DROG DPLY pb - push		Guarded.
		xxxxxxxxxxxxxxxxxxxxx		
		xxxxxxxxxxxxxxxxxxxxxxxxxxxxxxxxxxxxx		
		If no drogue deployment ELS AUTO - MAN Stabilize CM with direct RCS		
	5K'	MN DPLY pb - push ELS AUTO - AUTO		Guarded.
		xxxxxxxxxxxxxxxxxxxxxxxxxxxxxxxxxxxxx		

STA/T	STEP	PROCEDURE	PANEL	REMARKS
CDR				
10K'		Main parachutes and VHF recovery antenna deploy (auto)		Auto deployment occurs between 10,950 and 9,100 feet. Parachutes disreef in ≈15 seconds after pilot mortars fire.
		MN DPLY pb - push (within 1 sec)	1	Guarded. MN DPLY pushbutton should be pushed within one second after pilot mortars fire to ensure simultaneous deployment of main parachutes.
10K'				
+20 sec		Immediately following main parachute disreefing, CMP must egress from center couch and position himself in an optimum stance to support the fwd hatch (≈85 lbs)		
		When CMP in position CAB PRESS DUMP vlv - open (CCW) (full open)	Side hatch	
CMP		As pressure equalization allows fwd hatch to move, retrieve hatch and stow in hatch stowage bag		
		CAUTION Care must be exercised in handling fwd hatch because it will be at a high temperature.		
CDR		CAB PRESS DUMP vlv - close (CW)		

STA/T	STEP	PROCEDURE	PANEL	REMARKS
LMP		Set up entry communications		
		VHF ANT - RECY	3	
		VHF AM A - SIMPLEX		If VHF AM B SIMPLEX or VHF AM A DUPLEX is required, turn off beacon during period of transmission.
		VHF BCN - ON		
CDR		Transmit voice (VHF AM) reporting		Continue voice transmission until touchdown.
		Position		
		Main chutes disreefed		
		Splash error		
		Crew status		
		Crew couch struts (4) - unlock		
		(Deleted)		
		WARNING		
		RCS propellants should not be purged because of open hatch.		
LMP		cb FLT/PL BAT BUS A, B, & BAT C (3) - close	275	
		cb FLT/PL MNA - open		
		cb FLT/PL MNB - open		
		cb RAD HTRS OVLD (2) - open	5	
CDR		cb SPS PITCH (2) - open	8	
		cb SPS YAW (2) - open		

STA/T	STEP	PROCEDURE	PANEL	REMARKS
3K'				
CDR		FLOOD LTS FIXED - POST LDG	8	Provides power from the flight and postlanding bus to one floodlight in the LH couch area and one floodlight in the center couch area. Minimize floodlight use during postlanding. Maximum utilization should be 9.6 hours per 48-hour period.
		FLOOD LTS DIM - 1 or 2		Position 1 provides power to two secondary floodlights and position 2 provides power to two primary floodlights when the FLOOD LTS FIXED switch is in the POST LDG position after the dc main buses are deactivated.
1000'				
CMP		CM RCS PRPLNT (both) - OFF	2	OFF position is momentary.
		CM RCS PRPLNT tb (both) - bp		Barber pole indicates at least one valve closed in each system.
CDR		DIRECT O2 vlv - OPEN (CCW)	7	
LMP		MN BUS TIE (2) - OFF	5	Removes battery power from dc main buses A and B.
		CAUTION MN BUS TIE switches must be left in the OFF position to ensure that batteries A, B, and C are used to power the postlanding bus only, and to prevent battery shorting caused by water entering the CM feedthrough connectors.		
		cb BAT RLY BUS (2) - open Postlanding Check, para 4.20		

EMERGENCY

STA/T	STEP	PROCEDURE	PANEL	REMARKS
		5.3.2.8 Emergency Safe of Apex Cover Jett		
		If no MSFN GO for pyro arm indicates apex cover jettison		
CDR		SECS LOGIC (both) - OFF	8	Lever lock.
		cb ELS (2) - open		
		SECS LOGIC (both - on (up)		Lever lock.
		If MSFN GO cb ELS (2) - open (verify), close at or after apex cover jettison at 24K' Continue normal entry		
		If still indicates apex cover jettison cb SECS LOGIC A - open		
		If MSFN GO cb SECS LOGIC A - open (verify), close at or after apex cover jettison at 24K' Continue normal entry		
		If still indicates apex cover jettison cb SECS LOGIC A - close cb SECS LOGIC B - open		
		If MSFN GO cb SECS LOGIC B - open (verify), close at or after apex cover jettison at 24K' Continue normal entry		

STA/T	STEP	PROCEDURE	PANEL	REMARKS
		If still indicates apex cover jettison		
CDR		ELS AUTO - MAN	1	
		ELS LOGIC - OFF		Guarded.
		SECS LOGIC (both) - OFF	8	Lever lock.
		cb SECS LOGIC (2) - open		
		cb SECS ARM (2) - open		
CMP		cb PYRO A&B/SEQ A&B (2) - open	250	
LMP		Verify pyro bus A&B - 0 vdc	3	
CMP		Use tool E (5/32 allen head) to remove closeout pnl located beneath pnl 276 (≈10 fasteners on pnl)		
		Remove or cut all wires to connector (P545) marked "cut" with white tag. Tape ends of wires cut. Replace closeout pnl.		
		cb PYRO A&B/SEQ A&B (2) - close	250	
LMP		Verify pyro bus A&B voltage - >35 vdc	3	
CDR		cb ELS (2) - close	8	
		cb SECS LOGIC (2) - close		
		cb SECS ARM (2) - open (verify)		
		DO NOT ARM PYRO BUSES		
		Continue normal entry except		
		Perform CM RCS Pressurization, para 4.16.2.3 (for lunar mission) or 4.16.1.3 (for earth orbit mission) and CM/SM Separation, para 4.17.5 or 4.18.4 together at which time arm pyros as follows		For lunar mission CM RCS is pressurized in para 4.16.2.3 and CM/SM separation accomplished per para 4.17.5 or 4.18.4. For earth orbit mission, accomplish pressurization per para 4.16.1.3 and separation per para 4.17.5 or 4.18.4.
		PYRO B ARM - SAFE (verify)		Lever lock.
		PYRO A ARM - on (up)		Lever lock.

STA/T	STEP	PROCEDURE	PANEL	REMARKS
		To jettison apex cover at 24K'		
CDR		PYRO B ARM - on (up)	8	Lever lock.
		Continue normal entry		
	5.3.2.9	One Y Strut Will Not Fully Extend and Lock		The other Y strut should be extended and locked as the following operations are performed.
	1	Break lockwire on one Y strut adjustment jam nut of the affected Y strut		
	2	Using tool F, unscrew jam nut		
	3	Disengage washer key so that strut bearing pad will turn		
	4	Screw strut bearing pad inboard until strut can be extended and locked		
	5	Replace washer key, and tighten jam nut		Lockwire and key are not required for water landing.
	5.3.2.10	CM RCS Fails to Pressurize or Feed Propellant		
	1	Verify elect for pressurization		
CMP		cb BAT BUS (2) - close	229	
		cb PYRO A/SEQ A - close	250	
		cb PYRO B/SEQ B - close		
CDR		cb SECS ARM (2) - close	8	
		SECS PYRO ARM (2) - on (up)		
		SECS LOGIC (both) - on (up)		

STA/T	STEP	PROCEDURE	PANEL	REMARKS
CMP	2	Cycle CM RCS PRESS - on (up)	2	
	3	Verify elect to CM RCS prplnt vlvs		
		cb EPS GRP 1 & 3 (4) - close	229	
CDR		cb SM RCS HTR A&B (2) - close	8	
		cb RCS PRPLNT (2) - close		
CMP	4	Cycle CM RCS PRPLNT both - on (up)	2	
	5	Open He and PRPLNT crossfeed		
		cb EPS GRP 5 (2) - close	229	
		cb RCS LOGIC (2) - close	8	
CDR		CM RCS LOGIC - on (up)	1	
		CM PRPLNT DUMP - on (up) (momentarily, then OFF)		Guarded.
		5.3.3 POSTLANDING EMERGENCY PROCEDURES		
		5.3.3.1 Fire/Smoke in CM During Postlanding		
		a. Stable I		
ALL		Don emer 02 mask (refer to Operation of Emergency 02 Masks, para 4.7.4.15)	2	
CDR		Verify DIRECT 02 vlv - close (CW)	7	
CMP		cb ENTRY/PL BAT A, B, C (3) - open	250	
		cb PYRO A/SEQ A - open		
		cb PYRO B/SEQ B - open		
		Fire extinguisher - use as appropriate		
	and/or	Egress CM (refer to Stable I Water Egress Procedure, para 4.20.4.2)		

STA/T	STEP	PROCEDURE	PANEL	REMARKS
	b.	Stable II		
ALL		Don emer 02 mask (refer to Operation of Emergency 02 Masks, para 4.7.4.15)		
CDR		Verify DIRECT 02 vlv - close (CW)	7	
CMP		Fire extinguisher - use as appropriate		
		Upright CM to Stable I (refer to Postlanding Stabilization, Floating Inverted, para 4.20.1) and proceed to step a		
		If CM fails to upright Perform Stable II Water Egress Procedure, para 4.20.4.3		

APPENDIX B

CM PANEL ILLUSTRATIONS AND CONTROL/INDICATOR CONFIGURATION LIST FOR CSM 108 AND SUBS

This section contains CM panel illustrations and a control/indicator configuration list for CSM 108 and subs. Panel illustrations present the location of the displays and controls as they appear on the panels in the CM. The control/indicator configuration list provides the configuration of the CM displays and controls prior to backup crew cabin ingress, at lift-off, and during powered down configuration (low power consumption periods). Those talkbacks (tb) are included which reflect the last position selected of spring loaded switches. (Talkback indicators that are operated by sensors will not be listed.) The CSM control/indicator configuration list presents the panels in numerical sequence. The switches are not to be sequentially positioned as listed.

Constraints applicable to the spacecraft when in a powered down configuration are as follows:

- No contingency modes are assumed. Power up capability exists at all times for all systems.
- All spacecraft systems draw minimal power except communications, caution and warning, and life support subsystems. Power is removed from all backup communications systems. The G&C system has been powered down to the level defined by: Power Down Program (P06), para 4.10.1.3, Optics Power Control, para 4.10.1.4 step 2, and SCS Power Down, para 4.10.2.1.
- Power shall be removed from redundant monitoring and unnecessary flight qualification instrumentation by opening applicable circuit breakers.

NOMENCLATURE	CSM CONTROL/INDICATOR CONFIGURATION		
	PRIOR TO BACKUP CREW CABIN INGRESS	AT LIFTOFF	POWER DOWN
PANEL 1			
EMS FUNC	OFF	ΔV	OFF
EMS MODE	STBY	STBY	STBY
GTA sw	off (down)	off (down)	N/A
EMS GTA COVER	Secure	Secure	N/A
CMC ATT	IMU	IMU	IMU
FDAI SCALE	5/1	5/5	5/1
FDAI SEL	1/2	1/2	1 or 2
FDAI SOURCE	CMC	CMC	CMC
ATT SET	GDC	GDC	IMU
MAN ATT ROLL	RATE CMD	RATE CMD	RATE CMD
MAN ATT PITCH	ACCEL CMD	ACCEL CMD	RATE CMD
MAN ATT YAW	RATE CMD	RATE CMD	RATE CMD
LIM CYCLE	OFF	OFF	on (up)
ATT DBD	MIN	MIN	MAX
RATE	HI	HI	LO

TRANS CONTR PWR	OFF	on (up)	as desired
ROT CONTR PWR NORM 1	OFF	AC/DC	OFF
ROT CONTR PWR NORM 2	OFF	AC/DC	OFF
ROT CONTR PWR DIR 1	OFF	MNA/MNB	OFF
ROT CONTR PWR DIR 2	OFF	MNA/MNB	OFF
SC CONT	SCS	SCS	as desired
CMC MODE	FREE	FREE	FREE
BMAG MODE ROLL	RATE 2	RATE 1	RATE 2
BMAG MODE PITCH	RATE 2	RATE 1	RATE 2
BMAG MODE YAW	RATE 2	RATE 1	RATE 2
SPS THRUST	NORM (locked)	NORM (locked)	NORM (locked)
ΔV THRUST A	OFF (guarded)	OFF (guarded)	OFF (guarded)
ΔV THRUST B	OFF (guarded)	OFF (guarded)	OFF (guarded)
SCS TVC PITCH	RATE CMD	RATE CMD	as desired
SCS TVC YAW	RATE CMD	RATE CMD	as desired
GMBL MOT PITCH 1	OFF	OFF	OFF
GMBL MOT PITCH 2	OFF	OFF	OFF
GMBL MOT YAW 1	OFF	OFF	OFF

NOMENCLATURE	CSM CONTROL/INDICATOR CONFIGURATION		
	PRIOR TO BACKUP CREW CABIN INGRESS	AT LIFTOFF	POWER DOWN
PANEL 1 (CONT)			
GMBL MOT YAW 2	OFF	OFF	OFF
ΔV CG	CSM	CSM	CSM
ELS LOGIC	OFF (guarded)	OFF (guarded)	OFF (guarded)
ELS AUTO	AUTO	AUTO	N/A
CM RCS LOGIC	OFF	on (up)	OFF
CM PRPLNT DUMP	OFF (guarded)	OFF (guarded)	OFF (guarded)
CM PRPLNT PURG	off (down) (guarded)	off (down) (guarded)	off (down) (guarded)
IMU CAGE	off (down) (guarded)	off (down) (guarded)	off (down) (guarded)
EMS ROLL	OFF	OFF	OFF
.05 G sw	OFF	OFF	OFF
α/Pc IND sw	α	α	as desired
LV IND/GPI sw	SII/SIVB	SII/SIVB	GPI
TVC GMBL DR PITCH	AUTO	AUTO	1
TVC GMBL DR YAW	AUTO	AUTO	1

EVNT TMR RSET	up (ctr)	up (ctr)	up (ctr)
EVNT TMR START	ctr	ctr (START*)	STOP
EVNT TMR MIN	ctr	ctr	ctr
EVNT TMR SEC	ctr	ctr	ctr

*Identifies last momentary position switched to.

NOMENCLATURE	CSM CONTROL/INDICATOR CONFIGURATION		
	PRIOR TO BACKUP CREW CABIN INGRESS	AT LIFTOFF	POWER DOWN
PANEL 2			
PL VENT VLV	push (lock)	push (lock)	push (lock)
PROBE EXTD/REL	OFF (guarded)	OFF (guarded)	OFF (guarded)
PROBE EXTD/REL A tb	gray	gray	gray
PROBE EXTD/REL B tb	gray	gray	gray
PROBE RETR PRIM	OFF	OFF	OFF
PROBE RETR SEC	OFF	OFF	OFF
EXT RUN/EVA LT	OFF	OFF	OFF
EXT RNDZ LT	off (ctr)	off (ctr)	off (ctr)
TUNL LT	OFF	OFF	OFF
LM PWR	OFF	OFF	OFF
SM RCS He 1 A	ctr (CLOSE*)	ctr (OPEN*)	N/A
SM RCS A He 1 tb	bp	gray	N/A
SM RCS He 1 B	ctr (CLOSE*)	ctr (OPEN*)	N/A
SM RCS B He 1 tb	bp	gray	N/A
SM RCS He 1 C	ctr (CLOSE*)	ctr (OPEN*)	N/A

SM RCS C He 1 tb	bp	gray	N/A
SM RCS He 1 D	ctr (CLOSE*)	ctr (OPEN*)	N/A
SM RCS D He 1 tb	bp	gray	N/A
UP TLM CM	BLOCK	BLOCK	as desired
UP TLM IU	BLOCK	BLOCK	as desired
CM RCS PRESS	off (down) (guarded)	off (down) (guarded)	off (down) (guarded)
SM RCS IND sw	N/A	PRPLNT QTY	N/A
SM RCS He 2 A	ctr (CLOSE*)	ctr (OPEN*)	N/A
SM RCS A He 2 tb	bp	gray	N/A
SM RCS He 2 B	ctr (CLOSE*)	ctr (OPEN*)	N/A
SM RCS B He 2 tb	bp	gray	N/A
SM RCS He 2 C	ctr (CLOSE*)	ctr (OPEN*)	N/A
SM RCS C He 2 tb	bp	gray	N/A
SM RCS He 2 D	ctr (CLOSE*)	ctr (OPEN*)	N/A
SM RCS D He 2 tb	bp	gray	N/A
SM RCS HTRS A	OFF	OFF	N/A
SM RCS HTRS B	OFF	OFF	N/A

*Identifies last momentary position switched to.

NOMENCLATURE	CSM CONTROL/INDICATOR CONFIGURATION		
	PRIOR TO BACKUP CREW CABIN INGRESS	AT LIFTOFF	POWER DOWN
PANEL 2 (CONT)			
SM RCS HTRS C	OFF	OFF	N/A
SM RCS HTRS D	OFF	OFF	N/A
SM RCS PRPLNT A	ctr (CLOSE*)	ctr (OPEN*)	as desired
SM RCS A PRIM PRPLNT tb	bp	gray	--
SM RCS A SEC PRPLNT tb	bp	gray	--
SM RCS PRPLNT B	ctr (CLOSE*)	ctr (OPEN*)	as desired
SM RCS B PRIM PRPLNT tb	bp	gray	--
SM RCS B SEC PRPLNT tb	bp	gray	--
SM RCS PRPLNT C	ctr (CLOSE*)	ctr (OPEN*)	as desired
SM RCS C PRIM PRPLNT tb	bp	gray	--
SM RCS C SEC PRPLNT tb	bp	gray	--
SM RCS PRPLNT D	ctr (CLOSE*)	ctr (OPEN*)	as desired
SM RCS D PRIM PRPLNT tb	bp	gray	--
SM RCS D SEC PRPLNT tb	bp	gray	--
RCS CMD	ctr (OFF*)	ctr (OFF*)	ctr (OFF*)

RCS TRNFR	ctr (SM*)	ctr (SM*)	N/A
CM RCS PRPLNT 1	ctr (OFF*)	ctr (on, up*)	as desired
CM RCS 1 PRPLNT tb	bp	gray	--
CM RCS PRPLNT 2	ctr (OFF*)	ctr (on, up*)	as desired
CM RCS 2 PRPLNT tb	bp	gray	--
RCS SEC FUEL PRESS A	ctr (OPEN*)	ctr (CLOSE*)	N/A
RCS SEC FUEL PRESS B	ctr (OPEN*)	ctr (CLOSE*)	N/A
RCS SEC FUEL PRESS C	ctr (OPEN*)	ctr (CLOSE*)	N/A
RCS SEC FUEL PRESS D	ctr (OPEN*)	ctr (CLOSE*)	N/A
EDS AUTO	OFF	on (up)	OFF
CSM/LM FNL SEP 1	off (down) (guarded)	off (down) (guarded)	off (down) (guarded)
CSM/LM FNL SEP 2	off (down) (guarded)	off (down) (guarded)	off (down) (guarded)
CM/SM SEP 1	off (down) (guarded)	off (down) (guarded)	off (down) (guarded)
CM/SM SEP 2	off (down) (guarded)	off (down) (guarded)	off (down) (guarded)
SIVB/LM SEP	off (down) (guarded)	off (down) (guarded)	off (down) (guarded)
PRPLNT DUMP	AUTO	AUTO	N/A
2 ENG OUT sw	AUTO	AUTO	OFF

*Identifies last momentary position switched to.

NOMENCLATURE	CSM CONTROL/INDICATOR CONFIGURATION		
	PRIOR TO BACKUP CREW CABIN INGRESS	AT LIFTOFF	POWER DOWN
PANEL 2 (CONT)			
LV RATES sw	AUTO	AUTO	OFF
TWR JETT 1	AUTO (guarded)	AUTO (guarded)	OFF
TWR JETT 2	AUTO (guarded)	AUTO (guarded)	OFF
LV GUID sw	IU	IU	IU
LV STAGE	OFF (guarded)	OFF (guarded)	OFF (guarded)
XLUNAR INJECT	INJECT	INJECT	N/A
MN REL	off (down) (guarded)	off (down) (guarded)	off (down) (guarded)
MSN TMR HRS	ctr	ctr	ctr
MSN TMR MIN	ctr	ctr	ctr
MSN TMR SEC	ctr	ctr	ctr
C/W NORM	NORM	BOOST	NORM
C/W CSM	CSM	CSM	CSM
C/W PWR	1	1	1
C/W LAMP TEST	ctr	ctr	ctr
MSN TMR	STOP	START	START

RCS IND sel	CM 2	SM D	as desired
CAB FAN 1	OFF	on (up)	on (up)
CAB FAN 2	OFF	on (up)	on (up)
H2 HTRS 1	AUTO	AUTO	AUTO
H2 HTRS 2	AUTO	AUTO	AUTO
02 HTRS 1	AUTO	AUTO	AUTO
02 HTRS 2	AUTO	AUTO	AUTO
02 PRESS IND sw	TK 1	SURG TK	N/A
H2 FANS 1	AUTO	OFF	as req
H2 FANS 2	AUTO	OFF	as req
02 FANS 1	AUTO	OFF	as req
02 FANS 2	AUTO	OFF	as req
ECS IND sel	PRIM	PRIM	N/A
RAD FLOW CONT AUTO	AUTO	AUTO	AUTO
ECS RAD tb	gray	gray	gray
RAD FLOW CONT PWR	off (ctr)	off (ctr)	PWR
RAD MAN SEL	RAD 1	RAD 1	RAD 1
RAD PRIM HTR	off (ctr)	off (ctr)	1

NOMENCLATURE	CSM CONTROL/INDICATOR CONFIGURATION		
	PRIOR TO BACKUP CREW CABIN INGRESS	AT LIFTOFF	POWER DOWN
PANEL 2 (CONT)			
RAD SEC HTR	OFF	OFF	OFF
POT H20 HTR	OFF	OFF	OFF
SUIT H20 ACCUM AUTO	ctr	1	1
SUIT H20 ACCUM ON	ctr	ctr	N/A
SUIT HT EXCH	off (ctr)	off (ctr)	off (ctr)
SEC COOL EVAP	off (ctr)	off (ctr)	off (ctr)
SEC COOL PUMP	off (ctr)	off (ctr)	off (ctr)
H20 QTY IND sw	POT	POT	N/A
GLY EVAP IN TEMP	MAN	MAN	AUTO
GLY EVAP STM AUTO	MAN	MAN	AUTO
GLY EVAP STM INCR	ctr	ctr	N/A
GLY EVAP H20 FLOW	off (ctr)	off (ctr)	AUTO
CAB TEMP	MAN	MAN	AUTO
CAB TEMP tw	decr	max decr	as desired
HI GAIN ANT TRACK	AUTO	AUTO	as desired

HI GAIN ANT BEAM	WIDE	WIDE	as desired
HI GAIN ANT PITCH cont	0°	0°	as desired
HI GAIN ANT YAW cont	180°	180°	as desired
HI GAIN ANT PWR	OFF	OFF	as desired
HI GAIN ANT SERVO	PRIM	PRIM	PRIM

NOMENCLATURE	CSM CONTROL/INDICATOR CONFIGURATION		
	PRIOR TO BACKUP CREW CABIN INGRESS	AT LIFTOFF	POWER DOWN
PANEL 3			
VHF ANT	SM LEFT	SM LEFT	as desired
SPS INJ VLV A1 ind	CLOSE	CLOSE	CLOSE
SPS INJ VLV A2 ind	CLOSE	CLOSE	CLOSE
SPS INJ VLV B3 ind	CLOSE	CLOSE	CLOSE
SPS INJ VLV B4 ind	CLOSE	CLOSE	CLOSE
FC 1 RAD	off (ctr) (NORM*)	off (ctr) (NORM*)	off (ctr) (NORM*)
FC 1 RAD tb	gray	N/A	gray
FC 2 RAD	off (ctr) (NORM*)	off (ctr) (NORM*)	off (ctr) (NORM*)
FC 2 RAD tb	gray	N/A	gray
FC 3 RAD	off (ctr) (NORM*)	off (ctr) (NORM*)	off (ctr) (NORM*)
FC 3 RAD tb	gray	N/A	gray
FC 1 HTRS	on (up)	on (up)	on (up)
FC 2 HTRS	on (up)	on (up)	on (up)
FC 3 HTRS	on (up)	on (up)	on (up)
FC IND sel	2	2	as desired

SPS QTY TEST	ctr	ctr	ctr
OXID FLOW VLV INCR	NORM	NORM	NORM
OXID FLOW VLV PRIM	PRIM	PRIM	as desired
PUG MODE	NORM	NORM	as desired
FC 1 PURG	OFF	OFF	OFF
FC 2 PURG	OFF	OFF	OFF
FC 3 PURG	OFF	OFF	OFF
FC 1 REACS	ctr (on, up*)	ctr (on, up*)	N/A
FC 1 REACS tb	gray	gray	gray
FC 2 REACS	ctr (on, up*)	ctr (on, up*)	N/A
FC 2 REACS tb	gray	gray	gray
FC 3 REACS	ctr (on, up*)	ctr (on, up*)	N/A
FC 3 REACS tb	gray	gray	gray
FC 1 MNA	ctr (on, up*)	ctr (on, up*)	ctr (on, up*)
FC 1 MNA tb	gray	gray	gray
FC 2 MNA	ctr (on, up*)	ctr (on, up*)	ctr (on, up*)
FC 2 MNA tb	gray	gray	gray

*Identifies last momentary position switched to.

NOMENCLATURE	CSM CONTROL/INDICATOR CONFIGURATION		
	PRIOR TO BACKUP CREW CABIN INGRESS	AT LIFTOFF	POWER DOWN
PANEL 3 (CONT)			
FC 3 MNA	OFF	OFF	OFF
FC 3 MNA tb	bp	bp	bp
MNA RSET	ctr (RSET*)	ctr (RSET*)	ctr (RSET*)
FC 1 MNB	OFF	OFF	OFF
FC 1 MNB tb	bp	bp	bp
FC 2 MNB	ctr (on, up*)	ctr (on, up*)	ctr (on, up*)
FC 2 MNB tb	gray	gray	gray
FC 3 MNB	ctr (on, up*)	ctr (on, up*)	ctr (on, up*)
FC 3 MNB tb	gray	gray	gray
MNB RSET	ctr (RSET*)	ctr (RSET*)	ctr (RSET*)
DC IND sel	MN A	MN A	as desired
BAT CHG	OFF	OFF	OFF
SPS He VLV 1	AUTO	AUTO	AUTO
SPS He VLV 1 tb	bp	bp	bp
SPS He VLV 2	AUTO	AUTO	AUTO

SPS He VLV 2 tb	bp	bp	bp	
SPS LINE HTRS	off (ctr)	off (ctr)	as desired	
SPS PRESS IND sw	He	He	as desired	
S BD XPNDR	OFF	PRIM	as req	
S BD PWR AMPL PRIM	PRIM	PRIM	as req	
S BD PWR AMPL HI	off (ctr)	HI	HI	
PWR AMPL tb	bp	gray	gray	
S BD MODE VOICE	VOICE	VOICE	VOICE	
S BD MODE PCM	PCM	PCM	PCM	
S BD MODE RNG	RNG	RNG	as req	
S BD AUX TAPE	ctr	ctr	ctr	
S BD AUX TV	ctr	ctr	ctr	
UP TLM DATA	DATA	DATA	DATA	
UP TLM CMD	OFF	NORM	NORM	
S BD ANT OMNI A	B	B	as req	
S BD ANT OMNI	OMNI	OMNI	as req	
VHF AM SQLCH A tw	noise +1	noise +1	noise +1	

*Identifies last momentary position switched to.

NOMENCLATURE	CSM CONTROL/INDICATOR CONFIGURATION		
	PRIOR TO BACKUP CREW CABIN INGRESS	AT LIFTOFF	POWER DOWN
PANEL 3 (CONT)			
VHF AM A	off (ctr)	off (ctr)	as req
VHF AM B	off (ctr)	DUPLEX	off (ctr)
VHF AM RCV	off (ctr)	off (ctr)	off (ctr)
VHF BCN	OFF	OFF	OFF
VHF RNG	OFF	OFF	OFF
S BD SQLCH	ENBL	ENBL	ENBL
FC REAC VLVS	NORM	LATCH	NORM
H2 PURG LINE HTR	OFF	OFF	OFF
VHF AM SQLCH B tw	noise +1	noise +1	noise +1
TAPE RCDR PCM	PCM/ANLG	PCM/ANLG	PCM/ANLG
TAPE RCDR RCD	RCD	RCD	RCD
TAPE RCDR FWD	off (ctr)	FWD	FWD
TAPE MOTION tb	bp	gray	gray
SCE PWR	NORM	NORM	NORM
PMP PWR	NORM	NORM	NORM
PCM BIT RATE	HI	HI	LO

INV 1	MNA	MNA	MNA	
INV 2	MNB	MNB	MNB	
INV 3	OFF	OFF	OFF	
INV 1 AC1	on (up)	on (up)	on (up)	
INV 2 AC1	OFF	OFF	OFF	
INV 3 AC1	OFF	OFF	OFF	
AC1 RSET	ctr (RSET*)	ctr (RSET*)	ctr (RSET*)	
INV 1 AC2	OFF	OFF	OFF	
INV 2 AC2	on (up)	on (up)	on (up)	
INV 3 AC2	OFF	OFF	OFF	
AC2 RSET	ctr (RSET*)	ctr (RSET*)	ctr (RSET*)	
AC IND sel	BUS 2 ØC	BUS 2 ØC	as desired	

*Identifies last momentary position switched to.

NOMENCLATURE	CSM CONTROL/INDICATOR CONFIGURATION		
	PRIOR TO BACKUP CREW CABIN INGRESS	AT LIFTOFF	POWER DOWN
PANEL 4			
SPS GAUGING	AC1	AC1	as desired
TELCOM GRP 1	AC1	AC1	AC1
TELCOM GRP 2	AC2	AC2	AC2
GLY PUMPS	OFF	1 AC1	1 AC1
SUIT COMPR 1	OFF	AC1	AC1
SUIT COMPR 2	OFF	OFF	OFF
cb SUIT COMPR AC1 ØA	close	close	close
cb SUIT COMPR AC1 ØB	close	close	close
cb SUIT COMPR AC1 ØC	close	close	close
cb SUIT COMPR AC2 ØA	close	close	close
cb SUIT COMPR AC2 ØB	close	close	close
cb SUIT COMPR AC2 ØC	close	close	close
cb GLY PUMPS AC1 ØA	close	close	close
cb GLY PUMPS AC1 ØB	close	close	close
cb GLY PUMPS AC1 ØC	close	close	close

cb GLY PUMPS AC2 ØA	close		
cb GLY PUMPS AC2 ØB	close		
cb GLY PUMPS AC2 ØC	close		

NOMENCLATURE	CSM CONTROL/INDICATOR CONFIGURATION		
	PRIOR TO BACKUP CREW CABIN INGRESS	AT LIFTOFF	POWER DOWN
PANEL 5			
FC 1 PUMPS	AC1	AC1	AC1
FC 2 PUMPS	AC2	AC2	AC2
FC 3 PUMPS	AC2	AC2	AC2
G/N PWR	AC1	AC1	OFF
MN BUS TIE BAT A/C	OFF	on (up)	OFF
MN BUS TIE BAT B/C	OFF	on (up)	OFF
BAT CHGR	AC1	AC1	as desired
NONESS BUS	OFF	OFF	OFF
cb SNSR SIG MNA	close	close	close
cb EPS SNSR SIG MNB	close	close	close
cb SNSR SIG AC1	close	close	close
cb SNSR SIG AC2	close	close	close
cb C/W MNA	close	close	close
cb C/W MNB	close	close	close
cb LM PWR 1 MNB	close	close	close

cb INV CONT 1	close	close	close
cb INV CONT 2	close	close	close
cb INV CONT 3	close	close	close
cb DC SNSR UNIT A	close	close	close
cb DC SNSR UNIT B	close	close	close
cb AC SNSR UNIT 1	close	close	close
cb AC SNSR UNIT 2	close	close	close
cb BAT RLY BUS BAT A	close	close	close
cb BAT RLY BUS BAT B	close	close	close
cb LM PWR 2 MNB	close	close	close
INTGL LTS	on	as desired	as desired
FLOOD LTS	OFF (full dim or full BRT)	OFF (full dim or full BRT)	OFF (full dim or full BRT)
FLOOD LTS DIM	1	1	1
FLOOD LTS FIXED	OFF	OFF	OFF
cb RAD CONTR AC1	close	close	close
cb RAD CONTR AC2	close	close	close
cb RAD CONT/HTRS MNA	close	close	close
cb RAD CONT/HTRS MNB	close	close	close

NOMENCLATURE	CSM CONTROL/INDICATOR CONFIGURATION		
	PRIOR TO BACKUP CREW CABIN INGRESS	AT LIFTOFF	POWER DOWN
PANEL 5 (CONT)			
cb RAD HTRS OVLD BAT A	close	close	close
cb RAD HTRS OVLD BAT B	close	close	close
cb BAT CHGR BAT A	close	close	close
cb BAT CHGR BAT B	close	close	close
cb BAT CHGR MNA	close	close	close
cb BAT CHGR MNB	close	close	close
cb BAT CHGR AC PWR	close	close	close
cb ESS INST MNA	close	close	close
cb ESS INST MNB	close	close	close
cb NONESS INST	open	open	open
cb SCI EQUIP SEB 1	open	open	open
cb SCI EQUIP SEB 2	open	open	open
cb SCI EQUIP HATCH	open	open	open
cb POT H2O HTR MNA	close	close	close
cb POT H2O HTR MNB	close	close	close

cb H2O ACCUM MNA	close	close	close
cb H2O ACCUM MNB	close	close	close
cb WASTE/POT H2O XDUCR MNA	close	close	close
cb WASTE/POT H2O XDUCR MNB	close	close	close
cb ECS PRESS XDUCR 1 MNA	close	close	close
cb ECS PRESS XDUCR 1 MNB	close	close	close
cb ECS PRESS XDUCR 2 MNA	close	close	close
cb ECS PRESS XDUCR 2 MNB	close	close	close
cb ECS TEMP XDUCR MNA	close	close	close
cb ECS TEMP XDUCR MNB	close	close	close
cb SEC COOL AC1	close	close	close
cb SEC COOL AC2	close	close	close
cb SEC COOL RAD HTR MNA	close	close	close
cb SEC COOL XDUCR MNA	close	close	close
cb SEC COOL XDUCR MNB	close	close	close
cb WASTE DUMP HTRS MNA	open	open	close
cb WASTE DUMP HTRS MNB	open	open	close
cb CAB FAN 1 AC1 ØA	close	close	close

NOMENCLATURE	CSM CONTROL/INDICATOR CONFIGURATION		
	PRIOR TO BACKUP CREW CABIN INGRESS	AT LIFTOFF	POWER DOWN
PANEL 5 (CONT)			
cb CAB FAN 1 AC1 ØB	close	close	close
cb CAB FAN 1 AC1 ØC	close	close	close
cb CAB FAN 2 AC2 ØA	close	close	close
cb CAB FAN 2 AC2 ØB	close	close	close
cb CAB FAN 2 AC2 ØC	close	close	close
cb G/N PWR AC1	close	close	close
cb G/N PWR AC2	close	close	close
cb IMU MNA	close	close	close
cb IMU MNB	close	close	close
cb IMU HTR MNA	close	close	close
cb IMU HTR MNB	close	close	close
cb G/N CMPTR MNA	close	close	close
cb G/N CMPTR MNB	close	close	close
cb G/N OPT MNA	close	close	close
cb G/N OPT MNB	close	close	close

PANEL 6			
MODE	INTERCOM/PTT	as desired	as desired
VOX SENS tw	5	as req	as req
PWR	OFF	AUDIO/TONE	AUDIO/TONE
MASTER VOL tw	5	as req	as req
INTERCOM	T/R	T/R	T/R
INTERCOM VOL tw	5	as req	as req
PAD COMM	T/R	OFF	OFF
PAD COMM VOL tw	5	as desired	as desired
S BD	T/R	T/R	T/R
S BD VOL tw	5	as req	as req
VHF AM	T/R	T/R	T/R
VHF AM VOL tw	5	as req	as req
AUDIO CONT	NORM	NORM	NORM
SUIT PWR	OFF	on (up)	on (up)

NOMENCLATURE	CSM CONTROL/INDICATOR CONFIGURATION		
	PRIOR TO BACKUP CREW CABIN INGRESS	AT LIFTOFF	POWER DOWN
PANEL 7			
EDS PWR	OFF	on (up)	OFF
TVC SERVO PWR 1	OFF	AC1/MNA	OFF
TVC SERVO PWR 2	OFF	AC2/MNB	OFF
FDAI/GPI PWR	OFF	BOTH	OFF
LOGIC 2/3 PWR	on (up)	on (up)	OFF
ELEC PWR	OFF	GDC/ECA	OFF
SIG CONDR/DR BIAS PWR 1	OFF	AC1	OFF
SIG CONDR/DR BIAS PWR 2	OFF	AC2	OFF
BMAG 1 PWR	WARM UP	ON	WARM UP
BMAG 2 PWR	WARM UP	ON	WARM UP
DIRECT O2 vlv	OPEN (CCW)	partially OPEN (CCW)	N/A

PANEL 8			
cb SCS TVC AC1	close	close	close
cb SCS AC1	close	close	close
cb SCS AC2	close	close	close
AUTO RCS A/C ROLL A1	OFF	OFF	OFF
AUTO RCS A/C ROLL C1	OFF	OFF	OFF
AUTO RCS A/C ROLL A2	OFF	OFF	OFF
AUTO RCS A/C ROLL C2	OFF	OFF	OFF
AUTO RCS B/D ROLL B1	OFF	MNA	OFF
AUTO RCS B/D ROLL D1	OFF	MNB	OFF
AUTO RCS B/D ROLL B2	OFF	MNA	OFF
AUTO RCS B/D ROLL D2	OFF	MNB	OFF
AUTO RCS PITCH A3	OFF	MNB	OFF
AUTO RCS PITCH C3	OFF	MNA	OFF
AUTO RCS PITCH A4	OFF	MNA	OFF
AUTO RCS PITCH C4	OFF	MNB	OFF
AUTO RCS YAW B3	OFF	MNA	OFF
AUTO RCS YAW D3	OFF	MNB	OFF

NOMENCLATURE	CSM CONTROL/INDICATOR CONFIGURATION		
	PRIOR TO BACKUP CREW CABIN INGRESS	AT LIFTOFF	POWER DOWN
PANEL 8 (CONT)			
AUTO RCS YAW B4	OFF	MNB	OFF
AUTO RCS YAW D4	OFF	MNA	OFF
cb SCS ECA/TVC AC2	close	close	close
cb SCS DIR ULL MNA	close	close	close
cb SCS DIR ULL MNB	close	close	close
cb SCS CONTR 1 DIR MNA	close	close	close
cb SCS CONTR 1 DIR MNB	close	close	close
cb SCS CONTR 2 DIR MNA	close	close	close
cb SCS CONTR 2 DIR MNB	close	close	close
cb A/C ROLL MNA	close	close	as desired
cb A/C ROLL MNB	close	close	as desired
cb B/D ROLL MNA	close	close	as desired
cb B/D ROLL MNB	close	close	as desired
cb SCS PITCH MNA	close	close	as desired
cb SCS PITCH MNB	close	close	as desired

cb SCS YAW MNA	close	close	as desired
cb SCS YAW MNB	close	close	as desired
NUMERICS LTS	as desired	as desired	as desired
FLOOD LTS	OFF (full dim or full BRT)	OFF (full dim or full BRT)	OFF (full dim or full BRT)
INTGL LTS	as desired	as desired	as desired
cb ORDEAL AC2	close	close	close
cb ORDEAL MNB	close	close	close
cb SCS CONTR AUTO MNA	close	close	close
cb SCS CONTR AUTO MNB	close	close	close
cb SCS LOGIC 1/2 MNA	close	close	close
cb SCS LOGIC 3/4 MNA	close	close	close
cb SCS LOGIC 1/4 MNB	close	close	close
cb SCS LOGIC 2/3 MNB	close	close	close
cb SCS SYS MNA	close	close	close
cb SCS SYS MNB	close	close	close
FLOOD LTS DIM	1	1	1
FLOOD LTS FIXED	OFF	OFF	OFF
FLOAT BAG 1 L	VENT (locked)	VENT (locked)	OFF

NOMENCLATURE	CSM CONTROL/INDICATOR CONFIGURATION		
	PRIOR TO BACKUP CREW CABIN INGRESS	AT LIFTOFF	POWER DOWN
PANEL 8 (CONT)			
FLOAT BAG 2 R	VENT (locked)	VENT (locked)	OFF
FLOAT BAG 3 CTR	VENT (locked)	VENT (locked)	OFF
SECS LOGIC 1	OFF (locked)	on (up) (locked)	OFF (locked)
SECS LOGIC 2	OFF (locked)	on (up) (locked)	OFF (locked)
PYRO A ARM	SAFE (locked)	on (up) (locked)	SAFE (locked)
PYRO B ARM	SAFE (locked)	on (up) (locked)	SAFE (locked)
cb CM RCS HTR 1 MNA	open	open	open
cb CM RCS HTR 2 MNB	open	open	open
cb SM RCS HTR A MNB	close	close	close
cb SM RCS HTR C MNB	close	close	close
cb SM RCS HTR B MNA	close	close	close
cb SM RCS HTR D MNA	close	close	close
cb RCS PRPLNT MNA	close	close	close
cb RCS PRPLNT MNB	close	close	close
cb RCS LOGIC MNA	close	close	close

cb RCS LOGIC MNB	close	close	close
cb EMS MNA	close	close	close
cb EMS MNB	close	close	close
cb DOCK PROBE MNA	close	close	close
cb DOCK PROBE MNB	close	close	close
cb SPS GAUGING MNA	close	close	close
cb SPS GAUGING MNB	close	close	close
cb SPS GAUGING AC1	close	close	close
cb SPS GAUGING AC2	close	close	close
cb SPS He VLV MNA	close	close	close
cb SPS He VLV MNB	close	close	close
cb SPS PITCH 1 BAT A	close	close	open
cb SPS PITCH 2 BAT B	close	close	close
cb SPS YAW 1 BAT A	close	close	open
cb SPS YAW 2 BAT B	close	close	close
cb SPS PILOT VLVS A MNA	close	close	close
cb SPS PILOT VLVS B MNB	close	close	close
cb FLOAT BAG 1 BAT A	close	close	open

NOMENCLATURE	CSM CONTROL/INDICATOR CONFIGURATION		
	PRIOR TO BACKUP CREW CABIN INGRESS	AT LIFTOFF	POWER DOWN
PANEL 8 (CONT)			
cb FLOAT BAG 2 BAT B	close	close	open
cb FLOAT BAG 3 FLT/PL	close	close	open
cb SECS LOGIC A BAT A	open	close	close
cb SECS LOGIC B BAT B	open	close	close
cb SECS ARM A BAT A	open	close	open
cb SECS ARM B BAT B	open	close	open
cb EDS 1 BAT A	close	close	open
cb EDS 2 BAT C	close	close	open
cb EDS 3 BAT B	close	close	open
cb ELS BAT A	close	close	open
cb ELS BAT B	close	close	open
cb PL VENT FLT/PL	close	close	open

PANEL 9			
MODE	INTERCOM/PTT	as desired	as desired
VOX SENS tw	5	as req	as req
PWR	OFF	AUDIO/TONE	AUDIO/TONE
MASTER VOL tw	5	as req	as req
INTERCOM	T/R	T/R	T/R
INTERCOM VOL tw	5	as req	as req
PAD COMM	T/R	OFF	OFF
PAD COMM VOL tw	5	as desired as req	as desired
S BD	T/R	T/R	T/R
S BD VOL tw	5	as req	as req
VHF AM	T/R	T/R	T/R
VHF AM VOL tw	5	as req	as req
AUDIO CONT	NORM	NORM	NORM
SUIT PWR	OFF	on (up)	on (up)
VHF RNG	NORM	NORM	NORM

NOMENCLATURE	CSM CONTROL/INDICATOR CONFIGURATION		
	PRIOR TO BACKUP CREW CABIN INGRESS	AT LIFTOFF	POWER DOWN
PANEL 10			
MODE	INTERCOM/PTT	as desired	as desired
VOX SENS tw	5	as req	as req
PWR	OFF	AUDIO/TONE	AUDIO/TONE
MASTER VOL tw	5	as req	as req
PAD COMM	T/R	OFF	OFF
PAD COMM VOL tw	5	as desired as req	as desired
INTERCOM	T/R	T/R	T/R
INTERCOM VOL tw	5	as req	as req
S BD	T/R	T/R	T/R
S BD VOL tw	5	as req	as req
VHF AM	T/R	T/R	T/R
VHF AM VOL tw	5	as req	as req
AUDIO CONT	NORM	NORM	NORM
SUIT PWR	OFF	on (up)	on (up)

PANEL 12			
TUNL VENT vlv	OFF	LM/CM ΔP	N/A
PANEL 13			
FDAI 1 sw	INRTL	INRTL	INRTL
FDAI 2 sw	INRTL	INRTL	INRTL
EARTH/LUNAR	PWR OFF	PWR OFF	PWR OFF
ALT SET	100 NM	100 NM	N/A
LTG	OFF	OFF	OFF
MODE	HOLD/FAST	HOLD/FAST	N/A
SLEW	off (ctr)	off (ctr)	off (ctr)
PANEL 15			
COAS PWR	OFF	OFF	OFF
UTIL PWR	OFF	OFF	OFF
PL BCN LT	off (ctr)	off (ctr)	off (ctr)
DYE MARKER	off (down) (guarded)	off (down) (guarded)	off (down) (guarded)
PL VENT	OFF	OFF	OFF

NOMENCLATURE	CSM CONTROL/INDICATOR CONFIGURATION		
	PRIOR TO BACKUP CREW CABIN INGRESS	AT LIFTOFF	POWER DOWN
PANEL 16			
DOCK TRGT	OFF	OFF	OFF
UTIL PWR	OFF	OFF	OFF
COAS PWR	OFF	OFF	OFF
PANEL 100			
UTIL PWR	OFF	OFF	OFF
FLOOD LTS DIM	1	1	1
FLOOD LTS FIXED	OFF	OFF	OFF
OPT PWR	OFF	OFF	OFF
IMU PWR	on (up)	on (up)	OFF
RNDZ XPNDR	OFF	OFF	OFF
NUMERICS LTS	as desired	as desired	OFF
FLOOD LTS	OFF (full dim or full BRT)	OFF (full dim or full BRT)	OFF (full dim or full BRT)
INTGL LTS	as desired	as desired	OFF

PANEL 101			
SYS TEST (LH)	4	4	OFF
SYS TEST (RH)	B	B	as desired
CM RCS HTRS	OFF	OFF	OFF
WASTE H2O DUMP	OFF	HTR A	HTR A
URINE DUMP	OFF	HTR A	HTR A
RNDZ XPNDR	OPR	OPR	OPR
PANEL 122			
OPT ZERO	ZERO	ZERO	ZERO
OPT TELTRUN	SLAVE TO SXT	SLAVE TO SXT	SLAVE TO SXT
OPT COUPLING	DIRECT	DIRECT	DIRECT
OPT MODE	MAN	MAN	MAN
OPT SPEED	LO	LO	LO
COND LAMPS	ON	ON	as desired
UP TLM	ACPT	ACPT	as desired
PANEL 162			
SCI PWR (Located behind closeout panel and will be set at panel closeout)	OFF	OFF	OFF

NOMENCLATURE	CSM CONTROL/INDICATOR CONFIGURATION		
	PRIOR TO BACKUP CREW CABIN INGRESS	AT LIFTOFF	POWER DOWN
PANEL 163			
SCI/UTIL PWR (Located behind closeout panel and will be set at panel closeout)	OFF	OFF	OFF
PANEL 225			
cb PCM TLM ac GRP 1	close	close	close
cb PCM TLM ac GRP 2	close	close	close
cb FLT BUS MNA	close	close	close
cb FLT BUS MNB	close	close	close
cb PMP PRIM PWR FLT BUS	close	close	close
cb PMP AUX PWR FLT BUS	close	close	close
cb VHF/CREW AUDIO L FLT/PL	close	close	close
cb VHF/CREW AUDIO CTR FLT/PL	close	close	close
cb VHF/CREW AUDIO R FLT/PL	close	close	close
cb UDL FLT BUS	close	close	close
cb HI GAIN ANT FLT BUS	open	open	close

cb HI GAIN ANT ac GRP 2	open	open	close
cb S BD XMTR/DSE FLT BUS	close	close	close
cb S BD XMTR/DSE ac GRP 1	close	close	close
cb CTE MNA	close	close	close
cb CTE MNB	close	close	close
cb RNDZ XPNDR FLT BUS	close	close	close
cb SIG CONDR FLT BUS	close	close	close
cb S BD PWR AMPL 1 FLT BUS	close	close	close
cb S BD PWR AMPL 1 ac GRP 1	close	close	close
cb S BD PWR AMPL 2 FLT BUS	close	close	close
cb S BD PWR AMPL 2 ac GRP 2	close	close	close

NOMENCLATURE	CSM CONTROL/INDICATOR CONFIGURATION		
	PRIOR TO BACKUP CREW CABIN INGRESS	AT LIFTOFF	POWER DOWN
PANEL 226			
cb FC 1 PUMPS AC	close	close	close
cb FC 1 REACS	open	open	open
cb FC 1 BUS CONT	close	close	close
cb FC 1 PURG	close	close	close
cb FC 1 RAD	close	open	open
cb CRYO H2 HTR 1 MNA	close	close	close
cb CRYO H2 HTR 2 MNB	close	close	close
cb FC 2 PUMPS AC	close	close	close
cb FC 2 REACS	open	open	open
cb FC 2 BUS CONT	close	close	close
cb FC 2 PURG	close	close	close
cb FC 2 RAD	close	open	open
cb CRYO O2 HTR 1 MNA	close	close	close
cb CRYO O2 HTR 2 MNB	close	close	close
cb FC 3 PUMPS AC	close	close	close

cb FC 3 REACS	open	open	open	
cb FC 3 BUS CONT	close	close	close	
cb FC 3 PURG	close	close	close	
cb FC 3 RAD	close	open	open	
cb QTY AMPL AC1	close	close	close	
cb QTY AMPL AC2	close	close	close	
cb CRYO FAN TK1 AC1 ØA	close	close	close	
cb CRYO FAN TK1 AC1 ØB	close	close	close	
cb CRYO FAN TK1 AC1 ØC	close	close	close	
cb CRYO FAN TK2 AC2 ØA	close	close	close	
cb CRYO FAN TK2 AC2 ØB	close	close	close	
cb CRYO FAN TK2 AC2 ØC	close	close	close	
cb COAS/TUNL LTG MNA	close	close	close	
cb COAS/TUNL LTG MNB	close	open	close	
cb FLOOD LTG MNA	close	close	close	
cb FLOOD LTG MNB	close	close	close	
cb FLOOD LTG FLT/PL	close	close	close	
cb NUM/INTGL LTG LEB AC2	close	close	close	

NOMENCLATURE	CSM CONTROL/INDICATOR CONFIGURATION		
	PRIOR TO BACKUP CREW CABIN INGRESS	AT LIFTOFF	POWER DOWN
PANEL 226 (CONT)			
cb NUM/INTGL LTG L MDC AC1	close	close	close
cb NUM/INTGL LTG R MDC AC1	close	close	close
cb RUN/EVA/TRGT LTG AC1	close	close	close
cb RUN/EVA/TRGT LTG AC2	close	close	close
PANEL 227			
SCI PWR	OFF	OFF	OFF
PANEL 229			
cb EPS GRP 1 MNA	close	close	close
cb EPS GRP 1 MNB	close	close	close
cb EPS GRP 2 MNA	close	close	close
cb EPS GRP 2 MNB	close	close	close
cb EPS GRP 3 MNA	close	close	close
cb EPS GRP 3 MNB	close	close	close
cb EPS GRP 4 MNA	close	close	close

cb EPS GRP 4 MNB	close	close	close
cb EPS GRP 5 MNA	close	close	close
cb EPS GRP 5 MNB	close	close	close
cb UTIL R/L STA MNA	close	close	close
cb UTIL LEB MNB	close	close	close
cb BAT BUS A	close	close	close
cb BAT BUS B	close	close	close
cb TMRS MNA	close	close	close
cb TMRS MNB	close	close	close
cb SPS LINE HTRS MNA	close	close	close
cb SPS LINE HTRS MNB	close	close	close
cb 02 VAC ION PUMPS MNA	open	open	close
cb 02 VAC ION PUMPS MNB	open	open	close
cb MN REL PYRO A	open	open	open
cb MN REL PYRO B	open	open	open

NOMENCLATURE	CSM CONTROL/INDICATOR CONFIGURATION		
	PRIOR TO BACKUP CREW CABIN INGRESS	AT LIFTOFF	POWER DOWN
PANEL 250			
cb PYRO A BAT BUS A	open	open	open
cb PYRO A/SEQ A	close	close	close
cb PYRO B BAT BUS B	open	open	open
cb PYRO B SEQ B	close	close	close
cb ENTRY/PL BAT A	close	close	close
cb ENTRY/PL BAT B	close	close	close
cb ENTRY/PL BAT C	close	close	close
cb BAT BUS A BAT C	open	open	open
cb BAT BUS B BAT C	open	open	open
cb BAT CHGR/EDS2 BAT C	close	close	close
PANEL 251			
WASTE MGMT DRAIN vlv	OFF	OFF	N/A
PANEL 252			
BAT VENT vlv	VENT	CLOSE	N/A
WASTE STOW vlv	CLOSE	VENT	N/A

PANEL 275			
cb MNA BAT BUS A	close	close	close
cb MNA BAT C	open	open	open
cb MNB BAT C	open	open	open
cb MNB BAT BUS B	close	close	close
cb FLT/PL BAT BUS A	open	open	open
cb FLT/PL BAT BUS B	open	open	open
cb FLT/PL BAT C	open	open	open
cb FLT/PL MNA	close	close	close
cb FLT/PL MNB	close	close	close
cb INV 1 MNA	close	close	close
cb INV 2 MNB	close	close	close
cb INV 3 MNA	close	close	close
cb INV 3 MNB	close	close	close

NOMENCLATURE	CSM CONTROL/INDICATOR CONFIGURATION		
	PRIOR TO BACKUP CREW CABIN INGRESS	AT LIFTOFF	POWER DOWN
PANEL 276			
cb1 INST PWR CONT	close	close	close
cb2 INST PWR CONT	close	close	close
cb3 INST PWR CONT	close	close	close
cb4 INST PWR CONT	close	close	close
PANEL 278			
cb UPR SYS COMPR 1	open	open	open
cb UPR SYS COMPR 2	open	open	open
cb SIVB/LM SEP PYRO A	close	close	
cb SIVB/LM SEP PYRO B	close	close	
PANEL 300			
rh SUIT FLOW vlv	FULL FLOW	FULL FLOW	N/A
PANEL 301			
lh SUIT FLOW vlv	FULL FLOW	FULL FLOW	N/A
PANEL 302			
ctr SUIT FLOW vlv	FULL FLOW	FULL FLOW	N/A

PANEL 303			
PRIM CAB TEMP vlv	COLD (CW)	COLD (CW)	N/A
SEC CAB TEMP vlv	MAX COOL (CW)	MAX COOL (CW)	N/A
PANEL 304			
DRINK H2O SUP vlv	OFF (CW)	OFF (CW)	N/A
PANEL 305			
FOOD PREP COLD H2O vlv	rel	rel	N/A
FOOD PREP HOT H2O vlv	rel	rel	N/A
PANEL 306			
MSN TMR	START	START	START
EVNT TMR RSET	UP (ctr)	UP (ctr)	UP (ctr)
EVNT TMR START	ctr	ctr	STOP
EVNT TMR MIN	ctr	ctr	ctr
EVNT TMR SEC	ctr	ctr	ctr
MSN TMR HR	ctr	ctr	ctr
MSN TMR MIN	ctr	ctr	ctr
MSN TMR SEC	ctr	ctr	ctr

NOMENCLATURE	CSM CONTROL/INDICATOR CONFIGURATION		
	PRIOR TO BACKUP CREW CABIN INGRESS	AT LIFTOFF	POWER DOWN
PANEL 325			
rh CAB PRESS RELF vlv	BOOST/ENTR	BOOST/ENTR	N/A
lh CAB PRESS RELF vlv	BOOST/ENTR	BOOST/ENTR	N/A
PRIM GLY TO RAD	NORM	BYP	N/A
PANEL 326			
REPRESS PKG vlv	OFF	ON	N/A
SM 02 SUP vlv	ON	ON	N/A
SRG TK 02 vlv	ON	ON	N/A
GLY RSVR IN vlv	OPEN	OPEN	N/A
GLY RSVR BYP vlv	CLOSE	CLOSE	N/A
GLY RSVR OUT vlv	OPEN	OPEN	N/A
PANEL 350			
CO2 CSTR DIVERT vlv	ctr	ctr	N/A
PANEL 351			
MN REG A vlv	open	open	N/A
MN REG B vlv	open	open	N/A

H2O/GLY TK REG sel	BOTH	BOTH	N/A
H2O/GLY TK RELF sel	BOTH	BOTH	N/A
EMER CAB PRESS sel	OFF	OFF	N/A
CAB REPRESS vlv	OFF (CCW)	OFF (CCW)	N/A
PANEL 352			
WASTE TK SERV vlv	CLOSE	CLOSE	N/A
PRESS RELF sel	2	2	N/A
POT TK IN vlv	CLOSE	OPEN	N/A
WASTE TK IN vlv	AUTO	AUTO	N/A
PANEL 375			
SRG TK RELF vlv	open (CW)	open (CW)	N/A
PANEL 376			
PLVC sw	NORM	NORM	N/A
PANEL 377			
GLY TO RAD SEC vlv	BYP	BYP	N/A
PANEL 378			
PRIM GLY ACCUM vlv	open (CCW)	open (CCW)	N/A

NOMENCLATURE	CSM CONTROL/INDICATOR CONFIGURATION		
	PRIOR TO BACKUP CREW CABIN INGRESS	AT LIFTOFF	POWER DOWN
PANEL 379			
PRIM ACCUM FILL vlv	OFF	OFF	N/A
PANEL 380			
DEMAND REG sel	BOTH	BOTH	N/A
SUIT TEST vlv	OFF	OFF	N/A
SUIT RETURN vlv	close (push)	close (push)	N/A
PANEL 382			
SUIT HT EXCH PRIM GLY	FLOW (CCW)	FLOW (CCW)	FLOW
SUIT FLOW RELF	OFF	OFF	N/A
GLY EVAP IN TEMP vlv	MIN (CCW)	MIN (CCW)	N/A
SUIT HT EXCH SEC GLY	FLOW	FLOW	N/A
SEC EVAP H2O CONT	AUTO	AUTO	OFF
PRIM EVAP H2O CONT	AUTO	AUTO	AUTO
H2O ACCUM 1	RMTE	RMTE	RMTE
H2O ACCUM 2	RMTE	RMTE	RMTE

PANEL 600			
EMER 02	CLOSE	CLOSE	N/A
PANEL 601			
REPRESS 02	CLOSE	CLOSE	N/A
PANEL 602			
REPRESS 02 RELF	open (CW)	open (CW)	N/A
FWD HATCH			
PRESS EQUAL vlv	CLOSE	CLOSE	N/A
Actr handle sel	stowed	stowed	N/A
Actr handle rel	locked	locked	N/A
SIDE HATCH			
CAB PRESS DUMP vlv	close (CW)	close (CW)	close (CW)
Gearbox sel	LATCH	LATCH	N/A
Actr handle sel	L (latch)	U(unlatch)	N/A
BPC jett knob	180° from BPC JETT decal	Arrow on knob pointing to BPC JETT decal	N/A
Lock pin rel knob	UNLOCK	LOCK	N/A
GN2 vlv handle	neutral	push (outboard)	N/A

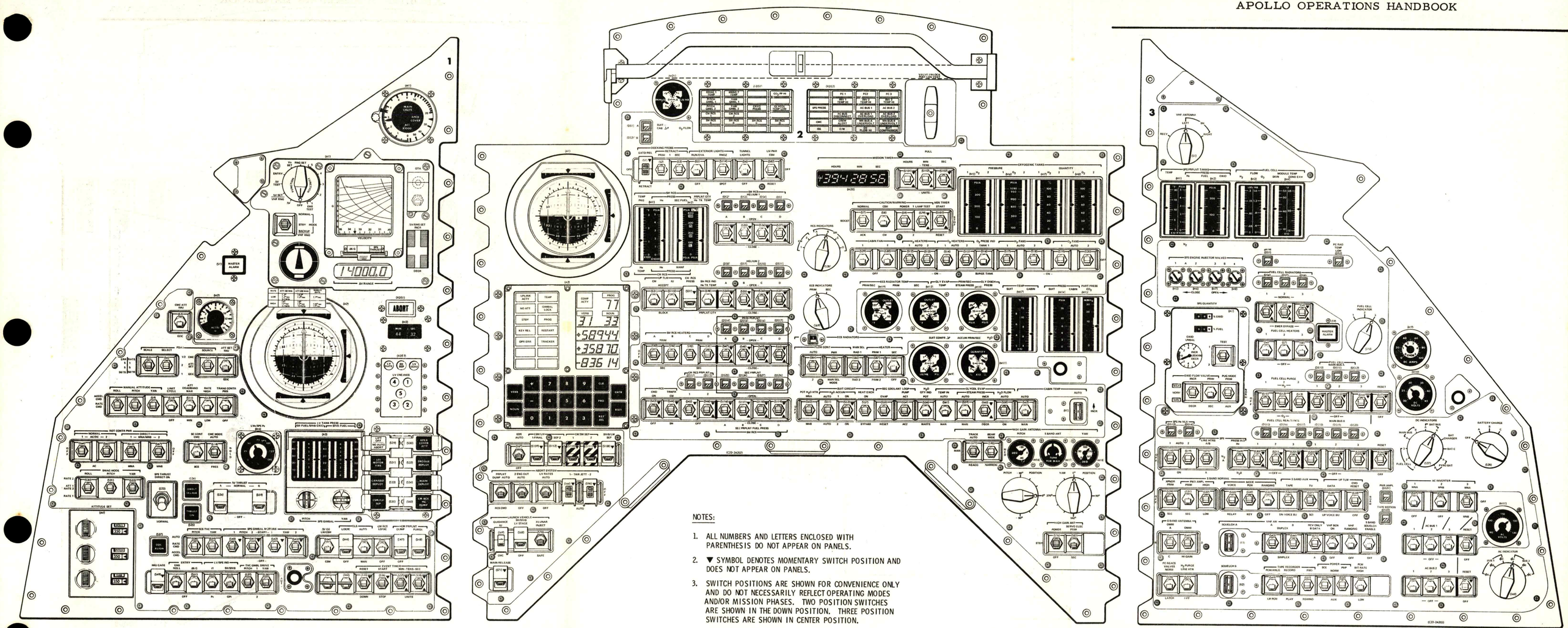

SM-2A-1999C

Figure B-1. Crew Displays and Controls (Sheet 1 of 5)

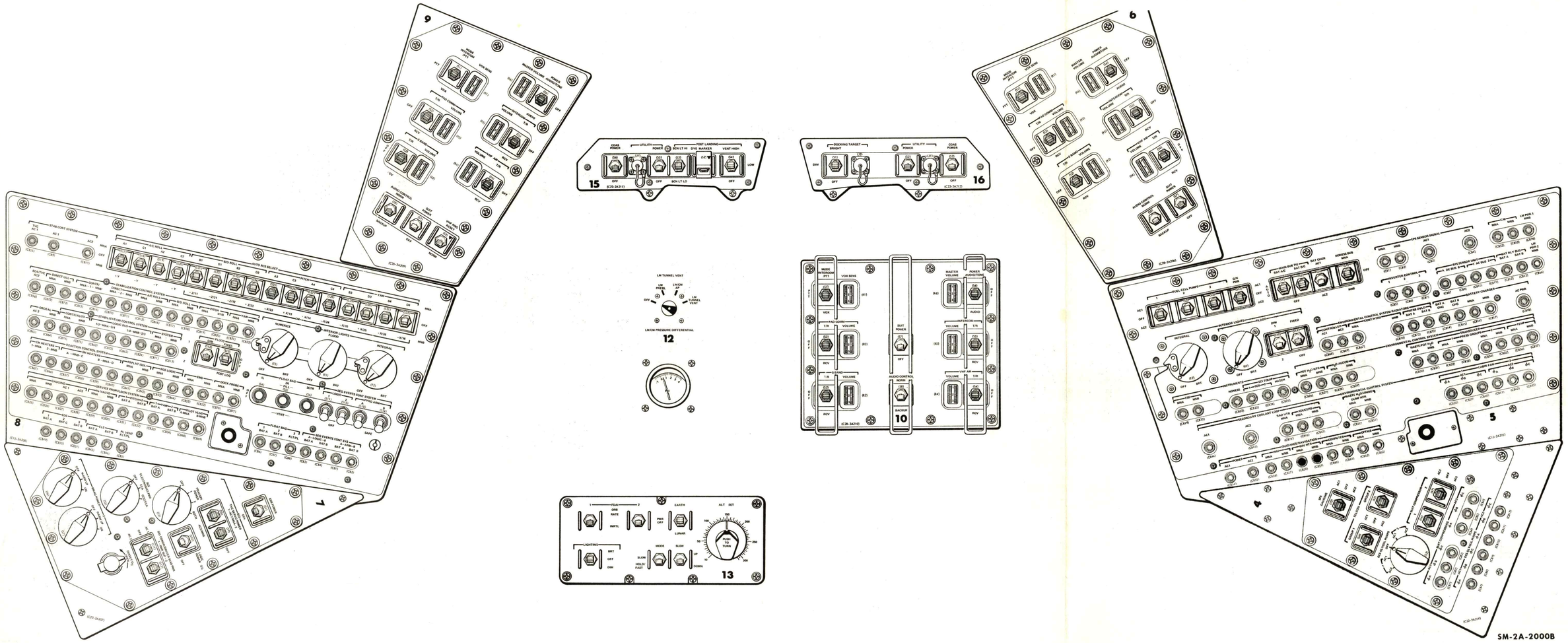

Figure B-1. Crew Displays and Controls (Sheet 2 of 5)

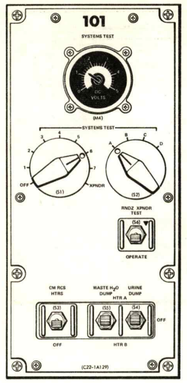

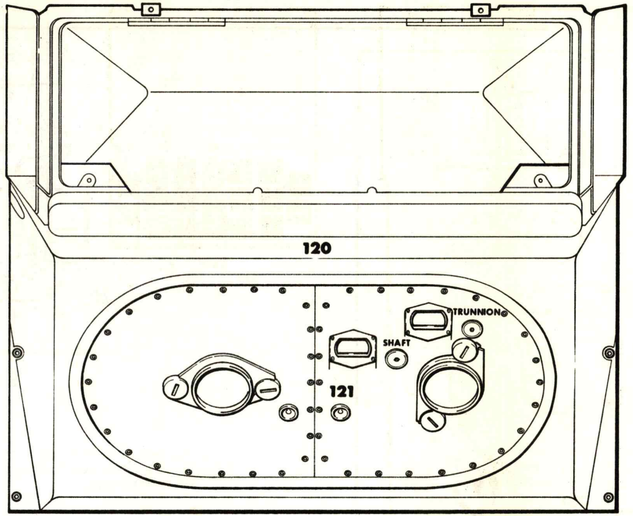

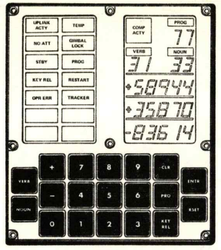

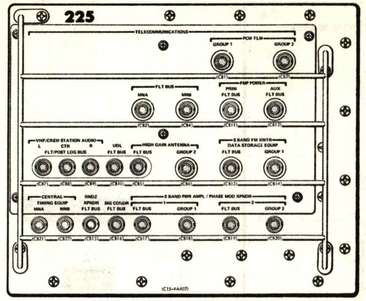

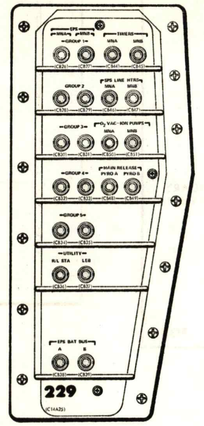

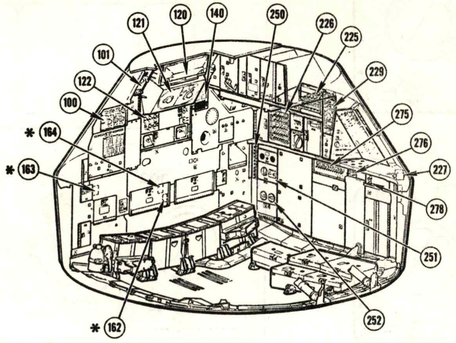

* PANELS 162, AND 164 ARE LOCATED BEHIND VOLUME B5 AND B6 RESPECTIVELY. PANEL 163 IS LOCATED BEHIND CLOSEOUT PANEL ADJACENT TO VOLUME B2.

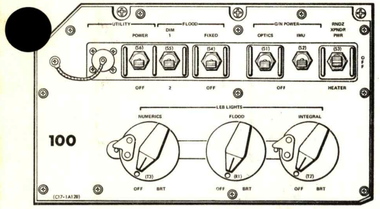

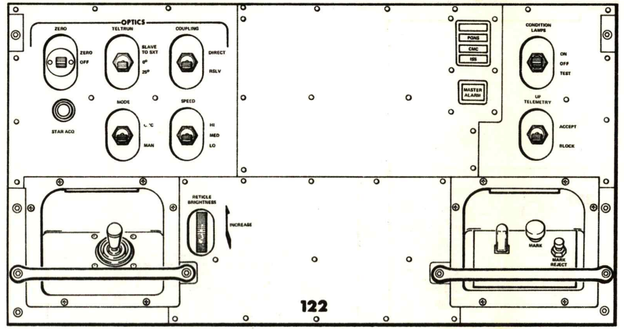

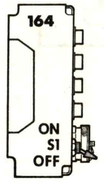

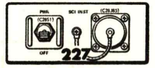

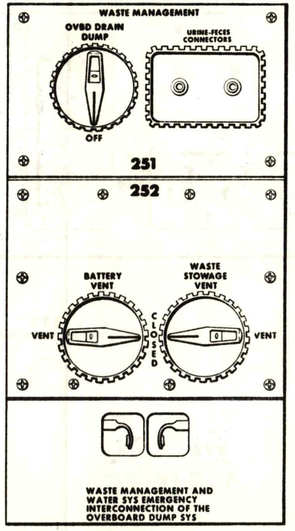

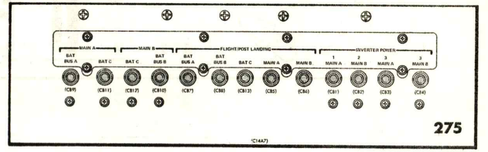

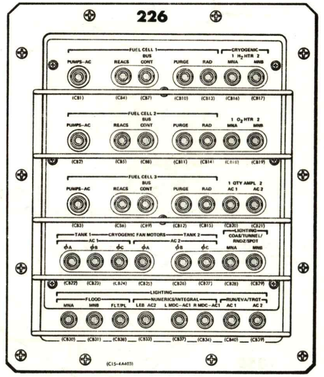

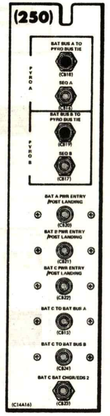



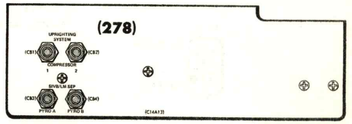



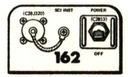

SM-2A-2001D

Figure B-1. Crew Displays and Controls (Sheet 3 of 5)

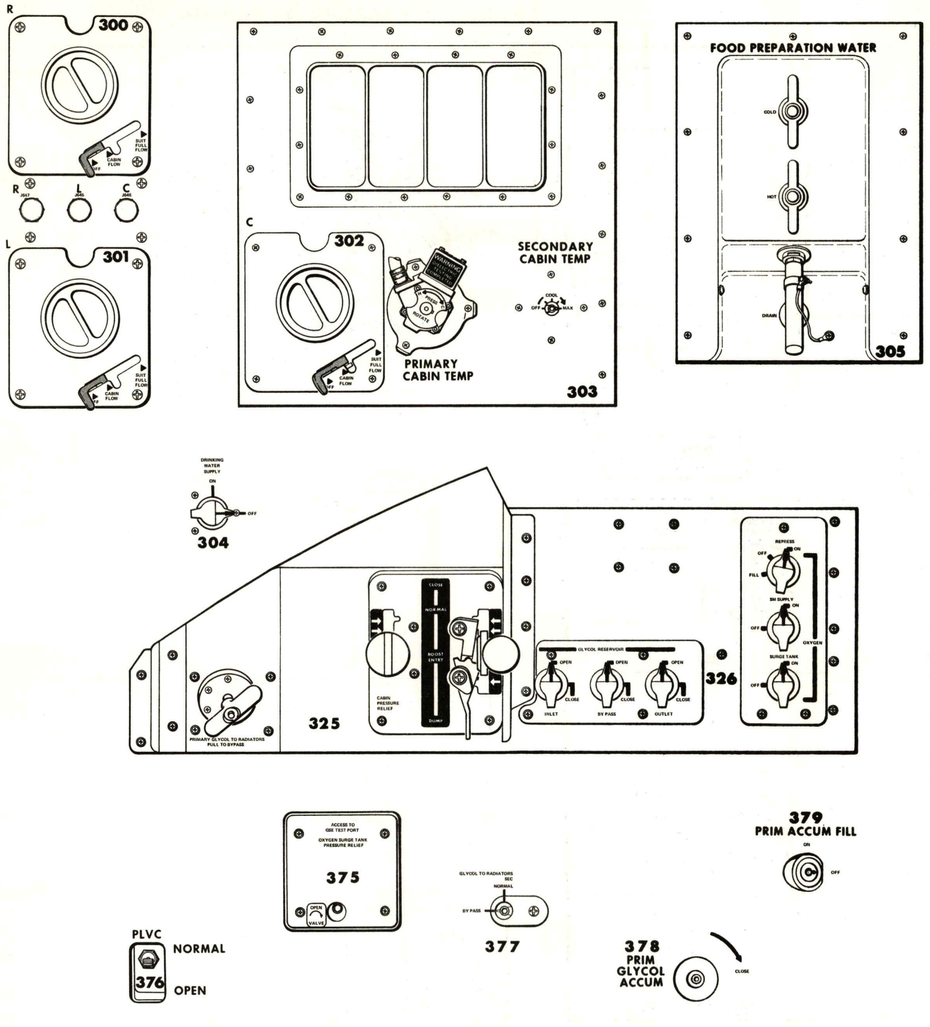

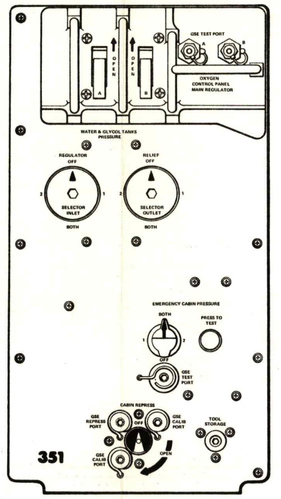

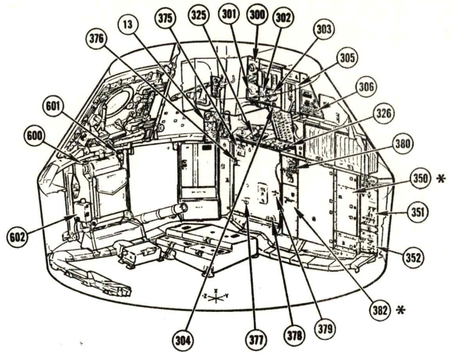

* CO_2 CANISTER DIVERTER VALVE ASSEMBLY (350) AND COOLANT CONTROL PANEL (382) LOCATED BEHIND ATTENUATION PANELS.

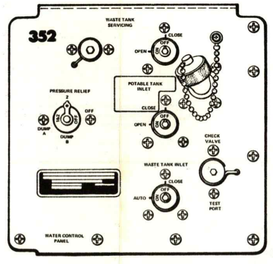

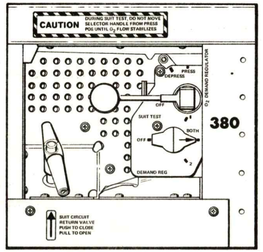

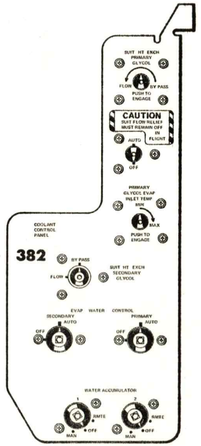

SM-2A-2002D

Figure B-1. Crew Displays and Controls (Sheet 4 of 5)

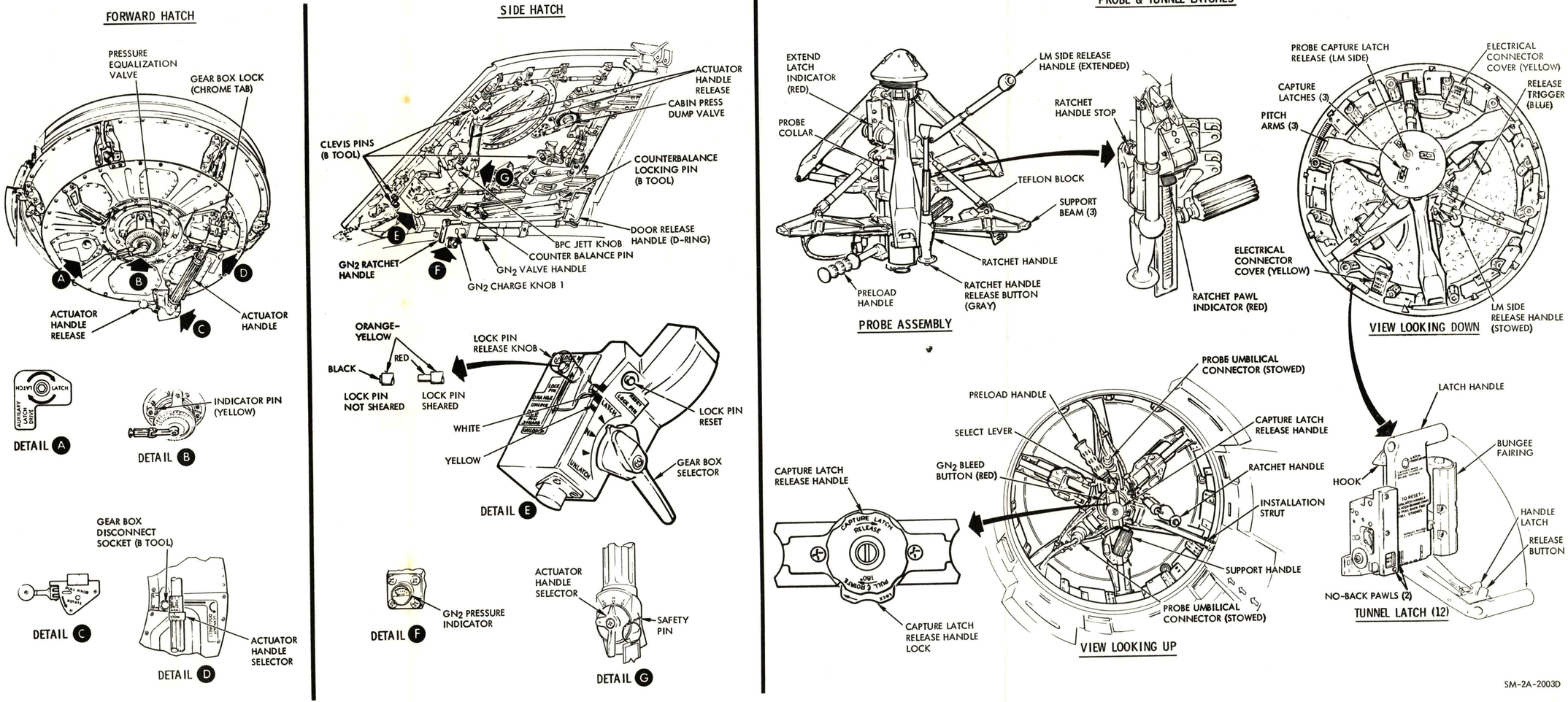

Figure B-1. Crew Displays and Controls (Sheet 5 of 5)

APPENDIX C

FLIGHT OPERATIONAL CHECKLIST DEVELOPMENT

The CSM Apollo Operations Handbook Procedures are formated so as to make possible direct development of flight operational checklist material.

Figures C-1 through C-3 indicate a method of arranging material from the procedures column of the normal/backup and contingency sections of the AOH to provide three relatively compact and convenient checklists ordered and oriented to specific Apollo mission phases. Material is arranged to provide a minimum of redundancy and cross referencing, while at the same time allowing optimum procedure sequencing for each phase.

The LAUNCH CHECKLIST, figure C-1, contains flight crew procedures from prime crew ingress through translunar injection, including aborts and applicable pad and flight emergency procedures.

Backup crew prelaunch procedures can be made a carry-off item at the time of backup crew egress and are therefore not included. Prime crew prelaunch procedures could conceivably be excluded as well from the launch checklist by use of task communication to the crew via hardline.

The ORBITAL OPERATIONS CHECKLIST, figure C-2, includes CSM/LM/SIVB interface, rendezvous, formation flight, docking and docked operations, and flight emergency procedures for use during all phases of Earth-Lunar orbital operations. These procedures are also used for TEI and for MCC burns during translunar and transearth coast periods.

The ENTRY CHECKLIST, figure C-3, includes preparation for deorbit and entry through postlanding procedures including flight emergency procedures and postlanding emergency procedures, if any.

The SUPPORT PROCEDURES AND DATA (SPAD), detailed in figure C-4, includes G&C reference data, subprocedures, mode selection, and vehicle system management procedures used in conjunction with orbital operations and in preparation for deorbit and entry.

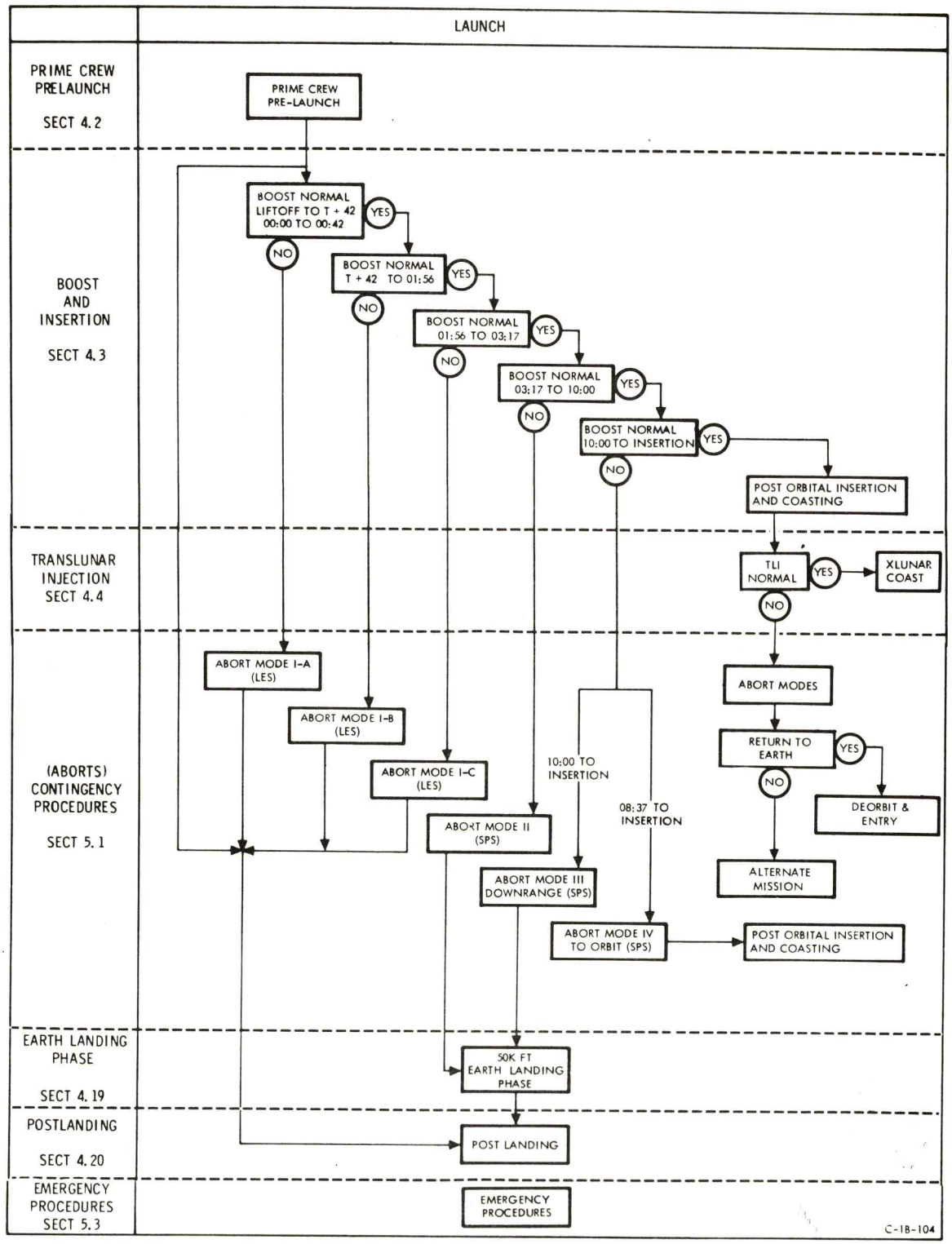
LAUNCH
PRIME CREW PRELAUNCH
SECT 4.2
PRIME CREW PRE-LAUNCH
BOOST AND INSERTION
SECT 4.3
BOOST NORMAL LIFTOFF TO T + 42 00:00 TO 00:42
YES
NO
BOOST NORMAL T + 42 TO 01:56
YES
NO
BOOST NORMAL 01:56 TO 03:17
YES
NO
BOOST NORMAL 03:17 TO 10:00
YES
NO
BOOST NORMAL 10:00 TO INSERTION
YES
NO
POST ORBITAL INSERTION AND COASTING
TRANSLUNAR INJECTION
SECT 4.4
TLI NORMAL
YES
XLUNAR COAST
NO
(ABORTS) CONTINGENCY PROCEDURES
SECT 5.1
ABORT MODE I-A (LES)
ABORT MODE I-B (LES)
ABORT MODE I-C (LES)
ABORT MODE II (SPS)
10:00 TO INSERTION
08:37 TO INSERTION
ABORT MODE III DOWNRANGE (SPS)
ABORT MODE IV TO ORBIT (SPS)
POST ORBITAL INSERTION AND COASTING
ABORT MODES
RETURN TO EARTH
YES
NO
DEORBIT & ENTRY
ALTERNATE MISSION
EARTH LANDING PHASE
SECT 4.19
50K FT EARTH LANDING PHASE
POSTLANDING
SECT 4.20
POST LANDING
EMERGENCY PROCEDURES
SECT 5.3
EMERGENCY PROCEDURES
C-1B-104

Figure C-1

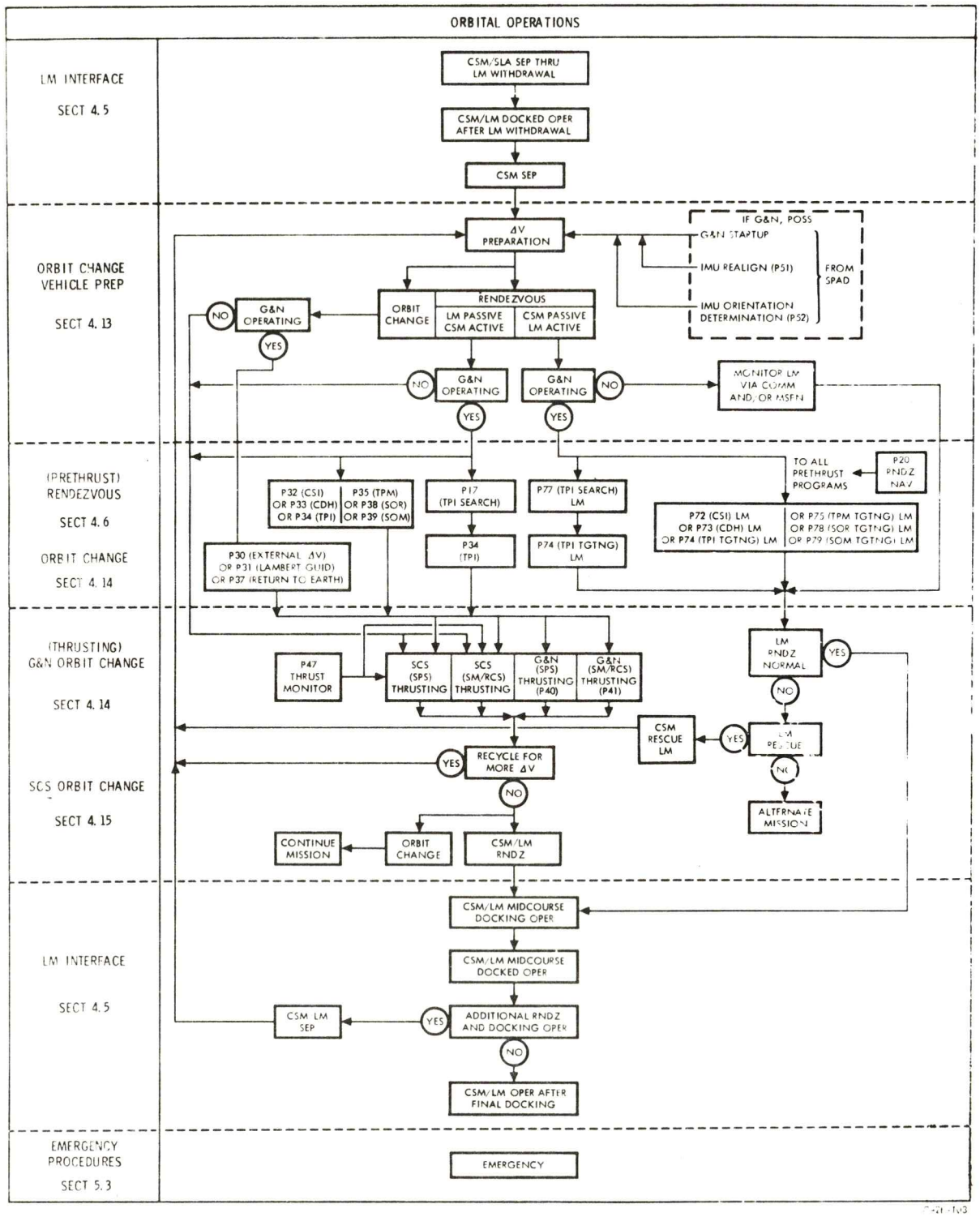
ORBITAL OPERATIONS
LM INTERFACE
SECT 4.5
CSM/SLA SEP THRU LM WITHDRAWAL
CSM/LM DOCKED OPER AFTER LM WITHDRAWAL
CSM SEP
ORBIT CHANGE VEHICLE PREP
SECT 4.13
ΔV PREPARATION
IF G&N, POSS
G&N STARTUP
IMU REALIGN (P51)
IMU ORIENTATION DETERMINATION (P52)
FROM SPAD
ORBIT CHANGE
RENDEZVOUS
LM PASSIVE CSM ACTIVE
CSM PASSIVE LM ACTIVE
NO
G&N OPERATING
YES
NO
G&N OPERATING
YES
G&N OPERATING
NO
YES
MONITOR LM VIA COMM AND/OR MSFN
(PRETHRUST) RENDEZVOUS
SECT 4.6
ORBIT CHANGE
SECT 4.14
TO ALL PRETHRUST PROGRAMS
P20 RNDZ NAV
P32 (CSI) OR P33 (CDH) OR P34 (TPI)
P35 (TPM) OR P38 (SOR) OR P39 (SOM)
P17 (TPI SEARCH)
P77 (TPI SEARCH) LM
P72 (CSI) LM OR P73 (CDH) LM OR P74 (TPI TGTNG) LM
OR P75 (TPM TGTNG) LM OR P78 (SOR TGTNG) LM OR P79 (SOM TGTNG) LM
P34 (TPI)
P74 (TPI TGTNG) LM
P30 (EXTERNAL ΔV) OR P31 (LAMBERT GUID) OR P37 (RETURN TO EARTH)
(THRUSTING) G&N ORBIT CHANGE
SECT 4.14
P47 THRUST MONITOR
SCS (SPS) THRUSTING
SCS (SM/RCS) THRUSTING
G&N (SPS) THRUSTING (P40)
G&N (SM/RCS) THRUSTING (P41)
LM RNDZ NORMAL
YES
NO
CSM RESCUE LM
YES
LM RESCUE
NO
ALTERNATE MISSION
SCS ORBIT CHANGE
SECT 4.15
YES
RECYCLE FOR MORE ΔV
NO
CONTINUE MISSION
ORBIT CHANGE
CSM/LM RNDZ
LM INTERFACE
SECT 4.5
CSM/LM MIDCOURSE DOCKING OPER
CSM/LM MIDCOURSE DOCKED OPER
CSM LM SEP
YES
ADDITIONAL RNDZ AND DOCKING OPER
NO
CSM/LM OPER AFTER FINAL DOCKING
EMERGENCY PROCEDURES
SECT 5.3
EMERGENCY

Figure C-2

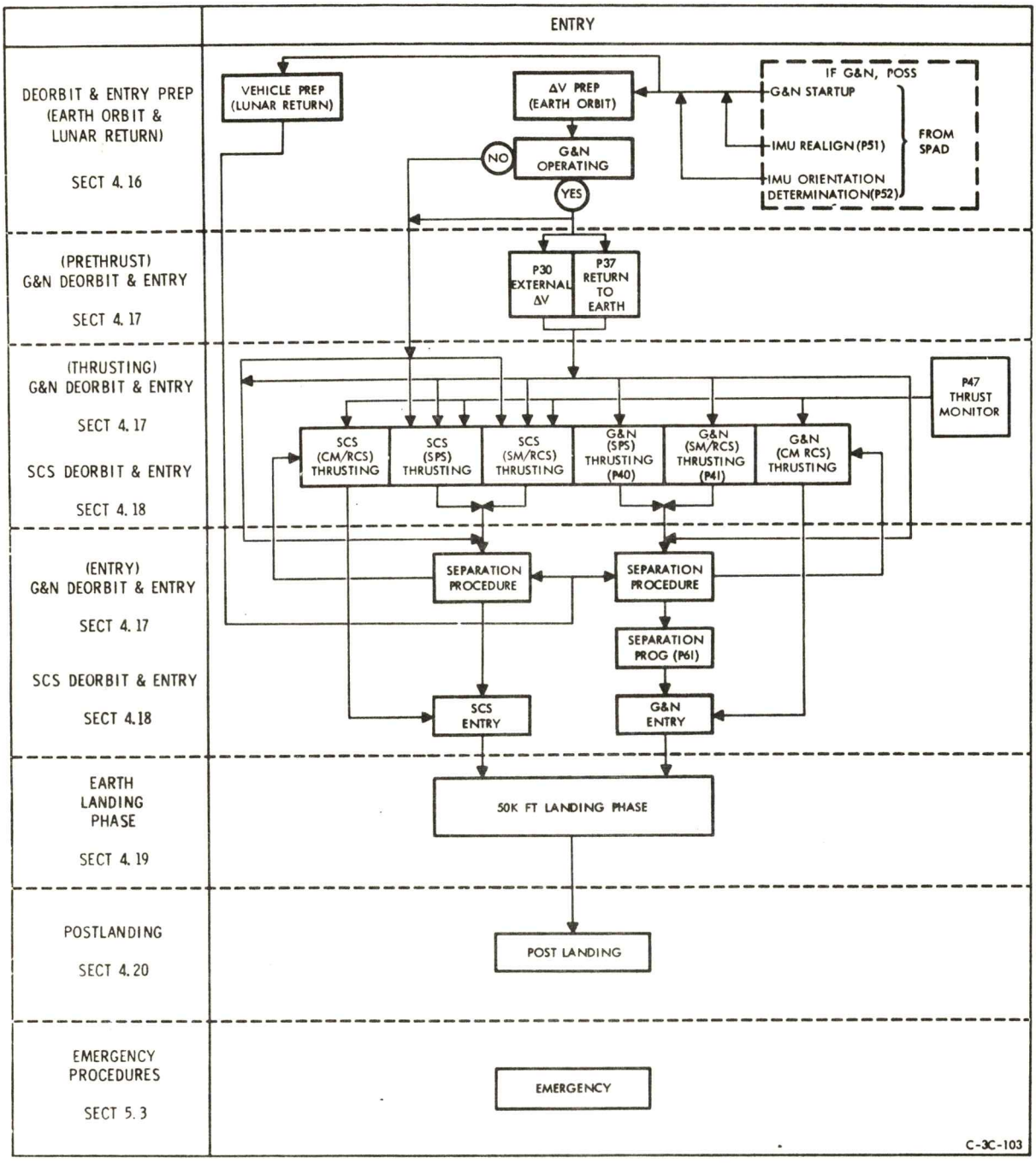
ENTRY
DEORBIT & ENTRY PREP (EARTH ORBIT & LUNAR RETURN)
SECT 4.16
VEHICLE PREP (LUNAR RETURN)
ΔV PREP (EARTH ORBIT)
IF G&N, POSS
G&N STARTUP
IMU REALIGN (P51)
IMU ORIENTATION DETERMINATION (P52)
FROM SPAD
NO
G&N OPERATING
YES
(PRETHRUST) G&N DEORBIT & ENTRY
SECT 4.17
P30 EXTERNAL ΔV
P37 RETURN TO EARTH
(THRUSTING) G&N DEORBIT & ENTRY
SECT 4.17
SCS DEORBIT & ENTRY
SECT 4.18
P47 THRUST MONITOR
SCS (CM/RCS) THRUSTING
SCS (SPS) THRUSTING
SCS (SM/RCS) THRUSTING
G&N (SPS) THRUSTING (P40)
G&N (SM/RCS) THRUSTING (P41)
G&N (CM RCS) THRUSTING
(ENTRY) G&N DEORBIT & ENTRY
SECT 4.17
SCS DEORBIT & ENTRY
SECT 4.18
SEPARATION PROCEDURE
SEPARATION PROCEDURE
SEPARATION PROG (P61)
SCS ENTRY
G&N ENTRY
EARTH LANDING PHASE
SECT 4.19
50K FT LANDING PHASE
POSTLANDING
SECT 4.20
POST LANDING
EMERGENCY PROCEDURES
SECT 5.3
EMERGENCY
C-3C-103

Figure C-3

SUPPORT PROCEDURES AND DATA			
REFERENCE DATA SECT 4.8	G&C GENERAL INSTRUCTIONS RATE & DEADBAND SELECT LOGIC RCS ENG, VENT & RADIATOR LOCATIONS LOGIC BUS PWR DISTR. LIMITED USE CONTROLS	G&N OPERATIONS • CSS/ISS INTERFACE • DSKY OPERATIONS • OPTICS MECHANIZATION VERB LIST NOUN LIST STAR LIST	CHECKLIST CODES OPTION CODES ALARM CODES CMC PROGRAM—ROUTINE CHECK • PROGRAMS • ROUTINES • CMC FLAG LISTINGS
G&C REFERENCE MODES SECT 4.9	ATTITUDE CONTROL MODES • CHANNEL SELECTION • SCS MINIMUM IMPULSE • SCS ACCELERATION COMMAND • SCS ATTITUDE HOLD/RATE COMMAND • CMC ACCEL CMD/MIN IMP • CMC ATT CONTR-AUTO/HOLD • SIVB ATT CONTR DISPLAY MODES • DYNAMIC DISPLAY MONITOR • RATE DISPLAY • ERROR DISPLAY (BMAG, CMC, ATT SET SOURCE) • TOTAL ATTITUDE DISPLAY • ORDEAL-LCL HORIZ ATT GDC ALIGN	TVC MODES • SPS THRUSTING • TVC INITIALIZATION • SPS GMBL CONTR • THRUST ON-OFF CONTR OPTICS CONTROL • AUTO OPT POSITIONING • MAN OPT CONTR • MAN OPT DRIVE ENTRY MONITOR SYSTEM (EMS) • ΔV TEST AND NULL BIAS CHECK • ΔV SETUP • EMS RAI TEST & ALIGNMENT • ENTRY TEST • ENTRY SETUP	
G&C GENERAL PROCEDURES SECT 4.10	G&N GENERAL • P00 (IDLING) • G&N STARTUP PROCEDURE • P06 (ISS/CMC PWR DOWN) • OPT PWR CONTR • P27 (UPDATE) • R03 (DAP DATA LOAD) • RCS DAP ATT DBD INCREASE • DAP ACTIVATION • R62 (CREW DEFINED MANEUVER) • DSKY, CMC CHECKS • DSKY COND LT TEST • P22 RAW DATA READOUT • MEASUREMENT & LOAD OF PIPA BIAS • EXTENDED VERB CALLUPS • CMC/LGC CLOCK SYNC (R33) • S BAND ANTENNA ROUTINE (R05)	• ΔR AND ΔV THRESHOLD CHANGE • A OR B ERASABLE VALUE CHANGE • G&N MONITOR (P47) • FLAGWORD MONITOR & CHANGE • RCS DAP ORBITAL RATE • G&N PASSIVE THERMAL CONTROL SCS GENERAL • SCS PWR DOWN • SCS PWR UP • DRIFT RATE ADJUST • MIN PWR SCS ATT HOLD (2 OR 3 AXES) • SCS ATT MANEUVER • GDC ALIGNMENT TO IMU • ATT REF SYSTEM ALIGN • ORDEAL INITIALIZATION • WOBBLE MODE • BAR-B-Q MODE	
COASTING SECT 4.12	• GROUND TRACK DETERMINATION (P21) • ORBITAL NAVIGATION (P22)	• CISLUNAR MIDCOURSE NAVIGATION (P23) • ORBIT PARAMETER DISPLAY (R30)	
ALIGNMENTS SECT 4.11	• ORIENTATION DETERM (P51) • IMU REALIGN (P52) • ALTERNATE LOS IMU ORIENT DETERM (P53) • ALTERNATE LOS IMU REALIGN (P54) • ALTERNATE SC INERTIAL ATT DETERM & GDC ALIGN • BACKUP GDC AND/OR IMU ALIGN	• INFLIGHT COAS CALIB • INPLANE GDC ALIGN • ZERO ICDU EXT VERB (V40 N20) • COARSE ALIGN ICDU EXT VERB (V41 N20) • COARSE ALIGN OCDU EXT VERB (V41 N91) • BACKUP GDC ALIGN USING COAS	
SYSTEMS MANAGEMENT SECT 4.7	PROPULSION • SPS • RCS EPS ECS	C&WS TELECOM PWR DOWN CONFIG LIMITED USE CB's	

C-4D-104

Figure C-4