SM2A-03-BLOCK II-J-(2)

APOLLO 16

# APOLLO OPERATIONS HANDBOOK

## COMMAND AND SERVICE MODULES
## J-SERIES MISSIONS
CSM 112 THRU 115

Volume 2
Operational Procedures

Contract NAS 9-150
EXHIBIT I, PARAGRAPH 10.3

Published under authority of
THE NATIONAL AERONAUTICS AND SPACE ADMINISTRATION
SPACECRAFT SYSTEMS BRANCH / FLIGHT CREW SUPPORT DIVISION

SD 70-220

17 JULY 1970

# LIST OF EFFECTIVE PAGES

INSERT LATEST CHANGED PAGES. DESTROY SUPERSEDED PAGES.

**NOTE:** Pages which are usable only on a single J-Series vehicle or specific series of vehicles are identified by including the spacecraft number or spacecraft number and letter S parenthetically as a part of the page number. The "S" indicates the page is applicable to the spacecraft number shown and to subsequent vehicles as well. Common pages (pages with no spacecraft identification in the page number) are used for all J-Series spacecraft. The portion of the text affected by technical changes is indicated by a vertical line in the outer margin of the page. Nontechnical changes which do not affect the procedure will be identified only by a change page date.

TOTAL NUMBER OF PAGES IN THIS PUBLICATION IS 831, CONSISTING OF THE FOLLOWING:

| Page | Issue |
|---|---|
| Title | Basic |
| A | Basic |
| i thru xiv | Basic |
| 4-1 thru 4-84 | Basic |
| 4-85(112) | Basic |
| 4-86(112) | Basic |
| 4-85(113S) | Basic |
| 4-86(113S) | Basic |
| 4-87 thru 4-616 | Basic |
| 5-1 thru 5-152 | Basic |
| Appendix B-1 thru B-68 | Basic |
| Appendix C-1 thru C-6 | Basic |

*The asterisk indicates pages changed, added, or deleted by the current change.

Manuals will be distributed as directed by the NASA Apollo Project Office. All requests for manuals should be directed to the NASA Apollo Spacecraft Project Office at Houston, Texas.

TABLE OF CONTENTS


| Section | Title | Page |
|---|---|---|
| | FOREWORD | xi |
| | INTRODUCTION | xiii |
| 4 | NORMAL/BACKUP PROCEDURES | 4-1 |
| | Introduction | 4-1 |
| 4.1 | Backup Crew Prelaunch Checks | 4-3 |
| 4.1.1 | C&WS Status Check | 4-3 |
| 4.1.2 | EMS Prelaunch Tests | 4-4 |
| 4.1.3 | Glycol Loop Checks | 4-8 |
| 4.1.4 | Standby Inverter (No. 3) Check | 4-9 |
| 4.1.5 | FC Radiator & Float Bag Checks | 4-10 |
| 4.1.6 | LHEB ECS Valve Status | 4-11 |
| 4.1.7 | LEB & Timer Panel 306 | 4-12 |
| 4.1.8 | RHEB & Panel 601 | 4-14 |
| 4.1.9 | ORDEAL Switch Position Check | 4-16 |
| 4.1.10 | LH Couch Checks | 4-17 |
| 4.1.11 | RH Couch Checks | 4-23 |
| 4.1.12 | Communications Check | 4-31 |
| 4.1.13 | Verify Couch Configuration | 4-33 |
| 4.1.14 | Prime Crew Pre-Ingress Procedure | 4-33 |
| 4.2 | Prime Crew Prelaunch Checks | 4-37 |
| 4.2.1 | Ingress & Status Checks | 4-37 |
| 4.2.1.1 | CDR Ingress LH Couch | 4-37 |
| 4.2.1.2 | LMP Ingress RH Couch | 4-38 |
| 4.2.1.3 | CMP Ingress Center Couch | 4-39 |
| 4.2.1.4 | EDS Checkout & Countdown Test | 4-40 |
| 4.2.1.5 | Cabin Closeout | 4-40 |
| 4.2.1.6 | Change Launch Azimuth (if necessary) | 4-42 |
| 4.2.1.7 | EDS Test Complete | 4-43 |
| 4.2.2 | Final Verification & Systems Checks | 4-43 |
| 4.2.2.1 | G&C Verification | 4-43 |
| 4.2.2.2 | Gimbal Drive & Trim Check | 4-45 |
| 4.2.2.3 | FDAI Verification | 4-47 |
| 4.2.2.4 | RSI Test & Setup | 4-47 |
| 4.2.2.5 | EMS Prep | 4-48 |
| 4.2.2.6 | Pad Abort Enable | 4-49 |
| 4.2.2.7 | SM RCS Activation | 4-49 |
| 4.2.2.8 | SM RCS Status Check | 4-50 |
| 4.2.3 | Launch Preparation | 4-51 |

| Section | Title | Page |
|---|---|---|
| 4.3 | Boost and Insertion | 4-55 |
| 4.3.1 | Boost | 4-55 |
| 4.3.2 | Postorbital Insertion Check | 4-65 |
| 4.3.2.1 | Status Checklist | 4-65 |
| 4.3.2.2 | SCS Attitude Reference Comparison Check | 4-67 |
| 4.3.2.3 | SCT/SXT Dust Cover Jett Procedure | 4-67 |
| 4.3.2.4 | ECS Postinsertion Configuration | 4-67 |
| 4.3.2.5 | Systems Verification and Monitoring | 4-69 |
| 4.3.2.6 | Cabin Atmosphere Verification | 4-70 |
| 4.4 | Injections | 4-73 |
| 4.4.1 | Translunar Injection (TLI) | 4-73 |
| 4.4.1.1 | Thrusting Preparation | 4-73 |
| 4.4.1.2 | TLI Thrusting | 4-80 |
| 4.4.1.3 | Post-TLI Activities | 4-81 |
| 4.4.2 | Lunar Orbit Insertion (LOI) | 4-83 |
| 4.4.3 | Transearth Injection (TEI) | 4-83 |
| 4.5 | Systems Management | 4-85 |
| 4.5.1 | General Data | 4-85 |
| 4.5.1.1 | Systems Test Indicator Readouts | 4-85 |
| 4.5.1.2 | Limited Use Circuit Breakers | 4-89 |
| 4.5.1.3 | Non-Dioded/Non-Switchable Loads | 4-92 |
| 4.5.1.4 | Powerdown Electrical Loads | 4-96 |
| 4.5.2 | Propulsion Systems | 4-98 |
| 4.5.2.1 | SPS Monitoring Check | 4-98 |
| 4.5.2.2 | SM RCS Monitoring Check | 4-99 |
| 4.5.2.3 | CM RCS Monitoring Check | 4-100 |
| 4.5.3 | Electrical Power System | 4-101 |
| 4.5.3.1 | Cryogenic Pressure-Quantity Check | 4-103 |
| 4.5.3.2 | FC Power Plant Check | 4-104 |
| 4.5.3.3 | D-C Voltage-Amperage Check | 4-104 |
| 4.5.3.4 | A-C Voltage Check | 4-105 |
| 4.5.3.5 | Battery Charging | 4-106 |
| 4.5.3.6 | FC Power Plant Purging | 4-107 |
| 4.5.3.7 | H2 or O2 Quantity Balance Correction | 4-108 |
| 4.5.3.8 | FC Load Disconnect | 4-108 |
| 4.5.3.9 | Inverter Changeover | 4-111 |
| 4.5.3.10 | Cryo O2 & H2 Manual Fan Operation | 4-113 |
| 4.5.4 | Environmental Control System | 4-114 |
| 4.5.4.1 | ECS Monitoring Check | 4-116 |
| 4.5.4.2 | ECS Redundant Component Check | 4-118 |
| 4.5.4.3 | CO2 Absorber Filter Replacement | 4-122 |
| 4.5.4.4 | Debris Screen Check | 4-123 |
| 4.5.4.5 | Potable Water Chlorination | 4-124 |
| 4.5.4.6 | PGA Mode Changes | 4-126 |

| Section | Title | Page |
|---|---|---|
| 4.5.4.7 | Waste Management Procedures | 4-131 |
| 4.5.4.8 | CM Repressurization | 4-138 |
| 4.5.4.9 | Pressure Suit Circuit & PGA Check at 5.0 psia | 4-139 |
| 4.5.4.10 | CM 02 Supply Refill | 4-143 |
| 4.5.4.11 | CM Pressure Dump | 4-144 |
| 4.5.4.12 | Suit Circuit Purge of H2 | 4-145 |
| 4.5.4.13 | Cabin Cold-Soak Operation | 4-146 |
| 4.5.4.14 | CM/LM Pressure Equalization | 4-148 |
| 4.5.4.15 | Operation of Emergency 02 Masks | 4-152 |
| 4.5.4.16 | Waste Water Tank Drain | 4-153 |
| 4.5.4.17 | Gas Separator Cartridge Servicing | 4-153 |
| 4.5.4.18 | Primary Glycol Evaporator Operation | 4-154 |
| 4.5.4.19 | Cabin Fan Lunar Dust Filter | 4-154 |
| 4.5.4.20 | Lunar Dust Vacuum Cleaner Operation | 4-155 |
| 4.5.5 | Caution and Warning System | 4-156 |
| 4.5.5.1 | C&WS Operational Check | 4-157 |
| 4.5.5.2 | Dark Adaptation Adjustment | 4-157 |
| 4.5.5.3 | Acknowledge/Reset Master Alarm Indication | 4-158 |
| 4.5.5.4 | Master Alarm Tone Headset Control | 4-158 |
| 4.5.5.5 | Stowable C/W Tone Booster | 4-159 |
| 4.5.5.6 | Normal Operation C/W Master Alarms | 4-159 |
| 4.5.6 | Telecommunications | 4-161 |
| 4.5.6.1 | Basic Switch Configuration | 4-162 |
| 4.5.6.2 | High Gain Antenna Operation | 4-164 |
| 4.5.6.3 | S-Band Xponder Modes | 4-166 |
| 4.5.6.4 | FM Xmtr Modes | 4-167 |
| 4.5.6.5 | VHF/AM Modes | 4-170 |
| 4.5.6.6 | VHF AM Ranging Mode | 4-171 |
| 4.5.6.7 | DSE Record Modes | 4-172 |
| 4.5.6.8 | Relay Mode (LM Voice to MSFN) | 4-173 |
| 4.5.6.9 | Rendezvous Transponder Activation and Self Test | 4-174 |
| 4.5.6.10 | Backup Modes | 4-175 |
| 4.5.6.11 | Pad Communications | 4-175 |
| 4.5.7 | Mechanical Systems | 4-176 |
| 4.5.7.1 | Opening Side Hatch for EVT | 4-176 |
| 4.5.7.2 | Closing Side Hatch for EVT | 4-182 |
| 4.5.7.3 | Side Hatch Counterbalance Operation | 4-185 |
| 4.5.7.4 | Opening Fwd Hatch | 4-187 |
| 4.5.7.5 | Closing Fwd Hatch | 4-188 |
| 4.5.8 | Floodlight Operating Modes | 4-190 |
| 4.5.8.1 | Prim Floodlight Mode | 4-190 |
| 4.5.8.2 | Sec Floodlight Mode | 4-190 |

| Section | Title | Page |
|---|---|---|
| 4.6 | G&C Reference Data | 4-191 |
| 4.6.1 | G&C Operating Notes | 4-191 |
| 4.6.1.1 | G&C Operations | 4-191 |
| 4.6.1.2 | SCS Operations | 4-200 |
| 4.6.1.3 | G&N Operations | 4-204 |
| 4.6.2 | Verb List | 4-210 |
| 4.6.3 | Noun List | 4-214 |
| 4.6.4 | Star List | 4-223 |
| 4.6.5 | Checklist Reference Code (V50 N25) | 4-225 |
| 4.6.6 | Option Codes (V04 N06 or V04 N12) | 4-226 |
| 4.6.7 | Alarm Codes (V05 N09) | 4-227 |
| 4.6.8 | CMC Program - Routine Index | 4-235 |
| 4.6.8.1 | Programs | 4-235 |
| 4.6.8.2 | Routines | 4-237 |
| 4.6.9 | CMC Program - Flat Listing | 4-239 |
| 4.6.9.1 | Flag Word - Memory Location Correlation | 4-239 |
| 4.6.9.2 | Flag - Program Listing | 4-240 |
| 4.7 | G&C Reference Modes | 4-243 |
| 4.7.1 | Attitude Control | 4-243 |
| 4.7.1.1 | SCS Channel Selection | 4-243 |
| 4.7.1.2 | SCS Minimum Impulse | 4-244 |
| 4.7.1.3 | SCS Acceleration Command | 4-245 |
| 4.7.1.4 | SCS Attitude Hold/Rate Command | 4-245 |
| 4.7.1.5 | CMC Minimum Impulse | 4-246 |
| 4.7.1.6 | CMC Attitude Control - Auto/Hold | 4-247 |
| 4.7.1.7 | SIVB Attitude Control | 4-248 |
| 4.7.2 | Attitude Displays | 4-249 |
| 4.7.2.1 | Rate Display | 4-249 |
| 4.7.2.2 | Attitude Error Display - BMAG Source | 4-249 |
| 4.7.2.3 | Attitude Error Display - CMC Source | 4-250 |
| 4.7.2.4 | Attitude Error Display - Attitude Set Source | 4-251 |
| 4.7.2.5 | Total Attitude | 4-252 |
| 4.7.2.6 | ORDEAL - Local Horizontal Attitude | 4-254 |
| 4.7.3 | GDC Align | 4-254 |
| 4.7.4 | SPS Thrust Control | 4-255 |
| 4.7.4.1 | TVC Initialization | 4-255 |
| 4.7.4.2 | SPS Gimbal Control | 4-255 |
| 4.7.4.3 | Thrust On-Off Control | 4-259 |
| 4.7.5 | Optics Control | 4-261 |
| 4.7.5.1 | Auto Optics Positioning | 4-261 |
| 4.7.5.2 | Manual Optics Control | 4-261 |
| 4.7.5.3 | Manual Optics Drive | 4-262 |

| Section | Title | Page |
|---|---|---|
| 4.7.6 | Entry Monitor System (EMS) | 4-263 |
| 4.7.6.1 | ΔV Test and Null Bias Check | 4-263 |
| 4.7.6.2 | ΔV Setup | 4-264 |
| 4.8 | G&C General Procedures | 4-265 |
| 4.8.1 | G&N General | 4-266 |
| 4.8.1.1 | (P00) CMC Idling Program | 4-266 |
| 4.8.1.2 | CMC/IMU Power Down | 4-266 |
| 4.8.1.3 | Startup | 4-267 |
| 4.8.1.4 | Optics Power Control | 4-268 |
| 4.8.1.5 | (P27) CSM - CMC Update | 4-269 |
| 4.8.1.6 | (P47) G&N Thrusting Monitor Program | 4-272 |
| 4.8.1.7 | CMC Self-Check Procedure | 4-274 |
| 4.8.1.8 | Measurement and Loading of PIPA Bias | 4-275 |
| 4.8.1.9 | (R33) CMC/LGC Clock Sync Routine | 4-276 |
| 4.8.1.10 | ΔR and ΔV Threshold Change Procedure | 4-277 |
| 4.8.1.11 | A or B Erasable Value Change Procedure | 4-277 |
| 4.8.1.12 | Flagword Monitor and Change Procedure | 4-278 |
| 4.8.1.13 | (V79) Orbrate/PTC (BBQ Mode - R64) | 4-279 |
| 4.8.1.14 | G&N Passive Thermal Control Procedure | 4-282 |
| 4.8.1.15 | Saturn Rate Change | 4-283 |
| 4.8.1.16 | (R02) IMU Status Check | 4-284 |
| 4.8.1.17 | (V64) S-Band Antenna Routine (R05) | 4-285 |
| 4.8.1.18 | DSKY 88888 Clear Procedure | 4-286 |
| 4.8.2 | Digital Autopilot (DAP) | 4-287 |
| 4.8.2.1 | (V48) CSM - DAP Data Load Procedure (R03) | 4-287 |
| 4.8.2.2 | RCS DAP Attitude Deadband Change Procedure | 4-289 |
| 4.8.2.3 | RCS DAP Orbital Rate Procedure | 4-290 |
| 4.8.3 | Extended Verbs | 4-297 |
| 4.8.3.1 | (V35) DSKY Condition Light Test | 4-297 |
| 4.8.3.2 | (V42) Torque Gyros | 4-298 |
| 4.8.3.3 | (V43) Load FDAI Error Needles | 4-299 |
| 4.8.3.4 | (V49) CSM Crew Defined Maneuver (R62) | 4-300 |
| 4.8.3.5 | (V67) Start W-Matrix RSS Error Display | 4-301 |
| 4.8.3.6 | (V74) Initialize Erasable Dump Via Downlink | 4-303 |
| 4.8.3.7 | (V91) Display Banksum | 4-303 |
| 4.8.4 | SCS General | 4-304 |
| 4.8.4.1 | SCS Power Down | 4-304 |
| 4.8.4.2 | SCS Power Up | 4-305 |
| 4.8.4.3 | Drift Rate Adjust | 4-306 |
| 4.8.4.4 | Minimum Power SCS Attitude Hold (Three or Two Axes) | 4-307 |
| 4.8.4.5 | SCS Attitude Maneuver | 4-309 |
| 4.8.4.6 | GDC Alignment to IMU Gimbal Angles | 4-310 |
| 4.8.4.7 | Attitude Reference System Comparison | 4-311 |

| Section | Title | Page |
|---|---|---|
| 4.8.4.8 | ORDEAL Initialization | 4-312 |
| 4.8.4.9 | SCS Passive Thermal Control Using Wobble Mode | 4-314 |
| 4.8.4.10 | SCS Passive Thermal Control Using BAR-B-Q Minimum Power Mode | 4-316 |
| 4.9 | Rendezvous | 4-319 |
| 4.9.1 | CSM/LM Rendezvous | 4-319 |
| 4.10 | LM Interface & EVA Activities | 4-321 |
| 4.10.1 | Maneuvers | 4-321 |
| 4.10.1.1 | CSM/SLA Separation, Transposition and Docking | 4-321 |
| 4.10.1.2 | LM Ejection From SLA | 4-330 |
| 4.10.1.3 | LM Undocking From CSM | 4-333 |
| 4.10.1.4 | LM Active Docking With CSM | 4-337 |
| 4.10.1.5 | CSM Active Docking With LM | 4-340 |
| 4.10.1.6 | LM Jettison and Separation | 4-344 |
| 4.10.2 | IVT | 4-346 |
| 4.10.2.1 | Preparation for LM Ejection | 4-346 |
| 4.10.2.2 | IVT to LM | 4-348 |
| 4.10.2.3 | IVT to CSM | 4-351 |
| 4.10.2.4 | Preparation for Manned LM Separation | 4-356 |
| 4.10.3 | Extravehicular Activity (EVA) | 4-361 |
| 4.10.3.1 | CSM/LM EVA | 4-361 |
| 4.10.3.2 | Scientific Instrumentation Module (SIM) EVA | 4-364 |
| 4.10.4 | Tunnel Mechanical Systems | 4-370 |
| 4.10.4.1 | Docking Probe Removal (CM side) | 4-370 |
| 4.10.4.2 | Docking Probe Removal (LM side) | 4-374 |
| 4.10.4.3 | Docking Probe Installation (CM side) | 4-375 |
| 4.10.4.4 | Docking Drogue Removal (CM side) | 4-379 |
| 4.10.4.5 | Docking Drogue Removal (LM side) | 4-379 |
| 4.10.4.6 | Docking Drogue Installation (CM side) | 4-381 |
| 4.10.4.7 | Probe Preload Operation | 4-382 |
| 4.10.4.8 | Tunnel Latch Operations | 4-383 |
| 4.11 | Navigation | 4-387 |
| 4.11.1 | Orbital Navigation | 4-387 |
| 4.11.1.1 | (P21) Ground Track Determination | 4-387 |
| 4.11.1.2 | (P22) Orbital Navigation | 4-389 |
| 4.11.1.3 | (P23) Cislunar Midcourse Navigation | 4-398 |
| 4.11.1.4 | (P29) Rate Aided Optics | 4-408 |
| 4.11.1.5 | (V82) Orbit Parameter Display (R30) | 4-411 |
| 4.11.2 | Rendezvous Navigation | 4-413 |
| 4.11.2.1 | (P20) CSM Rendezvous Navigation | 4-413 |
| 4.11.2.2 | (V83) Rendezvous Parameter Display #1 (R31) | 4-421 |
| 4.11.2.3 | (V85) Rendezvous Parameter Display #2 (R34) | 4-422 |

| Section | Title | Page |
|---|---|---|
| 4.11.2.4 | (V90) Rendezvous Out of Plane Display (R36) | 4-423 |
| 4.11.2.5 | (V89) Rendezvous Final Attitude (R63) | 4-425 |
| 4.11.2.6 | (P76) Target Delta V | 4-427 |
| 4.12 | Prethrusting | 4-429 |
| 4.12.1 | Orbit Change Prethrusting | 4-429 |
| 4.12.1.1 | (P30) External Delta V Prethrusting | 4-429 |
| 4.12.1.2 | (P37) Return to Earth Program | 4-432 |
| 4.12.2 | Rendezvous Prethrusting | 4-437 |
| 4.12.2.1 | (P32/P72) Co-Elliptic Sequence Initiation | 4-437 |
| 4.12.2.2 | (P33/P73) Constant Delta Altitude | 4-442 |
| 4.12.2.3 | (P34/P74) Transfer Phase Initiation | 4-445 |
| 4.12.2.4 | (P35/P75) Transfer Phase Midcourse | 4-450 |
| 4.13 | Thrusting | 4-453 |
| 4.13.1 | Vehicle Preparation | 4-453 |
| 4.13.2 | G&N Thrusting | 4-454 |
| 4.13.2.1 | (P40) G&N SPS Thrusting | 4-454 |
| 4.13.2.2 | (P41) G&N SM-RCS Thrusting | 4-473 |
| 4.13.2.3 | G&N Hybrid Deorbit Thrusting | 4-479 |
| 4.13.3 | SCS Thrusting | 4-486 |
| 4.13.3.1 | SCS SPS Thrusting | 4-486 |
| 4.13.3.2 | SCS SM RCS Thrusting | 4-500 |
| 4.13.3.3 | SCS Hybrid Deorbit Thrusting | 4-503 |
| 4.14 | Alignments | 4-507 |
| 4.14.1 | G&N Alignments | 4-507 |
| 4.14.1.1 | (P51/P53) IMU Orientation Determination | 4-507 |
| 4.14.1.2 | (P52/P54) IMU Realign | 4-511 |
| 4.14.1.3 | (V40 N20) Zero ICDU Extended Verb | 4-521 |
| 4.14.1.4 | (V41 N20) Coarse Align ICDU Extended Verb | 4-522 |
| 4.14.1.5 | (V41 N91) Coarse Align OCDU Extended Verb | 4-523 |
| 4.14.1.6 | Inflight COAS Calibration | 4-524 |
| 4.14.2 | SCS Alignments | 4-527 |
| 4.14.2.1 | Alternate SC Inertial Attitude Determination and GDC Alignment | 4-527 |
| 4.14.2.2 | Inplane GDC Alignment | 4-529 |
| 4.14.2.3 | Backup GDC Alignment With COAS | 4-531 |
| 4.14.3 | Backup GDC and/or IMU Alignment | 4-533 |
| 4.15 | Entry | 4-537 |
| 4.15.1 | Deorbit or Lunar Return Vehicle Preparation | 4-537 |
| 4.15.1.1 | General System Management | 4-537 |
| 4.15.1.2 | RSI Test and Alignment | 4-539 |
| 4.15.1.3 | EMS Entry Test | 4-539 |
| 4.15.1.4 | Systems Preparation | 4-542 |

| Section | Title | Page |
|---|---|---|
| 4.15.2 | CM/SM Separation | 4-546 |
| 4.15.3 | G&N Entry | 4-550 |
| 4.15.3.1 | P61 Entry Preparation | 4-550 |
| 4.15.3.2 | P62, P63, P64, P65, P66, P67 Entry | 4-553 |
| 4.15.4 | SCS Entry | 4-561 |
| 4.16 | Earth Landing Phase (<50K') | 4-565 |
| 4.17 | Postlanding | 4-573 |
| 4.17.1 | Postlanding Stabilization | 4-573 |
| 4.17.2 | Post Stabilization and Ventilation | 4-577 |
| 4.17.3 | Postlanding Communications | 4-580 |
| 4.17.3.1 | Normal Postlanding Communications | 4-580 |
| 4.17.3.2 | Survival Transceiver Communications | 4-581 |
| 4.17.3.3 | Communications Low Power Procedures | 4-581 |
| 4.17.3.4 | Spacecraft Power Down | 4-581 |
| 4.17.4 | Unaided Egress Procedures | 4-582 |
| 4.17.4.1 | Egress Preparation | 4-582 |
| 4.17.4.2 | Stable I Water Egress | 4-583 |
| 4.17.4.3 | Stable II Water Egress | 4-584 |
| 4.17.4.4 | Rough Sea Side Hatch Operations | 4-585 |
| 4.18 | CSM Experiments | 4-587 |
| 4.18.1 | General Requirements | 4-588 |
| 4.18.2 | SIM Door Jettison and Experiment Tie-Down Release | 4-589 |
| 4.18.3 | Deploy and Retract Gamma Ray and Mass Spectrometer Booms and Mapping Camera | 4-591 |
| 4.18.3.1 | Deploy Gamma Ray Boom | 4-591 |
| 4.18.3.2 | Retract Gamma Ray Boom | 4-591 |
| 4.18.3.3 | Deploy Mass Spectrometer Boom | 4-592 |
| 4.18.3.4 | Retract Mass Spectrometer Boom | 4-592 |
| 4.18.3.5 | Extend Mapping Camera | 4-593 |
| 4.18.3.6 | Retract Mapping Camera | 4-593 |
| 4.18.4 | SIM Experiments Preparation and Shutdown | 4-595 |
| 4.18.4.1 | Systems Preparation | 4-595 |
| 4.18.4.2 | Systems Shutdown | 4-595 |
| 4.18.5 | Sensor Calibration | 4-597 |
| 4.18.6 | S160 - Gamma Ray Spectrometer | 4-598 |
| 4.18.7 | S161 - X-Ray Fluoresence Spectrometer | 4-599 |
| 4.18.8 | S162 - Alpha Particle Spectrometer | 4-601 |
| 4.18.9 | S163 - Optical Bar Panoramic Camera | 4-602 |
| 4.18.9.1 | Panoramic Camera Boost Mode | 4-602 |
| 4.18.9.2 | Panoramic Camera Standby Mode | 4-602 |
| 4.18.9.3 | Panoramic Camera Heater Mode | 4-603 |
| 4.18.9.4 | Panoramic Camera Self Test | 4-603 |
| 4.18.9.5 | Panoramic Camera Operation | 4-603 |

| Section | | Title | Page |
|---|---|---|---|
| | 4.18.10 | S164 - S-Band Transponder | 4-605 |
| | 4.18.11 | S165 - Mass Spectrometer | 4-606 |
| | 4.18.11.1 | Mass Spectrometer Operation | 4-606 |
| | 4.18.12 | S166 - 3-Inch Mapping Camera | 4-609 |
| | 4.18.12.1 | Mapping Camera Cycling | 4-609 |
| | 4.18.12.2 | Mapping Camera Standby Mode | 4-609 |
| | 4.18.12.3 | Mapping Camera Operation | 4-610 |
| | 4.18.13 | S173/174 Subsatellite | 4-611 |
| | 4.18.14 | S169 - Far Ultra-Violet Spectrometer | 4-611 |
| | 4.18.14.1 | Far Ultra-Violet Spectrometer Operation | 4-611 |
| | 4.18.15 | S171 - Infra-Red Scanning Radiometer | 4-611 |
| | 4.18.15.1 | Infra-Red Scanning Radiometer Operation | 4-611 |
| | 4.18.16 | S175 - Laser Altimeter | 4-612 |
| | 4.18.16.1 | Independent Operation of Laser Altimeter | 4-612 |
| | 4.19 | Camera Support Procedures | 4-615 |
| | 4.19.1 | Hasselblad Electric Camera | 4-615 |
| | 4.19.2 | Data Acquisition Camera - 16mm | 4-615 |
| 5 | | CONTINGENCY PROCEDURES | 5-1 |
| | | Introduction | 5-1 |
| | 5.1 | Abort Procedures | 5-2 |
| | 5.1.1 | LES Abort Modes | 5-2 |
| | 5.1.1.1 | Mode 1A LES Abort (00:00 - 00:42) | 5-5 |
| | 5.1.1.2 | Mode 1B LES Abort (00:42 - 01:56) | 5-13 |
| | 5.1.1.3 | Mode 1C LES Abort (01:56 - 03:18) | 5-22 |
| | 5.1.2 | RCS/SPS Abort Modes II, III, IV | 5-33 |
| | 5.1.2.1 | Mode II RCS Abort (03:18 to 10:08) | 5-34 |
| | 5.1.2.2 | Mode III SPS Abort (10:08 to Insertion) | 5-38 |
| | 5.1.2.3 | Mode IV SPS Abort (09:00 to Insertion) | 5-43 |
| | 5.2 | Malfunction Procedures | 5-47 |
| | 5.2.1 | Guidance and Control | 5-49 |
| | 5.2.1.1 | Guidance and Control | 5-49 |
| | 5.2.1.2 | Stabilization Control System | 5-49 |
| | 5.2.1.3 | Guidance and Navigation | 5-49 |
| | 5.2.2 | Service Propulsion System | 5-50 |
| | 5.2.3 | Reaction Control System | 5-50 |
| | 5.2.3.1 | SM RCS | 5-50 |
| | 5.2.3.2 | CM RCS | 5-50 |
| | 5.2.4 | Electrical Power System | 5-50 |
| | 5.2.4.1 | Cryogenics | 5-50 |
| | 5.2.4.2 | Fuel Cells | 5-51 |
| | 5.2.4.3 | Power Distribution | 5-51 |

| Section | Title | Page |
|---|---|---|
| 5.2.5 | Telecommunications System | 5-51 |
| 5.2.6 | Environmental Control System | 5-52 |
| 5.2.7 | Entry Monitor System | 5-53 |
| 5.2.8 | Miscellaneous Malfunctions | 5-53 |
| 5.2.8.1 | Docking | 5-53 |
| 5.2.8.2 | Hatch | 5-53 |
| 5.3 | Emergency Procedures | 5-133 |
| 5.3.1 | Pad Emergency Procedures | 5-133 |
| 5.3.1.1 | Rapid Hatch Opening | 5-133 |
| 5.3.2 | Flight Emergency Procedures | 5-134 |
| 5.3.2.1 | Fire/Smoke in CM During Boost | 5-134 |
| 5.3.2.2 | Fire/Smoke in CM - Orbital Operations | 5-135 |
| 5.3.2.3 | Fire/Smoke in CM During Entry | 5-138 |
| 5.3.2.4 | Contamination in CM | 5-139 |
| 5.3.2.5 | Contamination in Suit (Suited Crewman) | 5-140 |
| 5.3.2.6 | LET Fails to Jettison | 5-141 |
| 5.3.2.7 | Forward Hatch Cannot be Re-installed | 5-142 |
| 5.3.2.8 | Emergency Safe of Apex Cover Jett | 5-148 |
| 5.3.2.9 | One Y Strut Will Not Fully Extend and Lock | 5-150 |
| 5.3.2.10 | CM RCS Fails to Pressurize or Feed Propellant | 5-151 |
| 5.3.3 | Postlanding Emergency Procedures | 5-151 |
| 5.3.3.1 | Fire/Smoke in CM During Postlanding | 5-151 |
| APPENDIX B | | B-1 |
| APPENDIX C | | C-1 |

# FOREWORD

This handbook contains the flight crew operational procedures for all active J-series spacecraft.

Volume II constitutes the crew Normal/Backup, Abort, Malfunction and Emergency procedures. Normal procedures are defined as those used if all systems are operating normally. Backup procedures are those used to accomplish the objective of the normal procedures when system failure or some other anomaly prevents use of the normal procedures. Malfunction and Emergency procedures encompass the recognition, diagnosis, and corrective action for system malfunctions or failure.

## Spacecraft Page Identification

Pages of this handbook which are usable only on a single J-series vehicle are identified by including the spacecraft number parenthetically as a part of the page number.

Pages applicable to a specific series of vehicles are identified by including the spacecraft number and the letter S parenthetically as a part of the page number. The "S" indicates the page is applicable to the spacecraft number shown and to subsequent vehicles as well.

Common pages (pages with no spacecraft identification in the page number) are used for all J-series spacecraft.

Some pages have been repeated in order to satisfy page requirements for all spacecraft covered by the current handbook.

## Utilization and Updates

This handbook concept requires the use of specific pages to provide specific vehicle coverage. It is suggested that the list of effective pages in the front of the handbook be used when changes to the book are made or to verify a specific vehicle configuration of the manual.

To prepare the manual for use on a particular vehicle, select the complete set of common pages and those pages indicated for a particular vehicle as indicated on the list of effective pages.

When pages identified as applicable only to other vehicles have been removed in preparation of a manual for a specific vehicle, redundant pages will have been eliminated. Do not discard the removed pages. These pages are current for other vehicles until superseded by subsequent change.

Volume 1 - Spacecraft Description, SM2A-03-BLOCK II-(1), is bound separately and contains the description portion of the spacecraft systems and equipment. User of Volume 2 procedures should be thoroughly familiar with spacecraft and system descriptions in Volume 1.

Comments or suggested change to this handbook should be addressed to the Spacecraft Systems Branch, FCSD, MSC, Office Code CF22, Telephone HU3-5558.

PROCEDURE COLUMNS

Procedural steps in this section are presented in tabular form and in numerical sequence. Steps are further organized by subgroups into related functions. Column headings of the Normal/Backup procedures consist of STATION/TIME (STA/T), STEP, PROCEDURE, PANEL and REMARKS. An explanation of each of these column headings is provided as follows:

STA/T — The station is equivalent to the crewmember assigned to the spacecraft location where a procedure or step is performed. Station CDR (commander), CMP (command module pilot) and LMP (lunar module pilot) correspond to the left, middle, and right crew couch positions, respectively. The CMP also pertains to the lower equipment bays inaccessible to the other crewmembers. The time column (T) will contain mission time, event time or altitudes.

STEP — The step is the numerical indication of the elements to be followed and their sequence in performing a complete procedure.

PROCEDURE — The procedure is a group of steps or overall task involved in performing a complete function or operation. If a perimeter of Xs are around a procedure, it constitutes a backup procedure relative to the preceding step.

PANEL — The panel location is the location of a particular control or display by panel number. The main display console (MDC) panels are numbered 1 through 12; the lower equipment bay (LEB), 100 through 181; the right-hand equipment bay (RHEB), 225 through 278; the left-hand equipment bay (LHEB), 325 through 382; the left-hand forward equipment bay (LHFEB), 300 through 306; and the upper equipment bay (UEB), 600 through 604 and 13 - ORDEAL BOX. (See figure B-1 for panel locations.)

REMARKS This column provides the rationale supporting the adjacent step and the operational procedure. Rationale will grow in scope as the operational procedures are refined through continued application by the Flight Crew as applied during mission simulation using Apollo evaluators and simulators. As the Flight Crew becomes more familiar with the spacecraft and increases its proficiency, the Abbreviated Checklist is expected to diminish in overall coverage. Volume 2, however, with its supporting rationale will become a repository of comprehensive data providing a reference baseline to the Abbreviated Checklist and for use by support personnel more recently assigned to the program.

SHORT-FORM NOMENCLATURE AND ABBREVIATIONS

Spacecraft controls and displays and their relative positions and indications are called out by their respective placard titles. Exceptions have been taken, where titles are lengthy by adoption of short-form nomenclature.

Whenever a designated callout refers to a control or display, it is identified by one of the following:

| | |
|---|---|
| Light | lt |
| Switch | sw |
| Rotary type switch | sel |
| Circuit breaker | cb |
| Talkback indicator | tb |
| Valve | vlv |
| Indicator | ind |
| Pushbutton | pb |
| Potentiometer or rheostat | cont |
| Thumbwheel | tw |

For Symbols and Definitions, refer to Appendix A in the Apollo Operations Handbook, Block II Spacecraft, Volume 1 - Spacecraft Description (SM2A-03-BLOCK II-(1) (H&J).

# SECTION 4

## NORMAL/BACKUP PROCEDURES

Normal/backup procedures consist of detail control actions and anticipated displays for accomplishing CSM systems management, flight control, navigation, and experimental procedures under nominal mission operating conditions. Approved alternate operating methods and backup systems procedures are included, and options indicated where applicable to provide maximum vehicle capability and operational flexibility. As an aid to the user, supporting rationale, system operating limitations, and remarks clarifying unique or obscure operating methods are provided adjacent to or keyed to affected locations in the procedures.

## 4.1 BACKUP CREW PRELAUNCH CHECKS

Prelaunch procedures consist of operational and configuration checks performed by backup flight crew prior to ingress of prime crew. Procedures have been sequenced so they can be more easily compared with other prelaunch documents. In order to keep them closely aligned, redundant switch settings may appear in more than one area and GDC align procedures have been repeated wherever necessary. It is assumed that a complete prelaunch checkout, including loose gear stowage, has been performed by ground support personnel, prior to backup crew ingress into command module, and that all systems are in an active configuration as required at time of ingress. Spacecraft suit circuit shall have been purged and oxygen content verified to be 95% minimum. Backup crew will utilize facility headsets until service structure is clear of vehicle, as there will be no VHF AM or S BAND transmission until that time. Refer to Appendix B for cabin switch/control position prior to backup crew cabin ingress.

### 4.1.1 C&WS STATUS CHECK

| STA/T | STEP | PROCEDURE | PANEL | REMARKS |
|---|---|---|---|---|
| CMP | | C/W NORM - NORM | 2 | |
| | | C/W CSM - CSM | | |
| | | C/W PWR - 2 [pause at off (ctr) at least 1 sec] | | Excessive switching speed will cause temporary loss of both power supplies, and alarm reset capability. |
| ALL | | MASTER ALARM pb/lt (3) - on, push | 1,3,122 | |
| CMP | | C/W PWR - 1 [pause at off (ctr) at least 1 sec] | 2 | Excessive switching speed will cause temporary loss of both power supplies, and alarm reset capability. |
| ALL | | MASTER ALARM pb/lt (3) - on, push | 1,3,122 | |
| CMP | | C/W LAMP TEST - 1 (hold) | 2 | 1 position is momentary. |
| CDR | | MASTER ALARM pb/lt - on | 1 | |
| CMP | | lh C/W lt (15) - on | 2 | |
| | | C/W NORM - BOOST | | |
| CDR | | MASTER ALARM pb/lt - out | 1 | |
| CMP | | C/W NORM - NORM | 2 | |
| CDR | | MASTER ALARM pb/lt - on | 1 | |



NORMAL BACKUP

| STA/T | STEP | PROCEDURE | PANEL | REMARKS |
|---|---|---|---|---|
| CMP | | C/W LAMP TEST - 2 (hold) | 2 | 2 position is momentary. |
| CDR | | MASTER ALARM pb/lt - out | 1 | |
| CMP | | lh C/W lt (15) - out | 2 | |
| LMP | | MASTER ALARM pb/lt - on | 3 | |
| CMP | | rh C/W lt (20) - on | 2 | |
| | | C/W LAMP TEST - rel | | |
| LMP | | MASTER ALARM pb/lt - out | 3 | |
| CMP | | rh C/W lt (19) - out | 2 | SUIT COMPR C/W light will remain on until compressor is activated. |
| | | C/W NORM - ACK | | |
| | 4.1.2 | EMS PRELAUNCH TESTS | | |
| | 1 | Initial EMS Prep | | |
| CDR | | EMS FUNC - OFF | 1 | |
| | | CAUTION<br>If SPS THRUST lt on, a grd exists on one or both ΔV THRUST sws. | | |
| | | cb EMS (2) - close | 8 | |
| | | Open EMS GTA cover | 1 | A 5/32-inch hex driver is required. |
| | | GTA sw - on (up) | | GTA switch is used during ground operations only. Setting switch on (up) allows EMS calibration for zero G condition. Switch must be set off (down) and door closed before flight. |
| | | EMS MODE - STBY | | |

| STA/T | STEP | PROCEDURE | PANEL | REMARKS |
|---|---|---|---|---|
| CDR | 2 | EMS FUNC - ΔV<br>Adj alphanumeric brightness (option)<br>Wait 5 sec | 1 | |
| | 3 | GTA Null Adj<br>EMS MODE - NORM<br>Adj GTA null adj until ΔV/RNG least significant digit changes <1 per 10 sec | | |
| | 4 | EMS FUNC - ΔV SET<br>Slew ΔV ind to +1586.8 | | ΔV/EMS SET switch used both for slewing G-V scroll and for setting ΔV/RNG indicator. Slew speeds executed by ΔV/EMS SET switch are as follows:<br><br>Slow (soft stop) INCR or DECR: G-V Display Ft/Sec (1827 Ft/Sec = 1 In. of Scroll): 30 ft/sec/sec = 0.0164 in./sec; ΔV RNG Indicator Ft/Sec or Nautical Miles: 0.25/sec<br><br>Fast (hard stop) INCR or DECR: G-V Display Ft/Sec (1827 Ft/Sec = 1 In. of Scroll): 480 ft/sec/sec = 0.263 in./sec; ΔV RNG Indicator Ft/Sec or Nautical Miles: 127.5/sec<br><br>For negative numbers ΔV/RNG indicator will display a minus sign. No sign will appear for positive numbers. |
| | 5 | EMS FUNC - ΔV TEST<br>SPS THRUST lt - on<br>ΔV ind - decr (10 sec) | | |



NORMAL/BACKUP

| STA/T | STEP | PROCEDURE | PANEL | REMARKS |
|---|---|---|---|---|
| CDR | | SPS THRUST lt - out (at ΔV -0.1 fps)<br>ΔV ind - stops at -20.8±20.7 fps<br>EMS MODE - STBY | 1 | |
| | 6 | EMS FUNC - EMS TEST 1 (CCW) (wait 5 sec) | | Test 1 checks lower trip point of .05 G comparator. |
| | | EMS MODE - NORM (wait 10 sec) | | Ten seconds should be allowed to verify no malfunctions. No other light should come on before or after 10 seconds. |
| | | .05 G lt - out<br>SPS THRUST lt - out<br>Lift vctr dn lt - out<br>Lift vctr up lt - out<br>RNG ind - 0.0 NM<br>Slew scroll until disp index superimposed upon notch at start of next self-test pattern | | EMS scroll reverse slew capability is limited to one inch. |
| | 7 | EMS FUNC - EMS TEST 2 | | Test 2 checks upper trip point of .05 G comparator. No other light should come on before or after 10 seconds. |
| | | Wait 10 sec<br>.05 G lt - on (all others out) | | |
| | 8 | EMS FUNC - EMS TEST 3 | | Test 3 checks corridor verification circuitry associated with lift vector down light (G <.2). |
| | | .05 G lt - on<br>Lift vctr dn lt - on (10 sec after .05 G lt)<br>Set RNG ind to 58.0±0.0 NM | | For negative numbers RNG indicator will display minus sign in most significant digit. No sign will appear for positive numbers. |

EMS PRELAUNCH TESTS

| STA/T | STEP | PROCEDURE | PANEL | REMARKS |
|---|---|---|---|---|
| CDR | 9 | EMS FUNC - EMS TEST 4 | 1 | Test 4 checks range-to-go integrator circuits, range-to-go indicator, G-servo circuits, and G-V plotter. |
| | | .05 G lt - on (all others out)<br>G-V trace (during 10-sec period) within test pattern<br>After 10 sec, G-V trace stops at lower right corner of test pattern<br>RNG ind (during 10-sec period) counts toward zero<br>After 10 sec, stops at 0.0±0.2 | | |
| | 10 | EMS FUNC - EMS TEST 5 | | Test 5 checks corridor verification circuitry associated with lift vector up light (G >.2). Enables slewing scroll to start of entry pattern. After scroll is set to <37K fps, it is not permissible to return EMS FUNC switch to EMS TEST 5 position (range integrator and scroll sync would be lost). |
| | | .05 G lt - on<br>Lift vctr up lt - on (10 sec after .05 G lt)<br>RNG ind - resets to 0.0 NM<br>Scribe traces vert line ≈9 G to 0.28±0.1 G & stops (trace within test pattern) | | |
| | 11 | Slew scroll until stylus is at 0.28 G tol step of grd test pattern 1 & verify ΔV instructions are visible | | |



NORMAL BACKUP

| STA/T | STEP | PROCEDURE | PANEL | REMARKS |
|---|---|---|---|---|
| CDR | 12 | EMS FUNC - RNG SET | 1 | |
| | | EMS MODE - STBY | | |
| | | Scribe traces vert line from 0.28 G to 0.0±0.1 G & stops | | |
| | | All lt - out | | |
| | 13 | EMS FUNC - OFF | | |
| | | WARNING | | |
| | | GTA sw is for grd tests only & must be set off (down) & door closed for proper flt oper of EMS. | | |
| | | GTA sw - off (down) | | |
| | | Close GTA cover | | A 5/32-inch hex driver is required. |
| | 4.1.3 | GLYCOL LOOP CHECKS | | |
| | | Sec Gly Loop Check | | |
| CMP | | GLY TO RAD SEC vlv - NORM | 377 | |
| | | ECS IND sel - SEC | 2 | |
| | | SEC COOL PUMP - AC1 | | |
| | | RAD SEC IN TEMP ind - 60°-97°F | | |
| | | RAD SEC OUT TEMP ind - 60°-70°F (pegged) | | |
| | | SEC GLY EVAP OUT TEMP ind - 60°-75°F (pegged) | | |
| | | SEC GLY EVAP STM PRESS ind - 0.25 psia (pegged) | | |
| | | SEC GLY DISCH PRESS ind - 39-51 psig | | |
| | | SEC ACCUM QTY ind - 30-50% | | |

| STA/T STEP | PROCEDURE | PANEL | REMARKS |
|---|---|---|---|
| CMP | SEC COOL PUMP - AC2 | 2 | |
| | SEC GLY DISCH PRESS ind - 39-51 psig | | |
| | SEC COOL PUMP - off (ctr) | | |
| | ECS IND sel - PRIM | | |
| | GLY TO RAD SEC vlv - BYP | 377 | |
| | Prim Gly Loop Activation | | |
| LMP | GLY PUMPS - 2 AC1 | 4 | |
| CMP | PRIM GLY DISCH PRESS ind - 37-50 psig | 2 | GSE flow must be temporarily interrupted (3 minutes maximum) for this check. |
| | PRIM ACCUM QTY ind - 25-50% | | |
| LMP | GLY PUMPS - 1 AC1 | 4 | |
| CMP | PRIM GLY DISCH PRESS ind - 37-50 psig | 2 | |
| | RAD FLOW CONT PWR - PWR | | |
| | RAD FLOW CONT AUTO - 2 | | |
| | ECS RAD tb - 2 | | 2 indicates No. 2 flow proportioning valve controlling flow. |
| | RAD FLOW CONT AUTO - AUTO | | |
| | ECS RAD tb - gray | | Gray indicates No. 1 flow proportioning valve controlling flow. |
| | RAD FLOW CONT PWR - off (ctr) | | |
| CDR | DIRECT O2 vlv - OPEN (CCW), adj for | 7 | |
| CMP | O2 FLOW ind - 0.4±0.1 lb/hr | 2 | |
| | 4.1.4 STANDBY INVERTER (NO. 3) CHECK | | |
| LMP | AC2 RSET - OFF | 3 | |
| | INV 3 - MNB | | |
| | INV 2 AC2 - OFF | | |
| | INV 3 AC2 - on (up) | | Rapid performance of inverter switching sequence may initiate MASTER ALARM pb/lt when alternate inverter is connected to bus. |



NORMAL/BACKUP

| STA/T | STEP | PROCEDURE | PANEL | REMARKS |
|---|---|---|---|---|
| LMP | | AC2 RSET - RSET | 3 | RSET position is momentary. Positioning AC1 or 2 RSET switches to RSET and releasing ensures a MASTER ALARM light and tone. Positioning AC1 or 2 RSET switches to center will cause random activation of MASTER ALARM lights and tone. |
| CMP,LMP | | MASTER ALARM pb/lt (2) - on (push) | 3,122 | |
| CMP | | C/W lts (34) - out | 2 | |
| LMP | | AC IND sel - BUS 2, ØA, B, C | 3 | |
| | | AC VOLTS ind - 113-117 vac | | |
| | | AC2 RSET - OFF | | |
| | | INV 3 AC2 - OFF | | |
| | | INV 2 AC2 - on (up) | | Rapid performance of inverter switching sequence may initiate MASTER ALARM pb/lt when alternate inverter connected to bus. |
| | | AC2 RSET - RSET | | RSET position is momentary. Positioning AC1 or 2 RSET switches to RSET and releasing ensures a MASTER ALARM light and tone. Positioning AC1 or 2 RSET switches to center will cause random activation of MASTER ALARM lights and tone. |
| LMP,CMP | | MASTER ALARM pb/lt (2) - on (push) | 3,122 | |
| CMP | | C/W lts (34) - out | 2 | |
| LMP | | INV 3 - OFF | 3 | Inverter 1 powering a-c bus No. 1 and inverter 2 powering a-c bus No. 2. |
| | | AC IND sel - BUS 1 & 2, ØA, B, C | | |
| | | AC VOLTS ind - 113-117 vac | | |
| | 4.1.5 | FC RADIATOR & FLOAT BAG CHECKS | | |
| | | FC Rad Check | | |
| CMP | | cb FC RAD (all) - close | 226 | |
| LMP | | FC RAD tb (all) - gray | 3 | Gray indicates fuel cell radiator panels not bypassing flow. |
| CMP | | cb FC RAD (all) - open | 226 | |

| STA/T STEP | PROCEDURE | PANEL | REMARKS |
|---|---|---|---|
| | Float Bag Check | | |
| CDR | FLOAT BAG (all) - OFF | 8 | Lever lock. |
| | cb FLOAT BAG (all) - close | | |
| | FLOAT BAG (all) - VENT | | Lever lock. |
| | cb FLOAT BAG (all) - open | | |
| | 4.1.6 LHEB ECS VALVE STATUS | | |
| CMP | GLY TO RAD SEC vlv - BYP (verify) | 377 | |
| | PRIM ACCUM FILL vlv - OFF | 379 | |
| | PRIM GLY ACCUM vlv - open (CCW) | 378 | |
| | Y-Y strut - retract | | Y-Y strut to be retracted to provide attenuation panel access. |
| | Open cool cont atten pnl | | Covers panel 382. |
| | SUIT HT EXCH PRIM GLY - FLOW (CCW) | 382 | |
| | WARNING<br>SUIT FLOW RELF vlv must remain OFF throughout msn or swelling of CO2-odor absorber filters may result. | | |
| | SUIT FLOW RELF vlv - OFF | | |
| | GLY EVAP IN TEMP vlv - MIN (CCW) | | |
| | SUIT HT EXCH SEC GLY - FLOW | | |
| | EVAP H2O CONT (2) - AUTO | | |
| | H2O ACCUM (both) - RMTE | | |
| | Close cool cont atten pnl | | |
| | Y-Y strut - **extd & lock in place** | | |



NORMAL BACKUP

| STA/T STEP | PROCEDURE | PANEL | REMARKS |
|---|---|---|---|
| CMP | Open CO2 cstr atten pnl | | Covers CO2 canisters. |
| | CO2 CSTR DIVERT vlv - ctr | 350 | |
| | Close CO2 cstr atten pnl | | |
| | MN REG (2) - open | 351 | |
| | H2O/GLY TK sel (2) - BOTH | | |
| | EMER CAB PRESS sel - OFF | | |
| | CAB REPRESS vlv - OFF (CCW) | | |
| | WASTE TK SERV vlv - CLOSE | 352 | Servicing fitting is plugged. |
| | PRESS RELF sel - 2 | | |
| | POT TK IN vlv - CLOSE | | Potable water chlorination port capped. |
| | WASTE TK IN vlv - AUTO | | |
| | PRESS EQUAL vlv - CLOSE | Fwd Hatch | |
| | AC UTIL PWR - OFF | 201 | |
| | TUNL VENT vlv - LM/CM ΔP | 12 | |
| | LM/CM ΔP ind - 0.0 psid | | |
| | SUIT FLOW vlv (3) - FULL FLOW | 300,301,302 | |
| | PRIM CAB TEMP vlv - COLD (CW) | 303 | |
| | SEC CAB TEMP vlv - MAX COOL (CW) | | |
| | DRINK H2O SUP vlv - OFF | 304 | Drinking water unavailable during launch hold periods. |
| 4.1.7 | LEB & TIMER PANEL 306 | | |
| | UTIL PWR - OFF | 100 | Connector covered. |
| | FLOOD DIM - 1 | | |
| | FLOOD FIXED - OFF | | |
| | G/N OPT PWR - OFF | | |
| | G/N IMU PWR - on (up) | | Guarded. |
| | RNDZ XPNDR PWR - HTR | | |
| | NUMERICS LTS - as desired | | |
| | INTGL LTS - as desired | | |
| | FLOOD LTS - OFF (CCW) | | |

| STA/T | STEP | PROCEDURE | PANEL | REMARKS |
|---|---|---|---|---|
| CMP | | MSN TMR - RSET | 306 | RSET position is momentary. |
| | | MSN TMR ind - zero | | |
| | | MSN TMR - START | | Mission timer will reset to zero and count up at launch. |
| | | MSN TMR ind - counting up (verify) | | |
| | | EVNT TMR START - STOP, then ctr | | |
| | | EVNT TMR RSET - RSET | | RSET position is momentary. |
| | | SYS TEST (2) - 5A | 101 | |
| | | SYS TEST ind - 1.1-1.9 vdc | | Equivalent to +45° to +75°F nominal SPS oxidizer engine feedline temperature. |
| | | SYS TEST (2) - 5B | | Monitors battery relay bus voltage during launch. |
| | | RNDZ XPNDR TEST - OPR | | |
| | | CM RCS HTRS - OFF | | |
| | | WASTE H2O DUMP - HTR A | | |
| | | URINE DUMP - HTR A | | |
| | | CAUTION | | |
| | | OPT ZERO sw must not be moved during prelaunch or inadvertent jett of opt covers could occur. | 122 | |
| | | OPT ZERO - ZERO | | |
| | | OPT TELTRUN - SLAVE TO SXT | | |
| | | OPT MODE - MAN | | |
| | | OPT COUPLING - DIR | | |
| | | OPT SPEED - LO | | |
| | | COND LAMPS - ON | | |
| | | UP TLM - ACPT | | |
| | | RETCL BRT tw - as req | | |



NORMAL/BACKUP

| STA/T | STEP | PROCEDURE | PANEL | REMARKS |
|---|---|---|---|---|
| CMP | | SCI/UTIL PWR - OFF | 163 | Switches are located behind closeout panel and will be set at panel closeout. |
| | | SCI PWR - OFF | 162 | |
| | | S1 - OFF | 164 | Connector covered. |
| | | CRYO AC PWR - on (up) | 181 | |
| | | H2 FAN - AUTO | | |
| | | O2 FAN - AUTO | | |
| | | SM/AC PWR - on (up) | | Supplies ac/dc power to cameras and EM sounder and heater power to pan camera. |
| | | DOOR JETT - off (down) | | Guarded. |
| | | LOGIC PWR - OFF | | |
| | | cb pnl 181 - all closed | | |
| | 4.1.8 | RHEB & PANEL 601 | | |
| | | cb pnl 225 - all closed except | 225 | |
| | | cb HI GAIN ANT (2) - open | | |
| | | cb pnl 226 - all closed except | 226 | |
| | | cb FC RAD (all) - open | | Prevents inadvertent fuel cell radiator effective area reduction. |
| | | cb FC REACS (all) - open | | Fuel cell reactant valve circuit breakers are opened after fuel cell start-up to preclude inadvertent valve closure. |
| | | cb COAS/TUNL LTG MNB - open | | |
| | | cb pnl 229 - all closed except | 229 | |
| | | cb MN REL (2) - open | | |
| | | cb O2 VAC ION PUMPS (2) - open | | |
| | | MAP CAMR ON tb - gray | 230 | Gray indicates TBD. |
| | | MAP CAMR TRACK tb - gray | | Gray indicates TBD. |

| STA/T STEP | PROCEDURE | PANEL | REMARKS |
|---|---|---|---|
| CMP | MAP CAMR ON - STBY | 230 | Map camera must be in standby during boost, TLI, and SPS thrusting periods. |
| | MAP CAMR TRACK - off (ctr) | | |
| | MAP CAMR IMAGE MTN - OFF | | |
| | GAMMA RAY BOOM DPLY tb - gray | | Gray indicates boom retracted. |
| | GAMMA RAY BOOM JETT tb - gray | | Gray indicates boom retracted and tie-down engaged. |
| | GAMMA RAY BOOM DPLY - off (ctr) | | |
| | GAMMA RAY BOOM JETT - off (down) | | |
| | GAMMA RAY EXP - OFF | | |
| | GAMMA RAY GAIN - SHLD OFF | | |
| | MASS SPECT BOOM DPLY tb - gray | | Gray indicates boom retracted. |
| | MASS SPECT BOOM JETT tb - gray | | Gray indicates boom retracted and tie-down engaged. |
| | MASS SPECT BOOM DPLY - off (ctr) | | |
| | MASS SPECT BOOM JETT - off (down) | | |
| | MASS SPECT EXP - off (ctr) | | |
| | MASS SPECT ION SOURCE - OFF | | |
| | MASS SPECT MULT - LO | | |
| | MASS SPECT DSCRM - LO | | |
| | DATA SYS CAL - off (down) | | |
| | DATA SYS ON - OFF | | |
| | SUB SAT tb - gray | | Gray indicates TBD. |
| | SUB SAT - off (ctr) | | |
| | PAN CAMR OPR tb - gray | | Gray indicates TBD. |
| | PAN CAMR SELF TEST - off (ctr) | | |
| | PAN CAMR MODE - STBY | | Pan camera must be in standby during boost, TLI, and SPS thrusting periods. |
| | PAN CAMR PWR - BOOST | | |
| | X RAY DR DPLY - off (ctr) | | |
| | X RAY EXP - off (ctr) | | |
| | ALPHA RAY - OFF | | |
| | LASER ALTM - OFF | | |



NORMAL/BACKUP

| STA/T | STEP | PROCEDURE | PANEL | REMARKS |
|---|---|---|---|---|
| CMP | | cb pnl 250 - all closed except | 250 | |
| | | CAUTION<br><br>cbs BAT BUS A&B TO PYRO BUS (2) should never be closed when cb PYRO A&B/SEQ A&B (2) are closed. Loss of pyro bat pwr could result. | | |
| | | cb BAT BUS A&B TO PYRO BUS (2) - open | | |
| | | cb BAT C TO BAT BUS A&B (2) - open | | |
| | | OVBD DRAIN vlv - OFF | 251 | |
| | | BAT VENT vlv - CLOSE | 252 | |
| | | WASTE STOW vlv - VENT | | |
| | | REPRESS O2 - CLOSE | 601 | |
| | 4.1.9 | ORDEAL SWITCH POSITION CHECK | | Assumes that ORDEAL box has been interconnected between FDAIs and EDA during installation, and that prime or backup crews will not be required to connect or disconnect ORDEAL cables to stow or unstow ORDEAL. |
| | | CAUTION<br><br>Before ORDEAL is stowed, or when not being used (whether EARTH/ LUNAR sw is in PWR OFF or not), FDAI 1 & 2 sw must be at INRTL. Otherwise, pitch inertial att cannot be displayed by FDAI ball. | | |
| CDR | | FDAI sw (both) - INRTL | 13 | |
| | | EARTH/LUNAR - PWR OFF | | |
| | | ALT SET cont - as desired | | This value to be determined from planned nominal insertion altitudes for each particular mission. |

| STA/T | STEP | PROCEDURE | PANEL | REMARKS |
|---|---|---|---|---|
| CDR | | LTG - OFF | 13 | |
| | | MODE - HOLD/FAST | | |
| | | SLEW - ctr | | |
| | 4.1.10 | LH COUCH CHECKS | | |
| | | THC & RHC - LOCKED | | It is possible to actuate THC clockwise or counter-clockwise while locked. |
| | | LH ECS Vlv Stat | | |
| CMP | | SRG TK RELF vlv - open (CW) | 375 | |
| | | PLVC sw - NORM | 376 | |
| | | DEMAND REG sel - BOTH | 380 | |
| | | SUIT TEST vlv - OFF | | |
| | | SUIT RETURN vlv - close (push) | | |
| | | PRIM GLY TO RAD - NORM | 325 | |
| | | CAB PRESS RELF vlv (2) - BOOST/ENTR (safety latch off) | | For ground checks, CAB PRESS is the equivalent of flight term CAB PRESS RELF. |
| | | GLY RSVR IN vlv - OPEN | 326 | |
| | | GLY RSVR OUT vlv - OPEN | | |
| | | GLY RSVR BYP vlv - CLOSE | | |
| | | SM 02 SUP vlv - ON | | |
| | | SRG TK 02 vlv - ON | | |
| | | REPRESS PKG vlv - ON | | |
| | | LH Side Pnls | | |
| CDR | | COAS PWR - OFF | 15 | |
| | | UTIL PWR - OFF | | Connector covered. |
| | | PL BCN LT - off (ctr) | | |
| | | DYE MARKER - off (down) | | Guarded. Verify safety removed. |
| | | PL VENT - OFF | | |



NORMAL/BACKUP

| STA/T STEP | PROCEDURE | PANEL | REMARKS |
|---|---|---|---|
| CDR | AUTO RCS (16) - OFF | 8 | |
| | FLOOD DIM - 1 | | |
| | FLOOD FIXED - OFF | | |
| | NUMERICS LTS - as desired | | |
| | FLOOD LTS - as desired | | |
| | INTGL LTS - as desired | | |
| | SECS LOGIC (both) - OFF | | Lever lock. |
| | SECS PYRO ARM (2) - SAFE | | Lever lock with key lock guard. |
| | cb pnl 8 - all closed except | | |
| | cb CM RCS HTRS (both) - open | | |
| | cb FLOAT BAG (all) - open | | |
| | cb SECS LOGIC (2) - open | | |
| | cb SECS ARM (2) - open | | |
| | EDS PWR - OFF | 7 | |
| | CAUTION<br><br>More than 1 hr of contin on-time for TVC SERVO PWR 1 or 2 sw may be detrimental to SPS gmbl actuators. | | |
| | TVC SERVO PWR (both) - OFF | | |
| | FDAI/GPI PWR - BOTH | | |
| | LOGIC 2/3 PWR - on (up) | | |
| | ELEC PWR - GDC/ECA | | |
| | SIG CONDR/DR BIAS PWR (both) - AC1 or AC2 | | Powers RJEC -4 vdc bias power supplies. To provide increased reliability, switches should not be set on same bus. |
| | BMAG PWR (both) - WARMUP | | |
| | LH MDC & Pnls 600, 602, 603, & 604 | | |
| | Set ALT index - 3300 | 1 | Value obtained from LCC. |

LH COUCH CHECKS

| STA/T STEP | PROCEDURE | PANEL | REMARKS |
|---|---|---|---|
| CDR | CMC ATT - IMU | 1 | Normally left at IMU position throughout mission. Selection of GDC position causes total attitude display to be lost on both balls. GDC damage will result if GDC position selected and pitch or yaw rate is >5°/sec, or if GDC yaw Euler angle is >80° and <280°. |
| | ACCEL - check (+1 G) | | |
| | FDAI SCALE - 5/1 | | |
| | FDAI SEL - 1/2 | | |
| | FDAI SOURCE - CMC | | |
| | ATT SET - GDC | | |
| | MAN ATT ROLL - RATE CMD | | |
| | MAN ATT PITCH - ACCEL CMD | | |
| | MAN ATT YAW - RATE CMD | | |
| | LIM CYCLE - OFF | | |
| | ATT DBD - MIN | | |
| | RATE - HI | | |
| | THC PWR - on (up) | | For ground checks, TRANS CONTR PWR, ROT CONTR PWR NORM, and ROT CONTR PWR DIR are the equivalent of flight terms THC PWR, RHC PWR NORM, and RHC PWR DIR respectively. |
| | RHC PWR NORM (both) - AC/DC | | |
| | RHC PWR DIR (both) - OFF | | |
| | SC CONT - SCS | | |
| | CMC MODE - FREE | | |
| | BMAG MODE (3) - RATE 2 | | |
| | SPS THRUST - NORM | | Lever lock. |
| | ΔV THRUST (2) - OFF | | Guarded. |
| | SPS GMBL tw (2) - 0 | | |
| | ATT SET tw (3) - R 162°, P 90°, Y 0° | | |
| | SCS TVC (2) - RATE CMD | | |
| | GMBL MOT (4) - OFF | | |
| | ΔV CG - LM/CSM | | Provides reduced gain for SPS thumbwheel control of SCS auto mode IV abort. |



NORMAL BACKUP

| STA/T STEP | PROCEDURE | PANEL | REMARKS |
|---|---|---|---|
| CDR | ELS LOGIC - OFF | 1 | Guarded. |
| | ELS AUTO - AUTO | | |
| | CM RCS LOGIC - OFF | | |
| | CM PRPLNT DUMP - OFF | | Guarded. |
| | CM PRPLNT PURG - off (down) | | Guarded. |
| | IMU CAGE - off (down) | | Guarded. |
| | EMS ROLL - OFF | | |
| | .05 G sw - OFF | | Required at OFF position until .05 G during entry. OFF position powered by LOGIC 2/3 PWR switch. |
| | α/Pc IND sw - α | | |
| | α/Pc ind - zero | | |
| | LV IND/GPI sw - GPI | | |
| | TVC GMBL DR (2) - AUTO | | |
| | EVNT TMR START - ctr | | Event Timer not counting. Timer resets and starts counting automatically when lift-off occurs. Resets and starts counting up in event of abort initiation. |
| | EVNT TMR RSET - up (ctr) | | |
| CMP | SUIT CAB ΔP ind - >+2.0 in. H20 | 2 | |
| | 02 FLOW ind - 0.4±0.1 lb/hr (not pegged) | | DIRECT 02 valve partially open. |
| | PROBE EXTD/REL tb (2) - gray | | Gray indicates probe fully extended or fully retracted. |
| | PROBE (3) - OFF | | PROBE EXTD/REL switch guarded. |
| | EXT RUN/EVA LTS - OFF | | |
| | EXT RNDZ LTS - off (ctr) | | |
| | TUNL LTS - OFF | | |
| | LM PWR - OFF | | |
| | UP TLM CM - ACPT | | UP TLM CM and UP TLM IU switches should be placed to ACPT only as required during updates. |
| | UP TLM IU - BLOCK | | |

LH COUCH CHECKS

| STA/T STEP | PROCEDURE | PANEL | REMARKS |
|---|---|---|---|
| CMP | CM RCS PRESS - off (down)<br>SM RCS IND sw - PRPLNT QTY | 2 | Guarded. |
| | RCS Status Check<br>SM RCS He 1 tb (4) - bp | | Barber pole indicates helium isolation valves for system 1 are closed. |
| | SM RCS He 2 tb (4) - bp | | Barber pole indicates helium isolation valves for system 2 are closed. |
| | SM RCS PRIM PRPLNT tb (4) - bp | | Barber pole indicates at least one primary propellant isolation valve (fuel or oxidizer) in each quad is closed. |
| | SM RCS SEC PRPLNT tb (4) - bp | | Barber pole indicates at least one secondary propellant isolation valve (fuel or oxidizer) in each quad is closed. |
| | SM RCS SEC FUEL PRESS (4) - OPEN | | OPEN position is momentary. There is no position indicator talkback. Valve opening can be confirmed by ACE. |
| | RCS IND sel - SM A, B, C, D<br>SM RCS PKG TEMP ind - amb | | SM RCS heaters are not operated on pad and during ascent to reduce effects of boost heating on package temperature. Ambient temperature <75° or >205°F will illuminate SM RCS status lights. |
| | SM RCS He PRESS ind - 4000-4350 psia | | Nominal He load is 4150 psig at 70°F. Pressure and temperature excursions are due to ambient conditions. |
| | SM RCS SEC FUEL PRESS ind - 192-207 psia | | |



NORMAL/BACKUP

| STA/T STEP | PROCEDURE | PANEL | REMARKS |
|---|---|---|---|
| CMP | SM RCS IND sw - He TK TEMP | 2 | |
| | SM RCS He TK TEMP ind - 60°-80°F | | |
| | SM RCS IND sw - PRPLNT QTY | | |
| | SM RCS PRPLNT QTY ind - 100% | | |
| | SM RCS HTRS (4) - OFF | | |
| | CM RCS PRPLNT (both) - on (up) | | On position is momentary. |
| | CM RCS PRPLNT tb (both) - gray | | Gray indicates propellant isolation valves are open. |
| | RCS IND sel - CM 1, CM 2 | | |
| | CM RCS He TEMP ind - 60°-90°F | | |
| | CM RCS He PRESS ind - 4000-4450 psia | | |
| | CM RCS MANF PRESS ind - 80-105 psia | | GSE servicing pressure monitored until system activated. Pressure varies with temperature and ullage. If manifold pressure drops suddenly (indicates a ruptured burst diaphragm), close CM RCS propellant isolation valves and then preheat jets, 4.15.4, for 15 minutes after orbit insertion. Preheating open vents to vent any propellant trapped between propellant isolation valves and jets by energizing jet valve direct coils. |
| | RCS CMD - ctr | | Switch last set to OFF (momentary position) prior to backup crew ingress. |
| | RCS TRNFR - SM | | SM position is momentary. |
| | EDS AUTO - OFF | | |
| | CSM/LM FNL SEP (both) - off (down) | | Guarded. |
| | CM/SM SEP (2) - off (down) | | Guarded. |
| | SIVB/LM SEP - off (down) | | Guarded. |
| | PRPLNT DUMP - AUTO | | |
| | 2 ENG OUT sw - AUTO | | |
| | LV RATES sw - AUTO | | |
| | TWR JETT (both) - AUTO | | Guarded. |

LH COUCH CHECKS

| STA/T STEP | PROCEDURE | PANEL | REMARKS |
|---|---|---|---|
| CMP | LV GUID sw - IU | 2 | Guarded. |
| | LV STAGE - OFF | | Guarded. |
| | XLUNAR INJECT - INJECT | | |
| | MN REL - off (down) | | Guarded. |
| | EMER O2 - CLOSE | 600 | |
| | REPRESS O2 RELF - open (CW) | 602 | |
| | REPRESS O2 PRESS ind - >865 psig | | |
| | EVA STA O2 SUP - OFF | 603 | |
| | SUIT PRESS ALARM - OFF | 604 | |
| | 4.1.11 RH COUCH CHECKS | | |
| | RHEB & Pnl 16 | | |
| LMP | SCI PWR - OFF | 227 | Connector covered. |
| | DOCK TRGT - OFF | 16 | Connector covered. |
| | UTIL PWR - OFF | | Connector covered. |
| | COAS PWR - OFF | | |
| | cb pnl 275 - all closed except | 275 | |
| | cb MNA & B BAT C (2) - open | | |
| | cb FLT/PL BAT BUS A, B, & BAT C (3) - open | | |
| | cb pnl 276 - all closed | 276 | |
| | cb pnl 278 - all closed except | 278 | |
| | cb UPR SYS COMPR (both) - open | | |
| | RH Side Pnls | | |
| | FC 1 PUMPS - AC1 | 5 | |
| | FC 2 & 3 PUMPS - AC2 | | |
| | G/N PWR - AC1 | | |
| | MN BUS TIE (2) - OFF | | |
| | BAT CHGR - AC1 | | |



NORMAL/BACKUP

| STA/T STEP | PROCEDURE | PANEL | REMARKS |
|---|---|---|---|
| LMP | NONESS BUS - OFF | 5 | |
| | INTGL LTS - OFF | | |
| | FLOOD LTS - OFF | | |
| | FLOOD DIM - 1 | | |
| | FLOOD FIXED - OFF | | |
| | cb pnl 5 - all closed except | | If circuit breaker RAD HTRS OVLD BAT A and/or BAT B trip, or are opened in flight, they should not be closed unless batteries are tied to main bus [MN BUS TIE (2) - on (up)]. This prevents possible disconnect of ECS radiator heaters by false overload signal. |
| | cb NONESS INST - open | | |
| | cb WASTE DUMP HTRS (2) - open | | |
| | SPS GAUGING - AC1 | 4 | |
| | TELCOM GRP 1 - AC1 | | |
| | TELCOM GRP 2 - AC2 | | |
| | GLY PUMPS - 1 AC1 (verify) | | |
| | SUIT COMPR (both) - OFF | | |
| | cb pnl 4 - all closed | | |
| | RH MDC Pnls | | |
| | FC RAD (all) - off (ctr) | 3 | |
| | FC RAD tb (all) - gray | | Gray does not indicate status of fuel cell radiator bypass valves as talkback circuits are not powered at this time. |
| | FC HTRS (all) - on (up) | | |
| | FC PURG (all) - OFF | | |
| | FC REACS (all) - ctr | | |
| | FC REACS tb (all) - gray | | Gray indicates fuel cell reactants valves open. |
| | FC MNA 1 & 3 - OFF, 2 - ctr | | Fuel cell management will be monitored by ground crew until the gimbal drive and trim check at which time they will be verified on the main buses by the crew. |

RH COUCH CHECKS

| STA/T STEP | PROCEDURE | PANEL | REMARKS |
|---|---|---|---|
| LMP | FC MNA 1 & 3 tb - bp, 2 tb - gray | 3 | Barber pole indicates fuel cells 1 and 3 disconnected from main bus A, gray indicates fuel cell 2 connected to main bus A. |
| | MNA RSET - ctr<br>FC MNB (all) - OFF<br>FC MNB tb (all) - bp | | Barber pole indicates all fuel cells disconnected from main bus B. |
| | MNB RSET - ctr<br>FC IND sel - 1, 2, 3<br>FC H2 FLOW ind - 0.01-0.05 lb/hr<br>FC 02 FLOW ind - 0.1-0.4 lb/hr | | Flow limits are proportional to individual fuel cell currents and can be approximated by fuel cell H2 flow ≈(amps x 2.5)/1000, and fuel cell 02 flow ≈(amps x 2.0)/100. GSE is supplying most of the SC power. |
| | FC SKIN TEMP ind - 390°-450°F<br>FC COND EXH TEMP ind - 150°-175°F<br>FC tb (2) - gray | | Gray indicates normal pH factor and normal fuel cell radiator temperature. |
| | FC IND sel - 2<br>BAT CHG - OFF<br>DC IND sel - FC 1, 2, 3<br>DC AMPS ind - 5-20 amps<br>DC IND sel - MNA, B<br>DC VOLTS ind - 26.5-31 vdc<br>DC IND sel - BAT BUS A, B, BAT C<br>DC VOLTS ind - 35-37.5 vdc<br>DC AMPS ind - <3.0 amps | | |



NORMAL/BACKUP

| STA/T STEP | PROCEDURE | PANEL | REMARKS |
|---|---|---|---|
| | CAUTION<br><br>Do not leave DC IND sel at PYRO BAT A (B) position any longer than req to read DC VOLTS, or PYRO bat chg will be depleted. | | |
| LMP | DC IND sel - PYRO BAT A, B<br>DC VOLTS ind - 36.0-37.5 vdc<br>DC IND sel - MNA | 3 | |
| | Dual Inv Stat Check<br><br>INV 1 - MNA<br>INV 2 - MNB<br>INV 3 - OFF<br>INV 1 AC1 - on (up)<br>INV 2 AC1 - OFF<br>INV 3 AC1 - OFF<br>INV 1 AC2 - OFF<br>INV 2 AC2 - on (up)<br>INV 3 AC2 - OFF<br>AC IND sel - BUS 1 & 2, ØA, B, C<br>AC VOLTS ind - 113-117 vac | | Switch position verification only. If switch positions must be changed, refer to 4.5.3.9, step a. |
| | SPS Stat Checks<br>SPS PRPLNT TEMP ind - 100°F max | | Normal operating temperature is +45° to +75°F. Redline is +27 and +100°F. |
| | SPS FUEL PRESS ind - 170-195 psia<br>SPS OXID PRESS ind - 170-195 psia | | Normal operating pressure after fuel and oxidizer tank is pressurized with He (after He valve is actuated) is 170-195 psia. GSE servicing pressure is 110 psia. |

| STA/T STEP | PROCEDURE | PANEL | REMARKS |
|---|---|---|---|
| LMP | SPS PRESS IND sw - He, N2A, N2B | 3 | |
| | SPS He PRESS ind - 3300-3900 psia | | GSE servicing pressure is 3600±50 psia. |
| | SPS N2 PRESS ind - 2200-2800 psia | | |
| | SPS INJ VLV ind (4) - CLOSE | | |
| | SPS OXID VLV upper tb - MAX (verify) | | Upper talkback MAX and lower talkback gray indicates propellant utilization valve positioned for maximum oxidizer flow. |
| | SPS OXID VLV lower tb - gray (verify) | | |
| | OXID FLOW VLV INCR - INCR (verify) | | Valve positioned to INCR by GSE during hypergolic landing. |
| | OXID FLOW VLV PRIM - PRIM | | |
| | PUG MODE - NORM | | |
| | SPS He VLV tb (both) - bp | | Barber pole indicates both helium isolation valves closed. |
| | SPS He VLV (both) - AUTO | | |
| | SPS LINE HTRS - off (ctr) | | |
| | SPS PRESS IND sw - He | | |
| | VHF ANT - SM LEFT | | |
| | S BD XPNDR - OFF | | |
| | S BD PWR AMPL PRIM - PRIM | | |
| | S BD PWR AMPL HI - off (ctr) | | |
| | S BD MODE VOICE - VOICE | | |
| | S BD MODE PCM - PCM | | |
| | S BD MODE RNG - RNG | | |
| | S BD AUX TAPE - ctr | | |
| | S BD AUX TV - ctr | | |
| | UP TLM DATA - DATA | | |
| | UP TLM CMD - RSET, then OFF | | |
| | PWR AMPL tb - bp | | Barber pole indicates power is not applied to S-band power amplifier. |
| | TAPE MOTION tb - bp | | Barber pole indicates no tape motion. |



NORMAL/BACKUP

| STA/T STEP | PROCEDURE | PANEL | REMARKS |
|---|---|---|---|
| LMP | S BD ANT OMNI A - B | 3 | |
| | S BD ANT OMNI - OMNI | | |
| | VHF AM SQLCH tw (2) - noise +1 | | |
| | VHF AM (2) - off (ctr) | | |
| | VHF AM RCV - off (ctr) | | |
| | VHF BCN - OFF | | |
| | VHF RNG - OFF | | |
| | S BD SQLCH - ENBL | | |
| | FC REAC VLV - NORM | | |
| | H2 PURG LINE HTR - OFF | | |
| | TAPE RCDR PCM - PCM/ANLG | | |
| | TAPE RCDR RCD - RCD | | Power to switch is provided by the up-data link or the TAPE RCDR FWD switch in FWD position. |
| | TAPE RCDR FWD - REWIND | | Allow tape to completely rewind before proceeding. TAPE MOTION talkback is gray when tape is in motion. |
| | TAPE RCDR FWD - off (ctr) | | |
| | SCE PWR - NORM | | |
| | PMP PWR - NORM | | |
| | PCM BIT RATE - HI | | |
| CMP | MSN TMR - RSET | 2 | RSET position is momentary. |
| | MSN TMR ind - zero | | |
| | MSN TMR - START | | Will reset to zero and count up at lift-off, but not abort initiation. |
| | MSN TMR ind - counting up | | |
| | C/W NORM - ACK | | |
| | C/W CSM - CSM | | |
| | C/W PWR - 1 (verify) | | |
| | C/W LAMP TEST sw - ctr | | |
| | PL VENT VLV - push (lock) | | |
| | CRYO H2 PRESS ind (both) - 225-260 psia | | |

RH COUCH CHECKS

| STA/T STEP | PROCEDURE | PANEL | REMARKS |
|---|---|---|---|
| CMP | 02 PRESS IND sw - SURGE TK | 2 | |
| | CRYO 02 PRESS 1 ind - 865-935 psia | | |
| | 02 PRESS IND sw - TK 1 | | |
| | CRYO 02 PRESS ind (both) - 865-935 psia | | |
| | CRYO H2 QTY ind (both) - 100% | | |
| | CRYO 02 QTY ind (both) - 100% | | |
| | CAB FAN (both) - OFF | | |
| | H2 HTRS (both) - AUTO | | |
| | 02 HTRS (both) - AUTO | | |
| | 02 PRESS IND sw - SURGE TK | | |
| | H2 FANS (both) - AUTO | | |
| | 02 FANS (both) - AUTO | | |
| | ECS IND sel - PRIM | | |
| | RAD PRIM IN TEMP ind - 60°-97°F | | |
| | RAD PRIM OUT TEMP ind - 35°-50°F | | |
| | PRIM GLY EVAP OUT TEMP ind - 35°-50°F | | |
| | PRIM GLY EVAP STM PRESS ind - 0.25 psia (pegged) | | |
| | PRIM GLY DISCH PRESS ind - 60 psig max | | |
| | SUIT TEMP ind - 45°-55°F | | |
| | CAB TEMP ind - 70°-80°F | | |
| | SUIT PRESS ind - ≈14.9 psia | | |
| | CAB PRESS ind - ≈14.7 psia | | |
| | CO2 PP ind - 0.0 mm Hg | | |
| | RAD FLOW CONT AUTO - AUTO | | |
| | ECS RAD tb - gray | | Gray indicates No. 1 flow proportioning valve controlling flow. |
| | RAD FLOW CONT PWR - off (ctr) | | When switch is powered, by placing RAD FLOW CONT PWR switch to MAN SEL, center position will close all isolation valves. |
| | RAD MAN SEL - RAD 1 | | |



NORMAL/BACKUP

| STA/T STEP | PROCEDURE | PANEL | REMARKS |
|---|---|---|---|
| CMP | RAD PRIM HTR - off (ctr)<br>RAD SEC HTR - OFF<br>SUIT COMPR ΔP ind - 0.0 psid | 2 | SUIT COMPR C/W light remains on as long as compressors are not operating. |
| | PRIM ACCUM QTY ind - 25-50% min<br>H2O QTY IND sw - WASTE<br>WASTE H2O QTY ind - <80%<br>H2O QTY IND sw - POT<br>POT H2O QTY ind - 80%<br>POT H2O HTR - OFF<br>SUIT H2O ACCUM AUTO - ctr<br>SUIT H2O ACCUM ON - ctr<br>SUIT HT EXCH - ON for 20 sec then off (ctr) | | Unless SUIT HT EXCH control switch is positioned to off (center), continuous power will be applied to motor valve. |
| | SEC COOL EVAP - RSET for 58 sec min, then off (ctr)<br>SEC COOL PUMP - off (ctr)<br>GLY EVAP IN TEMP - MAN<br>Position prim loop stm press vlv<br>GLY EVAP STM AUTO - MAN<br>GLY EVAP STM INCR - INCR for 58 sec min, then DECR for 8.5±0.5 sec | | Ensures secondary loop steam pressure valve closed.<br><br>INCR and DECR positions are momentary. Steam pressure valve requires 58 seconds from full close to full open. |
| | GLY EVAP H2O FLOW - off (ctr)<br>CAB TEMP - MAN<br>CAB TEMP tw - max decr<br>HI GAIN ANT PWR - OFF<br>HI GAIN ANT TRACK - AUTO<br>HI GAIN ANT BEAM - WIDE | | |

RH COUCH CHECKS

| STA/T | STEP | PROCEDURE | PANEL | REMARKS |
|---|---|---|---|---|
| CMP | | HI GAIN ANT PITCH ind - +90° | 2 | Power off indicator reading. |
| | | HI GAIN ANT YAW ind - 0° | | Power off indicator reading. |
| | | HI GAIN ANT PITCH cont - 0° | | Stow position. |
| | | HI GAIN ANT YAW cont - 180° | | Stow position. |
| | | HI GAIN ANT SERVO - PRIM | | |
| | | CAB PRESS DUMP vlv - close (CW) | Side hatch | |
| | | **4.1.12 COMMUNICATIONS CHECK** | | |
| | 1 | Comm Activation | | |
| LMP | | S BD XPNDR - PRIM | 3 | |
| | | S BD PWR AMPL HI - HI | | |
| | | PWR AMPL tb - gray (after 90 sec) | | Gray indicates power applied to S-band power amplifier. |
| | | VHF AM B - DUPLEX | | |
| CMP | | S BD ANT ind - >1/3 scale | 2 | |
| ALL | | MODE (3) - INTERCOM/PTT | 9,10,6 | |
| | | PAD COMM (3) - T/R | | |
| | | PAD COMM VOL tw (3) - 5 | | |
| | | PWR (3) - AUDIO/TONE | | |
| | | MASTER VOL tw (3) - 5 | | |
| | | SUIT PWR (3) - on (up) | | |
| | | INTERCOM (3) - T/R | | |
| | | INTERCOM VOL tw (3) - 5 | | |
| | | VHF AM (3) - T/R | | |
| | | VHF AM VOL tw (3) - 5 | | |
| | | S BD (3) - T/R | | |
| | | S BD VOL tw (3) - 5 | | |
| | | AUDIO CONT (3) - NORM | | |
| CDR | | VHF RNG - NORM | 9 | |



NORMAL BACKUP

| STA/T | STEP | PROCEDURE | PANEL | REMARKS |
|---|---|---|---|---|
| | 2 | Comm Checks | | |
| CDR,LMP | | Replace facility headsets with CM headsets | | CM headsets and CWG adapters have been connected to communication control head prior to backup crew ingress at which time PWR and SUIT PWR switches were OFF (panels 6, 10, and 9). |
| | | Perform comm checks (pad comm, S-band, & VHF AM) | | |
| CDR | | Return to facility headset | | |
| LMP | | Don CMP headset & perform S-band & VHF AM comm checks | | Ground will switch communication channel such that S-band modes and VHF AM may be verified. |
| | | UP TLM DATA - UP VOICE BU | 3 | |
| | | Establish 2-way comm on S-band | | |
| | | UP TLM DATA - DATA | | |
| | | S BD AUX TAPE - DN VOICE BU | | |
| | | Establish 2-way comm on S-band | | |
| | | S BD AUX TAPE - ctr | | |
| | | Return to facility headset | | |
| | 3 | At Completion of Comm Checks | | |
| ALL | | SUIT PWR (3) - OFF | 9,10,6 | |
| | | PWR (3) - OFF | | |
| CMP | | MASTER VOL tw - 6 | 10 | |
| | | INTERCOM VOL tw - 6 | | |
| | | S BD VOL tw - 6 | | |
| | | VHF AM VOL tw - 7 | | |
| ALL | | Disconnect CM headset & CWG adapter from comm cont head | | |
| CMP | | C/W PWR - off (ctr) | 2 | |
| LMP | | cb C/W (2) - open | 5 | |
| | | CDR & LMP egress CM | | |

| STA/T STEP | PROCEDURE | PANEL | REMARKS |
|---|---|---|---|
| | 4.1.13 VERIFY COUCH CONFIGURATION | | |
| BCMP | MDC assist bar - extd & locked<br>Headrests - soft suit position<br>THC armrest in launch position & locked<br>Inbd arm rests - stowed & contr locked<br>Couches - launch/entry position (Y-Y struts extd & locked)<br>Seat pans - 85° position & locked<br>O2/comm umb - stowed<br>Harnesses & restraints - extd & laid aside<br>Couch stab brace - stowed<br>Egress CM | | Backup CMP (BCMP) accomplishes all tasks in 4.1.13 and 4.1.14. To eliminate confusion, station callouts for CDR and LMP locations have not been included. |
| | 4.1.14 PRIME CREW PRE-INGRESS PROCEDURE | | |
| | Ingress CM | | Backup CMP re-enters CM. |
| | S BD PWR AMPL HI - OFF | 3 | The S-band is powered down to allow GMIL station S-band antenna alignment. |
| | S BD XPNDR - OFF | | |
| | cb C/W (2) - close | 5 | |
| | C/W PWR - 1 | 2 | |
| | MASTER ALARM pb/lt - on, push | 1,3,122 | |
| | Perform Pot Water Chlor | | Performed following launch vehicle propellant loading. |
| | POT TK IN vlv - OPEN | 352 | |
| | Attach needle assy to inj port | | Use carry-on sterilization kit for chlorination. |
| | Insert chlor ampoule into casing | | |
| | Conn knob assy & rot (CW) until piston contacts ampoule | | |
| | Install ampoule assy on needle assy (push & turn CW) | | |



NORMAL/BACKUP

| STA/T STEP | PROCEDURE | PANEL | REMARKS |
|---|---|---|---|
| BCMP | Rot knob (CW) until ampoule is empty (piston bottoms out) | 352 | Requires ≈5-1/2 turns. |
| | Disconnect ampoule assy from needle assy (push & turn CCW) | | |
| | Rot knob (CCW), remove used ampoule | | |
| | Repeat chlor inj steps using buffer ampoule (do not remove empty ampoule after inj) | | Needle assembly to remain on inject port. |
| | Wait 10 min. Then rot inj barrel (CCW) four turns while holding bayonet section in locked position (CW) | | Withdraws one ampoule of water. |
| | Rot knob (CCW), remove filled ampoule | | |
| | Remove needle assy from inj port | | |
| | Wait 30-45 min. Then withdraw water as follows | | |
| | Attach H20 sampling container to food prep unit H20 probe | | |
| | FOOD PREP HOT H20 vlv - push, rel until 40 oz water withdrawn | 305 | |
| | FOOD PREP COLD H20 vlv - push, rel until 20 oz water withdrawn | | |
| | Remove H20 sampling container from food prep unit & attach to drink gun nozzle | | |
| | DRINK H20 SUP vlv - ON | 304 | |
| | Actuate drink gun cont until 2-4 oz water withdrawn | | |
| | DRINK H20 SUP vlv - OFF | | |
| | Remove H20 sampling container from drink gun nozzle | | |
| | Remove sterilization kit from CM | | |



PRIME CREW PRE-INGRESS PROCEDURE

| STA/T | STEP | PROCEDURE | PANEL | REMARKS |
|---|---|---|---|---|
| BCMP | | DIRECT 02 vlv - OPEN (CCW), adj for 02 FLOW ind - 0.6-0.8 lb/hr | 7<br>2 | |
| | | SUIT COMPR 1 - AC1 | 4 | |
| | | SUIT COMPR lt - out<br>SUIT COMPR ΔP ind - 0.7-0.9 psid<br>SUIT CAB ΔP ind - >+2.0 in. H20 | 2 | |
| | | Verify PO2 | | |
| | | SECS PYRO ARM (2) - SAFE (unlocked) | 8 | Pad safety officer provides key to remove guard from lever lock SECS PYRO ARM switches. |
| | | RNDZ XPNDR PWR - OFF | 100 | |
| | | S BD XPNDR - PRIM | 3 | |
| | | S BD PWR AMPL HI - HI | | |
| | | Ingress LEB for prime crew ingress support | | |



NORMAL BACKUP

| STA/T STEP | PROCEDURE | PANEL | REMARKS |
|---|---|---|---|
| | 4.2 PRIME CREW PRELAUNCH CHECKS | | |
| | 4.2.1 INGRESS & STATUS CHECKS | | |
| BCMP | SEC COOL PUMP - may be cycled from AC1 to off (ctr) during crew ingress & checkout to maintain crew comfort | 2 | Activation of secondary loop will warm suit circuit ≈10-15°F. Secondary pump may be selected on or off at option of flight crew for their comfort. Crew may be cold as vehicle is being prechilled by GSE coolant at this time. |
| | 4.2.1.1 CDR Ingress LH Couch | | |
| CDR | Ingress LH couch | | |
| | CDR comm umb - conn to PGA | | |
| | SUIT PWR - on (up) | 9 | |
| | PWR - AUDIO/TONE | | |
| BCMP | lh SUIT FLOW vlv - OFF | 301 | |
| | CDR 02 umb - conn to PGA | | Connect red to red and blue to blue. Suit hose interconnect removed from CM. |
| | lh SUIT FLOW vlv - FULL FLOW | | |
| | CDR 02 vent - shut off & disconnect | | PGA gas connector plugs installed. Ventilator removed from CM. |
| | Assist CDR in position; connections & adjustments completed | | Restraints connected and tightened, and arm rests, torso and life vest adjusted. Helmet protector removed from CM. |
| | Verify sw positions as follows: | | |
| | CAB FAN (both) - on (up) | 2 | |
| CDR | FLOAT BAG (3) - VENT | 8 | Lever lock. |
| | THC - neutral (locked) | | |
| | MAN ATT ROLL - RATE CMD | 1 | |
| | MAN ATT PITCH - ACCEL CMD | | |



NORMAL BACKUP

| STA/T | STEP | PROCEDURE | PANEL | REMARKS |
|---|---|---|---|---|
| CDR | | MAN ATT YAW - RATE CMD | 1 | |
| | | SCS TVC (2) - RATE CMD | | |
| | | ΔV CG - LM/CSM | | |
| | | ELS AUTO - AUTO | | |
| | | 4.2.1.2 LMP Ingress RH Couch | | |
| LMP | | Ingress RH couch | | |
| | | LMP comm umb - conn to PGA | | |
| | | SUIT PWR - on (up) | 6 | |
| | | PWR - AUDIO/TONE | | |
| BCMP | | rh SUIT FLOW vlv - OFF | 300 | |
| | | LMP 02 umb - conn to PGA | | Connect red to red and blue to blue. Suit hose interconnect removed from CM. |
| | | rh SUIT FLOW vlv - FULL FLOW | | |
| | | LMP 02 vent - shut off & disconnect | | PGA gas connector plugs installed. Ventilator removed from CM. |
| | | Assist LMP in position; connections & adjustments completed | | Restraints connected and tightened, and arm rests, torso and life vest adjusted. |
| | | Verify the following | | |
| LMP | | SPS GAUGING - ACl | 4 | |
| | | GLY PUMPS - 1 ACl | | |
| | | VHF ANT - SM LEFT | 3 | |
| | | OXID FLOW VLV INCR - NORM | | |
| | | MNA RSET - ctr | | |
| | | MNB RSET - ctr | | |
| | | SPS He VLV (both) - AUTO | | |
| | | S BD ANT OMNI A - B | | |
| | | S BD ANT OMNI - OMNI | | |
| | | VHF BCN - OFF | | |
| | | SCE PWR - NORM | | |
| | | AC 1 RSET - ctr | | |
| | | AC 2 RSET - ctr | | |

| STA/T | STEP | PROCEDURE | PANEL | REMARKS |
|---|---|---|---|---|
| | 4.2.1.3 | CMP Ingress Center Couch | | |
| CMP | | Ingress ctr couch | | |
| | | CMP comm umb - conn to PGA | | |
| BCMP | | SUIT PWR - on (up) | 10 | |
| | | PWR - AUDIO/TONE | | |
| | | ctr SUIT FLOW vlv - OFF | 302 | |
| | | CMP 02 umb - conn to PGA | | Connect red to red and blue to blue. Suit hose interconnect removed from CM. |
| | | ctr SUIT FLOW vlv - FULL FLOW | | |
| | | CMP 02 vent - shut off & disconnect | | PGA gas connector plugs installed. Ventilator removed from CM. |
| | | Assist CMP in position; connections & adjustments completed | | Restraints connected and tightened, and arm rests, torso and life vest adjusted. Helmet protector removed from CM. |
| | | Perform fnl crew verification | | Helmets, umbilicals, PGA diverter valves and wrist disconnects, foot restraints, and life vests rechecked. |
| | | Verify the following | | |
| CMP | | PRPLNT DUMP - AUTO | 2 | |
| | | C/W NORM - BOOST | | |
| | | MSN TMR - START | | |
| | | SUIT H20 ACCUM AUTO - 1 | | |
| | | SUIT COMPR ΔP ind - 0.7-0.9 psid | | |
| All | | VHF AM VOL tw (3) - as desired | 6,10,9 | |
| | | S BD VOL tw (3) - as desired | | |
| LMP | | UP TLM CMD - NORM | 3 | |
| CMP | | UP TLM CM - BLOCK | 2 | |
| BCMP | | PAD COMM - OFF | 10 | PAD COMM can be used after launch for intercom backup with PAD COMM VOL thumbwheel decreased. |
| | | Egress CM | | |



NORMAL/BACKUP

| STA/T | STEP | PROCEDURE | PANEL | REMARKS |
|---|---|---|---|---|
| | | 4.2.1.4 EDS Checkout & Countdown Test | | Crew participation in EDS test is directed by ground personnel. Test requires ≈30 minutes. |
| CDR | | cb EDS (3) - close (verify) | 8 | |
| | | EDS PWR - on (up) | 7 | |
| CMP | | EDS AUTO - on (up) | 2 | |
| CDR | | ABORT lt oper - verify | 1 | CDR will verify ABORT light operation as it is activated by ground. |
| LMP | | UP TLM CMD - OFF | 3 | |
| CDR | | S BD - OFF | 9 | CDR will participate in EDS test on PAD COMM. |
| | | INTERCOM - OFF | | |
| | | VHF AM - OFF | | |
| LMP | | PAD COMM - OFF | 6 | |
| | | 4.2.1.5 Cabin Closeout | | |
| -01:40:00 | | | | |
| CMP | | Side hatch closing | Side hatch | |
| | | Verify external tool stowed on outside of hatch (tech) | | |
| | | Remove hatch seal protector (tech) | | |
| | | Verify safety pin has been removed from actr handle sel (tech) | | |
| | | Gear box sel - N (neut) (tech) | | |
| | | Actr handle sel - N (neut) (tech) | | |
| | | GN2 vlv handle - push (outbd) (tech) | | Squeeze handle to unlock. |
| | | Verify piston chamber pressurized | | |
| | | xxxxxxxxxxxxxxxxxxxxxxxxxxxxxxxxxxxxxxxx | | |
| | | If piston chamber is not pressurized GN2 charge No. 1 - CW (tech) | | |
| | | xxxxxxxxxxxxxxxxxxxxxxxxxxxxxxxxxxxxxxxx | | |

| STA/T STEP | PROCEDURE | PANEL | REMARKS |
|---|---|---|---|
| CMP | Hatch open lock - rel (tech)<br>Push hatch to near closed position (tech)<br>Lock pin rel knob - UNLOCK (verify)<br>Hold hatch closed<br>Insert tool B (handle in 9 o'clock position) into external hatch actuation socket, rot CW to stops & hold (tech)<br>Press & hold LOCK PIN reset button<br>Relax torque & remove tool B (tech)<br><br>LOCK PIN reset button - rel<br>LOCK PIN ind - not extd (rh couch) &/or white ind is opposite white mrk (ctr & lh couch)<br><br>xxxxxxxxxxxxxxxxxxxxxxxxxxxxxxxxxxxxxxx<br>x x<br>If lock pin is not engaged<br>Insert tool B into external hatch actuation socket & slowly rot CCW until LMP verifies lock pin engagement (tech)<br>x x<br>xxxxxxxxxxxxxxxxxxxxxxxxxxxxxxxxxxxxxxx<br><br>NOTE<br><br>If RED lock pin is extd ≈0.5 inch, lock pin has been sheared.<br><br>GN2 press ind - green (verify) | Side hatch | Obtains lock pin engagement. Mechanism should rotate ≈14 inches CCW due to spring pressure. |



NORMAL BACKUP

| STA/T STEP | PROCEDURE | PANEL | REMARKS |
|---|---|---|---|
| CMP | Configure hatch for rapid egress<br>Gear box sel - UNLATCH<br>Actr handle sel - U (unlatch)<br>BPC JETT knob - arrow on knob pointing to BPC JETT decal | Side hatch | |
| -01:35:00 | If rapid hatch opening req, refer to 5.3.1.1 | | |
| | Strut unlock lanyard (2) - unstow & attach handle ends to MDC | | |
| | Grd performs cab purge & hatch leak test<br>Cab purge to 60% 02/40% N2 (launch atmosphere)<br>Grd performs hatch leak test | | GSE verifies 60/40 ratio.<br>Requires ≈20 minutes. |
| | CAUTION<br>During this check, established SUIT/CAB ΔP should be maintained by DIRECT 02 vlv. | | |
| | 4.2.1.6 Change Launch Azimuth (if necessary) | | |
| | Key V78E<br>FL V06 N29<br>X SM launch azimuth XXX.XX DEG<br>Key V21E, load new azimuth<br>PRO<br>CAB FAN (both) - OFF | 2 | |

| STA/T STEP | PROCEDURE | PANEL | REMARKS |
|---|---|---|---|
| | 4.2.1.7 EDS Test Complete | | |
| -01:21:00 | | | |
| | Set cont after test | | |
| CDR | INTERCOM - T/R | 9 | |
| | VHF AM - T/R | | |
| | S BD - T/R | | |
| LMP | PAD COMM - T/R | 6 | |
| CDR | EDS PWR - OFF | 7 | |
| CMP | EDS AUTO - OFF (verify) | 2 | |
| | 2 ENG OUT sw - AUTO (verify) | | |
| | LV RATES sw - AUTO (verify) | | |
| CDR | α/Pc ind - ____% | 1 | |
| -01:13:00 | | | |
| CMP | UP TLM IU - BLOCK | 2 | |
| | 4.2.2 FINAL VERIFICATION & SYSTEMS CHECKS | | |
| | 4.2.2.1 G&C Verification | | |
| | 1 Gyro Pwr Up | | |
| | C/W NORM - NORM | | |
| | BMAG TEMP lt (both) - out | | |
| CDR | FDAI/GPI PWR - OFF | 7 | If FDAIs are powered when BMAGs come up to speed, rate needles will oscillate full scale. |
| | ELEC PWR - GDC/ECA | | |
| | BMAG PWR (both) - ON | | |
| | FDAI/GPI PWR - BOTH | | |
| CMP | C/W NORM - ACK | 2 | |
| | 2 GDC Align | | |
| CDR | FDAI SEL - 1 | 1 | |
| | FDAI SOURCE - ATT SET | | |



NORMAL/BACKUP

| STA/T STEP | PROCEDURE | PANEL | REMARKS |
|---|---|---|---|
| CDR | ATT SET tw (3) - R 162°, P 90°, Y 0° | 1 | These are nominal angles for a 72° launch azimuth and agree with prelaunch TCP. Only roll is affected by a variable launch azimuth. |
| | GDC ALIGN pb - push | | |
| | FDAI 1 - err null | | |
| | ATT SET tw (3) - R 168°, P 81°, Y 355° | | |
| | FDAI 1 - full scale err (verify)<br>R right, P up, Y right | | |
| | FDAI SEL - 2 | | |
| CMP | FDAI 2 - ind same as FDAI 1 (verify) | 2 | |
| CDR | GDC ALIGN pb - push | 1 | |
| CMP | FDAI 2 - err null | 2 | |
| CDR | ATT SET tw (3) - R 162°, P 90°, Y 0° | 1 | |
| CMP | FDAI 2 - full scale err (verify)<br>R left, P down, Y left | 2 | |
| CDR | FDAI SEL - 1 | 1 | |
| | FDAI 1 - ind same as FDAI 2 (verify) | | |
| | GDC ALIGN pb - push | | |
| | FDAI 1 - total att (verify)<br>R 162°, P 90°, Y 0° | | |
| | WARNING<br>Sequencers in SECS should be deactivated to preclude an inadvertent abort. | | |
| | SECS PYRO ARM (2) - SAFE (verify) | 8 | Lever lock. |
| | SECS LOGIC (both) - OFF (verify) | | Lever lock. |

| STA/T STEP | PROCEDURE | PANEL | REMARKS |
|---|---|---|---|
| | 4.2.2.2 Gimbal Drive & Trim Check | | Verifies trim control and manual (MTVC) control capability of primary and secondary gimbal control system. SPS gimbal angle settings based on CSM c.g. and vary with propellant loading.<br><br>PITCH and YAW GMBL caution/warning lights (panel 2) indicate overcurrent to gimbal motors. Otherwise, no indication to crew, except for switch selection, that a gimbal motor not operating or auto switchover (THC-CW) has taken place.<br><br>GMBL POS indicator response opposite to RHC commands as follows:<br><br>RHC: + Pitch, - Pitch, + Yaw, - Yaw<br>IND: - Pitch, + Pitch, - Yaw, + Yaw |
| | 1 Initialization<br>FC on mn buses (verify) | | Fuel cells are placed on main buses by crew prior to primary TVC check per ground crew instructions. |
| LMP | FC MNA 1 & 2 - ctr, 3 - OFF<br>FC MNA 1 & 2 tb - gray, 3 tb - bp | 3 | Gray indicates fuel cells 1 and 2 connected to main bus A; barber pole indicates fuel cell 3 disconnected from main bus A. |
| | FC MNB 1 & 2 - OFF, 3 - ctr<br>FC MNB 1 & 2 tb - bp, 3 tb - gray | | Barber pole indicates fuel cells 1 and 2 disconnected from main bus B; gray indicates fuel cell 3 connected to main bus B. |
| | MN BUS TIE (2) - on (up) | 5 | |
| CDR | SCS TVC (2) - RATE CMD (verify) | 1 | |



NORMAL BACKUP

| STA/T STEP | PROCEDURE | PANEL | REMARKS |
|---|---|---|---|
| | CAUTION<br>More than 1 hr of contin on-time for TVC SERVO PWR 1 or 2 sw may be detrimental to SPS gmbl actuators. | | |
| CDR | TVC SERVO PWR 1 - AC1/MNA<br>TVC SERVO PWR 2 - AC2/MNB<br>LV IND/GPI sw - GPI (verify)<br>RHC 2 - ARMED | 7<br><br>1 | |
| | 2 Prim TVC Check<br>GMBL MOT P1, Y1 - START | | START position is momentary. Start SPS gimbal motors sequentially at ≈1-second intervals to avoid power surge. For ground checks, GMBL MOT PITCH or YAW are the equivalent of flight terms GMBL MOT P or Y. |
| | Confirm trim cont on inds<br>SPS GMBL tw (2) - + & - | | Gimbals drive in response to SPS pitch and yaw thumbwheel movement. Verifies primary gimbal trim control. |
| | RHC 2 - perform MTVC check | | Gimbals drive in response to RHC movement, and return to set-in values when RHC is neutral. Verifies primary MTVC loops. |
| | 3 Sec TVC Check<br>SCS TVC (2) - AUTO<br>GMBL MOT P2, Y2 - START<br>THC - CW<br>Confirm trim cont on inds<br>SPS GMBL tw (2) - + & - | | Verifies secondary gimbal trim control. |
| | RHC 2 - perform MTVC check | | Verifies secondary MTVC loops. |

| STA/T | STEP | PROCEDURE | PANEL | REMARKS |
|---|---|---|---|---|
| | 4 | Auto Switchover Check | | |
| CDR | | GMBL MOT P2, Y2 - OFF | 1 | Shut off gimbal motors sequentially to avoid a power surge. |
| | | Verify no MTVC<br>THC - neut<br>SPS GMBL tw (2) - P___°, Y___° | | Gimbals are trimmed to thrusting values. These values are derived from Operational Trajectory, Table VIIIa, and include gimbal offset of ____ in pitch and ____ in yaw from spacecraft axis. |
| | | GMBL MOT P1, Y1 - OFF<br>RHC PWR NORM 2 - AC/DC<br>RHC 2 - LOCKED | | |
| LMP | | MN BUS TIE (2) - OFF, then AUTO | 5 | |
| CDR | | TVC SERVO PWR (both) - OFF | 7 | |
| | | LV IND/GPI sw - SII/SIVB | 1 | |
| | 4.2.2.3 | FDAI Verification | | |
| | | FDAI SEL - 1/2<br>FDAI SOURCE - CMC<br>FDAI 1 - total att<br>R X°; P 90°; Y 0° | | FDAI 2 is drifting as a function of earth rate. |
| | 4.2.2.4 | RSI Test & Setup | | For ground checks, EMS RAI is the equivalent of flight term RSI. |
| | | EMS ROLL - on (up)<br>GDC ALIGN pb - push & hold<br>ATT SET YAW tw - adj thru 45° angle, observe RSI tracks ≈45°, then adj until RSI points up<br>GDC ALIGN pb - rel<br>EMS ROLL - OFF | | Avoid FDAI gimbal lock region. |



NORMAL/BACKUP

| STA/T | STEP | PROCEDURE | PANEL | REMARKS |
|---|---|---|---|---|
| CDR | | Align GDC to IMU | | Ensures that GDC is aligned to actual IMU angles, rather than calculated values. Attitude reference comparison (in orbit) will be more accurate. |
| | | FDAI SEL - 1 | 1 | |
| | | FDAI SOURCE - ATT SET | | Constraint: If CMC is on, an overload in IMU resolver circuitry may cause an ICDU oscillation and trigger ISS warning light. (Reference ICD MH01-01325-216.) FDAI must be used as a null meter in this mode of operation. If not, large errors will result because of impedance mismatch. |
| | | ATT SET - IMU | | |
| | | ATT SET tw (3) - null FDAI 1 err | | |
| | | ATT SET - GDC | | |
| | | GDC ALIGN pb - push | | |
| | | FDAI SOURCE - CMC | | |
| | | FDAI SEL - 1/2 | | |
| | 4.2.2.5 | EMS Prep | | |
| | | Set EMS ΔV | | |
| | | EMS MODE - STBY (verify) | | |
| | | EMS FUNC - ΔV SET | | |
| | | Set ΔV ind - 6999.9 fps | | |
| | | EMS FUNC - ΔV | | |
| -55:00 | | | | |
| CMP | | C/W NORM - BOOST | 2 | Inhibits master alarm light on panel 1. |
| LMP | | Cont head sw - XMIT, hold until advised to rel | | |
| | | UP TLM CMD - NORM | 3 | |

| STA/T STEP | PROCEDURE | PANEL | REMARKS |
|---|---|---|---|
| | 4.2.2.6 Pad Abort Enable | | |
| | WARNING<br>After pad abort enbl, oper of THC - CCW will init an abort. | | |
| -44:00 | | | |
| CDR | EDS PWR - on (up) | 7 | |
| CMP | Gear box sel - LATCH | Side hatch | |
| | Actr handle sel - U (unlatch) (verify) | | |
| ALL | Shoulder harness - locked | | |
| CDR | CM RCS LOGIC - on (up) | 1 | |
| | cb SECS ARM (2) - close | 8 | |
| | cb SECS LOGIC (2) - close | | |
| | SECS LOGIC (both) - on (up) | | Lever lock. |
| | Report logic arm | | |
| | After GO from STC | | |
| | SECS PYRO ARM (2) - on (up) | | Both lever lock pyro arm switches must be operated. LES pad abort capability enabled; SECS LOGIC and PYRO buses are armed. |
| -28:00 | | | |
| CMP | H2 FANS (both) - off (ctr) | 2 | |
| | 02 FANS (both) - off (ctr) | | |
| | 4.2.2.7 SM RCS Activation | | |
| -25:00 | SM RCS He 1 (4) - OPEN | | OPEN position is momentary. |
| | SM RCS He 1 tb (4) - gray | | Gray indicates primary He isolation valves open. |
| | SM RCS He 2 (4) - OPEN | | OPEN position is momentary. |
| | SM RCS He 2 tb (4) - gray | | Gray indicates secondary He isolation valves open. |



NORMAL BACKUP

| STA/T | STEP | PROCEDURE | PANEL | REMARKS |
|---|---|---|---|---|
| CMP | | RCS IND sel - SM A, B, C, D | 2 | |
| | | SM RCS SEC FUEL PRESS ind - 192-207 psia | | Check pressure with RCS IND selector positioned at SM A, B, C, and D (in turn). |
| | | SM RCS SEC FUEL PRESS (4) - CLOSE | | CLOSE position is momentary. No talkbacks. ACE can confirm valves closed. |
| | | SM RCS PRPLNT (4) - OPEN | | OPEN position is momentary. Opens 16 isolation valves. |
| | | SM RCS PRIM PRPLNT tb (4) - gray | | Gray indicates primary fuel and oxidizer isolation valves open. |
| | | SM RCS SEC PRPLNT tb (4) - gray | | Gray indicates secondary fuel and oxidizer isolation valves open. |
| | 4.2.2.8 | SM RCS Status Check | | |
| | | RCS IND sel - SM A, B, C, D | | |
| | | SM RCS PKG TEMP ind - amb | | SM RCS heaters are not operated on pad or during ascent to reduce effects of boost heating on package temperature. Ambient temperature <75° or >205°F will cause SM RCS status lights to come on. |
| | | SM RCS He PRESS ind - 4000-4350 psia | | Nominal He load 4150 psig at 70°F. Pressure and temperature excursions are due to ambient conditions. |
| | | SM RCS SEC FUEL PRESS ind - 192-207 psia | | Primary fuel pressure initially shown for each quad until momentary OPEN position of SM RCS A (B, C, D) SEC FUEL PRESS switch selected. |
| | | SM RCS IND sw - He TK TEMP | | |
| | | SM RCS He TK TEMP ind - 60°-80°F | | |
| | | SM RCS IND sw - PRPLNT QTY | | |
| | | SM RCS PRPLNT QTY ind - 100% | | |
| | | RCS IND sel - CM 2 | | |

| STA/T STEP | PROCEDURE | PANEL | REMARKS |
|---|---|---|---|
| | 4.2.3 LAUNCH PREPARATION | | |
| -20:00 | | | |
| CMP | Change launch azimuth (if necessary) | | |
| | Key V78E | 2 | |
| | FL V06 N29 | | |
| | X SM launch azimuth XXX.XX DEG | | |
| | Key V21E, load new azimuth | | |
| | PRO | | |
| | Align GDC to IMU, 4.7.3 | | Ensures that GDC is aligned to actual IMU angles, rather than calculated values. Attitude reference comparison (in orbit) will be more accurate. |
| CDR | FDAI SEL - 1 | 1 | |
| | FDAI SOURCE - ATT SET | | Constraint: If CMC is on, an overload in IMU resolver circuitry may cause an ICDU oscillation and trigger ISS warning light. (Reference ICD MH01-01325-216.) FDAI must be used as a null meter in this mode of operation. If not, large errors will result because of impedance mismatch. |
| | ATT SET - IMU | | |
| | ATT SET tw (3) - null FDAI 1 err | | |
| | ATT SET - GDC | | |
| | GDC ALIGN pb - push | | |
| | FDAI SOURCE - CMC | | |
| | FDAI SEL - 1/2 | | |
| | AUTO RCS A/C ROLL (4) - OFF (verify) | 8 | |
| | AUTO RCS B/D ROLL B1 & B2 - MNA | | |
| | AUTO RCS B/D ROLL D1 & D2 - MNB | | |
| | AUTO RCS PITCH A3 & C4 - MNB | | |
| | AUTO RCS PITCH C3 & A4 - MNA | | |
| | AUTO RCS YAW B3 & D4 - MNA | | |
| | AUTO RCS YAW D3 & B4 - MNB | | |



NORMAL/BACKUP

| STA/T STEP | PROCEDURE | PANEL | REMARKS |
|---|---|---|---|
| LMP | BAT C voltage - ___vdc | 3 | |
| | DC IND sel - MNA | | |
| CDR | FDAI 1 - total att<br>R ___°, P ___°, Y ___° | 1 | FDAI 2 is drifting as function of earth rate. |
| | BMAG MODE (3) - RATE 1 | | This position provides most reliable configuration in event a rate gyro fails during boost. |
| | FDAI SCALE - 5/5 | | Roll attitude error is scaled in P11 assuming FDAI is in 50/15/50/10 position. Until this position is selected at +01:50, roll full scale deflection will be 20°, not 5° as position indicates. |
| | RATE - HI | | |
| | RHC (both) - ARMED | | |
| | RHC PWR DIR (both) - MNA/MNB | | |
| | CMC MODE - FREE | | |
| | THC PWR - on (up) | | |
| LMP | S BD - OFF | 6 | |
| CDR | VHF AM - OFF | 9 | |
| ALL | Perform air-to-grd voice check with MCCH | | |
| LMP | S BD - T/R | 6 | |
| CDR | VHF AM - T/R | 9 | |
| | SPS THRUST - NORM | 1 | Lever lock. |
| | ΔV THRUST (2) - OFF | | Guarded. |
| | α/Pc IND sw - α | | |
| CMP | EDS AUTO - on (up) | 2 | |
| | LV RATES sw - AUTO | | |
| | 2 ENG OUT sw - AUTO | | |
| | RCS CMD - OFF | | OFF position is momentary. |
| CDR | TVC SERVO PWR 1 - AC1/MNA | 7 | |
| | TVC SERVO PWR 2 - AC2/MNB | | |
| -10:00 | | | |
| LMP | FC REAC VLVS - LATCH | 3 | |

| STA/T STEP | PROCEDURE | PANEL | REMARKS |
|---|---|---|---|
| -08:30 | | | |
| CMP | SEC COOL PUMP - off (ctr) | 2 | Crew option may have been exercised to turn SEC COOL PUMP on for crew comfort. |
| -08:00 | Sys stat report | | |
| -06:00 | Sys GO/NO GO for launch | | |
| -04:00 | | | |
| CDR | LV ENG lts (5) - on | 1 | Launch vehicle engine lights on T -04:00 minutes. |
| CMP | P02 (verify) | 2 | |
| | CAUTION<br><br>Do not press ENTR after keying V75. If ENTR is pressed, G&C sys will receive incorrect liftoff time. | | |
| | Key V75 | | |
| -03:00 | | | |
| LMP | TAPE RCDR FWD - FWD | 3 | |
| | TAPE MOTION tb - gray | | Gray display indicates tape is in motion. |
| -02:15 | | | |
| CDR | PRIM GLY TO RAD - BYP (pull) | 325 | Accomplished immediately after GSE water-glycol pump deactivated (T -02:15). |
| CMP | PRIM GLY DISCH PRESS ind - 37-50 psig | 2 | |
| | PRIM ACCUM QTY ind - 25-50% | | |
| -01:15 | | | |
| LMP | MN BUS TIE (2) - on (up) | 5 | |
| -01:00 | | | |
| CDR,LMP | PAD COMM (2) - OFF | 9,6 | PAD COMM can be used after launch for intercom backup with PAD COMM VOL thumbwheel decreased. |



NORMAL BACKUP

| STA/T STEP | PROCEDURE | PANEL | REMARKS |
|---|---|---|---|
| -00:45 | | | |
| CDR | GDC ALIGN pb - push, hold | 1 | |
| CMP | FDAI 2 total att - no motion | 2 | |
| CDR | GDC ALIGN pb - rel | 1 | |
| | READY FOR IGNITION | | |
| | Refer to Appendix B for cab sw/cont position at veh liftoff. | | |

| STA/T STEP | PROCEDURE | PANEL | REMARKS |
|---|---|---|---|
| | 4.3 BOOST AND INSERTION | | |
| | 4.3.1 BOOST | | |
| -00:09 | Ignition | | LV engines lights (5) go on at T -4 min when S-IC indicating circuits are armed. |
| CDR<br>-00:01 | LV ENG lts (5) - out | 1 | Indicates all five engines have achieved over 90 percent of rated thrust. |
| 00:00 | LIFT OFF lt - on &<br>NO AUTO ABORT lt - out | 00:00<br>↑<br>MODE 1A | Additional lift-off cues:<br>Event Timer start<br>Voice communications from MSFN<br>DSKY displays Program 11 |
| | WARNING<br><br>Do not press LIFT OFF/NO AUTO ABORT pb if LV RATE or any LV ENG lts on. | | Manual abort initiation may be required. (Refer to mission rules.) |
| | xxxxxxxxxxxxxxxxxxxxxxxxxxxxxxx | | |
| | Liftoff verified<br>If LIFTOFF lt off - push<br>If NO AUTO ABORT lt on - push | | Guarded.<br>Guarded. |
| | xxxxxxxxxxxxxxxxxxxxxxxxxxxxxxx | | |
| CDR,<br>CMP | Verify EVNT TMR ind resets to zero & starts counting up | RATES<br>±4°/sec P,Y<br>±20°/sec R<br>↓ | |



NORMAL/BACKUP

| STA/T | STEP | PROCEDURE | PANEL | REMARKS |
|---|---|---|---|---|
| | | xxxxxxxxxxxxxxxxxxx<br>x x | | |
| CDR | | EVNT TMR START -<br>START | 1 | START position is momentary. |
| | | x x<br>xxxxxxxxxxxxxxxxxxx | | |
| CMP | | Verify MSN TMR ind<br>resets to zero &<br>starts counting up | 2 | |
| | | xxxxxxxxxxxxxxxxxxxxxxx<br>x x | | |
| | | MSN TMR - RSET/START | | RSET position is momentary. |
| | | x x<br>xxxxxxxxxxxxxxxxxxxxxxx | | |
| | | Verify P11 (auto) | | |
| | | xxxxxxxxxxxxxxxxxxx<br>x x | | |
| | | No P11 - Key ENTR | MODE 1A | V75 inserted in P02 prior to lift-off. |
| | | x x<br>xxxxxxxxxxxxxxxxxxx | | |
| | | V06 N62<br>VI XXXXX. FPS<br>H dot XXXXX. FPS<br>H pad XXXX.X NM | | These parameters will be displayed throughout ascent.<br>VI = Inertial velocity.<br>H dot = Altitude rate.<br>H pad = Altitude above pad radius. |
| CDR | | If LV RATE & LV GUID lts - on,<br>from T +0 to T +2 min | 1 | |

BOOST

| STA/T STEP | PROCEDURE | PANEL | REMARKS |
|---|---|---|---|
| CMP | LV GUID sw - CMC<br>If man cont req<br>Key 46E | 2 | Allows CMC automatic steering, all stages.<br><br>Disables CMC steering and activates Saturn DAP; RHC provides steering commands to the IU for booster control. These stick commands are discrete rate commands. The attitude error needles are not designed to provide meaningful "fly to" information in the manual mode. |
| | | MODE 1A | |
| CDR<br>+00:12<br><br>+00:30 | Roll prog report<br>Pitch prog - report<br>Roll prog - complete | | |
| CMP<br>+00:42 | PRPLNT DUMP - RCS CMD<br>MODE 1B - report | 00:42<br>MODE 1B | |
| CDR<br>+00:50 | Mon α/Pc ind ><br>to T +02:00 | RATES<br>±4°/sec P,Y<br>±20°/sec R 1 | |
| CMP<br>13K' to 15K' | CAB PRESS ind - starts decr | 2 | Relieves high CM-to-atmosphere ΔP. Assuming that cabin pressure at lift-off is 14.47 to 14.87 psia, the cabin pressure relief valve could begin modulating at 13K'. |
| | xxxxxxxxxxxxxxxxxxxxxxx<br>If no decr by 25K' | ATT ERROR | |
| CDR | rh CAB PRESS RELF vlv - DUMP (safety latch off) until | ±5° P,Y 325 | |



NORMAL BACKUP

| STA/T | STEP | PROCEDURE | PANEL | REMARKS |
|---|---|---|---|---|
| CDR | | CAB PRESS ind - 8 psia, then NORM (safety latch on) | 2 | |
| | | MODE 1B | | |
| | | If still no decr | | |
| CMP | | CAB PRESS DUMP vlv - open (CCW) until CAB PRESS ind - 8 psia, then close (CW) | Side hatch 2 | |
| | | xxxxxxxxxxxxxxxxxxxxxxxx | | |
| | +01:21 | MAX Q — 100% AOA 5° ROLL error | | |
| CDR | | | | |
| | +01:56 | MODE 1C - report (R3 = 16.5 NM) | 01:56 MODE 1C | |
| CMP | | | | |
| | +02:00 | EDS AUTO - OFF<br>2 ENG OUT sw - OFF<br>LV RATES sw - OFF | | |
| CDR | | α/Pc IND sw - Pc | 1 | |
| | | LV RATE lt disabled as platform failure cue & limits changed to 9.2° in P&Y | | |
| | +02:10 | Report GO/NO GO for staging | | |
| | +02:15 | CECO (LV ENG 5 lt - on)<br>LIFT OFF lt - out (CECO +0.6 sec) | | Center engine cutoff. |

BOOST

| STA/T STEP | PROCEDURE | PANEL | REMARKS |
|---|---|---|---|
| CDR | | | |
| +02:42 | OECO (LV ENG 1, 2, 3 & 4 lts - on) | 1 | Outboard engine cutoff. |
| +02:43 | All eng lts - out<br>SII/SIVB staging capability armed (OECO +1.4 sec) | | S-IC/SII separation. |
| | xxxxxxxxxxxxxxxxxxxxxxxxxxxxxx<br>If early SII/SIVB staging req, LV STAGE - on (up)<br>xxxxxxxxxxxxxxxxxxxxxxxxxxxxxx | | |
| CMP | | 2 | Guarded. |
| | MODE 1C | | |
| CDR | | | |
| +02:44 | LV ENG 1, 2, 3, 4 & 5 lts - on<br>SII SEP lt - on | 1 | SII engine ignition.<br>SII 2nd plane separation circuitry armed. |
| +02:45 | All eng lts - out | | SII engines 65 percent rated thrust. |
| CMP | GLY EVAP STM AUTO - AUTO<br>GLY EVAP H2O FLOW - AUTO | 2 | |
| CDR | | | |
| +03:13 | SII SEP lt - out | 1 | SII interstage jettisoned. |
| CMP | | | |
| +03:18 | TWR JETT (both) - on (up) (TFF >1+20)<br>TWR JETT & MODE II report | 03:16<br>MODE II<br>2 | Guarded. On position is momentary. |
| | xxxxxxxxxxxxxxxxxxxxxxxxxxxxxx<br>No tower jett<br>Go to EMER PROCEDURES, 5.3.2.6<br>xxxxxxxxxxxxxxxxxxxxxxxxxxxxxx | | |



NORMAL/BACKUP

| STA/T STEP | PROCEDURE | PANEL | REMARKS |
|---|---|---|---|
| CMP | If LV GUID sw - CMC<br>Key V46E for man cont | 2 | Activates Saturn DAP; provides steering commands to the IU for booster control. These stick commands are discrete rate commands. Attitude error needles are not designed to provide meaningful "fly to" information in manual mode. |
| | | MODE II | |
| CDR | MAN ATT PITCH - RATE CMD | 1 | |
| +03:23 | LV guidance init<br>(OECO +41 sec) | | |
| +03:53 | Guidance good | | |
| +04:00 | Report status | | |
| LMP | | | |
| +05:00 | Report status | | |
| CMP | | | |
| +05:40 | Upstage capability to COI | | |
| +05:50 | SIVB to orb capability | | |
| CDR | | | |
| +06:00 | Report status | | |
| | LV IND/GPI sw - GPI | | |
| CMP | Mon main bus voltages<br>during gmbl mot start | 3 | |
| CDR | GMBL MOT (4) - START | 1 | START position is momentary. Start SPS gimbal motors sequentially at ≈1-second intervals to avoid power surge. |
| | LV IND/GPI sw - SII/SIVB | | |
| LMP | | | |
| +06:15 | If AZ <96°<br>S BD ANT OMNI - D | 3 | |
| | If AZ >96°<br>S BD ANT OMNI A - C | MODE II | |

| STA/T STEP | PROCEDURE | PANEL | REMARKS |
|---|---|---|---|
| | MODE II | | |
| CMP<br>+07:00 | Report status | | |
| +07:42 | CECO (LV ENG 5 lt - on) | 1 | SII center engine cutoff. |
| LMP<br>+08:00 | Report status | | |
| CDR<br>+09:00 | MODE IV report | | |
| | 09:00<br>MODE IV | | |
| +09:11 | OECO (LV ENG 1, 2, 3 & 4 lts - on) | | SII outboard engines cutoff. |
| +09:12 | All eng lts - out | | SII/SIVB separation. |
| | xxxxxxxxxxxxxxxxxxxxxxxxx<br>x x | | |
| | If no SII/SIVB staging | | |
| CMP | LV STAGE - on (up) | 2 | Guarded. |
| | x<br>xxxxxxxxxxxxxxxxxxxxxxxxx x | | |
| CDR<br>+09:13 | LV ENG 1 lt - on | 1 | SIVB ignition. |
| +09:16 | LV ENG 1 lt - out | | SIVB thrust to 65 percent. |
| CMP<br>+10:00 | Report/confirm COI<br>MODE IV | | Coast orbital insertion. |
| | 10:08<br>MODE III | | |
| +11:00 | Report status<br>If CMC takeover exercised during thrusting go to backup for SECO | | SIVB cutoff must be manually initiated at a TBD time calculated during the boost. |
| | MODE IV | | |



NORMAL BACKUP

| STA/T STEP | PROCEDURE | PANEL | REMARKS |
|---|---|---|---|
| CDR | | | |
| +11:29 | SECO | | SIVB engine cutoff (auto). |
| | LV ENG 1 lt - on | 1 | |
| CMP | Begin TB5 | | Time base 5. |
| | MODE IV | | |
| | xxxxxxxxxxxxxxxxxxxxxxxxx | | |
| +TBD | If late SECO | | |
| | or LV GUID sw - CMC | 2 | |
| | LV STAGE sw - on | | Guarded. |
| | (up) | | |
| | SECO | | |
| CDR | LV ENG 1 | 1 | |
| | lt - on | | |
| | Begin TB5 | | |
| | If still no SECO | | |
| | MODE III | | |
| | WARNING | | |
| | THC must be returned from CCW position before 3.0 sec or CSM SLA sep will occur. | | |
| | THC - CCW, return within 1 sec | | |
| | SECO | | |
| | LV ENG 1 lt - on | | |
| | Begin TB5 | | |
| | xxxxxxxxxxxxxxxxxxxxxxxxx | | |
| +11:39 | INSERTION | | |
| | INSERTION | | |

BOOST

| STA/T STEP | PROCEDURE | | PANEL | REMARKS |
|---|---|---|---|---|
| CMP | LV ENG 1 lt - out (SECO +10 sec) | | 1 | |
| | Rcd from DSKY | | 2 | |
| | VI | XXXXX. FPS | | VI = Inertial velocity. |
| | H dot | XXXXX. FPS | | H dot = Altitude rate. |
| | H pad | XXXX.X NM | | H pad = Altitude above pad radius. V82 should not be selected during P02 or P11 within 5 seconds of liftoff time (this applies to any extended verb which sets bit 1 of flagword 4). |
| | (R30, Orbital Parameters) | | | Displays orbital parameters (N44). A meaningful display of N32 and N50 is available only during R30. |
| | Key V82E | | | |
| | FL V16 N44 | | | |
| | Ha | XXXX.X NM | | Ha = Apogee altitude. |
| | Hp | XXXX.X NM | | Hp = Perigee altitude. |
| | TFF | XXBXX MIN-SEC | | TFF = Time of free fall to 49.4 NM (300,000 feet). |
| | Key N50E | | | |
| | Splash err | XXXX.X NM | | Negative for undershoot, positive for overshoot. |
| | Hp | XXXX.X NM | | |
| | TFF | XXBXX MIN-SEC | | |
| | KEY REL | | | |
| | FL V16 N44 | | | |
| | Ha | XXXX.X NM | | |
| | Hp | XXXX.X NM | | |
| | TFF | XXBXX MIN-SEC | | If TFF = -59B59, TF perigee is available by keying N32E. |
| | PRO | | | |



NORMAL/BACKUP

| STA/T | STEP | PROCEDURE | | PANEL | REMARKS |
|---|---|---|---|---|---|
| CMP | | V06 N62 | | 2 | |
| | | VI | XXXXX. FPS | | |
| | | H dot | XXXXX. FPS | | |
| | | H pad | XXXX.X NM | | |
| | | SAFE ORBIT | | | |
| | | Key V37E 00E | | | |

| STA/T | STEP | PROCEDURE | PANEL | REMARKS |
|---|---|---|---|---|
| | | 4.3.2 POSTORBITAL INSERTION CHECK | | |
| | | 4.3.2.1 Status Checklist | | |
| CDR | | GMBL MOT (4) - OFF | 1 | Shut off gimbal motors sequentially to avoid power surge. Setting No. 2 motors off first minimizes switching in servo logic. |
| LMP | | MN BUS TIE (2) - OFF | 5 | |
| CDR | | ΔV THRUST (2) - OFF (verify) | 1 | Guarded. |
| | | RHC PWR DIR (both) - OFF | | |
| | | ELS AUTO - MAN | | |
| | | CM RCS LOGIC - OFF | | |
| | | cb ELS (2) - open | 8 | |
| | | SECS PYRO ARM (2) - SAFE | | Lever lock. |
| | | SECS LOGIC (both) - OFF | | Lever lock. |
| | | cb SECS ARM (2) - open | | |
| | | AUTO RCS (16) - OFF | | |
| | | EDS PWR - OFF | 7 | |
| | | TVC SERVO PWR (both) - OFF | | |
| LMP | | PAN CAMR PWR - off (ctr) | 230 | |
| | | PCM BIT RATE - LO | 3 | |
| | | FC REAC VLVS - NORM | | Setting switch to NORM removes holding voltage from open side of FC reactant valves. |
| CMP | | UP TLM IU - as req | 2 | |
| | | SM RCS HTRS (4) - PRIM | | |
| | | C/W NORM - NORM | | |



NORMAL BACKUP

| STA/T | STEP | PROCEDURE | PANEL | REMARKS |
|---|---|---|---|---|
| | | WARNING<br><br>If BPC JETT knob cannot be positioned 180° away from the BPC JETT position before opening side hatch, a pin in the plunger may be sheared possibly allowing press seal to be broken. Cabin repressurization may not be possible due to overboard venting around the BPC plunger. | | |
| CMP | | BPC JETT knob - turn arrow on knob 180° away from BPC JETT decal<br>Actr handle sel - N (neut)<br>Vent piston chamber<br>GN2 handle - pull (inbd)<br>GN2 press ind - min | Side hatch | Disarms boost cover hatch release mechanism, preventing BPC JETT plunger from actuating during inflight operation of hatch. |
| ALL | | MODE (3) - as desired | 9,10,6 | |
| CMP | | Crew couch strut unlock lanyards (2) - stow<br>Couch to docking position<br>Rcd 2-1 data from grd<br>Lat_____ Long_____<br>GETI_____ ΔV_____ | | This data defines landing site and thrusting parameters for a first orbit, deorbit, and entry. |
| CDR | | Mon LV TK PRESS ind (4) from orb insertion to CSM/SIVB sep for the following limits<br>ΔP <36 psid (oxid > fuel)<br>ΔP <26 psid (fuel > oxid)<br>LV TK PRESS <50 psia | 1 | Refer to mission rules concerning SIVB fuel and oxidizer tank pressures. |

| STA/T | STEP | PROCEDURE | PANEL | REMARKS |
|---|---|---|---|---|
| | | 4.3.2.2 SCS Attitude Reference Comparison Check, 4.8.2.7 | | Check must be performed as near to orbit injection as possible to prevent additional drift in attitude reference systems. |
| | | 4.3.2.3 SCT/SXT Dust Cover Jett Procedure | | |
| | | WARNING<br>Until optics are to be used, the OPT ZERO (pnl 122), should be kept at ZERO to prevent inadvertent jett of optics covers. | | |
| CMP | 1 | OPT PWR - on (up) | 100 | |
| | | OPT ZERO - OFF | 122 | Optics zero switch to OFF enables function of OPT MODE and OPT SPEED switches. |
| | | OPT MODE - MAN | | |
| | | OPT COUPLING - DIR | | |
| | | OPT SPEED - HI | | |
| | 2 | OHC - max right | | Shaft angles for dust cover jettison are SCT = 150° and SXT = 40°. The optics shaft should be driven and maintained at full rate through these angles until covers are jettisoned. |
| | | Observe ejection thru optics | | |
| | | 4.3.2.4 ECS Postinsertion Configuration | | |
| | | Sec rad leak check | | |
| | | Mon SEC ACCUM QTY ind | 2 | |
| | | GLY TO RAD SEC vlv - NORM | 377 | Provides rapid postinsertion pressure integrity check of secondary radiator circuit - verification system has not opened during boost phase. This does not verify coolant loop heat rejection capability as defined in 4.5.4.2, step 7. |
| | | for 30 sec, then BYP | | |



NORMAL BACKUP

| STA/T | STEP | PROCEDURE | PANEL | REMARKS |
|---|---|---|---|---|
| CDR | | cb PL VENT FLT/PL - open | 8 | Prevents inadvertent opening of postlanding vent valves. |
| | | CAB PRESS RELF vlv (2) - NORM (safety latch on) | 325 | |
| LMP | | PRIM GLY EVAP STM PRESS ind - 0.09-0.14 psia | 2 | |
| | | PRIM GLY EVAP OUT TEMP ind - 38-43°F | | |
| | | Init rad flow | | Water-glycol flow through primary loop radiators to commence no sooner than T +30:00 or later than T +55:00. After 2-1/2 minutes of flow, radiator outlet temperature should be less than inlet temperature. |
| CDR | | GLY RSVR BYP vlv - OPEN | 326 | |
| | | GLY RSVR OUT vlv - CLOSE | | |
| | | GLY RSVR IN vlv - CLOSE | | |
| LMP | | PRIM ACCUM QTY ind - 25-50% | 2 | |
| CMP,LMP | | PRIM ACCUM FILL vlv - ON, until 50% is reached | 379,2 | Primary accumulator quantity reading must be increased by at least 5% to provide ullage in glycol reservoir for temperature excursion. |
| LMP | | RAD FLOW CONT PWR - PWR | 2 | |
| CDR | | PRIM GLY TO RAD - NORM | 325 | |
| LMP | | RAD PRIM HTR - 1 | 2 | |
| | | RAD PRIM OUT TEMP ind - below RAD PRIM IN TEMP ind | | |
| | | xxxxxxxxxxxxxxxxxxxxxxxxxxxxxxxxxxxxxxxx | | |
| | | Outlet temp > than inlet after 5 min | | |
| CDR | | PRIM GLY TO RAD - BYP (pull), recheck in 10 min | 325 | ECS primary loop radiators again isolated. In 10 minutes, flow through radiators is attempted once more by repeating procedure. |
| | | xxxxxxxxxxxxxxxxxxxxxxxxxxxxxxxxxxxxxxxx | | |

| STA/T | STEP | PROCEDURE | PANEL | REMARKS |
|---|---|---|---|---|
| CMP | | DRINK H2O SUP vlv - ON (CCW) | 304 | |
| LMP | | ECS RAD tb - gray | 2 | Gray indicates No. 1 flow proportioning valve controlling flow. |
| | | POT H2O HTR - MNA | | |
| | | GLY EVAP IN TEMP - AUTO | | |
| | | cb WASTE DUMP HTRS (2) - close | 5 | |
| CDR | | REPRESS PKG vlv - FILL for 10 sec, then OFF | 326 | |
| CMP | | REPRESS O2 PRESS ind - >865 psia | 602 | |
| | 4.3.2.5 | Systems Verification and Monitoring | | |
| | 1 | Mount ORDEAL BOX | 13 | |
| | | Perform ORDEAL Initialization, 4.8.4.8 | | |
| | 2 | Perform C&WS Oper Check, 4.5.5.1 | | |
| | 3 | Perform SM RCS Mon Check, 4.5.2.2 | | |
| | 4 | Perform CM RCS Mon Check, 4.5.2.3 | | |
| CMP, LMP | 5 | Perform EPS Checks, 4.5.3.1 thru 4.5.3.4 | | |
| | 6 | Perform ECS Mon Check, 4.5.4.1 | | |
| LMP | 7 | Perform SPS Mon Check, 4.5.2.1 | | |
| | 8 | cb FC REACS (3) - open (verify) | 226 | |
| | | cb COAS/TUNL LTG MNB - close | | Provides power for right COAS six tunnel lights, and docking spotlight door indicator. |



NORMAL BACKUP

| STA/T | STEP | PROCEDURE | PANEL | REMARKS |
|---|---|---|---|---|
| | | 4.3.2.6 Cabin Atmosphere Verification | | |
| LMP | 1 | CAB PRESS ind - 5.6-6.2 psia & decr | 2 | Cabin pressure will be 5.6-6.2 psia after launch and continuously decrease until cabin pressure regulator activates and controls pressure to 4.7-5.3 psia. |
| CDR | 2 | DIRECT 02 vlv - close (CW) | 7 | |
| LMP | 3 | 02 FLOW ind - 0.2 lb/hr | 2 | |
| CMP | 4 | EMER CAB PRESS sel - BOTH | 351 | |
| | 5 | SUIT RETURN vlv - open (pull) | 380 | |
| ALL | 6 | Gloves & helmet removed | | |
| CMP | 7 | When CAB PRESS ind <5.3 psia<br>02 FLOW ind - 1.0 lb/hr<br>02 FLOW HI lt - on | 2 | |
| ALL | | MASTER ALARM pb/lt - on, push | 1,3,122 | After 16-second time delay. |
| | | CAUTION<br><br>Opening cb ECS PRESS XDUCER 2 MNB to extinguish 02 FLOW HI lt is a crew option. If exercised, the following redundant functions will be lost.<br><br>CO2 PP ind & C/W circuit<br>CAB PRESS ind<br>02 reg out press (PCM only)<br>GLY EVAP STM PRESS ind<br>02 FLOW ind | | |

| STA/T | STEP | PROCEDURE | PANEL | REMARKS |
|---|---|---|---|---|
| LMP | 8 | cb ECS PRESS XDUCER 2 MNB - open | 5 | |
| | 9 | 60/40 cab purge complete at 8 hrs after LM isolation following transposition & docking. For 24 hrs after LM isolation following T & D, LM press will be monitored at ≈8-hr intervals using tunl vent vlv in the LM/CM ΔP position. At 24 hrs after LM isolation, it will be determined if a Δ cabin purge is req & the length of this purge. | | |
| CMP | | WASTE STOW vlv - CLOSE | 252 | |
| LMP | | cb ECS PRESS XDUCER 2 MNB - close | 5 | |
| | | 02 FLOW HI lt - out | 2 | |



NORMAL BACKUP

| STA/T | STEP | PROCEDURE | PANEL | REMARKS |
|---|---|---|---|---|
| | | 4.4 INJECTIONS | | |
| | | 4.4.1 TRANSLUNAR INJECTION (TLI) | | |
| | | 4.4.1.1 Thrusting Preparation | | |
| | | CMC - on (req), 4.8.1.3<br>ISS - on and orient known (req), 4.8.1.3 & 4.14<br>SCS - on (req), 4.8.4.2<br>DAP - load & activate (desired), 4.8.2.1<br>Comm Mode - as desired | | Circuit breakers assumed closed except as defined in LIMITED USE CIRCUIT BREAKER list, 4.5.1.2. Alignment to pad orientation unless discrepancy between SIVB IU data and CSM G/N data. |
| CMP | 1 | XLUNAR INJECT - INJECT (verify)<br>If TLI inhibit desired<br>XLUNAR INJECT - SAFE | 2 | TLI inhibit at this point will prevent start of Time Base 6 (TB6). |
| | 2 | If SIVB att cont desired, perform 4.7.1.7 | | SIVB attitude control not affected by TLI inhibit signal. |
| | 3 | Receive IU grd update - _____<br>UP TLM IU - as req | | |
| | 4 | If req, IMU Realign (P52), 4.14.2 | | |
| CDR | 5 | LM Docking Sys Probe Extension & Stat Check<br>Extd probe<br>cb DOCK PROBE (2) - close (verify) | 8 | |



NORMAL BACKG

| STA/T STEP | PROCEDURE | PANEL | REMARKS |
|---|---|---|---|
| | CAUTION<br><br>PROBE EXTD/REL should not be held in EXTD/REL position longer than 20 sec if probe has not extended. Capability of capture latch rel mots may be degraded. | | |
| CMP | PROBE EXTD/REL - EXTD/REL & hold until probe fully extd<br>PROBE EXTD/REL tb (2) - gray to bp to gray<br>PROBE RETR (2) - OFF (verify) | 2 | Momentary up and guarded. Probe extended by compression spring and attenuator airhead forces. Crew should readily sense by auditory cues that probe has extended when probe bangs against stops. May not see talkbacks go to barber pole because of rapid motion of probe. Barber pole indicates power to talkback through probe circuitry. Return to gray indicates full extension of probe. |
| | PROBE EXTD/REL - RETR | | Guarded. |
| | PROBE EXTD/REL tb (2) - gray (verify) | | Verifies capture latches not locked and probe has started to extend. |

| PROBE POSITION | PROBE EXTD/REL sw & tb positions | |
|---|---|---|
| | EXTD/REL | RETR |
| FULL EXTD | gray | gray |
| FULL RETR | bp | bp |
| PARTIAL EXTD | bp | gray |

| STA/T | STEP | PROCEDURE | PANEL | REMARKS |
|---|---|---|---|---|
| | 6 | Perform Att Err Disp - Att Set Source, 4.7.2.4 | | |
| CDR | | FDAI/GPI PWR - BOTH | 7 | |
| | 7 | Perform EMS ΔV Test & Null Bias Check, 4.7.6.1, & EMS ΔV Setup, 4.7.6.2 | | |
| | 8 | Set up for CSM/SIVB sep capability | | This step is essentially a return to G&C lift-off configuration for an abort capability. |
| | | Verify/set controls | | |
| CDR,CMP | | RHC (both) - ARM | | |
| CDR | | cb SECS ARM (2) - close | 8 | |
| | | After MSFN AOS | | |
| | | SECS LOGIC (both) - on (up) | | Lever lock. |
| | | Report logic arm after GO from MSFN | | |
| | | SECS PYRO ARM (2) - on (up) | | Lever lock. |
| | | EDS PWR - on (up) | 7 | |
| CMP | | BMAG TEMP lt (2) - out | 2 | |
| CDR | | BMAG PWR (both) - ON | 7 | |
| | | FDAI SCALE - 5/5 | 1 | |
| | | FDAI SEL - 1/2 | | |
| | | THC PWR - on (up) | | |
| | | RHC PWR NORM (both) - AC/DC | | |
| | | RHC PWR DIR (both) - MNA/MNB | | |
| | | BMAG MODE (3) - RATE 1 | | |
| | | SC CONT - SCS | | |
| | | AUTO RCS A/C ROLL (4) - OFF | 8 | |
| | | AUTO RCS B/D ROLL (4) - MNA | | |
| | | AUTO RCS PITCH (4) - MNA | | |
| | | AUTO RCS YAW (4) - MNA | | |
| | | LV IND/GPI sw - SII/SIVB (verify) | | |
| CMP | | LV GUID sw - IU | 2 | |

| STA/T STEP | PROCEDURE | PANEL | REMARKS |
|---|---|---|---|
| CMP | UP TLM CM - BLOCK | 2 | |
| | UP TLM IU - as req | | |
| CDR | Monitor LV TK PRESS ind (4) | 1 | |
| | ΔP <36 psid (oxid > fuel) | | Refer to mission rules concerning SIVB fuel and oxidizer tank pressure. |
| | ΔP <26 psid (fuel > oxid) | | |
| | LV TK PRESS <50 psia | | |
| | xxxxxxxxxxxxxxxxxxxxxxxxxxxxxxxxxxx | | |
| | If ΔP or LV tank press exceeded | | |
| | TVC SERVO PWR 1 - AC1/MNA | 7 | |
| | TVC SERVO PWR 2 - AC2/MNB | | |
| 00:00 | THC - CCW (4 sec) | | CSM/LV separation. |
| LMP | MN BUS TIE (2) - on (up) | 5 | |
| CDR | BMAG MODE (3) - ATT 1/RATE 2 | 1 | |
| | GMBL MOT P1 & Y1 - START | | START position is momentary. Start SPS gimbal motors sequentially at ≈1-second intervals to avoid power surge. |
| | GMBL MOT P2 & Y2 - START | | |
| 00:04 | THC - neut & +X | | |
| | ΔV THRUST A - NORM | | |
| 00:06 | THRUST ON pb - push | | SPS ignition. |
| | THC - rel (+X off) | | |
| 00:11 | ΔV THRUST A - OFF | | Guarded. |
| | xxxxxxxxxxxxxxxxxxxxxxxxxxxxxxxxxxx | | |
| +02:37:42 | | | |
| | Monitor for SIVB TB6 | | TB6 may begin after GET 02:34:00. |
| CMP | TB6 strt via CMC | | |
| | V37E 15E | 2 | Configures CMC for TB6 initiation backup. |

| STA/T STEP | PROCEDURE | PANEL | REMARKS |
|---|---|---|---|
| CMP | FL V16 N35 | 2 | |
| | Time to evnt 00XXX. HRS<br>000XX. MIN<br>0XX.XX SEC | | Time from now to TB6 initiation. Display negative and counts to zero. |
| | EVNT TMR START - STOP<br>Set evnt tmr to 50:59 | | Prepares Event Timer to count up. |
| | SII SEP lt - on (TIG -9 min 38 sec)<br>UPLINK ACTY lt - on | | Indicates start of TB6.<br>Indicates CMC TB6 initiation discrete set. |
| | xxxxxxxxxxxxxxxxxxxx<br>x x<br>SII SEP lt not on<br>LV GUID - CMC<br>SII SEP lt - on<br>x x<br>xxxxxxxxxxxxxxxxxxxx | | Applies CMC TB6 discrete to IU. |
| | FL V16 N35<br>Time from evnt 00XXX. HRS<br>000XX. MIN<br>0XX.XX SEL | | Display positive and counts from zero. |
| | UPLINK ACTY lt - out<br>FL V37<br>Key XXE | | Goes out when N35 = 10 seconds.<br>R00. |
| | If TLI inhibit desired<br>XLUNAR INJECT - SAFE | | If switching is done between start of TB6 and TB6 +41 seconds. Switching after TB6 +41 seconds will be honored at TB6 +8 minutes 17 seconds. Inhibiting will cause recycle back into TB5 for countdown to point of second opportunity. |



NORMAL/BACKUP

| STA/T | STEP | PROCEDURE | PANEL | REMARKS |
|---|---|---|---|---|
| | | CAUTION<br>If emer CSM/SIVB sep desired after strt of TB6, without restrt of SIVB, XLUNAR INJECT sw must be in SAFE & read by the LVDC at either TB6 +41 sec or at anytime from TB6 +8 min 17 sec to TB6 +9 min 20 sec before physical CSM/SIVB sep. | | State of XLUNAR INJECT switch automatically transfers from SAFE to INJECT at CSM/SIVB separation. |
| CDR<br>50:59 | | SII SEP lt - out (TIG -9 min 1 sec)<br>EVNT TMR START - START | 1 | |
| | 9 | Perform GDC ALIGN, 4.7.3<br>Perform Cryo 02 & H2 Man Fan Oper, 4.5.3.10 | | |
| LMP | | PCM BIT RATE - HI<br>TAPE RCDR FWD - FWD<br>UP TLM CMD - RSET | 3 | |
| 58:00<br>CMP | 10 | Key V37E 47E (thrust mon) | 2 | |
| | | Poss PROG alarm (4.8.1.16) | | R02. |
| | | FL V16 N83<br>ΔVX, Y, Z (cont) XXXX.X FPS<br><br>Key N62E<br>VI XXXXX. FPS<br>H dot XXXXX. FPS<br>H pad XXXX.X NM | | |

| STA/T | STEP | PROCEDURE | PANEL | REMARKS |
|---|---|---|---|---|
| CDR | | | | |
| 58:36 | | SII SEP lt - on (TIG -1 min 24 sec) | 1 | |
| 58:38 | | SIVB ullage begins (TIG -1 min 22 sec) | | |
| | | WARNING<br>TLI inhibit signals will not be honored after 59:42 (TB6 +9 min 20 sec). | | |
| 59:16 | | If TLI inhibit desired | | |
| CMP | | XLUNAR INJECT - SAFE | 2 | TLI inhibit signals received between TB6 +8 minutes 17 seconds and TB6 +9 minutes 20 seconds will be honored ≈1 second after receipt. If inhibit signal received during this time, recycle back into TB5 will occur and countdown to point of second opportunity will commence. |
| | 11 | Activate TVC | | |
| CDR | | TVC SERVO PWR 1 - AC1/MNA | 7 | |
| 59:42 | | SII SEP lt - out (TIG -18 sec) | 1 | SII SEP light off at this point indicates 18 seconds from SIVB restart. TLI inhibit is ignored from this point on. |
| | | WARNING<br>If emer CSM/SIVB sep is performed after SII SEP lt - out (59:42), TB6 will continue to run with SIVB restrt occurring at 00:00. | | |
| ALL | 12 | Ready for TLI | | |



NORMAL/BACKUP

| STA/T | STEP | PROCEDURE | PANEL | REMARKS |
|---|---|---|---|---|
| CDR | 13 | EMS MODE - NORM | 1 | |
| 59:52 | | SIVB fuel lead | | |
| 59:55 | | SIVB ullage discontinues | | |
| 59:59 | | LV ENG 1 lt - on | | |
| | | 4.4.1.2 TLI Thrusting | | |
| 00:00 | | SIVB restrt (TB6 +9 min 38 sec) | | SIVB engine ignition. |
| 00:02 | | LV ENG 1 lt - out<br>Mon SIVB burn<br>LV TK PRESS ind (4)<br>ΔP <36 psid (oxid > fuel)<br>ΔP <26 psid (fuel > oxid) | | SIVB engine 65 percent rated thrust. |
| | | If CMC takeover exercised during thrusting, go to backup for SECO | | SIVB engine cutoff must be manually initiated at a TBD time calculated during boost. |
| 05:45 | | Mon SECO<br>LV ENG 1 lt - on<br>Report cutoff | | SIVB engine cutoff. TB7 begins. |
| | | xxxxxxxxxxxxxxxxxxxxxxxxxxxxxxxxxxxxxx | | |
| | | If late SECO<br>or LV GUID sw - CMC<br>LV STAGE sw - on (up)<br>SECO<br>LV ENG 1 lt - on<br>Report cutoff | | Guarded. |

| STA/T | STEP | PROCEDURE | PANEL | REMARKS |
|---|---|---|---|---|
| CDR | | If still no SECO | | |
| | | WARNING | | |
| | | THC must be returned from CCW position before 3.0 sec or CSM SLA sep will occur. | | |
| | | THC - CCW, return within 1 sec<br>SECO<br>LV ENG 1 lt - on<br>Report cutoff | 1 | |
| | | xxxxxxxxxxxxxxxxxxxxxxxxxxxxxxxxxxxxxxx | | |
| 05:55 | | LV ENG 1 lt - out (SECO +10 sec) | | |
| | 4.4.1.3 | Post-TLI Activities | | |
| | 1 | EMS MODE - STBY | | |
| CMP | 2 | Record ΔV | | |
| CDR | 3 | EMS FUNC - OFF | | |
| LMP | 4 | TAPE RCDR FWD - off (ctr)<br>PCM BIT RATE - LO | 3 | |
| | 5 | Check orb param (R30) | | |
| CMP | | Key V82E | 2 | |



NORMAL/BACKUP

| STA/T | STEP | PROCEDURE | | PANEL | REMARKS |
|---|---|---|---|---|---|
| CMP | | FL V16 N44 | | 2 | |
| | | Ha | XXXX.X NM | | Altitude above launch pad radius. |
| | | Hp | XXXX.X NM | | |
| | | TFF | XXBXX MIN-SEC | | TFF = Time of free fall to 49.4 NM (300,000 ft) above launch pad radius. |
| | | PRO (exit R30) | | | |
| | 6 | FL V16 N83 | | | P47 display. |
| | | ΔVX, Y, Z (cont) | XXXX.X FPS | | |
| | | PRO | | | |
| | | FL V37 | | | To exit P47 when desired. |
| | | Key XXE | | | |
| | 7 | Perform Postorb Insertion Status Checklist, 4.3.2.1 | | | |
| | 8 | Pan & Map Camr Stby Mode off | | | |
| LMP | | PAN CAMR PWR - off (ctr) | | 230 | |
| | | MAP CAMR ON - OFF | | | |
| CMP | | SM/AC PWR - OFF | | 181 | |

| STA/T STEP | PROCEDURE | PANEL | REMARKS |
|---|---|---|---|
| | 4.4.2 LUNAR ORBIT INSERTION (LOI)<br><br>For LOI go to Thrusting, 4.13<br><br>4.4.3 TRANSEARTH INJECTION (TEI)<br><br>For TEI go to Thrusting, 4.13 | | |



NORMAL BACKUP

## 4.5 SYSTEMS MANAGEMENT

Systems management is a compilation of data and procedures that are common to more than one mission phase. The procedures involve system monitoring, periodic checks, and unique functions of the following systems only: SPS, RCS, EPS, ECS, C&WS, T/C and Mechanical. Systems integrated procedures for prelaunch through postlanding phases will repeatedly reference material contained in systems management.

### 4.5.1 GENERAL DATA

This paragraph contains information of a general nature that closely relates with Systems Management procedures.

#### 4.5.1.1 Systems Test Indicator Readouts

A SYS TEST indicator and two selector switches (panel 101) provide the crew with the capability of monitoring some systems measurements telemetered to MSFN. A chart (figure 4.5-1) for converting the SYS TEST indicator readings to measurement parameters is included in this paragraph. Measurements consist of the following:

- Fuel cells 1, 2, and 3 regulated O2 and H2 pressures
- Fuel cells 1, 2, and 3 radiator outlet temperatures
- O2 and H2 tank 3 quantities and pressures
- Battery compartment manifold pressure
- Battery relay bus voltage
- CSM to LM current
- SPS oxidizer line temperature
- CM/RCS jet injector temperature
- Rendezvous radar transponder voltages and frequency lockup.

The systems test indicator conversion chart (figure 4.5-1) lists positions of the SYS TEST switches (2), and pertinent data available for each indicator readout.



NORMAL/BACKUP

## 4.5 SYSTEMS MANAGEMENT

Systems management is a compilation of data and procedures that are common to more than one mission phase. The procedures involve system monitoring, periodic checks, and unique functions of the following systems only: SPS, RCS, EPS, ECS, C&WS, T/C and Mechanical. Systems integrated procedures for prelaunch through postlanding phases will repeatedly reference material contained in systems management.

### 4.5.1 GENERAL DATA

This paragraph contains information of a general nature that closely relates with Systems Management procedures.

#### 4.5.1.1 Systems Test Indicator Readouts

A SYS TEST indicator and two selector switches (panel 101) provide the crew with the capability of monitoring some systems measurements telemetered to MSFN. A chart (figure 4.5-1) for converting the SYS TEST indicator readings to measurement parameters is included in this paragraph. Measurements consist of the following:

- Fuel cells 1, 2, and 3 regulated N2, O2, and H2 pressures
- Fuel cells 1, 2, and 3 radiator outlet temperatures
- O2 and H2 tank 3 quantities and pressures
- Battery compartment manifold pressure
- Battery relay bus voltage
- CSM to LM current
- SPS oxidizer line temperature
- CM/RCS jet injector temperature
- Rendezvous radar transponder voltages and frequency lockup.

The systems test indicator conversion chart (figure 4.5-1) lists positions of the SYS TEST switches (2), and pertinent data available for each indicator readout.

| SYS TEST Sel Sw (2) Position | SYS TEST Ind | | | | |
|---|---|---|---|---|---|
| | System | | | Nominal Range | |
| | Function | Measurement No. | Sensor Range | System | Display (volts) |
| 1D | FC 1 02 REG PRESS | SC 2066 P | Zero/75 psia | 58 - 69 psia | 3.9 - 4.6 |
| 2A | FC 2 02 REG PRESS | SC 2067 P | Zero/75 psia | 58 - 69 psia | 3.9 - 4.6 |
| 2B | FC 3 02 REG PRESS | SC 2068 P | Zero/75 psia | 58 - 69 psia | 3.9 - 4.6 |
| 2C | FC 1 H2 REG PRESS | SC 2069 P | Zero/75 psia | 57 - 67 psia | 3.8 - 4.5 |
| 2D | FC 2 H2 REG PRESS | SC 2070 P | Zero/75 psia | 57 - 67 psia | 3.8 - 4.5 |
| 3A | FC 3 H2 REG PRESS | SC 2071 P | Zero/75 psia | 57 - 67 psia | 3.8 - 4.5 |
| 3B | FC 1 RAD OUT TEMP | SC 2087 T | -50/+300°F | -10 - +90°F | 0.6 - 2.0 |
| 3C | FC 2 RAD OUT TEMP | SC 2088 T | -50/+300°F | -10 - +90°F | 0.6 - 2.0 |
| 3D | FC 3 RAD OUT TEMP | SC 2089 T | -50/+300°F | -10 - +90°F | 0.6 - 2.0 |
| 4A | 02 TK 3 QTY | SC 0051 Q | Zero/100% | 0 - 100% | 0.0 - 5.0 |
| 4B | 02 TK 3 PRESS | SC 0053 P | 50 - 1050 psia | 865 - 935 psia | 4.1 - 4.4 |
| 4C | H2 TK 3 QTY | SC 0050 Q | Zero/100% | 0 - 100% | 0.0 - 5.0 |
| 4D | H2 TK 3 PRESS | SC 0052 P | Zero/350 psia | 225 - 265 psia | 3.2 - 3.8 |
| 5A | SPS OXID LINE TEMP | SP 0049 T | Zero/+200°F | +45 - +75°F | 1.1 - 1.9 |

Figure 4.5-1. Systems Test Indicator Conversion Chart (Sheet 1 of 3)

| SYS TEST Sel Sw (2) Position | SYS TEST Ind | | | | |
|---|---|---|---|---|---|
| | System | | | Nominal Range | |
| | Function | Measurement No. | Sensor Range | System | Display (volts) |
| 1A | FC 1 N2 REG PRESS | SC 2060 P | Zero/75 psia | 50 - 58 psia | 3.3 - 3.9 |
| 1B | FC 2 N2 REG PRESS | SC 2061 P | Zero/75 psia | 50 - 58 psia | 3.3 - 3.9 |
| 1C | FC 3 N2 REG PRESS | SC 2062 P | Zero/75 psia | 50 - 58 psia | 3.3 - 3.9 |
| 1D | FC 1 02 REG PRESS | SC 2066 P | Zero/75 psia | 58 - 69 psia | 3.9 - 4.6 |
| 2A | FC 2 02 REG PRESS | SC 2067 P | Zero/75 psia | 58 - 69 psia | 3.9 - 4.6 |
| 2B | FC 3 02 REG PRESS | SC 2068 P | Zero/75 psia | 58 - 69 psia | 3.9 - 4.6 |
| 2C | FC 1 H2 REG PRESS | SC 2069 P | Zero/75 psia | 57 - 67 psia | 3.8 - 4.5 |
| 2D | FC 2 H2 REG PRESS | SC 2070 P | Zero/75 psia | 57 - 67 psia | 3.8 - 4.5 |
| 3A | FC 3 H2 REG PRESS | SC 2071 P | Zero/75 psia | 57 - 67 psia | 3.8 - 4.5 |
| 3B | FC 1 RAD OUT TEMP | SC 2087 T | -50/+300°F | -10 - +90°F | 0.6 - 2.0 |
| 3C | FC 2 RAD OUT TEMP | SC 2088 T | -50/+300°F | -10 - +90°F | 0.6 - 2.0 |
| 3D | FC 3 RAD OUT TEMP | SC 2089 T | -50/+300°F | -10 - +90°F | 0.6 - 2.0 |
| 4A | 02 TK 3 QTY | SC 0051 Q | Zero/100% | 0 - 100% | 0.0 - 5.0 |
| 4B | 02 TK 3 PRESS | SC 0053 P | 50 - 1050 psia | 865 - 935 psia | 4.1 - 4.4 |
| 4C | H2 TK 3 QTY | SC 0050 Q | Zero/100% | 0 - 100% | 0.0 - 5.0 |
| 4D | H2 TK 3 PRESS | SC 0052 P | Zero/350 psia | 225 - 265 psia | 3.2 - 3.8 |
| 5A | SPS OXID LINE TEMP | SP 0049 T | Zero/+200°F | +45 - +75°F | 1.1 - 1.9 |

Figure 4.5-1. Systems Test Indicator Conversion Chart (Sheet 1 of 3)

| SYS TEST Sel Sw (2) Position | SYS TEST Ind | | | | |
|---|---|---|---|---|---|
| | System | | | Nominal Range | |
| | Function | Measurement No. | Sensor Range | System | Display (volts) |
| 5B | BAT RLY BUS VOLT | CC 0232 V | Zero/+45 vdc | 30.5-37 vdc | 3.4 - 4.1 |
| 5C | CM RCS INJ TEMP 24 | CR 2110 T | -50/+50°F | >28°F | >3.9 |
| 5D | CM RCS INJ TEMP 25 | CR 2116 T | -50/+50°F | >28°F | >3.9 |
| 6A | CM RCS INJ TEMP 12 | CR 2114 T | -50/+50°F | >28°F | >3.9 |
| 6B | CM RCS INJ TEMP 14 | CR 2100 T | -50/+50°F | >28°F | >3.9 |
| 6C | CM RCS INJ TEMP 16 | CR 2103 T | -50/+50°F | >28°F | >3.9 |
| 6D | CM RCS INJ TEMP 21 | CR 2119 T | -50/+50°F | >28°F | >3.9 |
| 7A | BAT COMPT PRESS | CC 0188 P | Zero/20 psia | <1 psia | <0.2 |
| 7D | CSM TO LM CURRENT | CC 2962 C | Zero/10 amps | 1.0-6.4 amp | 0.5 - 3.2 |
| XPNDR A | PWR OUTPUT | ST 0711 V | 0 - 0.48W | >0.24W | >1.0 |
| XPNDR B | AGC SIGNAL | ST 0710 V | STIMULUS<br>-115 -25 DBM | TEST<br>OPERATE | >1.0<br>0.0 - 4.5 |
| XPNDR C | PHASE LOCKUP | ST 0712 X | 4.0 - 5.0V<br>0.0 - 0.8V | LOCKED<br>UNLOCKED | >4.0<br><0.8 |
| XPNDR D | OPEN | NONE | | | |

Figure 4.5-1. Systems Test Indicator Conversion Chart (Sheet 2 of 3)

| SYS TEST Ind Display | N2*, 02, H2 Press (psia) | EPS Rad Out Temp (°F) | 02, H2 Tk 3 Qty (%) | 02 Tk 3 Press (psia) | H2 Tk 3 Press (psia) | SPS Oxid Line Temp (°F) | Bat Rly Bus (vdc) | CM RCS Inj Temp (°F) | Bat Compt Manf Press (psia) | LM Power (amps) |
|---|---|---|---|---|---|---|---|---|---|---|
| 0.0 | 0 | -50 | 0 | 50 | 0 | 0 | 0.0 | -50 | 0.0 | 0.0 |
| 0.2 | 3 | -36 | 4 | 90 | 14 | 8 | 1.8 | -46 | 0.8 | 0.4 |
| 0.4 | 6 | -22 | 8 | 130 | 28 | 16 | 3.6 | -42 | 1.6 | 0.8 |
| 0.6 | 9 | -8 | 12 | 170 | 42 | 24 | 5.4 | -38 | 2.4 | 1.2 |
| 0.8 | 12 | +6 | 16 | 210 | 56 | 32 | 7.2 | -34 | 3.2 | 1.6 |
| 1.0 | 15 | +20 | 20 | 250 | 70 | 40 | 9.0 | -30 | 4.0 | 2.0 |
| 1.2 | 18 | +34 | 24 | 290 | 84 | 48 | 10.8 | -26 | 4.8 | 2.4 |
| 1.4 | 21 | +48 | 28 | 330 | 98 | 56 | 12.6 | -22 | 5.6 | 2.8 |
| 1.6 | 24 | +62 | 32 | 370 | 112 | 64 | 14.4 | -18 | 6.4 | 3.2 |
| 1.8 | 27 | +76 | 36 | 410 | 126 | 72 | 16.2 | -14 | 7.2 | 3.6 |
| 2.0 | 30 | +90 | 40 | 450 | 140 | 80 | 18.0 | -10 | 8.0 | 4.0 |
| 2.2 | 33 | +104 | 44 | 490 | 154 | 88 | 19.8 | -6 | 8.8 | 4.4 |
| 2.4 | 36 | +118 | 48 | 530 | 168 | 96 | 21.6 | -2 | 9.6 | 4.8 |
| 2.6 | 39 | +132 | 52 | 570 | 182 | 104 | 23.4 | +2 | 10.4 | 5.2 |
| 2.8 | 42 | +146 | 56 | 610 | 196 | 112 | 25.2 | +6 | 11.2 | 5.6 |
| 3.0 | 45 | +160 | 60 | 650 | 210 | 120 | 27.0 | +10 | 12.0 | 6.0 |
| 3.2 | 48 | +174 | 64 | 690 | 224 | 128 | 28.8 | +14 | 12.8 | 6.4 |
| 3.4 | 51 | +188 | 68 | 730 | 238 | 136 | 30.6 | +18 | 13.6 | 6.8 |
| 3.6 | 54 | +202 | 72 | 770 | 252 | 144 | 32.4 | +22 | 14.4 | 7.2 |
| 3.8 | 57 | +216 | 76 | 810 | 266 | 152 | 34.2 | +26 | 15.2 | 7.6 |
| 4.0 | 60 | +230 | 80 | 850 | 280 | 160 | 36.0 | +30 | 16.0 | 8.0 |
| 4.2 | 63 | +244 | 84 | 890 | 294 | 168 | 37.8 | +34 | 16.8 | 8.4 |
| 4.4 | 66 | +258 | 88 | 930 | 308 | 176 | 39.6 | +38 | 17.6 | 8.8 |
| 4.6 | 69 | +272 | 92 | 970 | 322 | 184 | 41.4 | +42 | 18.4 | 9.2 |
| 4.8 | 72 | +286 | 96 | 1010 | 336 | 192 | 43.2 | +46 | 19.2 | 9.6 |
| 5.0 | 75 | +300 | 100 | 1050 | 350 | 200 | 45.0 | +50 | 20.0 | 10.0 |

*N2 measurements not applicable to CSM 112.

Figure 4.5-1. Systems Test Indicator Conversion Chart (Sheet 3 of 3)

4.5.1.2 Limited Use Circuit Breakers

The following list defines circuit breakers which will be open during major portions of flight time. Primary considerations are to maintain maximum crew safety, reduce consumable usage, and increase equipment reliability.

| Circuit Breakers | Panel Location | When Opened | When Closed | Remarks |
|---|---|---|---|---|
| NONESS INST | 5 | Prelaunch | When required | No requirements are defined for use of this circuit breaker at the present time. |
| RAD HTRS OVLD (2) | 5 | CM/SM separation | Prelaunch | If opened in flight, do not reset unless batteries are tied to main buses. This prevents possible disconnect of ECS radiator heaters by a false overload signal. |
| FLOAT BAG (all) | 8 | Prelaunch | After splashdown | Opened to ensure against inadvertent activation of float bag compressors and sea dye marker. |
| CM RCS HTRS (both) | 8 | Prelaunch | Prior to deorbit and entry if heating required | Opened to ensure against inadvertent CM RCS jet activation. Heating probably not required. |
| ELS/CM SM SEP (2) | 8 | Postorbital insertion check | Prior to deorbit and entry | Opened to isolate ELS and CM SM SEP function until needed. |
| PL VENT FLT/PL | 8 | Postorbital insertion check | After splashdown | Opened to ensure against inadvertent activation of postlanding vents. |



NORMAL/BACKUP

| Circuit Breakers | Panel Location | When Opened | When Closed | Remarks |
|---|---|---|---|---|
| SECS ARM (2) | 8 | Postorbital insertion check | During prelaunch, launch, docking, deorbit and entry procedures | Opened to ensure against inadvertent activation of SECS functions. |
| RCS LOGIC (2) | 8 | Post S-IVB separation check | During prelaunch, launch, deorbit, and entry procedures | Opened to ensure against inadvertent CM/SM RCS transfer and/or CM RCS activation. |
| EDS (all) | 8 | Post separation panel configuration (CSM/SLA separation) | Prelaunch | No further use after CSM/SLA separation. |
| SPS PITCH 1 BAT A | 8 | When SCS powered down after first SPS thrust | From launch through first SPS thrust and during subsequent SPS thrusts | Opened to prevent power drain through SCS TVC fail sensor. |
| SPS YAW 1 BAT A | 8 | When SCS powered down after first SPS thrust | From launch through first SPS thrust and during subsequent SPS thrusts | Opened to prevent power drain through SCS TVC fail sensor. |
| FC REACS (all) | 226 | Prelaunch after FC startup | Only when required to shut down fuel cell | Opened to ensure against inadvertent fuel cell shutdown. |
| FC RAD (all) | 226 | Prelaunch | Only when required to activate FC radiator bypass function | Bypass is only used in event of fuel cell failure. |
| MN REL (2) | 229 | Prelaunch | Only after splashdown | Opened to prevent premature main parachute release. |

| Circuit Breakers | Panel Location | When Opened | When Closed | Remarks |
|---|---|---|---|---|
| 02 VAC ION PUMPS (2) | 229 | Prelaunch | When required | No requirements are defined for use of these circuit breakers at the present time. |
| PYRO A&B BAT BUS A&B (2) | 250 | Prelaunch | Only when required, if pyro bats indicate <35 vdc during bat check | Connects battery buses to pyro buses in event of pyro battery(s) failure. |
| BAT C TO BAT BUS A&B (2) | 250 | Prelaunch | When required to connect bat C to bat bus A or B | Connected when battery C is used to back up failed battery A or B. |
| MN A&B BAT C (2) | 275 | Prelaunch | Prior to deorbit and as required for bat A or B backup | Opened to isolate battery C from main buses. |
| FLT/PL BAT BUS A&B & BAT C (3) | 275 | Prelaunch | Prior to splashdown | Opened to isolate battery bus A & B and battery C from flight and post-landing bus. |
| UPR SYS COMPR (both) | 278 | Prelaunch | After splashdown | Opened to ensure against inadvertent activation of float bag compressors. |
| SIVB/LM SEP (2) | 278 | Following LM extraction | Prelaunch | No further use after LM is extracted from SIVB. |

## 4.5.1.3 Non-Dioded/Non-Switchable Loads

### MAIN BUS A

EPS/CRYO
- Tk 1 H2 & 02 Htrs
- Inv 1 Pwr
- Util Outlets (pnl 15 & 16)
- Tk 1 02 Vac-Ion Pump

ECS
- CO2 PP ind C/W lt & PCM
- Prim 2 Rad Htr Cont
- Rad Flow Contr 1 & Auto Sel
- Rad Isol vlv Man Sel
- H20 Accum 1 Auto & Man Cont
- Urine & Waste H20 Dump Htr A
- Steam Duct Htr A
- Sec Rad Htr Cont
- Sec Rad In & Out Temp ind & PCM

RCS
- CM Sys 1 Htrs
- CM Sys 1 Fuel & Oxid Purge
- CM Oxid Interconnect
- CM Fuel/He Interconnect
- CM Sys 1 Prplnt Dump 42 Sec TD
- CM Sys 1 Prplnt Isol vlv & tb
- SM B & D Htrs
- SM B & D He 1 & 2 Isol vlv & tb
- SM B & D Prim/Sec Prplnt Isol vlv & tb
- SM B & D Sec Fuel Press Isol vlv
- Trnfr Mot sw 1

SPS
- P & Y (Prim) Gmbl Mots
- Enbl Pwr Sol Driver 1
- He 1 vlv & tb
- Pilot 1 & 2 vlv
- Prim Pilot Pre vlv
- Line Htrs A
- PUGS Test

SCS
- FDAI 1 Total Att
- GDC (except RSI)
- BMAG 1 Htr & C/W Temp lt (eventually lose BMAG 1 as temp decr)
- Auto coils CM RCS 1 (if prior to CM/SM sep)
- Dir Ull Pitch C3 & A4
- Auto ΔV
- Auto Att Hold
- Rate 1 MTVC
- Rot Contr Pwr Dir 1
  - a. MNA/MNB to half of jets
  - b. MNA to all jets
- Rot Contr Pwr Dir 2, MNA/MNB to half of jets

LIGHTING
- RH Girth Shelf Flood (Fixed Mode)
- RH Couch Flood (Fixed Mode)
- LH Girth Shelf Flood (Var Mode)
- LH Couch Flood (Var Mode)
- LH & RH Strut Flood (Var Mode)
- LH Opt Align Sight
- Rndz lt
- Sys A Tunl lts (6 elements)

DISPLAYS & CONTROLS
- Msn Elapsed Tmr (pnl 2)

DOCKING
- Sys A Probe conn (however A & B conn may be switched)

## MAIN BUS B

EPS/CRYO
- Tk 2 H2 & 02 Htrs
- Inv 2 Pwr
- Util Outlet (pnl 100)
- LM Pwr
- Tk 2 02 Vac-Ion Pump

ECS
- 02 High Flow C/W lt
- Prim 1 Rad Htr Cont
- Rad Flow Contr 2
- Prim Rad In Temp ind & PCM
- H20 Accum 2 Auto & Man Cont
- Urine & Waste Dump Htr B
- Steam Duct Htr B

RCS
- CM Sys 2 Htrs
- CM Sys 2 Fuel & Oxid Purge
- CM Fuel Interconnect
- CM Oxid/He Interconnect
- CM Sys 2 Prplnt Dump 42 Sec TD
- CM Sys 2 Prplnt Isol vlv & tb
- SM A & C Htrs
- SM A & C He 1 & 2 Isol vlv & tb
- SM A & C Prim/Sec Prplnt Isol vlv & tb
- SM A & C Sec Fuel Press Isol vlv
- Trnfr Mot sw 2

SPS
- P & Y (Sec) Gmbl Mots
- Enbl Pwr Sol Driver 2
- He 2 vlv & tb
- Pilot 3 & 4 vlv
- Sec Pilot Pre vlv
- Line Htrs B

SCS
- FDAI 2 Total Att
- GDC
- BMAG 2 Htr & C/W Temp lt (eventually lose BMAG 2 as temp decr)
- Auto Coils CM RCS 2 (if prior to CM/SM sep)
- Dir Ull Yaw D3 & B4
- Auto ΔV (may be degraded)
- Min Imp Incr to ≈42 MS
- RSI
- ORDEAL
- Rot Contr Pwr Dir 1, MNA/MNB to half of jets
- Rot Contr Pwr Dir 2
  a. MNA/MNB to half of jets
  b. MNB to all jets

LIGHTING
- LH Girth Shelf Flood (Fixed Mode)
- LH Couch Flood (Fixed Mode)
- LH & RH Strut Flood (Fixed Mode)
- RH Couch Flood (Var Mode)
- RH Girth Shelf Flood (Var Mode)
- RH Opt Align Sight
- Sys B Tunl lts (6 elements)
- Spotlight Door Initiator

DISPLAYS & CONTROLS
- Msn Elapsed Tmr (pnl 306)

DOCKING
- Sys B Probe conn (however A & B conn may be switched)



NORMAL BACKUP

| BAT BUS A | BAT BUS B | BAT RELAY BUS |
|---|---|---|
| EPS/CRYO<br>Mn Bus Tie A/C Mot sw<br><br>ECS<br>Prim Rad 1 Htr Ovld Snsr<br><br>RCS<br>SECS Auto RCS Trnfr to Trnfr Mot sw 1<br><br>SPS<br>P & Y 1 (Prim) Gmbl Mot Cont<br><br>SCS<br>Auto RCS Sel MNA (if not previously enabled)<br><br>SECS<br>SECS & ELS Sys A<br>Float Bag Compr 1<br>Float Bag 1 Mot sw & Cont vlv<br>EDS Voting Logic 1 | EPS/CRYO<br>Mn Bus Tie B/C Mot sw<br><br>ECS<br>Prim Rad 2 Htr Ovld Snsr<br>Sec Rad Htr Ovld Snsr<br><br>RCS<br>SECS Auto RCS Trnfr to Trnfr Mot sw 2<br><br>SPS<br>P & Y (Sec) Gmbl Mot Cont<br><br>SCS<br>Auto RCS Sel MNB (if not previously enabled)<br><br>SECS<br>SECS & ELS Sys B<br>Float Bag Compr 2<br>Float Bag 2 Mot sw & Cont vlv<br>EDS Voting Logic 3 | EPS/CRYO<br>FC 1, 2, 3, Reacs vlvs, Latch Ckt & tbs<br>FC 1, 2, 3 Rad Byp vlvs & tbs<br>FC 1, 2, 3 to Mn Bus A & B Switching & tbs<br>Mn Bus A & B UV Sensing & UV C/W lt (if C/W NORM sw in ACK)<br>Inv 1, 2, 3 to AC Bus 1 & 2 & DC Bus Switching<br>AC Over/UV Sensing & C/W lt<br>AC Ovld C/W lt (if C/W NORM sw in ACK) |
| | BATTERY C | |
| | EDS Voting Logic 2 | |

| AC BUS 1 |
| --- |
| EPS/CRYO<br>Tk 1 H2 & O2 Fans<br>Tk 1 H2 & O2 Qty & Temp Sig Condr (ØC)<br><br>ECS<br>Cab Fan 1<br>Man Cont Prim Evap Stm vlv (ØC)<br>Auto Cont Prim Gly Cont vlv (ØA)<br>Sec Loop Evap Cool (ØA)<br>Elect Cont Suit Ht Exch Gly Byp vlv (ØB)<br>Rad Flow Contr 1 & Rad Isol vlvs (ØC)<br><br>SCS<br>GDC (all modes except RSI)<br>FDAI 1<br>BMAG 1 (ATT HOLD, RATE CMD)<br>Min Imp (ØA)<br>RHC 1 MTVC (ØA)<br>Rate Cmd Prplnt Att Cont (ØA)<br>Auto ΔV (ØA)<br>No. 1 Pitch & Yaw Needles on GPI (ØA)<br>SII Fuel & SIVB Fuel & Oxid Press for ind No. 1 (ØA) |

| |
| --- |
| LIGHTING<br>FDAI 1<br>EMS Num & Grid<br>Msn Tmr Num (pnl 2)<br>DSKY Num (pnl 2)<br>EL for pnls 1-9, 15, 16, 229, 275<br>Sys 1 SM Run lts (6 elements) & EVA lt (1 element) |
| AC BUS 2 |
| EPS/CRYO<br>Tk 2 H2 & O2 Fans<br>Tk 2 H2 & O2 Qty & Temp Sig Condr (ØC)<br><br>ECS<br>Cab Fan 2<br>Prim Evap Temp Cont Unit (ØA)<br>Auto Cab Temp Cont Unit (ØC)<br>Rad Flow Contr 2 & Rad Isol vlvs (ØC)<br><br>SCS<br>MTVC (RATE CMD, ACCEL CMD)<br>Proportional RATE CMD (TVC, ATT CONT)<br>FDAI 2<br>BMAG 2<br>RSI (ØA)<br>GDC (ØA)<br>Auto ΔV (TVC) (ØA) |

| |
| --- |
| ORDEAL<br>No. 2 Pitch & Yaw Needles on GPI (ØA)<br>SII Fuel & SIVB Fuel & Oxid Press for ind No. 2 (ØA)<br><br>LIGHTING<br>EMS Roll Att & Scroll lts<br>Msn Tmr Num (pnl 306)<br>DSKY Num (pnl 140)<br>EL for pnls 10, 100, 101, 122, 225, 226, 306<br>Sys 2 SM Run lts (8 elements) & EVA lt (1 element)<br>Dock Trgt & Spot lt |
| PYRO BUS A |
| Fuel/He Interconnect<br>Ox Interconnect<br>CM RCS 1 Purge vlvs<br>Seq Sys A Func (pyros) |
| PYRO BUS B |
| Ox/He Interconnect<br>Fuel Interconnect<br>CM RCS 2 Purge vlv<br>Seq Sys B Func (pyros) |



NORMAL BACKUP

4.5.1.4 Powerdown Electrical Loads

The following electrical loads list may be utilized to effect a powerdown if main buses should indicate less than 26 vdc with no short circuit verification. Three types of loads are provided to permit most rapid and effective selection for a given mission phase. A return to normal configuration should be established when main buses reach 26.5 vdc.

Use of list assumes that entry batteries A and B (battery C when applicable) have been tied to main buses before powerdown selections are made.

| Load Control | LAUNCH | FLIGHT | ENTRY | | |
|---|---|---|---|---|---|
| | Liftoff to Orbit Insertion | Orbit Insertion to Entry Preparation | Entry Preparation to 50K' | SPS Burns | Remarks |
| CONTINUOUS LOADS | | | | | |
| cb G/N (10) - open | | | 9.50 amp | | After 0.05 G |
| FC PUMPS (all) - OFF | 8.73 amp | 8.73 amp | 8.73 amp | 8.73 amp | Until CM/SM sep |
| IMU to stby | 6.33 amp | | | | |
| cb ESS INST (2) - open | 4.85 amp | 4.80 amp | 1.10 amp | 4.80 amp | MNA & B |
| S BD PWR AMPL HI - off (ctr) | 4.00 amp | 4.00 amp | 4.00 amp | 4.00 amp | |
| SUIT COMPR 1 (or 2) - OFF | | 4.00 amp/compr | 4.00 amp/compr | 4.00 amp/compr | Unsuited only |
| TELCOM (both) - OFF | 1.76 amp | 3.71 amp | 1.80 amp | 3.71 amp | Group 1 & 2 |
| cb G/N OPT (2) - open | | | 3.10 amp | | |
| GLY PUMPS - OFF | 2.57 amp | 2.57 amp | 2.57 amp | 2.57 amp | OFF no longer than 15 min |
| CMC to stby | 1.96 amp | | | | |
| G/N PWR - OFF | 1.50 amp | 1.50 amp | 1.50 amp | 1.50 amp | |
| cb RAD CONT/HTRS (2) - open | 1.05 amp | 1.05 amp | 1.05 amp | 1.05 amp | Until CM/SM sep |
| SCE PWR - off (ctr) | 0.65 amp | 0.65 amp | 0.65 amp | 0.65 amp | |

| Load Control | LAUNCH | FLIGHT | ENTRY | | |
|---|---|---|---|---|---|
| | Liftoff to Orbit Insertion | Orbit Insertion to Entry Preparation | Entry Preparation to 50K' | SPS Burns | Remarks |
| MANUALLY CYCLED LOADS | | | | | |
| GMBL MOT PITCH & YAW 2 - OFF | 10.0 amp | | | | At crew discretion |
| SPS LINE HTRS - off (ctr) | | 3.09 amp/bus | | 3.09 amp/bus | |
| SPS GAUGING - OFF | | | | 2.96 amp | |
| Min CM lighting | 1.57 amp | 1.57 amp | 1.57 amp | 1.57 amp | |
| TAPE RCDR FWD - off (ctr) | 1.57 amp | 1.57 amp | 1.57 amp | 1.57 amp | |
| AUTOMATICALLY CYCLED LOADS | | | | | |
| O2 HTRS (both) - off (ctr) | 11.05 amp | 11.05 amp | 11.05 amp | 11.05 amp | Until CM/SM sep |
| O2 FANS (both) - off (ctr) | | 5.40 amp | 5.40 amp | 5.40 amp | Until CM/SM sep |
| SM RCS HTRS (4) - OFF | | 2.09 amp/quad | 2.09 amp/quad | 2.09 amp/quad | Until CM/SM sep |
| POT H2O HTR - OFF | | 1.62 amp | | 1.62 amp | |
| H2 HTRS (both) - off (ctr) | 1.43 amp | 1.43 amp | 1.43 amp | 1.43 amp | Until CM/SM sep |
| H2 FANS (both) - off (ctr) | | 0.72 amp | 0.72 amp | 0.72 amp | Until CM/SM sep |



NORMAL/BACKUP

| STA/T | STEP | PROCEDURE | PANEL | REMARKS |
|---|---|---|---|---|
| | | 4.5.2 PROPULSION SYSTEMS | | |
| | | Specific functions of the SPS and RCS must be monitored to assure operational readiness and capability. SPS and SM RCS monitoring checks are performed during post-orbital insertion check and at 4-hour intervals and after each SPS burn. In addition, the SM RCS monitoring check is performed prior to each SPS burn. The CM RCS monitoring check is performed during post-orbital insertion check and at 12-hour intervals and prior to entry. | | |
| | | 4.5.2.1 SPS Monitoring Check | | |
| LMP | | SPS PRPLNT TEMP ind - +45° to +75°F<br>If <45°F, SPS LINE HTRS - A<br>If >75°F, SPS LINE HTRS - off (ctr) | 3 | Use A/B position if double heater operation required for temperature control. |
| | | SPS PRESS IND sw - He, N2A, & N2B | | |
| | | SPS He/N2 PRESS ind | | |
| | | SPS He PRESS - 3900 psia max | | 3600±50 psia at launch, decreases with each burn. |
| | | SPS N2 A PRESS - 2900 psia max | | 2900 psia at 130°F, decreases with each burn. |
| | | SPS N2 B PRESS - 2900 psia max | | 2900 psia at 130°F, decreases with each burn. |
| | | SPS PRESS IND sw - He | | |
| | | SPS FUEL PRESS ind - 170-195 psia<br>SPS OXID PRESS ind - 170-195 psia | | Fuel and oxidizer tanks pressurized with helium prior to launch. |
| | | CAUTION<br>If ΔP between fuel & oxid is >20 psi prior to a critical SPS burn, repressurize prplnt tks manually by placing SPS He VLV (both) - ON. ΔP between tks >20 psi during a burn may result in degraded performance, rough combustion, &/or eng failure. Refer to SPS malfunction symptom, 5.2.2. | | |

| STA/T | STEP | PROCEDURE | PANEL | REMARKS |
|---|---|---|---|---|
| LMP | | SPS INJ VLV ind (4) - CLOSE | 3 | Each CLOSE indicates two propellant ball valves closed. |
| | | SPS OXID QTY ind - record<br>SPS FUEL QTY ind - record<br>SPS OXID UNBAL ind - record<br>OXID FLOW VLV PRIM - PRIM | | Quantity and unbalance indications may not be accurate subsequent to SPS burns of less than 25 seconds. |
| | | CAUTION<br><br>Do not sw to sec oxid flow vlv with prim vlv functioning properly. Failure of sec vlv could result in loss of prplnt management capability. If OXID FLOW VLV PRIM sw inadvertently set to SEC when no failure exists, return to PRIM before repositioning OXID FLOW VLV INCR sw. | | |
| | | SPS He VLV (both) - AUTO<br>SPS He VLV tb (both) - bp | | Barber pole indicates helium isolation valve closed. |
| | 4.5.2.2 | SM RCS Monitoring Check | | In addition to normal monitoring checks, all helium and propellant talkbacks (16) should be verified gray after any mechanical shock to CSM. |
| CMP | | SM RCS He tb (8) - gray | 2 | Gray indicates helium systems 1 & 2 isolation valves open. |
| | | SM RCS PRIM PRPLNT tb (4) - gray<br>SM RCS SEC PRPLNT tb (4) - gray<br>RCS IND sel - SM A, B, C, D | | Gray indicates primary and secondary fuel and oxidizer isolation valves open. |



NORMAL/BACKUP

| STA/T STEP | PROCEDURE | PANEL | REMARKS |
|---|---|---|---|
| CMP | Check Quads A, B, C, D<br>SM RCS PKG TEMP ind - 115°-175°F | 2 | Temperature maintained between 115° and 134°F by thermostatically controlled heaters. |
| | SM RCS He PRESS ind - record<br>SM RCS IND sw - He TK TEMP<br>SM RCS He TK TEMP ind - record<br>SM RCS IND sw - PRPLNT QTY<br>SM RCS PRPLNT QTY ind - record<br>SM RCS SEC FUEL PRESS ind - 178-192 psia (192-207 psia until jets fired after orb insertion) | | Primary fuel pressure readout for each quad until momentary OPEN position of RCS A (B,C,D) SEC FUEL PRESS switch selected. |
| | When SM RCS SEC FUEL PRESS ind - <150 psia<br>SM RCS A (B,C,D) SEC FUEL PRESS - OPEN | | Decrease in fuel pressure indicates primary fuel low. OPEN position is momentary. |
| | 4.5.2.3 CM RCS Monitoring Check | | |
| | CM RCS PRPLNT tb (both) - gray | | Gray indicates propellant isolation valves open. |
| | RCS IND sel - CM 1, 2<br>CM RCS He TEMP ind - 60°-90°F<br>Prior to CM RCS activation<br>CM RCS He PRESS ind - 4100-4200 psia<br>CM RCS MANF PRESS ind - 80-105 psia | | GSE servicing pressure monitored until system activated. Pressure varies with temperature and ullage. If manifold pressure drops suddenly, indicating a ruptured burst diaphragm, close CM RCS propellant isolation valves and then preheat jets (4.15.1.4) for 15 minutes. Preheating procedure vents any propellant trapped between propellant isolation valves and jets by energizing jet valve direct coils. |
| | After CM RCS activation<br>CM RCS He PRESS ind - stab at 3300-3500 psia ≈15 min after activation<br>CM RCS MANF PRESS ind - 287-302 psia | | |

4.5.3 ELECTRICAL POWER SYSTEM

EPS Management

The normal EPS configuration will be with two fuel cells on main bus A and one on main bus B, e.g., FC 1 and 2 on MNA and FC 3 on MNB. If one fuel cell is to be removed from buses, one of two configurations may be assumed. The prime configuration is one fuel cell per bus; for example, fuel cell 1 to main bus A and fuel cell 3 to main bus B. This configuration requires a dual inverter configuration and subsequent load balancing after fuel cell configuration has been established. The second configuration is to have two fuel cells paralleled to buses. This configuration should not be assumed unless equipment malfunction does not permit load balancing or one of the remaining fuel cells performance is degraded.

Standby operation (in-line heaters, reactants and pumps remain on) may be used when powering down spacecraft, as a corrective action for fuel cell malfunctions, or in the event it is desired to hold a fuel cell in reserve for future use. Batteries and remaining fuel cells should be normal when a fuel cell is placed on standby operation (open circuit). Inline heaters and pumps should not be turned off unless fuel cell is to be shut down. If, during the mission, it becomes necessary to conserve cryogenics, electrical loads should be reduced which will in turn decrease flow of cryogenics to fuel cells. In an emergency situation, consideration may be given to deactivate a fuel cell (inline heaters, pumps, and loads off) to conserve cryogenics. During deactive period, continuous monitoring of the fuel cell system will not necessarily assure a reactivation capability and there exists a possibility of complete loss of the fuel cell.

The prime inverter configuration is to have inverter 1 powering ac bus 1 and inverter 2 powering ac bus 2, with inverter 3 as backup. This configuration permits optimum bus isolation; however, reliability of the inverter permits single inverter operation to both ac buses if cryogenics are to be conserved.

Entry batteries A and B will normally supply main bus A and main bus B respectively with battery C as backup. The batteries (2) should be on during countdown, lift-off, and all delta V maneuvers. Battery C will supply the buses prior to deorbit burn and as required throughout the mission.

Battery C will be connected to buses as required to provide two-battery configuration for delta V maneuvers. All three batteries are to be used during final deorbit burn.



NORMAL/BACKUP

The battery charging cycle should be terminated when either the battery bus voltage indicated on PCM exceeds 39.5 vdc or when 100 percent of the expended energy has been replaced. This presumes charger current PCM data availability, and integration of charge current on the ground with MSFN advice to crew when 100 percent of charge is returned. If PCM link is lost, voice readouts of the onboard charger DC AMPS indicator will be required at intervals of 20 to 30 minutes for integration on the ground. Charging may be resumed if interrupted before achieving terminal conditions previously listed. Normal practice is to continue any charge to completion.

Batteries will be checked prior to each GO/NO-GO flight decision, prior to deorbit burn, and in routine periodic checks as required.

The onboard readout will be prime readout throughout EPS checks.

Fuel cell periodic verification consists of updating onboard data and comparing respective fuel cell performance for a particular phase, with established history of the powerplant.

Normal fuel cell purge requirements will be established in flight on the basis of prelaunch purity tests and elapsed amp-hours since previous purge. Purging will also be required just prior to GO/NO-GO flight decisions. Purging is accomplished by sequentially purging 02 (for 120 seconds) then H2 (for 80 seconds).

The time required for the H2 vent line heater activation prior to H2 purge has been set at 20 minutes. This time is flexible in that a purge may be attempted with less heater time (for example, a contingency corrective action) with no immediate adverse effect on the powerplant.

Cryogenic System Operational Regions

There are four basic cryogenic system operational regions based on control requirements. Quantity balance should be obtained by end of Region I to assure optimum fluid quantity remaining in Regions III and IV. These regions and their respective quantity balance requirements are:

Region I - Automatic Control Region

Quantity balance correction is to be implemented at a 3-percent differential for hydrogen and for oxygen a differential from 2 percent to 4 percent. Unbalanced conditons of 5 percent for 02 and 4 percent for H2 should be avoided.

| STA/T STEP | PROCEDURE | PANEL | REMARKS |
|---|---|---|---|
| | Region II - Minimum dq/dm Region<br><br>Quantity balancing procedures should not be implemented in this region.<br><br>Region III - Post Minimum dq/dm Region<br><br>Quantity balancing correction should be implemented on the same basis as in Region I. Heater switches may be in either manual or AUTO and fan switches should be operated manually, depending on balancing requirements.<br><br>Region IV - Terminal Region<br><br>Quantity balancing procedures should not be implemented. | | |
| | 4.5.3.1 Cryogenic Pressure-Quantity Check | | |
| CMP | CRYO H2 PRESS ind (both) - 225-260 psia | 2 | Indicates H2 tank 1 and 2 pressure. |
| | 02 PRESS IND sw - SURGE TK | | |
| | CRYO 02 PRESS 1 ind - 865-935 psia | | Indicates surge tank 02 pressure. |
| | 02 PRESS IND sw - TK 1 | | |
| | CRYO 02 PRESS ind (both) - 865-935 psia | | Indicates 02 tank 1 and 2 pressure. |
| | CRYO H2 QTY ind (both) - record | | Nominal per mission profile curve, 100 percent maximum indicates full tank (28 pounds each tank). |
| | CRYO 02 QTY ind (both) - record | | Nominal per mission profile curve, 100 percent maximum indicates full tank (320 pounds each tank). |
| | SYS TEST (2) - 4B | 101 | |
| | SYS TEST ind - 4.1-4.4 vdc | | Indicates 02 tank 3 pressure (865-935 psia). |
| | SYS TEST (2) - 4D | | |
| | SYS TEST ind - 3.2-3.8 vdc | | Indicates H2 tank 3 pressure (225-265 psia). |



NORMAL/BACKUP

| STA/T | STEP | PROCEDURE | PANEL | REMARKS |
|---|---|---|---|---|
| CMP | | SYS TEST (2) - 4A | 101 | |
| | | SYS TEST ind - record | | Indicates O2 tank 3 quantity. |
| | | SYS TEST (2) - 4C | | |
| | | SYS TEST ind - record | | Indicates H2 tank 3 quantity. |
| | 4.5.3.2 | FC Power Plant Check | | |
| LMP | | FC HTRS (all) - on (up) | 3 | Enables electronic switches which automatically apply or remove power to fuel cell heaters. |
| | | FC REACS tb (all) - gray | | Gray indicates fuel cell reactant valves open. |
| | | FC IND sel - 1, 2, 3 | | |
| | | FC H2 FLOW ind - 0.03-0.15 lb/hr | | Flow limits are proportional to individual fuel cell currents and can be approximated by fuel cell O2 flow ≈(amps x 2.0)/100, and fuel cell H2 flow ≈(amps x 2.5)/1000. |
| | | FC O2 FLOW ind - 0.25-1.2 lb/hr | | |
| | | FC SKIN TEMP ind - 390°-450°F | | |
| | | FC COND EXH TEMP ind - 150°-175°F | | |
| | | FC pH HI tb - gray | | Gray indicates pH factor normal. |
| | | FC RAD TEMP LO tb - gray | | Gray indicates fuel cell radiator temperatures normal. |
| | 4.5.3.3 | D-C Voltage-Amperage Check | | |
| | | MN BUS TIE (2) - OFF (verify) | 5 | |
| | | FC 1 & 2 MNA tb (2) - gray | 3 | Gray indicates fuel cells 1 and 2 connected to main bus A. Barber pole indicates fuel cell 3 disconnected from main bus A. |
| | | FC 3 MNA tb - bp | | |
| | | FC 1 & 2 MNB tb - bp | | Barber pole indicates fuel cells 1 and 2 disconnected from main bus B. Gray indicates fuel cell 3 connected to main bus B. |
| | | FC 3 MNB tb (2) - gray | | |

| STA/T | STEP | PROCEDURE | PANEL | REMARKS |
|---|---|---|---|---|
| LMP | | DC IND sel - FC 1, 2, 3 | 3 | |
| | | DC AMPS ind - record amps | | Record dc amps for each fuel cell. |
| | | DC IND sel - MNA, B | | |
| | | DC VOLTS ind - 26.5-31 vdc (record) | | Record dc volts for main buses A and B. |
| | | DC IND sel - BAT BUS A, B, & BAT C | | |
| | | DC VOLTS ind - 31.5-38.0 vdc | | Voltage indication may be different than shown when |
| | | DC AMPS ind - <3.0 amps | | charging battery. |
| CMP | | SYS TEST (2) - 5B | 101 | Verifies battery relay bus voltage 30.5 to 37.0 vdc |
| | | SYS TEST ind - 3.4-4.1 vdc | | and verifies system test indicator. Perform if convenient. |
| | | If LM PWR - CSM | 2 | |
| | | SYS TEST (2) - 7D | 101 | |
| | | SYS TEST ind - 0.5-3.2 vdc | | Verifies LM heater current is 1 to 6.4 amps. |
| | | CAUTION | | |
| | | Do not leave DC IND sel at PYRO BAT A (B) position any longer than req to read DC VOLTS ind, or pyro bat chg will be depleted. | | |
| LMP | | DC IND sel - PYRO BAT A, B | 3 | Check pyro batteries A and B once every 24 hours. |
| | | DC VOLTS ind - 36.5-37.5 vdc | | |
| | | DC IND sel - MNA | | |
| | 4.5.3.4 | A-C Voltage Check | | |
| | | AC IND sel - BUS 1, 2, ϕA, B, C | | |
| | | AC VOLTS ind - 113-117 vac | | |



NORMAL/BACKUP

| STA/T | STEP | PROCEDURE | PANEL | REMARKS |
|---|---|---|---|---|
| | | 4.5.3.5 Battery Charging | | |
| LMP | | MN BUS TIE (2) - OFF | 5 | Placing MN BUS TIE switches at OFF completes circuit from charger to selected battery and disconnects battery from main bus. |
| | | cb PYRO A & B BAT BUS A & B (2) - open | 250 | |
| | | cb BAT C TO BAT BUS A & B - open | | |
| | | cb BAT RLY BUS BAT A (B) - open | 5 | |
| | | DC IND sel - BAT CHGR | 3 | |
| | | BAT CHG - A, B, or C | | |
| | | CAUTION<br>If bat chg is started immediately after discharge, chgr current may be high &/or chgr voltage may be low. Current & voltage should be within specified limits 45 min after initiation of chg, otherwise trnfr chgr to remaining bats. After remaining bats are charged, return chgr to affected bat. | | |
| | | DC VOLTS ind - 37.5-39.5 vdc | | |
| | | BAT CHG - OFF (at MSFN request or when DC VOLTS ind reads 39.5 vdc for bat bus A, B or bat C) | | |
| | | cb BAT RLY BUS BAT A (B) - close | 5 | |
| | | DC IND sel - MNA | 3 | |
| CMP | | SYS TEST (2) - 7A | 101 | |
| | | SYS TEST ind - <1.5 vdc | | |
| | | (After sea level amb press ≈14 psia has been vented) | | |

| STA/T | STEP | PROCEDURE | PANEL | REMARKS |
|---|---|---|---|---|
| | | If >1.5 vdc | | |
| CMP | | BAT VENT vlv - VENT (for 5 sec) then CLOSE | 252 | Battery vent manifold pressure >6 psia (1.5 vdc) indicates a gross battery malfunction which should have become apparent prior to manifold pressure increase. If manifold pressure ≈ cabin pressure, leakage into battery case(s) is indicated which will have no effect on battery performance. Battery vent valve should not be opened if waste water tank is full or is being manually dumped overboard, or if OVBD DRAIN valve is open with urine dump line interconnected to waste water dump line. |
| | | SYS TEST (2) - 5B | 101 | Monitors battery relay bus voltage. |
| | 4.5.3.6 | FC Power Plant Purging | | |
| LMP | 1 | 02 purging | | Refer to purge information at beginning of 4.5.3. Purging is performed as determined by real time decision. |
| | | FC IND sel - 1, 2, or 3 | 3 | |
| | | FC 1, 2, or 3 PURG - 02 (2 min) | | |
| | | FC 02 FLOW ind - flow incr 0.6 lb/hr | | 02 flow rate will increase by 0.6 lb/hr. This may cause FC 02 FLOW indicator to exceed its normal limits and activate MASTER ALARM pb/lt (3) and FC 1 (2 or 3) light. Alarm limits may be checked by monitoring FC 02 FLOW indicator at the moment C/W light comes on. |
| | | | | • If normal 02 flow is at lowest limits, purging 02 side of fuel cell will not cause MASTER ALARM pb/lt to come on. |
| | | FC 1, 2, or 3 PURG - OFF | | |
| | 2 | H2 purging | | Refer to purge information at beginning of 4.5.3. Purging is performed as determined by real time decision. |
| | | H2 PURG LINE HTR - on (up), 20 min prior to purge | | |



NORMAL/BACKUP

| STA/T | STEP | PROCEDURE | PANEL | REMARKS |
|---|---|---|---|---|
| LMP | | FC IND sel - 1, 2, or 3 | 3 | |
| | | FC 1, 2, or 3 PURG - H2 (1 min, 20 sec) | | |
| | | FC H2 FLOW ind - flow incr 0.67 lb/hr | | H2 flow rate will increase by 0.67 lb/hr. This will cause FC H2 FLOW indicator to exceed its normal limits, and activate MASTER ALARM pb/lt (3) and FC 1 (2 or 3) light. |
| ALL | | MASTER ALARM pb/lt (3) - on | 1,3,122 | |
| | | MASTER ALARM pb/lt - push | | |
| | | MASTER ALARM pb/lt (3) - out | | |
| CMP | | FC 1, 2, or 3 lt - on (until norm flow restored) | 2 | |
| LMP | | FC 1, 2, or 3 PURG - OFF | 3 | |
| | | After ≈10 min | | |
| | | H2 PURG LINE HTR - OFF | | |
| | 4.5.3.7 | H2 or 02 Quantity Balance Correction | | Refer to quantity balance information at beginning of 4.5.3. |
| | | On low qty tk | | |
| CMP | | H2 or 02 HTRS 1 (2) - off (ctr) | 2 | |
| | | When tk qty balanced | | |
| | | H2 or 02 HTRS 1 (2) - AUTO | | |
| | 4.5.3.8 | FC Load Disconnect (Example using FC 2) | | This procedure is presented with the following assumptions: |
| | a. | Prior to Disconnect | | Fuel cells 1 and 2 powering dc main bus A. Fuel cell 3 powering dc main bus B. |
| LMP | | Ensure that at least one FC is powering each mn bus | | |
| | | FC disconnect | | |
| | (1) | Prime configuration | | Requires load balancing. |
| | | FC 2 MNA - OFF | 3 | Fuel cell 2 is now disconnected from both dc main buses. |
| | | FC 2 MNB - OFF (verify) | | |

| STA/T STEP | PROCEDURE | PANEL | REMARKS |
|---|---|---|---|
| LMP | FC 2 MNA & B tb (2) - bp | 3 | Barber poles indicate fuel cell 2 is disconnected from main bus A and main bus B. |
| | FC 1 MNA tb - gray | | Gray indicates fuel cell 1 is connected to main bus A. |
| | FC 1 MNB tb - bp | | Barber pole indicates fuel cell 1 is disconnected from main bus B. |
| | FC 3 MNA tb - bp | | Barber pole indicates fuel cell 3 is disconnected from main bus A. |
| | FC 3 MNB tb - gray | | Gray indicates fuel cell 3 is connected to main bus B. |
| | (2) Sec configuration | | This configuration is assumed if load balancing cannot be obtained. |
| | FC 1 MNB - on (up)<br>FC 3 MNA - on (up) | | On position is momentary. When fuel cell main bus switches are placed from OFF to momentary on position, MASTER ALARM and FC BUS DISC lights are energized. |
| | FC 2 MNA - OFF<br>FC 2 MNB - OFF (verify) | | Fuel cell 2 disconnected from both dc main buses. Fuel cells 1 and 3 paralleled to both dc main buses. |
| ALL | MASTER ALARM pb/lt (3) - on | 1,3,122 | |
| CMP | FC BUS DISC lt - on (mom) | 2 | |
| ALL | MASTER ALARM pb/lt - push, out | 1,3,122 | |
| CMP | C/W lts (all) - out | 2 | |
| LMP | FC 1 MNA & B tb (2) - gray | 3 | Gray indicates fuel cell 1 connected to main bus A and B. |
| | FC 3 MNA & B tb (2) - gray | | Gray indicates fuel cell 3 connected to main bus A and B. |





NORMAL/BACKUP

| STA/T STEP | PROCEDURE | PANEL | REMARKS |
|---|---|---|---|
| LMP | FC 2 MNA & B tb (2) - bp | 3 | Barber poles indicate fuel cell 2 disconnected from main bus A and B. |
| | b. Conn Desired FC to Desired Mn Bus FC to bus conn | | |
| | FC 2 MNA - on (up) | | On position is momentary. When fuel cell main bus switches placed from OFF to momentary on position, MASTER ALARM and FC BUS DISC lights are energized. |
| | FC 1 MNB - OFF<br>FC 3 MNA - OFF | | Fuel cells returned to normal configuration (fuel cell 1 and 2 powering dc main bus A and fuel cell 3 powering dc main bus B). |
| ALL | MASTER ALARM pb/lt (3) - on | 1,3,122 | |
| CMP | FC BUS DISC lt - on (mom) | 2 | |
| ALL | MASTER ALARM pb/lt - push, out | 1,3,122 | |
| CMP | C/W lts (all) - out | 2 | |
| LMP | FC 2 MNA tb - gray<br>FC 2 MNB tb - bp | 3 | Gray indicates fuel cell 2 connected to main bus A, barber pole indicates fuel cell 2 disconnected from main bus B. |
| | FC 1 MNA tb - gray | | Gray indicates fuel cell 1 connected to main bus A. |
| | FC 1 MNB tb - bp | | Barber pole indicates fuel cell 1 disconnected from main bus B. |
| | FC 3 MNA tb - bp | | Barber pole indicates fuel cell 3 disconnected from main bus A. |
| | FC 3 MNB tb - gray | | Gray indicates fuel cell 3 connected to main bus B. |

| STA/T STEP | PROCEDURE | PANEL | REMARKS |
|---|---|---|---|
| | 4.5.3.9 Inverter Changeover | | Normal operation throughout mission will be with 2 inverters operating. During drifting flight, a single inverter is adequate to power both ac buses; however, two-inverter operation is assumed, providing maximum bus isolation. |
| | WARNING<br>Ensure at least one inv on each ac bus at all times (if available). | | If 3 inverters are switched onto one ac bus, loss of ac power to that bus will result. |
| | a. Dual Inv (No. 1 & 2) Oper | | This procedure is presented with the assumption that inverter 1 is powering ac bus 1 and 2. |
| LMP | AC2 RSET - OFF | 3 | |
| | INV 2 - MNB | | During dual inverter operation, inverter connected to dc main bus A should always power ac bus 1 and inverter connected to dc main bus B should always power ac bus 2, to preclude loss of all ac and dc power to SCS in event of single dc main bus failure. |
| | INV 1 AC2 - OFF | | S-band phaselock will be lost upon switching inverters. |
| | INV 2 AC2 - on (up) | | Inverter 1 now powering ac bus 1 and inverter 2 powering ac bus 2. Rapid performance of inverter switching sequence may initiate MASTER ALARM pb/lt when inverter is connected to bus. |
| | AC2 RSET - RSET | | RSET position is momentary. |
| ALL | MASTER ALARM pb/lt (3) - on<br>MASTER ALARM pb/lt - push<br>MASTER ALARM pb/lt (3) - out | 1,3,122 | Placing AC1 or 2 RSET switch to RSET and releasing ensures a MASTER ALARM pb/lt - on. Placing AC1 or 2 RSET to center will cause random activation of MASTER ALARM pb/lt. |
| CMP | C/W lts (all) - out | 2 | |



NORMAL/BACKUP

| STA/T STEP | PROCEDURE | PANEL | REMARKS |
|---|---|---|---|
| LMP | Perform AC Voltage Check, 4.5.3.4 | | |
| | b. Single Inv Oper | | This procedure is presented with the assumption that inverter 1 is powering ac bus 1 and inverter 2 is powering ac bus 2. |
| | AC2 RSET - OFF | 3 | |
| | INV 2 - OFF | | |
| | INV 2 AC2 - OFF | | S-band phaselock will be lost upon switching inverters. |
| | INV 1 AC2 - on (up) | | Inverter 1 now powering ac bus 1 and ac bus 2. Rapid performance of inverter switching sequence may initiate MASTER ALARM pb/lt when inverter is connected to bus. |
| | AC2 RSET - RSET | | RSET position is momentary. |
| ALL | MASTER ALARM pb/lt (3) - on | 1,3,122 | Placing AC1 or 2 RSET switch to RSET and releasing ensures a MASTER ALARM pb/lt - on. Placing AC1 or 2 RSET to center will cause random activation of MASTER ALARM pb/lt. |
| | MASTER ALARM pb/lt - push | | |
| | MASTER ALARM pb/lt (3) - out | | |
| CMP | C/W lts (all) - out | 2 | |
| LMP | Perform AC Voltage Check, 4.5.3.4 | | |
| | c. Stby Inv (No. 3) Check or Oper | | This procedure is presented with the assumption that inverter 1 is powering ac bus 1 and inverter 2 is powering ac bus 2. |
| | AC2 RSET - OFF | 3 | |
| | INV 2 - OFF | | |
| | INV 3 - MNB | | When switching inverter 3 from one main dc bus to the other, pause momentarily in OFF position. |
| | INV 2 AC2 - OFF | | S-band phaselock will be lost upon switching inverters. |

| STA/T STEP | PROCEDURE | PANEL | REMARKS |
|---|---|---|---|
| LMP | INV 3 AC2 - on (up) | 3 | Rapid performance of inverter switching sequence may initiate MASTER ALARM pb/lt when inverter is connected to bus. |
| | AC2 RSET - RSET | | RSET position is momentary. |
| ALL | MASTER ALARM pb/lt (3) - on<br>MASTER ALARM pb/lt - push<br>MASTER ALARM pb/lt (3) - out | 1,3,122 | Placing AC1 or 2 RSET switch to RSET and releasing ensures a MASTER ALARM pb/lt - on. Placing AC1 or 2 RSET to center will cause random activation of MASTER ALARM pb/lt. |
| CMP | C/W lts (all) - out | 2 | |
| LMP | Perform AC Voltage Check, 4.5.3.4 | 3 | Standby inverter (No. 3) check should be performed every 24 hours. |
| | If stby inv check<br>Go to dual inv (No. 1 & 2) oper, 4.5.3.9a, & set INV 3 - OFF | | |
| | 4.5.3.10 Cryo 02 & H2 Manual Fan Operation | | Manual fan operation should be used during flight to prevent possible cryo pressure control motor switch arcing, which may cause a-c inverter a-c bus disconnect. |
| | CAUTION<br>In the following step, if CRYO PRESS lt illuminates, do not set H2 & 02 FANS - off (ctr) or proceed to next step until lt extinguishes. | | |
| | Procedures to be determined. | | |



NORMAL/BACKUP

4.5.4 ENVIRONMENTAL CONTROL SYSTEM

ECS systems management procedures are divided into two categories. The first category consists of five procedures, described in steps 1 through 5, that are conducted at specific time intervals.

1. An ECS monitoring check is recommended every hour from time the SC attains orbit until CSM separation. This check provides crew with latest status of the ECS.

2. A redundant component check is accomplished at 24-hour intervals to determine operational status of certain ECS redundant components and secondary water-glycol loop. The test will reveal any inoperative or malfunctioning components that might have been selected for use later in the mission. Several redundant components are not checked, however, because of excessive use of oxygen, a means of selection not incorporated, or lack of direct indication.

3. Replacement of one CO2-odor absorber filter is required on an alternate basis, at 12-hour intervals, for the ECS to remain within prescribed metabolic limit. Filters are also changed if CO2 partial pressure exceeds 7.6 mm Hg.

4. It is recommended that at 24-hour intervals the debris screen on suit circuit return valve be checked and cleaned as necessary.

5. It is recommended that chlorine and a buffer chemical be individually injected into potable water supply every 24 hours to maintain potability. There is a 10-ampoule supply of each chemical on the CM. Should a condition exist where either glycol evaporator is in use and waste water tank is empty, chlorine and buffer injections should be postponed.

The second category consists of procedures, described in steps 1 through 15, that are accomplished at random intervals or only as required.

1. PGA/shirtsleeve mode changes require certain precautions to be taken regarding suit power switch settings, communication functions and ECS adjustments. This applies whether the mode change is from PGA-to-shirtsleeve, shirtsleeve-to-PGA, or full PGA to partially suited mode. Also specified is a configuration for extravehicular and intravehicular transfer (EVT/IVT).

2. Waste management procedures provide the steps necessary for collection, removal, and disposition of waste products (except perspiration and respiration) resulting from normal body functions. Collection and disposition of emesis within the CM is also covered.

3. Procedures are provided to repressurize the CM cabin to 5 psia following depressurization for any reason.

4. A verification of the PGA is carried out each time a crewman dons his suit. Although only one crewman may be returning to the suited mode, all those already suited will be subjected to PGA verification. The verification is also performed prior to S-IVB separation, SPS burns, cabin pressure dumping, EVT, IVT, and deorbit.

5. The CM oxygen supply, represented by the surge tank and repressurization tanks (3), requires replenishment after cabin repressurization.

6. The CM pressure dump procedure is utilized for extravehicular transfer (EVT).

7. The suit circuit, when isolated from the cabin, will be purged of accumulated hydrogen at the discretion of flight crew.

8. The cabin cold-soak operation is recommended for any period for which a cooler cabin is desirable, provided water consumption is compatible with water management, and radiator outlet temperature is greater than 0°F. The procedure may commence 8 to 12 hours prior to entry if a safety margin for entry is deemed advisable. Primary and secondary radiator loops are not to be operated simultaneously.

9. The CM/LM pressure equalization procedure will normally be performed to support initial hard docking and LM withdrawal, and intravehicular crew transfer from either CM or LM.

10. A procedure is provided for donning and doffing of emergency oxygen masks.

11. A procedure is provided to manually dump waste water overboard. This procedure is required approximately once per day to maintain waste water tank quantity level between 85 and 25 percent.



NORMAL/BACKUP

| STA/T STEP | PROCEDURE | PANEL | REMARKS |
|---|---|---|---|
| | 12. Data for servicing the gas separator cartridges is provided. The separators are used as a backup for separating H2 from H20 in the normal system. | | |
| | 13. The steps required to activate or deactivate the primary glycol evaporator are provided, if such action becomes necessary for lunar orbital path perturbations due to steam venting or for any other reason. | | |
| | 14. Prior to CM/LM rendezvous, the command module pilot should install the lunar dust filter over the cabin fan outlet. The filter should remain in place for 4 hours of cabin fan operation, starting when the CM and LM hatches are removed. This will ensure adequate lunar dust removal from the CM. | | |
| | 15. A procedure is provided for the use of the lunar dust vacuum cleaner following CM/LM rendezvous. Although this component is stowed in and is powered from the CM, its use within the LM is permitted by the length of the power cable. | | |
| | 4.5.4.1 ECS Monitoring Check | | |
| LMP | SUIT CAB ΔP ind - -1.0 to -3.5 in. H20 | 2 | |
| | 02 FLOW ind - 0.2-0.45 lb/hr | | 02 flow may be as high as 1.0 lb/hr (pegged) prior to completion of cabin purge. |
| | 02 PRESS IND sw - SURGE TK | | |
| | CRYO 02 PRESS 1 ind - 865-935 psia | | |
| | 02 PRESS IND sw - TK 1 | | |
| CMP | REPRESS 02 PRESS ind - >865 psia | 602 | |
| LMP | ECS RAD tb - gray | 2 | Gray indicates No. 1 flow proportioning valve controlling flow. |
| | xxxxxxxxxxxxxxxxxxxxxxxxxxxxxxxxxxxxxxxxxx | | |
| | If ECS RAD tb - 2 | | |
| | RAD FLOW CONT AUTO - 1 until tb gray, then AUTO | | Attempt resetting talkback before assuming radiator proportioning malfunction. |

| STA/T STEP | PROCEDURE | PANEL | REMARKS |
|---|---|---|---|
| LMP | If tb cannot be reset<br>RAD FLOW CONT AUTO - 1 | 2 | |
| | RAD PRIM OUT TEMP ind - within correct rng | | Correct range indicates talkback malfunction only, with both proportioning systems and failure detection circuit operable. |
| | RAD FLOW CONT AUTO - AUTO<br>RAD PRIM OUT TEMP ind - outside correct rng<br>Refer to ECS Malfunction Proced, PRIM ECS RAD OUT TEMP HIGH, Symptom 15 | | |
| | xxxxxxxxxxxxxxxxxxxxxxxxxxxxxxxxxxxxxxxxxx | | |
| | ECS IND sel - PRIM<br>RAD PRIM IN TEMP ind - 67°-97°F<br>RAD PRIM OUT TEMP ind - -20° to 63°F (-20° to 97°F for lunar orb)<br>PRIM GLY EVAP OUT TEMP ind - 38°-50.5°F<br>PRIM GLY EVAP STM PRESS ind<br>When boiling - 0.09-0.14 psia<br>Not boiling - >0.14 psia<br>PRIM GLY DISCH PRESS ind - 40-52 psig<br>SUIT TEMP ind<br>Without evap - 45°-70°F<br>With evap - 45°-55°F<br>CAB TEMP ind - 70°-80°F<br>SUIT PRESS ind - ≈CAB PRESS ind<br>CAB PRESS ind - 4.7-5.3 psia | | Cabin pressure will be 5.6 to 6.2 psia after launch and continuously decrease until cabin pressure regulator activates and controls to 4.7 to 5.3 psia. |



NORMAL BACKUP

| STA/T | STEP | PROCEDURE | PANEL | REMARKS |
|---|---|---|---|---|
| LMP | | CO2 PP ind - <7.6 mm Hg | 2 | |
| | | SUIT COMPR ΔP ind - 0.3-0.4 psid | | |
| | | PRIM ACCUM QTY ind - 30-65% | | |
| | | If qty <30% | | |
| CMP,LMP | | PRIM ACCUM FILL vlv - ON until 40-55% is reached | 379,2 | |
| LMP | | H2O QTY IND sw - POT | 2 | |
| | | POT H2O QTY ind - 10-100% | | |
| | | H2O QTY IND sw - WASTE | | |
| | | WASTE H2O QTY ind - 25-85% | | |
| | | If >85% - dump per 4.5.4.16 | | |
| | | 4.5.4.2 ECS Redundant Component Check | | |
| | 1 | Suit compr | | |
| | | SUIT COMPR (both) - redundant compr | 4 | |
| | | SUIT COMPR ΔP ind - 0.3-0.4 psid | 2 | |
| | 2 | Suit demand regs | | |
| CDR | | DEMAND REG sel - 1 | 380 | |
| | | Close demand reg cab bleed port with finger | | Obstruct bleed flow only long enough to obtain momentary high flow. |
| LMP | | O2 FLOW ind - mom incr | 2 | |
| CDR | | DEMAND REG sel - 2 | 380 | |
| | | Close demand reg cab bleed port with finger | | Obstruct bleed flow only long enough to obtain momentary high flow. |
| LMP | | O2 FLOW ind - mom incr | 2 | |
| CDR | | DEMAND REG sel - BOTH | 380 | |

| STA/T | STEP | PROCEDURE | PANEL | REMARKS |
|---|---|---|---|---|
| | 3 | Main 02 regs | | |
| CMP | | MN REG B - close | 351 | |
| | | EMER CAB PRESS sel - 1 | | |
| | | EMER CAB PRESS TEST pb - push | | Press-to-test pushbutton held only long enough to obtain momentary high flow. |
| LMP | | 02 FLOW ind - pegged hi | 2 | |
| CMP | | MN REG B - OPEN | 351 | |
| | | MN REG A - close | | |
| | | EMER CAB PRESS sel - 2 | | |
| | | EMER CAB PRESS TEST pb - push | | Press-to-test pushbutton held only long enough to obtain momentary high flow. |
| LMP | | 02 FLOW ind - pegged hi | 2 | |
| CMP | | MN REG A - OPEN | 351 | |
| | | EMER CAB PRESS sel - BOTH (OFF if all crewmen suited) | | |
| | 4 | H20 accum | | |
| LMP | | SUIT H20 ACCUM AUTO - redundant accum | 2 | |
| | | 02 FLOW ind - mon for momentary (10 sec) incr | | Allow up to 10 minutes for accumulator stroking. |
| | 5 | Urine dump nozzle htrs | | |
| CMP | | WASTE H20 DUMP - redundant htr | 101 | |
| | | URINE DUMP - redundant htr | | |
| | | MSFN reports no significant change in urine & water dump nozzle temps | | Nozzle temperatures are telemetered only. Temperature decrease indicates heater failure; however, if nozzles are facing sun, decrease may not be immediate. |
| | 6 | Open cool cont atten pnl | | Covers panel 382. Opened to perform part of secondary glycol loop check. |



NORMAL BACKUP

| STA/T | STEP | PROCEDURE | PANEL | REMARKS |
|---|---|---|---|---|
| | | WARNING | | |
| CMP | | SUIT FLOW RELF vlv must remain OFF throughout msn or swelling of CO2 odor absorber filters may result. | 382 | |
| | 7 | Sec gly loop | | Coldplates are not provided in secondary glycol loop for DSE and G&N. Usage time for noncoldplated items is as follows:<br>DSE: 2 hours ON, 1 hour OFF.<br>G&N: 1.9 hours ON, 9.2 hours OFF. |
| | | CAUTION | | |
| | | Simultaneous oper of cryo 02 htrs & sec loop rad htrs will result in low mn bus voltage (<26.5 vdc). This will be precluded if the following precautions are observed. | | |
| LMP | | If RAD PRIM OUT TEMP ind - ≤48°F preceding sec loop activation, or if RAD SEC OUT TEMP ind - ≤45°F following sec loop activation:<br>• Inhibit cryo 02 htrs whenever cryo tk press <900 psia [02 HTRS (both) - off (ctr)]. Enbl cryo htrs when RAD SEC OUT TEMP ind - >48°F.<br>• Enbl sec loop rad htrs when mn bus A & B ≥28.25 vdc with 3 FC oper or ≥28.5 vdc with 2 FC oper. | 2 | |

| STA/T | STEP | PROCEDURE | PANEL | REMARKS |
|---|---|---|---|---|
| CMP | | SEC EVAP H2O CONT - AUTO | 382 | |
| LMP | | ECS IND sel - SEC | 2 | |
| | | GLY EVAP STM AUTO - MAN | | |
| | | GLY EVAP STM INCR - INCR for 58 sec min | | Steam pressure valve requires 58 seconds from full open to full closed. INCR position is momentary. |
| CMP | | GLY TO RAD SEC vlv - NORM | 377 | |
| LMP | | RAD PRIM HTR - off (ctr) | 2 | |
| | | GLY PUMPS - OFF | 4 | |
| | | SEC COOL PUMP - AC1 | 2 | |
| | | SEC GLY DISCH PRESS ind - 39-51 psig | | |
| | | SEC ACCUM QTY ind - 30-55% | | |
| | | RAD SEC HTR - on (up) | | |
| | | SEC COOL EVAP - EVAP | | |
| | | SEC GLY EVAP STM PRESS ind | | |
| | | When boiling - 0.09-0.14 psia | | |
| | | Not boiling - >0.14 psia | | |
| | | After 20-30 min | | |
| | | RAD SEC IN TEMP ind - 60°-97°F | | Allow 20 to 30 minutes of glycol circulation before reading temperature indicators. |
| | | RAD SEC OUT TEMP ind - 40°-70°F (pegged) | | 75°F (actual) with high loads and worst case orientation, or >75°F (actual) during the subsolar point of lunar orbit. |
| | | SEC GLY EVAP OUT TEMP ind - 40°-50.5°F | | |
| | | SEC COOL PUMP - AC2 | | |
| | | SEC GLY DISCH PRESS ind - 39-51 psig | | |
| | | SEC COOL EVAP - RSET for 58 sec min, then off (ctr) | | RSET closes steam pressure control valve. Steam pressure valve requires 58 seconds from full open to full close. |
| | | RAD SEC HTR - OFF | | |
| CMP | | GLY TO RAD SEC vlv - BYP | 377 | |
| LMP | | ECS IND sel - PRIM | 2 | |
| | | SEC COOL PUMP - off (ctr) | | |
| CMP | | SEC EVAP H2O CONT - OFF | 382 | |



NORMAL/BACKUP

| STA/T | STEP | PROCEDURE | PANEL | REMARKS |
|---|---|---|---|---|
| CMP | 8 | Close cool cont atten pnl | 382 | Covers panel 382. |
| | 9 | Prim gly pumps | | |
| LMP | | GLY PUMPS - redundant pump | 4 | Switch to pump opposite that on at beginning of test. This verifies primary loop pump operation. |
| | | PRIM GLY DISCH PRESS ind - 40-52 psig | 2 | |
| | | PRIM ACCUM QTY ind - 30-65% | | |
| | | GLY EVAP STM AUTO - AUTO | | |
| | 10 | Rad htrs | | |
| | | RAD PRIM HTR - redundant htr | | Switch to heater opposite that on at beginning of test. "On" time of heater is function of radiator outlet temperature and is cyclic in nature. Verification requires radiator outlet temperature at -15°F. |

4.5.4.3 CO2 Absorber Filter Replacement

CAUTION

Conn grd wire when removing or replacing filters from cstr or stowage.

CMP Obtain unused filter

| Filter No. | Stowage Container | Filter No. | Stowage Container | Filter No. | Stowage Container |
|---|---|---|---|---|---|
| 1 | Cstr A | 12 | A9 | 23 | A4 |
| 2 | Cstr B | 13 | A9 | 24 | A4 |
| 3 | B5 | 14 | A9 | 25 | A5 |
| 4 | B5 | 15 | A1 | 26 | A5 |
| 5 | B5 | 16 | A1 | 27 | A5 |
| 6 | B5 | 17 | A3 | 28 | A5 |
| 7 | B6 | 18 | A3 | 29 | A6 |
| 8 | B6 | 19 | A3 | 30 | A6 |
| 9 | B6 | 20 | A3 | 31 | A6 |
| 10 | B6 | 21 | A4 | 32 | A6 |
| 11 | A9 | 22 | A4 | | |

| STA/T STEP | PROCEDURE | PANEL | REMARKS |
|---|---|---|---|
| CMP | Open CO2 cstr atten pnl | 2 | |
| | CO2 CSTR DIVERT vlv - up (or dn) | 350 | Handle placed up for canister B filter change, down for canister A filter change. |
| | CAUTION<br>Apply press to latching handle to allow press interlock pin to withdraw, otherwise latching handle may not disengage. | | |
| | Cstr man bleed vlv - press<br>Cover latching handle - unlock<br>Replace used filter<br>Cover latching handle - lock<br>CO2 CSTR DIVERT vlv - ctr<br>Close CO2 cstr atten pnl<br>Stow used filter | | |
| | Stow excess shims in volume B5 or B6 | | Space is available for four shims at each end of volume B5 and B6. |
| | 4.5.4.4 Debris Screen Check | | Lint or other debris on screens may reduce flow substantially. |
| | a. SUIT RETURN vlv screen<br>Open cool cont atten pnl | 380 | Covers panel 382 and SUIT RETURN valve screen. |
| | WARNING<br>SUIT FLOW RELF vlv must remain OFF throughout msn or swelling of CO2 odor absorber filters may result. | 382 | |



NORMAL/BACKUP

| STA/T | STEP | PROCEDURE | PANEL | REMARKS |
|---|---|---|---|---|
| | | If debris is present | | |
| CDR | | SUIT RETURN vlv - close (push) | 380 | |
| CMP | | Clean screens | | |
| CDR | | SUIT RETURN vlv - open (pull) | | |
| CMP | | Close cool cont atten pnl | | |
| | b. | Cab ht exch inlet screen | | |
| | | CAB FAN (both) - OFF (verify) | 2 | |
| | | Check cab ht exch inlet screen | | |
| | | If debris present - clean screen | | |
| | 4.5.4.5 | Potable Water Chlorination | | Chlorine concentration must not exceed 6 ppm. |
| | | CAUTION | | |
| | | If waste water qty is approaching empty (reads ≤15%) & either gly evap is in oper, chlor procedure will not be performed, as impairment of evap efficiency may result. | | |
| | 1 | Check POT H2O QTY ind - if >90%, withdraw 8 oz of water | | It is necessary to withdraw water to allow space for water flow into the tank after chlorine and buffer injection. |
| | 2 | Retrieve chlor unit | | Stowed in compartment B4. |
| | 3 | Remove chlor port cap | | |
| | 4 | Attach needle assy to inj port | | |
| | 5 | Insert chlor ampoule into casing | | Chlorine ampoules color-coded red. |

| STA/T | STEP | PROCEDURE | PANEL | REMARKS |
|---|---|---|---|---|
| CMP | 6 | Conn knob assy & rot (CW) until piston contacts ampoule | | |
| | 7 | Install ampoule assy on needle assy (push & turn CW) | 352 | |
| | | CAUTION<br>If potable water qty is <50%, inj half the contents of each ampoule (chlor & buffer) by rotating knob three turns (CW). | | |
| | 8 | Rot knob (CW) until ampoule is empty (piston bottoms out) | | Requires ≈5-1/2 turns. |
| | 9 | Disconnect ampoule assy from needle assy (push & turn CCW) | | |
| | 10 | Rot knob (CCW), remove & stow used ampoule | | Place used ampoule in chlorination unit stowage bag. |
| | 11 | Repeat steps 5 thru 8 using buffer ampoule | | Buffer ampoules color-coded brown. |
| | 12 | Wait 10 min, remove ampoule of H20 by rotating inj barrel (CCW) four turns while holding bayonet section in locked position (CW) | | |
| | 13 | Rot knob (CCW), remove & stow used ampoule | | |



NORMAL/BACKUP

| STA/T | STEP | PROCEDURE | PANEL | REMARKS |
|---|---|---|---|---|
| CMP | 14 | Stow chlor unit | | |
| | 15 | Replace chlor port cap | | |
| | | CAUTION | | |
| | | Wait 30 min before withdrawing water from water use ports. | | |
| | | 4.5.4.6 PGA Mode Changes | | |
| | | a. PGA to Shirtsleeve | | Two flow paths exist for returning cabin atmosphere to suit circuit for scrubbing. |
| | | CAB PRESS ind - >4.7 psia (verify) | 2 | |
| | | EMER CAB PRESS sel - BOTH | 351 | |
| ALL | | Doff & stow gloves & helmet | | |
| | | If suit return vlv is used | | |
| CDR | | SUIT RETURN vlv - open (pull) | 380 | |
| ALL | | Retrieve inflight coveralls | | |
| | | SUIT PWR - OFF | 9,10,6 | |
| | | PWR - OFF | | |
| | | AUDIO CONT - NORM | | |
| | | WARNING | | |
| | | If comm umb is to be disconnected at bulkhead or cont head, VHF AM sw on associated pnl must be placed OFF & S BD MODE PCM sw must be in PCM or ctr. | | |

| STA/T STEP | PROCEDURE | PANEL | REMARKS |
|---|---|---|---|
| ALL | Disconnect 02 & comm umb at PGA & insert interconnect in 02 return hose<br>If suit return vlv is not used<br>Retrieve inflight coveralls<br>SUIT PWR - OFF<br>PWR - OFF<br>AUDIO CONT - NORM | 9,10,6 | |
| CDR | DEMAND REG sel - OFF | 380 | Screens plus hose causes increased pressure drop in suit circuit causing 02 demand flow. |
| | WARNING<br>If comm umb is to be disconnected at bulkhead or cont head, VHF AM sw on associated pnl must be placed OFF & S BD MODE PCM sw must be in PCM or ctr. | | |
| ALL | Disconnect 02 & comm umb at PGA & install suit return hose screen cap | | Suit donning and suit loop isolation requires additional time for repositioning suit flow valves (inaccessible from couches) in addition to normal suiting time. |
| | SUIT FLOW vlv - CAB FLOW (for unsuited crewmen) | 300,301,302 | Adjust suit flow valve between CAB FLOW and FULL FLOW to maintain adequate flow for suited crewman. |
| | Disconnect UTCA, comm & biomed conn<br>Doff & stow UTCA & PGA<br>Don inflight coveralls<br>Retrieve & conn CWG adapter to comm & biomed conn | | |
| | Audio pnl sw (all) - as desired | 9,10,6 | Comm and biomed integrity should be verified. |



NORMAL/BACKUP

| STA/T STEP | PROCEDURE | PANEL | REMARKS |
|---|---|---|---|
| | b. Shirtsleeve to PGA | | Two flow paths exist for returning cabin atmosphere to suit circuit for scrubbing. |
| ALL | SUIT PWR - OFF<br>PWR - OFF<br>AUDIO CONT - NORM | 9,10,6 | |
| | WARNING<br><br>If comm umb is to be disconnected at bulkhead or cont head, VHF AM sw on associated pnl must be placed OFF & S BD MODE PCM sw must be in PCM or ctr. | | |
| | Disconnect & stow CWG adapter<br>Doff & stow inflight coveralls<br>Retrieve & don UTCA & PGA, conn UTCA, comm & biomed conn<br>If suit return vlv is used<br>Remove O2 umb interconnect & conn O2 & comm umb to PGA | | |
| CDR | SUIT RETURN vlv - close (push) (if all suited) | 380 | |
| ALL | If suit return vlv is <u>not</u> used<br>Remove suit ckt return hose screen cap & conn O2 & comm umb | | Suit donning and suit loop isolation requires additional time for repositioning suit flow valves (inaccessible from couches) in addition to normal suiting time. |
| CDR | DEMAND REG sel - BOTH | | |

| STA/T STEP | PROCEDURE | PANEL | REMARKS |
|---|---|---|---|
| ALL | SUIT FLOW vlv - FULL FLOW (for suited crewman) | 300,301,302 | |
| | Audio pnl sw (all) - as desired | 9,10,6 | Comm and biomed integrity should be verified. |
| | Retrieve & don helmet & gloves | | |
| CMP | EMER CAB PRESS sel - OFF (if all suited) | 351 | |
| | c. PGA to Partial PGA | | Two flow paths exist for returning cabin atmosphere to suit circuit for scrubbing. |
| | CAB PRESS ind - >4.7 psia (verify) | 2 | |
| | EMER CAB PRESS sel - BOTH | | |
| ALL | Doff & stow gloves & helmet | | |
| | If suit return vlv is used | | |
| CDR | SUIT RETURN vlv - open (pull) | 380 | |
| ALL | Reverse 02 umb conn at PGA | | 02 umbilicals reversed for optimum flow distribution within PGA. |
| | Supply hose to outlet conn | | |
| | Return hose to inlet conn | | |
| | If suit return vlv is <u>not</u> used | | |
| CDR | DEMAND REG sel - OFF | | Screens plus hose cause increased pressure drop in suit circuit causing 02 demand flow. |
| ALL | Disconnect return hose from PGA & install suit return hose screen cap | | |
| | Conn supply hose to outlet conn | | |
| | d. Shirtsleeve to EVT/IVT | | Two flow paths exist for returning cabin atmosphere to suit circuit for scrubbing. |
| CDR,LMP | SUIT PWR - OFF | 9,6 | |
| | PWR - OFF | | |
| | AUDIO CONT - NORM | | |



NORMAL/BACKUP

| STA/T STEP | PROCEDURE | PANEL | REMARKS |
|---|---|---|---|
| | WARNING<br><br>If comm umb is to be disconnected at bulkhead or cont head, VHF AM sw on associated pnl must be placed OFF & S BD MODE PCM sw must be in PCM or ctr. | | |
| CDR,LMP | Disconnect & stow CWG adapter<br>Doff & stow inflight coveralls<br>Doff CWG | | Stow LMP CWG. |
| | Don fecal containment system | | |
| CDR | Don CWG | | |
| LMP | Retrieve & don LCG | | |
| CDR,LMP | Don comm carrier/moulded earpiece adapters | | |
| | Retrieve & don UCTA & PGA, conn UCTA, comm, & biomed conn | | |
| | If suit return vlv is used | | |
| | Remove 02 umb interconnect & conn 02 & comm umb | | |
| CDR | SUIT RETURN vlv - close (push) (if all suited) | 380 | |
| | If suit return vlv is <u>not</u> used | | |
| CDR,LMP | Remove suit return hose screen cap & conn 02 & comm umb | | Suit donning and suit loop isolation requires additional time for repositioning suit flow valves (inaccessible from couches) in addition to normal suiting time. |
| | SUIT FLOW vlv (2) - FULL FLOW | 300,301 | |
| | Audio pnl sw (all) - as desired | 9,6 | Comm and biomed integrity should be verified. |
| | Retrieve & don helmet & gloves | | |
| CMP | EMER CAB PRESS sel - OFF (if all suited) | 351 | |

| STA/T STEP | PROCEDURE | PANEL | REMARKS |
|---|---|---|---|
| | 4.5.4.7 Waste Management Procedures<br><br>WARNING<br><br>If germicide pouch is accidently ruptured, proceed as follows:<br><br>• Germicide on CM surface or hardware; wipe up with tissue.<br><br>• Germicide on crewman's skin; blot with tissue and flush with water.<br><br>• Germicide in crewman's eyes; irrigate with water from water gun or soaked tissue.<br><br>• Germicide ingested; take magnesium compound and/or high protein food - do not induce vomiting. | | |
| | a. Urine Dump Modes | | |
| ALL | (1) PGA urine collection bag<br>Conn urine line filter to urine trnfr hose<br>Conn urine trnfr hose/filter to urine/feces QD<br>Remove cap from PGA thigh QD & stow | | Filter stowed in R-5, hose under A-6.<br><br>Temporary stowage. |



NORMAL/BACKUP

| STA/T STEP | PROCEDURE | PANEL | REMARKS |
|---|---|---|---|
| ALL | Conn urine trnfr hose/filter QD to thigh QD | | |
| | OVBD DRAIN vlv - DUMP | 251 | |
| | When PGA bag empty, disconnect urine trnfr hose/ filter QD at PGA thigh QD | | |
| | Replace cap on PGA thigh QD | | |
| | Conn UTS to urine trnfr hose/ filter QD | | Stowed in R-11. |
| | UTS vlv - open | | |
| | Purge until particles cease exhausting vent line (1 to 2 min), then OVBD DRAIN vlv - OFF | | |
| | UTS vlv - close | | |
| | Disconnect UTS from urine trnfr hose & stow | | Stowed in R-11. |
| | Disconnect urine trnfr hose from urine/feces QD & stow | | Stow filter in R-5, hose under A-6. |
| (2) | UTS (collection) | | Used when inconvenient for simultaneous urination and overboard dumping. |
| | Obtain UTS & verify vlv closed | | Stowed in R-11. |
| | Roll cuff - affixed | | |
| | UTS vlv - open | | |
| | Perform task | | Six spare roll-on cuffs stowed in medical accessory kit (B2), and one spare receiver assembly stowed in R-11. |
| | UTS vlv - close | | |
| | Roll cuff - removed | | |

| STA/T STEP | PROCEDURE | PANEL | REMARKS |
|---|---|---|---|
| ALL | Free urine in cuff absorbed with tissue | | |
| | UTS - stow (temporary) | | |
| | When convenient, dump urine by UTS (dump) proced | | |
| | (3) UTS (dump) | | |
| | Conn urine line filter to urine trnfr hose | | Filter in R-5, hose under A-6. |
| | Conn urine trnfr hose/filter to urine/feces QD | | |
| | Obtain UTS & verify vlv closed | | Stowed in R-11. |
| | Attach UTS to urine trnfr hose | | |
| | Perform UTS (collection) (if req), 4.5.4.7a (2) | | |
| | OVBD DRAIN vlv - DUMP | 251 | |
| | When UTS bag empty, UTS vlv - open | | |
| | Purge 30 sec (min), then OVBD DRAIN vlv - OFF | | |
| | UTS vlv - close | | |
| | Disconnect UTS from urine trnfr hose & stow | | Stow in R-11. |
| | Disconnect urine trnfr hose from urine/feces QD & stow | | Stow filter in R-5, hose under A-6. |
| | (4) Urine Receptacle Assy (URA) | | GFE assembly. |
| | Conn urine line filter to urine trnfr hose | | |
| | Conn urine trnfr hose/filter to urine feces QD | | |
| | Conn urine receptacle to urine trnfr hose | | |
| | URA vlv - VENT | | |



NORMAL BACKUP

| STA/T STEP | PROCEDURE | PANEL | REMARKS |
|---|---|---|---|
| ALL | Remove receptacle cover | | |
| | OVBD DRAIN vlv - DUMP | 251 | |
| | Perform task | | Direct urine stream parallel to honeycomb to prevent splashback. Avoid accelerations to URA during use. Remove last drop by touching screen at top of URA. |
| | Flush screen & honeycomb with water gun | | |
| | Replace receptacle cover after liquid has cleared from URA | | |
| | URA vlv - CLOSE (CW) | | |
| | Stow URA for next use with urine trnfr hose conn & OVBD DRAIN vlv - DUMP | | Allows URA to vacuum dry between uses. |
| | For stowage prior to entry | | |
| | OVBD DRAIN vlv - OFF | | |
| | Remove & stow URA, urine trnfr hose & urine filter | | Stow in A-8. |
| | b. Defecation | | |
| | Remove fecal collection assy from stowage | | Assemblies stowed in compartment R-10. |
| | Obtain defecation collection device from assy | | |
| | Remove germicide pouch | | |
| | Insert germicide pouch (protective cover removed) into inner fecal bag | | |
| | Remove protective covering from lip of inner fecal bag & place into bag | | Lip of inner fecal bag covered with adhesive. |
| | Affix inner fecal bag | | |
| | Perform task | | |

| STA/T STEP | PROCEDURE | PANEL | REMARKS |
|---|---|---|---|
| ALL | Seal inner fecal bag | | Remove air prior to sealing. |
| | Rupture germicide pouch | | |
| | Knead contents for 4 min | | |
| | Insert into outer fecal bag | | |
| | Only subsequent to initial odor detection will waste stowage compartment be vented prior to each waste deposit | | |
| | WASTE STOW vlv - VENT for 30 sec, then CLOSE | 252 | |
| | Stow fecal bag | | Fecal matter stowed in waste stowage compartment. |
| | c. Emesis | | |
| | Obtain fecal/emesis (F/E) bag | | |
| | Perform task | | |
| | Insert germicide pouch (protective cover removed) into inner F/E bag | | |
| | Seal inner F/E bag | | |
| | Rupture germicide pouch | | |
| | Insert inner F/E bag into outer F/E bag & seal | | |
| | Only subsequent to initial odor detection will waste stowage compartment be vented prior to each waste deposit | | |
| | WASTE STOW vlv - VENT for 30 sec, then CLOSE | | |
| | Stow outer F/E bag | | |

| STA/T | STEP | PROCEDURE | PANEL | REMARKS |
|---|---|---|---|---|
| | | d. Side Hatch Urine/Water Dump | | Cable and quick-disconnects stowed in Volume R-10. |
| CMP | | Remove dump nozzle conn cover | Side hatch | Use tool E. Rotate cover as necessary to permit removal of electrical connector. Connector lock pins must be aligned with slots (3) in threaded portion of cover. |
| | | Remove plug & stow | | Use tool E. Plug stowed in Volume R-10. |
| | | Withdraw wire guard & wires from slot | | Wire guard to hang loose on wiring. |
| | | Install male QD on dump nozzle (finger-tight) | | |
| | | Conn cable to htr conn (if req) | | The side hatch dump nozzle heater need not be connected (crew option). CM orientation and previous cold soak should be considered when electing not to connect heater. If nozzle freezes, connect and use heater to thaw nozzle. |
| | | UTIL PWR - OFF (verify) | 16 | |
| | | Conn cable to outlet | | |
| | | UTIL PWR - on (up) | | |
| | | If urine ovbd dump req | | |
| | | Conn urine dump hose to dump nozzle QD | | Cabin to ambient ΔP will provide for urine flow. |
| | | If waste H2O ovbd dump req | | |
| | | Install female QD on waste H2O servicing conn | 352 | Use tool F to remove connector cap. |
| | | Conn urine dump hose to servicing conn & dump nozzle | | |
| LMP | | H2O QTY IND sw - WASTE | 2 | |
| CMP | | WASTE TK SERV vlv - OPEN until WASTE H2O QTY ind - ≈25%, then CLOSE | 352 | |

| STA/T STEP | PROCEDURE | PANEL | REMARKS |
|---|---|---|---|
| | CAUTION<br><br>Depletion of all waste water may damage suit heat exchanger water separator. | | |
| | e. Water Collection | | |
| CMP | Conn urine trnfr hose-filter to urine/feces QD<br>Conn cab purge QD to urine trnfr hose<br>OVBD DRAIN vlv - DUMP<br>Collect water<br>After collection is complete<br>Purge until particles cease exhausting vent line (1 to 2 min)<br>OVBD DRAIN vlv - CLOSE | 251 | |
| | f. Vac Oper Using O2 Umb | | |
| | CAUTION<br><br>Not to be used for H2O collection. Ingestion of H2O will cause swelling of CO2 cstr element. | | |
| CDR | DEMAND REG sel - OFF<br>SUIT RETURN vlv - close (push) | 380 | Screens plus hose cause increased pressure drop in suit circuit causing O2 demand flow. |
| ALL | Install one screen & one interconnect to two return hoses<br>Install vac brush to third return hose | | |



NORMAL BACKUP

| STA/T | STEP | PROCEDURE | PANEL | REMARKS |
|---|---|---|---|---|
| ALL | | SUIT FLOW vlv (3) - FULL FLOW | 300,301,302 | |
| | | At completion of vac | | |
| CDR | | SUIT RETURN vlv - open (pull) | 380 | |
| | | DEMAND REG sel - BOTH | | |
| ALL | | SUIT FLOW vlv (3) - CAB FLOW | 300,301,302 | |
| LMP | | Remove vac brush & install screen cap on return hose | | |
| | 4.5.4.8 | CM Repressurization | | |
| | a. | Norm Mode (time ≈21 min) | | |
| CDR | | CAB PRESS RELF vlv (2) - NORM (safety latch on) | 325 | |
| CMP | | CAB PRESS DUMP vlv - close (CW) (verify) | Side hatch | |
| LMP | | 02 PRESS IND sw - SURGE TK | 2 | |
| CDR | | REPRESS PKG vlv - FILL | 326 | |
| | | REPRESS 02 - OPEN | 601 | Guarded. |
| LMP | | CRYO 02 PRESS 1 ind - 150 psia min | 2 | Minimum surge tank pressure. |
| CDR | | REPRESS PKG vlv - OFF | 326 | |
| LMP | | CAB PRESS ind - 3.0 psia (in 1 min) | 2 | |
| | | REPRESS 02 PRESS ind - 0.0 psig | 602 | |
| CDR | | REPRESS 02 - CLOSE | 601 | Guarded. |
| CMP | | CAB REPRESS vlv - open (CW) | 351 | Maintain 150 psia minimum in surge tank. |
| LMP | | CAB PRESS ind - 4.7-5.3 psia | 2 | |
| | | 02 PRESS IND sw - TK 1 | | |
| CMP | | CAB REPRESS vlv - OFF (CCW) | 351 | |

| STA/T | STEP | PROCEDURE | PANEL | REMARKS |
|---|---|---|---|---|
| | | b. Alternate Mode (time ≈48 min) | | |
| CDR | | CAB PRESS RELF vlv (2) - NORM (safety latch on) | 325 | |
| CMP | | CAB PRESS DUMP vlv - close (CW) (verify) | Side hatch | |
| | | EMER CAB PRESS sel - BOTH | 351 | |
| | | CAB REPRESS vlv - open (CW) | | |
| LMP | | O2 PRESS IND sw - SURGE TK | 2 | |
| | | CRYO O2 PRESS 1 ind - 150 psia min | | Minimum surge tank pressure. |
| CMP | | EMER CAB PRESS sel - OFF | 351 | |
| | | CAB REPRESS vlv - adj to 150 psia min | | |
| LMP | | CAB PRESS ind - 4.7-5.3 psia | 2 | |
| | | O2 PRESS IND sw - TK 1 | | |
| CMP | | CAB REPRESS vlv - OFF (CCW) | 351 | |
| | 4.5.4.9 | Pressure Suit Circuit & PGA Check at 5.0 psia | | |
| | | a. Gross Suit Ckt Verification | | This procedure may be used in lieu of step b, PGA Check Only, to ascertain complete suit loop integrity. |
| CDR | | DIRECT O2 vlv - close (CW) | 7 | |
| CMP | | SUIT PRESS ind - 4.7-5.3 psia | 2 | |
| | | O2 FLOW ind - 0.2-0.4 lb/hr | | |
| | | CAUTION<br>• SUIT TEST vlv should remain in PRESS position until suit ckt press is stab to preclude seal scarring. | | |

...continued



NORMAL BACKUP

| STA/T STEP | PROCEDURE | PANEL | REMARKS |
|---|---|---|---|
| | • If repositioning of SUIT TEST vlv from PRESS is req prior to suit press stabilization, perform the following: | | |
| CDR | a. DEMAND REG sel - OFF | 380 | |
| | b. Allow 15 sec (min) stabilization time | | |
| | c. Reposition SUIT TEST vlv - DEPRESS or OFF as applicable | | |
| | d. When suit press stabilized, DEMAND REG sel - BOTH | | |
| | SUIT TEST vlv - PRESS | | All crewmen exercise PGA joints during pressurization period. DIRECT 02 valve may be slightly opened to reduce suit loop pressurization time, but must be fully closed (CW) at 4.0 psig suit pressure. |
| CMP | 02 FLOW ind - 1.0 lb/hr (pegged) | 2 | |
| | 02 FLOW HI lt - on | | After 16-second delay. |
| ALL | MASTER ALARM pb/lt (3) - on, push | 1,3,122 | |
| CDR | Cycle SUIT RETURN vlv - open (pull) & close (push) when PGA press ind - 1.5-2.0 psig | 380 | Continue suit circuit pressurization until 02 flow starts to decrease. |
| CMP | SUIT PRESS ind - 8.8-9.8 psia | 2 | Crewmen remain inactive while monitoring suit circuit pressure and 02 flow indicator to preclude fluctuations in 02 flow. Monitoring should not be scheduled during H20 accumulator stroking (or 30 seconds thereafter), or accumulators should be temporarily disabled during test (SUIT H20 ACCUM AUTO - center, then back to previous position). |

| STA/T STEP | PROCEDURE | PANEL | REMARKS |
|---|---|---|---|
| ALL | PGA press ind (3) - 4.1-4.5 psig | PGA | |
| CMP | O2 FLOW HI lt - out | 2 | |
| | O2 FLOW ind - stab for 15 sec, & remain <0.8 lb/hr for 30 sec after stabilization | | |
| CDR | SUIT TEST vlv - DEPRESS | 380 | |
| CMP | O2 FLOW ind - 0.2-0.4 lb/hr | 2 | |
| | SUIT PRESS ind - slightly >CAB PRESS ind | | In ≈75 seconds. |
| CDR | SUIT TEST vlv - OFF | 380 | |
| | DEMAND REG sel - BOTH (verify) | | |
| | b. PGA Check Only | | This procedure is performed only if individual or collective PGA verification is required. |
| | DIRECT O2 vlv - close (CW) | 7 | |
| CMP | SUIT PRESS ind - 4.7-5.3 psia | 2 | |
| | O2 FLOW ind - 0.2-0.4 lb/hr | | |
| | CAUTION | | |
| | SUIT TEST vlv should remain in PRESS position until suit ckt press is stab to preclude seal scarring. | | |
| CDR | SUIT TEST vlv - PRESS | 380 | All crewmen exercise PGA joints during pressurization period. DIRECT O2 valve may be slightly opened to reduce suit loop pressurization time, but must be fully closed (CW) at 4.0 psig suit pressure. |



NORMAL/BACKUP

| STA/T | STEP | PROCEDURE | PANEL | REMARKS |
|---|---|---|---|---|
| CMP | | 02 FLOW ind - 1.0 lb/hr (pegged)<br>02 FLOW HI lt - on | 2 | |
| ALL | | MASTER ALARM pb/lt (3) - on, push | 1,3,122 | |
| CMP | | SUIT PRESS ind - 8.8-9.8 psia | 2 | After ≈75 seconds. |
| ALL | | PGA press ind (3) - 4.1-4.5 psig | PGA | |
| | | WARNING<br><br>Suit flow vlv(s) may remain in OFF position for no longer than one min or asphyxiation may result. | | |
| | | CAUTION<br><br>If all suit flow vlvs are closed simultaneously, suit comprs must be shut off to prevent compr damage due to deadheading of suit loop. | | |
| CMP | | SUIT FLOW vlv (suited crewmen) - OFF | 300,301,302 | |
| ALL | | PGA press ind (suited crewmen) - <0.5 psi/min press decay | PGA | Crewmen hold breath and remain inactive while monitoring PGA pressure decay to preclude pressure drop or fluctuation on PGA pressure indicators. |
| CMP | | SUIT FLOW vlv (suited crewmen) - FULL FLOW | 300,301,302 | |

| STA/T | STEP | PROCEDURE | PANEL | REMARKS |
|---|---|---|---|---|
| | | CAUTION | | |
| | | If repositioning of SUIT TEST vlv from PRESS is req prior to suit press stabilization, perform the following: | | |
| CDR | | a. DEMAND REG sel - OFF | 380 | |
| | | b. Allow 15 sec (min) stabilization time | | |
| | | c. Reposition SUIT TEST vlv - DEPRESS or OFF as applicable | | |
| | | d. When suit press stabilization, DEMAND REG sel - BOTH | | |
| | | SUIT TEST vlv - DEPRESS | | |
| CMP | | 02 FLOW HI lt - out | 2 | |
| | | 02 FLOW ind - 0.2-0.4 lb/hr | | |
| | | SUIT PRESS ind - slightly >CAB PRESS ind | | In ≈75 seconds. |
| CDR | | SUIT TEST vlv - OFF | 380 | |
| | 4.5.4.10 | CM 02 Supply Refill | | |
| LMP | | 02 PRESS IND sw - SURGE TK | 2 | |
| | | CRYO 02 PRESS 1 ind - 400 psia | | |
| CMP | | CAB REPRESS vlv - OFF (CCW) | 351 | |
| CDR | | REPRESS 02 - CLOSE | 601 | Guarded. |
| | | REPRESS PKG vlv - FILL | 326 | |
| CMP | | CRYO 02 PRESS 1 ind - 865-935 psia | 2 | Monitor pressure to assure no decrease below 150 psia. |
| | | 02 PRESS IND sw - TK 1 | | Upon completing refill operation. |
| CDR | | REPRESS PKG vlv - OFF | 326 | |



NORMAL/BACKUP

| STA/T | STEP | PROCEDURE | PANEL | REMARKS |
|---|---|---|---|---|
| | | 4.5.4.11 CM Pressure Dump | | |
| | | a. Using Cab Press Relf Vlv | | |
| CMP | | CAB FAN (both) - OFF (verify) | 2 | |
| CDR | | DIRECT 02 vlv - close (CW) | 7 | |
| | | rh CAB PRESS RELF vlv - DUMP (safety latch off) | 325 | Valve in DUMP position long enough for cabin pressure to decrease to ≈3.25 psia. |
| CMP | | CAB PRESS ind - 3.0-3.25 psia | 2 | |
| CDR | | rh CAB PRESS RELF vlv - BOOST/ENTR | 325 | |
| CMP | | 02 FLOW ind - ≈0.24 lb/hr | 2 | Verifies cabin pressure regulator lockout. |
| | | SUIT PRESS ind - 3.5-4.0 psia | | Verifies suit demand pressure regulator aneroid function. |
| CDR | | rh CAB PRESS RELF vlv - DUMP | 325 | |
| CMP | | CAB PRESS ind - 0.0 psia (within 6 min) | 2 | Cabin at 0.01 psia within 4.5 minutes. |
| CDR | | CAB PRESS RELF vlv (2) - NORM (safety latch on) | 325 | |
| | | b. Using Side Hatch Cab Press Dump Vlv | | |
| LMP | | CAB FAN (both) - OFF (verify) | 2 | |
| CMP | | EMER CAB PRESS sel - OFF | 351 | |
| CDR | | REPRESS PKG vlv - OFF | 326 | |
| | | If lone crewman oper | | |
| | | REPRESS PKG vlv - FILL | | REPRESS PKG valve should be in FILL position for lone crewman activities, as leaving valve in OFF reduces immediate repressurization capability to ≈1.8 psia, less than amount required to sustain life if suit ruptures. |

| STA/T | STEP | PROCEDURE | PANEL | REMARKS |
|---|---|---|---|---|
| LMP | | REPRESS 02 vlv - CLOSE | 601 | |
| CDR | | DIRECT 02 vlv - close (CW) (verify) | 7 | |
| LMP | | CAB PRESS DUMP vlv - open (CCW - one turn) | Side hatch | Valve in open position long enough for cabin pressure to decrease to ≈3.25 psia. |
| | | CAB PRESS ind - 3.0-3.25 psia | 2 | |
| | | CAB PRESS DUMP vlv - close (CW) | Side hatch | |
| | | 02 FLOW ind - <0.5 lb/hr | 2 | Verifies cabin pressure regulator lockout and that EMER CAB PRESS selector is OFF. |
| | | SUIT PRESS ind - 3.5-4.0 psia | | Verifies suit demand pressure regulator aneroid function. |
| | | CAB PRESS DUMP vlv - open (CCW) | Side hatch | Full open. |
| | | CAB PRESS ind - ≈0 psia | 2 | |
| | | CAB PRESS DUMP vlv - close (CW) | Side hatch | |
| | 4.5.4.12 | Suit Circuit Purge of H2 | | |
| CDR | | DIRECT 02 vlv - OPEN (CCW) for 1 min | 7 | Suit circuit pressure relief valve dumps hydrogen into cabin. |
| CMP | | 02 FLOW ind - 1.0 lb/hr (pegged) | 2 | |
| | | 02 FLOW HI lt - on | | After 16-second time delay. |
| ALL | | MASTER ALARM pb/lt (3) - on, push | 1,3,122 | |
| CDR | | DIRECT 02 vlv - close (CW) | 7 | |
| CMP | | 02 FLOW HI lt - out | 2 | |
| | | 02 FLOW ind - 0.2 lb/hr (pegged) | | |



NORMAL/BACKUP

| STA/T STEP | PROCEDURE | PANEL | REMARKS |
|---|---|---|---|
| | 4.5.4.13 Cabin Cold-Soak Operation | | Secondary glycol loop placed in evaporative cooling mode, and routed only to suit circuit heat exchanger. |
| | a. Activate Cold Soak | | |
| CMP | Open cool cont atten pnl | | Covers panel 382. |
| | WARNING | | |
| | SUIT FLOW RELF vlv must remain OFF throughout mission or swelling of CO2 odor absorber filters may result. | 382 | |
| | SUIT HT EXCH SEC GLY - FLOW | | |
| | SEC EVAP H2O CONT vlv - AUTO | | |
| | Close cool cont atten pnl | | |
| LMP | CAB TEMP - MAN | 2 | |
| CMP | PRIM CAB TEMP vlv - COLD (CW) | 303 | Maximum cold position. |
| | SEC CAB TEMP vlv - OFF (CCW) | | Bypass cabin heat exchanger. |
| LMP | SUIT HT EXCH - BYP for 20 sec, then off (ctr) | 2 | |
| | ECS IND sel - SEC | | |
| | SEC COOL PUMP - AC1 | | |
| | SEC GLY DISCH PRESS ind - 39-51 psig | | After initiating cold-soak operation, periodic ECS monitoring check should include readings from the following secondary loop indicators: SEC GLY EVAP OUT TEMP, SEC GLY EVAP STM PRESS, SEC GLY DISCH PRESS, and SEC ACCUM QTY. |
| | SEC ACCUM QTY ind - 30-55% | | |
| | SEC COOL EVAP - EVAP | | |
| | SEC GLY EVAP OUT TEMP ind - 38°-50.5°F | | |
| | SEC GLY EVAP STM PRESS ind | | |
| | When boiling - 0.09-0.14 psia | | |
| | Not boiling - >0.14 psia | | |

| STA/T STEP | PROCEDURE | PANEL | REMARKS |
|---|---|---|---|
| LMP | ECS IND sel - PRIM | 2 | |
| | RAD PRIM OUT TEMP ind - >-20°F | | |
| | If <-20°F | | Cold soak operation is stopped until RAD PRIM OUT TEMP indicator - >0°F. |
| | SEC COOL EVAP - RSET for 58 sec min, then off (ctr) | | |
| | SEC COOL PUMP - off (ctr) | | |
| | SUIT HT EXCH - ON for 20 sec, then off (ctr) | | |
| | b. Deactivate Cold Soak | | |
| CMP | SEC CAB TEMP vlv - MAX COOL (CW) | 303 | |
| LMP | CAB TEMP - AUTO | 2 | |
| | SUIT HT EXCH - ON for 20 sec, then off (ctr) | | |
| | SEC COOL EVAP - RSET for 58 sec min, then off (ctr) | | RSET closes steam pressure control valve. Steam pressure valve requires 58 seconds from full open to full close. |
| | SEC COOL PUMP - off (ctr) | | |
| CMP | Open cool cont atten pnl | | |
| | WARNING | | |
| | SUIT FLOW RELF vlv must remain OFF throughout msn or swelling of CO2 odor absorber filters may result. | 382 | |
| | SEC EVAP H2O CONT vlv - OFF | | |
| | Close cool cont atten pnl | | |



NORMAL/BACKUP

| STA/T STEP | PROCEDURE | PANEL | REMARKS |
|---|---|---|---|
| | 4.5.4.14 CM/LM Pressure Equalization | | |
| ALL | a. Vented LM<br>PGAs donned & checked (refer to PGA Mode Changes, 4.5.4.6, & Pressure Suit Circuit & PGA Check at 5.0 psia, 4.5.4.9) | | LM overhead hatch pressure dump valve open at launch. This procedure requires ≈30 minutes to complete. |
| CMP | WASTE STOW vlv - CLOSE | 252 | Required for transposition, docking, and LM ejection only. |
| LMP | O2 PRESS IND sw - SURGE TK<br>CRYO O2 PRESS 1 ind & REPRESS O2 PRESS ind - 865-935 psia (verify) | 2 | |
| CMP | EMER CAB PRESS sel - OFF (verify) | 351 | At reduced cabin pressure, unnecessary O2 consumption will occur if EMER CAB PRESS selector is not OFF. |
| CDR | REPRESS PKG vlv - OFF | 326 | |
| | CAUTION<br>Do not exceed cab press of 5.7 psia or cab press relf vlv will actuate. | | |
| | DIRECT O2 vlv - OPEN (CCW) | 7 | |
| LMP | O2 FLOW ind - 1.0 lb/hr (pegged)<br>O2 FLOW HI lt - on | 2 | |
| ALL | MASTER ALARM pb/lt (3) - on, push | 1,3,122 | |
| LMP | SUIT CAB ΔP ind - >+2.0 in. H2O<br>CAB PRESS ind - ≈5.7 psia | 2 | |

| STA/T | STEP | PROCEDURE | PANEL | REMARKS |
|---|---|---|---|---|
| CDR | | DIRECT 02 vlv - close (CW) | 7 | Cabin pressure should increase to ≈5.7 psia in ≈2 minutes. Surge tank pressure will decrease to ≈550 psia. |
| CMP | | TUNL VENT vlv - LM/CM ΔP (verify)<br>LM/CM ΔP ind - +4 psid (pegged)<br>after 27.5 min | 12 | |
| LMP | | CRYO 02 PRESS ind - 850 psia | 2 | Surge tank pressure will increase from 550 psia to 850 psia in ≈27.5 minutes after DIRECT 02 valve is closed. |
| CMP | | PRESS EQUAL vlv - OPEN | Fwd hatch | |
| | | xxxxxxxxxxxxxxxxxxxxxxxxxxxxxxxxxxxxxxxx | | |
| | | If unable to open PRESS EQUAL vlv, inform MSFN | | Applicable to transposition, docking, and LM ejection. SIVB life limit does not permit alternate pressure equalization through TUNL VENT valve. |
| | | CM Pressure Dump, 4.5.4.11a<br>Continue prep for LM ejection using pressurized PGAs<br>CM Repressurization, 4.5.4.8a | | |
| | | or TUNL VENT vlv - LM PRESS | 12 | TUNL VENT valve requires ≈10 hours to pressurize tunnel and LM. |
| | | xxxxxxxxxxxxxxxxxxxxxxxxxxxxxxxxxxxxxxxx | | |
| LMP | | CAB PRESS ind - 4.5 psia | 2 | |
| | | PRESS EQUAL vlv - CLOSE | Fwd hatch | |
| CMP | | LM/CM ΔP ind - ≈3.1 psid<br>Mon LM/CM ΔP ind for 3 min & verify ΔP stable | 12 | |
| LMP | | PRESS EQUAL vlv - OPEN | Fwd hatch | |
| | | CAB PRESS ind - 4.0 psia | 2 | |
| CMP | | REPRESS 02 - OPEN | 601 | |
| LMP | | CAB PRESS ind - 5.7 psia (max) | 2 | Anticipated cabin pressure will be ≈5.0 psia. |



NORMAL/BACKUP

| STA/T | STEP | PROCEDURE | PANEL | REMARKS |
|---|---|---|---|---|
| CMP | | Cycle REPRESS 02 as req between 4.0 & 5.7 psia limits until REPRESS 02 PRESS ind - ≈0.0 psia | 601 | |
| | | REPRESS 02 - CLOSE | | LM and CM cabin should be equalized in pressure when REPRESS 02 bottles are empty. If not, excessive tunnel or LM cabin leakage is indicated. |
| LMP | | CAB PRESS ind - ≥4.0 psia | 2 | |
| CMP | | LM/CM ΔP ind - ≈0.0 psid | 12 | Permissible to proceed with hatch removal. |
| | | xxxxxxxxxxxxxxxxxxxxxxxxxxxxxxxxxxxxxx | | |
| LMP | | CAB PRESS ind does not stab above 4.0 psia & LM/CM ΔP ind - ≥0.0 psid | 2 | Pressure will continue to increase automatically through cabin pressure regulator. |
| CMP | | PRESS EQUAL vlv - CLOSE | Fwd hatch | |
| | | PRESS EQUAL vlv opened periodically as CM press incr thru cab press until press is equalized at or above 4.0 psia | | |
| | | xxxxxxxxxxxxxxxxxxxxxxxxxxxxxxxxxxxx | | |
| LMP | | CRYO 02 PRESS 1 ind - 400 psia | 2 | |
| CDR | | REPRESS PKG vlv - FILL until | 326 | |
| LMP | | CRYO 02 PRESS 1 ind & | 2 | |
| CMP | | REPRESS 02 PRESS ind - 865-935 psia | 602 | |
| CDR | | REPRESS PKG vlv - OFF | 326 | |
| CMP | | EMER CAB PRESS sel - BOTH | 351 | |

| STA/T STEP | PROCEDURE | PANEL | REMARKS |
|---|---|---|---|
| | CAUTION<br><br>TUNL VENT vlv should not be inadvertently left in LM PRESS position when CM & LM are separated, as 02 would be vented to amb thru a 1/4-inch line. | | |
| CMP | TUNL VENT vlv - OFF | 12 | |
| | WASTE STOW vlv - VENT | 252 | Required for transposition, docking, and LM ejection only. |
| | b. Pressurized LM | | |
| | PGA donned & checked (refer to PGA Mode Changes, 4.5.4.6, & Pressure Suit Circuit & PGA Check at 5.0 psia, 4.5.4.9) | | |
| LMP | 02 PRESS IND sw - SURGE TK | 2 | |
| | CRYO 02 PRESS 1 ind - 865-935 psia (verify) | | |
| CMP | EMER CAB PRESS sel - OFF (verify) | 351 | At reduced cabin pressure, unnecessary 02 consumption will occur if EMER CAB PRESS selector is not OFF. |
| CDR | REPRESS PKG vlv - OFF | 326 | |
| | DIRECT 02 vlv - OPEN (CCW) | 7 | |
| LMP | CAB PRESS ind - 5.5 psia | 2 | |
| CDR | DIRECT 02 vlv - close (CW) until | 7 | |
| LMP | 02 FLOW ind - <0.5 lb/hr | 2 | |
| CDR | DIRECT 02 vlv - OPEN (CCW) until 02 flow - 0.6 lb/hr | 7 | |
| CMP | TUNL VENT vlv - LM/CM ΔP | 12 | |
| | LM/CM ΔP ind - +4 psid (pegged) | | |
| | PRESS EQUAL vlv - OPEN | Fwd hatch | |



NORMAL/BACKUP

| STA/T | STEP | PROCEDURE | PANEL | REMARKS |
|---|---|---|---|---|
| | | xxxxxxxxxxxxxxxxxxxxxxxxxxxxxxxxxxxxxxxx | | |
| | | If unable to open PRESS EQUAL vlv | | |
| CMP | | TUNL VENT vlv - LM PRESS | 12 | |
| | | xxxxxxxxxxxxxxxxxxxxxxxxxxxxxxxxxxxxxxxx | | |
| | | LM/CM ΔP ind - ≈3 psid | | |
| | | PRESS EQUAL vlv - CLOSE | Fwd hatch | |
| | | LM/CM ΔP ind - mon for 3 min & verify ΔP stable | 12 | |
| | | PRESS EQUAL vlv - OPEN | Fwd hatch | |
| | | LM/CM ΔP ind - 0.0 psid | 12 | |
| | | PRESS EQUAL vlv - CLOSE | Fwd hatch | |
| | | EMER CAB PRESS sel - BOTH | 351 | |
| | | CAUTION | | |
| | | TUNL VENT vlv should not be inadvertently left in LM PRESS position when CM & LM are separated, as 02 would be vented to amb thru a 1/4-inch line. | | |
| | | TUNL VENT vlv - OFF | 12 | |
| CDR | | DIRECT 02 vlv - close (CW) immediately after hatch close-out | 7 | |
| | 4.5.4.15 | Operation of Emergency 02 Masks | | |
| LMP | | EMER 02 - OPEN | 600 | Masks stowed on aft bulkhead aft of emergency 02 unit. |

| STA/T | STEP | PROCEDURE | PANEL | REMARKS |
|---|---|---|---|---|
| ALL | | Don emer 02 masks | AESB | Push mask pushbutton for continuous flow, otherwise mask is demand flow. |
| | | Doff emer 02 masks | | |
| LMP | | EMER 02 - CLOSE | 600 | |
| | 4.5.4.16 | Waste Water Tank Drain | | |
| | | H20 QTY IND sw - WASTE | 2 | |
| CMP | | PRESS RELF sel - DUMP A | 352 | |
| LMP | | Mon WASTE H20 QTY ind - decr<br>WASTE H20 QTY ind - ≈25% | 2 | |
| | | CAUTION<br>Depletion of all waste water may damage suit heat exchanger water separator. | | |
| CMP | | PRESS RELF sel - 2 | 352 | |
| | 4.5.4.17 | Gas Separator Cartridge Servicing | | |
| | a. | Remove separator cartridge from stowage | | Stowed in volume A1. |
| | b. | Attach separator to water pistol | | Female port of separator will fit on water pistol probe. |
| | c. | Trigger water pistol in short pulses until water is observed at separator outlet port | | |
| | d. | Wait 10 min | | Allow 10 minutes for membrane wetting. |



NORMAL/BACKUP

| STA/T STEP | PROCEDURE | PANEL | REMARKS |
|---|---|---|---|
| | CAUTION<br>Membrane can be damaged by pencils, screwdrivers, & other pointed objects. | | |
| CMP | e. Use separator on water pistol or food prep unit as req | 305 | |
| | 4.5.4.18 Primary Glycol Evaporator Operation | | |
| | 1 Activate prim evap<br>GLY EVAP H2O FLOW - AUTO<br>GLY EVAP STM AUTO - AUTO | 2 | |
| | 2 Deactivate prim evap<br>GLY EVAP H2O FLOW - off (ctr)<br>GLY EVAP STM AUTO - MAN<br>GLY EVAP STM INCR - INCR for 58 sec min | | INCR position is momentary. Steam pressure valve requires 58 seconds from full open to full close. |
| | 4.5.4.19 Cabin Fan Lunar Dust Filter | | |
| | 1 Filter installation before LM/CM rndz | | As close as is practical to LM/CM rendezvous. |
| | Unstow filter & install over cab fan outlet (louvers full open) | UEB | Filter stowage bag to remain in position in upper equipment bay adjacent to repress 02 panel. |
| | Place filter bellows in extd position<br>CAB FAN (2) - on (up) | 2 | Activated when CM and LM hatches are removed. |
| | 2 Filter removal after LM/CM rndz | | Cabin fans, with filter in place, to remain in operation for 4 hours after CM and LM hatches removed. |

| STA/T STEP | PROCEDURE | PANEL | REMARKS |
|---|---|---|---|
| | After 4 hours | | |
| CMP | CAB FAN (2) - OFF | 2 | |
| | Place filter bellows in compressed position | | |
| | Position filter stowage bag over filter | | |
| | Loosen filter mounting snaps (2) & carefully remove & seal filter in stowage bag | | |
| | Secure filter stowage bag to top of stowage locker A13 | | |
| | 4.5.4.20 Lunar Dust Vacuum Cleaner Operation | | The vacuum cleaner assembly may be used in LM as well as CM, because of length of power cable. |
| | Unstow vac cleaner & associated cmpnts (pwr cable, bag, hose, & brush) | AEB | |
| | AC UTIL PWR - OFF (verify) | 201 | |
| | Assemble cmpnts & conn pwr cable to pnl | | |
| | AC UTIL PWR - on (up) | | |
| | Vac cleaner pwr sw - ON | | |
| | At completion of vac cleaner use | | |
| | Vac cleaner pwr sw - OFF | | |
| | AC UTIL PWR - OFF | | |
| | Disconnect pwr cable & disassemble cmpnts | | |
| | Stow vac cleaner & associated cmpnts | AEB | |



NORMAL/BACKUP

4.5.5 CAUTION AND WARNING SYSTEM

CAUTION

Any or all of the system status lights should not be left illuminated for more than 10 minutes or overheating of the matrix will occur.

System management procedures for the C&WS consist of the following:

1. A procedure is provided for an operational test of the detection unit, system status lights, and MASTER ALARM pb/lt and tone. The test may be conducted at any time during the mission at discretion of crew.

2. An adjustment may be made at each orbital sunset to facilitate dark adaptation during period of orbital darkness.

3. Acknowledgement of system status light illumination and resetting of master alarm circuit is required. The procedures apply during prelaunch or any flight phase of the mission.

4. A procedure is provided for inhibiting master alarm tone in each headset, at discretion of the crew.

5. If one or more of the C&WS status lights are illuminated for more than 10 minutes, the status light matrix will become hot to the touch. The Acknowledge Mode may be used to prevent excessive on-time of status lights.

6. Installation procedures and an operational check for stowable C/W tone booster is presented.

7. During normal operations some C/W master alarms may illuminate. These alarms are listed, accompanied by information on what action should be taken to return C/W system to normal.

| STA/T STEP | PROCEDURE | PANEL | REMARKS |
|---|---|---|---|
| | 4.5.5.1 C&WS Operational Check | | |
| CMP | C/W LAMP TEST - 1 (hold) | 2 | Position 1 is momentary. Lamp test of MASTER ALARM light on panel 122 accomplished when G&N condition lights on that panel tested. Master alarm tone not activated by this test. |
| CDR | MASTER ALARM pb/lt - on | 1 | |
| CMP | lh C/W lts (15) - on | 2 | |
| | C/W LAMP TEST - 2 (hold) | | Position 2 is momentary. |
| CDR | MASTER ALARM pb/lt - out | 1 | |
| CMP | lh C/W lts (15) - out | 2 | |
| LMP | MASTER ALARM pb/lt - on | 3 | |
| CMP | rh C/W lts (20) - on | 2 | |
| | C/W LAMP TEST - rel | | |
| LMP | MASTER ALARM pb/lt - out | 3 | |
| CMP | rh C/W lts (20) - out | 2 | |
| | C/W CSM - CM | | |
| | CM RCS lt (both) - on | | Master alarm tone activated by this test. Systems 1 and 2 status lights. |
| ALL | MASTER ALARM pb/lt (3) & tone - on | 1,3,122 | MASTER ALARM light on MDC-1 will not come on if C/W NORM switch is in BOOST position. |
| | MASTER ALARM pb/lt - push | | |
| | MASTER ALARM pb/lt (3) & tone - out | | |
| CMP | C/W CSM - CSM | 2 | |
| | CM RCS lt (both) - out | | |
| | 4.5.5.2 Dark Adaptation Adjustment | | |
| | C/W NORM - ACK (at sunset) | | |
| | C/W NORM - NORM (at sunrise) | | |



NORMAL/BACKUP

| STA/T STEP | PROCEDURE | PANEL | REMARKS |
|---|---|---|---|
| | 4.5.5.3 Acknowledge/Reset Master Alarm Indication | | |
| | a. Norm Mode | | |
| ALL | MASTER ALARM pb/lt (3) & tone - on | 1,3,122 | |
| | MASTER ALARM pb/lt (3) - push | | All MASTER ALARM lights have reset capability. Pushing any light will reset alarm circuit unless C/W NORM switch in BOOST position. In this case, there is no reset capability with MASTER ALARM light on MDC-1. |
| | MASTER ALARM pb/lt (3) & tone - out | | |
| CMP | Applicable C/W lt - remains on | 2 | C/W light remains on until malfunction corrected. |
| | b. Acknowledge Mode (C/W NORM in ACK) | | |
| ALL | MASTER ALARM pb/lt (3) & tone - on | 1,3,122 | |
| CDR,LMP | MASTER ALARM pb/lt (2) - push & hold | 1,3 | MASTER ALARM light on panel 122 does not have acknowledge capability. |
| ALL | MASTER ALARM pb/lt (3) & tone - out | 1,3,122 | |
| CMP | Applicable C/W lt - on, for malfunction indication | 2 | |
| CDR,LMP | MASTER ALARM pb/lt (2) - rel | 1,3 | |
| CMP | Applicable C/W lt - out | 2 | Light may be recalled by again holding MASTER ALARM light on MDC-1 or MDC-3. |
| | 4.5.5.4 Master Alarm Tone Headset Control | | |
| | a. Inhibit Tone | | |
| ALL | PWR (3) - AUDIO | 9,10,6 | Inhibit function may be selected individually or in any combination. |

| STA/T STEP | PROCEDURE | PANEL | REMARKS |
|---|---|---|---|
| | b. Permit Tone | | |
| ALL | PWR (3) - AUDIO/TONE | 9,10,6 | |
| | 4.5.5.5 Stowable C/W Tone Booster | | Provided for crew use during sleep cycle and is stowed during Boost and Entry under locker A3. |
| | a. Installation | | |
| CDR,LMP | UTIL PWR - OFF | 15,16 | Removes power from connector on panel 15(16). |
| | Install conn of tone booster | | |
| | Place light snsr over MASTER ALARM lt | 1,3 | Velcro attached. |
| | UTIL PWR - on (up) | | |
| | Install tone beeper on LH (RH) girth shelf as req | | Velcro attached. |
| | b. Operational Check | | |
| CMP | C/W LAMP TEST - 1(2) (hold, rel) | 2 | Activates tone beeper as long as switch is held in position 1(2). |

4.5.5.6 Normal Operation C/W Master Alarms

The following list denotes those C/W lamps which may illuminate during normal operation. In all cases except SM C/W lights at CM/SM separation, push MASTER ALARM pb/lt to clear MASTER ALARM before proceeding to corrective action.



NORMAL/BACKUP

| C/W Lamp (MDC-2) | Remarks | Corrective Action |
|---|---|---|
| FC BUS DISC | Occurs momentarily when connecting fuel cell to bus. | None |
| SM RCS A, B, C, & D SPS PRESS | Occurs at CM separation from SM because C/W CSM switch at CSM position. | C/W CSM - CM; MASTER ALARM pb/lt - push |
| SM RCS A, B, C, & D | High temperature may illuminate light during (1) boost heating, (2) ΔVs using SM RCS extensively with SIVB attached, or (3) transposition and docking using SM RCS extensively. During phase (1), MASTER ALARM on panel 1 inactive. During phases (2) or (3), normal operating ranges on indicators should be utilized. | None |
| $O_2$ FLOW HI | Occurs (1) during cabin purge, and (2) if urine dump valve left open. May occur during urine dump. | Open cb ECS PRESS XDUCER 2 MNB (MDC-5). |
| CRYO PRESS | Limits may shift under flight conditions and cause low-limit warning during sleep periods. | Reference 4.5.3.7 & 4.5.3.10 |
| FC 1, 2, & 3 | Could occur when an H2 or O2 purge conducted. | None |
| BMAG 1 & 2 | Occurs during power up. | BMAG PWR switch(es) should be left in WARMUP until light extinguished. |

## 4.5.6 TELECOMMUNICATIONS

The T/C system will be in operation throughout entire mission. The information and procedures included here consist of normal and backup procedures that will be utilized to accomplish mission requirements and satisfy test objectives. Some of these procedures will only be required during tests or contingencies.

Most orbital paths will involve passage over several MSFN ground stations within acceptable slant ranges for S-band voice and data communications. Equipment necessary for voice communications, PCM, and TLM transmission will be activated and operating at all times. The UDL will also remain activated and capable of receiving up-data when required.

Action required of crew for voice communications and transmission of real-time PCM TLM will be to ensure optimum radiation and reception of RF signals, either by maintaining SC attitude such that selected antenna is directed toward MSFN station or by changing antennas or antenna attitude with S-band antenna controls. Also, audio control panels (MDC-6, -9, and -10) must be set up in accordance with requirements of individual crewman for control of voice transmission and reception.

The reception of up-data for updating the CTE and receiving real-time commands (RTCs) will require no action on part of crew since the UDL will normally remain activated and will utilize the same antenna as that used for S-band voice and data operations. For updating command module computer, however, up-telemetry switches (panels 2 and 122) must be set to ACPT position.

The following procedures are presented with the assumption that appropriate electrical buses are powered and that proper circuit breakers are closed.

| STA/T | STEP | PROCEDURE | PANEL | REMARKS |
|---|---|---|---|---|
| | | 4.5.6.1 Basic Switch Configuration | | |
| LMP | 1 | Apply A-C pwr | | |
| | | TELCOM GRP 1 - AC1 | 4 | |
| | | TELCOM GRP 2 - AC2 | | |
| ALL | 2 | Audio pnl (3) | 9,10,6 | Each crewman's individual audio panel must be activated to enable him to receive or transmit voice signals. T/R position enables voice transmission and reception over selected audio channel. RCV position permits reception only. |
| | | MODE (3) - INTERCOM/PTT | | |
| | | S BD (3) - T/R | | |
| | | SUIT PWR (3) - on (up) | | |
| | | AUDIO CONT (3) - NORM | | |
| | | PWR (3) - AUDIO/TONE | | |
| | | VHF AM (3) - T/R | | |
| | | INTERCOM (3) - T/R | | |
| | | PAD COMM (3) - OFF | | |
| CDR | | VHF RNG - NORM | 9 | |
| LMP | 3 | S band norm | 3 | |
| | | S BD XPNDR - PRIM | | Whenever S BD XPNDR switch positioned from PRIM to SEC or from SEC to PRIM, hesitate momentarily in OFF position to allow relay actuation to follow switch action. S-band phaselock will be lost upon switching to alternate transponder. Phaselock must be re-established. |
| | | S BD PWR AMPL PRIM - PRIM | | |
| | | S BD PWR AMPL HI - HI | | |
| | | S BD MODE VOICE - VOICE | | |
| | | S BD MODE PCM - PCM | | |
| | | S BD MODE RNG - RNG | | |

| STA/T | STEP | PROCEDURE | PANEL | REMARKS |
|---|---|---|---|---|
| | 4 | S band aux | | |
| LMP | | S BD AUX TAPE - off (ctr) | 3 | |
| | | S BD AUX TV - off (ctr) | | |
| | 5 | Up TLM | | |
| | | UP TLM DATA - DATA | | |
| | | UP TLM CMD - NORM | | |
| | | PWR AMPL tb - gray | | Gray indicates power applied to S-band power amplifier. |
| | | TAPE MOTION tb - gray | | Gray indicates tape in motion. |
| | 6 | S band ant | | |
| | | S BD ANT OMNI A - A | | If OMNI D is selected by crewman, ground switching capability will be lost. Since MSFN has the capability only to command OMNI D or to reset, manual selection of OMNI D essentially disables antenna command capability. |
| | | S BD ANT OMNI - OMNI | | |
| | 7 | VHF AM | | |
| | | VHF AM A - SIMPLEX | | |
| | | VHF AM B - off (ctr) | | |
| | | VHF AM RCV - off (ctr) | | |
| | | VHF AM SQLCH tw (2) - noise + 1 | | In the event marginal VHF voice communications is experienced and VHF voice communications is required, VHF receiver squelch may be disabled by setting the appropriate thumbwheel to 1. This will allow weak-signal reception, but will severely degrade DSE recorded voice. |



NORMAL/BACKUP

| STA/T | STEP | PROCEDURE | PANEL | REMARKS |
|---|---|---|---|---|
| LMP | 8 | VHF BCN - OFF<br>VHF RNG - OFF | 3 | |
| | 9 | Tape rcdr<br>TAPE RCDR PCM - PCM/ANLG<br>TAPE RCDR RCD - RCD<br>TAPE RCDR FWD - FWD | | |
| | 10 | Pwr<br>SCE PWR - NORM<br>PMP PWR - NORM | | |
| | 11 | TLM inputs<br>PCM BIT RATE - LO | | |
| | 12 | VHF ANT - SM LEFT | | |
| CMP | 13 | RNDZ XPNDR PWR - OFF | 100 | |
| | 14 | RNDZ XPNDR TEST - OPR | 101 | |
| LMP | 15 | S BD SQLCH - ENBL | 3 | |
| | | 4.5.6.2 High Gain Antenna Operation | | |
| CMP | | cb HI GAIN ANT (2) - close | 225 | |
| | | HI GAIN ANT TRACK - MAN | 2 | |
| | | HI GAIN ANT SERVO - PRIM | | |
| | | HI GAIN ANT BEAM - WIDE | | |
| | | HI GAIN ANT PWR - on (up) | | |

| STA/T STEP | PROCEDURE | PANEL | REMARKS |
|---|---|---|---|
| CMP | Determine req ant coordinates<br>If IMU aligned, 4.8.1.16<br>If G&N not available, trial & error method must be used<br><br>Verify that req coordinates are within full coverage region | | Refer to CSM DATA BOOK, section 4.7, HGA Scan and Warning Limit, Yaw-Pitch Coordinates. Reliable acquisition can be accomplished with YAW-PITCH coordinates in full coverage region. In the CSM skin interference zone, RF reflections will cause no problems when operating in MANUAL, AUTO or REACQ mode, when in WIDE BEAM. After acquisition, the antenna will track through CSM skin interference zone and scan limit zone while in NARROW beam and in either AUTO or REACQ modes without incurring an interference problem.<br><br>Should acquisition be attempted in the CSM skin interference zone in either NARROW or MEDIUM beam while in AUTO or REACQ mode, acquisition problems may be encountered. MSFN and SC will experience (a) low signal strength indicating lockup on a side lobe or (b) varying signal strength caused by antenna alternately switching between wide and narrow beamwidth. SC antenna pitch and yaw indicator will also provide visual indication of condition (b). Other indicators of the interference condition include noise or loss of voice or track loss.<br><br>Upon detection of this situation, attempt one of the following.<br>a. Change CSM attitude to provide antenna coordinates in the full coverage region. |



NORMAL BACKUP

| STA/T | STEP | PROCEDURE | PANEL | REMARKS |
|---|---|---|---|---|
| | | | | b. Allow up to 60 seconds for the expected CSM attitude variation to alleviate the condition.<br>c. In attitude hold condition, operate in wide beam mode.<br>d. Transfer to narrow beam and acquire earth manually. |
| CMP | | HI GAIN ANT PITCH & YAW cont (2) - set in req coordinates | 2 | |
| | | If in earth orb | | |
| LMP | | S BD PWR AMPL HI - off (ctr) | 3 | |
| | | S BD ANT OMNI - HI GAIN | | |
| CMP | | S BD ANT ind - >1/2 scale | 2 | |
| | | HI GAIN ANT TRACK - AUTO or REACQ | | With TRACK switch in REACQ, antenna will reposition to position control settings when the antenna reaches the scan limit. To prevent acquisition problems, predicted earth-rise should be set in the full coverage region. |
| | | HI GAIN ANT BEAM - as desired | | |
| | | S BD ANT ind - >1/2 scale | | |
| | | When omni ant oper is desired | | |
| | | HI GAIN ANT TRACK - MAN | | |
| | | HI GAIN ANT PITCH cont - -52° | | |
| | | HI GAIN ANT YAW cont - 270° | | |
| | 4.5.6.3 | S-Band Xponder Modes | | |
| | | Voice, RT-HBR Data, Ranging | | |
| LMP | | Sel BASIC except | | |
| | | PCM BIT RATE - HI | 3 | |
| | | Voice, RT-LBR Data, Ranging | | |
| | | Sel BASIC | | |

| STA/T STEP | PROCEDURE | PANEL | REMARKS |
|---|---|---|---|
| LMP | Voice, RT-HBR Data<br>Sel BASIC except<br>S BD MODE RNG - OFF<br>PCM BIT RATE - HI | 3 | |
| | Voice, RT-LBR Data<br>Sel BASIC except<br>S BD MODE RNG - OFF | | |
| | Voice & Ranging<br>Sel BASIC except<br>S BD MODE PCM - ctr | | |
| | Voice<br>Sel BASIC except<br>S BD MODE PCM - ctr<br>S BD MODE RNG - OFF | | |
| | Voice & LBR PCM with Apollo/Recovery Instrumented Aircraft (A/RIA)<br>Sel BASIC except<br>S BD MODE RNG - OFF | | |
| | 4.5.6.4 FM Xmtr Modes | | |
| | Dump PCM/Analog<br>Sel BASIC except<br>TAPE RCDR FWD - REWIND<br>S BD AUX TAPE - TAPE<br>TAPE RCDR RCD - PLAY<br>TAPE RCDR FWD - FWD (after rewind complete) | | |



NORMAL/BACKUP

| STA/T STEP | PROCEDURE | PANEL | REMARKS |
|---|---|---|---|
| LMP | TAPE MOTION tb - gray<br>Rewind & return to BASIC | 3 | Gray indicates tape in motion. |
| | Dump LM PCM<br>Sel BASIC except<br>TAPE RCDR FWD - REWIND<br>S BD AUX TAPE - TAPE<br>TAPE RCDR PCM - LM PCM<br>TAPE RCDR RCD - PLAY<br>TAPE RCDR FWD - FWD (after rewind complete)<br>TAPE MOTION tb - gray<br>Rewind & return to BASIC | | Gray indicates tape in motion. |
| | TV Camr Oper (black & white)<br><br>WARNING<br><br>Ensure that S BD AUX TV sw is off (ctr) prior to conn or disconnecting TV camr. | | |
| | Unstow camr, opt sight, lens, light atten, & cables<br>S BD AUX TAPE - ctr, or DN VOICE BU | | Positioning S BD AUX TAPE - TAPE, disables TV function. |
| | S BD AUX TV - off (ctr)<br>Conn pwr & RF cables<br>Install proper lens<br>(telephoto out of focus at <143 ft)<br>(wide angle out of focus at <18 in.)<br>Attach light atten to camr lens<br>(atten clamps around barrel) | | Camera is stowed with wide angle lens attached. |

| STA/T | STEP | PROCEDURE | PANEL | REMARKS |
|---|---|---|---|---|
| LMP | | Install opt ring sight in top or side mount as desired | | |
| | | S BD AUX TV - TV | 3 | There will be a 90-second delay for PA warmup before FM transmission commences. |
| | | ALC (camr) - IN (norm), OUT (when detail on dim objects in presence of of bright objects is desired) | Camr | |
| | | Pwr (camr) - ON | | |
| | | Adj light atten as req (lower numbers have less atten) | | |
| | | When TV oper is completed | | |
| | | Pwr (camr) - OFF | | |
| | | S BD AUX TV - off (ctr) | | |
| | | Disassemble & stow equip as desired | | |
| | | TV Camr Oper (color) | | |
| CMP | | Unstow TV camr, mon, & cables | | |
| | | Install camr & mon in mounts | | |
| | | Mon pwr sw - OFF | | |
| | | Camr xmit/stby sw - STANDBY (down) | | Camera will transmit sync but no video to MSFN in this configuration. |
| | | Camr auto light cont sw - AVG | | |
| | | Adj camr | | |
| | | Focus - 4 ft | | |
| | | Zoom - 25mm | | |
| | | Aperture - f/44 | | |
| | | Conn camr-to-mon cable (arrow-to-arrow) | | |
| LMP | | S BD AUX TAPE - ctr, or DN VOICE BU | 3 | |
| | | S BD AUX TV - ctr | | |
| | | Conn camr pwr & RF cable | | |
| | | S BD AUX TV - TV | | Power amplifier warmup time is 90 seconds. |



NORMAL BACKUP

| STA/T | STEP | PROCEDURE | PANEL | REMARKS |
|---|---|---|---|---|
| CMP | | Mon pwr sw - on (up) | Camr | |
| | | Adj mon cont for best image (VER, HOR, BRT & CONT cont knobs) | | |
| | | Adj cab lighting to max | | |
| ALL | | FLOOD LTS - OFF (CCW) | 5,8,100 | |
| | | FLOOD DIM - 1 | | |
| | | FLOOD FIXED - OFF | | |
| | | FLOOD LTS - full BRT (CW) | | |
| CMP | | Using mon, adj camr cont | Camr | |
| | | Lens aperture | | |
| | | Zoom cont | | |
| | | Focus cont | | |
| | | To xmit to MSFN | | |
| | | Camr xmit/stby sw - XMITT (up) | | Transmission will begin immediately if power amplifier warmup time has been satisfied. |
| | | When TV oper is complete | | |
| LMP | | S BD AUX TV - ctr | 3 | |
| CMP | | Disassemble & stow camr, mon, & cables | | |
| ALL | | Adj cab lighting as desired, 4.5.8 | | |
| | 4.5.6.5 | VHF/AM Modes | | BASIC switch configuration provides CSM-MSFN voice, CSM-LM voice, and CM-recovery voice. |
| | | Simplex A | | |
| | | Select BASIC | | |
| | | Duplex A | | PLSS operation. Should not be used until after CSM/SIVB separation as MSFN transmission on VHF AM B will interfere with booster TM. |
| LMP | | Sel BASIC except | | |
| | | VHF AM A - DUPLEX | | |

| STA/T | STEP | PROCEDURE | PANEL | REMARKS |
|---|---|---|---|---|
| | | Simplex B | | |
| LMP | | Sel BASIC except | | CM-recovery backup voice. Should not be used until after CSM/SIVB separation as MSFN transmission on VHF AM B will interfere with booster TM. |
| | | VHF AM B - SIMPLEX | 3 | |
| | | VHF AM A - off (ctr) | | |
| | | Duplex B | | PLSS backup operation. |
| | | Sel BASIC except | | |
| | | VHF AM B - DUPLEX | | |
| | | VHF AM A - off (ctr) | | |
| | | RCV ONLY A | | Provides capability to monitor recovery VHF voice transmissions. |
| | | Sel BASIC except | | |
| | | VHF AM RCV - A | | |
| | | VHF AM A - off (ctr) | | |
| | 4.5.6.6 | VHF AM Ranging Mode | | Activation of VHF ranging significantly reduces voice capability. In the event marginal VHF voice communications is experienced and voice communications is required, both CSM and LM VHF ranging equipment (DRG and RTTA) may be turned off during the communication period to provide increase voice margin. |
| | | VHF AM A - off (ctr) | | |
| | | VHF AM B - DUPLEX | | |
| | | VHF RNG - on (up) | | |
| | | If P20 operating & VHF AM ranging option selected | | |
| CMP | | TRACKER lt - on | 2,140 | The CMC will activate TRACKER light and wait for a "data good" signal from digital ranging generator. |
| CDR | | EMS FUNC - VHF RNG | 1 | |
| | | EMS MODE - VHF RNG | | |



NORMAL BACKUP

| STA/T | STEP | PROCEDURE | PANEL | REMARKS |
|---|---|---|---|---|
| | | CAUTION | | |
| | | There must be no VHF AM voice transmission by LM, CSM or MSFN for ≈12 sec after VHF RNG - RSET. | 9 | Voice transmission at this time could interfere with accuracy of ranging signal. |
| CDR | | VHF RNG - RSET (1 sec min) | | Momentary up, hold for 1 second minimum. When VHF RNG switch is placed to RSET, RNG indicator will reset to zero, and operator will hear mid tone (3.95 kHz) and then low tone (2.47 kHz). |
| | | RNG ind - B00000 | 1 | |
| | | If P20 operating & VHF AM ranging option selected | | |
| CMP | | TRACKER lt - out | 2,140 | TRACKER light - out (no OCDU failure) and RNG indicator starts counting up ≈4 seconds after termination of low tone. RNG indicator is interpreted as range in nautical miles to nearest .XXNM. |
| CDR | | RNG ind - BXXXXX | 1 | |
| | 4.5.6.7 | DSE Record Modes | | Under nominal conditions MSFN will control tape recorder operation. |
| | | Record HBR CM Data, CM/IC, LM/IC, LM/PCM | | In order to dump LM PCM when recorded with CM PCM, two dumps are required. |
| | | Sel BASIC except | | |
| LMP | | PCM BIT RATE - HI | 3 | |
| | | VHF AM RCV - B DATA | | |
| | | Record LBR CM Data, CM/IC, LM/PCM, EVA/LM/IC | | In order to dump LM PCM when recorded with CM PCM, two dumps are required. |
| | | Sel BASIC except | | |
| | | VHF AM RCV - B DATA | | |

| STA/T STEP | PROCEDURE | PANEL | REMARKS |
|---|---|---|---|
| | Record HBR CM Data, EVA/LM/IC, CM/IC | | |
| LMP | Sel BASIC except | | |
| | VHF AM A or B - DUPLEX | 3 | |
| | PCM BIT RATE - HI | | |
| | Record LBR CM Data, EVA/LM/IC, CM/IC | | |
| | Sel BASIC except | | |
| | VHF AM A or B - DUPLEX | | |
| | 4.5.6.8 Relay Mode (LM Voice to MSFN) | | |
| | Voice Relay (With VHF Ranging) | | |
| | Sel BASIC except | | |
| CMP | MODE - VOX | 10 | |
| | VOX SENS tw - 5 | | |
| | S BD - OFF | | |
| | INTERCOM - OFF | | |
| | AUDIO CONT - BU | | |
| CDR | MODE - VOX | 9 | When operating in VOX mode, LM reply should be delayed 2 seconds to allow for VOX release time. |
| | VOX SENS tw - as req | | |
| LMP | S BD MODE VOICE - RELAY | 3 | |
| | VHF AM A - off (ctr) | | |
| | VHF AM B - DUPLEX | | |
| | VHF RNG - on (up) | | |
| | Voice Relay (with LM LBR PCM record) | | |
| | Sel BASIC except | | |
| CMP | MODE - VOX | 10 | |
| | VOX SENS tw - 5 | | |



NORMAL BACKUP

| STA/T | STEP | PROCEDURE | PANEL | REMARKS |
|---|---|---|---|---|
| CMP | | S BD - OFF | 10 | |
| | | INTERCOM - OFF | | |
| | | AUDIO CONT - BU | | |
| CDR | | MODE - VOX | 9 | When operating in VOX mode, LM reply should be delayed 2 seconds to allow for VOX release time. |
| | | VOX SENS tw - as req | | |
| LMP | | S BD MODE VOICE - RELAY | 3 | |
| | | VHF AM RCV - B DATA | | |
| | 4.5.6.9 | Rendezvous Transponder Activation and Self Test | | |
| | | RNDZ XPNDR PWR - HTR for 24 min, then on (up) | 100 | One minute warmup is required if self-test only is to be performed. |
| | | SYS TEST (LH) - XPNDR | 101 | |
| | | SYS TEST (RH) - A (RRT XMTR OUT PWR) | | |
| | | SYS TEST ind - >1.0 vdc | | |
| | | SYS TEST (RH) - B (RRT AGC SIG) | | |
| | | RNDZ XPNDR TEST - on (up) | | On (up) position is momentary. |
| | | SYS TEST ind - >1.0 vdc (self-test) | | |
| | | RNDZ XPNDR TEST - OPR | | |
| | | SYS TEST ind - 0-4.5 vdc (opr) | | Indicates relative received signal strength, (preferred position during rendezvous). |
| | | SYS TEST (RH) - C (RRT FREQ LOCK) | | |
| | | SYS TEST ind | | |
| | | Unlocked - <0.8 vdc | | |
| | | Locked - >4.0 vdc | | RF lockup indicated by 4.0 vdc in OPR with LM interrogation. |
| | | SYS TEST (RH) - B (RRT AGC SIG opr) | | |

| STA/T | STEP | PROCEDURE | PANEL | REMARKS |
|---|---|---|---|---|
| | 4.5.6.10 | **Backup Modes** | | |
| | | Up Voice Backup | | Requires coordination with MSFN. Updata signal (noise) will be present in headsets until MSFN reconfigures for this mode. |
| LMP | | Sel BASIC except | | |
| | | UP TLM DATA - UP VOICE BU | 3 | |
| | | Down Voice Backup | | |
| | | Sel BASIC except | | |
| | | S BD MODE PCM - ctr | | |
| | | S BD AUX TAPE - DN VOICE BU | | |
| | | S BD MODE RNG - OFF | | |
| | | PCM BIT RATE - HI | | |
| | | Down Voice & LBR RT Data Backup | | |
| | | Sel BASIC except | | |
| | | S BD AUX TAPE - DN VOICE BU | | |
| | | S BD MODE RNG - OFF | | |
| | | Key | | |
| | | Sel BASIC except | | |
| | | S BD MODE PCM - KEY | | |
| | | S BD MODE RNG - OFF | | |
| | | Down Data Backup | | |
| | | Sel BASIC except | | |
| | | PMP PWR - AUX | | |
| | 4.5.6.11 | **Pad Communications** | | |
| | | Sel BASIC except | | |
| | | TAPE RCDR FWD - off (ctr) | | |
| | | Prior to launch | | |
| ALL | | PAD COMM (3) - T/R (or RCV) | 9,10,6 | PAD COMM switch can be used after launch for intercom backup with PAD COMM VOL thumbwheel decreased. |
| | | PAD COMM VOL tw (3) - as desired | | |
| | | Launch -10:00 | | |
| | | PAD COMM (3) - OFF | | |



NORMAL BACKUP

| STA/T STEP | PROCEDURE | PANEL | REMARKS |
|---|---|---|---|
| | 4.5.7 MECHANICAL SYSTEMS | | |
| | Procedures for opening and closing side and forward hatches are presented in the following paragraphs, as well as procedure for operation of side hatch counterbalance mechanism. The procedures include operational performance from the interior and exterior of the CM. | | |
| | 4.5.7.1 Opening Side Hatch for EVT | | |
| | a. Opening Side Hatch From CM Interior Without Utilizing Counterbalance Mechanism | | |
| ALL | PGAs donned & checked, 4.5.4.9 | | |
| LMP | Procure tether & tool B & fasten to arm | | Tool B stowed in volume A1. |
| CMP | Dump CM press, 4.5.4.11 | | |
| | WARNING | | |
| | Counterbalance piston chamber must be vented prior to opening hatch in zero G. | | |
| | Deactivate counterbalance mechanism, 4.5.7.3, step a | | |
| | CAUTION | | |
| | To prevent shearing lock pin, set lock pin rel knob to UNLOCK prior to operating actr handle. | | |

| STA/T STEP | PROCEDURE | PANEL | REMARKS |
|---|---|---|---|
| CMP | Lock pin rel knob - UNLOCK [check that red shear pin is extd ≈0.5 inch (rh couch) &/or white ind is opposite yellow mark (ctr/lh couch)] | Side hatch | Pin can be sheared if left in LOCK position. |
| | Gear box sel - UNLATCH | | |
| | Actr handle sel - U (unlatch) | | |
| | Actr handle rel - push or squeeze | | Push (button) or squeeze (bar) releases actuator handle for operation. |
| | Actr handle - opr (until hatch can be opened) | | |
| | CAUTION<br>If hatch does not open normally & there are no crewmen EVA, do not proceed with attempt to open hatch. | | |
| | If unable to open hatch & crewmen are EVA | | |
| | Recheck position of conts | | |
| | Ensure no foreign objects caught in hatch assy (latches, latch linkage, gear box linkage or hinges) | | |
| | Actr handle - opr (incr load) | | |
| | If still unable to open hatch | | |
| | Remove clevis pins (4 places) with tool B | | |
| | Move latches to unlatch position with tool F | | Wrench flats are on each latch assembly. |



NORMAL BACKUP

| STA/T | STEP | PROCEDURE | PANEL | REMARKS |
|---|---|---|---|---|
| CMP | | Actr handle sel - L<br>Stow actr handle<br>Gear box sel - LATCH | Side hatch | |
| | b. | Open Side Hatch From CM Interior Using Counterbalance Mechanism | | |
| ALL<br>CMP | | PGAs donned & checked, 4.5.4.9<br>Dump CM press, 4.5.4.11<br>Vent piston chamber<br>GN2 vlv handle - pull (inbd)<br>GN2 press ind - min | | |
| | | CAUTION<br>To prevent shearing lock pin, set lock pin rel knob to UNLOCK prior to operating actr handle. | | |
| | | Lock pin rel knob - UNLOCK [check that red shear pin extd ≈0.5 inch (rh couch) &/or white ind opposite yellow mark (ctr/lh couch)] | | Pin can be sheared if left in LOCK position. |
| | | Gear box sel - UNLATCH<br>Actr handle sel - U (unlatch)<br>Actr handle rel - push or squeeze<br>Actr handle - opr (until hatch latches are unlatched) | | Push (button) or squeeze (bar) releases actuator handle for operation. |

| STA/T STEP | PROCEDURE | PANEL | REMARKS |
|---|---|---|---|
| | CAUTION<br><br>If latches do not open normally, do not proceed with attempt to open hatch. | | |
| CMP | If unable to open latches & return trnfr cannot be performed through CM/LM tunl | Side hatch | |
| | Recheck position of conts | | |
| | Vent piston chamber | | |
| | GN2 vlv handle - pull (inbd) | | |
| | GN2 press ind - min | | |
| | Insure no foreign objects caught in hatch assy (latches, latch linkage, gear box linkage) | | |
| | Actr handle - opr (incr load) | | |
| | If still unable to open hatch | | |
| | Remove clevis pins (4 places with tool B | | |
| | Move latches to unlatch position with tool F | | Wrench flats are on each latch assembly. |
| | Actr handle sel - L | | |
| | Stow actr handle | | |
| | Gear box sel - LATCH | | Prepares hatch for closing. |



NORMAL/BACKUP

| STA/T STEP | PROCEDURE | PANEL | REMARKS |
|---|---|---|---|
| | CAUTION<br><br>Do not puncture second press bottle to open hatch. This press bottle is in reserve for postlanding. | | |
| CMP | Pressurize piston chamber<br>GN2 vlv handle - push slowly until hatch is open & locked | Side hatch | |
| | xxxxxxxxxxxxxxxxxxxxxxxxxxxxxxxxxxxxxx<br>If unable to open hatch<br>Insure no foreign objects caught in hatch hinges or counter-balance mechanism<br>xxxxxxxxxxxxxxxxxxxxxxxxxxxxxxxxxxxxxx | | |
| | CAUTION<br><br>Do not disconnect hatch bellcrank with hatch in open position. | | |
| | Depressurize piston chamber<br>GN2 vlv handle - pull inbd until GN2 press ind - min | | |

| STA/T | STEP | PROCEDURE | PANEL | REMARKS |
|---|---|---|---|---|
| | | xxxxxxxxxxxxxxxxxxxxxxxxxxxxxxxxxxxxxxxxxx | | |
| CMP | | If piston chamber will not vent | Side | |
| | | Disengage counterbalance | hatch | |
| | | Tool B - insert into counterbalance locking pin | | |
| | | Rot tool B (CCW) to stop (4-1/2 turns) | | Disengages piston bellcrank. Tool F may also be used. Counterbalance assist of hatch opening will not be available for postlanding. |
| | | xxxxxxxxxxxxxxxxxxxxxxxxxxxxxxxxxxxxxxxxxx | | |
| | c. | Opening Side Hatch From CM Exterior | | |
| | | PGAs donned & checked, 4.5.4.9 | | |
| | | Dump CM press | | |
| | | CAB PRESS DUMP vlv - insert tool B, depress & rot (CW) to stop | | Depressing pressure equalization valve with tool B will release inside actuating handle from stowed position, and rotating to stop will open valve. |
| | | WARNING | | |
| | | Counterbalance piston chamber must be vented prior to opening hatch in zero G. | | |
| | | Deactivate counterbalance mechanism, 4.5.7.3, step a | | |
| | | Wait 70 sec min, then insert tool B in hatch actuation socket | | |
| | | Rot CCW (368°) until hatch can be opened | | Releases hatch latches. |



NORMAL/BACKUP

| STA/T STEP | PROCEDURE | PANEL | REMARKS |
|---|---|---|---|
| | 4.5.7.2 Closing Side Hatch for EVT | | |
| | a. Closing Side Hatch From CM Interior | | |
| CMP | Check EVT equip clear of hatch & hatch frame | Side hatch | |
| | Actr handle sel - L (latch) | | |
| | Gear box sel - LATCH | | |
| | Open door rel handle - pull | | D-ring. |
| | Verify latches are in open position | | |
| | Close hatch | | |
| | Open door rel handle - stow | | |
| | Actr handle rel - push or squeeze | | |
| | Actr handle - opr (while holding hatch closed) | | |
| | Verify hatch fully latched | | |
| | xxxxxxxxxxxxxxxxxxxxxxxxxxxxxxxxxxxxxxxxx | | |
| | If hatch does not latch | | |
| | Recheck position of conts | | |
| | Check latches for unlatch position | | |
| | Insure hatch is closed sufficiently for latches to engage | | |
| | Insure no foreign objects caught in hatch assy | | |
| | Actr handle - opr (incr load) | | |
| | If hatch still does not latch | | |
| | Install jackscrews (3) to restrain hatch in closed position | | |
| | Disconnect gearbox from linkage | | Left bank of latches (looking outboard) cannot be closed if gearbox fails in extreme open position but can be closed if actuator handle can be operated for one complete stroke towards closure. |
| | Remove clevis pins (4 places) with tool B | | |

| STA/T STEP | PROCEDURE | PANEL | REMARKS |
|---|---|---|---|
| CMP | Move latches to latch position with tool F | Side hatch | Wrench flats are on each latch assembly. |
| | Install (2) clevis pins in threaded holes in linkage bell cranks of upper gearbox side & lower hinge side (clevis pins installed when ≈ half the threads are visible) | | |
| | If hatch still will not latch, tighten jackscrews (3) to close hatch | | Four latches have kickers to force latch open during unlatch cycle. If one is jammed open, jackscrews will not close hatch to pressure seal and there will be ≈0.6 inch between hatch and seal. Latch must be unjammed or removed (using torque set screwdriver) to close hatch completely. |
| | Lock pin rel knob - LOCK (auto)<br>LOCK PIN ind - not extd (rh couch) and/or that white ind is opposite white mark (ctr/lh couch) | | Verifies lock pin has automatically engaged. Indicates lock pin is engaged. |
| | If hatch was opened from CM exterior & lock pin rel knob does not lock, LOCK PIN rset - RSET (push) | | |
| | Actr handle - stowed position<br>Actr handle sel - N (neut)<br>Repressurize CM, 4.5.4.8 | | |



NORMAL/BACKUP

| STA/T | STEP | PROCEDURE | PANEL | REMARKS |
|---|---|---|---|---|
| | | b. Closing Side Hatch From CM Exterior | | |
| CMP | | Check EVT equip clear of hatch & hatch frame | Side hatch | |
| | | Actr handle sel - N (neut) | | |
| | | Gear box sel - N (neut) | | |
| | | Open door rel handle - pull | | D-ring. |
| LMP | | Close hatch | | |
| CMP | | Open door rel handle - stow | | |
| LMP | | Hatch actuation socket - insert tool B | | |
| | | Rot CW (382°) to stop | | Engages hatch latches. |
| | | Tool B - remove from socket | | |
| CMP | | LOCK PIN rset - RSET (push) | | Engages lock pin. Mechanism will automatically return 14° (CCW) when tool B is removed. |
| | | xxxxxxxxxxxxxxxxxxxxxxxxxxxxxxxxxxxxxxxx | | |
| | | If mechanism does not auto return 14° (CCW) when tool B is removed, reinsert tool B & man rot 14° (CCW) | | |
| | | xxxxxxxxxxxxxxxxxxxxxxxxxxxxxxxxxxxxxxxx | | |
| | | Lock pin rel knob - LOCK | | |
| | | LOCK PIN ind - not extd (rh couch) and/or white ind opposite white mark (ctr/lh couch) | | |
| LMP | | If PRESS EQUAL VLV is open | | |
| | | PRESS EQUAL VLV - insert tool B & rot (CCW) to stop | | Seals CM pressure equalization valve. |
| | | Remove tool B | | |
| | | Repressurize CM, 4.5.4.8 | | |

| STA/T STEP | PROCEDURE | PANEL | REMARKS |
|---|---|---|---|
| | 4.5.7.3 Side Hatch Counterbalance Operation | | |
| | a. Deactivate Counterbalance Mechanism | | |
| CMP | 1. Vent piston chamber | Side | |
| | GN2 vlv handle - pull (inbd) | hatch | Squeeze handle to unlock. |
| | GN2 press ind - min | | |
| | 2. Disengage counterbalance (crew option) | | Use either the pip pin or counterbalance locking pin to disengage counterbalance. Do not use both methods. |
| | (A) Counterbalance locking pin | | |
| | Tool B - insert into counterbalance locking pin | | |
| | Rot tool B (CCW) to stop (4-1/2 turns) | | Disengages piston bellcrank from hatch bellcrank. Tool F may also be used. |
| | or (B) Pip pin on counterbalance arm | | |
| | Pull pip pin connecting roller track fitting & bell crank | | |
| | Stow pip pin | R-10 | |
| | Push roller track fitting to end of track & check if roller will come off - stow roller(s) that can be removed | | |
| | b. Activate Counterbalance Mechanism | | |
| | 1. Engage counterbalance (if disengaged) | | Engage counterbalance by method used to disengage counterbalance: pip pin or counterbalance locking pin. |
| | (A) Counterbalance locking pin | | |
| | Tool B - insert into counterbalance locking pin | | |



NORMAL BACKUP

| STA/T STEP | PROCEDURE | PANEL | REMARKS |
|---|---|---|---|
| | CAUTION<br>Do not continue torquing after locking nut has bottomed or roll pin may shear causing locking pin cap to become a loose part. | | |
| CMP | Rot tool B (CW) to stop (4-1/2 turns) | Side hatch | When installing counterbalance locking pin, verify that locking pin is aligned with hole in crank. After seating roll pin, do not apply any additional torque. Excessive torque will shear roll pin and cause locking pin cap to become a loose part. If this should happen, stow loose cap. This is not detrimental to operation of system. Once locking pin is engaged and cap has separated, counterbalance disconnect may be accomplished by pulling pip-pin or removing locking pin using tool F. |
| | or (B) Pip-pin on counterbalance arm<br>Remove roller(s) from stowage (if removed) & re-install on track fitting<br>Remove pip-pin from stowage<br>Conn counterbalance to track fitting with pip-pin | | |
| | 2. Pressurize piston chamber<br>GN2 vlv handle - push (outbd) | | Squeeze handle to unlock. |
| LMP | GN2 press ind - green | | GN2 pressure indicator will display charge bottle pressure when GN2 valve handle in charge position (outboard). To provide maximum assist, GN2 valve handle will be left in charge position through time counterbalance activated. |

| STA/T | STEP | PROCEDURE | PANEL | REMARKS |
|---|---|---|---|---|
| | | xxxxxxxxxxxxxxxxxxxxxxxxxxxxxxxxxxxxx | | |
| LMP | | If GN2 press ind - below green<br>GN2 ratchet handle - opr | Side hatch | |
| | | xxxxxxxxxxxxxxxxxxxxxxxxxxxxxxxxxxxxx | | |
| | | 4.5.7.4 Opening Fwd Hatch | | |
| | | a. Opening Fwd Hatch From CM Interior<br>Equalize CM/LM press, 4.5.4.14 | | If required. Tunnel pressure integrity check is incorporated into these procedures. |
| | | Actr handle rel - PULL & ROTATE | Tunl | To free actuator handle for operation, release is rotated to stop. |
| | | Actr handle - pull to stop | | Actuator handle should move ≈80°. |
| | | Actr handle sel - U (unlatch) | | |
| | | Actr handle - push to stop | | Actuator handle should move ≈60° to release latches. |
| | | Gearbox disconnect socket - U (verify) | | |
| | | Actr handle sel - STOW | | |
| | | Actr handle - push to stowed position | | Actuator handle release automatically locks handle in stowed position. |
| | | Remove & stow fwd hatch | | Hatch should be stowed in LHEB. |
| | | b. Opening Fwd Hatch From CM Exterior | | |
| ALL | | PGAs donned & checked, 4.5.4.9 | | |
| CDR | | PRESS EQUAL vlv - OPEN | Fwd hatch | |
| | | Tool B - insert, hold depressed & rot (CW) | | |
| CMP | | TUNL VENT vlv - LM/CM ΔP | 12 | |



NORMAL/BACKUP

| STA/T | STEP | PROCEDURE | PANEL | REMARKS |
|---|---|---|---|---|
| CMP | | LM/CM ΔP ind - 0.0 psid | 12 | Report indication to CDR. Accuracy of gauge is ±0.1 psi at -1.0 to +1.0 psid and 70°F, ±0.2 psi at +1.0 to +4.0 psid and 70°F. |
| | | xxxxxxxxxxxxxxxxxxxxxxxxxxxxxxxxxxxxxxxx | | |
| | | If CMP is unable to mon LM/CM ΔP ind when PRESS EQUAL vlv is positioned to OPEN, wait min of 60 sec before attempting to opr hatch actuation socket | | LM pressure is normally 0.2 psia below that of CM. |
| | | xxxxxxxxxxxxxxxxxxxxxxxxxxxxxxxxxxxxxxxx | | |
| CDR | | Hatch actuation socket - insert tool B & rot (CCW) | Tunl | Disconnects gear box and releases hatch latches. |
| | | Remove & stow fwd hatch in LHEB | | |
| | 4.5.7.5 | Closing Fwd Hatch | | |
| LMP or CMP | | Closing Fwd Hatch From CM Interior | | Performed by LMP or CMP. |
| | | Obtain fwd hatch from stowage | Fwd | Forward hatch stowed in LHEB. |
| | | Position hatch against sealing surface | hatch | Align equivalent colored arrows. |
| | | Actr handle rel - PULL & ROTATE | | To free actuator handle for operation, release rotated to stop. |
| | | Actr handle - pull to stop | | Actuator handle should move ≈80°. |
| | | Actr handle sel - L (latch) | | |
| | | Actr handle - push to stop | | Actuator handle should move ≈60° to engage latches. |
| | | Verify gearbox disconnect socket is opposite L mark on hatch | | |

| STA/T STEP | PROCEDURE | PANEL | REMARKS |
|---|---|---|---|
| LMP<br>or<br>CMP | Actr handle sel - STOW | Fwd | |
| | Actr handle - push to stowed position | hatch | Actuator handle release automatically locks handle in stowed position. |
| | Push man gearbox lock<br>(chrome tab) | | Verifies that gear box lock is engaged. |
| CDR | PRESS EQUAL vlv - CLOSE (CW) | | Yellow indicator pin must be in green zone and valve handle must be in yellow-band area (indicates valve is fully closed). |
| | xxxxxxxxxxxxxxxxxxxxxxxxxxxxxxxxxxxxxxxx<br>Cannot close PRESS EQUAL vlv<br>Remove fwd hatch, 4.5.7.4<br>Insert Tool B in external tool interface for additional leverage, hold depressed & rot (CCW)<br>Install fwd hatch<br>xxxxxxxxxxxxxxxxxxxxxxxxxxxxxxxxxxxxxxxx | | |
| | Repressurize CM, 4.5.4.8 | | |



NORMAL BACKUP

| STA/T | STEP | PROCEDURE | PANEL | REMARKS |
|---|---|---|---|---|
| | | 4.5.8 FLOODLIGHT OPERATING MODES | | |
| | | 4.5.8.1 Prim Floodlight Mode | | |
| ALL | | FLOOD LTS - OFF (CCW)<br>FLOOD DIM - 1<br>FLOOD LTS - full dim or full BRT | 5,8,100 | |
| | | 4.5.8.2 Sec Floodlight Mode | | Operation in secondary mode is a backup only to be used in the event of DIM-1 circuitry in-flight failure. The DIM-2, dimmed floodlight predicted operating life is ≈100 hours. |
| | | FLOOD LTS - OFF (CCW)<br>FLOOD DIM - 2<br>FLOOD LTS - full BRT (CW) | | |

## 4.6 G&C REFERENCE DATA

This section provides data which generally apply to all G&C procedures in sections 4.7 through 4.16 and 5.1 through 5.3. The data do not include procedures but contains information which may be referenced in various procedures, may contain application of procedures, or may be helpful in applying the procedures.

### 4.6.1 G&C OPERATING NOTES

G&C operating notes are separated into three categories: G&C operations, SCS operations, and G&N operations. Notes for G&C operations provide data associated with guidance and control functions in general while notes for SCS and G&N operations are more specific to their systems.

#### 4.6.1.1 G&C Operations

1. ULLAGE: For ullage switch setup with or without attitude control, see figure 4.6-1. Normally, the setup should include attitude control.

2. RCS JET, VENT, RADIATOR, AND ANTENNA LOCATIONS: SM and CM RCS jets, vent, and radiator locations are illustrated in figure 4.6-2.

3. SCS LOGIC BUS POWER DISTRIBUTION: SCS logic bus circuit breakers on panel 8 provide MNA and MNB power to four SCS logic buses. Figure 4.6-3 delineates power source and power distribution for SCS controls (pushbuttons, functions, and switches).

   Main bus power to SCS logic buses 1 and 4 is controlled only by the SCS logic bus circuit breakers on panel 8. Power to SCS logic buses 2 and 3 is controlled by SCS logic bus circuit breakers on panel 8 and the LOGIC 2/3 PWR switch on panel 7. Other than SCS TVC, equipment loads can only be removed from a specific logic bus by selecting acceptable control positions not powered by that bus. (See figure 4.6-3.)



NORMAL/BACKUP

| Type of Ullage Desired | | Required AUTO RCS Switch Positions (Jets Firing*) | | | | | | | | RCS Jets* Providing Attitude Hold Capability | |
|---|---|---|---|---|---|---|---|---|---|---|---|
| | | Pitch | | | | Yaw | | | | | |
| | | A3 | C3 | A4 | C4 | B3 | D3 | B4 | D4 | Pitch | Yaw |
| 2 Jet-Quad A/C Pitch Jets C3 and A4 | Without Attitude Control | OFF | MNA or MNB | MNA or MNB | OFF | MNA or MNB | OFF | OFF | MNA or MNB | None | B3 and D4 |
| | With Attitude Control | MNA or MNB | MNA or MNB | MNA or MNB | MNA or MNB | MNA or MNB | OFF | OFF | MNA or MNB | A3 and C4 | B3 and D4 |
| 2 Jet - Quad B/D Yaw Jets D3 and B4 | Without Attitude Control | MNA or MNB | OFF | OFF | MNA or MNB | OFF | MNA or MNB | MNA or MNB | OFF | A3 and C4 | None |
| | With Attitude Control | MNA or MNB | OFF | OFF | MNA or MNB | MNA or MNB | MNA or MNB | MNA or MNB | MNA or MNB | A3 and C4 | B3 and D4 |
| 4 Jet - Quad ABCD Jets A4, B4, C3, D3 | Without Attitude Control | OFF | MNA or MNB | MNA or MNB | OFF | OFF | MNA or MNB | MNA or MNB | OFF | None | None |
| | With Attitude Control | MNA or MNB | MNA or MNB | MNA or MNB | MNA or MNB | MNA or MNB | MNA or MNB | MNA or MNB | MNA or MNB | A3 and C4 | B3 and D4 |

*See figure 4.6-2 for explanation of jet code.

Figure 4.6-1. SCS Ullage Setup

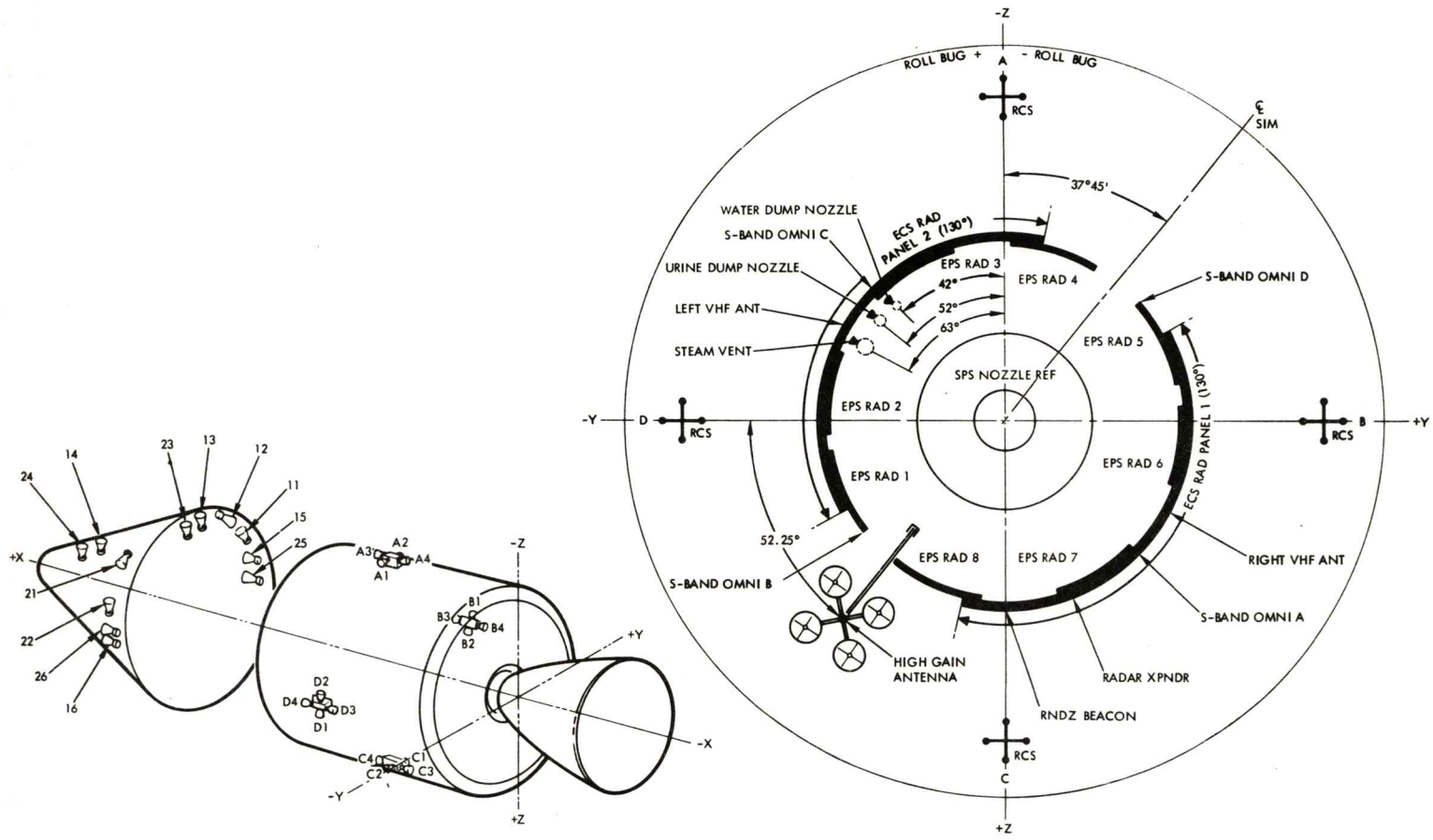


**CM RCS CODE**

FIRST DIGIT: SYSTEM (1 OR 2)
SECOND DIGIT: 1, 2 (+, -ROLL) 3, 4 (+, -PITCH) 5, 6 (+, -YAW)

**SM RCS CODE**

1 AND 2 ARE ROLL JETS
3 AND 4 ARE A/C PITCH OR B/D YAW JETS
1 AND 3 = + ROTATION, 2 AND 4 = - ROTATION

SM-2A-2212

Figure 4.6-2. RCS Jet, Vent, Radiator, and Antenna Locations



NORMAL/BACKUP

| CONTROLS | | POWER SOURCE | | | | POWER OFF | |
|---|---|---|---|---|---|---|---|
| TITLE | POSITIONS | BUS 1 (cb direct) | BUS 2 (LOGIC 2/3 PWR sw) | BUS 3 (LOGIC 2/3 PWR sw) | BUS 4 (cb direct) | OPEN CIRCUIT | SWITCHED OFF BY |
| CMC ATT | IMU | X | | | X | | cb SCS LOGIC 1/2, 1/4, & 3/4 |
| | GDC | | | | | X | |
| FDAI SCALE | 5/1 | | | | | X | |
| | 5/5 | | X | | | | LOGIC 2/3 PWR |
| | 50/15/50/10 | | | | X | | cb SCS LOGIC 1/4 & 3/4 |
| FDAI SEL | 1/2 | | | | X | | cb SCS LOGIC 1/4 & 3/4 |
| | 1 | | | X | | | LOGIC 2/3 PWR |
| | 2 | | | X | | | LOGIC 2/3 PWR |
| FDAI SOURCE | CMC | | X | | | | LOGIC 2/3 PWR |
| | ATT SET | | | X | | | LOGIC 2/3 PWR |
| | GDC | | | X | | | LOGIC 2/3 PWR |
| ATT SET | IMU | | X | | | | LOGIC 2/3 PWR |
| | GDC | | | | X | | cb SCS LOGIC 1/4 & 3/4 |
| MAN ATT (3) | ACCEL CMD | X | | | | | cb SCS LOGIC 1/2 & 1/4 |
| | RATE CMD | | | | | X | |
| | MIN IMP | X | | | | | cb SCS LOGIC 1/2 & 1/4 |
| LIM CYCLE | on (up) | | | | | X | |
| | OFF | X | | | | | cb SCS LOGIC 1/2 & 1/4 |
| ATT DBD | MAX | | | | | X | |
| | MIN | X | | | | | cb SCS LOGIC 1/2 & 1/4 |
| RATE | HI | X | | | | | cb SCS LOGIC 1/2 & 1/4 |
| | LO | | | | | X | |

Figure 4.6-3. SCS Logic Bus Power Distribution (Sheet 1 of 2)

| CONTROLS | | POWER SOURCE | | | | POWER OFF | |
|---|---|---|---|---|---|---|---|
| TITLE | POSITIONS | BUS 1 (cb direct) | BUS 2 (LOGIC 2/3 PWR sw) | BUS 3 (LOGIC 2/3 PWR sw) | BUS 4 (cb direct) | OPEN CIRCUIT | SWITCHED OFF BY |
| SC CONT | CMC | | X | | | | LOGIC 2/3 PWR |
| | SCS | | | X | | | LOGIC 2/3 PWR |
| BMAG MODE | RATE 2 | | (R) | (P & Y) | | | LOGIC 2/3 PWR |
| | ATT 1/RATE 2 | | (R) | (P & Y) | | | LOGIC 2/3 PWR |
| | RATE 1 | (R,P,Y) | | | | | cb SCS LOGIC 1/2 & 1/4 |
| DIR ULL | pb | X | | | | | cb SCS LOGIC 1/2 & 1/4 |
| THRUST ON | pb | X | | | | | cb SCS LOGIC 1/2 & 1/4 |
| GDC ALIGN | pb | | | | X | | cb SCS LOGIC 1/4 & 3/4 |
| SCS TVC (2) | AUTO | | | X | | | LOGIC 2/3 PWR |
| | RATE CMD | | | X | | | LOGIC 2/3 PWR |
| | ACCEL CMD | | | X | | | LOGIC 2/3 PWR |
| ΔV CG | LM/CSM | | | X | | | LOGIC 2/3 PWR |
| | CSM | | | | | X | LOGIC 2/3 PWR |
| EMS ROLL | on (up) | | | | X | | cb SCS LOGIC 1/4 & 3/4 |
| | OFF | | | | | X | |
| .05 G sw | on (up) | | | | X | | cb SCS LOGIC 1/4 & 3/4 |
| | OFF | | X | | | | LOGIC 2/3 PWR |
| TVC GMBL DR (2) | 1 | | | | | X | |
| | AUTO | X | | | | | cb SCS LOGIC 1/2 & 1/4 |
| | 2 | | | X | | | LOGIC 2/3 PWR |
| THC | CW sw | | X | | | | LOGIC 2/3 PWR |

Figure 4.6-3. SCS Logic Bus Power Distribution (Sheet 2 of 2)

CAUTION

SCS logic bus power must not be removed from CMC ATT switch if (1) pitch or yaw rate >5°/second, or (2) GDC yaw Euler angle >80° and <280°. Removing power when either of these conditions exist will result in GDC damage.

4. LIMITED USE CONTROLS: G&C circuit breakers, required for G&C operation, are to be closed during the entire mission except in event of malfunctions. (See figure 4.6-4.) If a malfunction occurs, some circuit breakers may be operated in order to isolate problem areas. Refer to malfunction procedures, section 5.2.

   Figure 4.6-5 defines switches which will remain in same position during major portion of orbital flight time because of functional requirements. Other considerations are to maintain maximum crew safety, increase equipment reliability, and minimize power consumption.

5. ATT SET - IMU FUNCTION: If CMC is on, an overload in IMU resolver circuitry may cause an ICDU oscillation and trigger the ISS warning light (Reference ICD MH01-01325-216). FDAI must be used only as a null meter in this mode of operation. If not, large errors will result because of impedance mismatch. ATT SET switch should be left at GDC when not in use.

   A polarity reversal occurs when ATT SET - IMU option is selected, and roll gimbal angle >±90°. The pitch and yaw attitude error needles become "fly from" indicators rather than "fly to" indicators in this instance.

6. LOGIC 2/3 PWR switch: Required "on" for proper control/display functions (G&N or SCS modes). See figure 4.6-3 for switches whose positions are dependent on this switch being on for proper system operation.

7. MANEUVER >17°: For CMC maneuvers >17° and during SIVB maneuvers, the BMAGs should be caged to prevent them from hitting their stops.

The G&C circuit breakers listed in this chart must be closed throughout the mission except when necessary to correct a malfunction.

Panel 8
- SCS
  - TVC AC1
  - AC (both)
  - ECA/TVC AC2
  - DIR ULL (2)
  - CONTR DIR (4)
  - CONTR AUTO (2)
  - LOGIC (all)
  - SYS (2)
  - A/C ROLL (2)
  - B/D ROLL (2)
  - PITCH (2)
  - YAW (2)
- ORDEAL (2)
- EMS (2)
- RCS
  - SM HTRS (4)
  - PRPLNT (2)
- SPS (12)

Panel 5
- G/N
  - PWR AC (both)
  - IMU (2)
  - IMU HTR (2)
  - CMPTR (2)
  - OPT (2)

Panel 229
- EPS
  - GRP 1 (both)
  - GRP 2 (both)
  - GRP 3 (both)
  - GRP 4 (both)
  - GRP 5 (both)

Figure 4.6-4. Limited Use G&C Circuit Breakers

| Switch | Location | Position Major Portion of Mission | When Required | Remarks |
|---|---|---|---|---|
| CMC ATT | MDC-1 | IMU | Normally not touched | Selection of GDC position causes total attitude display to be lost on both balls. Must not be moved to GDC position if (1) pitch or yaw rate is >5 deg/sec, or (2) GDC yaw Euler angle >80° and <280°. GDC damage will result if this is done. |
| IMU CAGE (guarded) | MDC-1 | off (down) | To establish an inertial reference in event of CSS failure or IMU tumbling. | Cage mode zeros the IMU gimbals in a coarse alignment. |
| EMS ROLL | MDC-1 | OFF | Prior to entry | Refer to Entry and Entry Preparation Procedures. |
| .05 G sw | MDC-1 | OFF | At .05 G during entry | Except for entry, on (up) position not desirable (cages BMAGs). Off position powered by LOGIC 2/3 PWR - on (up). |
| α/Pc IND sw | MDC-1 | Pc | Following launch tower jettison | Left in Pc position after tower jettison. |
| LV IND/GPI sw | MDC-1 | GPI | Prior to SPS thrusting | Placed in SII/SIVB position during Prime Crew Prelaunch. Temporarily placed in GPI position for SPS gimbal check at lift off +6 minutes. |
| LV GUID | MDC-2 | IU | If manual inputs to the SIVB control system are required | Nonfunctional after separation from SIVB. |
| UP TLM | LEB-122 | ACPT | Not normally changed | Both UP TLM switches (MDC-2, LEB 122) must be in ACPT position for CMC to accept telem data. MDC-2 switch normally used as control. |

Figure 4.6-5. Limited Use Controls

8. ACCEL CMDs: Acceleration commands are available, via RHCs, any time MAN ATT switches are at ACCEL CMD (SC CONT - CMC or SCS). However, ACCEL CMD position inhibits any CMC outputs to RCS jets.

9. EMS MODE switch: EMS MODE switch should be placed to NORM <30 seconds prior to thrusting to minimize buildup of ΔV indicator errors, caused by accelerometer bias. Errors also minimized if set to STBY immediately after thrusting. Otherwise, ΔV ind continues counting.

10. MAN ATT/BMAG MODE switches: Switches may be set by axis, as desired.

11. SPS GMBL MOTORS: Start motors sequentially at ≈1-second intervals to avoid electrical overload. Turn GMBL MOT switches OFF sequentially to avoid power surge. Turning servo 2 off first minimizes switching in the logic.

12. (R02) IMU STATUS check: Procedure prerequisites signify when ISS should be on and a known orientation required. Assuming that prerequisites have been complied with, program alarm for R02 should not occur. If prerequisites are not complied with, program alarm for ISS not on and/or IMU orientation unknown is treated as shown in 4.8.1.16.

13. CMC ATT switch: Normally left at IMU position throughout mission. Selection of GDC position causes total attitude display to be lost on both balls. GDC damage will result if GDC position selected and pitch or yaw rate is >5 deg/sec, or if GDC yaw Euler angle is >80° and <280°.

4.6.1.2 SCS Operations

1. SCS RATE/DEADBAND: During SCS attitude control modes (4.7.1), ATT DBD and RATE switch positions establish rate and deadband response. (See figure 4.6-6.) For FDAI scaling, see figure 4.6-7. Refer to 4.8.2.1 for selection of CMC controlled rate and deadband.

2. SCS JET SEL: Sixteen AUTO RCS switches, consisting of four switch groups titled A/C ROLL, B/D ROLL, PITCH, and YAW with four switches each, enable CM and/or SM jets. Panel nomenclature for AUTO RCS switches summarizes jet characteristics for both SM and CM RCS jets. See figure 4.6-8. Refer to 4.6.1.3, note 1d, and 4.8.2.1 for CMC jet selection.

3. INADVERTENT JET FIRINGS: When powering up SCS, BMAGs should be caged to prevent inadvertent firings of RCS jets.

4. PSEUDO RATE: The pseudo rate function, controlled by LIM CYCLE switch, is used only during SCS attitude hold mode to conserve RCS propellants. However, manual SCS maneuvers with LIM CYCLE switch on cause excessive RCS injector valve cycling and increased propellant consumption. Switch does not function when in computer (CMC) mode. Also refer to note 6.

5. SIG CONDR/DR BIAS PWR switch: Powers RJEC -4 vdc bias power supplies and various SCS signal conditioners for telemetery. To provide increased reliability, switches should not be set on same bus.

6. LIM CYCLE switch: For SCS modes, LIM CYCLE switch should be configured as follows in order to conserve RCS propellant:

   OFF - Manual proportional rate command.
   OFF - Automatic rate damping.
   on (up) - Attitude hold.

7. BMAG PWR switch: When BMAG PWR switches set to OFF, 40-minute warmup may be required (BMAG 1 & 2 TEMP lights out when operating temperature reached) before normal operation of BMAGs. If set from ON to WARMUP, BMAG TEMP lights should remain out.

| Control Parameter | | SWITCH POSITIONS | | | |
|---|---|---|---|---|---|
| | | RATE - LOW* | | RATE - HIGH | |
| | | ATT DBD: | | ATT DBD: | |
| | | MIN | MAX* | MIN | MAX |
| Attitude Deadband | | ±0.2° | ±4.2° | ±4.0° | ±8.0° |
| Commanded Rates | Pitch & Yaw | ±0.7°/sec | | ±7.0°/sec | |
| | Roll | | | ±20.0°/sec | |
| Rate Deadband | | ±0.2°/sec | | ±2.0°/sec | |

*Recommended position to minimize fuel consumption during attitude hold.

Figure 4.6-6. SCS Rate and Deadband Select Logic

| FDAI SCALE SW POS | ATT ERROR | | | |
|---|---|---|---|---|
| | FLIGHT PHASE | CMC | SCS | SCS RATES |
| 5/1 | Boost & entry | R 20°<br>P&Y 5° | RP&Y 5° | RP&Y 1°/sec |
| | All other | RP&Y 5° | RP&Y 5° | RP&Y 1°/sec |
| 5/5 | Boost & entry | R 20°<br>P&Y 5° | RP&Y 5° | RP&Y 5°/sec |
| | All other | RP&Y 5° | RP&Y 5° | RP&Y 5°/sec |
| 50/15, 50/10 | Boost & entry | R 50° | R 50° | R 50°/sec |
| | | P&Y 15° | P&Y 15° | P&Y 10°/sec |
| | All other | R 12.5° | R 50° | R 50°/sec |
| | | P&Y 15° | P&Y 15° | P&Y 10°/sec |

Figure 4.6-7. FDAI Scaling

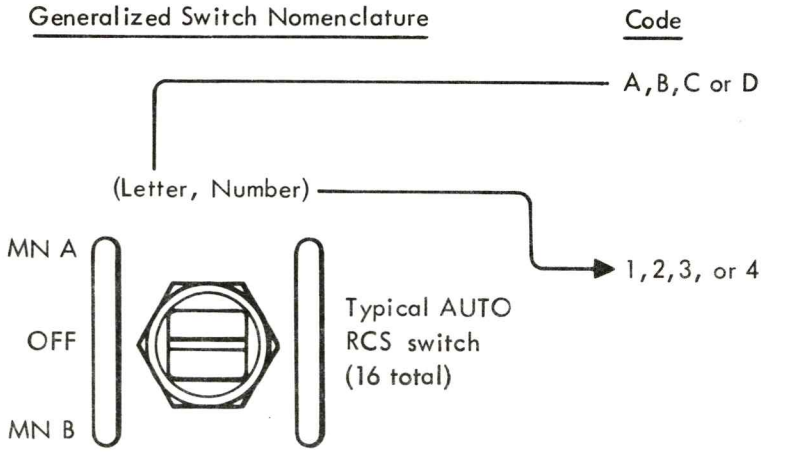


**Figure 4.6-8. SCS Jet Select Logic: MDC-8 Nomenclature**

4.6.1.3 G&N Operations

1. GENERAL:

a. IMU STBY PWR: If standby power is removed for more than 20 minutes, ISS calibration is no longer valid.

b. CMC CONTROLLED MANEUVERS: During CMC controlled maneuvers, any input from RHC (RHC out of detent) will be interpreted by CMC as a manual override and will cause immediate termination of auto maneuver calculation.

c. VEC POINT ROUTINE: VEC POINT routine (all CMC auto maneuvers except in P23 and R62) may compute large OGA (roll) required when +X must be rotated ≈180°. Sensitivity to such changes gets greater as magnitude increases toward 180°. If desired, a manual maneuver in pitch ≈30° is performed and the solution is then recomputed by keying PRO on FL V50 N18 while not in CMC/AUTO.

d. CMC JET SEL: CMC jet selection is accomplished by performing procedure 4.8.2.1, V48 (R03, DAP Data Load). AUTO RCS switches should correspond to RCS DAP configuration. During SPS thrusting, configuration for AUTO RCS roll enable should agree with RCS DAP load to reduce SPS propellant slosh in event of a failed-on roll jet.

e. IMU GMBL LOCK: If non-G&N controlled attitude maneuvers are made by crew, care must be taken to avoid IMU gimbal lock. IMU gimbal angles may be monitored by observing ICDUs (V16 N20) or by monitoring FDAI ball.

f. CMC PWR: If computer power is switched off, it will be necessary to perform a computer fresh start (V36E) to initialize erasable storage. CMC update program (P27) would have to be done to update the state vector and computer clock time.

g. CLOCK TIME (GET): CMC is capable of maintaining an accurate value of ground elapsed time (GET) for only 23 hours when in standby mode. If CMC is not brought out of standby condition to running condition at least once within 23 hours, CMC value of GET must be updated.

h. IMU ORIENTATION (P51): Time and RCS prplnt may be saved, and subsequent IMU alignment decisions greatly simplified if P51 is performed in such a way as to leave IMU inertially stabilized at an orientation as close as possible to optimum orientation required by future CMC programs.

2. CSS/ISS INTERFACE: Normally the CMC must be ON before the IMU can be operated. However, the IMU may be powered up while the CMC is at STBY. In this condition, the IMU is caged (if powered up) and remains in a coarse align mode. Caging is accomplished internally and does not require any panel switching. However, if the CMC is at STBY, the IMU can be uncaged by placing the IMU CAGE switch to on (up) for ≈5 seconds. V37 should not be called for 15 seconds after NO ATT light goes out. If V37 is called prior to 15 seconds, the PIPA FAIL bit will not be reset and a PIPA FAIL will go undetected.

3. DSKY OPERATIONS: DSKY operations (MDC-2 and LEB-140) require certain restrictions to operation, loading of data, and display of data which are necessary to proper operation. Some general restrictions are listed below. Detailed information relative to DSKY operations is contained in MIT Report E-2129, "Keyboard and Display Program and Operation."

a. DISPLAY/MONITOR VERBS: For display verbs (01-07), monitor verbs (11-17), and for all load verbs (21-25), the number of components of the verb must not exceed the number of components of the noun being used beginning with noun 04. Noun 01, 02, and 03 may be used with any verb regardless of number of components. If an attempt is made to violate this restriction, the OPR ERR indicator will illuminate when ENTR is pressed to execute the verb/noun action.

b. OCTAL/DECIMAL MIXING: No mixing of octal and decimal data will be allowed for loads having more than one component. If an attempt is made to violate this restriction, the OPR ERR indicator will illuminate when ENTR is pressed for the last entry.

c. DECIMAL/OCTAL LOADS: Octal data loads require only significant digits be keyed (e.g., 5, 4, ENTR). Loading decimal data requires each complete entry be made with a sign (+, -), followed by significant digits. Decimal load of less than 5 digits will be



NORMAL/BACKUP

accepted, just as an octal load. Zeros need not be entered ahead of most significant digit. (E.g., for a data load of +925, entry will be made by pressing DSKY keys +, 9, 2, 5, ENTR, and +, ENTR rather than +, 0, 0, 0, 0, 0, ENTR.) When loading decimal data. ENTR sometimes changes last digit of loaded value.

d. MACHINE ADDRESSES: Machine addresses must be loaded in octal.

e. DATA LOAD: If an attempt is made to load a data word which is too large in magnitude for the noun being used, the OPR ERR indicator will illuminate.

All data loads must be verified before pressing ENTR key for last register being loaded. (CLR key has no effect after last ENTR is pressed.) If any of the data is incorrect, register may be cleared by pressing CLR key. Each successive pressing of CLR key will clear preceding register until first register is cleared. (This backing up action will only operate on components called by load verb used.)

f. VERB/NOUN FLASHES: All VERB/NOUN flashes require operator action and the program in progress is halted until appropriate action is taken.

g. PROGRAM SELECTIONS: At times when program selection is not allowable by astronaut action (V37E XXE), R00 will issue a program alarm (01520) and interrupted activity will resume. Attempts to select nonexistent programs will result in an operator error light and return to interrupted program activity and display.

h. PROGRAM TERMINATION: Any program can be terminated at a flashing display via V34E except:

- When P20 is running in background of another program, a V34E on a P20 display (R60 or N49 in R22) will terminate P20 only. Conversely, a V34E on a prethrust program will turn off that program but not P20.
- V34E with an extended verb running will terminate the extended verb only.
- V34E is ignored in P06.

i. V96E: V96E may cause significant loss of W-matrix correlation if keyed in:

- After a V37E XXE from a program using average G and before XX appears in PROG lights.
- During a permanent state vector integration in P20 during mark processing.

To recover, V93E is keyed at some time prior to next navigation marks or VHF range input. In all other cases, use of V96E will cause no ill effects providing next program selected is P00.

j. V82E: After V82E, meaningful information in N50 (splash error) is available only during P11 and P00.

k. EXTENDED VERBS: Extended verbs are not restart-protected. If RESTART light goes on during an extended verb, or if software restart occurs (no RESTART light), the verb should be reselected.

l. VG/ΔV DISPLAYS: VG or ΔV displays in control coordinates, N85 or N83, are based on reading accelerometers every 2 seconds. Displays, however, are asynchronous 1-second monitors. Result is a possible 1/2- to 1-1/2-second delay between application of ΔV and visible result.

m. PRO KEY: A PRO key input is rejected if verb windows show a V21, V22, or V23. V33E must be used for these cases, e.g., a V21 PRO (or V25E PRO) will be rejected; a V25 PRO will not. For the V21, V22, V23 and PRO cases, PRO lights OPR ERR light.

n. KEY REL pb/KEY REL lt: Normal and special cases of KEY REL light and KEY REL push-button use are discussed in the following notes.

KEY REL lt - on

- When internal display comes up while operator has DSKY.
- When internal flashing display is currently on DSKY and keystroke is made except for PRO, ENTR, and ERR RSET.



NORMAL BACKUP

- Suspended monitor: When operator makes keystroke on top of (his own) monitor verbs (verbs 11-17).

- Remains on after V37 until new program is started. Operator should not use keyboard until KEY REL light is out and new program number is displayed.

o. KEY REL lt - out

- When operator relinquishes DSKY by pressing KEY REL.

- When operator terminates his current sequence normally by:

  Final ENTR of load sequence

  or ENTR, after a response to a flashing display (V34E)

  or ENTR, after an extended verb request (V49E).

p. Special cases of KEY REL

- If operator selects a nonmonitor verb display on top of his own previously selected monitor verb, the KEY REL light will flash. Pressing KEY REL will bring back (unsuspend) the monitor and extinguish light. However, if these sequences are performed on top of an internal display, the KEY REL light will not go out when KEY REL is pressed. One more KEY REL operation (total of two) is required to extinguish KEY REL light, and bring back the internal display.

- If operator selects a verb-noun combination (i.e., V16 monitor) on top of an internal flashing display, the internal display can still be answered with V32E, PRO, or V34E, which wipes everything from the DSKY until the next internal display. However, an operator-selected monitor should, as a rule, never be terminated with V34E. V34E may not be the desired response to the internal flashing display. KEY REL should be used instead. KEY REL need not be used if a data load is interrupted by a priority display.

4. OPTICS MECHANIZATION: Operation of the SCT and SXT requires adherence to certain constraints which are described as follows:

a. To avoid sun interference, the sun position must be more than 10 degrees from optics shaft-drive axis and more than 15 degrees from star LOS for SXT, and more than 55 degrees from shaft-drive axis for SCT. Within these limits it is possible to use SXT even when sun position is between the SLOS and LLOS. The constraints given, however, do not take into account light scattering which can occur from actual spacecraft configuration.

b. An adequate portion of the star field must be visible through SCT in order that navigational stars can be recognized. The optics shaft-drive axis thus must be pointed at least 30 degrees above local sunlit earth horizon and at least 20 degrees above local dark earth horizon.

c. Maximum SXT LOS drive rates are 10 deg/sec for trunnion and 19.5 deg/sec for shaft, with a $\pm$20 percent tolerance. During landmark tracking from a 100-nautical mile earth orbit, in order to be able to maintain optics LOS within the capability of shaft-drive rate, optics LOS to the landmark must be >8.5 degrees from optics shaft-drive-axis ground track at closest point of approach of landmark to shaft-drive-axis ground track. Within this constraint, landmarks on spacecraft ground track can be used by simply rolling CSM so that optic LOS is >8.5 degrees from optics shaft-drive-axis LOS.

d. TRACKER caution light should be ignored during TVC. Optics CDU fail during TVC, sets TRACKER light which will stay on (even with fail removed) until end of TVC or keying RSET.

e. During auto optics, computation lag between sampling IMU CDUs and driving optics causes optics to lag behind target. Amount of offset is proportional to CSM angular rate. At usual rate of 4 deg/min, maximum offset would be 0.133°. This will not cause an error during manual tracking and marking.

f. After a fresh start, or restart, or after turning optics power on, optics must be taken out of zero and returned to zero to perform an optics zero since it is not position of switch but change to zero position that triggers zeroing program.



NORMAL/BACKUP

| STA/T STEP | PROCEDURE | PANEL | REMARKS |
|---|---|---|---|
| 4.6.2 | VERB LIST | | |
| | Regular Verbs | | |
| | 01 Disp oct compnt 1 (R1) | | |
| | 02 Disp oct compnt 2 (R1) | | |
| | 03 Disp oct compnt 3 (R1) | | |
| | 04 Disp oct compnt 1, 2 (R1, R2) | | |
| | 05 Disp oct compnt 1, 2, 3 (R1, R2, R3) | | |
| | 06 Disp dec (R1 or R1, R2 or R1, R2, R3) | | |
| | 07 Disp DP dec - test only (R1, R2) | | |
| | 11 Mon oct compnt 1 (R1) | | |
| | 12 Mon oct compnt 2 (R1) | | |
| | 13 Mon oct compnt 3 (R1) | | |
| | 14 Mon oct compnt 1, 2 (R1, R2) | | |
| | 15 Mon oct compnt 1, 2, 3 (R1, R2, R3) | | |
| | 16 Mon dec (R1 or R1, R2 or R1, R2, R3) | | |
| | 17 Mon DP dec - test only (R1, R2) | | |
| | 21 Load compnt 1 (R1) | | |
| | 22 Load compnt 2 (R2) | | V33E must be used for accept option if V21, V22, or V23 is in verb window. PRO is not accepted and turns on OPR ERR light. |
| | 23 Load compnt 3 (R3) | | |
| | 24 Load compnt 1, 2 (R1, R2) | | |
| | 25 Load compnt 1, 2, 3 (R1, R2, R3) | | |
| | 27 Disp fixed memory | | |
| | 30 Request exec | | Use in P00 only. |
| | 31 Request waitlist | | Use in P00 only. |
| | 32 Recycle | | |
| | 33 Proceed | | |

| STA/T STEP | PROCEDURE | PANEL | REMARKS |
|---|---|---|---|
| 34 | Terminate | | |
| 35 | Test lights | | Use in P00 only. |
| 36 | Req fresh strt | | Blanks DSKY displays. May compromise stored state vector requiring a P27 update and IMU orientation determination. |
| 37 | Change prog (major mode) | | |
| | Extended Verbs | | |
| *40 | Zero CDU (with N20) | | Ensures sync between ISS CDU counters and CDU counters in CMC. Terminates coarse align and enters fine align. |
| 41 | Coarse align CDU (with N20 & N91) | | N20 - Aligns IMU to gimbal angles specified by crew. To coarse align to 0, 0, 0 when GMBL LOCK and coarse align. N91 - To drive optics to shaft and trunnion angles specified by crew (V41 N91 from P00 only). |
| 42 | Pulse torque gyro | | Fine align IMU. |
| 43 | Load FDAI att err needles (test only) | | P00 only. |
| *44 | Set surface flag | | |
| *45 | Rset surface flag | | |
| *46 | Activate DAP | | |
| *47 | Set LM state vctr into CSM state vctr | | |
| 48 | Strt DAP data load (R03) | | Calls up routine 03. |
| 49 | Strt crew defined mnvr (R62) | | P00 only. |
| 50 | Please perform | | |
| 51 | Please mrk | | |
| *Callable with another extended verb in use & does not lock out other extended verbs. | | | |



NORMAL BACKUP

| STA/T STEP | PROCEDURE | PANEL | REMARKS |
|---|---|---|---|
| *52 | Marked on offset ldg site (P22) | | |
| 53 | Please mrk alternate LOS | | |
| 54 | Strt rndz backup sighting mrk (R23) | | |
| 55 | Increment CMC time (dec) | | |
| *56 | Term tracking (P20) | | |
| 57 | Strt rndz sighting mrk (R21) | | |
| *58 | Rset stick flag, set V50 N18 flag | | Allows auto maneuvers. |
| 59 | Please mrk (opt calib) | | |
| *60 | Set att err ref to present att | | |
| *61 | Sel mode 1 (disp DAP att err) | | Mode 1. FDAI error needles show difference between current and DAP commanded ICDU angles. |
| *62 | Sel mode 2 (disp tot att err) | | Mode 2. Display difference between desired final ICDUs (N22) and present ICDUs (N20) resolved into CSM control axes. |
| *63 | Disp tot astronaut att err | | Mode 3. Display difference between astronaut total attitude (N17) and present ICDUs (N20) resolved into CSM control axes. |
| 64 | Strt S-bd ant routine (R05) | | |
| *65 | Strt opt verif of prelaunch align - P03 | | V65E calls for P03 (during P02 only). |
| *66 | Set CSM state vctr into LM state vctr | | |
| 67 | Strt W matrix RSS err disp | | |
| *69 | Restrt | | |
| 70 | Strt CMC update - liftoff time (P27) | | V70 through V73 are allowed only during P00 or P02. |
| 71 | Strt CMC update - block ADR (P27) | | |
| 72 | Strt CMC update - single ADR (P27) | | |
| 73 | Strt CMC update - CMC time (P27) | | |

*Callable with another extended verb in use & does not lock out other extended verbs.

| STA/T STEP | PROCEDURE | PANEL | REMARKS |
|---|---|---|---|
| *74 | Init erasable dump via downlink | | |
| *75 | Backup liftoff | | |
| *76 | Set pref att flag | | |
| *77 | Rset pref att flag | | |
| *78 | Update prelaunch az | | |
| 79 | Req orbrate/PTC (BBQ mode - R64) | | |
| *80 | Enbl LM state vctr update | | |
| *81 | Enbl CSM state vctr update | | |
| 82 | Req orb param disp (R30) | | V82E calls R30. |
| 83 | Req rndz param disp #1 (R31) | | V83E calls R31. V83 and V85 displays will be meaningless at altitudes >432 NM for both earth and moon if exercised during periods of precision vector integration. |
| 85 | Req rndz param disp #2 (R34) | | V85E calls R34. |
| *86 | Reject rndz backup sighting mrk | | |
| *87 | Set VHF range flag | | |
| *88 | Rset VHF range flag | | |
| 89 | Strt rndz fnl att routine (R63) | | V89E calls R63 from P00 only. |
| 90 | Req rndz out of plane disp (R36) | | V90E calls R36. |
| 91 | Banksum | | P00 only. |
| *93 | Enbl W matrix init | | |
| *94 | Enbl cislunar tracking recycle (P23) | | |
| *96 | Term integration & go to P00. | | |
| 97 | SPS thrust fail (R40) | | |
| 99 | Enbl eng ign | | |

*Callable with another extended verb in use & does not lock out other extended verbs.



NORMAL/BACKUP

| STA/T STEP | PROCEDURE | | PANEL | REMARKS |
|---|---|---|---|---|
| 4.6.3 | NOUN LIST | | | All nouns may be loaded via DSKY entry. However, registers containing units of XXBXX cannot be loaded and nouns containing such register data cannot be loaded by V24 or V25. |
| 01 | Specify address (fract) | | .XXXXX<br>.XXXXX<br>.XXXXX | |
| 02 | Specify address (whole) | | XXXXX.<br>XXXXX.<br>XXXXX. | |
| 03 | Specify address (deg) | | XXX.XX<br>XXX.XX<br>XXX.XX | |
| +05 | Angular err/diff | | XXX.XX DEG | |
| +06 | Option code ID | | OCT | |
| | Option code | | OCT | |
| +07 | Flagword | ECADR | OCT | ECADR $\leq$30 (octal) will select appropriate channel (except that channel 7 attempts will be ignored). |
| | | BIT ID | OCT | |
| | | ACTION | OCT | |
| 08 | Alarm data | ADRES | OCT | |
| | | BBCON | OCT | |
| | | ERCOUNT | OCT | |
| 09 | Alarm codes | FIRST | OCT | |
| | | SECOND | OCT | |
| | | LAST | OCT | |
| 10 | Chan to be specified | | OCT | |
| 11 | GETI (CSI) | | OOXXX. HRS<br>OOOXX. MIN<br>OXX.XX SEC | |
| +Nouns not manually callable with valid data at any time. | | | | |

| STA/T STEP | PROCEDURE | | PANEL | REMARKS |
|---|---|---|---|---|
| +12 | Option code | | OCT<br>OCT | Used only with extended verbs. |
| 13 | GETI (CDH) | | 00XXX. HRS<br>000XX. MIN<br>0XX.XX SEC | |
| 15 | Increment address | | OCT | Used with N01, N02, and N03. |
| +16 | Time of event | | 00XXX. HRS<br>000XX. MIN<br>0XX.XX SEC | Used by extended verb only. |
| 17 | Astronaut tot att | R<br>P<br>Y | XXX.XX DEG<br>XXX.XX DEG<br>XXX.XX DEG | Used in Mode 3 needles (V63). |
| 18 | Auto mnvr | R<br>P<br>Y | XXX.XX DEG<br>XXX.XX DEG<br>XXX.XX DEG | |
| 20 | ICDU angles | OG-R<br>IG-P<br>MG-Y | XXX.XX DEG<br>XXX.XX DEG<br>XXX.XX DEG | |
| 21 | PIPAS | X<br>Y<br>Z | XXXXX. Pulses<br>XXXXX. Pulses<br>XXXXX. Pulses | |
| 22 | New ICDU angles | OG-R<br>IG-P<br>MG-Y | XXX.XX DEG<br>XXX.XX DEG<br>XXX.XX DEG | |
| +24 | Δ time for CMC clock | | 00XXX. HRS<br>000XX. MIN<br>0XX.XX SEC | V25 N24 display initiated by V55E. |
| +25 | Checklist | | XXXXX. | Used with V50. |
| +26 | Prio/delay<br>ADRES<br>BBCON | | OCT<br>OCT<br>OCT | Used with V30, V31. |

+Nouns not manually callable with valid data at any time.

| STA/T STEP | PROCEDURE | PANEL | REMARKS |
|---|---|---|---|
| 27 | Self-test on/off sw | XXXXX. | |
| +29 | X SM launch az | XXX.XX DEG | |
| +30 | Trgt code (gyro com- | XXXXX. | |
| | passing verif) | XXXXX. | |
| | | XXXXX. | |
| 32 | TF perigee | 00XXX. HRS | Time from perigee/perilune. |
| | | 000XX. MIN | |
| | | 0XX.XX SEC | |
| 33 | GETI | 00XXX. HRS | GETI - ground elapsed time of ignition. |
| | | 000XX. MIN | |
| | | 0XX.XX SEC | |
| +34 | Time of **evnt** | 00XXX. HRS | |
| | | 000XX. MIN | |
| | | 0XX.XX SEC | |
| 35 | Time from **evnt** | 00XXX. HRS | |
| | | 000XX. MIN | |
| | | 0XX.XX SEC | |
| 36 | Time of CMC clock | 00XXX. HRS | |
| | | 000XX. MIN | |
| | | 0XX.XX SEC | |
| 37 | GETI (TPI) | 00XXX. HRS | |
| | | 000XX. MIN | |
| | | 0XX.XX SEC | |
| 38 | Time of state vctr | 00XXX. HRS | |
| | | 000XX. MIN | |
| | | 0XX.XX SEC | |
| 39 | ΔT for trnfr | 00XXX. HRS | |
| | | 000XX. MIN | |
| | | 0XX.XX SEC | |
| 40 | TF GETI/TFC | XXBXX MIN-SEC | This is a no load noun (OPR ERR). |
| | VG | XXXX.X FPS | |
| | ΔV (accum) | XXXX.X FPS | |

+Nouns not manually callable with valid data at any time.

| STA/T STEP | PROCEDURE | PANEL | REMARKS |
|---|---|---|---|
| +41 | Trgt Az | XXX.XX DEG | N41 - 2 component noun. |
| | Elev | XX.XXX DEG | |
| | ID | 0000X. | |
| 42 | Ha | XXXX.X NM | Apogee/apolune altitude. |
| | Hp | XXXX.X NM | Perigee/perilune altitude. |
| | ΔV (req) | XXXX.X FPS | |
| 43 | Lat (+N) | XXX.XX DEG | |
| | Long (+E) | XXX.XX DEG | |
| | Alt | XXXX.X NM | |
| 44 | Ha | XXXX.X NM | Apogee altitude. This is a no load noun (OPR ERR). |
| | Hp | XXXX.X NM | Perigee altitude. |
| | TFF | XXBXX MIN-SEC | Time of freefall to 49.4 NM (300,000 ft) above launch pad radius for earth orbit, or for lunar orbit, 5.8 NM (35,000 ft) above lunar radius at most recently defined lunar landing site. |
| 45 | Mrks (VHF/opt) | XXBXX MKS | This is a no load noun (OPR ERR). |
| | TF GETI (next burn) | XXBXX MIN-SEC | |
| | MGA | XXX.XX DEG | |
| 46 | DAP config | OCT | Loads configuration for use by DAPS. |
| | | OCT | |
| 47 | CSM wt | XXXXX. LB | Loads vehicle weights for use by DAPs. |
| | LM wt | XXXXX. LB | |
| 48 | Pitch trim | XXX.XX DEG | Loads pitch and yaw trim angles. |
| | Yaw trim | XXX.XX DEG | |
| 49 | ΔR | XXXX.X NM | |
| | ΔV | XXXX.X FPS | |
| | Code | 0000X. | |

+Nouns not manually callable with valid data at any time.



NORMAL/BACKUP

| STA/T STEP | PROCEDURE | PANEL | REMARKS |
|---|---|---|---|
| 50 | Splash err | XXXX.X NM | Negative for undershoot, positive for overshoot. This is a no load noun (OPR ERR). |
| | Hp | XXXX.X NM | |
| | TFF | XXBXX MIN-SEC | Time of freefall. |
| 51 | Rho | XXX.XX DEG | |
| | Gamma | XXX.XX DEG | |
| 52 | CENTANG (active veh) | XXX.XX DEG | Central angle of active vehicle. |
| 53 | Range | XXX.XX NM | |
| | Range rate | XXXX.X FPS | |
| | Phi (lcl horiz/SLOS) | XXX.XX DEG | 0 to 180° = SLOS above plane. |
| 54 | Range | XXX.XX NM | Range to LM. |
| | Range rate | XXXX.X FPS | |
| | Theta (lcl horiz/ CSM +X) | XXX.XX DEG | 0 to 180° = +X above plane. |
| 55 | NN | 0000X. | Display definition depends on using program/routine. |
| | E | XXX.XX DEG | Elevation. |
| | CENTANG (passive veh) | XXX.XX DEG | Central angle of passive vehicle. |
| 56 | Reentry angle | XXX.XX DEG | |
| | ΔV | XXXXX. FPS | |
| 58 | Hp (post TPI) | XXXX.X NM | Perigee alt (post TPI). |
| | ΔV (TPI) | XXXX.X FPS | |
| | ΔV (TPF) | XXXX.X FPS | |
| 59 | ΔV LOS 1 | XXXX.X FPS | |
| | ΔV LOS 2 | XXXX.X FPS | |
| | ΔV LOS 3 | XXXX.X FPS | |
| 60 | G max | XXX.XX G | |
| | V pred | XXXXX. FPS | |
| | Gamma EI [lcl horiz/VI (+up)] | XXX.XX DEG | |
| 61 | Impact Lat (+N) | XXX.XX DEG | |
| | Impact Long (+E) | XXX.XX DEG | |
| | Hds up/down (+Hds up) | +/-00001. | |

| STA/T STEP | PROCEDURE | PANEL | REMARKS |
|---|---|---|---|
| 62 | VI | XXXXX. FPS | Inertial velocity. |
| | H dot | XXXXX. FPS | Altitude rate. |
| | H pad | XXXX.X NM | Altitude above pad radius (earth orbit) or landing site radius (lunar orbit). |
| 63 | RTOGO (.05 G to splash) | XXXX.X NM | One shot display, should always be positive. .05 G represents pad loaded altitude. This is a no load noun (OPR ERR). |
| | VIO (at .05 G) | XXXXX. FPS | Predicted inertial velocity. |
| | TFE (time from .05 G) | XXBXX MIN-SEC | |
| 64 | Drag accel | XXX.XX G | |
| | VI | XXXXX. FPS | Inertial velocity. |
| | Range to splash | XXXX.X NM | Negative and counting down when approaching target; positive and counting up when leaving target. |
| 65 | Sampled CMC time | 00XXX. HRS<br>000XX. MIN<br>0XX.XX SEC | Fetched in interrupt. |
| 66 | Beta | XXX.XX DEG | Commanded bank angle. |
| | CRSRNG ERR | XXXX.X NM | Positive to right of plane (LATANG +South); negative to left of plane (-North). |
| | DNRNG ERR | XXXX.X NM | Negative for undershoot (PREDANGLE -θ); positive for overshoot. |
| 67 | Range to splash | XXXX.X NM | Negative counting down for approaching target; positive counting up for leaving target. |
| | Lat [Present pos (+N)] | XXX.XX DEG | |
| | Long [Present pos (+E)] | XXX.XX DEG | |



NORMAL BACKUP

| STA/T STEP | PROCEDURE | PANEL | REMARKS |
|---|---|---|---|
| 68 | Beta | XXX.XX DEG | Commanded bank angle. |
| | VI | XXXXX. FPS | Inertial velocity. |
| | H dot | XXXXX. FPS | Altitude rate. |
| 69 | Beta | XXX.XX DEG | Beta - commanded bank angle. |
| | DL | XXX.XX G | DL - drag acceleration at end of up-control. |
| | VL | XXXXX. FPS | VL - velocity at end of up-control. |
| 70 | Star code (before mrk) | OCT | |
| | Lmk data | OCT | |
| | Horiz data | OCT | |
| 71 | Star code (after mrk) | OCT | |
| | Lmk data | OCT | |
| | Horiz data | OCT | |
| 73 | Alt/10 | XXXXX. NM | On call in P21. |
| | VI | XXXXX. FPS | |
| | Gamma | XXX.XX DEG | |
| 74 | Beta | XXX.XX DEG | |
| | VI | XXXXX. FPS | |
| | Drag accel | XXX.XX G | |
| 75 | Δ alt (CDH) | XXXX.X NM | |
| | ΔT (CDH -CSI or TPI -CDH) | XXBXX MIN-SEC | |
| | ΔT (TPI -CDH or TPI -NOM TPI) | XXBXX MIN-SEC | |
| 79 | Rate | X.XXXX DEG/SEC | Used with V79. |
| | DBD | XXX.XX DEG | |
| | Axis option (X or Y) | 0000X. | 0 = X (PTC), non-zero = Y (orbrate). |
| 80 | Time to ign (cutoff) | XXBXX MIN-SEC | |
| | VG | XXXXX. FPS | |
| | ΔV (accum) | XXXXX. FPS | |
| 81 | ΔVX (lcl vert) | XXXX.X FPS | (ΔV components). |
| | ΔVY (lcl vert) | XXXX.X FPS | |
| | ΔVZ (lcl vert) | XXXX.X FPS | |



NOUN LIST

| STA/T STEP | PROCEDURE | | PANEL | REMARKS |
|---|---|---|---|---|
| 82 | ΔVX (lcl vert) | | XXXX.X FPS | |
| | ΔVY (lcl vert) | | XXXX.X FPS | |
| | ΔVZ (lcl vert) | | XXXX.X FPS | |
| 83 | ΔVX (cont) | | XXXX.X FPS | (ΔV components) control = CSM control axes. |
| | ΔVY (cont) | | XXXX.X FPS | |
| | ΔVZ (cont) | | XXXX.X FPS | |
| 84 | ΔVX (other veh) | | XXXX.X FPS | (ΔV components). |
| | ΔVY (other veh) | | XXXX.X FPS | |
| | ΔVZ (other veh) | | XXXX.X FPS | |
| 85 | VGX (cont) | | XXXX.X FPS | (VG vector components) control = CSM control axes. |
| | VGY (cont) | | XXXX.X FPS | |
| | VGZ (cont) | | XXXX.X FPS | |
| 86 | ΔVX (lcl vert) | | XXXXX. FPS | |
| | ΔVY (lcl vert) | | XXXXX. FPS | |
| | ΔVZ (lcl vert) | | XXXXX. FPS | |
| 87 | Mrk data | Shft | XXX.XX DEG | |
| | | Trun | XX.XXX DEG | |
| 88 | Planet | X | .XXXXX | Unit position vector. |
| | | Y | .XXXXX | |
| | | Z | .XXXXX | |
| 89 | Lmk | Lat (+N) | XX.XXX DEG | |
| | | Long/2 (+E) | XX.XXX DEG | |
| | | Alt | XXX.XX NM | |
| 90 | Rndz out of plane param | Y | XXX.XX NM | |
| | | Y Dot | XXXX.X FPS | |
| | | Psi | XXX.XX DEG | |
| 91 | Present OCDU angles | Shft | XXX.XX DEG | |
| | | Trun | XX.XXX DEG | |
| 92 | New OCDU angles | Shft | XXX.XX DEG | |
| | | Trun | XX.XXX DEG | |
| 93 | Δ gyro angles | X Gyro | XX.XXX DEG | |
| | | Y Gyro | XX.XXX DEG | |
| | | Z Gyro | XX.XXX DEG | |



NORMAL/BACKUP

| STA/T STEP | PROCEDURE | | PANEL | REMARKS |
|---|---|---|---|---|
| 94 | Alternate LOS | Shft | XXX.XX DEG | |
| | | Trun | XX.XXX DEG | |
| 95 | Pref att (FDAI angles) | Roll | XXX.XX DEG | Preferred tracking attitude ICDU angles. |
| | | Pitch | XXX.XX DEG | |
| | | Yaw | XXX.XX DEG | |
| 96 | +X axis att (FDAI angles) | Roll | XXX.XX DEG | |
| | | Pitch | XXX.XX DEG | |
| | | Yaw | XXX.XX DEG | |
| +97 | Sys test inputs | | XXXXX. | |
| | | | XXXXX. | |
| | | | XXXXX. | |
| +98 | Sys test results and inputs | | XXXXX. | |
| | | | .XXXXX | |
| | | | XXXXX. | |
| 99 | POS ERR | | XXXXX. FT | RSS value of position error. |
| | VEL ERR | | XXXX.X FPS | RSS value of velocity error. |
| | Option code | | 0000X. | Option code:<br>00001 - Rendezvous<br>00002 - Orbital<br>00003 - Cislunar |

+Nouns not manually callable with valid data at any time.



NOUN LIST

| STA/T STEP | PROCEDURE | PANEL | REMARKS |
|---|---|---|---|

4.6.4 STAR LIST

| NO. | STAR NAME (Numerical) | STAR NAME (Alphabetical) | NO. |
|---|---|---|---|
| 1 | Alpheratz | Acamar | 6 |
| 2 | Diphda | Achernar | 4 |
| 3 | Navi | Acrux | 25 |
| 4 | Achernar | Aldebaran | 11 |
| 5 | Polaris | Alkaid | 27 |
| 6 | Acamar | Alphard | 21 |
| 7 | Menkar | Alphecca | 32 |
| 10 | Mirfak | Alpheratz | 1 |
| 11 | Aldebaran | Altair | 40 |
| 12 | Rigel | Antares | 33 |
| 13 | Capella | Arcturus | 31 |
| 14 | Canopus | Atria | 34 |
| 15 | Sirius | Canopus | 14 |
| 16 | Procyon | Capella | 13 |
| 17 | Regor | Dabih | 41 |
| 20 | Dnoces | Deneb | 43 |
| 21 | Alphard | Denebola | 23 |
| 22 | Regulus | Diphda | 2 |
| 23 | Denebola | Dnoces | 20 |
| 24 | Gienah | Enif | 44 |
| 25 | Acrux | Fomalhaut | 45 |
| 26 | Spica | Gienah | 24 |
| 27 | Alkaid | Menkar | 7 |

Vis Mag, Right Ascension and Declination data are relative to the numerical list.

| | Right Ascension | | | Declination | | |
|---|---|---|---|---|---|---|
| Vis Mag | (hr) | (min) | (sec) | (deg) | (min) | (sec) |
| 2.1 | 0 | 06 | 49.9 | +28 | 55 | 29 |
| 2.2 | 0 | 42 | 05.0 | -18 | 09 | 04 |
| Var | 0 | 54 | 53.0 | +60 | 33 | 17 |
| 0.6 | 1 | 36 | 35.9 | -57 | 23 | 20 |
| 2.1 | 2 | 03 | 18.9 | +89 | 07 | 34 |
| 3.4 | 2 | 57 | 07.4 | -40 | 25 | 27 |
| 2.8 | 3 | 00 | 42.5 | +03 | 58 | 23 |
| 1.9 | 3 | 22 | 10.3 | +49 | 45 | 21 |
| 1.1 | 4 | 34 | 11.8 | +16 | 27 | 01 |
| 0.3 | 5 | 13 | 05.7 | -08 | 14 | 06 |
| 0.2 | 5 | 14 | 28.2 | +45 | 58 | 10 |
| -0.9 | 6 | 23 | 17.1 | -52 | 40 | 44 |
| -1.6 | 6 | 43 | 49.6 | -16 | 40 | 25 |
| 0.5 | 7 | 37 | 43.9 | +05 | 18 | 11 |
| 1.9 | 8 | 08 | 36.4 | -47 | 14 | 51 |
| 3.1 | 8 | 57 | 09.7 | +48 | 09 | 38 |
| 2.2 | 9 | 26 | 06.8 | -08 | 31 | 40 |
| 1.3 | 10 | 06 | 46.5 | +12 | 06 | 52 |
| 2.2 | 11 | 47 | 31.8 | +14 | 44 | 23 |
| 2.8 | 12 | 14 | 15.6 | -17 | 22 | 32 |
| 1.0 | 12 | 24 | 54.9 | -62 | 55 | 59 |
| 1.2 | 13 | 23 | 36.6 | -11 | 00 | 19 |
| 1.9 | 13 | 46 | 21.6 | +49 | 27 | 45 |



NORMAL/BACKUP

| STA/T STEP | PROCEDURE | | PANEL | REMARKS | | | | | | |
|---|---|---|---|---|---|---|---|---|---|---|
| | | | | | Right Ascension | | | Declination | | |
| NO. | STAR NAME (Numerical) | STAR NAME (Alphabetical) | NO. | Vis Mag | (hr) | (min) | (sec) | (deg) | (min) | (sec) |
| 30 | Menkent | Menkent | 30 | 2.3 | 14 | 04 | 54.6 | -36 | 13 | 23 |
| 31 | Arcturus | Mirfak | 10 | 0.2 | 14 | 14 | 17.5 | +19 | 20 | 16 |
| 32 | Alphecca | Navi | 3 | 2.3 | 15 | 33 | 25.0 | +26 | 48 | 53 |
| 33 | Antares | Nunki | 37 | 1.2 | 16 | 27 | 33.9 | -26 | 22 | 01 |
| 34 | Atria | Peacock | 42 | 1.9 | 16 | 45 | 28.3 | -68 | 58 | 31 |
| 35 | Rasalhague | Polaris | 5 | 2.1 | 17 | 33 | 32.4 | +12 | 34 | 50 |
| 36 | Vega | Procyon | 16 | 0.1 | 18 | 35 | 55.3 | +38 | 45 | 17 |
| 37 | Nunki | Rasalhague | 35 | 2.1 | 18 | 53 | 24.3 | -26 | 20 | 08 |
| 40 | Altair | Regor | 17 | 0.9 | 19 | 49 | 19.1 | +08 | 47 | 16 |
| 41 | Dabih | Regulus | 22 | 3.2 | 20 | 19 | 19.6 | -14 | 49 | 38 |
| 42 | Peacock | Rigel | 12 | 2.1 | 20 | 23 | 17.0 | -56 | 50 | 58 |
| 43 | Deneb | Sirius | 15 | 1.3 | 20 | 40 | 24.4 | +45 | 10 | 21 |
| 44 | Enif | Spica | 26 | 2.5 | 21 | 42 | 42.7 | +09 | 44 | 12 |
| 45 | Fomalhaut | Vega | 36 | 1.3 | 22 | 55 | 59.7 | -29 | 46 | 54 |

STAR LIST

| STA/T STEP | PROCEDURE | PANEL | REMARKS |
|---|---|---|---|
| | 4.6.5 CHECKLIST REFERENCE CODES (V50 N25) | | |
| | R1 Code ACTION FUNCTION | | |
| | 00013 Perform Coarse align or pulse torque | | |
| | 00014 Perform Fine align option | | |
| | 00015 Perform Trgt acq | | Target (celestial body) acquisition - Used in conjunction with N70, N71 and the following celestial body codes:<br>00 - Planet (any planet except Earth)<br>01 to 45 - Star<br>46 - Sun<br>47 - Earth<br>50 - Moon |
| | 00016 Key in Term mrk seq | | |
| | 00041 Sw CM/SM sep to up | | |
| | 00062 Sw CMC pwr down | | |
| | 00202 Perform G&N auto mnvr | | |
| | 00204 Perform Enbl gmbl trim option | | |



NORMAL/BACKUP

| STA/T STEP | PROCEDURE | PANEL | REMARKS |
|---|---|---|---|

4.6.6 OPTION CODES (V04 N06 or V04 N12)

| R1 Code | Purpose | Input for R2 |
|---|---|---|
| 00001 | Specify IMU orientation | 1 = PREF<br>2 = NOM<br>3 = REFSMMAT<br>4 = Ldg site |
| 00002 | Specify veh | 1 = This veh<br>2 = Other veh |
| 00003 | Specify tracking att | 1 = PREF<br>2 = +X axis |
| 00007 | Specify propul sys | 1 = SPS<br>2 = RCS |

Specified option codes will be flashed in R1 in conjunction with V04 N06 or V04 N12. Requests desired option be loaded into R2.

| STA/T STEP | PROCEDURE | PANEL | REMARKS |
|---|---|---|---|
| | 4.6.7 ALARM CODES (V05 N09) | | Alarms for V05 N09<br>(ERR RSET zeros R1 and R2; leaves R3 alone)<br>R1 - first alarm to occur<br>R2 - second alarm to occur<br>R3 - last alarm to occur<br>(There is no indication as to whether 3, or more than 3, alarms have occurred) |
| | Codes starting with 2 signifies POODOO routine: generates software restart (if ave G running, same as BAILOUT; if not, goes to R00). Will not turn on RESTART lt | | The following list shows general numbering logic for alarm codes excluding interfaces and exceptions:<br><br>00100-00200 Optics subsystem<br>00200-00300 IMU subsystem<br>00400-00600 Rendezvous<br>01100-01200 Computer hardware malfunctions<br>01200-01300 List overflows (all aborts)<br>01300-01400 Interpreter errors<br>01400-01500 Display alarms<br>01500-01600 Keyboard and display programs<br>01600-01700 System test alarms<br>01700-01800 DAP display alarms |
| | Codes starting with 3 signifies BAILOUT routine: generates software restart (returns to interrupted program). Does not turn on RESTART lt | | |
| | 00110 Mrk reject has been entered but ignored (continue) | | Either no marks have been received or there have been no marks since last mark reject. |
| | 00112 Mrk reject with no mrks being acptd (continue) | | |
| | 00113 No inbits (chan 16) (continue) | | If alarm recurs, use MDC DSKY. |
| | 00114 More mrks made than desired (continue) | | |
| | 00115 V41 N91 keyed with OPT MODE not in CMC | | Set OPT MODE - CMC and OPT ZERO - OFF. OPR ERR also lights. |
| | 00116 Opt sw altered before 15 sec zero time elapsed | | Set OPT ZERO - ZERO (≈15 sec to zero). |



NORMAL BACKUP

| STA/T STEP | PROCEDURE | PANEL | REMARKS |
|---|---|---|---|
| 00117 | V41 N91 keyed but CMC has reserved OCDU | | V41 N91 not yet available. May occur from start of drive test until end of burn. |
| 00120 | Opt torque has been req but opt have not been zeroed since last FRESH START or RESTART | | Set OPT ZERO - OFF then ZERO (≈15 sec to zero). |
| 00121 | SC att rates of ≥ two-thirds deg per sec will result in auto reject of sighting mrks | | Repeat mark. |
| 00122 | Marking not called for (continue) | | |
| 00205 | PIPA saturated | | Use SCS control. Refer to G&N malfunction procedures, symptom 12. While thrusting navigation (average G) is operating, a PIPA output in excess of 6399 pulses in a 2-second period has been detected. |
| 00206 | IMU zero routine has been entered with both GMBL LOCK lt and NO ATT lt on | | Coarse align to 0, 0, 0. Reselect V40 N20E. IMU mode switching. |
| 00207 | ISS turn-on req not present for 90 sec | | Redo IMU turn on. Refer to G&N malfunction procedures, symptom 12. |
| 00210 | ISS not on | | Redo IMU turn on. If alarm recurs, perform fresh start (V36E). Consult MSFN. Refer to malfunction procedures, symptom 12. Used by IMU zero routine, R02, P51, and P53. |
| 00211 | Coarse align err | | If P51, 53/P52, 54 in progress, record gyro torquing angles and perform fine align check in P52, 54. Otherwise, refer to V41 N20. Refer to G&N malfunction procedures, symptom 12. Following coarse align, an ICDU is found not to be within 2° of its desired value. |



ALARM CODES (V05 N09)

| STA/T STEP | PROCEDURE | PANEL | REMARKS |
|---|---|---|---|
| 00212 | PIPA fail, but PIPA not being used | | PIPA BIAS check. Refer to G&N malfunction procedures, symptom 6, step 7. A PIPA fail signal has been received by CMC but PIPAs are not being used (average G not on); or CMC has just finished with PIPAs and finds a PIPA fail signal. For latter case, ISS warning light is extinguished. |
| 00213 | IMU not operating with turn-on req | | Refer to 00210. CMC has detected an ISS turn-on request but finds ISS operate not present. |
| 00214 | Prog using IMU when turned off | | Refer to 00210 or exit program. IMU not in use (IMUSE flag reset). IMU in use (IMUSE flag set). |
| 00217 | IMU coarse align or pulse torque difficulty has occurred | | Reinitiate current program. If alarm recurs, terminate use of ISS. Refer to G&N malfunction procedures, symptom 12. This alarm is issued in alignment program, P5X, if coarse align or gyro torquing attempted during IMU turn-on, while a cage command is present or while IMU zeroing is taking place. It is also issued if coarse align failure has occurred (code 211) or if CMC detects ISS warning light on at end of a "successful" coarse alignment or gyro torquing process. |
| 00220 | IMU orient unknown | | Align or if aligned, set REFSMMAT flag. |
| 00401 | Desired middle gmbl angle excessive | | Call N22 - maneuver if MGA <85° or realign IMU. Alarm will be generated if MGA >60° is calculated during:<br>a. Realignment in P52/54<br>b. Entry attitude in P62, P66 display, and P64 (if velocity is <27K FPS at .05 G point). |



NORMAL/BACKUP

| STA/T STEP | PROCEDURE | PANEL | REMARKS |
|---|---|---|---|
| 00404 | Trgt out of view (90 deg test) | | P52, P22 and P23. A trunnion angle >90° required to acquire star or landmark. This is a priority alarm and will be displayed by CMC with a flashing V05 N09. |
| 00405 | Acpt star pair not avail | | In P52 and P54, CMC searches for pair of nav stars which are not <30° and not >76° apart. In addition, neither star may be occulted by earth, sun or moon, and each star must be within 38° of optics shaft axis. If no such pair can be found, alarm is displayed automatically by computer with a flashing V05 N09. |
| 00406 | Rndz nav not oper | | Select P20 or continue. V54 or V57 has been entered but rendezvous tracking is not operating. CMC ignores request for marks and reinstates interrupted display, if any. |
| 00421 | W-matrix overflow | | Notify MSFN but continue. W-matrix automatically reinitialized at next mark. |
| 20430 | Orb integration | | Notify MSFN. Probable state vector uplink required. This may happen if CMC attempts to integrate a state vector that intersects earth or moon. A state vector update may be required. |
| 00600 | Imaginary roots on 1st iteration | | P32, P72. |
| 00601 | Post CSI Hp <5.8 NM (85 NM for E.O.) | | P32, P72. |
| 00602 | Post CDH Hp <5.8 NM (85 NM for E.O.) | | P32, P72. |
| 00603 | CDH -CSI <10 min | | P32, P72. |
| 00604 | TPI -CDH <10 min | | P32, P72. |
| 00605 | No. of iterations exceeds loop max | | P32, P72, P37. |

ALARM CODES (V05 N09)

| STA/T STEP | PROCEDURE | PANEL | REMARKS |
|---|---|---|---|
| 00606 | ΔV exceeds max | | P32, P72. |
| 20607 | No solution from time θ or time radius | | Reselect program. Vehicle will be in a hyperbolic orbit, or entry angle too steep. |
| 20610 | Lambda < unity | | Reselect P37 and decrease TIG. Selected GETI yields a radius < entry interface radius. |
| 00611 | No TIG for given ELEV angle | | P33, P34, P73, P74. |
| 00612 | State vctr in wrong sphere of influence | | P37. |
| 00613 | Re-entry angle out of limits | | P37. |
| 00777 | ISS warning caused by PIPA fail | | Refer to G&N malfunction procedures, symptom 6. |
| 01102 | CMC self test err | | Self check. |
| 21103 | Unused CCS branch executed | | Copy N08, notify MSFN. Initiate V36 recovery. CMC has branched to an illogical point in its instruction sequence. |
| 31104 | Delay routine busy | | Reselect extended verb or continue with program. Notify MSFN. An internal routine (DELAYJOB) used by CMC to cause variable time delays, has received requests from more than 4 jobs. |
| 01105 | Downlink too fast | | Rset. If alarm recurs, DOWNLINK FAILURE. Refer to G&N malfunction procedures, symptom 12. |
| 01106 | Uplink too fast | | Rset. If alarm recurs, UPLINK FAILURE. Refer to G&N malfunction procedures, symptom 12. |



NORMAL/BACKUP

| STA/T STEP | PROCEDURE | PANEL | REMARKS |
|---|---|---|---|
| 01107 | Phase table failure - assume erasable memory is destroyed | | Perform: 1. V74 CMC DOWNLINK<br>2. P27 as necessary<br>3. V48 as necessary (V46)<br>4. Re-establish REFSMMAT via P51 as necessary.<br>If FRESH START recurs, CMC FAILURE. Refer to malfunction procedures, symptom SSR-3. During CMC restart, a phase table disagreement was found. CMC will perform an automatic fresh start if this condition exists. |
| 31201 | Exec overflow - no VAC area | | Reselect extended verb and/or continue program. |
| 31202 | Exec overflow - no core sets | | Refer to 31201. |
| 31203 | Waitlist overflow - too many tasks | | Refer to 31201. |
| 21204 | Neg or zero waitlist call | | If average G on, continue. Otherwise reselect program. |
| 21206 | Second job attempts to go to sleep via keyboard and disp prog | | Refer to 21204. |
| 31207 | No VAC area for marks | | Rset. Reselect program. If alarm recurs, consult MSFN. |
| 21210 | Second attempt is made to stall | | Reselect program. Do not attempt use of device while CMC is using it. While performing certain IMU mode switching functions or while performing automatic attitude maneuvers CMC begins a function or maneuver and then "stalls" until appropriate job has been completed. If a second attempt is made to stall for the same reason (i.e., IMU mode switch or attitude maneuver), this alarm is generated. |



ALARM CODES (V05 N09)

| STA/T STEP | PROCEDURE | PANEL | REMARKS |
|---|---|---|---|
| 31211 | Illegal interrupt of extended verb | | Reselect extended verb after optics marking completed. If an internal request for marks (SXTMARK or R57) made, CMC tests to see if mark system already busy or if an extended verb active. If either condition is discovered, alarm is generated. |
| 01301 | Arcsin or arccos input >1 | | Copy N08, notify MSFN, continue. |
| 21302 | SQRT called with neg argument | | Refer to 21103. |
| 01407 | VG incr | | P40. Refer to G&N malfunction procedures, symptom 12. CMC has determined that last measured value of ΔV was in such a direction as to cause VG to increase rather than decrease. As long as this condition exists, value of time to go to cutoff is not recalculated (although R1 of N40 will continue to count down) and an automatic engine-off command will not be sent by CMC. |
| 01426 | IMU unsatisfactory | | Realign or use SCS. Neither +Y stable member axis nor -Y stable member axis within 30° of $\underline{V} \times \underline{R}$ where $\underline{V}$ and $\underline{R}$ are present vehicle velocity and position vectors respectively. The test for this condition performed at beginning of P61 and P62. |
| 01427 | IMU reversed | | Note FDAI operation is inverted. The -Y stable member axis is within 30° of $\underline{V} \times \underline{R}$ (cf. code 1426). |
| 21501 | Keyboard and disp alarm during internal use (NVSUB). | | Refer to 21103. |
| 21502 | Illegal flashing disp | | Refer to 21103. |



NORMAL/BACKUP

| STA/T STEP | PROCEDURE | PANEL | REMARKS |
|---|---|---|---|
| 01520 | V37 req not permitted at this time | | Wait until COMP ACTY light not on continuously, reselect V37 or if P62/P67, select P00 and then desired program. Alarm will be generated if a V37 request made with IMU as follows:<br>a. In its 90-second turn-on period<br>b. Being caged<br>c. Being zeroed.<br>It will also be generated if V37 request is made for a program other than P00 after entry DAP has been started in P62, during P76 and P00 integration, in P06 and during optics zeroing. |
| 21521 | P01 or P07 illegally sel | | Refer to 21204. |
| 01600 | Overflow in drift test | | This is ground test alarm only. |
| 01601 | Bad IMU torque abort | | Refer to 01600. Generated in P01, P02, or P07. |
| 01602 | Bad opt during verif | | Refer to 01600. This alarm cannot be operated by the CMC. |
| 01703 | Insufficient time for integration | | P40, P41. Will occur between TIG -42.5 and TIG -35 seconds. |
| 03777 | ISS warning caused by ICDU fail | | Refer to G&N malfunction procedures, symptom 6. |
| 04777 | ISS warning caused by ICDU and PIPA fail | | Refer to G&N malfunction procedures, symptom 6. |
| 07777 | ISS warning caused by IMU fail | | Refer to G&N malfunction procedures, symptom 6. |
| 10777 | ISS warning caused by IMU and PIPA fail | | Refer to G&N malfunction procedures, symptom 6. |
| 13777 | ISS warning caused by IMU and ICDU fail | | Refer to G&N malfunction procedures, symptom 6. |
| 14777 | ISS warning caused by IMU, ICDU, and PIPA fail | | Refer to G&N malfunction procedures, symptom 6. |

ALARM CODES (V05 N09)

| STA/T STEP | PROCEDURE | PANEL | REMARKS |
|---|---|---|---|
| | 4.6.8 CMC PROGRAM - ROUTINE INDEX | | |
| | 4.6.8.1 Programs | | |

| Phase | Program No. | Program Title | Contains Crew Interface Routines |
|---|---|---|---|
| Pre-Launch & Service | 00 | CMC idling | None |
| | 01 | Prelaunch or service init | None |
| | 02 | Prelaunch or service gyro compassing | None |
| | 03 | Prelaunch or service opt verif of gyro compassing | None |
| | 06 | CMC pwr down | R00 |
| | 07 | Sys test | |
| Boost | 11 | Earth orb insertion mon | None |
| | 15 | CMC TB6 init | R00 |
| Coast | 20 | Rndz nav | R02,R61,R52, R00,R22,R21 |
| | 21 | Grd track determ | R00 |
| | 22 | Orb nav | R02,R53,R52, R00 |
| | 23 | Cislunar midcourse nav | R00,R53,R52 |
| | 24 | Rate aided opt | R00,R53,R52 |
| | 27 | CMC update | None |

Do not select the following program sequences:

a. P3X - P7X - P40/P41
   P3X - P23 - P40/P41
   (P3X computations are overwritten)
   Redo P3X and then P40 or P41

b. P40/P41 - P27 - P52
   (P27 overwrites preferred attitude computations)
   Redo P40/P41 up to V50 N18, then reselect P52

c. P27 - P40/P41 - 52
   Reload preferred REFSMMAT from ground.

| STA/T STEP | PROCEDURE | | PANEL | REMARKS |
|---|---|---|---|---|
| Phase | Program No. | Program Title | Contains Crew Interface Routines | |
| Pre-Thrusting | 30 | External ΔV | R00 | |
| | 32 | Co-elliptic seq init (CSI) | R00 | |
| | 33 | Constant Δalt (CDH) | R00 | |
| | 34 | Trnfr phase init (TPI) | R00,R22,R21 | |
| | 35 | Trnfr phase (midcourse) | R00,R22,R21 | |
| | 37 | Ret to Earth | R00 | |
| Thrusting | 40 | SPS | R02,R60,R00 | |
| | 41 | RCS | R02,R60,R00 | |
| | 47 | Thrust mon | R02,R00 | |
| Align-ment | 51 | IMU orient determ | R53,R54,R00 | |
| | 52 | IMU realign | R02,R50,R00 R52, R53, R54, R55 | |
| | 53 | Back-up IMU orient determ | R56, R54, R00 | |
| | 54 | Back-up IMU realign | R02, R50, R00 R56, R54, R55 | |
| Entry | 61 | Entry prep | R02 | |
| | 62 | CM/SM sep and pre-entry mnvr | R02 | |
| | 63 | Entry init | None | |
| | 64 | Post 0.05 G | None | |

CMC PROGRAM - ROUTINE INDEX

| STA/T STEP | PROCEDURE | PANEL | REMARKS |
|---|---|---|---|

| Phase | Program No. | Program Title | Contains Crew Interface Routines |
|---|---|---|---|
| | 65 | Entry upcontrol | None |
| | 66 | Ballistic entry | None |
| | 67 | Fnl phase | R00 |
| Abort | 72 | LM co-elliptic seq trgtg (CSI) | R00 |
| | 73 | LM constant Δalt trgtg (CDH) | R00 |
| | 74 | LM trnfr phase init (TPI) trgtg | R22,R00,R21 |
| | 75 | LM trnfr phase (midcourse) trgtg | R22,R00,R21 |
| | 76 | Trgt ΔV | R00 |

4.6.8.2 Routines

| Routine | Routine Title | |
|---|---|---|
| 00 | Fnl auto req term | |
| 02 | IMU stat check | |
| 03 | DAP data load | Manually selected by crew (V48E). |
| 05 | S bd ant | Manually selected by crew (V64E). |
| 21 | Rndz tracking sighting mrk | Manually selected by crew (V57E). |
| 22 | Rndz tracking data processing | |
| 23 | Backup rndz tracking sighting mrk | Manually selected by crew (V54E). |
| 30 | Orb param disp | May be called by crew (V82E). |

| STA/T STEP | PROCEDURE | PANEL | REMARKS |
|---|---|---|---|
| Routine | Routine Title | | |
| 31 | Rndz param disp routine No. 1 | | Displays range, range rate, and the angle between CSM +X axis and local horizontal (theta). Selected by crew (V83E). |
| 33 | CMC/LGC clock sync | | V06 N65. |
| 34 | Rndz param disp routine No. 2 | | Displays range, range rate, and angle between optics star line of sight and local horizontal (phi). Selected by crew (V85E). |
| 36 | Rndz out of plane disp | | Selected by V90E. |
| 40 | SPS thrust fail | | |
| 41 | State vctr integration (mid to ave) | | |
| 50 | Coarse align | | |
| 52 | Auto opt positioning | | Automatically selected by P20, P22, P23 or P52. It is self-perpetuating and terminated by R53 for star or landmark sightings. |
| 53 | Sighting mrk | | |
| 54 | Sighting data disp | | |
| 55 | Gyro torquing | | |
| 56 | Alternate LOS sighting mrk | | Used to perform sighting marks for backup alignment programs P53 and P54. |
| 57 | Opt calib | | |
| 60 | Att mnvr | | |
| 61 | Tracking att | | Orients CSM properly with respect to target vehicle during rendezvous tracking. |
| 62 | Crew defined mnvr | | Selected by (V49E) via P00 only. |
| 63 | Rndz fnl att | | Selected by (V89E) via P00 only. |
| 64 | Orbrate/PTC (BBQ mode - R64) | | Selected by (V79E). |

CMC PROGRAM - ROUTINE INDEX

| STA/T STEP | PROCEDURE | PANEL | REMARKS |
|---|---|---|---|

4.6.9 CMC PROGRAM - FLAG LISTING

The flags which are applicable to colossus programs are summarized in this section for information purposes only. Paragraph 4.6.9.1 shows the correlation between flag word numbers and erasable memory addresses while paragraph 4.6.9.2 lists the relationship between flags and programs.

4.6.9.1 Flag Word - Memory Location Correlation

| Flag Word | Memory Address |
|---|---|
| 0 | 00074 |
| 1 | 00075 |
| 2 | 00076 |
| 3 | 00077 |
| 4 | 00100 |
| 5 | 00101 |
| 6 | 00102 |
| 7 | 00103 |
| 8 | 00104 |
| 9 | 00105 |
| 10 | 00106 |
| 11 | 00107 |



NORMAL BACKUP

4.6.9.2 Flag - Program Listing

| No. | Title | Code | Flag Word | Bit | When Set | When Reset |
|---|---|---|---|---|---|---|
| FLAGS | | | | | | |
| 1 | Rndz | RNDVZFLG | 0 | 7 | P20 init | P20 term |
| 2 | Update | UPDATFLG | 1 | 7 | State vctr up-dating by marks allowed | State vctr up-dating by marks not allowed |
| 3 | Track | TRACKFLG | 1 | 5 | Rndz tracking allowed | Rndz tracking not allowed |
| 4 | Pref att | PFRATFLG | 2 | 4 | Preferred SC att computed | Preferred SC att not computed |
| 5 | Steer | STEERSW | 2 | 11 | Steering to be done | Steering omitted |
| 6 | IMU orient | REFSMFLG | 3 | 13 | REFSMMAT good | REFSMMAT not good |
| 7 | IMU | IMUSE | 0 | 8 | IMU in use | IMU not in use |
| 8 | State vctr | VEHUPFLG | 1 | 8 | CSM state vctr updated | LM state vctr updated |
| 9 | Term | TERMIFLG | 7 | 15 | Term R52 and R53 | Do not term |
| 11 | Trgt 1 | TARG1FLG | 1 | 10 | Sighting LM | Not sighting LM |
| 12 | Trgt 2 | TARG2FLG | 1 | 9 | Sighting lmk | Sighting Star |
| 13 | W matrix (rndz | RENDWFLG | 5 | 1 | W matrix for rndz nav valid | W matrix for rndz nav invalid |
| 14 | W matrix (orb nav) | ORBWFLAG | 3 | 6 | W matrix for orb nav valid | W matrix for orb nav invalid |

| No. | Title | Code | Flag Word | Bit | When Set | When Reset |
|---|---|---|---|---|---|---|
| 15 | 3 axis | 3AXISFLG | 5 | 6 | Mnvr specified by 3 axes | Mnvr specified by 1 axis |
| 16 | External ΔV | XDELVFLG | 2 | 8 | External ΔV VG computations | Lambert VG computations |
| 17 | Active veh | AVFLAG | 2 | 5 | LM active | CSM active |
| 18 | Final comp | FINALFLG | 2 | 6 | Fnl pass thru rndz prog comp | Interim pass thru rndz prog comp |
| 19 | Sighting mrk | R53FLAG | 0 | 6 | V51 initiated | V51 not initiated |
| 20 | Stick flag | STIKFLAG | 1 | 14 | RHC out of detent (auto mnvr not enabled) | RHC in detent (auto mnvr enabled) |
| 21 | Surface | SURFFLAG | 8 | 8 | LM on lunar surface | LM not on lunar surface |
| 22 | LM sphere | LMOONFLG | 8 | 11 | Permanent LM state in lunar sphere | Permanent LM state in earth sphere |
| 23 | CM sphere | CMOONFLG | 8 | 12 | Permanent CSM state in lunar sphere | Permanent CSM state in earth sphere |
| NON-FLAGS | | | | | | |
| 1 | Mrk | MARKSTAT | 1344* | 10 | After sighting mark | After mark reject |
| 2 | ISS zero | IMODES30 | 1334* | 9 | IMU opr bit present (set to 0) | IMU opr bit not present (reset to 1) |

*Memory address

| STA/T STEP | PROCEDURE | PANEL | REMARKS |
|---|---|---|---|
| | 4.7 G&C REFERENCE MODES | | |
| | This section provides information about basic G&C functions by defining them in terms of system operating prerequisites and switch positions which together represent reference modes. Their scope is limited to independent system functions. These reference modes are repeatable and are applicable to all G&C procedures and thus are referenced in all subsequent sections of G&C procedures. The modes, however, are NOT intended to be complete or self-contained procedures. | | |
| | Wherever a step in one of these G&C reference modes references another mode, the title and paragraph number of the referenced mode is shown and the recommended options in the mode, if any, are specified. Only those switches which are required to be in unique positions are shown in the affected step after the mode is referenced. | | |
| | During time-critical mission phases, reference to other sections of the handbook cannot be accommodated, and, therefore, all time-critical operations are self-contained. Modes similar to those shown in this section, however, are contained or repeated within the time-critical procedures. | | |
| | For general G&C operating data, refer to operating notes, 4.6.1. | | |
| | 4.7.1 ATTITUDE CONTROL | | |
| | 4.7.1.1 <u>SCS Channel Selection</u> | | Provides methods for enabling RCS auto coils without undesirable jet firings. |
| | 1 Set pwr sw | | |
| CDR | LOGIC 2/3 PWR - on (up) | 7 | Supplies 28 vdc to SC CONT switch, THC CW switch and ATT 1/RATE 2 and RATE 2 positions of BMAG MODE switches. |
| | SIG CONDR/DR BIAS PWR (both) - AC1 or AC2 | | 4.6.1.2, note 5. |



NORMAL BACKUP

| STA/T | STEP | PROCEDURE | PANEL | REMARKS |
|---|---|---|---|---|
| | 2 | Enable auto coils | | |
| | | For CMC cont | | |
| CDR | | SC CONT - CMC | 1 | For post CM/SM separation, AUTO RCS A/C ROLL switches should be OFF, and DAP configured for B/D roll. Also refer to 4.6.1.1, note 7. |
| | | CMC MODE - FREE | | |
| | | MAN ATT (3) - MIN IMP or RATE CMD | | 4.6.1.1, note 8. |
| | | AUTO RCS (16) - MNA or MNB or OFF (correspond to RCS DAP configuration) | 8 | Configure AUTO RCS roll enable to agree with RCS DAP load, to reduce SPS propellant slosh during ΔV thrusting in the event of a failed-on roll jet. |
| | | For SCS cont | | |
| | | a. SC CONT - SCS | 1 | |
| | | or SC CONT - CMC<br>THC - CW | | |
| | | b. BMAG MODE (3) - RATE 2 | | BMAG MODE or MAN ATT switching cages BMAGs and prevents attitude error signals from causing jet firings. |
| | | or MAN ATT (3) - MIN IMP or ACCEL CMD | | |
| | | c. AUTO RCS (16) - MNA or MNB | 8 | For SCS control, switches should be set by quad and rotation axis, as desired. Only one roll quad should be enabled for SCS control to optimize RCS propellant consumption. One exception is 3-axis translation when all quads are required. |
| | 4.7.1.2 | SCS Minimum Impulse | | |
| | 1 | Set pwr sw<br>ELEC PWR - GDC/ECA or ECA | 7 | Either position required for minimum impulse generator. |

| STA/T | STEP | PROCEDURE | PANEL | REMARKS |
|---|---|---|---|---|
| CDR | | LOGIC 2/3 PWR - on (up) | 7 | Supplies 28 vdc to SC CONT switch, and THC CW switch. 4.6.1.2, note 5. |
| | | SIG CONDR/DR BIAS PWR (both) - AC1 or AC2 | | |
| | | RHC PWR NORM (both) - AC/DC | 1 | |
| | 2 | Sel min imp cont | | |
| | | MAN ATT - MIN IMP | | Switches should be set by axis as desired. |
| | | SC CONT - SCS | | |
| | or | SC CONT - CMC | | |
| | | THC - CW | | |
| | 3 | Enable auto coils, 4.7.1.1 | | |
| | 4.7.1.3 | SCS Acceleration Command | | |
| | 1 | Set pwr sw | | |
| | | LOGIC 2/3 PWR - on (up) | 7 | Supplies 28 vdc to SC CONT switch. 4.6.1.2, note 5. |
| | | SIG CONDR/DR BIAS PWR (both) - AC1 or AC2 | | |
| | | RHC PWR NORM (both) - AC/DC | 1 | |
| | 2 | Sel accel cmd cont | | |
| | | MAN ATT - ACCEL CMD | | Switches should be set by axis as desired. |
| | 3 | Enable auto coils, 4.7.1.1 | | Either CMC or SCS control permissible. |
| | 4.7.1.4 | SCS Attitude Hold/Rate Command | | |
| | 1 | Set pwr sw | | |
| | | LOGIC 2/3 PWR - on (up) | 7 | Supplies 28 vdc to SC CONT switch. |
| | | ELEC PWR - GDC/ECA or ECA | | |



NORMAL/BACKUP

| STA/T STEP | PROCEDURE | PANEL | REMARKS |
|---|---|---|---|
| CDR | SIG CONDR/DR BIAS PWR 1 - AC1 or AC2 | 7 | Provides SCS signal conditioner power for RHC proportional rate command TLM. Also refer to 4.6.1.2, note 5. |
| | BMAG PWR (both) - ON | | If rate damping only is desired, BMAG 1 need not be turned ON but should be set to WARMUP. |
| | RHC PWR NORM (1, 2 or BOTH) - AC/DC | 1 | If manual override of attitude hold desired. |
| 2 | Enable auto coils, 4.7.1.1 | | 4.6.1.1, note 7. |
| 3 | Establish att hold<br>MAN ATT - RATE CMD<br>SC CONT - SCS | | Switches may be set by axis as desired. Also refer to 4.6.1.2, note 6. |
| or | SC CONT - CMC<br>THC - CW | | |
| | BMAG MODE - ATT 1/RATE 2 | | |
| 4.7.1.5 | <u>CMC Minimum Impulse</u> | | |
| 1 | The following are req<br>CMC - on, 4.8.1.3<br>RCS DAP - load & activate, 4.8.2.1 | | CMC, ISS, and RCS DAP enable autopilot control. Minimum impulse controller (MIC), located on panel 122 in LEB, and RHC provides minimum impulse command capability in this mode. RHC will provide normal acceleration commands providing MAN ATT switches at ACCEL CMD. |
| | ISS - on (desired), 4.8.1.3 | | For display of ISS total attitude and errors. |

| STA/T | STEP | PROCEDURE | PANEL | REMARKS |
|---|---|---|---|---|
| | 2 | Set pwr sw | | |
| CDR | | LOGIC 2/3 PWR - on (up) | 7 | Supplies 28 vdc to SC CONT switch. |
| | | SIG CONDR/DR BIAS PWR (both) - AC1 or AC2 | | 4.6.1.2, note 5. |
| | | RHC PWR NORM (both) - AC/DC | 1 | |
| | 3 | Establish CMC Cont | | |
| | | SC CONT - CMC | | |
| | | CMC MODE - FREE | | |
| | | MAN ATT (3) - MIN IMP | | ACCEL CMD position cannot be used because it inhibits CMC outputs to jets. |
| | | or MAN ATT (3) - RATE CMD | | |
| | | BMAG MODE (3) - RATE 2 | | |
| | 4 | Enable Auto Coils, 4.7.1.1 | | |
| | 4.7.1.6 | CMC Attitude Control - Auto/Hold | | |
| | 1 | The following are req | | CMC, ISS, and RCS DAP enable autopilot control. |
| | | CMC - on, 4.8.1.3 | | |
| | | ISS - on, 4.8.1.3 | | |
| | | RCS DAP - load & activate, 4.8.2.1 | | |
| | 2 | Set pwr sw | | |
| | | LOGIC 2/3 PWR - on (up) | 7 | Supplies 28 vdc to SC CONT switch. |
| | | SIG CONDR/DR BIAS PWR (both) - AC1 or AC2 | | 4.6.1.2, note 5. |
| | 3 | Enable auto coils, 4.7.1.1 | | |
| | 4 | Establish att cont | | |
| | | MAN ATT (3) - RATE CMD or MIN IMP | 1 | |



NORMAL/BACKUP

| STA/T | STEP | PROCEDURE | PANEL | REMARKS |
|---|---|---|---|---|
| CDR | | SC CONT - CMC | 1 | |
| | | CMC MODE - HOLD or AUTO | | AUTO position must be selected when CMC automatic maneuver desired. |
| | | 4.7.1.7 SIVB Attitude Control | | Describes condition required to enable RHC rate control of SIVB. |
| | 1 | The following are req | | |
| | | CMC - on, 4.8.1.3 | | |
| | | LOGIC 2/3 PWR - on (up) | 7 | Supplies power for caging BMAGs via BMAG MODE switches. |
| | | ISS - on (desired), 4.8.1.3 | | For display of ISS total attitude and errors. |
| | 2 | Enable att cont | | |
| CMP | | Saturn DAP activated, 4.8.2.1 | 2,140 | Load 3 in configuration option of DAP activation procedure. Also refer to 4.6.1.1, note 7. AUTO RCS switches should be off to prevent SM jet firing. |
| | | LV GUID sw - CMC | 2 | |

| STA/T | STEP | PROCEDURE | PANEL | REMARKS |
|---|---|---|---|---|
| | | 4.7.2 ATTITUDE DISPLAYS | | |
| | | 4.7.2.1 Rate Display | | Provides methods for displaying rate information on rate needles of FDAI 1 or FDAI 2, or both, as desired. |
| CDR | 1 | Set pwr sw<br>FDAI/GPI PWR - 1, 2 or BOTH | 7 | Provides power for display electronics. Position chosen depends on which FDAI(s) desired. |
| | | LOGIC 2/3 PWR - on (up) | | 4.6.1.1, note 6. |
| | | BMAG 2 PWR - ON<br>(req if BMAG 2 desired)<br>BMAG 1 PWR - ON<br>(req if BMAG 1 desired) | | Either BMAG 1 or BMAG 2 may be selected to provide information. BMAG 2 is normally used and BMAG 1 provides backup capability. |
| | 2 | Sel desired rate source<br>BMAG MODE - RATE 2 or ATT 1/RATE 2 | 1 | Switches should be set by axis as desired.<br>Selects BMAG 2. |
| | or | BMAG MODE - RATE 1 | | Selects BMAG 1. |
| | 3 | Sel disp configuration<br>FDAI SEL - 1 | | Displays rate from BMAG 1 or 2 on FDAI 1 only. |
| | or | FDAI SEL - 2 | | Displays rate from BMAG 1 or 2 on FDAI 2 only. |
| | or | FDAI SEL - 1/2 | | Displays rate from BMAG 1 or 2 on both FDAIs. |
| | | 4.7.2.2 Attitude Error Display - BMAG Source | | Provides methods for displaying BMAG 1 attitude error information on attitude error needles of FDAI 1 or FDAI 2. Needles display attitude excursion from point at which BMAGs are uncaged up to a maximum of 17°. |



NORMAL BACKUP

| STA/T | STEP | PROCEDURE | PANEL | REMARKS |
|---|---|---|---|---|
| | 1 | Set pwr sw | | |
| CDR | | FDAI/GPI PWR - 1, 2 or BOTH | 7 | Provides power for display electronics. Position chosen depends on which FDAI(s) desired. |
| | | LOGIC 2/3 PWR - on (up) | | Supplies power for caging BMAGs via BMAG MODE switches. |
| | | BMAG 1 PWR - ON | | Powers BMAGs in gyro assembly 1, the only BMAGs capable of providing attitude error information. |
| | 2 | Provide att err info | | |
| | | MAN ATT - RATE CMD | 1 | Switches should be set by axis as desired. RATE CMD position required to uncage BMAG 1. However, RHC breakout and MAN ATT switches overridden by IGN 2 logic signal during thrusting to uncage BMAGs. |
| | | BMAG MODE - ATT 1/RATE 2 | | |
| | | RHC - neut | | If RHC breakout switches activated, BMAGs caged (by axis) and attitude hold lost. |
| | 3 | Sel disp configuration | | |
| | | a. FDAI SEL - 1/2 | | Displays attitude error from BMAG 1 on FDAI 2. |
| | or | b. FDAI SEL - 1 or 2 | | Displays attitude error from BMAG 1 on FDAI 1 or 2. This position required when only one FDAI selected. |
| | | FDAI SOURCE - GDC | | |
| | | 4.7.2.3 Attitude Error Display - CMC Source | | Provides G&N computed attitude error in control axes. Information meaningful only when computer program defines desired attitude. |
| | 1 | The following are req | | |
| | | CMC - on, 4.8.1.3 | | Required to compute error and mode CDUs. |
| | | ISS - on, 4.8.1.3 | | Required for attitude information. |
| | 2 | Set pwr sw | | |
| | | FDAI/GPI PWR - 1, 2 or BOTH | 7 | Provides power for display electronics. Position chosen depends on which FDAI(s) desired. |

| STA/T | STEP | PROCEDURE | PANEL | REMARKS |
|---|---|---|---|---|
| CDR | | LOGIC 2/3 PWR - on (up) | 7 | Provides power for FDAI switches. |
| | 3 | Select disp scaling<br>FDAI SCALE - 5/5 or 5/1 | 1 | Positions provide for compatible scaling between CMC and display electronics in roll axis during orbital flight. If 50/15, 50/10 position is chosen, roll scaling is 12.5° full scale. |
| | 4 | Sel disp configuration | | |
| | | a. FDAI SEL - 1/2 | | Displays attitude error from CDUs on FDAI 1. |
| or | | b. FDAI SEL - 1 or 2<br>FDAI SOURCE - CMC | | Displays attitude error from CDUs on FDAI 1 or 2. This position required when only one FDAI selected. |
| | 4.7.2.4 | Attitude Error Display - Attitude Set Source | | Provides methods for displaying attitude difference between attitude set indicators and GDC (body error) or IMU gimbal angles (Euler error). Polarity reversal occurs when ATT SET - IMU option selected and roll gimbal angle >±90°. Pitch and yaw attitude error needles become "fly from" indicators rather than "fly to" indicators in this instance. |
| | 1 | Set pwr sw & disp logic<br>FDAI/GPI PWR - 1, 2 or BOTH | 7 | Provides power for display electronics. Position depends on which FDAI desired. |
| | | LOGIC 2/3 PWR - on (up)<br>FDAI SEL - 1 or 2<br>FDAI SOURCE - ATT SET | 1 | Display not available at 1/2 position. Required to enable attitude set input to FDAI. |
| | 2 | Sel att ref | | |
| | | a. SCS<br>ELEC PWR - GDC/ECA<br>BMAG 2 PWR - ON | 7 | Provides power to GDC electronics. |



NORMAL/BACKUP

| STA/T STEP | PROCEDURE | PANEL | REMARKS |
|---|---|---|---|
| CDR | ATT SET - GDC<br>BMAG MODE - RATE 2 or ATT 1/RATE 2 | 1 | Switches should be set by axis as desired. |
| | b. ISS<br>ISS - on, 4.8.1.3<br>ATT SET - IMU | | 4.6.1.1, note 5. |
| | 4.7.2.5 Total Attitude | | Provides methods for displaying Euler angles on FDAI ball from GDC or IMU. |
| | 1 Set pwr sw & enable FDAI<br>FDAI/GPI PWR - 1, 2 or BOTH | 7 | Provides power for display electronics. Position depends on which FDAI(s) desired. |
| | LOGIC 2/3 PWR - on (up) | | Supplies power for FDAI, BMAG MODE switches and ATT SET switch (IMU position). |
| | 2 Sel disp & disp source | | |
| | a. ISS disp<br>ISS - on, 4.8.1.3<br>FDAI 1 disp | | Enables IMU resolver outputs to FDAI 1 ball drive. There are three possible switch combinations. |
| | FDAI SEL - 1/2 | 1 | This position also enables GDC total attitude to FDAI No. 2. |
| | or FDAI SEL - 1<br>FDAI SOURCE - CMC | | |
| | or FDAI SOURCE - ATT SET<br>ATT SET - IMU | | 4.6.1.1, note 5. |
| | FDAI 2 disp<br>FDAI SEL - 2<br>FDAI SOURCE - CMC | | Enables IMU resolver outputs to FDAI 2 ball drive. There are two possible switch combinations. |

| STA/T STEP | PROCEDURE | PANEL | REMARKS |
|---|---|---|---|
| CDR | or FDAI SOURCE - ATT SET<br>ATT SET - IMU | 1 | 4.6.1.1, note 5. |
| | b. GDC disp | | |
| | ELEC PWR - GDC/ECA | 7 | Provides power to GDC electronics. |
| | BMAG 2 PWR - ON | | |
| | BMAG MODE - RATE 2 or ATT 1/RATE 2 | 1 | Switches should be set by axis as desired. |
| | xxxxxxxxxxxxxxxxxxxxxxxxxxxxxxxxxxxxx | | |
| | BMAG 1 PWR - ON (if BMAG 2 fails) | 7 | |
| | BMAG MODE - RATE 1 | 1 | |
| | xxxxxxxxxxxxxxxxxxxxxxxxxxxxxxxxxxxxx | | |
| | FDAI 2 disp<br>FDAI SEL - 1/2 | | Enables GDC resolver outputs to FDAI 2 ball drive. There are three possible switch combinations. |
| | or FDAI SEL - 2<br>FDAI SOURCE - GDC | | |
| | or FDAI SOURCE - ATT SET<br>ATT SET - GDC | | |
| | FDAI 1 disp<br>FDAI SEL - 1<br>FDAI SOURCE - GDC | | Enables GDC resolver outputs to FDAI 1 ball drive. There are two possible switch combinations. |
| | or FDAI SOURCE - ATT SET<br>ATT SET - GDC | | |



NORMAL/BACKUP

| STA/T STEP | PROCEDURE | PANEL | REMARKS |
|---|---|---|---|
| | 4.7.2.6 ORDEAL - Local Horizontal Attitude | | Provides methods for displaying local horizontal reference established by ORDEAL on FDAI 1 and/or FDAI 2 balls. Only pitch axis is affected. |
| | 1 Set pwr sw | | |
| | FDAI/GPI PWR - 1, 2 or BOTH | 7 | Provides power for display electronics. Position chosen depends on which FDAI(s) desired. |
| | EARTH/LUNAR - EARTH or LUNAR | 13 | |
| | LTG - BRT or DIM | | |
| | 2 Sel disp configuration | | Reference system may be GDC or IMU, 4.7.2.5. |
| | FDAI 1 disp | | |
| | FDAI SEL - 1 or 1/2 | 1 | |
| | FDAI 1 sw - ORB RATE | 13 | |
| | FDAI 2 disp | | |
| | FDAI SEL - 2 or 1/2 | 1 | |
| | FDAI 2 sw - ORB RATE | 13 | |
| | FDAI 1 & 2 disp | | |
| | FDAI SEL - 1/2 | 1 | |
| | FDAI sw (both) - ORB RATE | 13 | |
| | 4.7.3 GDC ALIGN | | Aligns GDC to ATT SET thumbwheels. |
| | ELEC PWR - GDC/ECA | 7 | Supplies power to GDC electronics. |
| | ATT SET - GDC | 1 | Enables att set inputs to GDC. |
| | Verify tw settings | | |
| | GDC ALIGN pb - push | | Enables attitude set inputs to GDC and disables BMAG inputs. |

| STA/T STEP | PROCEDURE | PANEL | REMARKS |
|---|---|---|---|
| | 4.7.4 SPS THRUST CONTROL | | |
| | 4.7.4.1 TVC Initialization | | Defines safe switch configuration required before initiation of thrusting procedures. |
| CDR | LOGIC 2/3 PWR - on (up) | 7 | Provides power to SCS TVC switches. Required for RCS jet on-off and MTVC TLM. |
| | SIG CONDR/DR BIAS PWR (both) - AC1 or AC2 | | |
| | SPS THRUST - NORM | 1 | |
| | SCS TVC (2) - RATE CMD (if burn is G&N or MTVC) | | |
| | or SCS TVC (2) - AUTO (SCS burn) | | |
| | TVC GMBL DR (2) - AUTO | | The 1 or 2 positions may be used as backup if required. |
| | ΔV CG - LM/CSM or CSM | | Required only for SCS/SPS auto thrusting. Position depends on whether LM attached or not. |
| | FDAI/GPI PWR - 1, 2 or BOTH | 7 | Position chosen depends on whether redundant GPI displays desired. To enable redundant GPI indicators, FDAI/GPI PWR switch must be set to BOTH. |
| | LV IND/GPI sw - GPI | 1 | |
| | 4.7.4.2 SPS Gimbal Control | | |
| 1 | CMC Cont | | |
| | ISS - on (req), 4.8.1.3 | | Provides attitude information and power to ECDUs. |
| | CMC - on (req), 4.8.1.3 | | |
| | Servo loop activated (step 4) | | |
| | Gmbl mot on | | Operating time limited depending on operating conditions. MN BUS TIE (2) must be on before gimbal motors started. |
| | SC CONT - CMC | | |



NORMAL/BACKUP

| STA/T | STEP | PROCEDURE | PANEL | REMARKS |
|---|---|---|---|---|
| CDR | | LOGIC 2/3 PWR - on (up)<br>THC - neutral | 7 | Supplies power to SC CONT switch. |
| | 2 | SCS Cont - AUTO<br>Servo loop activated (step 4)<br>Gmbl mot on | 1 | Operating time limited depending on operating conditions. MN BUS TIE (2) must be on before gimbal motors are started. |
| | | LOGIC 2/3 PWR - on (up) | 7 | Supplies power to SC CONT, BMAG MODE, SCS TVC, .05 G switch (OFF position) and THC CW switches. |
| | | ELEC PWR - ECA or GDC/ECA<br>BMAG PWR (both) - ON | | Supplies power to the control electronics.<br>Rate and attitude sensors required. |
| | | BMAG MODE - ATT 1/RATE 2 | 1 | BMAGs in gyro assembly 1 will uncage if MAN ATT switches are at RATE CMD. If not, uncaging will occur when IGN 2 logic signal is present. |
| | | SCS TVC (2) - AUTO<br>IGN 2 logic sig present | | Provided by thrust control logic at engine on until 1 second after engine off. |
| | | SC CONT - SCS<br>THC - neut | | |
| | or | SC CONT - CMC<br>THC - CW | | |
| | 3 | MTVC cont - RATE CMD/ACCEL CMD | | Stick integrator is enabled when IGN 2 logic signal is present. IGN 2 logic signal present at SPS on until 1 second after SPS - off, is provided by thrust control electronics. |

| STA/T STEP | PROCEDURE | PANEL | REMARKS |
|---|---|---|---|
| CDR | Servo loop activated (step 4)<br>Gmbl mot on | | Operating time limited depending on operating conditions. MN BUS TIE (2) must be on before gimbal motors started. |
| | LOGIC 2/3 PWR - on (up) | 7 | Provides power for SC CONT, BMAG MODE, SCS TVC and THC - CW switches. |
| | SIG CONDR/DR BIAS PWR (both) - AC1<br>or AC2<br>ELEC PWR - ECA or GDC/ECA<br>BMAG 2 PWR - ON (for RATE CMD)<br>BMAG MODE (3) - ATT 1/RATE 2 or RATE 2<br>RHC PWR NORM (both) - AC/DC | 1 | Required for RCS jet on-off and MTVC TLM.<br>Supplies power to RHCs and control electronics.<br>Rate information required for RATE CMD MTVC. |
| | Rate Cmd | | |
| | a. SCS TVC (2) - AUTO<br>SC CONT - SCS<br>THC - CW | | |
| or | b. SCS TVC (2) - RATE CMD<br>SC CONT - SCS | | |
| | or SC CONT - CMC<br>THC - CW | | |
| | Accel Cmd | | |
| | a. SCS TVC (2) - ACCEL CMD<br>SC CONT - SCS | | |
| | or SC CONT - CMC<br>THC - CW | | |



NORMAL/BACKUP

| STA/T STEP | PROCEDURE | PANEL | REMARKS |
|---|---|---|---|
| | 4 Servo Loop Activation | | |
| | a. Servo loop No. 1 | | |
| CDR | TVC SERVO PWR 1 - AC1/MNA | 7 | Provides power to clutches and servo drive electronics. Alternate position of this switch (AC2/MNB) should be used only in the event of an AC1 bus failure to provide additional redundancy. AC1/MNA position should be used in all other cases to be compatible with d-c power source for gimbal motors (DC MNA bus power). |
| | TVC GMBL DR (2) - 1 | 1 | |
| | or TVC GMBL DR (2) - AUTO<br>THC - neut<br>GMBL MOT 1 - operating | | No. 1 gimbal motor must be on with no overcurrent failure sensed. |
| | or TVC SERVO PWR 2 - OFF | 7 | |
| | b. Servo loop No. 2<br>TVC SERVO PWR 2 - AC2/MNB | | Alternate position of this switch (AC1/MNA) should be used only in the event of an AC2 bus failure to provide additional redundancy. AC2/MNB position should be used in all other cases to be compatible with d-c power source for gimbal motors (DC MNB bus power). |
| | TVC GMBL DR (2) - 2 | 1 | |
| | or TVC GMBL DR (2) - AUTO<br>LOGIC 2/3 PWR - on (up)<br>THC - CW | 7 | Provides power to THC - CW switch. |
| | or TVC GMBL DR (2) - AUTO<br>GMBL MOT 1 - not operating | 1 | If No. 1 gimbal motor is off or an overcurrent sensed, control transferred to No. 2 servo loop. |

| STA/T STEP | PROCEDURE | PANEL | REMARKS |
|---|---|---|---|
| | 4.7.4.3 Thrust On-Off Control | | |
| | 1 CMC Cont | | |
| | ISS - on (req), 4.8.1.3 | | |
| | CMC - on (req), 4.8.1.3 | | |
| | SPS Gmbl Cont (desired), 4.7.4.2 | | |
| | SC CONT - CMC | | To satisfy CMC control, THC must not be CW. |
| | LOGIC 2/3 PWR - on (up) | 7 | Supplies 28 vdc to SC CONT switch. |
| | SPS THRUST - NORM | 1 | DIR ON will override CMC thrust-on control. |
| | ΔV THRUST A(B) - NORM | | Guarded. |
| | Thrust on | | |
| | CMC eng on cmd (P40) | | |
| | Thrust off | | |
| | CMC eng off cmd (P40) | | |
| | or ΔV THRUST A &/or B - OFF | | Guarded. |
| | 2 SCS Cont | | |
| | SPS Gmbl Cont (desired), 4.7.4.2 | | |
| | SC CONT - SCS | | |
| | or SC CONT - CMC | | This option may establish SCS MTVC mode depending on position of SCS TVC switches. |
| | THC - CW | | |
| | LOGIC 2/3 PWR - on (up) | 7 | Supplies 28 vdc to SC CONT switch. |
| | SPS THRUST - NORM | 1 | DIR ON will override SPS thrust control. |
| | ΔV THRUST A(B) - NORM | | Guarded. |
| | Thrust on | | |
| | ΔV ind - not zero | | Required only if EMS FUNC in ΔV or ΔV TEST. |
| | THC - +X | | |



NORMAL/BACKUP

| STA/T | STEP | PROCEDURE | PANEL | REMARKS |
|---|---|---|---|---|
| CDR | | or DIR ULL pb - push | 1 | |
| | | THRUST ON pb - push | | |
| | | Thrust off | | |
| | | EMS FUNC - ΔV | | |
| | | ΔV ind - zero | | |
| | | or ΔV THRUST A &/or B - OFF | | Guarded. |
| | 3 | Dir Cont | | |
| | | SPS Gmbl Cont (desired), 4.7.4.2 | | |
| | | Thrust on | | |
| | | ΔV THRUST A &/or B - NORM | | Guarded. |
| | | SPS THRUST - DIR ON | | Lever lock. |
| | | Thrust off | | |
| | | ΔV THRUST A &/or B - OFF | | Guarded. |



SPS THRUST CONTROL

| STA/T STEP | PROCEDURE | PANEL | REMARKS |
|---|---|---|---|
| | 4.7.5 OPTICS CONTROL | | |
| | 4.7.5.1 Auto Optics Positioning | | This procedure permits CMC control of optics. |
| | 1 The following are req<br>ISS - on, & orient known, 4.8.1.3 & 4.14<br>CMC - on, 4.8.1.3<br>Opt - on, 4.8.1.4 | | |
| | 2 Establish CMC cont | | |
| CMP | OPT ZERO - OFF | 122 | |
| | OPT TELTRUN - SLAVE TO SXT | | Required for SCT trunnion drive. |
| | OPT MODE - CMC | | |
| | 4.7.5.2 Manual Optics Control | | Permits manual control of optics using optics hand control (OHC). |
| | 1 Opt - on, 4.8.1.4 | | |
| | 2 Establish man cont & sighting options | | |
| | OPT ZERO - OFF | | |
| | OPT COUPLING - DIR or RSLV | | Permits desired image motion in FOV. In DIRECT mode, OHC left, right motion drives optics shaft, while up, down motion drives trunnion. RSLV mode provides motion resolved into SC body coordinates. Motion appears to be target motion corresponding to direction of OHC movement. |
| | OPT MODE - MAN | | |
| | OPT TELTRUN - SLAVE TO SXT | | Required for proper landmark tracking. |
| | or 0° | | Provides zeroing of SCT trunnion axis. |
| | or 25° | | Provides greater scanning capability for star sightings. |
| | OPT SPEED - HI, MED or LO | | Set as desired. |



NORMAL BACKUP

| STA/T | STEP | PROCEDURE | PANEL | REMARKS |
|---|---|---|---|---|
| | | 4.7.5.3 Manual Optics Drive | | Permits manual optics operation (no power) using optics tool. |
| | 1 | The following are req | | |
| LMP | | G/N PWR - AC1 or AC2 | 5 | Supplies power for condition lamps and reticle. |
| CMP | | G/N OPT PWR - OFF | 100 | |
| | 2 | Obtain opt tool from tool kit | | |
| | 3 | Perform man opt drive | | |
| | | RETCL BRT tw - as req | 122 | |
| | | SHAFT - as desired | 121 | |
| | | TRUN - as desired | | |

| STA/T | STEP | PROCEDURE | PANEL | REMARKS |
|---|---|---|---|---|
| | | 4.7.6 ENTRY MONITOR SYSTEM (EMS) | | |
| | | 4.7.6.1 ΔV Test & Null Bias Check | | |
| CDR | 1 | Init EMS prep<br>EMS FUNC - OFF (verify)<br>cb EMS (2) - close<br>EMS MODE - STBY | <br>1<br>8<br>1 | |
| | 2 | EMS FUNC - ΔV SET<br>Adj alphanumeric brightness (option)<br>EMS MODE - NORM<br>Set ΔV ind to +1586.8 fps | | Enables slewing of ΔV indicator.<br>4.6.1.1, note 9. |
| | 3 | EMS FUNC - ΔV TEST<br>SPS THRUST lt - on<br>ΔV ind decr (10 sec)<br>SPS THRUST lt - out ≈-0.1 fps on ΔV ind<br>ΔV ind stops at -20.8±20.7 fps | | ΔV TEST checks ΔV circuitry. |
| | 4 | EMS MODE - STBY | | |
| | 5 | EMS FUNC - ΔV SET<br>Slew ΔV ind to -100.0 fps | | The ΔV indicator zeroed to start accelerometer null bias check. |
| | 6 | EMS FUNC - ΔV (wait 5 sec) | | |
| T=0 | 7 | EMS MODE - NORM | | |



NORMAL BACKUP

| STA/T | STEP | PROCEDURE | PANEL | REMARKS |
|---|---|---|---|---|
| CDR<br>T=100<br>sec | 8 | EMS MODE - STBY | 1 | |
| | | Rcd ΔV ind | | |
| | | If ΔV drift ≤1 fps, do not bias counter | | Acceleration ≤0.01 fps2. |
| | | If ΔV drift >1 fps but <10 fps bias if desired | | Acceleration ≥0.01 fps2 but <0.1 fps2. Counter bias not required for SPS ΔV. |
| | | If ΔV drift >10 fps, EMS is no-go for all functions | | Acceleration >0.1 fps2. |
| | | CAUTION<br>Do not turn EMS FUNC - OFF prior to ΔV, or null bias will be invalid. | | |
| | | 4.7.6.2 ΔV Setup | | Specifies required steps necessary to initialize EMS for monitoring ΔVs and to generate SPS engine cutoff signal for SCS controlled SPS ΔVs. |
| | | ΔV TEST & NULL BIAS CHECK (desired), 4.7.6.1 | | |
| | | cb EMS (2) - close | 8 | |
| | 1 | EMS MODE - STBY<br>EMS FUNC - ΔV SET | 1 | |
| | 2 | Set ΔV ind - req ΔV | | |
| | 3 | EMS FUNC - ΔV | | 4.6.1.1, note 9. |

| STA/T STEP | PROCEDURE | PANEL | REMARKS |
|---|---|---|---|

## 4.8 G&C GENERAL PROCEDURES

The procedures in this section involve both the G&N and SCS and are used most frequently during the orbital phase. Because they are fundamental to G&C operation, they are included or referenced in various forms in the more complex G&C procedures contained in sections 4.9 and 4.11 through 4.18.

Applicable G&C Reference Modes, 4.7, have been referenced throughout these procedures.

For general G&C operating data, refer to operating notes, 4.6.1.



NORMAL/BACKUP

| STA/T STEP | PROCEDURE | PANEL | REMARKS |
|---|---|---|---|
| | 4.8.1 G&N GENERAL | | |
| | 4.8.1.1 (P00) CMC Idling Program | | Indicates that CMC in operate condition but not performing control or computation operations requiring coordination with other crew tasks.<br><br>Maintains CMC in readiness for entry into most programs. CSM and LM state vectors and W-matrices (orbital and rendezvous) are updated. (Refer to 5.6.12 of R-577, section 5.) |
| CMP | Key V37E 00E<br>DSKY - P00 | 2,140 | |
| | 4.8.1.2 CMC/IMU Power Down | | |
| | (P06) CMC Power Down | | Transfers CMC from operate to standby. V69E may be used to recover from an inadvertent entrance into P06. Otherwise, when P06 selected, CMC must be powered down to standby. |
| | Perform DAP Activation, 4.8.2.1<br>Load 0 (no DAP) in left digit of R1 | | Prevents inadvertent jet firing during power up. |
| 1 | Key V37E 06E<br>DSKY - P06 | | |
| 2 | FL V50 N25<br>00062 (CMC pwr down)<br><br>PRO (push till STBY lt - on)<br>**CMC blanks DSKY dis** | | |

| STA/T | STEP | PROCEDURE | PANEL | REMARKS |
|---|---|---|---|---|
| | | IMU Power Down | | Transfers IMU from operate to standby. |
| CDR | 1 | CMC MODE - FREE | 1 | |
| CMP | 2 | G/N IMU PWR - OFF | 100 | Guarded. Loss of IRIG wheel power will send IMU FAIL discrete to CMC. |
| | 3 | If CMC operating<br>Key V37E XXE | 2,140 | Select program not requiring IMU. |
| | | CAUTION<br>Only in case of emer shall IMU be powered down beyond stby: | | If standby power removed for >20 minutes, ISS calibration no longer valid. |
| LMP | | cb IMU HTR (2) - open | 5 | |
| | 4.8.1.3 | Startup | | Transfers ISS/CMC from standby to operate condition. Startup procedure will be first procedure selected after returning from standby, since time 2/time 1 is invalid until this is done. |
| | | CMC Startup | | |
| CMP | | PRO - (push until STBY lt out)<br>Poss CMC warning lt (20 sec max)<br>Poss RESTART lt - on<br>Poss PROG alarm<br>RSET<br>DSKY - P06<br>FL V37<br>Key 00E | 2,140 | When PRO released, CMC may revert to STBY mode. Repeat PRO until STBY light out.<br>These alarms should be ignored if they can be reset. |



NORMAL BACKUP

| STA/T STEP | PROCEDURE | PANEL | REMARKS |
|---|---|---|---|
| | **If state vctr update** | | |
| CMP | Key V96E | 2,140 | V96E suspends state vector integration. |
| | Perform CSM - (P27) CMC Update, 4.8.1.5 | | |
| | Key V37E 00E | | Re-enables P00 integration suspended by V96E. |
| | Key V37E XXE | | |
| | ISS Startup | | |
| | If CMC on | | |
| | G/N IMU PWR - on (up) | 100 | Guarded. |
| | NO ATT lt - on (90 sec) | 2,140 | |
| | NO ATT lt - out (wait 15 sec) | | |
| | Key V37E XXE | | Select IMU alignment program desired. |
| | If CMC not on | | |
| | G/N IMU PWR - on (up) | 100 | Guarded. IMU drives to 0,0,0. |
| | Wait 90 sec | | |
| CDR | IMU CAGE - on (up) ≈5 sec then off (down) | 1 | Guarded. Releases IMU. |
| | 4.8.1.4 Optics Power Control | | |
| | 1 Opt pwr up | | |
| CMP | G/N PWR - AC1 or AC2 | 5 | Provides power to reticle and condition lights in LEB. |
| | G/N OPT PWR - on (up) | 100 | |
| | OPT ZERO - OFF | 122 | OPT ZERO switch should be left at ZERO until optics use required. It is not position of this switch, but change to ZERO position that triggers zeroing routine. |
| | OPT ZERO - ZERO (≈15 sec to zero) | | |
| | COND LAMPS - ON | | |
| | RETCL BRT tw - adj | | |

| STA/T | STEP | PROCEDURE | PANEL | REMARKS |
|---|---|---|---|---|
| | 2 | Opt pwr down | | |
| CMP | | OPT ZERO - ZERO | 122 | |
| | | G/N OPT PWR - OFF | 100 | |
| | | G/N PWR - OFF | 5 | Removes power from reticle and condition lights in LEB. |
| | | 4.8.1.5 (P27) CSM - CMC Update | | P27 may be entered only from P00, P02. All uplinked or keyed in ΔVs and target vectors must be in same sphere of influence as CMC determined state at TIG and TIG -30. |
| | | CMC - on (req), 4.8.1.3 | | |
| | | Key V37E 00E | 2,140 | |
| | | Auto Update | | |
| | 1 | UP TLM CM - ACPT | 2 | |
| | | UP TLM - ACPT | 122 | |
| | | UPLINK ACTY lt - on | | |
| | 2 | Update complete | | |
| | | UPLINK ACTY lt - out | 2,122 | PROG window on DSKY displays 00 or 02. |
| | | UP TLM CM - BLOCK | 2 | |
| | or | UP TLM - BLOCK | 122 | |
| | 3 | Key V37E 00E | 2,140 | |
| | | Voice Transmission Update | | |
| | 1 | Liftoff time - V70E | | |
| | or | Load data block - V71E | | |



NORMAL/BACKUP

| STA/T | STEP | PROCEDURE | PANEL | REMARKS |
|---|---|---|---|---|
| CMP | or | Load singular data - V72E | 2,140 | |
| | or | Oct time increment - V73E | | |
| | | Poss OPR ERR | | If another extended verb active. |
| | 2 | DSKY - P27 | | P27 may be terminated by responding to flashing display with V34E. Data will not be incorporated for use by CMC. |
| | 3 | FL V21 N01<br>R1 Blank<br>R2 Unchanged<br>R3 AAAAA | | |
| | | Key in update data, XXXXXE (R1) CMC increments R3 by 1 | | |
| | | Repeat 3 until all data loaded | | |
| | 4 | FL V21 N02<br>R1 Blank<br>R2 Unchanged<br>R3 00330 | | |
| | | Accept update V33E | | 4.6.1.3, note 3m. |
| | | P00 or P02 - sel auto | | Data transferred from buffer storage to appropriate cells |
| | | If V96 previously keyed Key V37E 00E | | Reinstates periodic P00 integration. |
| | | Reject update Load Oct ID (XXE) of word to be corrected<br>Return to 3 | | |

| STA/T | STEP | PROCEDURE | PANEL | REMARKS |
|---|---|---|---|---|
| | | Time Update (Decimal) | | |
| CMP | 1 | Key V55E | 2,140 | |
| | | Poss OPR ERR | | If another extended verb active. |
| | 2 | FL V21 N24 (V25) | | All registers initially blank. |
| | | Δ time (CMC clock) 00XXX. HRS<br>000XX. MIN<br>0XX.XX SEC | | Delta time change must all be provided in decimal. |
| | | Accept Load ΔT | | CMC adds ΔT to CMC clock time. |
| | | Reject V33E | | 4.6.1.3, note 3m. V33E or V34E does not update clock time. |
| | | or V34E | | |
| | 3 | Check Updated CMC Time<br>Key V06 N65E<br>Key V37E 00E | | DSKY displays R1, R2, R3 for crew verification.<br>CMC returns to P00. |
| | | Erasable Memory Update | | |
| | 1 | Key V37E 00E | | |
| | 2 | For Seq Address<br>V21 N01E<br>Load first address XXXXE<br>Load first data word XXXXXE | | |
| | | N15E Verify CMC increments address by one (R1) | | |



NORMAL/BACKUP

| STA/T STEP | PROCEDURE | PANEL | REMARKS |
|---|---|---|---|
| CMP | Load second data word XXXXXE,E<br>Load third data word XXXXXE,E<br><br>Continue until last address in seq filled | 2,140 | |
| | 3 For Non-seq Address<br>V21 N01E<br>Load first address XXXXE<br>Load first data word XXXXXE,E<br>Load second address XXXXE<br>Load second data word XXXXXE,E | | |
| | 4 To Verify Data Loaded in Seq Address<br>V01 N01E<br>Load first address XXXXE<br>Check first data word in R1<br>N15E<br>Check second data word in R1<br>ENTR<br>Check third data word in R1<br>ENTR | | |
| | 4.8.1.6 <u>(P47) G&N Thrusting Monitor Program</u><br><br>CMC - on (req), 4.8.1.3<br>ISS - on & aligned (req), 4.8.1.3 & 4.14 | | Monitors vehicle acceleration during non-G&N controlled thrusting maneuvers, and displays ΔV applied to vehicle by thrusting maneuver. |
| | 1 Key V37E 47E | 2 | G&N monitor of ΔV highly desirable, if available, but not a requirement. P47 should be called just prior to thrusting and terminated as soon as possible |

...continued

| STA/T STEP | PROCEDURE | PANEL | REMARKS |
|---|---|---|---|
| | | | thereafter in order to minimize errors of bias and average G. P47 also normally used during rendezvous final phase. Any ΔV under G&N control during that phase would require P34, P40, or P41. Range, range rate, and theta may be displayed by using V83 (R31).<br><br>Range, range rate, and phi may be displayed during P47 by using V85 (R34). Orbital parameters may be displayed by using V82 (R30). Also, an SCS orbit change can be monitored by P40 if properly combined with G&N Prethrusting and Thrusting Procedures, 4.12 and 4.13.<br><br>N62 (VI, H dot, H) available during P47. |
| | Poss PROG alarm (4.8.1.16) | | R02. |
| CMP 2 | FL V16 N83<br>ΔVX, Y, Z (cont) XXXX.X FPS | 2 | Displayed when average G turned on. CMC requires 12.5 seconds to turn on average G if integration required is < a time step plus 1.4 seconds (earth orbit) or 2.5 seconds (lunar orbit) for each additional time step. Time step = 240 seconds (earth orbit) or 350 seconds (lunar orbit). |
| | (To rezero registers - V32E)<br><br>Mon for furn completion<br>Rcd ΔV<br>PRO (exit P47) | | Provides capability to monitor another burn without going through R00.<br><br>When P47 termination desired. |



NORMAL BACKUP

| STA/T STEP | PROCEDURE | PANEL | REMARKS |
|---|---|---|---|
| CMP | 3 FL V37<br>Key XXE | 2 | If average G on, R00 turns off average G, zeros rendezvous optics mark and VHF ranging mark counters. Otherwise, counters not zeroed. It also sets or resets RNDZ, TRACK, and UPDATE flags, depending on which programs in progress or called. It may also recycle into P20. |
| | 4.8.1.7 CMC Self-Check Procedure | | Procedure used to check CMC's ability to write into and read out of erasable memory and performs internal fixed memory banksum. |
| | CMC - on (req), 4.8.1.3 | | |
| | 1 Key V25 N01E<br>1365E<br>E, E, E | 2,140 | Zero self-check cells: ERCOUNT, SCOUNT, SCOUNT +1. |
| | 2 Key V15 N01E - establish mon of self-check<br>1365E | | Begin monitor of self-check cells. |
| | 3 Key V21 N27E<br>10E - starts self-check | | Starts complete self-check. |
| | 4 Mon R2 & PROG lt | | |
| | a. R2 becomes $\geq$3<br>Self-check has been successfully completed at least once<br>Key V21 N27E<br>0E term self-check | | Turns off self-check. |
| | b. If PROG lt comes on<br>Coord with MSFN &/or perform malfunc SSR-1 | | |

| STA/T | STEP | PROCEDURE | PANEL | REMARKS |
|---|---|---|---|---|
| | | 4.8.1.8 Measurement and Loading of PIPA Bias | | |
| | | CMC - on (req), 4.8.1.3 | | |
| | | ISS - on (req), 4.8.1.3 & 4.14 | | ISS should be on at least one hour prior to performing this procedure to allow PIPAs to stabilize. |
| | | SCS - on (desired), 4.8.4.2 | | Provides display and SCS control capability. |
| CDR | | LOGIC 2/3 PWR - on (up) | 7 | |
| | 1 | Set Evnt Tmr 00:00 | 1 | |
| | 2 | Sel Att Cont desired, 4.7.1<br>Maintain SC Rates <0.1°/sec | | |
| CDR,CMP | | | | |
| 00:00 | 3 | Key V25 N21E, E, E, E/start Evnt Tmr | 2,140 | Zeros noun 21 cells. |
| CMP | 4 | Key V06 N21 (do not ENTR) | | |
| 01:04 | 5 | Key ENTR | | |
| | 6 | Rcd PIPA counts<br>(X)R1____(Y)R2____(Z)R3____ XXXAB | | |
| | 7 | Key V21 N01E (adj PIPA bias)<br>Load 1452E (calculated X bias)<br>±ABXXXE, E<br>1454E (calculated Y bias)<br>±ABXXXE, E<br>1456E (calculated Z bias)<br>±ABXXXE | | |



NORMAL BACKUP

| STA/T | STEP | PROCEDURE | PANEL | REMARKS |
|---|---|---|---|---|
| | | (If AB >99, CMC incapable of adj PIPA bias) | | |
| CMP | 8 | Key V37E 00E | 2,140 | |
| | | 4.8.1.9 (R33) CMC/LGC Clock Sync Routine | | Provides onboard method of determining difference between LGC and CMC clock time (ΔT). |
| | | CMC - on (req), 4.8.1.3 | | |
| | 1 | Key V06 N65 | | |
| | 2 | Confirm sel of this routine in LM | | |
| | 3 | Perform countdown with LM crew ENTR (simultaneously with LM) | | |
| | 4 | V06 N65<br>CM clock time 00XXX. HRS<br>000XX. MIN<br>0XX.XX SEC | | |
| | | Rcd this time<br>Obtain from LM the LM clock time of ENTR<br>Compute ΔT<br>If more data req, return to 3<br>Comp average of ΔTs | | |
| | 5 | To incorporate ΔT into CMC clock<br>Perform Time Update, 4.8.1.5 | | |

| STA/T STEP | PROCEDURE | PANEL | REMARKS |
|---|---|---|---|

4.8.1.10 ΔR and ΔV Threshold Change Procedure

CMC - on (req), 4.8.1.3

CMP Key V24 N01E 2,140
Key 2002E

Load erasable value for desired ΔR
(from following table)

R3 2003

Load erasable value for desired ΔV
(from following table)

| Desired ΔR NM | Erasable Value | Desired ΔV FPS | Erasable Value |
|---|---|---|---|
| 0.00 | 77776 | 0.00 | 77776 |
| 0.001 | 0 | 0.0001 | 0 |
| 0.1 | 6 | 2.5 | 1 |
| 0.2 | 14 | 5.12 | 2 |
| 0.3 | 21 | 7.68 | 3 |
| 0.4 | 27 | 10.24 | 4 |
| 0.5 | 35 | | |

4.8.1.11 A or B Erasable Value Change Procedure

CMC - on (req), 4.8.1.3
P35 & P75 not operating

Procedure ineffective if programs currently running.



NORMAL BACKUP

| STA/T STEP | PROCEDURE | PANEL | REMARKS |
|---|---|---|---|
| CMP | Key V24 N01E<br>Key 2021E (2023E for B)<br>Load 00000E (1:30 to 2:30)<br>Load 00003E (10:00)<br>Load 00004E (11:00 & 12:00)<br>R3 2022 (2024 for B)<br><br>Load desired value (from following 2022/2024 table) | 2,140 | Addresses 2021 and 2023 used by programs P35 and P75 respectively.<br><br>Addresses 2022 and 2024 used by programs P35 and P75 respectively. |

| Desired A or B | 2022/2024 |
|---|---|
| 1:30 | 21450 |
| 1:45 | 24404 |
| 2:00 | 27340 |
| 2:15 | 32274 |
| 2:30 | 35230 |
| 10:00 | 25140 |
| 11:00 | 00720 |
| 12:00 | 14500 |

4.8.1.12 Flagword Monitor and Change Procedure

Flagword Monitor

Key V11 N01E
Key XXXE (flagword address)

R1 XXXXX (flag bit)
R3 00XXX (flagword address)

Check flag bit in R1
KEY REL

4.6.13.1 for flagword addresses.

| STA/T | STEP | PROCEDURE | PANEL | REMARKS |
|---|---|---|---|---|
| | | Flagword Change | | |
| CMP | | Key V25 N07E<br>Key XXXE (flagword address) | 2,140 | ECADR ≤30 (octal) will select appropriate channel (except that channel 7 attempts will be ignored). |
| | | Key XXXXXE (bit ID)<br>Key 1 or 0 (1 = set flag bit, 0 = reset flag bit) | | Load code for bit to be changed as follows: |
| | | Example: | | |
| | | To set REFSMMAT FLG (flagword 3, bit 13)<br>Key V25 N07E<br>77E<br>10000E<br>1E | | |
| | 4.8.1.13 | (V79) Orbrate/PTC (BBQ Mode - R64) | | Allows orbital rate or PTC maneuver by astronaut selection of rate, deadband, and X or Y axis and sets DAP parameters to maintain chosen rate. For SCS passive thermal control procedures, refer to 4.8.4.9 and 10. |
| | | CMC - on (req), 4.8.1.3<br>ISS - on & orient known (req), 4.8.1.3 & 4.14<br>(For orbrate, Ysm aligned to V x R)<br>SCS - on (desired), 4.8.4.2<br>RCS DAP - Load & activate (req), 4.8.2.1 | | |
| CDR | | LOGIC 2/3 PWR - on (up) | 7 | Provides display and SCS control capability. 0.5° deadband and 0.2°/second rate recommended. |
| CMP | 1 | Perform (V49E) R62, 4.8.3.4<br>Load gmbl angles for init of mnvr (orbrate or PTC) | | MGA should be ≈zero for both cases. |

| | A | | | B | | | C | | | D | | | E | | |
|---|---|---|---|---|---|---|---|---|---|---|---|---|---|---|---|
| Bit | 15 | 14 | 13 | 12 | 11 | 10 | 9 | 8 | 7 | 6 | 5 | 4 | 3 | 2 | 1 |
| code | 4 | 2 | 1 | 4 | 2 | 1 | 4 | 2 | 1 | 4 | 2 | 1 | 4 | 2 | 1 |



NORMAL/BACKUP

| STA/T | STEP | PROCEDURE | PANEL | REMARKS |
|---|---|---|---|---|
| CMP | 2 | Disable two adjacent RCS quads | | Provides fuel conservation and lower rates (panel 8 switches, or R03, may be used to disable engines). |
| | | For PTC, att hold for 20 min | | To damp existing vehicle rates. |
| CDR | | MAN ATT P&Y (2) - ACCEL CMD<br>Enable all jets | 1 | Protects against a pitch or yaw jet firing between end of 20-minute wait period and PRO on N79. |
| CMP | 3 | Key V79E | 2,140 | |
| | | Poss OPR ERR | | If another extended verb active. |
| | | If in P00, go to 5 | | |
| | 4 | FL V06 N16<br>Time of event 00XXX. HRS<br>000XX. MIN<br>0XX.XX SEC | | Permits loading of GET for maneuver initiation. Initially 00000 (present time). |
| | | Accept PRO<br>Reject V25E<br>Load desired data | | |
| | 5 | FL V06 N79<br>Rate X.XXXX DEG/SEC<br>DBD XXX.XX DEG | | + for increasing CDU angles; - for decreasing CDU angles. |
| | | Axis option (X or Y) 0000X.<br>(0 = X axis, non-zero = Y axis) | | X axis (PTC), Y axis (orbrate). |
| CDR | | Accept SC CONT - CMC<br>CMC MODE - AUTO | 1 | |
| CMP | | PRO | 2,140 | Initiates pitch rate (orbrate), or roll rate (PTC), as determined by N79 load. If GET specified (non-zero) in N16, UPLINK ACTY lt will indicate maneuver initiation. KEY REL, ERR RSET or V37E XXE will extinguish light. |
| | | Reject Key V25E<br>Load desired data | | |

| STA/T | STEP | PROCEDURE | PANEL | REMARKS |
|---|---|---|---|---|
| CDR | | For PTC, MAN ATT ROLL - ACCEL CMD<br>MAN ATT P&Y (2) - RATE CMD | 1 | Enables auto pitch and yaw attitude hold in N79 deadband. |
| | 6 | If desired for PTC, AUTO RCS (16) - OFF | 8 | |
| | | RHC PWR DIR (both) - OFF | 1 | Prevents inadvertent direct coil jet firings. |
| | 7 | To term mnvr | | |
| CMP | | Orbrate<br>Key V46E | 2,140 | Sets last specified R03 parameters in RCS DAP. In addition, the DAP established by this routine will be altered according to the following table: |
| | | PTC | | |
| CDR | | MAN ATT (3) - ACCEL CMD | 1 | |
| | | AUTO RCS (16) - MNA or MNB | 8 | |
| | | V46E or cycle SC CONT sw | | |
| | | MAN ATT (3) - RATE CMD | 1 | |

| SWITCHING FUNCTION | ZEROS COMMANDED RATES | RETURNS TO (R03) SPECIFIED DEADBAND | ZEROS DAP ATTITUDE ERROR |
|---|---|---|---|
| V46E | X | X | X |
| SC CONT - Cycled, CMC/SCS/CMC | X | X | X |
| CMC MODE - HOLD | X | | X |
| RHC - out of detent | X | | X |
| V37E XXE | X | X | |
| KALCMANU | * | | X |

*KALCMANU generates new commanded rates.



NORMAL BACKUP

| STA/T | STEP | PROCEDURE | PANEL | REMARKS |
|---|---|---|---|---|
| | 4.8.1.14 | G&N Passive Thermal Control Procedure | | For SCS passive thermal control procedures, refer to 4.8.4.9 and 10. |
| | | CMC - on (req), 4.8.1.3<br>ISS - on & orient known (req), 4.8.1.3 & 4.14<br>RCS DAP - Load & activate (req), 4.8.2.1 | | 0.5° deadband and 0.2°/second rate recommended. |
| | 1 | Perform (V49E) R62, 4.8.3.4<br>(PRO on auto mnvr req, FL V50 N18) | | This option required to ensure erasable memory is properly set up. |
| CDR<br>CMP | 2 | Disable two adjacent RCS quads<br>Att hold for 20 min | 8 | Provides fuel conservation and lower rates (panel 8 switches or R03 may be used to disable engines). |
| CDR | 3 | MAN ATT P&Y (2) - ACCEL CMD<br>Enable all RCS jets | 1<br>8 | |
| CMP | 4 | Set att hold<br>Key V21 N01E<br>1013E, E (Set HOLD FLG zero) | 2,140 | Sets HOLD FLG zero and inhibits maneuver until after data load. |

Establish desired rate

| +0.1°/sec | -0.1°/sec | +0.3°/sec | -0.3°/sec |
|---|---|---|---|
| V24 N01E | V24 N01E | V24 N01E | V24 N01E |
| 3125E | 3125E | 3125E | 3125E |
| 3E | 77774E | 12E | 77765E |
| 24400E | 53400E | 35400E | 42400E |
| V21E | V21E | V24E | V24E |
| 3176E | 3176E | 3175E | 3175E |
| 35101E | 42676E | 2E | 77775E |
| | | 27303E | 50474E |

| STA/T | STEP | PROCEDURE | PANEL | REMARKS |
|---|---|---|---|---|
| CMP | 5 | Start roll mnvr<br>Key V21 N01E<br>1013E<br>70000E | 2,140 | Initiates maneuver. |
| CDR | 6 | MAN ATT ROLL - ACCEL CMD | 1 | Disables roll jets for duration of PTC. |
| CMP | 7 | Perform RCS DAP Att Dbd Change, 4.8.2.2 | | ±30° deadband is recommended. |
| CDR | 8 | AUTO RCS (16) - OFF | | |
| | 9 | To term PTC<br>MAN ATT (3) - ACCEL CMD (verify)<br>AUTO RCS (16) - MNA or MNB<br>V46E or Cycle SC CONT sw<br>MAN ATT (3) - RATE CMD | <br><br>8<br><br>1 | Re-establishes attitude hold within attitude deadband selected in R03. |
| | 4.8.1.15 | Saturn Rate Change | | |
| | | CMC - on (req), 4.8.1.3 | | |
| CMP | 1 | Key V24 N01E<br>3322E<br>XXXE<br>YYYYYE | 2,140 | |



NORMAL BACKUP

| STA/T STEP | PROCEDURE | PANEL | REMARKS |
|---|---|---|---|

| SIVB RATE | SAT RATE +1 (3322) XXX | SAT RATE +2 (3323) YYYYY |
|---|---|---|
| 0.05°/sec RPY | 161 | 77616 |
| 0.1°/sec RPY | 210 | 77567 |
| 0.2°/sec RPY | 266 | 77511 |
| *0.3°/sec RPY | 344 | 77433 |
| 0.5°/sec R, 0.3°/sec P&Y | 476 | 77301 |

*Use for TLI

4.8.1.16 (R02) IMU Status Check

Check whether IMU on and, if on, whether it is aligned to an orientation known by CMC. R02 automatically called by programs requiring ISS. Provides for program alarms if ISS not on and/or IMU orientation unknown.

1 ISS not on (known orient not req)

CMP — PROG alarm — 2,140 — Occurs only if ISS not on.

FL V37

Key V05 N09E (to verify alarm) — Alarm stored; must key V05 N09E to display alarm code.

00210 (ISS not on)

Perform ISS turnon

Key XXE — Return to PXX at completion of ISS turnon.

| STA/T STEP | PROCEDURE | PANEL | REMARKS |
|---|---|---|---|
| 2 | ISS not on &/or orient unknown (known orient req) | | |
| CMP | PROG alarm | 2,140 | |
| | Key V05 N09E (to verify alarm) | | Alarm stored; must key V05 N09E to display alarm code. |
| | 00210 (ISS not on) | | |
| | or 00220 (IMU orient unknown) | | |
| | FL V37 | | RSET and KEY REL pressed when nature of problem determined. When CMC regains control, program cycles through R00, which resets 3-AXIS flag and may set or reset RNDZ, TRACK, and UPDATE flags, depending on which programs are in progress or called. |
| | Key XXE | | Perform ISS turnon and/or IMU orientation determination. Reinitiate desired program. |
| 4.8.1.17 | (V64) S-Band Antenna Routine (R05) | | Computes and displays two steerable S-band antenna gimbal angles required to point antenna toward center of earth. |
| | CMC - on (req), 4.8.1.3 | | |
| | ISS - on & orient known (req), 4.8.1.3 & 4.14 | | Required for valid angle displays. |
| 1 | Key V64E | | Selects R05. Uses permanent state vector for calculations and therefore, will be based on old values if average G on. |
| | Poss OPR ERR | | If another extended verb active. |



NORMAL BACKUP

| STA/T | STEP | PROCEDURE | PANEL | REMARKS |
|---|---|---|---|---|
| CMP | 2 | FL V06 N51<br>Rho XXX.XX DEG<br>Gamma XXX.XX DEG<br><br>Accept Rcd angles<br>PRO<br>Reject Sel Att Cont mode desired, 4.7.1<br>Mnvr SC as req | 2,140 | S-band required gimbal angles.<br>Rho - Pitch gimbal angle.<br>Gamma - Yaw gimbal angle.<br><br>Spacecraft maneuver will be required only if displayed angles do not provide an unobstructed view of earth. (Ref CSM Data Book, section 4.7, HGA Scan and Warning Limit, Yaw - Pitch Coord.) |
| | | 4.8.1.18 DSKY 88888 Clear Procedure<br><br>Key V99 N99<br>Key V25 N01E<br>00000E<br>+99999E<br>+99999E<br>+99999 CLR, CLR, CLR<br>00000E<br>00000E<br>00000E<br><br>If OPR ERR<br>Start over<br><br>If DSKY does not clear<br>Repeat proced | | DSKY relay failure mode will cause an all-eights display on DSKY. Affects display capability of DSKY but will not affect input/output or control functions. |

| STA/T | STEP | PROCEDURE | PANEL | REMARKS |
|---|---|---|---|---|
| | | 4.8.2 DIGITAL AUTOPILOT (DAP) | | |
| | | 4.8.2.1 (V48) CSM - DAP Data Load Procedure (R03) | | For CMC control modes, DAP data load procedure is used to select rate, deadband, and quads. When under computer control, operating program will establish SC rates and attitude error deadbands, or crew may select other desired error deadbands via DSKY. In addition, crew has capability of selecting RCS quads for computer command of manual translation, attitude hold, or automatic and manual manuvers. |
| | | CMC - on (req), 4.8.1.3 | | |
| CMP | 1 | Key V48E | 2,140 | Extended verb 48 program calls DAP data 1, 2, and 3 in sequential order. DAP data 1, 2, or 3 may also be displayed individually by using respective verb/ noun combinations, i.e., V04 N46, V06 N47, or V06 N48. |
| | | (Bit A of R1 configures TVC DAP for LM on-off) | | |
| | 2 | FL V04 N46<br>R1 - A B C D E<br>R2 - A B C D E | | |
| | | Accept PRO<br>Reject V24E load desired data | | |



NORMAL BACKUP

| STA/T STEP | PROCEDURE | PANEL | REMARKS |
|---|---|---|---|

| | Vehicle Config. | Quad A/C for $\ddot{X}$ | Quad B/D for $\ddot{X}$ | Err Deadband | Rate Select |
|---|---|---|---|---|---|
| R1 | 0 = No Dap<br>1 = CSM<br>2 = CSM & LM<br>3 = CSM & SIVB<br>6 = CSM & LM (Ascent Stg only) | 0 = Fail A/C<br>1 = Use A/C | 0 = Fail B/D<br>1 = Use B/D | 0 = ± 0.5°<br>1 = ± 5.0° | 0 = 0.05°/sec<br>1 = 0.2°/sec<br>2 = 0.5°/sec<br>3 = 2.0°/sec |
| | **Roll Quad Select** | **Quad A** | **Quad B** | **Quad C** | **Quad D** |
| R2 | 0 = Use B/D<br>1 = Use A/C | 0 = Fail<br>1 = Use | 0 = Fail<br>1 = Use | 0 = Fail<br>1 = Use | 0 = Fail<br>1 = Use |

If quads A/C and B/D (4 jets) desired for ±X translation, R1-B and R1-C may be set to 0,0, or 1,1.

If A is failed, CMC assumes C is good. If B is failed, CMC assumes D is good.

CMP 3 FL V06 N47 — 2,140

CSM wt XXXXX. LBS
LM wt XXXXX. LBS

Value of mass used in non-DAP coding not updated unless vehicle configuration bit is 1, 2, or 6. During P40 TVC DAP reduces value for weight linearly, as function of SPS maneuver time. Maneuvers performed without using P40 could cause CMC's knowledge of weight to be compromised.

Accept PRO
Reject Key V21E, V22E or V24E
Load correct data

4 FL V06 N48

P Trim XXX.XX DEG
Y Trim XXX.XX DEG

If burn >0.42 second, trim values will be updated by CMC during burn. Do not load engine gimbal trim angles >9°.

Accept PRO - Return to prog in progress
Reject Key V21E, V22E or V24E
Load correct data

5 To activate DAP

To be done first time DAP started or after fresh start.

| STA/T STEP | PROCEDURE | PANEL | REMARKS |
|---|---|---|---|
| CDR | CMC MODE - FREE | 1 | Prevents inadvertent jet firings. |
| CMP | Key V46E | 2,140 | Activates DAP. |

4.8.2.2 RCS DAP Attitude Deadband Change Procedure

This procedure will change RCS DAP att deadband to ±2.5, 10, 15, 20, 25, or 30°. Alternate method of establishing desired deadbands is to use V79 procedures, loading desired deadband, and specify zero rate.

CMC - on (req), 4.8.1.3
ISS - on & orient known (req), 4.8.1.3 & 4.14
RCS DAP - activate (req), 4.8.2.1
SCS - on (desired), 4.8.4.2

1 Sel CMC Att Cont - auto, 4.7.1.6

2 Sel 5.0° dbd in RCS DAP, 4.8.2.1

3 Key V21 N01E
3255E
Load D Band (see table)

| Desired dbd | D Band |
|---|---|
| ±2.5° | 0343E |
| ±10° | 1616E |
| ±15° | 2525E |
| ±20° | 3434E |
| ±25° | 4343E |
| ±30° | 5252E |



NORMAL BACKUP

| STA/T | STEP | PROCEDURE | PANEL | REMARKS |
|---|---|---|---|---|
| CMP | 4 | To return to 5.0° dbd<br>THC - CW, then neut | | Center of deadband shifted. |
| | or | Key V48E<br>PRO<br>PRO<br>PRO | 2,140 | Center of deadband not affected. |
| | | 4.8.2.3 RCS DAP Orbital Rate Procedure | | |
| | | CMC - on (req), 4.8.1.3<br>ISS - on & orient known (req), 4.8.1.3 & 4.14<br>SCS - on (desired), 4.8.4.2<br>RCS DAP - load & activate (req), 4.8.2.1<br>(Use R03 to disable 2 adjacent RCS quads)<br>Ysm aligned to V x R<br>(If R x V, complement numbers for ZZZZZ) | | To minimize RCS propellant consumption. |
| | 1 | Perform (V49) R62, 4.8.3.4<br>Load gmbl angles for init of orbrate | | Gimbal angles loaded are those that are to be at initiation of orbital rate rotation. MGA should be zero. |
| | 2 | If desired<br>Key V37E XXE (non-att cont prog) | | |

| STA/T | STEP | PROCEDURE | PANEL | REMARKS |
|---|---|---|---|---|
| CMP | 3 | Establish orbrate<br>For rates 0.1°/sec or less, load oct numbers corresponding to desired mnvr rate from following table<br>For rate 0.5°/sec, go to 5 | | |
| | | Key V21 N01E<br>1013E,E (Set HOLD FLG zero) | 2,140 | Sets HOLD FLG to zero and inhibits maneuver until after data load. |
| | | Key V24 N01E<br>3127E<br>VVVVVE<br>WWWWWE | | |
| | | Key V24E<br>3131E<br>XXXXXE<br>YYYYYE | | |
| | | Key V21E<br>3200E<br>ZZZZZE | | |
| | | Key V21 N01E<br>1332E<br>70000E (Set HOLD FLG negative) | | Final ENTR initiates maneuver. |
| | | Mnvr in progress | | |



NORMAL/BACKUP

| STA/T STEP | PROCEDURE | | | | PANEL | REMARKS |
|---|---|---|---|---|---|---|
| 4 To term mnvr, go to 8 | | | | | | |
| ORBRATE deg/sec | CDUX 0 deg | +90 deg | +180 deg | +270 deg | | |
| -0.100 | VVVVV = 77774<br>WWWWW = 54300<br>XXXXX = 00000<br>YYYYY = 61300<br>ZZZZZ = 42676 | 00000<br>61300<br>00003<br>23500<br>42676 | 00003<br>23500<br>00000<br>16500<br>42676 | 00000<br>16500<br>77774<br>54300<br>42676 | | |
| -0.095 | VVVVV = 77774<br>WWWWW = 62200<br>XXXXX = 00000<br>YYYYY = 62000<br>ZZZZZ = 44250 | 00000<br>62000<br>00003<br>15600<br>44250 | 00003<br>15600<br>00000<br>16000<br>44250 | 00000<br>16000<br>77774<br>62200<br>44250 | | |
| -0.090 | VVVVV = 77774<br>WWWWW = 70000<br>XXXXX = 00000<br>YYYYY = 62600<br>ZZZZZ = 45622 | 00000<br>62600<br>00003<br>10000<br>45622 | 00003<br>10000<br>00000<br>15200<br>45622 | 00000<br>15200<br>77774<br>70000<br>45622 | | |
| -0.085 | VVVVV = 77774<br>WWWWW = 75600<br>XXXXX = 00000<br>YYYYY = 63400<br>ZZZZZ = 47173 | 00000<br>63400<br>00003<br>02200<br>47173 | 00003<br>02200<br>00000<br>14400<br>47173 | 00000<br>14400<br>77774<br>75600<br>47173 | | |
| ...continued | | | | | | |

| STA/T STEP | PROCEDURE | | | PANEL | REMARKS |
|---|---|---|---|---|---|
| ORBRATE deg/sec | CDUX 0 deg | +90 deg | +180 deg | +270 deg | |
| -0.080 | VVVVV = 77775<br>WWWWW = 43400<br>XXXXX = 00000<br>YYYYY = 64100<br>ZZZZZ = 50545 | 00000<br>64100<br>00002<br>34400<br>50545 | 00002<br>34400<br>00000<br>13700<br>50545 | 00000<br>13700<br>77775<br>43400<br>50545 | |
| -0.075 | VVVVV = 77775<br>WWWWW = 51300<br>XXXXX = 00000<br>YYYYY = 64700<br>ZZZZZ = 52117 | 00000<br>64700<br>00002<br>26500<br>52117 | 00002<br>26500<br>00000<br>13100<br>52117 | 00000<br>13100<br>77775<br>51300<br>52117 | |
| -0.070 | VVVVV = 77775<br>WWWWW = 57100<br>XXXXX = 00000<br>YYYYY = 65500<br>ZZZZZ = 53467 | 00000<br>65500<br>00002<br>20700<br>53467 | 00002<br>20700<br>00000<br>12300<br>53467 | 00000<br>12300<br>77775<br>57100<br>53467 | |
| -0.065 | VVVVV = 77775<br>WWWWW = 64700<br>XXXXX = 00000<br>YYYYY = 66300<br>ZZZZZ = 55041 | 00000<br>66300<br>00002<br>13100<br>55041 | 00002<br>13100<br>00000<br>11500<br>55041 | 00000<br>11500<br>77775<br>64700<br>55041 | |

...continued



NORMAL/BACKUP

| STA/T STEP | PROCEDURE | | | | PANEL | REMARKS |
|---|---|---|---|---|---|---|
| | ORBRATE deg/sec | CDUX 0 deg | +90 deg | +180 deg | +270 deg | |
| | -0.060 | VVVVV = 77775<br>WWWWW = 72500<br>XXXXX = 00000<br>YYYYY = 67100<br>ZZZZZ = 56413 | 00000<br>67100<br>00002<br>05300<br>56413 | 00002<br>05300<br>00000<br>10700<br>56413 | 00000<br>10700<br>77775<br>72500<br>56413 | |
| | -0.055 | VVVVV = 77776<br>WWWWW = 40300<br>XXXXX = 00000<br>YYYYY = 67600<br>ZZZZZ = 57765 | 00000<br>67600<br>00001<br>37400<br>57765 | 00001<br>37400<br>00000<br>10200<br>57765 | 00000<br>10200<br>77776<br>40300<br>57765 | |
| | -0.050 | VVVVV = 77776<br>WWWWW = 46200<br>XXXXX = 00000<br>YYYYY = 70400<br>ZZZZZ = 61337 | 00000<br>70400<br>00001<br>31600<br>61337 | 00001<br>31600<br>00000<br>07400<br>61337 | 00000<br>07400<br>77776<br>46200<br>61337 | |
| CMP 5 | Ysm aligned to $\underline{V}$ X $\underline{R}$<br>(If $\underline{R}$ x $\underline{V}$, complement numbers for AAAAA and ZZZZZ) | | | | 2,140 | |
| 6 | Key V21 N01E<br>1013E,E (set HOLD FLG zero) | | | | | Sets HOLD FLG zero and inhibits maneuver until after data load. |

| STA/T | STEP | PROCEDURE | PANEL | REMARKS |
|---|---|---|---|---|
| CMP | 7 | Establish orbrate (0.5°/sec)<br>Load oct numbers corresponding to mnvr rate from following table<br><br>Key V24E<br>3127E<br>VVVVVE<br>WWWWWE<br><br>Key V24E<br>3131E<br>XXXXXE<br>YYYYYE<br><br>Key V24E<br>AAAAAE<br>ZZZZZE<br><br>Key V21E<br>1013E<br>70000E (set HOLD FLG negative) | 2,140 | Final ENTR initiates maneuver. |

| | CDUX | | | |
|---|---|---|---|---|
| | 0° | 180° | 7.25° | 187.25° |
| VVVVV | 77755 | 00022 | 77722 | 00022 |
| WWWWW | 76077 | 01700 | 71351 | 06426 |
| XXXXX | 77775 | 00002 | --- | --- |
| YYYYY | 66367 | 11410 | --- | --- |
| AAAAA | 77773 | 77773 | 77773 | 77773 |
| ZZZZZ | 56272 | 56272 | 56272 | 56272 |



NORMAL BACKUP

| STA/T | STEP | PROCEDURE | PANEL | REMARKS |
|---|---|---|---|---|
| CDR | 8 | To term mnvr<br>CMC MODE - HOLD | 1 | |
| CMP | | or Key V49E, return to 1 | 2,140 | |
| | | or Key V46E | | |
| | | or RHC - out of detent | | |
| | | or Key V37E | | |

| STA/T | STEP | PROCEDURE | PANEL | REMARKS |
|---|---|---|---|---|
| | | 4.8.3 EXTENDED VERBS | | |
| | | 4.8.3.1 (V35) DSKY Condition Light Test | | Procedure designed to test CMC/caution and warning, DSKY interface. |
| | | CMC - on (req), 4.8.1.3 | | |
| CMP | 1 | Key V37E 00E (req) | 2,140 | Must be performed while in P00. |
| | 2 | Key V35E | | |
| | 3 | Mon the following events | | |
| | | a. All DSKY condition lts - on | | |
| | | b. ISS warning lt - on<br>CMC warning lt - on | | |
| | | c. All DSKY numerical windows disp 8<br>Sign positions in R1, R2, R3 show +<br>V, N windows flash | | |
| | | Wait 5 sec | | |
| | | d. All DSKY warning lts - out | | NO ATT will be left on if coarse align occurring. |
| | | e. ISS lt - out<br>CMC lt - out | | |
| | | f. Old PROG number will be disp<br>Interrupted disp (if any) will be restarted | | |



NORMAL BACKUP

| STA/T | STEP | PROCEDURE | PANEL | REMARKS |
|---|---|---|---|---|
| | | 4.8.3.2 (V42) Torque Gyros | | Fine aligns stable member by torquing gyros (primarily for ground use). |
| | | CMC - on (req), 4.8.1.3<br>ISS - on (req), 4.8.1.3 & 4.14 | | |
| CMP | 1 | Key V37E 00E | 2,140 | |
| | 2 | For Load <100°<br>Key V42E | | |
| | | Poss OPR ERR | | If another extended verb active, or IMU stall routine in use. |
| | or | For Load >99.999°<br>Key V21 N02E<br>2757E<br>XXXXXE<br>N15E<br>XXXXXEE<br>YYYYYEE<br>YYYYYEE<br>ZZZZZEE<br>ZZZZZE<br>Key V42E | | Load >90 deg should not be performed during flight. |
| | | Poss OPR ERR | | If another extended verb active, or IMU stall routine in use. |
| | 3 | FL V21 N93 (request load) | | If SC CONT at CMC and CMC MODE at AUTO or HOLD, DAP will maneuver vehicle to follow the platform as it moves. |

| STA/T STEP | PROCEDURE | PANEL | REMARKS |
|---|---|---|---|
| CMP | Δ Gyro X, Y, Z XX.XXX DEG | 2,140 | Registers initially blank. |
| | Accept Load desired data<br>DSKY displays V42<br>NO ATT lt - out | | |
| | Reject V33E<br>DSKY displays V42<br>NO ATT lt - out | | Key V33E if gyro torquing registers loaded prior to keying V42E. Also refer to 4.6.1.3, note 3m. |
| | 4.8.3.3 (V43) Load FDAI Error Needles | | Loads crew specified angles into FDAI error needles (primarily for ground use). |
| | CMC - on (req), 4.8.1.3<br>ISS - on (req), 4.8.1.3 | | |
| 1 | Key V37E 00E | | V43E can be executed only from P00. |
| 2 | Key V43E | | |
| | Poss OPR ERR | | V43E cannot be executed if CMC not in P00, IMU in coarse align or zero ICDU mode, or if another extended verb active. (Latter is constraint after liftoff.) |
| 3 | FL V21 N22 (request load)<br>R, P, Y XXX.XX DEG | | Registers initially blank. |
| | Load desired err angles | | Maximum effective angle which may be loaded is ±16.88 degrees. |



NORMAL BACKUP

| STA/T | STEP | PROCEDURE | PANEL | REMARKS |
|---|---|---|---|---|
| | | 4.8.3.4 (V49) CSM Crew Defined Maneuver (R62) | | Provides method of performing CMC controlled maneuver to crew defined attitude. |
| | | CMC - on (req), 4.8.1.3<br>ISS - on & orient known (req), 4.8.1.3 & 4.14<br>SCS - on (req), 4.8.4.2 | | |
| CMP | 1 | Key V37E 00E | 2,140 | Routine R62 may be called from P00 only. |
| | 2 | Sel Tot Att (ISS) Disp, 4.7.2.5 | | Both FDAIs recommended so either reference system (IMU or GDC) may be monitored. (CMC attitude error and rate displays available.) |
| | 3 | Key V49E | | |
| | | Poss OPR ERR | | If another extended verb active. |
| | 4 | FL V06 N22 (fnl gmbl angles)<br>R, P, Y XXX.XX DEG | | |
| | | Accept PRO<br>Reject V25E load desired gmbl angles | | |
| | | (R60 - Attitude Maneuver Routine) | | Provides for maneuver (automatically or manually) to specified attitude. |
| | 5 | FL V50 N18 (auto mnvr request)<br>R, P, Y XXX.XX DEG | | Required gimbal angles. |

| STA/T STEP | PROCEDURE | PANEL | REMARKS |
|---|---|---|---|
| CDR | Accept BMAG MODE (3) - RATE 2<br>Sel CMC Att Cont Auto, 4.7.1.6 | 1 | |
| CMP | PRO | 2,140 | May be performed second time as attitude trim. |
| | V06 N18<br>R, P, Y XXX.XX DEG<br>Mon auto mnvr on FDAI | | Static display until completion of auto manuever and reverts to FL V50 N18. |
| | Reject Key V62E | | Selects Mode 2, total attitude error on FDAI needles. |
| | RHC - Null FDAI needles | | Any input from RHC (RHC out of detent) will be interpreted by CMC as a manual override and will cause immediate termination of auto maneuver calculation. |
| | When att satisfactory<br>ENTR | | |
| 4.8.3.5 | (V67) Start W-Matrix RSS Error Display | | Provides display of RSS position and velocity errors, and opportunity to load new initialization values. However, initialization will not take place until next opportunity. |
| | CMC - on (req), 4.8.1.3 | | |
| | 1 Key V67E | | |
| | Poss OPR ERR<br>Exit | | If another extended verb in process. |
| | 2 FL V06 N99 | | |
| | POS ERR XXXXX. FT | | RSS value of position error. |
| | VEL ERR XXXX.X FPS | | RSS value of velocity error. |



NORMAL/BACKUP

| STA/T STEP | PROCEDURE | | PANEL | REMARKS |
|---|---|---|---|---|
| CMP | Option code | 0000X | 2,140 | Option code: (initially 00000)<br>00001 - Rendezvous<br>00002 - Orbital<br>00003 - Cislunar<br><br>R3 must be loaded for desired option. Otherwise, reinitialization will not occur. |
| | Accept PRO | | | Bypasses reinitialization, if R3 = 00000. |
| | Reject Key V25E<br>Load desired data (per following tables) | | | To initialize at new values. Initialization occurs next time a measurement is made. |
| | | | | N99 values to be loaded to obtain desired POS ERR and VEL ERR elements with corresponding octal values for erasable. |

W-MATRIX TABLE (V67)

| | | | | | |
|---|---|---|---|---|---|
| WRENDPOS | | 2000-P20 | WRENDVEL | | 2001-P20 |
| WORBPOS | | 2004-P22 | WORBVEL | | 2005-P22 |
| WMID POS | | 3000-P23 | WMIDVEL | | 3001-P23 |
| N99 R1 | 1000 ft | OCT | N99 R2 | fps | OCT |
| 10000 | 10 | 137 | 10 | 10 | 762 |
| 08000 | 8 | 114 | 8 | 8 | 620 |
| 06000 | 6 | 71 | 6 | 6 | 453 |
| 04000 | 4 | 46 | 4 | 4 | 307 |
| 02000 | 2 | 23 | 2 | 2 | 144 |
| 01000 | 1 | 11 | 1 | 1 | 61 |
| 00800 | .8 | 7 | .8 | .8 | 50 |
| 00600 | .6 | 5 | .6 | .6 | 34 |
| 00400 | .4 | 3 | .4 | .4 | 24 |
| 00300 | .2 | 2 | .2 | .2 | 10 |
| 00100 | .1 | 1 | .1 | .1 | 5 |

| STA/T STEP | PROCEDURE | PANEL | REMARKS |
|---|---|---|---|
| | 4.8.3.6 (V74) Initialize Erasable Dump Via Downlink | | Dumps all eight banks of erasable memory via downlink. |
| | CMC - on (req), 4.8.1.3 | | |
| CMP | 1 Key V74E<br>(V74 will deliver two complete dumps) | 2,140 | |
| | 4.8.3.7 (V91) Display Banksum | | Displays sum of each bank for comparison. |
| | CMC - on (req), 4.8.1.3 | | |
| | 1 Key V37E 00E | | Procedure must be performed in P00. |
| | 2 Key V91E | | |
| | Poss OPR ERR | | If another extended verb active. |
| | 3 FL V05 N01 | | |
| | Banksum XXXXX | | Sum of bits of chosen bank. |
| | Bank No. XXXXX | | Number of bank being read. |
| | Bugger word XXXXX | | Factor required to make \|R1\| = \|R2\|. |
| | Accept V34E (halt summing) | | Expected bank and banksum acceptable ( \|R1\| = \|R2\| ). |
| | Reject PRO, recycle 3 (next bank) | | 43 banks. |



NORMAL/BACKUP

| STA/T | STEP | PROCEDURE | PANEL | REMARKS |
|---|---|---|---|---|
| | | 4.8.4 SCS GENERAL | | |
| | | 4.8.4.1 SCS Power Down | | Describes safe power-down configuration. |
| | 1 | Provide Safe Sys Configuration | | |
| CDR | | EMS FUNC - OFF | 1 | |
| | | EMS MODE - STBY | | |
| | | AUTO RCS (16) - OFF | 8 | |
| | | BMAG MODE (3) - RATE 2 | 1 | |
| | | SPS THRUST - NORM | | Normal position selected to prevent inadvertent SPS firing. |
| | 2 | Remove SCS Pwr | | |
| | | TVC SERVO PWR (both) - OFF | 7 | |
| | | FDAI/GPI PWR - OFF | | |
| | | LOGIC 2/3 PWR - OFF | | |
| | | ELEC PWR - OFF | | |
| | | SIG CONDR/DR BIAS PWR (both) - OFF | | |
| | | BMAG PWR (both) - WARMUP | | |
| | | RHC PWR NORM (both) - OFF | 1 | |
| | | xxxxxxxxxxxxxxxxxxxxx<br>x x | | |
| | | For tot pwr down | | When BMAG switches set to OFF, 40-minute warmup may be required (BMAG 1 and 2 TEMP lights extinguish when operating temperature is reached) before normal operation of BMAGs. If set from ON to WARMUP, BMAG TEMP lights should remain out. |
| | | W BMAG 1 PWR - OFF | 7 | |
| | | x x<br>xxxxxxxxxxxxxxxxxxxxx | | |
| | 3 | Pwr Down ORDEAL | | |
| | | FDAI sw (both) - INRTL | 13 | |
| | | EARTH/LUNAR - PWR OFF | | |
| | | LTG - OFF | | |

| STA/T | STEP | PROCEDURE | PANEL | REMARKS |
|---|---|---|---|---|
| | 4 | Pwr Down COAS | | |
| LMP | | COAS PWR (2) - OFF | 15,16 | |
| CDR, CMP | 5 | Miscellaneous | | |
| | | THC - neut, LOCKED | | |
| | | RHC (both) - LOCKED | | |
| | 6 | Remove Logic Sw Pwr | | Optional step to place panel 1 switches on logic buses in their OFF position. Relationship between switch positions and logic buses described in 4.6.3. |
| CDR | | FDAI SCALE - 5/1 | 1 | |
| | | FDAI SEL - 1 or 2 | | |
| | | ATT SET - GDC | | ATT SET switch should be left at GDC when not in use. Also refer to 4.6.1.1, note 5. |
| | | MAN ATT (3) - RATE CMD | | |
| | | LIM CYCLE - on (up) | | |
| | | ATT DBD - MAX | | |
| | | RATE - LO | | |
| | | EMS ROLL - OFF | | |
| | | TVC GMBL DR (2) - 1 | | |
| | 4.8.4.2 | SCS Power Up | | Used to power up display and control electronics of SCS. |
| | 1 | Provide Safe Sys Configuration | | |
| | | AUTO RCS (16) - OFF | 8 | |
| | | BMAG MODE (3) - RATE 2 | 1 | Cages BMAGs and prevents attitude error signal, if any, from causing jet firings when RCS enabled. |
| | 2 | Set Pwr Switches | | |
| | | LOGIC 2/3 PWR - on (up) | 7 | Configures G&C for future command/control functions. Provides power for control and GDC electronics. |
| | | ELEC PWR - GDC/ECA | | |

| STA/T | STEP | PROCEDURE | PANEL | REMARKS |
|---|---|---|---|---|
| CDR | | SIG CONDR/DR BIAS PWR (both) - AC1 or AC2 | 7 | Switch 1 also provides SCS signal conditioner power for the following TLM functions: rate and attitude error, SCS auto TVC, MTVC, gimbal position transducer and RHC proportional rate commands. Switch 2 provides SCS signal conditioner power for TVC pitch and yaw differential clutch current TLM. For increased reliability, switches should not be set on same bus. Also refer to 4.6.1.2, note 5. |
| CMP | | BMAG TEMP lt (2) - out | 2 | |
| CDR | | FDAI/GPI PWR - OFF | 7 | If FDAIs are powered when BMAGs come up to speed, rate needles will oscillate full scale. |
| | | BMAG PWR (both) - ON | | Provides rate and attitude source for control and display functions. |
| | | FDAI/GPI PWR - BOTH | | Provides power for display electronics. |
| | | RHC PWR NORM (both) - AC/DC | 1 | Provides power to RHC for manual control functions if needed. |
| | 4.8.4.3 | Drift Rate Adjust | | Permits periodic adjustment of finite drift rates of <1 deg/sec. It is intended for use during long periods of drift such as in thermal control where high power consumption undesirable. |
| | 1 | Set up Pwr Sw | | |
| | | LOGIC 2/3 PWR - on (up) | 7 | Powers panel 1 controls for command/control functions. |
| | | ELEC PWR - ECA | | Powers control electronics. |
| CMP | | BMAG TEMP lt (2) - out | 2 | |
| CDR | | FDAI/GPI PWR - OFF | 7 | If FDAIs are powered when BMAGs come up to speed, rate needles will oscillate full scale. |

| STA/T STEP | PROCEDURE | PANEL | REMARKS |
|---|---|---|---|
| CDR | BMAG 2 PWR - ON | 7 | Provides rate source for control and display functions. |
| | FDAI/GPI PWR - 1 | | Provides power for display electronics. |
| | SIG CONDR/DR BIAS PWR (both) - AC1 or AC2 | | 4.6.1.2, note 5. |
| | RHC PWR NORM (both) - AC/DC | 1 | |
| 2 | Establish Rate Disp for Ball 1, 4.7.2.1<br>FDAI SEL - 1<br>BMAG MODE - RATE 2 | | |
| 3 | Establish SCS Min Imp, 4.7.1.2<br>MAN ATT (3) - MIN IMP<br>SC CONT - SCS<br>AUTO RCS - MNA or MNB | 8 | Single jet control in each axis preferred to allow fuel conservation. |
| 4 | Adj Veh Rates<br>RHC - ARMED<br>Adj rates using FDAI 1<br>RHC - LOCKED | | FDAI SCALE - 5/1 recommended since expected rates will be <1 deg/sec. |
| 4.8.4.4 | Minimum Power SCS Attitude Hold (Three or Two Axes) | | Provides attitude hold in two or three axes, as desired, for prolonged periods using low power consumption. |
| 1 | Set Pwr Sw<br>LOGIC 2/3 PWR - on (up)<br>ELEC PWR - ECA | 7 | If total attitude display desired, select GDC/ECA. |



NORMAL/BACKUP

| STA/T STEP | PROCEDURE | PANEL | REMARKS |
|---|---|---|---|
| CMP | BMAG TEMP lt (2) - out | 2 | |
| CDR | FDAI/GPI PWR - OFF | 7 | If FDAIs powered when BMAGs come up to speed, rate needles will oscillate full scale. |
| | SIG CONDR/DR BIAS PWR (both) - AC1 or AC2 | | 4.6.1.2, note 5. |
| | BMAG PWR (both) - ON | | |
| | FDAI/GPI PWR - 1 | | Provides power for display electronics. |
| 2 | Establish SCS Att Hold/Rate Cmd, 4.7.1.4 | | |
| | MAN ATT (3 or 2) - RATE CMD | 1 | Selection by axis using these switches will determine axes in which attitude hold is enabled. |
| | LIM CYCLE - on (up) | | |
| | ATT DBD - MAX | | |
| | RATE - LO | | |
| | SC CONT - SCS | | |
| | BMAG MODE (3) - RATE 2 | | |
| | AUTO RCS - MNA or MNB | 8 | Single jet control in each axis preferred to allow fuel conservation. |
| | BMAG MODE (3 or 2) - ATT 1/RATE 2 | 1 | |
| 3 | Sel Disp, 4.7.2.1 & 2 | | |
| | FDAI SEL - 1 | | |
| | FDAI SOURCE - GDC | | |
| 4 | Mon FDAI 1 att err during limit cycling | | |

| STA/T | STEP | PROCEDURE | PANEL | REMARKS |
|---|---|---|---|---|
| | | 4.8.4.5 SCS Attitude Maneuver | | Provides options for performing SCS attitude maneuver during normal orbital operations or to satisfy specific mission requirements. Permits easy correlation to G&C Reference Modes, 4.7, and other G&C General Procedures, 4.8. |
| | 1 | The following are req<br>ISS - on & orient known (for step 3a), 4.8.1.3 & 4.14<br>SCS - on, 4.8.4.2 | | |
| CDR | 2 | Obtain mnvr data from MSFN | | |
| | | a. Fnl mnvr angles<br>R___°, P___°, Y___° | | |
| or | | b. External ref cues | | |
| | 3 | Maneuver | | Select FDAI display as required. Also refer to 4.6.1.2, note 6. |
| | | a. To specified mnvr angles<br>If ISS avail<br>Perform GDC align to IMU gmbl angles, 4.8.4.6<br>If ISS not avail<br>Perform alternate SC Inertial Att Determination, 4.14.2.1<br>Set ATT SET tw - to desired values (step 2) | 1 | |
| | | Sel att cont mode, 4.7.1 | | Mode should be compatible with magnitude of maneuver - e.g., rate command, acceleration command or minimum impulse, and desired rates. |



NORMAL/BACKUP

| STA/T STEP | PROCEDURE | PANEL | REMARKS |
|---|---|---|---|
| CDR | RHC - mnvr | | Use total attitude and/or attitude error displays as required to obtain final gimbal angles. |
| or | b. To external ref<br>Sel att cont mode, 4.7.1<br>RHC - mnvr | | Null rates at desired orientation. |
| | 4.8.4.6 GDC Alignment to IMU Gimbal Angles | | Provides two methods for aligning GDC to IMU. |
| 1 | The following are req<br>CMC - (on for step 3b), 4.8.1.3<br>ISS - on & orient known, 4.8.1.3 & 4.14<br>SCS - on, 4.8.4.2<br>FDAI 1 sw - INRTL (desired) | 13 | Provides easy comparison between FDAI and ATT SET values. |
| 2 | Establish Att Cont, 4.7.1<br>Damp veh rates | | Selected to prevent drift error during alignment process. |
| 3 | Perform Att Err Disp - ISS Att Set Source, 4.7.2.4 | | 4.6.1.1, note 5. |
| | a. FDAI SOURCE - ATT SET<br>ATT SET - IMU<br>FDAI SEL - 1<br>ATT SET tw - null FDAI 1 errors | 1 | Verify that ATT SET tw and FDAI 1 indicate same total attitude because false nulling of error needles could occur 180° from desired attitude. |

| STA/T | STEP | PROCEDURE | PANEL | REMARKS |
|---|---|---|---|---|
| CMP<br>CDR | or b. | V16 N20E<br>ATT SET tw - adj to IMU gmbl angles on DSKY | 2,140<br>1 | |
| | or c. | ATT SET tw - adj to IMU gmbl angles as ind on FDAI | | |
| | 4 | Align GDC, 4.7.3<br>ATT SET - GDC<br>GDC ALIGN pb - push, hold<br>FDAI SEL - 1/2 | | Verify both FDAIs indicate same total attitude. |
| | 4.8.4.7 | Attitude Reference System Comparison | | |
| | 1 | The following are req<br>CMC - on, 4.8.1.3<br>ISS - on & orient known, 4.8.1.3 & 4.14<br>SCS - on, 4.8.4.2 | | |
| CMP | 2 | Key V37E 00E | 2,140 | |
| | 3 | Establish Att Cont, 4.7.1<br>Damp veh rates | | |
| | 4 | Key V06 N20E (ICDU angles)<br>R, P, Y XXX.XX DEG | | Required to allow rough ATT SET adjustment to IMU gimbal angles prior to nulling operation. |



NORMAL/BACKUP

| STA/T | STEP | PROCEDURE | PANEL | REMARKS |
|---|---|---|---|---|
| | 5 | Perform ATT SET/IMU comparison, 4.7.2.4 | | |
| CDR | | FDAI SEL - 1 | 1 | |
| | | FDAI SOURCE - ATT SET | | |
| | | ATT SET - IMU | | 4.6.1.1, note 5. |
| | | ATT SET tw (3) - set ≈ to DSKY values, null FDAI 1 att err | | |
| CMP | | ENTR (when nulled) | 2,140 | |
| | | Rcd DSKY values<br>R___°, P___°, Y___° | | Error needle bias, if any, determined and may be subtracted from GDC drift in step 6 (postflight). |
| | | Rcd ATT SET values<br>R___°, P___°, Y___° | 1 | |
| | 6 | Perform ATT SET/GDC comparison | | |
| CDR | | ATT SET - GDC | | |
| | | ATT SET tw (3) - null FDAI 1 att err | | |
| CMP | | ENTR (when nulled) | 2,140 | |
| | | Rcd DSKY values<br>R___°, P___°, Y___° | | |
| | | Rcd ATT SET values<br>R___°, P___°, Y___° | 1 | |
| | 4.8.4.8 | ORDEAL Initialization | | Aligns one or both FDAIs to local vertical coordinates. |
| | 1 | The following are req | | |
| | | CMC - on (for steps 4a & 7a), 4.8.1.3 | | |
| | | ISS - on & aligned, nom option (for step 7a), 4.8.1.3 & 4.14 | | IMU and/or SCS attitude reference system must be aligned with +Y axis of reference along (V x R), where V is velocity vector and R is position vector from center of earth/moon. |
| | | SCS - on, 4.8.4.2 | | |
| | 2 | Sel Tot Att Disp, 4.7.2.5 | | |

| STA/T | STEP | PROCEDURE | PANEL | REMARKS |
|---|---|---|---|---|
| CDR | 3 | Set ORDEAL cont, 4.7.2.6<br>FDAI 2 or 1 sw - ORB RATE<br>EARTH/LUNAR - as req<br>MODE - HOLD/FAST | 13 | Either or both FDAIs may be driven by ORDEAL. |
| | 4 | Obtain alt setting | | |
| CMP | | a. (R30) orb param disp routine<br>Key V82E<br>Record Ha and Hp<br>Calculate ave | 2,140 | |
| | or | b. (P21) ground track determination prog<br>Key V37E 21E<br>Record alt for 10-min intervals of present orb<br>Calculate ave | | |
| | or | c. MSFN<br>If CMC in STBY, obtain alt setting from MSFN | | |
| CDR | 5 | ALT SET - adj to proper alt | 13 | |
| | 6 | Sel att cont mode, 4.7.1, & mnvr to place +Xsc in orb plane (0° yaw) | | |



NORMAL/BACKUP

| STA/T | STEP | PROCEDURE | PANEL | REMARKS |
|---|---|---|---|---|
| CDR | 7 | Obtain θ - pitch angle to lcl horiz | | θ is the angle included between +Xsc and local horizontal. Angle in range 0° to 180° indicates +Xsc above local horizontal plane. Total range 0° to 360°. |
| CMP | | a. (R31) rndz param disp routine<br>Key V83E | 2,140 | |
| CDR | or | b. MSFN<br>If CMC in STBY, obtain θ from MSFN based on +Xsc pointed at horiz<br>Mnvr to point +Xsc at horiz, 4.8.4.5 | 13 | θ based on +Xsc pointed at horizon dependent on present altitude. |
| | 8 | Slew FDAI to θ | | The CMC display of θ is from 0° to 360°. |
| | 9 | MODE - OPR/SLOW<br>Slew/adj FDAI precisely | | FDAI may be more accurately adjusted using 1° marks if yaw angle is 0° and roll angle 0° or 180°. When momentary SLEW switch released, ORDEAL is in operate mode. |
| | 10 | Repeat 7 thru 9 as req | | FDAI sw (both) must be at INRTL (pwr OFF or not) to display pitch inertial attitude. |
| | 4.8.4.9 | SCS Passive Thermal Control Using Wobble Mode | | For G&N Passive Thermal Control Procedure, refer to 4.8.1.13 and 14. |
| | 1 | Set up pwr sw<br>LOGIC 2/3 PWR - on (up)<br>ELEC PWR - ECA | 7 | If total attitude display desired, select GDC/ECA. |

| STA/T STEP | PROCEDURE | PANEL | REMARKS |
|---|---|---|---|
| CMP<br>CDR | BMAG TEMP lt (2) - out<br>FDAI/GPI PWR - OFF | 2<br>7 | If FDAIs powered when BMAGs come up to speed, rate needles will oscillate full scale. |
| | BMAG PWR (both) - ON<br>FDAI/GPI PWR - 1 | | |
| | SIG CONDR/DR BIAS PWR (both) - AC1 or AC2 | | 4.6.1.2, note 5. |
| | RHC PWR NORM (both) - AC/DC | 1 | |
| 2 | Establish SCS att hold/rate cmd<br>MAN ATT (3) - RATE CMD<br>LIM CYCLE - on (up)<br>ATT DBD - MIN | | This switching assumes RCS not enabled or attitude error needles are nulled before this switching performed. |
| | RATE - LO<br>SC CONT - SCS<br>BMAG MODE (3) - RATE 2<br>AUTO RCS A/C ROLL or B/D ROLL (4) - MNA or MNB | 8 | Only one pair of roll quads should be enabled. |
| | AUTO RCS PITCH & YAW - set for single jet oper<br>BMAG MODE (3) - ATT 1/RATE 2 | 1 | Single jet control in PITCH and YAW provides reduced RCS authority for attainment of minimum rates. |
| 3 | Select Disp<br>FDAI SEL - 1<br>FDAI SOURCE - GDC | | |
| 4 | Mnvr SC to desired att | | Maneuver should place desired wobble axis in CSM -Z+Y quadrant, _____° from X axis. |



NORMAL/BACKUP

| STA/T | STEP | PROCEDURE | PANEL | REMARKS |
|---|---|---|---|---|
| CDR | 5 | Achieve pitch up & yaw right rates of 0.01-0.02°/sec | | Allow CSM to deadband to these rates. Rate may be obtained manually if minimum impulse control used. |
| | 6 | MAN ATT ROLL - ACCEL CMD | 1 | |
| | | LIM CYCLE - OFF | | |
| | | ATT DBD - MAX | | |
| | | RATE - HI | | |
| | | BMAG MODE (3) - RATE 2 | | |
| | | AUTO RCS ROLL (8) - MNA or MNB | 8 | |
| | | Init _____°/sec roll rate | | Full roll authority can be used to establish this rate with one RHC action. |
| | | AUTO RCS (16) - OFF | | |
| | 4.8.4.10 | SCS Passive Thermal Control Using BAR-B-Q Minimum Power Mode | | For G&N Passive Thermal Control Procedure, refer to 4.8.1.13 and 14. |
| | 1 | Set up pwr sw | | |
| | | LOGIC 2/3 PWR - on (up) | 7 | |
| | | SCS ELEC PWR - ECA | | If total attitude display desired, select GDC/ECA. |
| CMP | | BMAG TEMP lt (2) - out | 2 | |
| CDR | | FDAI/GPI PWR - OFF | 7 | If FDAIs powered when BMAGs come up to speed, rate needles will oscillate full scale. |
| | | BMAG PWR (both) - ON | | |
| | | FDAI/GPI PWR - 1 | | |
| | | SIG CONDR/DR BIAS PWR (both) - AC1 or AC2 | | 4.6.1.2, note 5. |
| | | RHC PWR NORM (both) - AC/DC | 1 | |
| | 2 | Sel Disp | | |
| | | FDAI SEL - 1 | | |
| | | FDAI SOURCE - GDC | | |

| STA/T | STEP | PROCEDURE | PANEL | REMARKS |
|---|---|---|---|---|
| CDR | 3 | Mnvr SC to desired att | | |
| | 4 | Establish 2 axis SCS att hold/rate cmd<br>MAN ATT P&Y (2) - RATE CMD | 1 | |
| | | MAN ATT ROLL - ACCEL CMD<br>LIM CYCLE - on (up) or MIN IMP<br>ATT DBD - MAX<br>RATE - HI<br>SC CONT - SCS | | |
| | | AUTO RCS PITCH & YAW - set for single jet oper | 8 | Engine combinations available for single jet control are: |
| | | AUTO RCS A/C ROLL or B/D ROLL (4) - MNA or MNB | | |
| | | BMAG MODE (3) - ATT 1/RATE 2 | 1 | |
| | 5 | Init 0.1°/sec roll rate | | |
| | 6 | Mon FDAI 1 att err during limit cycling | | |

SINGLE JET CONTROL

| | | | | |
|---|---|---|---|---|
| PITCH | A3-A4 | C3-C4 | A3-C4 | C3-A4 |
| YAW | B3-B4 | D3-D4 | B3-D4 | D3-B4 |



NORMAL/BACKUP

| STA/T STEP | PROCEDURE | PANEL | REMARKS |
|---|---|---|---|
| | 4.9 RENDEZVOUS | | Provides procedural requirements for CSM rendezvous with LM. |
| | 4.9.1 CSM/LM RENDEZVOUS | | |
| | CMC - on (req), 4.8.1.3<br>ISS - on & orient known (req), 4.8.1.3 & 4.14<br>SCS - on (req), 4.8.4.2<br>Opt pwr up (req), 4.8.1.4 | | Required for LM acquisition and SXT tracking during rendezvous phase. |
| | RCS DAP - load & activate (req), 4.8.2.1<br>Set up for VHF rng, 4.5.6.6 | | |
| 1 | Verify/confirm with MSFN, oper status of LM &/or CSM sys | | |
| 2 | Select desired att cont, 4.7.1 | | |
| 3 | Select desired disp, 4.7.2 | | |
| 4 | Perform rndz nav, 4.11 | | |
| 5 | If CSM passive<br>Perform targeting, 4.12.2 | | |
| 6 | If CSM active<br>Perform rndz prethrusting, 4.12.2<br>Perform thrusting, 4.13 | | |



NORMAL/BACKUP

| STA/T STEP | PROCEDURE | PANEL | REMARKS |
|---|---|---|---|
| | 4.10 LM INTERFACE & EVA ACTIVITIES | | |
| | 4.10.1 MANEUVERS | | |
| | 4.10.1.1 CSM/SLA Separation, Transposition and Docking | | |
| | 1 The following are req<br>CMC - on, 4.8.1.3<br>COAS - installed & calib, 4.14.1.8<br>LM Docking Sys Probe Extension & Stat Check, 4.4.1.1 (step 5)<br>SCS - on, 4.8.4.2<br>ISS - on & orient known, 4.8.1.3 & 4.14<br>RCS DAP load & activate, 4.8.2.1<br>R1 - 111XX<br>R2 - X1111 } Noun 46 Disp | | Provides G&N control capability.<br><br>Provides SCS control capability. |
| | SIVB mnvrs to sep att | | Establishes G&N control capability as follows: CSM configuration, 4 quad translation (quads A, B, C, D - on).<br><br>CSM maneuver should be performed in the following attitude and rate deadbands in either the CMC or SCS control modes to simplify the control task during separation. |
| CMP | Key V16 N20E<br>(N20) R____ P____ Y____<br>-60° +180° + to -<br><br>(N22) R___° P___° Y___°<br><br>Load N22 (Docking att) | 2 | |

| | CMC | SCS |
|---|---|---|
| ATT DBD | ±0.5° (R03) | ±0.2° (MIN) |
| RATE DBD | +0.2°/sec (fixed) | ±0.2°/sec (LO) |
| RATE CMD (RHC) | +0.5°/sec (R03) | ±0.65°/sec |



NORMAL/BACKUP

| STA/T | STEP | PROCEDURE | PANEL | REMARKS |
|---|---|---|---|---|
| | | Pnl configuration per 4.3.2.1 | | Postorbital insertion status checklist. |
| | 2 | Pnl reconfiguration & sep prep | | |
| CMP | | Key V60E | 2 | Nulls FDAI 1 error needles, N17 = N20. |
| | | Key V63E | | Permits display of error between present and astronaut loaded gimbal angles on FDAI 1, N20 and N17. |
| | | Verify SM RCS activation | | |
| | | SM RCS PRPLNT tb (8) - gray | | |
| | | Set pnl 1 SCS att cont | | |
| CDR | | THC PWR - on (up) | 1 | |
| | | RHC PWR DIR (both) - MNA/MNB | | Enables direct RCS coils for contingency takeover. |
| | | RHC PWR NORM (both) - AC/DC | | |
| | | SC CONT - SCS | | |
| | | CMC MODE - FREE | | |
| | | BMAG MODE (3) - RATE 2 | | Cages the BMAGs and prevents attitude maneuver signals from causing them to hit their stops. |
| | | ATT DBD - MIN | | |
| | | RATE - LO | | |
| | | LIM CYCLE - OFF | | |
| | | LV IND/GPI sw - SII/SIVB (verify) | | |
| | | AUTO RCS (16) - MNA or MNB | 8 | Jets enabled on MN bus A & B should be selected so that command will be maintained for the most critical maneuvers in case of either dc bus failure. |
| | | MAN ATT (3) - MIN IMP | 1 | Establishes proportional manual control with rate damping for SCS backup. |
| | | TVC SERVO PWR 1 - AC1/MNA | 7 | |

| STA/T | STEP | PROCEDURE | PANEL | REMARKS |
|---|---|---|---|---|
| CDR | | Establish sep performance cues | | |
| | | Perform EMS ΔV Test & Null Bias check, 4.7.6.1, & EMS ΔV Setup, 4.7.6.2, except set ΔV ind at -100 to avoid oper around the 0.0 fps settings | 7 | |
| | | GDC - align, 4.8.4.6 | | |
| | | Establish displays | | |
| | | FDAI SEL - 1/2 | 1 | Enables G&N on FDAI 1, SCS on FDAI 2. |
| CDR,CMP | | Key V37E 00E | 2 | Integrates state vector forward. |
| CDR | | EVNT TMR RSET - RSET | 1 | RSET position is momentary. |
| | | EVNT TMR ind - 00:00 | | |
| | 3 | Enbl sequencer logic | | Provides power to sequencer and pyro circuits for separation. |
| | | cb SECS ARM (2) - close | 8 | |
| | | After MSFN AOS | | |
| | | SECS LOGIC (both) - on (up) | | Lever lock. |
| | | Report logic arm | | |
| | | After GO from MSFN | | |
| | | SECS PYRO ARM (2) - on (up) | | Lever lock. |
| | | Perform fnl presep func | | |
| CMP | | V66E | 2 | Transfer CSM state vector to LM storage. |
| | | Key V37E 47E (thrust mon) | | Permits display of velocity change during thrusting on DSKY. Perform ≈60 seconds prior to separation to minimize effective PIPA bias. |
| | | FL V16 N83 | | |
| | | ΔVX, Y, Z (cont) XXXX.X FPS | | |



NORMAL/BACKUP

| STA/T STEP | PROCEDURE | PANEL | REMARKS |
|---|---|---|---|
| CDR | RHC 2 - ARMED | | |
| CMP | RCS CMD - ON | 2 | ON position is momentary. Enables RCS latching relay in SECS. This function also accomplished automatically by SECS. |
| CDR | RHC - RCS check (audible)<br>SC CONT - CMC<br>MAN ATT (3) - RATE CMD | 1 | |
| | 4 Separation | | |
| LMP | FC REAC VLVS - LATCH | 3 | |
| CDR | EMS MODE - NORM | 1 | Perform 30 seconds prior to separation to minimize effective EMS drift. |
| | CMC MODE - HOLD or AUTO | | |
| | THC - ARMED | | |
| -00:03 | THC - +X & hold 3 sec prior to sep | | Initiates preseparation tension. |
| 00:00 | CSM/LV SEP pb - push & hold<br>Start Evnt Tmr<br>LV TK PRESS ind (4) - 0<br>LV ENG 1 lt - out<br>CSM/LV SEP pb - rel | | Guarded.<br><br>Indicates physical separation. |
| | xxxxxxxxxxxxxxxxxxxxxxxxxxxxxxxxxx | | |
| | No sep<br>THC - CCW (leave in detent) | | |
| 00:00 | Evnt Tmr rset & counting up (auto)<br>RCS dir ullage (auto) | | Activates automatic SECS separation and direct RCS ullage. |
| 00:03 | LV TK PRESS ind (4) - 0<br>LV ENG 1 lt - out | | SECS delays separation for 3 seconds.<br>Indicates physical separation. |

| STA/T STEP | PROCEDURE | PANEL | REMARKS |
|---|---|---|---|
| CDR<br>00:07 max | THC - neut<br>RCS dir ullage<br>terminated (auto)<br>Confirm ΔV ≈1 fps | | Terminates automatic direct RCS ullage. |
| | xxxxxxxxxxxxxxxxxxxxxxxxxxxxxxxxxx | | |
| 00:04 max | THC - neut | | After ≈4 seconds of free thrusting. |
| | ΔV ≈-100.8 fps | | Based on CSM weight of 65,150 pounds an average separation ΔV as follows:<br>In 4.4 seconds ΔV = -100.8 fps<br>In 5.0 seconds ΔV = -100.9 fps<br>Either EMS and/or DSKY may be used to read ΔV = -100.8 fps which should be observed in 4.5±0.5 seconds. ΔV and time should be monitored concurrently to determine which cue will prevail. The EMS should provide primary cue. |
| 5 | Postsep pnl configuration | | During coast to transposition. Provides normal, safe, formation flight configuration. |
| CMP | SM RCS PRPLNT tb (8) - gray (verify)<br>SM RCS He tb (8) - gray (verify)<br>SM RCS SEC FUEL PRESS (4) - CLOSE | 2 | |
| LMP | FC REAC VLVS - NORM | 3 | Momentary. |

| STA/T | STEP | PROCEDURE | PANEL | REMARKS |
|---|---|---|---|---|
| LMP | 6 | Transposition | | |
| | | xxxxxxxxxxxxxxxxxxxxxxxxxxxxxxxxxxxx<br>x x<br>No TLI or propulsive venting not inhibited<br>Do NOT perform -X trans at 00:35<br>x x<br>xxxxxxxxxxxxxxxxxxxxxxxxxxxxxxxxxxxx | | If TLI not performed or propulsive venting not inhibited, minimum separation distance at completion of pitch maneuver will be ≈65 feet. |
| CDR | | | | |
| 00:35 | | THC -X to ΔV = -100.3 fps<br>MAN ATT PITCH - ACCEL CMD<br>RHC - pitch up 2°/sec<br>Visually acq SIVB & null pitch rate | 1 | Positive pitch at 2°/second followed by a negative pitch command to null rates at a total pitch maneuver of 180°. At completion of pitch maneuver, minimum separation distance will be ≈55 feet. |
| CMP | | V62E | 2 | Permits display of error between present and docking attitude on FDAI 1, N20 and N22. |
| CDR | | MAN ATT PITCH - RATE CMD<br>RHC, THC - Null trans err & rates<br>Perform auto roll mnvr to docking att, 4.8.3.4 | 1 | |
| | or | Perform man roll mnvr to docking att<br>CMC MODE - FREE<br>RHC - roll left 60° to null err needles | | |
| | 7 | HGA oper, 4.5.6.2 | | |

| STA/T | STEP | PROCEDURE | PANEL | REMARKS |
|---|---|---|---|---|
| | 8 | Set pnl 1 SCS att cont | | |
| CDR | | CMC MODE - FREE (verify) | 1 | |
| | | BMAG MODE (3) - ATT 1/RATE 2 | | |
| | | SC CONT - SCS | | |
| | 9 | Verify cont stat for docking | | |
| | | COAS PWR - on (up) | 15 | |
| CMP | | EXT RNDZ LT - SPOT | 2 | |
| | 10 | PROBE EXTD/REL - RETR (verify) | | Guarded. |
| | | PROBE EXTD/REL tb (2) - gray (verify) | | Verifies capture latches not locked. |
| | 11 | Init capture latch | | |
| CDR | | THC - translate to close at 0.25 to 0.5 fps maintain min lateral velocity | | Rate established visually. Use COAS and docking target for alignment cues. |
| | | RHC - maintain min relative align angles with SIVB | | |
| | | At contact, apply +X thrust as req | | Contact will be indicated by audio cues, a slight disturbance in motion, and/or COAS observation. |
| CMP | | PROBE EXTD/REL tb (2) - bp | | Talkbacks barber pole indicate capture. Only one talkback required for indication. Failure to capture will also be indicated by no noticeable rebound tension load (deceleration) and separation from SIVB. If retraction initiated, it will not occur until capture. |
| CDR | | SC CONT - CMC | 1 | |
| | | xxxx

| STA/T | STEP | PROCEDURE | PANEL | REMARKS |
|---|---|---|---|---|
| CDR | | SC CONT - SCS<br>THC - -X withdraw to formation flt distance | 1 | |
| CMP | | PROBE EXTD/REL - EXTD/REL for 5 sec<br>PROBE EXTD/REL - RETR<br>PROBE EXTD/REL tb - gray (verify)<br>Attempt redock as before | 2 | Guarded. EXTD/REL position is momentary.<br>Guarded. |
| | | XXXXXXXXXXXXXXXXXXXXXXXXXXXXXXXXXXXXXXXXXX | | |
| | | Allow probe to damp SC motions (≈10 sec) | | |
| CDR | | THC - null pitch & yaw align err to within ±3° (min possible) | | Alignment determined using COAS and docking target. Retraction loads may cause docking ring damage. Loads are minimum at zero misalignment during retraction. |
| | | RHC - null roll align err to within ±10° | | Docking with roll angles >±10° may prohibit LM umbilical connection. |
| | 12 | Init retraction & docking latch closure | | |
| CMP | | PROBE RETR PRIM - 1<br>Observe retraction movement between the two vehicles<br>PROBE EXTD/REL tb (2) - gray | | When capture latch alignment satisfactory. 10-inch retraction stroke should take ≈10 seconds.<br>Talkback A will indicate only if docking latches 1, 5, and 9 close. Talkback B will indicate only if latches 3, 7, and 11 close. Audio and tactile cues will also indicate docking latch closure. |

| STA/T | STEP | PROCEDURE | PANEL | REMARKS |
|---|---|---|---|---|
| | | xxxxxxxxxxxxxxxxxxxxxxxxxxxxxxxxxxxxx | | |
| CMP | | PROBE EXTD/REL tb (2) - remain bp after 30 sec & docking latch closure cues (auditory & tactile) unsatisfactory<br>PROBE RETR PRIM - 2<br>If docking still unsuccessful<br>PROBE RETR SEC - 1 | 2 | |
| | | xxxxxxxxxxxxxxxxxxxxxxxxxxxxxxxxxxxxx | | |
| | 13 | Safe docking sys | | |
| CDR | | SECS PYRO ARM (2) - SAFE | 8 | Lever lock. |
| | | SECS LOGIC (both) - OFF | | Lever lock. |
| | | cb SECS ARM (2) - open | | |
| | | EDS PWR - OFF | 7 | |
| | | cb EDS (3) - open | 8 | |
| CMP | | PROBE EXTD/REL - OFF | 2 | Guarded. |
| | | PROBE RETR (2) - OFF | | |
| CDR | | cb DOCK PROBE (2) - open | 8 | |
| | 14 | Postdocking pnl configuration | | |
| | | RATE - HI | 1 | |
| | | ATT DBD - MAX | | |
| | | cb RCS LOGIC (2) - open | 8 | |
| CDR | | TVC SERVO PWR (2) - OFF | 7 | |
| CMP | | EXT RNDZ LT - off (ctr) | 2 | |
| | | PRO | | |
| | | FL V37 | | |
| | | Key 00E | | |



NORMAL BACKUP

| STA/T | STEP | PROCEDURE | PANEL | REMARKS |
|---|---|---|---|---|
| CDR | | COAS PWR - OFF | 15 | |
| | | EMS MODE - STBY | 1 | |
| | | EMS FUNC - OFF | | |
| | | BMAG MODE (3) - RATE 2 | | |
| CMP | | TUNL LT - on (up) | 2 | |
| | | Key V83E | | Checks state vector. |
| | | Key V47E | | Moves LM state vector into CM state vector. |
| | | 4.10.1.2 LM Ejection From SLA | | |
| | 1 | The following are req | | |
| | | Prep for LM withdrawal completed, 4.10.2.1 | | |
| | | CMC - on, 4.8.1.3 | | |
| | | SCS - on, 4.8.4.2 | | |
| | | ISS - on & orientation known, 4.8.1.3 & 4.14 | | |
| | | RCS DAP load & activated, 4.8.2.1 | | |
| | | R1 - 21102 | | |
| | | R2 - X1111 | | |
| | 2 | Pre-LM ejection | | |
| CDR | | cb DOCK PROBE (2) - close | 8 | |
| | | Set Evnt Tmr 00:00 | 1 | |
| | | cb SECS ARM (2) - close | 8 | |
| | | After MSFN AOS | | |
| | | SECS LOGIC (both) - on (up) | | Lever lock. |
| | | Report logic arm | | |
| | | After GO from MSFN | | |
| | | SECS PYRO ARM (2) - on (up) | | Lever lock. |

| STA/T | STEP | PROCEDURE | PANEL | REMARKS |
|---|---|---|---|---|
| | 3 | Perform ejection | | |
| LMP | | cb SIVB/LM SEP (2) - close (verify) | 278 | |
| CDR | | TVC SERVO PWR 1 - AC1/MNA | 7 | |
| | | EMS FUNC - ΔV SET | 1 | |
| | | SLEW ΔV ind - -100.0 | | |
| | | EMS FUNC - ΔV | | |
| | | EMS MODE - NORM | | Perform ≈30 seconds prior to ejection to minimize EMS drift error. |
| CMP | | | | |
| 00:00 | | SIVB/LM SEP - on (up) | 2 | Guarded. On (up) position is momentary. |
| | | Start Evnt Tmr | | Spring system will provide a minimum separation velocity of ≈0.7 fps (assumes four actuators operated). |
| CDR | | | | |
| 00:05 | | THC -X & hold | | |
| 00:08 | | THC - neut | | Provides a minimum separation velocity of ≈1.44 fps; or ≈1.38 fps if TLI is not performed or propulsive venting is not inhibited. The following tables provide parameters for flight planning if the variables (SIVB propulsive vent, time of RCS burn, etc.) are changed for specific missions. (See figure 4.10-1.) |
| 00:14 | | CMC MODE - AUTO | 1 | |
| | 4 | Postejection | | |
| | | SECS PYRO ARM (2) - SAFE | 8 | Lever lock. |
| | | SECS LOGIC (both) - OFF | | Lever lock. |
| | | cb SECS ARM (2) - open | | |
| LMP | | cb SIVB/LM SEP (2) - open | 278 | |



NORMAL/BACKUP

| 3 Sec CSM RCS Burn (400 Lb -X Translation) | | | | |
|---|---|---|---|---|
| Configuration | SIVB Propulsive Vent Force (lbs) | Time to Translate 15 Ft (seconds) | | SIVB and CSM Recontact Time (No Evasive Mnvr) |
| | | RCS Burn at 5.0 to 8.0 Sec After Sep | RCS Burn at 8.0 to 11.0 Sec After Sep | |
| LM Ejection In Earth Parking Orbit | 0.0 | 16.3 sec | 17.6 sec | -- |
| | 8.0 | 16.8 sec | 18.6 sec | 1280 sec |
| | 12.5 | 17.2 sec | 19.0 sec | 810 sec |
| | 25.0 | 17.8 sec | 20.2 sec | 400 sec |
| LM Ejection After TLI | 0.0 | 13.5 sec | 14.4 sec | -- |
| | 8.0 | 14.0 sec | 15.0 sec | 375 sec |
| | 12.5 | 14.4 sec | 15.5 sec | 235 sec |
| | 25.0 | 15.6 sec | 16.9 sec | 115 sec |

| No CSM RCS -X Translation | | | |
|---|---|---|---|
| Configuration | SIVB Propulsive Vent Force (lbs) | Time to Translate 15 Ft (secs) | SIVB and CSM Recontact Time (No Evasive Mnvr) |
| | | No RCS Burn | |
| LM Ejection In Earth Parking Orbit | 0.0 | 27.4 sec | -- |
| | 8.0 | 36.3 sec | 600 sec |
| | 12.5 | 42.6 sec | 362 sec |
| | 25.0 | 61.3 sec | 160 sec |
| LM Ejection After TLI | 0.0 | 16.6 sec | -- |
| | 8.0 | 17.0 sec | 237 sec |
| | 12.5 | 17.5 sec | 149 sec |
| | 25.0 | 23.8 sec | 62 sec |

Figure 4.10-1. SIVB/CSM Separation Parameters

| STA/T | STEP | PROCEDURE | PANEL | REMARKS |
|---|---|---|---|---|
| CDR | | LV IND/GPI sw - GPI | 1 | |
| | | CMC MODE - FREE | | When clear of SIVB. |
| | | MAN ATT (3) - MIN IMP | | |
| | | SC CONT - SCS | | |
| CMP | | Reload DAP | 2 | |
| | | N46, R1 = 21111 | | |
| CDR | | EMS MODE - STBY | 1 | |
| | | EMS FUNC - OFF | | |
| | | THC PWR - OFF | | |
| | | RHC PWR DIR (both) - OFF | | |
| | | RHC, THC - LOCKED | | |
| | | TVC SERVO PWR 1 - OFF | 7 | |
| | 4.10.1.3 | LM Undocking From CSM | | This procedure describes CSM activities required each time LM separates from CSM after docking except for final LM separation. These procedures as written are incomplete until properly integrated with corresponding LM procedures. |
| | 1 | Perform prep for manned LM sep, 4.10.2.4 | | |
| | 2 | Perform systems prep | | |
| | | SCS - on, 4.8.4.2 | | |
| | | Sel desired displays, 4.7.2 | | |
| | | Sel SCS rate damping only, 4.7.1.4 | | |
| | | cb DOCK PROBE (2) - close | 8 | |
| CMP | | PROBE EXTD/REL - RETR | 2 | Guarded. |
| | | PROBE EXTD/REL tb (2) - bp (verify) | | Verifies redundant probe retract capability. |
| | | PROBE EXTD/REL - OFF | | Guarded. |



NORMAL BACKUP

| STA/T | STEP | PROCEDURE | PANEL | REMARKS |
|---|---|---|---|---|
| CDR | | MAN ATT (3) - RATE CMD<br>ATT DBD - MAX<br>RATE - HI<br>THC PWR - on (up)<br>RHC PWR NORM (both) - AC/DC<br>RHC PWR DIR (both) - MNA/MNB<br>RHC, THC - ARMED<br>SC CONT - SCS<br>BMAG MODE (3) - RATE 2 | 1 | |
| | 3 | Verify spacecraft status with LM | | CDR, LMP verify spacecraft status with CSM. |
| | 4 | Mnvr to sep att | | Per flight plan. Either vehicle may maintain attitude control. |
| | 5 | Perform fnl prep pnl operations<br>Set Evnt Tmrs<br>EVNT TMR RSET - DOWN | | Timer will be set up to reach 00:00 at separation. |
| -XX:XX | | EVNT TMR START - START (on sig from CDR) | | START position is momentary. |
| | 6 | Separation | | CDR will count down to separation time. |
| | | a. Undocking | | |
| | | CAUTION<br>PROBE EXTD/REL should not be held in EXTD/REL position longer than 20 sec if probe has not extended. Capability of capture latch rel mots may be degraded. | 2 | |

| STA/T STEP | PROCEDURE | PANEL | REMARKS |
|---|---|---|---|
| CMP<br>00:00 | PROBE EXTD/REL - EXTD/REL & hold until 5 sec after LM sep | 2 | Momentary up and guarded. Probe is extended by a compression spring and attenuator airhead forces. The 10-inch extension stroke working against CSM/LM inertia takes ≈5 seconds. |
| | PROBE EXTD/REL tb (2) - gray to bp to gray | | Barber pole indicates power to talkback through the probe circuitry. Return to gray indicates full extension of probe. |
| | Mon LM sep | | CDR will monitor CSM separation. The CSM and LM should attain a separation distance of 15 feet in 27 seconds with a separation velocity of 0.65 fps. Subsequent to 15-foot separation the LM may execute maneuvers with each vehicle configured as desired for attitude control. |
| | b. Soft Undocking (alternate) | | This procedure minimizes undocking ΔV. |
| | PROBE EXTD/REL - EXTD/REL (mom) | | Releasing switch from EXTD/REL position should be done as fast as possible in order to ensure that capture latches relock before probe gets fully extended. |
| | Probe extended & LM still attached (verify) | | LM motion should stop suddenly when probe gets fully extended resulting in both visual and tactile cues of probe extension and probe/drogue engagement. |
| | Allow motions to dampen (5 sec) | | |



NORMAL BACKUP

| STA/T | STEP | PROCEDURE | PANEL | REMARKS |
|---|---|---|---|---|
| | | CAUTION<br>PROBE EXTD/REL should not be held in EXTD/REL position longer than 20 sec. Capability of capture latch rel mots may be degraded. | | |
| CMP<br>00:00 | | PROBE EXTD/REL - EXTD/REL & hold<br>After 2 sec<br>THC - -X (4 jet) for 1 sec<br>PROBE EXTD/REL - OFF after probe/drogue disengagement verified | 2 | Guarded. EXTD/REL position is momentary.<br><br>Guarded. |
| | 7 | Postundocking reconfiguration<br>PROBE EXTD/REL - RETR | | Guarded. Required to provide capture latch talkback signal during subsequent docking. |
| | | PROBE EXTD/REL tb (2) - gray (verify)<br>PROBE EXTD/REL - OFF | | Verifies capture latches cocked.<br>Guarded. |
| CDR | | cb DOCK PROBE (2) - open | 8 | |
| | | Prepare for contingency redocking | | |
| CMP | | EXT RUN/EVA LT - on (up) (verify)<br>EXT RNDZ LT - RNDZ (verify)<br>Activate rndz xpndr, 4.5.6.9 | 2 | If required. |

| STA/T STEP | PROCEDURE | PANEL | REMARKS |
|---|---|---|---|
| | 4.10.1.4 LM Active Docking With CSM | | Describes CSM activities required each time LM docks with CSM. These procedures as written are incomplete until properly integrated with corresponding LM procedures. |
| | 1 The following are req | | |
| CMP | COAS - installed & calib, 4.14.1.8 | | |
| | Docking trgt - installed & on | | |
| | 2 Configure CSM for docking | | |
| CDR | THC PWR - on (up) | 1 | |
| | RHC PWR DIR (both) - MNA/MNB | | |
| | SC CONT - CMC | | |
| | CMC MODE - HOLD | | |
| | BMAG MODE (3) - RATE 2 | | |
| | AUTO RCS (16) - MNA or MNB | 8 | |
| | MAN ATT (3) - RATE CMD | 1 | |
| | THC - ARMED | | |
| CDR,CMP | RHC (both) - ARMED | | |
| CDR | ATT DBD - MIN | | |
| | RATE - LO | | |
| | EXT RUN/EVA LT - on (up) (verify) | 2 | If required. |
| | COAS PWR - on (up) | 15 | |
| | cb DOCK PROBE (2) - close | 8 | |
| | PROBE RETR (2) - OFF | 2 | |
| | cb SECS ARM (2) - close | 8 | |
| | After MSFN AOS | | |
| | SECS LOGIC (both) - on (up) | | Lever lock. |
| | Report logic arm | | |
| | After GO from MSFN | | |
| | SECS PYRO ARM (2) - on (up) (verify) | | Lever lock. |



NORMAL BACKUP

| STA/T | STEP | PROCEDURE | PANEL | REMARKS |
|---|---|---|---|---|
| CDR | | Confirm CSM status with LM | | |
| | | PROBE EXTD/REL - RETR (verify) | 2 | Guarded. |
| | | PROBE EXTD/REL tb (2) - gray (verify) | | Verifies capture latches are not locked. |
| | | xxxxxxxxxxxxxxxxxxxxxxxxxxxxxxxxxxxx | | |
| | | If PROBE EXTD/REL tb - bp | | |
| | | PROBE EXTD/REL - EXTD/REL for 5 sec | | Guarded. EXTD/REL position is momentary. |
| | | PROBE EXTD/REL - RETR | | Guarded. |
| | | PROBE EXTD/REL tb (2) - gray (verify) | | |
| | | xxxxxxxxxxxxxxxxxxxxxxxxxxxxxxxxxxxx | | |
| | 3 | Mon LM closing mnvrs | | LM will make final approach along +X axis at closing rates of 0.25 to 0.5 fps. |
| | 4 | Init capture latch & retraction | | |
| | | PROBE EXTD/REL tb (2) - mon | | Talkbacks barberpole indicates capture. Only one talkback is required for indication. Failure to capture will also be indicated by separation from the LM. If retraction is initiated it will not occur until capture. |
| | | PROBE EXTD/REL tb (2) - bp | | |
| | | xxxxxxxxxxxxxxxxxxxxxxxxxxxxxxxxxxxx | | |
| | | Positive ind of no capture | | |
| | | Advise LM no capture | | |
| | | THC - -X withdraw to formation flt distance | | |
| | | PROBE EXTD/REL - EXTD/REL for 5 sec | | Guarded. EXTD/REL position is momentary. |

| STA/T | STEP | PROCEDURE | PANEL | REMARKS |
|---|---|---|---|---|
| CDR | | PROBE EXTD/REL - RETR<br>PROBE EXTD/REL tb (2) - gray (verify)<br>Attempt redock as before | 2 | Guarded. |
| | | xxxxxxxxxxxxxxxxxxxxxxxxxxxxxxxxxxxxxx | | |
| | | Confirm capture latch to LM<br>CMC MODE - FREE | 1 | |
| | | When LM aligned within ±3°<br>PROBE RETR SEC - 1 | 2 | Initiates probe retraction. The 10-inch retraction stroke should require ≈5 seconds. |
| | | PROBE EXTD/REL tb (2) - gray | | Talkback A will indicate only if docking latches 1, 5, and 9 close. Talkback B will indicate only if latches 3, 7, and 11 close. Audio and tactile cues also indicate docking latch closure. |
| | | xxxxxxxxxxxxxxxxxxxxxxxxxxxxxxxxxxxxxx | | |
| | | PROBE EXTD/REL tb (2) - remain bp & docking latch closure cues (auditory & tactile) unsatisfactory<br>PROBE RETR PRIM - 2 | | |
| | | xxxxxxxxxxxxxxxxxxxxxxxxxxxxxxxxxxxxxx | | |
| | 5 | Safe docking system<br>PROBE EXTD/REL - OFF<br>PROBE RETR (2) - OFF<br>EXT RUN/EVA LT - OFF<br>EXT RNDZ LT - off (ctr) | | Guarded. |



NORMAL BACKUP

| STA/T STEP | PROCEDURE | PANEL | REMARKS |
|---|---|---|---|
| CDR | COAS PWR - OFF | 15 | |
| | cb DOCK PROBE (2) - open | 8 | |
| | SECS PYRO ARM (2) - SAFE | | Lever lock. |
| | SECS LOGIC (both) - OFF | | Lever lock. |
| | cb SECS ARM (2) - open | | |
| | RNDZ XPNDR PWR - ORR | 100 | |
| 6 | Post docking operations prior to IVT | | LM will configure for inactive control status. |
| | CMC MODE - HOLD | 1 | |
| 4.10.1.5 | CSM Active Docking With LM | | Describes CSM activities required each time CSM docks with LM. These procedures as written are incomplete until properly integrated with corresponding LM procedures. |
| 1 | The following is req | | Range and range rate must be within docking limits. |
| | COAS - installed & calib, 4.14.1.8 | | |
| 2 | Configure CSM for docking | | SCS functions are for backup operation. |
| | THC PWR - on (up) | | |
| | RHC PWR DIR (both) - MNA/MNB | | |
| | SC CONT - SCS | | |
| | CMC MODE - FREE | | |
| | AUTO RCS (16) - MNA or MNB | 8 | |
| | MAN ATT (3) - RATE CMD | 1 | |
| | BMAG MODE (3) - ATT 1/RATE 2 | | Establishes SCS attitude hold. |
| | THC - ARMED | | |
| | RHC (both) - ARMED | | |
| | LIM CYCLE - OFF | | |

| STA/T | STEP | PROCEDURE | PANEL | REMARKS |
|---|---|---|---|---|
| CDR | | ATT DBD - MIN | 1 | |
| | | RATE - LO | | |
| | | EXT RUN/EVA LT - on (up) (verify) | 2 | |
| | | COAS PWR - on (up) | 15 | |
| | | cb DOCK PROBE (2) - close | 8 | |
| | | PROBE RETR (2) - OFF | 2 | |
| | | cb SECS ARM (2) - close | 8 | |
| | | After MSFN AOS | | |
| | | SECS LOGIC (both) - on (up) | | Lever lock. |
| | | Report logic arm | | |
| | | After GO from MSFN | | |
| | | SECS PYRO ARM (2) - on (up) | | Lever lock. |
| | | PROBE EXTD/REL - RETR (verify) | 2 | Guarded. |
| | | PROBE EXTD/REL tb (2) - gray (verify) | | Verifies capture latches not locked. |
| | | xxxxxxxxxxxxxxxxxxxxxxxxxxxxxxxxxxxx | | |
| | | PROBE EXTD/REL tb (2) - bp | | |
| | | PROBE EXTD/REL - EXTD/REL for 5 sec | | Guarded. EXTD/REL position is momentary. |
| | | PROBE EXTD/REL - RETR | | Guarded. |
| | | PROBE EXTD/REL tb (2) - gray | | |
| | | xxxxxxxxxxxxxxxxxxxxxxxxxxxxxxxxxxxx | | |
| | 3 | Init capture latch & retraction | | |
| | | RHC, THC - align COAS with LM trgt | | |
| | | THC - init +X to close at 0.25 to 0.5 fps | | Rate established visually. Use COAS and docking target for alignment cues. |



NORMAL BACKUP

| STA/T STEP | PROCEDURE | PANEL | REMARKS |
|---|---|---|---|
| CDR | THC - maintain min lateral velocity<br>RHC - maintain min relative align angles with LM<br>At contact, provide cue to LM for thrusting | | Contact will be indicated by audio cues, slight disturbance in motion and/or COAS observation.<br><br>LM will apply +X thrusting as required on cue from CSM or by tactile cue at contact. |
| | PROBE EXTD/REL tb A and/or B - bp | 2 | Talkbacks barberpole indicate capture. Only one talkback required for indication. Failure to capture will also be indicated by separation from LM. If retraction initiated it will not occur until capture. |
| | Confirm capture latch to LM | | LM will terminate +X thrusting upon receipt of capture cue from the CSM. |
| | xxxxxxxxxxxxxxxxxxxxxxxxxxxxxxxxxxxxxxxx | | |
| | Positive ind of no capture<br>THC - -X withdraw to formation flt distance<br>PROBE EXTD/REL - EXTD/REL for 5 sec<br>PROBE EXTD/REL - RETR<br>PROBE EXTD/REL tb - gray (verify)<br>Attempt redock as before | | <br><br>Guarded. EXTD/REL position is momentary.<br><br>Guarded. |
| | xxxxxxxxxxxxxxxxxxxxxxxxxxxxxxxxxxxxxxxx | | |
| | SC CONT - CMC<br>Allow probe to damp SC motions (≈10 sec)<br>THC - null pitch & yaw align to within ±3° | 1 | <br><br>Alignment determined using COAS and docking target. |

| STA/T | STEP | PROCEDURE | PANEL | REMARKS |
|---|---|---|---|---|
| CDR | | PROBE RETR SEC - 1 | 2 | Initiates probe retraction. 10-inch retraction should require ≈5 seconds. |
| | | Observe retraction movement between the two vehicles | | |
| | | PROBE EXTD/REL tb (2) - gray | | Talkback A will indicate only if docking latches 1, 5, and 9 close. Talkback B will indicate only if latches 3, 7, and 11 close. Audio and tactile cues will also indicate docking latch closure. |
| | | xxxxxxxxxxxxxxxxxxxxxxxxxxxxxxxxxxxxx | | |
| | | PROBE EXTD/REL tb (2) - remain bp & docking latch closure cues (auditory & tactile) unsatisfactory | | |
| | | PROBE RETR PRIM - 2 | | |
| | | xxxxxxxxxxxxxxxxxxxxxxxxxxxxxxxxxxxxx | | |
| | 4 | Safe docking system | | |
| | | PROBE EXTD/REL - OFF | | Guarded. |
| | | PROBE RETR (2) - OFF | | |
| | | EXT RUN/EVA LT - OFF | | |
| | | EXT RNDZ LT - off (ctr) | | |
| | | COAS PWR - OFF | 15 | |
| | | cb DOCK PROBE (2) - open | 8 | |
| | | SECS PYRO ARM (2) - SAFE | | Lever lock. |
| | | SECS LOGIC (both) - OFF | | Lever lock. |
| | | cb SECS ARM (2) - open | | |
| | | RNDZ XPNDR PWR - OFF | 100 | |
| | 5 | Postdocking operations prior to IVT | | |
| | | CMC MODE - HOLD | 1 | |



NORMAL BACKUP

| STA/T STEP | PROCEDURE | PANEL | REMARKS |
|---|---|---|---|
| | 4.10.1.6 LM Jettison and Separation | | |
| | 1 Perform fnl IVT to CSM, 4.10.2.3 | | |
| | 2 Perform auto mnvr to jett att, 4.8.3.4 | | R62. |
| | or Perform SCS att mnvr to jett att, 4.8.4.5 | | |
| | 3 Perform tunl depressurization & fwd hatch seat integrity check, 4.10.2.4, step 5 | | |
| | 4 Perform LM jett prep | | |
| CMP | LM PWR - OFF (verify) | 2 | |
| CDR | cb SECS ARM (2) - close | 8 | |
| | After MSFN AOS | | |
| | SECS LOGIC (both) - on (up) | | Lever lock. |
| | Report logic arm | | |
| | After GO from MSFN | | |
| | SECS PYRO ARM (2) - on (up) | | Lever lock. |
| | At jett att | | |
| | BMAG MODE (3) - ATT 1/RATE 2 | 1 | |
| | SC CONT - SCS | | |
| CMP | RCS DAP - load & actuate, 4.8.2.1 | | |
| | R1-11102 (N46 display) | | |

| STA/T | STEP | PROCEDURE | PANEL | REMARKS |
|---|---|---|---|---|
| CMP | 5 | LM jett<br>CSM/LM FNL SEP (both) - on (up) | 2 | Guarded and momentary. Provides jettison of docking ring, with probe and LM attached, from CSM. Separation velocity of 0.4 ft/sec will be obtained with the use of the docking ring pyrotechnic separation device only (CM/LM tunnel depressurized). If four quads RCS firing is used to augment ΔV, 1.44 pounds of propellants are used for every second of firing. Any pressure in CM/LM tunnel at time of separation will impart an additional ΔV up to a maximum of 1.9 ft/sec. |
| | 6 | Postjett pnl reconfiguration | | |
| CDR | | SECS PYRO ARM (2) - SAFE | 8 | Lever lock. |
| | | SECS LOGIC (both) - OFF | | Lever lock. |
| | | cb SECS ARM (2) - open | | |
| | 7 | Separation | | |
| | | Perform SCS att mnvr to sep att, 4.8.4.5 | | |
| | or | Perform auto mnvr to sep att, 4.8.3.4 | | R62. |
| | | Mon G&N thrusting, 4.8.1.6 | | P47. |
| | | EMS MODE - NORM | 1 | |
| | | THC - +Z (2 jet) for 1.0 fps ΔV (5 sec min after pyro sep) | | |



NORMAL BACKUP

| STA/T | STEP | PROCEDURE | PANEL | REMARKS |
|---|---|---|---|---|
| | | 4.10.2 IVT | | |
| | | This section provides data which apply to all intervehicular crew transfers during the CSM mission. Because a transfer to the LM or to the CM is basically the same, only a few procedures are provided to cover all the intervehicular transfers involved in the mission. As is the practice throughout the J-Series Volume II AOH, the column heading STA/T refers to the spacecraft location where a procedure or step is performed except for those times when a crewman has transferred to the LM. In this case, the STA/T heading is used to refer directly to the corresponding crewman and not to the spacecraft location. | | |
| | | 4.10.2.1 Preparation for LM Ejection | | |
| ALL CMP | 1 | Configure PGAs, 4.5.4.6b<br>Retrieve & don helmet protective shield | | |
| | 2 | Configure couches as req | | |
| | 3 | Configure cont pnl<br>LM PWR - OFF (verify)<br>TUNL LT - on (up) | 2 | |
| | 4 | Perform docking tunl operations<br>Equalize CM/LM press, 4.5.4.14<br>Remove fwd hatch, 4.5.7.4a<br>Verify docking latches<br>Pull latch handle of each latch to ensure hook is engaged<br>Pwr bungee parallel to +X axis (verify) | tunl | Tunnel pressure integrity incorporated in CM/LM pressure equalization procedure.<br><br>Latch indicator button (red) may protrude through hole in latch handle if latch is not engaged. |

| STA/T STEP | PROCEDURE | PANEL | REMARKS |
|---|---|---|---|
| | xxxxxxxxxxxxxxxxxxxxxxxxxxxxxxxxxxxxxx | | |
| CMP | If hook(s) not engaged<br>Attempt to engage latch handle prior to recocking latch<br>If pwr bungee not parallel to +X axis<br>Push on top of bungee fairing to obtain fnl preload<br>If hook(s) cannot be engaged or pwr bungee parallel to +X axis not attained<br>Recock latch(es) & man trigger, 4.10.4.8, steps 2 & 4 | tunl | |
| | xxxxxxxxxxxxxxxxxxxxxxxxxxxxxxxxxxxxxx | | |
| | Depress GN2 bleed button (red) at aft end of probe body & hold for 10 sec | | Required to bleed probe retract gas system for subsequent operation. |
| | Connect LM umb conn (2)<br>Open docking ring conn fairings (2) (orange)<br>Disengage one conn from stowage receptacle in LM tunl<br>Pull umb across docking interface<br>Align index marks<br>Push LM umb conn into pwr receptacle in docking ring & rot CW to lock | | One at a time. |



NORMAL/BACKUP

| STA/T | STEP | PROCEDURE | PANEL | REMARKS |
|---|---|---|---|---|
| CMP | | Route LM umb thru slot in back of receptacle assy & close fairing (orange) | tunl | Fairing must be closed to install hatch. |
| | | Repeat for sec umb | | |
| | | LM PWR - CSM | 2 | |
| | | SYS TEST (2) - 7D | 101 | Test for integrity of electrical umbilical connection. |
| | | SYS TEST ind - 0.5-3.2 vdc (1-6.4 amps) | | |
| | | Reinstall fwd hatch, 4.5.7.5 | | |
| ALL | 5 | Reconfigure couches as req | | |
| | | 4.10.2.2 IVT to LM | | Procedure describes general requirements for crew transfer to LM under normal conditions. Not all steps included here are necessarily required for every IVT; utilization depends on particular time in mission when transfer occurs. Procedures as written are incomplete until properly integrated with corresponding LM procedures. |
| | 1 | The following are req | | |
| CDR,LMP | | PGAs configured, 4.5.4.6d | | |
| CMP | | PGA - configured, 4.5.4.6b | | |
| | | Retrieve & don helmet protective shield | | |
| | | Couches configured as req | | |
| | 2 | Clear tunl | | |
| | | TUNL LT - on (up) | 2 | |
| | | Equalize CM/LM press, 4.5.4.14 | | Tunnel pressure integrity check included as part of CM/LM pressure equalization procedure. |
| | | Remove fwd hatch, docking probe, & docking drogue, 4.5.7.4a, 4.10.4.1, & 4.10.4.4 | | |

| STA/T STEP | PROCEDURE | PANEL | REMARKS |
|---|---|---|---|
| | 3 Crew Transfer | | LMP umbilical hoses used as transfer hoses. Transfer umbilical hoses must be hooked up to left PGA connectors before transferring. |
| LMP | Connect trnfr 02 hose to left PGA conn (2) | | Red to red, blue to blue. |
| | rh SUIT FLOW vlv - FULL FLOW | 300 | |
| | Connect protective plugs to right PGA conn (2) | | |
| | Trnfr to LM head first entering LM cabin facing fwd | | |
| CMP | Audio pnl sw (all) - as desired by LMP | 6 | LMP will perform initial entry status check, partial activation of systems and checkout. |
| CDR | LM PWR - OFF (upon coordination with LMP) | 2 | |
| CMP | rh SUIT FLOW vlv - OFF (upon request from LMP) | 300 | LMP will connect to LM ECS and perform VHF activation and checkout. |
| | Upon request from LMP<br>PWR - OFF<br>SUIT PWR - OFF<br>AUDIO CONT - FORM | | |
| CDR | Obtain umbs from LMP | | LMP will disconnect transfer umbilicals. |
| CMP | ctr SUIT FLOW vlv - CAB FLOW | 302 | |
| CDR | Connect 02 trnfr umb to left PGA conn (2) | | Red to red, blue to blue. |
| | rh SUIT FLOW vlv - FULL FLOW | 300 | |
| | Disconnect 02 hose from right PGA conn (2) | | |
| | Connect protective plugs to right PGA conn (2) | | |
| | Install interconnect on 02 hose (CDR's) | | |



NORMAL/BACKUP

| STA/T | STEP | PROCEDURE | PANEL | REMARKS |
|---|---|---|---|---|
| CMP | | PWR - OFF<br>SUIT PWR - OFF<br>AUDIO CONT - NORM | 9 | |
| CDR | | Remove CCU from PGA conn | | |
| CMP | | Verify PWR & SUIT PWR sws on LMP's audio pnl are in OFF position | 6 | |
| CDR | | Connect trnfr CCU to PGA | | |
| CMP | | Audio pnl sw (all) - as desired by CDR | | |
| CDR | | Trnfr to LM head first entering LM cab facing fwd | | |
| | | Upon request from CDR | | CDR will hook up 02 umbilical. |
| CMP | | rh SUIT FLOW vlv - OFF | 300 | |
| | | | | CDR will verify 02 flow to PGA from LM ARS and perform VHF activation and checkout. |
| | | PWR - OFF<br>SUIT PWR - OFF | 6 | |
| | | | | CDR will disconnect transfer umbilical comm cable from PGA and connect LM comm cable to PGA when headset sounds cease. |
| | | Obtain trnfr umbs | | |
| | | Install suit hose interconnect on 02 hoses | | |
| | | Stow trnfr umbs | | |
| | 4 | Close tunl (docking hardware stowage) | | Step to be performed when other than temporary stowage in CM cabin required for mission phases such as DPS, docked burn, and EVA. |
| | | Install docking drogue, docking probe, & fwd hatch, 4.10.4.6, 4.10.4.3 & 4.5.7.5 | | |
| | | TUNL VENT vlv - LM/CM ΔP | 12 | |

| STA/T | STEP | PROCEDURE | PANEL | REMARKS |
|---|---|---|---|---|
| | | 4.10.2.3 IVT to CSM | | |
| ALL CMP | 1 | The following are req<br>PGAs configured as req<br>Retrieve & don helmet protective shield if req<br>Couches configured as req | | |
| | 2 | Clear tunl | | |
| | | a. Prior to LOD | | This is the normal procedure for returning to the CSM prior to LOD. |
| | | CM/LM Press Equalization, 4.5.4.14<br>Remove fwd hatch, docking probe, & docking drogue, 4.5.7.4a, 4.10.4.1, & 4.10.4.4<br>Equalize tunl/LM press & open LM hatch | | |
| | | b. After LOD or emergency | | Normal procedure for returning to CSM after LOD and would be used for an emergency return without assistance from CSM. |
| | | Equalize LM/tunl press from LM<br>Remove docking drogue & docking probe, 4.10.4.5 & 4.10.4.2<br>Stow probe & drogue in LM as req<br>CM/LM Press Equalization, 4.5.4.14, if req<br>Remove fwd hatch, 4.5.7.4 | | Procedure of 4.5.7.4b would be performed only if CMP could not perform 4.5.7.4a. |



NORMAL/BACKUP

| STA/T | STEP | PROCEDURE | PANEL | REMARKS |
|---|---|---|---|---|
| CMP | 3 | Crew Transfer | | |
| | | a. From LM ECS | | The procedure as written assumes that CDR normally makes transfer first. If LMP transfers first, it will be necessary for LMP and CDR to trade umbilicals. |
| | | rh SUIT FLOW vlv - as desired (verify) | 300 | |
| | | Connect hose interconnect to trnfr umbs (verify) | | |
| | | PWR - OFF (verify) | | |
| | | SUIT PWR - OFF (verify) | | |
| | | AUDIO CONT - NORM (verify) | | |
| | | Pass trnfr umbs to LM | | |
| | | | | LM crewman will connect transfer 02 and comm umbilicals to PGA. |
| | | Upon request from LM crewman (via VHF) | | |
| | | rh SUIT FLOW vlv - FULL FLOW | 300 | |
| | | PWR - AUDIO/TONE | 6 | |
| | | SUIT PWR - on (up) | | |
| CDR,LMP | | Trnfr to CSM | | |
| | | Remove protective plugs from right PGA conn (2) | | |
| | | Remove suit hose interconnect from 02 hoses (CDR's) | | |
| | | Connect 02 umb (CDR's) to right PGA conn (2) | | Red to red, blue to blue. |
| | | lh SUIT FLOW vlv - FULL FLOW | 301 | |
| | | rh SUIT FLOW vlv - OFF | 300 | |

| STA/T STEP | PROCEDURE | PANEL | REMARKS |
|---|---|---|---|
| CDR,LMP | Disconnect LMP's 02 hose from left PGA conns | | |
| | Connect protective plugs to left PGA conns | | |
| | Install suit hose interconnect on 02 hoses (trnfr) | | |
| CMP | PWR - OFF | 6 | |
| | SUIT PWR - OFF | | |
| | AUDIO CONT - NORM (verify) | | |
| CDR,LMP | Remove trnfr CCU from PGA conn | | |
| CMP | Verify PWR & SUIT PWR sws on CDR's audio pnl are in OFF position & AUDIO CONT sw in NORM position | 9 | |
| CDR,LMP | Connect CDR's (left) CCU to PGA | | |
| CMP | Audio pnl sw (all) - as desired | | |
| CDR,LMP | rh SUIT FLOW vlv - OFF (verify) | 300 | |
| | Connect hose interconnect to trnfr umbs (verify) | | |
| | PWR - OFF (verify) | | |
| | SUIT PWR - OFF (verify) | | |
| | AUDIO CONT - NORM (verify) | | |
| | | | LM crewman will connect transfer 02 and CCU umbilicals to PGA. |
| | Pass trnfr umbs to LM | | |
| | Upon request from LMP/CDR | | |
| CMP | rh SUIT FLOW vlv - FULL FLOW | 300 | |
| | PWR - AUDIO/TONE | 6 | |
| | SUIT PWR - on (up) | | |
| | | | LM vehicle power down. |
| | LM/CSM pwr trnfr | | If required. |
| | Upon request from LMP | | |
| | LM PWR - CSM | 2 | |



NORMAL BACKUP

| STA/T STEP | PROCEDURE | PANEL | REMARKS |
|---|---|---|---|
| LMP,CDR | Trnfr to CSM | | |
| | b. From PLSS/OPS & LM ECS | | CDR and LMP are in LM, one crewman on LM ECS, one crewman on PLSS/OPS. LMP transferred first in these procedures because of operational considerations (i.e., amount of oxygen available in PLSS/OPS, etc.). It will be necessary for LMP and CDR to trade umbilicals once transfer completed. |
| CMP | rh SUIT FLOW vlv - OFF (verify)<br>PWR - OFF (verify)<br>SUIT PWR - OFF (verify)<br>AUDIO CONT - NORM (verify) | 300 | |
| | Pass trnfr umbs to LM | | LM crewman will open LM hatch and secure.<br>LM crewman on PLSS/OPS will connect transfer 02 and comm umbilicals to PGA. |
| | rh SUIT FLOW vlv - as desired<br>LM crewman<br>Upon request from LM (via VHF)<br>PWR - AUDIO/TONE<br>SUIT PWR - on (up) | 6 | |
| | | | LM crewman will transfer through tunnel to CM. |
| LMP,CDR | lh SUIT FLOW vlv - OFF (verify)<br>Remove protective plugs from left PGA conn (2) | 301 | |
| | Connect 02 umb (CDR's) to left PGA conn (2) | | Red to red, blue to blue. |
| | lh SUIT FLOW vlv - FULL FLOW<br>rh SUIT FLOW vlv - OFF<br>Disconnect 02 trnfr umbs from right PGA conn (2) | 300 | |

| STA/T STEP | PROCEDURE | PANEL | REMARKS |
|---|---|---|---|
| LMP,CDR | Connect protective plugs to right PGA conns | | |
| | Install interconnect on 02 hose | | |
| CMP | PWR - OFF | 6 | |
| | SUIT PWR - OFF | | |
| | AUDIO CONT - NORM (verify) | | |
| | PWR - OFF (verify) | 9 | |
| | SUIT PWR - OFF (verify) | | |
| | AUDIO CONT - NORM (verify) | | |
| | Remove trnfr CCU from PGA | | |
| | Audio pnl sw (all) - as desired | | |
| | rh SUIT FLOW vlv - OFF (verify) | 300 | |
| | Connect hose interconnect to trnfr umbs (verify) | | |
| | PWR - OFF (verify) | 6 | |
| | SUIT PWR - OFF (verify) | | |
| | AUDIO CONT - NORM (verify) | | |
| | Pass trnfr umbs to LM | | |
| | | | LM crewman will connect transfer 02 and CCU umbilicals to PGA. |
| | Upon request from CDR/LMP | | |
| LMP,CDR | rh SUIT FLOW vlv - FULL FLOW | 300 | |
| CMP | PWR - AUDIO/TONE | 6 | |
| | SUIT PWR - on (up) | | |
| | | | LM vehicle power down. |
| | LM/CSM pwr trnfr | | If required. |
| | Upon request from LM crewman | | |
| | LM PWR - CSM | | |



NORMAL BACKUP

| STA/T | STEP | PROCEDURE | PANEL | REMARKS |
|---|---|---|---|---|
| CDR,LMP | | Trnfr to CSM<br>Install docking drogue, docking probe, & fwd hatch, 4.10.4.6, 4.10.4.3, & 4.5.7.5 | | If required. |
| | 6 | Close tunl (docking hardware stowage), prior to LOD only<br>Install docking drogue, docking probe, & fwd hatch, 4.10.4.6, 4.10.4.3, & 4.5.7.5 | | |
| CMP | | TUNL VENT vlv - LM PRESS | 12 | |
| | 4.10.2.4 | Preparation for Manned LM Separation | | |
| | 1 | Complete crew trnfr to LM, 4.10.2.2 | | |
| | 2 | Remove LM umbs<br>LM PWR - OFF<br>Open docking ring conn fairings (2) (orange)<br>Pull conn shell inbd & rot CCW to unlock<br>Pull conn inbd to disengage from receptacle<br>Repeat for sec umb<br>Close docking ring conn fairings (2) (orange)<br>Pull lanyard on LM end of umb<br><br>Remove umb from tunl & stow in CM | tunl | Connector lanyard located behind flat panel near LM hatch. |

| STA/T | STEP | PROCEDURE | PANEL | REMARKS |
|---|---|---|---|---|
| | 3 | Install tunl hardware<br>Install docking drogue & docking probe, 4.10.4.6 & 4.10.4.3 | | |
| | 4 | Preload probe & disengage docking latches<br>Preload docking probe, 4.10.4.7 | | |
| | | CAUTION<br>Verify that CSM RCS roll commands are inhibited before disengaging docking latches. Roll commands may be initiated after cab/tunl ΔP ≥3.5 psid. | | Firing the RCS roll thrusters with latches disengaged and cabin/tunnel ΔP <3.5 psid may result in docking interface slippage. |
| | | Disengage docking latches, 4.10.4.8, steps 1 thru 3 | | |
| | | xxxxxxxxxxxxxxxxxxxxxxxxxxxxxxxxxxxxxxxxxxxx | | |
| CMP | | Master alarm tone sounds | | |
| | | Re-engage/verify 3 docking latches ≈120° apart are engaged, 4.10.4.8, step 4 | tunl | |
| | | Determine O2 FLOW HI lt - on | 2 | |
| | | MASTER ALARM pb/lt - on (push) | 122 | |
| | | Use tool F to drive hex fitting on aft end of preload handle 180° max in CW direction | tunl | |



NORMAL/BACKUP

| STA/T | STEP | PROCEDURE | PANEL | REMARKS |
|---|---|---|---|---|
| | | Torque preload handle CW until load limiter releases | | |
| | | Cock engaged docking latches, 4.10.4.8, steps 1-3 | | |
| | | Master alarm tone does not sound | | |
| | | Proceed with the procedure (step 5) | | |
| | | or Master alarm tone sounds | | Suit may balloon. |
| | | Install fwd hatch, 4.5.7.5 | | |
| | | Proceed with the procedure deleting step 5 (secure tunl hatches & check integrity) | | |
| | | xxxxxxxxxxxxxxxxxxxxxxxxxxxxxxxxxxxxxxxxxx | | |
| | 5 | Secure tunl hatches & check integrity | | |
| | | Install fwd hatch, 4.5.7.5 | | |
| | | Verify LM hatch is closed & vlv properly set | | LM function. |
| CMP | | CAB PRESS ind - 4.7-5.3 psia (verify) | 2 | |
| | | Read O2 FLOW ind | | |
| | | TUNL VENT vlv - TUNL VENT for 30 sec, then LM/CM ΔP & check ΔP incr | 12 | |
| | | TUNL VENT vlv - TUNL VENT until ΔP >3.5 psi | | |
| | | LM/CM ΔP ind - remains constant within ±0.2 psi at least value read for 2 min (verify) | | |
| | | O2 FLOW ind - no incr (verify) | 2 | |

| STA/T STEP | PROCEDURE | PANEL | REMARKS |
|---|---|---|---|
| | xxxxxxxxxxxxxxxxxxxxxxxxxxxxxxxxxxxxxxxxxx | | |
| CMP | 02 FLOW ind - incrs and/or | | |
| | LM/CM ΔP ind - ΔP decr | 12 | |
| | 02 FLOW ind remains stable, LM hatch is probably not integral - advise LM crew | 2 | |
| | 02 FLOW ind - incrs, CM fwd hatch is probably not integral | | |
| | Pressurize tunl using PRESS EQUAL vlv | Fwd hatch | |
| | Open fwd hatch, 4.5.7.4a | | |
| | Check for foreign object(s) jammed in tunl/hatch seal interface or hatch seal damage | | |
| | Close fwd hatch, 4.5.7.5 | | |
| | Reinitiate step 5 (secure tunl hatches & check integrity) | | |
| | xxxxxxxxxxxxxxxxxxxxxxxxxxxxxxxxxxxxxxxxxx | | |
| | For undocking only | | |
| | TUNL VENT vlv - TUNL VENT for 10 min, then | 12 | Required to vent tunnel pressure to zero to allow LM RCS 4-jet yaw or CSM RCS 4-jet roll maneuvers. During LM RCS jet test firings, CSM roll attitude control will be disabled. |
| | TUNL VENT vlv - LM/CM ΔP | | |
| | LM/CM ΔP ind - >4 psid (pegged) | | |
| | TUNL VENT vlv - OFF | | |
| | TUNL LT - OFF | 2 | |
| | For jett only | | |
| | TUNL VENT vlv - TUNL VENT for 10 min | 12 | |
| | TUNL LT - OFF | 2 | |



NORMAL BACKUP

| STA/T | STEP | PROCEDURE | PANEL | REMARKS |
|---|---|---|---|---|
| CMP | 6 | Configure cab for sep<br>Remove ctr couch & stow<br>Install docking trgt & receive alignment verification from LM<br>Configure side hatch for unaided ingress<br>Actr handle sel - N (neut)<br>Vent counterbalance piston chamber<br>GN2 vlv handle - pull (inbd)<br>GN2 press ind - min | | |

| STA/T STEP | PROCEDURE | PANEL | REMARKS |
|---|---|---|---|
| | 4.10.3 EXTRAVEHICULAR ACTIVITY (EVA) | | |
| | 4.10.3.1 CSM/LM EVA | | |
| | 1 CSM Prep | | |
| | Configure PGA as desired, 4.5.4.6 | | |
| | Configure couches as req | | |
| | Disable desired RCS jets (Quad A) | | |
| CDR | AUTO RCS A/C ROLL A1, A2 (2) - OFF | 8 | |
| | AUTO RCS B/D ROLL (4) - OFF | | |
| | AUTO RCS PITCH A3, A4 (2) - OFF | | |
| | AUTO RCS YAW B3, D4 (2) - OFF | | |
| CMP | Verify side hatch counterbalance mechanism is disengaged, 4.5.7.3a (if desired) | | |
| | Reconfigure PGA, 4.5.4.6b | | |
| | PLSS comm check if req on request by LM | | |
| LMP | VHF AM A - DUPLEX | 3 | |
| | VHF AM B - off (ctr) (verify) | | |
| | VHF RNG - OFF (verify) | | |
| | Verify comm with | | |
| | 2 PLSS - CDR (EVCS #1) & LMP (EVCS #2) | | |
| | or 1 PLSS - EVCS #1 or EVCS #2 | | |
| | Suit circuit & PGA integrity check, 4.5.4.9a | | |
| | Dump CM press, 4.5.4.11 | | |



NORMAL BACKUP

| STA/T STEP | PROCEDURE | PANEL | REMARKS |
|---|---|---|---|
| | 2 Side Hatch Operation<br><br>WARNING<br><br>The hatch should not remain in the open position and exposed to worst conditions for longer than 60 min as warpage may occur & make the hatch difficult to close. | | |
| | a. From CM Interior | | |
| CMP | Open side hatch, 4.5.7.1a or b<br>Close side hatch, 4.5.7.2a | | The particular method and crewmen involved in opening the hatch optional (by crew coordination per flight plan). |
| | or b. From CM Exterior | | |
| LMP | Open side hatch, 4.5.7.1c | | |
| | or c. From CM Interior/Exterior | | |
| CMP, LMP | Close side hatch, 4.5.7.2b | | |
| | 3 Vacuum Trnfr to CSM ECS | | |
| | a. From LM ECS<br>Perform trnfr, 4.10.2.3-6 | | |
| | b. From OPS & PLSS/OPS | | All crewmen in CM, CDR on OPS, LMP on PLSS/OPS. Although these procedures are written sequentially, actual transfers of CDR and LMP to CSM ECS may be performed concurrently depending upon operational considerations (i.e., amount of oxygen remaining in OPS and PLSS/OPS, other time constraints, etc.). CDR and LMP assist each other as required. |

| STA/T | STEP | PROCEDURE | PANEL | REMARKS |
|---|---|---|---|---|
| CDR | | lh SUIT FLOW vlv - OFF (verify) | 301 | |
| CMP | | PWR - OFF (verify) | 9 | |
| | | SUIT PWR - OFF (verify) | | |
| | | AUDIO CONT - NORM (verify) | | |
| CDR | | Remove PGA conn thermal covers | | |
| | | Connect O2 umb (CDR's) to right PGA conns | | Red to red, blue to blue. |
| | | lh SUIT FLOW vlv - FULL FLOW | 301 | |
| | | OPS O2 shutoff vlv - close | | |
| | | Close purge vlv in left PGA outlet conn | | |
| | | Connect CCU (CDR's) to PGA | | |
| | | Audio pnl sw (all) - as desired | 9 | |
| LMP | | rh SUIT FLOW vlv - OFF (verify) | 300 | CDR positioned nearest suit flow valves. |
| CMP | | PWR - OFF (verify) | 6 | LMP may perform these operations depending upon his position in CM. |
| | | SUIT PWR - OFF (verify) | | |
| | | AUDIO CONT - NORM (verify) | | |
| LMP | | Remove PGA conn thermal covers | | |
| | | Remove purge vlv from right PGA outlet conn | | This operation should be deferred until CM repressurized if operationally feasible. |
| | | OPS O2 shutoff vlv - close | | |
| | | Disconnect OPS O2 hose from right PGA inlet conn | | |
| | | Connect O2 umb (LMP's) to right PGA conns | | Red to red, blue to blue. |
| CDR | | rh SUIT FLOW vlv - FULL FLOW | 300 | |
| LMP | | PLSS FAN sw - OFF | PLSS | |
| | | PLSS O2 SHUTOFF vlv - CLOSE | | |
| | | PLSS PUMP sw - OFF | | |
| | | PLSS MODE SELECTOR sw - OFF (position 3) | | |



NORMAL/BACKUP

| STA/T | STEP | PROCEDURE | PANEL | REMARKS |
|---|---|---|---|---|
| LMP | | Disconnect PLSS elect umb from PGA<br>Connect CCU (LMP's) to PGA<br>Audio pnl sw (all) - as desired | PLSS<br><br>6 | |
| ALL | 4 | CSM POST-EVA Reconfiguration<br>Repressurize CM, 4.5.4.8a or 4.5.4.8b<br><br>Reconfigure couches as req | | |
| | 4.10.3.2 | Scientific Instrumentation Module (SIM) EVA | | These are integrated operations requiring coordination with OPS procedures. |
| | 1 | System Prep<br><br>CMC - on (req), 4.8.1.3<br>ISS - on & orient known (req), 4.18.1.3 & 4.14<br>SCS - on (desired), 4.8.4.2<br>RCS DAP - load & activate (req), 4.8.2.1 | | Assumes all experiments have been deactivated and those requiring retraction have been retracted (4.18.3.2, 4.18.3.4, 4.18.3.6, & 4.18.4.2).<br><br>Deadband recommended 5°. Select A/C for roll control to be compatible with step 12 jet disable configuration. |
| | 2 | Mnvr to EVA att<br>P___° Y___° R___° | | Provides best lighting on SIM. |
| | 3 | Configure couches as req | | |

| STA/T | STEP | PROCEDURE | PANEL | REMARKS |
|---|---|---|---|---|
| LMP, CDR | 4 | Don PGAs with 02 umb conns reversed<br>SUIT FLOW vlv - FULL FLOW | 300,301 | 02 umbilical reversed for optimum flow distribution within PGA. |
| | 5 | Configure PGA for EVA | | |
| CMP | | Don PGA | | LMP assist as required. |
| LMP | | SUIT PWR - OFF | 10 | |
| | | PWR - OFF | | |
| | | AUDIO CONT - NORM | | |
| | | Conn EVA 02/comm umb to CM IVA/EVA sta | 603 | |
| | | Conn EVA 02/comm umb to PGA | PGA | |
| | | Attach OPS & OPS PURGE vlv | | |
| | | Attach SUIT CONT vlv | | |
| | | Attach PRESS CONT vlv | | |
| | 6 | Configure audio ctr | | |
| | | SUIT PWR - on (up) | 10 | |
| | | PWR - AUDIO | | |
| | | MODE - INTERCOM/PTT | | |
| | | S BD - T/R | | |
| | | INTERCOM - T/R | | |
| | | PAD COMM - OFF | | |
| | | VHF AM - OFF | | |
| | 7 | Checkout OPS, PGA, & EVA 02 umb | | |
| CMP | | Don helmet & gloves | | |
| | | OPS checkout per decal | | Refer to orbital EVA Procedures document prepared by EVA Branch FCSD, MSC. |
| | | PGA & EVA 02 umb checkout | | |



NORMAL/BACKUP

| STA/T | STEP | PROCEDURE | PANEL | REMARKS |
|---|---|---|---|---|
| CDR | | EVA STA O2 SUP - ON | 603 | |
| | | SUIT PRESS ALARM - ON | 604 | |
| | | PCV - open | PGA | |
| | | SCU - open | | |
| | | Mon suit tonal alarm | | Automatic shutoff occurs at suit pressure indication of 3.1-3.4 psig. |
| | | Mon PGA press incr | Cuff | |
| | | SUIT PRESS ind - 3.5-4.0 psig | gage | |
| | | Tonal alarm - off | | |
| | | SUIT PRESS ind - stable at 3.5-4.0 psig | | |
| | | WARNING | | |
| | | SCU vlv may remain in close position for no longer than one min or asphyxiation may result. | | |
| | | SCU - close | PGA | |
| | | Mon SUIT PRESS ind for <0.3 psi/min press decay | | |
| | | SCU - open | | |
| LMP, CDR | 8 | Configure for CM Depressurization<br>Configure PGA, 4.5.4.6b | | |
| CMP | | ctr SUIT FLOW vlv - OFF (EVA crewman only) | 302 | |
| | | Install O2 umb interconnect | | |
| LMP | 9 | Activate prim evap | | To facilitate water removal in the suit circuit and preclude LMP and CDR face plate fogging. |
| | | GLY EVAP H2O FLOW - AUTO | 2 | |
| | | GLY EVAP STM AUTO - AUTO | | |

| STA/T | STEP | PROCEDURE | PANEL | REMARKS |
|---|---|---|---|---|
| LMP, CDR | 10 | Perform suit ckt integrity check, 4.5.4.9 | | |
| CDR | 11 | Perform CM press dump, 4.5.4.11a (except rh CAB PRESS RELF vlv - DUMP at conclusion of dump) | 325 | To preclude pressure buildup in CM because of purge flow from returning EVA crewman, the CAB PRESS RELF vlv must remain open. |
| | 12 | Deactivate SM RCS<br>AUTO RCS A/C ROLL A1 & A2 - OFF<br>AUTO RCS B/D ROLL B1 & B2 & D2 - OFF<br>AUTO RCS PITCH A3 & A4 - OFF<br>AUTO RCS YAW B3 & B4 - OFF | 8 | |
| | 13 | Side Hatch Oper (open) | | |
| | | WARNING<br>The side hatch should not remain in open position & exposed to worst case conditions for longer than 60 min as warpage may occur & make hatch difficult to close. | | |
| | | Open side hatch, 4.5.7.1a | | The particular method and crewman involved in opening hatch is optional. Flight plan coordination is required. |
| CMP | 14 | EVA to SIM | | Use CM/SM handrails and Dutch slippers. Refer to orbital EVA Procedures document for approach to SM and film cassette removal. |



NORMAL/BACKUP

| STA/T | STEP | PROCEDURE | PANEL | REMARKS |
|---|---|---|---|---|
| | | xxxxxxxxxxxxxxxxxxxxxxxxxxxxxxxxxxxxxx | | |
| | | If PGA press alarm tone sounds or loss of purge flow | | |
| CMP | | OPS shutoff vlv - open | PGA | |
| | | PURGE vlv - HI FLOW | | |
| | | SUIT PRESS ind - >3.4 psig | Cuff gage | |
| | | SCU - close | PGA | |
| | | PCV - close | | |
| | | If SUIT PRESS ind - <3.4 psig | | |
| | | SCU - open | | |
| | | SUIT PRESS still <3.4 psig | | |
| | | PURGE vlv - LO FLOW | | |
| | | Ingress CM immediately | | |
| | | Helmet & gloves can be removed at CM PRESS ind - 3.0 psi if req | | |
| | | xxxxxxxxxxxxxxxxxxxxxxxxxxxxxxxxxxxxxx | | |
| | 15 | Side Hatch Oper (close) | | |
| | | Close side hatch, 4.5.7.2a | | |
| | 16 | CM Post - EVA reconfiguration | | |
| | | Repressurize CM, 4.5.4.8a | | |
| | | Reconfigure couches as req | | |
| ALL | 17 | Remove PGAs & stow | | |
| | 18 | Deactivate EVA sta | | |
| CDR | | EVA STA 02 SUP - OFF | 603 | |
| | | SUIT PRESS ALARM - OFF | 604 | |

| STA/T | STEP | PROCEDURE | PANEL | REMARKS |
|---|---|---|---|---|
| | 19 | Deactivate prim evap | | |
| LMP | | GLY EVAP H2O FLOW - off (ctr) | 2 | |
| | | GLY EVAP STM AUTO - MAN | | |
| | | GLY EVAP STM INCR - INCR for 58 sec min | | INCR position is momentary. Steam pressure valve requires 58 seconds from full open to full close. |



NORMAL BACKUP

| STA/T | STEP | PROCEDURE | PANEL | REMARKS |
|---|---|---|---|---|
| | | 4.10.4 TUNNEL MECHANICAL SYSTEMS | | |
| | | 4.10.4.1 Docking Probe Removal (CM side) | | |
| CMP | 1 | Pnl & tunl configuration<br>PROBE (3) - OFF<br>cb DOCK PROBE (2) - open<br>Fwd hatch removed, 4.5.7.4<br>Auto docking latches engaged (at least 3 engaged latches ≈120° apart) | 2<br>8<br><br>tunl | PROBE EXTD/REL switch is guarded. |
| | 2 | Extend latch engaged, ind (red) not visible (verify) | | If probe is being removed after previously being Installed for stowage, it will not be necessary to perform steps 2, 3, and 4. Step 2 should be performed only after TLD. |
| | | If extd latch is not engaged, ind (red) not flush with latch housing<br>Preload sel lever - rot CW (away from orange stripe)<br>Preload handle - torque CCW until extd latch engages, ind (red) not visible | | |

| STA/T STEP | PROCEDURE | PANEL | REMARKS |
|---|---|---|---|
| | GN2 bleed button (red) - press for 10 sec | tunl | GN2 bleed button (red) located under pyro components cover, depressurizes probe retract system when depressed. |
| | Preload sel lever - rot CCW (parallel to orange stripe)<br>Preload handle - torque CW until load is removed from support beams | | Support beams may become loose in docking ring sockets. |
| 3 | Preload sel lever - rot CW (away from orange stripe)<br>Preload handle - torque CCW until extd latch engages, ind (red) not visible<br>GN2 bleed button (red) - press for 10 sec | | Step 3 should be performed only after LOD.<br><br>GN2 bleed button (red), located under pyro components cover, depressurizes probe retract system when depressed. |
| 4 | Disconnect & stow probe umbs<br>Pull conn shell (yellow) & rot CCW to unlock<br>Pull conn to remove, align yellow mark with stowage conn (yellow) & push to engage<br>Rot conn shell CW to lock<br>Repeat for sec prob umb (yellow)<br>Close probe umb conn covers (2) (yellow)<br>Position preload handle against stowed probe umb<br>Preload sel lever - mid-position | | Stowage connector located on aft side of support beams. |



NORMAL/BACKUP

| STA/T STEP | PROCEDURE | PANEL | REMARKS |
|---|---|---|---|
| | 5 Fold probe | | |
| | Pull installation strut from clip on support beam, rot foot 180° & position against tunl wall between yellow marks | tunl | |
| | Rot capture latch rel handle lock CCW to unlock (orange stripe visible) | | |
| | Depress ratchet handle rel button (gray) & pull ratchet handle aft to full extension | | Ratchet handle release button (gray) is on aft end of ratchet handle. |
| | Depress ratchet handle rel button (gray) & push ratchet handle to first detent (red band only visible) | | |
| | Push ratchet handle outbd 30° & hold allowing probe to fold | | Probe fully folded when Teflon block on Z-support beam within 1/4 inch of ratchet housing. |
| | xxxxxxxxxxxxxxxxxxxxxxxxxxxxxxxxxxxxxxxxxxxxxxx | | |
| | Probe will not fold | | |
| | Using tool F, rot jam nut & hex bolt (ratchet handle stop) CCW to remove bolt | | |
| | Push ratchet handle outd until probe releases & hold until probe folds | | |
| | (Subsequent installations of probe must be done very carefully to avoid releasing ratchet & folding probe while attempting to install it) | | |
| | xxxxxxxxxxxxxxxxxxxxxxxxxxxxxxxxxxxxxxxxxxxxxxx | | |

| STA/T STEP | PROCEDURE | PANEL | REMARKS |
|---|---|---|---|
| | Depress ratchet handle rel button (gray) & pull ratchet handle aft to full extension<br>Push ratchet handle outbd 25° for one stroke only<br>Depress ratchet handle rel button (gray) & with ratchet handle held inbd, push fully fwd to stow position<br>Rot installation strut foot 180° to stow position & restow installation strut in clip on support beam | tunl | |
| 6 | Rel probe from drogue<br>Pull capture latch rel handle from recess, rot 180° CW & push fwd into recess<br>Grasp probe support handle & pull aft to rel probe from drogue | | ≈25 pounds pull required to release probe. |
| | xxxxxxxxxxxxxxxxxxxxxxxxxxxxxxxxxxxxxxxxxx | | |
| | If probe will not rel from drogue<br>Pull installation strut from clip on support beam, rot foot 180° & position against tunl wall between yellow marks<br>Depress ratchet handle rel button (gray) & pull ratchet handle aft to full extension | | |



NORMAL/BACKUP

| STA/T | STEP | PROCEDURE | PANEL | REMARKS |
|---|---|---|---|---|
| | | Push ratchet handle outbd 25° to stop & repeat until support beams engage docking ring sockets | tunl | |
| | | Rot preload sel lever CCW (parallel to orange stripe) | | |
| | | Rot capture latch rel handle 180° CW & hold | | |
| | | Torque preload handle CW until capture latches rel from drogue | | |
| | | Fold probe, step 5 | | |
| | | x xxxxxxxxxxxxxxxxxxxxxxxxxxxxxxxxxxxxxxxxxx x | | |
| | | Remove probe from tunl & stow as req | | Temporary stowage provided on left-hand couch. |
| | 4.10.4.2 | Docking Probe Removal (LM side) | | Steps 1 and 3 only are required if probe previously installed for stowage. |
| | 1 | Pnl & tunl configuration | | |
| CMP | | PROBE (3) - OFF | 2 | PROBE EXTD/REL switch guarded. |
| | | cb DOCK PROBE (2) - open | 8 | |
| | | Drogue removed, 4.10.4.5 | tunl | |
| | 2 | Disconnect probe umbs (2) | | |
| | | Pull conn shell (yellow) inbd & rot CCW to unlock | | |
| | | Pull conn inbd to remove | | |
| | | Repeat for sec probe umb (yellow) | | |
| | | Close probe umb conn covers (2) (yellow) | | |

| STA/T | STEP | PROCEDURE | PANEL | REMARKS |
|---|---|---|---|---|
| | 3 | Fold probe | | |
| CMP | | Depress ratchet handle rel button (gray) & push ratchet handle toward CM, 1 inch to first detent | tunl | Ratchet handle release button (gray) on CM end of ratchet handle. An alternate method to release ratchet shaft is to pull release trigger (blue) on LM end of shaft. |
| LM side | | Unstow LM side rel handle (blue) by sliding handle toward LM to clear locking tang & rot toward LM to stop | | |
| | | CAUTION<br>Probe will move toward LM when released so precaution must be taken to prevent injury. | | |
| | | Push LM side rel handle outbd 30° & hold, allowing probe to fold | | This action could take up to 70 pounds of handle force. |
| | | Remove probe from tunl & stow as req | | Stowage for LM jettison provided in LM. |
| | 4.10.4.3 | Docking Probe Installation (CM side) | | Steps 1 through 6 required to install probe for stowage. Step 5 required only for probe stowage. |
| | 1 | Pnl & tunl configuration | | |
| CMP | | PROBE (3) - OFF (verify) | 2 | PROBE EXTD/REL switch guarded. |
| | | cb DOCK PROBE (2) - open | 8 | |
| | | Fwd hatch removed, 4.5.7.4 | tunl | |
| | | Drogue installed, 4.10.4.6 | | |
| | 2 | Remove probe from stowage | | Temporary stowage provided on left-hand couch. |

| STA/T | STEP | PROCEDURE | PANEL | REMARKS |
|---|---|---|---|---|
| CMP | | Pull capture latch rel handle from recess & rot 150° CCW to cock capture latches<br>Move probe into tunl | tunl | Orange arrow on pyro cover should align with orange end at capture latch release handle. Do not force handle. |
| | 3 | Engage capture latches<br>Push probe head into drogue until capture latches engage & lock | | A slight pull in aft direction will disengage capture latches if not fully engaged. |
| | | Rot capture latch rel handle CCW 30° to lock capture latches & push fwd into recess | | Colored ends of capture latch release handle should match colors on probe collar. Do not force handle. |
| | | Verify probe capture latch rel (LM side) button protrudes above probe head | | LM crewman must make this verification. Probe capture latch release button on LM side of drogue when capture latches engaged. |
| | 4 | Engage probe in docking ring<br>Pull installation strut from clip on support beam, rot foot 180° & position against tunl wall between yellow marks | | Yellow marks located on -Z axis. Probe support beam and corresponding docking ring socket color-coded yellow. |
| | | Depress ratchet handle rel button (gray) & pull ratchet handle aft to full extension (green & red bands visible) | | Ratchet handle release button (gray) on aft end of ratchet handle. |
| | | Push ratchet handle outboard 25° to stop & repeat until probe support beams (3) engage in docking ring sockets | | From this point ≈19 strokes required to install probe. An orange hash mark on collar conduit becomes visible when fully installed. Care should be exercised to ensure probe support beams (3) align with docking ring sockets and end of pitch arms do not interfere with docking latch fairings. |

| STA/T STEP | PROCEDURE | PANEL | REMARKS |
|---|---|---|---|
| | xxxxxxxxxxxxxxxxxxxxxxxxxxxxxxxxxxxxxxxxxx | | |
| CMP | If pushing ratchet handle outbd does not advance support beams to engage docking ring sockets | | |
| | Depress ratchet handle rel button (gray) & push ratchet handle fwd to first detent (red band only visible) | tunl | |
| | Slowly push ratchet handle outbd ≈25° until ratchet pawl engages (audible click) & repeat until 3 probe support beams engage in docking ring sockets | | If ratchet pawl not audible, watch action of ratchet pawl indicator (red). |
| | (If ratchet handle is pushed outbd past point of pawl engagement, probe will rel) | | |
| | xxxxxxxxxxxxxxxxxxxxxxxxxxxxxxxxxxxxxxxxxx | | |
| | Verify ratchet pawl ind (red) is flush with ratchet housing | | |
| | xxxxxxxxxxxxxxxxxxxxxxxxxxxxxxxxxxxxxxxxxx | | |
| | If ratchet pawl ind is protruding above ratchet housing | | |
| | Push ratchet handle outbd 25° to stop & hold | | |
| | Press ratchet pawl ind (red) to seat pawl (ind flush) | | |
| | Return ratchet handle to full inbd position | | |
| | xxxxxxxxxxxxxxxxxxxxxxxxxxxxxxxxxxxxxxxxxx | | |



NORMAL/BACKUP

| STA/T | STEP | PROCEDURE | PANEL | REMARKS |
|---|---|---|---|---|
| CMP | | Depress ratchet handle rel button (gray) & with ratchet handle held inbd, push fully fwd to stow position<br>Rot installation strut foot 180° to stow position & restow installation strut in clip on support beam | tunl | |
| | 5 | Adj preload handle in direction req to maintain support beams in an unloaded condition | | This step required only if probe installed in tunnel for stowage. Support beams may become loose in docking ring sockets. Rotate preload select lever CCW (parallel to orange stripe) to move extend latch aft (compress probe) and CW (away from orange stripe) to move extend latch forward (expand probe). |
| | | Position preload handle at a 45° angle to support beam (either side) | | Position provides clearance with forward hatch actuator handle. |
| | 6 | Push preload shaft fwd into detent<br>Push capture latch rel handle fwd into detent<br>Rot capture latch rel handle lock CW to lock (orange stripe not visible) | | |
| | 7 | Connect probe umbs | | This step not required when installing probe for stowage. |
| | | Pull probe umbs covers (2) (yellow) inbd & rot fwd to open | | Probe umbilical covers located in docking ring. |

| STA/T | STEP | PROCEDURE | PANEL | REMARKS |
|---|---|---|---|---|
| CMP | | Pull conn shell (yellow) aft & rot CCW to unlock<br>Pull conn to remove, align with docking ring conn (yellow) & push to engage<br>Rot conn shell CW to lock<br>Repeat for sec probe umb (yellow) | tunl | Probe umbilical connectors stowed on probe support beams. |
| | 4.10.4.4 | Docking Drogue Removal (CM side) | | Normally accomplished when all three crewmen are in CM prior to an IVT to LM and normally follows probe removal. |
| | | Docking probe removal, 4.10.4.1<br>Pull & rot (CCW) drogue lock lever until flush against tunl wall<br>Remove drogue | | Drogue outer ring should be grasped with both hands at opposite sides. Drogue lugs must move to left end of support fitting before drogue can be pushed free. Care must be taken not to strike LM hatch. |
| | | Rot (CW) & push until 3 drogue lugs clear support fittings<br>Rot toward CM & grasp any 2 handles<br>Mnvr drogue past support fittings & stow in CM | | Drogue must be canted and rotated to clear tunnel. Drogue stowed under LMP couch. |
| | 4.10.4.5 | Docking Drogue Removal (LM side) | | |
| | 1 | Verify auto docking latches engaged (at least 3 engaged latches ≈120° apart) | tunl | Step 1 should be performed only after LOD. This could be visual verification or tactile verification using tool B if required. |



NORMAL/BACKUP

| STA/T STEP | PROCEDURE | PANEL | REMARKS |
|---|---|---|---|
| | Push probe capture latch rel button<br>tool B | tunl | Releases three probe capture latches and extend latch will engage automatically to prevent probe from re-extending. |
| | Probe head retracts from drogue (verify) | | |
| | xxxxxxxxxxxxxxxxxxxxxxxxxxxxxxxxxx | | |
| | If probe head does not retract from drogue<br>Remove probe from CM side, 4.10.4.1<br>Remove drogue, steps 2 & 4 or 4.10.4.4 | | |
| | xxxxxxxxxxxxxxxxxxxxxxxxxxxxxxxxxx | | |
| | xxxxxxxxxxxxxxxxxxxxxxxxxxxxxxxxxxxxxxxxx | | |
| | If capture latches will not rel<br>Rel probe, 4.10.4.1, steps 1, 3, 2, 4, & 5<br>Rel drogue, step 2<br>Remove probe & drogue connected, & stow in LM | | This procedure requires a crewman in both LM and CM. |
| | xxxxxxxxxxxxxxxxxxxxxxxxxxxxxxxxxxxxxxxxx | | |
| 2 | Remove drogue<br>Rot drogue lock lever inbd 90°<br>Push drogue lock lever & rot 90° CW to unlock drogue<br>Rot drogue CCW until drogue lugs (3) clear tunl drogue supports (3) | | |

| STA/T STEP | PROCEDURE | PANEL | REMARKS |
|---|---|---|---|
| 3 | Depress capture latch rel button with tool B & hold<br>Pull on drogue handle to rel capture latches | tunl | Step 3 should be performed only when probe and drogue were previously installed for stowage. |
| | xxxxxxxxxxxxxxxxxxxxxxxxxxxxxxxxxxxxxxxx<br>If capture latches will not rel<br>Rel probe, 4.10.4.1, steps 1, 3, 2, 4, & 5<br>Rel drogue, step 2<br>Remove probe & drogue connected, & stow in LM<br>xxxxxxxxxxxxxxxxxxxxxxxxxxxxxxxxxxxxxxxx | | This procedure requires a crewman in both LM and CM. |
| 4 | Remove drogue from tunl & stow in LM as req | | Stowage for LM jettison provided in LM. |
| 4.10.4.6 | Docking Drogue Installation (CM side) | | |
| | Procure drogue from stowage | | Drogue stowed under LMP couch. |
| | Install drogue<br>Mnvr past support fitting in LM tunl | | Drogue must be canted and rotated to clear support fittings in tunnel. Limited clearance between LM hatch and support fittings requires care in maneuvering drogue if closed. Handles should be used for support. |
| | Align drogue lugs (3) with support fittings in LM tunl | | Drogue must be held along outer diameter at opposite sides adjacent to drogue lugs. At this point drogue handles are facing LM hatch. |



NORMAL/BACKUP

| STA/T STEP | PROCEDURE | PANEL | REMARKS |
|---|---|---|---|
| | Pull drogue lugs into support fittings & rot (CCW) until lugs hit stops in support fittings | tunl | Ramps on support fittings will guide drogue lugs into support fitting recesses. |
| | Push & rot drogue latch lever 90° (CW) | | This locks drogue latch mechanism. |
| | 4.10.4.7 Probe Preload Operation | | |
| | Rot preload sel lever CCW (parallel to orange stripe) | | |
| | Torque preload handle CW until load limiter releases | | Preload handle extension may be telescoped outboard to provide additional leverage if required. |
| | If preload handle will not drive<br>Use tool F to drive hex fitting on aft end preload shaft in CW direction. Apply an estimated 30 to 40 lb on tool F handle | | |
| | Verify capture latch rel button protudes above probe head | | LM crewman must make this verification. Capture latch release button on LM side of drogue when capture latches are engaged. |
| | Push preload handle inbd to detent & position at 45° angle to support beam (either side) | | Position provides clearance with forward hatch handle. |

| STA/T STEP | PROCEDURE | PANEL | REMARKS |
|---|---|---|---|
| | Preload sel lever - Rot to mid-position<br>Capture latch rel handle lock - locked position (orange stripe not visible) (verify) | tunl | |
| | 4.10.4.8 Tunnel Latch Operations | | |
| 1 | Verify probe is preloaded, 4.10.4.7 | | |
| 2 | Cocking of latches | | Any suitable tool may be used to trigger release lever if desired. |
| | WARNING<br>To avoid possible injury to fingers or damage to the PGA, care must be taken not to place fingers under or near a latch while cocking, nor under or near the latch hook of a cocked latch. | | |
| | Depress rel button behind handle latch grip & pull latch handle down two complete strokes | | This procedure disengages and cocks latch. It may take only one complete stroke to cock each latch. |
| | xxxxxxxxxxxxxxxxxxxxxxxxxxxxxxxxxxxxxxxxxxx | | |
| | If latch handle cannot be pulled<br>While pulling handle, depress rh no-back pawl on bottom until it disengages from ratchet tooth | | |



NORMAL BACKUP

| STA/T STEP | PROCEDURE | PANEL | REMARKS |
|---|---|---|---|
| | If latch handle pulls free, remove press from rh no-back pawl & complete cocking procedures | tunl | |
| | If latch handle still cannot be pulled<br>While pulling handle, depress lh no-back pawl through fairing covering hole with tools E and R until ratchet tooth disengages & latch handle pulls free<br>Remove press from lh no-back pawl & complete cocking procedure | | |
| | If latch handle still cannot be pulled<br>Remove fairing covering lh no-back pawl (using tools E and R)<br>While pulling handle, depress both no-back pawls on the bottom until ratchet teeth are disengaged & latch handle pulls free<br>Remove press from both no-back pawls & complete cocking procedure | | |
| | xxxxxxxxxxxxxxxxxxxxxxxxxxxxxxxxxxxxxxxxxxxx | | |
| | Verify hook rotates inbd to clear LM ring | | |

| STA/T STEP | PROCEDURE | PANEL | REMARKS |
|---|---|---|---|
| | xxxxxxxxxxxxxxxxxxxxxxxxxxxxxxxxxxxxxx<br>If latch hook does not rel from LM ring on first stroke<br>Push top of AUX REL (yellow) button & proceed with sec stroke<br>xxxxxxxxxxxxxxxxxxxxxxxxxxxxxxxxxxxxxx | tunl | |
| | Verify/push latch handle outbd against latch hook | | Prevents latch handle sticking inboard which could prevent the latch primary trigger from resetting after undocking. |
| 3 | Repeat step 2 until all 12 latches are disengaged & cocked | | Latches reset for subsequent docking operations. |
| 4 | Man triggering of latches<br>Push man rel lever at side of latches located | | This procedure engages latch. Manual release lever located at lower right side of latch handle. Use tool L to push manual release lever. |



NORMAL/BACKUP

| STA/T STEP | PROCEDURE | PANEL | REMARKS |
|---|---|---|---|
| | 4.11 NAVIGATION | | For general G&C operating data, refer to operating notes, 4.6.1. |
| | 4.11.1 ORBITAL NAVIGATION | | |
| | 4.11.1.1 (P21) Ground Track Determination | | Provides crew ground track data for either CSM or LM, based on time loaded in 3. |
| | CMC - on (req), 4.8.1.3 | | |
| CMP | 1 Key V37E 21E | 2,140 | |
| | 2 FL V04 N06<br>Option code 00002<br>CMC assumed option 0000X<br>(00001 = CSM,<br>00002 = LM)<br><br>Accept PRO<br>Reject V22E (load desired option) | | |
| | 3 FL V06 N34 | | Initial display will contain zeros (present time). If not changed by astronaut, P21 calculations will be based on present time. |
| | GET lat long 00XXX. HRS<br>000XX. MIN<br>0XX.XX SEC | | GET at desired position of selected vehicle. |
| | Accept PRO<br>Reject V25E (load desired T-lat long) | | |



NORMAL/BACKUP

| STA/T STEP | PROCEDURE | PANEL | REMARKS |
|---|---|---|---|
| CMP 4 | FL V06 N43 | 2,140 | |
| | Lat (+N) XXX.XX DEG | | Selected vehicle latitude at T-lat long. |
| | Long (+E) XXX.XX DEG | | Selected vehicle longitude at T-lat long. |
| | Alt XXXX.X NM | | Selected vehicle altitude above launch pad radius for earth orbit, or above lunar radius at most recently defined landing site for lunar orbit, at T-lat long. |
| | If desired | | |
| | Key N73 | | |
| | Alt/10 XXXXX. NM | | Provides altitude display with scale compatible with altitudes associated with lunar mission. |
| | VI XXXXX. FPS | | |
| | Gamma XXX.XX DEG | | |
| | To increment T-lat long by 10 min | | |
| | Key V32E | | For V32E, program keeps previous state vector for use in starting next iteration without, however, ensuring that subsequent integrations are precision. If times reasonably close, V32E should be used; if far apart, would be quicker to reselect P21. |
| | Return to 3 | | |
| 5 | PRO (term P21) | | |
| | FL V37 | | ROO. |
| | Key XXE | | |

(P21) GROUND TRACK DETERMINATION

| STA/T STEP | PROCEDURE | PANEL | REMARKS |
|---|---|---|---|
| 4.11.1.2 | (P22) Orbital Navigation | | Purpose:<br>• Locate, track and mark on lmk suitable for navigation.<br>• Calculate orbital parameter changes generated by lmk sightings marks.<br>• Display orbital parameter changes generated by first lmk sighting mark for crew/MSFN verification prior to state vector update.<br>• Update known lmk coordinates.<br>• Provide unknown lmk coordinates.<br>• Track a preloaded landing site.<br>• Provide coordinates of a new landing site (treated as an unknown lmk).<br>• Provide coordinates of an offset landing site.<br>• Point optics along an advanced orbit ground track to track and map a new landing site.<br>Lmks may be known or unknown.<br>Known lmk - Made known to CMC by Lat, Long/2 and Alt. |



NORMAL/BACKUP

| STA/T STEP | PROCEDURE | PANEL | REMARKS |
|---|---|---|---|
| | | | Unknown lmk - Identified to CMC as unknown lmk.<br><br>There are two types of landing site mapping:<br><br>• Landing site determination - Track and mark an unknown lmk and store coordinates in lmk ID 01.<br><br>• Landing site offset - To store offset landing site coordinates in lmk ID 01.<br><br>Only legitimate values of lmk ID in N70 and N71 are:<br><br>00 - known lmk loaded by N89<br>01 - landing site<br>50-57 advanced orbit option where units digit is the number of orbits ahead. (N70 only)<br><br>Ground Track Determination Program (P21) available to aid in selection of lmks. For orbital navigation, W-matrix should not be initialized to magnitudes >328 fps and 51,647 ft (N99 display). |
| CMP | CMC - on (req), 4.8.1.3<br>ISS - on & orient known (req), 4.8.1.3 & 4.14<br>Opt Pwr Up (req), 4.8.1.4<br>OPT ZERO - OFF<br>OPT MODE - CMC<br>SCS - on (req), 4.8.4.2 | 122 | Provides monitoring and alternate control capability. |

| STA/T | STEP | PROCEDURE | PANEL | REMARKS |
|---|---|---|---|---|
| | 1 | Sel Tot Att Disp, 4.7.2.5 | | |
| | 2 | Sel Att Cont mode, 4.7.1 | | |
| CMP | 3 | Key V37E 22E | 2,140 | |
| | | Poss PROG alarm (4.8.1.16) | | R02. |
| | 4 | FL V06 N45<br>R3 - max MGA if X-axis inplane XXX.XX DEG | | MGA maximum possible middle gimbal angle if CSM X-axis held in orbital plane. |
| | | If IMU align satisfactory | | |
| CDR | | Perform ORDEAL Init, 4.8.4.8<br>Mnvr to sighting att & establish orb rate<br>Sel FDAI disp & att cont mode desired, 4.7.1 & 4.7.2 | | Initial sighting attitude should position optics shaft axis inplane and ≈50° ahead of local vertical. This provides optics cone of view which extends ≈90° ahead of local vertical at beginning of sighting. |
| | | RHC - position Xsc axis ≈20° above lcl horiz, SEF hds up; as lmk approaches, pitch slowly to ≈20° below horiz (put COAS LOS on horiz or use ORDEAL FDAI) | | As lmk approaches, pitch CSM down ≈20° below horizon. Cone of view now extends from ≈50° ahead to ≈30° aft of local vertical. |
| | | RHC or MIC - pitch to offset orb rate, roll to avoid shft axis ≈10° of lmk, if known | | Sighting attitude should be adjusted by small roll maneuver, if necessary, to prevent optics shaft axis from passing within 10° of target lmk. The 10° separation of lmk LOS and shaft axis ensures optics drive rates are not exceeded because of optics shaft reversal to avoid trunnion stop at -5°. |



NORMAL BACKUP

| STA/T STEP | PROCEDURE | PANEL | REMARKS |
|---|---|---|---|
| CMP | PRO (If E.O., go to 6) | 2,140 | |
| or | If realign desired<br>Key V37E XXE | | Select IMU realignment procedure. Reselect P22 at completion of realignment procedure. |
| 5 | FL V05 N70 (L.O. only)<br>R2 - lmk code ABCDE<br>A 1 (known lmk), 2 (unknown lmk)<br>B Index of offset designator<br>C Not used<br>DE lmk ID | | |
| | Reject Key V22E<br>Load desired lmk code<br>Accept If A = 2<br>OPT MODE - MAN<br>PRO<br>Go to 8 | 122<br>2,140 | |
| | or If A = 1 & DE = 01 or 50-57<br>PRO<br>Go to 7 | | PROG alarm (00404) may occur at this point. |
| | or If A = 1 & DE = 00<br>PRO | | |
| | Poss OPR ERR<br>A = 0 or >2, B >5, or DE ≠ 00, 01 or 50-57<br>Recycle 5 | | |

| STA/T | STEP | PROCEDURE | PANEL | REMARKS |
|---|---|---|---|---|
| CMP | 6 | FL V06 N89 (lmk data) | 2,140 | |
| | | Lat (+N) XX.XXX DEG | | Lmk latitude. |
| | | Long/2 (+E) XX.XXX DEG | | Lmk longitude divided by 2. |
| | | Alt XXX.XX NM | | Lmk altitude above Fischer ellipsoid for earth orbit, or above mean lunar radius for lunar orbit. |
| | | Reject V25E | | |
| | | Load desired data | | |
| | | Accept PRO | | |
| | | Poss OPR ERR<br>R1 or R2 >90°<br>Recycle 6 | | |
| | | (R52, Auto Optics Positioning Routine) | | Points optics SLOS to selected lmk automatically. If in lunar orbit and a lmk code (DE) of 50 through 57 loaded in 5 (E defining desired number of orbits ahead), CMC points optics 60° ahead of CSM along advanced orbit. |
| | | Poss FL V05 N09<br>00404 (TA >90°) | | PROG alarm light on. |
| | | Mnvr CSM until opt can acq lmk<br>PRO | | PRO recomputes required optics angles. |
| | | or V34E (term prog)<br>FL V37<br>Key XXE | | R00. |



NORMAL/BACKUP

| STA/T STEP | PROCEDURE | PANEL | REMARKS |
|---|---|---|---|
| CMP | If TA >50° & <90° | | If TA >50° and <90°, trunnion driven to upper limit (≈49.7754°) and held at this angle. |
| | Mnvr to reduce trun angle | | Key V16 N92E for display of required optics angles if not presently displayed. |
| 7 | V06 N92 (new OCDU angles)<br>SA XXX.XX DEG<br>TA XX.XXX DEG | 2,140 | No display if OPT MODE - MAN or if R52 reselected after R53 called, see next remark. |
| | To mrk, OPT MODE - MAN | 122 | Selects R53. To regain auto optics positioning, select OPT MODE - CMC (prior to completion of R53). CSM attitude rates ≥two-thirds degree/second will result in rejection of sighting marks; indicated by PROG alarm. |
| | (R53, Sighting Mark Routine) | | |
| 8 | FL V51 (please mrk) | 2,140 | |
| | Center lmk in opt | 121 | Known or unknown lmk in SCT. If mark made on an offset lmk (landing site), key V52E (after offset mark) or use N71 in 9 to identify offset mark. If only one mark made, it should not be identified as offset landing site. If more than one mark made, any mark may be used (and identified) as offset landing site mark. If desirable to terminate lmk tracking without making marks, key V34E or V37E XXE. |
| | MARK pb - push | 122 | |
| | Accept Repeat mrk proced | | If more marks desired. |
| | or PRO | 2,140 | If sufficent marks made. At least one unrejected mark must be made before keying PRO. Otherwise, V51 reinstated. If desirable to terminate lmk tracking without making marks, key V34E or V37E XXE. |

| STA/T STEP | PROCEDURE | PANEL | REMARKS |
|---|---|---|---|
| CMP | Reject MARK REJ pb - push<br>Repeat mrk proced | 122 | |
| | If 5 mrks made<br>FL V50 N25<br>00016 (term mrks) | 2,140 | |
| | Accept PRO<br>Reject MARK REJ pb - push<br>Repeat mrk proced | 122 | Rejects last (5th) mark. |
| | OPT ZERO - ZERO (≈15 sec to zero)<br>OPT ZERO - OFF<br>OPT MODE - CMC<br>Exit R53 & R52 | | |
| 9 | FL V05 N71 (lmk data)<br>R2 - lmk code ABCDE<br><br>A 1 (known lmk), 2 (unknown lmk)<br>B Index of offset designator<br>C Not used<br>DE Lmk ID | 2,140 | If mark was made on an offset landing site, ensure that B corresponds to mark. If no offset landing mark made, ensure B = 0. |
| | Reject V22E<br>Load correct data in R2<br>Accept PRO<br>If A is 2 (or A is 1 & DE = 01)<br>Go to 11<br><br>Poss OPR ERR<br>A = 0 or >2, B >5 or DE ≠ 00 or 01 | | |



NORMAL BACKUP

| STA/T | STEP | PROCEDURE | PANEL | REMARKS |
|---|---|---|---|---|
| CMP | 10 | FL V06 N89 (lmk coord)<br>Lat (+N) XX.XXX DEG<br>Long/2 (+E) XX.XXX DEG<br>Alt XXX.XX NM<br><br>Reject V25E (load desired data)<br>Accept PRO<br><br>Poss OPR ERR<br>R1 or R2 >90°<br>Recycle 10 | 2,140 | If auto optics positioning was performed, this data will be identical to N89 data loaded in 6. |
| | 11 | FL V06 N49<br>ΔR XXXX.X NM<br>ΔV XXXX.X FPS<br><br>Accept PRO<br>Reject V32E<br>E.O. - return to 6<br><br>or L.O. - return to 5 | | Position vector change magnitude.<br>Velocity vector change magnitude.<br><br>If in earth orbit.<br><br>If in lunar orbit. |
| | 12 | FL V06 N89<br>Lat (+N) XX.XXX DEG<br>Long/2 (+E) XX.XXX DEG<br>Alt XXX.XX NM<br><br>Accept PRO (L.O. only)<br>Return to 5 | | If offset landing site mark made and identified to CMC, display is offset landing site coordinates. Otherwise, display is coordinates of lmk on which marks were taken.<br><br>Stores coordinates in CMC memory as landing site (lmk ID 01). Previously stored landing site coordinates erased. |

| STA/T | STEP | PROCEDURE | PANEL | REMARKS |
|---|---|---|---|---|
| CMP | | Reject V32E<br>E.O. - return to 6 | 2,140 | Does not store coordinates. |
| | | or L.O. - return to 5 | | |
| | 13 | Key V34E (to term P22)<br>FL V37<br>Key XXE | | V34E at any flashing display terminates P22.<br>R00. |
| | 14 | Set opt cont<br>OPT ZERO - ZERO<br>OPT PWR - OFF<br>RETCL BRT tw - DIM | <br>122<br>100<br>122 | |



NORMAL/BACKUP

| STA/T | STEP | PROCEDURE | PANEL | REMARKS |
|---|---|---|---|---|
| | | 4.11.1.3 (P23) Cislunar Midcourse Navigation | | Accomplishes midcourse navigation by incorporating star/earth and star/moon optical measurements. |
| | | CMC - on (req), 4.8.1.3<br>ISS - on & orient known (desired), 4.8.1.3 & 4.14 | | Permits auto maneuver to tracking attitude and auto optics positioning, if desired. Optics should be on for 15 minutes prior to marking. |
| | | SCS - on (req), 4.8.4.2 | | Provides monitoring displays and alternate control capability. |
| | | RCS DAP - Load & activate (desired), 4.8.2.1 | | Required if automatic attitude maneuver desired. For cislunar navigation, W-matrix should not be initialized to magnitudes >328 fps and 99,999 feet (N99 display). |
| | | Opt pwr up (req), 4.8.1.4 | | |
| | 1 | Sel Tot Att Disp, 4.7.2.5 | | |
| | 2 | Sel Att Cont mode, 4.7.1 | | |
| CMP | 3 | Key V37E 23E | 2,140 | |
| | | (R57, Optics Calibration) | | Measures effect of solar radiation on SXT trunnion angle and stores measured trunnion bias for P23. |
| | | If IMU orient unknown<br>RHC - mnvr to acq star in SXT FOV | | Select suitable star for use by Optics Calibration Routine, R57. |
| | | Go to 8 | | |
| | or | IMU orient known<br>Go to 4 | | |

| STA/T | STEP | PROCEDURE | PANEL | REMARKS |
|---|---|---|---|---|
| CMP | 4 | FL V50 N25<br>00015 (request auto mnvr, calib star) | 2,140 | |
| | | Accept PRO<br>Reject RHC - mnvr, acq star/lunar or earth disc in SXT FOV<br>ENTR, go to 8 | | Select a suitable star/lunar or earth disc for use by Optics Calibration Routine, R57. |
| | 5 | FL V01 N70<br>Star ID (calib) 000DE<br>Lmk code ABCDE<br>Horiz ID 00CD0 | | Only R1 is of significance for R57. |
| | | Reject Key V21E (load desired data)<br>R1 - 00 for planet<br>01-45 for star | | |
| | | Accept Rcd data<br>PRO | | |
| | | Poss OPR ERR | | Target code negative of >50. |
| | | If 00 R1 51, go to 7 | | |
| | 6 | FL V06 N88 (planet only)<br>X, Y, Z .XXXXX | | |
| | | Accept PRO<br>Reject Key V25E, load desired data | | |



NORMAL/BACKUP

| STA/T | STEP | PROCEDURE | PANEL | REMARKS |
|---|---|---|---|---|
| | | (R60, Attitude Maneuver Routine) | | Provides for maneuver (auto or manual) to attitude calculated by vecpoint routine. |
| CMP | 7 | FL V50 N18 (CMC auto request)<br>R, P, Y XXX.XX DEG | 2,140 | Required gimbal angles. |
| CDR | | Accept SC CONT - CMC<br>CMC MODE - AUTO | 1 | |
| CMP | | PRO<br>V06 N18<br>R, P, Y XXX.XX DEG<br>Mon auto mnvr on FDAI<br>Recycle 7 | 2,140 | Static display until completion of auto maneuver and then reverts to FL V50 N18. |
| | | Reject V62E<br>RHC - null FDAI err needles<br>Recycle 7 | | Provides error needle reference for manual maneuver. |
| CDR | | or SC CONT - SCS (or CMC MODE - ≠ AUTO) | 1 | |
| CMP | | PRO (updates disp)<br>Recycle 7 | 2,140 | Recomputes desired attitude without performing auto maneuver. |
| | | or ENTR (exit R60) | | When attitude satisfactory. |
| | 8 | FL V59 (perform calib mrk) | | |
| | | Accept Ctr desired calib feature or star in SXT<br>OPT ZERO - OFF<br>OPT SPEED - LO<br>OPT MODE - MAN<br>OPT TELTRUN - SLAVE TO SXT<br>OPT COUPLING - DIR | 122 | |

| STA/T STEP | PROCEDURE | PANEL | REMARKS |
|---|---|---|---|
| CMP | Superimpose SLOS & LLOS<br>MARK pb - push<br>Go to 9 | 122 | Trunnion bias angle is a function of angle between LLOS and sun and is a constant if sun is outside cone ±15 deg from LLOS. |
| Reject | If IMU orient unknown<br>OPT MODE - MAN<br>ENTR<br>Go to 17 | 2,140 | If optics were calibrated with sun outside cone defined in preceding remark and are used outside cone during future marks, recalibration not necessary. If sun is within cone, calibration should be performed each time through P23. |
| | If IMU orient known<br>OPT MODE - CMC<br>ENTR<br>Go to 10 | 122<br>2,140 | PROG alarm (00404) may occur at this point. |
| 9 | FL V06 N87<br>R2 - trun bias XX.XXX DEG | | Scaling of N87 is such that small negative angle will appear as positive angle approaching 90°. (Actual angle equal to 90° minus displayed value.) |
| Accept | If IMU orient unknown<br>OPT MODE - CMC<br>PRO, go to 17 | 122<br>2,140 | CMC stores calibration angle. |
| | If IMU orient is unknown<br>PRO<br>Go to 17 | | |
| Reject | If IMU orient known, return to 4 | | |
| | If IMU orient unknown, return to 8 | | |
| 10 | FL V05 N70<br>Star ID 00ODE<br>Lmk code ABCDE<br>Horiz ID 00CD0 | | |
| Reject | Key V25E (load desired data) | | Either R2 or R3 should be 00000, but not both. |



NORMAL/BACKUP

| STA/T STEP | PROCEDURE | PANEL | REMARKS |
|---|---|---|---|
| CMP | R1 - 00 for planet<br>01-45 for star<br>R2 - AB not used<br>C 1 (earth lmk), 2 (moon lmk)<br>DE not used<br><br>or R2 - 00000 for horiz measurement<br><br>R3 - horiz ID<br>C 1 (earth horiz), 2 (moon horiz)<br>D 1 (near horiz), 2 (far horiz)<br><br>or R3 - 00000 for lmk measurement<br><br>Accept Rcd data<br>PRO<br>go to 11<br><br>or If sighting on planet/horiz,<br>go to 12<br><br>or If sighting on star/horiz, go<br>to 13<br><br>Poss OPR ERR<br>R1 <0 or >45<br><br>or R2 (C) & R3 (CD) = 0<br><br>or R2 (C) & R3 (CD) = 1 or 2<br>Either R2 or R3 must be<br>zero (but not both) | 2,140 | R1 00DE Star or planet ID<br><br>R2 00100 Star/EL<br>00200 Star/LL<br><br>R3 0010 Star/ENH<br>00120 Star/EFH<br>00210 Star/LNH<br>00220 Star/LFH |

(P23) CISLUNAR MIDCOURSE NAVIGATION

| STA/T STEP | PROCEDURE | PANEL | REMARKS |
|---|---|---|---|
| CMP | or R2 (C) = 0 & R3 (C&D) ≠ 1 or 2 | 2,140 | |
| | Recycle 10 | | |
| 11 | FL V06 N89<br>Lat (+N) XX.XXX DEG<br>Long/2 (+E) XX.XXX DEG<br>Alt XXX.XX NM | | If planet or star and either earth or moon landmark sighting.<br><br>Above Fischer ellipsoid for earth orbit, or above mean lunar radius for lunar orbit. |
| | Accept PRO<br>If planet not specified, go to 13<br>Reject V25E (load desired data) | | |
| | Poss OPR ERR<br>R1 or R2 >90°<br>Recycle 11 | | |
| 12 | FL V06 N88 (planet only)<br>X, Y, Z .XXXXX | | |
| | Accept PRO<br>Reject V25E (load desired data) | | |
| 13 | FL V50 N25<br>00202 (request 3-axis mnvr) | | Optional 3-axis maneuver or vecpoint maneuver available. |
| | Accept PRO (3-axis mnvr), go to 14<br>Reject ENTR (vecpoint mnvr), go to 14 | | PRO or ENTR calls R60 to perform automatic maneuver. |



NORMAL/BACKUP

| STA/T | STEP | PROCEDURE | PANEL | REMARKS |
|---|---|---|---|---|
| | | (R60, Attitude Maneuver Routine) | | Provides for maneuver (auto or manual) to attitude calculated by 3-axis or vecpoint routines. |
| CMP | 14 | FL V50 N18 (CMC auto request)<br>R, P, Y XXX.XX DEG | 2,140 | Required gimbal angles. |
| CDR | | Accept SC CONT - CMC<br>CMC MODE - AUTO | 1 | |
| CMP | | PRO<br>V06 N18<br>R, P, Y XXX.XX DEG<br>Mon auto mnvr on FDAI<br>Recycle 14 | 2,140 | Static display until completion of auto maneuver and then reverts to FL V50 N18. |
| | | Reject V62E<br>RHC - null FDAI err needles<br>Recycle 14 | | Provides error needle reference for manual maneuver. |
| CDR | | or SC CONT - SCS (or CMC MODE - ≠ AUTO) | 1 | |
| CMP | | PRO (updates disp)<br>Recycle 14 | 2,140 | Recomputes desired attitude without performing auto maneuver. |
| | | or ENTR (exit R60) | | When attitude satisfactory. |
| | | (R52, Automatic Optics Positioning Routine) | | Points SLOS of optics at selected star. |
| | | Poss FL V05 N09<br>00404 (TA >90°)<br>Mnvr to reduce TA<br>PRO | | |
| | | or V34E<br>FL V37<br>Key XXE | | ROO. |

| STA/T | STEP | PROCEDURE | PANEL | REMARKS |
|---|---|---|---|---|
| | | If TA >50° and <90° | | If TA >50° and <90°, trunnion driven to upper limit (≈49.7754°) and held at this angle. |
| CMP | | Mnvr to reduce TA | | |
| | 15 | V06 N92 (desired opt angles)<br>SA XXX.XX DEG<br>TA XX.XXX DEG<br><br>(R53, Sighting Mark Routine) | 2,140 | Optics will drive to acquire selected star or planet. |
| | 16 | OPT MODE - MAN | 122 | |
| | 17 | FL V51 (please mrk) 2,140<br>Check star & lmk are in SXT FOV<br>OPT COUPLING - RSLV<br>OPT SPEED - LO<br>RHC - position lmk near ctr of SXT FOV<br>OHC - superimpose star & lmk images<br>MARK pb - push | 2,140<br>122 | If CMC aid in reacquiring lmk/horiz desired, key V94E and place OPT MODE switch to CMC. V94 terminates R52 and R53, starts R60 going again, recalculates required optics vector, reselects R52 and positions optics. V94 usable only in P23 from R52 callup through R53 to mark accept (PRO in 18). |
| | 18 | FL V50 N25<br>00016 (term mrks)<br><br>Accept PRO<br>Reject MARK REJ pb - push<br>Return to 17 | 2,140<br><br><br>122 | |
| | 19 | FL V05 N71<br>Star ID 000DE<br>Lmk code ABCDE<br>Horiz ID 00CD0 | 2,140 | Refer to 10 for codes. |



NORMAL/BACKUP

| STA/T STEP | PROCEDURE | PANEL | REMARKS |
|---|---|---|---|
| CMP | Reject V25E<br>Load desired data<br>Accept Rcd data<br>PRO<br><br>If sighting on planet/horiz<br>Go to 21<br>If sighting on star/horiz<br>Go to 22<br><br>Poss OPR ERR<br>R1 ≤0 or >45<br><br>or R2 (C) & R3 (CD) = 0<br><br>or R2 (C) & R3 (CD) = 1 or 2<br>Either R2 or R3 must be zero (but not both)<br><br>or R2 (C) = 0 & R3 (C&D) ≠ 1 or 2<br><br>Recycle 19 | 2,140 | |
| 20 | FL V06 N89<br>Lat XX.XXX DEG<br>Long/2 XX.XXX DEG<br>Alt XXX.XX NM<br><br>Accept PRO<br>If planet not specified, go to 22<br>Reject V25E<br>Load desired data | | Altitude above Fischer ellipsoid for earth orbit, or above mean lunar radius for lunar orbit. |

| STA/T STEP | PROCEDURE | PANEL | REMARKS |
|---|---|---|---|
| CMP | Poss OPR ERR<br>R1 or R2 >90°<br>Recycle 20 | 2,140 | |
| 21 | FL V06 N88 (planet only)<br>X, Y, Z .XXXXX<br><br>Accept PRO<br>Reject V25E (load desired data) | | |
| 22 | FL V06 N49<br>ΔR XXXX.X NM<br>ΔV XXXX.X FPS<br><br>Accept PRO<br>Reject Reselect V37E 23E, return to 3<br><br>or V32E (go to 23) | | Magnitude of position vector change.<br>Magnitude of velocity vector change.<br><br>Updates state vector.<br>No state vector update if reject option selection. |
| 23 | FL V37<br>Key XXE | | |
| 24 | Key V93E (if necessary) | | If state vector update via P27 has not occurred.<br>Enables W-matrix initialization. |
| 25 | Set opt cont<br>OPT ZERO - Zero<br>OPT PWR - OFF<br>RETCL BRT tw - DIM | <br>122<br>100<br>122 | |



NORMAL/BACKUP

| STA/T STEP | PROCEDURE | PANEL | REMARKS |
|---|---|---|---|
| 4.11.1.4 | (P24) Rate Aided Optics | | • To locate and acquire lmk via auto optics positioning.<br>• To track lmk using manual rate-aided optics feature of R52.<br>• Obtain and downlink unlimited number of sighting marks of chosen lmk. |
| | CMC - on (req), 4.8.1.3<br>ISS - on & orient known (req), 4.8.1.3 & 4.14<br>SCS - on (req), 4.8.4.2<br>RCS DAP - load & activate (req), 4.8.2.1<br>Opt pwr up (req), 4.8.1.4<br>Sel Tot Att disp, 4.7.2.5<br>Sel Att Cont mode, 4.7.1 | | |
| 1 | Key V37E 24E | 140 | |
| 2 | Mnvr to sighting att | | Tracking may be facilitated by initiating pitch maneuver using V79 (PTC/orb rate) procedure. |
| 3 | FL V06 N89<br>Lat (+N) XX.XXX DEG<br>Long/2 (+E) XX.XXX DEG<br>Alt XXX.XX NM | | Lmk latitude.<br>Lmk longitude divided by 2.<br>Lmk altitude above Fischer ellipsoid for earth orbit, or above mean lunar radius for lunar orbit. |
| | Reject V25E<br>Load desired data<br>Accept OPT MODE - CMC<br>PRO | | |
| | Poss OPR ERR<br>R1 or R2 >90°<br>Recycle 3 | | |

| STA/T STEP | PROCEDURE | PANEL | REMARKS |
|---|---|---|---|
| | (R52, Auto Optics Positioning) | | |
| CMP | Poss FL V05 N09<br>00404 (TA >90°) | 140 | PROG alarm light on. |
| | Mnv CSM until opt can<br>acq lmk<br>PRO | | PRO recomputes required optics angles. |
| | or V34E (term prog)<br>FL V37<br>Key XXE | | R00. |
| | If TA >50° & <90° | | If TA >50° and <90°, trunnion driven to upper limit (≈49.7754°) and held at this angle. |
| | Mnvr to reduce TA | | Key V16 N92E for display of required optics angles if not presently displayed. |
| 4 | V06 N92 (new OCDU angles)<br>SA XXX.XX DEG<br>TA XX.XXX DEG | | No display if OPT MODE - MAN or if R52 reselected after R53 called. |
| | To mrk<br>OPT MODE - MAN | 122 | Selects R53 and enables rate-aided drive feature of R52. To regain auto optics positioning, select OPT MODE - CMC (prior to completion of R53). Having regained auto optics, FL V51 remains; rate-aided drive is disabled. However, marking process may be continued. |



NORMAL/BACKUP

| STA/T | STEP | PROCEDURE | PANEL | REMARKS |
|---|---|---|---|---|
| | | (R53, Sighting Mark) | | |
| CMP | 5 | FL V51 (please mrk)<br>Ctr lmk in opt | 140 | Lmk is centered by using OHC augmented by rate-aided optics feature of R52. |
| | | MARK pb - push | 122 | Stores mark data in downlink area. |
| | | Accept Repeat mrk proced | | Number of marks unlimited. |
| | | Reject MARK REJ pb - push | | Places complement of last mark's time register on downlink. |
| | | Recycle 5 | | |
| | | Poss OPR ERR<br>00110 (no mrks made) | 140 | |
| | | To term mrks<br>PRO | | If sufficient marks made. At least one unrejected mark must be made before keying PRO. Otherwise, V51 reinstated. If desirable to terminate lmk tracking without making marks, key V34E or V37E XXE. |
| | | FL V37<br>Key XXE | | |
| | 6 | Set opt cont<br>OPT ZERO - ZERO<br>OPT PWR - OFF<br>RETCL BRT tw - DIM | <br>122<br>100<br>122 | |

| STA/T STEP | PROCEDURE | PANEL | REMARKS |
|---|---|---|---|
| | 4.11.1.5 (V82) Orbit Parameter Display (R30) | | Provides crew with CMC computed orbital parameters. Time from perigee/perilune (TF perigee) available via N32 if Hp >49.4 NM (300,000 ft) for earth orbit or >5.8 NM (35,000 ft) for lunar orbit. If P00 or P11 running, ΔR (miss distance) available via N50. |
| | CMC - on (req), 4.8.1.3 | | |
| CMP | 1 Key V82E<br>If ave G routine on, go to 4 | 2,140 | V82 computations based on two-body conic equations and may give erroneous results during transearth/lunar coasting. TFF display may be incorrect if return trajectory is hyperbolic. |
| | 2 FL V04 N12<br>Option code 00002<br>CMC assumed option 0000X<br>(1 = CSM active<br>2 = LM active)<br>Accept PRO<br>Reject V22E (load desired option) | | |
| | 3 FL V06 N16<br>GET event 00XXX. HRS<br>000XX. MIN<br>0XX.XX SEC<br>Accept PRO<br>Reject Key V25E<br>Load desired time | | Time for state vector integration. TFF and N32 continue to be measured from present time rather than N16 input time. CMC sets time option initially to zero, meaning present time. |



NORMAL BACKUP

| STA/T STEP | PROCEDURE | PANEL | REMARKS |
|---|---|---|---|
| CMP 4 | FL V16 N44 | 2,140 | If average G on, display updates every 2 seconds. |
| | Ha XXXX.X NM<br>Hp XXXX.X NM | | Above launch pad radius for earth orbit or above landing site radius for lunar orbit. Calculations are subject to limitations of two-body approximation and yield reasonable results if vehicle close to earth or moon. |
| | TFF XXBXX MIN-SEC | | Time of free fall to 49.4 NM (300,000 feet) for earth orbit, or 5.8 NM (35,000 feet) for lunar orbit. TFF reads -59B59 if Hp >49.4/5.8 NM; under these conditions, time from perigee/perilune available by keying N32. If average G off and Hp <49.4/5.8 NM, TFF counts down. For N32, if average G off and Hp >49.4/5.8 NM, time from perigee/perilune counts down. |
| | Accept PRO<br>Reject V32E<br>Recycle to 3 | | Recalculates orbital parameters. (Valid only if average G off.) |

(V82) ORBIT PARAMETER DISPLAY (R30)

| STA/T | STEP | PROCEDURE | PANEL | REMARKS |
|---|---|---|---|---|
| | | 4.11.2 RENDEZVOUS NAVIGATION | | |
| | | 4.11.2.1 (P20) CSM Rendezvous Navigation | | Purpose:<br>• Control CSM attitude and optics to acquire LM in SXT FOV and to point CSM transponder at LM or to control CSM attitude to acquire LM along CSM +X axis depending on option selected by crew.<br>• To update either LM or CSM state vector depending on crew selection. Update is based on optical tracking or VHF ranging data.<br>The uplink activity light indicates R61 requesting an automatic maneuver during rendezvous.<br>For rendezvous navigation W-matrix should not be initialized to magnitudes >328 fps and 51,647 feet (N99 display). |
| | | CMC - on (req), 4.8.1.3 | | |
| | | ISS - on & orient known (req), 4.8.1.3 & 4.14 | | |
| | | SCS - on (desired), 4.8.4.2 | | |
| | | Opt pwr up (req), 4.8.1.4 | | |
| | | VHF AM ranging mode sel (req), 4.5.6.6 | | Provides total attitude and rate monitoring.<br>Not required for VHF update.<br>Not required for optical update. |
| CDR | | CMC ATT - IMU (verify) | 1 | |
| | | LOGIC 2/3 PWR - on (up) (if no SCS) | 7 | Required for control and display functions. |
| | | Key V93E (if necessary) | 2,140 | If hour or more has elapsed since W-matrix initialization or if state vector has not been updated via P27. |



NORMAL/BACKUP

| STA/T | STEP | PROCEDURE | PANEL | REMARKS |
|---|---|---|---|---|
| | 1 | Sel Tot Att disp, 4.7.2.5 | | |
| | 2 | Sel Att Cont mode, 4.7.1 | | |
| CMP | 3 | Key V37E 20E | 2,140 | Selection of P20 automatically selects preferred tracking attitude option and LM state vector update option. Crew may exercise control of these options through use of the following extended verbs.<br><br>V76E - Selects preferred tracking attitude.<br>V77E - Selects +X axis tracking attitude.<br>V80E - Selects LM state vector update.<br>V81E - Selects CSM state vector update.<br>V87E - Allow R22 to accept VHF range data.<br>V88E - Inhibit acceptance of VHF range data. |
| | | Poss PROG alarm (4.8.1.16) | | R02. |
| | | (R60, Attitude Maneuver Routine) | | Provides for maneuver (auto or manual) to attitude specified by option selected. R60 called only if maneuver >10° (in any axis) required. Otherwise maneuver performed by R61. |
| | | (If UPLINK ACTY lt on Key V58E) | | Must key V58E in order to get R60 (V50 N18), except for initial entry to P20. R61 resets V50 N18 flag; V58E sets flag to allow R60 if subsequent auto maneuver >10° required. |

| STA/T | STEP | PROCEDURE | PANEL | REMARKS |
|---|---|---|---|---|
| CMP | 4 | Poss FL V50 N18 (auto mnvr request) (2 sec priority) If req GMBL angle change >10° | 2,140 | DAP will point preferred or X-axis at LM but will not constrain roll about tracking axis. If required maneuver <10°, maneuver performed by R61. |
| | | R, P, Y XXX.XX DEG | | Required gimbal angles. |
| CDR | | Accept SC CONT - CMC | 1 | |
| | | CMC MODE - AUTO | | |
| CMP | | PRO | 2,140 | This may be performed second time as attitude trim. |
| | | V06 N18 | | Priority display. At completion of maneuver, display will revert to FL V50 N18. |
| | | R, P, Y XXX.XX DEG | | |
| | | Mon auto mnvr on FDAI | | |
| | | Reject Key V62E | | Provides reference for manual maneuver. |
| | | RHC - null FDAI err needles | | |
| | | Recycle 4 | | |
| CDR | | or SC CONT - SCS (or CMC mode ≠ auto) | 1 | To update display without performing maneuver. |
| CMP | | PRO | 2,140 | |
| | | Recycle 4 | | |
| | | When att satisfactory ENTR | | Terminates Attitude Maneuver Routine, R60. (Routine R61 will continue to compute and maintain selected attitude (option) as long as SC control CMC AUTO and RHC not moved out of detent.) UPLINK ACTY light will be lit if V50 N18 flag not set and tracking angles >10 degrees. |



NORMAL/BACKUP

| STA/T | STEP | PROCEDURE | PANEL | REMARKS |
|---|---|---|---|---|
| CMP | a. | If opt sighting mrks desired, go to 5 | | |
| | or b. | If BU opt (COAS) sighting mrks desired, go to 8 | | |
| | or c. | If VHF ranging data update desired,<br>Key V87E<br>Go to 11 | 2,140 | |
| | | (R52, Automatic Optics Positioning) | | |
| | 5 | OPT ZERO - OFF<br>OPT MODE - CMC<br>If TA >50° | 122 | If TA >50°, trunnion driven to upper limit (≈49.7754°) and held at this angle. |
| | a. | RHC - man mnvr to selected tracking att | | Key V16 N22 for desired gimbal angles.<br>Key V16 N92 for desired optics angles. |
| CDR | or b. | SC CONT - CMC<br>CMC MODE - AUTO<br>Key V58E if RHC moved from detent | 1<br><br>2,140 | |
| | | (R21, Rendezvous Tracking Sighting Mark Routine) | | To perform sighting marks on LM. |
| | 6 | Key V57E | | |

| STA/T | STEP | PROCEDURE | | PANEL | REMARKS |
|---|---|---|---|---|---|
| CMP | 7 | FL V51 N45 (please mrk) | | 2,140 | |
| | | Mrks (VHF/opt) | XXBXX MKS | | Number of marks processed by R22. Two most significant digits display VHF ranging marks. Two least significant digits display optics marks [either SXT or backup optics (COAS) marks]. Optics mark counter does not distinguish between backup and primary marks. |
| | | TF GETI (next burn) | XXBXX MIN-SEC | | Constraint - R2 cannot be >59B59 at this point. If TF GETI >59 min 59 sec, display is limited. N35 may be used to get full time to ignition. |
| | | MGA (next burn) | XXX.XX DEG | | MGA displayed as -00002 at this point if IMU not on and orientation known (REFSMMAT flag reset). Otherwise, MGA at GETI displayed if CSM +X axis aligned with initial thrust direction. |
| | | OPT MODE - MAN<br>OHC - ctr LM in SXT<br>MARK pb - push | | 122 | |
| | | Accept | Repeat mrk proced | | If more marks desired. |
| | | or | PRO<br>OPT MODE - CMC<br>Go to 11 | 2,140<br>122 | If sufficient marks have been made. To ensure processing of last mark, wait 15 seconds before proceeding. This allows for previous mark to be processed. If PRO done too soon, one of last two marks may be ignored. |
| | | Reject | MARK REJ pb - push<br>Repeat mrk proced | | |



NORMAL/BACKUP

| STA/T STEP | PROCEDURE | PANEL | REMARKS |
|---|---|---|---|
| (R23, Backup Rendezvous Tracking Sighting Mark Routine) | | | To perform sighting marks on LM using backup optics (COAS). |
| CMP 8 | Key V54E | 2,140 | |
| 9 | FL V06 N94 | | |
| | SA XXX.XX DEG<br>TA XX.XXX DEG | | SA - Shaft angle (nominal = 00000).<br>TA - Trunnion angle (nominal = 57470). |
| | Accept PRO<br>Reject Key V24E<br>Load desired data | | |
| 10 | FL V53 N45 (request alt LOS mrk) | | |
| | Mrks (VHF/opt) XXBXX MKS | | Number of marks processed by R22. Two most significant digits display VHF ranging marks. Two least significant digits display optics marks [either SXT or backup optics (COAS) marks]. Optics mark counter does not distinguish between backup and primary marks. |
| | TF GETI (next burn) XXBXX MIN-SEC | | Constraint - R2 cannot be >59B59 at this point. If TF GETI >59 min 59 sec, display is limited. N35 may be used to get full time to ignition. |
| | MGA (next burn) XXX.XX DEG | | MGA displayed as -00002 at this point if IMU not on and orientation known (REFSMMAT flag reset). Otherwise, MGA at GETI displayed if CSM +X axis aligned with initial thrust direction. |
| | RHC - Align LM in COAS<br>ENTR | | Alternate LOS mark. |

| STA/T STEP | PROCEDURE | PANEL | REMARKS |
|---|---|---|---|
| CMP | Accept Repeat mrk proced | | If more marks desired. |
| | or PRO | 2,140 | If sufficient marks have been made. To ensure processing of last mark, wait 15 seconds before proceeding. This allows for previous marks to be processed. If PRO done too soon, one of the last two marks may be ignored. |
| | Reject V86E<br>Repeat mrk proced | | Rejects previous mark. |
| (R22, Rendezvous Tracking Data Processing Routine) | | | |
| 11 | Poss FL V06 N49 (2 sec priority)<br>ΔR XXXX.X NM<br>ΔV XXXX.X FPS | | Excessive update parameters. To change ΔR and ΔV threshold values, refer to 4.8.1.10. |
| | Source code 0000X. | | 00001 = Optics (CMC does not differentiate between SXT and COAS marks).<br>00002 = VHF ranging. |
| | Wait 2 sec | | Priority display. Will not respond to DSKY input until after 2 seconds. |
| | Accept PRO | | Incorporates update data. |
| | Reject Key V32E | | Does not incorporate update data. (V32E will erase mark data from positions 1, 2, and 3 if R3 = 00001.) |



NORMAL/BACKUP

| STA/T | STEP | PROCEDURE | PANEL | REMARKS |
|---|---|---|---|---|
| CMP | 12 | To term P20 & all other prog running<br>Key V37E 00E | 2,140 | |
| | or | To term P20 only<br>Key V56E | | If V56 keyed in during computation in P34/P35, these computations will be restarted from beginning. |
| | | Poss FL V37<br>Key XXE | | FL V37 only if no other program active. |
| | 13 | Set opt cont<br>OPT ZERO - ZERO<br>OPT PWR - OFF<br>RETCL BRT tw - DIM | <br>122<br>100<br>122 | |

| STA/T | STEP | PROCEDURE | PANEL | REMARKS |
|---|---|---|---|---|
| | | 4.11.2.2 (V83) Rendezvous Parameter Display #1 (R31) | | Displays CMC calculated rendezvous parameters (range, range rate, and theta). |
| | | CMC - on (req), 4.8.1.3<br>ISS - on & orient known (req), 4.8.1.3 & 4.14 | | Required for meaningful display of theta. |
| CMP | 1 | Key V83E | 2,140 | |
| | | Poss OPR ERR | | If another extended verb active. |
| | 2 | FL V16 N54 | | Display updated at 2-second intervals. |
| | | Range XXX.XX NM | | Range and range rate based on stored state vectors. Range and range rate displays may degrade considerably at ranges below ≈0.3 to 0.5 NM depending on marking schedules and resultant CMC navigation accuracy. Once this routine has started, changes to state vector caused by optics mark or VHF sample will not be reflected in displayed parameters. |
| | | Range rate XXXX.X FPS | | (-) range rate indicates closing. This calculation not sufficiently accurate for reliable terminal closing values. It should not be utilized without good visual cues. |
| | | Theta (lcl horiz/ CSM +X) XXX.XX DEG | | Theta - Angle included between +Xsc axis and local horizontal. Angle in range 0° to 180° indicates +Xsc axis is above local horizontal plane. Total range: 0° to 360°. |
| | | PRO<br>Return to prog in progress | | |

| STA/T | STEP | PROCEDURE | PANEL | REMARKS |
|---|---|---|---|---|
| | | 4.11.2.3 (V85) Rendezvous Parameter Display #2 (R34) | | Displays CMC calculated rendezvous parameters (range, range rate, and phi). |
| | | CM - on (req), 4.8.1.3 | | |
| | | ISS - on & orient known (req), 4.8.1.3 & 4.14 | | Required for meaningful display of phi. |
| | | Opt pwr up (req), 4.8.1.4 | | Required for meaningful display of phi. |
| CMP | 1 | Key V85E | 2,140 | |
| | | Poss OPR ERR | | If another extended verb active. |
| | 2 | FL V16 N53 | | Display updated at 2-second intervals. |
| | | Range XXX.XX NM<br>Range rate XXXX.X FPS | | Range and range rate computed based on stored LM and CSM state vectors. (-) range rate indicates closing. Range and range rate displays may degrade considerably at ranges below ≈0.3 to 0.5 NM depending on marking schedules and resultant CMC navigation accuracy. Once this routine has started, changes to state vector caused by optics mark or VHF sample will not be reflected in displayed parameters. |
| | | Phi (lcl horiz/ SLOS) XXX.XX DEG | | Phi - Angle included between optics starline of sight and a local horizontal. Angle in range 0° to 180° indicates SLOS is above local horizontal plane. Total range: 0° to 360°. |
| | | PRO<br>Return to prog in progress | | |

| STA/T STEP | PROCEDURE | PANEL | REMARKS |
|---|---|---|---|
| | 4.11.2.4 (V90) Rendezvous Out of Plane Display (R36) | | Displays CMC calculated rendezvous out-of-plane parameters (Y, Ydot, Psi) for vehicles selected in 2. |
| | CMC - on (req), 4.8.1.3 | | |
| CMP | 1 Key V90E | 2,140 | |
| | Poss OPR ERR | | If another extended verb active. |
| | 2 FL V04 N12 | | |
| | Option code 00002. | | |
| | CMC assumed option 0000X. | | |
| | (1 = CSM active; 2 = LM active) | | |
| | Accept PRO | | |
| | Reject V22E (load desired option) | | |
| | 3 FL V06 N16 | | |
| | GET event 00XXX. HRS | | GET for which out-of-plane parameters desired. N16 initialized to TIG(N33) before this display, and after recycle. (Present time indicated by all zeros.) |
| | 000XX. MIN | | |
| | 0XX.XX SEC | | |
| | Accept PRO | | |
| | Reject Key V25E | | |
| | Load desired GET event | | |



NORMAL BACKUP

| STA/T | STEP | PROCEDURE | PANEL | REMARKS |
|---|---|---|---|---|
| CMP | 4 | FL V06 N90 (rndz out of plane param) | 2,140 | |
| | | Y XXX.XX NM | | Y - Distance along V x R of passive vehicle. |
| | | Ydot XXXX.X FPS | | Ydot = Rate of change of Y. +, increasing; -, decreasing. |
| | | Psi XXX.XX DEG | | Psi - Angle between active vehicle orbital plane and LOS to passive vehicle projected into horizontal plane. Range: 0° to 360°. |
| | | Accept PRO<br>Exit R36 | | |
| | | Reject Key V32E<br>Return to 3 (adjust GET event) | | To obtain additional data point. |

(V90) RENDEZVOUS OUT OF PLANE DISPLAY (R36)

| STA/T | STEP | PROCEDURE | PANEL | REMARKS |
|---|---|---|---|---|
| | | 4.11.2.5 (V89) Rendezvous Final Attitude (R63) | | Calculates final gimbal angles required to point either CSM +X axis or preferred tracking axis at LM. Provides auto maneuver to selected attitude by calling R60. |
| | | CMC - on (req), 4.8.1.3<br>ISS - on & orient known (req), 4.8.1.3 & 4.14<br>SCS - on (desired), 4.8.4.2<br>RCS DAP - load & activate (req), 4.8.2.1 | | |
| CMP | 1 | Key V37E 00E | 2,140 | R63 may be selected from P00 only. |
| | 2 | Sel ISS Tot Att Disp, 4.7.2.5 | | Both FDAIs recommended so that either reference system (IMU or GDC) may be monitored. (CMC attitude error and rate display available.) |
| | 3 | Key V89E<br>Poss PROG alarm (4.8.1.16) | | R02. |
| | 4 | FL V04 N06<br>Option code 00003<br>CMC assumed option 0000X<br>(00001 - Pref; 00002 - +X axis)<br>Accept PRO<br>Reject Key V22E<br>Load desired option | | |
| | 5 | FL V06 N18 (computed GMBL angles)<br>R, P, Y XXX.XX DEG<br>Accept PRO<br>Reject Key V32E (to update disp)<br>or Key V34E (to term routine) | | Computed required gimbal angles at selected tracking attitude (preferred or +X axis) if present IMU orientation maintained. |



NORMAL/BACKUP

| STA/T STEP | PROCEDURE | PANEL | REMARKS |
|---|---|---|---|
| | (R60, Attitude Maneuver Routine) | | Provides maneuver (automatic or manual) to attitude selected in 4. |
| CMP | 6 FL V50 N18 (CMC auto request)<br>R, P, Y XXX.XX DEG | 2,140 | Required gimbal angles. |
| CDR | Accept SC CONT - CMC<br>CMC MODE - AUTO | 1 | |
| CMP | PRO<br>Go to 7 | 2,140 | |
| | Reject Key V62E<br>RHC - null FDAI err needles | | Provides reference for manual maneuver. |
| CDR | or SC CONT - SCS<br>(or CMC MODE ≠ AUTO) | 1 | Recomputes desired attitude without performing auto maneuver. |
| CMP | PRO (to update disp)<br>Recycle 6 | 2,140 | |
| | or ENTR<br>Exit R60 | | Terminates R60. |
| | 7 V06 N18 (auto mnvr)<br>R, P, Y XXX.XX DEG | | |
| | Mon auto mnvr on FDAI<br>Return to 6 | | |

| STA/T STEP | PROCEDURE | PANEL | REMARKS |
|---|---|---|---|
| | 4.11.2.6 (P76) TARGET DELTA V | | Provides LM maneuver parameters to CMC for updating CMC knowledge of LM state vector.<br><br>P76 may be performed concurrently with P20. If P20 operating, discontinue marking and ensure data incorporation complete in P20 by reviewing N45 mark counters prior to P76 state vector changes. If P76 completed prior to LM burn, delay P20 state vector updates until after LM maneuver executed. |
| | CMC - on (req), 4.8.1.3 | | |
| CMP | 1 Key V37E 76E | 2,140 | |
| | 2 FL V06 N33<br>GETI 00XXX. HRS<br>000XX. MIN<br>0XX.XX SEC<br><br>Accept PRO<br>Reject Key V25E<br>Load desired GETI | | |
| | 3 FL V06 N84<br>ΔVX, Y, Z (LM lcl vert) XXXX.X FPS<br><br>Accept PRO<br>Reject Key V25E<br>Load desired data | | CMC updates LM state vector and zeros mark counters. |
| | 4 FL V37<br>Key XXE | | R00. |



NORMAL BACKUP

| STA/T | STEP | PROCEDURE | PANEL | REMARKS |
|---|---|---|---|---|
| | | 4.12 PRETHRUSTING | | |
| | | 4.12.1 ORBIT CHANGE PRETHRUSTING | | If P37 Return to Earth Program desired, go to 4.12.1.2. |
| | | 4.12.1.1 (P30) External Delta V Prethrusting | | Accepts targeting parameters from sources external to CMC and computes, therefrom, required velocity and other initial conditions required by CMC for execution of ΔV maneuver. Targeting parameters include time of ignition (TIG) and impulsive ΔV along CSM local vertical axes at TIG. P30 displays, to flight crew and MSFN, certain specific dependent variables associated with desired maneuver for approval by flight crew/MSFN. |
| | | CMC - on (req), 4.8.1.3<br>ISS - on & orient known (desired), 4.8.1.3 & 4.14 | | ISS must be on and its orientation known to obtain middle gimbal display (step 5). |
| CMP | 1 | Key V37E 30E | 2,140 | At this point, P30 sets TRACK and UPDATE flags. |
| | 2 | FL V06 N33<br>GETI, stored OOXXX. HRS<br>OOOXX. MIN<br>OXX.XX SEC<br><br>Accept Rcd GETI<br>PRO<br>Reject V25E, load desired GETI | | |
| | 3 | FL V06 N81 (ΔV compnts)<br>ΔVX, Y, Z (lcl vert at GETI) XXXX.X FPS | | Stored ΔV components along local vertical axes at GETI. If P30 for estimating perilune, load N81:<br>+00000<br>+00010<br>+00000 |



NORMAL/BACKUP

| STA/T | STEP | PROCEDURE | | PANEL | REMARKS |
|---|---|---|---|---|---|
| CMP | | Accept PRO | | 2,140 | PRO option resets UPDATE flag and sets external ΔV flag. |
| | | Reject V25E, load desired data | | | |
| | 4 | FL V06 N42 (calculated thrust parameters) | | | |
| | | Ha | XXXX.X NM | | Altitudes above launch pad radius if earth orbit or above lunar radius at most recently defined landing site. Measurements limited to 9999.9 NM. Calculated Ha and Hp in P30 considerably in error for long burns and should be ignored because parameters computed (assuming an impulsive ΔV) at time of ignition along CSM local vertical axis. ΔV magnitude of impulsive ΔV vector at GETI. |
| | | Hp | XXXX.X NM | | |
| | | ΔV (req) | XXXX.X FPS | | |
| | | Coord parameters with MSFN (if available) | | | |
| | | Accept PRO | | | |
| | | Reject Reselect P30 or P27 | | | |
| | | Load new parameters | | | |
| | 5 | FL V16 N45 | | | |
| | | Mrks (VHF/opt) | XXBXX MKS | | Number of marks processed by R22. Two most significant digits display VHF ranging marks. Two least significant digits display optics marks [either SXT or backup optics (COAS) marks]. Optics mark counter does not distinguish between backup and primary marks. |
| -59:59 | | TF GETI (next burn) | XXBXX MIN-SEC | | Constraint: R2 cannot be >59B59 at this point. If TF GETI >59 min 59 sec, display limited. For full time to ignition display, use N35. |
| | | MGA (next burn) | XXX.XX DEG | | MGA displayed as -00002 at this point if IMU not on and orientation known (REFSMMAT flag reset). Otherwise, MGA at GETI displayed if CSM +X axis aligned with initial thrust direction. |



(P30) EXTERNAL DELTA V PRETHRUSTING

| STA/T | STEP | PROCEDURE | PANEL | REMARKS |
|---|---|---|---|---|
| CMP | | Rcd values<br>PRO<br>Align GDC to IMU, 4.8.4.6 | 2,140 | |
| | 6 | FL V37<br>Key XXE | | If average G on, R00 turns off average G, and zeros rendezvous mark and VHF ranging mark counters. Otherwise, counters not zeroed. R00 also sets or resets RNDZ, TRACK, and UPDATE flags, depending on which programs in progress or called. R00 may recycle into P20 under certain conditions. |
| | | Go to<br>(P40) G&N/SPS Thrusting, 4.13.2.1 | | |
| | | or (P41) G&N/SM RCS Thrusting, 4.13.2.2 | | |
| | | or SCS Thrusting, 4.13.3 | | |
| | | or (P52) IMU Realign, 4.14.1.2 | | IMU realign should be selected if MGA unsatisfactory in step 5. |



NORMAL BACKUP

| STA/T | STEP | PROCEDURE | PANEL | REMARKS |
|---|---|---|---|---|
| | | 4.12.1.2 (P37) Return to Earth Program | | Computes return-to-earth trajectory for CSM from outside lunar sphere of influence at TIG. P37 computes and displays preliminary series of parameters based on conic trajectory and crew-specified time of ignition, maximum change in velocity, and entry angle. Upon acceptance, P37 computes and stores target parameters for use by P40 or P41. P37 not restart protected and must be reselected if a restart occurs. P37 assumes no MSFN contact required.<br><br>Provides two modes of operation: fuel critical and nonfuel critical. Nonfuel critical mode can be used to move landing site by adjusting maximum change in velocity. |
| | | CMC - on (req), 4.8.1.3<br>ISS - on & orient known (desired), 4.8.1.3 & 4.14<br>SCS - on (desired), 4.8.4.2<br>DAP Data Load - complete (req), 4.8.2.1<br>(P30) External ΔV Prethrusting (if desired), 4.12.1.1 | | Desired to provide MGA display (step 10). |
| CMP | 1 | Key V37E 37E | 2 | |
| | 2 | FL V06 N33 (GETI)<br>00XXX. HRS<br>000XX. MIN<br>0XX.XX SEC | | Ground elapsed time of ignition. |
| | | Accept Rcd GETI<br>PRO<br>Reject V25E, load desired values | | |

| STA/T STEP | PROCEDURE | PANEL | REMARKS |
|---|---|---|---|
| CMP 3 | FL V06 N60<br>Blank<br>V Pred XXXXX. FPS | 2 | R2 and R3 initially 00000.<br><br>Maximum allowable change in velocity. To compute fuel critical trajectory, zeros should be loaded in R2. If slowdown desired, load negative value. |
| | Gamma EI XXX.XX DEG | | Flight path angle between inertial velocity vector and local horizontal at entry interface altitude, 65.8 NM (400,000 feet). Minus indicates flight path below horizontal plane. If zero-loaded in R3, computation solved to hit center of entry corridor. Otherwise, computation solved to hit angle entered. |
| | Accept Rcd R2 value<br>PRO | | Record R2 for subsequent use. Both input scaler (desired ΔV) and output scaler (entry velocity) use VPRED register of N60. Therefore, original ΔV input no longer in N60. R2 of N56 contains magnitude of original input. |
| | Reject V22E, V23E, or V25E<br>Load desired values | | |
| | Poss PROG alarm (comp problem)<br>FL V05 N09<br>00605 (solution does not converge; excessive iterations)<br>00612 (state vector in wrong sphere of influence)<br><br>V32E<br>RSET, return to 2 | | |



NORMAL BACKUP

| STA/T STEP | PROCEDURE | PANEL | REMARKS |
|---|---|---|---|
| CMP | or FL V37<br>Key V05 N09E (to verify alarm)<br>20607 (no solution from time theta or time radius routine)<br>20610 (state vector at TIG <400K feet)<br><br>KEY REL<br>37E, return to 2 | 2 | |
| 4 | FL V06 N61 (entry data)<br>Impact Lat (+N) XXX.XX DEG<br>Impact Long (+E) XXX.XX DEG<br>Blank<br><br>Accept Rcd values<br>PRO<br>Reject V32E, return to 2 | | |
| 5 | FL V06 N39<br>ΔT Trans 00XXX. HRS<br>000XX. MIN<br>0XX.XX SEC<br><br>Accept Rcd values<br>PRO<br>Reject V32E, return to 2 | | Time required for transfer from GETI to time of entry at 65.8 NM (400,000 ft) above Fischer ellipsoid. |
| 6 | FL V06 N60<br>Blank<br>V Pred XXXXX. FPS<br>Gamma EI XXX.XX DEG | | |

| STA/T STEP | PROCEDURE | PANEL | REMARKS |
|---|---|---|---|
| CMP | Accept Rcd values<br>PRO | 2 | |
| | Reject V32E, return to 2 | | |
| | 7 FL V06 N81 (ΔV compnts)<br>ΔVX, Y, Z (lcl vert at GETI) XXXX.X FPS | | |
| | Crew option<br>Key N40E<br>TF GETI XXBXX MIN-SEC<br>VG XXXX.X FPS<br>ΔV (accum) XXXX.X FPS | | |
| | Rcd VG (lcl vert vel to be gained)<br>KEY REL | | |
| | Accept Rcd N81 values<br>PRO<br>If first pass, recycle to 4 | | |
| | Poss PROG alarm (comp problem)<br>FL V05 N09<br>00605 (solution does not converge; excessive iterations)<br>00613 (re-entry angle out of limits) | | |
| | Key V32E, return to 2 | | |



NORMAL BACKUP

| STA/T | STEP | PROCEDURE | PANEL | REMARKS |
|---|---|---|---|---|
| CMP | 8 | FL V04 N06 (propul code)<br>00007 (option code)<br>0000X (CMC assumed option)<br>Blank<br><br>Accept PRO<br>Go to 9<br>Reject V22E, load desired option<br>Recycle 8 | 2 | CMC initially sets 00001 in R2 to indicate data intended for SPS thrust (P40). 00002 indicates RCS (P41). DAP Data Load should be complete before PRO. |
| | 9 | FL V06 N33<br>GETI 00XXX. HRS<br>000XX. MIN<br>0XX.XX SEC<br>Rcd data<br>PRO | | External ΔV flag reset at this point. |
| N | 10 | FL V16 N45 (mnvr data)<br>Mrks (VHF/opt) XXBXX MKS<br>TF GETI XXBXX MIN-SEC<br>MGA XXX.XX DEG<br>If IMU not aligned<br>R3 -00002<br><br>PRO | | Marks (VHF/optics) not meaningful to this program.<br><br>MGA (+) at TIG if CSM +X axis aligned with initial thrust direction. |
| | 11 | FL V37<br>Key XXE<br><br><br><br>Go to Thrusting, 4.13 | | If average G on, R00 turns off average G and zeros rendezvous mark and VHF ranging mark counters. Otherwise, counters not zeroed. R00 also sets or resets RNDZ, TRACK and UPDATE flags, depending on which programs in progress or called. R00 may recycle into P20 under certain conditions. |

| STA/T STEP | PROCEDURE | PANEL | REMARKS |
|---|---|---|---|
| | 4.12.2 RENDEZVOUS PRETHRUSTING | | |
| | 4.12.2.1 (P32/P72) Co-elliptic Sequence Initiation | | P32 Co-elliptic Sequence Initiation (CSM active) or P72 Co-elliptic Sequence Initiation Targeting (LM active) calculates parameters associated with CSI and with either P33 or P73 Constant Delta Altitude (CDH) ΔV Maneuvers.<br><br>Successful completion dependent upon assumptions:<br>a. Prescribed angle (E) exists at selected GETI (TPI).<br>b. GETI (CDH) -GETI (CSI), and GETI (TPI) -GETI (CDH), each >10 minutes.<br>c. CSI burn parallel to passive vehicle orbital plane (crew may modify), impulsive, and in active vehicle horizontal plane.<br>d. CDH maneuver minimizes ΔH variations and resulting Hp >85 for EO or >5.8 NM for LO.<br>e. Computed variables may be stored for later MSFN verification.<br><br>P32 or P72 may be performed concurrently with P20. If P20 operating, optic sighting marks on LM may be initiated by keying V57E (R21) or V54E (R23) and referring to 4.11.2.1, steps 5-7 or 8-10, respectively. Also if P20 operating, VHF ranging data state vector update may be initiated by configuring for VHF AM Ranging Mode, 4.5.6.6, and keying V87E.<br><br>Keying V34E terminates P32 or P72 at any flashing display. |



NORMAL BACKUP

| STA/T | STEP | PROCEDURE | | PANEL | REMARKS |
|---|---|---|---|---|---|
| | | CMC - on (req), 4.8.1.3<br>ISS - on & orient known (desired), 4.8.1.3 & 4.14 | | | Required if P20 running and automatic state vector update desired and, if P32, for meaningful MGA display during final N45 display (step 8). |
| CMP | 1 | Key V37E 32E/72E | | 2,140 | |
| | 2 | FL V06 N11 | | | |
| | | GETI (CSI) | 00XXX. HRS<br>000XX. MIN<br>0XX.XX SEC | | |
| | | Accept Rcd GETI (CSI)<br>PRO | | | |
| | | Reject Key V25E<br>Load desired GETI (CSI) | | | |
| | 3 | FL V06 N55 | | | |
| | | N | 0000X | | Future active vehicle apsidal crossing (perilune or apolune). Should load to define future crossing at which CDH maneuver should occur; e.g., 00001 = first, 00002 = second, etc. |
| | | E | XXX.XX DEG | | Elevation angle at GETI (TPI). |
| | | CENTANG | 00000 | | Initially 00000 (except for recycle from step 5) and used by CMC as an option code. If any nonzero value loaded in R3, CMC calculates CDH parameters for GETI (CDH) at N (180°) from CSI maneuver where N specified by value set in R1. |

(P32/P72) CO-ELLIPTIC SEQUENCE INITIATION

| STA/T STEP | PROCEDURE | PANEL | REMARKS |
|---|---|---|---|
| CMP | Accept Rcd data<br>PRO | 2,140 | |
| | Reject Key V25E<br>Load desired data | | |
| | 4 FL V06 N37<br>GETI (TPI) 00XXX. HRS<br>000XX. MIN<br>0XX.XX SEC | | |
| | Accept Rcd GETI (TPI)<br>PRO<br>Go to 8 | | |
| | Reject Key V25E<br>Load desired GETI (TPI) | | |
| | 5 CMC Computes CSI & CDH parameters | | |
| | Poss FL V05 N09<br>00600 no solution of LOS at TPI<br>00601 post CSI Hp <5.8 NM (<85 NM for EO)<br>00602 post CDH Hp <5.8 NM (<85 NM for EO)<br>00603 CDH -CSI <10 min<br>00604 TPI -CDH <10 min | | |
| | or Computed GETI (CDH) >input GETI (TPI) in step 4 | | |
| | 00605 no solution & CMC iterations >15 | | |



NORMAL BACKUP

| STA/T STEP | PROCEDURE | PANEL | REMARKS |
|---|---|---|---|
| CMP | 00606 CSI ΔV >1000 fps (for two consecutive iterations) | 2,140 | |
| | Key V32E<br>Return to 2 | | To adjust input parameters. |
| | FL V06 N75<br>Δ Alt (CDH) XXXX.X NM<br>ΔT (CDH -CSI) XXBXX MIN-SEC<br>ΔT (TPI -CDH) XXBXX MIN-SEC<br>Rcd values<br>PRO | | Maximum reading (displayed) in R2 and R3 is 59B59. Only minutes and seconds displayed although time computation done in hours, minutes, and seconds. Computed CDH and TPI times can be determined by calling N13 and N37, respectively. |
| 6 | FL V06 N81<br>ΔVX, Y, Z (lcl vert) XXXX.X FPS | | CMC calculated components of ΔV (in local vertical coordinates) for CSI. |
| | Accept Rcd values<br>PRO<br>Reject Key V25E<br>Load desired values | | To modify ΔV (local vertical) to correct for out of planeness, key V90E (R36). Use data obtained from R36 to determine desired ΔV (local vertical). Modification will not impact N82 of step 7. |
| 7 | FL V06 N82<br>ΔVX, Y, Z (lcl vert) XXXX.X FPS | | CDH velocity components based on original CSI values of step 6, and cannot be written over. |
| | Rcd values<br>PRO | | |
| 8 | FL V16 N45<br>Mrks XXBXX MKS | | Number of marks processed by R22. Two most significant digits display VHF ranging marks. Two least significant digits display optics marks [either SXT or backup optics (COAS) marks]. |

(P32/P72) CO-ELLIPTIC SEQUENCE INITIATION

| STA/T | STEP | PROCEDURE | PANEL | REMARKS |
|---|---|---|---|---|
| CMP | | TF GETI (CSI) XXBXX MIN-SEC | 2,140 | Time from CSI ignition. Maximum reading is 59B59.<br>-, before; +, after. |
| | | MGA -0000X | | -00001 for other than final pass.<br>-00002 for final pass (and IMU not aligned if P32). |
| | | Or IMU ALIGNED & P32 +XXX.XX DEG | | Middle gimbal angle (yaw):<br>+XXX.XX DEG for final pass and IMU aligned (if +X axis aligned to initial thrust direction). |
| | | To continue mrk process<br>Key V32E<br>Return to 5 | | |
| | or | To term mrk process & do fnl pass thru prog<br>PRO<br>Return to 5 | | |
| | or | After fnl pass thru prog<br>PRO | | |
| | 9 | FL V37<br>Key XXE | | R00. |



NORMAL BACKUP

| STA/T | STEP | PROCEDURE | PANEL | REMARKS |
|---|---|---|---|---|
| | | 4.12.2.2 (P33/P73) Constant Delta Altitude | | P33 Constant Delta Altitude (CSM active) or P73 LM Constant Delta Altitude Targeting (LM active) computes parameters associated with CDH maneuver. Successful completion dependent upon prior completion of P32 for P33, or P72 for P73.<br><br>P33 or P73 may be performed concurrently with P20. If P20 operating, optic sighting marks on LM may be initiated by keying V57E (R21) or V54E (R23) and referring to 4.11.2.1, steps 5-7 or 8-10, respectively. Also if P20 operating, VHF ranging data state vector update may be initiated by configuring for VHF AM Ranging Mode, 4.5.6.6, and keying V87E.<br><br>Keying V34E terminates P33 or P73 at any flashing display. |
| | | CMC - on (req), 4.8.1.3<br>ISS - on & orient known (desired), 4.8.1.3 & 4.14 | | Required if P20 running and automatic state vector desired and, if P33, for meaningful MGA display during final N45 display in step 5. |
| | | If P33 - P32 (complete), 4.12.2.1<br>If P73 - P72 (complete), 4.12.2.1 | | P33 or P73 computations based upon GETI (TPI), and elevation angle (E) defined in P32 or P72. |
| CMP | 1 | Key V37E 33E/73E | 2,140 | |
| | 2 | FL V06 N13<br>GETI (CDH) 00XXX. HRS<br>000XX. MIN<br>0XX.XX SEC | | |

| STA/T STEP | PROCEDURE | PANEL | REMARKS |
|---|---|---|---|
| CMP | Accept Rcd GETI (CDH)<br>PRO<br>Go to 5<br>Reject Key V25E<br>Load desired GETI (CDH) | 2,140 | |
| 3 | CMC computes CDH parameters<br><br>Poss FL V05 N09<br>00611 (No GETI for given E)<br>PRO, go to FL V06 N75<br><br>or Key V32E, return to 2 | | To force GETI (CDH) solution.<br><br>To adjust input parameters. |
| | FL V06 N75<br>Δ Alt (CDH) XXXX.X NM<br>ΔT (TPI -CDH) XXBXX MIN-SEC<br><br>ΔT (TPI -TPI) XXBXX MIN-SEC<br><br>Rcd values<br>PRO | | Maximum reading (displayed) in R2 and R3 is 59B59. Only minutes and seconds displayed although time computation done in hours, minutes, and seconds.<br><br>TPI computed minus TPI computed in P32 or P72. TPI time, computed in P33 or P73, can be determined by calling N37. |
| 4 | FL V06 N81<br>ΔVX, Y, Z (lcl vert) XXXX.X FPS<br><br>Accept Rcd values<br>PRO<br>Reject Key V25E<br>Load desired values | | CMC calculated components of ΔV (in local vertical coordinates) for CDH.<br><br>To modify ΔV (local vertical) to correct for out of planeness, key V90E (R36). Use data obtained from R36 to determine desired ΔV (local vertical). |



NORMAL/BACKUP

| STA/T | STEP | PROCEDURE | | PANEL | REMARKS |
|---|---|---|---|---|---|
| CMP | 5 | FL V16 N45 | | 2,140 | |
| | | Mrks | XXBXX MKS | | Number of marks processed by R22. Two most significant digits display VHF ranging marks. Two least significant digits display optics marks [either SXT or backup optics (COAS) marks]. |
| | | TF GETI (CDH) | XXBXX MIN-SEC | | Time from CDH ignition. Maximum reading is 59B59. -, before; +, after. |
| | | MGA | -0000X | | -00001 for other than final pass.<br>-00002 for final pass (and IMU not aligned if P33). |
| | | Or IMU ALIGNED & P33 | +XXX.XX DEG | | Middle gimbal angle (yaw):<br>+XXX.XX DEG for final pass and IMU aligned (if +X axis aligned to initial thrust direction). |
| | | To continue mrk process<br>Key V32E<br>Return to 3 | | | |
| | or | To term mrk process & do fnl pass thru prog<br>PRO<br>Return to 3 | | | |
| | or | After fnl pass thru prog<br>PRO | | | |
| | 6 | FL V37<br>Key XXE | | | R00. |



(P33/P73) CONSTANT DELTA ALTITUDE

| STA/T | STEP | PROCEDURE | PANEL | REMARKS |
|---|---|---|---|---|
| | 4.12.2.3 | (P34/P74) Transfer Phase Initiation | | P34 Transfer Phase Initiation (CSM active) or P74 LM TPI Targeting (LM active) calculates required ΔV and other initial conditions required by CMC for CSM execution (P34), or by LGC for LM execution (P37), of TPI maneuver, given:<br>a. Time of ignition, GETI (TPI), or elevation angle (E) of active-to-passive LOS at GETI (TPI).<br>b. Central angle of transfer (CENTANG) of passive vehicle from GETI (TPI) to time of intercept.<br>c. Calculates GETI (TPI) given E, or E given GETI (TPI).<br><br>P34 or P74 may be performed concurrently with P20. If P20 operating, sighting marks on LM may be initiated by keying V57E (R21) or V54E (R23) and referring to 4.11.2.1, steps 5-7 or 8-10, respectively. Also if P20 operating, VHF ranging data state vector update may be initiated by configuring for VHF Ranging Mode, 4.5.6.6, and keying V87E. |
| | | CMC - on (req), 4.8.1.3<br>ISS - on & orient known (desired), 4.8.1.3 & 4.14 | | Required if P20 running and automatic state vector desired and, if P34, for meaningful MGA display during final N45 display (step 8). |
| CMP | 1 | Key V37E 34E/74E | 2,140 | |
| | 2 | FL V06 N37<br>GETI (TPI) 00XXX. HRS<br>000XX. MIN<br>0XX.XX SEC | | |



NORMAL BACKUP

| STA/T STEP | PROCEDURE | PANEL | REMARKS |
|---|---|---|---|
| CMP | Key V25E<br>Load desired GETI (TPI)<br>Rcd GETI (TPI)<br>PRO | 2,140 | Load desired GETI (TPI) if CMC computation of E desired. For a specified value of E and CMC computation of GETI (TPI), load an initial value of GETI (TPI). Loaded value should be within 30 minutes of actual. |
| 3 | FL V06 N55 | | |
| | NN 0000X. | | Integration method and number of precision offset computations desired. NN initially 0. |
| | E XXX.XX DEG | | Elevation angle. |
| | CENTANG XXX.XX DEG | | Central angle of passive vehicle from GETI (TPI) to time of intercept. |
| | Accept Rcd CENTANG & E<br>PRO<br>Go to 8 | | |
| | Reject Key V25E<br>Load desired data | | Load desired NN in R1: 0, conic integration; X, precision integration with (X) target offsets.<br><br>Desired E in R2, CMC computes GETI (TPI). +00000 in R2, CMC computes E. |
| 4 | If E specified (CMC computes GETI)<br><br>Poss FL V05 N09<br>00611 (no GETI for given E)<br>PRO<br>Return to 2 (adj input parameters) | | |

| STA/T STEP | PROCEDURE | | PANEL | REMARKS |
|---|---|---|---|---|
| CMP | FL V06 N37 | | 2,140 | |
| | GETI (TPI) | 00XXX. HRS<br>000XX. MIN<br>0XX.XX SEC | | |
| | Rcd GETI (TPI)<br>PRO<br>Go to 5 | | | |
| or | If +00000 specified for E (CMC computes E)<br>FL V06 N55 | | | |
| | NN | 0000X. | | Integration method and number of precision offset computations desired. |
| | E | XXX.XX DEG | | CMC computed E. |
| | CENTANG | XXX.XX DEG | | |
| | Rcd E<br>PRO | | | |
| 5 | FL V06 N58 | | | |
| | Hp | XXXX.X NM | | Perigee altitude above launch pad radius for earth orbit, or perilune altitude above landing site radius for lunar orbit, after TPI maneuvers. Display meaningless if Hp >9999.9 NM. |
| | ΔV (TPI) | XXXX.X FPS | | Required impulsive ΔV to accomplish TPI maneuver at GETI (TPI). |



NORMAL BACKUP

| STA/T | STEP | PROCEDURE | | PANEL | REMARKS |
|---|---|---|---|---|---|
| CMP | | ΔV (TPF) | XXXX.X FPS | 2,140 | Required impulsive ΔV to accomplish intercept maneuver (TPF) at calculated time of intercept. |
| | | Rcd data<br>PRO<br>If not fnl pass, go to 7 | | | To obtain central angle of active vehicle, key V06 N52. |
| | 6 | FL V06 N81 (fnl pass only)<br>ΔVX, Y, Z (lcl vert) | XXXX.X FPS | | Required impulsive ΔV components in active vehicle local vertical coordinates. |
| | | Accept Rcd ΔV (lcl vert)<br>PRO<br>Reject Key V25E<br>Load desired ΔV (lcl vert) | | | To modify ΔV (lcl vert) to correct for out of planeness, key V90E (R36). Use data obtained from R36 to determine desired ΔV (local vertical). |
| | 7 | FL V06 N59<br>ΔV 1, 2, 3 (LOS)<br>Rcd ΔV (LOS)<br>PRO | XXXX.X FPS | | Required impulsive ΔV components in an orthogonal coordinate system oriented along CSM to LM LOS in P34, or along LM to CSM LOS for P74. (For complete definition, refer to GSOP section 5.4.2.2 of R577.) |
| | 8 | FL V16 N45<br>Mrks | XXBXX MKS | | Number of marks processed by Rendezvous Data Processing Routine, R22. Two most significant digits display VHF ranging marks. Two least significant digits display optics marks [either SXT or backup optics (COAS) marks]. |
| | | TF GETI (TPI) | XXBXX MIN-SEC | | Time from ignition. Max reading is 59B59. -, before; +, after. |
| | | MGA | -0000X | | -00001 for other than final pass.<br>-00002 for final pass (and IMU not aligned in P34). |

| STA/T STEP | PROCEDURE | PANEL | REMARKS |
|---|---|---|---|
| CMP | Or IMU ALIGNED & P34 +XXX.XX DEG | 2,140 | Middle gimbal angle (yaw):<br>+XXX.XX DEG for final pass and IMU aligned (if +X axis aligned to initial thrust direction). |
| | To continue mrk process<br>Key V32E<br>Return to 4 | | |
| | or **To term mrk process & do fnl pass thru prog**<br>PRO<br>Return to 4 | | |
| | or After fnl pass thru prog<br>PRO<br>If P74, xmit all mnvr parameters to LM | | |
| 9 | FL V37<br>Key XXE | | ROO. |



NORMAL BACKUP

| STA/T | STEP | PROCEDURE | PANEL | REMARKS |
|---|---|---|---|---|
| | 4.12.2.4 | (P35/P75) Transfer Phase Midcourse | | P35 Transfer Phase Midcourse (CSM active) or P75 TPM Targeting (LM active) calculates required ΔV and other initial conditions required by CMC for CSM (P35), or by LGC for LM (P75), execution of next midcourse correction of transfer phase.<br><br>P35 or P75 may be performed concurrently with P20. If P20 operating, sighting marks on LM may be initiated by keying V57E (R21) or V54E (R23) and referring to 4.11.2.1, steps 5-7 or 8-10, respectively. Also if P20 operating, VHF ranging data state vector update may be initiated by configuring for VHF Ranging Mode, 4.5.6.6, and keying V87E. |
| | | CMC - on (req), 4.8.1.3<br>If P35 - P34 (complete), 4.12.2.4<br>If P75 - P74 (complete), 4.12.2.4 | | Time of intercept computed and stored by P34 (P74) required for P35 (P75) computations. Type of integration (conic or precision) and number of offsets determined by P34 (P74) computations. |
| | | ISS - on & orient known (desired), 4.8.1.3 & 4.14 | | Required if P20 running and automatic state vector desired and, if P35, for meaningful MGA display during final N45 display (step 4). |
| CMP | 1 | Key V37E 35E/75E<br>Go to 4 | 2,140 | |
| | 2 | FL V06 N81 (fnl pass only)<br>ΔV X, Y, Z (lcl vert) XXXX.X FPS | | Required ΔV components in active vehicle local vertical coordinates. |
| | | Accept Rcd ΔV (lcl vert)<br>PRO | | |
| | | Reject Key V25E<br>Load desired ΔV (lcl vert) | | To modify ΔV (local vertical) to correct for out of planeness, key V90E (R36). Use data obtained from R36 to determine desired ΔV (local vertical). |

| STA/T | STEP | PROCEDURE | | PANEL | REMARKS |
|---|---|---|---|---|---|
| CMP | 3 | FL V06 N59 | | 2,140 | |
| | | ΔV 1, 2, 3 (LOS) | XXXX.X FPS | | Required impulse ΔV components in an orthogonal coordinate system oriented along CSM to LM LOS (P35) or along LM to CSM LOS (P75). (For complete definition refer to GSOP section 5.4.2.3 of R577.) |
| | | Rcd ΔV (LOS PRO | | | To obtain active vehicle central angle, key V06 N52. |
| | 4 | FL V16 N45 | | | |
| | | Mrks | XXBXX MKS | | Number of marks processed by R22. Two most significant digits display VHF ranging marks. Two least significant digits display optics marks [either SXT or backup optics (COAS) marks]. |
| | | TF GETI (TPM) | XXBXX MIN-SEC | | Time from ignition (update at 1-second intervals). Max reading is 59B59; -, before; +, after. GETI (TPM) recomputed as Tnow +A (+B for P75) for each recycle and again when final pass selected (PRO). Value of A (B for P75), stored in erasable memory, may be changed by using procedure 4.8.1.11, by P27 update, or by prelaunch erasable load. |
| | | MGA | -0000X | | -00001 for other than final pass.<br>-00002 for final pass (and IMU not aligned in P35). |
| | | Or IMU ALIGNED & P35 | +XXX.XX DEG | | Middle gimbal angle (yaw):<br>+XXX.XX DEG for final pass and IMU aligned (if +X axis aligned to initial thrust direction) |
| | | To continue mrk process<br>Key V32E<br>Return to 3 | | | |



NORMAL/BACKUP

| STA/T STEP | PROCEDURE | PANEL | REMARKS |
|---|---|---|---|
| | or To term mrk proced & do fnl pass thru prog | | |
| CMP | PRO | 2,140 | |
| | Return to 2 | | |
| | or After fnl pass thru prog PRO If P75, xmit all mnvr parameters to LM | | |
| 5 | FL V37 Key XXE | | R00. |

| STA/T STEP | PROCEDURE | PANEL | REMARKS |
|---|---|---|---|
| | 4.13 THRUSTING | | For general G&C operating data, refer to operating notes 4.6.1. |
| | 4.13.1 VEHICLE PREPARATION | | |
| | (Proced not designated "req" are optional) | | |
| | 1 For orb change | | |
| | Obtain update from MSFN | | |
| CMP | Gas Separator Cartridge Prep (req) | | |
| | Remove separator from water pistol & stow temporarily in LEB stowage bag | | |
| | Assure separator on food prep unit secured with bayonet locks | | |
| | Install outlet cap on food prep unit separator | | |
| | SPS & SM RCS Checks, 4.5.2.1 & 4.5.2.2 | | |
| | EPS DC & AC Checks, 4.5.3.3 & 4.5.3.4 | | |
| | Press Suit Ckt & PGA Check at 5.0 psia, 4.5.4.9 (if req) | | |
| | C&WS Oper Check, 4.5.5.1 | | |
| | CMC Self Check, 4.8.1.7 | | |
| | DSKY Condition Lt Check, 4.8.3.1 | | |
| | If undocked from LM | | |
| | Dry tunnel | | If necessary, absorb water with towel. Condensed moisture in tunnel rains on crew during thrusting. |
| | ΔV Test & Null Bias Check, 4.7.6.1 | | In-flight verification of X-axis accelerometer output, ΔV indicator, SPS THRUST light, and thrust cutoff relay in EMS. |
| | 2 For deorbit or lunar ret | | |
| | Deorbit or Lunar Ret Veh Prep, 4.15.1 (req) | | |



NORMAL/BACKUP

| STA/T STEP | PROCEDURE | PANEL | REMARKS |
|---|---|---|---|
| | 4.13.2 G&N THRUSTING | | |
| | 4.13.2.1 (P40) G&N SPS Thrusting | | Computes preferred CSM attitude and IMU orientation for SPS thrust.<br><br>Calculates and displays gimbal angles which would result if present IMU orientation used for thrust in preferred vehicle attitude (function of R60 computations). Crew then decides whether to thrust at present IMU orientation or to reorient IMU using P52/P54.<br><br>Maneuvers CSM to thrust attitude (R60); controls GNCS during SPS thrust countdown, ignition, thrust, and thrust termination; and allows residual steering error trimming. |
| | CMC - on (req), 4.8.1.3<br>ISS - on & orient known (req), 4.8.1.3 & 4.14<br>SCS - on (req), 4.8.4.2 | | G&C circuit breakers on all panels should be closed except as defined in Limited Use Controls, 4.6.4. |
| | Test C/W lamps<br>DAP - load & activate, including ull sel, 4.8.2.1 | | SPS trim values should be reviewed now for use at beginning of P40 in computing preferred IMU orientation and final vehicle attitude. SPS trim values are updated during CMC-controlled burn. If a roll jet fails on during SPS thrust, an appreciable roll excursion (≈30°) may occur. PITCH-YAW DAP will continue to function properly. |

| STA/T | STEP | PROCEDURE | PANEL | REMARKS |
|---|---|---|---|---|
| | | **WARNING**<br><br>Experiments must be retracted prior to SPS thrust. Prevents poss boom or track structural failure. | | |
| | | Gamma ray & mass spectrometer booms, & map camr tracks - retracted (req), 4.18.3.2, 4.18.3.4, & 4.18.3.6<br>If experiments S163 & S166 not complete<br>Pan camr boost mode - on (req), 4.18.9.1, step 1<br>Map camr stby mode - on (req), 4.18.12.2, step 1<br>Prethrust prog (req), 4.12<br>Veh prep (req), 4.13.1 | | |
| | 1 | ΔV Setup, 4.7.6.2 | | |
| CMP | | OPT ZERO - ZERO (verify) | 122 | Prevents optics drift during TVC use of OCDUs. |
| | 2 | Key V37E 00E | 2 | P00 updates state vector periodically. |
| | 3 | Key V37E 40E | | TFI available (prior to step 10) by keying V16 N35E or V16 N40E. |
| | | Poss PROG alarm (4.8.1.16) | | R02. If no alarms at this point (after R02 exited), CMC computes initial thrust direction and initial value of VG (local vertical), computes preferred IMU orientation, and sets PFRATFLG (preferred attitude flag) and stores desired attitude for use in R60. Final attitude computed in R60, gimbals trimmed for initial thrust, and 0.5-degree deadband set in RCS DAP. |



NORMAL BACKUP

| STA/T | STEP | PROCEDURE | PANEL | REMARKS |
|---|---|---|---|---|
| | 4 | If VG disp desired | | |
| CMP | | Key V06 N81E<br>VGX, Y & Z XXXX.X FPS<br>(lcl vert at GETI) | 2 | Display available until average G turned on (GETI minus 30 seconds). |
| | | (R60, Attitude Maneuver) | | Maneuvers CSM to attitude stored in P40. Maneuver performed automatically by G&N, or manually with an optional final automatic G&N-controlled trim maneuver. |
| | 5 | FL V50 N18 (sel CMC - auto)<br>R, P, Y XXX.XX DEG | | Desired final gimbal angles. |
| | | Establish tot att disp, 4.7.2.5 | | Both FDAIs should be selected to provide redundant displays. |
| CDR | | Accept BMAG MODE (3) - RATE 2<br>CMC Att Cont - auto, 4.7.1.6 | 1 | Prevents BMAGs from hitting stops during maneuvers. |
| CMP | | PRO | 2 | PRO initiates auto maneuver without reviewing final gimbal angles. If review desired prior to auto maneuver, reject option should be selected. If desired, attitude set control panel can then be set to final gimbal angles to provide attitude error information for completion of maneuver manually if G&N fails. |
| | | Reject Sel desired Att Cont, 4.7.1<br>Mnvr to thrust att<br>ENTR - Go to 7 | | |
| | 6 | Auto mnvr<br>V06 N18 (fnl att)<br>R, P, Y XXX.XX DEG | | Angles obtained from a VECPOINT calculation. Maneuver rate is as last defined by DAP load. |
| CDR,CMP | | Mon FDAIs<br>If RHC used or SCS sel, go to 7 | 1,2 | CSM began maneuver to final attitude when PRO keyed in step 5. Refer to 4.6.1.3, note 1b. |

| STA/T | STEP | PROCEDURE | PANEL | REMARKS |
|---|---|---|---|---|
| CMP | 7 | FL V50 N18 (att trim enbl)<br>R, P, Y XXX.XX DEG | 2 | Final trim maneuver should be considered essential to SPS ΔV attitudes. Display of final gimbal angles remains in registers. Final attitude trim maneuver performed after gimbal drive and trim check. |
| | 8 | Ign prep | | Sets up nontime-critical switching required for thrust. If necessary for deorbit, MSFN dumps and rewinds tape recorder, and changes to HBR. |
| | | CAUTION<br>If either bat bus A(B) current fails to incr after cycling MN BUS TIE sws, configure bats to mn buses using cb BAT C TO BAT BUS A(B) & cb MNA(B) BAT C as necessary. | 250 | Assumes reconfiguration BAT C to MNA(B) for orbit change; BAT A(B) and BAT C to MNA(B) for deorbit. |
| LMP | | | | |
| -10:00 | | MN BUS TIE BAT A/C - on (up) | 5 | |
| | | Verify bat bus A current incr &/or bat volt decr | 3 | Verification of current increase for appropriate battery bus via DC AMPS indicator (panel 3) confirms successful operation of main bus tie motor switches. |
| | | MN BUS TIE BAT B/C - on (up) | 5 | |
| | | Verify bat bus B current incr &/or bat volt decr | 3 | MN BUS TIE BAT A/C and B/C switches at on provide two batteries on line for orbit change if cb MNA & B BAT C (2) - open, or three batteries on line for deorbit and entry if circuit breakers closed (panel 275). |
| | | SPS He VLV tb (both) - bp | 3 | Barber pole indicates helium isolation valves closed. |
| | | SPS He VLV (both) - AUTO | | |
| CDR | | RHC PWR DIR (both) - OFF | 1 | |
| | | SC CONT - CMC | | |
| | | CMC MODE - AUTO | | |



NORMAL/BACKUP

| STA/T | STEP | PROCEDURE | PANEL | REMARKS |
|---|---|---|---|---|
| CDR | | SCS TVC (2) - RATE CMD | 1 | Provides rate damped manual TVC as backup to G&N, if THC - CW. SCS auto or MTVC acceleration command optional, but less desirable backup modes. |
| | | BMAG MODE (3) - ATT 1/RATE 2 | | |
| | | RATE - LO | | |
| | | ATT DBD - MIN | | |
| | | TVC GMBL DR (2) - AUTO | | |
| | 9 | Gmbl drive & trim check | | PITCH and YAW GMBL caution/warning lights (panel 2) indicate overcurrent to actuator motors. |
| | | cb SPS PITCH 1 BAT A - close (verify) | 8 | Remain closed from launch through first SPS thrust and closed again for each subsequent SPS thrusting. |
| | | cb SPS YAW 1 BAT A - close (verify) | | |
| | | TVC SERVO PWR 1 - AC1/MNA | 7 | |
| | | TVC SERVO PWR 2 - AC2/MNB | | |
| | | THC PWR - on (up) | 1 | |
| | | RHC PWR NORM 2 - AC | | Opens RHC 2 (commander's) breakout switch (dc circuits) to prevent attitude maneuvers through CMC during MTVC checks. During burn, RCS DAP disabled at SPS engine ignition (TFI = 0). |
| | | RHC 2 - ARMED | | |
| -05:00 | | GMBL MOT P1 & Y1 - START | | START position is momentary. Also refer to 4.6.1.1, note 11. |
| | | Auto switchover check | | |
| | | THC - CW | | Enables MTVC and switches TVC to channel 2. |
| | | RHC - verify no MTVC cont | | |
| | | GMBL POS ind (4) - no motion | | Verifies TVC switches from channel 1 to channel 2 (which is off) when THC CW selected. |
| | | Sec TVC check | | |
| | | GMBL MOT P2 & Y2 - START | | START position is momentary. |
| | | Confirm & set trim cont | | Verifies secondary gimbal trim control. |
| | | SPS GMBL tw (2) - + & - | | |
| | | Set to c.g. trim values | | Trim values obtained from DAP Data Load (4.8.2.1) or MSFN. |

| STA/T STEP | PROCEDURE | PANEL | REMARKS |
|---|---|---|---|
| CDR | RHC 2 - Verify MTVC | | Gimbals drive in response to RHC movement and return to set-in values when RHC neutral. Verifies control of secondary MTVC loops through RHC. Gimbals move proportional to RHC deflection since MTVC integrator not enabled until engine ignition. |
| | THC - neut | | |
| | RHC PWR NORM 2 - AC/DC | 1 | |
| | Accept Complete auto att trim | | Accept and reject options refer to attitude trim enable flash N50 N18 in step 7. |
| | BMAG MODE (3) - RATE 2 | | |
| | Align CSM in roll | | |
| | CMC Att Cont - Auto, 4.7.1.6 | | |
| CMP | PRO | 2 | |
| | Returns to V06 N18 disp of 6 | | Does not imply that any previous checks need be repeated for each trim enable. |
| | Reject Sel desired Att Cont, 4.7.1 | | |
| | Verify/mnvr to thrust att | | |
| | (V62E for tot att err disp) | | |
| CDR | RHC PWR DIR (both) - MNA/MNB | 1 | Enables manual direct RCS for overriding an auto RCS roll failure during thrusting. |
| | MAN ATT (3) - RATE CMD | | |
| | RATE - HI | | If MTVC required, RATE - HI bypasses noise problem in SCS gyro assemblies because of thrusting vibration levels, which can cause spurious RCS roll jet firings. |
| | BMAG MODE (3) - ATT 1/RATE 2 | | |
| | or If RATE 1 ΔV planned | | RATE 1 ΔV should be used for burns where angular change >15° or if gyro assembly 2 failed. |
| | BMAG MODE PITCH - RATE 1 | | |
| | BMAG MODE YAW - RATE 1 | | |
| | or BMAG MODE (in axis) - RATE 1 | | |



NORMAL/BACKUP

| STA/T STEP | PROCEDURE | PANEL | REMARKS |
|---|---|---|---|
| CDR | Align GDC to IMU if necessary, 4.8.4.6 | | DSKY display option recommended because of its availability - only need to set ATT SET thumbwheels to DSKY values and defer alignment until just prior to thrust. |
| CMP | Check boresight star<br>ENTR (exit R60) | 2 | |
| 10 | FL V50 N25<br>00204 (CMC GMBL drive test) | | Manual drive, trim and MTVC check accomplished before CMC gimbal drive test enabled (PRO keyed). |
| | Accept PRO<br>Mon GMBL drive seq | | |
| | 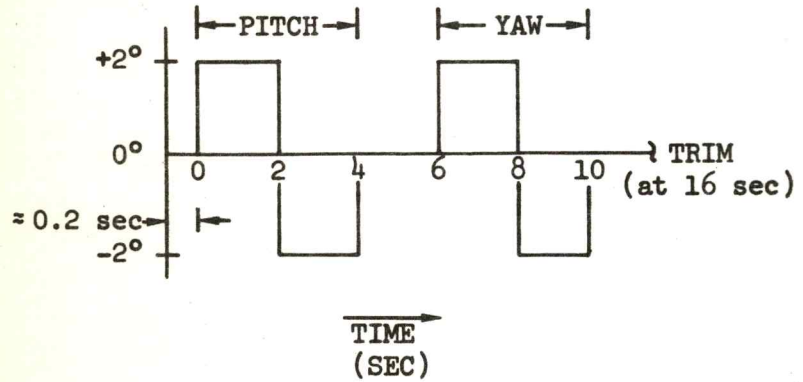 | | |
| | Reject ENTR<br>GMBLs drive to trim position (after 4 sec) | | If gimbal test sequence not desired, gimbals drive to trim 4 seconds after ENTR keyed. |
| 11 | V06 N40<br>TF GETI XXBXX MIN-SEC<br>VG XXXX.X FPS<br>ΔV (accum) XXXX.X FPS | | TF GETI max reading is 59B59. Sign minus before nominal GETI, plus after. Event Timer will not agree with R1 if GETI was slipped. |

| STA/T STEP | PROCEDURE | PANEL | REMARKS |
|---|---|---|---|
| CDR 12 | 2-min countdown | | |
| -02:00 | Report TF GETI = 2 min | | |
| | FDAI SCALE - 5/5 | 1 | |
| | ΔV THRUST A(B) - NORM | | Guarded. |
| | THC - ARMED | | |
| CDR,CMP | RHC (both) - ARMED | | |
| | (R41, State Vector Integration) | | |
| -00:40 | | | |
| CMP | If PROG lt - on, CMC slipped TIG | 2 | May illuminate between TIG -42.5 and -35 seconds. TIG slipped delta amount as required by CMC to complete state vector integration. |
| | DSKY R1 continues count to former TIG | | |
| | DSKY clears at new TIG -35 sec | | |
| | COMP ACTY lt - out (exit R41) | | |
| -00:35 | DSKY clears | | |
| -00:30 | V06 N40 (ave G on) | | Static display, with COMP ACTY lt flash every 2 seconds. |
| | Check ΔV (accum) for PIPA bias | | G&N controlled burns unreliable if R3 >0002.0 FPS. |
| | R3 $\leq$0002.0 FPS | | |
| | If orb change | | |
| LMP | UP TLM CMD - RSET then NORM | 3 | |
| | PCM BIT RATE - HI | | |
| | TAPE RCDR FWD - FWD | | |
| CDR | EMS MODE - NORM | 1 | 4.6.1.1, note 9. |



NORMAL BACKUP

| STA/T STEP | PROCEDURE | PANEL | REMARKS |
|---|---|---|---|
| CDR<br>-00:29<br>to<br>-00:06 | Perform ull if req | | No ullage required if sump tanks full. CSM/LM or CSM 2 or 4 jet ullage times defined in SNA-8-D-027 CSM Data Book, Vol I. Retain ullage for ≈1 second after ignition. Exact velocity change not critical - only a steady ullage to settle SPS propellants. |
| | xxxxxxxxxxxxxxxxxxxxxxxxxxxxxx<br>x x<br>No ull<br>DIR ULL pb - push, hold<br>RHC - cont att<br>x x<br>xxxxxxxxxxxxxxxxxxxxxxxxxxxxxx | 1 | Direct ullage inhibits pitch and yaw auto RCS. Maintain attitude within deadband limits. |
| -00:05<br>CMP 13 | FL V99 N40 (eng enbl)<br>TF GETI XXBXX MIN-SEC<br>VG XXXX.X FPS<br>ΔV (accum) XXXX.X FPS | 2 | CMC changes V06 to V99, but retains previous display in registers. Do not exercise extended verb or monitor displays for extended periods during TVC; these displays can override a FL V97 N40 (low thrust) display. Override indicates CMC thinks engine off, steering stopped (including cutoff computations), and attitude hold established. |
| | Accept PRO<br>Go to 14<br>Reject ENTR, go to 16 as req & 17<br>Man trim with RCS | | If ENTR option selected, post SPS burn switching in step 16 must be accomplished. |
| | or V34E<br>FL V37<br>Key XXE | | If average G on, R00 turns off average G, zeros rendezvous mark and VHF ranging mark counters. Otherwise counters not zeroed. R00 also sets or resets RNDZ, TRACK, and UPDATE flags, depending on which programs in progress or called. |

| STA/T STEP | PROCEDURE | | PANEL | REMARKS |
|---|---|---|---|---|
| CDR 14 Ign<br>00:00 | SPS THRUST lt - on | | 1 | If LM off, CMC will not accept V46 or V48 during TVC. If LM on, CMC will accept V46 as cue for low bandwidth mode (decreases control required response because of off-nominal bending moments). |
| CMP | V06 N40 | | 2 | |
| | TFC | XXBXX MIN-SEC | | Time from engine cutoff. Sign (-) before cutoff, (+) thereafter. TFC display discontinuous for 4 to 5 seconds after ignition. |
| | VG (decr) | XXXX.X FPS | | |
| | ΔV accum (incr) | XXXX.X FPS | | |
| CDR | ΔV ind - decr | | 1 | |
| CMP | Poss PROG alarm<br>Key V05 N09E (to verify alarm)<br>01407 (VG incr) | | 2 | |
| IGN+1 sec<br>CDR | Discontinue ull | | | RCS X-axis translation discontinued by program 2 seconds after engine-on command. RCS DAP disabled at ignition. |
| IGN+2 to<br>5 sec | ΔV THRUST (2) - NORM (if desired) | | 1 | Guarded. For dual bank operation. |
| | xxxxxxxxxxxxxxxxxxxxxxxxxxxxxxxxxxxxxx | | | |
| | If no ign or premature shutdown | | | Engine restart should not be attempted within 5 seconds from initial ignition - avoids undesirable helium pressure excursions. |
| | Continue ull<br>ΔV THRUST (2) - NORM<br>Recycle 14 | | | Guarded. |



NORMAL/BACKUP

| STA/T STEP | PROCEDURE | PANEL | REMARKS |
|---|---|---|---|
| CMP | or If FL V97 N40 (R40)<br>PRO - If thrust back on | 2 | Thrust failure routine (R40) called if CMC detects thrust failure during non-impulsive thrusting period. If thrust decreases to some low level, VG and ΔV displays continue changing. If thrust actually terminates prematurely, VG and ΔV displays become static. |
| CDR | or ΔV THRUST (2) - NORM<br>Reorient to thrust att | 1 | |
| CMP | ENTR - Recycle to 13 | 2 | If ENTR response to FL V97 N40, R1 (TFC) set to 59B59. |
| | or Key V34E<br>FL V37<br>Key XXE | | Terminates P40 and R40. |
| | or Sel SCS option | | |
| CDR | or Discontinue ull<br>SC CONT - SCS<br>ΔV THRUST (2) - NORM<br>SCS TVC (2) - AUTO | 1 | SCS ΔV option selected to bypass as many failure modes as possible and provide minimum engine delay. Depending on duration of burn prior to failure, a motion transient could result if c.g. shifted significantly from GMBL thumbwheel values. |
| | Init ull<br>THRUST ON pb - push | | Ullage and THRUST ON pushbutton required to satisfy SCS logic if SPS THRUST switch not at DIR ON. |
| | or SPS THRUST - DIR ON | | Lever lock. |
| IGN+1 sec | Discontinue ull | | |
| | or Term mnvr | | |

x xxxxxxxxxxxxxxxxxxxxxxxxxxxxxxxxxxxxxxxxxx x

| STA/T | STEP | PROCEDURE | PANEL | REMARKS |
|---|---|---|---|---|
| | 15 | Orb change SPS mon | | |
| CDR | | Pc ind - 95-105 psia | 1 | 65 to 125 percent green range on indicator corresponds to psia. Normal Pc range 95-105 psia. |
| LMP | | SPS INJ VLV ind (2 or 4) - OPEN<br>SPS He VLV tb (both) - gray<br>SPS FUEL & OXID PRESS ind (2) - 170-195 psia<br>SPS OXID UNBAL ind - mon | 3 | All four injector valves open for dual-bank operation.<br>Gray indicates helium isolation valves open. |
| | | xxxxxxxxxxxxxxxxxxxxxxxxxxxxxxxxxxxxxxxx | | Prior to crossover, maintain unbalance near value at which indicator first stabilizes after burn initiation. After crossover, maintain unbalance near zero. |
| | | SPS OXID UNBAL ind erratic, pegged or failed stationary<br>PUG MODE - AUX | | Selects auxiliary PUGS for SPS OXID UNBAL indication. |
| | | SPS OXID UNBAL ind erratic, pegged or failed stationary in prim & aux modes<br>PUG MODE - NORM<br>SPS FUEL & OXID QTY ind (2) - mon | | OXID FLOW VLV INCR switch controls oxid/fuel mixture ratio to maintain SPS OXID QTY indicator within ±0.4 percent of SPS FUEL QTY indicator. |
| | | SPS FUEL or OXID QTY ind erratic, pegged or failed stationary<br>PUG MODE - AUX | | |
| | | SPS FUEL or OXID QTY ind erratic, pegged or failed stationary in prim & aux modes<br>PUG MODE - NORM | | Probable loss of PUGS data. |
| | | xxxxxxxxxxxxxxxxxxxxxxxxxxxxxxxxxxxxxxxx | | |



NORMAL/BACKUP

| STA/T | STEP | PROCEDURE | PANEL | REMARKS |
|---|---|---|---|---|
| LMP | | OXID FLOW VLV INCR - as req<br>SPS OXID VLV tb - verify | 3 | Switch position determined by SPS oxidizer unbalance. Continue monitoring SPS OXID UNBAL indicator. |
| | | xxxxxxxxxxxxxxxxxxxxxxxxxxxxxxxxxxxxxxxx<br>No SPS OXID VLV tb response during flow adj<br>OXID FLOW VLV INCR - NORM<br>Wait 6 sec<br>OXID FLOW VLV PRIM - SEC<br>OXID FLOW VLV INCR - as req<br>OXID FLOW VLV tb - verify | | Continue monitoring SPS OXID UNBAL indicator and control oxidizer flow with OXID FLOW VLV PRIM switch in SEC position until thrusting completed. |
| | | No SPS OXID VLV tb response during flow adj in prim & sec modes | | Probable SPS OXID VLV talkback failure. |
| | | CAUTION<br>Do not use sec oxid flow vlv with prim vlv functioning properly. Failure of sec vlv could result in loss of prplnt mgmt capability. | | |
| | | OXID FLOW VLV INCR - NORM<br>Wait 6 sec<br>OXID FLOW VLV PRIM - PRIM<br>OXID FLOW VLV INCR - as req<br>xxxxxxxxxxxxxxxxxxxxxxxxxxxxxxxxxxxxxxxx | | SPS OXID UNBAL indicator trend may be used to confirm valve position. |

| STA/T | STEP | PROCEDURE | PANEL | REMARKS |
|---|---|---|---|---|
| | | CAUTION | | |
| CDR | | If noncritical burn & ΔP >20 psi<br>ΔV THRUST (2) - OFF | 1 | ΔP between fuel and oxidizer should not exceed 20 psi during burn or degraded performance, rough combustion, and/or engine failure may result. |
| | 16 | Deorbit SPS mon | | SPS OXID unbalance indicator erratic for about 25 seconds after ignition. |
| | | Pc ind - 95-105 psia | | 65 to 125 percent green range on indicator corresponds to psia. Normal Pc range 95-105 psia. |
| LMP | | SPS INJ VLV ind (4) - OPEN<br>SPS He VLV tb (both) - gray<br>SPS FUEL & OXID PRESS ind (2) - 170-195 psia | 3 | All four injector valves open for dual-bank operation. Gray indicates helium isolation valves open. |
| CDR or CMP | 17 | FDAI - mon err & rates | 1,2 | Monitoring for possible required MTVC takeover. |
| | | xxxxxxxxxxxxxxxxxxxxxxxxxxxxxxxxxxxxxxxxxxxxx | | |
| CDR | | MTVC takeover<br>THC - CW<br>Maintain att cont man | | |
| | | or ΔV THRUST (2) - OFF<br>Damp rates to IMU ball or out window<br>Reorient & hold thrust att<br>THC - CW<br>ΔV THRUST A(B) - NORM | 1 | Guarded.<br><br><br><br><br>Guarded. |



NORMAL/BACKUP

| STA/T STEP | PROCEDURE | PANEL | REMARKS |
|---|---|---|---|
| CDR | Init ull<br>THRUST ON pb - push | 1 | Ullage and THRUST ON pushbutton required to satisfy SCS logic if SPS THRUST switch not at DIR ON. |
| | or SPS THRUST - DIR ON | | Lever lock. |
| | Fly MTVC (RATE CMD) | | |
| IGN+2 to 5 sec | ΔV THRUST B(A) - NORM (if desired) | | Guarded. For dual bank operation. |
| | Init ull<br>THRUST ON pb - push | | Ullage and THRUST ON pushbutton required to satisfy SCS logic for second bank operation if SPS THRUST switch not at DIR ON. |
| | or SPS THRUST - DIR ON | | Lever lock. |
| | or Term mnvr | | |
| | xxxxxxxxxxxxxxxxxxxxxxxxxxxxxxxxxxxxxxxxxxxx | | |
| | xxxxxxxxxxxxxxxxxxxxxxxxxxxxxxxxxxxxxxxxxxxx | | |
| | Roll att cont failure<br>MAN ATT ROLL - ACCEL CMD | | ACCEL CMD position inhibits CMC roll commands and allows acceleration control of RCS auto coils with RHC. |
| | or AUTO RCS ROLL (8) - OFF<br>Use dir cont | 8 | |
| | xxxxxxxxxxxxxxxxxxxxxxxxxxxxxxxxxxxxxxxxxxxx | | |
| 18 | Mon SPS eng cutoff<br>SPS THRUST lt - out | 1 | |

| STA/T STEP | PROCEDURE | PANEL | REMARKS |
|---|---|---|---|
| CMP | FL V16 N40 (eng cutoff) | 2 | |
| | TFC (static at 2.5 sec from cutoff) XXBXX MIN-SEC | | Time from cutoff. At cutoff +2.5 seconds, CMC sets wide deadband in RCS DAP. Then CMC switches from TVC DAP to RCS DAP at cutoff +3.1 seconds. |
| | VG XXXX.X FPS | | |
| | ΔV (accum) XXXX.X FPS | | |
| CDR | EVNT TMR ind - 59:59 (-) thrust duration | 1 | Timer normally counts down from 59:59. |
| C/O+1 sec | ΔV THRUST (2) - OFF | | Guarded. |
| | SPS THRUST - NORM (verify) | | Lever lock. |
| | Report eng off | | |
| | Pc = 0 | | |
| LMP | SPS INJ VLV ind (4) - CLOSE | 3 | |
| | SPS He VLV tb (both) - bp | | Barber pole indicates helium isolation valves closed. |
| C/O +2.5 sec | | | |
| CDR | GMBL POS ind (4) - servo null | 1 | CMC removes TVC enable discrete (C/O indicated by TFC sign change and VG → 0). |
| | For postorbit change free drift | | |
| | BMAG MODE (3) - RATE 2 | | |
| | CMC MODE - FREE | | |
| | GMBL MOT P2 & Y2 - OFF | | 4.6.1.1, note 11. |
| | GMBL MOT P1 & Y1 - OFF | | |
| | If MTVC | | |
| | THC - neut | | To prevent possible reignition (if G&N thrust-on command still present), ΔV THRUST switches must be OFF prior to THC - neutral. |
| | TVC SERVO PWR (both) - OFF | 7 | |
| | If orb change | | |
| | cb SPS PITCH 1 BAT A - open | 8 | |
| | cb SPS YAW 1 BAT A - open | | |



NORMAL BACKUP

| STA/T | STEP | PROCEDURE | PANEL | REMARKS |
|---|---|---|---|---|
| | | If deorbit | | |
| CDR | | cb SPS PITCH (both) - open | 8 | |
| | | cb SPS YAW (both) - open | | |
| | | EMS MODE - STBY | 1 | 4.6.1.1, note 9. |
| LMP | | If orb change | | |
| | | PCM BIT RATE - LO | 3 | |
| CDR | | Rcd ΔV ind | 1 | |
| CMP | | PRO | 2 | CMC sets minimum deadband in RCS DAP. |
| | 19 | FL V16 N85 (VG vctr compnt) | | |
| | | VGX, Y, Z (cont) XXXX.X FPS | | Velocity to be gained resolved along CSM X, Y, and Z control axes (updated each computation cycle). |
| | | If VG compnt to be nulled | | Optional. All AUTO RCS switches must be on for nulling residuals in 3 axis. |
| CDR | | CMC MODE - AUTO or HOLD | 1 | |
| | | RHC/THC - null out VG compnt | | |
| | | THC - neut, LOCKED | | |
| | | If orb change | | |
| | | RHC - LOCKED | | |
| LMP | | If deorbit | | |
| | | TAPE RCDR FWD - off (ctr) | 3 | |
| | | If R30 desired | | |
| CMP | | Key V82E | 2 | |
| | | Go to 20 | | |
| | | To term P40 | | |
| | | PRO | | |
| | | Go to 21 | | CMC sets last specified R03 deadband in RCS DAP. |

| STA/T STEP | PROCEDURE | PANEL | REMARKS |
|---|---|---|---|
| | (R30, Orbital Parameter Display) | | |
| CMP 20 | FL V16 N44 | 2 | |
| | Ha XXXX.X NM<br>Hp XXXX.X NM | | Altitudes above launch pad radius (earth orbit) or lunar radius at most recently defined lunar landing site (lunar orbit). Parameter calculations yield reasonable results if vehicle close to earth or moon. |
| | TFF XXBXX MIN-SEC | | Time of free fall to 49.4 NM (300,000 feet) above launch pad radius (earth orbit) or 5.8 NM (35,000 feet) above lunar radius at most recently defined lunar landing site (lunar orbit). |
| | If Hp >49.4 NM/5.8 NM<br>R3 = -59B59<br><br>PRO (exit R30)<br>Return to 19 | | If TFF = -59B59, time from perigee or perilune available via N32E. |
| 21 | FL V37 | | If average G on, R00 turns off average G, and zeros rendezvous and VHF ranging mark counters. Otherwise counters not zeroed. R00 also sets or resets RNDZ, TRACK, and UPDATE flags, depending on which programs in progress or called. Under certain conditions, R00 may recycle into P20. |
| | If orb change<br>Key XXE<br>Set conts after tailoff | | |
| LMP | MN BUS TIE (2) - OFF | 5 | Monitor main bus voltage for maximum allowable (31 vdc) during power down sequence. |



NORMAL/BACKUP

| STA/T | STEP | PROCEDURE | PANEL | REMARKS |
|---|---|---|---|---|
| | | xxxxxxxxxxxxxxxxxxxxxxxxxxxxxxxxxxxxxxxx | | |
| | | If MN BUS TIE fail prior to thrust | | |
| LMP | | Leave MN BUS TIE BAT B/C(A/C) - on (up) | 5 | Circuit breakers used to reconfigure for subsequent bat bus operation and battery charging procedures in place of opening (known) good main bus tie motor switches. |
| | | Go to EPS SSR-2, BAT BUS A(B) reconfig for subsequent mn bus ties | | |
| | | xxxxxxxxxxxxxxxxxxxxxxxxxxxxxxxxxxxxxxxx | | |
| CMP | | Rcd burn data | | Recorded burn data should include ΔV accomplished and SPS propellant quantity remaining. |
| CDR | | EMS FUNC - OFF | 1 | |
| | | THC PWR - OFF | | |
| | | RHC PWR DIR (both) - OFF | | |
| | | If pan & map camr in stby mode | | |
| LMP | | PAN CAMR PWR - OFF | 230 | |
| | | MAP CAMR ON - OFF | | |
| CMP | | SM/AC PWR - OFF | 181 | |
| | | Chg bats, 4.5.3.5 | | |
| | | If last MCC & lunar return, or TLI abort | | |
| | | Go to Deorbit or Lunar Return Veh Prep, 4.15.1, prior to entry | | |
| | or | If deorbit | | |
| | | Rcd burn data | | Recorded burn data should include ΔV accomplished. |
| | | Key 61E | 2 | |
| | | Go to CM/SM Sep, 4.15.2 | | |

| STA/T | STEP | PROCEDURE | PANEL | REMARKS |
|---|---|---|---|---|
| | | 4.13.2.2 (P41) G&N SM-RCS Thrusting | | Computes preferred CSM attitude and preferred IMU orientation for RCS thrust, and maneuvers CSM to thrust attitude (R60). |
| | | CMC - on (req), 4.8.1.3<br>ISS - on & orient known (req), 4.8.1.3 & 4.14<br>SCS - on (req), 4.8.4.2 | | G&C circuit breakers on all panels should be closed except as defined in Limited Use Controls, 4.6.4. |
| | | Test C/W lamps<br>Prethrust prog (req), 4.12<br>Veh Prep (req), 4.13.1<br>DAP - Load & Activate, 4.8.2.1 | | |
| CDR | 1 | Set EVNT TMR to read 00:00 at GETI | 1 | |
| CMP | 2 | Key V37E 00E | 2 | P00 updates state vector periodically. |
| | 3 | Key V37E 41E | | TFI available (prior to step 12) by keying V16 N35E or V16 N40E. |
| | | Poss PROG alarm (4.8.1.16) | | R02. If no alarms at this point (after R02 exited), CMC computes initial thrust direction and initial value of VG (local vertical), computes preferred IMU orientation, sets PFRATFLG (preferred attitude flag) and stores desired attitude for use in R60. Final attitude computed in R60 and 0.5-degree deadband set in RCS DAP. |
| | 4 | If VG disp desired<br>Key V06 N81E<br>VGX, Y, Z XXXX.X FPS<br>(Lcl vert at GETI) | | Display available until average G turned on (GETI minus 30 seconds). |



NORMAL/BACKUP

| STA/T | STEP | PROCEDURE | PANEL | REMARKS |
|---|---|---|---|---|
| | | (R60, Attitude Maneuver) | | Maneuvers CSM to attitude stored in P41. Maneuver performed automatically by G&N, or manually with optional final automatic G&N controlled trim maneuver. |
| CMP | 5 | FL V50 N18 (sel CMC - auto)<br>R, P, Y XXX.XX DEG | 2 | Desired final gimbal angles. |
| | | Establish Tot Att disp, 4.7.2.5 | | Both FDAIs should be selected to provide redundant displays. |
| CDR | | Accept BMAG MODE (3) - RATE 2<br>CMC Att Cont - auto, 4.7.1.6 | 1 | Prevents BMAGs from hitting stops during maneuvers. |
| CMP | | PRO | 2 | Initiates auto maneuver without a review of final gimbal angles. |
| CDR | | Reject Sel desired Att Cont, 4.7.1<br>Mnvr to thrust att | | |
| CMP | | ENTR, go to 8 | | |
| | 6 | Auto mnvr<br>V06 N18 (fnl att)<br>R, P, Y XXX.XX DEG | | |
| CDR,CMP | | Mon FDAIs<br>If RHC used or SCS sel, go to 7 | 1,2 | CSM began maneuver to final attitude when PRO keyed in step 5. ICDU drives to achieve final gimbal angles. Refer to 4.6.1.3, note 1b. |
| CMP | 7 | FL V50 N18 (att trim enbl)<br>R, P, Y XXX.XX DEG | 2 | Step should be completed prior to TIG -2 minutes. Display of final gimbal angles in registers. |
| CDR | | Accept BMAG MODE (3) - RATE 2<br>CMC Att Cont - auto, 4.7.1.6 | 1 | |



(P41) G&N SM RCS THRUSTING

| STA/T | STEP | PROCEDURE | PANEL | REMARKS |
|---|---|---|---|---|
| CMP | | PRO<br>Returns to V06 N18 disp of 6 | 2 | Does not imply that any previous checks need be repeated for each trim enable. |
| CDR | Reject | Sel desired Att Cont, 4.7.1<br>Verify/mnvr to thrust att | | All RCS channels required for 3-axis translation. |
| CMP | | (V62E for tot att err disp) | | |
| CDR | | MAN ATT (3) - RATE CMD<br>BMAG MODE (3) - ATT 1/RATE 2<br>Align GDC to IMU if necessary, 4.8.4.6 | 1 | DSKY display option recommended because of its availability - only need to set ATT SET thumbwheels to DSKY values and defer alignment until just prior to thrust. |
| CMP | | ENTR (exit R60) | 2 | |
| | 8 | Mon VG disp<br>V06 N85 (VG vctr compnts)<br>VGX, Y, Z (cont) XXXX.X FPS | | Components resolved along CSM axes, and updated at 1-second intervals. |
| -05:00 | | | | |
| | 9 | Ign prep | | Sets up nontime-critical switching required for thrust. |
| CDR | | Check boresight star<br>For X axis thrust<br>THC PWR - on (up)<br>If orb change<br>ΔV Test & Null Bias Check, 4.7.6.1 | 1 | For deorbit thrust, check accomplished during EMS Entry Test, 4.15.1.3, if desired. |
| | | ΔV Setup, 4.7.6.2 | | Set to ΔV obtained from charts, P30, and/or MSFN. |



NORMAL/BACKUP

| STA/T STEP | PROCEDURE | PANEL | REMARKS |
|---|---|---|---|
| | (R41, State Vector Integration) | | |
| -00:40 | | | |
| CMP 10 | If PROG lt - on, CMC slipped TIG<br>DSKY R1 continues count to former TIG<br>DSKY clears at new TIG -35 sec<br>COMP ACTY lt - out (exit R41) | 2 | May illuminate between TIG -42.5 and -35 seconds. TIG slipped delta amount as required by CMC to complete state vector integration. |
| -00:35 | DSKY clears | | |
| -00:30 | | | |
| 11 | V16 N85 (ave G on) | | Static display with COMP ACTY light flash every 2 seconds. |
| -00:25 | | | |
| CDR | THC - ARMED | | |
| CDR,CMP | RHC (both) - ARMED | | |
| CDR | LIM CYCLE - OFF | 1 | For SCS translations. |
| | If deorbit | | |
| LMP | TAPE RCDR FWD - FWD | 3 | |
| CDR | EMS MODE - NORM | 1 | 4.6.1.1, note 9. |
| 00:00 | | | |
| 12 | RCS thrust | | |
| CMP | FL V16 N85 (requests null VG)<br>VGX, Y, Z (cont) XXXX.X FPS | 2 | Event Timer not valid if GETI slipped. |
| CDR | Man null VG | | Command manual translations and rotations to null VG components. |
| | If R30 desired | | |
| CMP | Key V82E<br>Go to 13 | | |
| | To term P41 | | |
| | PRO<br>Go to 14 | | CMC sets last specified RO3 deadband in RCS DAP. |

| STA/T | STEP | PROCEDURE | PANEL | REMARKS |
|---|---|---|---|---|
| | | (R30, Orbital Parameter Display) | | R30 displays automatically updated at 2-second intervals if called because average G still on. |
| CMP | 13 | FL V16 N44 | 2 | |
| | | Ha XXXX.X NM | | Altitudes above launch pad radius (earth orbit) or lunar radius at most recently defined lunar landing site (lunar orbit). |
| | | Hp XXXX.X NM | | |
| | | TFF XXBXX MIN-SEC | | Time of free fall to 49.4 NM (300,000 feet) above launch pad radius (earth orbit) or 5.8 NM (35,000 feet) above lunar radius at most recently defined lunar landing site (lunar orbit). |
| | | If Hp >49.4 NM/5.8 NM | | |
| | | R3 = -59B59 | | If TFF = -59B59, time from perigee or perilune available via N32E. |
| | | PRO (exit R30) | | |
| | | Return to 12 | | |
| | 14 | Thrust complete | | |
| CDR | | EMS MODE - STBY | 1 | 4.6.1.1, note 9. |
| | | Rcd ΔV ind | | |
| | | If orb change | | |
| | | EMS FUNC - OFF | | |
| | | THC PWR - OFF | | |
| CDR,CMP | | RHC (both) - LOCKED | | |
| | | If deorbit | | |
| LMP | | TAPE RCDR FWD - off (ctr) | 3 | |
| CDR | | THC - neut, LOCKED | | |
| CMP | 15 | FL V37 | 2 | If average G on, R00 turns off average G, and zeros rendezvous and VHF ranging mark counters. Otherwise counters not zeroed. R00 also sets or resets, RNDZ, TRACK, and UPDATE flags, depending on which programs in progress or called. Under certain conditions, R00 may recycle into P20. |

| STA/T STEP | PROCEDURE | PANEL | REMARKS |
|---|---|---|---|
| | If orb change | | |
| CMP | Key XXE | 2 | |
| | If last MCC & lunar return, or | | |
| | TLI abort | | |
| | Go to Deorbit or Lunar Return Veh Prep, 4.15.1, prior to entry | | |
| | or If deorbit | | |
| | Key 61E (if desired) | | P61 may be bypassed if hybrid or SCS deorbit. |
| | Go to CM/SM Sep, 4.15.2 | | |

(P41) G&N SM RCS THRUSTING

| STA/T | STEP | PROCEDURE | PANEL | REMARKS |
|---|---|---|---|---|
| | | 4.13.2.3 G&N Hybrid Deorbit Thrusting | | Computes preferred CSM attitude and preferred IMU orientation for RCS thrusting maneuver. Maneuvers CSM to thrusting attitude (R60), and provides sufficient displays for cutoff of both SM RCS burn followed by CM RCS deorbit burn. |
| | | CMC - on (req), 4.8.1.3<br>ISS - on & orient known (req), 4.8.1.3 & 4.14<br>SCS - on (req), 4.8.4.2 | | G&C circuit breakers on all panels should be closed except as defined in Limited Use Controls, 4.6.4. |
| | | Test C/W lts<br>Prethrust prog (req), 4.12<br>Veh Prep (req), 4.13.1<br>DAP - Load & Activate, 4.8.2.1 | | |
| CDR | 1 | **Set EVNT TMR to read 00:00 at GETI** | 1 | |
| CMP | 2 | Key V37E 41E | 2 | |
| | | Poss PROG alarm (4.8.1.16) | | R02. If no alarms at this point (after R02 exited), CMC computes initial thrust direction and initial value of VG (local vertical), computes preferred IMU orientation, sets PFRATFLG (preferred attitude flag), and stores desired attitude for use in R60. Final attitude computed in R60 and 0.5-degree deadband set in RCS DAP. |
| | 3 | If VG disp desired<br>Key V06 N81E<br>VGX, Y, Z XXXX.X FPS<br>(lcl vert at GETI) | | Display available until average G turned on (GETI minus 30 seconds). |



NORMAL/BACKUP

| STA/T | STEP | PROCEDURE | PANEL | REMARKS |
|---|---|---|---|---|
| | | (R60, Attitude Maneuver) | | Maneuvers CSM to attitude stored in P41. Maneuver performed automatically by G&N, or manually with an optional final automatic G&N controlled trim maneuver. |
| CMP | 4 | FL V50 N18 (sel CMC - auto)<br>R, P, Y XXX.XX DEG | 2 | |
| | | Establish Tot Att disp, 4.7.2.5 | | Both FDAIs should be selected to provide redundant displays. |
| CDR | | Accept BMAG MODE (3) - RATE 2<br>CMC Att Cont - auto, 4.7.1.6 | 1 | Prevents BMAGs from hitting stops during maneuvers. |
| CMP | | PRO | 2 | Initiates auto maneuver without review of final gimbal angles. |
| CDR<br>CMP | | Reject Sel desired Att Cont, 4.7.1<br>ENTR, go to 7 | | |
| | 5 | Auto mnvr<br>V06 N18 (fnl att)<br>R, P, Y XXX.XX DEG | | |
| CDR,CMP | | Mon FDAIs | 1,2 | CSM began maneuver to final attitude when PRO keyed in step 4. ICDU drives to achieve final gimbal angles. Refer to 4.6.1.3, note 1b. |
| | | If RHC used or SCS sel, go to 6 | | |
| CMP | 6 | FL V50 N18 (att trim enbl)<br>R, P, Y XXX.XX DEG | 2 | Step should be completed prior to TIG -2 minutes. Display of final gimbal angles in registers. |
| CDR | | Accept BMAG MODE (3) - RATE 2<br>CMC Att Cont - auto, 4.7.1.6 | 1 | |
| CMP | | PRO, return to 5 | 2 | |

| STA/T | STEP | PROCEDURE | PANEL | REMARKS |
|---|---|---|---|---|
| CMP | | Reject Sel desired Att Cont, 4.7.1<br>Verify/mnvr to thrust att<br>(V62E for tot att err disp) | | |
| CDR | | MAN ATT (3) - RATE CMD<br>BMAG MODE (3) - ATT 1/RATE 2 | 1 | DSKY display option recommended because of its availability - only need to set ATT SET thumbwheels to DSKY values and defer alignment until just prior to thrust. |
| CMP | | ENTR (exit R60) | 2 | |
| | 7 | Mon VG disp<br>V06 N85 (VG vctr compnts)<br>VGX, Y, Z (cont) XXXX.X FPS | | Components resolved along CSM axes and updated at 1-second intervals. |
| LMP | 8 | Configure & preload bats | | Prepares for battery preloading prior to CM/SM separation and verifies batteries transferred to main buses. |
| | | CAUTION<br>If either bat bus A(B) current fails to incr after cycling MN BUS TIE sws, configure bats to mn buses using cb BAT C TO BAT BUS A(B). | 250 | Assumes reconfiguration BAT A(B) and BAT C to MNA(B). |
| -10:00 | | MN BUS TIE BAT A/C - on (up)<br>Verify bat bus A current incr &/or bat volt decr<br>MN BUS TIE BAT B/C - on (up)<br>Verify bat bus B current incr &/or bat volt decr | 5<br>3<br>5<br>3 | Verification of current increase for appropriate battery bus via DC AMPS indicator (panel 3) confirms successful operation of main bus tie motor switches. MN BUS TIE BAT A/C and B/C switches at on provide two batteries on line if circuit breaker MNA & B BAT C (2) - open, or three batteries on line for deorbit and entry if circuit breakers closed (panel 275). |



NORMAL/BACKUP

| STA/T | STEP | PROCEDURE | PANEL | REMARKS |
|---|---|---|---|---|
| -05:00 | | | | |
| CDR | 9 | Ign prep | | |
| | | THC PWR - on (up) | 1 | Sets up nontime-critical switching required for thrusting. |
| | | ΔV Setup, 4.7.6.2 | | Set to ΔV obtained from charts, P30, and/or MSFN. |
| | | (R41, State Vector Integration) | | |
| -00:40 | | | | |
| CMP | 10 | If PROG lt - on, CMC slipped TIG | 2 | May illuminate between TIG -42.5 and -35 seconds. TIG slipped delta amount as required by CMC to complete state vector integration. |
| | | DSKY R1 continues counting to former TIG | | |
| | | DSKY clears at new TIG -35 sec | | |
| | | COMP ACTY lt - out (exit R41) | | |
| -00:35 | | DSKY clears | | |
| -00:30 | | | | |
| | 11 | V16 N85 (ave G on) | | Static display with COMP ACTY light flashing every 2 seconds. |
| -00:25 | | | | |
| CDR,CMP | | RHC (both) - ARMED | | |
| CDR | | THC - ARMED | | |
| | | LIM CYCLE - OFF | 1 | For SCS translations. |
| LMP | | TAPE RCDR FWD - FWD | 3 | |
| CDR | | EMS MODE - NORM | 1 | 4.6.1.1, note 9. |
| 00:00 | | | | |
| CMP | 12 | SM RCS thrust | | |
| | | FL V16 N85 (request null VG) | 2 | Event Timer not valid if GETI slipped. |
| | | VGX, Y, Z (cont) XXXX.X FPS | | |
| CDR | | Man null VG | | |
| | | Mon DSKY, ΔV ind, & EVNT TMR | 1,2 | Command manual translation and rotation to null VG components. |

G&N HYBRID DEORBIT THRUSTING

| STA/T | STEP | PROCEDURE | | PANEL | REMARKS |
|---|---|---|---|---|---|
| CMP | | Crew options<br>V83 - R, R dot, θ<br>V82 - Ha, Hp, TFF | | 2 | |
| | 13 | SM RCS thrust complete | | | |
| CDR | | EMS MODE - STBY | | 1 | 4.6.1.1, note 9. |
| CMP | | Rcd DSKY, ΔV ind, & EVNT TMR values | | 1,2 | |
| CDR | | Reset EVNT TMR<br>THC - neut, LOCKED | | 1 | |
| | 14 | Sel SCS Att Cont mode, 4.7.1 | | | Separation follows immediately, preventing proper G&N DAP operation until entry DAP selected in P62. |
| | 15 | Perform Sep proced, 4.15.2 | | | Separation at SM deorbit attitude saves time. Only one minute allowed between burns. |
| | 16 | Verify/mnvr to CM RCS deorbit att<br>R ___°, P ___°, Y ___° | | | Both CM RCS systems should be enabled. CM RCS deorbit portion completed with +X axis ≈70° below velocity vector (apex down and forward); ≈110° +pitch maneuver from heads down, BEF, SM RCS portion of deorbit. |
| | | MAN ATT YAW, ROLL - RATE CMD<br>MAN ATT PITCH - ACCEL CMD<br>RATE - HI<br>ATT DBD - MIN | | | |
| CDR,CMP | | RHC (both) - ARMED | | | |
| CDR | | FDAI SCALE - 5/5 | | | |
| CMP | 17 | Key V82E<br>FL V16 N44 | | 2 | |
| | | Ha | XXXX.X NM | | Altitudes above launch pad radius. |
| | | Hp | XXXX.X NM | | |
| | | TFF | XXBXX MIN-SEC | | Time of free fall to 49.4 NM (300,000 feet) above launch pad radius. |



NORMAL BACKUP

| STA/T | STEP | PROCEDURE | PANEL | REMARKS |
|---|---|---|---|---|
| CDR | 18 | EVNT TMR ind - SM RCS C/O +1 min<br>EMS MODE - NORM | 1 | One minute after SM RCS cutoff, start CM RCS burn. 4.6.1.1, note 9. |
| CMP<br>CDR | | RHC 1 - contin -pitch<br>RHC 2 - pulse to maintain att in pitch axis<br>Mon FDAI | | Negative pitch jets have ≈25 to 30 percent less authority than positive jets because of jet location and thrust direction relative to CM c.g. |
| | | xxxxxxxxxxxxxxxxxxxxxxxxxxxxxxxxxxxx<br>x x<br>If only 1 RHC<br>Pulse RHC + & - ≈5° pitch from pitch retro att, maintaining rates <3°/sec<br>x x<br>xxxxxxxxxxxxxxxxxxxxxxxxxxxxxxxxxxxx | | |
| CMP | 19 | Mon Hp & TFF on DSKY | 2 | Monitor Event Timer for duration of thrust no greater than 02:10 for either single or dual system. Conserve CM RCS propellant reserves, 30 pounds each system for entry. ΔV indicator cutoff cue must be adjusted to account for EMS sensing axis (along X) being reversed from SM RCS burn and biased off ≈70° from CM RCS velocity vector. (ΔVems = ΔVcm Cos 70°). |
| | 20 | PRO<br>FL V16 N85<br>VGX, Y, Z (cont) XXXX.X FPS | | |
| | 21 | Thrust complete, ΔV ind = _____ or<br>EVNT TMR = _____ | 1 | |
| | | PRO | 2 | |
| CDR | | MAN ATT (3) - RATE CMD<br>Rcd ΔV ind, DSKY, EVNT TMR | 1<br>1,2 | |



G&N HYBRID DEORBIT THRUSTING

| STA/T | STEP | PROCEDURE | PANEL | REMARKS |
|---|---|---|---|---|
| LMP | | TAPE RCDR FWD - off (ctr) | 3 | |
| CDR | | ATT DBD - MAX | 1 | |
| CMP | 22 | FL V37 | 2 | |
| CDR | | EMS MODE - STBY | 1 | 4.6.1.1, note 9. |
| CDR,CMP | | RHC (both) - LOCKED | | |
| | 23 | Sel Att Cont mode, 4.7.1<br>Mnvr to entry att<br>R ___°, P ___°, Y ___° | | |
| | 24 | Set up for CM RCS sys 1 | | |
| CDR | | AUTO RCS A/C ROLL (4) - OFF<br>AUTO RCS CM 1 (6) - MNA or MNB<br>AUTO RCS CM 2 (6) - OFF | 8 | Electrically isolates system 2 for entry. If problem develops in system 1, disable affected channel and use direct RCS control. |
| | 25 | Go to G&N Entry, 4.15.3 | | |



NORMAL/BACKUP

| STA/T | STEP | PROCEDURE | PANEL | REMARKS |
|---|---|---|---|---|
| | | 4.13.3 SCS THRUSTING | | |
| | | 4.13.3.1 SCS SPS Thrusting | | |
| | | CMC - on (desired), 4.8.1.3<br>ISS - on & orient known (desired), 4.8.1.3 & 4.14<br>SCS - on (req), 4.8.4.2 | | CMC and ISS on, and orientation known, necessary for P47 monitor.<br><br>G&C circuit breakers on all panels should be closed except as defined in Limited Use Controls, 4.6.4. |
| | | WARNING<br><br>Experiments must be retracted prior to SPS thrust. Prevents poss boom or track structural failure. | | |
| | | Gamma ray & mass spectrometer booms, & map camr tracks - retracted (req), 4.18.3.2, 4.18.3.4, & 4.18.3.6<br>If experiments S163 & S166 not complete<br>Pan camr boost mode - on (req), 4.18.9.1, step 1<br>Map camr stby mode - on (req), 4.18.12.2, step 1<br>Veh Prep (req), 4.13.1 | | |
| | 1 | ΔV Setup, 4.7.6.2 | | |
| CMP | 2 | Key V37E 00E | 2 | P00 updates state vector periodically. |
| | 3 | Establish Tot Att disp, 4.7.2.5 | | To obtain telemetry on BMAG attitude error, FDAI SEL switch must be in 1 or 2 position (with SCS displays). |
| | 4 | SCS Att Mnvr to thrust att, 4.8.4.5 | | |

| STA/T | STEP | PROCEDURE | PANEL | REMARKS |
|---|---|---|---|---|
| | 5 | Establish SCS Att Hold, 4.7.1.4 | | Limit cycle, maximum deadband and low rate should be selected for propellant conservation. |
| CMP | | Check boresight star | 2 | |
| | 6 | Ign prep | | Sets up nontime-critical switching required for thrusting. |
| LMP | | SPS He VLV tb (both) - bp | 3 | Barber pole indicates helium isolation valves closed. |
| | | SPS He VLV (both) - AUTO | | |
| | | CAUTION | | |
| | | If either bat bus A(B) current fails to incr after cycling MN BUS TIE sws, configure bats to mn buses using cb BAT C TO BAT BUS A(B) & cb MNA(B) BAT C as necessary. | 250 | Assumes reconfiguration BAT C to MNA(B) for orbit change; BAT A(B) and BAT C to MNA(B) for deorbit. |
| LMP | | | | |
| -10:00 | | MN BUS TIE BAT A/C - on (up) | 5 | |
| | | Verify bat bus A current incr &/or bat voltage decr | 3 | Verification of current increase for appropriate battery bus via DC AMPS indicator (panel 3) confirms successful operation of main bus tie motor switches. |
| | | MN BUS TIE BAT B/C - on (up) | 5 | |
| | | Verify bat bus B current incr &/or bat voltage decr | 3 | MN BUS TIE BAT A/C and B/C switches at on provide two batteries on line for orbit change if circuit breakers MNA & B BAT C (2) - open, or three batteries on line for deorbit and entry if circuit breakers closed (panel 275). |
| CDR | | RHC PWR DIR (both) - OFF | 1 | |
| | | SCS TVC (2) - AUTO | | |
| | | TVC GMBL DR (2) - AUTO | | |
| | | ΔV CG - LM/CSM or CSM | | |
| | | Establish Ull Sel, 4.6.1 | | |
| CMP | 7 | If P47 for thrust mon | | G&N monitoring highly desirable but not required. Refer to 4.8.1.6 for P47 description. |
| | | Key V37E 47E | 2 | |
| | | Poss PROG alarm (4.8.1.16) | | R02. |



NORMAL/BACKUP

| STA/T | STEP | PROCEDURE | | PANEL | REMARKS |
|---|---|---|---|---|---|
| CMP | | FL V16 N83 | | 2 | |
| | | ΔVX, Y, Z (cont) | XXXX.X FPS | | |
| | | If desired | | | |
| | | Key N62E | | | |
| | | VI | XXXXX. FPS | | Inertial velocity. |
| | | H dot | XXXXX. FPS | | Altitude rate. |
| | | H pad | XXXX.X NM | | Altitude above pad radius (earth orbit) or landing site radius (lunar orbit). |
| | | KEY REL (to return to N83) | | | |
| | 8 | Gmbl drive & trim check | | | PITCH and YAW GMBL caution/warning lights indicate overcurrent to actuator motors. |
| CDR | | TVC SERVO PWR 1 - AC1/MNA | | 7 | |
| | | TVC SERVO PWR 2 - AC2/MNB | | | |
| | | cb SPS PITCH 1 BAT A - close (verify) | | 8 | Remain closed from launch through first SPS thrust and closed again for each subsequent SPS thrusting. |
| | | cb SPS YAW 1 BAT A - close (verify) | | | |
| | | THC PWR - on (up) | | 1 | |
| | | RHC PWR NORM 2 - AC | | | Opens RHC 2 (commander's) breakout switch dc circuits to prevent loss of attitude reference. Prevents RCS jets from firing when RHC is used for MTVC check. Normally, IGN 1 signal disables RCS pitch and yaw channels 1 second after SPS engine ignition. |
| | | RHC 2 - ARMED | | | |
| | | Prim TVC check | | | 4.6.1.1, note 11. |
| -05:00 | | GMBL MOT P1 & Y1 - START | | | START position is momentary. |
| | | Verify trim cont on ind | | | Gimbals drive in response to thumbwheel movement. Verifies primary gimbal trim control. |
| | | Auto switchover check | | | |
| | | THC - CW | | | |
| | | RHC 2 - verify no MTVC | | | |
| | | GMBL POS ind (4) - no motion | | | Verifies TVC control switches from channel 1 to channel 2 (which is off) when THC - CW selected. |

| STA/T | STEP | PROCEDURE | PANEL | REMARKS |
|---|---|---|---|---|
| | | Sec TVC check | | |
| CDR | | GMBL MOT P2 & Y2 - START | 1 | START position is momentary. |
| | | Verify trim cont | | Verifies secondary gimbal trim control. |
| | | Verify MTVC | | Gimbals drive in response to RHC movement, and return |
| | | THC - neut | | to set-in values when RHC neutral. Verifies control of secondary MTVC loops through RHC. |
| | | SPS GMBL tw (2) - set & confirm fnl desired gmbl position | | Gimbals trimmed in primary channel to thrusting values (SCS modes). |
| | 9 | RHC PWR DIR (both) - MNA/MNB | | Enables manual direct RCS for overriding a roll automatic RCS failure during thrusting. |
| | | RHC 2 - null att err | | Needles can be used as error null reference during MTVC contingency takeover from automatic ΔV mode. |
| | | ATT DBD - MIN | | Set to MIN as errors nulled. |
| | | RHC PWR NORM (both) - AC/DC | | |
| | | Check boresight star | | |
| CMP | 10 | 2-min countdown | | |
| -02:00 | | Report TF GETI = 2 min | 2 | |
| CDR | | FDAI SCALE - 5/5 | 1 | |
| | | ΔV THRUST A(B) - NORM | | Guarded. |
| | | THC - ARMED | | |
| | | LIM CYCLE - OFF | | |
| | | If orb change | | |
| LMP | | UP TLM CMD - RSET, then NORM | 3 | |
| | | PCM BIT RATE - HI | | |
| -00:30 | | TAPE RCDR FWD - FWD | | |
| CDR | | EMS MODE - NORM | 1 | 4.6.1.1, note 9. |



NORMAL/BACKUP

| STA/T STEP | PROCEDURE | PANEL | REMARKS |
|---|---|---|---|
| CDR<br>-00:29<br>to<br>-00:06 | Perform ull (if req) | | No ullage required if SPS sump tanks full. CSM/LM or CSM 2 or 4 jet ullage times defined in SNA-8-D-027 CSM Data Book, Vol I. Exact velocity change not critical - only steady ullage to settle SPS propellants. |
| | xxxxxxxxxxxxxxxxxxxxxxxxxxxxxx<br>No ull<br>DIR ULL pb - push, hold<br>RHC 2 - cont att<br>xxxxxxxxxxxxxxxxxxxxxxxxxxxxxx | 1 | Direct ullage inhibits pitch and yaw auto RCS control. Attitude should be maintained manually. |
| 11<br>00:00 | Orb change ign<br>If ull present<br>THRUST ON pb - push<br>If no ull present<br>THC - +X, hold<br>THRUST ON pb - push<br>SPS THRUST lt - on | | Engine restart should not be attempted within 5 seconds from initial ignition - avoids undesirable He pressure excursions.<br><br>Provides ullage discrete to SCS. |
| IGN+1 sec | RATE - HI | | Bypasses noise problem in SCS gyro assemblies because of thrusting vibration levels and provides backup to auto selection of high rate in pitch and yaw TVC. |
| | Discontinue ull | | |
| IGN<br>+2 to 5<br>sec | ΔV THRUST (2) - NORM (if desired) | | For dual bank operation. |
| | Init ull<br>THRUST ON pb - push | | Ullage and THRUST ON pushbutton required to satisfy SCS logic for second bank operation. |

| STA/T | STEP | PROCEDURE | PANEL | REMARKS |
|---|---|---|---|---|
| | | xxxxxxxxxxxxxxxxxxxxxxxxxxxxxxxxxxxxxx | | |
| | | If no ign, or premature shutdown | | |
| CDR | | ΔV THRUST (2) - NORM | 1 | |
| | | Recycle 11 | | |
| | | or SPS THRUST - DIR ON | | Lever lock. |
| | | Recycle 11 | | |
| | | or Term mnvr | | |
| | | xxxxxxxxxxxxxxxxxxxxxxxxxxxxxxxxxxxxxx | | |
| | 12 | Deorbit ign | | |
| 00:00 | | SPS THRUST - DIR ON | | Engine restart should not be attempted within 5 seconds from initial ignition to avoid undesirable He pressure excursions. |
| | | SPS THRUST lt - on | | |
| IGN+1 sec | | RATE - HI | | Bypasses noise problem in SCS gyro assemblies because of thrusting vibration levels and provides backup to automatic selection of high rate in pitch and yaw TVC. |
| | | xxxxxxxxxxxxxxxxxxxxxxxxxxxx | | |
| | | If no ign | | |
| | | ΔV THRUST (2) - NORM | | Guarded. |
| | | Recycle 12 | | |
| | | or Term mnvr | | |
| | | xxxxxxxxxxxxxxxxxxxxxxxxxxxx | | |
| | | Discontinue ull | | |
| IGN +2 to 5 sec | | ΔV THRUST (2) - NORM | | Guarded. |



NORMAL/BACKUP

| STA/T STEP | PROCEDURE | PANEL | REMARKS |
|---|---|---|---|
| | 13 Orb change SPS mon | | |
| CDR | Pc ind - 95-105 psia | 1 | 65 to 125 percent green range on indicator corresponds to psia. Normal range 95-105 psia. |
| LMP | SPS INJ VLV ind (2 or 4) - OPEN<br>SPS He VLV tb (both) - gray<br>SPS FUEL & OXID PRESS ind (2) - 170-195 psia<br>SPS OXID UNBAL ind - mon | 3 | All four injector valves open for dual-bank operation.<br>Gray indicates helium isolation valves open. |
| | | | Prior to crossover, maintain unbalance near value at which indicator first stabilizes after burn initiation. After crossover, maintain unbalance near zero. |
| | xxxxxxxxxxxxxxxxxxxxxxxxxxxxxxxxxxxxxxxx | | |
| | SPS OXID UNBAL ind erratic, pegged or failed stationary<br>PUG MODE - AUX | | Selects auxiliary PUGS for SPS OXID UNBAL indication. |
| | SPS OXID UNBAL ind erratic, pegged or failed stationary in prim & aux modes<br>PUG MODE - NORM<br>SPS FUEL & OXID QTY ind (2) - mon | | OXID FLOW VLV INCR switch controls oxid/fuel mixture ratio to maintain SPS OXID QTY indicator within ±0.4 percent of SPS FUEL QTY indicator. |
| | SPS FUEL or OXID QTY ind erratic, pegged or failed stationary<br>PUG MODE - AUX | | |
| | SPS FUEL or OXID QTY ind erratic, pegged or failed stationary in prim & aux modes<br>PUG MODE - NORM | | Probable loss of PUGS data. |
| | xxxxxxxxxxxxxxxxxxxxxxxxxxxxxxxxxxxxxxxx | | |

| STA/T | STEP | PROCEDURE | PANEL | REMARKS |
|---|---|---|---|---|
| LMP | | OXID FLOW VLV INCR - as req<br>SPS OXID VLV tb - verify | 3 | Switch position determined by SPS oxidizer unbalance. Continue monitoring SPS OXID UNBAL indicator. |
| | | xxxxxxxxxxxxxxxxxxxxxxxxxxxxxxxxxxxxxxxx<br>x x<br>No SPS OXID VLV tb response during flow adj<br>OXID FLOW VLV INCR - NORM<br>Wait 6 sec<br>OXID FLOW VLV PRIM - SEC<br>OXID FLOW VLV INCR - as req<br>OXID FLOW VLV tb - verify | | Continue monitoring SPS OXID UNBAL indicator and control oxidizer flow with OXID FLOW VLV PRIM switch in SEC position until thrusting completed. |
| | | No SPS OXID VLV tb response during flow adj in prim & sec modes | | Probable SPS OXID VLV talkback failure. |
| | | CAUTION<br>Do not use sec oxid flow vlv with prim vlv functioning properly. Failure of sec vlv could result in loss of prplnt management capability. | | |
| | | OXID FLOW VLV INCR - NORM<br>Wait 6 sec<br>OXID FLOW VLV PRIM - PRIM<br>OXID FLOW VLV INCR - as req<br>x x<br>xxxxxxxxxxxxxxxxxxxxxxxxxxxxxxxxxxxxxxxx | | SPS OXID UNBAL indicator trend may be used to confirm valve position. |



NORMAL/BACKUP

| STA/T | STEP | PROCEDURE | PANEL | REMARKS |
|---|---|---|---|---|
| | | CAUTION<br>If noncritical burn & ΔP >20 psi, | | ΔP between fuel and oxidizer should not exceed 20 psi during burn or degraded performance, rough combustion and/or engine failure may result. |
| CDR | | ΔV THRUST (2) - OFF | 1 | Guarded. |
| | 14 | Deorbit SPS mon<br>Pc ind - 95-105 psia | | SPS OXID UNBAL indicator erratic for about 25 seconds after ignition. |
| LMP | | SPS INJ VLV ind (4) - OPEN<br>SPS He VLV tb (both) - gray<br>SPS FUEL & OXID PRESS ind (2) - 170-195 psia | 3 | Gray indicates helium isolation valves open. |
| CDR or LMP | 15 | FDAI - mon att err & rates | 1,2 | |
| | | xxxxxxxxxxxxxxxxxxxxxxxxxxxxxxxxxxxxxxxx | | |
| CDR | | Orb change MTVC takeover<br>Pitch & yaw err & rates abnormal<br>ΔV THRUST (2) - OFF<br>Damp rates to IMU ball or out window with RHC | 1 | Backup procedure bypasses maximum possible failure modes, thereby providing alternate means of completing burn without troubleshooting. |
| | | If no response<br>Use dir RCS & disable affected chan | | Since a failure causing abnormal TVC and RCS attitude control is not a failed-on jet, RCS disabling should be done with MAN ATT switch to ACCEL CMD rather than AUTO RCS switches OFF, thereby providing automatic RCS control for reorientation. |

| STA/T STEP | PROCEDURE | PANEL | REMARKS |
|---|---|---|---|
| CDR | If rate needle(s) abnormal<br>BMAG MODE - RATE 1 | 1 | |
| | Reorient to thrust att<br>THC - CW<br>ΔV THRUST A(B) - NORM<br>Init ull<br>THRUST ON pb - push | | Guarded. |
| | or SPS THRUST - DIR ON | | Lever lock. |
| | Fly MTVC (rate cmd) | | |
| IGN+2 to 5 sec | ΔV THRUST B(A) - NORM (if desired) | | For dual bank operation. |
| | Init ull<br>THRUST ON pb - push | | Ullage and THRUST ON pushbutton required to satisfy SCS logic for second bank operation if SPS THRUST switch not at DIR ON. |
| | or SPS THRUST - DIR ON | | Lever lock. |
| | or Term mnvr | | |
| | xxxxxxxxxxxxxxxxxxxxxxxxxxxxxxxxxxxxxxxxxx | | |
| | xxxxxxxxxxxxxxxxxxxxxxxxxxxxxxxxxxxxxxxxxx | | |
| | Orb change roll err & rates abnormal<br>& no roll att cont<br>MAN ATT ROLL - ACCEL CMD<br>RHC - cont roll rates | | |
| | or AUTO RCS (16) - OFF<br>Cont roll using dir RCS | 8 | |
| | xxxxxxxxxxxxxxxxxxxxxxxxxxxxxxxxxxxxxxxxxx | | |



NORMAL/BACKUP

| STA/T STEP | PROCEDURE | PANEL | REMARKS |
|---|---|---|---|
| | xxxxxxxxxxxxxxxxxxxxxxxxxxxxxxxxxxxxxxxx | | |
| CDR | Deorbit MTVC takeover | | |
| | If err & rates abnormal | | |
| | ΔV THRUST (2) - OFF | 1 | Backup procedure bypasses maximum possible failure modes, thereby providing an alternate means of completing burn without troubleshooting. |
| | Damp rates to IMU ball or out window with RHC | | |
| | SPS THRUST - NORM | | Lever lock. |
| | If no response | | Since a failure causing abnormal TVC and RCS attitude control is not a failed-on jet, RCS disabling should be done with MAN ATT switch to ACCEL CMD rather than AUTO RCS switches - OFF, thereby providing automatic RCS control for reorientation. |
| | Use dir RCS & disable affected chan | | |
| | If rate needle(s) abnormal | | |
| | BMAG MODE - RATE 1 | | |
| | Reorient to thrust att | | |
| | THC - CW | | |
| | ΔV THRUST A(B) - NORM | | Guarded. |
| | Init ull | | |
| | SPS THRUST - DIR ON | | Lever lock. |
| | Fly MTVC (rate cmd) | | |
| IGN+2 to 5 sec | ΔV THRUST (2) - NORM | | Guarded. |
| | or Term mnvr | | |
| | xxxxxxxxxxxxxxxxxxxxxxxxxxxxxxxxxxxxxxxx | | |

| STA/T | STEP | PROCEDURE | PANEL | REMARKS |
|---|---|---|---|---|
| | | xxxxxxxxxxxxxxxxxxxxxxxxxxxxxxxxxx | | |
| | | Deorbit no roll att cont | | |
| CDR | | MAN ATT ROLL - ACCEL CMD | 1 | |
| | | RHC - cont roll rates | | |
| | | or AUTO RCS (16) - OFF | 8 | |
| | | Cont roll using dir RCS | | |
| | | xxxxxxxxxxxxxxxxxxxxxxxxxxxxxxxxxx | | |
| | 16 | Mon for SPS eng cutoff cue | | |
| | | ΔV ind - goes thru -0.1 | 1 | For suspected ΔV indicator failures, utilize Event Timer to terminate SPS thrust manually. Timer normally counts down from 59:59. |
| | | &/or EVNT TMR ind - 59:59 (-) thrust duration | | |
| | | ΔV THRUST (2) - OFF | | Guarded. |
| | | SPS THRUST - NORM | | Lever lock. |
| | | SPS THRUST lt - out | | |
| | | For postorbit change free drift | | |
| | | MAN ATT (3) - ACCEL CMD | | |
| | | Report eng cutoff | | |
| | | Pc = 0 | | |
| LMP | | SPS INJ VLV ind (4) - CLOSE | 3 | |
| | | SPS He VLV tb (both) - bp | | Barber pole indicates helium isolation valves closed. |
| | 17 | Set cont after tailoff | | |
| CDR | | GMBL MOT P2 & Y2 - OFF | 1 | 4.6.1.1, note 11. |
| | | GMBL MOT P1 & Y1 - OFF | | |
| | | EMS MODE - STBY | | 4.6.1.1, note 9. |
| LMP | | If orb change | | |
| | | PCM BIT RATE - LO | 3 | |
| CMP | | Rcd ΔV ind | 1 | |
| CDR | | TVC SERVO PWR (both) - OFF | 7 | |



NORMAL/BACKUP

| STA/T | STEP | PROCEDURE | PANEL | REMARKS |
|---|---|---|---|---|
| | | If orb change | | |
| CDR | | cb SPS PITCH 1 BAT A - open | 8 | |
| | | cb SPS YAW 1 BAT A - open | | |
| | | If deorbit | | |
| | | cb SPS PITCH (both) - open | | |
| | | cb SPS YAW (both) - open | | |
| | | ATT DBD - MAX | 1 | |
| | | THC - LOCKED | | |
| | | If deorbit | | |
| LMP | | TAPE RCDR FWD - off (ctr) | 3 | |
| | | If orb change | | |
| CDR,CMP | | RHC (both) - LOCKED | | |
| CDR | | RHC PWR DIR (both) - OFF | 1 | |
| CMP | | (To re-zero registers, V32E) | 2 | Provides capability to monitor another burn without going through ROO. |
| | 18 | PRO (exit P47) | | When P47 termination desired. |
| | 19 | FL V37 | | |
| | | Key XXE | | |
| | | If deorbit | | |
| | | Go to CM/SM Sep, 4.15.2 | | |
| | | If orb change | | |
| LMP | | MN BUS TIE (2) - OFF | 5 | |
| | | xxxxxxxxxxxxxxxxxxxxxxxxxxxxxxxxxxxxxxx | | |
| | | If MN BUS TIE fail prior to thrust | | |
| | | Leave MN BUS TIE BAT B/C(A/C) - on (up) | | Circuit breakers used to reconfigure for subsequent bat bus operation and battery charging procedures in place of opening (known) good main bus tie motor switches. |
| | | Go to EPS SSR-2 BAT BUS A(B) reconfig for subsequent mn bus ties | | |
| | | xxxxxxxxxxxxxxxxxxxxxxxxxxxxxxxxxxxxxxx | | |

| STA/T | STEP | PROCEDURE | PANEL | REMARKS |
|---|---|---|---|---|
| CDR | | EMS FUNC - OFF | 1 | |
| | | If pan & map camr in stby mode | | |
| LMP | | PAN CAMR PWR - OFF | 230 | |
| | | MAP CAMR ON - OFF | | |
| CMP | | SM/AC PWR - OFF | 181 | |
| | | Charge bats, 4.5.3.5 | | |
| | | If last MCC & lunar return, or | | |
| | | TLI abort | | |
| | | Go to Deorbit or Lunar Return Veh Prep, 4.15.1, prior to entry | | |

| STA/T | STEP | PROCEDURE | PANEL | REMARKS |
|---|---|---|---|---|
| | | 4.13.3.2 SCS SM RCS Thrusting | | |
| | | CMC - on (desired), 4.8.1.3<br>ISS - on & orient known (desired), 4.8.1.3 & 4.14<br>SCS - on (req), 4.8.4.2<br>Veh Prep (req), 4.13.1 | | CMC and ISS on, and orientation known, necessary for P47 monitor. |
| CMP | 1 | Key V37E 00E | 2 | P00 updates state vector periodically. |
| | 2 | Establish Tot Att disp, 4.7.2.5 | | |
| | 3 | Sel desired Att Cont, 4.7.1<br>Mnvr to thrust att | | All RCS channels required for 3-axis thrusting. |
| | 4 | Establish SCS Att Hold, 4.7.1.4 | | Limit cycle, maximum deadband and low rate should be selected for propellant conservation until prior to thrusting. |
| -05:00 | | | | |
| | 5 | Check boresight star | | |
| | 6 | For X-axis thrust<br>If orb change<br>ΔV Test & Null Bias Check, 4.7.6.1 | | EMS can monitor only X-axis thrusting.<br>For deorbit thrust, ΔV Test & Null Bias Check previously accomplished during Deorbit or Lunar Return Vehicle Preparation, 4.15.1, if desired. |
| | | ΔV Setup, 4.7.6.2 | | |
| | 7 | If P47 for thrust mon<br>Key V37E 47E | | G&N monitoring highly desirable, but not required. Refer to 4.8.1.6 for P47 description. |

| STA/T STEP | PROCEDURE | PANEL | REMARKS |
|---|---|---|---|
| CMP | Poss PROG alarm (4.8.1.16) | 2 | R02. |
| | FL V16 N83 | | |
| | ΔVX, Y, Z (cont) XXXX.X FPS | | |
| | If desired | | |
| | Key N62E | | |
| | VI XXXXX. FPS | | Inertial velocity. |
| | H dot XXXXX. FPS | | Altitude rate. |
| | H pad XXXX.X NM | | Altitude above pad radius (earth orbit) or landing site radius (lunar orbit). |
| | KEY REL (to return to N83) | | |
| -00:30 | | | |
| CDR, | | | |
| CMP 8 | RHC (both) - ARMED | | |
| CDR | THC - ARMED | | |
| | ATT DBD - MIN | 1 | |
| | LIM CYCLE - OFF | | |
| LMP | If deorbit | | |
| | TAPE RCDR FWD - FWD | 3 | |
| CDR | EMS MODE - NORM | 1 | 4.6.1.1, note 9. |
| 00:00 | | | |
| 9 | Perform thrust by manually nulling ΔV ind | | |
| 10 | EMS MODE - STBY | | 4.6.1.1, note 9. |
| | Rcd ΔV compnts | | |
| | If orb change | | |
| | EMS FUNC - OFF | | |
| CDR,LMP | RHC (both) - LOCKED | | |



NORMAL BACKUP

| STA/T | STEP | PROCEDURE | PANEL | REMARKS |
|---|---|---|---|---|
| CDR | | THC - neut, LOCKED | | |
| LMP | | If deorbit | | |
| | | TAPE RCDR FWD - off (ctr) | 3 | |
| CMP | | (To re-zero registers, V32E) | 2 | Provides capability to monitor another burn without going through R00. |
| | 11 | PRO (exit P47) | | |
| | 12 | FL V37<br>Key XXE | | R00 turns off average G. |
| | 13 | If deorbit<br>Go to CM/SM Sep, 4.15.2 | | |
| | 14 | If last MCC & lunar return, or TLI abort<br>Go to Deorbit or Lunar Return Veh Prep, 4.15.1, prior to entry | | |

| STA/T | STEP | PROCEDURE | PANEL | REMARKS |
|---|---|---|---|---|
| | | 4.13.3.3 SCS Hybrid Deorbit Thrusting | | This procedure can be utilized for a pure CM RCS deorbit by omitting steps 10 and 11. |
| | | CMC - on (desired), 4.8.1.3<br>ISS - on & orient known (desired), 4.8.1.3 & 4.14<br>SCS - on (req), 4.8.4.2<br>Veh Prep (req), 4.13.1 | | CMC and ISS on, and orientation known, necessary for P47 monitor. |
| CMP | 1 | Key V37E 00E | 2 | P00 updates state vector periodically. |
| | 2 | Establish Tot Att disp, 4.7.2.5 | | |
| | 3 | Sel desired Att Cont, 4.7.1<br>Mnvr to thrust att<br>R_____°, P_____°, Y_____° | | Thrusting attitude for SM RCS portion of hybrid burn is nominally a retrograde +X translation with heads down and BEF. |
| | 4 | Establish SCS Att Hold, 4.7.1.4 | | Limit cycle, maximum deadband, and low rate should be selected for propellant conservation until prior to thrusting. |
| LMP | 5 | Configure & preload bats | | Prepares for battery preloading prior to CM/SM separation and verifies batteries transferred to main buses. |
| | | CAUTION<br>If either bat bus A(B) current fails to incr after cycling MN BUS TIE sws, configure bats to mn buses using cb BAT C TO BAT BUS A(B). | 250 | Assumes reconfiguration BAT A(B) and BAT C to MNA(B). |



NORMAL/BACKUP

| STA/T STEP | PROCEDURE | PANEL | REMARKS |
|---|---|---|---|
| LMP | | | |
| -10:00 | MN BUS TIE BAT A/C - on (up) | 5 | |
| | Verify bat bus A current incr &/or bat voltage decr | 3 | Verification of current increase for appropriate battery bus via DC AMPS indicator (panel 3) confirms successful operation of main bus tie motor switches. |
| | MN BUS TIE BAT B/C - on (up) | 5 | |
| | Verify bat bus B current incr &/or bat voltage decr | 3 | MN BUS TIE BAT A/C and B/C switches at on provide two batteries on line if circuit breakers MNA & B BAT C (2) - open, or three batteries on line for deorbit and entry if circuit breakers closed (panel 275). |
| -05:00 | | | |
| CMP 6 | Check boresight star | | |
| 7 | For X-axis thrust<br>ΔV Setup, 4.7.6.2 | | If G&N inoperative, X axis only direction ΔV can be measured. |
| 8 | If P47 for thrust mon<br>Key V37E 47E | 2 | G&N monitoring desirable but not required. Refer to 4.8.1.6 for P47 description. |
| | Poss PROG alarm (4.8.1.16) | | R02. |
| | FL V16 N83<br>ΔVX, Y, Z (cont) XXXX.X FPS | | |
| | If desired<br>Key N62E | | |
| | VI XXXXX. FPS | | Inertial velocity. |
| | H dot XXXXX. FPS | | Altitude rate. |
| | H pad XXXX.X NM | | Altitude above pad radius (earth orbit) or landing site radius (lunar orbit). |
| | KEY REL (to return to N83) | | |

| STA/T | STEP | PROCEDURE | PANEL | REMARKS |
|---|---|---|---|---|
| -00:30 | | | | |
| CDR, | | | | |
| CMP | 9 | RHC (both) - ARMED | | |
| CDR | | THC - ARMED | | |
| | | ATT DBD - MIN | 1 | |
| | | LIM CYCLE - OFF | | |
| LMP | | TAPE RCDR FWD - FWD | 3 | |
| CDR | | EMS MODE - NORM | 1 | 4.6.1.1, note 9. |
| 00:00 | | | | |
| | 10 | Perform SM RCS thrust<br>Mon ΔV ind or EVNT TMR ind | | |
| | 11 | SM RCS thrust complete<br>EMS MODE - STBY<br>Rcd ΔV ind, EVNT TMR ind | | 4.6.1.1, note 9. |
| | 12 | Sel SCS Att Cont mode, 4.7.1 | | |
| | 13 | Perform Sep proced, 4.15.2 | | Separation at SM deorbit attitude saves time. Only one minute allowed between burns. |
| | 14 | Mnvr to CM RCS deorbit att<br>R ___°, P ___°, Y ___°<br>Verify using external visual cues | 2 | Both CM RCS systems should be enabled. CM RCS portion completed with +X axis ≈70° below velocity vector (apex down and forward); ≈110° +pitch maneuver from heads down, BEF, SM RCS portion of deorbit. |
| | | MAN ATT ROLL, YAW - RATE CMD | 1 | |
| | | MAN ATT PITCH - ACCEL CMD | | |
| | | RATE - HI | | |
| | | FDAI SCALE - 5/5 | | |
| | 15 | EVNT TMR ind - SM RCS C/O +1 min<br>EMS MODE - NORM | | One minute after SM RCS cutoff, start CM RCS burn. 4.6.1.1, note 9. |



NORMAL BACKUP

| STA/T | STEP | PROCEDURE | PANEL | REMARKS |
|---|---|---|---|---|
| CMP | | RHC 1 - contin -pitch | 2 | Negative pitch jets have ≈25 to 30 percent less authority than positive jets because of jet location and thrust direction relative to CM c.g. |
| CDR | | RHC 2 - pulse +pitch to maintain att in 3 axes | 1 | |
| | | xxxxxxxxxxxxxxxxxxxxxxxxxxxxxxxxxxxx | | |
| | | If only 1 RHC<br>Pulse RHC + & - ≈5° pitch from pitch retro att, maintaining rates <3°/sec | | |
| | | xxxxxxxxxxxxxxxxxxxxxxxxxxxxxxxxxxxx | | |
| | 16 | Mon ΔV ind or EVNT TMR ind for req value | | ΔV ind cutoff cue must be adjusted to account for EMS sensing axis (along X) being reversed from SM RCS burn and biased off ≈70° from CM RCS velocity vector. (ΔVems = ΔVcm Cos 70°). |
| | 17 | Term CM RCS deorbit burn<br>MAN ATT (3) - RATE CMD or ACCEL CMD<br>EMS MODE - STBY<br>Rcd ΔV ind<br>THC - LOCKED | | 4.6.1.1, note 9. |
| | 18 | Set up for CM RCS Sys 1<br>AUTO RCS A/C ROLL (4) - OFF<br>AUTO RCS CM 1 (6) - MNA or MNB<br>AUTO RCS CM 2 (6) - OFF | 8 | Electrically isolates system 2 for entry. If a problem develops in system 1, disable affected channel and use direct RCS control. |
| CMP | 19 | PRO (exit P47) | 2 | |
| | 20 | FL V37<br>Key XXE<br>Go to SCS Entry, 4.15.4 | | |

SCS HYBRID DEORBIT THRUSTING

| STA/T | STEP | PROCEDURE | PANEL | REMARKS |
|---|---|---|---|---|
| | | 4.14 ALIGNMENTS | | For general G&C operating data, refer to operating notes, 4.6.1. |
| | | 4.14.1 G&N ALIGNMENTS | | |
| | | 4.14.1.1 (P51/P53) IMU Orientation Determination | | (P51) IMU Orientation Determination defines inertial orientation of IMU using optics. (P53) Alternate LOS IMU Orientation Determination defines inertial orientation of IMU using backup optical device (COAS). P53 may also be used with failed optics or MARK pb. |
| | | CMC - on (req), 4.8.1.3<br>ISS - on (req), 4.8.1.3<br>SCS - on (desired), 4.8.4.2 | | Provides total attitude monitoring and attitude control capability. Minimum impulse control using RHC available (SCS & G&N) for sighting mark target alignment. |
| CDR | | LOGIC 2/3 PWR - on (up) (req if no SCS)<br>Opt - on (req, P51), 4.8.1.4<br>COAS - calib (req, P53), 4.14.1.6<br>Att Cont (req), 4.7.1 | 7 | Required for control and display functions. Optics required for P51; COAS used for P53.<br>Allows maneuvering, and provides inertial stability of CSM to ensure accuracy of alignments. |
| | | Total Att Disp (req), 4.7.2.5 | | Both ISS and GDC attitude displays recommended for monitoring of IMU coarse align and SC motion. |
| CMP | 1 | Key V37E 51E/53E | 2,140 | |
| | | Poss PROG alarm (4.8.1.16) | | R02. |
| | 2 | FL V50 N25<br>00015 (trgt acq) | | Targets (celestial bodies). |



NORMAL/BACKUP

| STA/T STEP | PROCEDURE | PANEL | REMARKS |
|---|---|---|---|
| CMP | a. Desired att cont mode, 4.7.1 | | V16 N20 may be keyed in to monitor for impending gimbal lock if operating from LEB where no FDAI available. |
| | Mnvr to acq tgts, if necessary<br>PRO | 2,140 | |
| | If P51 go to 3<br>If P53 go to 4 | | |
| | or b. To coarse align IMU to SC axes<br>ENTR (when att acpt)<br>V41 N22 (coarse align)<br>R, P, Y 000.00 DEG<br>NO ATT lt - on, then out<br>Recycle 2 | | Time and RCS fuel may be saved and subsequent IMU alignment decisions greatly simplified if IMU left inertially stabilized as close as possible to orientation required for future CMC programs. |
| | (R53, Sighting Mark Routine) | | |
| 3 | FL V51 (please mrk)<br>OPT ZERO - OFF | 122 | |
| | OPT MODE - MAN<br>Ctr trgt in SXT | | SCT may be used if reduced accuracy acceptable. |
| | MARK (on trgt), go to 6 | | |
| | (R56, Alternate LOS Sighting Mark Routine) | | To perform sighting marks using COAS. |
| 4 | FL V06 N94 | 2,140 | |
| | SA XXX.XX DEG | | |
| | TA XX.XXX DEG | | |

| STA/T STEP | PROCEDURE | PANEL | REMARKS |
|---|---|---|---|
| CMP | Accept PRO | 2,140 | |
| | Reject Key V24E<br>Load desired SA & TA | | Values obtained from COAS Calibration, 4.14.1.6.<br>Nominal SA and TA for COAS sightings are:<br>SA - 000.00 DEG<br>TA - 57.470 DEG |
| 5 | FL V53 (please mrk)<br>RHC - ctr trgt in COAS reticle | | SCS minimum impulse mode is recommended. |
| | ENTR, go to 6 | | CMC interprets ENTR as a mark. An inadvertent PRO instead of ENTR will recycle FL V53. |
| 6 | FL V50 N25<br>00016 (term mrks) | | |
| | Accept PRO | | |
| | Reject If P51, MARK REJ pb - push<br>Return to 3 | 122 | An unsatisfactory mark may be rejected by pressing MARK REJ pushbutton (P51) or ENTR (P53) anytime prior to terminating marking sequence. In P51, possible program alarms if marks rejected without prior marks or if surplus marks made. |
| | If P53, ENTR, return to 5 | 2,140 | CMC interprets ENTR as a mark reject. |
| 7 | FL V01 N71<br>Trgt code 00XX | | Target (celestial body) codes:<br>00 - Planet (any planet except Earth)<br>01 to 45 - Star<br>46 - Sun<br>47 - Earth<br>50 - Moon |
| | Accept PRO | | |
| | Poss OPR ERR<br>Recycles disp | | Target code negative or >50. |



NORMAL/BACKUP

| STA/T STEP | PROCEDURE | PANEL | REMARKS |
|---|---|---|---|
| CMP | Reject Key V21E<br>Load trgt code | 2,140 | |
| | For trgt 2 (trgt code ≠ 00)<br>P51, return to 3<br>P53, return to 4 | | |
| 8 | FL V06 N88 (planet only)<br>X, Y, Z .XXXXX | | This flash will occur only if marks were made on a planet. X, Y, Z - components of planet unit position vector at present time. |
| | Accept PRO<br>Reject Key V25E<br>Load desired data | | Use on-board tables to determine planet position vector at present time. |
| | For trgt 2<br>P51, return to 3<br>P53, return to 4 | | |
| | (R54, Sighting Data Display Routine) | | Tests accuracy of pair of target sightings. |
| 9 | FL V06 N05<br>Sighting angle diff XXX.XX DEG | | |
| | Accept PRO<br>Reject Key V32E, return to 2 | | CMC calculates and stores IMU orientation as REFSMMAT. |
| 10 | FL V37<br>Key XXE | | R00. |
| 11 | If P51 and no P52<br>Opt Pwr Down, 4.8.1.4 | | |

(P51/P53) IMU ORIENTATION DETERMINATION

| STA/T | STEP | PROCEDURE | PANEL | REMARKS |
|---|---|---|---|---|
| | 4.14.1.2 | (P52/P54) IMU Realign | | (P52) IMU Realign, and (P54) Alternate LOS IMU Realign, aligns IMU from known orientation to one of four orientations selected by crew. Sightings made on two targets (celestial bodies) with optics in P52, or with COAS in P54.<br><br>Orientation options available are:<br>• Preferred<br>• Nominal<br>• REFSMMAT<br>• Landing site |
| | | CMC - on (req), 4.8.1.3<br>ISS - on & orient known (req), 4.8.1.3 & 4.14<br>SCS - on (desired), 4.8.4.2 | | Provides total attitude monitoring and attitude control capability. Minimum impulse control using RHC available (SCS & G&N) for sighting mark target alignment. |
| CDR | | LOGIC 2/3 PWR - on (up) (req if no SCS)<br>Optics - on (req, P52), 4.8.1.4<br>COAS - calib (req, P54), 4.14.1.6<br>Att Cont (req), 4.7.1 | 7 | Required for control and display functions. Optics required for P52; COAS used for P54.<br><br>Allows maneuvering, and provides inertial stability of CSM to ensure accuracy of alignments. |
| | | Tot Att Disp (req), 4.7.2.5 | | Both ISS and GDC attitude displays recommended for monitoring of IMU coarse align and SC motion. |
| CMP | 1 | Key V37E 52E/54E | 2,140 | |
| | | Poss PROG alarm (4.8.1.16) | | R02. |



NORMAL/BACKUP

| STA/T | STEP | PROCEDURE | PANEL | REMARKS |
|---|---|---|---|---|
| CMP | 2 | FL V04 N06 | 2,140 | If preferred orientation defined, R2 = 00001. Otherwise R2 = 00003 (REFSMMAT alignment).<br><br>Options available are:<br>00001 - Preferred (operator ensures preferred orientation defined)<br>00002 - Nominal<br>00003 - REFSMMAT<br>00004 - Landing site |
| | | Option code 00001<br>Option 0000X<br><br>Accept PRO<br>Reject Key V22E<br>Load desired option | | |
| | | a. If 00001 sel, go to 5 | | |
| | | or b. If 00002 or 0004 sel, go to 3 | | |
| | | or c. If 00003 sel, go to 8 | | |
| | 3 | FL V06 N34<br>GET align 00XXX. HRS<br>000XX. MIN<br>0XX.XX SEC<br><br>Accept PRO<br>If option 2, go to 5<br>Reject Key V25E<br>Load desired GET align | | GET align - Time at which nominal orientation defined. Display initially 0, 0, 0. If this value accepted, nominal orientation will be defined for GET align automatically selected as present time. |
| | 4 | FL V06 N89<br>Lat (+N) XX.XXX DEG<br>Long/2 (+E) XX.XXX DEG<br>Alt XXX.XX NM<br><br>Accept PRO<br>Reject Key V25E<br>Load correct coordinates | | Stored landing site coordinates. |

| STA/T | STEP | PROCEDURE | PANEL | REMARKS |
|---|---|---|---|---|
| CMP | 5 | FL V06 N22<br>R, P, Y XXX.XX DEG | 2,140 | |
| | | Accept PRO<br>Reject Desired att cont mode, 4.7.1<br>Mnvr SC<br>Key V32E | | To obtain acceptable MGA.<br>V32E recycles to update gimbal angle display. |
| | | or Key V37E XXE<br>Exit P52/P54 | | |
| | 6 | FL V50 N25<br>00013 (coarse align or pulse torque) | | |
| | | Coarse align<br>PRO, go to 7 | | Selects coarse align R50 and allows auto optics positioning. |
| | | Pulse torque<br>ENTR | | To pulse torque gyros. Bypasses R50 and auto optics positioning. |
| | | V16 N20 (present gmbl angles)<br>R, P, Y XXX.XX DEG | | If it appears that IMU will be torqued into gimbal lock, maneuver should be performed to avoid condition. If SC CONT at CMC and CMC MODE at AUTO or HOLD, the DAP will maneuver vehicle to follow platform as it moves. If N93 used for display, scaling of N93 will not remain XX.XXX. Initially, N93 will display proper values; thereafter, R2, then R3, and finally R1 will diminish to zero as each gyro axis is torqued. |
| | | Go to 20 | | |



NORMAL BACKUP

| STA/T | STEP | PROCEDURE | PANEL | REMARKS |
|---|---|---|---|---|
| | | (R50, Coarse Align Routine) | | |
| CMP | 7 | Verify coarse align complete<br>NO ATT lt - on, then out<br>Mon ball motion | 2,140 | If required gimbal angle change <1 degree, IMU will not be coarse-aligned. |
| | 8 | FL V50 N25<br>00015 (trgt acq) | | |
| | | a. For CMC assist in sel<br>Desired att cont mode, 4.7.1<br>Mnvr to acq trgt | | After target acquisition, SCS minimum impulse operation desirable for minimum fuel consumption and reduction of vehicle rates to minimum. |
| | | PRO | | CMC performs target selection routine. However, for P54, since primary optics are not being used, selected stars may not be acceptable for backup optics sightings. |
| | | Poss FL V05 N09<br>00405 (accept pair not avail)<br>Mnvr until suitable trgt acq<br>PRO, go to 9 | | |
| | | or Key V32E, recycle 8 | | |
| | | or b. To bypass CMC sel<br>ENTR | | Crew manually acquires target. |

| STA/T STEP | PROCEDURE | PANEL | REMARKS |
|---|---|---|---|
| CMP 9 | FL V01 N70 | 2,140 | |
| | Trgt code 00XX | | Target (celestial body) codes:<br>00 - Planet (any planet except Earth)<br>01 to 45 - Star<br>46 - Sun<br>47 - Earth<br>50 - Moon |
| | Accept If P52 | | |
| | OPT ZERO - OFF | 122 | |
| | OPT MODE - as desired | | |
| | PRO | 2,140 | |
| | If P54 | | |
| | PRO | | |
| | Poss OPR ERR | | Target code negative or >50. |
| | Recycles disp | | |
| | Reject Key V21E | | |
| | Load desired code | | |
| | For P52 | | |
| | If trgt code ≠ 00 & | | |
| | OPT MODE - CMC, go to 11 | 122 | |
| | or OPT MODE - MAN, go to 12 | | |
| | For P54 | | |
| | If trgt code ≠ 00, go to 13 | | |
| 10 | FL V06 N88 (planet only) | 2,140 | |
| | X, Y, Z .XXXXX | | X, Y, Z - Components of planet unit position vector at present time. |
| | Accept If P52 | | |
| | PRO | | |
| | If OPT MODE - MAN, go to 12 | 122 | |



NORMAL/BACKUP

| STA/T STEP | PROCEDURE | PANEL | REMARKS |
|---|---|---|---|
| | If P54 | | |
| CMP | PRO, go to 13 | 2,140 | |
| | Reject Key V25E<br>Load desired data | | Use on-board tables to determine planet position at present time. |
| | (R52, Auto Optics Positioning Routine) | | Points SLOS of optics at selected target. |
| 11 | V06 N92 (desired opt angles)<br>SA XXX.XX DEG<br>TA XX.XXX DEG | | Optics will drive to acquire selected target. No display if R52 reselected after R53 called. |
| | Poss FL V05 N09 (2 sec priority)<br>00404 (TA >90°) | | |
| | a. Desired att cont mode, 4.7.1<br>Mnvr to reduce TA | | If required optics angles not being displayed, key V16 N92E to obtain display. |
| | PRO | | |
| | or b. Key V34E<br>FL V37<br>Key XXE | | ROO. |
| | If TA >50° & <90°<br>Desired att cont mode, 4.7.1 | | If TA >50° and <90°, trunnion driven to upper limit (≈49.7754°) and held at this angle. |
| | Mnvr to reduce TA | | If required optics angles not being displayed, key V16 N92E to obtain display. |
| | When sighting mrks are desired<br>OPT MODE - MAN | 122 | Calls R53. To regain auto optics positioning, select OPT MODE - CMC (prior to completion of R53). |

| STA/T | STEP | PROCEDURE | PANEL | REMARKS |
|---|---|---|---|---|
| | | (R53, Sighting Mark Routine) | | |
| CMP | 12 | FL V51 (please mrk)<br>Ctr trgt in SXT<br>MARK (on trgt), go to 15 | 2,140<br><br>122 | SCT may be used if reduced accuracy acceptable. |
| | | (R56, Alternate LOS Sighting Mark Routine) | | To perform sighting marks using COAS. |
| | 13 | FL V06 N94<br>SA XXX.XX DEG<br>TA XX.XXX DEG<br><br>Accept PRO<br>Reject Key V24E<br>Load desired SA & TA | 2,140 | Values obtained from COAS Calibration, 4.14.1.6. Nominal SA and TA for COAS sightings are:<br>SA - 000.00 DEG<br>TA - 57.470 DEG |
| | 14 | FL V53 (please mrk)<br>RHC - ctr trgt in COAS reticle<br><br>ENTR | | SCS minimum impulse mode recommended.<br><br>CMC interprets ENTR as a mark. An inadvertent PRO instead of ENTR will recycle FL V53. |
| | 15 | FL V50 N25<br>00016 (term mrks)<br><br>Accept PRO<br>Reject If P52, MARK REJ pb - push<br>Return to 12 | <br><br><br><br>122 | An unsatisfactory mark may be rejected by pressing MARK REJ pushbutton (P52) or ENTR (P54) anytime prior to terminating marking sequence. In P52, possible program alarms if marks rejected without prior marks or if surplus marks made. |

| STA/T STEP | PROCEDURE | PANEL | REMARKS |
|---|---|---|---|
| CMP | If P54, ENTR<br>Return to 14 | 2,140 | CMC interprets ENTR as a mark reject. |
| 16 | FL V01 N71<br>Trgt code 00XX<br><br>Accept PRO<br><br>Poss OPR ERR<br>Recycles disp<br><br>Reject Key V21E<br>Load trgt code<br><br>If trgt code ≠ 00<br>Return to 9 for trgt 2 | | Target (celestial body) codes:<br>00 - Planet (any planet except Earth)<br>01 to 45 - Star<br>46 - Sun<br>47 - Earth<br>50 - Moon<br><br>Target code negative or >50. |
| 17 | FL V06 N88 (planet only)<br>X, Y, Z .XXXXX<br><br>Accept PRO<br>Reject Key V25E<br>Load desired data<br><br>Return to 9 for trgt 2 | | This flash will occur only if marks were made on a planet. X, Y, Z - Components of planet unit position vector at present time.<br><br>Use on-board tables to determine planet position vector at present time. |

| STA/T STEP | PROCEDURE | PANEL | REMARKS |
|---|---|---|---|
| | (R54, Sighting Data Display Routine) | | Tests accuracy of pair of target sightings. |
| CMP 18 | FL V06 N05<br>Sighting angle diff XXX.XX DEG<br><br>Accept PRO<br>Reject Key V32E, go to 20 | 2,140 | |
| | (R55, Gyro Torquing Routine) | | Calculates and displays gyro torquing angles for final (fine) alignment of inertial platform and to torque gyros. |
| 19 | FL V06 N93 (Δ gyro angles)<br>X, Y, Z XX.XXX DEG<br><br>Accept PRO (gyros torqued)<br>Reject Key V32E, go to 20<br><br>or Key V37E 00E, go to 22 | | X, Y, Z Gyro - Angle through which each gyro must be torqued to complete fine alignment. Once this step is complete, CMC will reset preferred orientation flag. If CMC MODE switch is at AUTO or HOLD during R55, the DAP will maneuver CSM to follow platform as it moves.<br><br>Pulse IRIGs through desired angle.<br>Do not torque gyros. |
| 20 | FL V50 N25<br>00014 (fine align check)<br><br>Accept PRO, return to 8<br><br>Reject ENTR | | PRO repeats target sightings (R52 & R53) for P52; (R56) for P54 sighting data test (R54), and gyro torquing (R55) to verify accuracy of alignment. |



NORMAL/BACKUP

| STA/T | STEP | PROCEDURE | PANEL | REMARKS |
|---|---|---|---|---|
| CMP | 21 | FL V37<br>Key XXE | 2,140 | R00. |
| | 22 | If P52<br>Opt Pwr Down, 4.8.1.4 | | |

| STA/T | STEP | PROCEDURE | PANEL | REMARKS |
|---|---|---|---|---|
| | | 4.14.1.3 (V40 N20) Zero ICDU Extended Verb | | |
| | | CMC - on (req), 4.8.1.3<br>ISS - on (req), 4.8.1.3 | | |
| CMP | 1 | Key V40 N20E<br>NO ATT lt - OFF<br>Wait 15 sec | 2,140 | • Ensures synchronization between ISS CDU counters and CDU counters in CMC.<br>• Terminates IMU coarse align mode and enters fine align mode (inertial IMU). |
| | | Poss OPR ERR | | If IMU stall routine in use. |
| | | Poss PROG alarm<br>Exit routine<br>Key V05 N09E (to verify alarm)<br>00206 (zero encode not allowed)<br>Key V41 N20E, 4.14.1.4 | | If ISS in coarse align mode with gimbal lock. |



NORMAL BACKUP

| STA/T | STEP | PROCEDURE | PANEL | REMARKS |
|---|---|---|---|---|
| | | 4.14.1.4 (V41 N20) Coarse Align ICDU Extended Verb | | Coarse aligns IMU to gimbal angles specified by crew. |
| | | CMC - on (req), 4.8.1.3<br>ISS - on (req), 4.8.1.3 | | |
| CMP | 1 | Key V41 N20E | 2,140 | |
| | | Poss OPR ERR<br>Exit coarse align | | Occurs if another extended verb active, or if IMU stall routine in use. |
| | 2 | FL V21 N22 (load CDU angles)<br>R, P, Y XXX.XX DEG | | Registers initially blank. |
| | | Accept Load desired angles<br>Reject V33E | | 4.6.1.3, note 3m. |
| | | DSKY - V41<br>NO ATT lt - on | | NO ATT lt will remain on even after gimbals have been driven to specified angles. |
| | | Poss PROG alarm<br>Key V05 N09E (to verify alarm)<br>00211 (error >2°) | | Present and specified gimbal angles may be compared by keying V16 N20E and V16 N22E. Alternate method is to key V62E (Mode 2) to display difference between N20 and N22 on FDAI error needles. |
| | | To repeat coarse align<br>Key V41 N20E | | |
| | 3 | To extinguish NO ATT lt & term coarse align<br>Key V40 N20E<br>Wait 15 sec | | Zero ICDU extended verb, 4.14.1.3. |
| | | or V42E | | Torque gyros extended verb, 4.8.3.2. |

| STA/T | STEP | PROCEDURE | PANEL | REMARKS |
|---|---|---|---|---|
| | | 4.14.1.5 (V41 N91) Coarse Align OCDU Extended Verb | | Drive optics to shaft and trunnion angles specified by crew. Not permitted from start of drive test until end of burn. (Ref note opposite 00117 alarm, step 3.) |
| | | CMC - on (req), 4.8.1.3<br>Opt Pwr Up (req), 4.8.1.4 | | |
| CMP | 1 | Key V37E 00E | 2,140 | V41 N91 from P00 only. |
| | 2 | OPT ZERO - OFF<br>OPT MODE - CMC | 122 | |
| | 3 | Key V41 N91E | 2,140 | |
| | | Poss OPR ERR<br>Exit coarse align OCDUs | | Occurs if another extended verb active. |
| | | Poss PROG alarm<br>Key V05 N09E (to verify alarm)<br>00115 (OPT MODE not CMC)<br>OPT MODE - CMC | 122 | OPR ERR lt on. |
| | | or 00117 (OPT not avail)<br>Exit coarse align | 2,140 | This alarm code indicates that OCDUs are being used by TVC DAP or gimbal drive test and that this procedure cannot be performed. May occur from start of drive test until end of burn. |
| | 4 | FL V21 N92 (Load OCDUs)<br>SA XXX.XX DEG<br>TA XX.XXX DEG | | Registers initially blank. |
| | | Accept Load desired SA & TA<br>Reject V33E | | 4.6.1.3, note 3m. |
| | 5 | DSKY - V41 | | Key V16 N91E to monitor optics angles. |
| | 6 | Opt Pwr Down, 4.8.1.4 | | |



NORMAL BACKUP

| STA/T | STEP | PROCEDURE | PANEL | REMARKS |
|---|---|---|---|---|
| | 4.14.1.6 | Inflight COAS Calibration | | Provides method for in-flight calibration of COAS (i.e., equivalent shaft and trunnion angles). Spare COAS light bulbs (2) are stowed in volume U3. When installing COAS on window mount, align (rotate COAS barrel to detent) as indicated by arrow on decal. |
| | | CMC - on (req), 4.8.1.3<br>ISS - on & orient known (req), 4.8.1.3 & 4.14<br>SCS - on (req), 4.8.4.2<br>COAS filter installed (req) | | Filter used to reduce glare of reticle image when sighting on low intensity targets. |
| | 1 | Opt Pwr Up, 4.8.1.4 | | |
| | 2 | Sel Tot Att Disp, 4.7.2.5 | | |
| CMP | 3 | Key V37E 52E | 2,140 | |
| | | Poss PROG alarm (4.8.1.16) | | R02. |
| | 4 | FL V04 N06 | | |
| | | Option code 00001 | | If preferred alignment flag is set, R2 will display 00001. Otherwise, R2 will display 00003 (REFSMMAT alignment). |
| | | Option 0000X | | Options available are:<br>00001 - Preferred (operator ensures preferred orientation defined)<br>00002 - Nominal<br>00003 - REFSMMAT<br>00004 - Landing site |
| | | Sel REFSMMAT orient (V22E, 3E)<br>PRO | | |

| STA/T | STEP | PROCEDURE | PANEL | REMARKS |
|---|---|---|---|---|
| CMP | 5 | FL V50 N25<br>00015 (trgt acq)<br>Att Cont Mode, 4.7.1<br>Mnvr to acq trgt in COAS<br>ENTR | 2,140 | Target (celestial bodies). |
| | 6 | FL V01 N70<br>Trgt code 000XX<br><br>OPT ZERO - OFF<br>OPT MODE - CMC | 122 | Target codes:<br>00 - Planet (any planet except Earth)<br>01 to 45 - Star<br>46 - Sun<br>47 - Earth<br>50 - Moon |
| | | Reject Key V21E<br>Load trgt code of trgt centered in COAS<br>Accept PRO | 2,140 | |
| | | Poss OPR ERR<br>Recycles display | | Target code negative or >50. |
| | | If trgt not a planet, go to 8 | | |
| | 7 | FL V06 N88 (planet only)<br>X, Y, Z .XXXXX<br><br>Accept PRO<br>Reject Key V25E<br>Load desired data | | X, Y, Z - Components of planet unit position vector at present time. |



NORMAL/BACKUP

| STA/T | STEP | PROCEDURE | PANEL | REMARKS |
|---|---|---|---|---|
| | | (R52, Auto Optics Positioning Routine) | | |
| CMP | 8 | V06 N92<br>SA XXX.XX DEG<br>TA XX.XXX DEG<br><br>When trgt centered in COAS & SA & TA relatively constant<br>Key VERB (to freeze disp)<br><br>Accept Rcd SA & TA for use in P53/P54<br>Reject KEY REL<br>Repeat 8 | 2,140 | Display will be updated every ≈0.5 second. |
| | 9 | Opt Pwr Down, 4.8.1.4 | | |
| | 10 | Sel new prog | | |

| STA/T | STEP | PROCEDURE | PANEL | REMARKS |
|---|---|---|---|---|
| | | 4.14.2 SCS ALIGNMENTS | | |
| | | 4.14.2.1 Alternate SC Inertial Attitude Determination and GDC Alignment | | |
| | | SCS - on (req), 4.8.4.2 | | |
| | 1 | Opt Pwr Up, 4.8.1.4 | | |
| | 2 | Sel Tot Att, Att Err & Rate Disp for SCS, 4.7.2 | | If IMU off, only FDAI 1 need be powered or selected. |
| | 3 | Sel SCS Att Hold/Rate Cmd, 4.7.1.4 | | For fuel conservation, max deadband preferred until stars obtained. |
| CMP | 4 | Obtain 2 stars in SCT<br>Sel Opt Cont, 4.7.5.2<br>OHC - ctr star on R-line<br>OHC - ctr star in FOV<br>Hold star 1 in ctr of FOV | 121 | OHC - Optics hand control.<br>Final adjustment required OPT COUPLING - DIRECT. |
| | | Hold star 2 on R line | | Minimum impulse control can be used to allow positioning of stars on R line. |
| CDR | 5 | BMAG MODE (3) - RATE 2<br>ATT DBD - MIN<br>BMAG MODE (3) - ATT 1/RATE 2 | 1 | Stars must be kept aligned while BMAGs caged. |



NORMAL BACKUP

| STA/T | STEP | PROCEDURE | PANEL | REMARKS |
|---|---|---|---|---|
| CMP | 6 | Read & rcd angles on trun & shft ind(s) & xmit with star data to MSFN | 121 | |
| | 7 | Obtain inertial att values for ATT SET tw from MSFN | | |
| | 8 | Align GDC to MSFN values, 4.7.3 | | |
| | 9 | Opt Pwr Down, 4.8.1.4 | | |

ALTERNATE SC INERTIAL ATTITUDE DETERMINATION AND GDC ALIGNMENT

| STA/T | STEP | PROCEDURE | PANEL | REMARKS |
|---|---|---|---|---|
| | | 4.14.2.2 Inplane GDC Alignment | | Provides method for aligning SCS attitude reference system in orbital plane (+Y axis of reference along V x R). This allows use of ORDEAL on FDAI 2 with IMU out of plane. |
| | | CMC - on (req), 4.8.1.3<br>ISS - on & orient known (req), 4.8.1.3 & 4.14<br>SCS - on (req), 4.8.4.2 | | |
| | 1 | Sel Tot Att Disp, 4.7.2.5 | | |
| CDR | | FDAI SEL - 1/2 | 1 | |
| CMP | 2 | Key V37E 52E | 2,140 | |
| | | Poss PROG alarm (4.8.1.16) | | R02. |
| | 3 | FL V04 N06 | | |
| | | Option code 00001 | | |
| | | Option 0000X | | Options available are:<br>00001 - Preferred (operator ensures preferred orientation defined)<br>00002 - Nominal<br>00003 - REFSMMAT<br>00004 - Landing site |
| | | Select nom option<br>Key V22E 2E | | |
| | | PRO | | |
| | 4 | FL V06 N34 | | |
| | | GET align 00XXX. HRS<br>000XX. MIN<br>0XX.XX SEC | | GET align - Time at which vehicle position and velocity vectors selected to define IMU local vertical orientation. |



NORMAL/BACKUP

| STA/T | STEP | PROCEDURE | PANEL | REMARKS |
|---|---|---|---|---|
| CMP | | Key V25E<br>Load present time plus 10 min | 2,140 | |
| | 5 | Establish Att Cont, 4.7.1<br><br>Damp veh rates<br><br>PRO | | Selected to prevent drift between gimbal angle calculation and GDC alignment. |
| | 6 | FL V06 N22<br>R, P, Y XXX.XX DEG | | IMU gimbal angles for desired IMU orientation at present SC attitude. |
| CDR | 7 | ATT SET tw - adj to Euler angles disp on DSKY | 1 | |
| | 8 | Align GDC, 4.7.3 | | |
| | 9 | Sel new program | | |



INPLANE GDC ALIGNMENT

| STA/T STEP | PROCEDURE | PANEL | REMARKS |
|---|---|---|---|
| | 4.14.2.3 Backup GDC Alignment With COAS | | Aligns GDC without IMU, CMC or optics.<br><br>A more accurate alignment can be performed if COAS calibration procedure, 4.14.1.6, has been performed earlier and calibration information provided to MSFN for use in computation of R, P and Y ALIGN. |
| | SCS - on (req), 4.8.4.2<br>CMC - off or STBY (req) | | |
| CMP | 1 Rcd following data from MSFN<br>GDC Align Values (step 2)<br>R ALIGN ____, P ALIGN ____<br>Y ALIGN ____<br><br>Boresight star data (step 13)<br>Boresight star<br>SPA ____°<br>SXP ____°<br><br>Nav stars<br>Prim star ____ (step 5)<br>Sec star ____ (step 8)<br>Star diff angle ____° (step 7) | | SPA - Sight pitch angle<br>SXP - Star X position<br><br>Star difference angle cannot exceed 35° since this is maximum COAS field of view in pitch. |
| CDR | 2 SCS att set for FDAI 1, 4.7.2.4<br>ATT SET tw - set R, P, Y ALIGN | 1 | |
| | 3 Install COAS & set reticle to 0° pitch | | |
| | 4 Sel SCS att cont mode, 4.7.1 | | |
| | 5 Mnvr to position prim star on crosshairs of COAS reticle | | |



NORMAL/BACKUP

| STA/T | STEP | PROCEDURE | PANEL | REMARKS |
|---|---|---|---|---|
| CDR | 6 | Establish att hold with min P & Y dbd | | |
| | 7 | Pitch COAS reticle up Star Angle Diff value | | |
| | 8 | Roll SC to place sec star on pitch axis of COAS reticle | | |
| | 9 | Establish att hold with min roll dbd | | |
| | 10 | Repeat 3 through 9 as necessary | | |
| | 11 | Align GDC, 4.7.3<br>GDC ALIGN pb - push, when stars positioned, until err null on FDAI 1 | 1 | |
| | 12 | Mnvr to ΔV att<br>ATT SET tw - set to ΔV att<br>Mnvr<br>Null errors on FDAI | | |
| | 13 | Perform Boresight Star ck | | |



BACKUP GDC ALIGNMENT WITH COAS

| STA/T STEP | PROCEDURE | PANEL | REMARKS |
|---|---|---|---|
| | 4.14.3 BACKUP GDC AND/OR IMU ALIGNMENT | | Aligns GDC and/or IMU without CMC. |
| | SCS - on (req), 4.8.4.2<br>CMC - off or STBY (for step 3a) | | |
| CMP | 1 Rcd following data from MSFN<br>GDC Align Values (step 8)<br>R ALIGN_____, P ALIGN_____,<br>Y ALIGN_____ | | |
| | SXTS data (step 10)<br>SXTS_____<br>SHAFT_____°<br>TRUN_____° | | SXTS - Sextant star. |
| | Boresight star data (step 4)<br>Boresight star_____<br>SPA_____°<br>SXP_____° | | SPA - Sight pitch angle.<br>SXP - Star X position.<br>0° and 0° allows SC to be rolled about boresight star in 7. |
| | Nav stars (step 7)<br>Prim star_____(0° mark on R line of SCT reticle)<br>Sec star_____(R line) | | |
| | 2 ISS att set for FDAI 1, 4.7.2.4 | | |



NORMAL/BACKUP

| STA/T | STEP | PROCEDURE | PANEL | REMARKS |
|---|---|---|---|---|
| CMP | 3 | Cage IMU | | This step is bypassed, if only GDC aligned. |
| | | If IMU in stby<br>IMU PWR - on (up)<br>(IMU automatically cages) | 100 | Guarded.<br>Occurs only if CMC off, or in STBY. |
| | | If IMU powered up | | |
| | | a. IMU PWR - OFF<br>Wait 5 min for gyros to run down<br>IMU PWR - on (up) | | Guarded.<br>Guarded. |
| CDR | or | b. ATT SET tw - set to 0°, 0°, 0°<br>Mnvr SC to 0°, 0°, 0° & null<br>FDAI 1 errors | 1 | IMU gimbal angles should be 0±5° before caging to avoid damaging gyros. |
| | | IMU CAGE - on (up) & hold until 11 | | Guarded. |
| | 4 | Sel desired SCS Att Cont Mode, 4.7.1, & mnvr to position boresight star in COAS | | |
| | 5 | Opt Pwr Up, 4.8.1.4 | | |
| CMP | 6 | Set opt to 0° shft & 352.5° trun, 4.7.5 | | 0° shaft and 352.5° trunnion places 0° mark of SCT reticle along +Zsc axis. |
| | | OPT PWR - OFF | 100 | Eliminates optics drift. |
| | 7 | Mnvr to position stars in SCT | | Roll SC around boresight star to acquire navigation stars. After positioning primary star on 0° mark, SC may be yawed about this star to place secondary star on R line. |

BACKUP GDC AND/OR IMU ALIGNMENT

| STA/T | STEP | PROCEDURE | PANEL | REMARKS |
|---|---|---|---|---|
| CDR | 8 | Align GDC<br>ATT SET tw - set to R, P, Y ALIGN<br>ATT SET - GDC<br>GDC ALIGN pb - push when stars positioned, until err null on FDAI 1 | 1 | ELEC PWR - GDC/ECA (required for GDC ALIGN) satisfied by SCS Power Up, 4.8.4.2. |
| | 9 | Mnvr to ΔV att<br>ATT SET tw - set to ΔV att<br>Mnvr<br>Null err on FDAI 1 | | |
| | 10 | Perform SXTS ck & adj SC att if necessary | | With optics set to proper shaft and trunnion angles, and SC at ΔV attitude, specified star should appear in SXT. |
| | 11 | Uncage IMU<br>IMU CAGE - on (up) and rel<br><br>If 3b was used<br>IMU CAGE - rel | | This frees IMU at 0°, 0°, 0°. (For deorbit, GDC will be at 180°, 180°, 0°.) |
| | 12 | Opt Pwr Down, 4.8.1.4 | | |

| STA/T | STEP | PROCEDURE | PANEL | REMARKS |
|---|---|---|---|---|
| | | 4.15 ENTRY | | |
| | | 4.15.1 DEORBIT OR LUNAR RETURN VEHICLE PREPARATION | | |
| | | (Proced in 4.15.1.1 thru 4.15.1.4 not designated as "req" are optional) | | Deorbit preparation applies to any deorbit (SPS or RCS, pure or hybrid, whether G&N, SCS or manually controlled) and should be done prior to deorbit thrust to minimize crew workload between deorbit and entry. For lunar return, preparation accomplished after final MCC and during coast period prior to SM separation from CM. |
| | | 4.15.1.1 General System Management | | |
| | | Cab Cold Soak Oper (GETI or EI minus 8 to 12 hrs), 4.5.4.13 | | Provides cabin heat-sink during entry. EI (entry interface) ≈400,000 feet. |
| | or | If no cold-soak | | |
| CMP | | SEC EVAP H2O CONT - AUTO (req) | 382 | |
| | | If lunar return<br>CMC - on, 4.8.1.3<br>ISS - on & orient known, 4.8.1.3 & 4.14<br>SCS - on (req), 4.8.4.2<br>DAP Data Load - complete, 4.8.2.1 | | |
| | 1 | Obtain update & entry data from MSFN | | |



NORMAL/BACKUP

| STA/T | STEP | PROCEDURE | PANEL | REMARKS |
|---|---|---|---|---|
| LMP | 2 | If deorbit<br>Configure TLM (req)<br>TAPE RCDR FWD - off (ctr)<br>PCM BIT RATE - HI<br>UP TLM CMD - RSET, then NORM | 3 | After MSFN dumps and rewinds tape recorder and returns DSE control to crew at last contact prior to deorbit, TAPE RCDR FWD switch placed to off (center) and PCM BIT RATE switch to HI. |
| | | Propul Sys Checks, 4.5.2.1 thru 4.5.2.3 | | |
| | 3 | If lunar return<br>Configure telcom (req)<br>VHF AM A - SIMPLEX<br>Propul Sys Checks, 4.5.2.2 & 4.5.2.3 | | |
| | 4 | EPS DC & AC checks, 4.5.3.3 & 4.5.3.4<br>PYRO BAT A & B >35 vdc (verify) | | |
| | | xxxxxxxxxxxxxxxxxxxxxxxxxxxxxxxxxxxxxxxxx | | |
| | | If PYRO BAT A(B) <35 vdc<br>cb PYRO A(B)/SEQ A(B) - open<br>cb BAT BUS A(B) TO PYRO BUS - close | 250 | |
| | | xxxxxxxxxxxxxxxxxxxxxxxxxxxxxxxxxxxxxxxxx | | |
| | 5 | ECS Mon Check, 4.5.4.1 | | |
| CMP | 6 | Stow gas separator cartridges (req)<br>Remove separator bags from stowage<br>Disconnect separators from water pistol & food prep unit<br>Place separators in stowage bags<br>Stow separators | 352 | |

DEORBIT OR LUNAR RETURN VEHICLE PREPARATION

| STA/T | STEP | PROCEDURE | PANEL | REMARKS |
|---|---|---|---|---|
| CMP | 7 | Stow loose gear (req) | | |
| | 8 | Dry tunl | | If necessary, absorb water with towel. Condensed moisture rains on crew. |
| | 9 | CMC Self-Check Proced, 4.8.1.7 | | |
| | 10 | DSKY Condition Lt Check, 4.8.3.1 | | |
| | 11 | C&WS Oper Check, 4.5.5.1 | | |
| | 12 | P52 IMU Align, 4.14.1.2 | | |
| | | 4.15.1.2 RSI Test and Alignment | | Permits testing EMS roll stability indicator (RSI) and positioning to desired orientation for entry. |
| CDR | | ELEC PWR - GDC/ECA | 7 | |
| | | ATT SET - GDC | 1 | |
| | 1 | EMS ROLL - on (up)<br>GDC ALIGN pb - push, hold<br>ATT SET YAW tw - adj thru 45° angle, observe RSI tracks ≈45°, then position RSI<br>GDC ALIGN pb - rel<br>EMS ROLL - OFF | | Avoid FDAI gimbal lock region. |
| | 2 | ATT SET YAW tw - reset<br>GDC ALIGN pb - push (32 sec max) | | This step required only if GDC was aligned and realignment required. |
| | | 4.15.1.3 EMS Entry Test | | Light illumination other than those listed indicates a malfunction. Lift vector up (G >0.2) and down (G <0.2) lights for entry from lunar mission only. ΔV/EMS SET switch slews G-V scroll and sets RNG indicator. |



NORMAL/BACKUP

| STA/T | STEP | PROCEDURE | PANEL | REMARKS |
|---|---|---|---|---|
| | 1 | Init EMS prep | | |
| CDR | | EMS FUNC - OFF (verify) | 1 | |
| | | cb EMS (2) - close | 8 | |
| | | EMS MODE - STBY | 1 | |
| | 2 | EMS FUNC - EMS TEST 1 (CCW) | | Test 1 checks .05 G comparator lower trip-point. |
| | | Wait 5 sec | | |
| | | Adj alphanumeric brightness (option) | | |
| | | EMS MODE - NORM | | Ten seconds should be allowed to verify no malfunctions. No light on before or after 10 seconds. |
| | | Wait 10 sec min | | |
| | | All ind lts - out | | |
| | | RNG ind - 0.0 | | |
| | | Slew scroll until hairline superimposed on notch in next self-test pattern | | EMS scroll can be slewed only one inch in reverse. |
| | 3 | EMS FUNC - EMS TEST 2 | | Test 2 checks .05 G comparator upper trip-point. No other light on before or after 10 seconds. |
| | | Wait 10 sec | | |
| | | .05 G lt - on (all others out) | | |
| | 4 | EMS FUNC - EMS TEST 3 | | Test 3 checks corridor verification circuitry associated with lift vector down light. |
| | | .05 G lt - on | | |
| | | Lift vector dn lt - on (10 sec after .05 G lt) | | G <0.2. |
| | | Set RNG ind to 58.0±0.0 NM | | RNG indicator displays minus sign for negative numbers or no sign for positive numbers in most significant digit. |
| | 5 | EMS FUNC - EMS TEST 4 | | Test 4 checks range-to-go integrator circuits, range-to-go indicator, G-V servo circuits, and G-V plotter. |
| | | .05 G lt - on (all others out) | | |
| | | G-V trace (during 10 sec period) within test pattern | | |

| STA/T STEP | PROCEDURE | PANEL | REMARKS |
|---|---|---|---|
| CDR | After 10 sec, G-V trace stops at lower right corner of test pattern at ≈9 G<br>RNG ind (during 10 sec period) counts toward zero. After 10 sec, stops at ≈0.0±0.2 G | 1 | |
| 6 | EMS FUNC - EMS TEST 5<br>.05 G lt - on<br>Lift vector up lt - on (10 sec after .05 G lt)<br>RNG ind - 0.0<br>Scribe traces vert line ≈9 G to 0.28±0.1 G & stops (trace within test pattern)<br>Align G-V scroll to entry pattern (hairline on 37K fps line) | | Test 5 checks corridor verification circuitry associated with lift vector up light and enables scroll slewing to start of entry pattern. After scroll set to less than 37K fps, reselecting EMS TEST 5 switch position not permitted; range integrator and scroll synchronization would be lost. |
| 7 | EMS FUNC - RNG SET<br>G-V traces vert line ≈0.28 G to 0.0±0.1 G & stops<br>If lunar return<br>Slew RNG ind to pred RTOGO from .05 G | | |
| 8 | EMS FUNC - Vo SET<br><br>CAUTION<br><br>Never slew scroll in incr direction more than 1500 fps. Ensures range integrator remains slaved to scroll velocity. | | |



NORMAL BACKUP

| STA/T STEP | PROCEDURE | PANEL | REMARKS |
|---|---|---|---|
| CDR | Slew scroll until display index (arrow) aligned to pred entry velocity | 1 | Scroll can be slewed only one inch in reverse. In Vo SET position, both initial velocity in range integrator and scroll velocity change simultaneously. |
| | 9 ΔV Test & Null Bias Check, 4.7.6.1 | | |
| | 4.15.1.4 Systems Preparation | | |
| | If suited | | |
| | Press Suit Circuit & PGA Check at 5.0 psia, 4.5.4.9 | | |
| ALL | Mae Wests - donned | | |
| CMP | EMER CAB PRESS sel - OFF | 351 | |
| EI or GETI -1:00:00 | | | |
| | 1 CM RCS temp check | | |
| | SYS TEST (2) - 5C, 5D, 6A, 6B, 6C, 6D | 101 | Checks CM RCS 12, 14, 16, 21, 24, and 25 jet injector temperatures, respectively. |
| | If lowest reading <3.9 vdc (28°F) | | |
| CDR | cb CM RCS HTRS (both) - close | 8 | |
| | cb RCS LOGIC (2) - close | | |
| | CM RCS LOGIC - on (up) | 1 | |
| CMP | CM RCS HTRS - on (up) for 20 min | 101 | Jet injector valve direct coils utilized for preheating all jets. |
| | 2 URINE DUMP - OFF | | |
| | 3 WASTE H2O DUMP - OFF | | |
| | 4 Align RSI & GDC, 4.15.1.2 | | |
| | 5 If deorbit | | |
| | Set FDAI 2 on ORB RATE & restow, 4.8.4.8 | | |

| STA/T | STEP | PROCEDURE | PANEL | REMARKS |
|---|---|---|---|---|
| CMP<br>-40:00 | 6 | CM RCS heating completion (if accomplished)<br>CM RCS HTRS - OFF | 101 | |
| LMP | 7 | Configure entry bats (req)<br>cb MNA BAT C - close<br>cb MNB BAT C - close | 275 | |
| | 8 | If SPS deorbit<br>Cryo 02 & H2 Man Fan Opera, 4.5.3.10 | | |
| CDR | 9 | Panel 8 - all cb closed except (req)<br>cb PL VENT FLT/PL - open<br>cb FLOAT BAG (all) - open<br>cb EDS (all) - open<br>cb CM RCS HTR (both) - open | 8 | |
| | | If lunar return<br>cb SPS PITCH (both) - open<br>cb SPS YAW (both) - open | | |
| | 10 | Sequencer & CM RCS activation (req)<br>After MSFN AOS<br>SECS LOGIC (both) - on (up)<br>Report logic arm<br>ELS AUTO - AUTO<br>ELS LOGIC - on (up)<br>After GO from MSFN<br>ELS AUTO - MAN<br>ELS LOGIC - OFF<br>SECS PYRO ARM (2) - on (up) | <br><br><br>1<br><br><br><br><br>8 | <br><br>Lever lock.<br><br>Guarded.<br><br><br>Guarded.<br>Lever lock. |
| CMP | | CM RCS PRPLNT (both) - on (up) (verify) | 2 | On position is momentary. |



NORMAL/BACKUP

| STA/T | STEP | PROCEDURE | PANEL | REMARKS |
|---|---|---|---|---|
| CMP | | CM RCS PRPLNT tb (both) - gray | 2 | Gray indicates fuel and oxidizer isolation valves open. |
| | | CM RCS PRESS - on (up) | | Guarded. On position is momentary. |
| | | RCS IND sel - CM 1, then 2<br>CM RCS He PRESS ind - 3300-3500 psia (after ≈15 min)<br>CM RCS MANF PRESS ind - 287-302 psia | | Immediately after pressurization, He pressure less than 3300-3500 psia. |
| | 11 | If deorbit<br>SM RCS SEC FUEL PRESS (4) - OPEN | | OPEN position is momentary. No talkbacks. Activates secondary fuel tanks for possible SM RCS deorbit. |
| | | RCS IND sel - SM A | | |
| | 12 | If docking ring still in place (req)<br>CSM/LM FNL SEP (both) - on (up) | | Guarded. On position is momentary. Jettisons docking ring. |
| CDR | 13 | SECS PYRO ARM (2) - SAFE | 8 | Lever lock. |
| | 14 | If lunar return, test CM RCS jets<br>SC CONT - SCS | 1 | |
| CMP | | RCS TRNFR - CM | 2 | CM position is momentary. |
| CDR | | AUTO RCS CM 1 (6) - MNA<br>AUTO RCS CM 2 (6) - MNB<br>cb B/D ROLL, SCS PITCH & SCS YAW MNA (3) - open<br>Test ring 2 jets<br>cb B/D ROLL, SCS PITCH & SCS YAW MNA (3) - close<br>cb B/D ROLL, SCS PITCH & SCS YAW MNB (3) - open | 8 | |

DEORBIT OR LUNAR RETURN VEHICLE PREPARATION

| STA/T | STEP | PROCEDURE | PANEL | REMARKS |
|---|---|---|---|---|
| CDR | | Test ring 1 jets<br>cb B/D ROLL, SCS PITCH & SCS YAW MNB (3) - close | 8 | |
| CMP | | RCS TRNFR - SM | 2 | SM position is momentary. |
| CDR | | SC CONT - CMC | 1 | |
| EI<br>-30:00 | | | | |
| LMP | 15 | If lunar return<br>TAPE RCDR FWD - REWIND | 3 | |
| CMP | 16 | If hatch counterbalance deactivated for EVA (req)<br>Activate counterbalance mechanism, 4.5.7.3, step b | Side hatch | |
| | 17 | Strut unlock lanyard (2) - unstow & attach handle ends to MDC (req) | | |
| | 18 | If SCS, sel P00 | | |
| | 19 | If deorbit<br>Go to THRUSTING, 4.13 | | |
| | 20 | If lunar return<br>Go to CM/SM Sep, 4.15.2 | | |



NORMAL BACKUP

| STA/T | STEP | PROCEDURE | PANEL | REMARKS |
|---|---|---|---|---|
| | | 4.15.2 CM/SM SEPARATION | | |
| LMP | 1 | If SM RCS deorbit or lunar return | | Prepares for battery preloading prior to CM/SM separation and verifies batteries transferred to main buses. (Previously configured in SPS or Hybrid Deorbit Thrusting of 4.13.2.1, 4.13.2.3, 4.13.3.1 or 4.13.3.3.) |
| | | CAUTION<br>If either bat bus A(B) current fails to incr after cycling MN BUS TIE switch, configure bats to mn buses using cb BAT C TO BAT BUS A(B). | 250 | |
| -12:00 | | MN BUS TIE BAT A/C - on (up)<br>Verify bat bus A current incr &/or bat volt decr<br>MN BUS TIE BAT B/C - on (up)<br>Verify bat bus B current incr &/or bat volt decr | 5 | Verification of current increase for appropriate battery bus via DC AMPS indicator (panel 3) confirms successful operation of main bus tie motor switches. MN BUS TIE BAT A/C and B/C switches at on provide 2 batteries on line if cb MNA & B BAT C (2) - open, or 3 batteries on line for entry if circuit breakers closed (panel 275). |
| CDR | 2 | Configure RCS<br>AUTO RCS B/D ROLL B1 & B2 - MNA<br>AUTO RCS B/D ROLL D1 & D2 - MNB<br>AUTO RCS PITCH A3 & C4 - MNB<br>AUTO RCS PITCH C3 & A4 - MNA<br>AUTO RCS YAW B3 & D4 - MNA<br>AUTO RCS YAW D3 & B4 - MNB | 8 | Assumes desired Attitude Control mode, 4.7.1, previously selected. |

| STA/T | STEP | PROCEDURE | PANEL | REMARKS |
|---|---|---|---|---|
| CMP | | SM RCS PRPLNT (4) - OPEN (verify) | 2 | OPEN position is momentary. Opens 16 quad isolation valves. |
| | | SM RCS PRPLNT tb (8) - gray (verify) | | Gray indicates quad fuel and oxidizer isolation valves open. |
| | | SM RCS SEC FUEL PRESS (4) - OPEN (verify) | | OPEN position is momentary. No talkbacks. Opens helium isolation valves between quad helium regulators and secondary fuel tanks. |
| | 3 | Mnvr to sep att | | Nominally deorbit burn attitude plus a 45° yaw out of plane. |
| CDR | | If CMC cont<br>SC CONT - SCS | 1 | During separation, CSM RCS DAP acting upon CM would produce undesirable rates. |
| | | or CMC MODE - FREE | | |
| CMP | 4 | If earth orb<br>RCS TRNFR - CM<br>Test jets | 2 | |
| | | RCS TRNFR - SM | | If lunar mission, jets test fired in Deorbit or Lunar Return Vehicle Preparation, 4.15.1. |
| CDR | 5 | ATT DBD - MAX<br>RATE - HI | 1 | Conserves propellant between separation and .05 G. |
| LMP | 6 | Configure telcom<br>VHF AM (2) - off (ctr)<br>S BD ANT OMNI A - C<br>S BD ANT OMNI - OMNI<br>If RCS deorbit<br>TAPE RCDR FWD - FWD | 3 | |



NORMAL/BACKUP

| STA/T | STEP | PROCEDURE | PANEL | REMARKS |
|---|---|---|---|---|
| LMP | 7 | Preload bats | | |
| -08:00 | | FC2 MNA - OFF | 3 | |
| | | FC2 MNA tb - bp | | Barber pole indicates fuel cell not connected to bus. |
| -05:00 | | FC PUMPS (all) - OFF | 5 | |
| CMP | | HI GAIN ANT PWR - OFF | 2 | |
| | 8 | Configure ECS | | |
| CDR | | PRIM GLY TO RAD - BYP (pull) | 325 | |
| | | REPRESS PKG vlv - FILL | 326 | Assures CM 02 supply full before CM/SM separation. |
| | | SURGE TK - ON (verify) | | |
| CMP | | 02 PRESS IND sw - SURGE TK | 2 | |
| | | CRYO 02 PRESS 1 ind - 865-935 psia | | |
| CDR | | REPRESS PKG vlv - ON | 326 | |
| | | SM 02 SUP vlv - OFF | | |
| LMP | | cb ECS RAD CONT/HTRS (2) - open | 5 | |
| | | cb WASTE H20/URINE DUMP HTRS (2) - open | | |
| | | cb RAD HTRS OVLD (2) - open | | |
| CMP | | POT H20 HTR - OFF | 2 | |
| CDR | 9 | Arm SECS | | |
| | | SECS LOGIC (both) - on (up) (verify) | 8 | SECS LOGIC and PYRO ARM lever lock switches required for sequencing of separation and landing events. |
| | | SECS PYRO ARM (2) - on (up) | | |
| CMP | 10 | PRPLNT DUMP - RCS CMD (verify) | 2 | Was set to RCS CMD 42 seconds after lift-off. CM RCS activated in 4.15.1.4. |
| CDR | | EMS MODE - STBY (verify) | 1 | Should remain at STBY until just prior to entry interface to preclude false .05 G sensing. |
| CMP | 11 | Sep from SM | | |
| 00:00 | | CM/SM SEP (both) - on (up) | 2 | Guarded. On position is momentary. |
| | | SM C/W lts - on | | Low limit SM system lights on at separation. |
| | | C/W CSM - CM | | |

| STA/T | STEP | PROCEDURE | PANEL | REMARKS |
|---|---|---|---|---|
| CDR | | MASTER ALARM pb/lt - on, push | 1 | |
| CMP | | SM C/W lts - out | 2 | |
| | | RCS TRNFR - CM | | CM position is momentary. Backup to automatic RCS transfer. |
| CDR | | CM RCS LOGIC - OFF | 1 | |
| | 12 | Sel Att Cont mode, 4.7.1<br>Mnvr to entry att (or to SM RCS deorbit att if hybrid deorbit)<br>R ____, P ____, Y ____ | | Entry DAP not turned on. |
| | 13 | Set up for CM/RCS sys 1 (omit for hybrid deorbit) | | G&N entry DAP will function with either one or both CM/RCS systems enabled. |
| | | AUTO RCS A/C ROLL (4) - OFF<br>AUTO RCS CM 1 (6) - MNA or MNB<br>AUTO RCS CM 2 (6) - OFF | 8 | Electrically isolates CM RCS system 2 for entry. If a problem develops in system 1, disable affected channel and use direct RCS control. |
| | 14 | Go to P61 Entry Prep, 4.15.3.1 | | |
| | or | Go to SCS Entry, 4.15.4 | | |
| | or | If G&N Hybrid Deorbit, go to 4.13.2.3 (step 16) | | |
| | or | If SCS Hybrid Deorbit, go to 4.13.3.3 (step 14) | | |

| STA/T STEP | PROCEDURE | PANEL | REMARKS |
|---|---|---|---|
| | 4.15.3 G&N ENTRY | | |
| | 4.15.3.1 P61 Entry Preparation | | Displays predicted entry interface parameters and obtains EMS initialization parameters for comparison with MSFN values. |
| | Required<br>CMC - on, 4.8.1.3<br>ISS - on & orient known, 4.8.1.3 & 4.14<br>SCS - on, 4.8.4.2 | | |
| CMP 1 | DSKY - P61 (sel at end of deorbit burn) | 2 | |
| | or Key V37E 61E | | |
| | Poss PROG alarm (4.8.1.16) | | R02. |
| | (R41 - State Vector Integration) | | |
| | COMP ACTY lt - on (R41)<br>COMP ACTY lt - flashes every 2 sec (ave G on) | | Indicates state vector integration in process. Indicates integration complete, and average G on. |
| | Poss PROG alarm<br>V05 N09 (10 sec)<br>01427 (IMU reversed) | | Zero roll on FDAI is lift-down. -Ysm within 30° of $\underline{V} \times \underline{R}$. Alarm 01427 always displayed following P40 or P41 deorbit if platform aligned to preferred orientation computed in P40 or P41. |
| | or 01426 (IMU unsatisfactory for entry) | | Neither +Ysm or -Ysm within 30° of $\underline{V} \times \underline{R}$. |

P61 ENTRY PREPARATION

| STA/T | STEP | PROCEDURE | | PANEL | REMARKS |
|---|---|---|---|---|---|
| CMP | 2 | FL V06 N61 | | 2 | |
| | | Impact Lat (+N) | XXX.XX DEG | | Latitude and longitude of desired impact point. |
| | | Impact Long (+E) | XXX.XX DEG | | |
| | | Hds Up/Dn (+up) | +/-00001 | | Heads up/down defines entry roll attitude. |
| | | Accept PRO | | | |
| | | Reject V25E, load desired values | | | Normally, these values loaded prior to deorbit. |
| | 3 | FL V06 N60 (entry data) | | | |
| | | G max | XXX.XX G | | Predicted maximum G level for an entry at nominal bank angle (L/D = 0.18) |
| | | V pred | XXXXX. FPS | | Predicted inertial velocity at entry interface (65.8 NM, 400,000 feet) above Fischer ellipsoid. |
| | | Gamma EI | XXX.XX DEG | | Flight path angle (between inertial velocity vector and local horizontal) at 65.8 NM (400,000 feet) above Fischer ellipsoid. Minus indicates flight path below horizontal plane. |
| | | Rcd values | | | |
| | | PRO | | | |
| | 4 | FL V16 N63 | | | Display relative to erasable preloaded altitude value above Fischer ellipsoid. |
| | | RTOGO (.05 G to splash) | XXXX.X NM | | Range to go from preloaded erasable altitude value to splash. |
| | | VIO (at .05 G) | XXXXX. FPS | | Predicted inertial velocity at preloaded altitude value. |



NORMAL/BACKUP

| STA/T STEP | PROCEDURE | PANEL | REMARKS |
|---|---|---|---|
| CMP | TFE (time from .05 G) XXBXX MIN-SEC | 2 | Predicted time from now to preloaded altitude value (updated every 2 seconds). Predicts about 3 minutes longer than actual, following hybrid deorbit when called half hour before .05 G. Error varies, depending on how early P61 called after deorbit. 59B59 maximum reading (-above, +below). |
| | Rcd & compare with MSFN | | |
| CDR | EMS MODE - STBY | 1 | |
| | EMS FUNC - RNG SET (CW) | | Do not go through EMS TEST positions. |
| | Set RNG ind - RTOGO from .05 G (MSFN value) | | Range to go from preloaded value to splashdown. |
| | Align scroll Vo to exact entry velocity (if req) | | Predicted entry velocity may have been preset in EMS Entry Test, 4.15.1.3. Scroll can be slewed only one inch in reverse. In Vo SET position, both initial velocity in range integrator and scroll velocity change simultaneously. |
| | EMS FUNC - ENTRY | | |
| CMP | Accept PRO (exit P61) | 2 | |
| | P61 calls P62 | | |
| | Go to G&N Entry, 4.15.3.2 | | |
| | Reject V32E, recycle to 3 | | Obtains new state vector and updated N60. |

P61 ENTRY PREPARATION

| STA/T STEP | PROCEDURE | PANEL | REMARKS |
|---|---|---|---|
| | 4.15.3.2 P62, P63, P64, P65, P66, P67 Entry | | |
| | Required<br>CMC - on, 4.8.1.3<br>ISS - on & orient known, 4.8.1.3 & 4.14<br>SCS - on, 4.8.4.2 | | |
| CMP 1 | DSKY - P62<br>Auto sel by P61 (bypasses state vctr extrapolation reqt) | 2 | |
| or | If FL V37<br>Key 62E | | |
| or | Key V37E 62E (ave G reinitiated) | | |
| | Poss PROG alarm (4.8.1.16) | | R02. |
| | (R41 - State Vector Integration) | | R41 bypassed if P62 called by P61. |
| | COMP ACTY lt - on (R41) | | Indicates integration in process. |
| | COMP ACTY lt - flash every 2 sec (ave G on) | | Indicates integration complete, and average G on. |
| | Poss PROG alarm<br>V05 N09 (10 sec)<br>01427 (IMU reversed) | | Zero roll on FDAI is lift-down. -Ysm within 30° of $\underline{V} \times \underline{R}$. Alarm 01427 always displayed following P40 or P41 deorbit if platform aligned to preferred orientation computed in P40 or P41. |
| | or 01426 (IMU unsatisfactory for entry) | | Neither +Ysm or -Ysm within 30° of $\underline{V} \times \underline{R}$. |



NORMAL BACKUP

| STA/T | STEP | PROCEDURE | PANEL | REMARKS |
|---|---|---|---|---|
| CMP | 2 | FL V50 N25<br>00041 (request CM/SM sep) | 2 | If CM and SM not separated prior to this step, separation should be accomplished now per 4.15.2. V37s inhibited after response to this display, except P00; programs not requiring DAP control may then be selected from P00. P62 should be reselected before entry into atmosphere because average G terminates by going to P00. |
| | 3 | PRO | | Starts entry DAP. Roll attitude error scaling changed in G&N for compatibility with 50/15/50/10 FDAI scale position. After PRO and until 50/15/50/10 selected, full scale roll error 20°, not 5°. |
| | 4 | FL V06 N61<br>Impact lat (+N) XXX.XX DEG<br>Impact long (+E) XXX.XX DEG<br>Hds up/down (+Hds up) +/-00001<br><br>Accept PRO<br>If α <45° - DSKY P63,<br>go to 6<br>Reject V25E, load new data | | Latitude and longitude of desired impact point.<br><br>Defines entry roll attitude.<br><br>If α within 45° of (-) velocity vector, P63 automatically called. |
| | 5 | V06 N22 (mon)<br>R, P, Y XXX.XX DEG<br><br>If α >45°<br>21 sec after α <45°, DSKY P63 | | Final gimbal angles at EI. Display bypassed and P63 called if α within 45°. |
| | 6 | ORDEAL Pitch - ___° (Hds up)<br>ORDEAL Pitch - ___° (Hds down) | | IMU inertial attitude on FDAI 1 and ORDEAL local vertical attitude on FDAI 2. |
| | 7 | DSKY - P63 | | |

| STA/T | STEP | PROCEDURE | | PANEL | REMARKS |
|---|---|---|---|---|---|
| CDR | 8 | After CM/SM sep & CM stab at entry att | | | |
| | | EMS MODE - NORM | | 1 | Left in STBY until after separation and stabilization; if no postburn update, and for RCS deorbit, start EMS by positioning EMS MODE from STBY to BU at MSFN supplied value of RET .05 G. Also refer to 4.6.1.1, note 9. |
| | | ATT DBD - MAX | | | |
| | | RATE - HI | | | |
| | | FDAI SCALE - as desired | | | |
| CDR,CMP | | Mon FDAIs & RSI | | 1,2 | |
| | | xxxx

| STA/T STEP | PROCEDURE | PANEL | REMARKS |
|---|---|---|---|
| LMP | PCM BIT RATE - HI<br>TAPE RCDR RCD - RCD<br>TAPE RCDR FWD - FWD | 3 | |
| CDR | BMAG MODE (3) - RATE 2 | 1 | Cages attitude BMAGs. Prevents SCS-driven FDAI roll stability indicator from jumping when GAl BMAGs automatically cage at .05 G. |
| | MAN ATT (3) - RATE CMD<br>SC CONT - CMC | | Configuration required for auto G&N entry and normally selected at last status check prior to .05 G. |
| | CMC MODE - AUTO, HOLD, or FREE | | Entry DAP does not look at CMC MODE switch. |
| CMP | DSKY - P64 (at .05 G) | 2 | CMC changes Entry DAP from attitude hold in alpha and beta to rate damping in pitch and yaw (roll unchanged). |
| CDR | .05 G sw - on (up)<br>EMS ROLL - on (up) | 1 | .05 G and EMS ROLL switches should be placed on simultaneously to minimize EMS error. |
| | .05 G lt - on | | .05 G lt will not necessarily occur simultaneously with P64 on DSKY. |
| | If no .05 G indication by RET .05 G +3 sec<br>EMS MODE - BU | | At .05 G +10 seconds, one lift vector light will come on; disregard light. |
| | Scroll slews to left<br>RNG ind decr | | |

| STA/T | STEP | PROCEDURE | | PANEL | REMARKS |
|---|---|---|---|---|---|
| CMP | 10 | V06 N74 (mon) | | 2 | N64 and N68 available if desired. |
| | | Beta | XXX.XX DEG | | Commanded bank angle. |
| | | VI | XXXXX. FPS | | Inertial velocity (decreasing). |
| | | Drag accel | XXX.XX G | | Drag acceleration (increasing). |
| | | Compare RSI & ball for lift vctr G-V plot within limits | | 1 | Violation of an EMS G onset ray should be followed by an orientation to lift vector up. Violation of an EMS G offset ray should be followed by an orientation to lift vector down. If at point of tangency, G&N not commanding lift-up or lift-down, manually orient CM and terminate G&N steering. |
| | 11 | If DSKY - P67<br>Go to 18 | | 2 | P64 calls P67 at 0.2 G if VI at .05 G (step 10) <27K fps. Entry velocities $\geq$27K fps are possible from RCS deorbits. |
| | 12 | DSKY - P65 (entry up-cont)<br>Indicates VI $\geq$27K fps & constant drag cont has brought range prediction to within 25 NM of desired range | | | P65 not applicable to low earth orbital mission. Executes entry up-control guidance, which steers CM to calculated reference trajectory, and establishes entry up-control displays for crew use with EMS to determine whether backup procedures should be implemented. Also selects entry-ballistic phase program (P66) if D <DL ($\approx$0.196 G) sensed, or selects final phase program (P67) if D >DL ($\approx$0.196 G) sensed, R dot negative, and V sufficiently low. |
| CDR | | EMS disp - approach DSKY disp DL & VL | | 1 | |
| CMP | 13 | FL V16 N69 (computed exit conditions) | | 2 | |
| | | Beta | XXX.XX DEG | | Commanded bank angle. |
| | | DL | XXX.XX G | | Drag acceleration at end of up control. |
| | | VL | XXXXX. FPS | | Velocity at end of up control. |



NORMAL BACKUP

| STA/T STEP | PROCEDURE | PANEL | REMARKS |
|---|---|---|---|
| CMP | Rcd data for later use with EMS | | |
| | PRO | 2 | N69 may be terminated by PRO, or selection of either P66 or P67 by entry guidance provides automatic termination. |
| | FDAI att err _____ deg<br>rates _____ deg/sec | | |
| 14 | V06 N74<br>Beta XXX.XX DEG<br>VI XXXXX. FPS<br>Drag accel XXX.XX G | | N64 and N68 available if desired. |
| 15 | If DSKY - P67<br>Go to 18 | | P67 occurs if drag >DL, R dot negative, and V sufficiently low. |
| 16 | DSKY - P66 (entry-ballistic) | | Automatically selected by P65 when D <DL (≈0.196 G). Not applicable to low earth orbit mission. N64, N68, N74 available if desired.<br><br>Maintains CM attitude during ballistic (skipout) phase for atmospheric re-entry and selects P67 when re-entry (drag acceleration builds up to Q7F +0.5 fps squared, ≈0.2 G) sensed. |
| 17 | V06 N22 (desired gmbl angles)<br>R, P, Y XXX.XX DEG | | |
| | Check FDAI tot att = DSKY values<br>FDAI att err <_____ deg<br>rates <_____ deg/sec | | |
| | (Three-axis DAP cont regained when <.05 G sensed, & relinquished when .05 G again sensed) | | |

| STA/T | STEP | PROCEDURE | | PANEL | REMARKS |
|---|---|---|---|---|---|
| CMP<br>0.2 G | | | | | |
| | 18 | DSKY - P67 | | 2 | P67 continues entry guidance from ≈0.2 G until termination of steering when CM velocity with respect to earth = 1000 ft/sec (≈10.7 NM altitude). N64, N68, and N74 available if desired. |
| CDR | | EMS - 0.2 G (if 10 sec since .05 G) | | 1 | |
| CMP | 19 | V06 N66 (mon) | | 2 | |
| | | Beta | XXX.XX DEG | | Commanded bank angle (-command will correct for + cross range error). |
| | | CRSRNG ERR | XXXX.X NM | | CMC solution for cross range error (+ target south of direction of motion). |
| | | DWNRNG ERR | XXXX.X NM | | CMC solution for down range error (decreasing); + is overshoot. 9999.9 after overshoot of target. |
| | | Key VERB (freeze disp)<br>Compare DWNRNG ERR to pad data (DWNRNG ERR within 100 NM of pad data) | | | |
| | | xxxxxxxxxxxxxxxxxxxxxxxxxxxxxxxxxxx | | | |
| | | If DWNRNG ERR not within 100 NM | | | |
| CDR | | Maintain BBA entry | | | |
| | | xxxxxxxxxxxxxxxxxxxxxxxxxxxxxxxxxxx | | | |
| CMP | | KEY REL (reinstates V06 N66 mon) | | | |
| CDR | | Fly roll cmd<br>Mon lift vctr on RSI & ball | | 1 | |



NORMAL/BACKUP

| STA/T | STEP | PROCEDURE | PANEL | REMARKS |
|---|---|---|---|---|
| CMP | 20 | FL V16 N67 (mon) | 2 | |
| | | Range to splash (+ overshoot) XXXX.X NM | | Range to go to desired splashpoint (+ is overshoot). |
| | | Lat present position (+N) XXX.XX DEG | | Latitude and longitude of present position. |
| | | Long present position (+E) XXX.XX DEG | | |
| | | (V REL = 1000 fps at ≈65K') | | |
| | | If R1 = -, lift-up; +, lift-down | | |
| CDR | | Mon altimeter | 1 | |
| | | Rcd lat, long, & voice to RECY at 10K' | | |
| | | Rcd EMS RTOGO | | |
| | | EMS MODE - STBY | | |
| | | EMS FUNC - OFF | | |
| | 21 | Go to Earth Ldg Phase (<50K'), 4.16 | | |

| STA/T | STEP | PROCEDURE | PANEL | REMARKS |
|---|---|---|---|---|
| | 4.15.4 | SCS ENTRY | | Assumes CM and SM separated. During entry, do not "fly to" a pegged rate needle. For this contingency, control to operational attitude ball or out-the-window visual cues. |
| | | CMC - on (desired), 4.8.1.3<br>ISS - on & orient known (desired), 4.8.1.3 & 4.14<br>SCS - on (req), 4.8.4.2<br>RSI aligned, 4.15.1.2 | | |
| CDR | 1 | Verify/mnvr to entry att | | SCS acceleration command recommended until .05 G for failure takeover considerations. |
| | | EMS Entry Test, 4.15.1.3 | | May have been done during Deorbit or Lunar Return Vehicle Preparation, 4.15.1. |
| | 2 | EMS MODE - STBY<br>EMS FUNC - RNG SET (CW) | 1 | Do not go through EMS TEST positions. The following steps to be done as soon as possible after deorbit ΔV. |
| | | Set RNG ind - RTGO from .05 G (MSFN value) | | |
| | 3 | EMS FUNC - Vo SET<br>Realign scroll Vo to exact entry velocity (if req) | | Predicted entry velocity preset in step 1 (EMS Entry Test). Scroll can be slewed only one inch in reverse. In Vo SET position, both initial velocity in range integrator and scroll velocity change simultaneously. |
| | 4 | EMS FUNC - ENTRY | | |
| | 5 | Align RSI to desired angle (if necessary)<br>ATT SET - GDC<br>EMS ROLL - on (up) | | This alignment may be performed prior to launch or prior to deorbit. |



NORMAL/BACKUP

| STA/T | STEP | PROCEDURE | PANEL | REMARKS |
|---|---|---|---|---|
| CDR | | GDC ALIGN pb - push, hold<br>ATT SET YAW tw - position RSI | 1 | EMS roll stability indicator alignment provides indication of backup bank angle (BBA). |
| | | GDC ALIGN pb - rel<br>EMS ROLL - OFF<br>ATT SET YAW tw - rset<br>GDC ALIGN pb - push (32 sec max) | | |
| | 6 | After CM SM sep & CM stab at entry att<br>EMS MODE - NORM | | Left in STBY until after separation and stabilization; if no postburn update, and for RCS deorbit, start EMS by positioning MODE switch from STBY to BU at MSFN supplied value of RET .05 G. Also refer to 4.6.1.1, note 9. |
| | | ATT DBD - MAX<br>RATE - HI<br>FDAI SCALE - 50/15/50/10<br>BMAG MODE (3) - RATE 2<br>MAN ATT ROLL - ACCEL CMD<br>MAN ATT PITCH & YAW - RATE CMD | | Cages attitude BMAGs, preventing SCS-driven FDAI RSI jumping at .05 G when GA 1 attitude BMAGs automatically caged to furnish rate information for SCS-driven FDAI RSI. This configuration can be delayed, as close to .05 G as convenient, for propellant conservation. |
| LMP | | PCM BIT RATE - HI<br>TAPE RCDR RCD - RCD<br>TAPE RCDR FWD - FWD | 3 | |
| CDR,CMP | | Mon FDAIs & RSI | 1,2 | |

| STA/T | STEP | PROCEDURE | PANEL | REMARKS |
|---|---|---|---|---|
| | | xxxxxxxxxxxxxxxxxxxxxxxxxxxxxxxxxxxxxxxxxx | | |
| CDR | | If abnormal veh dynamics | | This procedure sequence minimizes failure isolation time. (Another functionally acceptable method disables AUTO RCS switches first, then RHC direct power.) |
| | | Damp rates with dir RCS | | |
| | | RHC PWR DIR (both) - OFF | 1 | |
| | | If abnormal veh dynamics continue | | |
| | | RHC PWR DIR (both) - MNA/MNB | | |
| | | Damp rates with dir RCS | | |
| | | AUTO RCS (affected axis) - OFF | 8 | |
| | | Continue with dir RCS (affected axis) | | |
| | | xxxxxxxxxxxxxxxxxxxxxxxxxxxxxxxxxxxxxxxxxx | | |
| | 7 | EVNT TMR ind - mon for .05 G time | 1 | |
| | | .05 G lt - on | | |
| | | xxxxxxxxxxxxxxxxxxxxxxxxxxxxxxxxxxxxxxxxxx | | |
| | | If no .05 G lt by RET .05 G +3 sec | | Backup cue may be obtained from MSFN or CMC. |
| | | EMS MODE - BU | | Lift vector lights do not function in EMS BU mode. If RNG indicator not decreasing, EMS ranging capability lost. |
| | | xxxxxxxxxxxxxxxxxxxxxxxxxxxxxxxxxxxxxxxxxx | | |
| | | .05 G sw - on (up) | | At .05 G +10 seconds, one lift vector light will come on; disregard light. |
| | | EMS ROLL - on (up) | | .05 G and EMS ROLL switches should be placed to on simultaneously to minimize roll attitude error. |
| | | Scroll slews to left, RNG ind decr | | If scroll slews in one axis (V or G), that axis usable. |



NORMAL/BACKUP

| STA/T | STEP | PROCEDURE | PANEL | REMARKS |
|---|---|---|---|---|
| CDR | | Mnvr to BBA & maintain until range potential guidelines can be interpreted, then null range err using range potential guidelines & EMS RNG ind. While nulling range err, avoid tangency to G on-set lines. Reverse bank angle at RETRB to null lateral range err. | 1 | BBA is backup bank angle.<br><br>Disregard corridor lamps (as corridor verification cues) for entry from earth orbit (entry velocity <35K fps).<br><br>RETRB is retrofire elapsed time to reverse bank. |
| | 8 | Go to Earth Ldg Phase (<50K'), 4.16 | | |

| STA/T | STEP | PROCEDURE | PANEL | REMARKS |
|---|---|---|---|---|
| | | 4.16 EARTH LANDING PHASE (<50K') | | |
| CDR | 50K' | CAB PRESS RELF vlv (2) - BOOST/ENTR (safety latch on) | 325 | |
| | | Report CM stable | | |
| | | xxxxxxxxxxxxxxxxxxxxxxxxxxxxxxxxxxxx | | |
| | | CM unstable | | |
| CMP | 40K' | RCS CMD - OFF | 2 | OFF position is momentary. |
| CDR | | APEX COVER JETT pb - push | 1 | Guarded. |
| | | DROG DPLY pb - push (2 sec after apex cover jett) | | Guarded. |
| | | xxxxxxxxxxxxxxxxxxxxxxxxxxxxxxxxxxxx | | |
| | 30K' | ELS LOGIC - on (up) | | Guarded. |
| | | ELS AUTO - AUTO | | |
| CMP | | SEC COOL EVAP - off (ctr) | 2 | Required only if secondary loop in operation. |
| | | GLY EVAP H2O FLOW - off (ctr) | | |
| | 24K' | SCS RCS disable (auto) | | |
| | | xxxxxxxxxxxxxxxxx | | |
| | | RCS CMD - OFF | | OFF position is momentary. |
| | | xxxxxxxxxxxxxxxxx | | |
| | | Apex cover jett (auto) | | The apex cover will be jettisoned at 24K feet plus 0.4 seconds. |
| | | xxxxxxxxxxxxxxxxxxxxxxxxxxxxxx | | |
| CDR | | APEX COVER JETT pb - push | 1 | Guarded. |
| | | xxxxxxxxxxxxxxxxxxxxxxxxxxxxxx | | |



NORMAL/BACKUP

| STA/T | STEP | PROCEDURE | PANEL | REMARKS |
|---|---|---|---|---|
| CDR | | Drogue chutes deployed (auto) | | Drogue parachutes deployed at 24K feet plus 2.0 seconds. The CM may be very unstable until the drogue chutes disreef in ≈11 seconds. |
| | | DROG DPLY pb - push | 1 | Guarded. |
| | | If no drogue deployment<br>ELS AUTO - MAN<br>Stab CM with dir RCS | | |
| | | 5K' MN DPLY pb - push<br>ELS AUTO - AUTO | | Guarded. |
| CMP | | | | |
| 23.5K' | | Mon CAB PRESS ind - starts incr | 2 | No increase indicates cabin pressure relief valve failure. |
| CDR | | If no incr by 17K'<br>rh CAB PRESS RELF vlv - DUMP<br>(safety latch off) | 325 | RH valve has four positions. |
| CMP | | If still no incr<br>CAB PRESS DUMP vlv -<br>open (CCW) | Side hatch | |

| STA/T | STEP | PROCEDURE | PANEL | REMARKS |
|---|---|---|---|---|
| CMP | | | | |
| 10K' | | Mn chutes & VHF recovery ant deploy (auto) | | Auto deployment occurs between 10,950 and 9,100 feet. Parachutes disreef in ≈15 seconds after pilot mortars fire. |
| CDR | | MN DPLY pb - push (within 1 sec) | 1 | Guarded. MN DPLY pushbutton should be pushed within 1 second after pilot mortars fire to ensure simultaneous deployment of main parachutes. |
| | | SRG TK 02 vlv - OFF | 326 | |
| | | REPRESS PKG vlv - OFF | | |
| | | DIRECT 02 vlv - OPEN (CCW) | 7 | |
| LMP | | Set up entry comm | | |
| | | VHF ANT - RECY | 3 | |
| | | VHF AM A - SIMPLEX | | If VHF AM B SIMPLEX or VHF AM A DUPLEX required, turn off beacon during period of communication. |
| | | VHF BCN - ON | | |
| CDR | | Transmit voice (VHF AM) reporting | | Continue voice transmission until touchdown. |
| | | Position | | |
| | | Mn chutes disreefed | | |
| | | Splash err | | |
| | | Crew stat | | |
| CMP | | Crew couch struts (4) - unlock | | |
| CDR | | CM RCS LOGIC - on (up) | 1 | Must be on to power CM PRPLNT DUMP switch. |
| | | CAUTION | | |
| | | CM PRPLNT DUMP should be init immediately after mn chute disreefing. If mn or pyro bus lost, use RHCs for burn, not CM PRPLNT DUMP sw. | | |



NORMAL/BACKUP

| STA/T | STEP | PROCEDURE | PANEL | REMARKS |
|---|---|---|---|---|
| CDR | | CAB PRESS RELF vlv (2) - CLOSE<br>(safety latch off) | 325 | |
| | | xxxxxxxxxxxxxxxxxxxxxxxxxxxxxxxx | | |
| CMP | | If CAB PRESS DUMP vlv used to equalize ΔP, CAB PRESS DUMP vlv - close (CW) | Side hatch | |
| | | xxxxxxxxxxxxxxxxxxxxxxxxxxxxxxxx | | |
| CDR | | CM PRPLNT DUMP - on (up)<br>(dump burn is audible) | 1 | Guarded. |
| CMP | | RCS IND sel - CM 1 & 2<br>RCS He PRESS ind - decr | 2 | |
| | | xxxxxxxxxxxxxxxxxxxxxxxxxxxxxxxxxxxx | | |
| | | No burn or no press decr | | |
| CDR,CMP | | RHC (both) - fire all RCS jets (except + pitch) until prplnts are depleted | | One RHC positioned to command plus yaw and roll (excluding plus pitch) and other RHC positioned to command minus yaw, pitch, and roll. |
| | | xxxxxxxxxxxxxxxxxxxxxxxxxxxxxxxxxxxx | | |
| | | When prplnt dump burn completed | | |
| CDR | | CM PRPLNT PURG - on (up)<br>(purge is audible) | 1 | Guarded. Both CM RCS LOGIC and CM PRPLNT DUMP switches must be on (up) to power CM PRPLNT PURG switch. Visible fire from RCS engine nozzle extension surfaces, after burn to depletion and during purge, expected and normal. |



EARTH LANDING PHASE (<50K')

| STA/T | STEP | PROCEDURE | PANEL | REMARKS |
|---|---|---|---|---|
| | | xxxxxxxxxxxxxxxxxxxxxxxxxxxxxxxxxx | | |
| CDR | | CM RCS He DUMP pb - push | 1 | Guarded. CM RCS He DUMP pushbutton should be used to initiate purge following a normal dump operation if CM PRPLNT PURG switch fails to initiate purge. |
| CDR,CMP | | If RHC (both) used for prplnt dump burn<br>RHC (both) - fire all jets (except + pitch) | | One RHC positioned to command plus yaw and roll (excluding plus pitch) and other RHC positioned to command minus yaw, pitch and roll. |
| | | xxxxxxxxxxxxxxxxxxxxxxxxxxxxxxxxxx | | |
| CDR | | CAB PRESS RELF vlv (2) - BOOST/ENTR (safety latch off) | 325 | |
| | | xxxxxxxxxxxxxxxxxxxxxxxxxxxxxxxxxx | | |
| CMP | | If CAB PRESS DUMP vlv used to equalize ΔP, CAB PRESS DUMP vlv - open (CCW) | Side hatch | |
| | | xxxxxxxxxxxxxxxxxxxxxxxxxxxxxxxxxx | | |
| | | If night ldg | | |
| CDR | | cb FLOAT BAG (all) - close | 8 | |
| | | PL BCN LT - LO | 15 | The postlanding beacon light has longer operating life in LO. |
| LMP | | cb FLT/PL BAT BUS A, B & BAT C (3) - close | 275 | Connects battery bus A, B, and battery C to flight and postlanding bus. |
| | | cb FLT/PL MNA & B (2) - open | | |
| CDR | | cb SPS PITCH (2) - open | 8 | |
| | | cb SPS YAW (2) - open | | |



NORMAL BACKUP

| STA/T | STEP | PROCEDURE | PANEL | REMARKS |
|---|---|---|---|---|
| CMP | | CM RCS PRPLNT (both) - OFF | 2 | OFF position is momentary. Prevents RCS fume ingestion into cabin at 3K' when CAB PRESS RELF vlv - DUMP. |
| | | CM RCS PRPLNT tb (both) - bp | | Barber pole indicates at least one valve (fuel or oxidizer) closed in the particular system 1 or 2. |
| 3K' CDR | | rh CAB PRESS RELF vlv - DUMP (safety latch off) | 325 | Assures minimum cabin-to-ambient negative ΔP for landing impact. |
| | | FLOOD FIXED - POST LDG | 8 | Provides power from flight and postlanding bus to one floodlight in LH couch area and one floodlight in center couch area. Minimize floodlight use during postlanding. Maximum utilization should be 9.6 hours per 48-hour period. |
| | | FLOOD DIM - 1 or 2 | | Position 1 provides power to two secondary floodlights and position 2 provides power to two primary floodlights when FLOOD LTS FIXED switch in POST LDG position after dc main buses deactivated. |
| 800' | | CAB PRESS RELF vlv (2) - CLOSE (safety latch off) | 325 | Valves must be closed prior to touchdown to prevent water from entering CM. |
| | | xxxxxxxxxxxxxxxxxxxxxxxxxxxxxxxxx | | |
| CMP | | If CAB PRESS DUMP vlv used to equalize ΔP, CAB PRESS DUMP vlv - close (CW) | Side hatch | |
| | | xxxxxxxxxxxxxxxxxxxxxxxxxxxxxxxxx | | |
| CDR | | ELS AUTO - AUTO (verify)<br>ELS LOGIC - on (up) (verify) | 1 | Guarded. |

EARTH LANDING PHASE (<50K')

| STA/T | STEP | PROCEDURE | PANEL | REMARKS |
|---|---|---|---|---|
| LMP | | MN BUS TIE (2) - OFF | 5 | Removes battery power from dc main buses. |
| | | CAUTION<br><br>MN BUS TIE sws must be left in OFF position to ensure that bats A, B, and C are used to pwr the PL bus only, & to prevent bat shorting caused by water entering the CM feed-thru connectors. | | |
| | | cb BAT RLY BUS (2) - open | | |
| | | Postlanding Check, 4.17 | | |



NORMAL/BACKUP

| STA/T | STEP | PROCEDURE | PANEL | REMARKS |
|---|---|---|---|---|
| | | 4.17 POSTLANDING | | |
| | | 4.17.1 POSTLANDING STABILIZATION | | |
| LMP | | cb MN REL (2) - close | 229 | |
| CMP | | MN REL - on (up) | 2 | Guarded. On position is momentary. Releases main parachutes. |
| | | xxxxxxxxxxxxxxxxxxxxxxxxxxxxxxxxxxx | | |
| | | If no mn chute rel | | |
| CDR | | ELS AUTO - AUTO (verify) | 1 | Switch should have been on at least 14 seconds to allow timer to time out and enable MN REL switch. |
| | | ELS LOGIC - on (up) (verify) | | Guarded. |
| CMP | | MN REL - on (up) | 2 | Guarded. On position is momentary. |
| | | xxxxxxxxxxxxxxxxxxxxxxxxxxxxxxxxxxx | | |
| | | WARNING | | |
| | | If fire or smoke after impact, refer to Fire/Smoke in CM During Postlanding, 5.3.3.1. | | |
| CDR | | SECS PYRO ARM (2) - SAFE | 8 | Lever lock. |
| | | SECS LOGIC (both) - OFF | | Lever lock. |
| | | If not in contact with recovery forces | | |
| ALL | | VHF AM (3) - RCV | 9,10,6 | |
| LMP | | VHF AM A - off (ctr) | 3 | |
| | | VHF AM RCV - A | | |



NORMAL/BACKUP

| STA/T | STEP | PROCEDURE | PANEL | REMARKS |
|---|---|---|---|---|
| CDR | | cb PL VENT FLT/PL - close | 8 | |
| | | cb FLOAT BAG (all) - close | | |
| LMP | | cb UPR SYS COMPR (both) - close | 278 | |
| | | If floating upright | | |
| | | CAUTION<br>Wait 10 min prior to init bag fill. This allows the ablator to cool sufficiently prior to inflation. Heat can destroy bags. | | |
| CDR | | FLOAT BAG (all) - FILL for 7 min, then OFF | 8 | Lever lock. Wait 15 minutes prior to running compressors again. |
| | | If floating inverted | | |
| | | FLOAT BAG (all) - FILL | | Lever lock. |
| LMP | | VHF BCN - OFF | 3 | |
| | | VHF AM A - off (ctr) | | |
| | | Two min after upright | | |
| CDR | | FLOAT BAG (all) - OFF | 8 | Lever lock. |
| LMP | | VHF BCN - ON | 3 | |
| | | If in contact with recovery forces prior to floating inverted | | |
| | | VHF AM A - SIMPLEX | | If VHF AM B SIMPLEX or VHF AM A DUPLEX required, turn off beacon during period of communication. |

| STA/T STEP | PROCEDURE | PANEL | REMARKS |
|---|---|---|---|
| | If CM fails to upright in 7 min<br>&<br>CM rolls CW | | Crew reposition procedures may be required if uprighting does not occur in 7 minutes and sea state is minimal. |
| CDR | FLOAT BAG 2 R - OFF<br>(Continue uprighting for 8 additional min) | 8 | Lever lock. |
| CMP,LMP | If uprighting does not occur in 3 min, reposition to area behind CDR's couch & CMP's couch as near as poss to B3 stowage locker | | |
| | or CM rolls CCW | | |
| CDR | FLOAT BAG 1 L - OFF<br>(Continue uprighting for 8 additional min) | | Lever lock. |
| CDR,CMP | If uprighting does not occur in 3 min, reposition to area behind LMP's couch & CMP's couch | | |
| | or No roll | | |
| CDR | FLOAT BAG 3 CTR - OFF<br>(Continue uprighting for 8 additional min) | | Lever lock. |



NORMAL/BACKUP

| STA/T STEP | PROCEDURE | PANEL | REMARKS |
|---|---|---|---|
| CMP,LMP | If uprighting does not occur in 3 min, reposition to area on top of or along lower equip bay cstr<br><br>WARNING<br><br>If CM still does not upright, prepare to egress within 15 min (because of environmental conditions) after completing above uprighting procedure. Refer to Stable II Water Egress Procedure, 4.17.4.3 | | |

| STA/T | STEP | PROCEDURE | PANEL | REMARKS |
|---|---|---|---|---|
| | | 4.17.2 POST STABILIZATION AND VENTILATION | | |
| ALL | | Release footstraps<br>Release restraint harness | | |
| LMP | | cb MNA BAT BUS A & BAT C (2) - open<br>cb MNB BAT BUS B & BAT C (2) - open<br>cb FLT/PL BAT C - open | 275 | Battery C held in reserve for use after depletion of battery A and B charge. |
| | | cb PYRO A/SEQ A - open<br>cb PYRO B/SEQ B - open<br>DC IND sel - BAT BUS A,B<br>DC VOLTS ind - >27.5 vdc | 250<br><br>3 | |
| | | xxxxxxxxxxxxxxxxxxxxxxxxxxxxxxxxxxxxxxxx | | |
| | | If BAT BUS A(B) <27.5 vdc<br>cb FLT/PL BAT BUS A(B) - open<br>Go to Comm Low Pwr Procedures, 4.17.3.3 | 275 | |
| | | If BAT BUS A & B (2) <27.5 vdc<br>cb FLT/PL BAT BUS A & B (2) - open<br>cb FLT/PL BAT C - close<br>Go to Comm Low Pwr Procedures, 4.17.3.3, & mon BAT C voltage | | |
| | | xxxxxxxxxxxxxxxxxxxxxxxxxxxxxxxxxxxxxxxx | | |
| CMP | | PLV distribution duct (3) - unstow & install | | Stowed in aft bulkhead stowage area. |
| | | Remove debris trap from left X-X head strut at MDC | | Allows cabin air to flow to PL valve exhaust port on forward bulkhead. |
| | | PL VENT VLV - PULL (unlock) | 2 | |



NORMAL/BACKUP

| STA/T STEP | PROCEDURE | PANEL | REMARKS |
|---|---|---|---|
| CDR | PL VENT - HI or LO | 15 | PLV fan can operate in high flow for 12 hours maximum. During periods of no PLV fan operation, cycle PLV 5 minutes every half hour. If RCS fumes are noticed, prepare to egress immediately. PL VENT should be cycled from HI to LO prior to using manual backup procedure. |
| | xxxxxxxxxxxxxxxxxxxxxxxxxxxxxx | | |
| | If no PLV operation<br>To initially open vlvs<br>PLVC sw - OPEN | 376 | Prepare to egress CM in 30 minutes after landing if valves cannot be opened. |
| | To close vlvs<br>PL VENT - OFF | 15 | |
| | To reopen vlvs<br>PL VENT - HI or LO | | |
| | xxxxxxxxxxxxxxxxxxxxxxxxxxxxxx | | |
| | PL BCN LT - LO | | After dark only. Place switch at HI only at request of recovery forces. |
| | xxxxxxxxxxxxxxxxxxxxxxxxxxxxxx | | |
| | If no flashing lt | | Perform backup duty cycle at request of recovery forces. |
| | FLOOD FIXED - POST LDG<br>for 1/2 min<br>OFF for 1/2 min | 8 | |
| | xxxxxxxxxxxxxxxxxxxxxxxxxxxxxx | | |
| | Deploy dye marker & swimmer umbilical<br>DYE MARKER - on (up) | 15 | Guarded. On (up) position is momentary. |

| STA/T | STEP | PROCEDURE | PANEL | REMARKS |
|---|---|---|---|---|
| ALL | | INTERCOM (3) - T/R (verify) | 9,10,6 | Required for swimmer umbilical operation. |
| CDR | | Deploy line grappling hook (if req) | | Grappling hook deployed at request of recovery forces. It is located in aft bulkhead stowage area and is for snagging sea anchors deployed by recovery forces. Adapter E and driver R tools required to remove cabin pressure dump valve and secure cover plate on side hatch (over valve opening). |
| | | CAB PRESS DUMP vlv - remove | Side hatch | |
| | | Grappling hook & line - deploy thru vlv opening | | |
| | | Cover plate - secure | | |

| STA/T | STEP | PROCEDURE | PANEL | REMARKS |
|---|---|---|---|---|
| | | 4.17.3 POSTLANDING COMMUNICATIONS | | |
| | | 4.17.3.1 Normal Postlanding Communications | | |
| LMP | | VHF BCN - ON (verify)<br>VHF ANT - RECY (verify) | 3 | |
| | | If no contact with recovery forces<br>VHF AM B - SIMPLEX<br>Mon for VHF bcn 1000 Hz tone<br>(2 sec on, 3 sec off)<br>VHF AM B - off (ctr)<br>If VHF bcn not audible<br>Remove survival transceiver from stowage & mount ant<br>Sel VOICE on transceiver<br>Mon VHF bcn for 1000 Hz tone<br>(2 sec on, 3 sec off)<br>If VHF bcn operating<br>Turn off survival transceiver<br>Stow transceiver in RHFEB | | Government-furnished survival transceiver stowed in RHFEB. |
| | | xxxxxxxxxxxxxxxxxxxxxxxxxxxxxxxxxxxxxx | | |
| | | If no VHF bcn sig, turn off transceiver, remove ant, & conn transceiver to ant per 4.17.3.2<br>Sel BCN on transceiver<br>Mon VHF AM for comm initiated by recovery aircraft | | |
| | | xxxxxxxxxxxxxxxxxxxxxxxxxxxxxxxxxxxxxx | | |

| STA/T | STEP | PROCEDURE | PANEL | REMARKS |
|---|---|---|---|---|
| | | 4.17.3.2 Survival Transceiver Communications | | |
| LMP | | VHF BCN - OFF (if no contact after 24 hours) | 3 | Conserve spacecraft power for terminal phase of recovery operations. |
| | | Survival transceiver - conn to VHF BCN ant cable | | |
| | | Remove survival transceiver from stowage | | Transceiver is stowed in RHFEB. |
| | | Unlatch & open VHF ant access door | | A 5/32" hex wrench, for opening two hex fasteners on antenna cable access door, stowed in aft bulkhead stowage area. |
| | | Disconnect P112 conn from bcn | | An adjustable wrench, stowed in aft bulkhead stowage area, used to loosen 5/8" hex on coax connector. |
| | | Attach transceiver cable P1 conn to transceiver (verify) | | |
| | | Conn transceiver cable J1 conn to P112 conn | | |
| | | Select BCN on transceiver | | |
| | | 4.17.3.3 Communications Low Power Procedures | | |
| | | VHF BCN - OFF | | |
| CDR | | FLOOD FIXED - OFF | 8 | Turns off postlanding floodlights. |
| LMP | | VHF AM A - off (ctr) | 3 | |
| | | VHF AM RCV - A | | |
| CDR | | PL VENT sys - minimize use | | |
| | | Survival transceiver - conn to VHF BCN ant cable (refer to Survival Transceiver Comm, 4.17.3.2) | | |
| | | 4.17.3.4 Spacecraft Power Down | | |
| | | PL VENT - OFF | 15 | |
| LMP | | cb ENTRY/PL BAT A, B, C (3) - open | 250 | |



NORMAL BACKUP

| STA/T STEP | PROCEDURE | PANEL | REMARKS |
|---|---|---|---|
| | 4.17.4 UNAIDED EGRESS PROCEDURES | | |
| | 4.17.4.1 Egress Preparation | | |
| ALL | Disconnect umbilicals (if suited) | | |
| | Neck dams on (if suited) | | |
| | Configure couch seat pans | | |
| | Center couch - 270° position | | |
| | L & R couch - 270° position (if stable II egress anticipated) | | |
| CDR,LMP | Armrests folded (stowed) | | |
| ALL | If unsuited, transfer scissors from suit to coveralls | | Scissors may be required to cut mooring lanyard in an emergency. |
| | Tape flight penlight to wrist (night egress) | | |
| LMP | Survival kits removed from stowage | R-4 | |
| | Remove lanyards from rucksack kit No. 2 & reclose rucksack | | |
| CMP | Conn liferaft mooring line (olive drab) to CM | | |
| | Conn lanyard titled (attach to first crewman out) to suit (if unsuited attach to buckle on life vest) | | |
| LMP | Conn lanyard titled (attach to second crewman out) to suit (if unsuited attach to buckle on life vest) | | |
| CDR | Conn lanyard titled (attach to third crewman out) to suit (if unsuited attach to buckle on life vest) | | |

| STA/T | STEP | PROCEDURE | PANEL | REMARKS |
|---|---|---|---|---|
| | | 4.17.4.2 Stable I Water Egress | | |
| CMP | | PL VENT - OFF | 15 | |
| LMP | | cb ENTRY/PL BAT A, B, C (3) - open | 250 | |
| CMP | | Charge hatch counterbalance | Side hatch | |
| | | GN2 ratchet handle - opr | | |
| | | GN2 vlv handle - unlock and push outboard | | |
| | | Open side hatch | | |
| | | xxxxxxxxxxxxxxxxxxxxxxxxxxxxxxxxxxxxxxxxxx | | |
| | | If side hatch was closed by backup proced in 4.5.7.2, loosen jackscrews by screwing wing nuts CCW | | |
| | | Disengage hooks from catches on hatch | | |
| | | Disengage jackscrew lever from hatch frame | | |
| | | If any hatch latches are latched, complete side hatch opening proced; if not, open hatch | | |
| | | xxxxxxxxxxxxxxxxxxxxxxxxxxxxxxxxxxxxxxxxxx | | |
| | | Lock pin rel knob - UNLOCK | | |
| | | Gear box sel - UNLATCH | | |
| | | Actr handle sel - U (unlatch) | | |
| | | Actr handle rel - push or squeeze | | Push button or squeeze for release on actuator handle for operation. |



NORMAL/BACKUP

| STA/T | STEP | PROCEDURE | PANEL | REMARKS |
|---|---|---|---|---|
| CMP | | Actr handle - opr (until hatch can be opened) | Side hatch | |
| | | Push hatch open | | |
| | | Actr handle sel - N (neut) | | |
| CDR | | Remove life raft from rucksack kit No. 2 | | |
| | | Simultaneously throw life raft overboard & pull inflation lanyard | | |
| | | Throw rucksacks No. 1 & 2 overboard | | |
| | | Egress, inflate life vest, board raft | | |
| LMP | | Egress, inflate life vest, board raft | | |
| CMP | | Egress, inflate life vest, board raft | | |
| | 4.17.4.3 | Stable II Water Egress | | |
| | | PWR (3) - OFF | 6,9,10 | |
| | | SUIT PWR (3) - OFF | | |
| | | PRESS EQUAL vlv - OPEN | Fwd hatch | Pull detent knob on end of handle, then pivot up 90°. Rotate crank ≈3 turns CCW to fully open valve. This will flood tunnel prior to opening hatch. |
| | | WARNING<br>To prevent injury to crew members, do not unlock hatch until flooding stops & press equalizes in CM. | | |
| | | Actr handle rel - pull & rotate | | To free actuator handle for operation, release rotated to mechanical stop. |
| | | Actr handle - pull to stop | | Actuator handle should move ≈80°. |
| | | Actr handle sel - U (unlatch) (CCW 90°) | | |

| STA/T | STEP | PROCEDURE | PANEL | REMARKS |
|---|---|---|---|---|
| CMP | | Actr handle - push to stop | Fwd hatch | Actuator handle should move 60° to release hatch. |
| | | Actr handle sel - stow (CW 90°) | | |
| | | Actr handle - push to stowed position | | |
| CMP,LMP | | Remove & stow fwd hatch | | Forward hatch weighs ≈85 lbs and is stowed in LHEB. |
| CMP | | Put survival rucksacks down tunnel | | |
| | | Exit feet first; when clear of CM, inflate water wings | | |
| LMP | | Exit feet first; when clear of CM, inflate water wings | | |
| CMP,LMP | | Remove life raft from rucksack No. 2 & inflate raft | | |
| CDR | | Disconnect life raft mooring line (olive drab) from CM & return end of line (CDR's discretion) | | |
| | | Exit feet first; when clear of CM inflate water wings | | |
| | | Reconnect life raft mooring line (olive drab) to SC exterior - sea anchor hardpoint or EVA handles (CDR's discretion) | | |
| | 4.17.4.4 | Rough Sea Side Hatch Operations | | |
| CMP | | Close side hatch | Side hatch | |
| | | GN2 vlv handle - pull (inboard) | | Vents counterbalance piston chamber. Squeeze handle to unlock. |
| | | GN2 press ind - min | | |
| | | Open door rel handle - pull | | D-ring. |
| | | Verify latches are in open position | | |
| | | Close hatch | | |



NORMAL BACKUP

| STA/T STEP | PROCEDURE | PANEL | REMARKS |
|---|---|---|---|
| CMP | Actr handle sel - L (latch) | Side hatch | |
| | Gear box sel - LATCH | | |
| | Open door rel handle - stow | | |
| | Actr handle rel - push or squeeze | | |
| | Actr handle - opr (while holding hatch closed) | | |
| | Lock pin rel knob - LOCK (auto) | | Verify lock pin has automatically engaged. |
| | LOCK PIN ind - not extd | | Indicates lock pin engaged. |
| | Actr handle - stowed | | |
| | Re-open side hatch | | |
| | Lock pin rel knob - UNLOCK | | Pin can be sheared if left in LOCK position. |
| | Gear box sel - UNLATCH | | |
| | Actr handle sel - U (unlatch) | | |
| | Actr handle rel - push or squeeze | | Push button or squeeze (bar) releases actuator handle for operation. |
| | GN2 vlv handle - push (outboard) | | |
| | GN2 press ind - green | | |
| | Actr handle - opr (until hatch can be opened) | | Actuator handle should not be operated until immediately prior to egress. |

## 4.18 LUNAR ORBIT EXPERIMENTS

Procedures presented in this section represent a single cycle of each experiment operation. The operational periods will be defined by the mission time line (or flight plan) including status of deployment mechanisms after data collection periods. All experiments except S-band transponder (S164) and Bi-static Radar (S170) require that SIM door be jettisoned prior to conducting experiments. The following matrix identifies experiments having electrical interface with CSM requiring crew participation.

| EXP. No. | Name | CSM | | | |
|---|---|---|---|---|---|
| | | 112 | 113 | 114 | 115 |
| S160 | Gamma Ray Spectrometer | X | X | | |
| S161 | X-Ray Fluoresence Spectrometer | X | X | | |
| S162 | Alpha-Particle Spectrometer | X | X | | |
| S163 | Optical Bar Panoramic Camera | X | X | X | X |
| S164 | S-Band Transponder | X | X | X | X |
| S165 | Mass Spectrometer | X | X | | |
| S166 | 3-inch Mapping Camera | X | X | X | X |
| S169 | Far Ultra-Violet Spectrometer | | | X | X |
| S170 | Bi-Static Radar | | | | X |
| S171 | IR Scanning Radiometer | | | X | X |
| S173/174 | Subsatellite | X | | X | X |
| S175 | Laser Altimeter | X | X | X | X |



NORMAL/BACKUP

4.18.1 GENERAL OPERATIONAL REQUIREMENTS

The following considerations are applicable to lunar orbit experiment procedures:

1. SM RCS jets A2, A4, B1 and B4 are inhibited during experiment operation to reduce contamination and thermal gradients in the SIM bay after the SIM door is jettisoned. In addition, jets C1 and C3 are inhibited whenever the mass spectrometer boom is deployed.

2. Particle-sensitive experiments should be scheduled as long as possible after ECS dumps and purges to preclude degradation of experimental data.

3. If required during experiment operation, mission time and duration of dumps and purges must be recorded for postflight analysis of experimental data.

4. Local vertical attitude hold will be maintained during experiment operations, except for experiment calibration and possibly for IMU alignments.

5. During spacecraft maneuvers in lunar orbit, direct sunlight impingement into the SIM bay should be avoided to prevent damage to experiments.

| STA/T | STEP | PROCEDURE | PANEL | REMARKS |
|---|---|---|---|---|
| | 4.18.2 | SIM DOOR JETTISON AND EXPERIMENT TIE-DOWN RELEASE | | |
| | | CMC - on (req), 4.8.1.3 | | |
| | | ISS - on & orient known (req), 4.8.1.3 & 4.14 | | |
| | | SCS - on (desired), 4.8.4.2 | | |
| | | RCS DAP - load & activate (req), 4.8.2.1 | | |
| | | All jets OFF except | | |
| CDR | | AUTO RCS B/D ROLL B2 & D1 - MNA or MNB | 8 | Jets are disabled to prevent SIM bay contamination and enables single jet control until SIM experiments completed. |
| | | AUTO RCS PITCH A3 & C4 - MNA or MNB | | |
| | | AUTO RCS YAW B3 & D4 - MNA or MNB | | |
| | | Mnvr to jett SIM door R____°, P____°, Y____° | | SIM door to impact lunar surface. |
| LMP | | FC REACS VLVS - LATCH | 3 | Holding voltage prevents SIM door jettison shock from inadvertently closing FC reactants valves. |
| | | Arm SIM door & jett | | |
| CMP | | cb LOGIC PWR (2) - close (verify) | 181 | |
| | | LOGIC PWR - JETT | | |
| | | DOOR JETT - on (up) | | Guarded - On (up) position momentary. |
| LMP | | FC REACS VLVS - NORM | 3 | |
| | | Rel booms | | |
| | | NONESS BUS - MNA (MNB) (verify) | 5 | |
| | | cb INST SCI EQUIP (3) - close (verify) | | |
| CMP | | SM/AC PWR - on (up), then OFF | 181 | Releases gamma-ray and mass spectrometer booms and subsatellite launcher tie-downs. |
| | | DOOR JETT - off (down) | | Guarded. |
| | | LOGIC PWR - OFF | | |



NORMAL BACKUP

| STA/T STEP | PROCEDURE | PANEL | REMARKS |
|---|---|---|---|
| | Go to boom & camera/altimeter deploy, 4.18.3.1, 4.18.3.3 & 4.18.3.5 as req | | |



SIM DOOR JETTISON AND EXPERIMENT TIE-DOWN RELEASE

| STA/T STEP | PROCEDURE | PANEL | REMARKS |
|---|---|---|---|
| | 4.18.3 DEPLOY & RETRACT GAMMA RAY & MASS SPECTROMETER BOOMS & MAPPING CAMERA | | |
| | 4.18.3.1 Deploy Gamma Ray Boom | | |
| CMP | cb LOGIC PWR MNA - close (verify) | 181 | |
| | LOGIC PWR - DPLY/RETR | | |
| | GAMMA RAY BOOM DPLY - on (up) | 230 | If gamma-ray spectrometer is to be operated in retracted position, omit this and following step. Maximum continuous operating time in retracted position is 3 hours because of thermal considerations. |
| | GAMMA RAY BOOM DPLY tb - bp, then gray | | Barber pole when boom is in any position except fully extended or retracted. ≈100 seconds required to fully extend boom. |
| | LOGIC PWR - OFF | 181 | |
| | 4.18.3.2 Retract Gamma Ray Boom | | |
| | WARNING<br>Boom must be retracted prior to SPS mnvrs or structural failure may result. | | |
| | cb LOGIC PWR MNA - close (verify) | | |
| | LOGIC PWR - DPLY/RETR | | |
| | GAMMA RAY BOOM DPLY - RETR | 230 | ≈100 seconds required to retract boom. |
| | GAMMA RAY BOOM DPLY tb - bp, then gray | | Barber pole when boom is in any position except fully extended or retracted. |



NORMAL/BACKUP

| STA/T STEP | PROCEDURE | PANEL | REMARKS |
|---|---|---|---|
| | xxxxxxxxxxxxxxxxxxxxxxxxxxxxxxxxxxxxxxxxxx | | |
| | If no boom retract, jett exp pkg prior to SPS thrusting | | |
| CMP | cb LOGIC PWR (2) - close (verify) | 181 | |
| | LOGIC PWR - JETT | | |
| | GAMMA RAY BOOM JETT - on (up) | 230 | On position momentary. Jettisons experiment package. |
| | GAMMA RAY BOOM JETT tb - bp, then gray | | |
| | xxxxxxxxxxxxxxxxxxxxxxxxxxxxxxxxxxxxxxxxxx | | |
| | LOGIC PWR - OFF | 181 | |
| | 4.18.3.3 Deploy Mass Spectrometer Boom | | |
| | cb LOGIC PWR MNA - close (verify) | | |
| | LOGIC PWR - DPLY/RETR | | |
| | MASS SPECT BOOM DPLY - on (up) | 230 | |
| | MASS SPECT BOOM DPLY tb - bp, then gray | | Barber pole while boom is extending. ≈84 seconds required to fully extend boom. |
| | LOGIC PWR - OFF | 181 | |
| | 4.18.3.4 Retract Mass Spectrometer Boom | | |
| | WARNING | | |
| | Boom must be retracted prior to SPS mnvrs or structural failure may result. | | |
| | cb LOGIC PWR MNA - close (verify) | | |
| | LOGIC PWR - DPLY/RETR | | |

DEPLOY & RETRACT MASS SPECTROMETER BOOM

| STA/T | STEP | PROCEDURE | PANEL | REMARKS |
|---|---|---|---|---|
| CMP | | MASS SPECT ION SOURCE - OFF (verify) | 230 | Must be OFF when boom is retracted in SIM bay or instrument damage may result. |
| | | MASS SPECT BOOM DPLY - RETR | | |
| | | MASS SPECT BOOM DPLY tb - bp, then gray | | Barber pole while boom retracting. ≈84 seconds required to fully retract boom. |
| | | xxxxxxxxxxxxxxxxxxxxxxxxxxxxxxxxxxxxxxxxxx | | |
| | | If no boom retract, jett exp pkg prior to SPS thrusting | | |
| | | cb LOGIC PWR (2) - close (verify) | 181 | |
| | | LOGIC PWR - JETT | | |
| | | MASS SPECT BOOM JETT - on (up) | 230 | On position momentary. |
| | | MASS SPECT BOOM JETT tb - bp, then gray | | |
| | | xxxxxxxxxxxxxxxxxxxxxxxxxxxxxxxxxxxxxxxxxx | | |
| | | LOGIC PWR - OFF | 181 | |
| | 4.18.3.5 | Deploy Mapping Camera & Laser Altimeter | | |
| | | cb LOGIC PWR MNA - close (verify) | | |
| | | LOGIC PWR - DPLY/RETR | | |
| | | MAP CAMR TRACK - EXTD | 230 | |
| | | MAP CAMR TRACK tb - bp, then gray | | Barber pole while camera/altimeter extending. |
| | | LOGIC PWR - OFF | 181 | |
| | 4.18.3.6 | Retract Mapping Camera & Laser Altimeter | | |
| | | cb LOGIC PWR MNA - close (verify) | | |
| | | LOGIC PWR - DPLY/RETR | | |



NORMAL BACKUP

| STA/T | STEP | PROCEDURE | PANEL | REMARKS |
|---|---|---|---|---|
| CMP | | MAP CAMR TRACK - RETR | 230 | |
| | | MAP CAMR TRACK tb - bp, then gray | | Barber pole while camera/altimeter retracting. |
| | | LOGIC PWR - OFF | 181 | |

DEPLOY AND RETRACT MAPPING CAMERA

| STA/T STEP | PROCEDURE | PANEL | REMARKS |
|---|---|---|---|
| | 4.18.4 SIM EXPERIMENTS PREPARATION & SHUTDOWN | | |
| | 4.18.4.1 System Preparation | | |
| | CMC - on (req), 4.8.1.3 | | |
| | ISS - on & orient known (req), 4.8.1.3 & 4.14 | | |
| | SCS - on (desired), 4.8.4.2 | | |
| | RCS DAP - load & activate (req), 4.8.2.1 | | Recommended rates and deadbands - TBD. |
| | Verify all jets off, except | | |
| CDR | AUTO RCS B/D ROLL B2 & D1 - MNA or MNB | 8 | Jets disabled to prevent SIM bay contamination and maintain balanced SM RCS single jet rotation control until SIM experiments completed. |
| | AUTO RCS PITCH A3 & C4 - MNA or MNB | | |
| | AUTO RCS YAW B3 & D4 - MNA or MNB | | |
| | SIM Data Sys Prep | | |
| | Configure TLM, 4.5.6.1, except | | |
| LMP | PCM BIT RATE - HI | 3 | |
| | Activate Data Sys | | |
| CMP | DATA SYS ON - ON | 230 | Allow 15-minute warmup prior to calibration. |
| | DATA SYS CAL - on (up) | | On position (momentary) puts a known calibration signal into voltage control oscillator of FM analog channel. Three-step calibration required. |
| | Repeat following three times | | |
| | Wait one sec | | |
| | DATA SYS CAL - on (up) | | |
| | 4.18.4.2 Systems Shutdown | | |
| | When all SIM exp complete | | |
| | DATA SYS CAL - on (up) | | On position momentary. |



NORMAL/BACKUP

| STA/T STEP | PROCEDURE | PANEL | REMARKS |
|---|---|---|---|
| CMP | Repeat following three times<br>Wait one sec<br>DATA SYS CAL - on (up)<br>DATA SYS ON - OFF | 230 | Three-step calibration required prior to shutdown. |

SIM EXPERIMENTS PREPARATION & SHUTDOWN

| STA/T STEP | PROCEDURE | PANEL | REMARKS |
|---|---|---|---|
| 4.18.5 | SENSOR CALIBRATION | | Performed once each day on lunar darkside by pointing sensor toward deep space. Calibration data obtained by taking background level measurements of deep space. |
| | Mnvr to calib att<br>R____°, R____°, Y____°<br>Att hold for 15 min<br>Mnvr to exp att<br>Resume exp oper | | Roll to point sensor 135°-180° (toward deep space) from local vertical. |



NORMAL BACKUP

| STA/T STEP | PROCEDURE | PANEL | REMARKS |
|---|---|---|---|
| | 4.18.6 S160 - GAMMA RAY SPECTROMETER | | |
| | Verify SIM Door Jett, 4.18.2 | | |
| | Sys Prep, 4.18.4.1 | | |
| | Mnvr to exp att<br>R____°, P____°, Y____°<br>(detector at lcl vert) | | Normal lunar orbit operation periods will utilize local vertical mode, with SIM pointing toward moon. |
| | Establish lcl vert att hold, TBD | | |
| | Deploy Gamma Ray Boom, 4.18.3.1 | | |
| | Activate exp | | |
| LMP | cb SCI EQUIP SEB 2 - close (verify) | 5 | |
| | NONESS BUS - MNA (MNB) (verify) | | |
| CMP | GAMMA RAY EXP - ON | 230 | No warmup required. |
| | GAMMA RAY GAIN - STEP (as req) | | STEP position momentary. Increases sensitivity. Positioned per flight plan or as directed by MSFN in real time. |
| | GAMMA RAY GAIN - ctr | | |
| | Terminate exp | | |
| | GAMMA RAY EXP - OFF | | |
| | If boom to be retracted, refer to 4.18.3.2 | | Mission time line or flight plan will determine whether boom to be retracted between data collection periods. |

| STA/T STEP | PROCEDURE | PANEL | REMARKS |
|---|---|---|---|
| | 4.18.7 S161 - X-RAY FLUORESCENCE SPECTROMETER | | |
| | Verify SIM Door Jett, 4.18.2<br>Sys Prep, 4.18.4.1 | | |
| | CAUTION<br>Avoid Sun entering instrument FOV (±30° from SIM pointing line) or instrument will be destroyed. If direct sunlight exposure is anticipated pwr to the instrument must be removed by placing X RAY EXP sw to STBY. | | |
| | Mnvr to exp att<br>R____°, P____°, Y____° (snsr at lcl vert) | | Normal lunar orbital operation periods will utilize local vertical mode, with SIM pointing toward moon. |
| | Establish lcl vert att hold, TBD | | |
| | Open solar snsr door | | |
| LMP | cb SCI EQUIP HATCH - close (verify) | 5 | |
| CMP | cb LOGIC PWR MNB - close (verify) | 181 | |
| LMP | NONESS BUS - MNA (MNB) (verify) | 5 | |
| CMP | LOGIC PWR - JETT | 181 | |
| | X RAY DR DPLY - on (up) | 230 | On position momentary. Opens X-ray solar sensor door. Door not retractable. |
| | LOGIC PWR - OFF | 181 | |
| | Activate exp | | |
| | X RAY EXP - ON | 230 | No warmup required. |



NORMAL/BACKUP

| STA/T STEP | PROCEDURE | PANEL | REMARKS |
|---|---|---|---|
| | If calib req, refer to 4.18.5 | | Calibration required once each day. |
| | To term exp | | |
| CMP | X RAY EXP - OFF | 230 | |

| STA/T STEP | PROCEDURE | PANEL | REMARKS |
|---|---|---|---|
| | 4.18.8 S162 - ALPHA PARTICLE SPECTROMETER | | |
| | Verify SIM Door Jett, 4.18.2<br>Sys Prep, 4.18.4.1 | | |
| | CAUTION<br>Avoid sun entering instrument FOV (±45° from SIM pointing line), or damage to instrument will result. | | |
| | Mnvr to exp att<br>R____°, P____°, Y____° (snsr at lcl vert) | | Normal lunar orbital operation periods will utilize local vertical mode, with SIM pointing toward moon. Limit exposure of detector to direct solar radiation for not more than 5 consecutive minutes with a total exposure time not to exceed 30 minutes. |
| | Establish lcl vert att hold, TBD<br>Activate exp | | |
| LMP | cb SCI EQUIP HATCH - close (verify) | 5 | |
| | NONESS BUS - MNA (MNB) (verify | | |
| CMP | ALPHA RAY - ON | 230 | Warmup not required. |
| | If calib req, refer to 4.18.5 | | Calibration required once each day on lunar dark side. |
| | To term exp<br>ALPHA RAY - OFF | | |



NORMAL BACKUP

| STA/T | STEP | PROCEDURE | PANEL | REMARKS |
|---|---|---|---|---|
| | | 4.18.9 S163 - OPTICAL BAR PANORAMIC CAMERA | | |
| | | 4.18.9.1 Panoramic Camera Boost Mode | | Boost mode required during boost, TLI and SPS thrusting periods until panoramic camera operations are complete. |
| | 1 | Boost Mode On | | |
| LMP | | NONESS BUS - MNA (MNB) (verify) | 5 | |
| | | cb SCI EQUIP SEB 1 & 2 (2) - close (verify) | | |
| CMP | | cb SM SECTOR 1 AC2 (3) - close (verify) | 181 | |
| | | PAN CAMR MODE - STBY (verify) | 230 | |
| | | PAN CAMR PWR - BOOST | | |
| | 2 | Boost Mode Off | | When thrusting is completed. |
| | | PAN CAMR PWR - off (ctr) | | |
| | | SM/AC PWR - OFF | 181 | |
| | | 4.18.9.2 Panoramic Camera Standby Mode | | |
| | 1 | Stby Mode On | | |
| LMP | | NONESS BUS - MNA (verify) | 5 | |
| | | cb SCI EQUIP SEB 1 - close (verify) | | |
| CMP | | cb SM SECTOR 1 AC2 (3) - close (verify) | 181 | |
| | | SM/AC PWR - on (up) (verify) | | |
| | | PAN CAMR PWR - ON | 230 | |
| | | PAN CAMR MODE - STBY (verify) | | |
| | | PAN CAMR SELF TEST - off (ctr) | | |
| | 2 | Stby Mode Off | | |
| | | PAN CAMR PWR - off (ctr) | | |

| STA/T STEP | PROCEDURE | PANEL | REMARKS |
|---|---|---|---|
| | 4.18.9.3 Panoramic Camera Heater Mode | | ≈10 hours of warmup time in heater mode required before camera operation. |
| | 1 Htr Mode On | | |
| LMP | NONESS BUS - MNB | 5 | |
| | cb SCI EQUIP SEB 1 - close (verify) | | |
| CMP | SM/AC PWR - on (up) (verify) | 181 | |
| | PAN CAMR SELF TEST - HTRS | 230 | |
| | 2 Htr Mode Off | | |
| | PAN CAMR SELF TEST - off (ctr) | | |
| | 4.18.9.4 Panoramic Camera Self Test | | Panoramic camera must be operated every 24±6 hours to prevent film set. Panoramic camera self-test or camera operation will satisfy this requirement. |
| LMP | NONESS BUS - MNA (verify) | 5 | |
| | cb SCI EQUIP SEB 1 - close (verify) | | |
| CMP | cb SM SECTOR 1 AC2 (3) - close | 181 | |
| | SM/AC PWR - on (up) (verify) | | |
| | PAN CAMR MODE - STBY (verify) | 230 | |
| | PAN CAMR PWR - ON | | |
| | PAN CAMR SELF TEST - on (up) | | On position momentary. |
| | PAN CAMR OPR tb - bp to gray | | Barper pole until completion of five test frames; if barber pole remains, panoramic camera no-go. |
| | At completion of self-test | | |
| | PAN CAMR PWR - off (ctr) | | |
| | SM/AC PWR - OFF | 181 | |
| | 4.18.9.5 Panoramic Camera Operation | | |
| | Verify SIM Door Jett, 4.18.2 | | |
| | Sys Prep, 4.18.4.1 | | 0.5° attitude and 0.05°/sec rate deadbands for this experiment. |



NORMAL/BACKUP

| STA/T STEP | PROCEDURE | PANEL | REMARKS |
|---|---|---|---|
| | Mnvr to exp att<br>R____°, P____°, Y____° | | Normal lunar orbital operation periods will utilize local vertical mode, with SIM pointing toward moon. ±0.5° attitude hold deadband is recommended in roll and yaw. Camera is direction-sensitive; plus X-axis into velocity vector. |
| | Verify gamma-ray & mass spectrometer booms retracted, 4.18.3.2 & 4.18.3.4 | | Photo degradation will result if gamma-ray and mass spectrometer booms extended. |
| | Pan Camr Htr Mode On, 4.18.9.3, step 1 | | ≈10 hours of warmup time in heater mode required before camera operation. |
| | Pan camr oper | | |
| | Change oper modes (htr to stby) | | |
| LMP | NONESS BUS - MNA | 5 | These steps represent the delta between modes. |
| CMP | cb SM SECTOR 1 AC2 (3) - close | 181 | |
| | SM/AC PWR - on (up) | | |
| | PAN CAMR SELF TEST - off (ctr) | 230 | |
| | Start pan camr | | |
| | PAN CAMR MODE - OPR | | Camera starts operating. Camera operation limited to 20 minutes. |
| | PAN CAMR OPR tb - bp, then gray | | Talkback gray after 2 seconds and remains gray. If barber pole appears, camera not operating. |
| | Stop pan camr | | |
| | PAN CAMR MODE - STBY | | |
| | PAN CAMR PWR - off (ctr) | | |
| | SM/AC PWR - OFF | 181 | |
| | EVA req for film cassette retrieval, 4.10.3 | | Film cassette retrieved during TEC. Cassette is 19 inches in diameter 7 inches wide and weighs ≈88 pounds. |

| STA/T STEP | PROCEDURE | PANEL | REMARKS |
|---|---|---|---|
| | 4.18.10 S164 - S-BAND TRANSPONDER | | |
| | The S-band transponder experiment is conducted with a solo CSM in lunar orbit (LM on lunar surface). The experiment consists of a data collection period of two lunar revolutions with the number of data collection periods dependent upon CSM orbit inclination. During each experimental period, MSFN will track CSM while it is being held in a G&N attitude hold (minimum deadband). This hold will be maintained by SM RCS jets operating in balanced couples, minimizing high gain antenna motion relative to MSFN tracking stations, and should be completed prior to SIM door jettison to avoid SIM bay contamination. Also, to prevent unnecessary motion during the experiment, H20 boiler operation, purges, water dumps, etc., will be avoided. | | |
| | CMC - on (req), 4.8.1.3 | | |
| | ISS - on & orient known (desired), 4.8.1.3 & 4.14 | | |
| | SCS - on (desired), 4.8.4.2 | | |
| | RCS DAP - load & activate (req), 4.8.2.1 | | |
| CDR | AUTO RCS (16) - as req | 8 | 0.5° attitude deadband and 0.5°/sec rates are recommended. |
| | Mnvr to exp att | | |
| | R____°, P____°, Y____° | | |
| | Sel telecom basic config, 4.5.6.1 | | |
| | except | | |
| LMP | PCM BIT RATE - HI | 3 | |



NORMAL BACKUP

| STA/T STEP | PROCEDURE | PANEL | REMARKS |
|---|---|---|---|

## 4.18.11 S165 - MASS SPECTROMETER

Operational Requirements

- Prior to initial operation in lunar orbit, the mass spectrometer must have accumulated 6 hours of warmup operation with its boom extended. If dumps or boom retractions occur during the 6-hour period, each dump or retraction will necessitate an additional 1/2-hour warmup. Additionally, at least 1 hour of uninterrupted warmup is required immediately prior to data collection. Subsequent lunar orbit operations require 30-minute warmup periods. Prior to TEC operations, a 3-hour warmup is required. The same continuity and interference constraints imposed on lunar orbit warmup apply to TEC warmup.

- In lunar orbit, a minimum of three data collection periods of at least two revolutions per collection period are required. During each of the three periods the minus X-axis of the CSM will be aligned to the velocity vector. Additionally, a minimum of one revolution is required while the CSM plus X-axis is aligned to the velocity vector.

- Data collection during TEC should not begin within 6 hours of an SPS or RCS translation burn.

### 4.18.11.1 Mass Spectrometer Operation

Verify SIM Door Jett, 4.18.2
Sys Prep, 4.18.4.1
Mnvr to exp att
R____°, P____°, Y____°
Xsc aligned along velocity vctr &
detector at lcl vert
Initiate orb rate TBD
Deploy Mass Spect Boom, 4.18.3.3

Normal lunar orbital operation periods will utilize local vertical mode, with SIM pointing toward moon.

| STA/T | STEP | PROCEDURE | PANEL | REMARKS |
|---|---|---|---|---|
| | | Warmup | | |
| LMP | | cb SCI EQUIP SEB 1 - close (verify) | 5 | |
| | | NONESS BUS - MNA (MNB) (verify) | | |
| CMP | | MASS SPECT EXP - STBY | 230 | Prior to initial operation, mass spectrometer must have accumulated 6 hours of warmup operation (boom extended) with MASS SPECT EXP and MASS SPECT ION SOURCE switches at STBY. If dumps or boom retractions occur during the 6-hour period, each dump or retraction will necessitate an additional 1/2 hour of warmup. Additionally, at least one hour of uninterrupted warmup is required immediately prior to data collection. Subsequent lunar orbit operations require 30 minute warmup periods. |
| | | MASS SPECT ION SOURCE - STBY | | |
| | | (wait 30 min) | | |
| | | Activate exp | | |
| | | MASS SPECT EXP - ON | | |
| | | MASS SPECT ION SOURCE - ON | | |
| | | MASS SPECT MULT - as req | | MASS SPECT MULT and MASS SPECT DSCRM switches positioned per flight plan or as directed in real time by MSFN. |
| | | MASS SPECT DSCRM - as req | | |
| | | Term exp | | |
| | | If in lunar orb | | |
| | | MASS SPECT ION SOURCE - OFF | | |
| | | MASS SPECT EXP - off (ctr) | | |
| | | If boom to be retracted, refer to 4.18.3.4 | | The mission timeline or flight plan will determine whether boom is to be retracted between data collection periods. |
| | or | If in transearth coast | | |
| | | MASS SPECT BOOM DPLY - RETR for 20 sec then off (ctr) | | Boom retracted in five stages. Assumes 3 ips retract rate. |
| | | MASS SPECT BOOM DPLY tb - gray | | While boom is in motion, tb is bp. |
| | | (wait 7 min) | | |

| STA/T STEP | PROCEDURE | PANEL | REMARKS |
|---|---|---|---|
| | Repeat above seq 3 times | | |
| CMP | MASS SPECT BOOM DPLY - RETR<br>MASS SPECT BOOM DPLY tb - bp, then gray<br>MASS SPECT BOOM DPLY - off (ctr) (wait 7 min) | 230 | Gray tb while DPLY switch is in RETR indicates experiment is fully retracted. |
| | MASS SPECT ION SOURCE - OFF<br>MASS SPECT EXP - off (ctr) | | |
| | or If no boom retract, refer to backup, 4.18.3.4 | | |

| STA/T | STEP | PROCEDURE | PANEL | REMARKS |
|---|---|---|---|---|
| | | 4.18.12 S166 - THREE INCH MAPPING CAMERA | | |
| | | 4.18.12.1 Mapping Camera Cycling | | After film has been loaded, camera must be cycled every 24±6 hours to prevent film set. |
| | | Mapping Camr Stby Mode On, 4.18.12.2, step 1 | | |
| CMP | | MAP CAMR ON - ON (for 2 min), then STBY | 230 | 2 minutes cycles film five frames. |
| | | Mapping Camr Stby Mode Off 4.18.12.2, step 2 | | |
| | | 4.18.12.2 Mapping Camera Standby Mode | | |
| | 1 | Stby Mode On | | Standby mode required during boost, TLI, and SPS thrusting periods until cassette recovery. Standby may be required for 25 hours (worst cold case) prior to initial operation. SIM door may be on or off during the warmup period; camera should be retracted. Note: if hot condition (worst case) the camera should be extended for cool down. |
| LMP | | NONESS BUS - MNA (MNB) (verify) | 5 | |
| | | cb SCI EQUIP-SEB 2 - close (verify) | | |
| CMP | | cb LOGIC PWR MNB - close (verify) | 181 | |
| | | cb SM SECTOR 1 AC2 (3) - close (verify) | | |
| | | SM/AC PWR - on (up) | | |
| | | MAP CAMR ON - STBY | 230 | |
| | | CAUTION | | |
| | | The following seq must be performed to prevent loss of GN2. Loss of GN2 results in film degradation. | | |
| | 2 | Stby Mode Off | | When thrusting complete. |
| | | MAP CAMR ON - OFF | | |
| | | SM/AC PWR - OFF (if pan camr not in oper) | 181 | |



NORMAL/BACKUP

| STA/T | STEP | PROCEDURE | PANEL | REMARKS |
|---|---|---|---|---|
| | | 4.18.12.3 Mapping Camera Operation | | Operation is direction sensitive with plus X-axis into velocity vector. |
| | | Verify SIM Door Jett, 4.18.2 | | |
| | | Sys Prep, 4.18.4.1 | | |
| | | Mnvr to exp att<br>R____°, P____°, Y____° | | |
| | | Initiate orb rate | | |
| | | Verify gamma-ray & mass spectrometer booms retracted, 4.18.3.2 & 4.18.3.4 | | Photo degradation will result if the gamma ray and mass spectrometer booms remain extended. |
| | | Extd mapping camr, 4.18.3.5 | | |
| CMP | | LASER ALTM - ON | 230 | |
| | | Mapping Camr Stby Mode On, 4.18.12.2, step 1 | | |
| | | Start mapping camr<br>MAP CAMR ON - ON<br>MAP CAMR IMAGE MTN - as req | | Switch position per flight plan or as directed in real time by MSFN. |
| | | Stop mapping camr<br>MAP CAMR ON - STBY | | |
| | | Mapping Camr Stby Mode Off, 4.18.12.2, step 2<br>LASER ALTM - OFF | | |
| | | EVA req for film cassette retrieval, 4.10.3 | | Film cutter is manually triggered during EVA. |

| STA/T STEP | PROCEDURE | PANEL | REMARKS |
|---|---|---|---|
| | 4.18.13 S173/S179 - SUBSATELLITE | | |
| | SIM Door Jett, 4.18.2 (verify) | | |
| | Sys Prep, 4.18.4.1 | | |
| | Mnvr to subsatellite launch att<br>R____°, P____°, Y____° | | |
| CMP | cb LOGIC PWR MNA (MNB) - close (verify) | 181 | |
| | Report to MSFN | | |
| | After Go From MSFN | | |
| | LOGIC PWR - JETT | | |
| | SUB SAT - LAUNCH | 230 | SUB SAT tb is gray, then bp for 20 seconds, and returns to gray |
| | After SUB SAT tb returns to gray | | |
| | SUB SAT - off (ctr) | | |
| | LOGIC PWR - off (ctr) | 181 | |
| | 4.18.14 S169 - FAR ULTRA-VIOLET SPECTROMETER | | |
| | The far ultra-violet spectrometer is used to determine the composition & density of the lunar atmosphere. | | |
| | 4.18.14.1 Far Ultra-Violet Spectrometer Operation (TBD) | | |
| | 4.18.15 S171 - INFRA-RED SCANNING RADIOMETER | | |
| | The infra-red scanning radiometer is used to locate and identify, for study, irregularly hot and/or cold regions of the lunar surface that are not illuminated. | | |
| | 4.18.15.1 Infra-Red Scanning Radiometer Operation (TBD) | | |



NORMAL/BACKUP

| STA/T | STEP | PROCEDURE | PANEL | REMARKS |
|---|---|---|---|---|
| | | 4.18.16 S175 - LASER ALTIMETER | | |
| | | The laser altimeter provides precise time-correlated altitude information for use in conjunction with tracking data and pictures taken by mapping camera, 4.18.12, and panoramic camera, 4.18.9. CSM pointing altitude should be maintained within ±2 degrees of nadir with a maximum drift rate of 0.05 degree-per-second during data collection. | | |
| | | 4.18.16.1 Independent Operation of Laser Altimeter | | |
| | 1 | Start Laser Altm | | |
| | | Verify that instrument temps lie between TBD & TBD | | Laser cavity temperature critical. |
| | | Deploy mapping camr sys, 4.18.3.5 | | |
| CMP | | LASER ALTM - ON | 230 | In the automatic mode, the laser altimeter is not slaved to the mapping camera and it cycles once every 20 seconds. |
| | 2 | Stop Laser Altm | | |
| | | LASER ALTM - OFF | | |

| STA/T STEP | PROCEDURE | PANEL | REMARKS |
|---|---|---|---|

4.18.17 S170 - DOWNLINK BI-STATIC RADAR OBSERVATIONS OF MOON

This experiment will utilize CSM S-band and VHF-AM transmitters as lunar orbiting radar beacons, and will be conducted during the front side pass of lunar orbits which are visible to Goldstone and Stanford facilities. The experiment period is divided into two phases: Phase A is initiated when the CSM crosses earth-moon line of centers and terminates when the CSM has traversed 120° west longitude; phase B is initiated when the CSM is at 120° east longitude and terminates when the CSM crosses earth-moon line of centers. It is highly desirable that both the S-band and VHF aspect of the experiment be conducted simultaneously. Operation of either or both experiments during additional passes is also highly desirable.

4.18.17.1 S-Band Experiment Operation

The reflected signal from the lunar surface and diverted signal from the back lobe of the CSM high-gain antenna will both be received by 210-foot Goldstone antenna. The S-band high-gain antenna is positioned to a predetermined orientation relative to CSM axes and the CSM is maneuvered such that the reflected beam will be parallel to earth-moon line of centers and the CSM will not occlude high-gain antenna during experiment. There is no modulation of downlink carrier. CSM voice and LBR PCM will be recorded during the experiment for dump to MSFN after experiment phase.

| | | | |
|---|---|---|---|
| 1 | CSM att cont<br>CMC - on (req), 4.8.1.3<br>ISS - on & orient known (desired), 4.8.1.3 & 4.14<br>SCS - on (desired), 4.8.4.2<br>RCS DAP - load & activate (req), 4.8.2.1<br>Mnvr to exp att<br>R____°, P____°, Y____<br>Initiate orb rate | | MSFN will provide initial CSM attitude. |



NORMAL BACKUP

| STA/T | STEP | PROCEDURE | PANEL | REMARKS |
|---|---|---|---|---|
| | 2 | Sel telecom basic config, 4.5.6.1, except | | |
| ALL | | S BD (3) - RCV | 9,10,6 | |
| LMP | | S BD MODE PCM - ctr | 3 | |
| | | S BD MODE RNG - OFF | | |
| | | S BD AUX TAPE - DN VOICE BU | | |
| | | S BD ANT OMNI - HI GAIN | | |
| | 3 | HGA | | |
| CMP | | HI GAIN ANT TRACK - MAN | 2 | |
| | | HI GAIN ANT SERVO - PRIM | | |
| | | HI GAIN ANT BEAM - WIDE | | |
| | | HI GAIN ANT PWR - on (up) | | |
| | | HI GAIN ANT PITCH & YAW cont (2) - set in req coords | | MSFN will provide antenna coordinates. |
| | 4.18.17.2 | VHF AM Experiment Operation | | |
| | | The reflected signal from the lunar surface and direct signal from the CSM VHF scimitar antenna will be received by 150-foot Stanford antenna. The CSM attitude will be that which is optimum for S-band experiment. One of two VHF scimitar antennas will be selected to provide favorable reception. This experiment will not be conducted during lunar surface EVA. | | |
| | 1 | CSM att cont, 4.18.15.1, step 1 | | |
| | 2 | Sel telecom basic config, 4.5.6.1, except | | |
| ALL | | VHF AM (3) - RCV | 9,10,6 | |
| LMP | | VHF AM A - off (ctr) | 3 | |
| | | VHF AM B - DUPLEX | | |
| | | VHF RNG - on (up) | | |
| | | VHF ANT - as req | | |

| STA/T STEP | PROCEDURE | PANEL | REMARKS |
|---|---|---|---|
| | 4.19 CAMERA SUPPORT PROCEDURES | | |
| | 4.19.1 HASSELBLAD ELECTRIC CAMERA - 70mm | | |
| CMP 1 | Set up camr for oper | | |
| | Unstow camr, mount bracket, intervalometer, T-cable & associated compnts | | |
| | Intervalometer sw - OFF (verify) | | |
| | Install camr at window position | | |
| | Connect T-cable to pnl & camr | 227 | Connection is for PCM signal only. Camera is powered by self-contained battery. |
| | Connect intervalometer to T-cable | | |
| 2 | Dismantle camr setup | | |
| | At completion of camr oper | | |
| | Intervalometer sw - OFF (verify) | | |
| | Disconnect T-cable at pnl & camr | | |
| | Remove camr, mount bracket, & intervalometer & stow all equipment | | |
| | 4.19.2 DATA ACQUISITION CAMERA - 16mm | | |
| 1 | Set up camr for oper | | |
| | Unstow camr, mount bracket, pwr cable & associated compnts | | |
| | UTIL PWR - OFF (verify) (on pnl selected for pwr source) | 15,16,100 | Power cable may be connected to panel 15, 16, or 100. |
| | Install camr at desired location | | Includes right-angle mirror. |
| | Connect pwr cable to camr & pnl | | |
| | UTIL PWR - on (up) | | |



NORMAL/BACKUP

| STA/T | STEP | PROCEDURE | PANEL | REMARKS |
|---|---|---|---|---|
| CMP | 2 | Dismantle camr setup<br>At completion of camr oper<br>UTIL PWR - OFF<br>Disconnect pwr cable from camr & pnl<br>Remove camr & mount bracket & stow all equipment | 15,16,100 | |

Basic Date 17 July 1970 Change Date Page 5-1

# SECTION 5
# CONTINGENCY PROCEDURES

## INTRODUCTION

Contingency procedures consist of operational and trajectory analysis for situations other than normal that may occur during all mission phases. This will provide the crew with decision-making guidance as to aborting the mission, selecting and implementing an alternate mission, or continuing the mission under degraded conditions. The procedures include the corrective action that must be taken and the limitations that may be imposed. Contingency procedures consist of the following:

- Abort procedures. These procedures may be considered as a specialized form of backup procedures which involve early mission termination.
- Malfunction procedures. These procedures encompass the recognition, diagnosis, and corrective action for system malfunctions.
- Emergency procedures. These procedures are another form of backup procedures where safety of the flight crew requires instant action (other than an abort).



ABORT

## 5.1 ABORT PROCEDURES

During the ascent phase, an abort can be accomplished in an LES, RCS, or SPS mode. An abort in the LES mode is accomplished by utilizing the launch escape system, which has solid propellant motors mounted on a tower above the command module. During a normal mission, the launch escape tower is jettisoned approximately 36 seconds after second-stage booster ignition. After launch escape tower jettison, an abort can be accomplished in the RCS or SPS mode by utilizing the SM RCS to attain a safe separation distance from the SIVB. The SPS engine is then used, as needed, to correct trajectory for the desired landing site, or insert the CSM into earth orbit.

### 5.1.1 LES ABORT MODES

An abort may be initiated automatically by the emergency detection system (EDS) when two L/V engines fail, L/V excessive rates detected, breakup between IU and CM, or manually when the commander's translation control is rotated to the full CCW position. Upon receipt of an abort signal, regardless of its source, the booster is cut off (if after T +30 seconds), the CM is separated from the SM, and simultaneous ignition of the launch escape and pitch control motors takes place. Firing of the pitch control motor is inhibited 42 seconds after lift-off. Cutoff of the booster engines is inhibited for the first 30 seconds after lift-off by circuitry in IU because of range safety restrictions. The LES motors provide thrust to propel the command module away from the launch pad or trajectory of the launch vehicle.

Certain events that occur during an abort are controlled automatically by controllers in the sequential events control system (SECS). The earth landing sequence controller (ELSC) contains high-altitude and low-altitude baroswitches. The opening of these baroswitches inhibit ELS operations and the closing initiates the operations. The high-altitude baroswitch controls automatic LES tower jettison, apex cover jettison, and drogue parachute mortar fire. The high-altitude baroswitch is designed to open at 38,500 feet and close at 24,000 feet. Because of venting lag, the high-altitude baroswitch will not open until 40,500 feet during ascent. On an abort initiated under 30,000 feet (low part of abort mode I-B), the 24K feet baroswitch will remain closed and allow automatic LES tower jettison, apex cover jettison, and drogue parachute and main parachute

deployment on a timed sequence controlled by time-delay relays. On an abort initiated between 30,000 feet and 3 minutes 18 seconds, automatic LES tower jettison, apex cover jettison, and drogue parachute deployment are delayed until the command module descends to the closing altitude of the high-altitude baroswitch (24,900 to 21,500 feet).

The low-altitude (10K') baroswitch is closed at 10,000 feet, open at 18,000 feet. Opening of the low-altitude baroswitch will delay automatic deployment of the pilot-main parachutes until the command module descends to the closing altitude (10,950 to 9100 feet).

The LES abort is divided into three different modes as follows:

- Mode 1-A (launch pad to 42 seconds)
- Mode 1-B (42 seconds to 1 minute 56 seconds)
- Mode 1-C (1 minute 56 seconds to LES tower jettison)

During a Mode 1-A abort, CM RCS oxidizer automatically dumps overboard through a hole in the aft heat shield. CM RCS fuel automatically dumps overboard through another hole in the aft heat shield 5 seconds after oxidizer dump started, and requires about 11 seconds for depletion. CM RCS helium automatically begins purging the system 13 seconds after fuel dump started.

During a Mode 1-B or Mode 1-C abort after the main parachutes disreef, manual initiation fires 10 CM RCS jets to expend all propellant, followed by manually initiated helium expenditure through the jets to purge the system.

The two engines out, LV rates, and auto abort capability is switched off prior to S-1C/S-II staging, and the crew must be ready to manually initiate an abort if these conditions arise. During a Mode 1-C abort (over 100K'), it is possible to jettison the LET and accomplish a normal entry provided certain conditions prevail. There must be sufficient TFF (100 sec) to perform the entry maneuver, a reliable attitude reference, and launch escape vehicle (LEV) rates must be within tolerance. If any of these conditions are not met, the LET must be retained to ensure capture of

the LEV with the heat shield oriented forward. The altitude and velocity of the LEV is such that a possibility exists that it could enter the atmosphere canard and escape tower forward. The LEV would remain in this condition until descending below 100,000 feet and Mach 3.8. At this time a fast turnaround would occur which would be detrimental to crew safety. The crew will prevent canard forward capture by manual intervention shortly after abort initiation. A positive pitch rate of over 5° per second will be commanded and maintained until the canard starts trailing the CM upon descending to an altitude under 100,000 feet. Escape tower jettison and ELS activation will automatically occur at approximately 24,000 ft provided that the ELS AUTO sw is in the AUTO position.

The ELS decelerates the CM to a safe touchdown speed. Crew couch attenuators reduce the touchdown impact and start operating at approximately 15 G when they are unlocked. If they are not unlocked, a pin will shear in the lock at approximately 21 G and allow them to operate.

| STA/T | STEP | PROCEDURE | PANEL | REMARKS |
|---|---|---|---|---|
| | | 5.1.1.1 Mode 1A LES Abort (00:00 - 00:42) | | |
| CDR | 1 | Abort initiation | X | If manual backup required for any auto event after abort initiation it must be performed after LE motor burnout (abort T +00:05) because of high G environment during LE motor burn. |
| | | auto or man | X | |
| | | THC - CCW | X | |
| | | | X | |
| | | | X | |
| | | XXXXXXXXXXXXXXXXXXXXXXXXX | | |
| | | X | | |
| CMP | | X CM/SM SEP (both) - on | X | Guarded. On position is momentary. If abort is initiated with CM/SM SEP switches, subsequent events may require manual initiation and must be performed after LE motor burnout. |
| | | X (up) | X | |
| | | X | | |
| | | XXXXXXXXXXXXXXXXXXXXXXXXX | | |
| | | | X | |
| | | BECO (auto after | X | Request grd |
| | | T +00:30) | X | cmd BECO |
| | | | X | |
| 00:00 | | Evnt Tmr rset & | X | |
| | | counting up (auto) | X | |
| | | | X | |
| | | CM/SM deadface (auto) | X | |
| | | | X | |
| | | SM C/W lts - on | X | Because of switching transients, AC BUS 1 and 2 C/W lights will go on and MN BUS A and MN BUS B UV lights might go on if abort initiated prior to T -01:00. |
| | | | X | |
| | | | X | |
| | | | X | |
| | | MASTER ALARM pb/lt - | X | |
| | | on | X | |



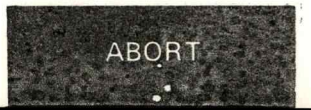

| STA/T STEP | PROCEDURE | PANEL | REMARKS |
|---|---|---|---|
| CDR | CM RCS press (auto) | X | MN BUS TIE switches set to AUTO by T -30:00 and then to ON at T -01:00. DC main buses must be energized to provide power for RCS transfer, propellant dump, and purge. |
| | RCS cont trnfr (auto) | X | |
| | Entry bats to mn buses (auto if abort init prior to T -01:00) | X | |
| | CM RCS oxid dump (auto) | X | |
| | CM RCS isolation vlvs close (auto) | X | |
| 00:00.1 | CM/SM sep (auto) | X | |
| | LE & PC mot fire (auto) | X | |
| 00:01.8 | CM/SM sep pyro deadface (auto) | X | |
| 00:05 | CM RCS fuel dump (auto) | X | |
| | XXXXXXXXXXXXXXXXXXXXXXXXXX | X | |
| | If abort init with CM/SM SEP (both) or BU req for any auto evnt | X | |

LES ABORT MODE IA

| STA/T | STEP | PROCEDURE | PANEL | REMARKS |
|---|---|---|---|---|
| CDR | X | EVNT TMR RSET - RSET | | RSET position is momentary. |
| | X | | | |
| | X | EVNT TMR START - START | | START position is momentary. |
| | X | | | |
| CMP | X | CM RCS PRESS - on (up) | | Guarded. On position is momentary. |
| | X | | | |
| | X | RCS TRNFR - CM | | CM position is momentary. |
| | X | | | |
| LMP | X | MN BUS TIE (2) - on (up) | | |
| | X | | | |
| CMP | X | Verify PRPLNT DUMP - | | |
| | X | AUTO | | |
| | X | | | |
| | X | CM RCS PRPLNT (both) - OFF | | OFF position is momentary. |
| | X | | | |
| CDR | X | LES MOT FIRE pb - push | | Guarded. Pitch control motor will not fire if LES MOT FIRE pushbutton used as backup 1.8 sec after abort initiation. |
| | X | | | |
| | XXXXXXXXXXXXXXXXXXXXXXXXXX | | X | |
| 00:11 | | Canard deploy (auto) | X | No BU req |
| | | | X | on Mode 1A |
| | | | X | |
| | | | X | |
| | | | X | |
| | | | X | |
| CMP | 2 | C/W CSM - CM | X | Extinguishes all SM C/W lights and enables CM RCS C/W lights. |
| | | | X | |
| | 3 | MASTER ALARM pb/lt - | X | |
| | | push | X | |

5.1.1.1 LES ABORT MODE IA

ABORT

| STA/T | STEP | PROCEDURE | PANEL | REMARKS |
|---|---|---|---|---|
| CDR | | | X | |
| 00:14 | | ELS logic arm (auto) | X | |
| | | | X | |
| | 4 | ELS LOGIC - on (up) | X | Guarded. |
| | | | X | |
| | | LES TWR jett (auto) | X | |
| | | | X | |
| CMP | | a. Docking ring sep | X CSM/LM FNL SEP | Guarded. On position is momentary. |
| | | | X (both) - on (up) | |
| | | | X | |
| | | b. TWR attach nuts detonate | X TWR JETT | Guarded. On position is momentary. |
| | | | X (both) - on (up) | |
| | | | X | |
| | | c. SCS RCS disable | X RCS CMD - OFF | OFF position is momentary. |
| | | | X | |
| | | d. TWR jett mot fire | X | |
| | | | X | |
| CDR | | | X | |
| 00:14.4 | | Apex cover jett (auto) | X APEX COVER JETT | Guarded. |
| | | | X pb - push | |
| | | | X | |
| 00:16 | | Drogue chutes deploy (auto) | X DROG DPLY pb - | Guarded. |
| | | | X push (2 sec | |
| | | | X after apex cover | |
| | | | X jett) | |
| | | WARNING | X | |
| | | | X | |
| | | Below alidade marker on altimeter, MN DPLY pb - push | X Altitude = 0.4 NM | |
| | | | X | |
| | | | X | |

LES ABORT MODE IA

| STA/T | STEP | PROCEDURE | PANEL | REMARKS |
|---|---|---|---|---|
| CDR | | | X | |
| 00:18 | | CM RCS helium purge (auto) | X CM RCS He DUMP pb - push | Guarded. |
| | | | X CM PRPLNT DUMP - on (up) | Guarded. CM PRPLNT DUMP and PURG switches provided alternate means of initiating He dump. |
| | | | X CM PRPLNT PURG - on (up) | Guarded. |
| ≥10K' | | Main chutes & VHF recovery ant deploy (auto) | X | Main parachutes disreef in ≈15 seconds. |
| | 5 | MN DPLY pb - push (within 1 sec) | X | Guarded. MN DPLY pushbutton should be pushed within 1 second after pilot chute mortars fire to ensure simultaneous deployment of main parachutes. |
| LMP | 6 | Set up entry comm | X | |
| | | VHF ANT - RECY | X | |
| | | VHF AM A - SIMPLEX | X | If VHF AM B SIMPLEX or VHF AM A DUPLEX required, turn off beacon during period of communication. |
| | | VHF BCN - ON | X | |
| CDR | | Xmit voice (VHF AM) reporting | X | Continue voice transmission until touchdown. |
| | | Position | X | |
| | | Mn chutes disreefed | X | |
| | | Splash err | X | |
| | | Crew status | X | |
| CMP | 7 | Crew couch struts (4) - unlock | X | |



5.1.1.1 LES ABORT MODE IA

| STA/T | STEP | PROCEDURE | PANEL | REMARKS |
|---|---|---|---|---|
| LMP | 8 | cb FLT/PL BAT BUS A, B & BAT C (3) - close | X X X X | Connects battery bus A, B, and battery C to flight and postlanding bus. |
| | 9 | cb FLT/PL MNA - open | X X | |
| | 10 | cb FLT/PL MNB - open | X X | |
| | 11 | cb RAD HTRS OVLD (2) - open | X X X | |
| CDR | 12 | cb SPS PITCH (2) - open | X X | |
| | 13 | cb SPS YAW (2) - open | X X | |
| 3K' | 14 | rh CAB PRESS RELF vlv - DUMP (safety latch off) | X X X X | Assures minimum cabin-to-ambient negative ΔP for landing impact. |
| CDR | 15 | FLOOD FIXED - POST LDG | X X X X | Provides power from flight and postlanding bus to one floodlight in LH couch area and one floodlight in center couch area. |
| | 16 | FLOOD DIM - 1 or 2 | X X X X X | Position 1 provides power to two secondary floodlights, and position 2 provides power to two primary floodlights when FLOOD FIXED switch is in POST LDG position and dc main buses are deactivated. |
| CMP | 17 | Verify RCS IND sel - CM 1 | X X | Provides means of monitoring He pressure. |



LES ABORT MODE IA

| STA/T | STEP | PROCEDURE | PANEL | REMARKS |
|---|---|---|---|---|
| CDR | | | X | |
| 800' | 18 | CAB PRESS RELF vlv (2) - | X | Valves must be closed prior to touchdown to prevent water from entering CM. |
| | | CLOSE (safety latch | X | |
| | | off) | X | |
| | | | X | |
| | 19 | ELS LOGIC - on (up) | X | |
| | | (verify) | X | |
| | | | X | |
| CMP | 20 | CM RCS PRPLNT (both) - | X | OFF position is momentary. |
| | | OFF | X | |
| | | CM RCS PRPLNT tb | X | Barber pole indicates at least one valve closed in each system. |
| | | (both) - bp | X | |
| | | | X | |
| CDR | 21 | DIRECT O2 vlv - OPEN | X | |
| | | (CCW) | X | |
| | | | X | |
| LMP | 22 | MN BUS TIE (2) - OFF | X | Removes battery power from dc main buses. |
| | | | X | |
| | | CAUTION | X | |
| | | | X | |
| | | Sw must be left in OFF | X | |
| | | position to ensure that | X | |
| | | bats A, B & C are used | X | |
| | | to pwr postlanding sys | X | |
| | | only, & to prevent bat | X | |
| | | shorting caused by | X | |
| | | water entering CM feed- | X | |
| | | thru conn. | X | |



ABORT

| STA/T | STEP | PROCEDURE | PANEL | REMARKS |
|---|---|---|---|---|
| LMP | 23 | cb BAT RLY BUS (2) - open | X<br>X<br>X | |
| | 24 | Postlanding check, 4.17 | X | |

| STA/T | STEP | PROCEDURE | PANEL | REMARKS |
|---|---|---|---|---|
| | | 5.1.1.2 Mode 1B LES Abort (00:42 - 01:56) | | |
| CDR | 1 | Abort initiation | X | If manual backup required for any auto event after abort initiation, it must be performed after LE motor burnout (abort T +00:05) because of high G environment during LE motor burn. |
| | | auto or man | X | |
| | | THC - CCW | X | |
| | | | X | |
| | | XXXXXXXXXXXXXXXXXXXXXXXXXX | | |
| | | X | | |
| CMP | | X CM/SM SEP (both) - on | X | Guarded. On position is momentary. If abort initiated with CM/SM SEP switches, subsequent events may require manual initiation and must be performed after LE motor burnout. |
| | | X (up) | X | |
| | | X | | |
| | | XXXXXXXXXXXXXXXXXXXXXXXXXX | | |
| | | | X | |
| | | BECO (auto) | X | Request grd cmd BECO |
| | | | X | |
| | | | X | |
| 00:00 | | Evnt Tmr rset & | X | |
| | | counting up (auto) | X | |
| | | | X | |
| | | CM/SM deadface (auto) | X | |
| | | | X | |
| | | SM C/W lts - on | X | |
| | | | X | |
| LMP | | MASTER ALARM pb/lt - | X | |
| | | on | X | |
| | | | X | |
| CDR | | CM RCS press | X | |
| | | (auto) | X | |

| STA/T | STEP | PROCEDURE | PANEL | REMARKS |
|---|---|---|---|---|
| CDR | | RCS cont trnfr (auto) | X | |
| | | | X | |
| | 00:00.1 | CM/SM sep (auto) | X | |
| | | | X | |
| | | LE motor fire (auto) | X | |
| | | | X | |
| | 00:01 | SCS/RCS enbl (auto) | X | |
| | | | X | |
| | 00:01.8 | CM/SM sep pyro dead-face (auto) | X | |
| | | | X | |
| | | | X | |
| | | XXXXXXXXXXXXXXXXXXXXXXXXXX | | |
| | | X | | |
| | 00:05 | X If abort init with | | |
| | | X CM/SM SEP (both) or | | |
| | | X BU req for any auto | | |
| | | X evnt | | |
| | | X | | |
| | | X EVNT TMR RSET - RSET | | RSET position is momentary. |
| | | X | | |
| | | X EVNT TMR START - START | | START position is momentary. |
| | | X | | |
| CMP | | X CM RCS PRESS - on (up) | | Guarded. On position is momentary. |
| | | X | | |
| | | X RCS TRNFR - CM | | CM position is momentary. |
| | | X | | |
| CDR | | X LES MOT FIRE pb - push | | Guarded. |
| | | X | | |
| CMP | | X RCS CMD - ON | | ON position is momentary. |
| | | X | | |
| | | XXXXXXXXXXXXXXXXXXXXXXXXXX | | |

LES ABORT MODE IB

| STA/T | STEP | PROCEDURE | PANEL | REMARKS |
|---|---|---|---|---|
| CDR | | | X | |
| 00:11 | | Canard deploy (auto) | X CNRD DPLY pb - push | Guarded. |
| | | | X | |
| CMP | 2 | C/W CSM - CM | X | Extinguishes all SM C/W lights and enables CM RCS lights. |
| | | | X | |
| | | | X | |
| | | | X | |
| LMP | 3 | MASTER ALARM pb/lt - push | X | |
| | | | X | |
| | | | X | |
| CDR | | | X | |
| 00:14 | | ELS logic arm (auto) | X ELS LOGIC - on (up) | Guarded. |
| | | | X | |
| 24K' | | LES TWR jett (auto) | X | |
| | | | X | |
| CMP | | a. Docking ring sep | X CSM/LM FNL SEP | Guarded. On position is momentary. |
| | | | X (both) - on (up) | |
| | | | X | |
| | | b. TWR attach nuts detonate | X TWR JETT | Guarded. On position is momentary. |
| | | | X (both) - on (up) | |
| | | | X | |
| | | c. SCS RCS disable | X RCS CMD - OFF | OFF position is momentary. |
| | | | X | |
| | | d. TWR jett mot fire | X | |
| | | | X | |
| CDR | | Apex cover jett (auto) | X APEX COVER JETT | Guarded. |
| | | | X pb - push | |
| | | | X | |
| | | Drogue chutes deploy (auto) | X DROG DPLY pb - push | Guarded. |
| | | | X (2 sec after | |
| | | | X apex cover jett) | |

5.1.1.2

LES ABORT MODE IB

ABORT

| STA/T | STEP | PROCEDURE | PANEL | REMARKS |
|---|---|---|---|---|
| CDR | | | X | |
| 23.5K' | 4 | Mon CAB PRESS ind - starts incr | X If not incr by 17K' rh CAB PRESS RELF vlv - DUMP (safety latch off) | No increase indicates cabin pressure relief valve failure. |
| CMP | | | X If still no incr CAB PRESS DUMP vlv - open (CCW) | |
| 10K' | | Mn chutes & VHF recovery ant deploy (auto) | | Auto deployment occurs between 10,950 feet and 9,100 feet. Parachutes disreef in ≈15 seconds. |
| CDR | 5 | MN DPLY pb - push (within 1 sec) | | Guarded. MN DPLY pushbutton should be pushed within one second after pilot chute mortars fire to ensure simultaneous deployment of main parachutes. |
| | | CAUTION | | |
| | | CM PRPLNT DUMP should be init immediately after mn chute disreefing. If mn or pyro bus lost, use RHCs for burn, not CM PRPLNT DUMP sw. | | |
| | 6 | CAB PRESS RELF vlv (2) - CLOSE (safety latch off) | | |
| CMP | | | X If CAB PRESS DUMP vlv used to equalize ΔP, CAB PRESS DUMP vlv - close (CW) | |

| STA/T | STEP | PROCEDURE | PANEL | REMARKS |
|---|---|---|---|---|
| CDR | 7 | CM PRPLNT DUMP - on (up) (dump burn is audible) | X X X | Guarded. |
| CMP | 8 | RCS IND sel - CM 1<br>CM RCS He PRESS ind - decr | X X X X X X X X | RCS IND sel - CM 2<br>CM RCS He PRESS ind - decr<br>If not decr or RCS jets not firing |
| CDR,CMP | | | X X X X X X X X X | RHC (both) - Fire all RCS jets (except plus pitch) until prplnts are depleted<br>One RHC positioned to command plus yaw and roll (excluding plus pitch) and other RHC positioned to command minus yaw, pitch and roll. |
| LMP | 9 | Set up entry comm<br>VHF ANT - RECY<br>VHF AM A - SIMPLEX<br>VHF BCN - ON | X X X X X | If VHF AM B SIMPLEX or VHF AM A DUPLEX required, turn off beacon during period of communication. |
| CDR | | Xmit voice<br>(VHF AM) reporting<br>Position<br>Mn chutes disreefed<br>Splash err<br>Crew status | X X X X X X X | Continue voice transmission until touchdown. |



ABORT

| STA/T | STEP | PROCEDURE | PANEL | REMARKS |
|---|---|---|---|---|
| CMP | 10 | Crew couch struts (4) - unlock | X | |
| | 11 | Grd track determination | X | |
| | | a. Key V37E 21E | X | |
| | | b. FL V04 N06 | X | |
| | | Option code 00002 | X | |
| | | CMC assumed option 0000X | X | |
| | | Verify R2 = 00001 PRO | X | |
| | | c. FL V06 N34 | X | Initial display will contain zeros (present time). If not changed by astronaut, calculations will be based on present time. |
| | | GET Lat Long | X | |
| | | 00XXX. HRS | X | |
| | | 000XX. MIN | X | |
| | | 0XX.XX SEC | X | |
| | | Accept PRO | X | |
| | | Reject Key V25E | X | |
| | | Load desired GET Lat Long | X | |



LES ABORT MODE IB

| STA/T | STEP | PROCEDURE | PANEL | REMARKS |
|---|---|---|---|---|
| CMP | d. | FL V06 N43<br>Lat (+N)<br>XXX.XX DEG<br>Long (+E)<br>XXX.XX DEG<br>Alt XXXX.X NM | | Altitude above launch pad radius. At this point, altitude/10, VI, and gamma available by keying N73E. |
| | 12 | When prplnt dump burn completed | | Both CM RCS LOGIC and CM PRPLNT DUMP switches must be on to power CM PRPLNT PURG switch. |
| CDR | | CM PRPLNT PURG - on (up) (purge is audible) | CM RCS He DUMP pb - push | Guarded. CM RCS He DUMP pb should be used to initiate purge following normal dump operation if CM PRPLNT PURG switch fails to initiate purge. Visual fire from RCS engine nozzle extension surfaces after burn to depletion and during purge, is expected and normal. |
| CDR,CMP | | | If RHC (both) used for prplnt dump burn<br>RHC (both) - Fire all jets (except plus pitch) | One RHC positioned to command plus yaw and roll (excluding plus pitch) and other RHC positioned to command minus yaw, pitch and roll. |
| | 13 | CAB PRESS RELF vlv (2) - BOOST/ENTR (safety latch off) | If CAB PRESS DUMP vlv used to equalize ΔP, CAB PRESS DUMP vlv - open (CCW) | |
| LMP | 14 | cb FLT/PL BAT BUS A, B & BAT C (3) - close | | Connects battery bus A, B, and battery C to flight and postlanding bus. |

| STA/T | STEP | PROCEDURE | PANEL | REMARKS |
|---|---|---|---|---|
| LMP | 15 | cb FLT/PL MNA - open | X<br>X | |
| | 16 | cb FLT/PL MNB - open | X<br>X | |
| | 17 | cb RAD HTRS OVLD (2) - open | X<br>X<br>X | |
| CDR | 18 | cb SPS PITCH (2) - open | X<br>X | |
| | 19 | cb SPS YAW (2) - open | X<br>X | |
| 3K' | 20 | rh CAB PRESS RELF vlv - DUMP (safety latch off) | X<br>X<br>X<br>X | Ensures minimum cabin-to-ambient negative ΔP for landing impact. |
| | 21 | FLOOD FIXED - POST LDG | X<br>X<br>X<br>X | Provides power from flight and postlanding bus to one floodlight in LH couch area and one floodlight in center couch area. |
| | 22 | FLOOD DIM - 1 or 2 | X<br>X<br>X<br>X<br>X | Position 1 provides power to two secondary floodlights and position 2 provides power to two primary floodlights when FLOOD FIXED switch in POST LDG position after dc main buses deactivated. |
| 800' CMP | 23 | CAB PRESS RELF vlv (2) - CLOSE (safety latch off) | X<br>X<br>X<br>X<br>X | If CAB PRESS DUMP vlv used to equalize ΔP, CAB PRESS DUMP vlv - close (CW) |

Valves must be closed prior to touchdown to prevent water from entering CM.

LES ABORT MODE IB

| STA/T | STEP | PROCEDURE | PANEL | REMARKS |
|---|---|---|---|---|
| CDR | 24 | ELS LOGIC - on (up) (verify) | X X X | Guarded. |
| CMP | 25 | CM RCS PRPLNT (both) - OFF<br>CM RCS PRPLNT tb (both) - bp | X X X X X | Barber pole indicates at least one valve closed in each system. |
| CDR | 26 | DIRECT 02 vlv - OPEN (CCW) | X X X | |
| LMP | 27 | MN BUS TIE (2) - OFF | X X | Removes battery power from dc main buses. |
| | | CAUTION<br>MN BUS TIE sw must be left in OFF position to ensure that bats A, B, & C are used to pwr postlanding sys only, & to prevent bat shorting caused by water entering CM feed-thru conn | X X X X X X X X X X X X X | |
| | 28 | cb BAT RLY BUS (2) - open | X X X | |
| | 29 | Postlanding check, 4.17 | X | |



ABORT

| STA/T | STEP | PROCEDURE | PANEL | REMARKS |
|---|---|---|---|---|
| | | 5.1.1.3 Mode 1C LES Abort (01:56 - 03:18) | | |
| CDR | 1 | Abort initiation | X | If manual backup required for any auto event after abort initiation it must be performed after LE motor burnout (abort T +00:05) because of the high G environment during LE motor burn. |
| | | auto or man | X | |
| | | THC - CCW | X | |
| | | | X | |
| | | | X | |
| | | XXXXXXXXXXXXXXXXXXXXXXXXXX | | |
| | | X | | |
| CMP | | X CM/SM SEP (both) - on | > | Guarded. On position is momentary. If abort is initiated with CM/SM SEP switches, subsequent events may require manual initiation and must be performed after LE motor burnout. |
| | | X (up) | | |
| | | X | | |
| | | XXXXXXXXXXXXXXXXXXXXXXXXXX | | |
| | | | X | |
| | | BECO (auto) | X | Request grd |
| | | | X | cmd BECO |
| | | | X | |
| 00:00 | | Evnt Tmr rset & | X> | |
| | | counting up (auto) | X | |
| | | | X | |
| | | CM/SM deadface (auto) | X | |
| | | | X | |
| | | SM C/W lts - on | X | |
| | | | X | |
| LMP | | MASTER ALARM pb/lt - | X | |
| | | on | X | |
| | | | X | |
| CDR | | CM RCS press | X> | |
| | | (auto) | X | |

LES ABORT MODE IC

| STA/T | STEP | PROCEDURE | PANEL | REMARKS |
|---|---|---|---|---|
| CDR | | RCS cont trnfr (auto) | X> | |
| | | | X | |
| 00:00.1 | | CM/SM sep (auto) | X | |
| | | | X | |
| | | LE mot fire (auto) | X> | |
| | | | X | |
| 00:01 | | SCS/RCS enbl (auto) | X> | |
| | | | X | |
| 00:01.8 | | CM/SM sep pyro dead- | X | |
| | | face (auto) | X | |
| | | | X | |
| 00:05 | | XXXXXXXXXXXXXXXXXXXXXXXXX | X | |
| | | X | | |
| | | X If abort init with CM/ | ◄ | |
| | | X SM SEP (both) or BU | | |
| | | X req for any auto | | |
| | | X evnt | | |
| | | X | | |
| 00:00 | | X EVNT TMR RSET - RSET | | RSET position is momentary. |
| | | X | | |
| | | X EVNT TMR START - START | | START position is momentary. |
| | | X | | |
| CMP | | X CM RCS PRESS - on (up) | | Guarded. On position is momentary. |
| | | X | | |
| | | X RCS TRNFR - CM | | CM position is momentary. |
| | | X | | |
| CDR | | X LES MOT FIRE pb - push | | Guarded. |



5.1.1.3 LES ABORT MODE IC

| STA/T | STEP | PROCEDURE | PANEL | REMARKS |
|---|---|---|---|---|
| CMP | | X RCS CMD - ON<br>X<br>XXXXXXXXXXXXXXXXXXXXXXXXXX | | ON position is momentary. |
| CDR | | | X | |
| 00:11 | | Canard deploy (auto) | X CNRD DPLY pb - push<br>X | Guarded. |
| CMP | 2 | C/W CSM - CM | X | Extinguishes all SM C/W lights and enables CM RCS lights. |
| LMP | 3 | MASTER ALARM pb/lt - push | X | |
| CMP | 4 | Mon LEV stat<br>GMBL LOCK lt - out<br>Abort apogee >30 NM<br>IMU gmbl lock can be avoided during man con<br>FDAIs agree<br><br>If all above conditions met, go to 5; otherwise go to 18 | X<br>X<br>X<br>X<br>X<br>X<br><br>X<br>X<br>X<br>X | |
| | 5 | TWR JETT (both) - on (up) | X<br>X | Guarded. On position is momentary. |
| | | a. Docking ring sep | X CSM/LM FNL SEP<br>X (both) - on (up) | Guarded. On position is momentary. |

| STA/T | STEP | PROCEDURE | PANEL | REMARKS |
|---|---|---|---|---|
| CMP | | b. TWR attach nuts | X | |
| | | detonate | X | |
| | | | X | |
| | | c. TWR jett mot fire | X | |
| | | | X | |
| CDR | 6 | Damp rates | X | |
| | | | X | |
| | 7 | Mnvr to entry att | X | |
| | | R 0°, P 135°, Y 0° | X | |
| | | | X | |
| | 8 | BMAG MODE (3) - ATT 1/ | X | |
| | | RATE 2 | X | |
| | | | X | |
| | 9 | ATT DBD - MAX | X | |
| | | | X | |
| | 10 | Set up for CM RCS sys 1 | X | |
| | | AUTO RCS CM 1 | X | |
| | | (6) - MNA/MNB | X | |
| | | | X | |
| | | AUTO RCS CM 2 | X | |
| | | (6) - OFF | X | |
| | | | X | |
| | 11 | BMAG MODE (3) - RATE 2 | X | Prevents FDAI roll bug jump. |
| | | | X | |
| | 12 | EMS FUNC - ENTRY | X | |
| | | | X | |
| | 13 | EMS MODE - NORM | X | |
| | | | X | |
| | 14 | When .05 G lt - on | X | |
| | | .05 G sw - on | X | |



5.1.1.3 LES ABORT MODE IC

| STA/T | STEP | PROCEDURE | PANEL | REMARKS |
|---|---|---|---|---|
| CDR | 15 | EMS ROLL - on (up) | X<br>X | |
| | 16 | Maintain full lift | X<br>X | |
| 50K' | 17 | Proceed to Earth Ldg Phase, 4.16 | X<br>X | |
| | | (LET descent from step 4) | | |
| | 18 | Establish & maintain min 5 to 10°/sec + pitch rate with RHC | X<br>X<br>X<br>X<br>X | Pitchup rate of at least 5°/second should be maintained until canard and LET begin trailing CM upon descending below entry interface. SCS ATT mode is rate command in all three axes at this time and RHC maximum command is 7°/second. |
| CMP<br>24K' | | LES TWR jett (auto) | X<br>X | |
| | | a. Docking ring sep | X CSM/LM FNL SEP<br>X (both) - on (up)<br>X | Guarded. On position is momentary. |
| | | b. TWR attach nuts detonate | X TWR JETT<br>X (both) - on (up)<br>X | Guarded. On position is momentary. |
| | | c. SCS RCS disable | X RCS CMD - OFF<br>X | OFF position is momentary. |
| | | d. TWR jett mot fire | X<br>X | |
| CDR | | Apex cover jett (auto) | X APEX COVER JETT<br>X pb - push<br>X | Guarded. |
| | | Drogue chutes deploy (auto) | X DROG DPLY pb -<br>X push (2 sec after<br>X apex cover jett) | Guarded. |

| STA/T | STEP | PROCEDURE | PANEL | REMARKS |
|---|---|---|---|---|
| 23.5K' | | | X | |
| CDR | 19 | Mon CAB PRESS ind - starts incr | X If not incr by 17K' rh CAB PRESS RELF vlv - DUMP (safety latch off) | No increase indicates cabin pressure relief valve failure. |
| CMP | | | X If still no incr CAB PRESS DUMP vlv - open (CCW) | |
| 10K' | | Mn chutes & VHF recovery ant deploy (auto) | X | Auto deployment occurs between 10,950 feet and 9,100 feet. Parachutes disreef in ≈15 seconds. |
| CDR | 20 | MN DPLY pb - push (within 1 sec) | X | MN DPLY pushbutton should be pushed within one second after pilot chute mortars fire to ensure simultaneous deployment of main parachutes. |
| | | CAUTION<br>CM PRPLNT DUMP should be init immediately after mn chute disreefing. If mn or pyro bus lost, use RHCs for burn, not CM PRPLNT DUMP sw. | X | |
| CMP | 21 | CAB PRESS RELF vlv (2) - CLOSE (safety latch off) | X If CAB PRESS DUMP vlv used to equalize ΔP, CAB PRESS DUMP vlv - close (CW) | |

| STA/T | STEP | PROCEDURE | PANEL | | REMARKS |
|---|---|---|---|---|---|
| CDR | 22 | CM PRPLNT DUMP - on (up) | X | | Guarded. |
| | | (dump burn is audible) | X | | |
| | | | X | | |
| CMP | 23 | RCS IND sel - CM 1 | X | RCS IND sel - CM 2 | |
| | | CM RCS He PRESS ind - | X | CM RCS He PRESS | |
| | | decr | X | ind - decr | |
| | | | X | If not decr or | |
| | | | X | RCS jets not | |
| | | | X | firing | |
| CDR,CMP | | | X | RHC (both) - | One RHC positioned to command plus yaw and roll |
| | | | X | Fire all RCS | (excluding plus pitch) and other RHC positioned |
| | | | X | jets (except | to command minus yaw, pitch, and roll. |
| | | | X | plus pitch) | |
| | | | X | until prplnt | |
| | | | X | are depleted | |
| LMP | 24 | Set up entry comm | X | | |
| | | VHF ANT - RECY | X | | |
| | | VHF AM A - SIMPLEX | X | | If VHF AM B SIMPLEX or VHF AM A DUPLEX required, |
| | | VHF BCN - ON | X | | turn off beacon during period of communication. |
| | | | X | | |
| CDR | | XMIT voice (VHF) | X | | Continue voice transmission until touchdown. |
| | | AM) reporting | X | | |
| | | Pos | X | | |
| | | Mn chute | X | | |
| | | disreefed | X | | |
| | | Splash err | X | | |
| | | Crew stat | X | | |
| | | | X | | |
| CMP | 25 | Crew couch struts (4) - | X | | |
| | | unlock | X | | |

| STA/T | STEP | PROCEDURE | PANEL | REMARKS |
|---|---|---|---|---|
| | 26 | Grd track determination | X<br>X<br>X | |
| CMP | | a. Key V37E 21E | X<br>X | |
| | | b. FL V04 N06 | X | |
| | | Option code 00002 | X | |
| | | CMC assumed option | X | |
| | | 0000X | X | Initially set to 00001 (this vehicle). |
| | | Verify | X | |
| | | R2 = 00001 | X | |
| | | PRO | X<br>X | |
| | | c. FL V06 N34 | X | Initial display will contain zeros (present time). |
| | | GET Lat Long | X | If not changed by astronaut, calculations will be |
| | | 00XXX. HRS | X | based on present time. |
| | | 000XX. MIN | X | |
| | | 0XX.XX SEC | X<br>X | |
| | | Accept PRO | X | |
| | | Reject Key V25E | X | |
| | | Load | X | |
| | | desired | X | |
| | | GET Lat | X | |
| | | Long | X<br>X | |
| | | d. FL V06 N43 | X | |
| | | Lat (+N) | X | |
| | | XXX.XX DEG | X | |
| | | Long (+E) | X | |
| | | XXX.XX DEG | X | |
| | | Alt XXXX.X NM | X<br>X<br>X | Altitude is above launch pad radius. At this point, altitude/10, VI, and gamma is available by keying N73E. |

5.1.1.3 LES ABORT MODE IC

ABORT

| STA/T | STEP | PROCEDURE | | PANEL | REMARKS |
|---|---|---|---|---|---|
| | 27 | When prplnt dump burn complete | X<br>X | | |
| CDR | | CM PRPLNT PURG - on (up) (purge is audible) | X<br>X<br>X | | Both CM RCS LOGIC and CM PRPLNT DUMP switches must be on to power CM PRPLNT PURG switch. |
| | | | X<br>X | CM RCS He DUMP pb - push | Guarded pushbutton. CM RCS He DUMP pushbutton should be used to initiate purge following normal dump operation if CM PRPLNT PURG switch fails to initiate purge. Visual fire from RCS engine nozzle extension surfaces, after burn to depletion and during purge, expected and normal. |
| CDR,CMP | | | X<br>X<br>X<br>X | If RHC (both) used for prplnt dump burn | |
| | | | X<br>X<br>X<br>X | RHC (both) - Fire all jets (except plus pitch) | One RHC positioned to command plus yaw and roll (excluding plus pitch) and other RHC positioned to command minus yaw, pitch, and roll. |
| | 28 | CAB PRESS RELF vlv (2) - BOOST/ENTR (safety latch off) | X<br>X<br>X<br>X<br>X<br>X | If CAB PRESS DUMP vlv used to equalize ΔP, CAB PRESS DUMP vlv - open (CCW) | |
| LMP | 29 | cb FLT/PL BAT BUS A, B & BAT C (3) - close | X<br>X<br>X | | Connects battery bus A, B, and battery C to flight and postlanding bus. |
| | 30 | cb FLT/PL MNA - open | X<br>X | | |
| | 31 | cb FLT/PL MNB - open | X<br>X | | |
| | 32 | cb RAD HTRS OVLD (2) - open | X<br>X | | |

| STA/T | STEP | PROCEDURE | PANEL | REMARKS |
|---|---|---|---|---|
| CDR | 33 | cb SPS PITCH (2) - open | X | |
| | | | X | |
| | 34 | cb SPS YAW (2) - open | X | |
| | | | X | |
| 3K' | 35 | rh CAB PRESS RELF vlv - | X | Ensures minimum cabin-to-ambient negative ΔP for CM |
| | | DUMP (safety latch | X | impact. |
| | | off) | X | |
| | | | X | |
| | 36 | FLOOD FIXED - POST LDG | X | Provides power from flight and postlanding bus to |
| | | | X | one floodlight in LH couch area and one floodlight |
| | | | X | in center couch area. |
| | | | X | |
| | 37 | FLOOD DIM - 1 or 2 | X | Position 1 provides power to two secondary flood- |
| | | | X | lights, and position 2 provides power to two primary |
| | | | X | floodlights when FLOOD FIXED switch in POST LDG |
| | | | X | position and dc main buses deactivated. |
| | | | X | |
| 800' | 38 | CAB PRESS RELF vlv (2) - | X | Valves must be closed prior to touchdown to prevent |
| CMP | | CLOSE (safety latch | X | If CAB PRESS DUMP | water from entering CM. |
| | | off) | X | vlv used to | |
| | | | X | equalize ΔP, CAB | |
| | | | X | PRESS DUMP vlv - | |
| | | | X | close (CW) | |
| | | | X | | |
| CDR | 39 | ELS LOGIC - on | X | | Guarded. |
| | | (up) (verify) | X | | |
| | | | X | | |
| CMP | 40 | CM RCS PRPLNT (both) - | X | | OFF position is momentary. |
| | | OFF | X | | |
| | | CM RCS PRPLNT tb | X | | Barber pole indicates at least one valve closed in |
| | | (both) - bp | X | | each system. |



ABORT

| STA/T | STEP | PROCEDURE | PANEL | REMARKS |
|---|---|---|---|---|
| CDR | 41 | DIRECT O2 vlv - OPEN (CCW) | X | |
| LMP | 42 | MN BUS TIE (2) - OFF | X | Removes battery power from dc main buses. |
| | | CAUTION<br>MN BUS TIE sw must be left in OFF position to ensure that bats A, B, & C are used to pwr postlanding sys only, & to prevent bat shorting caused by water entering CM feed-thru conn. | X | |
| | 43 | cb BAT RLY BUS (2) - open | X | |
| | 44 | Postlanding check, 4.17 | X | |

5.1.2 RCS/SPS ABORT MODES II, III, IV

Mode II, III, and IV aborts are manually initiated and utilize the SM RCS to provide a safe separation distance from the SIVB. After separation and CSM stabilization, the abort possibilities separate into three categories.

- CM/SM separation and coast-to-landing site (MODE II).
- Shaped trajectory abort utilizing an SPS variable maneuver to correct the trajectory for the desired landing site in the Atlantic Recovery Area (MODE III).
- Abort-to-earth-orbit utilizing the SPS to attain earth orbital altitude and speed (MODE IV).

| STA/T | STEP | PROCEDURE | PANEL | REMARKS |
|---|---|---|---|---|
| | | 5.1.2.1 Mode II RCS Abort (03:18 to 10:08) | | |
| CDR | 1 | THC - CCW (4.0 sec min) | X<br>X<br>X<br>X<br>X | Direct ullage commanded when THC placed CCW. THC must be left in CCW detent for 4.0 seconds to allow 3.0-second timer (adapter separation) and 0.8-second timer (RCS enable) to operate. |
| 00:00 | | Evnt Tmr rset & counting up (auto) | X EVNT TMR RSET -<br>X RSET<br>X EVNT TMR START -<br>X START | RSET position is momentary.<br><br>START position is momentary. |
| | | BECO (auto)<br>SII Stage - LV ENG 1, 2, 3, 4 & 5 lts - on<br>SIVB Stage - LV ENG 1 lt - on | X Request grd<br>X cmd BECO<br>X<br>X<br>X | |
| | | Dir ullage started (auto) | X DIR ULL pb - push<br>X | |
| 00:03 | | Adapter sep (auto)<br>All LV ENG lts - out | X CSM/LV SEP pb -<br>X push<br>X | Guarded. |
| CMP | | | X | |
| 00:03.8 | | RCS/SCS enbl (auto)<br>Key V82E<br>FL V16 N44<br>Ha XXXX.X NM<br>Hp XXXX.X NM<br>TFF XXBXX MIN-SEC | X RCS CMD - ON<br>X<br>X<br>X<br>X<br>X<br>X | ON position is momentary.<br>Calls R30 for meaningful display of N50.<br><br>Apogee altitude.<br>Perigee altitude.<br>Time of free fall to 49.4 NM (300,000 feet). |
| CDR | 2 | THC - ARMED, ctr & +X trans | X DIR ULL pb - push<br>X | Automatic direct ullage terminated when THC returned to center. |

| STA/T | STEP | PROCEDURE | PANEL | REMARKS |
|---|---|---|---|---|
| CMP | 3 | Key N50E | X | |
| | | | X | |
| | | Splash error | X | |
| | | XXXX.X NM | X | Negative for undershoot, positive for overshoot. |
| | | Hp XXXX.X NM | X | |
| | | TFF XXBXX MIN- | X | If TFF <100 seconds, maneuver to entry attitude must be initiated immediately and separation performed at entry attitude. |
| | | SEC | X | |
| | | | X | |
| CDR | | | X | |
| 00:24 | 4 | Term +X trans | X | |
| | | | X | |
| | 5 | If TFF <2 min | X | |
| | | Yaw 45° left (out of plane) | X | |
| | | Start R&P mnvr to entry att R 0°, P 120° | X | |
| | | | X | |
| | | If TFF <2 min | X | |
| | | Start mnvr to entry att R 0°, P 120°, Y 0° | X | |
| | | | X | |
| | 6 | BMAG MODE (3) - ATT 1/RATE 2 | X | |
| | | | X | |
| CMP | 7 | CSM/LM FNL SEP (both) - on (up) | X | Guarded. On position is momentary. Jettisons docking ring. |
| | | | X | |
| | | | X | |
| | 8 | CM/SM SEP (both) - on (up) | X | Guarded. On position is momentary. CM/SM umbilical and tension ties severed. |
| | | | X | |
| | | CM/SM deadface (auto) | X | |
| | | SM C/W lts - on | X | |

5.1.2.1

RCS ABORT MODE II

ABORT

| STA/T | STEP | PROCEDURE | PANEL | REMARKS |
|---|---|---|---|---|
| LMP | | MASTER ALARM pb/lts - on | X<br>X | |
| CDR | | CM RCS press (auto) | X CM RCS PRESS - on<br>X (up) | Guarded. On position is momentary. |
| CMP | | RCS cont trnfr (auto) | X RCS TRNFR - CM | CM position is momentary. |
| | | CM/SM sep (auto) | X | |
| | | C/W CSM - CM | X | Extinguishes all SM C/W lights and enables CM RCS C/W lights. |
| LMP | | MASTER ALARM pb/lt - push | X<br>X | |
| CDR | 9 | Start yaw mnvr to entry att Y 0° | X<br>X<br>X | |
| | 10 | ATT DBD - MAX | X | |
| | 11 | Note TFF | X | Maneuver-to-entry attitude must be completed prior to TFF = 0 seconds. |
| 01:40 | | | X | |
| | 12 | Mnvr to entry att R 0°, P 126°, Y 0° | X<br>X | BEF, heads down, full lift. |
| | 13 | Set up for CM RCS sys 1 AUTO RCS CM 1 (6) - MNA or MNB AUTO RCS CM 2 (6) - OFF | X<br>X<br>X<br>X<br>X | |
| | 14 | BMAG MODE (3) - RATE 2 | X | Prevents roll bug jump when .05 G switch set to on. |

RCS ABORT MODE II

| STA/T | STEP | PROCEDURE | PANEL | REMARKS |
|---|---|---|---|---|
| CDR | 15 | EMS FUNC - ENTRY | X | |
| | | | X | |
| | 16 | EMS MODE - NORM | X | |
| | | | X | |
| | 17 | When .05 G lt - on, | X | |
| | | .05 G sw - on (up) | X | |
| | | | X | |
| | 18 | EMS ROLL - on (up) | X | |
| | | | X | |
| | 19 | Maintain full lift | X | |
| | | | X | |
| | 20 | Proceed to Earth | X | |
| | | Ldg Phase, 4.16 | X | |

| STA/T | STEP | PROCEDURE | PANEL | REMARKS |
|---|---|---|---|---|
| | | 5.1.2.2 Mode III SPS Abort (10:08 to Insertion) | | |
| CDR | 1 | THC - CCW (4.0 sec min) | X<br>X<br>X<br>X<br>X | Direct ullage commanded when THC placed CCW. THC must be left in CCW detent for 4.0 seconds to allow 3.0-second timer (adapter separation) and 0.8-second timer (RCS enable) to operate. |
| 00:00 | | Evnt Tmr rset & counting up (auto) | X EVNT TMR RSET -<br>X RSET<br>X EVNT TMR START -<br>X START | RSET position is momentary.<br><br>START position is momentary. |
| | | BECO (auto) | X Request grd cmd<br>X SIVB BECO | |
| | | LV ENG 1 lt - on | X | |
| | | Dir ullage started (auto) | X DIR ULL pb - push<br>X | |
| 00:03 | | Adapter sep (auto) | X CSM/LV SEP pb - | Guarded. |
| | | LV ENG 1 lt - out | X push | |
| CMP | | | X | |
| 00:03.8 | | RCS/SCS enbl (auto) | X RCS CMD - ON<br>X | ON position is momentary. |
| | | Key V82E | X | |
| | | FL V16 N44 | X | Calls R30 for meaningful display of N50. |
| | | Ha XXXX.X NM | X | Apogee altitude. |
| | | Hp XXXX.X NM | X | Perigee altitude. |
| | | TFF XXBXX MIN-SEC | X | Time of free fall to 49.4 NM (300,000 ft). |
| | | | X | |
| CDR | 2 | LV IND/GPI sw - GPI | X | |

| STA/T | STEP | PROCEDURE | PANEL | REMARKS |
|---|---|---|---|---|
| CDR | 3 | THC - ARMED, ctr & +X trans | X DIR ULL pb - push<br>X<br>X | Automatic direct ullage terminated when THC returned to center. |
| CMP | 4 | Key N50E<br>Splash err<br>XXXX.X NM<br>Hp XXXX.X NM<br>TFF XXBXX MIN-SEC | X<br>X<br>X<br>X<br>X<br>X | Negative for undershoot, positive for overshoot.<br>If TFF <100 seconds, maneuver to entry attitude immediately. |
| CDR | | | X | |
| 00:24 | 5 | Term +X trans | X<br>X | |
| | 6 | Mnvr to retro att<br>R 180°, P 194°, Y 0° | X<br>X<br>X | BEF, heads up. |
| | 7 | Obtain retro update | X<br>X | |
| | 8 | BMAG MODE (3) - ATT 1/ RATE 2 | X<br>X<br>X | |
| | 9 | RATE - LO | X<br>X | |
| | 10 | Verify SPS GMBL ind (2) = SPS GMBL tw (2) settings | X<br>X<br>X<br>X | |
| | 11 | EMS MODE - NORM | X<br>X | |
| 01:50 | | | X | |
| | 12 | Start ullage | X | |

| STA/T | STEP | PROCEDURE | PANEL | REMARKS |
|---|---|---|---|---|
| CDR | 13 | ΔV THRUST A - NORM | X | Guarded. |
| | | | X | |
| 02:05 | | | X | |
| | 14 | SPS THRUST - DIR ON | X | Lever lock. |
| | | | X | |
| | | If no SPS IGN | X | |
| | | ΔV THRUST B - NORM | X | |
| | | If still no SPS IGN | X | |
| | | THRUST ON pb - push | X | |
| | | | X | |
| | 15 | RATE - HI | X | Bypasses noise problem in SCS gyro assemblies because of thrusting vibration levels and provides backup to auto selection high rate in pitch and yaw TVC. |
| | | | X | |
| | | | X | |
| | 16 | Term ullage - | X | |
| | | IGN +1 sec | X | |
| | | | X | |
| | 17 | ΔV ind = desired value | X | |
| | | or ΔR = 0 | X | |
| | | | X | |
| | | If TFF >2 min | X | |
| | | Yaw 45° right (out of | X | |
| | | plane) before CM/SM | X | |
| | | sep | X | |
| | | | X | |
| | | If TFF <2 min, go to 18 | X | |
| | | | X | |
| | 18 | ΔV THRUST (2) - OFF | X | Guarded. |
| | | | X | |
| | 19 | EMS MODE - STBY | X | |

SPS ABORT MODE III

| STA/T | STEP | PROCEDURE | | PANEL | REMARKS |
|---|---|---|---|---|---|
| CDR | 20 | Mnvr to entry att | X | | |
| | | R 0°, P 105°, Y 0° | X | | |
| | | | X | | |
| CMP | 21 | CSM/LM FNL SEP (both) - | X | | Guarded. On position is momentary. Jettisons docking ring. |
| | | on (up) | X | | |
| | | | X | | |
| | 22 | CM/SM SEP (both) - on | X | | Guarded. On position is momentary. CM/SM umbilical and tension ties severed. |
| | | (up) | X | | |
| | | CM/SM deadface (auto) | X | | |
| | | SM C/W lts - on | X | | |
| | | MASTER ALARM pb/lt - on | X | | |
| | | CM RCS press (auto) | X | CM RCS PRESS - on | Guarded. On position is momentary. |
| | | | X | (up) | |
| | | RCS cont trnfr (auto) | X | RCS TRNFR - CM | CM position is momentary. |
| | | CM/SM sep (auto) | X | | |
| | | | X | | |
| | 23 | C/W CSM - CM | X | | Extinguishes all SM C/W lights and enables CM RCS C/W lights. |
| | | | X | | |
| LMP | 24 | MASTER ALARM pb/lt - | X | | |
| | | push | X | | |
| | | | X | | |
| CDR | 25 | ATT DBD - MAX | X | | |
| | | | X | | |
| | 26 | Note TFF | X | | Maneuver-to-entry attitude must be completed prior to TFF = 0 seconds. |
| | | | X | | |
| | | | X | | |
| | 27 | Complete mnvr to entry | X | | BEF, heads down, full lift. |
| | | att | X | | |

| STA/T | STEP | PROCEDURE | PANEL | REMARKS |
|---|---|---|---|---|
| CDR | 28 | Set up for CM RCS sys 1 | X | |
| | | AUTO RCS CM 1 | X | |
| | | (6) - MNA OR MNB | X | |
| | | AUTO RCS CM 2 | X | |
| | | (6) - OFF | X | |
| | | | X | |
| | 29 | BMAG MODE (3) - RATE 2 | X | Prevents roll bug jump when .05 G switch is set to on. |
| | | | X | |
| | 30 | EMS FUNC - ENTRY | X | |
| | | | X | |
| | 31 | EMS MODE - NORM | X | |
| | | | X | |
| | 32 | Maintain full lift to | X | |
| | | .05 G | X | |
| | | | X | |
| | 33 | When .05 G lt - on, | X | |
| | | .05 G sw - on (up) | X | |
| | | | X | |
| | 34 | EMS ROLL - on (up) | X | |
| | | | X | |
| | 35 | Maintain half lift | X | |
| | | | X | |
| 50K' | 36 | Proceed to Earth | X | |
| | | Ldg Phase, 4.16 | X | |



SPS ABORT MODE III

| STA/T | STEP | PROCEDURE | | PANEL | REMARKS |
|---|---|---|---|---|---|
| | | 5.1.2.3 Mode IV SPS Abort (09:00 to Insertion) | | | |
| CDR | 1 | THC - CCW (4.0 sec min) | X<br>X<br>X<br>X<br>X | | Direct ullage is commanded when THC placed CCW. THC must be left in CCW detent for 4.0 seconds to allow 3.0-second timer (adapter separation) and 0.8-second timer (RCS enable) to operate. |
| 00:00 | | Evnt Tmr rset & counting up (auto) | X<br>X | EVNT TMR RSET - RSET | RSET position is momentary. |
| | | | X<br>X | EVNT TMR START - START | START position is momentary. |
| | | BECO (auto) | X<br>X | Request grd cmd SIVB BECO | |
| | | LV ENG 1 lt - on | X | | |
| | | Dir ullage started (auto) | X<br>X | DIR ULL pb - push | |
| 00:03 | | Adapter sep (auto) | X<br>X | CSM/LV SEP pb - push | Guarded. |
| | | LV ENG 1 lt - out | X | | |
| CMP | | | X | | |
| 00:03.8 | | RCS/SCS enbl (auto) | X<br>X | RCS CMD - ON | ON position is momentary. |
| CDR | 2 | LV IND/GPI sw - GPI | X<br>X | | |
| | 3 | THC - ARMED, ctr & +X tran | X<br>X<br>X | DIR ULL pb - push | Automatic direct ullage terminated when THC returned to center. |
| CMP | 4 | Key V82E | X | | |
| | | FL V16 N44 | X | | |
| | | Ha XXXX.X NM | X | | |
| | | Hp XXXX.X NM | X | | |
| | | TFF XXBXX MIN-SEC | X | | |

| STA/T | STEP | PROCEDURE | PANEL | REMARKS |
|---|---|---|---|---|
| CDR | | | X | |
| 00:24 | 5 | Term +X trans | X | |
| | | | X | |
| | 6 | Mnvr to insertion att | X | |
| | | R 180°, P 350°, Y 0° | X | SEF, heads down. Slight movement of GPI indicator |
| | | | X | (4) will be observed if SCS TVC (2) - RATE CMD. |
| | 7 | Obtain insertion update | X | |
| | | | X | |
| | 8 | BMAG MODE (3) - ATT 1/ | X | |
| | | RATE 2 | X | |
| | | | X | |
| | 9 | RATE - LO | X | |
| | | | X | |
| | 10 | Verify SPS GMBL ind | X | |
| | | (2) = SPS GMBL tw (2) | X | |
| | | settings | X | |
| | | | X | |
| | 11 | EMS MODE - NORM | X | |
| | | | X | |
| 01:00 | | | X | |
| | 12 | Start ullage | X | |
| | | | X | |
| | 13 | ΔV THRUST A - NORM | X | Guarded. |
| | | | X | |
| 02:05 | | | X | |
| | 14 | SPS THRUST - DIR ON | X | Lever lock. |
| | | | X | |
| | | If no SPS IGN | X | |
| | | ΔV THRUST B - NORM | X | |
| | | | X | |
| | | If still no SPS IGN | X | |
| | | THRUST ON pb - push | X | |



SPS ABORT MODE IV

| STA/T | STEP | PROCEDURE | PANEL | REMARKS |
|---|---|---|---|---|
| CDR | 15 | RATE - HI | X<br>X<br>X<br>X | Bypasses noise problem in SCS gyro assemblies because of thrusting vibration levels and provides backup to auto selection of high rate in pitch and yaw TVC. |
| | 16 | Term ullage - IGN<br>+1 sec | X<br>X<br>X | |
| | 17 | BMAG MODE PITCH - RATE 1<br>SPS GMBL tw - maintain<br>pitch profile (VI,<br>H dot, H) | X<br>X<br>X<br>X<br>X | |
| | 18 | ΔV THRUST (2) - OFF on<br>VI | X<br>X<br>X | |
| | 19 | SPS THRUST - NORM | X<br>X | Lever lock. |
| | 20 | EMS MODE - STBY<br>SECO +40 sec<br>Stat from grd | X<br>X<br>X<br>X | |
| | 21 | SAFE ORBIT | X | |
| CMP | | PRO (exit R30)<br>Key V37E 00E | X<br>X<br>X | |
| | 22 | Postorbital Insertion<br>Check, 4.3.2 | X<br>X | |

## 5.2 MALFUNCTION PROCEDURES

### INTRODUCTION

Malfunction procedures encompass the recognition, diagnosis, and corrective action for system malfunctions. In most cases, the crew is alerted to a malfunction condition by C&WS lights and indicators, or by the absence of a scheduled function or event. The crew will then locate, correct, or isolate the malfunction and determine its effect on the scheduled mission. In general, the procedures cover significant single failures. Double unrelated failures are not covered to prevent procedures from becoming complex and unmanageable.

The malfunction procedures are presented in logic flow diagram format and arranged by symptom routines. The symptom routines contain the primary malfunction procedures and are backed up by special subroutines and system reconfiguration routines where necessary. A three column format is used for symptom routine logic flow diagrams. A description and use of each of these columns is as follows:

Symptom Column. The primary purpose of the symptom column is to allow entry into the malfunction procedures. Two types of symptom logic blocks are used in this column. These are the "C/W Status Light" and "Other Symptom" blocks. These two blocks, along with the supporting information under each block, explain and qualify the situation so the reader fully understands the symptom or condition that exists. All symptoms are arranged by systems, i.e., G&C, SPS, RCS, EPS, etc., and are numbered in sequence starting with number 1 for each system. A subsymptom that is directly related to a major symptom is identified by using the same number followed by a lower case letter, 1a, 1b, 1c, etc.

Procedure Column. The procedure column presents a step-by-step logic flow diagram of actions and decisions used to isolate or correct a malfunction symptom. This information is presented with several types of logic blocks. These blocks contain the procedures, decisions, and actions to locate and isolate the failure. Caution and Warning blocks alert the crew to situations which, if not corrected, may degrade the operational integrity of the SC systems or may have critical crew safety consequences. Remote event symbols are used to reference items in the Remarks column or to refer to other procedural steps.

Remarks Column. This column will include the following information:

a. Amplifying additional remarks related to the symptom, i.e., relief valve vents at ____ psia, burst disc ruptures at ____ psia, or to notify the user of the urgency that he must treat a particular symptom, etc.

b. Amplifying remarks which relate to a decision and/or action items (e.g., why a step is taken, possible system time lag, etc.).

c. Explain resultant system status or operational capability after a failure has been identified, i.e., how subsystem is degraded, can degraded subsystem support primary mission, early termination of mission, etc.

d. Cautions or Warnings, as necessary, to cover conditions that may exist because of a failure.

| Symptom | Number | Page |
|---|---|---|
| 5.2.1 GUIDANCE AND CONTROL | | |
| 5.2.1.1 Guidance and Control | | |
| Abnormal Vehicle Dynamics During SPS Thrusting | 1 | 5-57 |
| FDAI ATT Error Abnormal | 2 | 5-59 |
| FDAI Rate Ind Abnormal | 3 | 5-59 |
| FDAI Total Attitude Display Abnormal | 4 | 5-60 |
| FDAI Fails to Slew With ORDEAL | 5 | 5-60 |
| FDAI Total ATT Does Not Respond to GDC Align | 6 | 5-61 |
| GPI/Fuel Press Ind(s) Pegged or Zero | 7 | 5-61 |
| BMAG 1 (2) TEMP lt - on | 8 | 5-61 |
| Abnormal Vehicle Dynamics (Non-SPS Thrusting LM - Inactive) | A | 5-62 |
| 5.2.1.2 Stabilization Control System | | |
| RCS Failed On | 1 | 5-63 |
| Accel CMD Troubleshooting Routine | 2 | 5-66 |
| Suspected Reduced RCS Authority | 2a | 5-66 |
| Rate CMD Troubleshooting Routine | 3 | 5-67 |
| CSM Drifts Out of Deadband | 3a | 5-68 |
| Min Imp Troubleshooting Routine | 4 | 5-69 |
| Suspected Reduced RCS Authority | 4a | 5-70 |
| Direct RCS Troubleshooting Routine | 5 | 5-71 |
| Vehicle Dynamics Oscillating & Diverging | 6 | 5-71 |
| Abnormal Vehicle Dynamics During Translation | 7 | 5-72 |
| 5.2.1.3 Guidance and Navigation | | |
| RCS Failed On | 1 | 5-74 |
| RHC Troubleshooting Routine | 2 | 5-75 |
| CMC Auto Troubleshooting Routine | 2a | 5-75 |
| Suspected Reduced RCS Authority | 2b | 5-75 |
| THC Troubleshooting Routine | 3 | 5-76 |
| Min Imp Cont Troubleshooting Routine | 4 | 5-76 |
| CMC lt - on | 5 | 5-77 |
| ISS lt - on | 6 | 5-77 |
| GIMBAL LOCK lt - on | 7 | 5-77 |
| TEMP lt - on | 8 | 5-78 |
| RESTART lt - on | 9 | 5-78 |
| TRACKER lt - on | 10 | 5-78 |
| PROG lt - on | 11 | 5-79 |
| Alarm Codes | 12 | 5-79 |

| Special Sub Routines | | |
|---|---|---|
| CMC Test | SSR-1 | 5-80 |
| CMC Jet Re-Config | SSR-2 | 5-81 |
| Fresh Start | SSR-3 | 5-81 |

| Symptom | Number | Page |
|---|---|---|
| 5.2.2 SERVICE PROPULSION SYSTEM | | |
| SPS PRESS lt - on | 1 | 5-83 |
| Fuel and/or Oxid Press High | 1a | 5-83 |
| Fuel and/or Oxid Press Low | 1b | 5-83 |
| Fuel and Oxid ΔP >20 psi | 1c | 5-83 |
| Pitch (Yaw) Gmbl 1 (2) lt - on | 2 | 5-84 |
| SPS Premature Shutdown | 3 | 5-84 |
| No SPS Ignition | 3a | 5-84 |
| SPS Eng Does Not Shut Down Auto | 4 | 5-85 |
| SPS Thrust lt on - Non Thrusting | 4a | 5-85 |
| SPS Pc Abnormal | 5 | 5-85 |
| SPS He Vlv tb - Abnormal | 6 | 5-85 |
| He Press Low or Decr | 7 | 5-86 |
| GN2 A (B) Press Low | 8 | 5-86 |
| SPS Inj Vlv Partially Open | 8a | 5-86 |
| SPS Inj Vlv Ind Abnormal | 9 | 5-86 |
| No Prplnt Temp Control | 10 | 5-86 |
| No Response of SPS Oxid Vlv tb During Flow Adjust | 11 | 5-87 |
| SPS Oxid Unbal Ind Erratic or Pegged | 12 | 5-87 |
| SPS Oxid (Fuel) Qty Ind Readout Abnormal | 13 | 5-87 |
| 5.2.3 REACTION CONTROL SYSTEM | | |
| 5.2.3.1 SM RCS | | |
| SM RCS A (B,C,D) lt - on | 1 | 5-89 |
| SM RCS Pkg Temp Low | 1a | 5-89 |
| SM RCS Pkg Temp High | 1b | 5-89 |
| SM RCS SEC FUEL Press Low | 1c | 5-89 |
| SM RCS SEC FUEL Press High | 1d | 5-89 |
| SM RCS He Press Low or Decr | 2 | 5-90 |
| SM RCS Prplnt Qty Low or Decr | 2a | 5-90 |
| 5.2.3.2 CM RCS | | |
| CM RCS 1 (2) lt - on | 3 | 5-90 |
| CM RCS Manf Press High | 3a | 5-90 |
| CM RCS Manf Press Low | 3b | 5-90 |
| CM RCS He Press Low or Decr | 4 | 5-90 |
| CM RCS Eng Temp Fails to Incr | 5 | 5-90 |
| 5.2.4 ELECTRICAL POWER SYSTEM | | |
| 5.2.4.1 Cryogenics | | |
| CRYO PRESS lt - on | 1 | 5-91 |
| O2 (H2) Cryo Press Hi | 1a | 5-91 |
| O2 (H2) Cryo Press Low | 1b | 5-91 |

| Symptom | Number | Page |
|---|---|---|
| 5.2.4.2 Fuel Cells | | |
| FC 1 (2, 3) lt - on | 1 | 5-92 |
| FC 1 (2, 3) Skin Temp Hi | 1a | 5-92 |
| FC 1 (2, 3) Skin Temp Low | 1b | 5-92 |
| FC 1 (2, 3) Mod Cond Exh Temp Hi | 1c | 5-93 |
| FC 1 (2, 3) Cond Exh Temp Low | 1d | 5-93 |
| FC 1 (2, 3) Rad Temp Low tb - bp | 1e | 5-93 |
| FC 1 (2, 3) pH HI tb - bp | 1f | 5-94 |
| FC 1 (2, 3) O2 (H2) Flow Hi | 1g | 5-94 |
| FC 1 (2, 3) O2 (H2) Flow Low | 2 | 5-94 |
| FC Reg O2 (H2) Out Press Hi | 3 | 5-94 |
| cb FC 1 (2, 3) PUMPS AC - Open | 4 | 5-95 |
| FC 1 (2, 3) V-I-T Performance Low | 5 | 5-95 |
| 5.2.4.3 Power Distribution | | |
| MN BUS A (B) UNDERVOLT lt - on | 1 | 5-96 |
| AC BUS 1 (2) lt - on | 1a | 5-96 |
| AC BUS 1 (2) Overload lt - on | 1b | 5-96 |
| MN BUS A (B) Indicates <26 vdc | 1c | 5-96 |
| AC BUS 1 (2) Voltage Low | 1d | 5-97 |
| AC BUS 1 (2) Voltage High | 1e | 5-97 |
| INV 1 (2, 3) TEMP HI lt - on | 2 | 5-97 |
| FC BUS DISCONNECT lt - on | 3 | 5-98 |
| Suspected Hi Current For CSM Config | 4 | 5-98 |
| Bat Chgr Current Zero | 5 | 5-99 |
| Bat Bus A (B) Current >1.0 With MN BUS TIE (2) - OFF | 6 | 5-99 |
| FC tbs All Gray | 6a | 5-99 |
| Pyro Bat Voltage <35 vdc | 7 | 5-99 |

| Special Sub Routine | | |
|---|---|---|
| Fuel Cell Shutdown | SSR-1 | 5-99 |
| Bus Short Isolation | SSR-2 | 5-100 |

| Symptom | | |
|---|---|---|
| 5.2.5 TELECOMMUNICATIONS SYSTEM | | |
| One Crewman Has No Intercom Capability | 1 | 5-103 |
| Loss of Intercom (All Crewmen) | 2 | 5-103 |
| One Crewman Has Unselected Hot Mike Condition | 3 | 5-103 |
| Loss of VHF Comm With MSFN | 4 | 5-104 |
| Loss of VHF Comm With LM | 5 | 5-105 |
| EMS Range Display Abnormal | 6 | 5-105 |

| Symptom | Number | Page |
|---|---|---|
| Loss of S BD Voice Comm (MSFN within VHF range) | 7 | 5-106 |
| Loss of S BD Voice Comm (MSFN not within VHF range) | 8 | 5-107 |
| MSFN Reports Loss of Ranging | 9 | 5-108 |
| MSFN Reports Loss of Real Time PCM | 10 | 5-108 |
| Hi Gain Antenna Does Not Respond Properly to Manual Pointing Commands | 11 | 5-109 |
| Cannot Acquire or Maintain Phaselock With High Gain Antenna | 12 | 5-109 |
| Cannot Acquire Phaselock With Omniantennas | 13 | 5-110 |
| 5.2.6 ENVIRONMENTAL CONTROL SYSTEM | | |
| 02 FLOW HI lt - on | 1 | 5-111 |
| 02 Flow High | 1a | 5-111 |
| 02 Flow Low | 2 | 5-112 |
| Surge Tank Press High | 3 | 5-112 |
| Cabin Press High or Increasing | 4 | 5-112 |
| Surge Tank Press Low | 5 | 5-113 |
| Cabin Press Low or Decreasing | 6 | 5-113 |
| Crew Uncomfortable In Cabin | 7 | 5-114 |
| Cabin Humidity High | 7a | 5-114 |
| Clinging Suit | 8 | 5-114 |
| SUIT COMPRESSOR lt - on | 9 | 5-115 |
| Suit Compr ΔP Low | 9a | 5-115 |
| Ballooned PGA's | 10 | 5-115 |
| Crew Uncomfortable in Suit Loop | 11 | 5-116 |
| Suit Ckt Humidity High | 11a | 5-116 |
| CO2 PP HI lt - on | 12 | 5-116 |
| CO2 Part Press High | 12a | 5-116 |
| CO2 Part Press Low | 12b | 5-116 |
| CO2 Filter Seizure Within Canister | 13 | 5-117 |
| GLYCOL TEMP LOW lt - on | 14 | 5-117 |
| Prim ECS Rad Out Temp Low | 14a | 5-117 |
| Prim ECS Rad Out Temp High | 15 | 5-117 |
| Prim Gly Evap Out Temp High | 16 | 5-118 |
| Prim Steam Press Low | 16a | 5-118 |
| Prim Gly Evap Out Temp Low | 17 | 5-119 |
| Prim Gly Accum Qty High | 18 | 5-119 |
| Prim Gly Disch Press High | 18a | 5-119 |
| Prim Gly Accum Qty Low or Decreasing | 19 | 5-120 |
| Prim Gly Disch Press Low | 20 | 5-120 |
| Sec Gly Evap Out Temp High | 21 | 5-121 |
| Sec Steam Press Low | 21a | 5-121 |
| Sec Gly Evap Out Temp Low | 22 | 5-121 |

| Symptom | Number | Page |
|---|---|---|
| Sec ECS Rad Out Temp High | 23 | 5-122 |
| Sec ECS Rad Out Temp Low | 24 | 5-122 |
| Sec Gly Accum Qty High | 25 | 5-122 |
| Sec Gly Accum Qty Decreasing | 26 | 5-122 |
| Sec Gly Disch Press Low | 27 | 5-123 |
| H2O Dumping Overboard | 28 | 5-123 |
| Potable H2O Quantity Decreasing Rapidly | 28a | 5-123 |
| Waste H2O Quantity Decreasing Rapidly | 28b | 5-123 |
| Food Prep Water Temp Low | 29 | 5-123 |
| Entrapped Gas in Potable H2O | 30 | 5-124 |
| Urine Overboard Dump Not Draining | 31 | 5-124 |
| Waste H2O Overboard Dump Not Draining | 31a | 5-124 |
| Inadequate Ventilation After Landing | 32 | 5-124 |
| Water Inflow After Landing | 33 | 5-124 |
| **Special Sub Routine** | | |
| Secondary Loop Activation | SSR-1 | 5-125 |
| Frozen Steam Duct | SSR-2 | 5-125 |
| **Symptom** | | |
| 5.2.7 ENTRY MONITOR SYSTEM | | |
| .05 G lt on (TEST 1) | 1 | 5-127 |
| G/V Scroll Assy Does Not Slew (TEST 1) | 2 | 5-127 |
| .05 G lt out (TEST 2) | 3 | 5-127 |
| Lift Vector Dn Lt Will Not Come On (TEST 3) | 4 | 5-128 |
| Rng Ind Will Not Slew (TEST 3) | 4a | 5-128 |
| V-Axis Only or Multiple Displays Abnormal (TEST 4) | 5 | 5-129 |
| Rng Ind Only Abnormal (TEST 4) | 6 | 5-129 |
| G-Axis Only Abnormal (TEST 4) | 7 | 5-129 |
| Lift Vector Up Lt Not On (TEST 5) | 8 | 5-130 |
| G-Axis Does Not Drive (TEST 5) | 8a | 5-130 |
| Rng Ind Does Not Slew in RNG SET | 9 | 5-130 |
| G-Axis Does Not Zero in RNG SET | 9a | 5-130 |
| V-Axis Does Not Slew in Vo SET | 10 | 5-130 |
| ΔV/Rng Ind Abnormal in ΔV TEST | 11 | 5-131 |
| SPS Thrust Lt Not On in ΔV TEST | 12 | 5-131 |
| ΔV Ind Does Not Slew in ΔV SET | 13 | 5-131 |
| ΔV/Rng Ind Fails to Count During ΔV's | 14 | 5-131 |
| Either Lift Vector Lt On After 2 G | 15 | 5-131 |
| 5.2.8 MISCELLANEOUS MALFUNCTIONS | | |
| 5.2.8.1 Docking | | |
| Dock Probe Will Not Fold | 1 | 5-133 |
| Dock Probe Extd/Rel tb A (B) Remains Gray After Capture (TLD only) | 2 | 5-133 |
| 5.2.8.2 Hatch | | |
| Fwd Hatch Will Not Unlatch | 1 | 5-134 |
| Fwd Hatch Will Not Latch | 2 | 5-134 |

| SYMPTOM | PROCEDURE | REMARKS |
|---|---|---|

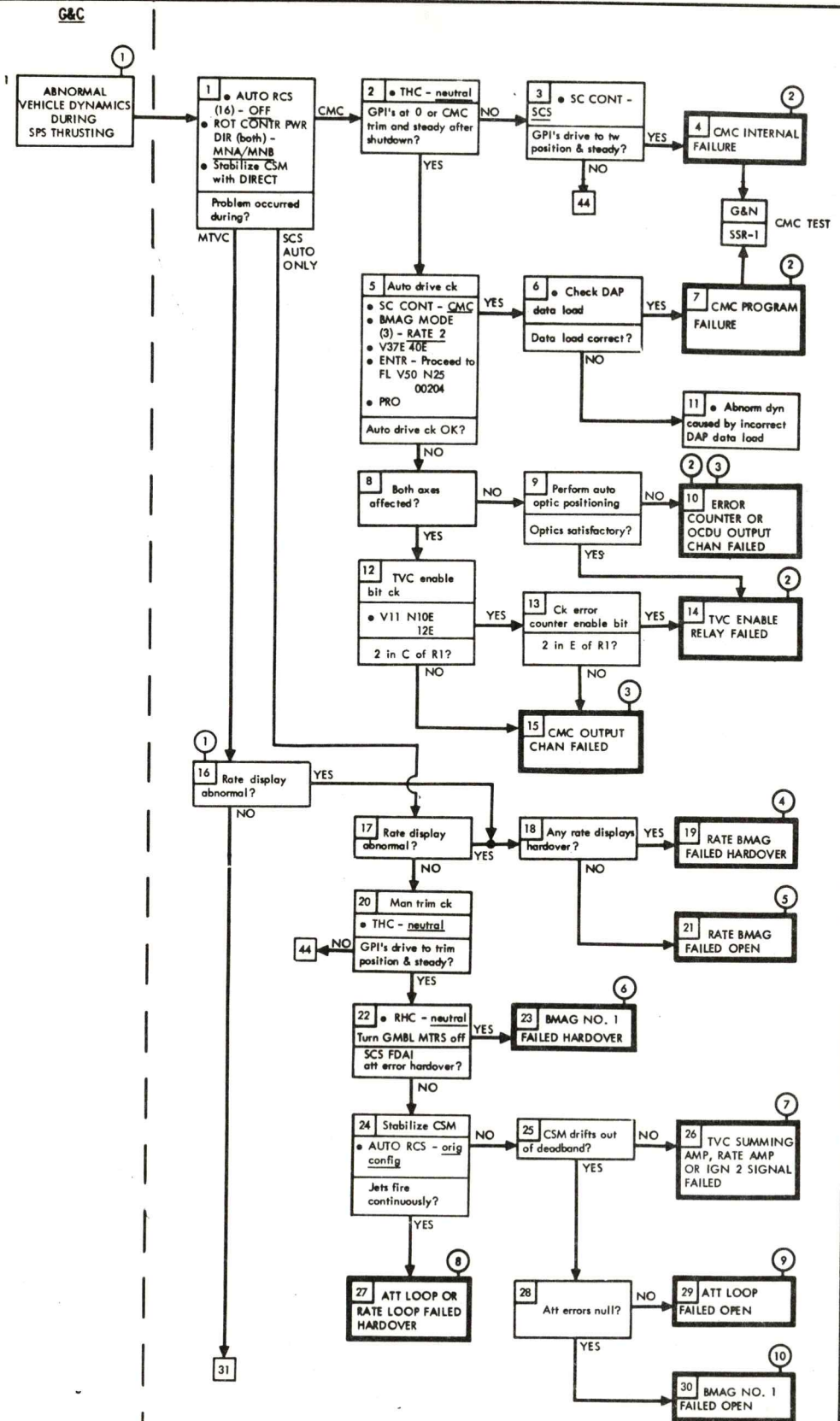


(1) Thrust is shut off and system returned to configuration at failure. If gmbl motors are off, they must be turned on before starting this procedure.

(2) CMC SPS control capability lost.

(3) Auto optics lost

(4) SCS auto ΔV lost. MTVC possible if redundant BMAG placed in RATE position.

(5) An open rate BMAG may be confirmed by null rate displays. SCS ball drive lost in axis unless alternate rate BMAG used. If YAW or ROLL: If BMAG 1, after .05G, SCS roll att erroneous. If BMAG 2, after .05 G, EMS RSI erroneous unless in RATE 1. Rate damping and SCS auto ΔV lost. For MTVC, use alternate rate BMAG.

(6) SCS auto ΔV lost if pitch or yaw. If roll, control attitude with Direct or ACCEL CMD.

(7) SCS auto ΔV capability lost.

(8) SCS RATE CMD, att hold, and proportional control lost for affected axis. SC auto ΔV lost if pitch or yaw. Translations without att hold possible in MIN IMP. Further troubleshooting not recommended.

(9) Att hold capability lost in affected axis. SCS auto ΔV lost if pitch or yaw.

(10) For affected axis: In ATT 1 RATE 2, att hold and att error display lost. After .05 G, SCS FDAI roll att erroneous if yaw or roll.

| SYMPTOM | PROCEDURE | REMARKS |
|---|---|---|
| G&C<br>1 (Cont) | 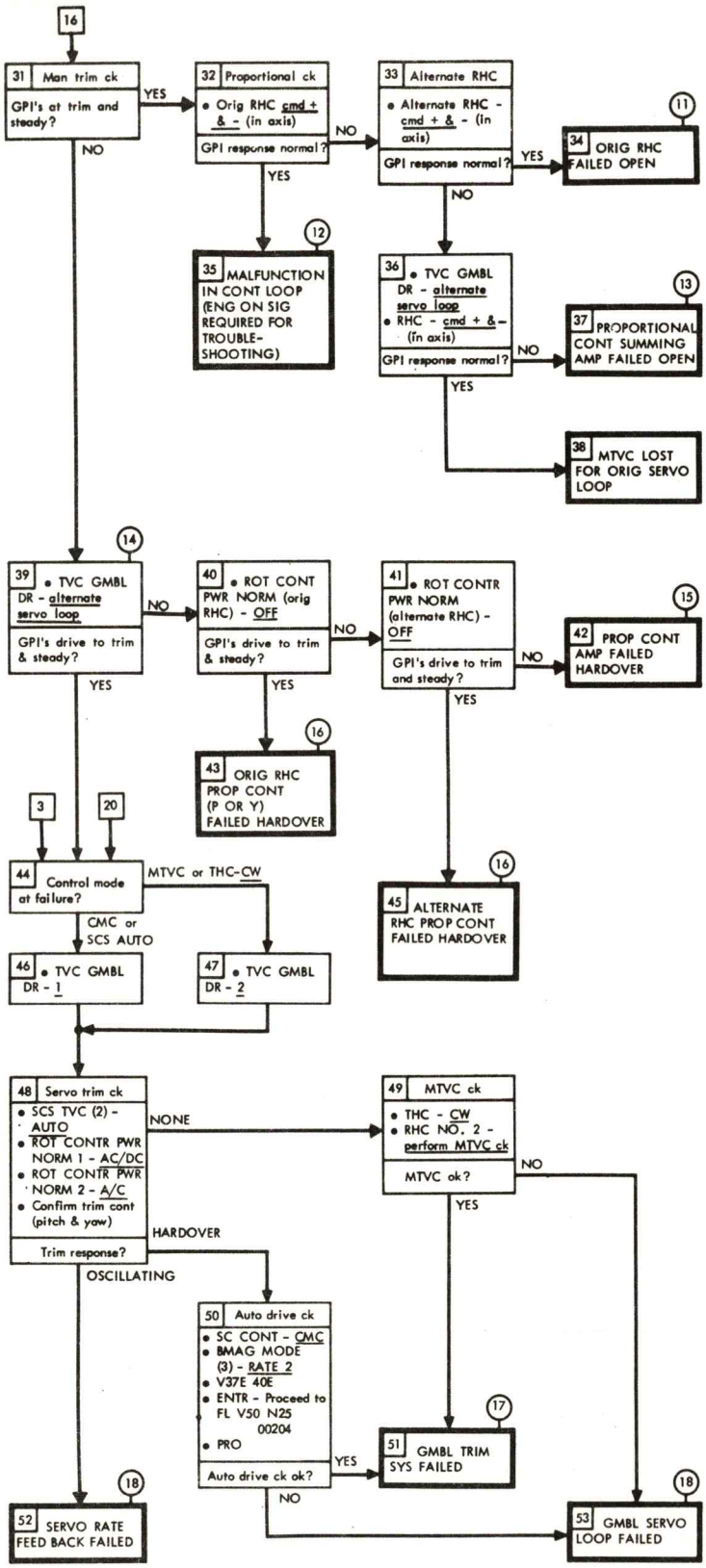 | (11) SCS proportional control and MTVC lost for failed RHC.<br>(12) One probable failure could be loss of MTVC integrator in which case during MTVC the gimbal position directly follows the stick position.<br>(13) SCS proportional control and MTVC lost for both RHC's.<br>(14) If THC - CW at time of failure, servo #2 being used, select servo #1.<br>(15) No MTVC capability. RATE CMD lost in affected axis. Att hold possible if RHC's locked (or neutral) or ROT CONTR PWR NORM (2) - OFF. Disable affected axis if direct used.<br>(16) MTVC and proportional cont available with unaffected RHC if affected RHC ROT CONT PWR NORM sw is OFF or RHC locked.<br>(17) CMC ΔV unaffected. On affected servo, SCS auto ΔV and trim lost, but MTVC without trim remains.<br>(18) Affected servo lost for all ΔV's. |

| SYMPTOM | PROCEDURE | REMARKS |
|---|---|---|

G&C

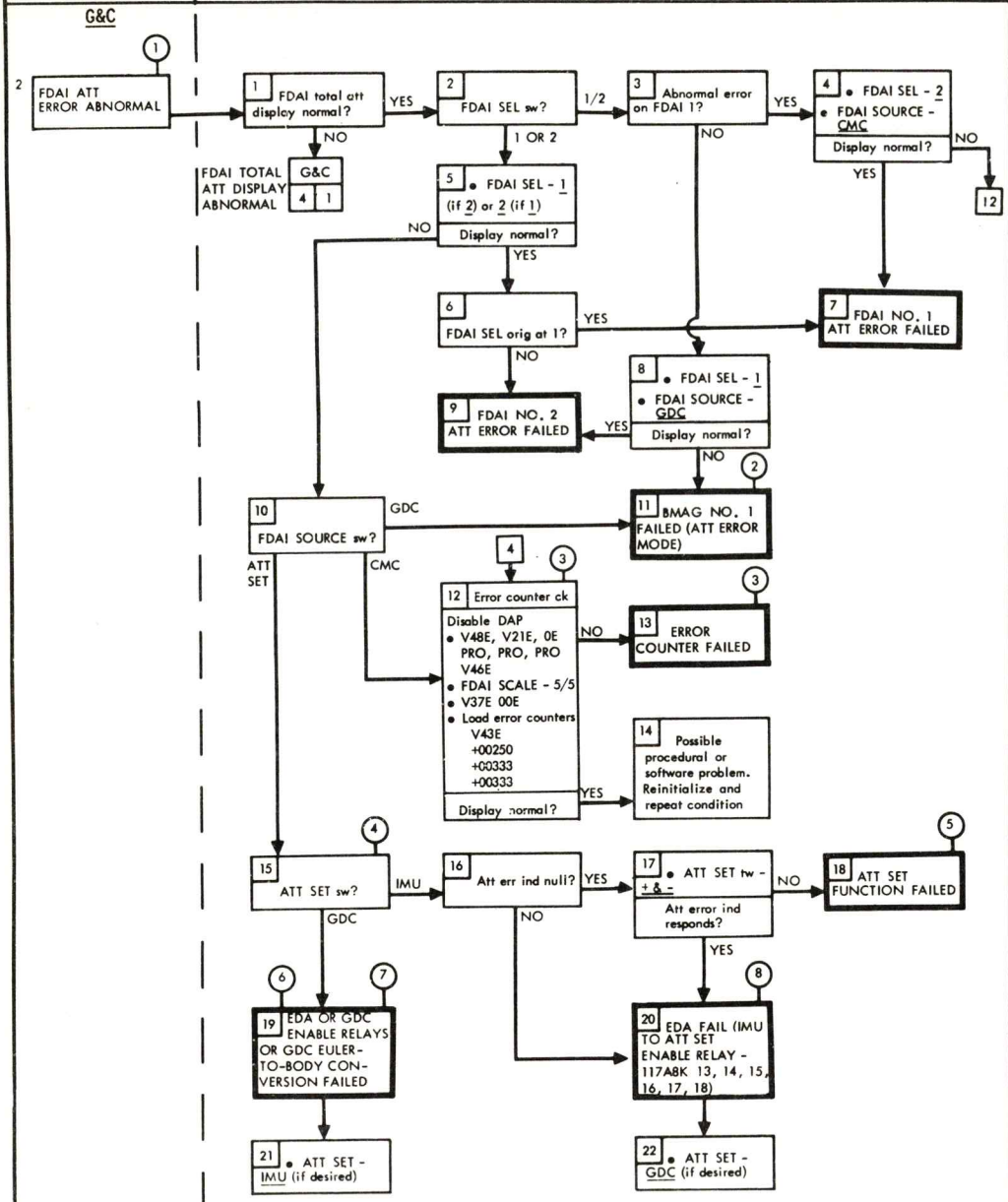


(1) May be single or multi axis.

(2) RATE 1 operation from this BMAG may not be available.

(3) CMC attitude error, coarse align and SIVB attitude control lost for axis that showed abnormal in error counter check.

(4) Cycling ATT SET sw may free sticking relays.

(5) Attitude error functions are inoperative when FDAI SOURCE switch at ATT SET.

(6) Failure of GDC enable relays will be determined by an inability to align GDC by GDC ALIGN pb.

(7) SCS att set error display lost. If ATT SET - IMU, attitude errors displayed will be Euler angles.

(8) IMU function of ATT SET sw lost.

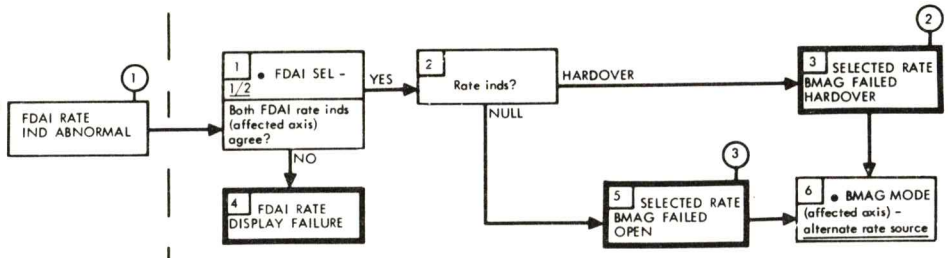


(1) May be single or multiple axes.

(2) Attitude error display and attitude hold capability lost. SCS auto ΔV lost if pitch or yaw; for roll place MAN ATT ROLL - ACCEL CMD and control roll manually. If failure is No. 1 roll or yaw BMAG after .05 G, No. 2 FDAI roll ind will spin up.

(3) If BMAG No. 2 failed: SCS auto ΔV lost unless in roll, then place BMAG MODE ROLL - ATT 1 RATE 2 and LIM CYCLE - on (up). RCS attitude hold available in all axes with BMAG MODE (3) - ATT 1 RATE 2 and LIM CYCLE on (up). If roll or yaw BMAG No. 1 failed, No. 2 FDAI roll ind erroneous after .05 G.

SM-2A-1894F

| SYMPTOM | PROCEDURE | REMARKS |
|---|---|---|

G&C

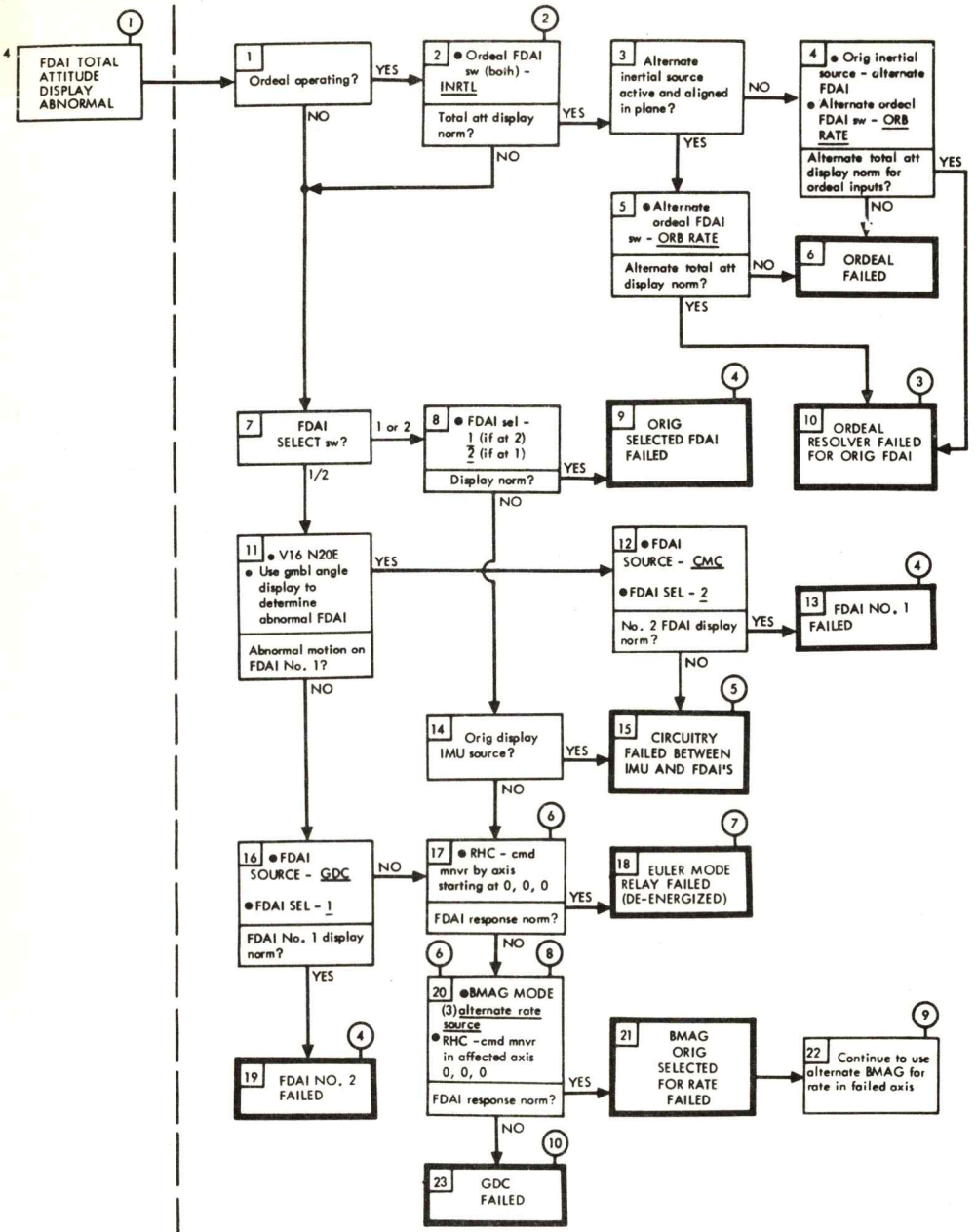


(1) For GDC FDAI total attitude, if rate display(s) also hardover, enter "FDAI Rate Ind Abnormal" procedure.

(2) Assumes inertial reference for orbital rate FDAI is aligned in plane.

(3) Use alternate FDAI for subsequent orbital rate displays.

(4) Confirm FDAI failure by placing alternate inertial source on affected FDAI. Normal total attitude with alternate inertial source indicative of Golden G relay failure.

(5) Any failure of IMU itself would have been indicated by ISS light.

(6) The FDAI can be aligned to 0, 0, 0 by the GDC align pb.

(7) Attempt only single-axis maneuvers in order pitch, yaw and roll. This failure has no effect after .05 G since Euler mode relays are disabled.

(8) Assumes alternate rate source operable.

(9) After .05 G, if BMAG NO. 1 fails in yaw or roll, FDAI Roll Att will be erroneous; if BMAG No. 2 fails in yaw or roll, EMS RSI attitude will be erroneous unless RATE 1 selected.

(10) Entry capability can be determined from GDC FDAI roll ind and EMS RSI response when a yaw maneuver is commanded with .05 G sw and EMS ROLL sw - on (up).

Total attitude capability lost for affected axis. After .05 G, if failure axis is:
YAW - EMS RSI invalid
ROLL - No. 2 FDAI roll ind invalid.

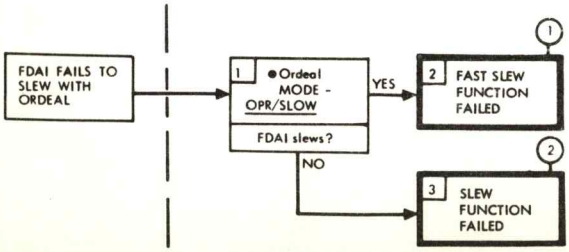


(1) Slew FDAI at slow rate.

(2) With an in-plane GDC alignment, FDAI pitch angle may be set by pressing GDC align pb and slewing pitch att set tw.

SM-2A-1943D

| SYMPTOM | PROCEDURE | REMARKS |
|---|---|---|

G&C

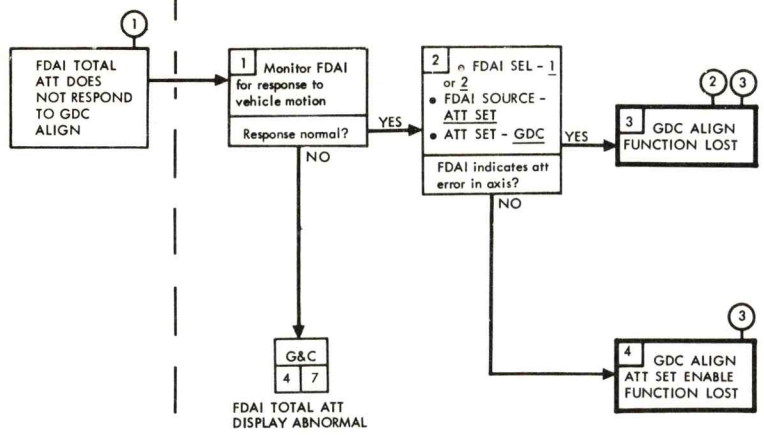


(1) May be single or multiple axes.

(2) Att set error displays still operational.

(3) GDC can be aligned to an arbitrary position by:
- a. Fly CSM to indicated attitude to which GDC is to be aligned.
- b. Disable GDC.
- c. Fly CSM to prescribed inertial attitude (star or visual reference).
- d. Re-enable GDC.

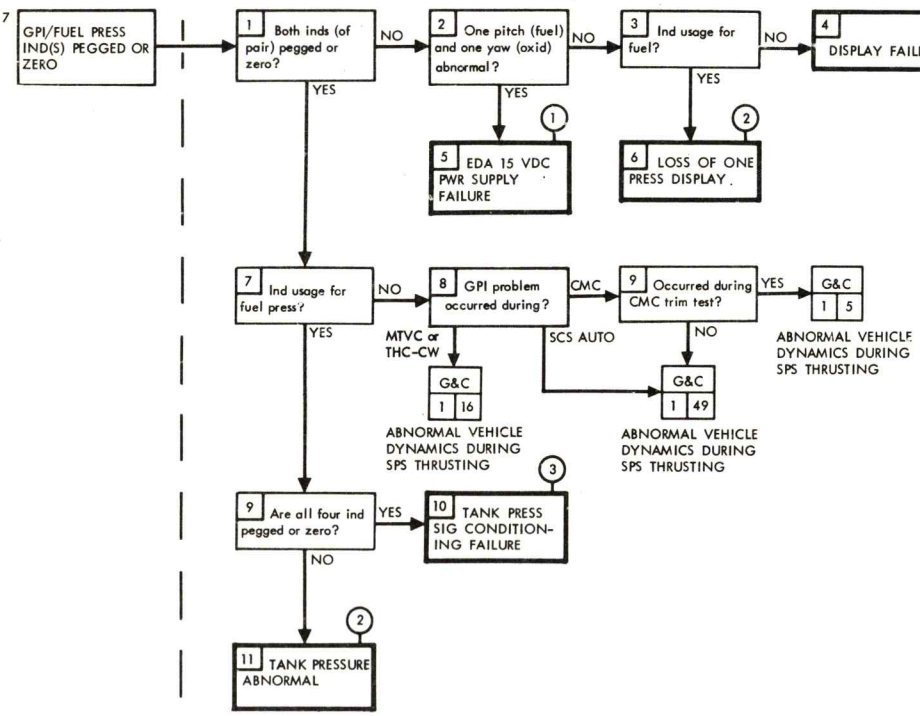


(1) Total attitude, attitude error & rate display lost for 1 FDAI.

(2) Check GPI operation during first gimbal drive and trim check.

(3) Utilize MSFN to monitor tank press.

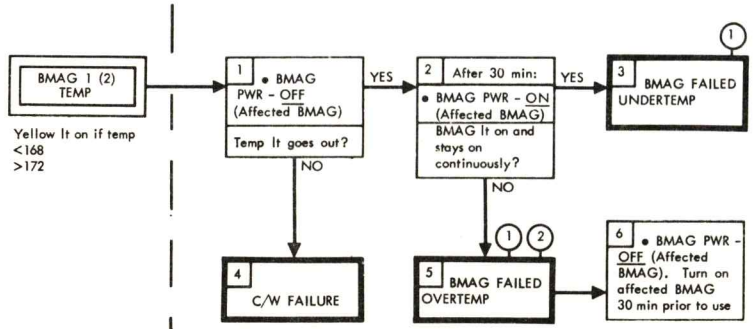


(1) BMAG rate information relatively unaffected by temperature out-of-tolerance. However attitude error information degrades ~4% per degree out of tolerance.

(2) Time that the BMAG TEMP lt is off is an indication of the temperature rate increase and period of accuracy for subsequent BMAG use.

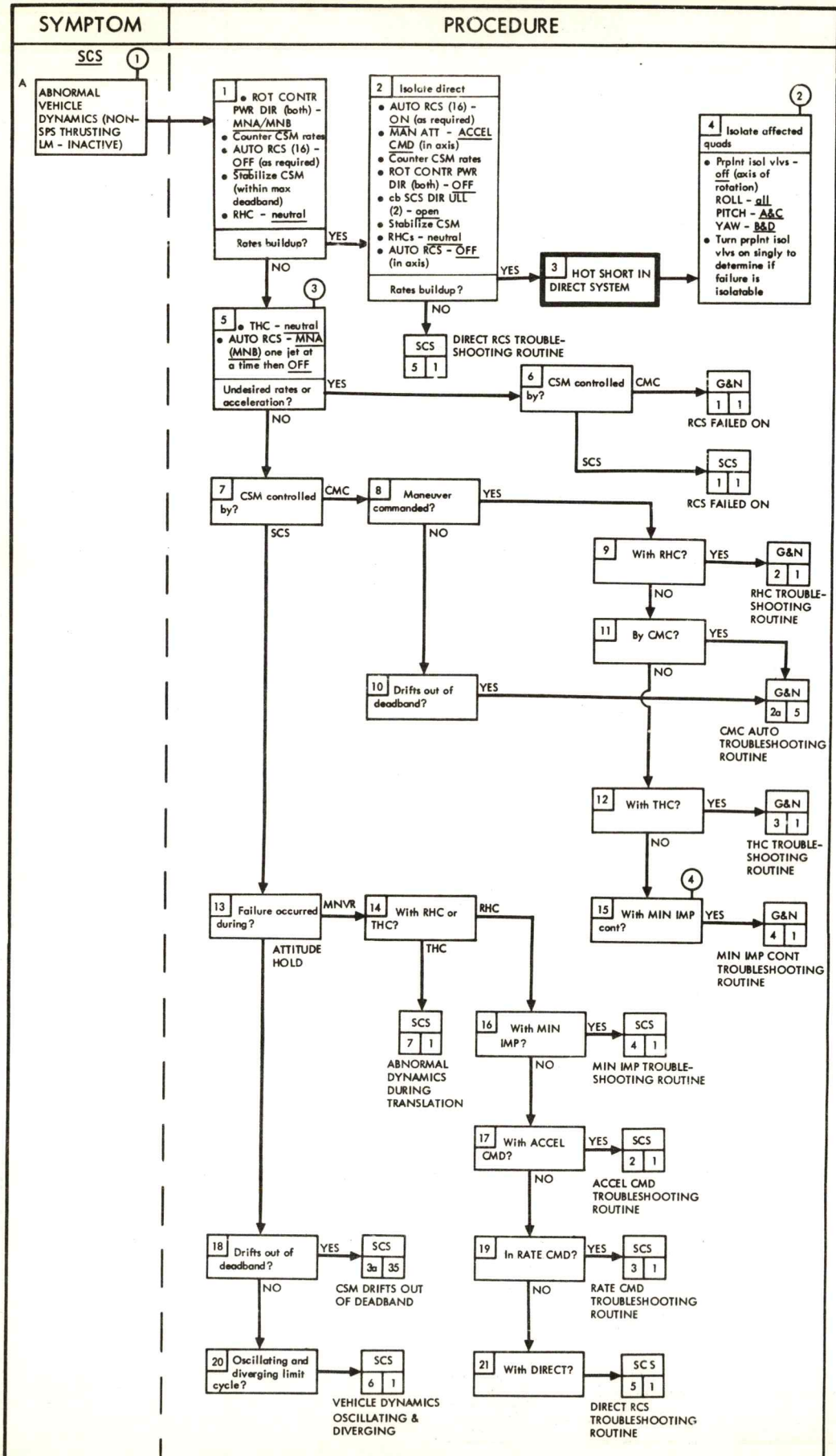
SYMPTOM
PROCEDURE
REMARKS
SCS
A
ABNORMAL VEHICLE DYNAMICS (NON-SPS THRUSTING LM - INACTIVE)
1 • ROT CONTR PWR DIR (both) - MNA/MNB • Counter CSM rates • AUTO RCS (16) - OFF (as required) • Stabilize CSM (within max deadband) • RHC - neutral
Rates buildup?
YES
NO
2 Isolate direct • AUTO RCS (16) - ON (as required) • MAN ATT - ACCEL CMD (in axis) • Counter CSM rates • ROT CONTR PWR DIR (both) - OFF • cb SCS DIR ULL (2) - open • Stabilize CSM • RHCs - neutral • AUTO RCS - OFF (in axis)
Rates buildup?
YES
NO
3 HOT SHORT IN DIRECT SYSTEM
4 Isolate affected quads • Prpint isol vlvs - off (axis of rotation) ROLL - all PITCH - A&C YAW - B&D • Turn prpint isol vlvs on singly to determine if failure is isolatable
SCS 5 1 DIRECT RCS TROUBLE-SHOOTING ROUTINE
5 • THC - neutral • AUTO RCS - MNA (MNB) one jet at a time then OFF
Undesired rates or acceleration?
YES
NO
6 CSM controlled by?
CMC
SCS
G&N 1 1 RCS FAILED ON
SCS 1 1 RCS FAILED ON
7 CSM controlled by?
CMC
SCS
8 Maneuver commanded?
YES
NO
9 With RHC?
YES
NO
G&N 2 1 RHC TROUBLE-SHOOTING ROUTINE
11 By CMC?
YES
NO
10 Drifts out of deadband?
YES
G&N 2a 5 CMC AUTO TROUBLESHOOTING ROUTINE
12 With THC?
YES
NO
G&N 3 1 THC TROUBLE-SHOOTING ROUTINE
13 Failure occurred during?
MNVR
ATTITUDE HOLD
14 With RHC or THC?
RHC
THC
15 With MIN IMP cont?
YES
G&N 4 1 MIN IMP CONT TROUBLESHOOTING ROUTINE
SCS 7 1 ABNORMAL DYNAMICS DURING TRANSLATION
16 With MIN IMP?
YES
SCS 4 1 MIN IMP TROUBLE-SHOOTING ROUTINE
NO
17 With ACCEL CMD?
YES
SCS 2 1 ACCEL CMD TROUBLESHOOTING ROUTINE
NO
18 Drifts out of deadband?
YES
SCS 3a 35 CSM DRIFTS OUT OF DEADBAND
NO
19 In RATE CMD?
YES
SCS 3 1 RATE CMD TROUBLESHOOTING ROUTINE
NO
20 Oscillating and diverging limit cycle?
SCS 6 1 VEHICLE DYNAMICS OSCILLATING & DIVERGING
21 With DIRECT?
SCS 5 1 DIRECT RCS TROUBLESHOOTING ROUTINE
1 Abnormal dynamics is defined to mean undesired rates or accelerations during uncommanded maneuvers or abnormal response during commanded maneuvers.
2 Auto RCS switches for all jets on affected quad should be placed to off position before quad isolation.
3 CSM should be stabilized within the attitude deadband (if in an attitude hold mode) to preclude normal jet firings resulting from being outside rate or attitude deadbands.
4 Would occur in FREE mode only.

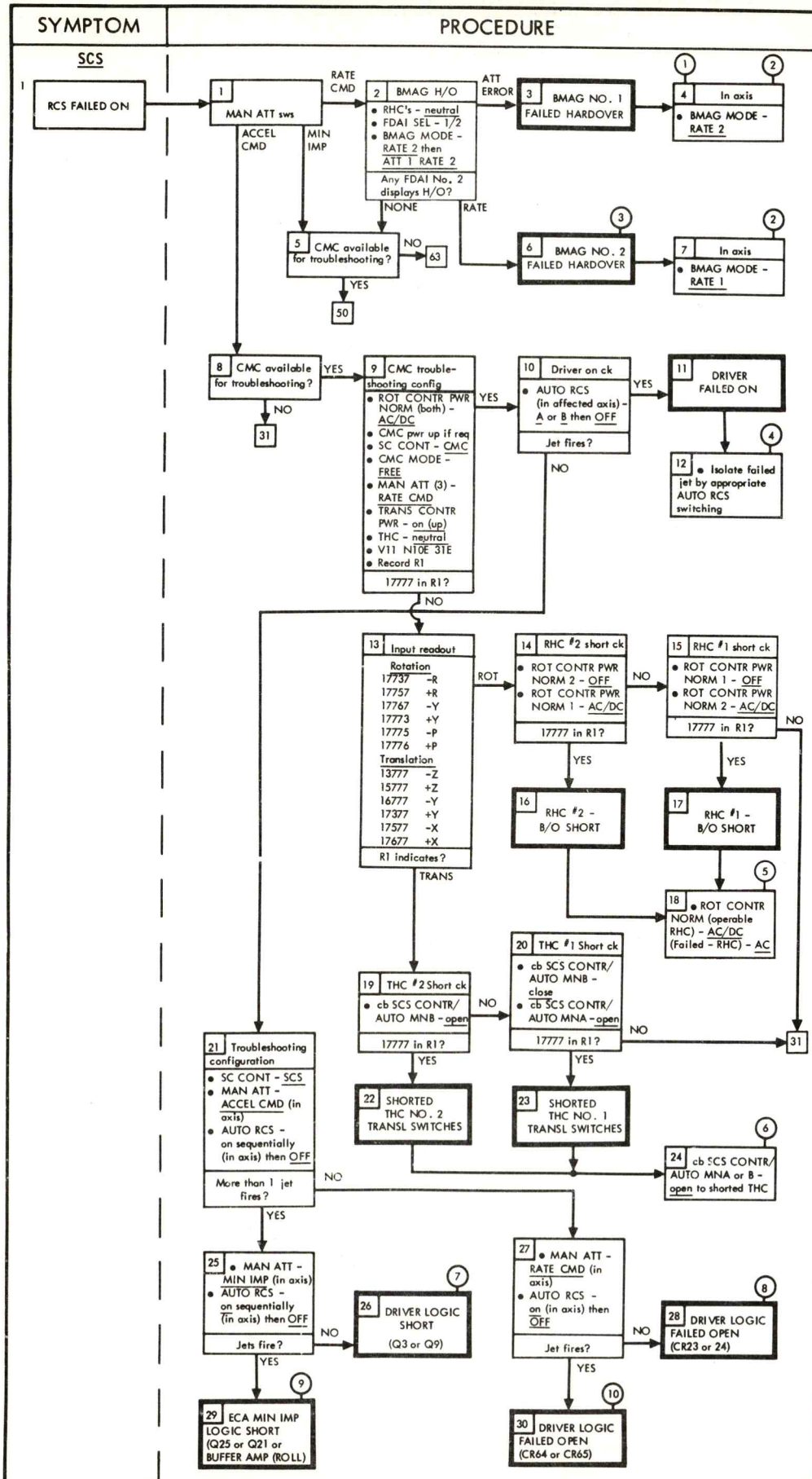
SYMPTOM
PROCEDURE
REMARKS
SCS
1 RCS FAILED ON
1 MAN ATT sws
ACCEL CMD
MIN IMP
RATE CMD
2 BMAG H/O
• RHC's - neutral
• FDAI SEL - 1/2
• BMAG MODE - RATE 2 then ATT 1 RATE 2
Any FDAI No. 2 displays H/O?
NONE
RATE
ATT ERROR
3 BMAG NO. 1 FAILED HARDOVER
4 In axis
• BMAG MODE - RATE 2
5 CMC available for troubleshooting?
NO
63
YES
50
6 BMAG NO. 2 FAILED HARDOVER
7 In axis
• BMAG MODE - RATE 1
8 CMC available for troubleshooting?
YES
NO
31
9 CMC troubleshooting config
• ROT CONTR PWR NORM (both) - AC/DC
• CMC pwr up if req
• SC CONT - CMC
• CMC MODE - FREE
• MAN ATT (3) - RATE CMD
• TRANS CONTR PWR - on (up)
• THC - neutral
• V11 N10E 31E
• Record R1
17777 in R1?
YES
NO
10 Driver on ck
• AUTO RCS (in affected axis) - A or B then OFF
Jet fires?
YES
NO
11 DRIVER FAILED ON
12 • Isolate failed jet by appropriate AUTO RCS switching
13 Input readout
Rotation
17737 -R
17757 +R
17767 -Y
17773 +Y
17775 -P
17776 +P
Translation
13777 -Z
15777 +Z
16777 -Y
17377 +Y
17577 -X
17677 +X
R1 indicates?
ROT
TRANS
14 RHC #2 short ck
• ROT CONTR PWR NORM 2 - OFF
• ROT CONTR PWR NORM 1 - AC/DC
17777 in R1?
NO
YES
15 RHC #1 short ck
• ROT CONTR PWR NORM 1 - OFF
• ROT CONTR PWR NORM 2 - AC/DC
17777 in R1?
NO
YES
16 RHC #2 - B/O SHORT
17 RHC #1 - B/O SHORT
5
18 • ROT CONTR NORM (operable RHC) - AC/DC (Failed - RHC) - AC
19 THC #2 Short ck
• cb SCS CONTR/ AUTO MNB - open
17777 in R1?
NO
YES
20 THC #1 Short ck
• cb SCS CONTR/ AUTO MNB - close
• cb SCS CONTR/ AUTO MNA - open
17777 in R1?
NO
YES
31
21 Troubleshooting configuration
• SC CONT - SCS
• MAN ATT - ACCEL CMD (in axis)
• AUTO RCS - on sequentially (in axis) then OFF
More than 1 jet fires?
NO
YES
22 SHORTED THC NO. 2 TRANSL SWITCHES
23 SHORTED THC NO. 1 TRANSL SWITCHES
6
24 cb SCS CONTR/ AUTO MNA or B - open to shorted THC
25 • MAN ATT - MIN IMP (in axis)
• AUTO RCS - on sequentially (in axis) then OFF
Jets fire?
NO
YES
7
26 DRIVER LOGIC SHORT (Q3 or Q9)
9
29 ECA MIN IMP LOGIC SHORT (Q25 or Q21 or BUFFER AMP (ROLL)
27 • MAN ATT - RATE CMD (in axis)
• AUTO RCS - on (in axis) then OFF
Jet fires?
NO
YES
8
28 DRIVER LOGIC FAILED OPEN (CR23 or 24)
10
30 DRIVER LOGIC FAILED OPEN (CR64 or CR65)
1 If failure is in roll or yaw after 0.05G, GDC driven ball will spin up.
2 Attitude hold lost in affected axis. SCS auto ΔV lost if pitch or yaw. If roll, control attitude by direct or ACCEL CMD.
3 BMAG No. 2 hardover will cause FDAI No. 2 total attitude to drive randomly in Euler modes.
4 Affected thruster lost for all auto coil operation. Direct mode unaffected.
5 Direct sws in affected RHC still functional. Affected RHC lost for SCS and G/N attitude control. If RHC 2, swap RHC 1 to CDRs position and leave RHC 2 off. For ΔV's replace RHC 2 to CDR's position and leave in AC only.
6 Still have translation capability through redundant switches in THC. Select operable enable bus with AUTO RCS.
7 ACCEL CMD lost in pitch or yaw.
8 ACCEL CMD lost for that jet.
9 All SCS RCS (auto coils) lost for affected axis. Disable affected jets with AUTO RCS sws and use direct.
10 SCS auto RCS coil modes lost for affected jet. If affected jet is in roll, loss of either ±Y or Z translation. If affected jet is in pitch or yaw loss of 4 jet + or -X trans.

SM-2A-1944E

| SYMPTOM | PROCEDURE | REMARKS |
|---|---|---|

SCS

1 Cont

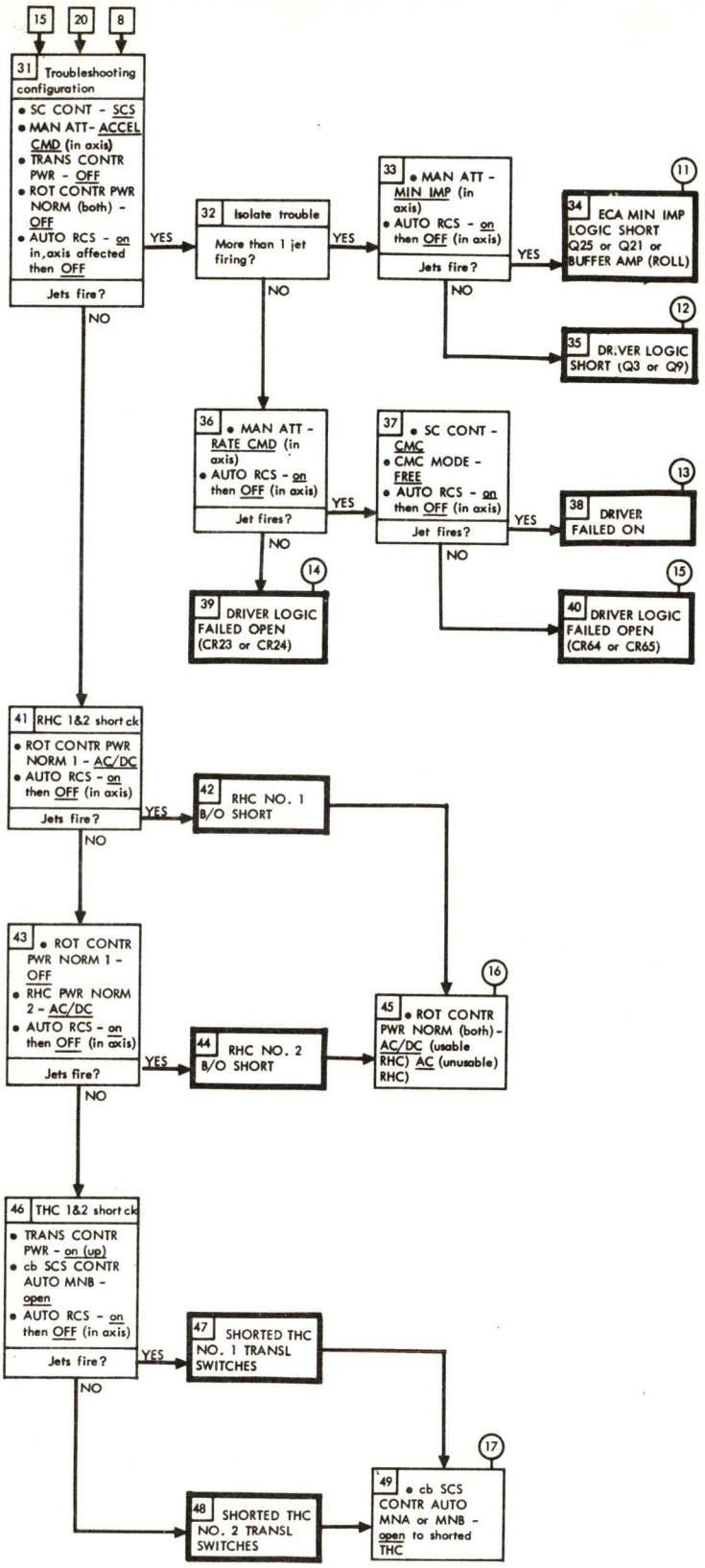


(11) All SCS RCS (auto coils) lost for affected axis. Disable affected jets with AUTO RCS sws and use direct control.

(12) ACCEL CMD lost in pitch or yaw. Use alternate quad pair for roll.

(13) This jet lost for all SCS & G/N control modes. Disable jet with AUTO RCS sws and use direct control.

(14) ACCEL CMD lost for this jet.

(15) SCS AUTO RCS coil modes lost for affected jet. If affected jet is in roll loss of either ±Y or Z trans. If affected jet is in pitch or yaw, loss of 4 jet + or -X trans.

(16) Direct sws in affected RHC still functional. Affected RHC lost for SCS and G/N attitude control. If RHC 2, swap RHC 1 to CDR's position and leave RHC 2 off. For ΔV's replace RHC 2 to CDR's position and leave in AC only.

(17) Still have translation capability through redundant sws in THC. Select operable enable bus with AUTO RCS.

| SYMPTOM | PROCEDURE | REMARKS |
|---|---|---|

**SCS**

1 cont

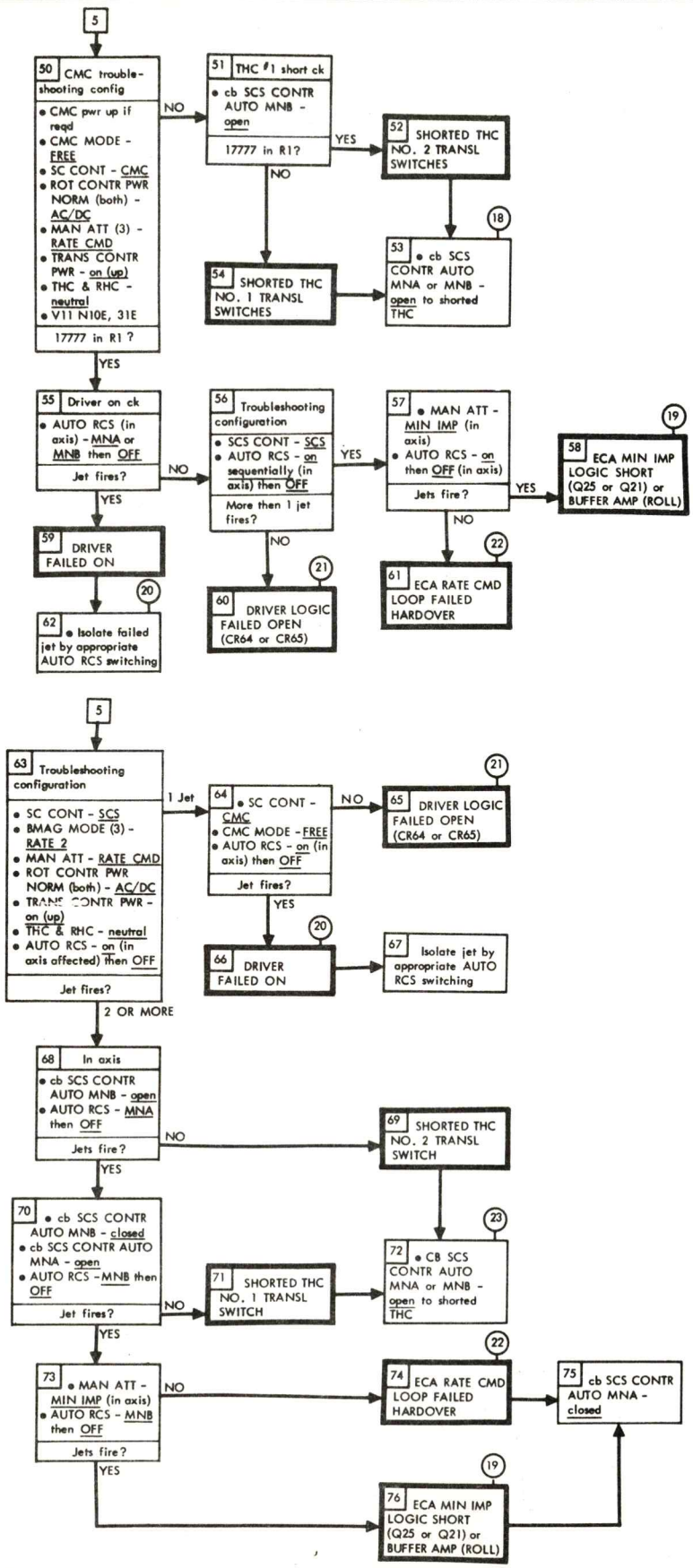


(18) Still have translation capability through redundant sws in THC. Select operable enable bus with AUTO RCS.

(19) All SCS RCS (auto coils) lost for affected axis. Disable affected jets with AUTO RCS sws and use direct control.

(20) This jet lost for SCS & G&N control modes. Use direct control in affected axis.

(21) SCS AUTO RCS coil modes lost for affected jet. If affected jet is in roll loss of either ±Y or Z trans. If affected jet is in pitch or yaw loss of 4 jet + or -X trans.

(22) SCS RATE CMD, attitude hold & prop cont lost for affected jet. SCS auto ΔV lost if pitch or yaw but operable in roll in ACCEL CMD. Translation without attitude hold possible in MIN IMP or ACCEL CMD.

(23) Still have translation capability through redundant sws in THC. Select operable enable bus with AUTO RCS.

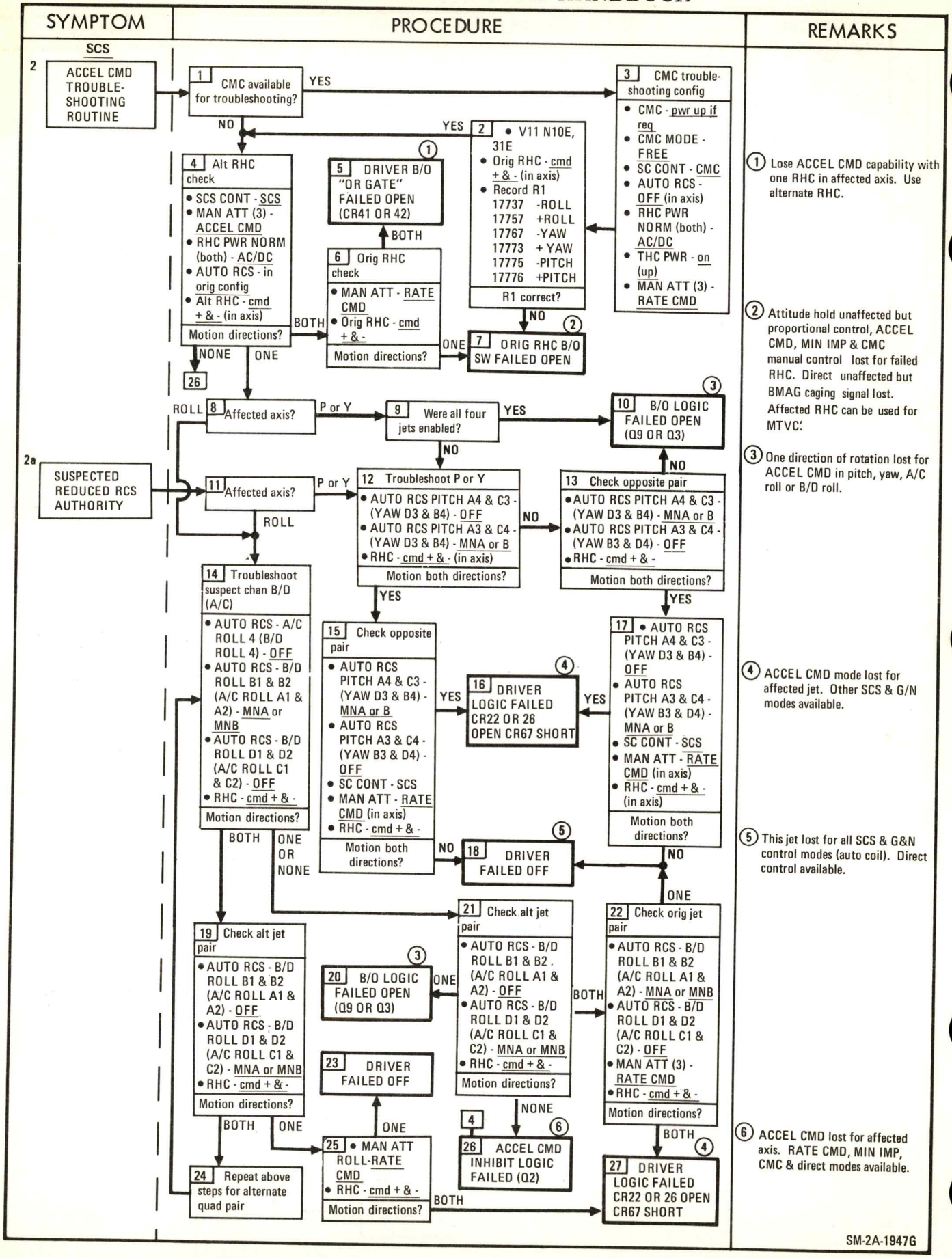
SYMPTOM
PROCEDURE
REMARKS
SCS
2 ACCEL CMD TROUBLE-SHOOTING ROUTINE
1 CMC available for troubleshooting?
YES
NO
3 CMC trouble-shooting config
• CMC - pwr up if req
• CMC MODE - FREE
• SC CONT - CMC
• AUTO RCS - OFF (in axis)
• RHC PWR NORM (both) - AC/DC
• THC PWR - on (up)
• MAN ATT (3) - RATE CMD
2 • V11 N10E, 31E
• Orig RHC - cmd + & - (in axis)
• Record R1
17737 -ROLL
17757 +ROLL
17767 -YAW
17773 + YAW
17775 -PITCH
17776 +PITCH
R1 correct?
NO
2
7 ORIG RHC B/O SW FAILED OPEN
4 Alt RHC check
• SCS CONT - SCS
• MAN ATT (3) - ACCEL CMD
• RHC PWR NORM (both) - AC/DC
• AUTO RCS - in orig config
• Alt RHC - cmd + & - (in axis)
Motion directions?
BOTH
ONE
NONE
1
5 DRIVER B/O "OR GATE" FAILED OPEN (CR41 OR 42)
BOTH
6 Orig RHC check
• MAN ATT - RATE CMD
• Orig RHC - cmd + & -
Motion directions?
ONE
26
ROLL
8 Affected axis?
P or Y
9 Were all four jets enabled?
YES
NO
3
10 B/O LOGIC FAILED OPEN (Q9 OR Q3)
NO
2a SUSPECTED REDUCED RCS AUTHORITY
11 Affected axis?
P or Y
ROLL
12 Troubleshoot P or Y
• AUTO RCS PITCH A4 & C3 - (YAW D3 & B4) - OFF
• AUTO RCS PITCH A3 & C4 - (YAW D3 & B4) - MNA or B
• RHC - cmd + & - (in axis)
Motion both directions?
NO
13 Check opposite pair
• AUTO RCS PITCH A4 & C3 - (YAW D3 & B4) - MNA or B
• AUTO RCS PITCH A3 & C4 - (YAW B3 & D4) - OFF
• RHC - cmd + & -
Motion both directions?
YES
14 Troubleshoot suspect chan B/D (A/C)
• AUTO RCS - A/C ROLL 4 (B/D ROLL 4) - OFF
• AUTO RCS - B/D ROLL B1 & B2 (A/C ROLL A1 & A2) - MNA or MNB
• AUTO RCS - B/D ROLL D1 & D2 (A/C ROLL C1 & C2) - OFF
• RHC - cmd + & -
Motion directions?
BOTH
ONE OR NONE
15 Check opposite pair
• AUTO RCS PITCH A4 & C3 - (YAW D3 & B4) - MNA or B
• AUTO RCS PITCH A3 & C4 - (YAW B3 & D4) - OFF
• SC CONT - SCS
• MAN ATT - RATE CMD (in axis)
• RHC - cmd + & -
Motion both directions?
YES
4
16 DRIVER LOGIC FAILED CR22 OR 26 OPEN CR67 SHORT
YES
17 • AUTO RCS PITCH A4 & C3 - (YAW D3 & B4) - OFF
• AUTO RCS PITCH A3 & C4 - (YAW B3 & D4) - MNA or B
• SC CONT - SCS
• MAN ATT - RATE CMD (in axis)
• RHC - cmd + & - (in axis)
Motion both directions?
5
NO
18 DRIVER FAILED OFF
NO
ONE
19 Check alt jet pair
• AUTO RCS - B/D ROLL B1 & B2 (A/C ROLL A1 & A2) - OFF
• AUTO RCS - B/D ROLL D1 & D2 (A/C ROLL C1 & C2) - MNA or MNB
• RHC - cmd + & -
Motion directions?
BOTH
ONE
3
20 B/O LOGIC FAILED OPEN (Q9 OR Q3)
ONE
21 Check alt jet pair
• AUTO RCS - B/D ROLL B1 & B2 (A/C ROLL A1 & A2) - OFF
• AUTO RCS - B/D ROLL D1 & D2 (A/C ROLL C1 & C2) - MNA or MNB
• RHC - cmd + & -
Motion directions?
BOTH
22 Check orig jet pair
• AUTO RCS - B/D ROLL B1 & B2 (A/C ROLL A1 & A2) - MNA or MNB
• AUTO RCS - B/D ROLL D1 & D2 (A/C ROLL C1 & C2) - OFF
• MAN ATT (3) - RATE CMD
• RHC - cmd + & -
Motion directions?
23 DRIVER FAILED OFF
ONE
NONE
4
6
26 ACCEL CMD INHIBIT LOGIC FAILED (Q2)
BOTH
4
27 DRIVER LOGIC FAILED CR22 OR 26 OPEN CR67 SHORT
25 • MAN ATT ROLL-RATE CMD
• RHC - cmd + & -
Motion directions?
BOTH
ONE
24 Repeat above steps for alternate quad pair
1 Lose ACCEL CMD capability with one RHC in affected axis. Use alternate RHC.
2 Attitude hold unaffected but proportional control, ACCEL CMD, MIN IMP & CMC manual control lost for failed RHC. Direct unaffected but BMAG caging signal lost. Affected RHC can be used for MTVC.
3 One direction of rotation lost for ACCEL CMD in pitch, yaw, A/C roll or B/D roll.
4 ACCEL CMD mode lost for affected jet. Other SCS & G/N modes available.
5 This jet lost for all SCS & G&N control modes (auto coil). Direct control available.
6 ACCEL CMD lost for affected axis. RATE CMD, MIN IMP, CMC & direct modes available.
SM-2A-1947G

## SYMPTOM

SCS

## PROCEDURE

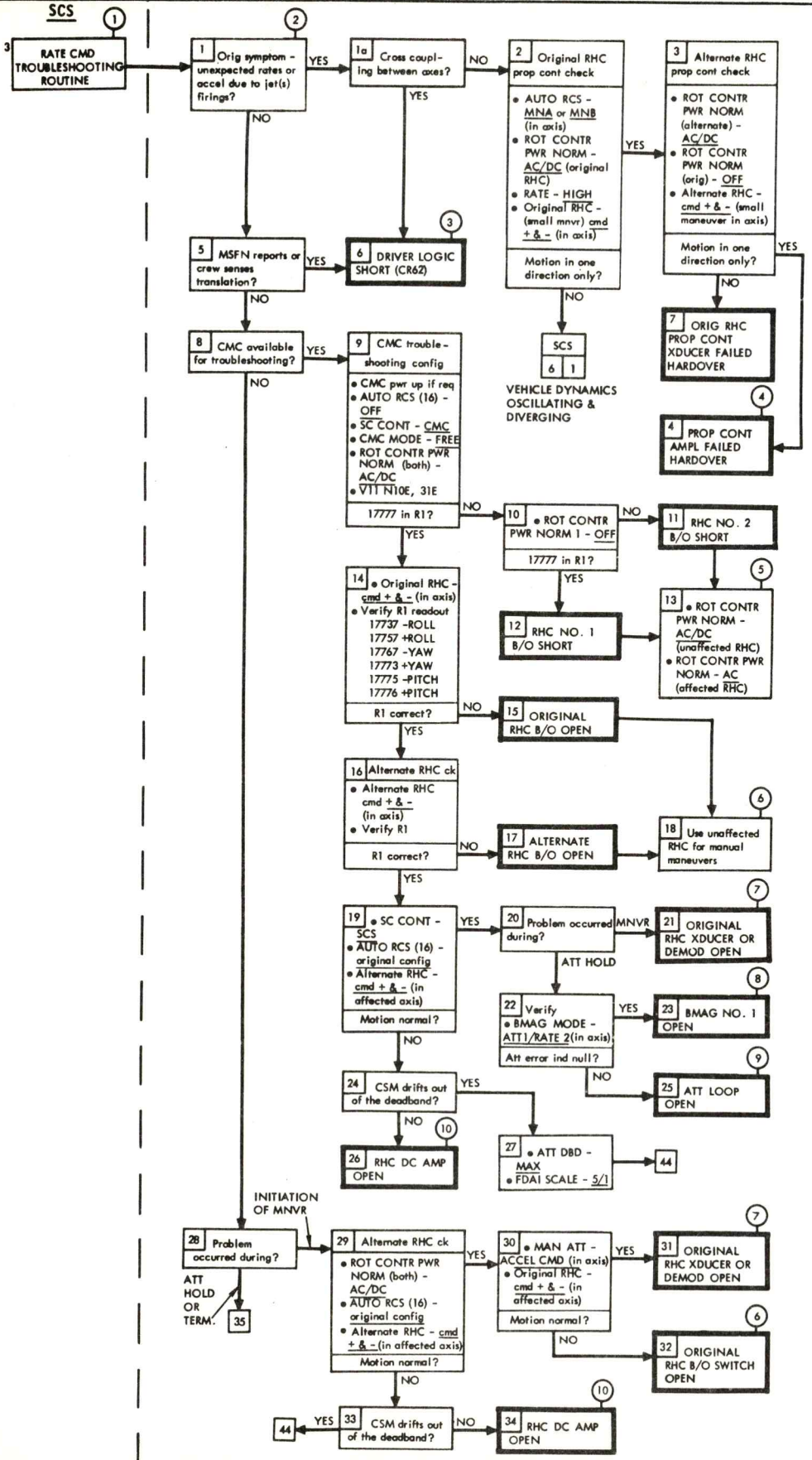


## REMARKS

(1) Assumes full thruster operation except in roll.

(2) Assumes RCS thrusters fail on where identified in the "A" flow.

(3) Failure causes translation when rotation cmds given. Attitude hold RATE CMD & MIN IMP lost in one direction for affected axis (pitch, yaw, A/C roll, B/D roll). Translation without attitude hold possible with MAN ATT - MIN IMP.

(4) For PROP CONT AMP failed hardover, MTVC and RATE CMD lost in affected axis. Attitude hold possible if RHC's locked (or neutral) or if ROT CONTR PWR NORM (both) - OFF. Disable thrusters in affected axis if direct used.

(5) Direct sws in affected RHC still functional. One RHC lost; however, RATE CMD mode in failed RHC still possible when breakout switches closed in same axis by operable RHC. MTVC ok when ROT CONTR PWR NORM (affected RHC) is at AC

(6) Attitude hold unaffected but prop cont, ACCEL CMD, MIN IMP & CMC man cont lost for failed RHC. Direct unaffected but BMAG caging signal lost. Affected RHC can be used for MTVC.

(7) SCS prop cont & MTVC lost for failed RHC.

(8) For affected axis: In ATT 1 RATE 2, att hold & att error display lost. SCS auto ΔV possible if roll, by controlling attitude manually. After .05 G, SCS FDAI roll attitude erroneous if yaw or roll.

(9) Attitude hold capability lost in affected axis. SCS auto ΔV lost if pitch or yaw, but possible if roll by placing MAN ATT ROLL - ACCEL CMD.

(10) SCS prop cont & MTVC lost for both RHCs.

| SYMPTOM | PROCEDURE | REMARKS |
|---|---|---|

SCS

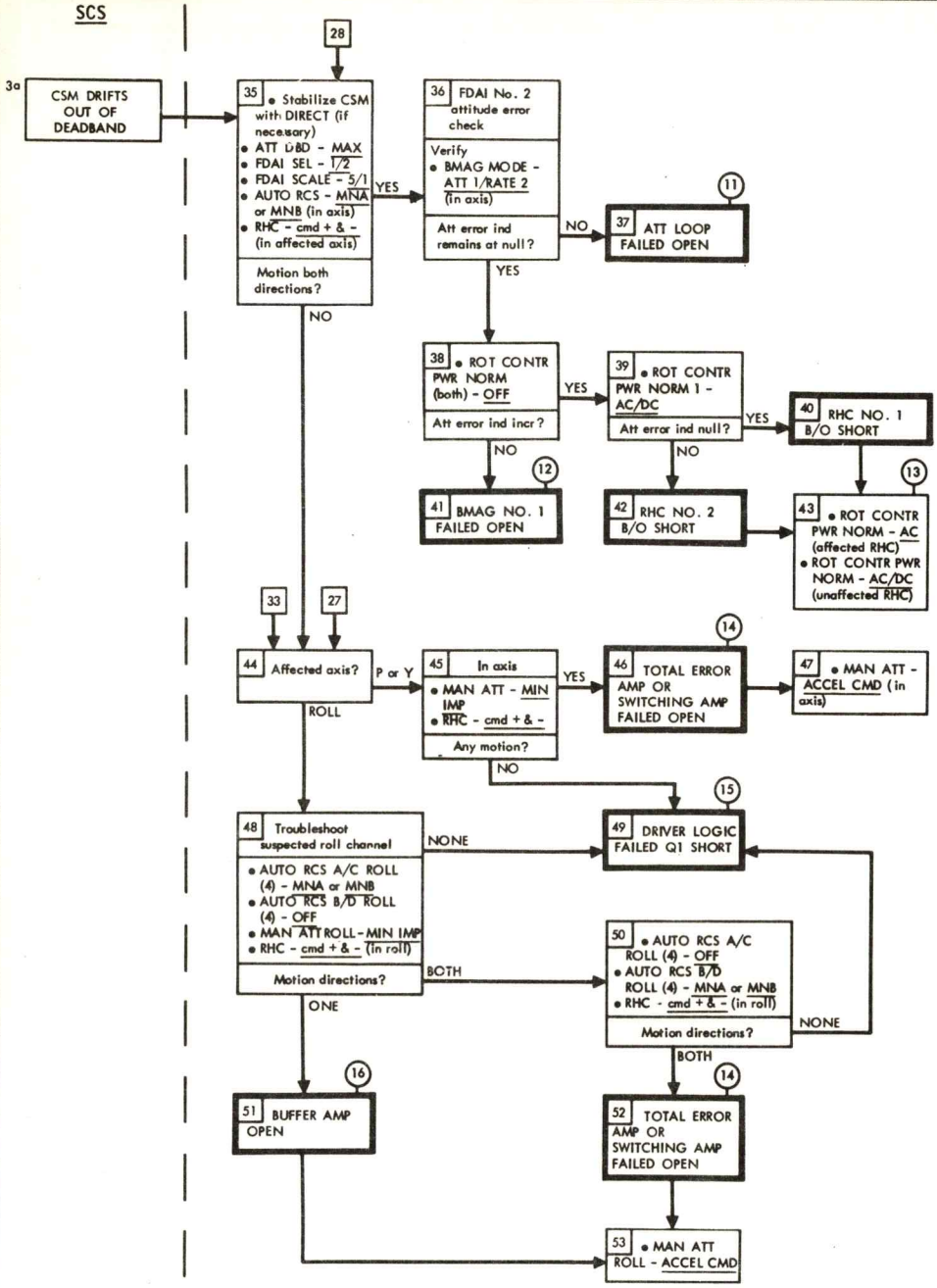


(11) Attitude hold capability lost in affected axis. SCS auto ΔV lost if pitch or yaw, but possible if roll by placing MAN ATT ROLL - ACCEL CMD.

(12) For affected axis: In ATT 1 RATE 2, att hold & att error display lost. SCS auto ΔV possible if roll, by controlling att manually. After .05 G, SCS FDAI roll attitude erroneous if yaw or roll.

(13) Direct sws in affected RHC still functional. One RHC lost; however, RATE CMD mode in failed RHC still possible when breakout switches closed in same axis by operable RHC. MTVC ok when ROT CONTR PWR NORM (affected RHC) is at AC.

(14) All RATE CMD & attitude hold capability lost for affected axis. Translation possible with MAN ATT sw in RATE CMD & attitude control in affected axis by direct or MIN IMP.

(15) Lose all SCS modes except ACCEL CMD. No Translation on affected axis. Direct control available.

(16) One polarity lost in RATE CMD & MIN IMP. Translation capability remains but attitude hold lost.

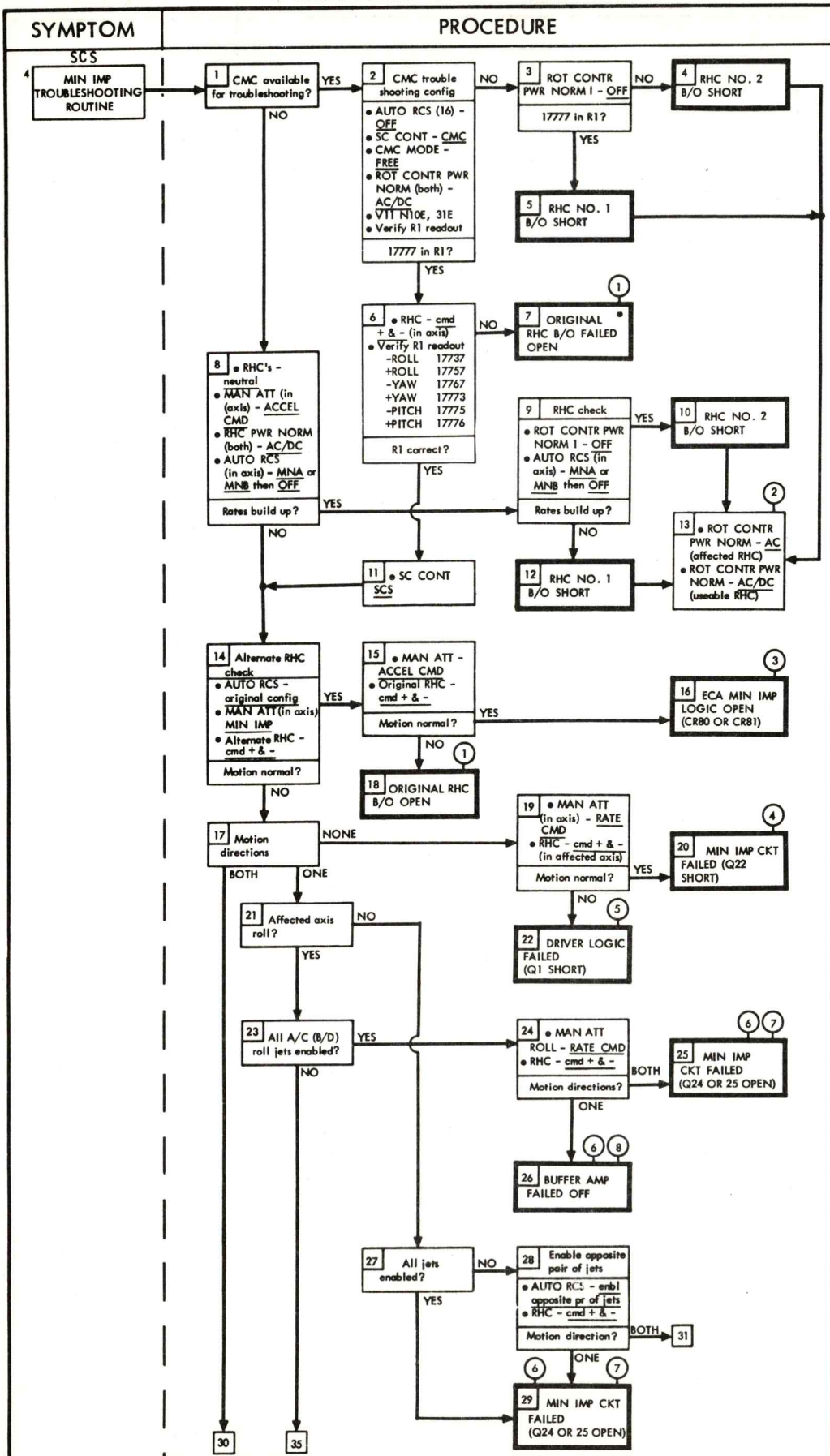
SYMPTOM
PROCEDURE
REMARKS
SCS
4 MIN IMP TROUBLESHOOTING ROUTINE
1 CMC available for troubleshooting?
YES
NO
2 CMC trouble shooting config
• AUTO RCS (16) - OFF
• SC CONT - CMC
• CMC MODE - FREE
• ROT CONTR PWR NORM (both) - AC/DC
• VII N10E, 31E
• Verify R1 readout
17777 in R1?
NO
YES
3 ROT CONTR PWR NORM 1 - OFF
17777 in R1?
NO
YES
4 RHC NO. 2 B/O SHORT
5 RHC NO. 1 B/O SHORT
6 • RHC - cmd + & - (in axis)
• Verify R1 readout
-ROLL 17737
+ROLL 17757
-YAW 17767
+YAW 17773
-PITCH 17775
+PITCH 17776
R1 correct?
NO
YES
7 ORIGINAL RHC B/O FAILED OPEN
8 • RHC's - neutral
• MAN ATT (in (axis) - ACCEL CMD
• RHC PWR NORM (both) - AC/DC
• AUTO RCS (in axis) - MNA or MNB then OFF
Rates build up?
YES
NO
9 RHC check
• ROT CONTR PWR NORM 1 - OFF
• AUTO RCS (in axis) - MNA or MNB then OFF
Rates build up?
YES
NO
10 RHC NO. 2 B/O SHORT
11 • SC CONT SCS
12 RHC NO. 1 B/O SHORT
13 • ROT CONTR PWR NORM - AC (affected RHC)
• ROT CONTR PWR NORM - AC/DC (useable RHC)
14 Alternate RHC check
• AUTO RCS - original config
• MAN ATT (in axis) MIN IMP
• Alternate RHC - cmd + & -
Motion normal?
YES
NO
15 • MAN ATT - ACCEL CMD
• Original RHC - cmd + & -
Motion normal?
YES
NO
16 ECA MIN IMP LOGIC OPEN (CR80 OR CR81)
18 ORIGINAL RHC B/O OPEN
17 Motion directions
NONE
BOTH
ONE
19 • MAN ATT (in axis) - RATE CMD
• RHC - cmd + & - (in affected axis)
Motion normal?
YES
NO
20 MIN IMP CKT FAILED (Q22 SHORT)
22 DRIVER LOGIC FAILED (Q1 SHORT)
21 Affected axis roll?
NO
YES
23 All A/C (B/D) roll jets enabled?
YES
NO
24 • MAN ATT ROLL - RATE CMD
• RHC - cmd + & -
Motion directions?
BOTH
ONE
25 MIN IMP CKT FAILED (Q24 OR 25 OPEN)
26 BUFFER AMP FAILED OFF
27 All jets enabled?
NO
YES
28 Enable opposite pair of jets
• AUTO RCS - enbl opposite pr of jets
• RHC - cmd + & -
Motion direction?
BOTH
ONE
31
29 MIN IMP CKT FAILED (Q24 OR 25 OPEN)
30
35
1 Lose prop cont ACCEL CMD, MIN IMP & CMC MAN CONT for failed RHC. Direct unaffected but BMAG caging signal lost. Affected RHC can be used for MTVC. Attitude hold unaffected.
2 Direct sw's in affected RHC still functional. Affected RHC lost for SCS and G/N attitude control. If RHC 2 swap RHC 1 to CDR's position and leave RHC 2 off. For ΔV's replace RHC 2 to CDR's position and leave in AC only.
3 Loss of MIN IMP cont in one direction of affected axis. RATE CMD & ACCEL CMD still available. BMAG cage function still operational.
4 Lose MIN IMP in both directions of affected axis. RATE CMD & ACCEL CMD still available.
5 RATE CMD and MIN IMP lost for affected axis (pitch, yaw, A/C roll or B/D roll). SCS translation capability from affected thrusters lost except by DIR ULL. ACCEL CMD and G/N modes unaffected.
6 Min engine on time protection lost for RATE CMD & ACCEL CMD.
7 Lose MIN IMP in one direction of affected axis. RATE CMD & ACCEL CMD available. Translation unaffected.
8 Lose MIN IMP & RATE CMD in one direction of roll axis. ACCEL CMD available. Roll attitude hold lost. SCS auto ΔV unaffected but control roll attitude manually with ACCEL CMD.

| SYMPTOM | PROCEDURE | REMARKS |
|---|---|---|

**SCS**

4 (cont)

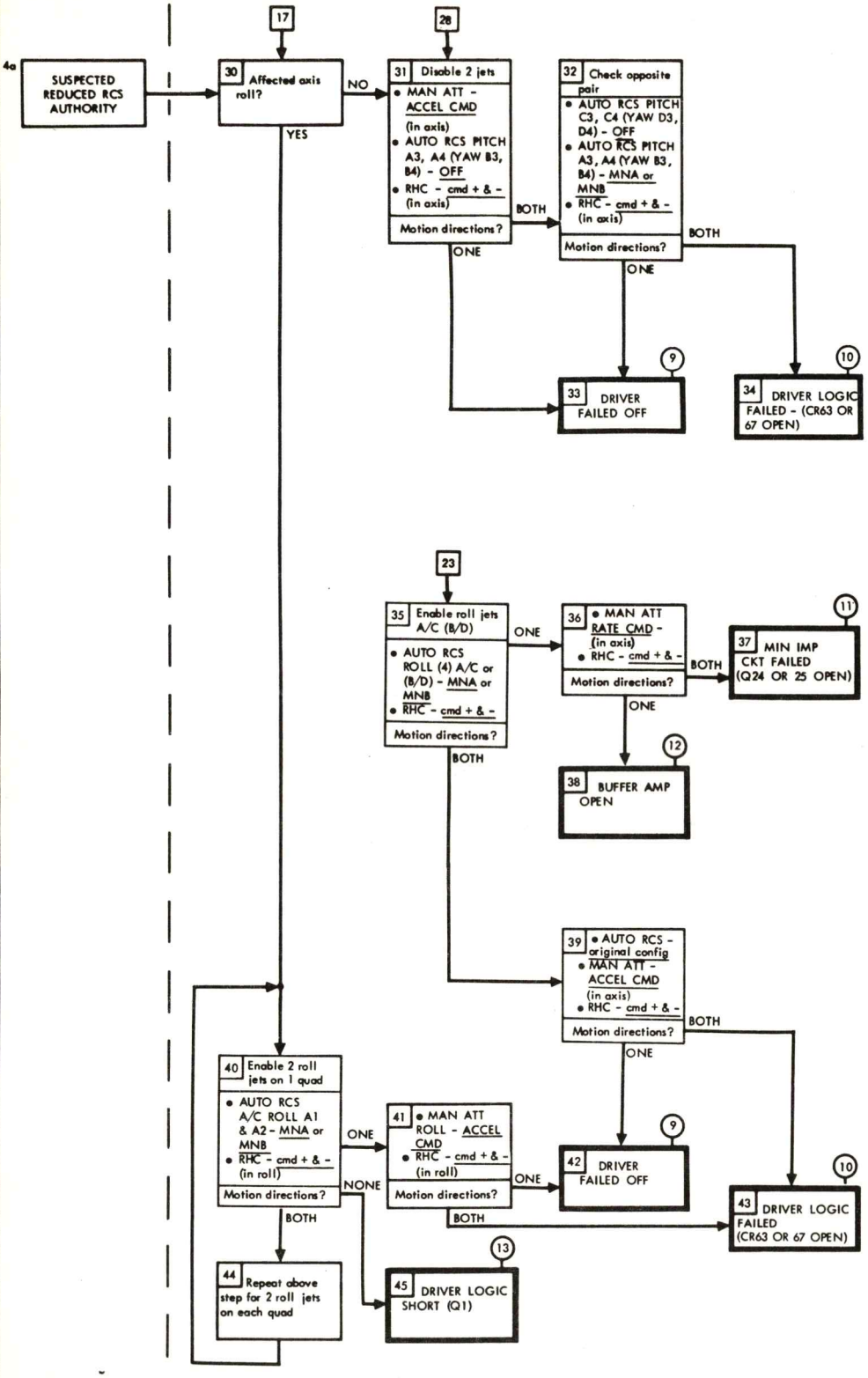


(9) This jet lost for all SCS & G/N control modes. Direct mode of operation available.

(10) Lose RATE CMD & MIN IMP modes. ACCEL CMD still available.

(11) Lose MIN IMP in one direction of affected axis. RATE CMD & ACCEL CMD available. Translation uneffected.

(12) Lose MIN IMP & RATE CMD in one direction of roll axis. ACCEL CMD available.

(13) RATE CMD and MIN IMP lost for affected axis (pitch, yaw, A/C roll or B/D roll). SCS translation capability from affected thrusters lost except by DIR ULL. ACCEL CMD and G&N modes unaffected.

| SYMPTOM | PROCEDURE | REMARKS |
|---|---|---|

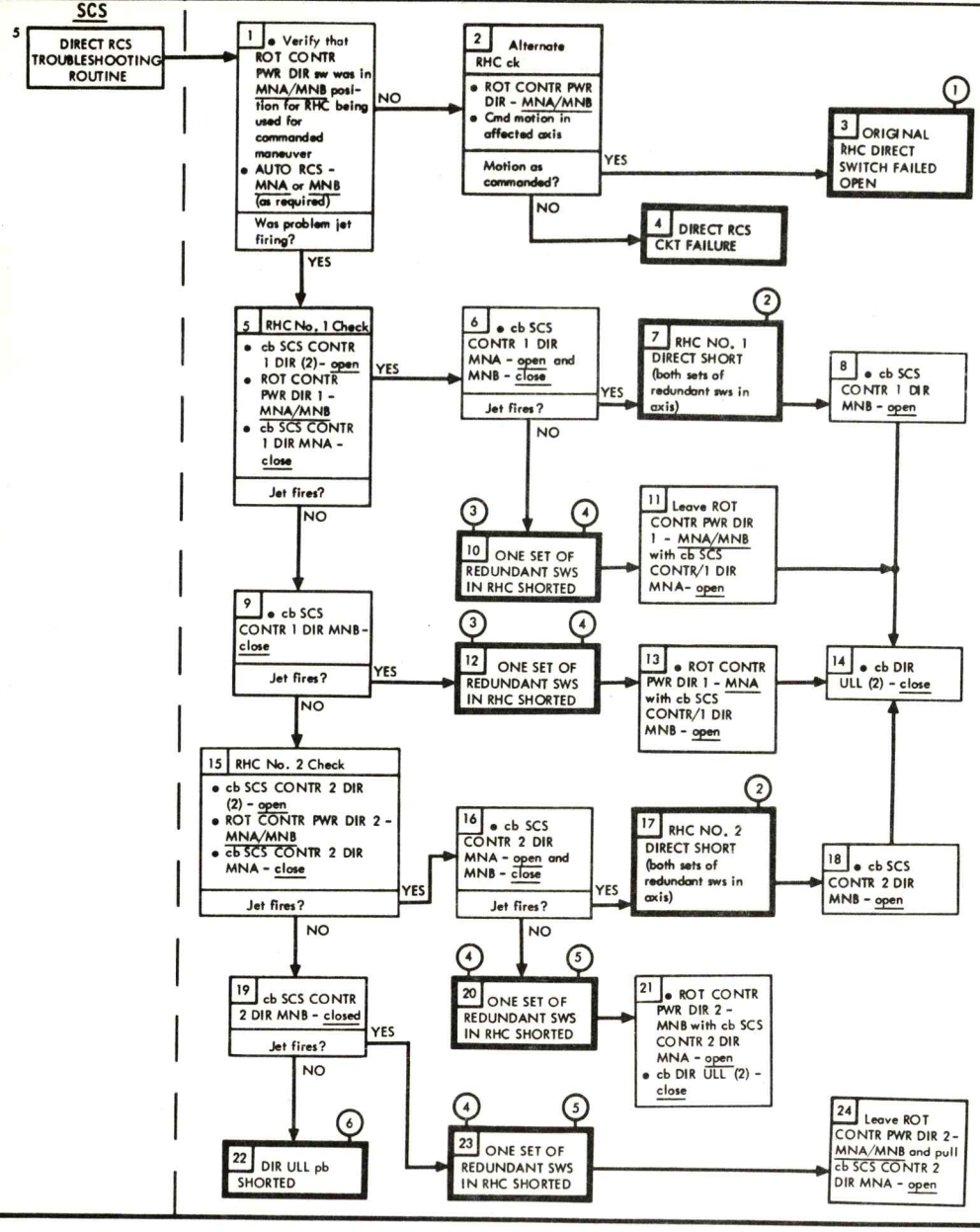


(1) Direct operation with original RHC results in reduced authority in affected axis through redundant switch.

(2) Direct operation with affected RHC lost.

(3) Direct operation with RHC No. 1 functional through redundant set of sws.

(4) Loss of one set of redundant direct sws results in reduced authority in affected axis.

(5) Operation with RHC No. 2 functional through redundant set of sws.

(6) Close direct ullage cbs one at a time to isolate the failure within the DIR ULL pb. DIR ULL MNA powers quad B/D. MNB powers quad A/C jets. This will provide 2-jet direct ullage.

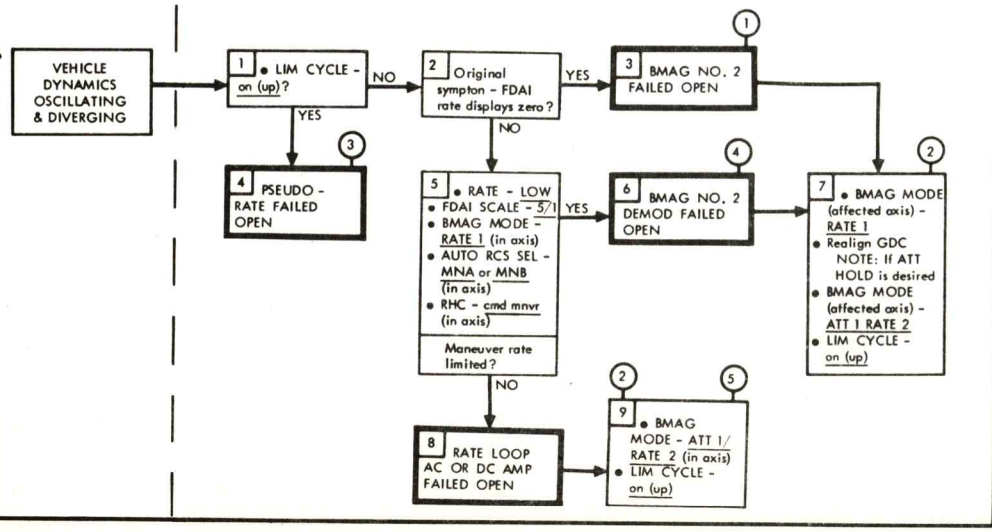


(1) SCS ball drive lost in affected axis in RATE 2 or ATT 1 RATE 2. EMS-RSI erroneous after .05 G if yaw or roll, unless switched to RATE 1.

(2) No SCS auto ΔV if pitch or yaw; if in roll SCS auto ΔV possible if BMAG mode - ATT 1 RATE 2 & LIM CYCLE - ON.

(3) This failure noticeable only if BMAG 2 power is off.

(4) Displays & RATE 1 unaffected.

(5) For affected axis all rate damping lost. RATE CMD response similar to ACCEL CMD.

| SYMPTOM | PROCEDURE | REMARKS |
|---|---|---|

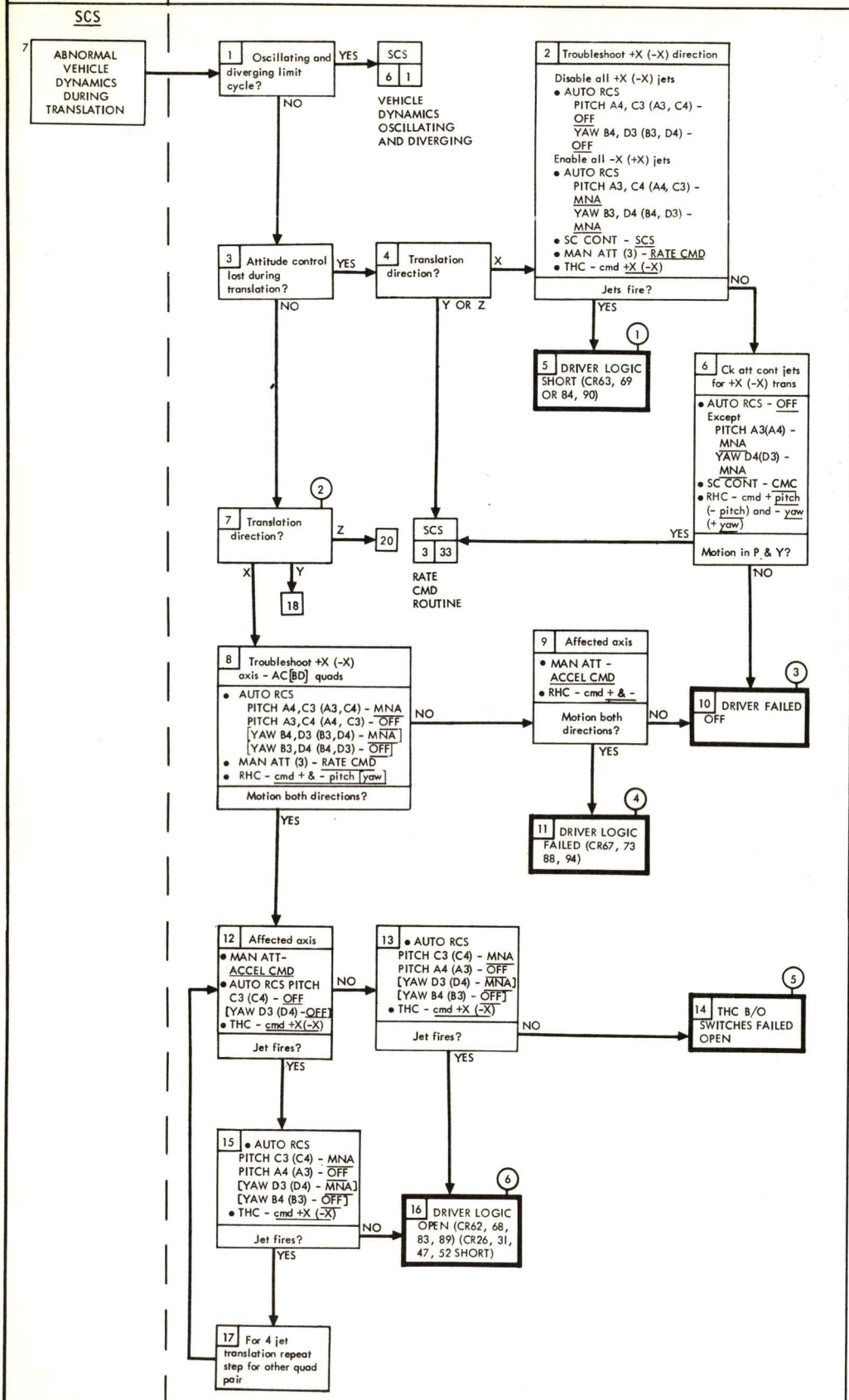


(1) This failure causes translation jets opposite to selected direction to fire. Attitude control during translations will be lost in one axis (pitch or yaw). For + or -X trans, disable thrusters in affected axis and control attitude with direct. (Translations will be 2 jet.) Or for +X trans, use DIR ULL and control attitude with direct.

(2) If CMC is available, operation of B/O switches in THC may be checked per G&N 3 step 1.

(3) All auto coil capability lost for this thruster. Direct available.

(4) Affected jet lost for SCS RATE CMD, MIN IMP and auto coil translations. ACCEL CMD and G&N modes unaffected.

(5) Translation capability lost in affected axis. If problem is in the +X axis, direct ullage capability remains.

(6) Affected jet lost for all auto-coil translations. Rotation capability unaffected.

| SYMPTOM | PROCEDURE | REMARKS |
|---|---|---|
| SCS<br><br>7 (Cont) | 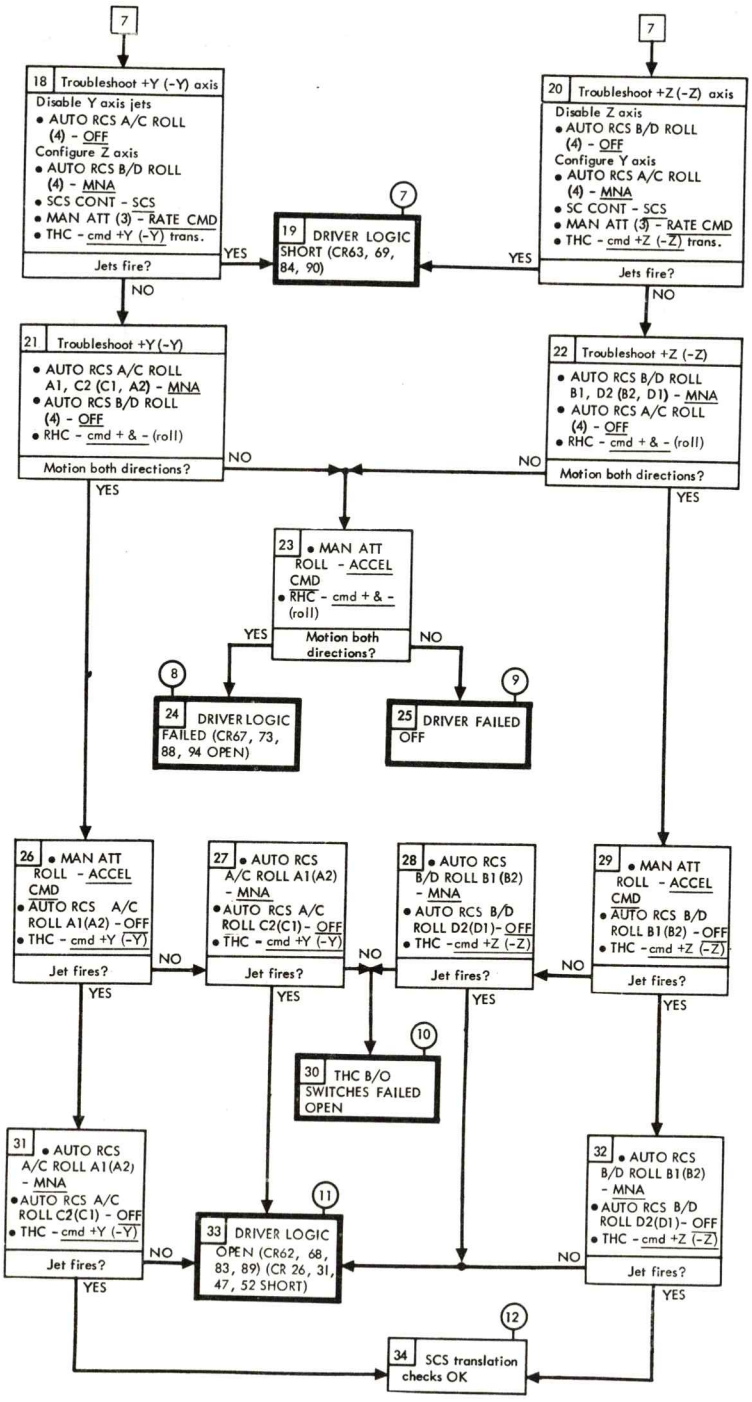 | (7) One direction of Y or Z translation lost.<br><br>(8) Affected jet lost for SCS RATE CMD, MIN IMP and auto coil translations. ACCEL CMD and G/N modes unaffected.<br><br>(9) All auto coil capability lost for this thruster. Direct available.<br><br>(10) Translation capability lost in affected axis. If problem is in the +X axis, direct ullage capability remains.<br><br>(11) Affected jet lost for all auto-coil translations. Rotation capability unaffected.<br><br>(12) Abnormal dynamics may be due to thruster degradation. |

| SYMPTOM | PROCEDURE | REMARKS |
|---|---|---|

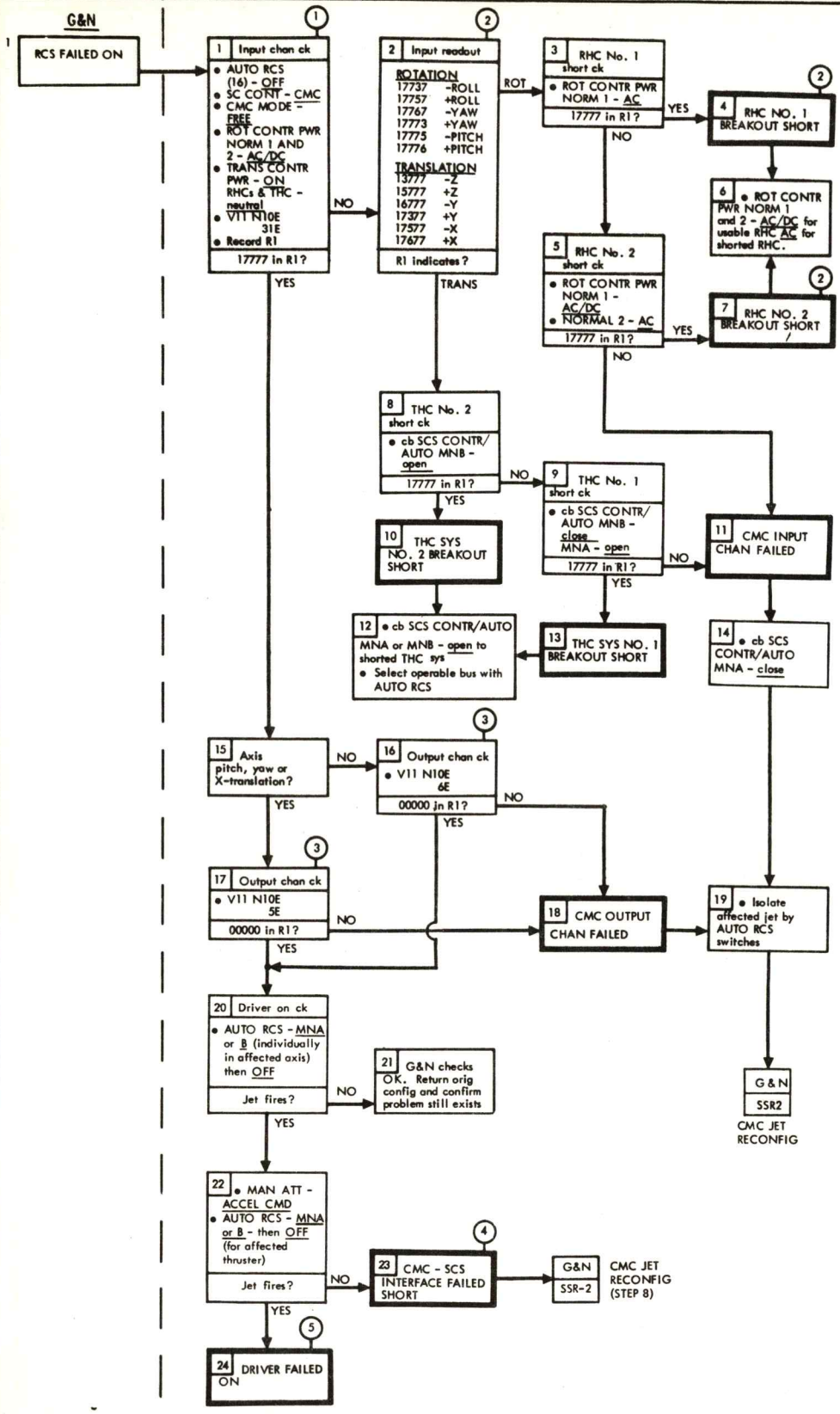


(1) An R1 of 17777 indicates no jet commands into CMC.

(2) Direct switches in affected RHC still functional. Locking an RHC mechanically opens breakout switches.

(3) An R1 of 00000 indicates no jet commands from computer.

(4) Affected thruster(s) lost for all G&N control modes. SCS control mode and direct unaffected.

(5) Affected thruster lost for all auto-coil operations. Direct uneffected.

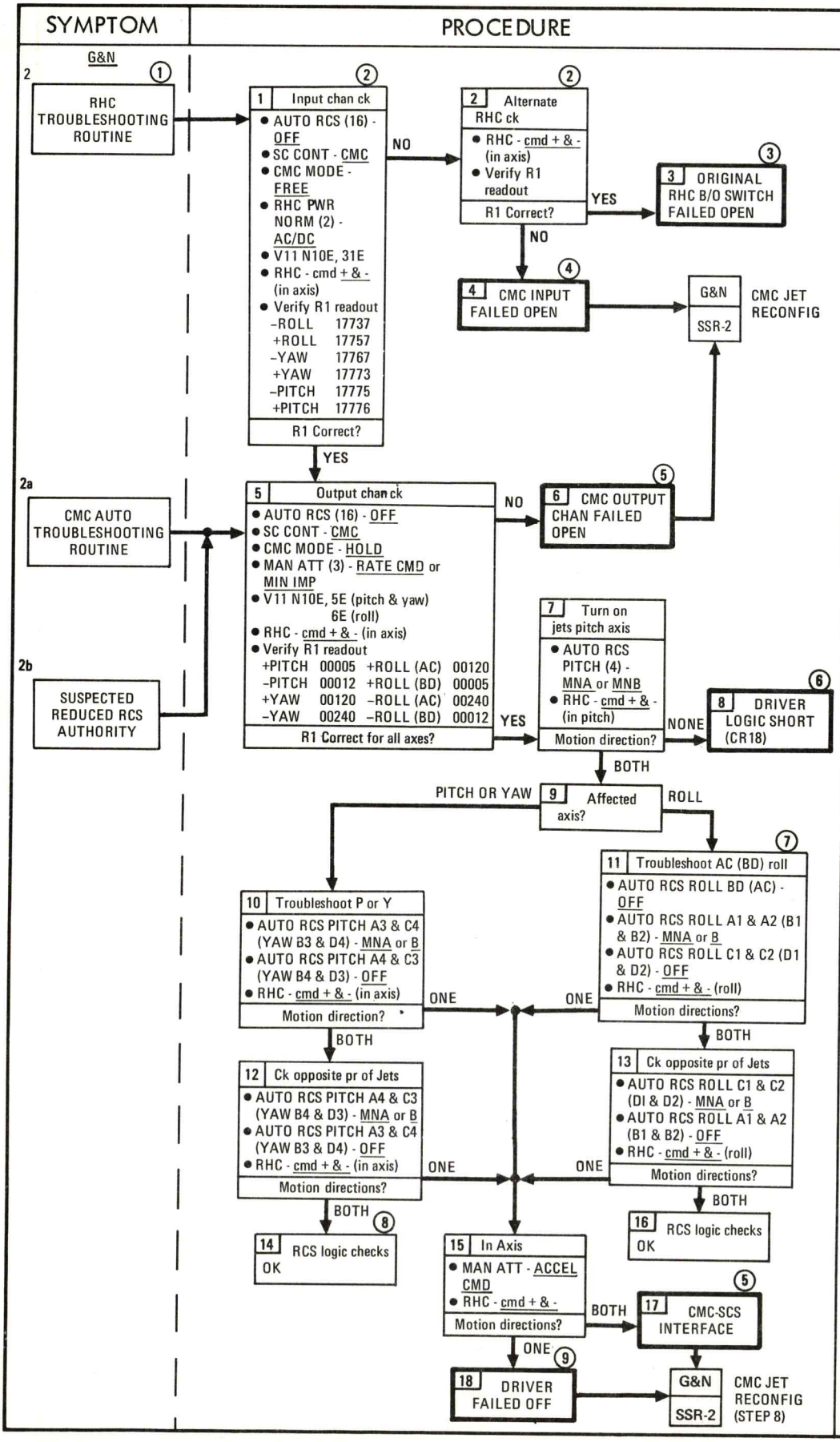
SYMPTOM
PROCEDURE
REMARKS
G&N
2
1
RHC TROUBLESHOOTING ROUTINE
2
1 Input chan ck
• AUTO RCS (16) - OFF
• SC CONT - CMC
• CMC MODE - FREE
• RHC PWR NORM (2) - AC/DC
• V11 N10E, 31E
• RHC - cmd + & - (in axis)
• Verify R1 readout
-ROLL 17737
+ROLL 17757
-YAW 17767
+YAW 17773
-PITCH 17775
+PITCH 17776
R1 Correct?
NO
2
2 Alternate RHC ck
• RHC - cmd + & - (in axis)
• Verify R1 readout
R1 Correct?
YES
3
3 ORIGINAL RHC B/O SWITCH FAILED OPEN
NO
4
4 CMC INPUT FAILED OPEN
G&N
SSR-2
CMC JET RECONFIG
YES
2a
CMC AUTO TROUBLESHOOTING ROUTINE
5
5 Output chan ck
• AUTO RCS (16) - OFF
• SC CONT - CMC
• CMC MODE - HOLD
• MAN ATT (3) - RATE CMD or MIN IMP
• V11 N10E, 5E (pitch & yaw) 6E (roll)
• RHC - cmd + & - (in axis)
• Verify R1 readout
+PITCH 00005 +ROLL (AC) 00120
-PITCH 00012 +ROLL (BD) 00005
+YAW 00120 -ROLL (AC) 00240
-YAW 00240 -ROLL (BD) 00012
R1 Correct for all axes?
NO
5
6 CMC OUTPUT CHAN FAILED OPEN
2b
SUSPECTED REDUCED RCS AUTHORITY
YES
7 Turn on jets pitch axis
• AUTO RCS PITCH (4) - MNA or MNB
• RHC - cmd + & - (in pitch)
Motion direction?
NONE
6
8 DRIVER LOGIC SHORT (CR18)
BOTH
PITCH OR YAW
9 Affected axis?
ROLL
7
10 Troubleshoot P or Y
• AUTO RCS PITCH A3 & C4 (YAW B3 & D4) - MNA or B
• AUTO RCS PITCH A4 & C3 (YAW B4 & D3) - OFF
• RHC - cmd + & - (in axis)
Motion direction?
ONE
11 Troubleshoot AC (BD) roll
• AUTO RCS ROLL BD (AC) - OFF
• AUTO RCS ROLL A1 & A2 (B1 & B2) - MNA or B
• AUTO RCS ROLL C1 & C2 (D1 & D2) - OFF
• RHC - cmd + & - (roll)
Motion directions?
ONE
BOTH
BOTH
12 Ck opposite pr of Jets
• AUTO RCS PITCH A4 & C3 (YAW B4 & D3) - MNA or B
• AUTO RCS PITCH A3 & C4 (YAW B3 & D4) - OFF
• RHC - cmd + & - (in axis)
Motion directions?
ONE
13 Ck opposite pr of Jets
• AUTO RCS ROLL C1 & C2 (D1 & D2) - MNA or B
• AUTO RCS ROLL A1 & A2 (B1 & B2) - OFF
• RHC - cmd + & - (roll)
Motion directions?
ONE
BOTH
BOTH
8
14 RCS logic checks OK
15 In Axis
• MAN ATT - ACCEL CMD
• RHC - cmd + & -
Motion directions?
BOTH
16 RCS logic checks OK
5
17 CMC-SCS INTERFACE
ONE
9
18 DRIVER FAILED OFF
G&N
SSR-2
CMC JET RECONFIG (STEP 8)
1 Assumes DAP data load has been verified.
2 Command RCS maneuvers within soft stop region.
3 Use alternate RHC. Direct unaffected but BMAG caging signal lost.
4 RHC control (G&N) of affected thruster lost. CMC AUTO and MIC modes unaffected.
5 All CMC cont to affected thruster lost. SCS modes and direct unaffected.
6 All CMC modes lost when SC CONT - CMC. SCS modes and direct unaffected.
7 If DAP is configured for B/D roll, replace all references to AC with BD.
8 Reduced authority may be caused by thruster degradation.
9 Affected thruster lost for all SCS and CMC modes. Direct mode unaffected.
SM-2A-2264A

| SYMPTOM | PROCEDURE | REMARKS |
|---|---|---|

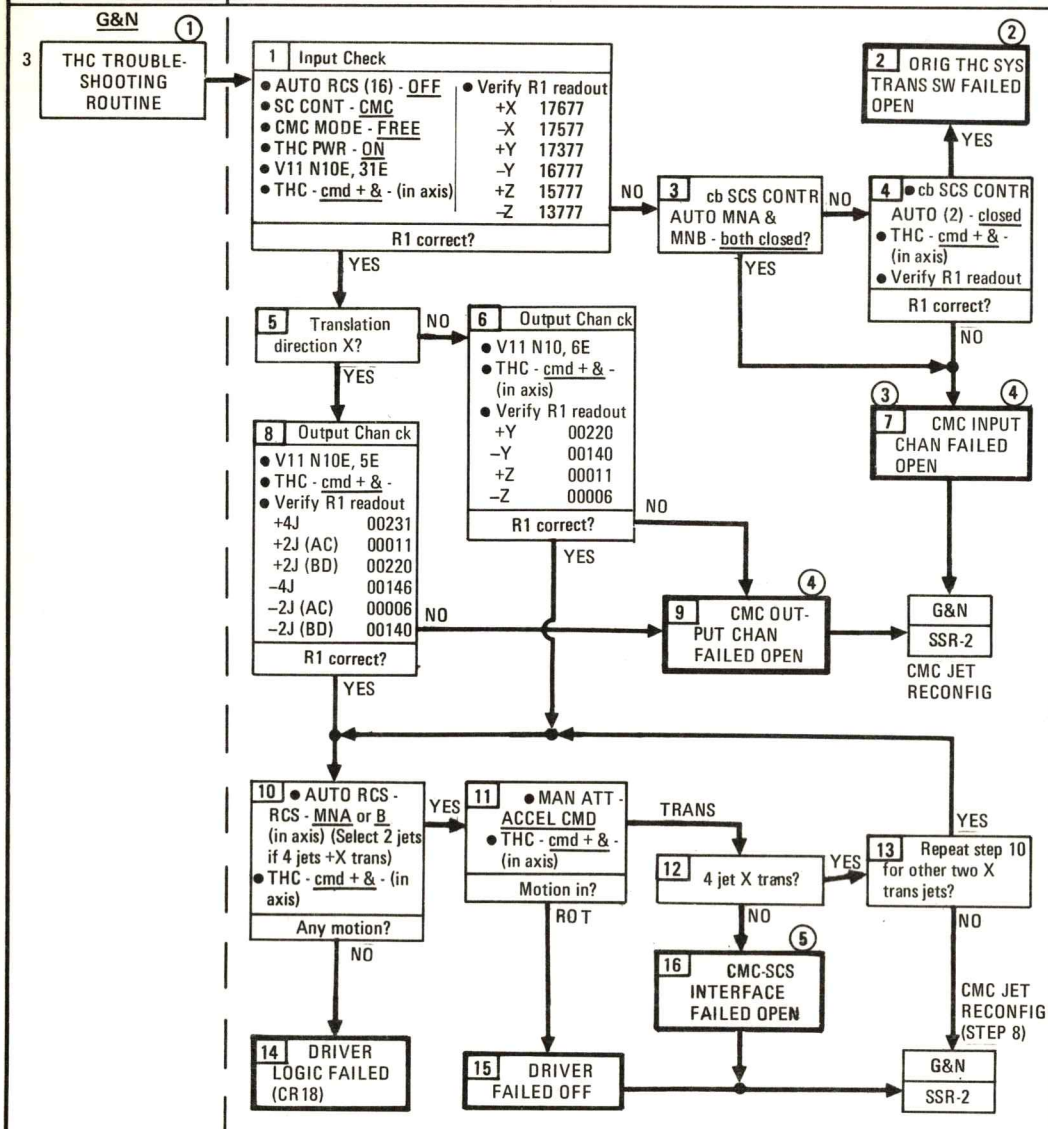


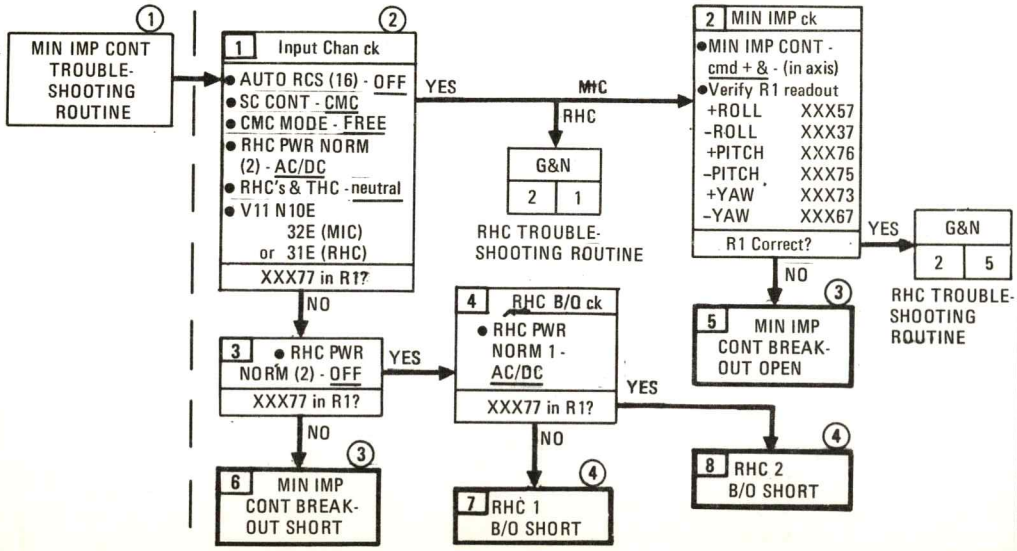


(1) Assumes DAP data load has been verified.

(2) Check cb SCS CONTR AUTO MNA and MNB - close prior to future THC cmd. If MNB cb open, original THC switch failed in system A; if MNA cb open, original THC switch failed in system B.

(3) The remote possibility of both THC system translation switches failed open can be determined with the SC CONT - SCS.

(4) Translation lost in CMC modes for affected directions.

(5) All CMC control to affected thruster lost. SCS modes and direct unaffected.

(1) Assumes DAP Data Load has been verified.

(2) An R1 of XXX77 indicates no input commands to CMC.

(3) CMC MIN IMP lost for controller in LEB. CMC or SCS MIN IMP available with RHC.

(4) CMC & SCS MIN IMP lost for affected RHC. CMC MIN IMP available with MIC in LEB. Also lost, FDAI att error & att control (BMAG caged in axis). MTVC pitch & yaw not affected. During SCS-SPS thrusting, have FDAI att errors and control after IGN 2 signal.

SM-2A-2263

| SYMPTOM | PROCEDURE | REMARKS |
|---|---|---|

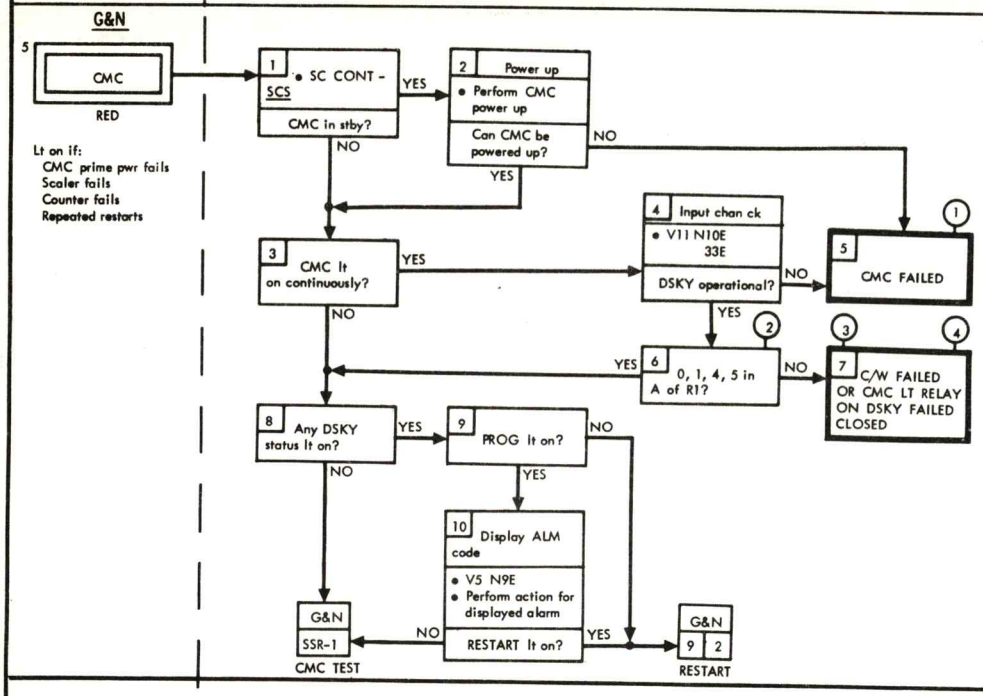


(1) All CMC functions lost.

(2) The R1 readout indicates a CMC FAIL signal to CMC.

(3) Subsequent CMC malfunction indication from unaffected CMC light.

(4) If the LEB CMC lt is on, all gyro torquing and PIPA capability lost. CMC monitor and control of both TVC and entry lost.

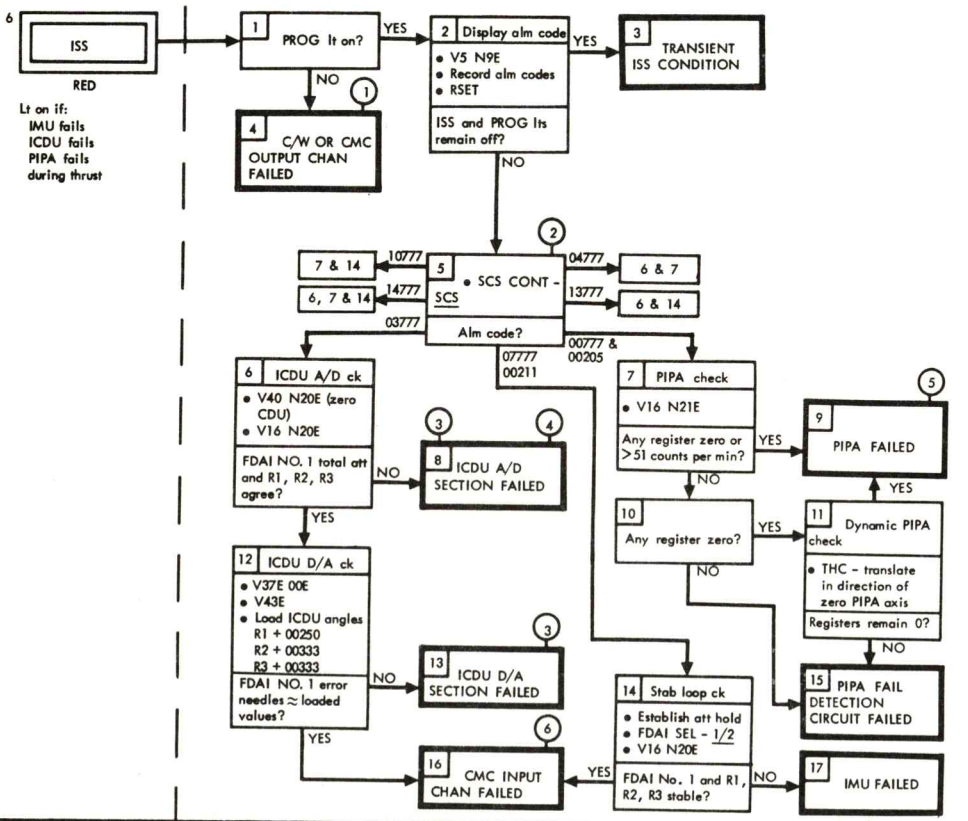


(1) Subsequent ISS malfunction indications from unaffected ISS lt.

(2) The following alarm codes are generated by the listed failures (or by transient fail discretes):
04777 - PIPA and ICDU fail
10777 - PIPA and IMU fail
13777 - IMU and ICDU fail
14777 - PIPA, IMU and ICDU fail
If any of these alarm codes occur, proceed sequentially to each of the steps indicated. A "no" answer to each step is indicative that a transient fail discrete has been generated.

(3)

| Function Remaining | A/D Failure | D/A Failure |
|---|---|---|
| Fine align | NO | YES |
| Coarse align | NO | NO |
| Att err signal | NO | NO |
| Total att to FDAI | YES | YES |
| Gmbl angles to CMC | NO | YES |
| IMU stabilization loop | YES | YES |
| Cage mode | YES | YES |
| IMU fail detect ckt | YES | YES |
| Coarse align in gmbl lock | NO | YES |

(4) CMC can perform functions not requiring IMU inputs. After each maneuver, state vectors must be updated via P27.

(5) CMC monitor and control of both TVC and entry lost.

(6) Affects assurance of an ISS command. Subsequent indicator of an ISS failure loss.

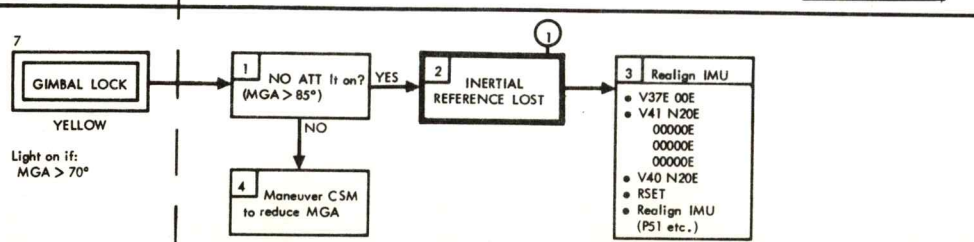


(1) IMU in coarse align and must be realigned to a new inertial reference.

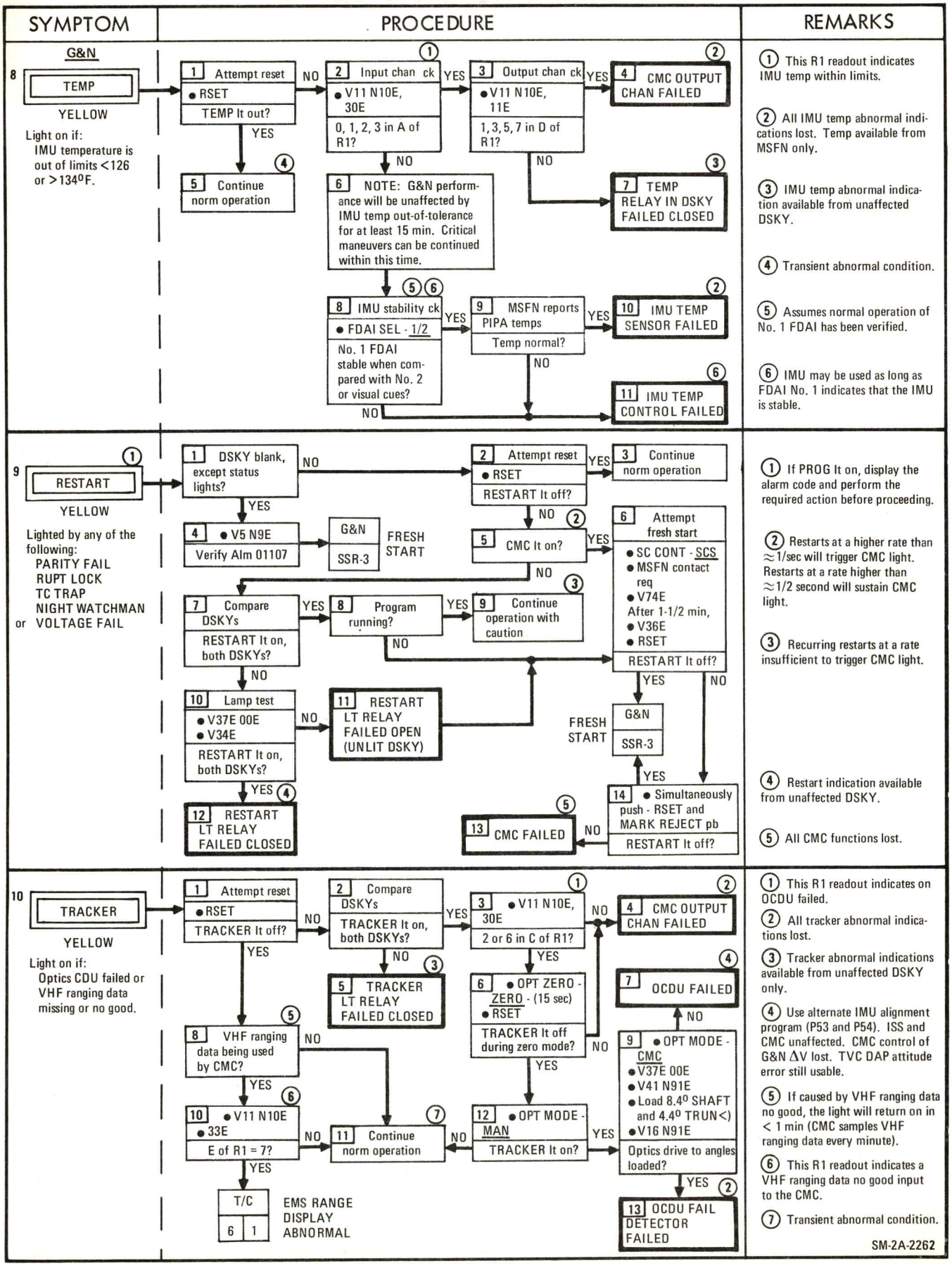
SYMPTOM
PROCEDURE
REMARKS
8
G&N
TEMP
YELLOW
Light on if:
IMU temperature is out of limits <126 or >134°F.
1 Attempt reset
• RSET
TEMP lt out?
NO
YES
2 Input chan ck
• V11 N10E, 30E
0, 1, 2, 3 in A of R1?
YES
NO
3 Output chan ck
• V11 N10E, 11E
1, 3, 5, 7 in D of R1?
YES
NO
4 CMC OUTPUT CHAN FAILED
5 Continue norm operation
6 NOTE: G&N performance will be unaffected by IMU temp out-of-tolerance for at least 15 min. Critical maneuvers can be continued within this time.
7 TEMP RELAY IN DSKY FAILED CLOSED
8 IMU stability ck
• FDAI SEL - 1/2
No. 1 FDAI stable when compared with No. 2 or visual cues?
YES
NO
9 MSFN reports PIPA temps
Temp normal?
YES
NO
10 IMU TEMP SENSOR FAILED
11 IMU TEMP CONTROL FAILED
(1) This R1 readout indicates IMU temp within limits.
(2) All IMU temp abnormal indications lost. Temp available from MSFN only.
(3) IMU temp abnormal indication available from unaffected DSKY.
(4) Transient abnormal condition.
(5) Assumes normal operation of No. 1 FDAI has been verified.
(6) IMU may be used as long as FDAI No. 1 indicates that the IMU is stable.
9
RESTART
YELLOW
Lighted by any of the following:
PARITY FAIL
RUPT LOCK
TC TRAP
NIGHT WATCHMAN
or VOLTAGE FAIL
1 DSKY blank, except status lights?
NO
YES
2 Attempt reset
• RSET
RESTART lt off?
YES
NO
3 Continue norm operation
4 • V5 N9E
Verify Alm 01107
G&N
SSR-3
FRESH START
5 CMC lt on?
YES
NO
6 Attempt fresh start
• SC CONT - SCS
• MSFN contact req
• V74E
After 1-1/2 min,
• V36E
• RSET
RESTART lt off?
YES
NO
7 Compare DSKYs
RESTART lt on, both DSKYs?
YES
NO
8 Program running?
YES
NO
9 Continue operation with caution
10 Lamp test
• V37E 00E
• V34E
RESTART lt on, both DSKYs?
NO
YES
11 RESTART LT RELAY FAILED OPEN (UNLIT DSKY)
12 RESTART LT RELAY FAILED CLOSED
13 CMC FAILED
14 • Simultaneously push - RSET and MARK REJECT pb
RESTART lt off?
NO
YES
FRESH START
G&N
SSR-3
(1) If PROG lt on, display the alarm code and perform the required action before proceeding.
(2) Restarts at a higher rate than ≈1/sec will trigger CMC light. Restarts at a rate higher than ≈1/2 second will sustain CMC light.
(3) Recurring restarts at a rate insufficient to trigger CMC light.
(4) Restart indication available from unaffected DSKY.
(5) All CMC functions lost.
10
TRACKER
YELLOW
Light on if:
Optics CDU failed or VHF ranging data missing or no good.
1 Attempt reset
• RSET
TRACKER lt off?
NO
YES
2 Compare DSKYs
TRACKER lt on, both DSKYs?
YES
NO
3 • V11 N10E, 30E
2 or 6 in C of R1?
NO
YES
4 CMC OUTPUT CHAN FAILED
5 TRACKER LT RELAY FAILED CLOSED
6 • OPT ZERO - ZERO - (15 sec)
• RSET
TRACKER lt off during zero mode?
NO
YES
7 OCDU FAILED
8 VHF ranging data being used by CMC?
NO
YES
9 • OPT MODE - CMC
• V37E 00E
• V41 N91E
• Load 8.4° SHAFT and 4.4° TRUN<)
• V16 N91E
Optics drive to angles loaded?
YES
10 • V11 N10E
• 33E
E of R1 = 7?
NO
YES
11 Continue norm operation
12 • OPT MODE - MAN
TRACKER lt on?
NO
YES
13 OCDU FAIL DETECTOR FAILED
T/C
6 1
EMS RANGE DISPLAY ABNORMAL
(1) This R1 readout indicates on OCDU failed.
(2) All tracker abnormal indications lost.
(3) Tracker abnormal indications available from unaffected DSKY only.
(4) Use alternate IMU alignment program (P53 and P54). ISS and CMC unaffected. CMC control of G&N ΔV lost. TVC DAP attitude error still usable.
(5) If caused by VHF ranging data no good, the light will return on in < 1 min (CMC samples VHF ranging data every minute).
(6) This R1 readout indicates a VHF ranging data no good input to the CMC.
(7) Transient abnormal condition.
SM-2A-2262

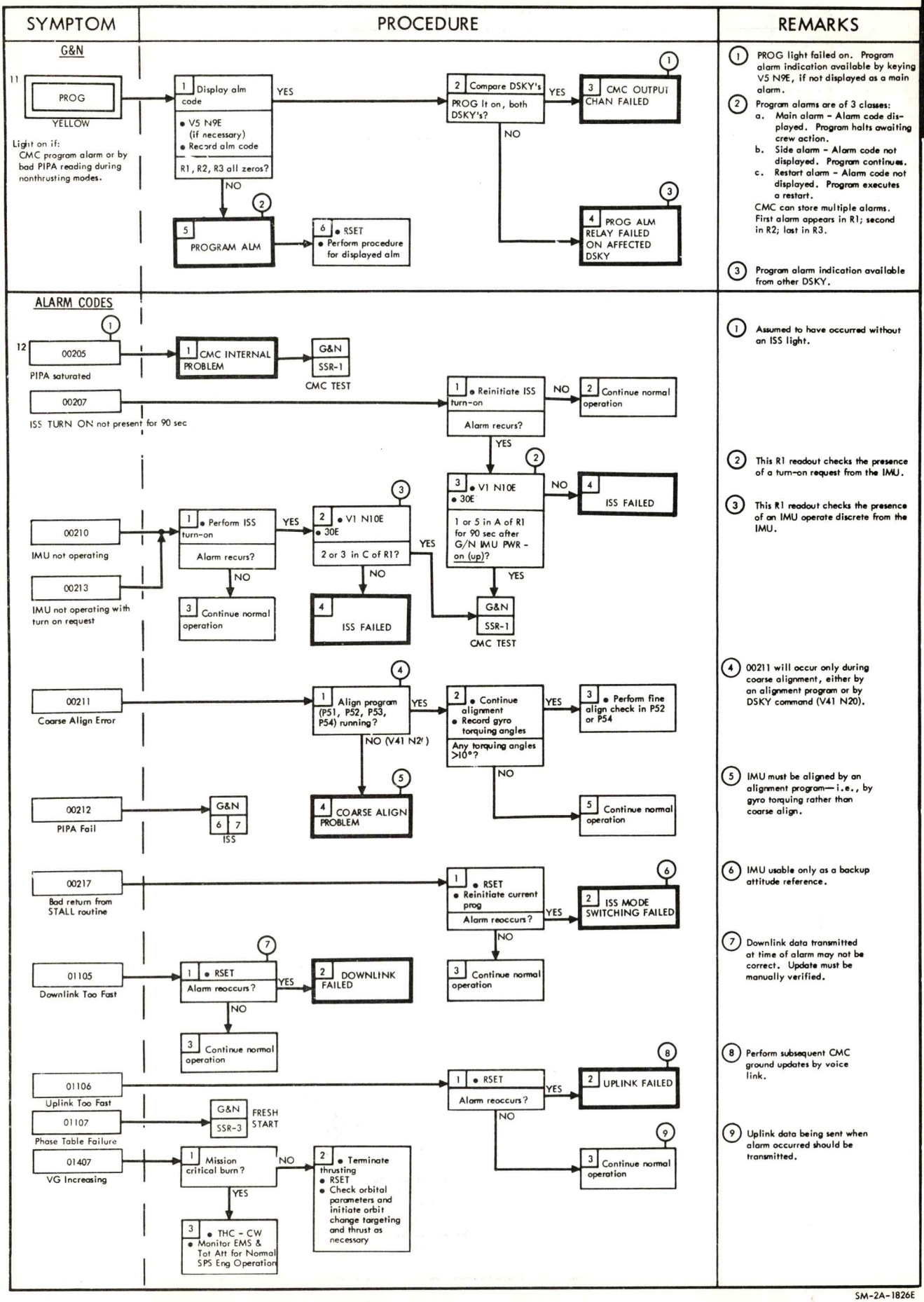
SYMPTOM
PROCEDURE
REMARKS
G&N
11
PROG
YELLOW
Light on if:
CMC program alarm or by bad PIPA reading during nonthrusting modes.
1 Display alm code
• V5 N9E (if necessary)
• Record alm code
R1, R2, R3 all zeros?
YES
NO
2 Compare DSKY's
PROG lt on, both DSKY's?
YES
NO
3 CMC OUTPUT CHAN FAILED
4 PROG ALM RELAY FAILED ON AFFECTED DSKY
5 PROGRAM ALM
6 • RSET
• Perform procedure for displayed alm
1 PROG light failed on. Program alarm indication available by keying V5 N9E, if not displayed as a main alarm.
2 Program alarms are of 3 classes:
a. Main alarm – Alarm code displayed. Program halts awaiting crew action.
b. Side alarm – Alarm code not displayed. Program continues.
c. Restart alarm – Alarm code not displayed. Program executes a restart.
CMC can store multiple alarms. First alarm appears in R1; second in R2; last in R3.
3 Program alarm indication available from other DSKY.
ALARM CODES
12
00205
PIPA saturated
1 CMC INTERNAL PROBLEM
G&N SSR-1
CMC TEST
00207
ISS TURN ON not present for 90 sec
1 • Reinitiate ISS turn-on
Alarm recurs?
NO
2 Continue normal operation
YES
3 • V1 N10E
• 30E
1 or 5 in A of R1 for 90 sec after G/N IMU PWR – on (up)?
NO
4 ISS FAILED
YES
00210
IMU not operating
00213
IMU not operating with turn on request
1 • Perform ISS turn-on
Alarm recurs?
YES
NO
3 Continue normal operation
2 • V1 N10E
• 30E
2 or 3 in C of R1?
YES
NO
4 ISS FAILED
G&N SSR-1
CMC TEST
00211
Coarse Align Error
1 Align program (P51, P52, P53, P54) running?
YES
NO (V41 N20)
2 • Continue alignment
• Record gyro torquing angles
Any torquing angles >10°?
YES
NO
3 • Perform fine align check in P52 or P54
5 Continue normal operation
4 COARSE ALIGN PROBLEM
00212
PIPA Fail
G&N 6 7 ISS
00217
Bad return from STALL routine
1 • RSET
• Reinitiate current prog
Alarm reoccurs?
YES
NO
2 ISS MODE SWITCHING FAILED
3 Continue normal operation
01105
Downlink Too Fast
1 • RSET
Alarm reoccurs?
YES
NO
2 DOWNLINK FAILED
3 Continue normal operation
01106
Uplink Too Fast
01107
Phase Table Failure
G&N SSR-3
FRESH START
1 • RSET
Alarm reoccurs?
YES
NO
2 UPLINK FAILED
3 Continue normal operation
01407
VG Increasing
1 Mission critical burn?
NO
YES
2 • Terminate thrusting
• RSET
• Check orbital parameters and initiate orbit change targeting and thrust as necessary
3 • THC – CW
• Monitor EMS & Tot Att for Normal SPS Eng Operation
1 Assumed to have occurred without an ISS light.
2 This R1 readout checks the presence of a turn-on request from the IMU.
3 This R1 readout checks the presence of an IMU operate discrete from the IMU.
4 00211 will occur only during coarse alignment, either by an alignment program or by DSKY command (V41 N20).
5 IMU must be aligned by an alignment program—i.e., by gyro torquing rather than coarse align.
6 IMU usable only as a backup attitude reference.
7 Downlink data transmitted at time of alarm may not be correct. Update must be manually verified.
8 Perform subsequent CMC ground updates by voice link.
9 Uplink data being sent when alarm occurred should be transmitted.

| SYMPTOM | PROCEDURE | REMARKS |
|---|---|---|
| SPECIAL SUB ROUTINES | | |

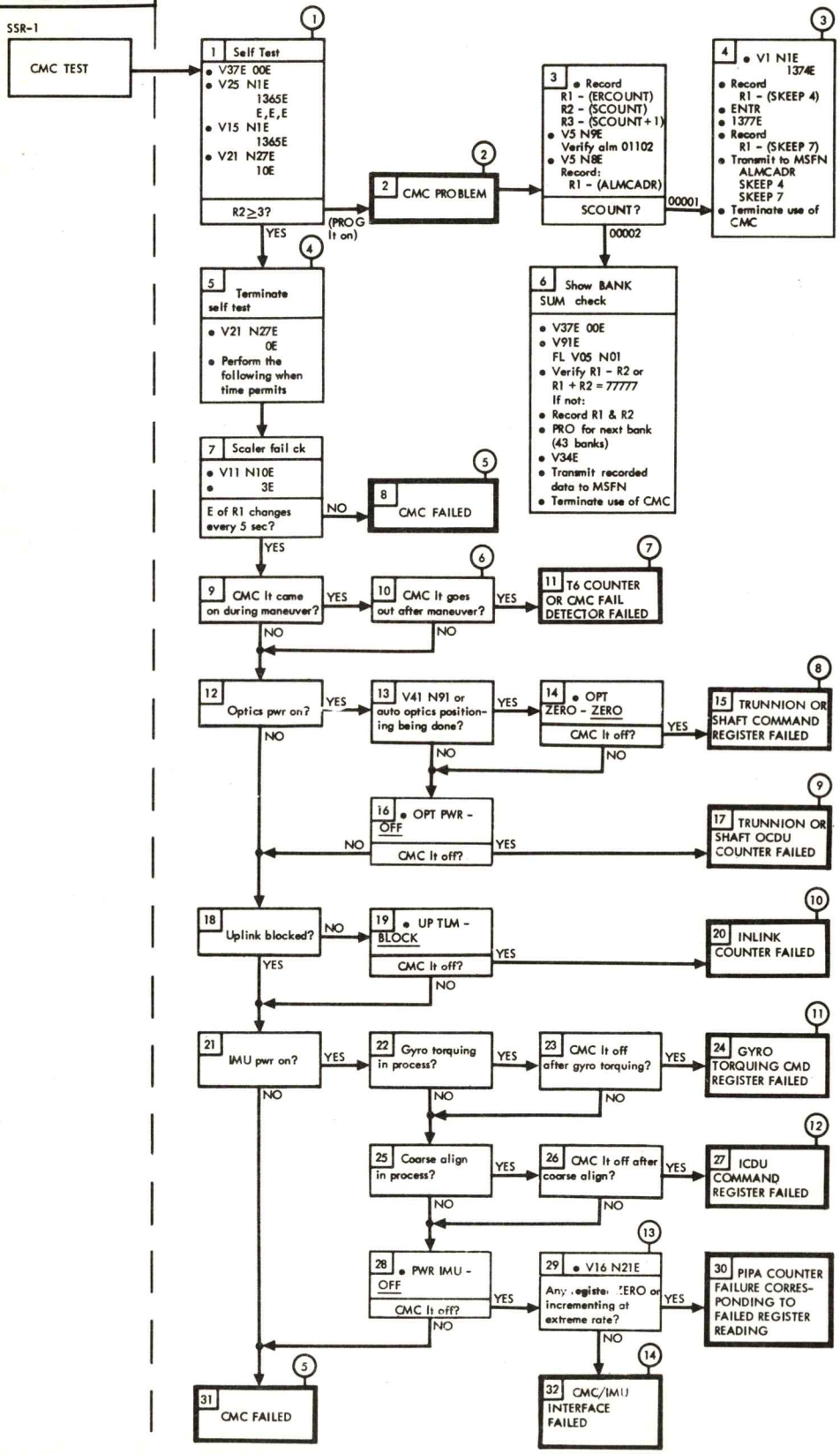


(1) R2 00001 for 7 SEC
R2 00002 for 43 SEC

(2) Subsequent use of CMC dependent on MSFN evaluation (via downlink) of the succeeding steps in self-test.

(3) Problem is in erasable memory.

(4) CMC self check tests only erasable and fixed memory. Other internal problems cannot be determined by self check.

(5) All CMC functions lost.

(6) Do not use CMC control for attitude maneuvers.

(7) RCS DAP unusable since T6 counter controls DAP jet firing times.

(8) TVC DAP and auto optics positioning lost.

(9) Optics/CMC interface lost. Use alternate LOS marking routine (P53, P54).

(10) CMC uplink unusable.

(11) IMU cannot be fine aligned.

(12) IMU cannot be coarse aligned. Align by caging and/or fine align. CMC attitude error display lost in axis. CMC control of SIVB lost.

(13) CMC TVC and entry control lost.

(14) IMU usable as attitude reference only.

SM-2A-1827D

## SPECIAL SUB ROUTINES

## PROCEDURE

SSR-2

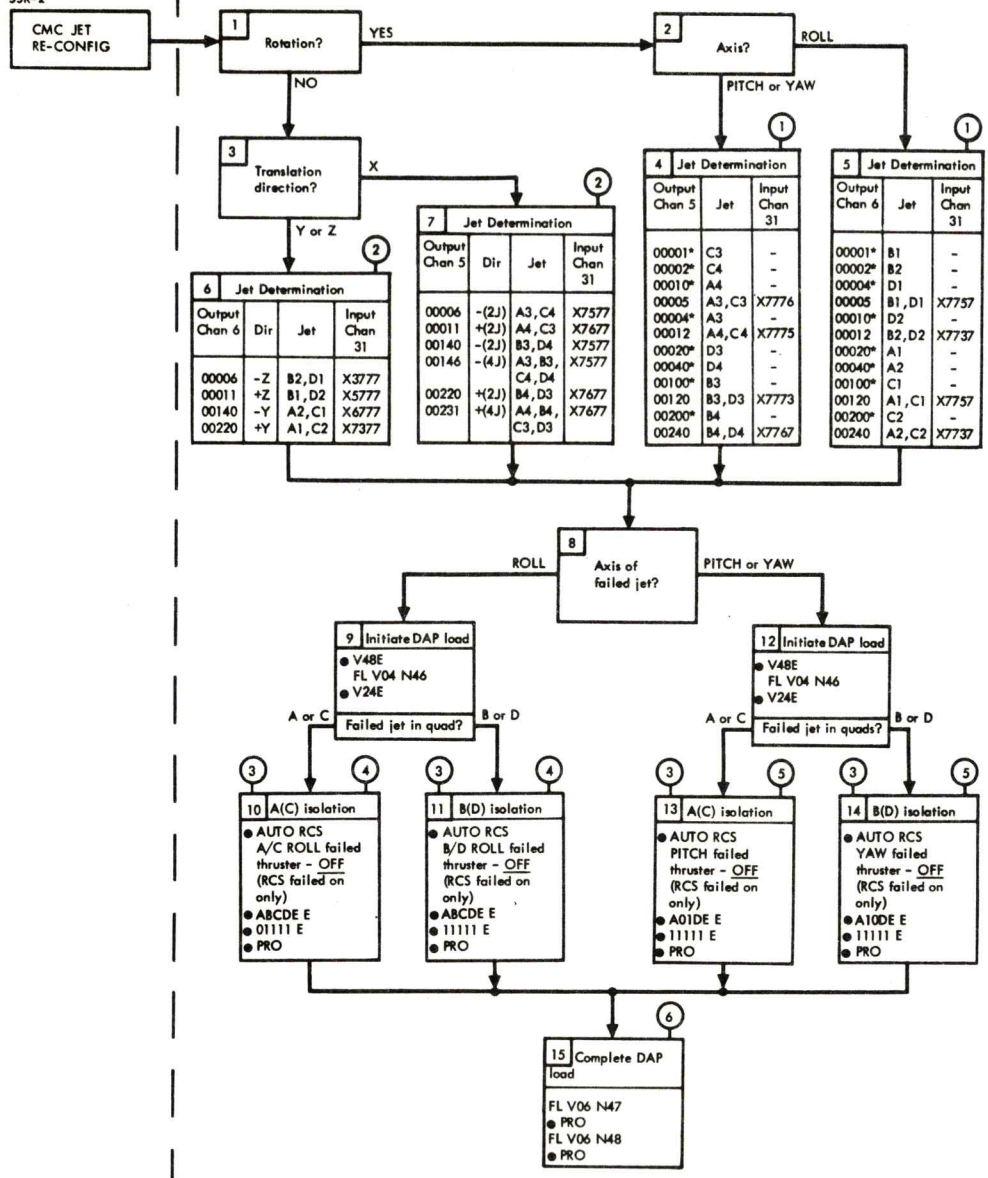


## REMARKS

(1) Starred (*) outputs are single jet commands. For RCS failed on, the failed jet is the indicated jet. For output channel failed open, the failed jet is the corresponding jet in the rotational couple, e.g. command + pitch. Should observe 00005 in chan 5 (A3, C3 + pitch couple). If observe 00004, C3 can not be commanded on by CMC.

(2) If R1 (output chan) contains a number not listed, determine the failed jet from the R1 (output) readout when a rotation command is given.

(3) In R1, A is vehicle configuration:
0 - No DAP
1 - CSM only
2 - CSM + LM (asc + des)
3 - CSM + SIVB
6 - CSM + LM (asc only)
In R1, B is quad A/C for X translation:
0 - FAIL A/C
1 - USE A/C
In R1, C is quad B/D for X translation:
0 - FAIL B/D
1 - USE B/D
In R1, D is DAP deadband
0 - 0.5°
1 - 5.0°
E is the DAP rate
0 - 0.05°/sec
1 - 0.20°/sec
2 - 0.5°/sec
3 - 2.0°/sec
In R2, A is roll selection
0 - Use B/D
1 - Use A/C

(4) Translation (Y or Z) will be single jet and result in excessive RCS prpint consumption.

(5) Rotations (pitch or yaw) will be single jet. X translations will be 2 jet.

(6) N47 and N48 display other DAP parameters assumed to be correct.

SSR-3

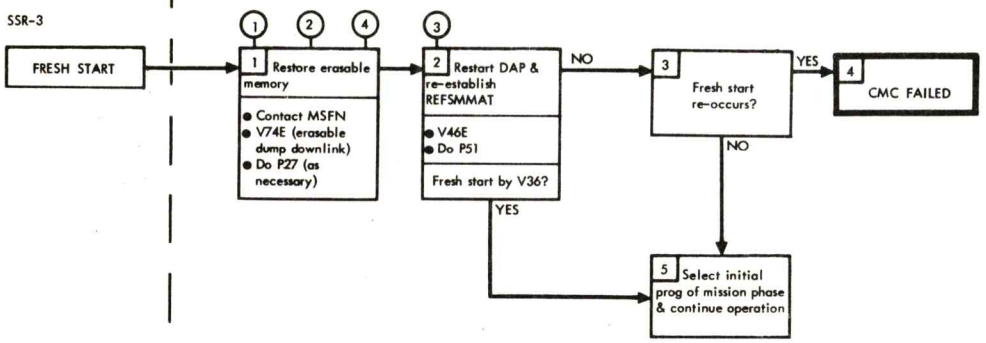


(1) State vector and CMC time should be updated. All nonpad-loaded parameters, except time & state vector, will be properly updated by CMC programs in their proper sequence as if CMC had just been turned on when fresh start occurred.

(2) Extended V74 permits MSFN to examine all pertinent erasable locations to determine if any parameters need reloading.

(3) DAP is shut off by fresh start & must be re-initiated by V46.

(4) REFSMMAT, SURF FLAG, LMOONFLG, CMOONFLG, and NODOPO1FLAG are not changed by a fresh start. All other flagwords are reset by fresh start. DRIFTFLG (bit 15, flagword 2) should be set by:
V25 N7E
76E
40000E
1E
For all others proper flags are set again by performance of CMC programs in normal sequence.

SM-2A-1828G

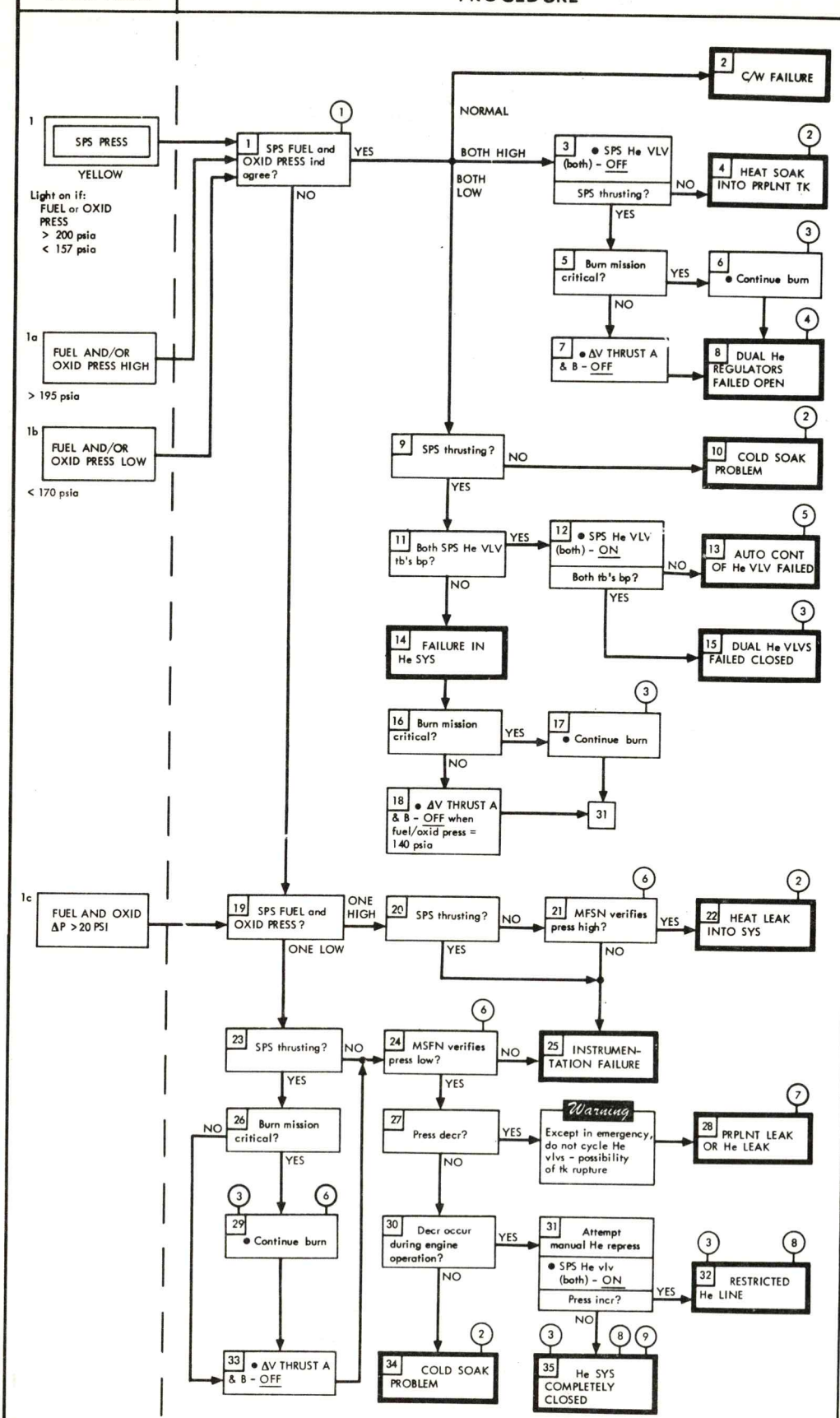
SYMPTOM
PROCEDURE
REMARKS
1 SPS PRESS YELLOW
Light on if: FUEL or OXID PRESS > 200 psia < 157 psia
1a FUEL AND/OR OXID PRESS HIGH > 195 psia
1b FUEL AND/OR OXID PRESS LOW < 170 psia
1c FUEL AND OXID ΔP > 20 PSI
1 SPS FUEL and OXID PRESS ind agree?
YES
NO
NORMAL
BOTH HIGH
BOTH LOW
2 C/W FAILURE
3 • SPS He VLV (both) - OFF
SPS thrusting?
NO
YES
4 HEAT SOAK INTO PRPLNT TK
5 Burn mission critical?
6 • Continue burn
7 • ΔV THRUST A & B - OFF
8 DUAL He REGULATORS FAILED OPEN
9 SPS thrusting?
10 COLD SOAK PROBLEM
11 Both SPS He VLV tb's bp?
12 • SPS He VLV (both) - ON
Both tb's bp?
13 AUTO CONT OF He VLV FAILED
14 FAILURE IN He SYS
15 DUAL He VLVS FAILED CLOSED
16 Burn mission critical?
17 • Continue burn
18 • ΔV THRUST A & B - OFF when fuel/oxid press = 140 psia
31
19 SPS FUEL and OXID PRESS?
ONE HIGH
ONE LOW
20 SPS thrusting?
21 MFSN verifies press high?
22 HEAT LEAK INTO SYS
23 SPS thrusting?
24 MSFN verifies press low?
25 INSTRUMENTATION FAILURE
26 Burn mission critical?
27 Press decr?
Warning
Except in emergency, do not cycle He vlvs - possibility of tk rupture
28 PRPLNT LEAK OR He LEAK
29 • Continue burn
30 Decr occur during engine operation?
31 Attempt manual He repress
• SPS He vlv (both) - ON
Press incr?
32 RESTRICTED He LINE
33 • ΔV THRUST A & B - OFF
34 COLD SOAK PROBLEM
35 He SYS COMPLETELY CLOSED
1 Normal operating press is 170 - 195 psia. MSFN will use fuel and oxid telemetered press data to backup onboard indications.
2 Attempt temp control by orienting CSM if possible.
a. Fuel & oxid press high, orient -X axis toward deep space.
b. Fuel press high, orient -Z, -Y quadrant toward deep space.
c. Oxid press high, orient +Y, +Z quadrant toward deep space.
3 Engine chugging may occur if SPS Pc is < 60 psia. Corresponding fuel & oxid press is ≈ 85 psia.
4 Control fuel & oxid press between 175 and 185 psi by manual actuation of He sw. Individual actuation of the He switches will identify the failed regulator leg. Flow through failed regs will exceed the capability of the relief vlv.
5 Open and close He vlvs manually for each burn.
6 Caution
ΔP between SPS FUEL and OXID PRESS should not exceed 20 psi during a burn. Degraded performance, rough combustion, and/or engine failure may result.
7 Prior to emergency SPS operation, manually repressurize propellant tanks.
8 All subsequent SPS burns should be made with SPS He VLV (both) - OFF to minimize ΔP between fuel and oxidizer.
9 When fuel and oxidizer press decreases to 140 psia, place OXID FLOW VLV - DECR.

SM-2A-1459K

## SYMPTOM

### 2 PITCH (YAW) GMBL 1 (2)

YELLOW

Light on if:

Overcurrent occurs in respective drive motor or gimbal actuator.

## PROCEDURE

1 After SPS shutdown and before SPS GMBL MOT shutdown
- TVC GMBL DR PITCH (YAW) - 1 (2)
- Perform gimbal trim check

Gimbal control maintained?
- NO → Caution: Gimbal drive circuits are not C/B protected. Before proceeding with step 2, MSFN may be able to provide failure identification.
- YES → 4 C/W FAILURE

2 DC load check
- DC IND sel - FC 1 (2, 3)
- SPS GMBL MOT PITCH (YAW) - 1 (2) - Start and hold for check

Amps abnormally high?
- NO → 5 OVERCURRENT SENSOR FAILED
- YES → 3 GIMBAL MOTOR FAILED (2)

### 3 SPS PREMATURE SHUTDOWN

1 Single or dual bank?
- DUAL → 2 SC CONT mode?
  - CMC → 3 Output chan ck
    - ΔV THRUST (2) - OFF
    - Recycle to ignition in P40
    - FL V99 N40
    - PRO
    - V01 N10E, 11E

    1 in A of R1?
    - NO → 4 CMC INTERNAL PROBLEM (2)
      - G&N
      - SSR-1
      - CMC TEST
    - YES → 5 CMC-SCS INTERFACE FAILED OPEN (3, 4)
  - SCS → 7 VLV PAIR FAILED CLOSED (5)
- SINGLE → 6 All SPS INJ VLV ind (4) CLOSE?
  - NO → 7 VLV PAIR FAILED CLOSED (5)
  - YES → 8 cb SPS He VLV or cb PILOT VLVS - open?
    - YES → 9 ENG VLV CKTRY FAILED (5)
    - NO → 10 SC CONT mode?
      - SCS → 11 EMS ΔV counter ≤ - 0.1 fps
        - YES → 12 EMS COUNTER RESET PREMATURELY (6, 3)
        - NO → 13 SPS THRUST lt - on?
          - NO → 14
            - ΔV THRUST (2) - OFF
            - AUTO RCS SEL +X (4) - OFF
            - THC - cmd +X
            - THRUST ON pb - push

            SPS THRUST lt on?
            - YES → 16 ONE BANK FAILED (7)
            - NO → 18
              - THC - CW
              - THC - cmd +X
              - THRUST ON pb - push

              SPS THRUST lt - on?
              - YES → 19 SC CONT ENABLE PWR LOST (8)
              - NO → 22
                - cb DIR ULL (2) - open
                - DIR ULL pb - push
                - THRUST ON pb - push

                SPS THRUST lt - on?
                - YES → 23 +X TRANS LOGIC FAILED (9)
                - NO → 24 EMS-SCS INTERFACE FAILED SHORT (10)
          - YES → 17 SPS THRUST lt - on
            - YES → 16 ONE BANK FAILED (7)
            - NO → 21 CMC-SCS INTERFACE FAILED OPEN (3, 4)
      - CMC → 15 Output chan ck
        - ΔV THRUST (2) - OFF
        - Recycle to ignition in P40
        - FL V99 N40
        - PRO
        - V01 N10E, 11E

        1 in A or R1?
        - YES → 17 SPS THRUST lt - on
        - NO → 20 CMC INTERNAL PROBLEM (2)
          - G&N
          - SSR-1
          - CMC TEST

### 3a NO SPS IGNITION

## REMARKS

(1) Automatic transfer from the primary system to secondary occurs with an overcurrent provided the TVC GMBL DR switch is at AUTO.

(2) For subsequent ΔV's, place TVC GMBL DR sw to alternate servo position in affected axis.

(3) Selected gimbal motor is operational when SPS Pitch (Yaw) 1 (2) cb is opened while affected gimbal motor switch is held at START. However, overcurrent protection and switch-over capability will not be available. Close the cb to turn off the gimbal motor.

(1) Troubleshooting assumes original switch positions at time of shutdown.

(2) All G&N SPS capability lost.

(3) Manual on-off procedure
a. At TIG -1 min, SPS THRUST - DIR ON
b. At TIG, ΔV THRUST A(B) - NORM
c. At TIG +3 sec, ΔV THRUST B(A) - NORM (if dual bank)
d. Terminate burn on ΔV or time by ΔV THRUST (2) - OFF.

(4) G&N SPS on-off control lost. TVC DAP unaffected.

(5) ΔV capability lost for affected bank.

(6) Perform EMS ΔV test and if OK, use ΔV counter to monitor burn. Use manual on-off procedure (Remark 3).

(7) Affected bank may still be available using SPS THRUST - DIR ON. Alternate bank unaffected.

(8) THC must be CW for SCS ΔV capability. SCS auto ΔV lost.

(9) For SCS ΔV use DIR ULL pb for eng on initiation (+X TRANS logic function lost).

(10) CMC ΔV capability unaffected. SCS ΔV auto on-off lost. For SCS ΔV use manual on-off procedure (Remark 3).

SM-2A-1460R

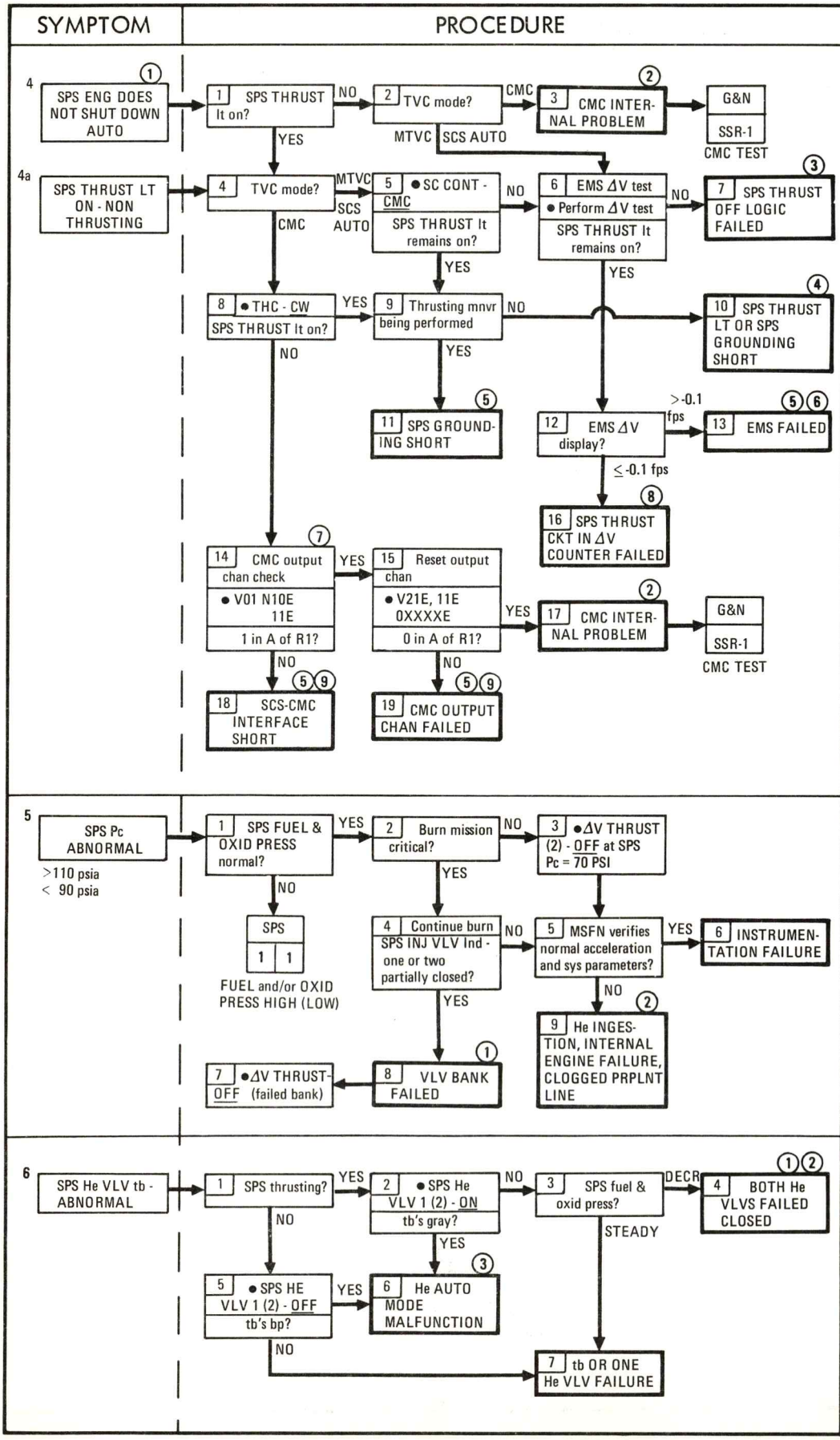
SYMPTOM
PROCEDURE
REMARKS
4
SPS ENG DOES NOT SHUT DOWN AUTO
1 SPS THRUST lt on?
NO
2 TVC mode?
CMC
3 CMC INTERNAL PROBLEM
G&N
SSR-1
CMC TEST
YES
MTVC
SCS AUTO
4a
SPS THRUST LT ON - NON THRUSTING
4 TVC mode?
MTVC
SCS AUTO
CMC
5 • SC CONT - CMC
SPS THRUST lt remains on?
NO
6 EMS ΔV test
• Perform ΔV test
SPS THRUST lt remains on?
NO
7 SPS THRUST OFF LOGIC FAILED
YES
YES
8 • THC - CW
SPS THRUST lt on?
YES
9 Thrusting mnvr being performed
NO
10 SPS THRUST LT OR SPS GROUNDING SHORT
NO
YES
11 SPS GROUNDING SHORT
12 EMS ΔV display?
>-0.1 fps
13 EMS FAILED
≤-0.1 fps
16 SPS THRUST CKT IN ΔV COUNTER FAILED
14 CMC output chan check
• V01 N10E 11E
1 in A of R1?
YES
15 Reset output chan
• V21E, 11E 0XXXXE
0 in A of R1?
YES
17 CMC INTERNAL PROBLEM
G&N
SSR-1
CMC TEST
NO
NO
18 SCS-CMC INTERFACE SHORT
19 CMC OUTPUT CHAN FAILED
1 Assumes SPS engine was shut down with the ΔV thrust switches.
2 All G&N SPS capability lost.
3 SCS auto cutoff lost, use manual thrust on-off procedure presented in Remark 5.
4 Since failure could be SPS thrust lt on only, for ΔV's perform single bank ignition per Remark 5.
5 Auto thrust on-off lost for one and possibly both banks. Use manual on-off procedure:
a. At TIG-1 min, SPS THRUST DIR ON
b. At TIG, ΔV THRUST A(B) - NORM
c. At TIG +3 sec, ΔV THRUST B(A) - NORM (if dual bank)
d. Terminate burn on ΔV or time by ΔV THRUST (2) - OFF
or for single bank operation:
At TIG -2 sec, ΔV THRUST (alt bank) - NORM
a. If SPS lts, auto thrust on-off lost for both banks, use manual on-off procedure above.
b. If no SPS ign, auto on-off remains for alt bank.
6 SCS ΔV capability remains but must terminate burn with time. Perform entry self test to determine EMS capability for entry.
7 This step must be done while still in P40. After check has been made exit P40 to terminate average G.
8 SCS auto cutoff lost. Manual cutoff required.
9 G&N auto eng on-off control lost only.
5
SPS Pc ABNORMAL
>110 psia
< 90 psia
1 SPS FUEL & OXID PRESS normal?
YES
2 Burn mission critical?
NO
3 • ΔV THRUST (2) - OFF at SPS Pc = 70 PSI
NO
YES
SPS
1 1
FUEL and/or OXID PRESS HIGH (LOW)
4 Continue burn
SPS INJ VLV Ind - one or two partially closed?
NO
5 MSFN verifies normal acceleration and sys parameters?
YES
6 INSTRUMENTATION FAILURE
YES
NO
7 • ΔV THRUST - OFF (failed bank)
8 VLV BANK FAILED
9 He INGESTION, INTERNAL ENGINE FAILURE, CLOGGED PRPLNT LINE
1 Failed bank should not be used except in an emergency.
2 SPS engine operable until engine indications require shutdown. Engine chugging may occur if SPS Pc is < 60 psi.
6
SPS He VLV tb - ABNORMAL
1 SPS thrusting?
YES
2 • SPS He VLV 1 (2) - ON
tb's gray?
NO
YES
3 SPS fuel & oxid press?
DECR
4 BOTH He VLVS FAILED CLOSED
STEADY
5 • SPS HE VLV 1 (2) - OFF
tb's bp?
YES
6 He AUTO MODE MALFUNCTION
NO
7 tb OR ONE He VLV FAILURE
1 When fuel and oxidizer press decreases to 140 psia, place OXID FLOW VLV - DECR.
2 SPS engine operable until engine indications require shutdown. Engine chugging may occur if Pc is < 60 psi. Corresponding fuel & oxid pressure is ≈85 psia.
3 Open and close He valves manually for each burn.
SM-2A-1461L

| SYMPTOM | PROCEDURE | REMARKS |
|---|---|---|

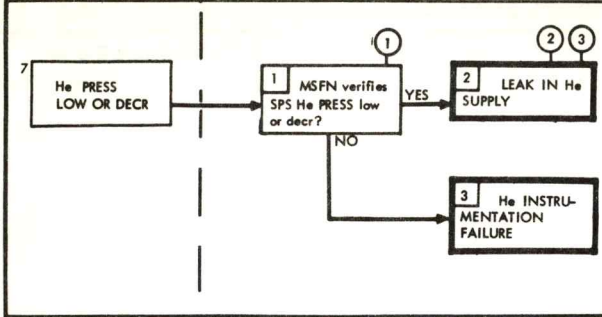


(1) MSFN will monitor redundant He press instrumentation.

(2) He depletion imminent. SPS engine operable until engine indications require shutdown. Engine chugging may occur if SPS Pc is <60 psi. Corresponding fuel & oxid pressure is ≈85 psia.

(3) When fuel and oxidizer press decreases to 140 psia, place OXID FLOW VLV - DECR.

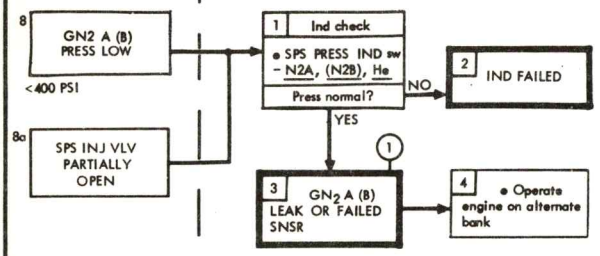


(1) Operation at <350 psi results in partially open ball vlvs and hazardous engine operation.

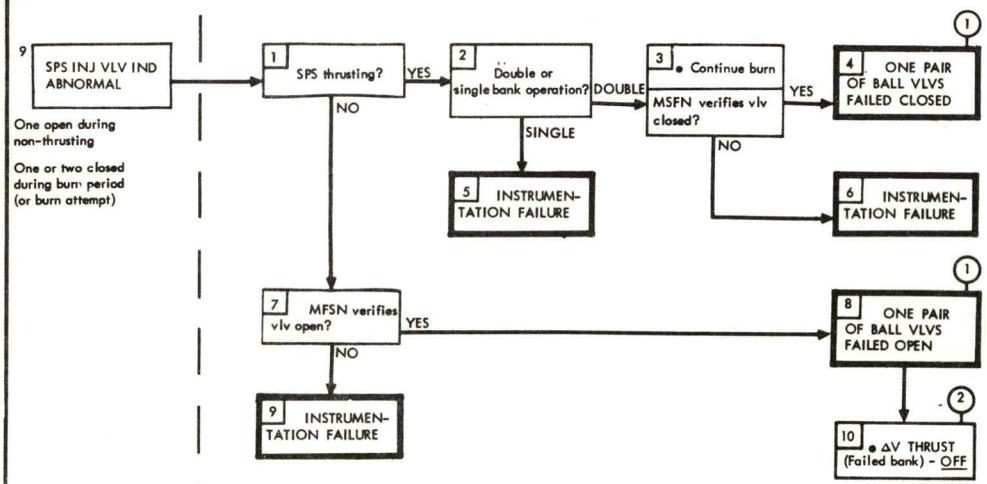


(1) SPS operable on redundant bank if one bank failed.

(2) Failed bank should not be used except in an emergency.

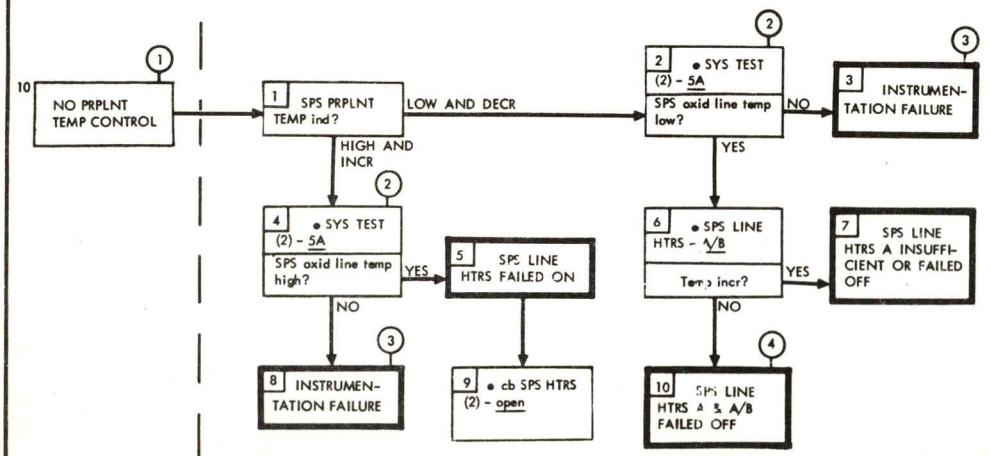


(1) Normal range 45-75°F.

(2) Assumes CSM not in inertial hold mode which might normally result in differences between SPS prplnt temp and SPS oxid line temp.

(3) Use oxid line temp for SPS prplnt temp.

(4) Prplnt temp may be incr by CSM orientation or by firing SPS engine. At 27°F the propellants become slushy and the fuel & oxid ratio becomes unpredictable.

SM-2A-1462J

| SYMPTOM | PROCEDURE | REMARKS |
|---|---|---|
| 11 NO RESPONSE OF SPS OXID VLV tb DURING FLOW ADJUST<br>(OXID FLOW VLV PRIM - PRIM) | 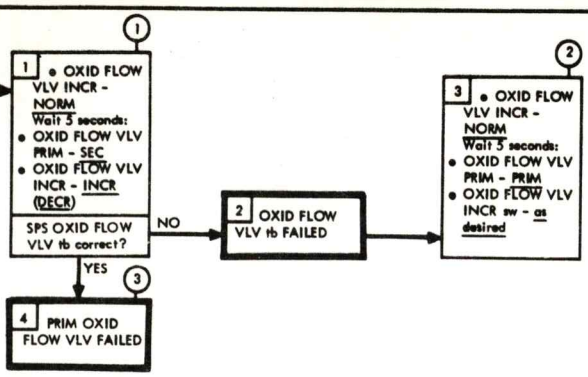 | (1) OXID FLOW VLV INCR sw cannot operate unless power applied through a thrust on signal or through the SPS QTY TEST sw. If flow vlv position was changed by the SPS QTY TEST sw, % FUEL & % OXID quantity readouts must be returned to original values.<br>(2) The secondary sliding gate vlv must be in the nominal flow position (rather than INCR or DECR) before switching to the prim oxid flow vlv or misalignment of the secondary vlv could make the primary vlv inoperative.<br>(3) Sec vlv has sufficient range to compensate for prim vlv failure in any position and still provide vlv openings for INCR, NORM or DECR oxid flow. |
| 12 SPS OXID UNBAL IND ERRATIC OR PEGGED | 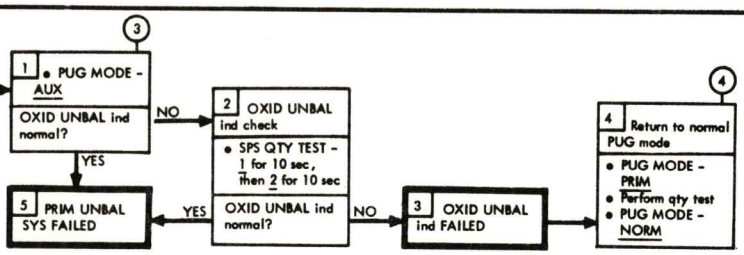 | (1) Assumes qty indicating sys normal.<br>(2) The unbalance meter will behave erratically for approximately 25 seconds after engine ignition. This is caused by propellant dynamics.<br>(3) Assumes CSM is still thrusting. If thrust has terminated, proceed with step 2.<br>(4) Actuation of SPS QTY TEST sw here will realign digital display to prim sys. |
| 13 SPS OXID (FUEL) QTY IND READOUT ABNORMAL | 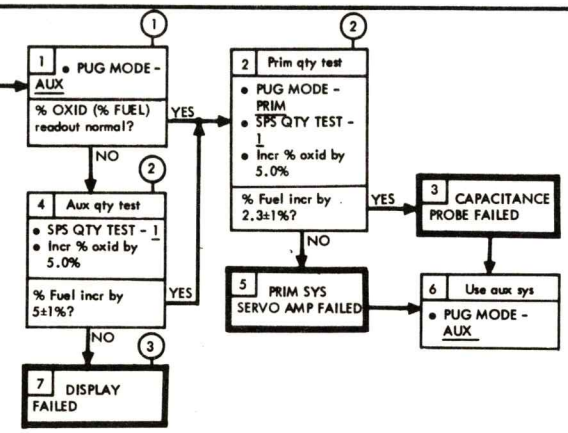 | (1) Assumes SPS is still thrusting. If thrusting terminated before step 1 is complete, proceed to step 4.<br>(2) Complete thrusting prior to qty test.<br>(3) MSFN must now supply any prplnt quantity data. |

SM-2A-1463J

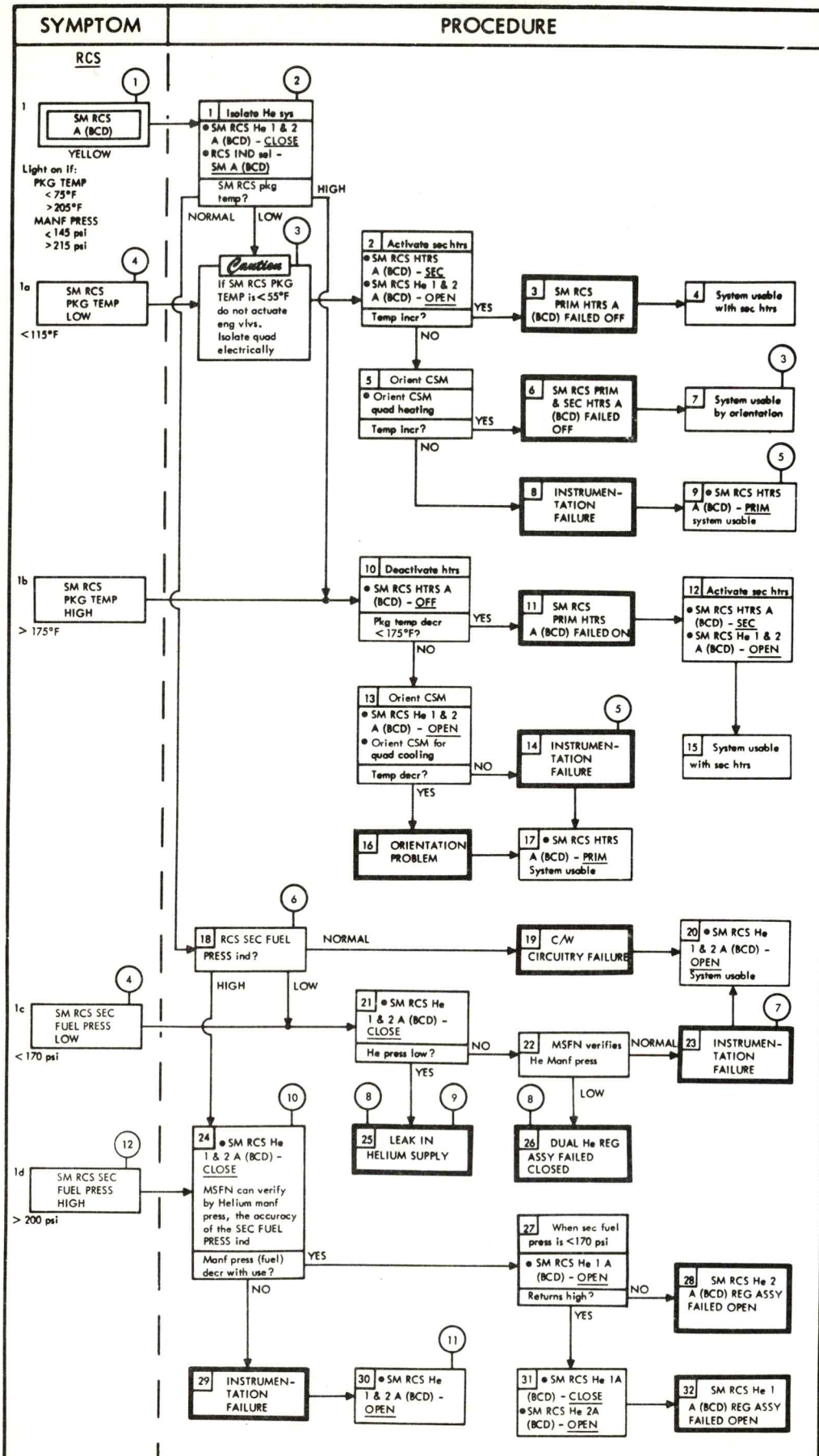
SYMPTOM
PROCEDURE
REMARKS
RCS
1
SM RCS A (BCD)
YELLOW
Light on If:
PKG TEMP
< 75°F
> 205°F
MANF PRESS
< 145 psi
> 215 psi
1a
SM RCS PKG TEMP LOW
< 115°F
1b
SM RCS PKG TEMP HIGH
> 175°F
1c
SM RCS SEC FUEL PRESS LOW
< 170 psi
1d
SM RCS SEC FUEL PRESS HIGH
> 200 psi
1 Isolate He sys
• SM RCS He 1 & 2 A (BCD) - CLOSE
• RCS IND sel - SM A (BCD)
SM RCS pkg temp?
NORMAL
LOW
HIGH
Caution
If SM RCS PKG TEMP is < 55°F do not actuate eng vlvs. Isolate quad electrically
2 Activate sec htrs
• SM RCS HTRS A (BCD) - SEC
• SM RCS He 1 & 2 A (BCD) - OPEN
Temp incr?
YES
NO
3 SM RCS PRIM HTRS A (BCD) FAILED OFF
4 System usable with sec htrs
5 Orient CSM
• Orient CSM quad heating
Temp incr?
YES
NO
6 SM RCS PRIM & SEC HTRS A (BCD) FAILED OFF
7 System usable by orientation
8 INSTRUMENTATION FAILURE
9 • SM RCS HTRS A (BCD) - PRIM system usable
10 Deactivate htrs
• SM RCS HTRS A (BCD) - OFF
Pkg temp decr < 175°F?
YES
NO
11 SM RCS PRIM HTRS A (BCD) FAILED ON
12 Activate sec htrs
• SM RCS HTRS A (BCD) - SEC
• SM RCS He 1 & 2 A (BCD) - OPEN
13 Orient CSM
• SM RCS He 1 & 2 A (BCD) - OPEN
• Orient CSM for quad cooling
Temp decr?
NO
YES
14 INSTRUMENTATION FAILURE
15 System usable with sec htrs
16 ORIENTATION PROBLEM
17 • SM RCS HTRS A (BCD) - PRIM System usable
18 RCS SEC FUEL PRESS ind?
NORMAL
HIGH
LOW
19 C/W CIRCUITRY FAILURE
20 • SM RCS He 1 & 2 A (BCD) - OPEN System usable
21 • SM RCS He 1 & 2 A (BCD) - CLOSE
He press low?
NO
YES
22 MSFN verifies He Manf press
NORMAL
LOW
23 INSTRUMENTATION FAILURE
25 LEAK IN HELIUM SUPPLY
26 DUAL He REG ASSY FAILED CLOSED
24 • SM RCS He 1 & 2 A (BCD) - CLOSE
MSFN can verify by Helium manf press, the accuracy of the SEC FUEL PRESS ind
Manf press (fuel) decr with use?
YES
NO
27 When sec fuel press is < 170 psi
• SM RCS He 1 A (BCD) - OPEN
Returns high?
NO
YES
28 SM RCS He 2 A (BCD) REG ASSY FAILED OPEN
29 INSTRUMENTATION FAILURE
30 • SM RCS He 1 & 2 A (BCD) - OPEN
31 • SM RCS He 1A (BCD) - CLOSE
• SM RCS He 2A (BCD) - OPEN
32 SM RCS He 1 A (BCD) REG ASSY FAILED OPEN
1 Illumination during boost or immediately following orbit insertion may be due to boost heating.
2 Anticipated PKG TEMP operating range is 115-175°F. Safe operating range is 55-210°F
3 Actuation at < 55°F might result in eng explosion. Four AUTO RCS switches and both ROT CONTR PWR DIRECT switches must be OFF to elec isolate the affected quad. If there were eng vlv actuations while PKG TEMP was < 55°F, close prplnt isolation vlvs in the affected quad. Reactivate the quad only in emergency. If quad is reactivated, the first pulse on each jet should be ≥1 second.
4 Sensors powered by cb 3 (Quads A, C) and cb 4 (Quads B, D) INST PWR CONT (pnl 276).
5 Use temp of other quads to estimate the temp of affected quad.
6 Anticipated He operating press is 175-195 psi. In addition to He MANF PRESS, MSFN can read out fuel & oxid manf press of each quad.
7 MSFN must be used for SM RCS SEC FUEL PRESS indication of affected quad.
8 Quad usable until SM RCS SEC FUEL PRESS drop < 75 psi. Place SM RCS PRPLNT A (BCD) - OFF. Firing jets at press < 75 psi may cause eng wall burn-through due to inadequate film cooling.
9 A prplnt leak will not cause low sec fuel pressure when He isolation vlvs are open.
10 Relf vlv burst disk ruptures at 220-236 psi. Relief vlvs open at 225-248 psi and reseats at no less than 220 psi.
11 MSFN must be relied upon for SM RCS SEC FUEL PRESS indications.
12 SM RCS SEC FUEL PRESS may increase to > 200 psia during boost until jets are fired.

SM-2A-1938E

| SYMPTOM | PROCEDURE | REMARKS |
|---|---|---|

RCS

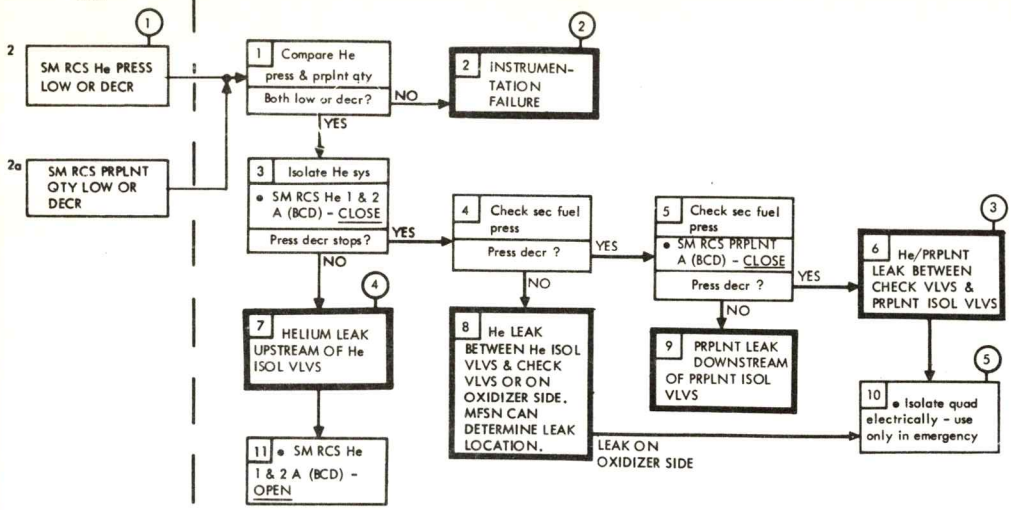


1. Sensors powered by cb 3 (Quads A, C) and cb 4 (Quads B, D) INST PWR CONT (pnl 276).
2. He press can be estimated from PRPLNT QTY remaining, or obtained from MSFN.
3. Differentiation between a hellium and prplnt leak not determinable from onboard instrumentation. Subsequent operational capability may be determined with MSFN.
4. Quad usable until SM RCS SEC FUEL PRESS (fuel) drops to<75 psi. Place SM RCS PRPLNT A (BCD) - CLOSE. Firing jets at press <75 psi may cause engine wall burn-through due to inadequate film cooling.
5. If prplnt leak is at eng vlv, firing of engine may result in an explosion

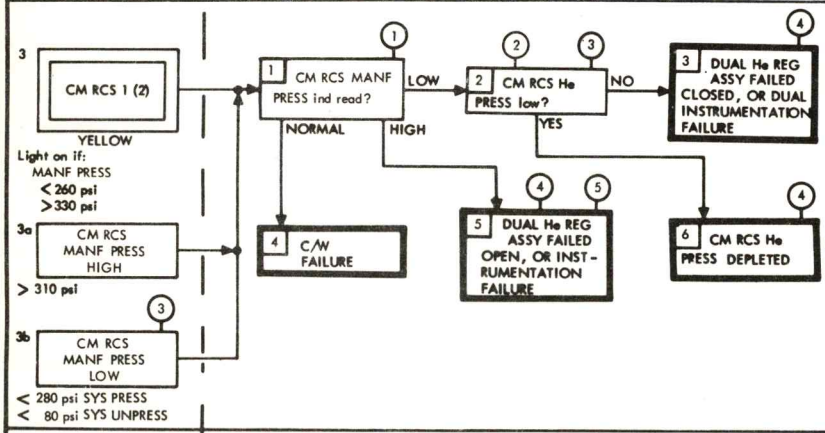


1. Anticipated operating range 285-305 psi.
2. Prior to system pressurization, MSFN must aid in determining failure identification from redundant manifold pressure instrumentation.
3. All CM RCS sensors for ring 1 (2) powered by cb 1 (cb 2) INST PWR CONT (pnl 276).
4. No limit for low fuel and oxid press for safe eng operation (at 65 psi, thrust is approximately 29 pounds).
5. Relf vlv diaphragm ruptures at 332-348 psi. Relf vlv relieves at 332-360 psi and reseats at 327 psi minimum.

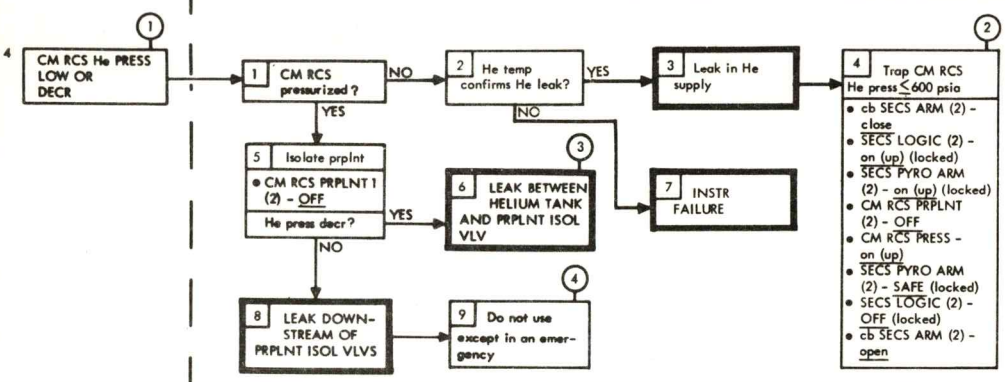


1. All CM RCS sensors for ring 1 (2) powered by cb 1 (cb 2) INST PWR CONT (pnl 276).
2. System can be pressurized to normal reg press if He press is >600 psi.
3. Degraded sys usable if necessary. Leakage may be He or prplnt. Prplnt leakage into CM area is not aggravated by use of CM RCS engs.
4. As a last resort, the He systems can be interconnected by placing the CM RCS LOGIC - on (up) then the CM PRPLNT DUMP - on (up) momentarily, then OFF. Once interconnected, systems cannot be isolated and all He could be lost.

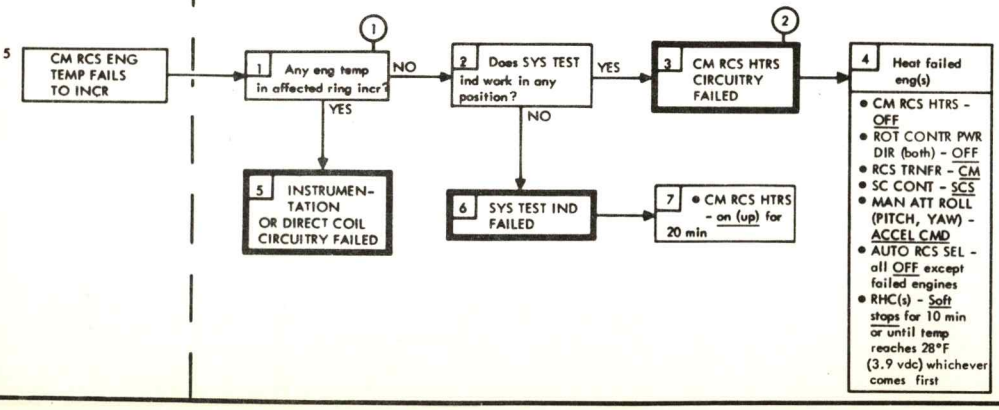


1. Six RCS engs are instrumented. SYS TEST (2) in positions 6-A, B, C, D checks temp in engs 12, 14, 16 and 21. SYS TEST (2) in positions 5-C and D checks temp in engs 24 and 25.
2. Htrs sw failure can be verified by observing DC AMPS indicator for change during sw operation.

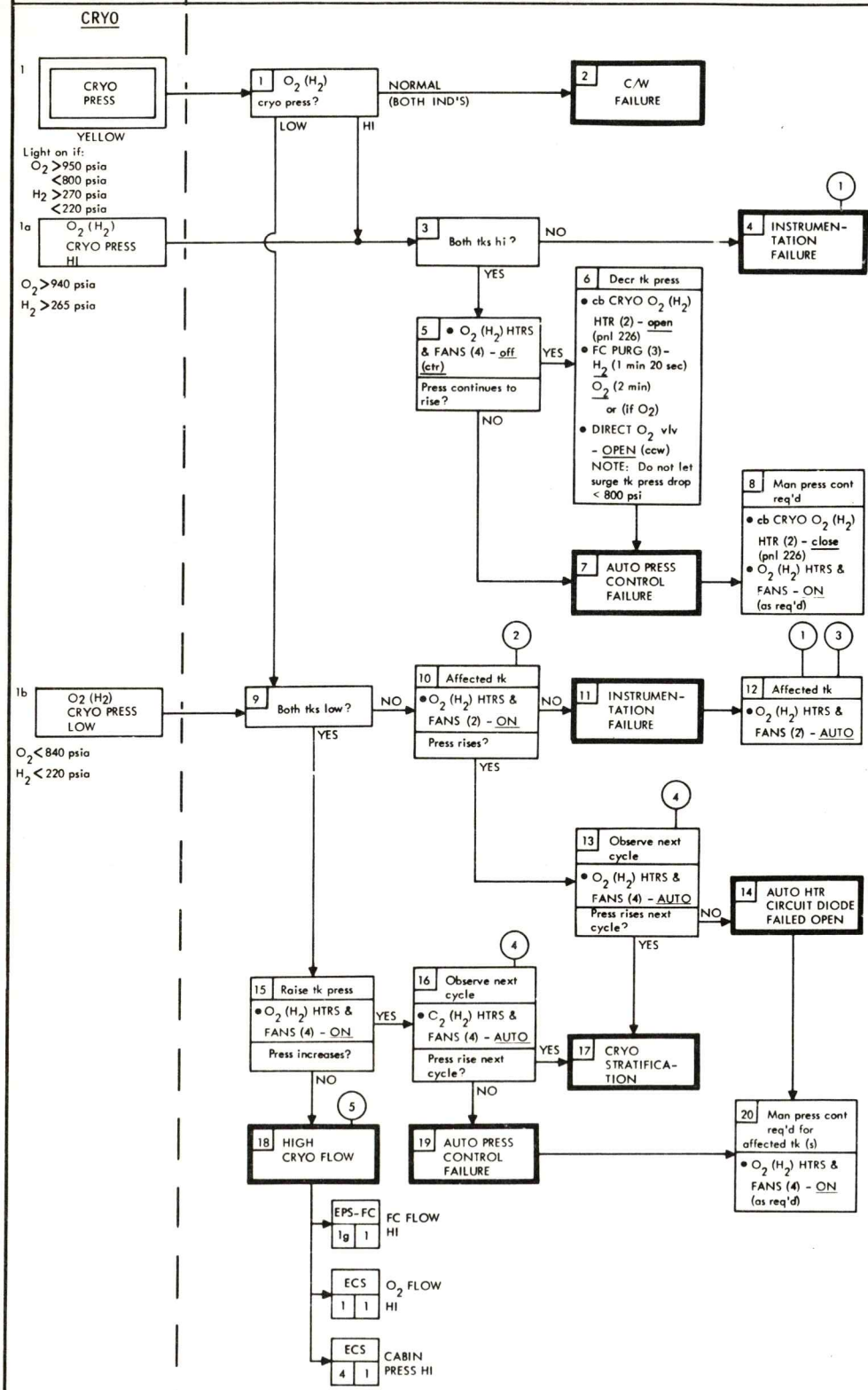
SYMPTOM
PROCEDURE
REMARKS
CRYO
1
CRYO PRESS
YELLOW
Light on if:
$O_2$ >950 psia
<800 psia
$H_2$ >270 psia
<220 psia
1a
$O_2$ ($H_2$) CRYO PRESS HI
$O_2$ >940 psia
$H_2$ >265 psia
1b
O2 (H2) CRYO PRESS LOW
$O_2$ <840 psia
$H_2$ <220 psia
1 $O_2$ ($H_2$) cryo press?
NORMAL (BOTH IND'S)
2 C/W FAILURE
LOW
HI
3 Both tks hi?
NO
YES
4 INSTRUMENTATION FAILURE
5 • $O_2$ ($H_2$) HTRS & FANS (4) - off (ctr)
Press continues to rise?
YES
NO
6 Decr tk press
• cb CRYO $O_2$ ($H_2$) HTR (2) - open (pnl 226)
• FC PURG (3) - $H_2$ (1 min 20 sec) $O_2$ (2 min) or (if $O_2$)
• DIRECT $O_2$ vlv - OPEN (ccw)
NOTE: Do not let surge tk press drop < 800 psi
7 AUTO PRESS CONTROL FAILURE
8 Man press cont req'd
• cb CRYO $O_2$ ($H_2$) HTR (2) - close (pnl 226)
• $O_2$ ($H_2$) HTRS & FANS - ON (as req'd)
9 Both tks low?
NO
YES
10 Affected tk
• $O_2$ ($H_2$) HTRS & FANS (2) - ON
Press rises?
NO
YES
11 INSTRUMENTATION FAILURE
12 Affected tk
• $O_2$ ($H_2$) HTRS & FANS (2) - AUTO
13 Observe next cycle
• $O_2$ ($H_2$) HTRS & FANS (4) - AUTO
Press rises next cycle?
NO
YES
14 AUTO HTR CIRCUIT DIODE FAILED OPEN
15 Raise tk press
• $O_2$ ($H_2$) HTRS & FANS (4) - ON
Press increases?
YES
NO
16 Observe next cycle
• $C_2$ ($H_2$) HTRS & FANS (4) - AUTO
Press rise next cycle?
YES
NO
17 CRYO STRATIFICATION
18 HIGH CRYO FLOW
19 AUTO PRESS CONTROL FAILURE
20 Man press cont req'd for affected tk (s)
• $O_2$ ($H_2$) HTRS & FANS (4) - ON (as req'd)
EPS-FC 1g 1 FC FLOW HI
ECS 1 1 $O_2$ FLOW HI
ECS 4 1 CABIN PRESS HI
1 MSFN may have valid press signal. If $O_2$, a check of surge tk press will validate cryo tk press within high limits.
2 An immediate drop in press upon htr/fan operation is indicative of stratification. Allow sufficient time for press rise indication.
3 Use unaffected tk to estimate cryo press.
4 Observation of more than one cycle may be necessary.
5 Resultant flow rate will be detectable in other systems.

| SYMPTOM | PROCEDURE | REMARKS |
|---|---|---|

## FUEL CELL

1 FC 1 (2,3) — YELLOW

Light on if:
One or more of the six monitored functions exceeds its limits.

(1)
1 Isolate FC malf
- FC IND sel - 1(2,3)
- Monitor performance by on board read-outs

Operation norm? YES → 2 C&WS FAILURE

NO →

3 FC SKIN TEMP ($T_{SKIN}$): >475°F HI → 1a; <360°F LOW → 1b

4 FC COND EXH TEMP ($T_{CE}$): >175°F HI → 1c; <150°F LOW → 1d

5 FC RAD TEMP LO tb - bp → 1e

6 FC pH HI tb - bp → 1f

7 FC $O_2$ ($H_2$) FLOW HI
$O_2$ > 1.27 pph
$H_2$ > 0.161 pph → 1g

(1) FC pump cb's, $O_2$ and $H_2$ flow low, $O_2$ and $H_2$ reg out press. and sys performance are part of sys verification, but are not monitored by Caution and Warning sys.

---

1a (1) FC 1 (2, 3) SKIN TEMP HI — >450°F

1.3

1 • FC 1 (2, 3) HTRS - OFF
FC current decr ≈2-5 amps? YES → 2 FC INLINE HTR FAILED ON

NO →

3 Observed temp norm for V-I performance? NO → 4 FC performance lower than other FC's? YES → 5 INTERNAL FC FAILURE PROBABLE → Caution: If FC current decr to 5 amps, shut down FC → EPS SSR-1 → FC SHUTDOWN

YES →

Caution: Prolonged operation >500°F will result in eventual FC failure

8 $H_2$ BYPASS VLV FAILED IN OVER REGENERATIVE POSITION

NO → 6 SKIN TEMP SNSR FAILURE → 7 Continue FC operation — Monitor performance, other C&WS indications inoperative

(2) 9 Decr skin temp
- FC1 (2,3) MN A (B) - OFF
  or
- Decr elect loads
  or
- FC1 (2,3) PURG - $H_2$

(3) (4) 10 FC usable — Maintain $T_{skin}$ between 400°F and 475°F by periodic open circuiting FC, reducing loads or $H_2$ purge

(1) If TCE also abnormal, enter appropriate TCE procedure (1c or 1d).

(2) Purging $H_2$ will tend to reduce FC temp. $H_2$ purge flow is 0.7 pph.

$H_2$ purge should be preceded whenever possible by ≈20 min of $H_2$ purge line htr operation. Criticality of operation above 500°F may preclude this operation.

(3) Reactivate inline htr on open circuit F/C.

(4) MASTER ALARM and FC BUS DISC lts will come on when reconnecting open-circuited FC to bus.

---

1b FC 1 (2, 3) SKIN TEMP LOW — ≤360°F

1.3

1 Observed temp norm for V-I performance? YES → 2 FC htrs off
• FC 1 (2,3) HTRS - OFF
FC current decr ≈2.5 amps? YES → 3 $H_2$ BYPASS FAILED IN EXCESSIVE BYPASS POSITION

NO →

4 SNSR OR CONT FAILURE → 5 Monitor V-I-T performance

NO → 6 FAILURE OF FC INLINE HTR → (1) 7 Maintain $T_{SKIN}$ >360°F by incr elect loads on affected FC

(1) If $T_{SKIN}$ continues to decr, FC operation may continue until ≈330°F with degraded output.

SM-2A-1966B

| SYMPTOM | PROCEDURE | REMARKS |
|---|---|---|

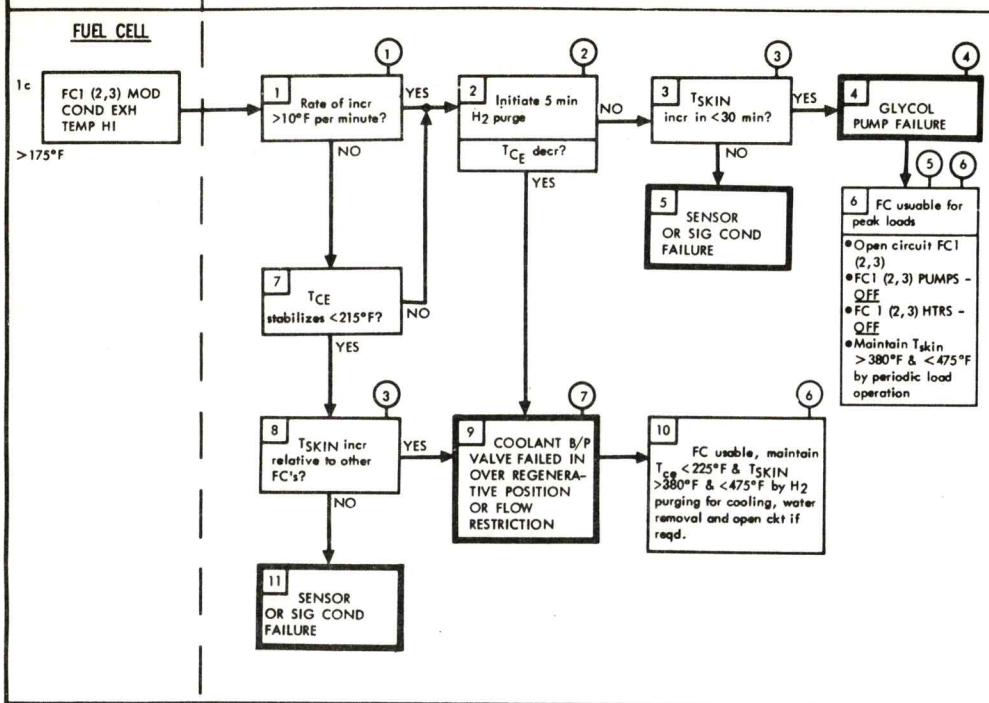


1. Cyclic overheats to 250°F may be tolerated. Use $H_2$ purge to prevent steady state $T_{CE}$ from exceeding 225°F at 25 amps.
2. If possible, $H_2$ PURGE LINE HTR should be ON (up) 20 min prior to purge.
3. FC load changes may affect rates of temperature change.
4. If coolant pump failure is confirmed by MSFN reporting rad in and rad out temps converging, turn FC PUMPS - OFF for affected FC.
5. Loss of glycol pump will result in loss of $H_2$ pump due to overheating. $H_2$ pump loss will result in in-line htr burn out if used.
6. MASTER ALARM and FC BUS DISC lts will come on when reconnecting open-circuited FC to bus.
7. MSFN can determine if reduced flow condition exists.

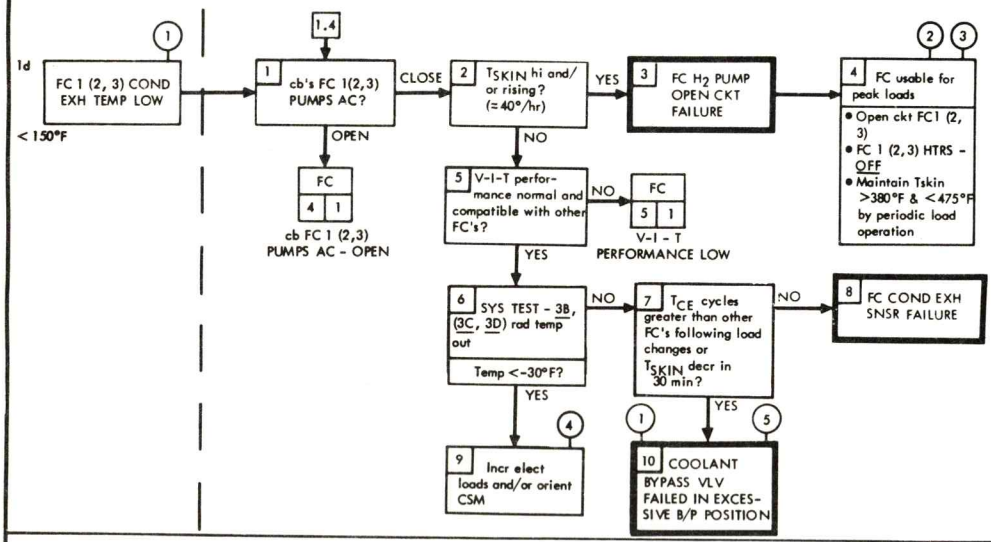


1. Low $T_{CE}$ is no restriction to FC operation if rad out and $T_{SKIN}$ are maintained within limits.
2. If $H_2$ pump is not running, inline htr will burn out if used.
3. MASTER ALARM and FC BUS DISC lts will come on when reconnecting open-circuited FC to bus
3. Since continuous operation with rad out temp <-30°F may result in rad freezing or high pressure drop and pump stall, consideration may be given to rad bypass. However, this procedure may be an irreversible action.
4. Performance may be improved due to electrolyte dehydration. Voltage should be maintained within limits.

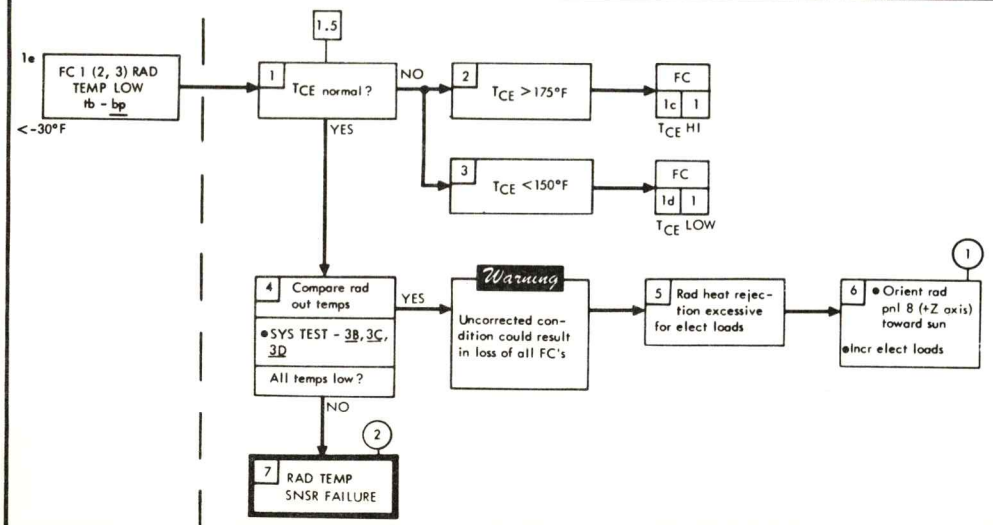


1. Since continuous operation with rad out temp <-30°F may result in rad freezing or high pressure drop and pump stall, consideration may be given to rad bypass. However, this procedure may be an irreversible action.
2. Use other FC rad out temp's for confirmation or MSFN can confirm snsr failure from FC rad inlet temp's.

SM-2A-1967F

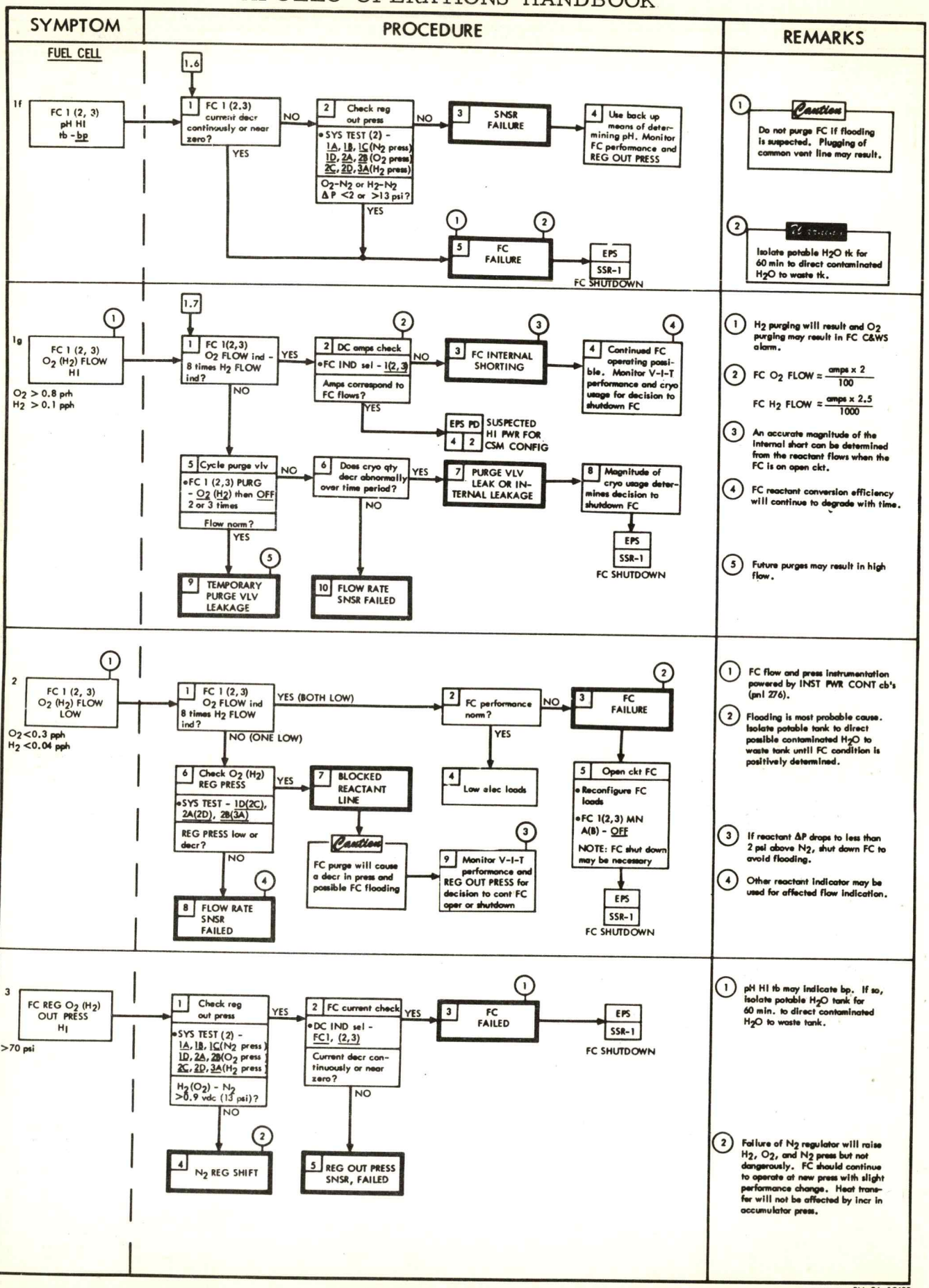
SYMPTOM
PROCEDURE
REMARKS
FUEL CELL
1f
FC 1 (2, 3) pH HI tb - bp
1.6
1 FC 1 (2,3) current decr continuously or near zero?
NO
YES
2 Check reg out press
• SYS TEST (2) - 1A, 1B, 1C (N2 press) 1D, 2A, 2B (O2 press) 2C, 2D, 3A (H2 press)
O2-N2 or H2-N2 ΔP <2 or >13 psi?
YES
NO
3 SNSR FAILURE
4 Use back up means of determining pH. Monitor FC performance and REG OUT PRESS
5 FC FAILURE
EPS
SSR-1
FC SHUTDOWN
1 Caution
Do not purge FC if flooding is suspected. Plugging of common vent line may result.
2
Isolate potable H2O tk for 60 min to direct contaminated H2O to waste tk.
1g
FC 1 (2, 3) O2 (H2) FLOW HI
O2 > 0.8 pph
H2 > 0.1 pph
1.7
1 FC 1(2,3) O2 FLOW ind - 8 times H2 FLOW ind?
YES
NO
2 DC amps check
• FC IND sel - 1(2,3)
Amps correspond to FC flows?
NO
YES
3 FC INTERNAL SHORTING
4 Continued FC operating possible. Monitor V-I-T performance and cryo usage for decision to shutdown FC
EPS PD 4 2 SUSPECTED HI PWR FOR CSM CONFIG
5 Cycle purge vlv
• FC 1 (2,3) PURG - O2 (H2) then OFF 2 or 3 times
Flow norm?
NO
YES
6 Does cryo qty decr abnormally over time period?
YES
NO
7 PURGE VLV LEAK OR INTERNAL LEAKAGE
8 Magnitude of cryo usage determines decision to shutdown FC
EPS
SSR-1
FC SHUTDOWN
9 TEMPORARY PURGE VLV LEAKAGE
10 FLOW RATE SNSR FAILED
1 H2 purging will result and O2 purging may result in FC C&WS alarm.
2 FC O2 FLOW = amps x 2 / 100
FC H2 FLOW = amps x 2.5 / 1000
3 An accurate magnitude of the internal short can be determined from the reactant flows when the FC is on open ckt.
4 FC reactant conversion efficiency will continue to degrade with time.
5 Future purges may result in high flow.
2
FC 1 (2, 3) O2 (H2) FLOW LOW
O2 <0.3 pph
H2 <0.04 pph
1 FC 1 (2, 3) O2 FLOW ind 8 times H2 FLOW ind?
YES (BOTH LOW)
NO (ONE LOW)
2 FC performance norm?
NO
YES
3 FC FAILURE
4 Low elec loads
5 Open ckt FC
• Reconfigure FC loads
• FC 1(2,3) MN A(B) - OFF
NOTE: FC shut down may be necessary
EPS
SSR-1
FC SHUTDOWN
6 Check O2 (H2) REG PRESS
• SYS TEST - 1D(2C), 2A(2D), 2B(3A)
REG PRESS low or decr?
YES
NO
7 BLOCKED REACTANT LINE
Caution
FC purge will cause a decr in press and possible FC flooding
9 Monitor V-I-T performance and REG OUT PRESS for decision to cont FC oper or shutdown
8 FLOW RATE SNSR FAILED
1 FC flow and press instrumentation powered by INST PWR CONT cb's (pnl 276).
2 Flooding is most probable cause. Isolate potable tank to direct possible contaminated H2O to waste tank until FC condition is positively determined.
3 If reactant ΔP drops to less than 2 psi above N2, shut down FC to avoid flooding.
4 Other reactant indicator may be used for affected flow indication.
3
FC REG O2 (H2) OUT PRESS HI
>70 psi
1 Check reg out press
• SYS TEST (2) - 1A, 1B, 1C (N2 press) 1D, 2A, 2B (O2 press) 2C, 2D, 3A (H2 press)
H2 (O2) - N2 >0.9 vdc (13 psi)?
YES
NO
2 FC current check
• DC IND sel - FC1, (2,3)
Current decr continuously or near zero?
YES
NO
3 FC FAILED
EPS
SSR-1
FC SHUTDOWN
4 N2 REG SHIFT
5 REG OUT PRESS SNSR, FAILED
1 pH HI tb may indicate bp. If so, isolate potable H2O tank for 60 min. to direct contaminated H2O to waste tank.
2 Failure of N2 regulator will raise H2, O2, and N2 press but not dangerously. FC should continue to operate at new press with slight performance change. Heat transfer will not be affected by incr in accumulator press.

SM-2A-1968B

| SYMPTOM | PROCEDURE | REMARKS |
|---|---|---|

**FUEL CELL**

4 cb FC 1 (2, 3) PUMPS AC - OPEN (1)

1 Attempt reset
- cb FC 1(2,3) PUMPS AC - close

cb reset?

NO → 2 FC PUMP ($H_2$ OR GLY) FAILURE (2) → 3 FC usable for peak loads (3)
- Open circuit FC
- FC 1 (2, 3) HTRS - OFF
- Maintain Tskin > 380°F & < 475°F by periodic load operation

YES → 4 Continue FC operation

Transient caused cb to open

(1) This condition will result in low $T_{CE}$ and/or high $T_{SKIN}$.

(2) pH snsr lost since power is con non to pumps.

(3) MASTER ALARM and FC BUS DISC lts will come on when re-connecting open-circuited FC to bus.

---

5 FC 1 (2, 3) V-I-T PERFORMANCE LOW

1 Compare V-I-T performance of all FC's
- Record V-I-T for each FC
- Compare with V-I-T curves

Performance low on all FC's?

YES → 2 Potable & waste tanks full? (1)

YES → ECS 31a 10

WASTE $H_2O$ OVERBOARD DUMP NOT DRAINING

NO → 3 Purge all FC (2)
- $H_2$ PURGE LINE HTR - on (up), 20 min prior to purge
- FC 1, 2, 3 PURG - $O_2$ for 2 min then - OFF
- FC 1, 2, 3 PURG - $H_2$ for 1 min 20 sec then OFF

Performance improved on all FC's?

YES → 4 Repeat purge
Continue purging as long as improved performance results

→ 5 CONTAMINATION IN REACTANTS OR PURGE INEFFICIENCY

NO (1 FC LOW)

6 Purge 1 FC (2)
- $H_2$ PURG LINE HTR - on (up) 20 min prior to purge
- FC 1, (2,3) PURG - $O_2$ for 2 min then - OFF
- FC 1, (2,3) PURG - $H_2$ for 1 min 20 sec, then OFF

Performance improved?

YES → 7 TEMPORARY DEGRADATION IN FC PERFORMANCE

10 Repeat purge
Continue purging as long as improved performance results

NO → 8 DC volt check
- DC IND sel - BAT C

Voltage 34-38V?

YES → 9 DC AMPS IND FAILURE (3)

NO → 11 DC VOLTS IND FAILURE

12 Monitor performance by comparing with other FC's. MSFN provides V&I information for V-I-T check

NO → 13 Affected FC current output much lower than other FC's and $T_{SKIN} \approx$ or lower? (4)

YES → 14 Currents correspond to FC flow? (3)

YES → 15 INTERNAL FC FAILURE

Caution: If FC current decr to 5 amps, shut down FC

→ EPS SSR-L

FC SHUTODWN

NO → 16 $T_{SKIN}$ SNSR FAILURE

NO → 17 Open ckt affected FC (5)
- FC HTR 1, (2, 3) - OFF
- DC IND SEL - FC 1 (2, 3)
- Open ckt affected FC (momentarily)

FC flow>0?

NO → 18 AMMETER CIRCUITRY SHIFT (6)

YES → 19 INTERNAL FC SHORT (≈FC FLOW)

(1) If both potable & waste $H_2O$ tanks are full, possible freezing of waste $H_2O$ dump line may be cause.

(2) Verify purge flow by incr in reactant flow.

(3) Ammeter accuracy can be verified by FC reactant flow

$$\text{FC } O_2 \text{ flow} = \frac{\text{amps} \times 2}{100}$$

$$\text{FC } H_2 \text{ flow} = \frac{\text{amps} \times 2.5}{1000}$$

(4) If only 2 FC's are in operation, both FC's should be tied to both buses for this check. Time must be allowed for $T_{SKIN}$ to stabilize.

(5) MASTER ALARM and FC BUS DISC lts will come on when reconnecting open-circuited FC to bus.

(6) Use reactant flow rates to estimate current.

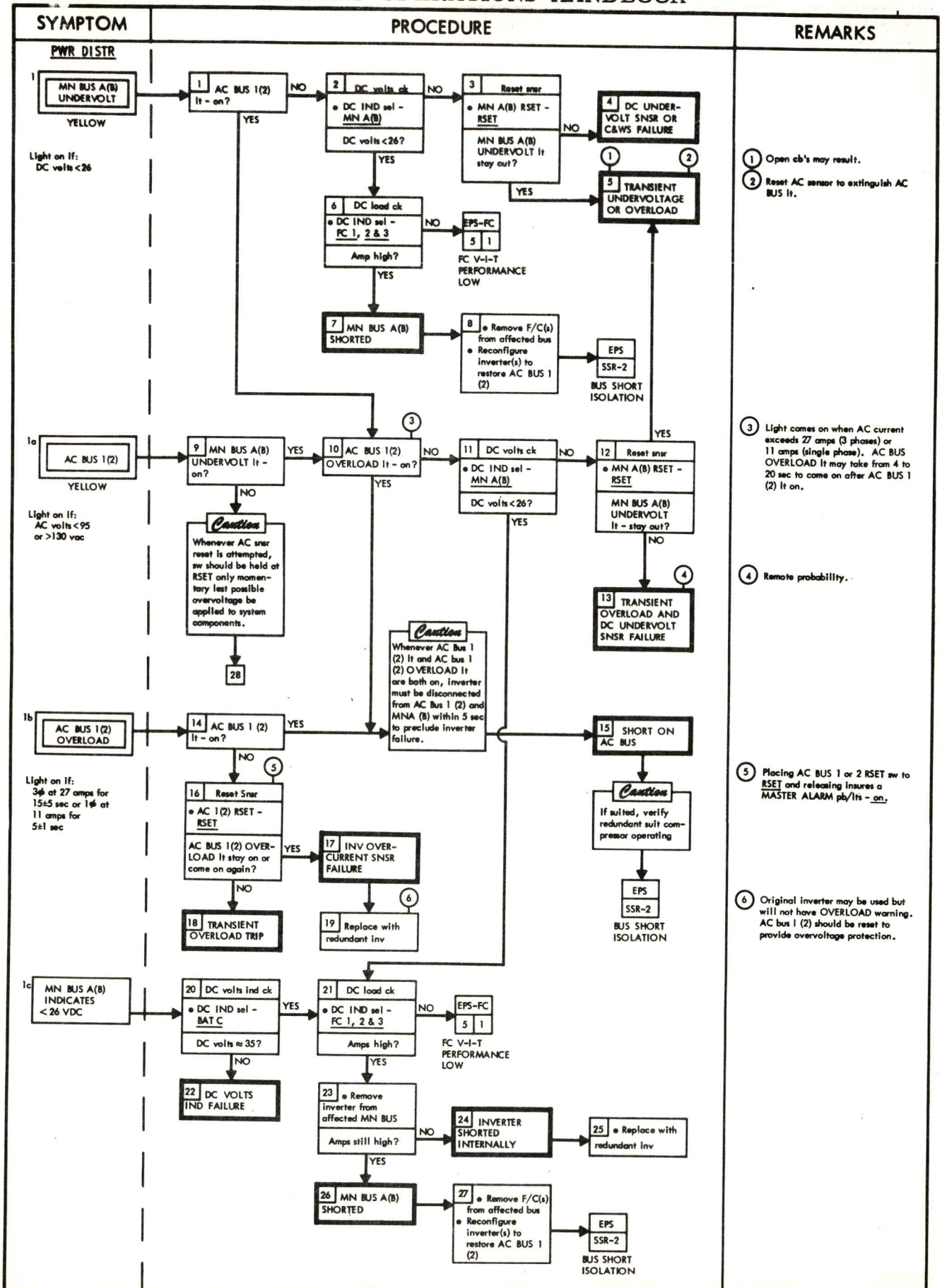
SYMPTOM
PROCEDURE
REMARKS
PWR DISTR
1 MN BUS A(B) UNDERVOLT
YELLOW
Light on if: DC volts <26
1 AC BUS 1(2) lt - on?
NO
YES
2 DC volts ck
• DC IND sel - MN A(B)
DC volts <26?
NO
YES
3 Reset snsr
• MN A(B) RSET - RSET
MN BUS A(B) UNDERVOLT lt stay out?
NO
YES
4 DC UNDER-VOLT SNSR OR C&WS FAILURE
5 TRANSIENT UNDERVOLTAGE OR OVERLOAD
6 DC load ck
• DC IND sel - FC 1, 2 & 3
Amp high?
NO
YES
EPS-FC 5 1
FC V-I-T PERFORMANCE LOW
7 MN BUS A(B) SHORTED
8 • Remove F/C(s) from affected bus
• Reconfigure inverter(s) to restore AC BUS 1 (2)
EPS SSR-2
BUS SHORT ISOLATION
1a AC BUS 1(2)
YELLOW
Light on if: AC volts <95 or >130 vac
9 MN BUS A(B) UNDERVOLT lt - on?
YES
NO
Caution
Whenever AC snsr reset is attempted, sw should be held at RSET only momentary last possible overvoltage be applied to system components.
28
3
10 AC BUS 1(2) OVERLOAD lt - on?
NO
YES
11 DC volts ck
• DC IND sel - MN A(B)
DC volts <26?
NO
YES
12 Reset snsr
• MN A(B) RSET - RSET
MN BUS A(B) UNDERVOLT lt - stay out?
YES
NO
4
13 TRANSIENT OVERLOAD AND DC UNDERVOLT SNSR FAILURE
Caution
Whenever AC Bus 1 (2) lt and AC bus 1 (2) OVERLOAD lt are both on, inverter must be disconnected from AC Bus 1 (2) and MNA (B) within 5 sec to preclude inverter failure.
1b AC BUS 1(2) OVERLOAD
Light on if: 3ϕ at 27 amps for 15±5 sec or 1ϕ at 11 amps for 5±1 sec
14 AC BUS 1 (2) lt - on?
YES
NO
5
16 Reset Snsr
• AC 1(2) RSET - RSET
AC BUS 1(2) OVERLOAD lt stay on or come on again?
YES
NO
17 INV OVER-CURRENT SNSR FAILURE
6
19 Replace with redundant inv
18 TRANSIENT OVERLOAD TRIP
15 SHORT ON AC BUS
Caution
If suited, verify redundant suit compressor operating
EPS SSR-2
BUS SHORT ISOLATION
1c MN BUS A(B) INDICATES <26 VDC
20 DC volts ind ck
• DC IND sel - BAT C
DC volts ≈ 35?
YES
NO
22 DC VOLTS IND FAILURE
21 DC load ck
• DC IND sel - FC 1, 2 & 3
Amps high?
NO
YES
EPS-FC 5 1
FC V-I-T PERFORMANCE LOW
23 • Remove inverter from affected MN BUS
Amps still high?
NO
YES
24 INVERTER SHORTED INTERNALLY
25 • Replace with redundant inv
26 MN BUS A(B) SHORTED
27 • Remove F/C(s) from affected bus
• Reconfigure inverter(s) to restore AC BUS 1 (2)
EPS SSR-2
BUS SHORT ISOLATION
1 Open cb's may result.
2 Reset AC sensor to extinguish AC BUS lt.
3 Light comes on when AC current exceeds 27 amps (3 phases) or 11 amps (single phase). AC BUS OVERLOAD lt may take from 4 to 20 sec to come on after AC BUS 1 (2) lt on.
4 Remote probability.
5 Placing AC BUS 1 or 2 RSET sw to RSET and releasing insures a MASTER ALARM pb/lts - on.
6 Original inverter may be used but will not have OVERLOAD warning. AC bus 1 (2) should be reset to provide overvoltage protection.

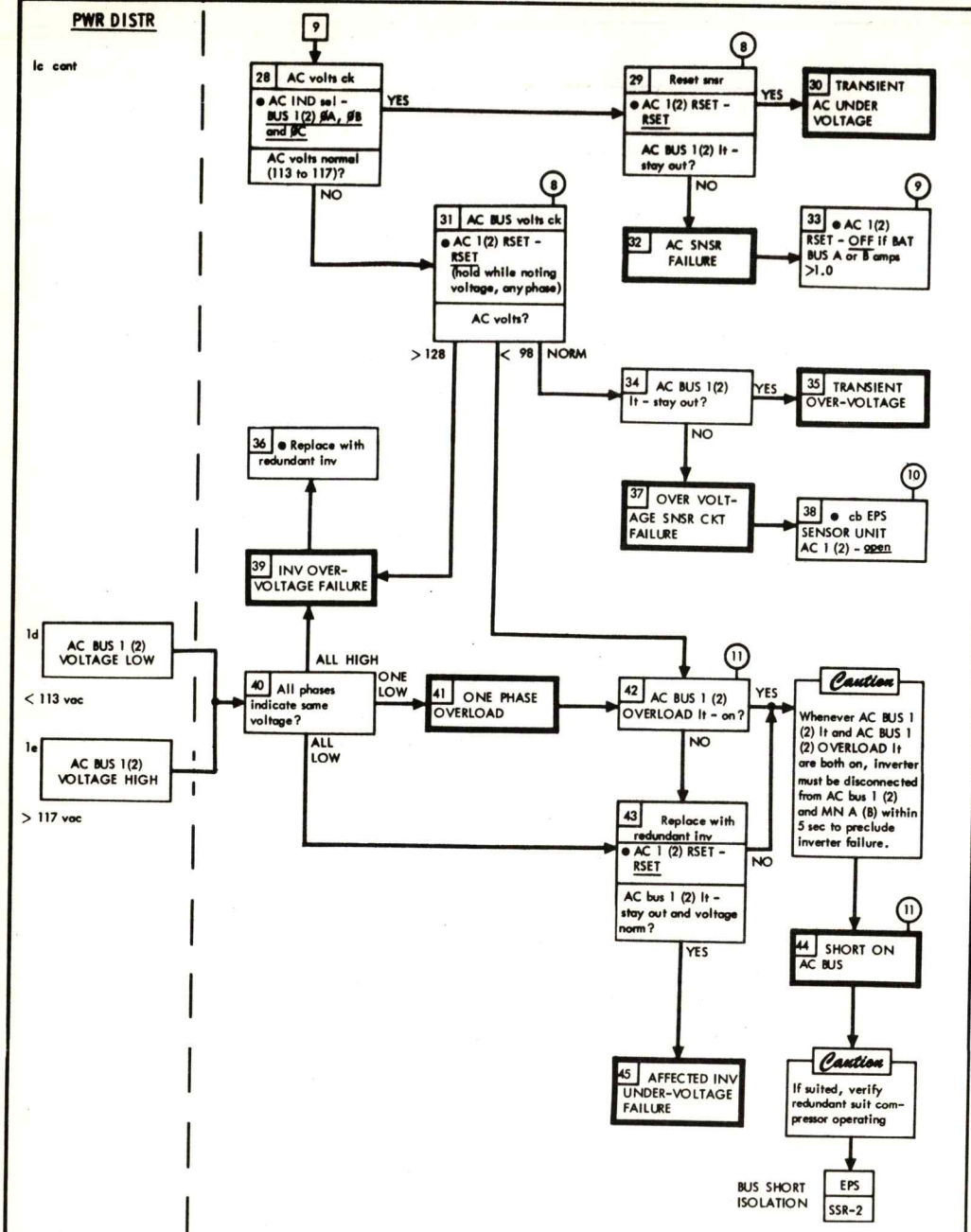
SYMPTOM
PROCEDURE
REMARKS
PWR DISTR
Ic cont
9
28 AC volts ck
● AC IND sel - BUS 1(2) ØA, ØB and ØC
AC volts normal (113 to 117)?
YES
NO
8
29 Reset snsr
● AC 1(2) RSET - RSET
AC BUS 1(2) lt - stay out?
YES
30 TRANSIENT AC UNDER VOLTAGE
NO
32 AC SNSR FAILURE
9
33 ● AC 1(2) RSET - OFF If BAT BUS A or B amps >1.0
8
31 AC BUS volts ck
● AC 1(2) RSET - RSET (hold while noting voltage, any phase)
AC volts?
> 128
< 98
NORM
34 AC BUS 1(2) lt - stay out?
YES
35 TRANSIENT OVER-VOLTAGE
NO
37 OVER VOLTAGE SNSR CKT FAILURE
10
38 ● cb EPS SENSOR UNIT AC 1 (2) - open
36 ● Replace with redundant inv
39 INV OVER-VOLTAGE FAILURE
1d
AC BUS 1 (2) VOLTAGE LOW
< 113 vac
1e
AC BUS 1(2) VOLTAGE HIGH
> 117 vac
40 All phases indicate same voltage?
ALL HIGH
ONE LOW
ALL LOW
41 ONE PHASE OVERLOAD
11
42 AC BUS 1 (2) OVERLOAD lt - on?
YES
NO
Caution
Whenever AC BUS 1 (2) lt and AC BUS 1 (2) OVERLOAD lt are both on, inverter must be disconnected from AC bus 1 (2) and MN A (B) within 5 sec to preclude inverter failure.
43 Replace with redundant inv
● AC 1 (2) RSET - RSET
AC bus 1 (2) lt - stay out and voltage norm?
NO
YES
11
44 SHORT ON AC BUS
Caution
If suited, verify redundant suit compressor operating
45 AFFECTED INV UNDER-VOLTAGE FAILURE
BUS SHORT ISOLATION
EPS
SSR-2
2
INV 1 (2,3) TEMP HI
YELLOW
Light on if: Temp>190±3°F
1
Gly evap prim (sec) out temp hi?
NO
YES
ECS 16 1
ECS 21 1
PRIM GLY EVAP OUT TEMP HIGH
SEC GLY EVAP OUT TEMP HIGH
2
● AC IND sel - BUS 1 (2)
AC volts<113 or >117 vac?
NO
YES
1
3 Replace with redundant inv and turn original inverter off.
INV 1 (2, 3) TEMP HI lt - out within 15 min?
NO
YES
2
4 INV 1 (2,3) TEMP HI INSTRUMENTATION FAILURE
5 INV FAILED INTERNALLY
8 Placing AC BUS 1 or 2 RSET sw to RSET and releasing insures a MASTER ALARM pb/lts - on.
9 Subsequent auto inv disconnect for overvoltage lost. If sw left ON, overload indication available but overvoltage may not provide auto inverter disconnect.
10 Subsequent auto inv disconnect for overvoltage and undervoltage indication lost. Overload indication unaffected.
11 AC BUS OVERLOAD lt may take from 4 to 20 sec to come on after AC BUS 1 (2) lt on. Light comes on when AC current exceeds 27 amps (3 phase) or 11 amps (single phase).
1 Refer to checklist for inverter changeover.
2 Inv usable but no high temp indication available.

| SYMPTOM | PROCEDURE | REMARKS |
|---|---|---|

## PWR DISTR

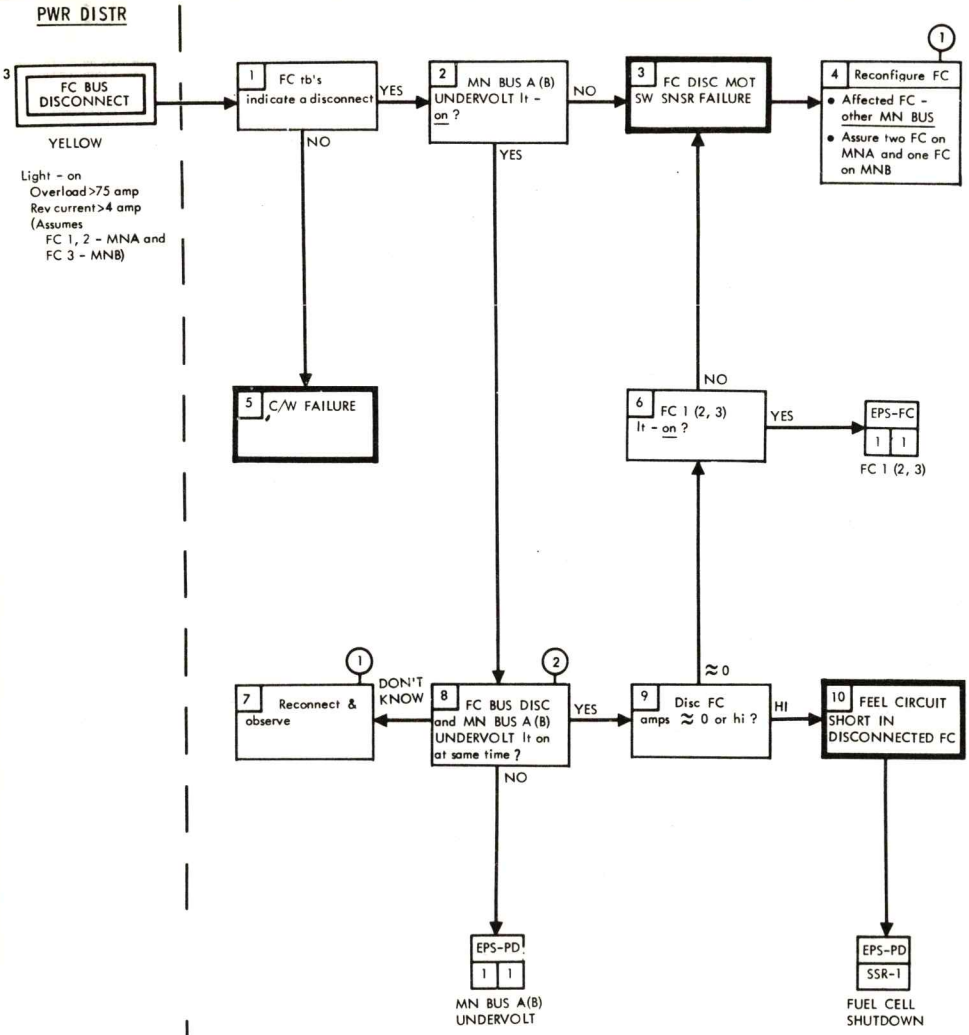


1. MASTER ALARM and FC BUS DISC lts will come on when reconnecting open- circuited FC to bus.

2. During actual overloads, the MN BUS UNDERVOLT lt may be on as long as 20 sec before the FC BUS DISC lt.

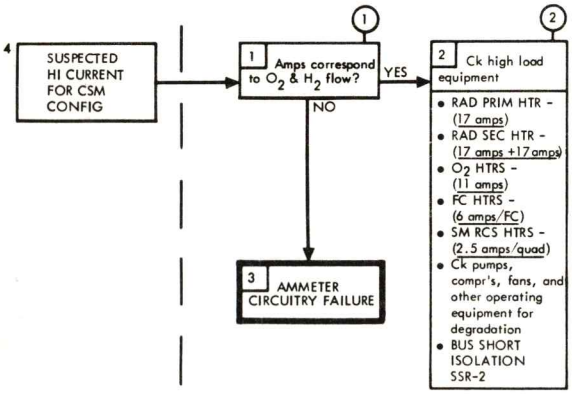


1. $O_2$ FLOW $\approx \frac{\text{amps} \times 2}{100}$

   $H_2$ FLOW $\approx \frac{\text{amps} \times 2.5}{1000}$

2. a. ECS rad htrs operate:

   RAD PRIM OUT TEMP $< -15°F$

   RAD SEC OUT TEMP $< +45°F$

   b. Cryo htrs & fans operate:

   $O_2 < 865$ psia

   $H_2 < 225$ psia

   c. FC htrs operate:

   $T_{SKIN} < 380°F$

   d. SM RCS htrs operate at pkg temp:

   PRIM $< 115°F$

   SEC $< 115°F$

SM-2A-1972F

| SYMPTOM | PROCEDURE | REMARKS |
|---|---|---|

**PWR DISTR**

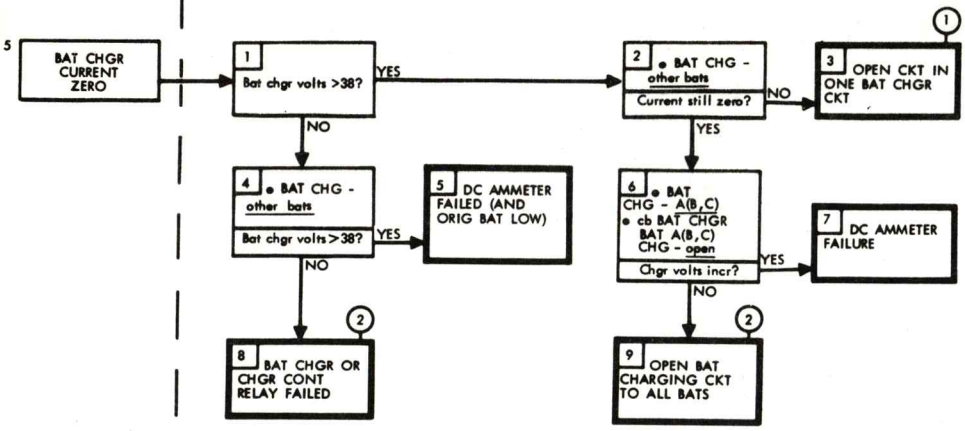


(1) Affected battery might still be charged throught BAT TIE cb's

(2) Battery charging capability lost.

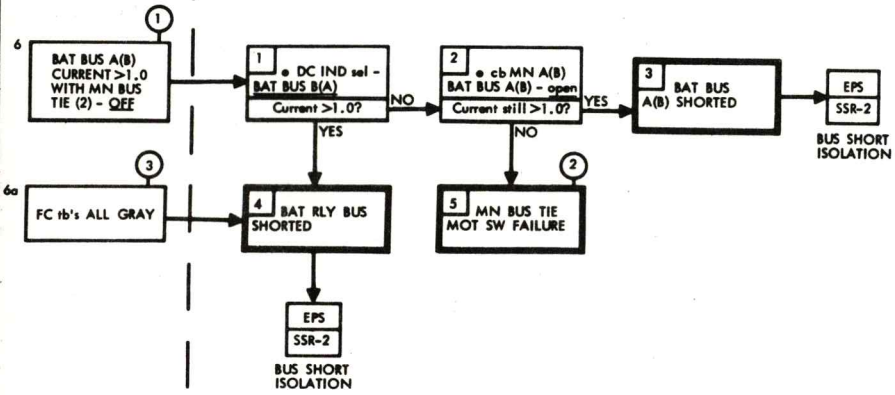


(1) Bat bus current will be <1.0 amps for all mission phases except:

a. Prelaunch (<3.0 amps)
b. Boost & insertion
c. ΔV maneuvers
d. Deorbit & entry.

(2) If a, b & c batts on MN buses, cycling MN bus tie switches may correct the problem. If not, MN bus tie will have to be accomplished by cb action. May have to change battery through other battery bus.

(3) Not valid after CM/SM separation.

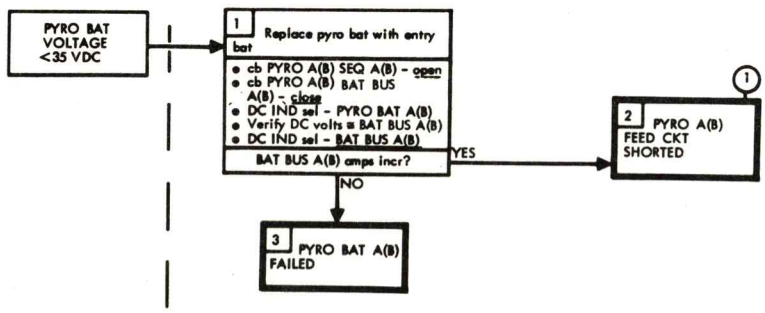


(1) It is crew option to leave a main battery connected to a known short to retain redundant pyro circuit capability. If dc amps >30, expect cb PYRO A(B) BAT BUS A(B) to open within 1 to 5 min and loss of redundant pyro circuit.

**SPECIAL SUB ROUTINE**

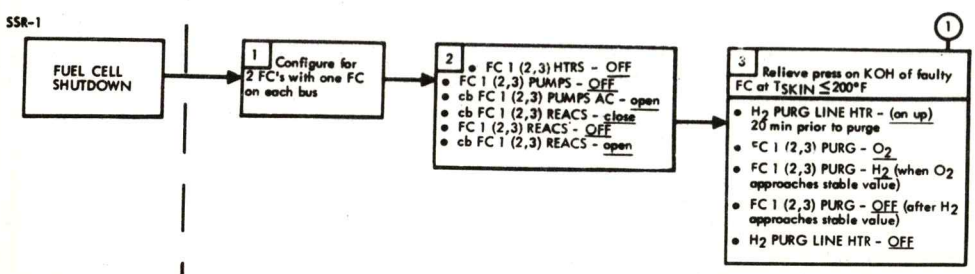


(1) FC will not reach $T_{SKIN}$ = 200°F for approximately 24 hours.

KOH will be solidified at $T_{SKIN} \leq 200°F$. The press is relieved to reduce the possibility of corrosive fluid leaking into the SM and to insure sealing of the check vlv, isolating the potable water from the FC.

| SYMPTOM | PROCEDURE | REMARKS |
|---|---|---|

SSR-2

**BUS SHORT ISOLATION**

**1** Remove all equipment from affected bus

**2** Affected bus?

- BAT RLY BUS → **3**
- MNA (B) → **16**
- AC 1 (2) → **22**
- BAT A (B) → **22**

**3** Bat chgr to bat bus
- cb ENTRY/PL BAT A - open (pnl 250)
- cb BAT RLY BUS BAT B - open
- BAT CHG - A
- DC IND sel - BAT CHGR

Bat chgr amps > 0?
- NO → **6** Return to original configuration. Close cb's to isolate affected equip.
- YES → **8** Current drain on BAT RLY BUS. Bus loss depends on magnitude of current drain ①

**8** → **11** Isolate BAT RLY BUS from BAT A & B
- cb BAT RLY BUS BAT A - open
- cb BAT RLY BUS BAT B - open
- Return BAT RLY BUS load to original config

**11** → **12** BAT RLY BUS non-transferable loads

EPS/CRYO
- FC reacs vlvs, latch ckt & tb's
- FC rad bypass vlvs & tb's
- FC to bus cont & tb's
- DC undervolt sensing if CW NORM - ACK
- AC over/undervolt sensing & CW lt
- AC ovld CW lt (if CW NORM - ACK)
- Inverter cont (DC & AC)

**4** Individually close equip cb's or sws while monitoring FC current

**5** ● INV 1(2) - to affected bus

AC BUS 1(2) OVERLOAD lt on?
- NO → **4**
- YES → **7** AFFECTED AC BUS LOST

*Caution*

Whenever AC BUS 1(2) lt and AC BUS 1(2) OVERLOAD lt are both on, inverter must be disconnected from AC BUS 1(2) AND MNA(B) within 5 sec to preclude inverter failure.

**7** AFFECTED AC BUS LOST
- AC1 → **9**
- AC2 → **10**

**9** AC1 BUS reconfiguration
- INV 1 - OFF
- INV 1 AC1 - OFF
- SUIT COMPR - AC2
- FDAI SEL - 2
- BMAG MODE (3) - RATE 2
- S BD PWR AMPL PRIM - SEC
- S BD XPNDR - SEC
- FC 1 PUMP - AC2
- GLY PUMPS - 2 AC2
- BMAG 1 PWR - OFF
- G/N PWR - AC2
- SIG CONDR/DR BIAS PWR 1 - AC2
- Maintain GLY EVAP TEMP INLET temp > 40°F
- RAD FLOW CONT AUTO - 2
- BAT CHGR - AC2

**10** AC2 BUS reconfiguration
- INV 2 - OFF
- INV 2 AC2 - OFF
- ELEC PWR - ECA
- Verify OMNI in proper configuration for MSFN
- FC 2 & 3 PUMPS - AC1
- BMAG 2 PWR - OFF
- FDAI SEL - 1
- SIG CONDR/DR BIAS PWR 2 - AC1
- BMAG MODE (3) - RATE 1
- Activate SEC COOL LOOP
- Shut down PRIM EVAP

**13** AC1 BUS non-transferable loads

EPS/CRYO
- Tank 1 $H_2$ & $O_2$ fans
- Tank 1 $H_2$ & $O_2$ qty & temp sig condr (ØC)

ECS
- Cabin fan 1
- Man cont prim evap stm vlv (ØC)
- Auto cont prim gly cont vlv (ØA)
- Sec loop evap cooling (ØA)
- Elect cont suit heat exch gly bypass vlv (ØB)
- Red flow contr 1 & rad isol vlvs (ØC)

SCS
- GDC (all modes except RSI)
- FDAI 1
- BMAG 1 (ATT HOLD, RATE CMD)
- Min Imp (ØA)
- RHC 1 MTVC (ØA)
- Rate cmd prop att cont (ØA)
- Auto ΔV (ØA)
- No 1 pitch & yaw needles on GPI (ØA)
- SII fuel & SIVB fuel & oxid press for ind No 1 (ØA)

LIGHTING
- FDAI 1
- EMS numerics & grid
- Mission timer numerics (pnl 2)
- DSKY numerics (pnl 2)
- EL for pnls 1 thru 9, 15, 16, 229, 275
- Sys 1 SM running lts (8 elements) & EVA lt (1 element)

**14** AC2 BUS non-transferable loads

EPS/CRYO
- Tank 2 $H_2$ & $O_2$ fans
- Tank 2 $H_2$ & $O_2$ qty & temp sig condr (ØC)
- AC utility outlet (pnl 201)

ECS
- Cabin fan 2
- Prim evap temp cont unit (ØA)
- Auto cabin temp cont unit ØC
- Rad flow contr 2 & isol vlvs(ØC)

SCS
- MTVC (RATE CMD, ACCEL CMD)
- Prop rate cmd (TVC, ATT CONT)
- FDAI 2
- BMAG 2
- RSI (ØA)
- GDC (ØA)
- Auto ΔV (TVC) (ØA)
- Ordeal
- No 2 pitch & yaw needles on GPI (ØA)
- SII fuel & SIVB fuel & oxid press for indicator No 2 (ØA)

LIGHTING
- EMS roll att & scroll lts
- Mission timer numerics (pnl 306)
- DSKY numerics (pnl 140)
- EL for pnls 10, 100, 101, 122, 226, 306
- Sys 2 CM running lts (8 elements) & EVA lt (1 element)
- Docking target & spot lt

① If short circuit amps < 2.0, it is a crew option to maintain bat relay bus powered to retain AC bus sensors and FC overcurrent/reverse current protection functions. Increased battery recharge cycle may be required. If short circuit > 2.0 amps, close bat relay bat A or bat B cb's only when required to operate equipment connected to bat relay bus.

SM-2A-2248

| SYMPTOM | PROCEDURE | REMARKS |
|---|---|---|

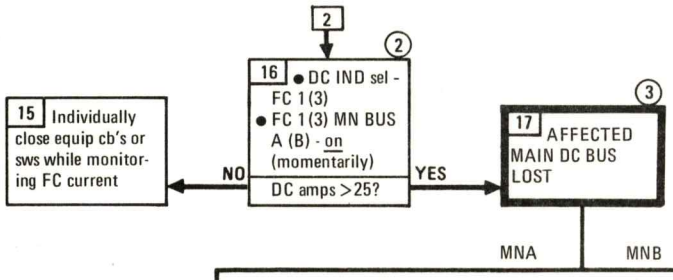


(2) MASTER ALARM and FC BUS DISC lts will come on when reconnecting open-circuited FC to bus.

(3) Place two batteries on remaining bus for SPS maneuvers.

**18 MN BUS A reconfiguration**

- FC 2, 3 - MNB only
- FC 1 MNB - on (up) (if reqd)
- FC 1 MNA - OFF
- INV 1 AC1 - OFF
- INV 1 - OFF
- INV 3 - MNB
- INV 3 AC1 - on (up)
- cb MNA BAT BUS A - open
- cb MNB BAT C - close
- SUIT $H_2O$ ACCUM AUTO - 2
- BMAG MODE (3) - RATE 2
- FDAI SEL - 2
- URINE DUMP - HTR B
- WASTE $H_2O$ DUMP - HTR B
- RHC PWR DIR 2 - MNB
- AUTO RCS SEL (16) - MNB (as reqd)
- RAD PRIM HTR - 1
- RAD FLOW CONT AUTO - 2
- SPS LINE HTRS - A/B (as reqd)
- SCS TVC (2) - RATE CMD
- Use RHC's for RCS dump, not CM PRPLNT DUMP sw

**19 MN BUS B reconfiguration**

- FC 1, 2 - MNA only
- FC 3 MNA - on (up) (if reqd)
- FC 3 MNB - OFF
- INV 2 AC2 - OFF
- INV 2 - OFF
- INV 3 - MNA
- INV 3 AC2 - on (up)
- cb MNB BAT BUS B - open
- cb MNA BAT C - close
- BMAG MODE (3) - RATE 1
- RHC PWR DIR 1 - MNA
- AUTO RCS SEL (16) - MNA (as reqd)
- ELEC PWR - ECA
- RAD PRIM HTR - 2
- RAD FLOW CONT AUTO - 1
- Use RHC's for RCS dump, not CM PRPLNT DUMP sw

**20 MN BUS A non-transferable loads**

EPS/CRYO
- Tank 1 $H_2$ & $O_2$ htrs
- Inverter 1 pwr
- Utility outlets (pnl 15 & 16)
- Tank 1 $O_2$ vac-ion pump

ECS
- $CO_2$ PP ind, CW lt & PSM
- Prim 2 rad htr cont
- Rad flow contr 1 & auto select
- Rad isol vlv man sel
- $H_2O$ accum 1 auto & man cont
- Urine & waste $H_2O$ dump htr A
- Steam duct htr A
- Sec rad htr cont
- Sec rad in & out temp ind & PCM

RCS
- CM sys 1 htrs
- CM sys 1 fuel & oxid purge
- CM oxid interconnect
- CM fuel/He interconnect
- CM sys 1 prplnt dump (42 sec TD)
- CM sys 1 prplnt isol vlv & tb
- SM B & D He 1 & 2 isol vlv & tb
- SM B & D prim/sec prplnt isol vlv & tb
- SM B & D sec fuel press isol vlv
- SM B & D htrs
- Transfer mot sw 1

SPS
- Pitch & yaw (prim) gmbl mots
- Enable pwr sol driver 1
- He vlv 1 & tb
- Pilot vlv 1 & 2
- Prim pilot pre-vlv
- Line htrs A
- PUGS test

SCS
- FDAI 1 total attitude
- GDC (except RSI)
- BMAG 1 htr & CW temp lt (eventually lose BMAG 1 as temp decreases)
- Auto coils CM RCS 1 (if prior to CM/SM sep)
- Direct ullage yaw D3 & B4
- Auto $\Delta V$
- Auto attitude hold
- Rate 1 MTVC
- RHC pwr dir 1
  a. MNA/MNB to half of jets
  b. MNA to all jets
- RHC pwr dir 2, MNA/MNB to half of jets

LIGHTING
- RH girth shelf flood (fixed mode)
- RH couch flood (fixed mode)
- LH girth shelf flood (variable mode)
- LH couch flood (variable mode)
- LH & RH strut flood (variable mode)
- LH optical align sight
- Rendeavous lt
- Sys A tunnel lts (6 elements)

DISPLAYS & CONTROLS
- Mission elapsed timer (pnl 2)

DOCKING
- Sys A probe connector (however A & B connectors may be switched)

**21 MN BUS B non-transferable loads**

EPS/CRYO
- Tank 2 $H_2$ & $O_2$ htrs
- Inverter 2 pwr
- Utility outlet (pnl 100)
- LM power
- Tank 2 $O_2$ vac-ion pump

ECS
- $O_2$ high flow CW lt
- Prim 1 rad htr cont
- Rad flow contr 2
- Prim rad in temp ind & PCM
- $H_2O$ accum 2 auto & man cont
- Urine & waste dump htr B
- Steam duct htr B

RCS
- CM sys 2 htrs
- CM sys 2 fuel & oxid purge
- CM fuel interconnect
- CM oxid/He interconnect
- CM sys 2 prplnt dump (42 sec TD)
- CM sys 2 prplnt isol vlv & tb
- SM A & C He 1 & 2 isol vlv & tb
- SM A & C prim/sec prplnt isol vlv & tb
- SM A & C sec fuel press isol vlv
- SM A & C htrs
- Transfer mot sw 2

SPS
- Pitch & yaw (sec) gmbl motrs
- Enable pwr sol driver 2
- He vlv 2 & tb
- Pilot vlvs (3 & 4)
- Line htrs B
- Sec pilot pre-vlv

SCS
- FDAI 2 total attitude
- GDC
- BMAG 2 htr & CW temp lt (eventually lose BMAG 2 as temp decreases)
- Auto coils CM RCS 2 (if prior to CM/SM sep)
- Direct ullage pitch C3 & A4
- Auto $\Delta V$ (maybe degraded)
- Min imp increased to $\approx$42 MS
- RSI
- Ordeal
- RHC pwr dir 1, MNA/MNB to half of jets
- RHC pwr dir 2
  a. MNA/MNB to half of jets
  b. MNB to all jets

LIGHTING
- LH girth shelf flood (fixed mode)
- LH couch flood (fixed mode)
- LH & RH strut flood (fixed mode)
- RH couch flood (variable mode)
- RH girth shelf flood (variable mode)
- RH optical align sight
- Sys B tunnel lts (6 elements)
- Spotlight door initiator

DISPLAYS & CONTROLS
- Mission elapsed timer (pnl 306)

DOCKING
- Sys B probe connector (however A & B connectors may be switched)

SM-2A-2249

| SYMPTOM | PROCEDURE | REMARKS |
|---|---|---|

SSR-2 (CONT)

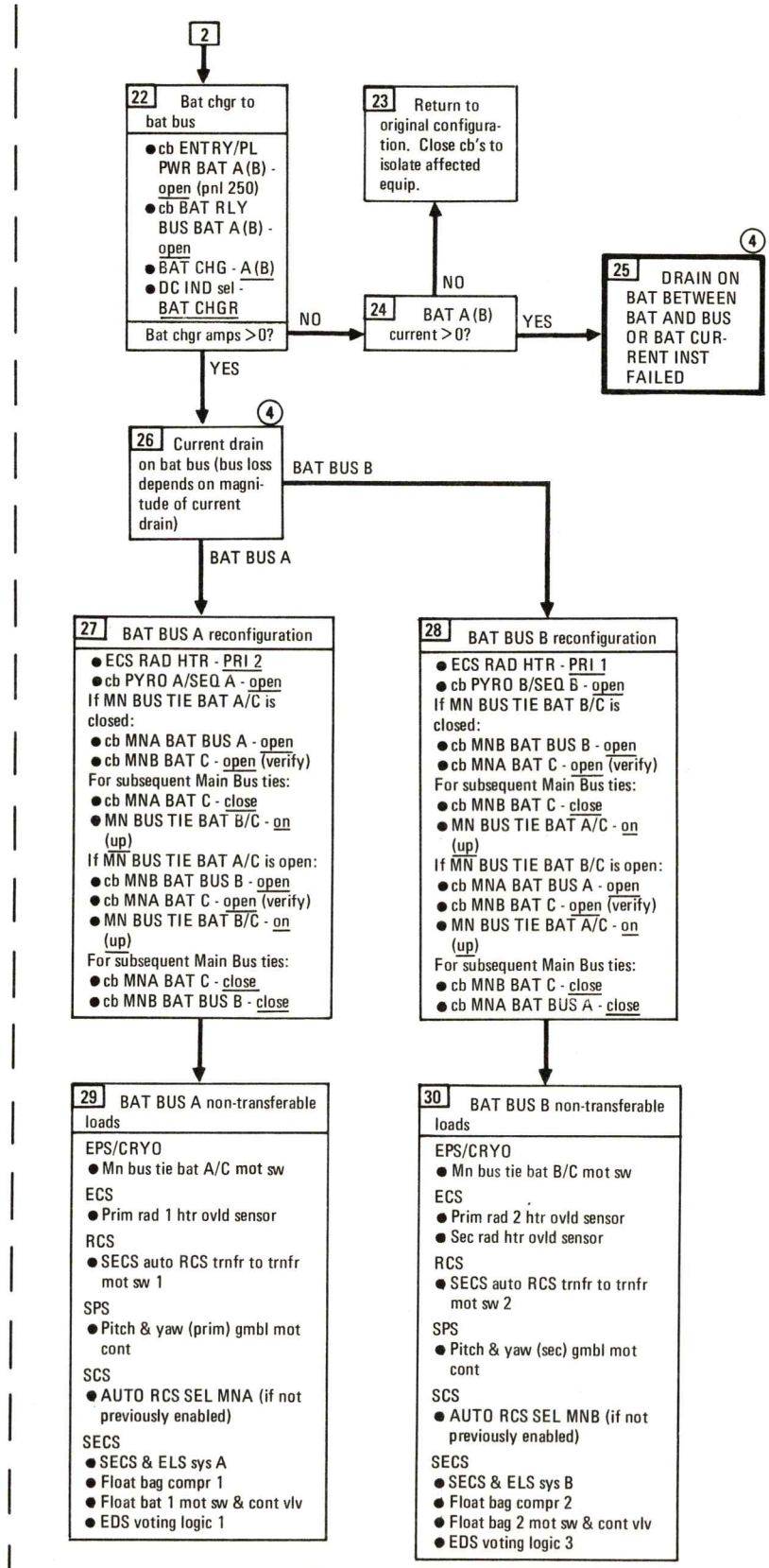


(4) If cb RAD HTRS OVLD BAT A and/or BAT B are opened to reduce battery drain, they should not be closed unless batteries are tied to main buses. This prevents possible disconnect of ECS radiator heaters by a false overload signal.

SM-2A-2250

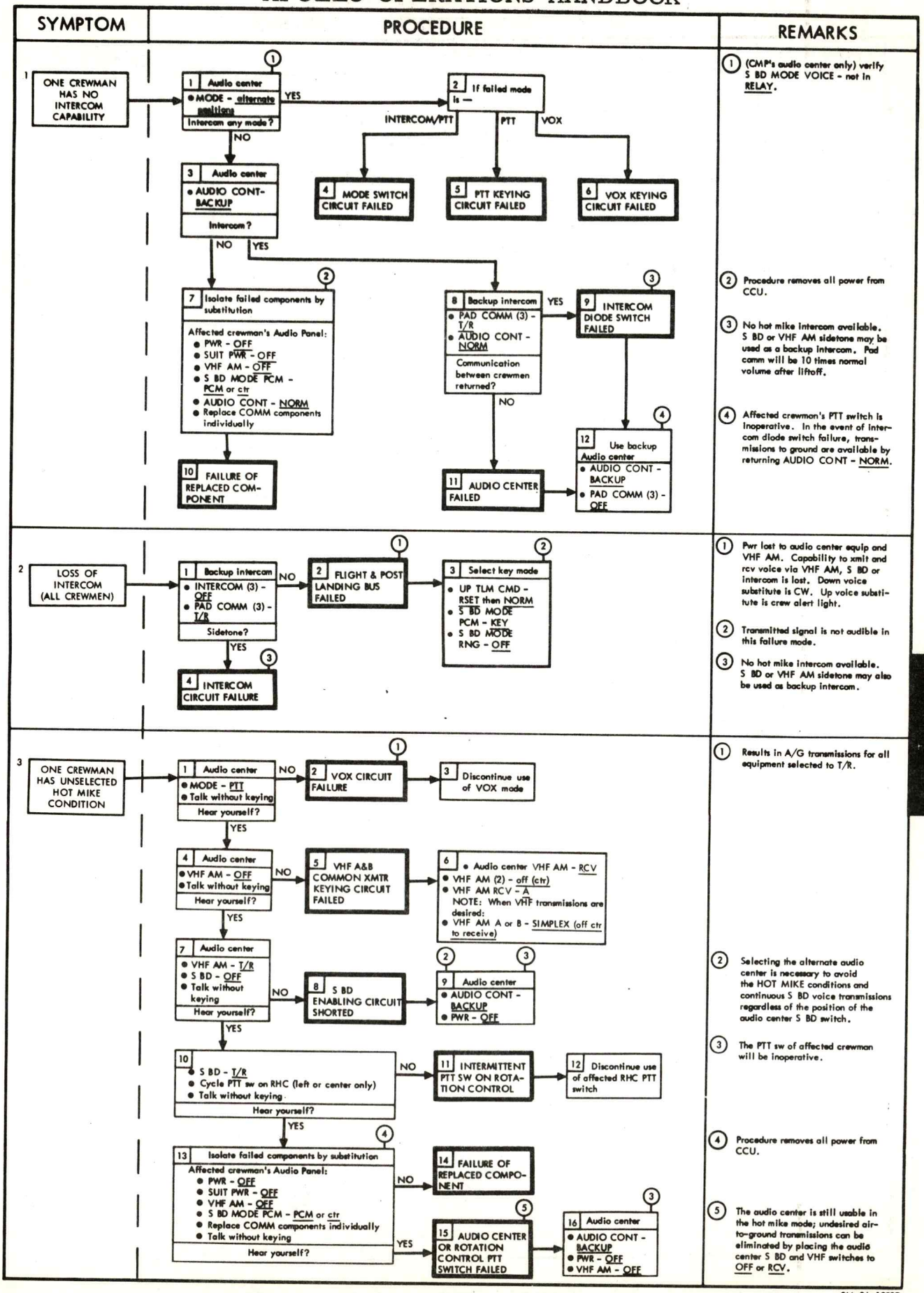
SYMPTOM
PROCEDURE
REMARKS
1 ONE CREWMAN HAS NO INTERCOM CAPABILITY
1 Audio center
• MODE - alternate positions
Intercom any mode?
YES
NO
2 If failed mode is —
INTERCOM/PTT
PTT
VOX
3 Audio center
• AUDIO CONT - BACKUP
Intercom?
NO
YES
4 MODE SWITCH CIRCUIT FAILED
5 PTT KEYING CIRCUIT FAILED
6 VOX KEYING CIRCUIT FAILED
7 Isolate failed components by substitution
Affected crewman's Audio Panel:
• PWR - OFF
• SUIT PWR - OFF
• VHF AM - OFF
• S BD MODE PCM - PCM or ctr
• AUDIO CONT - NORM
• Replace COMM components individually
8 Backup intercom
• PAD COMM (3) - T/R
• AUDIO CONT - NORM
Communication between crewmen returned?
YES
NO
9 INTERCOM DIODE SWITCH FAILED
10 FAILURE OF REPLACED COMPONENT
11 AUDIO CENTER FAILED
12 Use backup Audio center
• AUDIO CONT - BACKUP
• PAD COMM (3) - OFF
2 LOSS OF INTERCOM (ALL CREWMEN)
1 Backup intercom
• INTERCOM (3) - OFF
• PAD COMM (3) - T/R
Sidetone?
NO
YES
2 FLIGHT & POST LANDING BUS FAILED
3 Select key mode
• UP TLM CMD - RSET then NORM
• S BD MODE PCM - KEY
• S BD MODE RNG - OFF
4 INTERCOM CIRCUIT FAILURE
3 ONE CREWMAN HAS UNSELECTED HOT MIKE CONDITION
1 Audio center
• MODE - PTT
• Talk without keying
Hear yourself?
NO
YES
2 VOX CIRCUIT FAILURE
3 Discontinue use of VOX mode
4 Audio center
• VHF AM - OFF
• Talk without keying
Hear yourself?
NO
YES
5 VHF A&B COMMON XMTR KEYING CIRCUIT FAILED
6 • Audio center VHF AM - RCV
• VHF AM (2) - off (ctr)
• VHF AM RCV - A
NOTE: When VHF transmissions are desired:
• VHF AM A or B - SIMPLEX (off ctr to receive)
7 Audio center
• VHF AM - T/R
• S BD - OFF
• Talk without keying
Hear yourself?
NO
YES
8 S BD ENABLING CIRCUIT SHORTED
9 Audio center
• AUDIO CONT - BACKUP
• PWR - OFF
10
• S BD - T/R
• Cycle PTT sw on RHC (left or center only)
• Talk without keying
Hear yourself?
NO
YES
11 INTERMITTENT PTT SW ON ROTATION CONTROL
12 Discontinue use of affected RHC PTT switch
13 Isolate failed components by substitution
Affected crewman's Audio Panel:
• PWR - OFF
• SUIT PWR - OFF
• VHF AM - OFF
• S BD MODE PCM - PCM or ctr
• Replace COMM components individually
• Talk without keying
Hear yourself?
NO
YES
14 FAILURE OF REPLACED COMPONENT
15 AUDIO CENTER OR ROTATION CONTROL PTT SWITCH FAILED
16 Audio center
• AUDIO CONT - BACKUP
• PWR - OFF
• VHF AM - OFF
REMARKS
1 (CMP's audio center only) verify S BD MODE VOICE - not in RELAY.
2 Procedure removes all power from CCU.
3 No hot mike intercom available. S BD or VHF AM sidetone may be used as a backup intercom. Pad comm will be 10 times normal volume after liftoff.
4 Affected crewman's PTT switch is inoperative. In the event of intercom diode switch failure, transmissions to ground are available by returning AUDIO CONT - NORM.
1 Pwr lost to audio center equip and VHF AM. Capability to xmit and rcv voice via VHF AM, S BD or intercom is lost. Down voice substitute is CW. Up voice substitute is crew alert light.
2 Transmitted signal is not audible in this failure mode.
3 No hot mike intercom available. S BD or VHF AM sidetone may also be used as backup intercom.
1 Results in A/G transmissions for all equipment selected to T/R.
2 Selecting the alternate audio center is necessary to avoid the HOT MIKE conditions and continuous S BD voice transmissions regardless of the position of the audio center S BD switch.
3 The PTT sw of affected crewman will be inoperative.
4 Procedure removes all power from CCU.
5 The audio center is still usable in the hot mike mode; undesired air-to-ground transmissions can be eliminated by placing the audio center S BD and VHF switches to OFF or RCV.

SM-2A-1958D

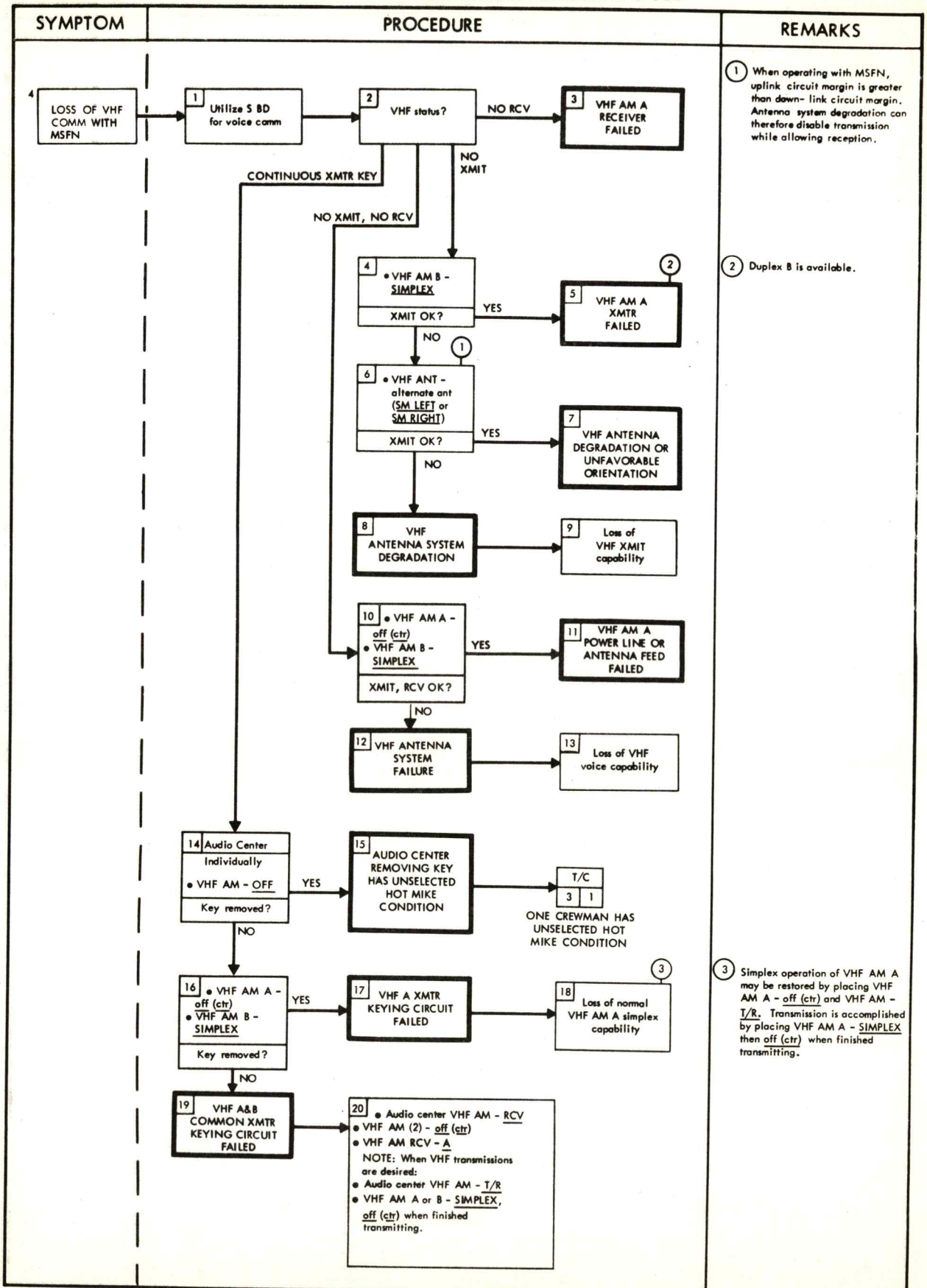
SYMPTOM
PROCEDURE
REMARKS
4 LOSS OF VHF COMM WITH MSFN
1 Utilize S BD for voice comm
2 VHF status?
NO RCV
3 VHF AM A RECEIVER FAILED
CONTINUOUS XMTR KEY
NO XMIT
NO XMIT, NO RCV
4 • VHF AM B - SIMPLEX
XMIT OK?
YES
5 VHF AM A XMTR FAILED
NO
6 • VHF ANT - alternate ant (SM LEFT or SM RIGHT)
XMIT OK?
YES
7 VHF ANTENNA DEGRADATION OR UNFAVORABLE ORIENTATION
NO
8 VHF ANTENNA SYSTEM DEGRADATION
9 Loss of VHF XMIT capability
10 • VHF AM A - off (ctr)
• VHF AM B - SIMPLEX
XMIT, RCV OK?
YES
11 VHF AM A POWER LINE OR ANTENNA FEED FAILED
NO
12 VHF ANTENNA SYSTEM FAILURE
13 Loss of VHF voice capability
14 Audio Center Individually
• VHF AM - OFF
Key removed?
YES
15 AUDIO CENTER REMOVING KEY HAS UNSELECTED HOT MIKE CONDITION
T/C 3 1
ONE CREWMAN HAS UNSELECTED HOT MIKE CONDITION
NO
16 • VHF AM A - off (ctr)
• VHF AM B - SIMPLEX
Key removed?
YES
17 VHF A XMTR KEYING CIRCUIT FAILED
18 Loss of normal VHF AM A simplex capability
NO
19 VHF A&B COMMON XMTR KEYING CIRCUIT FAILED
20 • Audio center VHF AM - RCV
• VHF AM (2) - off (ctr)
• VHF AM RCV - A
NOTE: When VHF transmissions are desired:
• Audio center VHF AM - T/R
• VHF AM A or B - SIMPLEX, off (ctr) when finished transmitting.
1 When operating with MSFN, uplink circuit margin is greater than down-link circuit margin. Antenna system degradation can therefore disable transmission while allowing reception.
2 Duplex B is available.
3 Simplex operation of VHF AM A may be restored by placing VHF AM A - off (ctr) and VHF AM - T/R. Transmission is accomplished by placing VHF AM A - SIMPLEX then off (ctr) when finished transmitting.

SM-2A-1959E

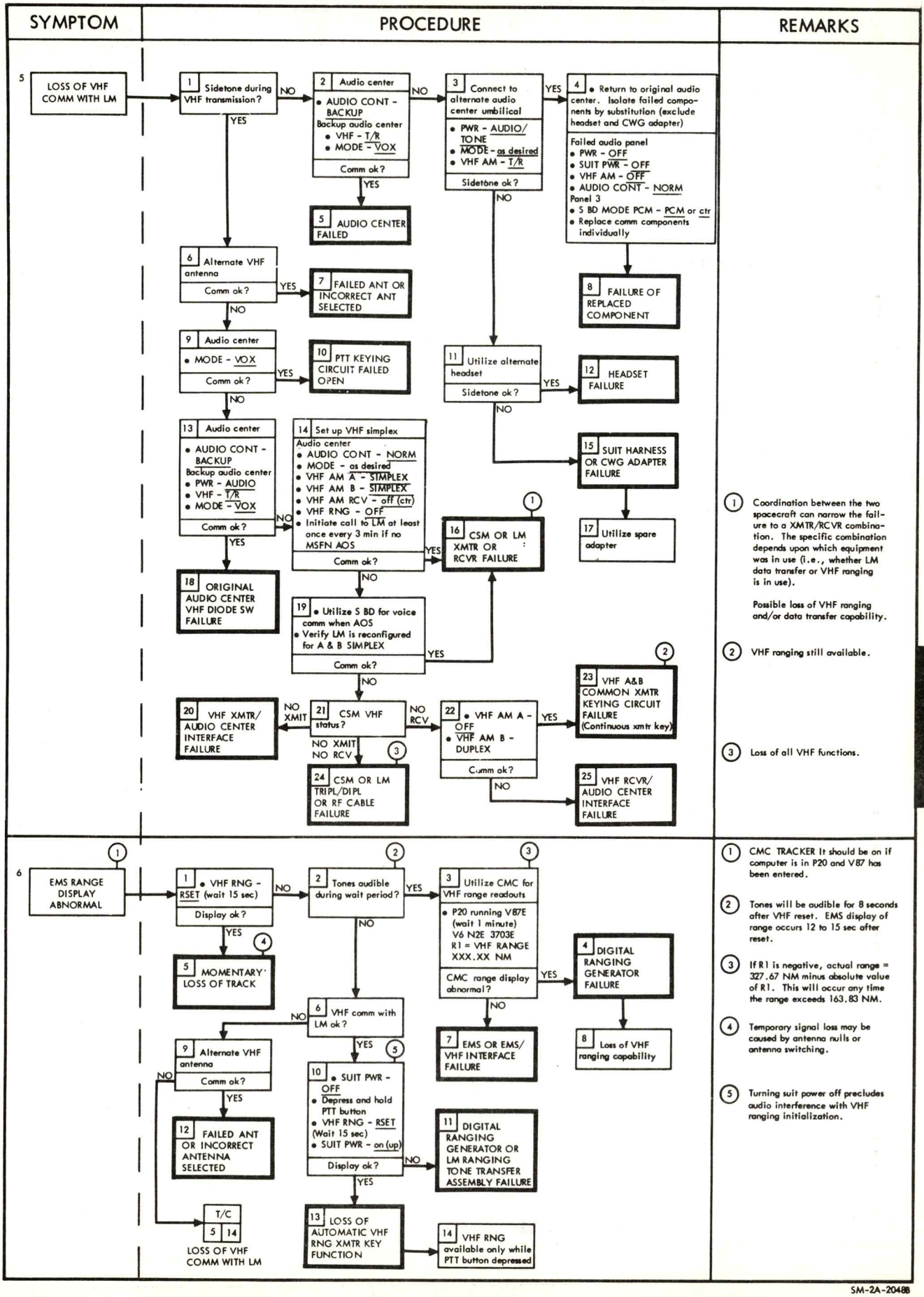
SYMPTOM
PROCEDURE
REMARKS
5
LOSS OF VHF COMM WITH LM
1 Sidetone during VHF transmission?
NO
YES
2 Audio center
• AUDIO CONT - BACKUP
Backup audio center
• VHF - T/R
• MODE - VOX
Comm ok?
NO
YES
5 AUDIO CENTER FAILED
3 Connect to alternate audio center umbilical
• PWR - AUDIO/TONE
• MODE - as desired
• VHF AM - T/R
Sidetone ok?
YES
NO
4 • Return to original audio center. Isolate failed components by substitution (exclude headset and CWG adapter)
Failed audio panel
• PWR - OFF
• SUIT PWR - OFF
• VHF AM - OFF
• AUDIO CONT - NORM
Panel 3
• S BD MODE PCM - PCM or ctr
• Replace comm components individually
8 FAILURE OF REPLACED COMPONENT
6 Alternate VHF antenna
Comm ok?
YES
NO
7 FAILED ANT OR INCORRECT ANT SELECTED
9 Audio center
• MODE - VOX
Comm ok?
YES
NO
10 PTT KEYING CIRCUIT FAILED OPEN
11 Utilize alternate headset
Sidetone ok?
YES
NO
12 HEADSET FAILURE
13 Audio center
• AUDIO CONT - BACKUP
Backup audio center
• PWR - AUDIO
• VHF - T/R
• MODE - VOX
Comm ok?
NO
YES
14 Set up VHF simplex
Audio center
• AUDIO CONT - NORM
• MODE - as desired
• VHF AM A - SIMPLEX
• VHF AM B - SIMPLEX
• VHF AM RCV - off (ctr)
• VHF RNG - OFF
• Initiate call to LM at least once every 3 min if no MSFN AOS
Comm ok?
YES
NO
1
16 CSM OR LM XMTR OR RCVR FAILURE
15 SUIT HARNESS OR CWG ADAPTER FAILURE
17 Utilize spare adapter
18 ORIGINAL AUDIO CENTER VHF DIODE SW FAILURE
19 • Utilize S BD for voice comm when AOS
• Verify LM is reconfigured for A & B SIMPLEX
Comm ok?
YES
NO
2
23 VHF A&B COMMON XMTR KEYING CIRCUIT FAILURE (Continuous xmtr key)
20 VHF XMTR/AUDIO CENTER INTERFACE FAILURE
NO XMIT
21 CSM VHF status?
NO RCV
NO XMIT
NO RCV
3
22 • VHF AM A - OFF
• VHF AM B - DUPLEX
Comm ok?
YES
NO
24 CSM OR LM TRIPL/DIPL OR RF CABLE FAILURE
25 VHF RCVR/AUDIO CENTER INTERFACE FAILURE
1 Coordination between the two spacecraft can narrow the failure to a XMTR/RCVR combination. The specific combination depends upon which equipment was in use (i.e., whether LM data transfer or VHF ranging is in use).
Possible loss of VHF ranging and/or data transfer capability.
2 VHF ranging still available.
3 Loss of all VHF functions.
6
1
EMS RANGE DISPLAY ABNORMAL
1 • VHF RNG - RSET (wait 15 sec)
Display ok?
NO
YES
2
2 Tones audible during wait period?
YES
NO
3
3 Utilize CMC for VHF range readouts
• P20 running V87E (wait 1 minute) V6 N2E 3703E R1 = VHF RANGE XXX.XX NM
CMC range display abnormal?
YES
NO
4 DIGITAL RANGING GENERATOR FAILURE
7 EMS OR EMS/VHF INTERFACE FAILURE
8 Loss of VHF ranging capability
4
5 MOMENTARY LOSS OF TRACK
6 VHF comm with LM ok?
NO
YES
5
9 Alternate VHF antenna
Comm ok?
NO
YES
10 • SUIT PWR - OFF
• Depress and hold PTT button
• VHF RNG - RSET (Wait 15 sec)
• SUIT PWR - on (up)
Display ok?
NO
YES
11 DIGITAL RANGING GENERATOR OR LM RANGING TONE TRANSFER ASSEMBLY FAILURE
12 FAILED ANT OR INCORRECT ANTENNA SELECTED
T/C 5 14
LOSS OF VHF COMM WITH LM
13 LOSS OF AUTOMATIC VHF RNG XMTR KEY FUNCTION
14 VHF RNG available only while PTT button depressed
1 CMC TRACKER It should be on if computer is in P20 and V87 has been entered.
2 Tones will be audible for 8 seconds after VHF reset. EMS display of range occurs 12 to 15 sec after reset.
3 If R1 is negative, actual range = 327.67 NM minus absolute value of R1. This will occur any time the range exceeds 163.83 NM.
4 Temporary signal loss may be caused by antenna nulls or antenna switching.
5 Turning suit power off precludes audio interference with VHF ranging initialization.

SM-2A-2048B

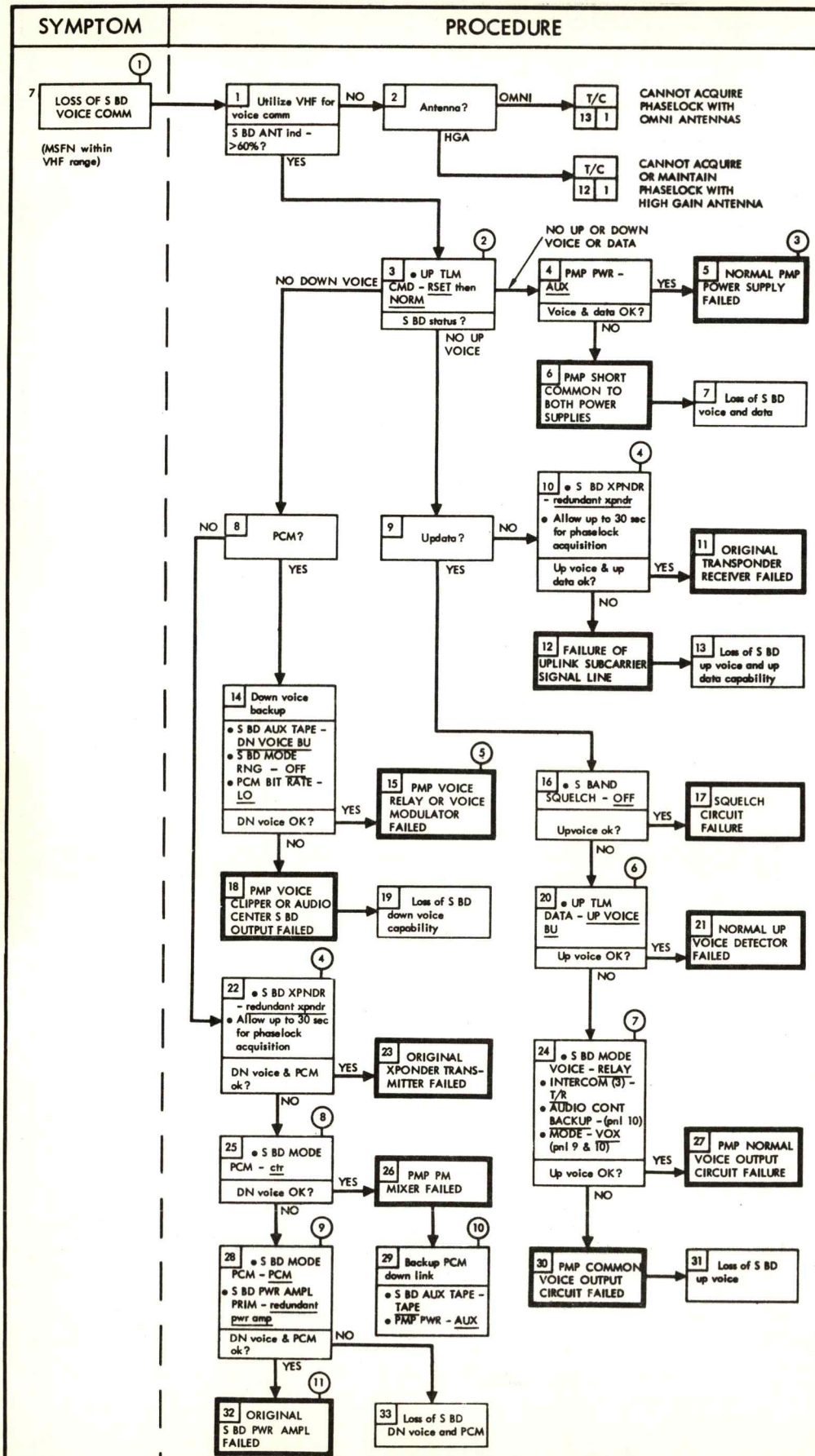
SYMPTOM
PROCEDURE
REMARKS
7 LOSS OF S BD VOICE COMM
(MSFN within VHF range)
1 Utilize VHF for voice comm
S BD ANT ind - >60%?
NO
YES
2 Antenna?
OMNI
HGA
T/C 13 1
CANNOT ACQUIRE PHASELOCK WITH OMNI ANTENNAS
T/C 12 1
CANNOT ACQUIRE OR MAINTAIN PHASELOCK WITH HIGH GAIN ANTENNA
NO UP OR DOWN VOICE OR DATA
NO DOWN VOICE
3 • UP TLM CMD - RSET then NORM
S BD status?
NO UP VOICE
4 PMP PWR - AUX
Voice & data OK?
YES
NO
5 NORMAL PMP POWER SUPPLY FAILED
6 PMP SHORT COMMON TO BOTH POWER SUPPLIES
7 Loss of S BD voice and data
8 PCM?
9 Updata?
NO
YES
10 • S BD XPNDR - redundant xpndr
• Allow up to 30 sec for phaselock acquisition
Up voice & up data ok?
11 ORIGINAL TRANSPONDER RECEIVER FAILED
12 FAILURE OF UPLINK SUBCARRIER SIGNAL LINE
13 Loss of S BD up voice and up data capability
14 Down voice backup
• S BD AUX TAPE - DN VOICE BU
• S BD MODE RNG - OFF
• PCM BIT RATE - LO
DN voice OK?
15 PMP VOICE RELAY OR VOICE MODULATOR FAILED
16 • S BAND SQUELCH - OFF
Upvoice ok?
17 SQUELCH CIRCUIT FAILURE
18 PMP VOICE CLIPPER OR AUDIO CENTER S BD OUTPUT FAILED
19 Loss of S BD down voice capability
20 • UP TLM DATA - UP VOICE BU
Up voice OK?
21 NORMAL UP VOICE DETECTOR FAILED
22 • S BD XPNDR - redundant xpndr
• Allow up to 30 sec for phaselock acquisition
DN voice & PCM ok?
23 ORIGINAL XPONDER TRANSMITTER FAILED
24 • S BD MODE VOICE - RELAY
• INTERCOM (3) - T/R
• AUDIO CONT BACKUP - (pnl 10)
• MODE - VOX (pnl 9 & 10)
Up voice OK?
27 PMP NORMAL VOICE OUTPUT CIRCUIT FAILURE
25 • S BD MODE PCM - ctr
DN voice OK?
26 PMP PM MIXER FAILED
28 • S BD MODE PCM - PCM
• S BD PWR AMPL PRIM - redundant pwr amp
DN voice & PCM ok?
29 Backup PCM down link
• S BD AUX TAPE - TAPE
• PMP PWR - AUX
30 PMP COMMON VOICE OUTPUT CIRCUIT FAILED
31 Loss of S BD up voice
32 ORIGINAL S BD PWR AMPL FAILED
33 Loss of S BD DN voice and PCM
(1) Loss or near loss of upvoice is indicated by S BD ant ind <60% (approx), and noise in headset if S BD SQUELCH - OFF. Loss of normal downvoice should be anticipated if S BD ant ind 80% (approx).
(2) Notify MSFN of UP TLM reset action.
(3) The capability is lost to transmit recorded PCM.
(4) When S BD XPNDR - redundant xpndr, hesitate momentarily in OFF.
(5) Loss of capability of simultaneous transmission of down voice and HBR PCM.
(6) Notify MSFN to transmit voice on the up data subcarrier. Backup up voice and up data transmission must be time shared. Action will result in 1-2 KHz tone in headset until MSFN configures for up voice backup.
(7) CMP PTT switch will be inoperative. S BD reception will be via intercom bus.
(8) Provides an alternate voice circuit, but no PCM capability.
(9) The power amplifier requires a 90 sec warmup period.
(10) S BD AUX TAPE - TAPE activates the FM transmitter and the alternate power amplifier which requires a 90 sec warmup period. It is crew option to transmit real time PCM, recorded data, or TV via the FM transmitter.
(11) With one of the power amplifiers failed the capability is lost to transmit FM (recorded data or TV) simultaneously with PM transmission of real time PCM and voice.

SM-2A-1471H

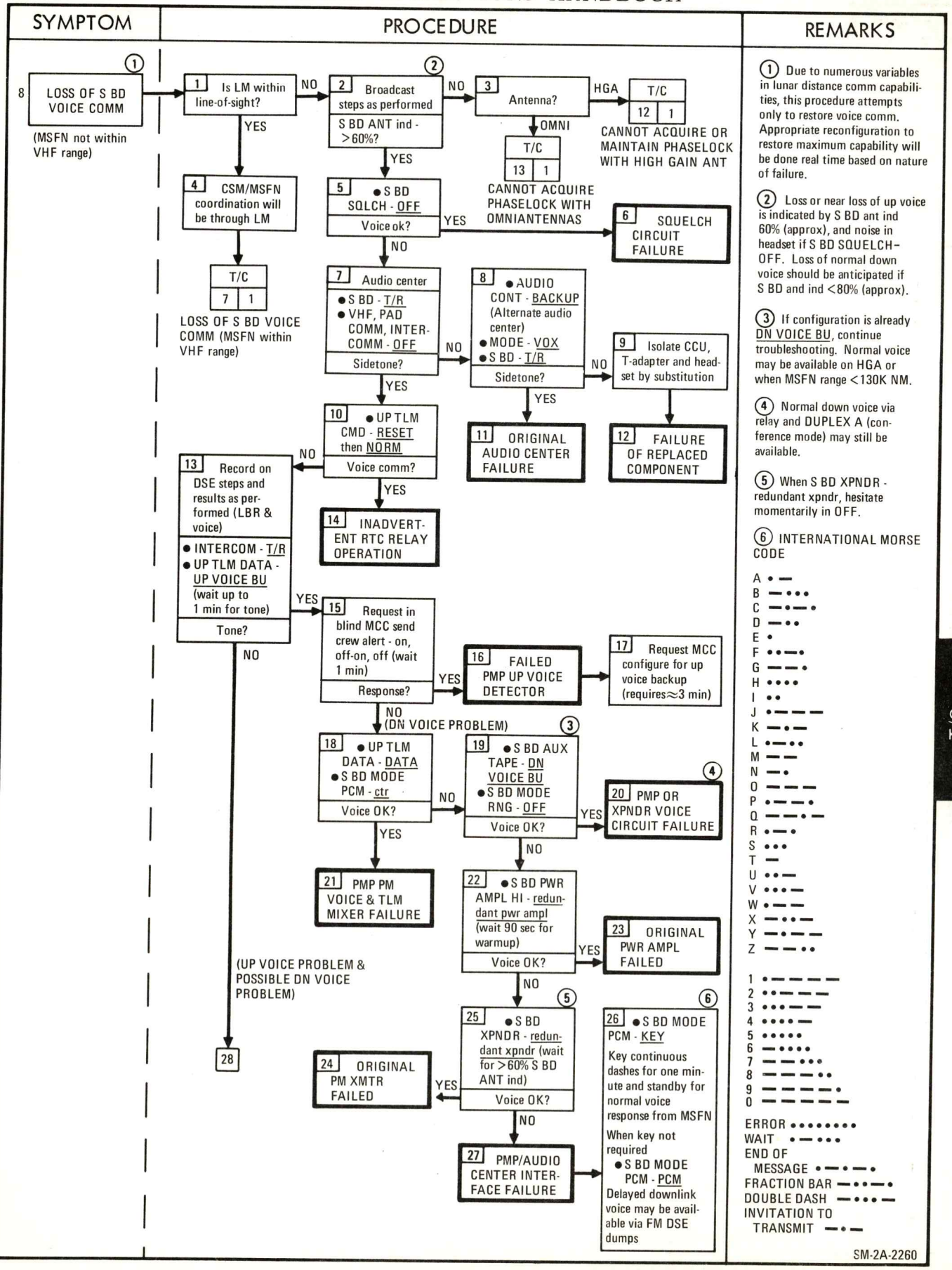
SYMPTOM
PROCEDURE
REMARKS
8 LOSS OF S BD VOICE COMM
(MSFN not within VHF range)
1 Is LM within line-of-sight?
NO
YES
2 Broadcast steps as performed
S BD ANT ind - >60%?
NO
YES
3 Antenna?
HGA
T/C 12 1
CANNOT ACQUIRE OR MAINTAIN PHASELOCK WITH HIGH GAIN ANT
OMNI
T/C 13 1
CANNOT ACQUIRE PHASELOCK WITH OMNIANTENNAS
4 CSM/MSFN coordination will be through LM
T/C 7 1
LOSS OF S BD VOICE COMM (MSFN within VHF range)
5 ● S BD SQLCH - OFF
Voice ok?
YES
6 SQUELCH CIRCUIT FAILURE
NO
7 Audio center
● S BD - T/R
● VHF, PAD COMM, INTERCOMM - OFF
Sidetone?
NO
8 ● AUDIO CONT - BACKUP (Alternate audio center)
● MODE - VOX
● S BD - T/R
Sidetone?
NO
9 Isolate CCU, T-adapter and headset by substitution
YES
11 ORIGINAL AUDIO CENTER FAILURE
12 FAILURE OF REPLACED COMPONENT
YES
10 ● UP TLM CMD - RESET then NORM
Voice comm?
NO
YES
13 Record on DSE steps and results as performed (LBR & voice)
● INTERCOM - T/R
● UP TLM DATA - UP VOICE BU (wait up to 1 min for tone)
Tone?
YES
NO
14 INADVERTENT RTC RELAY OPERATION
15 Request in blind MCC send crew alert - on, off-on, off (wait 1 min)
Response?
YES
16 FAILED PMP UP VOICE DETECTOR
17 Request MCC configure for up voice backup (requires≈3 min)
NO (DN VOICE PROBLEM)
(UP VOICE PROBLEM & POSSIBLE DN VOICE PROBLEM)
18 ● UP TLM DATA - DATA
● S BD MODE PCM - ctr
Voice OK?
NO
YES
19 ● S BD AUX TAPE - DN VOICE BU
● S BD MODE RNG - OFF
Voice OK?
YES
20 PMP OR XPNDR VOICE CIRCUIT FAILURE
NO
21 PMP PM VOICE & TLM MIXER FAILURE
22 ● S BD PWR AMPL HI - redundant pwr ampl (wait 90 sec for warmup)
Voice OK?
YES
23 ORIGINAL PWR AMPL FAILED
NO
25 ● S BD XPNDR - redundant xpndr (wait for >60% S BD ANT ind)
Voice OK?
YES
24 ORIGINAL PM XMTR FAILED
NO
26 ● S BD MODE PCM - KEY
Key continuous dashes for one minute and standby for normal voice response from MSFN
When key not required
● S BD MODE PCM - PCM
Delayed downlink voice may be available via FM DSE dumps
27 PMP/AUDIO CENTER INTERFACE FAILURE
28
1 Due to numerous variables in lunar distance comm capabilities, this procedure attempts only to restore voice comm. Appropriate reconfiguration to restore maximum capability will be done real time based on nature of failure.
2 Loss or near loss of up voice is indicated by S BD ant ind 60% (approx), and noise in headset if S BD SQUELCH-OFF. Loss of normal down voice should be anticipated if S BD and ind <80% (approx).
3 If configuration is already DN VOICE BU, continue troubleshooting. Normal voice may be available on HGA or when MSFN range <130K NM.
4 Normal down voice via relay and DUPLEX A (conference mode) may still be available.
5 When S BD XPNDR - redundant xpndr, hesitate momentarily in OFF.
6 INTERNATIONAL MORSE CODE
A • —
B — • • •
C — • — •
D — • •
E •
F • • — •
G — — •
H • • • •
I • •
J • — — —
K — • —
L • — • •
M — —
N — •
O — — —
P • — — •
Q — — • —
R • — •
S • • •
T —
U • • —
V • • • —
W • — —
X — • • —
Y — • — —
Z — — • •
1 • — — — —
2 • • — — —
3 • • • — —
4 • • • • —
5 • • • • •
6 — • • • •
7 — — • • •
8 — — — • •
9 — — — — •
0 — — — — —
ERROR • • • • • • • •
WAIT • — • • •
END OF MESSAGE • — • — •
FRACTION BAR — • • — •
DOUBLE DASH — • • • —
INVITATION TO TRANSMIT — • —
SM-2A-2260

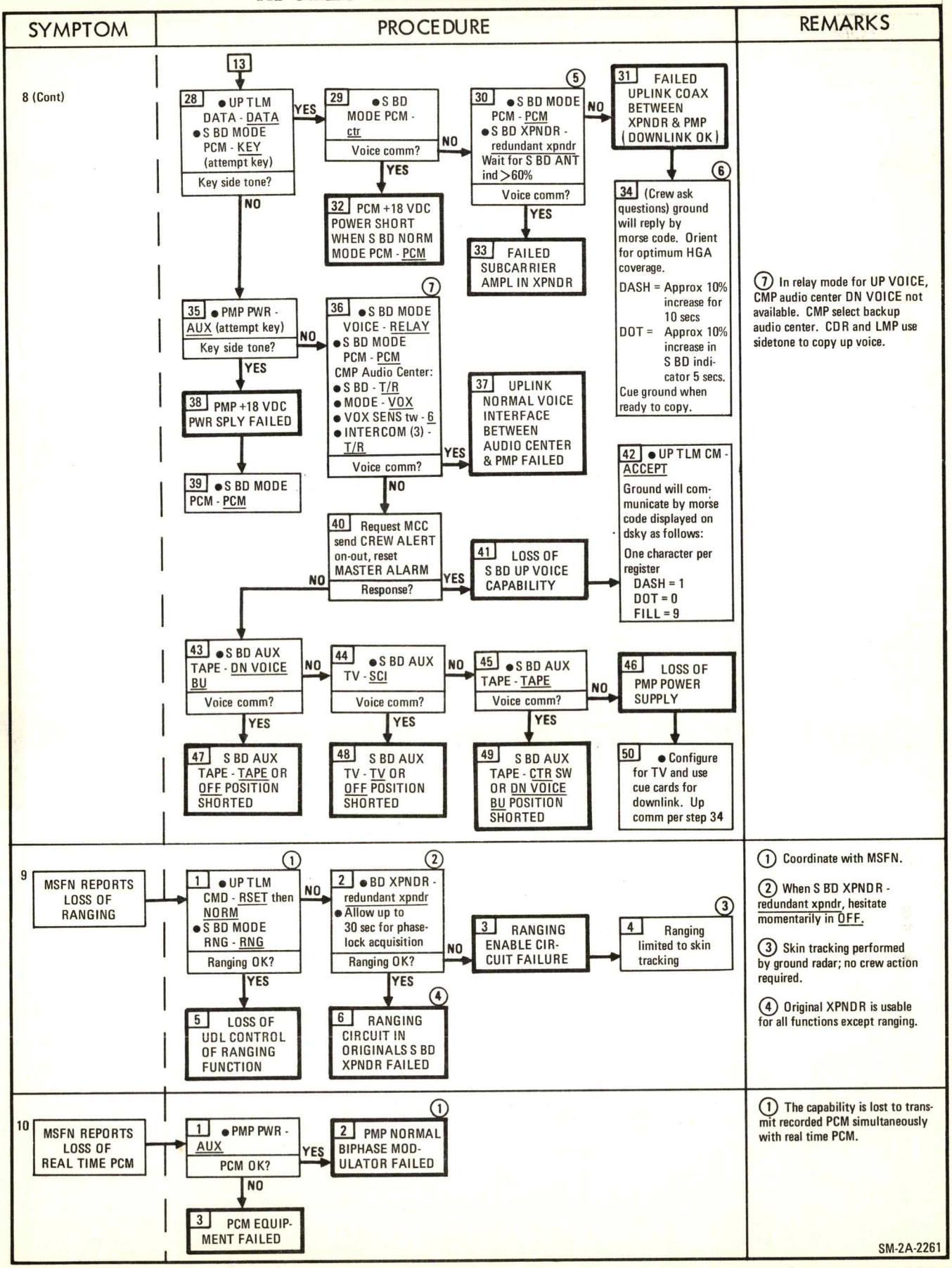
SYMPTOM
PROCEDURE
REMARKS
8 (Cont)
13
28 ● UP TLM DATA - DATA ● S BD MODE PCM - KEY (attempt key)
Key side tone?
YES
29 ● S BD MODE PCM - ctr
Voice comm?
NO
YES
30 ● S BD MODE PCM - PCM ● S BD XPNDR - redundant xpndr Wait for S BD ANT ind >60%
Voice comm?
NO
YES
5
31 FAILED UPLINK COAX BETWEEN XPNDR & PMP (DOWNLINK OK)
6
34 (Crew ask questions) ground will reply by morse code. Orient for optimum HGA coverage.
DASH = Approx 10% increase for 10 secs
DOT = Approx 10% increase in S BD indicator 5 secs.
Cue ground when ready to copy.
32 PCM +18 VDC POWER SHORT WHEN S BD NORM MODE PCM - PCM
33 FAILED SUBCARRIER AMPL IN XPNDR
NO
35 ● PMP PWR - AUX (attempt key)
Key side tone?
NO
YES
38 PMP +18 VDC PWR SPLY FAILED
39 ● S BD MODE PCM - PCM
7
36 ● S BD MODE VOICE - RELAY ● S BD MODE PCM - PCM CMP Audio Center: ● S BD - T/R ● MODE - VOX ● VOX SENS tw - 6 ● INTERCOM (3) - T/R
Voice comm?
YES
NO
37 UPLINK NORMAL VOICE INTERFACE BETWEEN AUDIO CENTER & PMP FAILED
40 Request MCC send CREW ALERT on-out, reset MASTER ALARM
Response?
NO
YES
41 LOSS OF S BD UP VOICE CAPABILITY
42 ● UP TLM CM - ACCEPT
Ground will communicate by morse code displayed on dsky as follows:
One character per register
DASH = 1
DOT = 0
FILL = 9
43 ● S BD AUX TAPE - DN VOICE BU
Voice comm?
NO
YES
44 ● S BD AUX TV - SCI
Voice comm?
NO
YES
45 ● S BD AUX TAPE - TAPE
Voice comm?
NO
YES
46 LOSS OF PMP POWER SUPPLY
47 S BD AUX TAPE - TAPE OR OFF POSITION SHORTED
48 S BD AUX TV - TV OR OFF POSITION SHORTED
49 S BD AUX TAPE - CTR SW OR DN VOICE BU POSITION SHORTED
50 ● Configure for TV and use cue cards for downlink. Up comm per step 34
7 In relay mode for UP VOICE, CMP audio center DN VOICE not available. CMP select backup audio center. CDR and LMP use sidetone to copy up voice.
9
MSFN REPORTS LOSS OF RANGING
1
1 ● UP TLM CMD - RSET then NORM ● S BD MODE RNG - RNG
Ranging OK?
NO
YES
2
2 ● BD XPNDR - redundant xpndr ● Allow up to 30 sec for phase-lock acquisition
Ranging OK?
NO
YES
4
3 RANGING ENABLE CIRCUIT FAILURE
3
4 Ranging limited to skin tracking
5 LOSS OF UDL CONTROL OF RANGING FUNCTION
6 RANGING CIRCUIT IN ORIGINALS S BD XPNDR FAILED
1 Coordinate with MSFN.
2 When S BD XPNDR - redundant xpndr, hesitate momentarily in OFF.
3 Skin tracking performed by ground radar; no crew action required.
4 Original XPNDR is usable for all functions except ranging.
10
MSFN REPORTS LOSS OF REAL TIME PCM
1 ● PMP PWR - AUX
PCM OK?
YES
NO
1
2 PMP NORMAL BIPHASE MODULATOR FAILED
3 PCM EQUIPMENT FAILED
1 The capability is lost to transmit recorded PCM simultaneously with real time PCM.
SM-2A-2261

| SYMPTOM | PROCEDURE | REMARKS |
|---|---|---|

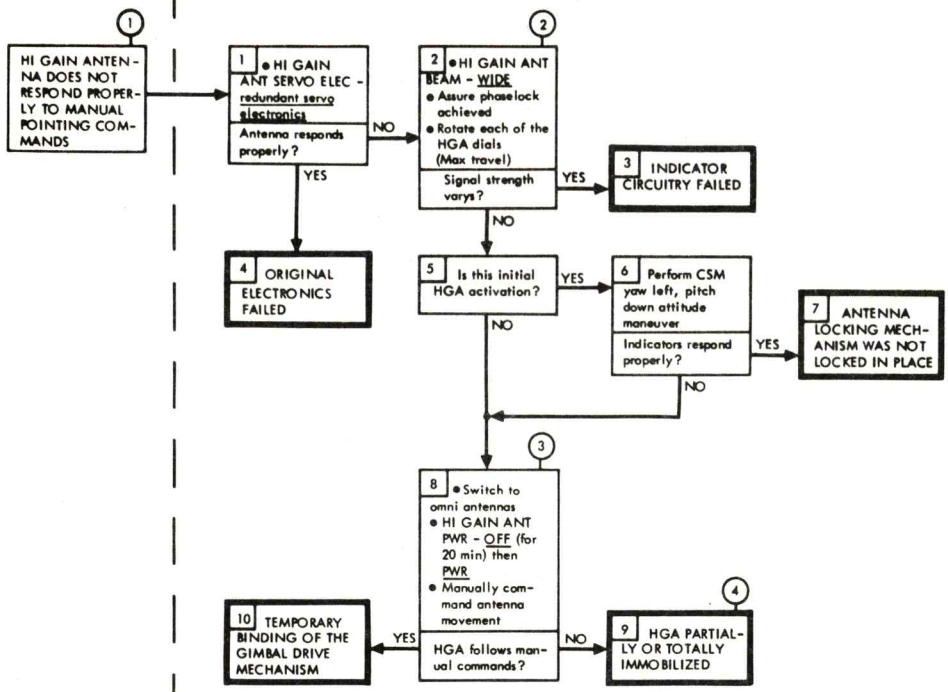


(1) Assumes that MANUAL MODE has been selected and that both HGA command dials have been rotated back and forth ≈30° several times.

(2) If antenna pointing is incorrect, phaselock can still be achieved but with a reduced signal strength.

(3) If HGA usage mandatory orient CSM with HGA pointed toward earth; HI GAIN ANT BEAM - NARROW. Rotate HGA pitch and yaw command dials to correspond to meter readings.

(4) Indicators will display actual antenna position. If look angle is outside shadow area HGA may be utilized when CSM attitude permits.

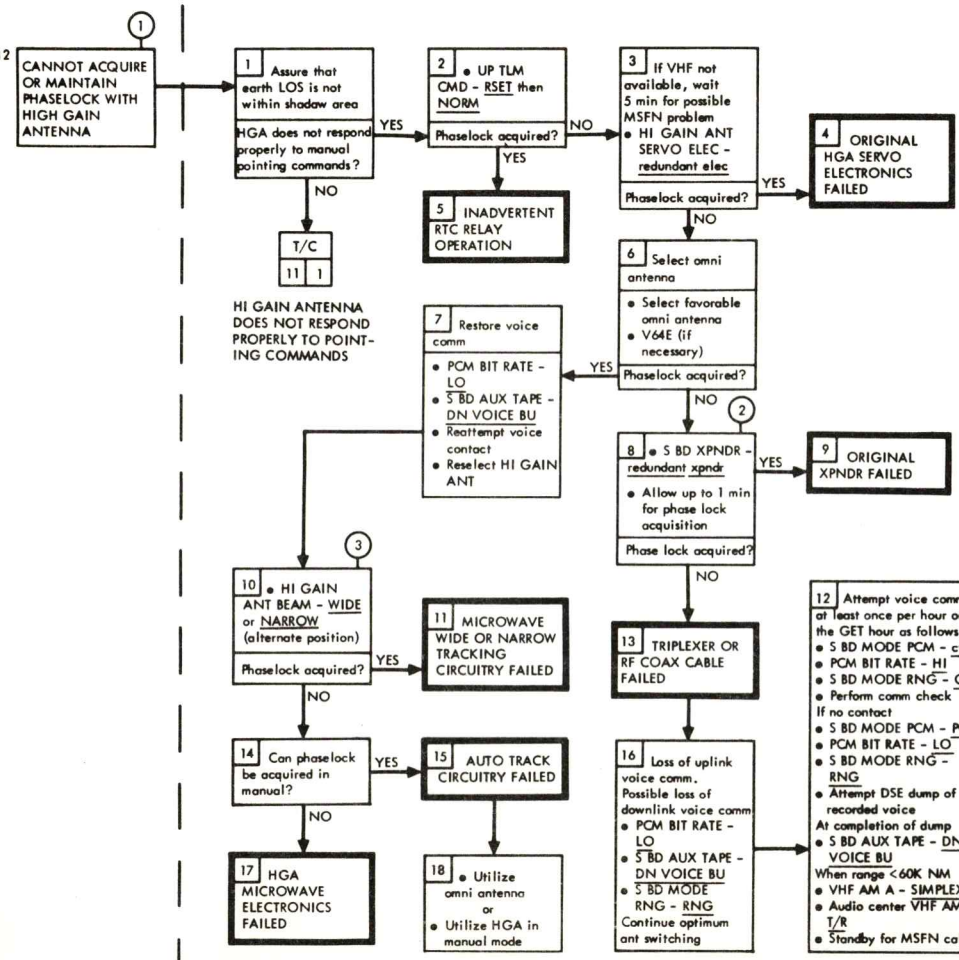


(1) Loss of uplink phaselock is indicated by noise in headset and S-BD antenna ind <30%.

(2) When SBD XPNDR-redundant xpndr, hesitate momentarily in OFF.

(3) If in medium select wide.

SM-2A-1903H

| SYMPTOM | PROCEDURE | REMARKS |
|---|---|---|

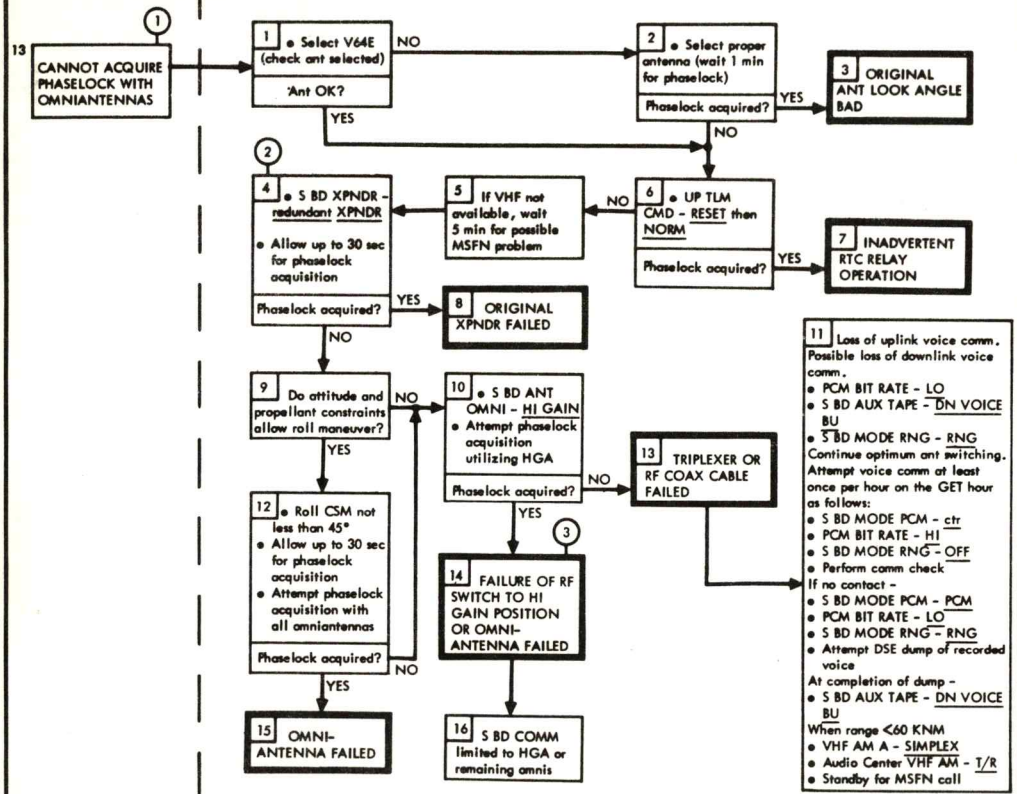


(1) Loss of uplink phaselock is indicated by noise in headset and S BD antenna ind<30%.

(2) When SBD XPNDR-redundant xpndr, hesitate momentarily in OFF.

(3) Performing roll maneuver eliminates omniantenna as failure.

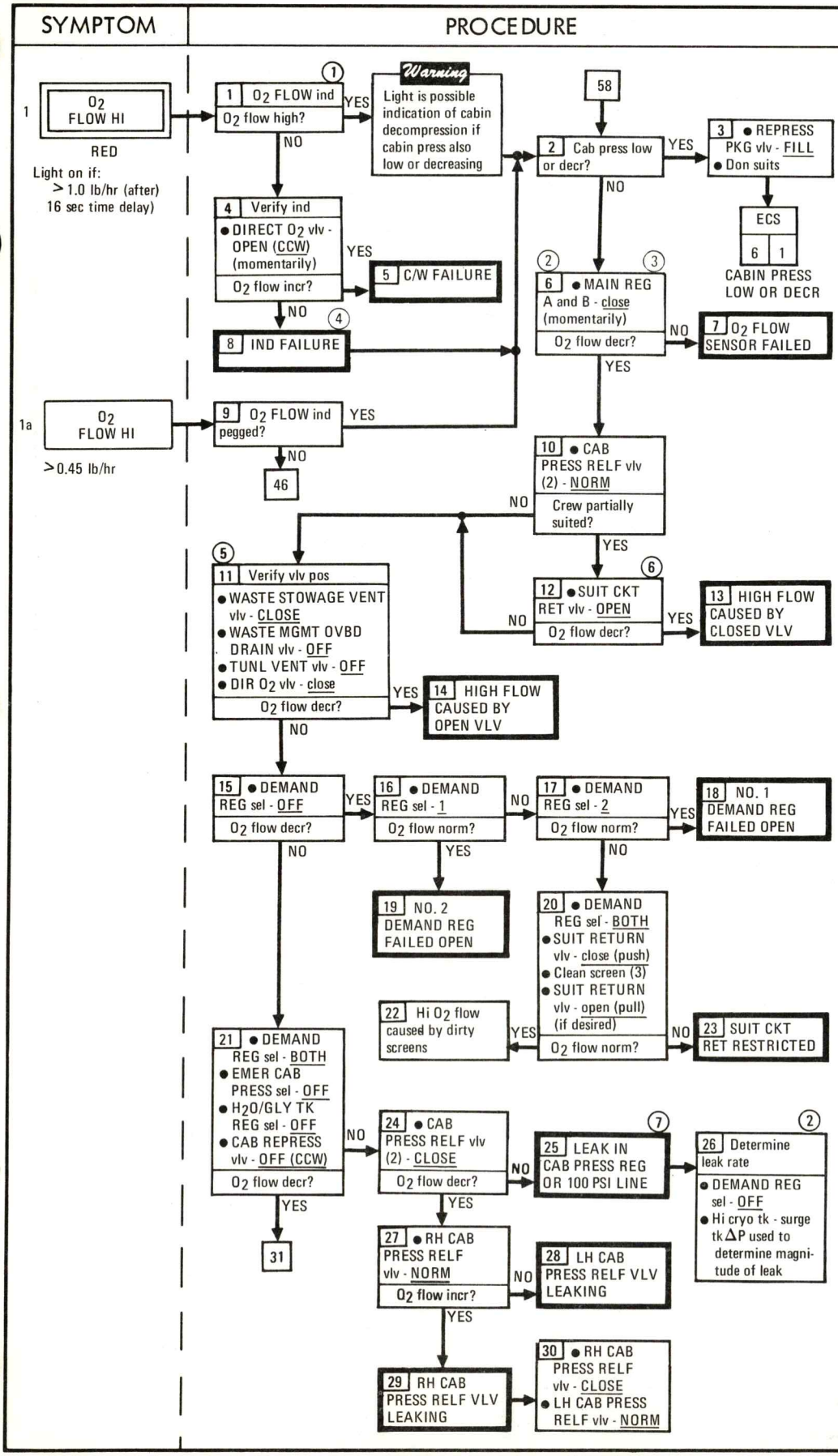
SYMPTOM
PROCEDURE
REMARKS
1 O2 FLOW HI
RED
Light on if:
> 1.0 lb/hr (after) 16 sec time delay)
1a O2 FLOW HI
>0.45 lb/hr
1 O2 FLOW ind
O2 flow high?
YES
NO
Warning
Light is possible indication of cabin decompression if cabin press also low or decreasing
4 Verify ind
• DIRECT O2 vlv - OPEN (CCW) (momentarily)
O2 flow incr?
YES
5 C/W FAILURE
NO
8 IND FAILURE
9 O2 FLOW ind pegged?
YES
NO
46
58
2 Cab press low or decr?
YES
NO
3 • REPRESS PKG vlv - FILL
• Don suits
ECS
6 1
CABIN PRESS LOW OR DECR
6 • MAIN REG A and B - close (momentarily)
O2 flow decr?
NO
7 O2 FLOW SENSOR FAILED
YES
10 • CAB PRESS RELF vlv (2) - NORM
Crew partially suited?
NO
YES
11 Verify vlv pos
• WASTE STOWAGE VENT vlv - CLOSE
• WASTE MGMT OVBD DRAIN vlv - OFF
• TUNL VENT vlv - OFF
• DIR O2 vlv - close
O2 flow decr?
YES
14 HIGH FLOW CAUSED BY OPEN VLV
NO
12 • SUIT CKT RET vlv - OPEN
O2 flow decr?
NO
YES
13 HIGH FLOW CAUSED BY CLOSED VLV
15 • DEMAND REG sel - OFF
O2 flow decr?
YES
NO
16 • DEMAND REG sel - 1
O2 flow norm?
YES
NO
19 NO. 2 DEMAND REG FAILED OPEN
17 • DEMAND REG sel - 2
O2 flow norm?
YES
NO
18 NO. 1 DEMAND REG FAILED OPEN
20 • DEMAND REG sel - BOTH
• SUIT RETURN vlv - close (push)
• Clean screen (3)
• SUIT RETURN vlv - open (pull) (if desired)
O2 flow norm?
YES
NO
22 Hi O2 flow caused by dirty screens
23 SUIT CKT RET RESTRICTED
21 • DEMAND REG sel - BOTH
• EMER CAB PRESS sel - OFF
• H2O/GLY TK REG sel - OFF
• CAB REPRESS vlv - OFF (CCW)
O2 flow decr?
NO
YES
24 • CAB PRESS RELF vlv (2) - CLOSE
O2 flow decr?
NO
YES
25 LEAK IN CAB PRESS REG OR 100 PSI LINE
26 Determine leak rate
• DEMAND REG sel - OFF
• Hi cryo tk - surge tk ΔP used to determine magnitude of leak
31
27 • RH CAB PRESS RELF vlv - NORM
O2 flow incr?
NO
YES
28 LH CAB PRESS RELF VLV LEAKING
29 RH CAB PRESS RELF VLV LEAKING
30 • RH CAB PRESS RELF vlv - CLOSE
• LH CAB PRESS RELF vlv - NORM
1 Normal range 0.25 to 0.45 lb/hr.
2 A surge tank - cryo tank ΔP of 50 psi will verify a high O2 flow. Typical HI CRYO TK-SURGE TK ΔP:
50 psi ≈ 1.0 lb/hr
100 psi ≈ 2.5 lb/hr
150 psi ≈ 3.5 lb/hr
400 psi ≈ 5.5 lb/hr
3 Placing the MAIN REG A & B - closed and noting a decrease in O2 flow will validate the sensor indication.
4 Continue with O2 Flow Hi procedure and use C/W lt and surge tank bleed down as indication of O2 flow.
5 This action verifies that inadvertently opened valve has not caused increased O2 flow. However, high O2 flow normal during cabin gas changeover.
6 Assumes partially suited mode is:
• SUIT CKT RET vlv - open
• DEMAND REG vlv - BOTH
7 If leak is not isolated and O2 flow remains high, mission time may be extended by shutting off the main O2 regulators, re-opening them when necessary to maintain cabin pressure and for actuation of the cyclic accumulators. Placing the WASTE STOWAGE VENT valve to VENT may prevent the cabin relief valve from actuating.
SM-2A-2251

| SYMPTOM | PROCEDURE | REMARKS |
|---|---|---|

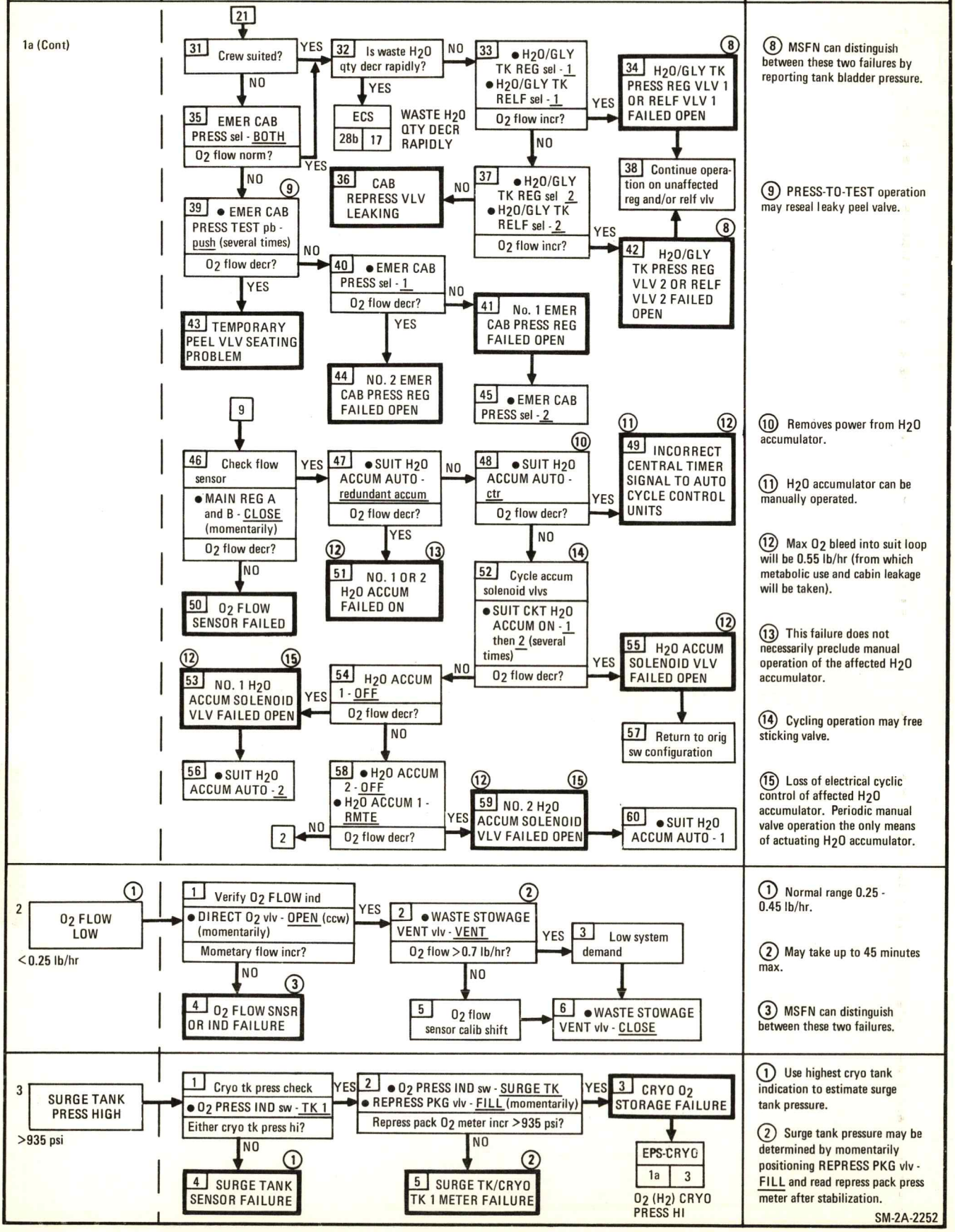

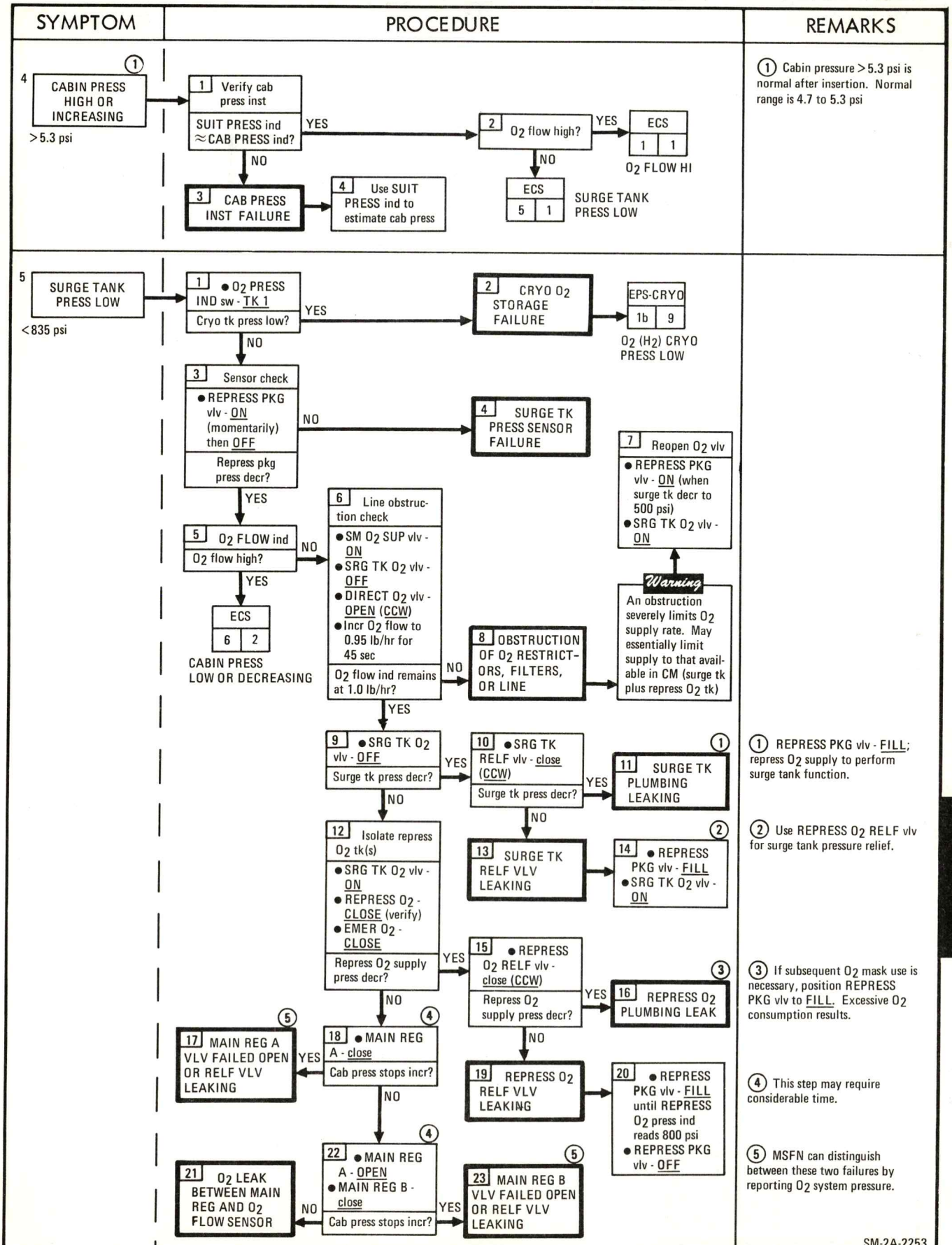
SYMPTOM
PROCEDURE
REMARKS
4 CABIN PRESS HIGH OR INCREASING
>5.3 psi
1 Verify cab press inst
SUIT PRESS ind ≈ CAB PRESS ind?
YES
NO
2 O2 flow high?
YES
NO
ECS 1 1
O2 FLOW HI
ECS 5 1
SURGE TANK PRESS LOW
3 CAB PRESS INST FAILURE
4 Use SUIT PRESS ind to estimate cab press
5 SURGE TANK PRESS LOW
<835 psi
1 ● O2 PRESS IND sw - TK 1
Cryo tk press low?
2 CRYO O2 STORAGE FAILURE
EPS-CRYO 1b 9
O2 (H2) CRYO PRESS LOW
3 Sensor check
● REPRESS PKG vlv - ON (momentarily) then OFF
Repress pkg press decr?
4 SURGE TK PRESS SENSOR FAILURE
5 O2 FLOW ind
O2 flow high?
ECS 6 2
CABIN PRESS LOW OR DECREASING
6 Line obstruction check
● SM O2 SUP vlv - ON
● SRG TK O2 vlv - OFF
● DIRECT O2 vlv - OPEN (CCW)
● Incr O2 flow to 0.95 lb/hr for 45 sec
O2 flow ind remains at 1.0 lb/hr?
7 Reopen O2 vlv
● REPRESS PKG vlv - ON (when surge tk decr to 500 psi)
● SRG TK O2 vlv - ON
Warning
An obstruction severely limits O2 supply rate. May essentially limit supply to that available in CM (surge tk plus repress O2 tk)
8 OBSTRUCTION OF O2 RESTRICTORS, FILTERS, OR LINE
9 ● SRG TK O2 vlv - OFF
Surge tk press decr?
10 ● SRG TK RELF vlv - close (CCW)
Surge tk press decr?
11 SURGE TK PLUMBING LEAKING
12 Isolate repress O2 tk(s)
● SRG TK O2 vlv - ON
● REPRESS O2 - CLOSE (verify)
● EMER O2 - CLOSE
Repress O2 supply press decr?
13 SURGE TK RELF VLV LEAKING
14 ● REPRESS PKG vlv - FILL
● SRG TK O2 vlv - ON
15 ● REPRESS O2 RELF vlv - close (CCW)
Repress O2 supply press decr?
16 REPRESS O2 PLUMBING LEAK
17 MAIN REG A VLV FAILED OPEN OR RELF VLV LEAKING
18 ● MAIN REG A - close
Cab press stops incr?
19 REPRESS O2 RELF VLV LEAKING
20 ● REPRESS PKG vlv - FILL until REPRESS O2 press ind reads 800 psi
● REPRESS PKG vlv - OFF
21 O2 LEAK BETWEEN MAIN REG AND O2 FLOW SENSOR
22 ● MAIN REG A - OPEN
● MAIN REG B - close
Cab press stops incr?
23 MAIN REG B VLV FAILED OPEN OR RELF VLV LEAKING
1 Cabin pressure > 5.3 psi is normal after insertion. Normal range is 4.7 to 5.3 psi
1 REPRESS PKG vlv - FILL; repress O2 supply to perform surge tank function.
2 Use REPRESS O2 RELF vlv for surge tank pressure relief.
3 If subsequent O2 mask use is necessary, position REPRESS PKG vlv to FILL. Excessive O2 consumption results.
4 This step may require considerable time.
5 MSFN can distinguish between these two failures by reporting O2 system pressure.
SM-2A-2253

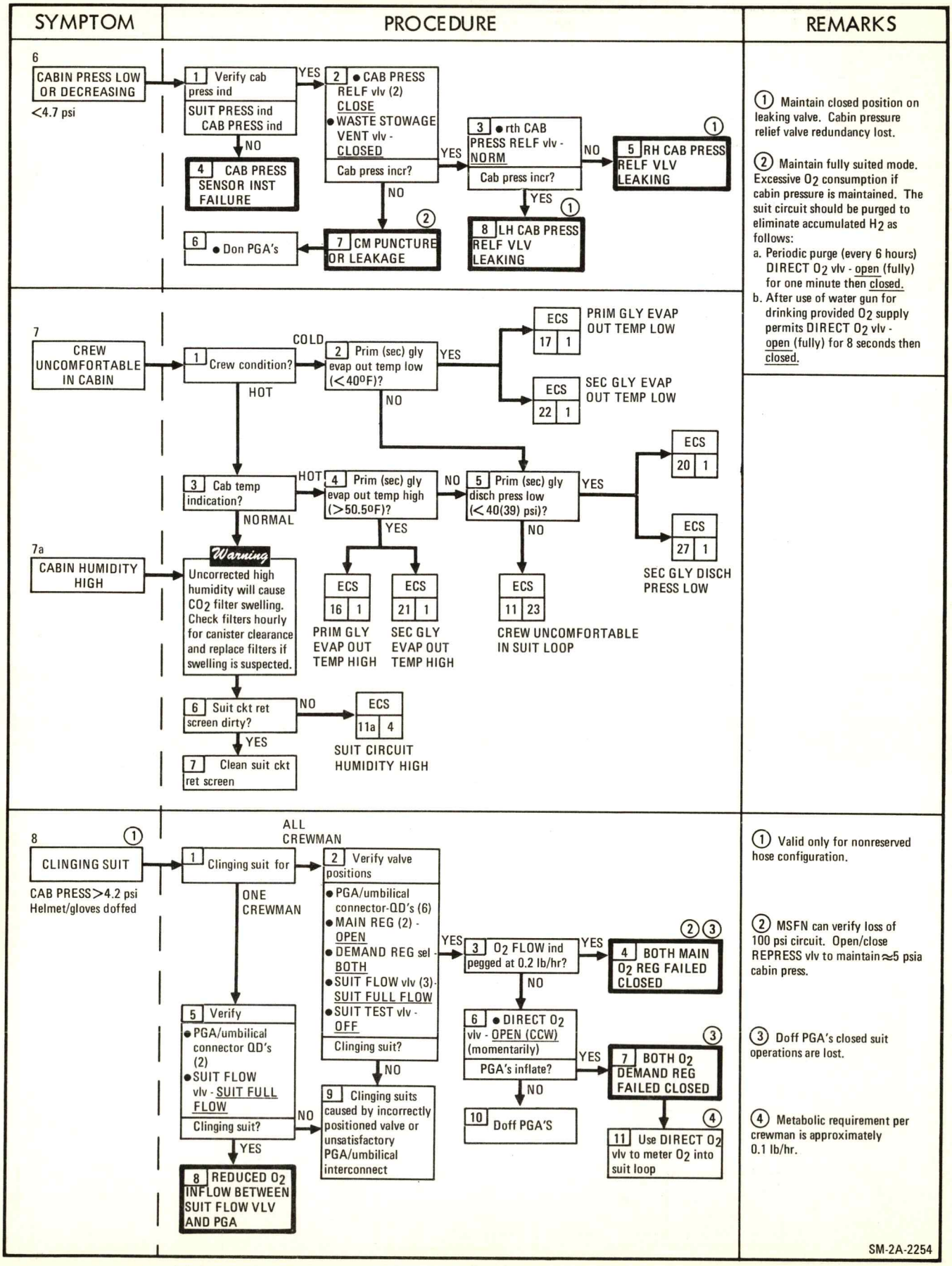
SYMPTOM
PROCEDURE
REMARKS
6
CABIN PRESS LOW OR DECREASING
<4.7 psi
1 Verify cab press ind
SUIT PRESS ind
CAB PRESS ind
YES
NO
2 • CAB PRESS RELF vlv (2) CLOSE
• WASTE STOWAGE VENT vlv - CLOSED
Cab press incr?
YES
NO
3 • rth CAB PRESS RELF vlv - NORM
Cab press incr?
NO
YES
1
5 RH CAB PRESS RELF VLV LEAKING
1
8 LH CAB PRESS RELF VLV LEAKING
4 CAB PRESS SENSOR INST FAILURE
2
7 CM PUNCTURE OR LEAKAGE
6 • Don PGA's
7
CREW UNCOMFORTABLE IN CABIN
1 Crew condition?
COLD
HOT
2 Prim (sec) gly evap out temp low (<40°F)?
YES
NO
ECS 17 1
PRIM GLY EVAP OUT TEMP LOW
ECS 22 1
SEC GLY EVAP OUT TEMP LOW
3 Cab temp indication?
HOT
NORMAL
4 Prim (sec) gly evap out temp high (>50.5°F)?
NO
YES
5 Prim (sec) gly disch press low (< 40(39) psi)?
YES
NO
ECS 20 1
ECS 27 1
SEC GLY DISCH PRESS LOW
7a
CABIN HUMIDITY HIGH
Warning
Uncorrected high humidity will cause CO2 filter swelling. Check filters hourly for canister clearance and replace filters if swelling is suspected.
ECS 16 1
PRIM GLY EVAP OUT TEMP HIGH
ECS 21 1
SEC GLY EVAP OUT TEMP HIGH
ECS 11 23
CREW UNCOMFORTABLE IN SUIT LOOP
6 Suit ckt ret screen dirty?
NO
YES
ECS 11a 4
SUIT CIRCUIT HUMIDITY HIGH
7 Clean suit ckt ret screen
8
1
CLINGING SUIT
CAB PRESS >4.2 psi
Helmet/gloves doffed
1 Clinging suit for
ALL CREWMAN
ONE CREWMAN
2 Verify valve positions
• PGA/umbilical connector-QD's (6)
• MAIN REG (2) - OPEN
• DEMAND REG sel - BOTH
• SUIT FLOW vlv (3) - SUIT FULL FLOW
• SUIT TEST vlv - OFF
Clinging suit?
NO
9 Clinging suits caused by incorrectly positioned valve or unsatisfactory PGA/umbilical interconnect
5 Verify
• PGA/umbilical connector QD's (2)
• SUIT FLOW vlv - SUIT FULL FLOW
Clinging suit?
NO
YES
8 REDUCED O2 INFLOW BETWEEN SUIT FLOW VLV AND PGA
3 O2 FLOW ind pegged at 0.2 lb/hr?
YES
NO
2 3
4 BOTH MAIN O2 REG FAILED CLOSED
6 • DIRECT O2 vlv - OPEN (CCW) (momentarily)
PGA's inflate?
YES
NO
3
7 BOTH O2 DEMAND REG FAILED CLOSED
10 Doff PGA'S
4
11 Use DIRECT O2 vlv to meter O2 into suit loop
1 Maintain closed position on leaking valve. Cabin pressure relief valve redundancy lost.
2 Maintain fully suited mode. Excessive O2 consumption if cabin pressure is maintained. The suit circuit should be purged to eliminate accumulated H2 as follows:
a. Periodic purge (every 6 hours) DIRECT O2 vlv - open (fully) for one minute then closed.
b. After use of water gun for drinking provided O2 supply permits DIRECT O2 vlv - open (fully) for 8 seconds then closed.
1 Valid only for nonreserved hose configuration.
2 MSFN can verify loss of 100 psi circuit. Open/close REPRESS vlv to maintain ≈5 psia cabin press.
3 Doff PGA's closed suit operations are lost.
4 Metabolic requirement per crewman is approximately 0.1 lb/hr.
SM-2A-2254

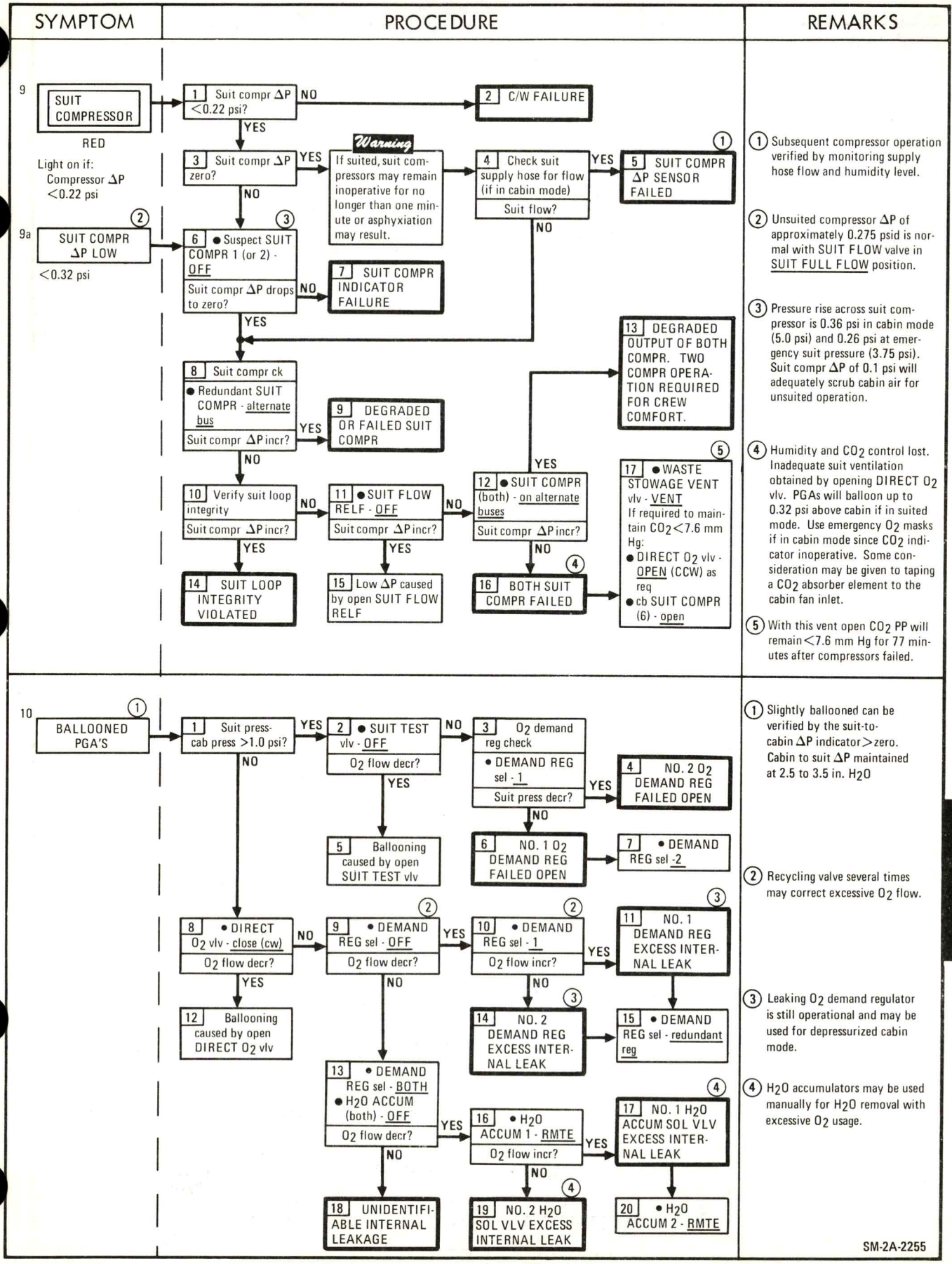
SYMPTOM
PROCEDURE
REMARKS
9
SUIT COMPRESSOR
RED
Light on if:
Compressor ΔP <0.22 psi
1 Suit compr ΔP <0.22 psi?
NO
2 C/W FAILURE
YES
3 Suit compr ΔP zero?
YES
Warning
If suited, suit compressors may remain inoperative for no longer than one minute or asphyxiation may result.
4 Check suit supply hose for flow (if in cabin mode)
Suit flow?
YES
5 SUIT COMPR ΔP SENSOR FAILED
(1)
NO
9a
(2)
SUIT COMPR ΔP LOW
<0.32 psi
6 • Suspect SUIT COMPR 1 (or 2) - OFF
Suit compr ΔP drops to zero?
NO
7 SUIT COMPR INDICATOR FAILURE
(3)
YES
8 Suit compr ck
• Redundant SUIT COMPR - alternate bus
Suit compr ΔP incr?
YES
9 DEGRADED OR FAILED SUIT COMPR
NO
10 Verify suit loop integrity
Suit compr ΔP incr?
NO
11 • SUIT FLOW RELF - OFF
Suit compr ΔP incr?
NO
12 • SUIT COMPR (both) - on alternate buses
Suit compr ΔP incr?
YES
13 DEGRADED OUTPUT OF BOTH COMPR. TWO COMPR OPERATION REQUIRED FOR CREW COMFORT.
YES
NO
14 SUIT LOOP INTEGRITY VIOLATED
YES
15 Low ΔP caused by open SUIT FLOW RELF
YES
16 BOTH SUIT COMPR FAILED
(4)
NO
(5)
17 • WASTE STOWAGE VENT vlv - VENT
If required to maintain CO2 <7.6 mm Hg:
• DIRECT O2 vlv - OPEN (CCW) as req
• cb SUIT COMPR (6) - open
(1) Subsequent compressor operation verified by monitoring supply hose flow and humidity level.
(2) Unsuited compressor ΔP of approximately 0.275 psid is normal with SUIT FLOW valve in SUIT FULL FLOW position.
(3) Pressure rise across suit compressor is 0.36 psi in cabin mode (5.0 psi) and 0.26 psi at emergency suit pressure (3.75 psi). Suit compr ΔP of 0.1 psi will adequately scrub cabin air for unsuited operation.
(4) Humidity and CO2 control lost. Inadequate suit ventilation obtained by opening DIRECT O2 vlv. PGAs will balloon up to 0.32 psi above cabin if in suited mode. Use emergency O2 masks if in cabin mode since CO2 indicator inoperative. Some consideration may be given to taping a CO2 absorber element to the cabin fan inlet.
(5) With this vent open CO2 PP will remain <7.6 mm Hg for 77 minutes after compressors failed.
10
(1)
BALLOONED PGA'S
1 Suit press-cab press >1.0 psi?
YES
2 • SUIT TEST vlv - OFF
O2 flow decr?
YES
5 Ballooning caused by open SUIT TEST vlv
NO
3 O2 demand reg check
• DEMAND REG sel - 1
Suit press decr?
YES
4 NO. 2 O2 DEMAND REG FAILED OPEN
NO
6 NO. 1 O2 DEMAND REG FAILED OPEN
7 • DEMAND REG sel -2
NO
8 • DIRECT O2 vlv - close (cw)
O2 flow decr?
NO
(2)
9 • DEMAND REG sel - OFF
O2 flow decr?
YES
(2)
10 • DEMAND REG sel - 1
O2 flow incr?
YES
(3)
11 NO. 1 DEMAND REG EXCESS INTERNAL LEAK
YES
12 Ballooning caused by open DIRECT O2 vlv
NO
(3)
14 NO. 2 DEMAND REG EXCESS INTERNAL LEAK
15 • DEMAND REG sel - redundant reg
13 • DEMAND REG sel - BOTH
• H2O ACCUM (both) - OFF
O2 flow decr?
YES
16 • H2O ACCUM 1 - RMTE
O2 flow incr?
YES
(4)
17 NO. 1 H2O ACCUM SOL VLV EXCESS INTERNAL LEAK
NO
18 UNIDENTIFIABLE INTERNAL LEAKAGE
(4)
19 NO. 2 H2O SOL VLV EXCESS INTERNAL LEAK
20 • H2O ACCUM 2 - RMTE
(1) Slightly ballooned can be verified by the suit-to-cabin ΔP indicator >zero. Cabin to suit ΔP maintained at 2.5 to 3.5 in. H2O
(2) Recycling valve several times may correct excessive O2 flow.
(3) Leaking O2 demand regulator is still operational and may be used for depressurized cabin mode.
(4) H2O accumulators may be used manually for H2O removal with excessive O2 usage.
SM-2A-2255

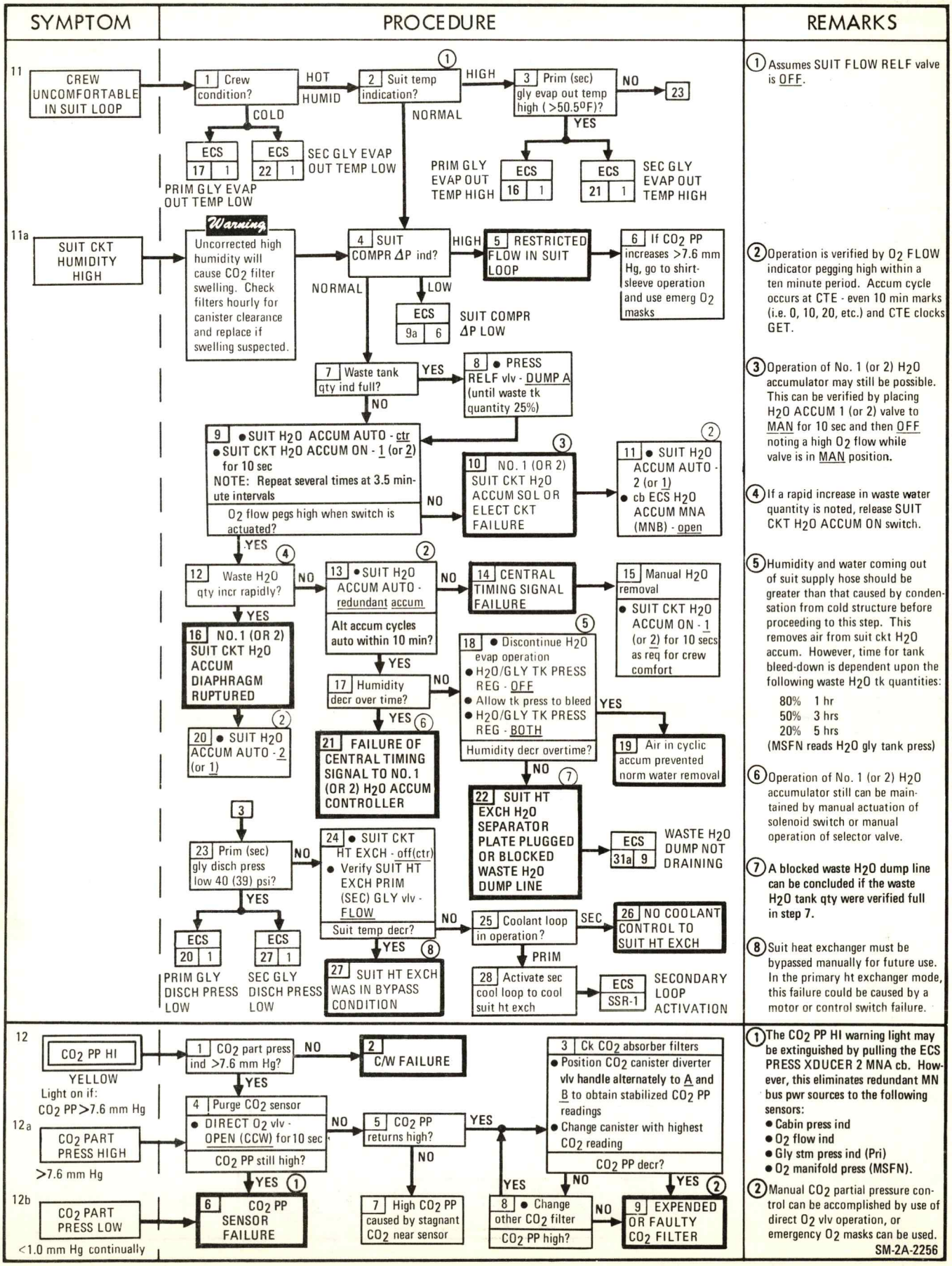
SYMPTOM
PROCEDURE
REMARKS
11
CREW UNCOMFORTABLE IN SUIT LOOP
1 Crew condition?
HOT HUMID
COLD
2 Suit temp indication?
HIGH
NORMAL
3 Prim (sec) gly evap out temp high (>50.5°F)?
NO
23
YES
ECS 17 1
PRIM GLY EVAP OUT TEMP LOW
ECS 22 1
SEC GLY EVAP OUT TEMP LOW
PRIM GLY EVAP OUT TEMP HIGH
ECS 16 1
ECS 21 1
SEC GLY EVAP OUT TEMP HIGH
11a
SUIT CKT HUMIDITY HIGH
Warning
Uncorrected high humidity will cause CO2 filter swelling. Check filters hourly for canister clearance and replace if swelling suspected.
4 SUIT COMPR ΔP ind?
HIGH
5 RESTRICTED FLOW IN SUIT LOOP
6 If CO2 PP increases >7.6 mm Hg, go to shirt-sleeve operation and use emerg O2 masks
NORMAL
LOW
ECS 9a 6
SUIT COMPR ΔP LOW
7 Waste tank qty ind full?
YES
8 • PRESS RELF vlv - DUMP A (until waste tk quantity 25%)
NO
9 • SUIT H2O ACCUM AUTO - ctr
• SUIT CKT H2O ACCUM ON - 1 (or 2) for 10 sec
NOTE: Repeat several times at 3.5 minute intervals
O2 flow pegs high when switch is actuated?
NO
10 NO. 1 (OR 2) SUIT CKT H2O ACCUM SOL OR ELECT CKT FAILURE
11 • SUIT H2O ACCUM AUTO - 2 (or 1)
• cb ECS H2O ACCUM MNA (MNB) - open
YES
12 Waste H2O qty incr rapidly?
NO
13 • SUIT H2O ACCUM AUTO - redundant accum
Alt accum cycles auto within 10 min?
NO
14 CENTRAL TIMING SIGNAL FAILURE
15 Manual H2O removal
• SUIT CKT H2O ACCUM ON - 1 (or 2) for 10 secs as req for crew comfort
YES
16 NO. 1 (OR 2) SUIT CKT H2O ACCUM DIAPHRAGM RUPTURED
20 • SUIT H2O ACCUM AUTO - 2 (or 1)
17 Humidity decr over time?
NO
YES
18 • Discontinue H2O evap operation
• H2O/GLY TK PRESS REG - OFF
• Allow tk press to bleed
• H2O/GLY TK PRESS REG - BOTH
Humidity decr overtime?
YES
19 Air in cyclic accum prevented norm water removal
NO
21 FAILURE OF CENTRAL TIMING SIGNAL TO NO. 1 (OR 2) H2O ACCUM CONTROLLER
22 SUIT HT EXCH H2O SEPARATOR PLATE PLUGGED OR BLOCKED WASTE H2O DUMP LINE
ECS 31a 9
WASTE H2O DUMP NOT DRAINING
3
23 Prim (sec) gly disch press low 40 (39) psi?
NO
24 • SUIT CKT HT EXCH - off(ctr)
• Verify SUIT HT EXCH PRIM (SEC) GLY vlv - FLOW
Suit temp decr?
NO
25 Coolant loop in operation?
SEC
26 NO COOLANT CONTROL TO SUIT HT EXCH
PRIM
YES
ECS 20 1
PRIM GLY DISCH PRESS LOW
ECS 27 1
SEC GLY DISCH PRESS LOW
27 SUIT HT EXCH WAS IN BYPASS CONDITION
28 Activate sec cool loop to cool suit ht exch
ECS SSR-1
SECONDARY LOOP ACTIVATION
12
CO2 PP HI
YELLOW Light on if: CO2 PP >7.6 mm Hg
1 CO2 part press ind >7.6 mm Hg?
NO
2 C/W FAILURE
YES
4 Purge CO2 sensor
• DIRECT O2 vlv - OPEN (CCW) for 10 sec
CO2 PP still high?
NO
5 CO2 PP returns high?
YES
3 Ck CO2 absorber filters
• Position CO2 canister diverter vlv handle alternately to A and B to obtain stabilized CO2 PP readings
• Change canister with highest CO2 reading
CO2 PP decr?
12a
CO2 PART PRESS HIGH
>7.6 mm Hg
YES (1)
6 CO2 PP SENSOR FAILURE
12b
CO2 PART PRESS LOW
<1.0 mm Hg continually
7 High CO2 PP caused by stagnant CO2 near sensor
NO
YES
8 • Change other CO2 filter
CO2 PP high?
NO
YES (2)
9 EXPENDED OR FAULTY CO2 FILTER
(1) Assumes SUIT FLOW RELF valve is OFF.
(2) Operation is verified by O2 FLOW indicator pegging high within a ten minute period. Accum cycle occurs at CTE - even 10 min marks (i.e. 0, 10, 20, etc.) and CTE clocks GET.
(3) Operation of No. 1 (or 2) H2O accumulator may still be possible. This can be verified by placing H2O ACCUM 1 (or 2) valve to MAN for 10 sec and then OFF noting a high O2 flow while valve is in MAN position.
(4) If a rapid increase in waste water quantity is noted, release SUIT CKT H2O ACCUM ON switch.
(5) Humidity and water coming out of suit supply hose should be greater than that caused by condensation from cold structure before proceeding to this step. This removes air from suit ckt H2O accum. However, time for tank bleed-down is dependent upon the following waste H2O tk quantities:
80% 1 hr
50% 3 hrs
20% 5 hrs
(MSFN reads H2O gly tank press)
(6) Operation of No. 1 (or 2) H2O accumulator still can be maintained by manual actuation of solenoid switch or manual operation of selector valve.
(7) A blocked waste H2O dump line can be concluded if the waste H2O tank qty were verified full in step 7.
(8) Suit heat exchanger must be bypassed manually for future use. In the primary ht exchanger mode, this failure could be caused by a motor or control switch failure.
(1) The CO2 PP HI warning light may be extinguished by pulling the ECS PRESS XDUCER 2 MNA cb. However, this eliminates redundant MN bus pwr sources to the following sensors:
• Cabin press ind
• O2 flow ind
• Gly stm press ind (Pri)
• O2 manifold press (MSFN).
(2) Manual CO2 partial pressure control can be accomplished by use of direct O2 vlv operation, or emergency O2 masks can be used.
SM-2A-2256

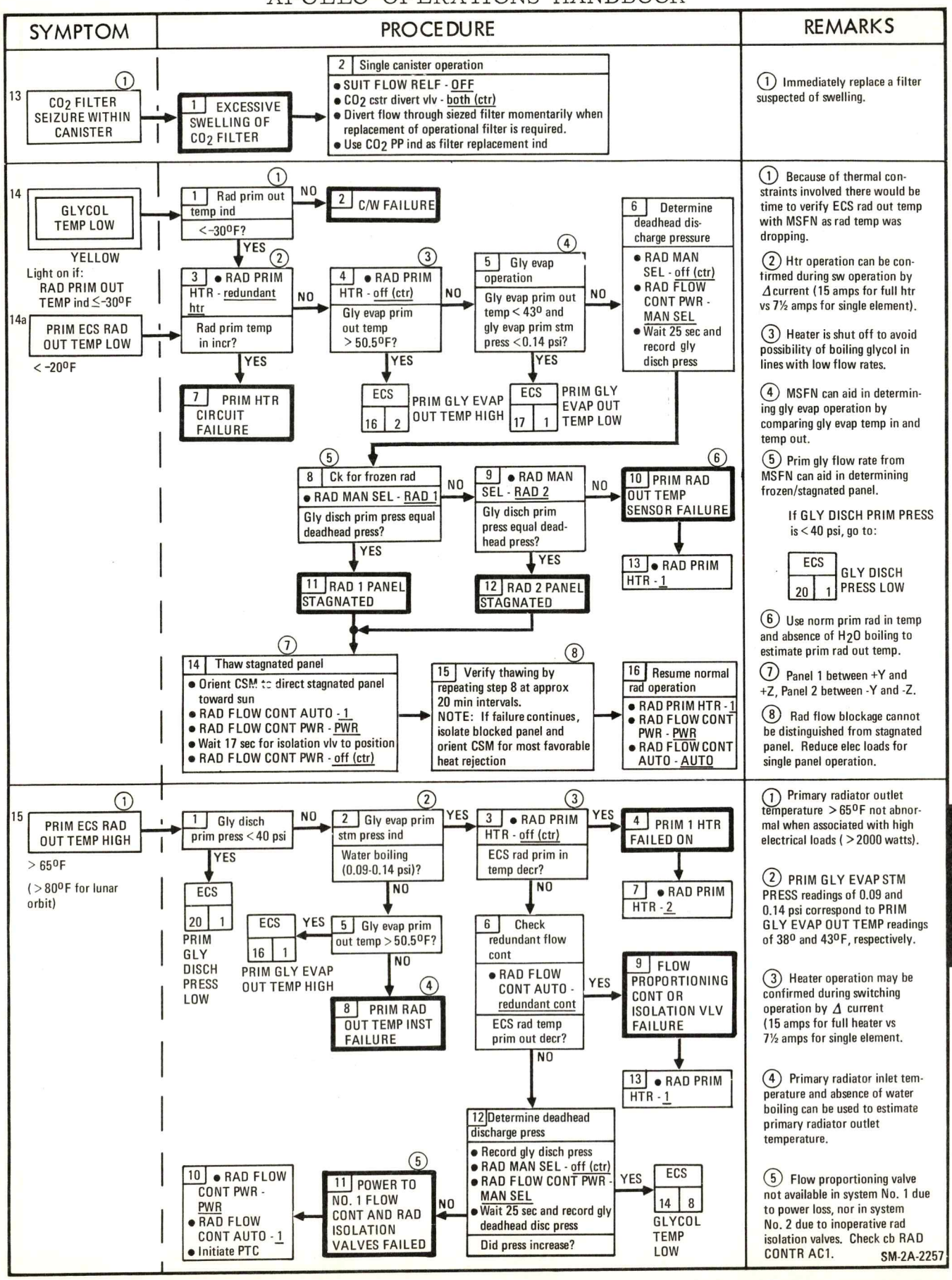
SYMPTOM
PROCEDURE
REMARKS
13 CO2 FILTER SEIZURE WITHIN CANISTER (1)
1 EXCESSIVE SWELLING OF CO2 FILTER
2 Single canister operation
• SUIT FLOW RELF - OFF
• CO2 cstr divert vlv - both (ctr)
• Divert flow through siezed filter momentarily when replacement of operational filter is required.
• Use CO2 PP ind as filter replacement ind
(1) Immediately replace a filter suspected of swelling.
14 GLYCOL TEMP LOW
YELLOW
Light on if:
RAD PRIM OUT TEMP ind ≤-30°F
14a PRIM ECS RAD OUT TEMP LOW
< -20°F
1 Rad prim out temp ind <-30°F? NO 2 C/W FAILURE
YES
3 • RAD PRIM HTR - redundant htr
Rad prim temp in incr? NO
YES
7 PRIM HTR CIRCUIT FAILURE
4 • RAD PRIM HTR - off (ctr)
Gly evap prim out temp > 50.5°F? NO
YES
ECS 16 2 PRIM GLY EVAP OUT TEMP HIGH
5 Gly evap operation
Gly evap prim out temp < 43° and gly evap prim stm press <0.14 psi? NO
YES
ECS 17 1 PRIM GLY EVAP OUT TEMP LOW
6 Determine deadhead discharge pressure
• RAD MAN SEL - off (ctr)
• RAD FLOW CONT PWR - MAN SEL
• Wait 25 sec and record gly disch press
8 Ck for frozen rad
• RAD MAN SEL - RAD 1
Gly disch prim press equal deadhead press? NO
YES
11 RAD 1 PANEL STAGNATED
9 • RAD MAN SEL - RAD 2
Gly disch prim press equal deadhead press? NO
YES
12 RAD 2 PANEL STAGNATED
10 PRIM RAD OUT TEMP SENSOR FAILURE
13 • RAD PRIM HTR - 1
14 Thaw stagnated panel
• Orient CSM to direct stagnated panel toward sun
• RAD FLOW CONT AUTO - 1
• RAD FLOW CONT PWR - PWR
• Wait 17 sec for isolation vlv to position
• RAD FLOW CONT PWR - off (ctr)
15 Verify thawing by repeating step 8 at approx 20 min intervals.
NOTE: If failure continues, isolate blocked panel and orient CSM for most favorable heat rejection
16 Resume normal rad operation
• RAD PRIM HTR - 1
• RAD FLOW CONT PWR - PWR
• RAD FLOW CONT AUTO - AUTO
(1) Because of thermal constraints involved there would be time to verify ECS rad out temp with MSFN as rad temp was dropping.
(2) Htr operation can be confirmed during sw operation by Δ current (15 amps for full htr vs 7½ amps for single element).
(3) Heater is shut off to avoid possibility of boiling glycol in lines with low flow rates.
(4) MSFN can aid in determining gly evap operation by comparing gly evap temp in and temp out.
(5) Prim gly flow rate from MSFN can aid in determining frozen/stagnated panel.
If GLY DISCH PRIM PRESS is < 40 psi, go to:
ECS 20 1 GLY DISCH PRESS LOW
(6) Use norm prim rad in temp and absence of H2O boiling to estimate prim rad out temp.
(7) Panel 1 between +Y and +Z, Panel 2 between -Y and -Z.
(8) Rad flow blockage cannot be distinguished from stagnated panel. Reduce elec loads for single panel operation.
15 PRIM ECS RAD OUT TEMP HIGH
> 65°F
(> 80°F for lunar orbit)
1 Gly disch prim press < 40 psi NO
YES
ECS 20 1 PRIM GLY DISCH PRESS LOW
2 Gly evap prim stm press ind
Water boiling (0.09-0.14 psi)? YES
NO
ECS 16 1 PRIM GLY EVAP OUT TEMP HIGH
5 Gly evap prim out temp > 50.5°F? YES
NO
8 PRIM RAD OUT TEMP INST FAILURE
3 • RAD PRIM HTR - off (ctr)
ECS rad prim in temp decr? YES
NO
4 PRIM 1 HTR FAILED ON
7 • RAD PRIM HTR - 2
6 Check redundant flow cont
• RAD FLOW CONT AUTO - redundant cont
ECS rad temp prim out decr? YES
NO
9 FLOW PROPORTIONING CONT OR ISOLATION VLV FAILURE
13 • RAD PRIM HTR - 1
12 Determine deadhead discharge press
• Record gly disch press
• RAD MAN SEL - off (ctr)
• RAD FLOW CONT PWR - MAN SEL
• Wait 25 sec and record gly deadhead disc press
Did press increase? YES
ECS 14 8 GLYCOL TEMP LOW
NO
11 POWER TO NO. 1 FLOW CONT AND RAD ISOLATION VALVES FAILED
10 • RAD FLOW CONT PWR - PWR
• RAD FLOW CONT AUTO - 1
• Initiate PTC
(1) Primary radiator outlet temperature > 65°F not abnormal when associated with high electrical loads ( > 2000 watts).
(2) PRIM GLY EVAP STM PRESS readings of 0.09 and 0.14 psi correspond to PRIM GLY EVAP OUT TEMP readings of 38° and 43°F, respectively.
(3) Heater operation may be confirmed during switching operation by Δ current (15 amps for full heater vs 7½ amps for single element.
(4) Primary radiator inlet temperature and absence of water boiling can be used to estimate primary radiator outlet temperature.
(5) Flow proportioning valve not available in system No. 1 due to power loss, nor in system No. 2 due to inoperative rad isolation valves. Check cb RAD CONTR AC1.
SM-2A-2257

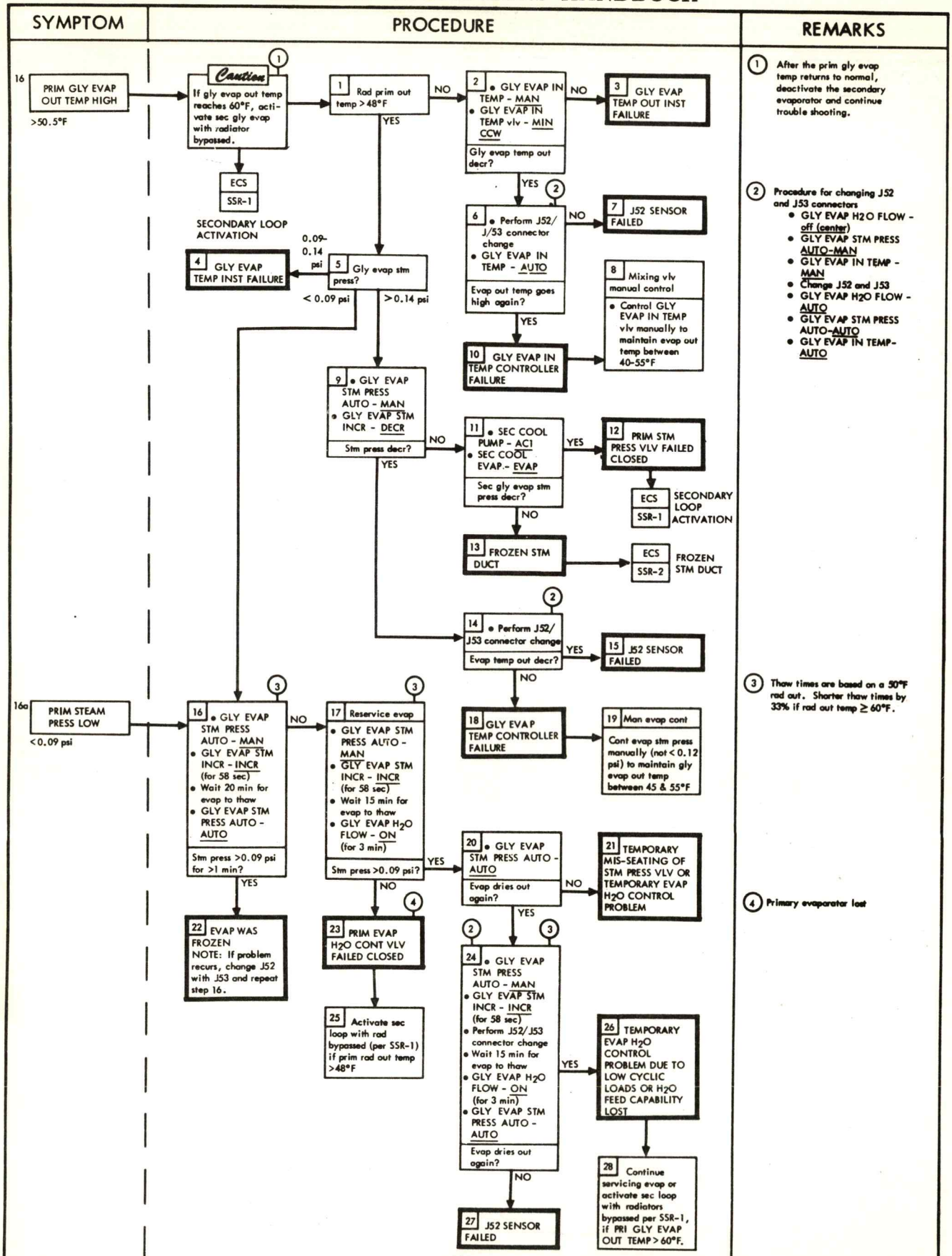
SYMPTOM
PROCEDURE
REMARKS
16 PRIM GLY EVAP OUT TEMP HIGH
>50.5°F
Caution
If gly evap out temp reaches 60°F, activate sec gly evap with radiator bypassed.
ECS
SSR-1
SECONDARY LOOP ACTIVATION
1 Rad prim out temp > 48°F
NO
YES
2 • GLY EVAP IN TEMP - MAN
• GLY EVAP IN TEMP vlv - MIN CCW
Gly evap temp out decr?
NO
3 GLY EVAP TEMP OUT INST FAILURE
YES
6 • Perform J52/J53 connector change
• GLY EVAP IN TEMP - AUTO
Evap out temp goes high again?
NO
7 J52 SENSOR FAILED
YES
8 Mixing vlv manual control
• Control GLY EVAP IN TEMP vlv manually to maintain evap out temp between 40-55°F
10 GLY EVAP IN TEMP CONTROLLER FAILURE
0.09-0.14 psi
5 Gly evap stm press?
< 0.09 psi
> 0.14 psi
4 GLY EVAP TEMP INST FAILURE
9 • GLY EVAP STM PRESS AUTO - MAN
• GLY EVAP STM INCR - DECR
Stm press decr?
NO
YES
11 • SEC COOL PUMP - AC1
• SEC COOL EVAP - EVAP
Sec gly evap stm press decr?
YES
12 PRIM STM PRESS VLV FAILED CLOSED
ECS
SSR-1
SECONDARY LOOP ACTIVATION
NO
13 FROZEN STM DUCT
ECS
SSR-2
FROZEN STM DUCT
14 • Perform J52/J53 connector change
Evap temp out decr?
YES
15 J52 SENSOR FAILED
NO
18 GLY EVAP TEMP CONTROLLER FAILURE
19 Man evap cont
Cont evap stm press manually (not < 0.12 psi) to maintain gly evap out temp between 45 & 55°F
16a PRIM STEAM PRESS LOW
< 0.09 psi
16 • GLY EVAP STM PRESS AUTO - MAN
• GLY EVAP STM INCR - INCR (for 58 sec)
• Wait 20 min for evap to thaw
• GLY EVAP STM PRESS AUTO - AUTO
Stm press >0.09 psi for >1 min?
NO
YES
22 EVAP WAS FROZEN
NOTE: If problem recurs, change J52 with J53 and repeat step 16.
17 Reservice evap
• GLY EVAP STM PRESS AUTO - MAN
• GLY EVAP STM INCR - INCR (for 58 sec)
• Wait 15 min for evap to thaw
• GLY EVAP H2O FLOW - ON (for 3 min)
Stm press >0.09 psi?
YES
NO
20 • GLY EVAP STM PRESS AUTO - AUTO
Evap dries out again?
NO
21 TEMPORARY MIS-SEATING OF STM PRESS VLV OR TEMPORARY EVAP H2O CONTROL PROBLEM
YES
23 PRIM EVAP H2O CONT VLV FAILED CLOSED
25 Activate sec loop with rad bypassed (per SSR-1) if prim rad out temp >48°F
24 • GLY EVAP STM PRESS AUTO - MAN
• GLY EVAP STM INCR - INCR (for 58 sec)
• Perform J52/J53 connector change
• Wait 15 min for evap to thaw
• GLY EVAP H2O FLOW - ON (for 3 min)
• GLY EVAP STM PRESS AUTO - AUTO
Evap dries out again?
YES
26 TEMPORARY EVAP H2O CONTROL PROBLEM DUE TO LOW CYCLIC LOADS OR H2O FEED CAPABILITY LOST
NO
28 Continue servicing evap or activate sec loop with radiators bypassed per SSR-1, if PRI GLY EVAP OUT TEMP > 60°F.
27 J52 SENSOR FAILED
1 After the prim gly evap temp returns to normal, deactivate the secondary evaporator and continue trouble shooting.
2 Procedure for changing J52 and J53 connectors
• GLY EVAP H2O FLOW - off (center)
• GLY EVAP STM PRESS AUTO-MAN
• GLY EVAP IN TEMP - MAN
• Change J52 and J53
• GLY EVAP H2O FLOW - AUTO
• GLY EVAP STM PRESS AUTO-AUTO
• GLY EVAP IN TEMP-AUTO
3 Thaw times are based on a 50°F rad out. Shorter thaw times by 33% if rad out temp ≥ 60°F.
4 Primary evaporator lost

SM-2A-1510R

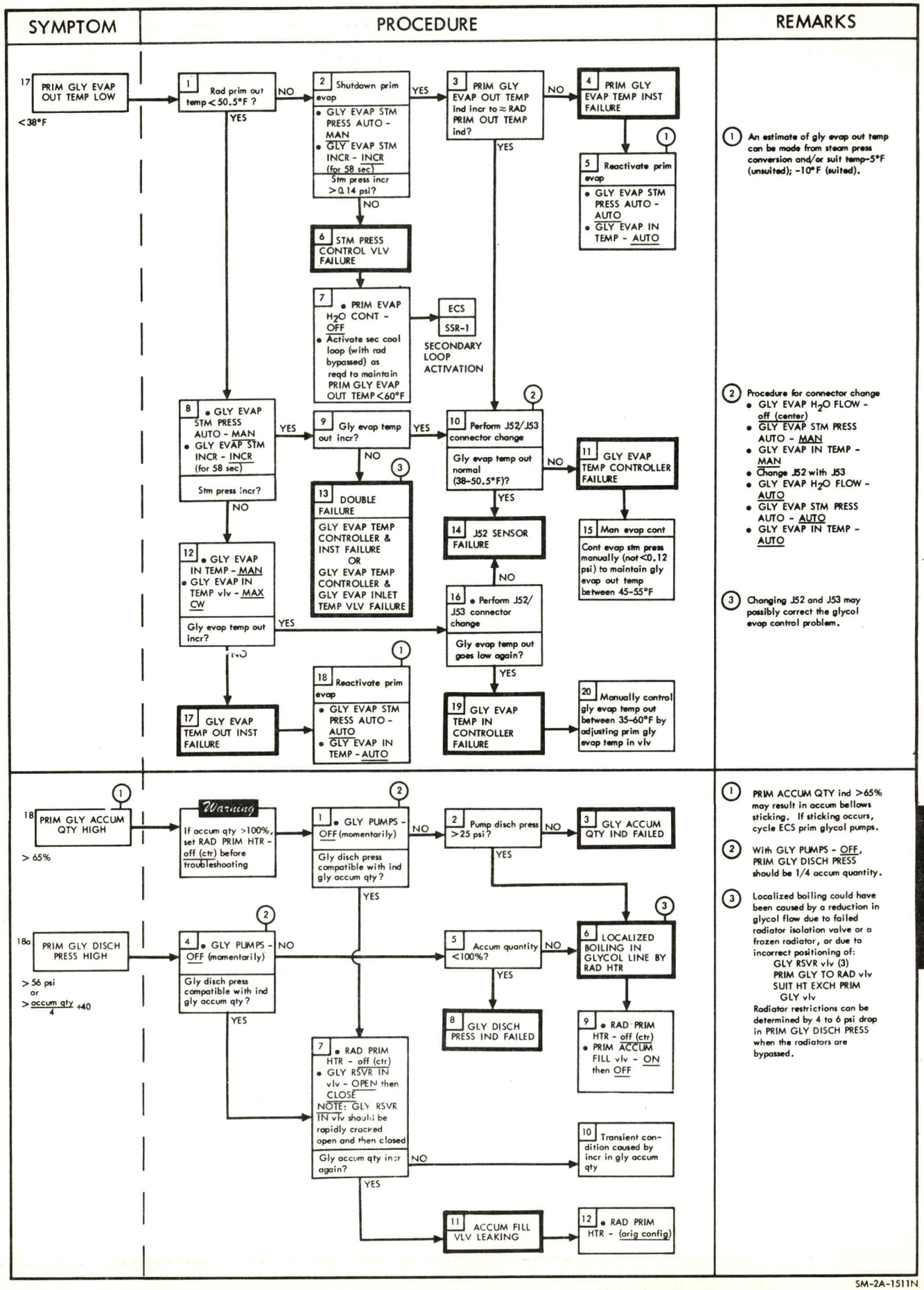
SYMPTOM
PROCEDURE
REMARKS
17 PRIM GLY EVAP OUT TEMP LOW
<38°F
1 Rad prim out temp < 50.5°F ?
NO
YES
2 Shutdown prim evap
• GLY EVAP STM PRESS AUTO - MAN
• GLY EVAP STM INCR - INCR (for 58 sec)
Stm press incr >0.14 psi?
YES
NO
3 PRIM GLY EVAP OUT TEMP ind incr to ≈ RAD PRIM OUT TEMP ind?
NO
YES
4 PRIM GLY EVAP TEMP INST FAILURE
1
5 Reactivate prim evap
• GLY EVAP STM PRESS AUTO - AUTO
• GLY EVAP IN TEMP - AUTO
6 STM PRESS CONTROL VLV FAILURE
7 • PRIM EVAP H2O CONT - OFF
• Activate sec cool loop (with rad bypassed) as reqd to maintain PRIM GLY EVAP OUT TEMP <60°F
ECS
SSR-1
SECONDARY LOOP ACTIVATION
8 • GLY EVAP STM PRESS AUTO - MAN
• GLY EVAP STM INCR - INCR (for 58 sec)
Stm press incr?
YES
NO
9 Gly evap temp out incr?
YES
NO
3
10 Perform J52/J53 connector change
2
Gly evap temp out normal (38-50.5°F)?
NO
YES
11 GLY EVAP TEMP CONTROLLER FAILURE
15 Man evap cont
Cont evap stm press manually (not <0.12 psi) to maintain gly evap out temp between 45-55°F
13 DOUBLE FAILURE
GLY EVAP TEMP CONTROLLER & INST FAILURE
OR
GLY EVAP TEMP CONTROLLER & GLY EVAP INLET TEMP VLV FAILURE
14 J52 SENSOR FAILURE
12 • GLY EVAP IN TEMP - MAN
• GLY EVAP IN TEMP vlv - MAX CW
Gly evap temp out incr?
YES
NO
16 • Perform J52/J53 connector change
Gly evap temp out goes low again?
NO
YES
17 GLY EVAP TEMP OUT INST FAILURE
1
18 Reactivate prim evap
• GLY EVAP STM PRESS AUTO - AUTO
• GLY EVAP IN TEMP - AUTO
19 GLY EVAP TEMP IN CONTROLLER FAILURE
20 Manually control gly evap temp out between 35-60°F by adjusting prim gly evap temp in vlv
1 An estimate of gly evap out temp can be made from steam press conversion and/or suit temp-5°F (unsuited); -10°F (suited).
2 Procedure for connector change
• GLY EVAP H2O FLOW - off (center)
• GLY EVAP STM PRESS AUTO - MAN
• GLY EVAP IN TEMP - MAN
• Change J52 with J53
• GLY EVAP H2O FLOW - AUTO
• GLY EVAP STM PRESS AUTO - AUTO
• GLY EVAP IN TEMP - AUTO
3 Changing J52 and J53 may possibly correct the glycol evap control problem.
1
18 PRIM GLY ACCUM QTY HIGH
> 65%
Warning
If accum qty >100%, set RAD PRIM HTR - off (ctr) before troubleshooting
2
1 • GLY PUMPS - OFF (momentarily)
Gly disch press compatible with ind gly accum qty?
NO
YES
2 Pump disch press >25 psi?
NO
YES
3 GLY ACCUM QTY IND FAILED
2
18a PRIM GLY DISCH PRESS HIGH
> 56 psi
or
> accum qty / 4 + 40
4 • GLY PUMPS - OFF (momentarily)
Gly disch press compatible with ind gly accum qty?
NO
YES
5 Accum quantity <100%?
NO
YES
3
6 LOCALIZED BOILING IN GLYCOL LINE BY RAD HTR
8 GLY DISCH PRESS IND FAILED
9 • RAD PRIM HTR - off (ctr)
• PRIM ACCUM FILL vlv - ON then OFF
7 • RAD PRIM HTR - off (ctr)
• GLY RSVR IN vlv - OPEN then CLOSE
NOTE: GLY RSVR IN vlv should be rapidly cracked open and then closed
Gly accum qty incr again?
NO
YES
10 Transient condition caused by incr in gly accum qty
11 ACCUM FILL VLV LEAKING
12 • RAD PRIM HTR - (orig config)
1 PRIM ACCUM QTY ind >65% may result in accum bellows sticking. If sticking occurs, cycle ECS prim glycol pumps.
2 With GLY PUMPS - OFF, PRIM GLY DISCH PRESS should be 1/4 accum quantity.
3 Localized boiling could have been caused by a reduction in glycol flow due to failed radiator isolation valve or a frozen radiator, or due to incorrect positioning of:
GLY RSVR vlv (3)
PRIM GLY TO RAD vlv
SUIT HT EXCH PRIM GLY vlv
Radiator restrictions can be determined by 4 to 6 psi drop in PRIM GLY DISCH PRESS when the radiators are bypassed.



SM-2A-1511N

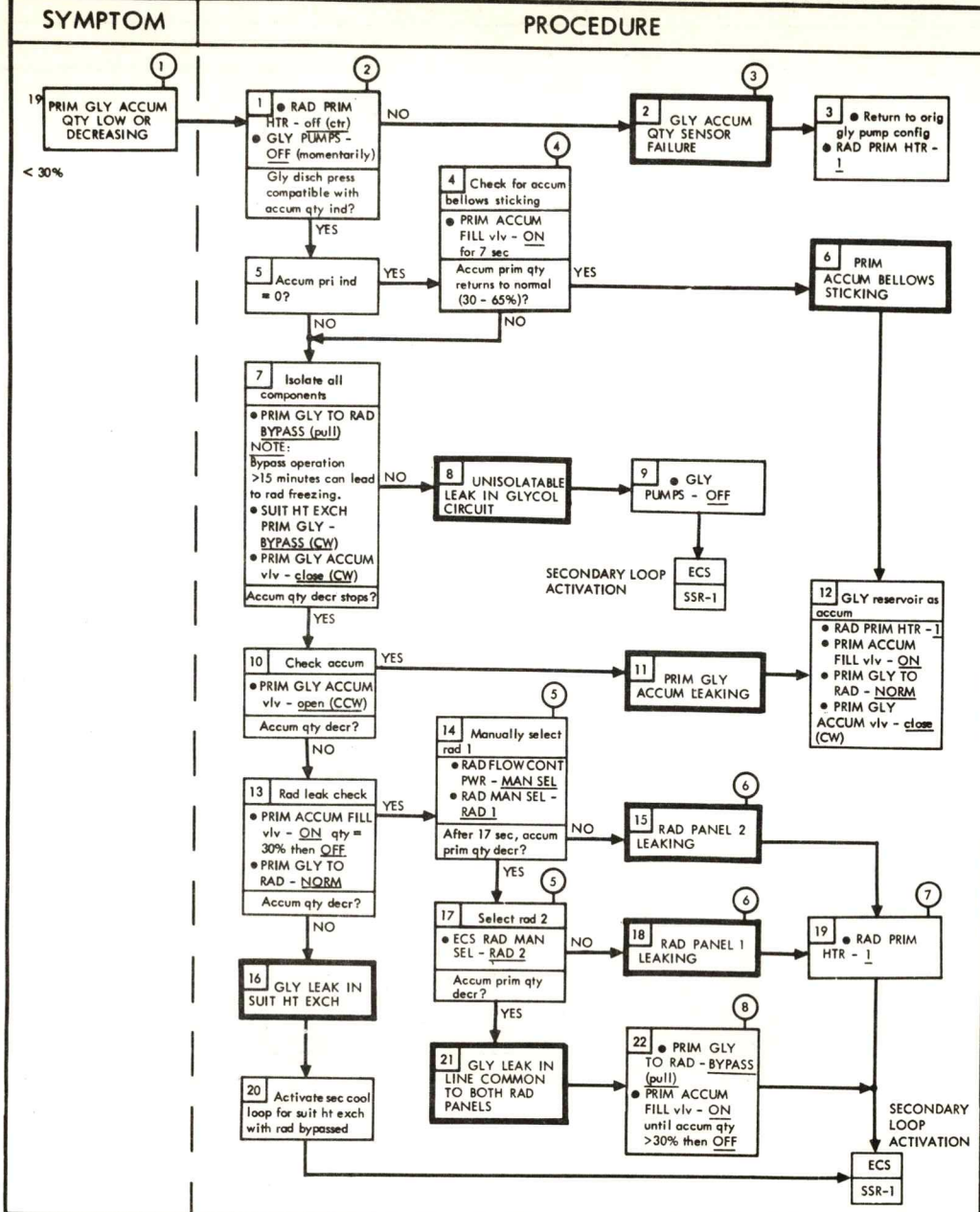
SYMPTOM
PROCEDURE
REMARKS
19 PRIM GLY ACCUM QTY LOW OR DECREASING
< 30%
1 • RAD PRIM HTR - off (ctr) • GLY PUMPS - OFF (momentarily) Gly disch press compatible with accum qty ind?
NO
2 GLY ACCUM QTY SENSOR FAILURE
3 • Return to orig gly pump config • RAD PRIM HTR - 1
YES
5 Accum pri ind = 0?
YES
4 Check for accum bellows sticking • PRIM ACCUM FILL vlv - ON for 7 sec Accum prim qty returns to normal (30 - 65%)?
YES
6 PRIM ACCUM BELLOWS STICKING
NO
NO
7 Isolate all components • PRIM GLY TO RAD BYPASS (pull) NOTE: Bypass operation >15 minutes can lead to rad freezing. • SUIT HT EXCH PRIM GLY - BYPASS (CW) • PRIM GLY ACCUM vlv - close (CW) Accum qty decr stops?
NO
8 UNISOLATABLE LEAK IN GLYCOL CIRCUIT
9 • GLY PUMPS - OFF
SECONDARY LOOP ACTIVATION
ECS SSR-1
YES
10 Check accum • PRIM GLY ACCUM vlv - open (CCW) Accum qty decr?
YES
11 PRIM GLY ACCUM LEAKING
12 GLY reservoir as accum • RAD PRIM HTR - 1 • PRIM ACCUM FILL vlv - ON • PRIM GLY TO RAD - NORM • PRIM GLY ACCUM vlv - close (CW)
NO
13 Rad leak check • PRIM ACCUM FILL vlv - ON qty = 30% then OFF • PRIM GLY TO RAD - NORM Accum qty decr?
YES
14 Manually select rad 1 • RAD FLOW CONT PWR - MAN SEL • RAD MAN SEL - RAD 1 After 17 sec, accum prim qty decr?
NO
15 RAD PANEL 2 LEAKING
YES
17 Select rad 2 • ECS RAD MAN SEL - RAD 2 Accum prim qty decr?
NO
18 RAD PANEL 1 LEAKING
19 • RAD PRIM HTR - 1
YES
16 GLY LEAK IN SUIT HT EXCH
21 GLY LEAK IN LINE COMMON TO BOTH RAD PANELS
22 • PRIM GLY TO RAD - BYPASS (pull) • PRIM ACCUM FILL vlv - ON until accum qty >30% then OFF
20 Activate sec cool loop for suit ht exch with rad bypassed
SECONDARY LOOP ACTIVATION
ECS SSR-1
1 Normal range is 30-65% Sensor powered by cb ECS PRESS XDUCER 1 MDC-5. If the glycol leak is slow (~5%/hr) the leak source may be more rapidly detected by momentarily placing the gly accum vlv off after each component is isolated.
2 With pump off, glycol disch press should equal 1/4 accumulator quantity.
3 Use gly disch press when pump off (momentarily) to estimate accum qty ind. With GLY PUMPS - OFF accumulator quantity should be 4 times pump disch press.
4 Cycling the primary ECS glycol pump may free a sticking accumulator bellows.
5 Radiator isolation valves take 17 sec to position.
6 Half of radiator heat rejection capability lost.
7 The secondary radiator will freeze unless secondary coolant loop activated.
8 Use primary coolant loop in evaporative mode when required for G&N operation. Constraints are evaporator H2O consumption.
20 PRIM GLY DISCH PRESS LOW
< 40 psi or < accum qty / 4 +32 psi
1 Accum prim qty < 30%?
NO
ECS 19 1
PRIM GLY ACCUM QTY LOW OR DECREASING
2 • RAD PRIM HTR - off (ctr) • ECS GLY PUMPS - OFF (momentarily) Gly disch press compatible for indicated gly accum qty?
NO
3 Verify sensor • ECS GLY PUMPS - OFF • PRIM GLY ACCUM vlv - close (CW) • PRIM ACCUM FILL vlv - ON Gly disch press 18-22 psi?
NO
4 GLY DISCH PRESS SENSOR FAILURE
YES
5 ACCUM PRIM QTY IND FAILURE
6 • Return to orig gly pump • RAD PRIM HTR - orig config
YES
6 Check for cavitated pump • PRIM GLY ACCUM vlv - close (CW) • PRIM ACCUM FILL vlv - ON Gly disch press >50 psig?
YES
5 PUMP WAS CAVITATED
NO
9 GLY PUMP DEGRADED OR FAILED
10 • PRIM GLY ACCUM vlv - open (CCW) until gly disch press reads 50 psig. • PRIM ACCUM FILL vlv - OFF
11 RAD PRIM HTR - orig config
12 • Switch to redundant pump • PRIM ACCUM FILL vlv - OFF • PRIM GLY ACCUM vlv - open (CCW)
1 With radiators by-passed, pump disch press is nominally 2 psi lower than with radiators operating.
2 With GLY PUMPS - OFF, glycol discharge press should equal 1/4 accumulator quantity indication.
3 Degraded glycol pump may be verified by checking GLY PRIM COLDPLATE flow rate with MSFN.

SM-2A-1661J

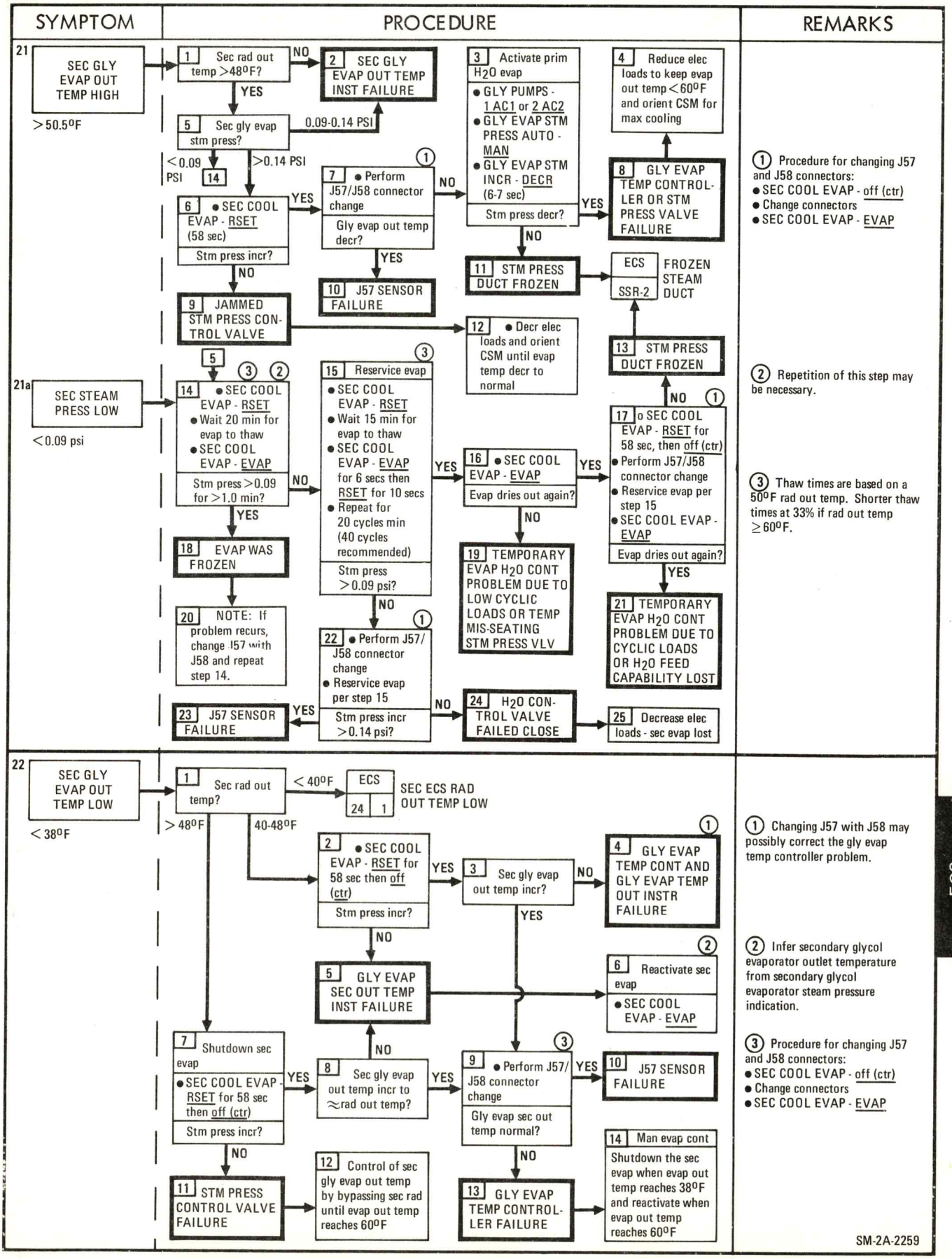
SYMPTOM
PROCEDURE
REMARKS
21
SEC GLY EVAP OUT TEMP HIGH
>50.5°F
1 Sec rad out temp >48°F?
NO
2 SEC GLY EVAP OUT TEMP INST FAILURE
YES
5 Sec gly evap stm press?
0.09-0.14 PSI
<0.09 PSI
14
>0.14 PSI
6 • SEC COOL EVAP - RSET (58 sec)
Stm press incr?
YES
7 • Perform J57/J58 connector change
Gly evap out temp decr?
NO
YES
10 J57 SENSOR FAILURE
9 JAMMED STM PRESS CONTROL VALVE
3 Activate prim H2O evap
• GLY PUMPS - 1 AC1 or 2 AC2
• GLY EVAP STM PRESS AUTO - MAN
• GLY EVAP STM INCR - DECR (6-7 sec)
Stm press decr?
YES
NO
4 Reduce elec loads to keep evap out temp <60°F and orient CSM for max cooling
8 GLY EVAP TEMP CONTROLLER OR STM PRESS VALVE FAILURE
11 STM PRESS DUCT FROZEN
ECS
SSR-2
FROZEN STEAM DUCT
12 • Decr elec loads and orient CSM until evap temp decr to normal
13 STM PRESS DUCT FROZEN
1 Procedure for changing J57 and J58 connectors:
• SEC COOL EVAP - off (ctr)
• Change connectors
• SEC COOL EVAP - EVAP
21a
SEC STEAM PRESS LOW
<0.09 psi
5
3 2
14 • SEC COOL EVAP - RSET
• Wait 20 min for evap to thaw
• SEC COOL EVAP - EVAP
Stm press >0.09 for >1.0 min?
NO
YES
18 EVAP WAS FROZEN
20 NOTE: If problem recurs, change J57 with J58 and repeat step 14.
3
15 Reservice evap
• SEC COOL EVAP - RSET
• Wait 15 min for evap to thaw
• SEC COOL EVAP - EVAP for 6 secs then RSET for 10 secs
• Repeat for 20 cycles min (40 cycles recommended)
Stm press >0.09 psi?
NO
1
22 • Perform J57/J58 connector change
• Reservice evap per step 15
Stm press incr >0.14 psi?
NO
YES
23 J57 SENSOR FAILURE
24 H2O CONTROL VALVE FAILED CLOSE
25 Decrease elec loads - sec evap lost
YES
16 • SEC COOL EVAP - EVAP
Evap dries out again?
YES
NO
19 TEMPORARY EVAP H2O CONT PROBLEM DUE TO LOW CYCLIC LOADS OR TEMP MIS-SEATING STM PRESS VLV
NO
1
17 o SEC COOL EVAP - RSET for 58 sec, then off (ctr)
• Perform J57/J58 connector change
• Reservice evap per step 15
• SEC COOL EVAP - EVAP
Evap dries out again?
YES
21 TEMPORARY EVAP H2O CONT PROBLEM DUE TO CYCLIC LOADS OR H2O FEED CAPABILITY LOST
2 Repetition of this step may be necessary.
3 Thaw times are based on a 50°F rad out temp. Shorter thaw times at 33% if rad out temp ≥60°F.
22
SEC GLY EVAP OUT TEMP LOW
<38°F
1 Sec rad out temp?
<40°F
ECS
24 1
SEC ECS RAD OUT TEMP LOW
>48°F
40-48°F
2 • SEC COOL EVAP - RSET for 58 sec then off (ctr)
Stm press incr?
YES
3 Sec gly evap out temp incr?
NO
1
4 GLY EVAP TEMP CONT AND GLY EVAP TEMP OUT INSTR FAILURE
NO
5 GLY EVAP SEC OUT TEMP INST FAILURE
YES
2
6 Reactivate sec evap
• SEC COOL EVAP - EVAP
7 Shutdown sec evap
• SEC COOL EVAP - RSET for 58 sec then off (ctr)
Stm press incr?
YES
NO
8 Sec gly evap out temp incr to ≈rad out temp?
YES
NO
3
9 • Perform J57/J58 connector change
Gly evap sec out temp normal?
YES
10 J57 SENSOR FAILURE
NO
11 STM PRESS CONTROL VALVE FAILURE
12 Control of sec gly evap out temp by bypassing sec rad until evap out temp reaches 60°F
13 GLY EVAP TEMP CONTROLLER FAILURE
14 Man evap cont
Shutdown the sec evap when evap out temp reaches 38°F and reactivate when evap out temp reaches 60°F
1 Changing J57 with J58 may possibly correct the gly evap temp controller problem.
2 Infer secondary glycol evaporator outlet temperature from secondary glycol evaporator steam pressure indication.
3 Procedure for changing J57 and J58 connectors:
• SEC COOL EVAP - off (ctr)
• Change connectors
• SEC COOL EVAP - EVAP
SM-2A-2259

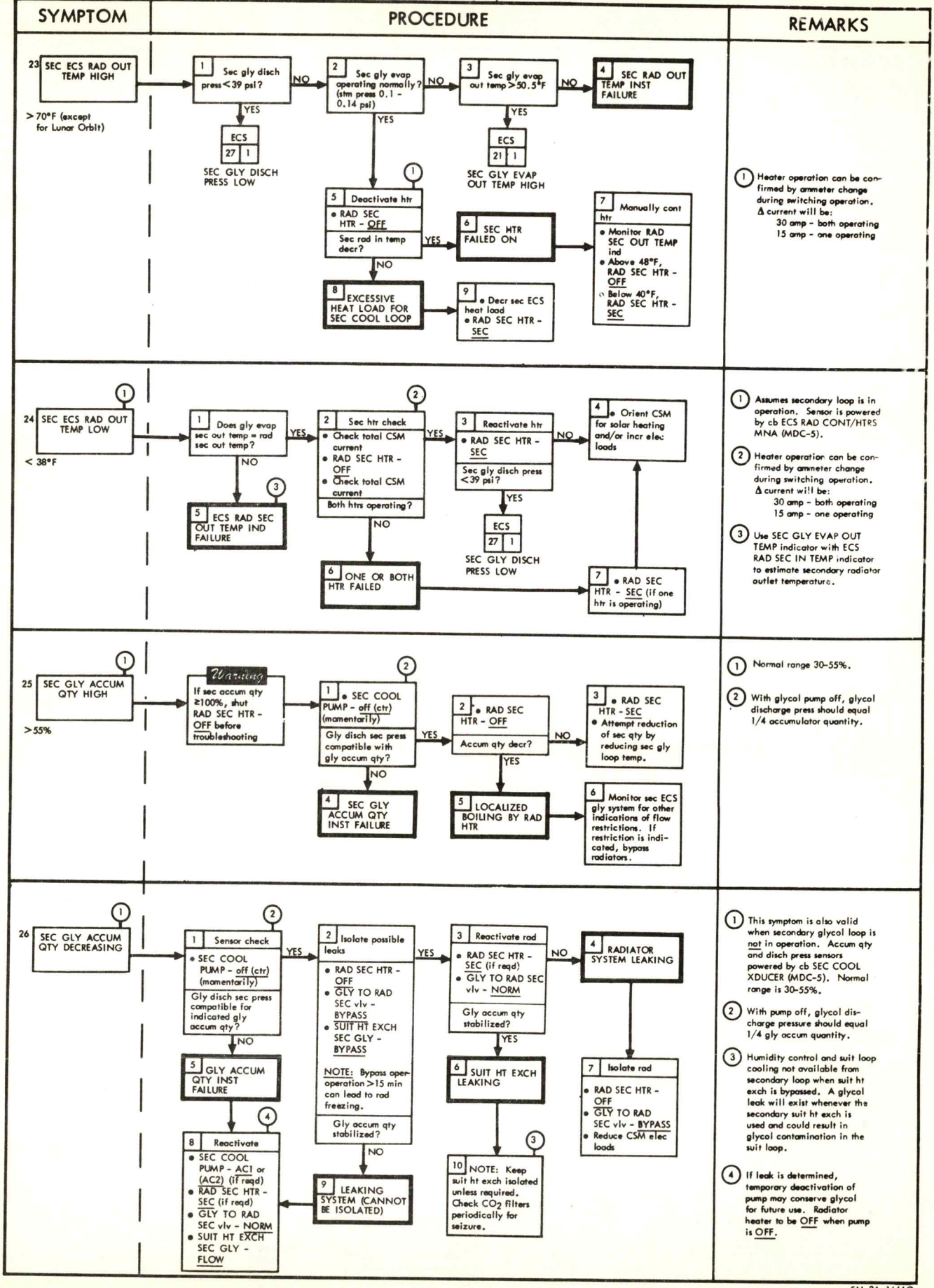
SYMPTOM
PROCEDURE
REMARKS
23 SEC ECS RAD OUT TEMP HIGH
>70°F (except for Lunar Orbit)
1 Sec gly disch press <39 psi?
NO
YES
2 Sec gly evap operating normally? (stm press 0.1 - 0.14 psi)
NO
YES
3 Sec gly evap out temp >50.5°F
NO
YES
4 SEC RAD OUT TEMP INST FAILURE
ECS 27 1
SEC GLY DISCH PRESS LOW
ECS 21 1
SEC GLY EVAP OUT TEMP HIGH
5 Deactivate htr
• RAD SEC HTR - OFF
Sec rad in temp decr?
YES
NO
6 SEC HTR FAILED ON
7 Manually cont htr
• Monitor RAD SEC OUT TEMP ind
• Above 48°F, RAD SEC HTR - OFF
• Below 40°F, RAD SEC HTR - SEC
8 EXCESSIVE HEAT LOAD FOR SEC COOL LOOP
9 • Decr sec ECS heat load
• RAD SEC HTR - SEC
(1) Heater operation can be confirmed by ammeter change during switching operation. Δ current will be:
30 amp - both operating
15 amp - one operating
24 SEC ECS RAD OUT TEMP LOW
< 38°F
1 Does gly evap sec out temp = rad sec out temp?
YES
NO
2 Sec htr check
• Check total CSM current
• RAD SEC HTR - OFF
• Check total CSM current
Both htrs operating?
NO
3 Reactivate htr
• RAD SEC HTR - SEC
Sec gly disch press <39 psi?
YES
NO
4 • Orient CSM for solar heating and/or incr elec loads
5 ECS RAD SEC OUT TEMP IND FAILURE
ECS 27 1
SEC GLY DISCH PRESS LOW
6 ONE OR BOTH HTR FAILED
7 • RAD SEC HTR - SEC (if one htr is operating)
(1) Assumes secondary loop is in operation. Sensor is powered by cb ECS RAD CONT/HTRS MNA (MDC-5).
(2) Heater operation can be confirmed by ammeter change during switching operation. Δ current will be:
30 amp - both operating
15 amp - one operating
(3) Use SEC GLY EVAP OUT TEMP indicator with ECS RAD SEC IN TEMP indicator to estimate secondary radiator outlet temperature.
25 SEC GLY ACCUM QTY HIGH
>55%
Warning
If sec accum qty ≥100%, shut RAD SEC HTR - OFF before troubleshooting
1 • SEC COOL PUMP - off (ctr) (mamentarily)
Gly disch sec press compatible with gly accum qty?
YES
NO
2 • RAD SEC HTR - OFF
Accum qty decr?
YES
NO
3 • RAD SEC HTR - SEC
• Attempt reduction of sec qty by reducing sec gly loop temp.
4 SEC GLY ACCUM QTY INST FAILURE
5 LOCALIZED BOILING BY RAD HTR
6 Monitor sec ECS gly system for other indications of flow restrictions. If restriction is indicated, bypass radiators.
(1) Normal range 30-55%.
(2) With glycol pump off, glycol discharge press should equal 1/4 accumulator quantity.
26 SEC GLY ACCUM QTY DECREASING
1 Sensor check
• SEC COOL PUMP - off (ctr) (mamentarily)
Gly disch sec press compatible for indicated gly accum qty?
YES
NO
2 Isolate possible leaks
• RAD SEC HTR - OFF
• GLY TO RAD SEC vlv - BYPASS
• SUIT HT EXCH SEC GLY - BYPASS
NOTE: Bypass operation >15 min can lead to rad freezing.
Gly accum qty stabilized?
YES
NO
3 Reactivate rad
• RAD SEC HTR - SEC (if reqd)
• GLY TO RAD SEC vlv - NORM
Gly accum qty stabilized?
YES
NO
4 RADIATOR SYSTEM LEAKING
5 GLY ACCUM QTY INST FAILURE
6 SUIT HT EXCH LEAKING
7 Isolate rad
• RAD SEC HTR - OFF
• GLY TO RAD SEC vlv - BYPASS
• Reduce CSM elec loads
8 Reactivate
• SEC COOL PUMP - AC1 or (AC2) (if reqd)
• RAD SEC HTR - SEC (if reqd)
• GLY TO RAD SEC vlv - NORM
• SUIT HT EXCH SEC GLY - FLOW
9 LEAKING SYSTEM (CANNOT BE ISOLATED)
10 NOTE: Keep suit ht exch isolated unless required. Check $CO_2$ filters periodically for seizure.
(1) This symptom is also valid when secondary glycol loop is not in operation. Accum qty and disch press sensors powered by cb SEC COOL XDUCER (MDC-5). Normal range is 30-55%.
(2) With pump off, glycol discharge pressure should equal 1/4 gly accum quantity.
(3) Humidity control and suit loop cooling not available from secondary loop when suit ht exch is bypassed. A glycol leak will exist whenever the secondary suit ht exch is used and could result in glycol contamination in the suit loop.
(4) If leak is determined, temporary deactivation of pump may conserve glycol for future use. Radiator heater to be OFF when pump is OFF.

SM-2A-1666G

| SYMPTOM | PROCEDURE | REMARKS |
|---|---|---|

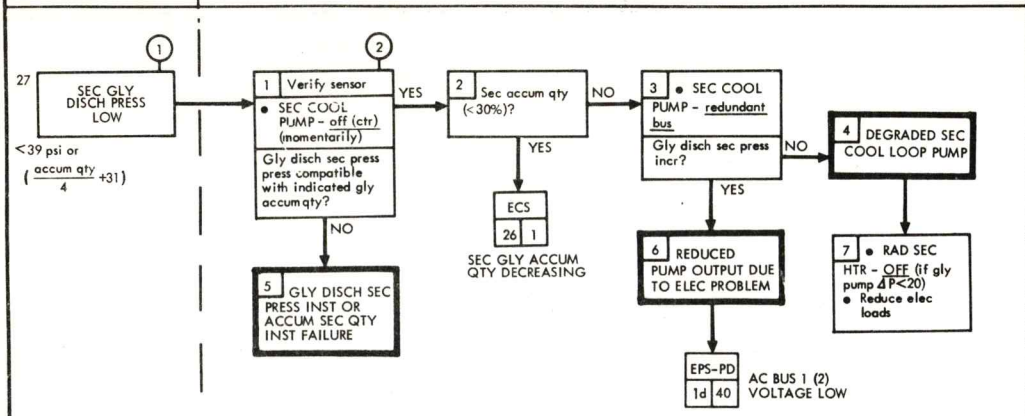


1. Disch press and accum qty sensor powered by cb ECS SEC COOL XDUCERS (2) (MDC-5).
2. With glycol pump off, glycol discharge pressure should equal 1/4 accumulator quantity.

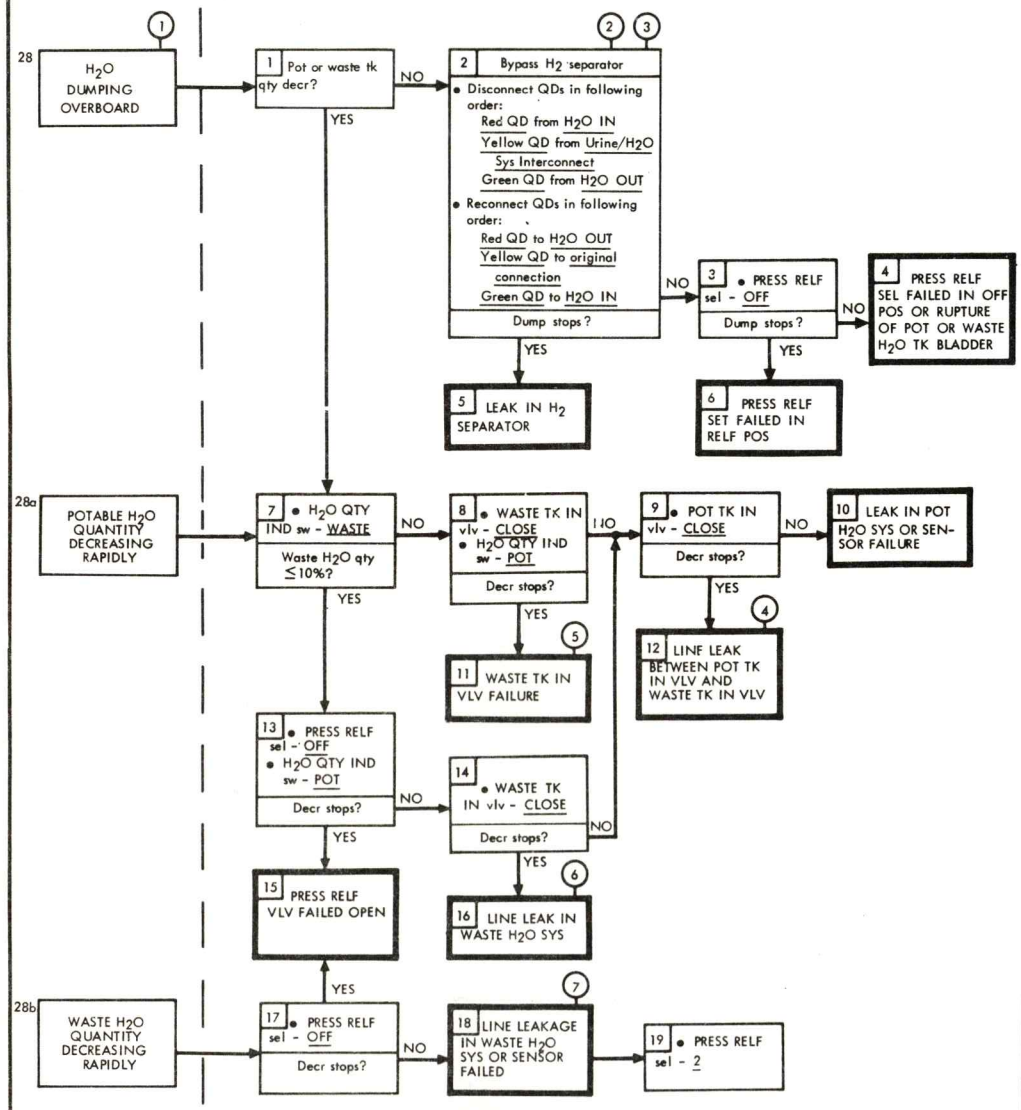


1. Ice particles visible through windows with no manual dump scheduled. MSFN can also verify by $H_2O$ dump nozzle temp.
2. Yellow QD disconnected to gain access to QD at $H_2O$ OUT connector.
3. Dump flow will taper off rather than stop suddenly if leaking separator is bypassed. If dumping does not stop, reconnect QDs to original connections.
4. Incoming fuel cell water will still pass through this leak.
5. This failure is not serious and will result in approximately equal quantities being maintained in potable and waste water tanks.
6. Prim & sec evap unusable. Water evaporators can be used by periodically opening the waste tank inlet valve for approximately 2-3 minutes until the evaporator wicks are saturated. Water line leakage will occur during these periods.
7. Monitor cabin humidity. Check for water in CM.

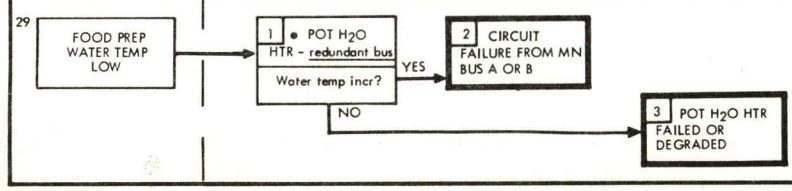




SM2A-1663J

| SYMPTOM | PROCEDURE | REMARKS |
|---|---|---|

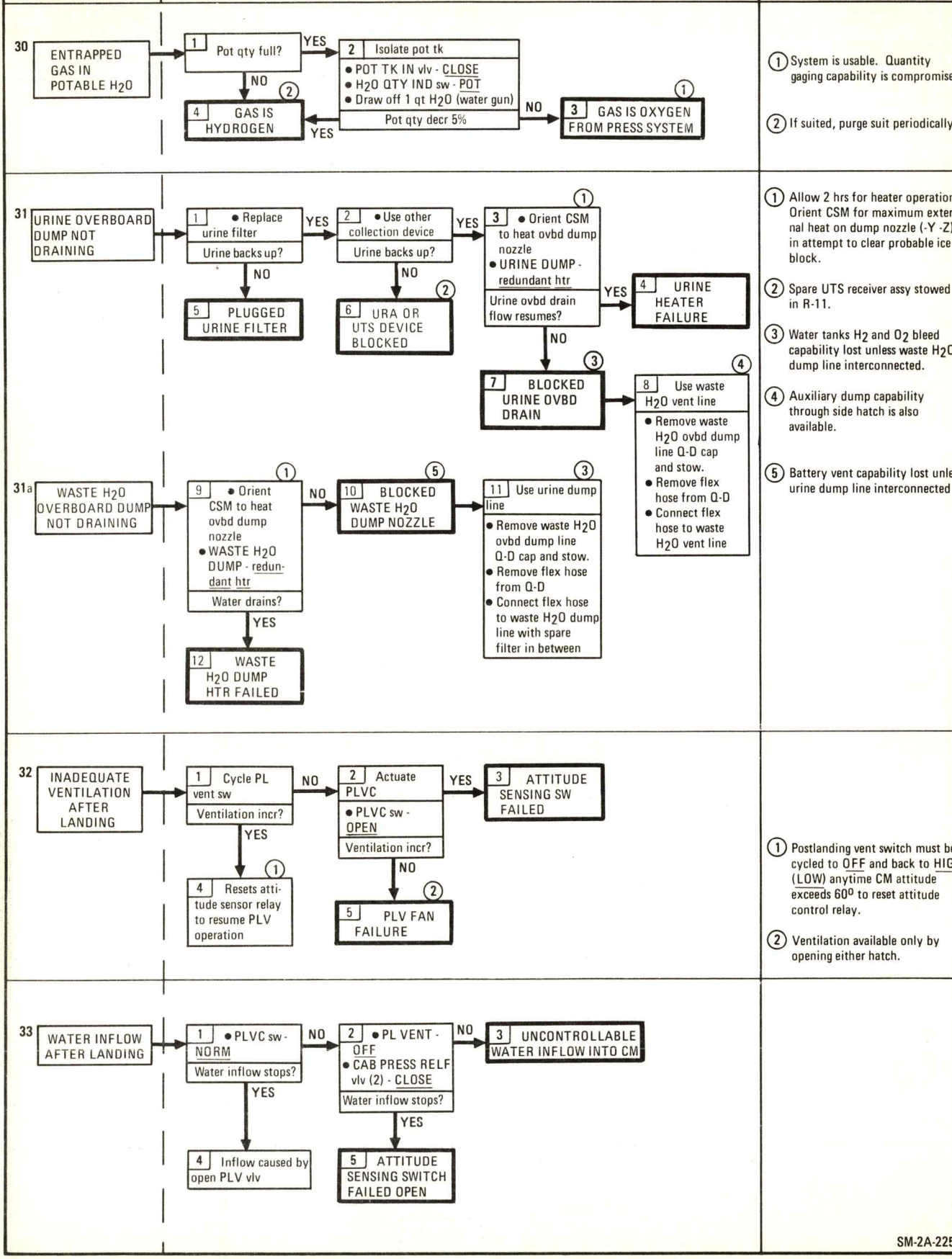


(1) Allow 2 hrs for heater operation. Orient CSM for maximum external heat on dump nozzle (-Y -Z) in attempt to clear probable ice block.

(2) Spare UTS receiver assy stowed in R-11.

(3) Water tanks $H_2$ and $O_2$ bleed capability lost unless waste $H_2O$ dump line interconnected.

(4) Auxiliary dump capability through side hatch is also available.

(5) Battery vent capability lost unless urine dump line interconnected

(1) Postlanding vent switch must be cycled to OFF and back to HIGH (LOW) anytime CM attitude exceeds 60° to reset attitude control relay.

(2) Ventilation available only by opening either hatch.

SM-2A-2258

| SPECIAL SUB ROUTINES | PROCEDURE | REMARKS |
|---|---|---|

SSR-1

SECONDARY LOOP ACTIVATION

1 Simultaneous prim and sec loop operation desired?

YES → ① Caution ② For simultaneous cool loop operation only rad of one cool loop should be used. For loop bypassing rad:
- PRIM/(SEC) GLY TO RAD vlv - BYPASS
- PRIM/(SEC) RAD HTR - OFF

NO → ③ 3 Deactivate prim loop
- PRIM EVAP $H_2O$ CONT vlv - OFF
- ECS RAD PRIM HTR - off (ctr)
- GLY EVAP STM PRESS AUTO - MAN
- GLY EVAP STM INCR - INCR for 58 sec
- GLY PUMPS - OFF

2 Activate sec loop
- ECS IND sel - SEC
- GLY TO RAD SEC vlv - NORM (rad open)
- SEC COOL PUMP - AC1 (or AC2)
- SEC GLY DISCH PRESS ind - > 39 psi
- RAD SEC HTR - SEC (rad open)
- SEC EVAP $H_2O$ CONT vlv - AUTO
- SEC COOL EVAP - EVAP
- SEC GLY EVAP OUT TEMP ind - 40-50.5°F
- SUIT HT EXCH SEC GLY vlv - FLOW (if reqd)

4 If a return to prim operation is desired, proceed as follows:

5 Deactivate sec loop
- RAD SEC HTR - OFF
- SEC COOL EVAP - RESET for 58 sec then off (ctr)
- SEC COOL PUMP - off (ctr)
- SEC EVAP $H_2O$ CONT vlv - OFF

6 Activate prim loop
- ECS IND sel - PRIM
- PRIM GLY TO RAD vlv - NORM
- GLY PUMPS - 1 AC1
- PRIM GLY DISCH PRESS ind - >40 psi
- RAD PRIM HTR - 1
- GLY EVAP IN TEMP - AUTO
- PRIM EVAP $H_2O$ CONT vlv - AUTO
- GLY EVAP STM PRESS AUTO - AUTO
- PRIM GLY EVAP OUT TEMP ind - 40-50°F
- SUIT CKT HT EXH - ON for 30 secs then off (ctr)
- CAB TEMP - AUTO

① If one panel of the primary radiator is lost, the secondary radiator should be used, otherwise the secondary radiator will be lost due to freezing.

② Operation of both coolant loops simultaneously may result in low rad out temp. To preclude rad freezing, terminate evap operation if possible.

③ G&N, DSE, and Signal Conditioners are not coldplated on secondary loop. Usage limits for this equipment are as follows:

G&N 17% duty cycle with max on time of 1 hr 55 min.

DSE 66% duty cycle with max on time of 2 hrs.

SSR-2

FROZEN STEAM DUCT

1 Initiate manual operation
- Orient steam vent outlet to sun (-Y, -Z)
- GLY EVAP STM AUTO - MAN
- GLY EVAP STM INCR - INCR (58 sec)
- GLY EVAP IN TEMP - MAN
- GLY EVAP $H_2O$ FLOW - off (ctr)
- GLY EVAP IN TEMP vlv - adjust (to obtain prim evap out temp ~ 60°)
- GLY EVAP STM INCR - DECR (6-7 sec)

ECS rad prim out temp < -30°F?

YES → ① 4 Activate sec coolant loop
- SEC COOL EVAP - off (ctr)
- SEC COOL PUMP - AC1 or AC2
- RAD SEC HTR - SEC
- RAD PRIM HTR - off (ctr)
- PRIM GLY TO RAD - BYPASS (pull)

NO → 2 Stm press changes (decr) from stabilized value within 15 min?

YES → 3 Service evap when stm press > 0.14 psi.
- GLY EVAP $H_2O$ FLOW - ON (2 min) then off (ctr)

Gly evap temp out <47°F

YES → 6 Resume norm opr
- GLY EVAP STM PRESS AUTO - AUTO
- GLY EVAP $H_2O$ FLOW - AUTO
- GLY EVAP IN TEMP - AUTO
- PRIM GLY TO RAD vlv - NORM
- RAD PRIM HTR - PRIM 1
- RAD SEC HTR - OFF
- SEC COOL PUMP - off (ctr)

NO → 5 Cycle $H_2O$
- GLY EVAP $H_2O$ FLOW - ON 1 min - off (ctr) 15 min

Gly evap temp out <47°F

NO → (5)

YES → (6)

① Primary glycol evaporator temperature inlet can be approximated by secondary radiator inlet temperature.

SM-2A-1525H

| SYMPTOM | PROCEDURE | REMARKS |
|---|---|---|

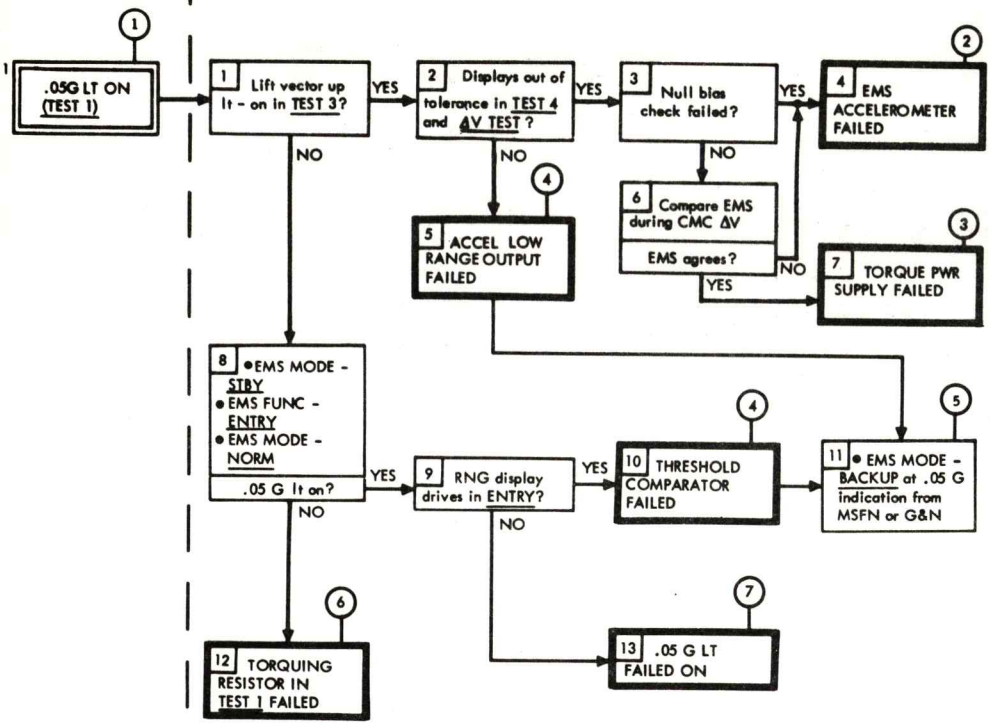


1. The EMS MODE sw assumed to be in STBY for at least 5 sec before self-test started.
2. EMS lost except EMS RSI.
3. All self test capability lost. For entry, G-Drive, and corridor verification will be erroneous. ΔV/RNG ind, V AXIS and EMS RSI unaffected.
4. AUTO position functions of EMS MODE sw lost for entry only.
5. Corridor verification inoperative with EMS MODE sw - BACKUP.
6. EMS FUNC - TEST 1 lost only.
7. Loss of threshold cue only (.05 G lt). RNG ind operation is indication of .05 G.

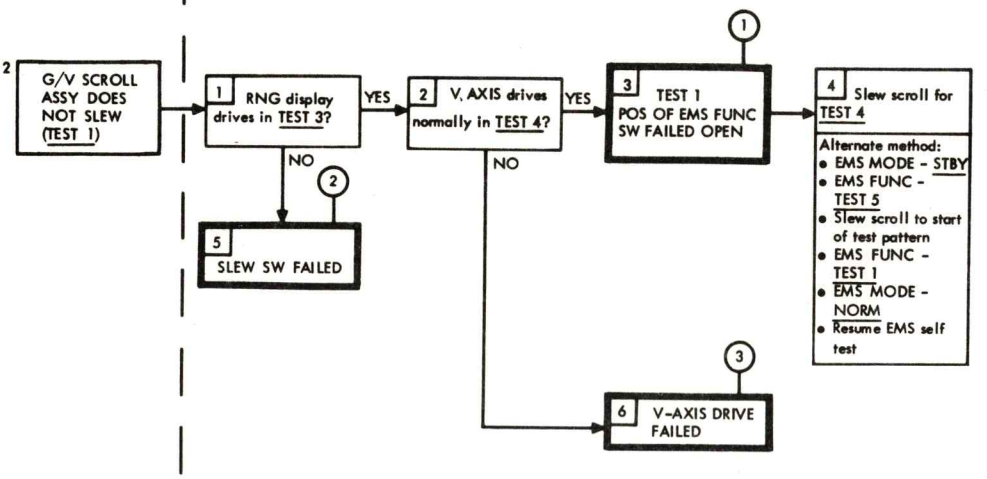


1. EMS FUNC - TEST 1 capability lost only.
2. RNG SET capability lost. SCS ΔV possible only if ΔV display is driven positive by placing the GTA sw - on (up), then - off (down) at the desired value. G&N or ΔV maneuver with the SPS THRUST - DIR ON can be monitored by the change in the ΔV display (down to -9999 fps). Vo can be set by using EMS FUNC - TEST 4 (repeatedly if necessary), stopping the V drive at the desired value by EMS FUNC - TEST 5. No backup capability available.
3. EMS lost for ENTRY except threshold, corridor, and EMS RSI. ΔV functions unaffected.

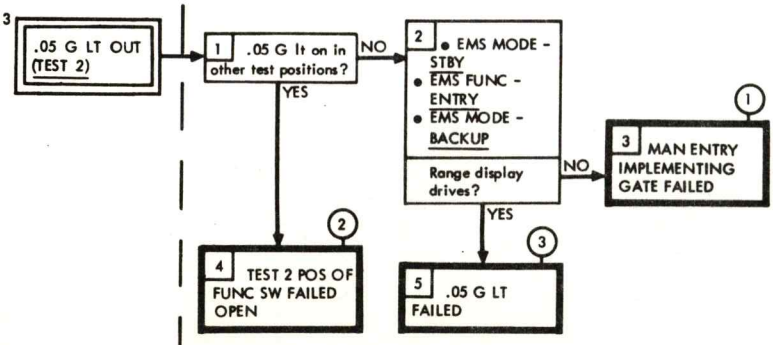


1. ENTRY functions of EMS inoperative except EMS RSI. ΔV functions unaffected.
2. EMS FUNC - TEST 2 inoperative.
3. EMS operation unaffected. RNG ind operation is indication of .05 G.

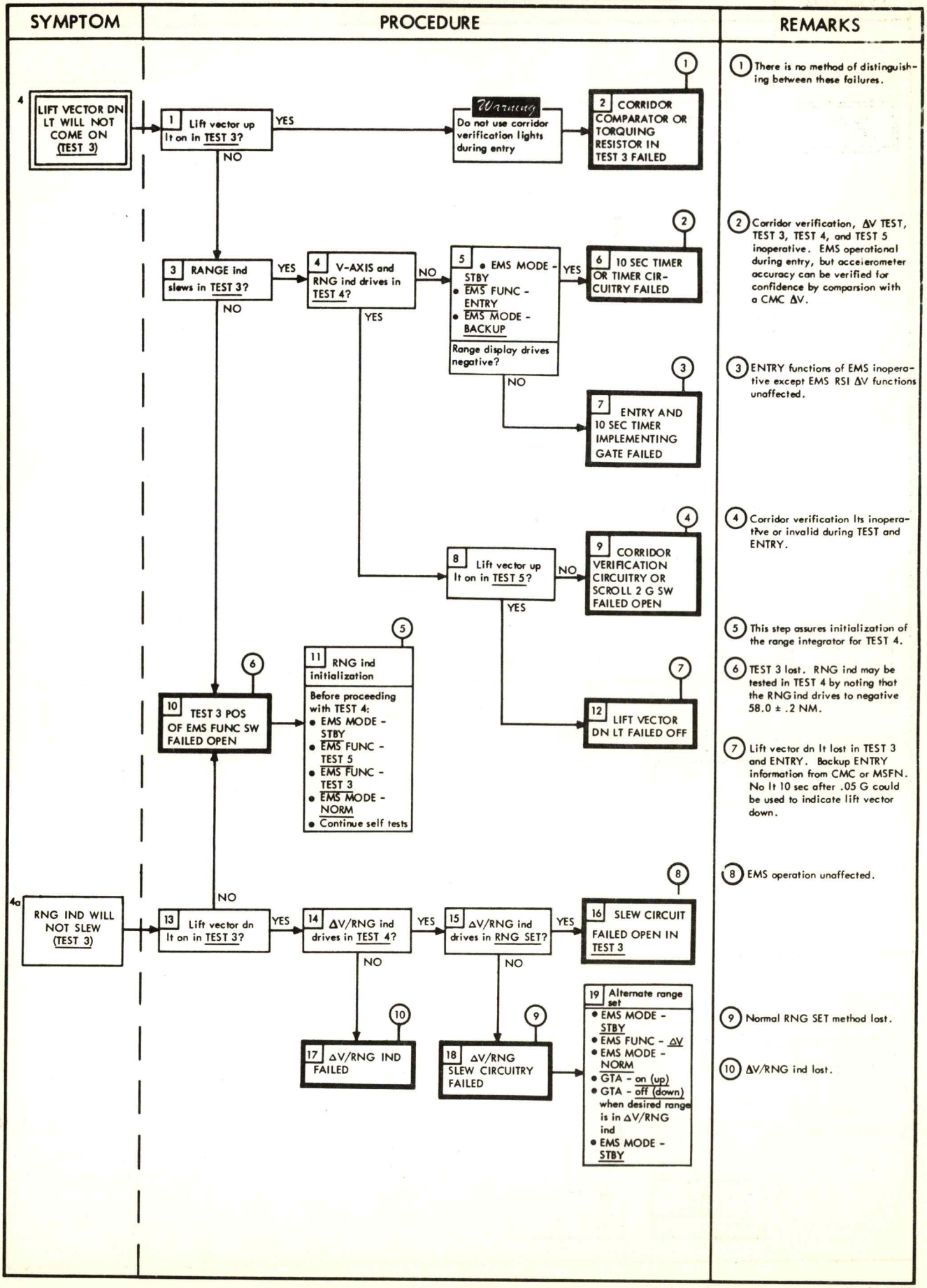
SYMPTOM
PROCEDURE
REMARKS
4 LIFT VECTOR DN LT WILL NOT COME ON (TEST 3)
1 Lift vector up lt on in TEST 3?
YES
NO
Warning
Do not use corridor verification lights during entry
1
2 CORRIDOR COMPARATOR OR TORQUING RESISTOR IN TEST 3 FAILED
3 RANGE ind slews in TEST 3?
YES
NO
4 V-AXIS and RNG ind drives in TEST 4?
NO
YES
5 • EMS MODE - STBY
• EMS FUNC - ENTRY
• EMS MODE - BACKUP
Range display drives negative?
YES
NO
2
6 10 SEC TIMER OR TIMER CIRCUITRY FAILED
3
7 ENTRY AND 10 SEC TIMER IMPLEMENTING GATE FAILED
8 Lift vector up lt on in TEST 5?
NO
YES
4
9 CORRIDOR VERIFICATION CIRCUITRY OR SCROLL 2 G SW FAILED OPEN
5
11 RNG ind initialization
Before proceeding with TEST 4:
• EMS MODE - STBY
• EMS FUNC - TEST 5
• EMS FUNC - TEST 3
• EMS MODE - NORM
• Continue self tests
6
10 TEST 3 POS OF EMS FUNC SW FAILED OPEN
7
12 LIFT VECTOR DN LT FAILED OFF
4a RNG IND WILL NOT SLEW (TEST 3)
13 Lift vector dn lt on in TEST 3?
YES
NO
14 ΔV/RNG ind drives in TEST 4?
YES
NO
15 ΔV/RNG ind drives in RNG SET?
YES
NO
8
16 SLEW CIRCUIT FAILED OPEN IN TEST 3
10
17 ΔV/RNG IND FAILED
9
18 ΔV/RNG SLEW CIRCUITRY FAILED
19 Alternate range set
• EMS MODE - STBY
• EMS FUNC - ΔV
• EMS MODE - NORM
• GTA - on (up)
• GTA - off (down) when desired range is in ΔV/RNG ind
• EMS MODE - STBY
1 There is no method of distinguishing between these failures.
2 Corridor verification, ΔV TEST, TEST 3, TEST 4, and TEST 5 inoperative. EMS operational during entry, but accelerometer accuracy can be verified for confidence by comparsion with a CMC ΔV.
3 ENTRY functions of EMS inoperative except EMS RSI ΔV functions unaffected.
4 Corridor verification lts inoperative or invalid during TEST and ENTRY.
5 This step assures initialization of the range integrator for TEST 4.
6 TEST 3 lost. RNG ind may be tested in TEST 4 by noting that the RNG ind drives to negative 58.0 ± .2 NM.
7 Lift vector dn lt lost in TEST 3 and ENTRY. Backup ENTRY information from CMC or MSFN. No lt 10 sec after .05 G could be used to indicate lift vector down.
8 EMS operation unaffected.
9 Normal RNG SET method lost.
10 ΔV/RNG ind lost.

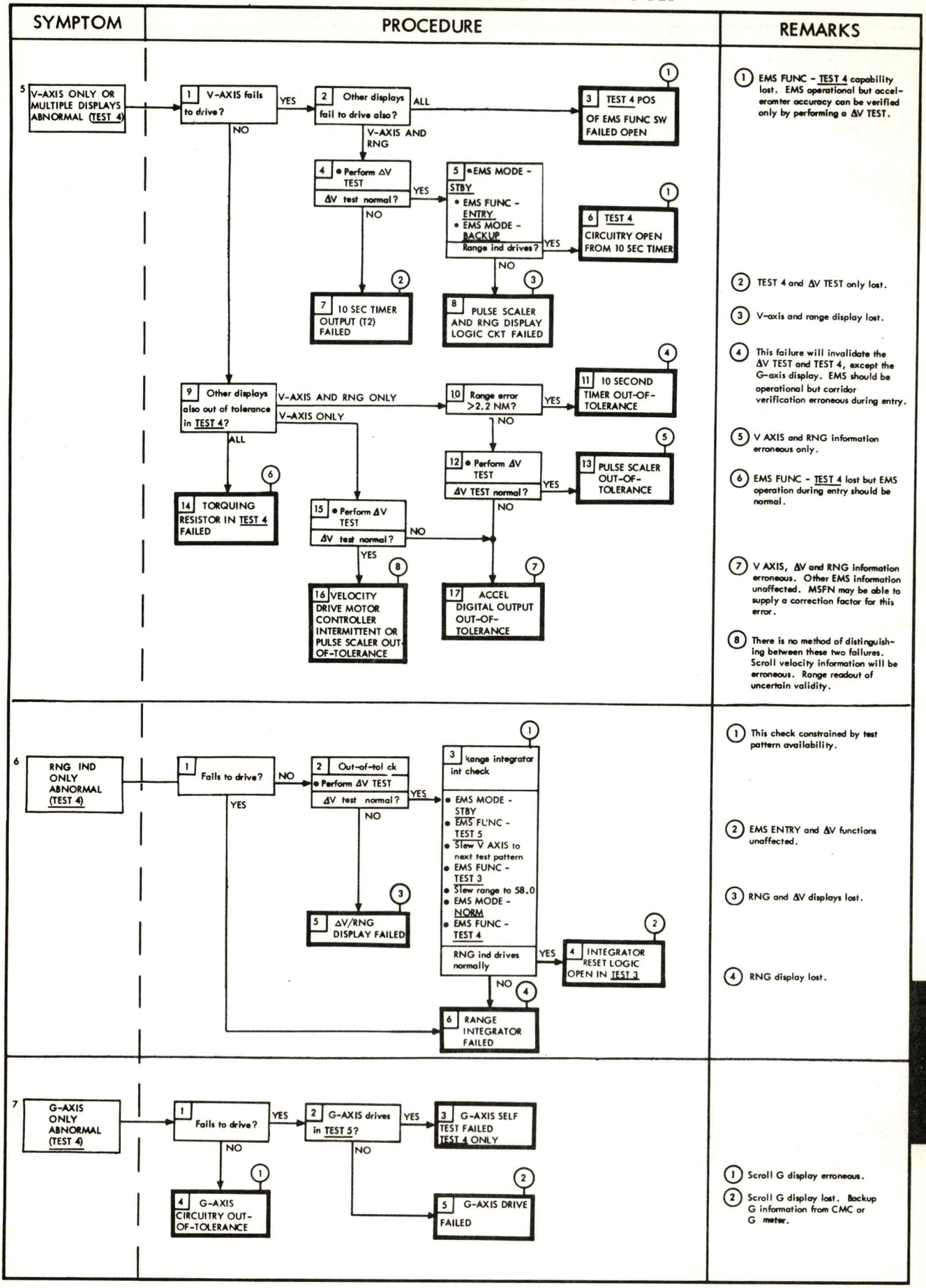
SYMPTOM
PROCEDURE
REMARKS
5 V-AXIS ONLY OR MULTIPLE DISPLAYS ABNORMAL (TEST 4)
1 V-AXIS fails to drive?
YES
NO
2 Other displays fail to drive also?
ALL
V-AXIS AND RNG
3 TEST 4 POS OF EMS FUNC SW FAILED OPEN
4 • Perform ΔV TEST
ΔV test normal?
YES
NO
5 • EMS MODE - STBY
• EMS FUNC - ENTRY
• EMS MODE - BACKUP
Range ind drives?
YES
NO
6 TEST 4 CIRCUITRY OPEN FROM 10 SEC TIMER
7 10 SEC TIMER OUTPUT (T2) FAILED
8 PULSE SCALER AND RNG DISPLAY LOGIC CKT FAILED
9 Other displays also out of tolerance in TEST 4?
V-AXIS AND RNG ONLY
V-AXIS ONLY
ALL
10 Range error >2.2 NM?
YES
NO
11 10 SECOND TIMER OUT-OF-TOLERANCE
12 • Perform ΔV TEST
ΔV TEST normal?
YES
NO
13 PULSE SCALER OUT-OF-TOLERANCE
14 TORQUING RESISTOR IN TEST 4 FAILED
15 • Perform ΔV TEST
ΔV test normal?
NO
YES
16 VELOCITY DRIVE MOTOR CONTROLLER INTERMITTENT OR PULSE SCALER OUT-OF-TOLERANCE
17 ACCEL DIGITAL OUTPUT OUT-OF-TOLERANCE
1 EMS FUNC - TEST 4 capability lost. EMS operational but accelerometer accuracy can be verified only by performing a ΔV TEST.
2 TEST 4 and ΔV TEST only lost.
3 V-axis and range display lost.
4 This failure will invalidate the ΔV TEST and TEST 4, except the G-axis display. EMS should be operational but corridor verification erroneous during entry.
5 V AXIS and RNG information erroneous only.
6 EMS FUNC - TEST 4 lost but EMS operation during entry should be normal.
7 V AXIS, ΔV and RNG information erroneous. Other EMS information unaffected. MSFN may be able to supply a correction factor for this error.
8 There is no method of distinguishing between these two failures. Scroll velocity information will be erroneous. Range readout of uncertain validity.
6 RNG IND ONLY ABNORMAL (TEST 4)
1 Fails to drive?
NO
YES
2 Out-of-tol ck
• Perform ΔV TEST
ΔV test normal?
YES
NO
3 Range integrator int check
• EMS MODE - STBY
• EMS FUNC - TEST 5
• Slew V AXIS to next test pattern
• EMS FUNC - TEST 3
• Slew range to 58.0
• EMS MODE - NORM
• EMS FUNC - TEST 4
RNG ind drives normally
YES
NO
4 INTEGRATOR RESET LOGIC OPEN IN TEST 3
5 ΔV/RNG DISPLAY FAILED
6 RANGE INTEGRATOR FAILED
1 This check constrained by test pattern availability.
2 EMS ENTRY and ΔV functions unaffected.
3 RNG and ΔV displays lost.
4 RNG display lost.
7 G-AXIS ONLY ABNORMAL (TEST 4)
1 Fails to drive?
YES
NO
2 G-AXIS drives in TEST 5?
YES
NO
3 G-AXIS SELF TEST FAILED TEST 4 ONLY
4 G-AXIS CIRCUITRY OUT-OF-TOLERANCE
5 G-AXIS DRIVE FAILED
1 Scroll G display erroneous.
2 Scroll G display lost. Backup G information from CMC or G meter.

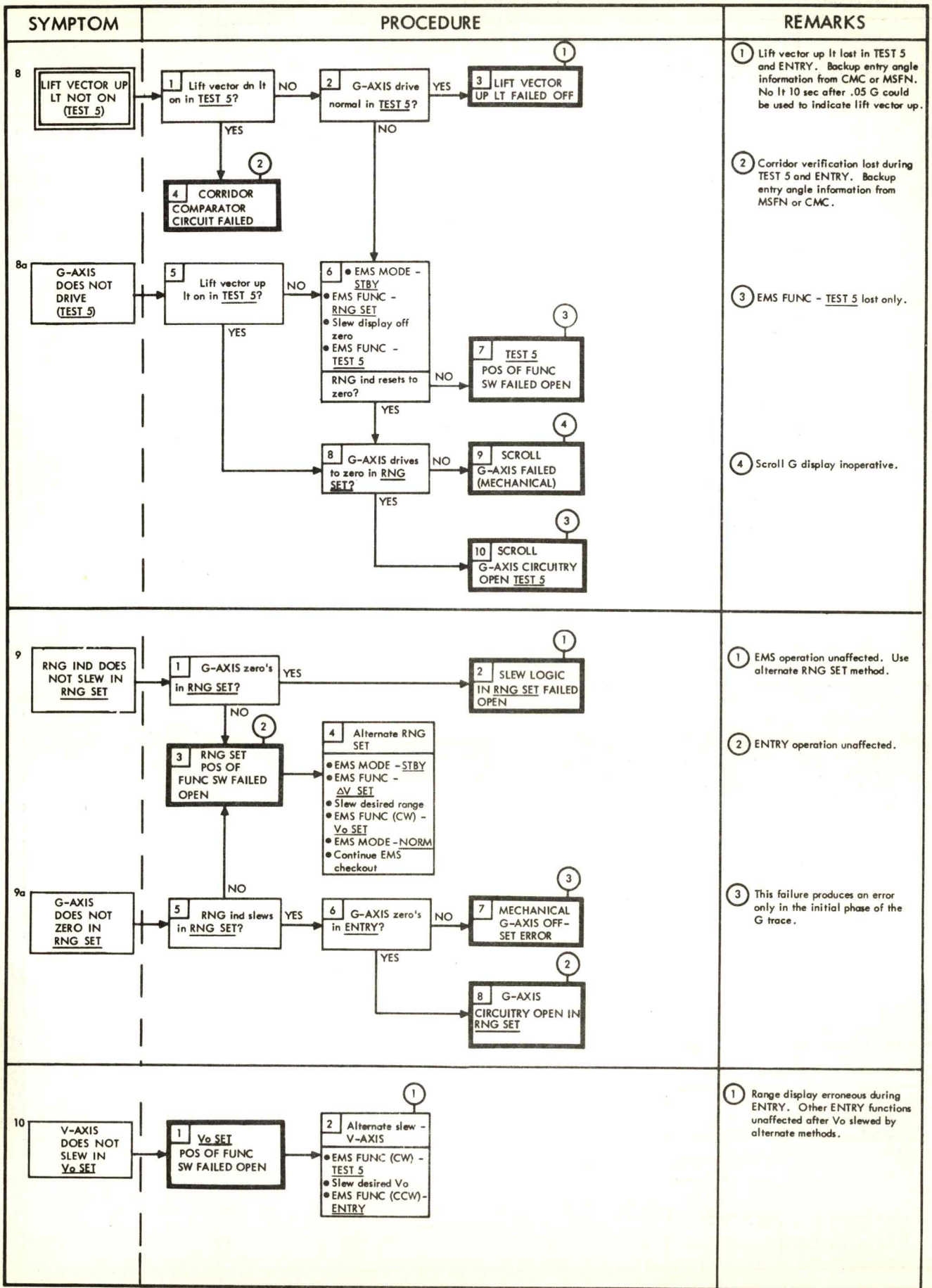
SYMPTOM
PROCEDURE
REMARKS
8
LIFT VECTOR UP LT NOT ON (TEST 5)
1 Lift vector dn lt on in TEST 5?
NO
2 G-AXIS drive normal in TEST 5?
YES
1
3 LIFT VECTOR UP LT FAILED OFF
YES
NO
2
4 CORRIDOR COMPARATOR CIRCUIT FAILED
8a
G-AXIS DOES NOT DRIVE (TEST 5)
5 Lift vector up lt on in TEST 5?
NO
6 • EMS MODE - STBY
• EMS FUNC - RNG SET
• Slew display off zero
• EMS FUNC - TEST 5
RNG ind resets to zero?
NO
3
7 TEST 5 POS OF FUNC SW FAILED OPEN
YES
YES
4
8 G-AXIS drives to zero in RNG SET?
NO
9 SCROLL G-AXIS FAILED (MECHANICAL)
YES
3
10 SCROLL G-AXIS CIRCUITRY OPEN TEST 5
1 Lift vector up lt lost in TEST 5 and ENTRY. Backup entry angle information from CMC or MSFN. No lt 10 sec after .05 G could be used to indicate lift vector up.
2 Corridor verification lost during TEST 5 and ENTRY. Backup entry angle information from MSFN or CMC.
3 EMS FUNC - TEST 5 lost only.
4 Scroll G display inoperative.
9
RNG IND DOES NOT SLEW IN RNG SET
1 G-AXIS zero's in RNG SET?
YES
1
2 SLEW LOGIC IN RNG SET FAILED OPEN
NO
2
3 RNG SET POS OF FUNC SW FAILED OPEN
4 Alternate RNG SET
• EMS MODE - STBY
• EMS FUNC - ΔV SET
• Slew desired range
• EMS FUNC (CW) - Vo SET
• EMS MODE - NORM
• Continue EMS checkout
9a
G-AXIS DOES NOT ZERO IN RNG SET
NO
5 RNG ind slews in RNG SET?
YES
6 G-AXIS zero's in ENTRY?
NO
3
7 MECHANICAL G-AXIS OFF-SET ERROR
YES
2
8 G-AXIS CIRCUITRY OPEN IN RNG SET
1 EMS operation unaffected. Use alternate RNG SET method.
2 ENTRY operation unaffected.
3 This failure produces an error only in the initial phase of the G trace.
10
V-AXIS DOES NOT SLEW IN Vo SET
1 Vo SET POS OF FUNC SW FAILED OPEN
1
2 Alternate slew - V-AXIS
• EMS FUNC (CW) - TEST 5
• Slew desired Vo
• EMS FUNC (CCW) - ENTRY
1 Range display erroneous during ENTRY. Other ENTRY functions unaffected after Vo slewed by alternate methods.

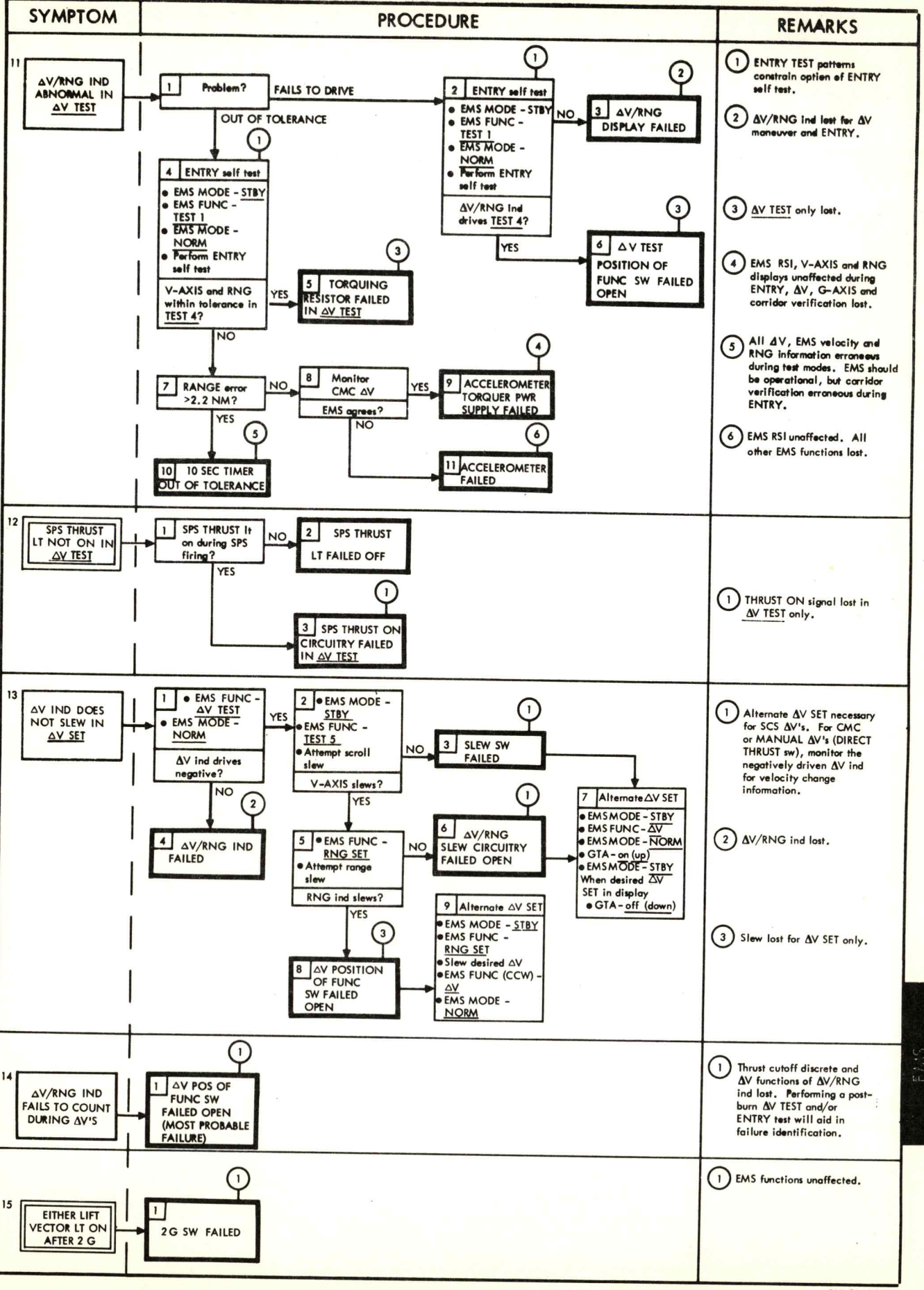
SYMPTOM
PROCEDURE
REMARKS
11
ΔV/RNG IND ABNORMAL IN ΔV TEST
1 Problem?
FAILS TO DRIVE
OUT OF TOLERANCE
2 ENTRY self test
• EMS MODE - STBY
• EMS FUNC - TEST 1
• EMS MODE - NORM
• Perform ENTRY self test
ΔV/RNG ind drives TEST 4?
NO
YES
3 ΔV/RNG DISPLAY FAILED
6 ΔV TEST POSITION OF FUNC SW FAILED OPEN
4 ENTRY self test
• EMS MODE - STBY
• EMS FUNC - TEST 1
• EMS MODE - NORM
• Perform ENTRY self test
V-AXIS and RNG within tolerance in TEST 4?
YES
5 TORQUING RESISTOR FAILED IN ΔV TEST
NO
7 RANGE error >2.2 NM?
NO
8 Monitor CMC ΔV
EMS agrees?
YES
NO
9 ACCELEROMETER TORQUER PWR SUPPLY FAILED
11 ACCELEROMETER FAILED
YES
10 10 SEC TIMER OUT OF TOLERANCE
1 ENTRY TEST patterns constrain option of ENTRY self test.
2 ΔV/RNG ind lost for ΔV maneuver and ENTRY.
3 ΔV TEST only lost.
4 EMS RSI, V-AXIS and RNG displays unaffected during ENTRY, ΔV, G-AXIS and corridor verification lost.
5 All ΔV, EMS velocity and RNG information erroneous during test modes. EMS should be operational, but corridor verification erroneous during ENTRY.
6 EMS RSI unaffected. All other EMS functions lost.
12
SPS THRUST LT NOT ON IN ΔV TEST
1 SPS THRUST lt on during SPS firing?
NO
2 SPS THRUST LT FAILED OFF
YES
3 SPS THRUST ON CIRCUITRY FAILED IN ΔV TEST
1 THRUST ON signal lost in ΔV TEST only.
13
ΔV IND DOES NOT SLEW IN ΔV SET
1 • EMS FUNC - ΔV TEST
• EMS MODE - NORM
ΔV ind drives negative?
YES
NO
2 • EMS MODE - STBY
• EMS FUNC - TEST 5
• Attempt scroll slew
V-AXIS slews?
NO
YES
3 SLEW SW FAILED
4 ΔV/RNG IND FAILED
5 • EMS FUNC - RNG SET
• Attempt range slew
RNG ind slews?
NO
YES
6 ΔV/RNG SLEW CIRCUITRY FAILED OPEN
7 Alternate ΔV SET
• EMS MODE - STBY
• EMS FUNC - ΔV
• EMS MODE - NORM
• GTA - on (up)
• EMS MODE - STBY
When desired ΔV SET in display
• GTA - off (down)
8 ΔV POSITION OF FUNC SW FAILED OPEN
9 Alternate ΔV SET
• EMS MODE - STBY
• EMS FUNC - RNG SET
• Slew desired ΔV
• EMS FUNC (CCW) - ΔV
• EMS MODE - NORM
1 Alternate ΔV SET necessary for SCS ΔV's. For CMC or MANUAL ΔV's (DIRECT THRUST sw), monitor the negatively driven ΔV ind for velocity change information.
2 ΔV/RNG ind lost.
3 Slew lost for ΔV SET only.
14
ΔV/RNG IND FAILS TO COUNT DURING ΔV'S
1 ΔV POS OF FUNC SW FAILED OPEN (MOST PROBABLE FAILURE)
1 Thrust cutoff discrete and ΔV functions of ΔV/RNG ind lost. Performing a post-burn ΔV TEST and/or ENTRY test will aid in failure identification.
15
EITHER LIFT VECTOR LT ON AFTER 2 G
1 2G SW FAILED
1 EMS functions unaffected.

| SYMPTOM | PROCEDURE | REMARKS |
|---|---|---|

**DOCKING**

1 DOCK PROBE WILL NOT FOLD

1 LM manned? NO / YES

2
- Remove drogue from LM side
- Connect probe umbilicals (2) (yellow)
- Cb DOCK PROBE (2) - close
- Verify LM tunnel hatch open and crew clear of tunnel
- PROBE EXTD/REL - EXTD/REL for 20 sec. max.
- Verify probe extension
- Cb DOCK PROBE (2) - open
- Using tools F, W and 1, remove nut and bolt from one end of shock struts (3)
- Fold support beams by pulling probe toward CSM
- Disconnect probe umbilicals (2) (yellow) and remove probe from tunnel

3
- Verify probe support beams unloaded
- Using tools F, W and 1, remove nut and bolt from one end of shock struts (3)
- Connect probe umbilicals (2) (yellow)
- Cock docking latches No. 1 & 3
- Cb DOCK PROBE (2) - closed
- Cb SECS ARM (2) - closed
- After MSFN AOS, SECS LOGIC (both) - on (up)
- After go from MSFN, SECS PYRO ARM (2) - on (up)
- PROBE EXTD/REL - RETRACT
- PROBE RETRACT SEC - 1
- PROBE RETRACT (2) - off
- SECS PYRO ARM (2) - off
- SECS LOGIC (both) - off
- Cb SECS ARM (2) - open
- Manually release docking latches 1 & 3
- Preload the probe
- PROBE EXTD/REL - EXTD/REL for 20 sec. max.
- Verify extend latch indicator (red) is visible
- Depress probe BLEED button (red) at intervals to allow probe to extend slowly
- PROBE EXTD/REL - EXTD/REL and hold
- Pull probe aft (20 lb) to release from drogue
- PROBE EXTD/REL - OFF (release)
- Cb DOCK PROBE (2) - open
- Disconnect probe umbilicals (2) (yellow) and remove probe from tunnel

2 DOCK PROBE EXTD/REL tb A(B) REMAINS GRAY AFTER CAPTURE (TLD only)

1 Attempt retraction
PROBE EXTD/REL - RETR
- PROBE RETR - PRIM 1 (SEC 1)

Retraction? NO / YES

2
- PROBE RETR - PRIM 2 (SEC 2)

Retraction? NO / YES

3
- PROBE RETR - SEC-1 (PRIM-1)

4 Troubleshoot System A(B) before removing probe as follows
- PROBE RETR (2) - OFF
- cb DOCK PROBE (2) - open
- Interchange probe umbilical connectors (cut cable retainers if necessary)
- Cock docking latches 1 and 7
- cb DOCK PROBE (2) - close
- PROBE EXTD/REL - RETR

DOCK PROBE EXTD/REL tb B(A) - gray? YES / NO

5 tb OR tb CIRCUIT FAILURE

6 PYRO OR $GN_2$ BOTTLE FAILURE

7 SYSTEM A (B) CIRCUIT FAILURE IN PROBE

8
- Interchange umbilicals again
- Use SEC 2 (PRIM 2) to initiate only available $GN_2$ bottle when required
- Manually release docking latches No.'s 1 and 7

9 SYSTEM A (B) CIRCUIT FAILURE IN CSM

10
- Use SEC-1 (PRIM 1) and SEC-2 (PRIM 2) to initiate two available $GN_2$ bottles when required.
- Manually release docking latches No.'s 1 and 7

| SYMPTOM | PROCEDURE | REMARKS |
|---|---|---|

**HATCH**

1 FWD HATCH WILL NOT UNLATCH

1 Does actr handle drive clutch engage gearbox?

NO

2 Assume failure of actr handle to engage and drive gearbox

YES

3 Assume failure is frozen gearbox.

4
- Unstow actr handle and push to stop to unlock gearbox
- AUX LATCH DRIVE - rotate 113° (use tool B)
- Remove tool B and verify hatch unlatch

5
- Remove gearbox mounting screws (3) and spacers (use tools W and 4)
- Unstow actr handle and rotate away from hatch approx 30°
- Push actr handle outboard rotating gearbox approx 40° CCW to release latches
- Remove hatch from tunnel

6 To reinstall hatch
- Align hatch in tunnel
- Rotate gearbox approx 40° CW and reinstall gearbox mounting screws (3)

2 FWD HATCH WILL NOT LATCH

1
- Remove hatch to CM cabin
- Attempt to latch mechanism

Does actr handle drive gearbox?

NO

2 Gearbox frozen
- Gearbox disconnect - 180° CCW (tool B)
- Position hatch in tunnel
- AUX LATCH DRIVE - LATCH (113° CW - tool B)
- Verify hatch latched, remove tool B (cannot remove hatch from CM side)

YES

3 Frozen latch
- Inspect to identify frozen latch(es)
- Remove dome nuts from long pivot screws of frozen latch. (Use tools F, W, 2 and 4)
- Remove long pivot screws and rotate latch dog to clear striker plate
- Unlatch mechanism
- Install hatch

SM-2A-2053B

| STA/T | STEP | PROCEDURE | PANEL | REMARKS |
|---|---|---|---|---|
| | | 5.3 EMERGENCY PROCEDURES | | |
| | | INTRODUCTION | | |
| | | Emergency procedures provide the crew with the necessary steps to quickly alleviate situations that have (or will) become both crew-hazardous and time-critical. These procedures require instant reaction on the part of the crew to prevent the conditions from becoming worse. In most instances the conditions are physically sensed by the crew rather than brought to their attention by the caution and warning system or voice communication from MSFN. | | |
| | | 5.3.1 PAD EMERGENCY PROCEDURES | | |
| | | 5.3.1.1 Rapid Hatch Opening | | To accomplish rapid hatch opening after engaging latches, the hatch must be configured for rapid egress as shown in 4.2.1 (step 6), Cabin Closeout. |
| CMP | 1 | Gear box sel - UNLATCH (verify) | Side hatch | |
| | 2 | Actr handle rel - push or squeeze | | |
| | 3 | Actr handle - opr (until hatch is unlatched) | | Lock pin will be sheared. About 5 cycles of actuator operation will open hatch. |
| | | xxxxxxxxxxxxxxxxxxxxxxxxxxxxxxxx<br>If hatch fails to open<br>GN2 ratchet handle - opr<br>GN2 vlv handle - unlock & push (outbd)<br>xxxxxxxxxxxxxxxxxxxxxxxxxxxxxxxx | | |

| STA/T | STEP | PROCEDURE | PANEL | REMARKS |
|---|---|---|---|---|
| | | 5.3.2 FLIGHT EMERGENCY PROCEDURES | | |
| | | 5.3.2.1 Fire/Smoke in CM During Boost | | |
| LMP | 1 | CAB FAN (both) - OFF (verify) | 2 | |
| | 2 | Mon EPS inds for excess current. Immediately remove pwr from affected bus to prevent further damage to critical sys | | |
| | 3 | If in abort mode I or II SUIT COMPR 1 (or 2) - on good ac bus | 4 | |
| | 4 | If in abort mode III & affected bus is MNA (or B) | | |
| CDR | | TVC GMBL DR (2) - 2 (or 1) | 1 | |
| LMP | | INV 1 (or 2) ACl (or 2) - OFF<br>INV 2 (or 1) ACl (or 2) - on (up) | 3 | Powers both ac buses with inverter from good main bus. |
| CDR | 5 | rh CAB PRESS RELF vlv - DUMP (safety latch off) | 325 | |
| | 6 | Continue appropriate abort | | |

| STA/T | STEP | PROCEDURE | PANEL | REMARKS |
|---|---|---|---|---|
| | | 5.3.2.2 Fire/Smoke in CM - Orbital Operations | | |
| | | a. Suited Crew | | |
| LMP | | CAB FAN (both) - OFF (verify) | 2 | |
| | | Mon EPS inds for excess current. Immediately remove pwr from affected bus to prevent further damage to critical sys | | |
| | | SUIT COMPR 1 (or 2) - on good ac bus | 4 | |
| | | Fire extinguisher - use as appropriate | | Water dispenser used on all open nonelectrical fires. Foam fire extinguisher used on fires behind panels, closed compartments, and electrical fires. |
| | | Fire out | | |
| | | WARNING<br>Combustion products may be toxic. Smoke should be removed from cab per Contam in CM, 5.3.2.4 (step 3b) before removing helmets. | | |
| | | Fire persists | | |
| | | Dump cab as follows | | |
| CDR | | SUIT RETURN vlv - close (push) (verify) | 380 | |
| CMP | | EMER CAB PRESS sel - OFF (verify) | 351 | |
| CDR | | REPRESS PKG vlv - OFF (verify) | 326 | |
| ALL | | PGA - vis integrity check | | |

| STA/T | STEP | PROCEDURE | PANEL | REMARKS |
|---|---|---|---|---|
| CDR,LMP | | rh CAB PRESS RELF vlv - DUMP (safety latch off) until CAB PRESS ind 3.0 psia, then to BOOST/ENTR | 325<br>2 | Provides controlled cabin dump until suit circuit pressure verified. |
| LMP | | SUIT PRESS ind - holding >3.5 psia (verify) | | |
| CDR,LMP | | rh CAB PRESS RELF vlv - DUMP &/or CAB PRESS DUMP vlv - open (CCW) | 325<br>Side hatch | |
| LMP | | CAB PRESS ind - 0.0 psia for 6 min | 2 | Time period is a function of equipment oxygen exposure and saturation level. |
| CDR,LMP | | rh CAB PRESS RELF vlv - NORM (safety latch on) & CAB PRESS DUMP vlv - close (CW) | 325<br>Side hatch | |
| | | WARNING<br><br>Do not repress cab until fire source removed. Reignition may occur with additional damage. If condition lasts longer than 10 min, gly circulation & temp cont must be re-established. | | |
| | b. | Unsuited or Partially Suited Crew | | |
| ALL | | Don emer 02 mask (refer to Oper of Emer 02 Masks, 4.5.4.15) | | |
| LMP | | CAB FAN (both) - OFF (verify) | 2 | |
| | | SUIT COMPR (both) - OFF | 4 | |

| STA/T | STEP | PROCEDURE | PANEL | REMARKS |
|---|---|---|---|---|
| LMP | | Mon EPS inds for excess current. Immediately remove pwr from affected bus to prevent further damage to critical sys | 3 | |
| | | Fire extinguisher - use as appropriate | | Water dispenser used on all open nonelectrical fires. Foam fire extinguisher used on fires behind panels, closed compartments, and electrical fires. |
| | | Fire out | | |
| | | WARNING<br>Combustion products may be toxic. Smoke should be removed from cab per Contam in CM, 5.3.2.4 (step 3b) before removing helmets. | | |
| | | Fire persists | | |
| ALL | | Don PGA except helmet (refer to PGA Mode Changes, 4.5.4.6) | | 02 connections red-to-red and blue-to-blue. Use 02 masks as long as possible. |
| CDR | | DIRECT 02 vlv - OPEN (CCW) | 7 | Purges suit inlet manifold, suit hoses, and PGA portion of suit circuit. |
| ALL | | Remove emer 02 mask & don helmet | | |
| CMP | | SUIT FLOW vlv (3) - FULL FLOW | 300,301,302 | |
| LMP | | SUIT COMPR 1 (or 2) - AC1 (or AC2) | 4 | |
| CDR | | DIRECT 02 vlv - close (CW) | 7 | |
| CMP | | EMER CAB PRESS sel - OFF | 351 | |
| ALL | | PGA - vis integrity check | | |
| CDR,LMP | | rh CAB PRESS RELF vlv - DUMP (safety latch off) until | 325 | Provides controlled cabin dump until suit circuit pressure is verified. |
| | | CAB PRESS ind 3.0 psia, then to BOOST/ENTR | 2 | |

| STA/T | STEP | PROCEDURE | PANEL | REMARKS |
|---|---|---|---|---|
| LMP | | SUIT PRESS ind - holding >3.5 psia (verify) | 2 | |
| CDR,LMP | | rh CAB PRESS RELF vlv - DUMP &/or CAB PRESS DUMP vlv - open (CCW) | 325 Side hatch | |
| LMP | | CAB PRESS ind - 0.0 psia for 6 min | 2 | Time period is a function of equipment oxygen exposure and saturation level. |
| CDR,LMP | | rh CAB PRESS RELF vlv - NORM (safety latch on) & CAB PRESS DUMP vlv - close (CW) | 325 Side hatch | |
| | | WARNING<br>Do not repress cab until fire source removed. Reignition may occur with additional damage. If condition lasts longer than 10 min, gly circulation & temp cont must be re-established. | | |
| | | 5.3.2.3 Fire/Smoke in CM During Entry | | |
| CMP | 1 | CAB FAN (both) - OFF (verify) | 2 | |
| LMP | 2 | Mon EPS inds for excess current. Immediately remove pwr from affected bus to prevent further damage to critical sys | 3 | |
| CDR | 3 | RHC PWR DIR (both) - MNA/MNB, & maintain att if req | 1 | |

| STA/T | STEP | PROCEDURE | PANEL | REMARKS |
|---|---|---|---|---|
| | 4 | If affected bus is MNA | | |
| LMP | | INV 1 AC1 - OFF<br>INV 2 AC1 - on (up) | 3 | Powers both ac buses with inverter being powered from good dc main bus, providing ac power for suit compressors and SCS. |
| CDR | | Set up for CM/RCS sys 2<br>AUTO RCS A/C ROLL (4) - OFF<br>AUTO RCS CM 1 (6) - OFF<br>AUTO RCS CM 2 (6) - MNB | 8 | System 1 is normal and system 2 is redundant. |
| | | Use only RHCs to dump RCS prplnts, not CM PRPLNT DUMP sw | | If CM PRPLNT DUMP switch used with MNA bus failed, all oxidizer not expended. |
| | 5 | If affected bus is MNB | | |
| LMP | | INV 2 AC2 - OFF<br>INV 1 AC2 - on (up) | 3 | Powers both ac buses with inverter being powered from good dc main bus, providing ac power for suit compressors and SCS. |
| | | Use only RHCs to dump RCS prplnts, not CM PRPLNT DUMP sw | | If CM PRPLNT DUMP switch used with MNB bus failed, all fuel not expended. |
| CDR | 6 | rh CAB PRESS RELF vlv - DUMP (safety latch off) | 325 | |
| | 7 | Continue entry | | |
| | 5.3.2.4 | Contamination in CM | | Types, sources, and amount of contamination not defined. The very existence of contamination in CM is treated as an emergency. |
| ALL | 1 | Don emer 02 mask &/or PGA immediately (refer to Oper of Emer 02 Masks, 4.5.4.15 & PGA Mode Changes, 4.5.4.6) | | |

| STA/T | STEP | PROCEDURE | PANEL | REMARKS |
|---|---|---|---|---|
| ALL | 2 | Evaluate contam level, & isolate or correct source of contam | | |
| | 3 | If contam persists | | |
| | | a. Acpt contam level in cab | | Slow removal of contamination accomplished with WASTE STOW valve (panel 252) in VENT position. |
| | | Retain 02 mask or remain in PGA | | |
| CDR,CMP | | If in PGA, adj DIRECT 02 vlv for SUIT CAB ΔP >2 in. H20 | 7,2 | |
| | | b. Dump & repress cab | | |
| ALL | | Retain or don PGA (refer to PGA Mode Changes, 4.5.4.6) | | |
| | | PGA - vis integrity check | | |
| | | Perform CM Press Dump, 4.5.4.11 | | |
| | | Perform CM Repressurization, 4.5.4.8a | | |
| | 5.3.2.5 | Contamination in Suit (Suited Crewman) | | Contamination originates within suit circuit if, after purging with oxygen, contamination still present. |
| LMP | 1 | SUIT COMPR 2 - ACl | 4 | |
| | 2 | SUIT COMPR 1 - OFF | | |
| CDR | 3 | DIRECT 02 vlv - OPEN (CCW) for 1 min, then close (CW) | 7 | |
| | 4 | If condition persists | | |
| LMP | | SUIT COMPR 2 - OFF | 4 | |
| CDR | | DIRECT 02 vlv - close (CW) | 7 | |

| STA/T | STEP | PROCEDURE | PANEL | REMARKS |
|---|---|---|---|---|
| ALL | | Doff helmet<br>Don emer 02 mask (refer to Oper of Emer 02 Masks, 4.5.4.15)<br>Determine contam cause | | |
| | 5.3.2.6 | LET Fails to Jettison | | |
| | a. | Tower legs cut/no jett mot ign | | |
| CDR | | LES MOT FIRE pb - push | 1 | Guarded. |
| | | If tower jett successful, | | |
| CMP | | TWR JETT (both) - OFF (ctr) | 2 | Guarded. |
| | | Continue mission | | |
| | | If tower jett unsuccessful | | |
| | | TWR JETT (both) - OFF (ctr) | | Guarded. |
| | | Report to MSFN & go for orbit | | |
| | b. | No response to TWR JETT sws | | |
| | | Verify the following | | |
| CDR | | cb SECS ARM (2) - close | 8 | |
| | | cb SECS LOGIC (2) - close | | |
| | | cb EDS (all) - close | | |
| | | SECS LOGIC (both) - on (up) | | Lever lock. |
| | | SECS PYRO ARM (2) - on (up) | | Lever lock. |
| | | EDS PWR - on (up) | 7 | |
| CMP | | TWR JETT (both) - on (up) | 2 | Guarded. On (up) position is momentary. |
| | | If tower jett successful | | |
| | | TWR JETT (both) - OFF (ctr) | | Guarded. |
| | | Continue mission | | |
| | | If tower jett unsuccessful | | |
| | | TWR JETT (both) - OFF (ctr) | | Guarded. |
| | | Report to MSFN & go for orbit | | |

| STA/T | STEP | PROCEDURE | PANEL | REMARKS |
|---|---|---|---|---|
| | | 5.3.2.7 Forward Hatch Cannot Be Re-installed | | |
| CMP | 1 | Position hatch & depress tunl | | |
| | | Don PGA, 4.5.4.6, thermal gloves, & check suit ckt, 4.5.4.9 | | |
| | | CAB PRESS ind - 4.8-5.2 psia (verify) | 2 | |
| | | O2 FLOW ind - 0.4-0.6 lb/hr (verify) | | |
| | | Position fwd hatch against tunl hatch seal interface misaligning hatch ind arrows by 30° in either direction | | |
| | | While pushing hatch firmly against tunl hatch seal interface | | |
| | | TUNL VENT vlv - TUNL VENT | 12 | |
| | | Wait one min, then place TUNL VENT vlv - LM/CM ΔP | | |
| | | Mon LM/CM ΔP ind & verify ΔP ≈2.5 psid. If ΔP ≠2.5 psid, recycle TUNL VENT vlv until ΔP ind is ≈2.5 psid | | When LM/CM ΔP ind indicates ≈2.5 psid, hatch should be held immobile against seal by ΔP. |
| | | Continue mon LM/CM ΔP ind for 1 min after reaching ≈2.5 psid & verify no detectable change in ΔP ind | | This constitutes a hatch seal integrity check. |
| | | XXXXXXXXXXXXXXXXXXXXXXXXXXXXXXXXXXXXXXXX | | |
| | | LM/CM ΔP ind - press differential decr | | |
| | | Mon CAB PRESS ind & O2 FLOW ind | 2 | |
| | | If CAB PRESS ind & O2 FLOW ind remains stable, LM hatch is probably not integral | | If this condition occurs, further action is dependent upon LM documentation. |
| | | If CAB PRESS ind decr & O2 flow ind incr, CM fwd hatch is probably not integral | | |

| STA/T | STEP | PROCEDURE | PANEL | REMARKS |
|---|---|---|---|---|
| CMP | | Pressurize tunl using PRESS EQUAL vlv | Fwd hatch | |
| | | Open fwd hatch, 4.5.7.4a | | |
| | | Check for foreign object(s) jammed in tunl/hatch, seal interface, or hatch seal damage | | |
| | | Reposition fwd hatch against hatch seal interface | | |
| | | Reinitiate tunl depress & hatch seal integrity check | | |
| | | x xxxx

| STA/T | STEP | PROCEDURE | PANEL | REMARKS |
|---|---|---|---|---|
| | | CM unstable | | |
| CMP | | RCS CMD - OFF | 2 | OFF position is momentary. |
| CDR | 40K' | APEX COVER JETT pb - push | 1 | Guarded. |
| | | DROG DPLY pb - push (2 sec after apex cover jett) | | Guarded. |
| | 30K' | ELS LOGIC - on (up) | | Guarded. |
| | | ELS AUTO - AUTO | | |
| CMP | | | | |
| | 24K' | SCS RCS disable (auto) | | |
| | | RCS CMD - OFF | 2 | OFF position is momentary. |
| | | Apex cover jett (auto) | | The apex cover will be jettisoned at 24K feet plus 0.4 second. |
| CDR | | APEX COVER JETT pb - push | 1 | Guarded. |
| | | Drogue chutes deployed (auto) | | Drogue parachutes deployed at 24K feet plus 2.0 seconds. CM may be very unstable until drogue chutes disreef in ≈11 seconds. |

| STA/T | STEP | PROCEDURE | PANEL | REMARKS |
|---|---|---|---|---|
| | | xxxxxxxxxxxxxxxxxxxxxxx | | |
| CDR | | DROG DPLY pb - push | 1 | Guarded. |
| | | xxxxxxxxxxxxxxxxxxxxxxx | | |
| | | xxxxxxxxxxxxxxxxxxxxxxxxxxxxxxxxx | | |
| | | If no drogue deploy<br>ELS AUTO - MAN<br>Stab CM with direct RCS | | |
| | 5K' | MN DPLY pb - push<br>ELS AUTO - AUTO | | Guarded. |
| | | xxxxxxxxxxxxxxxxxxxxxxxxxxxxxxxxx | | |
| 10K' | | Main chutes & VHF recovery ant deploy (auto) | | Auto deployment occurs between 10,950 and 9,100 feet. Parachutes disreef in ≈15 seconds after pilot mortars fire. |
| | | MN DPLY pb - push (within 1 sec) | | Guarded. MN DPLY pushbutton should be pushed within one second after pilot mortars fire to ensure simultaneous deployment of main parachutes. |
| 10K' +20 sec | | Immediately following mn chute disreefing, CMP must egress from ctr couch & position himself in an optimum stance to support fwd hatch (≈85 lbs)<br>When CMP in position<br>CAB PRESS DUMP vlv - open (CCW) (full open) | Side hatch | |
| CMP | | As press equalization allows fwd hatch to move, retrieve hatch & stow in hatch stowage bag | | |

| STA/T | STEP | PROCEDURE | PANEL | REMARKS |
|---|---|---|---|---|
| | | CAUTION<br><br>Care must be exercised in handling fwd hatch because it will be at a high temp. | | |
| CDR | | CAB PRESS DUMP vlv - close (CW) | Side hatch | |
| LMP | | Set up entry comm<br>VHF ANT - RECY | 3 | |
| | | VHF AM A - SIMPLEX<br>VHF BCN - ON | | If VHF AM B SIMPLEX or VHF AM A DUPLEX is required, turn off beacon during period of transmission. |
| CDR | | Xmit voice (VHF AM) reporting<br>Position<br>Mn chutes disreefed<br>Splash err<br>Crew stat | | Continue voice transmission until touchdown. |
| | | Crew couch struts (4) - unlock | | |
| | | WARNING<br><br>RCS prplnts should not be purged because of open hatch. | | |
| LMP | | cb FLT/PL BAT BUS A, B, & BAT C (3) - close | 275 | |
| | | cb FLT/PL MNA - open | | |
| | | cb FLT/PL MNB - open | | |
| | | cb RAD HTRS OVLD (2) - open | 5 | |
| CDR | | cb SPS PITCH (2) - open | 8 | |
| | | cb SPS YAW (2) - open | | |

| STA/T | STEP | PROCEDURE | PANEL | REMARKS |
|---|---|---|---|---|
| 3K' | | | | |
| CDR | | FLOOD FIXED - POST LDG | 8 | Provides power from flight and postlanding bus to one floodlight in LH couch area and one floodlight in center couch area. Minimize floodlight use during postlanding. Maximum utilization should be 9.6 hours per 48-hour period. |
| | | FLOOD DIM - 1 or 2 | | Position 1 provides power to two secondary floodlights and position 2 provides power to two primary floodlights when FLOOD LTS FIXED switch in POST LDG position after dc main buses deactivated. |
| 1000' | | | | |
| CMP | | CM RCS PRPLNT (both) - OFF | 2 | OFF position is momentary. |
| | | CM RCS PRPLNT tb (both) - bp | | Barber pole indicates at least one propellant isolation valve (fuel or oxidizer) closed in particular system 1 or 2. |
| CDR | | DIRECT O2 vlv - OPEN (CCW) | 7 | |
| LMP | | MN BUS TIE (2) - OFF | 5 | Removes battery power from dc main buses A and B. |
| | | CAUTION<br>MN BUS TIE sw (2) must be left in OFF position to ensure bats A, B, & C are used to pwr postlanding bus only, & to prevent bat shorting caused by water entering CM feed-thru conns. | | |
| | | cb BAT RLY BUS (2) - open<br>Postlanding Check, 4.17 | | |

| STA/T | STEP | PROCEDURE | PANEL | REMARKS |
|---|---|---|---|---|
| | | 5.3.2.8 Emergency Safe of Apex Cover Jett | | |
| | | If no MSFN GO for pyro arm indicates apex cover jett | | |
| CDR | | SECS LOGIC (both) - OFF | 8 | Lever lock. |
| | | cb ELS/CM SM SEP (2) - open | | |
| | | SECS LOGIC (both) - on (up) | | Lever lock. |
| | | If MSFN GO | | |
| | | cb ELS/CM SM SEP BAT A - close | | |
| | | cb ELS/CM SM SEP BAT B - open (verify) | | |
| | | If MSFN GO | | |
| | | cb ELS/CM SM SEP BAT B - open (verify), close at or after apex cover jett at 24K' | | |
| | | Continue norm entry | | |
| | | If still indicates apex cover jett | | |
| | | cb ELS/CM SM SEP BAT B - close | | |
| | | cb ELS/CM SM SEP BAT A - open | | |
| | | SECS LOGIC (both) - OFF, then ON | | |
| | | MSFN confirm GO | | |
| | | cb ELS/CM SM SEP BAT A - open (verify), close at or after apex cover jett at 24K' | | |
| | | Continue norm entry | | |
| | | If still indicates apex cover jett | | |
| | | cb SECS LOGIC A - open | | |

| STA/T | STEP | PROCEDURE | PANEL | REMARKS |
|---|---|---|---|---|
| | | If MSFN GO | | |
| CDR | | cb SECS LOGIC A - open (verify), close at or after apex cover jett at 24K' | 8 | |
| | | Continue norm entry | | |
| | | If still indicates apex cover jett | | |
| | | cb SECS LOGIC A - close | | |
| | | cb SECS LOGIC B - open | | |
| | | If MSFN GO | | |
| | | cb SECS LOGIC B - open (verify), close at or after apex cover jett at 24K' | | |
| | | Continue norm entry | | |
| | | If still indicates apex cover jett | | |
| | | ELS AUTO - MAN | 1 | |
| | | ELS LOGIC - OFF | | Guarded. |
| | | SECS LOGIC (both) - OFF | 8 | Lever lock. |
| | | cb SECS LOGIC (2) - open | | |
| | | cb SECS ARM (2) - open | | |
| CMP | | cb PYRO A&B/SEQ A&B (2) - open | 250 | |
| LMP | | Pyro bus A&B - 0 vdc (verify) | 3 | |
| CMP | | Use tool E (5/32 allen head) to remove closeout pnl located beneath pnl 276 (≈10 fasteners on pnl) | | |
| | | Remove or cut all wires to conn (P545) marked "cut" with white tag. Tape ends of wires cut. Replace closeout pnl | | |
| | | cb PYRO A&B/SEQ A&B (2) - close | 250 | |

| STA/T | STEP | PROCEDURE | PANEL | REMARKS |
|---|---|---|---|---|
| LMP | | Pyro bus A&B voltage - >35 vdc (verify) | 3 | |
| CDR | | cb ELS/CM SM SEP (2) - close | 8 | |
| | | cb SECS LOGIC (2) - close | | |
| | | cb SECS ARM (2) - open (verify) | | |
| | | DO NOT ARM PYRO BUSES | | |
| | | Continue norm entry except | | |
| | | Perform CM RCS Pressurization, 4.15.1.4, & CM/SM Separation, 4.15.2, together at which time arm pyros as follows | | |
| | | PYRO B ARM - SAFE (verify) | | Lever lock. |
| | | PYRO A ARM - on (up) | | Lever lock. |
| | | To jett apex cover at 24K' | | |
| | | PYRO B ARM - on (up) | | Lever lock. |
| | | Continue norm entry | | |
| | 5.3.2.9 | One Y Strut Will Not Fully Extend and Lock | | The other Y strut should be extended and locked as the following operations are performed. |
| | 1 | Break lockwire on one Y strut adjustment jam nut of the affected Y strut | | |
| | 2 | Using tool F, unscrew jam nut | | |
| | 3 | Disengage washer key so that strut bearing pad will turn | | |
| | 4 | Screw strut bearing pad inbd until strut can be extended & locked | | |
| | 5 | Replace washer key, & tighten jam nut | | Lockwire and key not required for water landing. |

| STA/T | STEP | PROCEDURE | PANEL | REMARKS |
|---|---|---|---|---|
| | | 5.3.2.10 CM RCS Fails to Pressurize or Feed Propellant | | |
| | 1 | Verify elect for pressurization | | |
| CMP | | cb EPS BAT BUS (2) - close | 229 | |
| | | cb PYRO A/SEQ A - close | 250 | |
| | | cb PYRO B/SEQ B - close | | |
| CDR | | cb SECS ARM (2) - close | 8 | |
| | | SECS PYRO ARM (2) - on (up) | | Lever lock. |
| | | SECS LOGIC (both) - on (up) | | Lever lock. |
| CMP | 2 | Cycle CM RCS PRESS - on (up) | 2 | |
| | 3 | Verify elect to CM RCS prplnt vlvs | | |
| | | cb EPS GRP 1 & 3 (4) - close | 229 | |
| CDR | | cb SM RCS HTR A&B (2) - close | 8 | |
| | | cb RCS PRPLNT (2) - close | | |
| CMP | 4 | Cycle CM RCS PRPLNT (both) - on (up) | 2 | |
| | 5 | Open He & PRPLNT crossfeed | | |
| | | cb EPS GRP 5 (2) - close | 229 | |
| | | cb RCS LOGIC (2) - close | 8 | |
| CDR | | CM RCS LOGIC - on (up) | 1 | |
| | | CM PRPLNT DUMP - on (up) (mom), then OFF | | Guarded. |
| | | 5.3.3 POSTLANDING EMERGENCY PROCEDURES | | |
| | | 5.3.3.1 Fire/Smoke in CM During Postlanding | | |
| | | a. Stable I | | |
| ALL | | Don emer O2 mask (refer to Oper of Emer O2 Masks, 4.5.4.15) | 2 | |

| STA/T | STEP | PROCEDURE | PANEL | REMARKS |
|---|---|---|---|---|
| CDR | | DIRECT 02 vlv - close (CW) (verify) | 7 | |
| CMP | | cb ENTRY/PL BAT A, B, C (3) - open | 250 | |
| | | cb PYRO A/SEQ A - open | | |
| | | cb PYRO B/SEQ B - open | | |
| | | Fire extinguisher - use as appropriate | | Water dispenser used on all open nonelectrical fires. Foam fire extinguisher used on fires behind panels, closed compartments, and electrical fires. |
| | and/or | Egress CM (refer to Stable I Water Egress Procedure, 4.17.4.2) | | |
| | b. | Stable II | | |
| ALL | | Don emer 02 mask (refer to Oper of Emer 02 Masks, 4.5.4.15) | | |
| CDR | | DIRECT 02 vlv - close (CW) (verify) | 7 | |
| CMP | | Fire extinguisher - use as appropriate | | Water dispenser used on all open nonelectrical fires. Foam fire extinguisher used on fires behind panels, closed compartments, and electrical fires. |
| | | Upright CM to Stable I (refer to Postlanding Stab, Floating Inverted, 4.17.1) & proceed to step a | | |
| | | If CM fails to upright Perform Stable II Water Egress Procedure, 4.17.4.3 | | |

# APPENDIX B

## CM PANEL ILLUSTRATIONS AND CONTROL/INDICATOR CONFIGURATION LIST FOR CSM 112

This section contains CM panel illustrations and a control/indicator configuration list for CSM 112. Panel illustrations present the location of the displays and controls as they appear on the panels in the CM. The control/indicator configuration list provides the configuration of the CM displays and controls prior to backup crew cabin ingress, at lift-off, and during powered down configuration (low power consumption periods). Those talkbacks (tb) are included which reflect the last position selected of spring loaded switches. (Talkback indicators that are operated by sensors will not be listed.) The CSM control/indicator configuration list presents the panels in numerical sequence. The switches are not to be sequentially positioned as listed.

Constraints applicable to the spacecraft when in a powered down configuration are as follows:

- No contingency modes are assumed. Power up capability exists at all times for all systems.
- All spacecraft systems draw minimal power except communications, caution and warning, and life support subsystems. Power is removed from all backup communications systems. The G&C system has been powered down to the level defined by: Power Down Program (P06), 4.8.1.2, Optics Power Control, 4.8.1.4 step 2, and SCS Power Down, 4.8.4.1.
- Power shall be removed from redundant monitoring and unnecessary flight qualification instrumentation by opening applicable circuit breakers.

| NOMENCLATURE | CSM CONTROL/INDICATOR CONFIGURATION | | |
|---|---|---|---|
| | PRIOR TO BACKUP CREW CABIN INGRESS | AT LIFTOFF | POWER DOWN |
| PANEL 1 | | | |
| EMS FUNC | OFF | ΔV | OFF |
| EMS MODE | STBY | STBY | STBY |
| GTA sw | off (down) | off (down) | N/A |
| EMS GTA COVER | Secure | Secure | N/A |
| CMC ATT | IMU | IMU | IMU |
| FDAI SCALE | 5/1 | 5/5 | 5/1 |
| FDAI SEL | 1/2 | 1/2 | 1 or 2 |
| FDAI SOURCE | CMC | CMC | CMC |
| ATT SET | GDC | GDC | IMU |
| MAN ATT ROLL | RATE CMD | RATE CMD | RATE CMD |
| MAN ATT PITCH | ACCEL CMD | ACCEL CMD | RATE CMD |
| MAN ATT YAW | RATE CMD | RATE CMD | RATE CMD |
| LIM CYCLE | OFF | OFF | on (up) |
| ATT DBD | MIN | MIN | MAX |
| RATE | HI | HI | LO |

| | | | |
|---|---|---|---|
| THC PWR | OFF | on (up) | as desired |
| RHC PWR NORM 1 | OFF | AC/DC | OFF |
| RHC PWR NORM 2 | OFF | AC/DC | OFF |
| RHC PWR DIR 1 | OFF | MNA/MNB | OFF |
| RHC PWR DIR 2 | OFF | MNA/MNB | OFF |
| SC CONT | SCS | SCS | as desired |
| CMC MODE | FREE | FREE | FREE |
| BMAG MODE ROLL | RATE 2 | RATE 1 | RATE 2 |
| BMAG MODE PITCH | RATE 2 | RATE 1 | RATE 2 |
| BMAG MODE YAW | RATE 2 | RATE 1 | RATE 2 |
| SPS THRUST | NORM (locked) | NORM (locked) | NORM (locked) |
| ΔV THRUST A | OFF (guarded) | OFF (guarded) | OFF (guarded) |
| ΔV THRUST B | OFF (guarded) | OFF (guarded) | OFF (guarded) |
| SCS TVC PITCH | RATE CMD | AUTO | as desired |
| SCS TVC YAW | RATE CMD | AUTO | as desired |
| GMBL MOT P1 | OFF | OFF | OFF |
| GMBL MOT P2 | OFF | OFF | OFF |
| GMBL MOT Y1 | OFF | OFF | OFF |

PANEL 1

| NOMENCLATURE | CSM CONTROL/INDICATOR CONFIGURATION | | |
|---|---|---|---|
| | PRIOR TO BACKUP CREW CABIN INGRESS | AT LIFTOFF | POWER DOWN |
| PANEL 1 (CONT) | | | |
| GMBL MOT Y2 | OFF | OFF | OFF |
| ΔV CG | LM/CSM | LM/CSM | CSM |
| ELS LOGIC | OFF (guarded) | OFF (guarded) | OFF (guarded) |
| ELS AUTO | AUTO | AUTO | N/A |
| CM RCS LOGIC | OFF | on (up) | OFF |
| CM PRPLNT DUMP | OFF (guarded) | OFF (guarded) | OFF (guarded) |
| CM PRPLNT PURG | off (down) (guarded) | off (down) (guarded) | off (down) (guarded) |
| IMU CAGE | off (down) (guarded) | off (down) (guarded) | off (down) (guarded) |
| EMS ROLL | OFF | OFF | OFF |
| .05 G sw | OFF | OFF | OFF |
| α/Pc IND sw | α | α | as desired |
| LV IND/GPI sw | SII/SIVB | SII/SIVB | GPI |
| TVC GMBL DR PITCH | AUTO | AUTO | 1 |
| TVC GMBL DR YAW | AUTO | AUTO | 1 |

| | | | |
|---|---|---|---|
| EVNT TMR RSET | up (ctr) | up (ctr) | up (ctr) |
| EVNT TMR START | STOP | ctr | ctr |
| EVNT TMR MIN | ctr | ctr | ctr |
| EVNT TMR SEC | ctr | ctr | ctr |

| NOMENCLATURE | CSM CONTROL/INDICATOR CONFIGURATION | | |
|---|---|---|---|
| | PRIOR TO BACKUP CREW CABIN INGRESS | AT LIFTOFF | POWER DOWN |
| PANEL 2 | | | |
| PL VENT VLV | push (lock) | push (lock) | push (lock) |
| PROBE EXTD/REL | OFF (guarded) | OFF (guarded) | OFF (guarded) |
| PROBE EXTD/REL A tb | gray | gray | gray |
| PROBE EXTD/REL B tb | gray | gray | gray |
| PROBE RETR PRIM | OFF | OFF | OFF |
| PROBE RETR SEC | OFF | OFF | OFF |
| EXT RUN/EVA LTS | OFF | OFF | OFF |
| EXT RNDZ LTS | off (ctr) | off (ctr) | off (ctr) |
| TUNL LTS | OFF | OFF | OFF |
| LM PWR | OFF | OFF | OFF |
| SM RCS A He 1 | ctr (CLOSE*) | ctr (OPEN*) | N/A |
| SM RCS A He 1 tb | bp | gray | N/A |
| SM RCS B He 1 | ctr (CLOSE*) | ctr (OPEN*) | N/A |
| SM RCS B He 1 tb | bp | gray | N/A |
| SM RCS C He 1 | ctr (CLOSE*) | ctr (OPEN*) | N/A |

| | | | |
|---|---|---|---|
| SM RCS C He 1 tb | bp | gray | N/A |
| SM RCS D He 1 | ctr (CLOSE*) | ctr (OPEN*) | N/A |
| SM RCS D He 1 tb | bp | gray | N/A |
| UP TLM CM | BLOCK | BLOCK | as desired |
| UP TLM IU | BLOCK | BLOCK | as desired |
| CM RCS PRESS | off (down) (guarded) | off (down) (guarded) | off (down) (guarded) |
| SM RCS IND sw | N/A | PRPLNT QTY | N/A |
| SM RCS A He 2 | ctr (CLOSE*) | ctr (OPEN*) | N/A |
| SM RCS A He 2 tb | bp | gray | N/A |
| SM RCS B He 2 | ctr (CLOSE*) | ctr (OPEN*) | N/A |
| SM RCS B He 2 tb | bp | gray | N/A |
| SM RCS C He 2 | ctr (CLOSE*) | ctr (OPEN*) | N/A |
| SM RCS C He 2 tb | bp | gray | N/A |
| SM RCS D He 2 | ctr (CLOSE*) | ctr (OPEN*) | N/A |
| SM RCS D He 2 tb | bp | gray | N/A |
| SM RCS A HTRS | OFF | OFF | N/A |
| SM RCS B HTRS | OFF | OFF | N/A |

*Identifies last momentary position switched to.

PANEL 2

| NOMENCLATURE | CSM CONTROL/INDICATOR CONFIGURATION | | |
|---|---|---|---|
| | PRIOR TO BACKUP CREW CABIN INGRESS | AT LIFTOFF | POWER DOWN |
| PANEL 2 (CONT) | | | |
| SM RCS C HTRS | OFF | OFF | N/A |
| SM RCS D HTRS | OFF | OFF | N/A |
| SM RCS A PRPLNT | ctr (CLOSE*) | ctr (OPEN*) | as desired |
| SM RCS A PRIM PRPLNT tb | bp | gray | -- |
| SM RCS A SEC PRPLNT tb | bp | gray | -- |
| SM RCS B PRPLNT | ctr (CLOSE*) | ctr (OPEN*) | as desired |
| SM RCS B PRIM PRPLNT tb | bp | gray | -- |
| SM RCS B SEC PRPLNT tb | bp | gray | -- |
| SM RCS C PRPLNT | ctr (CLOSE*) | ctr (OPEN*) | as desired |
| SM RCS C PRIM PRPLNT tb | bp | gray | -- |
| SM RCS C SEC PRPLNT tb | bp | gray | -- |
| SM RCS D PRPLNT | ctr (CLOSE*) | ctr (OPEN*) | as desired |
| SM RCS D PRIM PRPLNT tb | bp | gray | -- |
| SM RCS D SEC PRPLNT tb | bp | gray | -- |
| RCS CMD | ctr (OFF*) | ctr (OFF*) | ctr (OFF*) |

| | | | |
|---|---|---|---|
| RCS TRNFR | ctr (SM*) | ctr (SM*) | N/A |
| CM RCS 1 PRPLNT | ctr (OFF*) | ctr (on, up*) | as desired |
| CM RCS 1 PRPLNT tb | bp | gray | -- |
| CM RCS 2 PRPLNT | ctr (OFF*) | ctr (on, up*) | as desired |
| CM RCS 2 PRPLNT tb | bp | gray | -- |
| RCS A SEC FUEL PRESS | ctr (OPEN*) | ctr (CLOSE*) | N/A |
| RCS B SEC FUEL PRESS | ctr (OPEN*) | ctr (CLOSE*) | N/A |
| RCS C SEC FUEL PRESS | ctr (OPEN*) | ctr (CLOSE*) | N/A |
| RCS D SEC FUEL PRESS | ctr (OPEN*) | ctr (CLOSE*) | N/A |
| EDS AUTO | OFF | on (up) | OFF |
| CSM/LM FNL SEP 1 | off (down) (guarded) | off (down) (guarded) | off (down) (guarded) |
| CSM/LM FNL SEP 2 | off (down) (guarded) | off (down) (guarded) | off (down) (guarded) |
| CM/SM SEP 1 | off (down) (guarded) | off (down) (guarded) | off (down) (guarded) |
| CM/SM SEP 2 | off (down) (guarded) | off (down) (guarded) | off (down) (guarded) |
| SIVB/LM SEP | off (down) (guarded) | off (down) (guarded) | off (down) (guarded) |
| PRPLNT DUMP | AUTO | AUTO | N/A |
| 2 ENG OUT sw | AUTO | AUTO | OFF |

*Identifies last momentary position switched to.

| NOMENCLATURE | CSM CONTROL/INDICATOR CONFIGURATION | | |
|---|---|---|---|
| | PRIOR TO BACKUP CREW CABIN INGRESS | AT LIFTOFF | POWER DOWN |
| PANEL 2 (CONT) | | | |
| LV RATES sw | AUTO | AUTO | OFF |
| TWR JETT 1 | AUTO (guarded) | AUTO (guarded) | OFF |
| TWR JETT 2 | AUTO (guarded) | AUTO (guarded) | OFF |
| LV GUID sw | IU | IU | IU |
| LV STAGE | OFF (guarded) | OFF (guarded) | OFF (guarded) |
| XLUNAR INJECT | INJECT | INJECT | N/A |
| MN REL | off (down) (guarded) | off (down) (guarded) | off (down) (guarded) |
| MSN TMR HRS | ctr | ctr | ctr |
| MSN TMR MIN | ctr | ctr | ctr |
| MSN TMR SEC | ctr | ctr | ctr |
| C/W NORM | NORM | BOOST | NORM |
| C/W CSM | CSM | CSM | CSM |
| C/W PWR | 1 | 1 | 1 |
| C/W LAMP TEST | ctr | ctr | ctr |
| MSN TMR | STOP | START | START |

| | | | |
|---|---|---|---|
| RCS IND sel | CM 2 | SM D | as desired |
| CAB FAN 1 | OFF | OFF | OFF |
| CAB FAN 2 | OFF | OFF | OFF |
| H2 HTRS 1 | OFF | OFF | AUTO |
| H2 HTRS 2 | OFF | OFF | AUTO |
| 02 HTRS 1 | OFF | OFF | AUTO |
| 02 HTRS 2 | OFF | OFF | AUTO |
| 02 PRESS IND sw | TK 1 | SURGE TK | N/A |
| H2 FANS 1 | OFF | OFF | as req |
| H2 FANS 2 | OFF | OFF | as req |
| 02 FANS 1 | OFF | OFF | as req |
| 02 FANS 2 | OFF | OFF | as req |
| ECS IND sel | PRIM | PRIM | N/A |
| RAD FLOW CONT AUTO | AUTO | AUTO | AUTO |
| ECS RAD tb | gray | gray | gray |
| RAD FLOW CONT PWR | off (ctr) | off (ctr) | PWR |
| RAD MAN SEL | RAD 1 | RAD 1 | RAD 1 |
| RAD PRIM HTR | off (ctr) | off (ctr) | 1 |

PANEL 2

| NOMENCLATURE | CSM CONTROL/INDICATOR CONFIGURATION | | |
|---|---|---|---|
| | PRIOR TO BACKUP CREW CABIN INGRESS | AT LIFTOFF | POWER DOWN |
| PANEL 2 (CONT) | | | |
| RAD SEC HTR | OFF | OFF | OFF |
| POT H2O HTR | OFF | OFF | OFF |
| SUIT H2O ACCUM AUTO | ctr | 1 | 1 |
| SUIT H2O ACCUM ON | ctr | ctr | N/A |
| SUIT HT EXCH | off (ctr) | off (ctr) | off (ctr) |
| SEC COOL EVAP | off (ctr) | off (ctr) | off (ctr) |
| SEC COOL PUMP | off (ctr) | off (ctr) | off (ctr) |
| H2O QTY IND sw | POT | POT | N/A |
| GLY EVAP IN TEMP | MAN | MAN | AUTO |
| GLY EVAP STM AUTO | MAN | MAN | AUTO |
| GLY EVAP STM INCR | ctr | ctr | N/A |
| GLY EVAP H2O FLOW | off (ctr) | off (ctr) | AUTO |
| CAB TEMP | MAN | MAN | AUTO |
| CAB TEMP tw | N/A | N/A | N/A |
| HI GAIN ANT TRACK | AUTO | AUTO | as desired |

| | | | |
|---|---|---|---|
| HI GAIN ANT BEAM | WIDE | WIDE | as desired |
| HI GAIN ANT PITCH cont | 0° | 0° | as desired |
| HI GAIN ANT YAW cont | 180° | 180° | as desired |
| HI GAIN ANT PWR | OFF | OFF | as desired |
| HI GAIN ANT SERVO | PRIM | PRIM | PRIM |

PANEL 2

| NOMENCLATURE | CSM CONTROL/INDICATOR CONFIGURATION | | |
|---|---|---|---|
| | PRIOR TO BACKUP CREW CABIN INGRESS | AT LIFTOFF | POWER DOWN |
| PANEL 3 | | | |
| VHF ANT | SM LEFT | SM LEFT | as desired |
| SPS INJ VLV A1 ind | CLOSE | CLOSE | CLOSE |
| SPS INJ VLV A2 ind | CLOSE | CLOSE | CLOSE |
| SPS INJ VLV B3 ind | CLOSE | CLOSE | CLOSE |
| SPS INJ VLV B4 ind | CLOSE | CLOSE | CLOSE |
| FC 1 RAD | off (ctr) (NORM*) | off (ctr) (NORM*) | off (ctr) (NORM*) |
| FC 1 RAD tb | gray | N/A | gray |
| FC 2 RAD | off (ctr) (NORM*) | off (ctr) (NORM*) | off (ctr) (NORM*) |
| FC 2 RAD tb | gray | N/A | gray |
| FC 3 RAD | off (ctr) (NORM*) | off (ctr) (NORM*) | off (ctr) (NORM*) |
| FC 3 RAD tb | gray | N/A | gray |
| FC 1 HTRS | on (up) | on (up) | on (up) |
| FC 2 HTRS | on (up) | on (up) | on (up) |
| FC 3 HTRS | on (up) | on (up) | on (up) |
| FC IND sel | 2 | 2 | as desired |

| | | | |
|---|---|---|---|
| SPS QTY TEST | ctr | ctr | ctr |
| OXID FLOW VLV INCR | INCR | INCR | INCR |
| OXID FLOW VLV PRIM | PRIM | PRIM | as desired |
| PUG MODE | NORM | NORM | as desired |
| FC 1 PURG | OFF | OFF | OFF |
| FC 2 PURG | OFF | OFF | OFF |
| FC 3 PURG | OFF | OFF | OFF |
| FC 1 REACS | ctr (on, up*) | ctr (on, up*) | N/A |
| FC 1 REACS tb | gray | gray | gray |
| FC 2 REACS | ctr (on, up*) | ctr (on, up*) | N/A |
| FC 2 REACS tb | gray | gray | gray |
| FC 3 REACS | ctr (on, up*) | ctr (on, up*) | N/A |
| FC 3 REACS tb | gray | gray | gray |
| FC 1 MNA | ctr (on, up*) | ctr (on, up*) | ctr (on, up*) |
| FC 1 MNA tb | gray | gray | gray |
| FC 2 MNA | ctr (on, up*) | ctr (on, up*) | ctr (on, up*) |
| FC 2 MNA tb | gray | gray | gray |

*Identifies last momentary position switched to.

PANEL 3

| NOMENCLATURE | CSM CONTROL/INDICATOR CONFIGURATION | | |
|---|---|---|---|
| | PRIOR TO BACKUP CREW CABIN INGRESS | AT LIFTOFF | POWER DOWN |
| PANEL 3 (CONT) | | | |
| FC 3 MNA | OFF | OFF | OFF |
| FC 3 MNA tb | bp | bp | bp |
| MNA RSET | ctr (RSET*) | ctr (RSET*) | ctr (RSET*) |
| FC 1 MNB | OFF | OFF | OFF |
| FC 1 MNB tb | bp | bp | bp |
| FC 2 MNB | OFF | OFF | OFF |
| FC 2 MNB tb | bp | bp | bp |
| FC 3 MNB | ctr (on, up*) | ctr (on, up*) | ctr (on, up*) |
| FC 3 MNB tb | gray | gray | gray |
| MNB RSET | ctr (RSET*) | ctr (RSET*) | ctr (RSET*) |
| DC IND sel | MN A | MN A | as desired |
| BAT CHG | OFF | OFF | OFF |
| SPS He VLV 1 | AUTO | AUTO | AUTO |
| SPS He VLV 1 tb | bp | bp | bp |
| SPS He VLV 2 | AUTO | AUTO | AUTO |

| | | | |
|---|---|---|---|
| SPS He VLV 2 tb | bp | bp | bp |
| SPS LINE HTRS | off (ctr) | off (ctr) | as desired |
| SPS PRESS IND sw | He | He | as desired |
| S BD XPNDR | OFF | PRIM | as req |
| S BD PWR AMPL PRIM | PRIM | PRIM | as req |
| S BD PWR AMPL HI | off (ctr) | HI | HI |
| PWR AMPL tb | bp | gray | gray |
| S BD MODE VOICE | VOICE | VOICE | VOICE |
| S BD MODE PCM | PCM | PCM | PCM |
| S BD MODE RNG | RNG | RNG | as req |
| S BD AUX TAPE | ctr | ctr | ctr |
| S BD AUX TV | ctr | ctr | ctr |
| UP TLM DATA | DATA | DATA | DATA |
| UP TLM CMD | OFF | NORM | NORM |
| S BD ANT OMNI A | B | B | as req |
| S BD ANT OMNI | OMNI | OMNI | as req |
| VHF AM SQLCH A tw | noise +1 | noise +1 | noise +1 |

*Identifies last momentary position switched to.

| NOMENCLATURE | CSM CONTROL/INDICATOR CONFIGURATION | | |
|---|---|---|---|
| | PRIOR TO BACKUP CREW CABIN INGRESS | AT LIFTOFF | POWER DOWN |
| PANEL 3 (CONT) | | | |
| VHF AM A | off (ctr) | off (ctr) | as req |
| VHF AM B | off (ctr) | DUPLEX | off (ctr) |
| VHF AM RCV | off (ctr) | off (ctr) | off (ctr) |
| VHF BCN | OFF | OFF | OFF |
| VHF RNG | OFF | OFF | OFF |
| S BD SQLCH | ENBL | ENBL | ENBL |
| FC REAC VLVS | NORM | LATCH | NORM |
| H2 PURG LINE HTR | OFF | OFF | OFF |
| VHF AM SQLCH B tw | noise +1 | noise +1 | noise +1 |
| TAPE RCDR PCM | PCM/ANLG | PCM/ANLG | PCM/ANLG |
| TAPE RCDR RCD | RCD | RCD | RCD |
| TAPE RCDR FWD | off (ctr) | FWD | FWD |
| TAPE MOTION tb | bp | gray | gray |
| SCE PWR | NORM | NORM | NORM |
| PMP PWR | NORM | NORM | NORM |
| PCM BIT RATE | HI | HI | LO |

| | | | |
|---|---|---|---|
| INV 1 | MNA | MNA | MNA |
| INV 2 | MNB | MNB | MNB |
| INV 3 | OFF | OFF | OFF |
| INV 1 AC1 | on (up) | on (up) | on (up) |
| INV 2 AC1 | OFF | OFF | OFF |
| INV 3 AC1 | OFF | OFF | OFF |
| AC1 RSET | ctr (RSET*) | ctr (RSET*) | ctr (RSET*) |
| INV 1 AC2 | OFF | OFF | OFF |
| INV 2 AC2 | on (up) | on (up) | on (up) |
| INV 3 AC2 | OFF | OFF | OFF |
| AC2 RSET | ctr (RSET*) | ctr (RSET*) | ctr (RSET*) |
| AC IND sel | BUS 2 ØC | BUS 2 ØC | as desired |

*Identifies last momentary position switched to.

PANEL 3

| NOMENCLATURE | CSM CONTROL/INDICATOR CONFIGURATION | | |
|---|---|---|---|
| | PRIOR TO BACKUP CREW CABIN INGRESS | AT LIFTOFF | POWER DOWN |
| PANEL 4 | | | |
| SPS GAUGING | AC1 | AC1 | as desired |
| TELCOM GRP 1 | AC1 | AC1 | AC1 |
| TELCOM GRP 2 | AC2 | AC2 | AC2 |
| GLY PUMPS | OFF | 1 AC1 | 1 AC1 |
| SUIT COMPR 1 | OFF | AC1 | AC1 |
| SUIT COMPR 2 | OFF | OFF | OFF |
| cb SUIT COMPR AC1 ØA | close | close | close |
| cb SUIT COMPR AC1 ØB | close | close | close |
| cb SUIT COMPR AC1 ØC | close | close | close |
| cb SUIT COMPR AC2 ØA | close | close | close |
| cb SUIT COMPR AC2 ØB | close | close | close |
| cb SUIT COMPR AC2 ØC | close | close | close |
| cb GLY PUMPS AC1 ØA | close | close | close |
| cb GLY PUMPS AC1 ØB | close | close | close |
| cb GLY PUMPS AC1 ØC | close | close | close |

| | | | |
|---|---|---|---|
| cb GLY PUMPS AC2 ØA | close | close | close |
| cb GLY PUMPS AC2 ØB | close | close | close |
| cb GLY PUMPS AC2 ØC | close | close | close |

PANEL 4

| NOMENCLATURE | CSM CONTROL/INDICATOR CONFIGURATION | | |
|---|---|---|---|
| | PRIOR TO BACKUP CREW CABIN INGRESS | AT LIFTOFF | POWER DOWN |
| PANEL 5 | | | |
| FC 1 PUMPS | AC1 | AC1 | AC1 |
| FC 2 PUMPS | AC2 | AC2 | AC2 |
| FC 3 PUMPS | AC2 | AC2 | AC2 |
| G/N PWR | AC1 | AC1 | OFF |
| MN BUS TIE BAT A/C | OFF | on (up) | OFF |
| MN BUS TIE BAT B/C | OFF | on (up) | OFF |
| BAT CHGR | AC1 | AC1 | as desired |
| NONESS BUS | MNA | MNA | OFF |
| cb SNSR SIG MNA | close | close | close |
| cb SNSR SIG MNB | close | close | close |
| cb SNSR SIG AC1 | close | close | close |
| cb SNSR SIG AC2 | close | close | close |
| cb C/W MNA | close | close | close |
| cb C/W MNB | close | close | close |
| cb LM PWR 1 MNB | close | close | close |

| | | | |
|---|---|---|---|
| cb INV CONT 1 | close | close | close |
| cb INV CONT 2 | close | close | close |
| cb INV CONT 3 | close | close | close |
| cb DC SNSR UNIT A | close | close | close |
| cb DC SNSR UNIT B | close | close | close |
| cb AC SNSR UNIT 1 | close | close | close |
| cb AC SNSR UNIT 2 | close | close | close |
| cb BAT RLY BUS BAT A | close | close | close |
| cb BAT RLY BUS BAT B | close | close | close |
| cb LM PWR 2 MNB | close | close | close |
| INTGL LTS | on | as desired | as desired |
| FLOOD LTS | OFF (full dim or full BRT) | OFF (full dim or full BRT) | OFF (full dim or full BRT) |
| FLOOD DIM | 1 | 1 | 1 |
| FLOOD FIXED | OFF | OFF | OFF |
| cb RAD CONTR AC1 | close | close | close |
| cb RAD CONTR AC2 | close | close | close |
| cb RAD CONT/HTRS MNA | close | close | close |
| cb RAD CONT/HTRS MNB | close | close | close |

PANEL 5

| NOMENCLATURE | CSM CONTROL/INDICATOR CONFIGURATION | | |
|---|---|---|---|
| | PRIOR TO BACKUP CREW CABIN INGRESS | AT LIFTOFF | POWER DOWN |
| PANEL 5 (CONT) | | | |
| cb RAD HTRS OVLD BAT A | close | close | close |
| cb RAD HTRS OVLD BAT B | close | close | close |
| cb BAT CHGR BAT A | close | close | close |
| cb BAT CHGR BAT B | close | close | close |
| cb BAT CHGR MNA | close | close | close |
| cb BAT CHGR MNB | close | close | close |
| cb BAT CHGR AC PWR | close | close | close |
| cb ESS INST MNA | close | close | close |
| cb ESS INST MNB | close | close | close |
| cb NONESS INST | open | open | open |
| cb SCI EQUIP SEB 1 | close | close | open |
| cb SCI EQUIP SEB 2 | close | close | open |
| cb SCI EQUIP HATCH | open | open | open |
| cb POT H2O HTR MNA | close | close | close |
| cb POT H2O HTR MNB | close | close | close |

| | | | |
|---|---|---|---|
| cb H2O ACCUM MNA | close | close | close |
| cb H2O ACCUM MNB | close | close | close |
| cb WASTE/POT H2O XDUCR MNA | close | close | close |
| cb WASTE/POT H2O XDUCR MNB | close | close | close |
| cb ECS PRESS XDUCR 1 MNA | close | close | close |
| cb ECS PRESS XDUCR 1 MNB | close | close | close |
| cb ECS PRESS XDUCR 2 MNA | close | close | close |
| cb ECS PRESS XDUCR 2 MNB | close | close | close |
| cb ECS TEMP XDUCR MNA | close | close | close |
| cb ECS TEMP XDUCR MNB | close | close | close |
| cb SEC COOL AC1 | close | close | close |
| cb SEC COOL AC2 | close | close | close |
| cb SEC COOL RAD HTR MNA | close | close | close |
| cb SEC COOL XDUCR MNA | close | close | close |
| cb SEC COOL XDUCR MNB | close | close | close |
| cb WASTE DUMP HTRS MNA | open | open | close |
| cb WASTE DUMP HTRS MNB | open | open | close |
| cb CAB FAN 1 AC1 ØA | close | close | close |

PANEL 5

| NOMENCLATURE | CSM CONTROL/INDICATOR CONFIGURATION | | |
|---|---|---|---|
| | PRIOR TO BACKUP CREW CABIN INGRESS | AT LIFTOFF | POWER DOWN |
| PANEL 5 (CONT) | | | |
| cb CAB FAN 1 AC1 ØB | close | close | close |
| cb CAB FAN 1 AC1 ØC | close | close | close |
| cb CAB FAN 2 AC2 ØA | close | close | close |
| cb CAB FAN 2 AC2 ØB | close | close | close |
| cb CAB FAN 2 AC2 ØC | close | close | close |
| cb G/N PWR AC1 | close | close | close |
| cb G/N PWR AC2 | close | close | close |
| cb G/N IMU MNA | close | close | close |
| cb G/N IMU MNB | close | close | close |
| cb G/N IMU HTR MNA | close | close | close |
| cb G/N IMU HTR MNB | close | close | close |
| cb G/N CMPTR MNA | close | close | close |
| cb G/N CMPTR MNB | close | close | close |
| cb G/N OPT MNA | close | close | close |
| cb G/N OPT MNB | close | close | close |

| PANEL 6 | | | |
|---|---|---|---|
| MODE | INTERCOM/PTT | as desired | as desired |
| VOX SENS tw | 5 | as req | as req |
| PWR | OFF | AUDIO/TONE | AUDIO/TONE |
| MASTER VOL tw | 5 | as req | as req |
| INTERCOM | T/R | T/R | T/R |
| INTERCOM VOL tw | 5 | as req | as req |
| PAD COMM | T/R | OFF | OFF |
| PAD COMM VOL tw | 5 | as desired | as desired |
| S BD | T/R | T/R | T/R |
| S BD VOL tw | 5 | as req | as req |
| VHF AM | T/R | T/R | T/R |
| VHF AM VOL tw | 5 | as req | as req |
| AUDIO CONT | NORM | NORM | NORM |
| SUIT PWR | OFF | on (up) | on (up) |

PANELS 5 AND 6

| NOMENCLATURE | CSM CONTROL/INDICATOR CONFIGURATION | | |
|---|---|---|---|
| | PRIOR TO BACKUP CREW CABIN INGRESS | AT LIFTOFF | POWER DOWN |
| PANEL 7 | | | |
| EDS PWR | OFF | on (up) | OFF |
| TVC SERVO PWR 1 | OFF | AC1/MNA | OFF |
| TVC SERVO PWR 2 | OFF | AC2/MNB | OFF |
| FDAI/GPI PWR | OFF | BOTH | OFF |
| LOGIC 2/3 PWR | on (up) | on (up) | OFF |
| ELEC PWR | OFF | GDC/ECA | OFF |
| SIG CONDR/DR BIAS PWR 1 | OFF | AC1 | OFF |
| SIG CONDR/DR BIAS PWR 2 | OFF | AC2 | OFF |
| BMAG 1 PWR | WARM UP | ON | WARM UP |
| BMAG 2 PWR | WARM UP | ON | WARM UP |
| DIRECT 02 vlv | OPEN (CCW) | partially OPEN (CCW) | N/A |

| PANEL 8 | | | |
|---|---|---|---|
| cb SCS TVC AC1 | close | close | close |
| cb SCS AC1 | close | close | close |
| cb SCS AC2 | close | close | close |
| AUTO RCS A/C ROLL A1 | OFF | OFF | OFF |
| AUTO RCS A/C ROLL C1 | OFF | OFF | OFF |
| AUTO RCS A/C ROLL A2 | OFF | OFF | OFF |
| AUTO RCS A/C ROLL C2 | OFF | OFF | OFF |
| AUTO RCS B/D ROLL B1 | OFF | MNA | OFF |
| AUTO RCS B/D ROLL D1 | OFF | MNB | OFF |
| AUTO RCS B/D ROLL B2 | OFF | MNA | OFF |
| AUTO RCS B/D ROLL D2 | OFF | MNB | OFF |
| AUTO RCS PITCH A3 | OFF | MNB | OFF |
| AUTO RCS PITCH C3 | OFF | MNA | OFF |
| AUTO RCS PITCH A4 | OFF | MNA | OFF |
| AUTO RCS PITCH C4 | OFF | MNB | OFF |
| AUTO RCS YAW B3 | OFF | MNA | OFF |
| AUTO RCS YAW D3 | OFF | MNB | OFF |

PANELS 7 AND 8

| NOMENCLATURE | CSM CONTROL/INDICATOR CONFIGURATION | | |
|---|---|---|---|
| | PRIOR TO BACKUP CREW CABIN INGRESS | AT LIFTOFF | POWER DOWN |
| PANEL 8 (CONT) | | | |
| AUTO RCS YAW B4 | OFF | MNB | OFF |
| AUTO RCS YAW D4 | OFF | MNA | OFF |
| cb SCS ECA/TVC AC2 | close | close | close |
| cb SCS DIR ULL MNA | close | close | close |
| cb SCS DIR ULL MNB | close | close | close |
| cb SCS CONTR 1 DIR MNA | close | close | close |
| cb SCS CONTR 1 DIR MNB | close | close | close |
| cb SCS CONTR 2 DIR MNA | close | close | close |
| cb SCS CONTR 2 DIR MNB | close | close | close |
| cb A/C ROLL MNA | close | close | as desired |
| cb A/C ROLL MNB | close | close | as desired |
| cb B/D ROLL MNA | close | close | as desired |
| cb B/D ROLL MNB | close | close | as desired |
| cb SCS PITCH MNA | close | close | as desired |
| cb SCS PITCH MNB | close | close | as desired |

| | | | |
|---|---|---|---|
| cb SCS YAW MNA | close | close | as desired |
| cb SCS YAW MNB | close | close | as desired |
| NUMERICS LTS | as desired | as desired | as desired |
| FLOOD LTS | OFF (full dim or full BRT) | OFF (full dim or full BRT) | OFF (full dim or full BRT) |
| INTGL LTS | as desired | as desired | as desired |
| cb ORDEAL AC2 | close | close | close |
| cb ORDEAL MNB | close | close | close |
| cb SCS CONTR AUTO MNA | close | close | close |
| cb SCS CONTR AUTO MNB | close | close | close |
| cb SCS LOGIC 1/2 MNA | close | close | close |
| cb SCS LOGIC 3/4 MNA | close | close | close |
| cb SCS LOGIC 1/4 MNB | close | close | close |
| cb SCS LOGIC 2/3 MNB | close | close | close |
| cb SCS SYS MNA | close | close | close |
| cb SCS SYS MNB | close | close | close |
| FLOOD DIM | 1 | 1 | 1 |
| FLOOD FIXED | OFF | OFF | OFF |
| FLOAT BAG 1 L | VENT (locked) | VENT (locked) | OFF |



PANEL 8

| NOMENCLATURE | CSM CONTROL/INDICATOR CONFIGURATION | | |
|---|---|---|---|
| | PRIOR TO BACKUP CREW CABIN INGRESS | AT LIFTOFF | POWER DOWN |
| PANEL 8 (CONT) | | | |
| FLOAT BAG 2 R | VENT (locked) | VENT (locked) | OFF |
| FLOAT BAG 3 CTR | VENT (locked) | VENT (locked) | OFF |
| SECS LOGIC 1 | OFF (locked) | on (up) (locked) | OFF (locked) |
| SECS LOGIC 2 | OFF (locked) | on (up) (locked) | OFF (locked) |
| SECS PYRO A ARM | SAFE (locked) | on (up) (locked) | SAFE (locked) |
| SECS PYRO B ARM | SAFE (locked) | on (up) (locked) | SAFE (locked) |
| cb CM RCS 1 HTR MNA | open | open | open |
| cb CM RCS 2 HTR MNB | open | open | open |
| cb SM RCS A HTR MNB | close | close | close |
| cb SM RCS C HTR MNB | close | close | close |
| cb SM RCS B HTR MNA | close | close | close |
| cb SM RCS D HTR MNA | close | close | close |
| cb RCS PRPLNT ISOL MNA | close | close | close |
| cb RCS PRPLNT ISOL MNB | close | close | close |
| cb RCS LOGIC MNA | close | close | close |

| | | | |
|---|---|---|---|
| cb RCS LOGIC MNB | close | close | close |
| cb EMS MNA | close | close | close |
| cb EMS MNB | close | close | close |
| cb DOCK PROBE MNA | close | close | close |
| cb DOCK PROBE MNB | close | close | close |
| cb SPS GAUGING MNA | close | close | close |
| cb SPS GAUGING MNB | close | close | close |
| cb SPS GAUGING AC1 | close | close | close |
| cb SPS GAUGING AC2 | close | close | close |
| cb SPS He VLV MNA | close | close | close |
| cb SPS He VLV MNB | close | close | close |
| cb SPS PITCH 1 BAT A | open | close | open |
| cb SPS PITCH 2 BAT B | close | close | close |
| cb SPS YAW 1 BAT A | open | close | open |
| cb SPS YAW 2 BAT B | close | close | close |
| cb SPS PILOT VLV A MNA | close | close | close |
| cb SPS PILOT VLV B MNB | close | close | close |
| cb FLOAT BAG 1 BAT A | open | open | open |



PANEL 8

| NOMENCLATURE | CSM CONTROL/INDICATOR CONFIGURATION | | |
|---|---|---|---|
| | PRIOR TO BACKUP CREW CABIN INGRESS | AT LIFTOFF | POWER DOWN |
| PANEL 8 (CONT) | | | |
| cb FLOAT BAG 2 BAT B | open | open | open |
| cb FLOAT BAG 3 FLT/PL | open | open | open |
| cb SECS LOGIC A BAT A | open | close | close |
| cb SECS LOGIC B BAT B | open | close | close |
| cb SECS ARM A BAT A | open | close | open |
| cb SECS ARM B BAT B | open | close | open |
| cb EDS 1 BAT A | close | close | open |
| cb EDS 2 BAT C | close | close | open |
| cb EDS 3 BAT B | close | close | open |
| cb ELS/CM SM SEP BAT A | close | close | open |
| cb ELS/CM SM SEP BAT B | close | close | open |
| cb PL VENT FLT/PL | close | close | open |

| PANEL 9 | | | |
|---|---|---|---|
| MODE | INTERCOM/PTT | as desired | as desired |
| VOX SENS tw | 5 | as req | as req |
| PWR | OFF | AUDIO/TONE | AUDIO/TONE |
| MASTER VOL tw | 5 | as req | as req |
| INTERCOM | T/R | T/R | T/R |
| INTERCOM VOL tw | 5 | as req | as req |
| PAD COMM | T/R | OFF | OFF |
| PAD COMM VOL tw | 5 | as desired | as desired |
| S BD | T/R | T/R | T/R |
| S BD VOL tw | 5 | as req | as req |
| VHF AM | T/R | T/R | T/R |
| VHF AM VOL tw | 5 | as req | as req |
| AUDIO CONT | NORM | NORM | NORM |
| SUIT PWR | OFF | on (up) | on (up) |
| VHF RNG | NORM | NORM | NORM |

| NOMENCLATURE | CSM CONTROL/INDICATOR CONFIGURATION | | |
|---|---|---|---|
| | PRIOR TO BACKUP CREW CABIN INGRESS | AT LIFTOFF | POWER DOWN |
| PANEL 10 | | | |
| MODE | INTERCOM/PTT | as desired | as desired |
| VOX SENS tw | 5 | as req | as req |
| PWR | OFF | AUDIO/TONE | AUDIO/TONE |
| MASTER VOL tw | 5 | as req | as req |
| PAD COMM | T/R | OFF | OFF |
| PAD COMM VOL tw | 5 | as desired | as desired |
| INTERCOM | T/R | T/R | T/R |
| INTERCOM VOL tw | 5 | as req | as req |
| S BD | T/R | T/R | T/R |
| S BD VOL tw | 5 | as req | as req |
| VHF AM | T/R | T/R | T/R |
| VHF AM VOL tw | 5 | as req | as req |
| AUDIO CONT | NORM | NORM | NORM |
| SUIT PWR | OFF | on (up) | on (up) |

| | | | |
|---|---|---|---|
| PANEL 12 | | | |
| TUNL VENT vlv | OFF | LM/CM ΔP | N/A |
| PANEL 13 | | | |
| FDAI 1 sw | INRTL | INRTL | INRTL |
| FDAI 2 sw | INRTL | INRTL | INRTL |
| EARTH/LUNAR | PWR OFF | PWR OFF | PWR OFF |
| ALT SET cont | 100 NM | 100 NM | N/A |
| LTG | OFF | OFF | OFF |
| MODE | HOLD/FAST | HOLD/FAST | N/A |
| SLEW | off (ctr) | off (ctr) | off (ctr) |
| PANEL 15 | | | |
| COAS PWR | OFF | OFF | OFF |
| UTIL PWR | OFF | OFF | OFF |
| PL BCN LT | off (ctr) | off (ctr) | off (ctr) |
| PL DYE MARKER | off (down) (guarded) | off (down) (guarded) | off (down) (guarded) |
| PL VENT | OFF | OFF | OFF |

| NOMENCLATURE | CSM CONTROL/INDICATOR CONFIGURATION | | |
|---|---|---|---|
| | PRIOR TO BACKUP CREW CABIN INGRESS | AT LIFTOFF | POWER DOWN |
| PANEL 16 | | | |
| DOCK TRGT | OFF | OFF | OFF |
| UTIL PWR | OFF | OFF | OFF |
| COAS PWR | OFF | OFF | OFF |
| PANEL 100 | | | |
| UTIL PWR | OFF | OFF | OFF |
| FLOOD DIM | 1 | 1 | 1 |
| FLOOD FIXED | OFF | OFF | OFF |
| G/N OPT PWR | OFF | OFF | OFF |
| G/N IMU PWR | on (up) (guarded) | on (up) (guarded) | OFF (guarded) |
| RNDZ XPNDR PWR | OFF | OFF | OFF |
| NUMERICS LTS | as desired | as desired | OFF |
| FLOOD LTS | OFF (full dim or full BRT) | OFF (full dim or full BRT) | OFF (full dim or full BRT) |
| INTGL LTS | as desired | as desired | OFF |

| | | | |
|---|---|---|---|
| **PANEL 101** | | | |
| SYS TEST (LH) | 4 | 4 | OFF |
| SYS TEST (RH) | B | B | as desired |
| CM RCS HTRS | OFF | OFF | OFF |
| WASTE H2O DUMP | OFF | HTR A | HTR A |
| URINE DUMP | OFF | HTR A | HTR A |
| RNDZ XPNDR TEST | OPR | OPR | OPR |
| **PANEL 122** | | | |
| OPT ZERO | ZERO | ZERO | ZERO |
| OPT TELTRUN | SLAVE TO SXT | SLAVE TO SXT | SLAVE TO SXT |
| OPT COUPLING | DIRECT | DIRECT | DIRECT |
| OPT MODE | MAN | MAN | MAN |
| OPT SPEED | LO | LO | LO |
| COND LAMPS | ON | ON | as desired |
| UP TLM | ACPT | ACPT | as desired |
| **PANEL 162** | | | |
| SCI PWR (Located behind closeout panel and will be set at panel closeout) | OFF | OFF | OFF |

PANELS 16 THRU 162

| NOMENCLATURE | CSM CONTROL/INDICATOR CONFIGURATION | | |
|---|---|---|---|
| | PRIOR TO BACKUP CREW CABIN INGRESS | AT LIFTOFF | POWER DOWN |
| **PANEL 163** | | | |
| SCI/UTIL PWR (Located behind closeout panel and will be set at panel closeout) | OFF | OFF | OFF |
| **PANEL 164** | | | |
| S1 (Located behind closeout panel and will be set at panel closeout) | OFF | OFF | OFF |
| **PANEL 181** | | | |
| CRYO AC PWR | on (up) | on (up) | OFF |
| H2 FAN | AUTO | AUTO | OFF |
| O2 FAN | AUTO | AUTO | OFF |
| cb SM SECTOR 1 AC2 ØA | close | close | open |
| cb SM SECTOR 1 AC2 ØB | close | close | open |
| cb SM SECTOR 1 AC2 ØC | close | close | open |
| SM/AC PWR | on (up) | on (up) | OFF |
| DOOR JETT | off (down) (guarded) | off (down) (guarded) | off (down) (guarded) |
| LOGIC PWR | OFF | OFF | OFF |

| | | | |
|---|---|---|---|
| cb LOGIC PWR MNA | close | close | open |
| cb LOGIC PWR MNB | close | close | open |
| PANEL 201 | | | |
| AC UTIL PWR | OFF | OFF | OFF |
| PANEL 225 | | | |
| cb PCM TLM ac GRP 1 | close | close | close |
| cb PCM TLM ac GRP 2 | close | close | close |
| cb FLT BUS MNA | close | close | close |
| cb FLT BUS MNB | close | close | close |
| cb PMP PRIM FLT BUS | close | close | close |
| cb PMP AUX FLT BUS | close | close | close |
| cb VHF/CREW AUDIO L FLT/PL | close | close | close |
| cb VHF/CREW AUDIO CTR FLT/PL | close | close | close |
| cb VHF/CREW AUDIO R FLT/PL | close | close | close |
| cb UDL FLT BUS | close | close | close |
| cb HI GAIN ANT FLT BUS | open | open | close |
| cb HI GAIN ANT ac GRP 2 | open | open | close |
| cb S BD XMTR/DSE FLT BUS | close | close | close |
| cb S BD XMTR/DSE ac GRP 1 | close | close | close |

| NOMENCLATURE | CSM CONTROL/INDICATOR CONFIGURATION | | |
|---|---|---|---|
| | PRIOR TO BACKUP CREW CABIN INGRESS | AT LIFTOFF | POWER DOWN |
| PANEL 225 (CONT) | | | |
| cb CTE MNA | close | close | close |
| cb CTE MNB | close | close | close |
| cb RNDZ XPNDR FLT BUS | close | close | close |
| cb SIG CONDR FLT BUS | close | close | close |
| cb S BD PWR AMPL 1 FLT BUS | close | close | close |
| cb S BD PWR AMPL 1 ac GRP 1 | close | close | close |
| cb S BD PWR AMPL 2 FLT BUS | close | close | close |
| cb S BD PWR AMPL 2 ac GRP 2 | close | close | close |

| PANEL 226 | | | |
|---|---|---|---|
| cb FC 1 PUMPS AC | close | close | close |
| cb FC 1 REACS | open | open | open |
| cb FC 1 BUS CONT | close | close | close |
| cb FC 1 PURG | close | close | close |
| cb FC 1 RAD | close | open | open |
| cb CRYO H2 HTR 1 MNA | close | close | close |
| cb CRYO H2 HTR 2 MNB | close | close | close |
| cb FC 2 PUMPS AC | close | close | close |
| cb FC 2 REACS | open | open | open |
| cb FC 2 BUS CONT | close | close | close |
| cb FC 2 PURG | close | close | close |
| cb FC 2 RAD | close | open | open |
| cb CRYO O2 HTR 1 MNA | close | close | close |
| cb CRYO O2 HTR 2 MNB | close | close | close |
| cb FC 3 PUMPS AC | close | close | close |
| cb FC 3 REACS | open | open | open |
| cb FC 3 BUS CONT | close | close | close |
| cb FC 3 PURG | close | close | close |

| NOMENCLATURE | CSM CONTROL/INDICATOR CONFIGURATION | | |
|---|---|---|---|
| | PRIOR TO BACKUP CREW CABIN INGRESS | AT LIFTOFF | POWER DOWN |
| PANEL 226 (CONT) | | | |
| cb FC 3 RAD | close | open | open |
| cb QTY AMPL AC1 | close | close | close |
| cb QTY AMPL AC2 | close | close | close |
| cb CRYO FAN TK1 AC1 ØA | close | close | close |
| cb CRYO FAN TK1 AC1 ØB | close | close | close |
| cb CRYO FAN TK1 AC1 ØC | close | close | close |
| cb CRYO FAN TK2 AC2 ØA | close | close | close |
| cb CRYO FAN TK2 AC2 ØB | close | close | close |
| cb CRYO FAN TK2 AC2 ØC | close | close | close |
| cb COAS/TUNL LTG MNA | close | close | close |
| cb COAS/TUNL LTG MNB | close | open | close |
| cb FLOOD LTG MNA | close | close | close |
| cb FLOOD LTG MNB | close | close | close |
| cb FLOOD LTG FLT/PL | close | close | close |
| cb NUM/INTGL LTG LEB AC2 | close | close | close |

| | | | |
|---|---|---|---|
| cb NUM/INTGL LTG L MDC AC1 | close | close | close |
| cb NUM/INTGL LTG R MDC AC1 | close | close | close |
| cb RUN/EVA/TRGT LTG AC1 | close | close | close |
| cb RUN/EVA/TRGT LTG AC2 | close | close | close |
| PANEL 227 | | | |
| SCI PWR | OFF | OFF | OFF |
| PANEL 229 | | | |
| cb EPS GRP 1 MNA | close | close | close |
| cb EPS GRP 1 MNB | close | close | close |
| cb EPS GRP 2 MNA | close | close | close |
| cb EPS GRP 2 MNB | close | close | close |
| cb EPS GRP 3 MNA | close | close | close |
| cb EPS GRP 3 MNB | close | close | close |
| cb EPS GRP 4 MNA | close | close | close |
| cb EPS GRP 4 MNB | close | close | close |
| cb EPS GRP 5 MNA | close | close | close |
| cb EPS GRP 5 MNB | close | close | close |
| cb UTIL R/L STA MNA | close | close | close |

| NOMENCLATURE | CSM CONTROL/INDICATOR CONFIGURATION | | |
|---|---|---|---|
| | PRIOR TO BACKUP CREW CABIN INGRESS | AT LIFTOFF | POWER DOWN |
| PANEL 229 (CONT) | | | |
| cb UTIL LEB MNB | close | close | close |
| cb EPS BAT BUS A | close | close | close |
| cb EPS BAT BUS B | close | close | close |
| cb TMRS MNA | close | close | close |
| cb TMRS MNB | close | close | close |
| cb SPS LINE HTRS MNA | close | close | close |
| cb SPS LINE HTRS MNB | close | close | close |
| cb 02 VAC ION PUMPS MNA | open | open | open |
| cb 02 VAC ION PUMPS MNB | open | open | open |
| cb MN REL PYRO A | open | open | open |
| cb MN REL PYRO B | open | open | open |

| PANEL 230 | | | |
|---|---|---|---|
| MAP CAMR ON tb | gray | gray | TBD |
| MAP CAMR TRACK tb | gray | gray | TBD |
| MAP CAMR ON | OFF | STBY | OFF |
| MAP CAMR TRACK | OFF | OFF | OFF |
| MAP CAMR IMAGE MTN | OFF | OFF | OFF |
| GAMMA RAY BOOM DPLY tb | gray | gray | TBD |
| GAMMA RAY BOOM JETT tb | gray | gray | TBD |
| GAMMA RAY BOOM DPLY | off (ctr) | off (ctr) | off (ctr) |
| GAMMA RAY BOOM JETT | off (down) | off (down) | off (down) |
| GAMMA RAY EXP | OFF | OFF | OFF |
| GAMMA RAY GAIN | SHLD OFF | SHLD OFF | SHLD OFF |
| MASS SPECT BOOM DPLY tb | gray | gray | TBD |
| MASS SPECT BOOM JETT tb | gray | gray | TBD |
| MASS SPECT BOOM JETT | off (down) | off (down) | off (down) |
| MASS SPECT BOOM DPLY | off (ctr) | off (ctr) | off (ctr) |
| MASS SPECT EXP | OFF | OFF | OFF |
| MASS SPECT ION SOURCE | OFF | OFF | OFF |

| NOMENCLATURE | CSM CONTROL/INDICATOR CONFIGURATION | | |
|---|---|---|---|
| | PRIOR TO BACKUP CREW CABIN INGRESS | AT LIFTOFF | POWER DOWN |
| PANEL 230 (CONT) | | | |
| MASS SPECT MULT | LO | LO | LO |
| MASS SPECT DSCRM | LO | LO | LO |
| LASER ALTM | OFF | OFF | OFF |
| PAM CAMR OPR tb | gray | gray | TBD |
| PAN CAMR SELF TEST | off (ctr) | off (ctr) | off (ctr) |
| PAN CAMR MODE | STBY | STBY | STBY |
| PAN CAMP PWR | BOOST | BOOST | off (ctr) |
| DATA SYS CAL | off (down) | off (down) | off (down) |
| DATA SYS ON | OFF | OFF | OFF |
| ALPHA RAY | OFF | OFF | OFF |
| X RAY DR DPLY | off (down) | off (down) | off (down) |
| X RAY EXP | OFF | OFF | OFF |
| SUB SAT | off (ctr) | off (ctr) | off (ctr) |
| SUB SAT tb | gray | gray | gray |

| | | | |
|---|---|---|---|
| PANEL 250 | | | |
| cb BAT BUS A TO PYRO BUS | open | open | open |
| cb PYRO A/SEQ A | close | close | close |
| cb BAT BUS B TO PYRO BUS | open | open | open |
| cb PYRO B SEQ B | close | close | close |
| cb BAT A PWR ENTRY/PL | close | close | close |
| cb BAT B PWR ENTRY/PL | close | close | close |
| cb BAT C PWR ENTRY/PL | close | close | close |
| cb BAT C TO BAT BUS A | open | open | open |
| cb BAT C TO BAT BUS B | open | open | open |
| cb BAT C BAT CHGR/EDS 2 | close | close | close |
| PANEL 251 | | | |
| OVBD DRAIN vlv | OFF | OFF | N/A |
| PANEL 252 | | | |
| BAT VENT vlv | VENT | CLOSE | N/A |
| WASTE STOW vlv | CLOSE | VENT | N/A |

| NOMENCLATURE | CSM CONTROL/INDICATOR CONFIGURATION | | |
|---|---|---|---|
| | PRIOR TO BACKUP CREW CABIN INGRESS | AT LIFTOFF | POWER DOWN |
| PANEL 275 | | | |
| cb MNA BAT BUS A | close | close | close |
| cb MNA BAT C | open | open | open |
| cb MNB BAT C | open | open | open |
| cb MNB BAT BUS B | close | close | close |
| cb FLT/PL BAT BUS A | open | open | open |
| cb FLT/PL BAT BUS B | open | open | open |
| cb FLT/PL BAT C | open | open | open |
| cb FLT/PL MNA | close | close | close |
| cb FLT/PL MNB | close | close | close |
| cb INV 1 MNA | close | close | close |
| cb INV 2 MNB | close | close | close |
| cb INV 3 MNA | close | close | close |
| cb INV 3 MNB | close | close | close |

| | | | |
|---|---|---|---|
| PANEL 276 | | | |
| cb1 INST PWR CONT | close | close | close |
| cb2 INST PWR CONT | close | close | close |
| cb3 INST PWR CONT | close | close | close |
| cb4 INST PWR CONT | close | close | close |
| PANEL 278 | | | |
| cb UPR SYS COMPR 1 | open | open | open |
| cb UPR SYS COMPR 2 | open | open | open |
| cb SIVB/LM SEP PYRO A | close | close | |
| cb SIVB/LM SEP PYRO B | close | close | |
| PANEL 300 | | | |
| rh SUIT FLOW vlv | FULL FLOW | FULL FLOW | N/A |
| PANEL 301 | | | |
| lh SUIT FLOW vlv | FULL FLOW | FULL FLOW | N/A |
| PANEL 302 | | | |
| ctr SUIT FLOW vlv | FULL FLOW | FULL FLOW | N/A |
| PANEL 303 | | | |
| PRIM CAB TEMP vlv | COLD (CW) | COLD (CW) | N/A |
| SEC CAB TEMP vlv | MAX COOL (CW) | MAX COOL (CW) | N/A |

PANELS 275 THRU 303

| NOMENCLATURE | CSM CONTROL/INDICATOR CONFIGURATION | | |
|---|---|---|---|
| | PRIOR TO BACKUP CREW CABIN INGRESS | AT LIFTOFF | POWER DOWN |
| PANEL 304 | | | |
| DRINK H2O SUP vlv | OFF (CW) | OFF (CW) | N/A |
| PANEL 305 | | | |
| FOOD PREP COLD H2O vlv | rel | rel | N/A |
| FOOD PREP HOT H2O vlv | rel | rel | N/A |
| PANEL 306 | | | |
| MSN TMR | START | START | START |
| EVNT TMR RSET | UP (ctr) | UP (ctr) | UP (ctr) |
| EVNT TMR START | ctr | ctr | STOP |
| EVNT TMR MIN | ctr | ctr | ctr |
| EVNT TMR SEC | ctr | ctr | ctr |
| MSN TMR HRS | ctr | ctr | ctr |
| MSN TMR MIN | ctr | ctr | ctr |
| MSN TMR SEC | ctr | ctr | ctr |

| | | | |
|---|---|---|---|
| **PANEL 325** | | | |
| rh CAB PRESS RELF vlv | BOOST/ENTR | BOOST/ENTR | N/A |
| lh CAB PRESS RELF vlv | BOOST/ENTR | BOOST/ENTR | N/A |
| PRIM GLY TO RAD | NORM | BYP | N/A |
| **PANEL 326** | | | |
| REPRESS PKG vlv | OFF | ON | N/A |
| SM 02 SUP vlv | ON | ON | N/A |
| SRG TK 02 vlv | ON | ON | N/A |
| GLY RSVR IN vlv | OPEN | OPEN | N/A |
| GLY RSVR BYP vlv | CLOSE | CLOSE | N/A |
| GLY RSVR OUT vlv | OPEN | OPEN | N/A |
| **PANEL 350** | | | |
| CO2 CSTR DIVERT vlv | ctr | ctr | N/A |
| **PANEL 351** | | | |
| MN REG A vlv | open | open | N/A |
| MN REG B vlv | open | open | N/A |
| H2O/GLY TK REG sel | BOTH | BOTH | N/A |
| H2O/GLY TK RELF sel | BOTH | BOTH | N/A |

PANELS 304 THRU 351

| NOMENCLATURE | CSM CONTROL/INDICATOR CONFIGURATION | | |
|---|---|---|---|
| | PRIOR TO BACKUP CREW CABIN INGRESS | AT LIFTOFF | POWER DOWN |
| PANEL 351 (CONT) | | | |
| EMER CAB PRESS sel | OFF | OFF | N/A |
| CAB REPRESS vlv | OFF (CCW) | OFF (CCW) | N/A |
| PANEL 352 | | | |
| WASTE TK SERV vlv | CLOSE | CLOSE | N/A |
| PRESS RELF sel | 2 | 2 | N/A |
| POT TK IN vlv | CLOSE | OPEN | N/A |
| WASTE TK IN vlv | AUTO | AUTO | N/A |
| PANEL 375 | | | |
| SRG TK RELF vlv | open (CW) | open (CW) | N/A |
| PANEL 376 | | | |
| PLVC sw | NORM | NORM | N/A |
| PANEL 377 | | | |
| GLY TO RAD SEC vlv | BYP | BYP | N/A |
| PANEL 378 | | | |
| PRIM GLY ACCUM vlv | open (CCW) | open (CCW) | N/A |

| | | | |
|---|---|---|---|
| PANEL 379 | | | |
| PRIM ACCUM FILL vlv | OFF | OFF | N/A |
| PANEL 380 | | | |
| DEMAND REG sel | BOTH | BOTH | N/A |
| SUIT TEST vlv | OFF | OFF | N/A |
| SUIT RETURN vlv | close (push) | close (push) | N/A |
| PANEL 382 | | | |
| SUIT HT EXCH PRIM GLY | FLOW (CCW) | FLOW (CCW) | FLOW |
| SUIT FLOW RELF | OFF | OFF | N/A |
| GLY EVAP IN TEMP vlv | MIN (CCW) | MIN (CCW) | N/A |
| SUIT HT EXCH SEC GLY | FLOW | FLOW | N/A |
| SEC EVAP H2O CONT | AUTO | AUTO | OFF |
| PRIM EVAP H2O CONT | AUTO | AUTO | AUTO |
| H2O ACCUM 1 | RMTE | RMTE | RMTE |
| H2O ACCUM 2 | RMTE | RMTE | RMTE |
| PANEL 600 | | | |
| EMER O2 | CLOSE | CLOSE | N/A |
| PANEL 601 | | | |
| REPRESS O2 | CLOSE | CLOSE | N/A |

| NOMENCLATURE | CSM CONTROL/INDICATOR CONFIGURATION | | |
|---|---|---|---|
| | PRIOR TO BACKUP CREW CABIN INGRESS | AT LIFTOFF | POWER DOWN |
| PANEL 602 | | | |
| REPRESS 02 RELF | open (CW) | open (CW) | N/A |
| PANEL 603 | | | |
| EVA STA 02 SUP | OFF | OFF | OFF |
| PANEL 604 | | | |
| SUIT PRESS ALARM | OFF | OFF | OFF |
| FWD HATCH | | | |
| PRESS EQUAL vlv | CLOSE | CLOSE | N/A |
| Actr handle sel | stowed | stowed | N/A |
| Actr handle rel | locked | locked | N/A |
| SIDE HATCH | | | |
| CAB PRESS DUMP vlv | close (CW) | close (CW) | close (CW) |
| Gearbox sel | LATCH | LATCH | N/A |
| Actr handle sel | L (latch) | U (unlatch) | N/A |
| BPC jett knob | 180° from BPC JETT decal | Arrow on knob pointing to BPC JETT decal | N/A |

| | | | |
|---|---|---|---|
| Lock pin rel knob | UNLOCK | LOCK | N/A |
| GN2 vlv handle | neutral | push (outboard) | N/A |
| Lock pin ind | flush | flush | N/A |

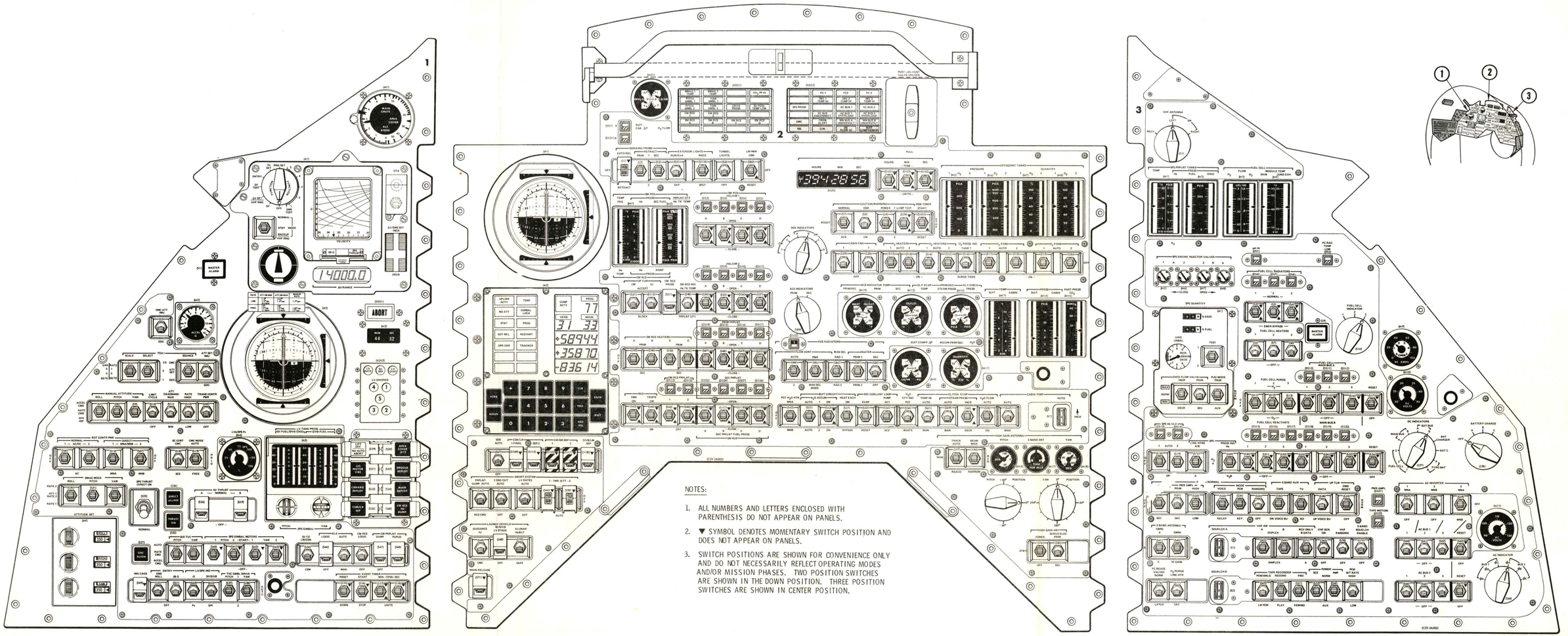


SM-2A-1999H

Figure B-1. Crew Displays and Controls (Sheet 1 of 5)

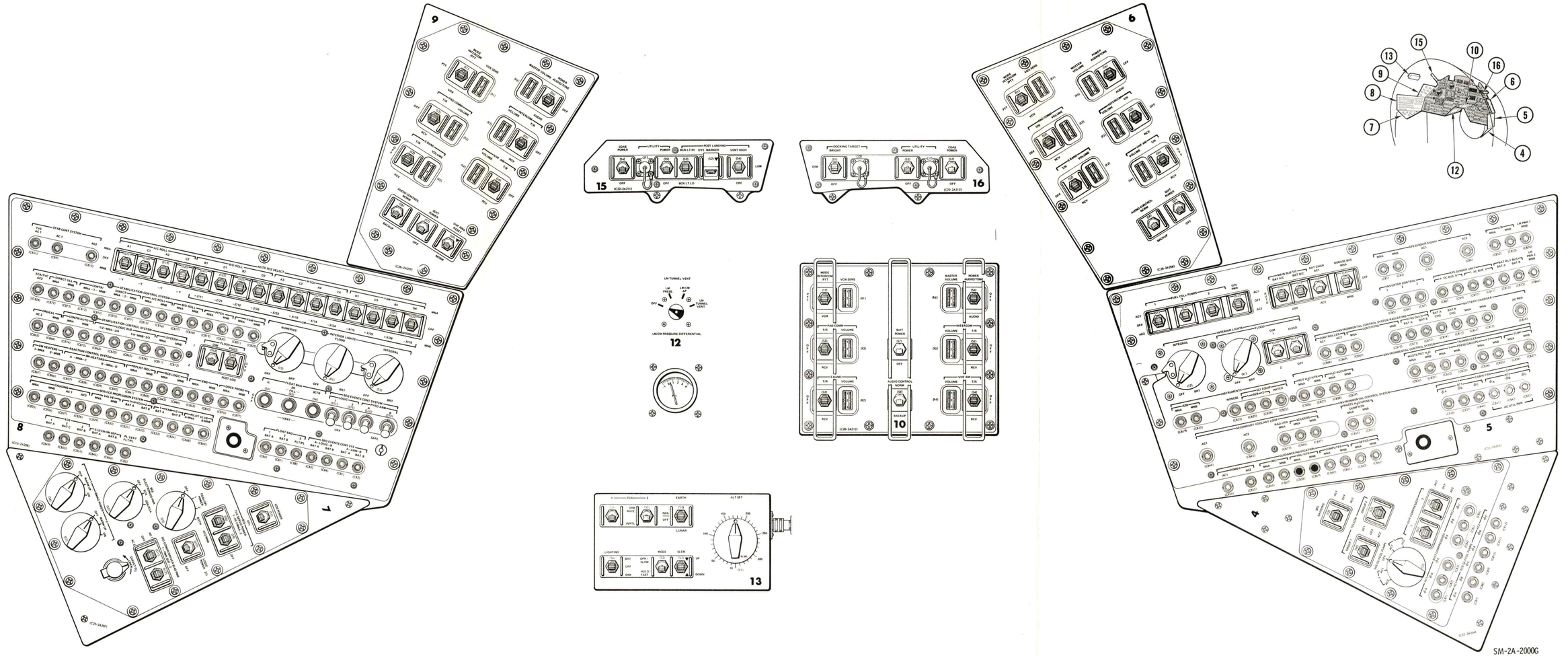


**Figure** B-1. Crew Displays and Controls (Sheet 2 of 5)

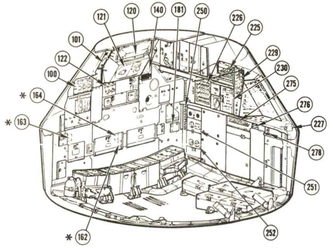


*PANELS 162, AND 164 ARE LOCATED BEHIND VOLUME 85 AND 86 RESPECTIVELY. PANEL 163 IS LOCATED BEHIND CLOSEOUT PANEL ADJACENT TO VOLUME 82.

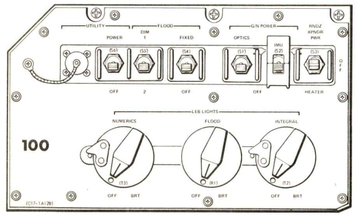


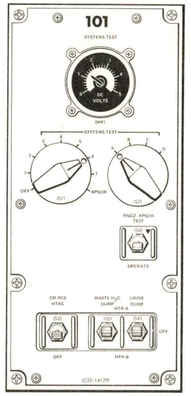


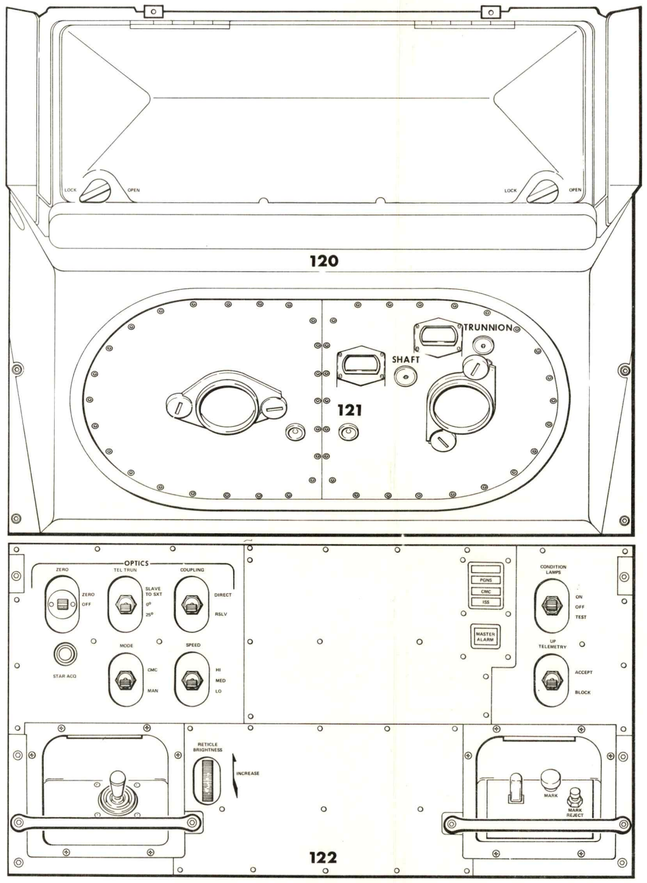


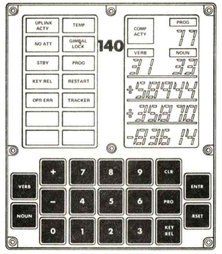


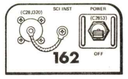





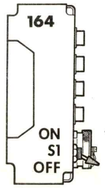


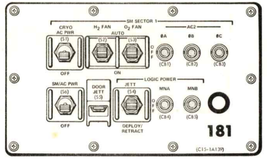





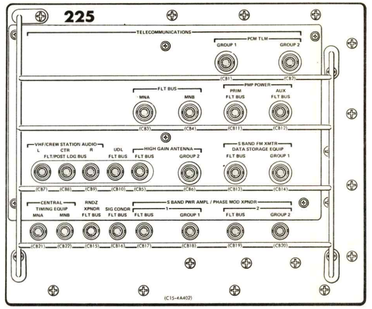


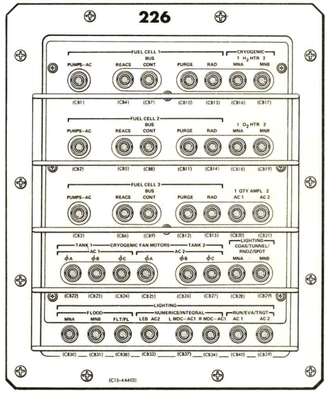





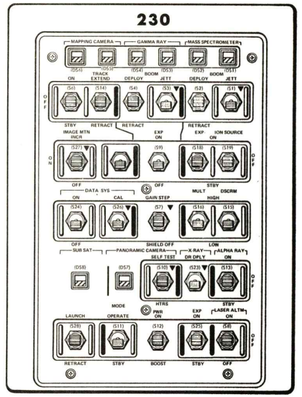


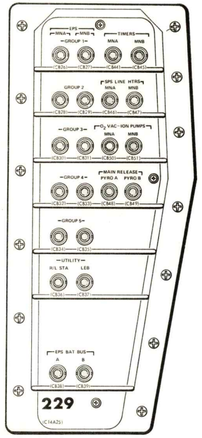


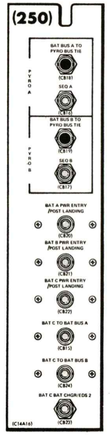


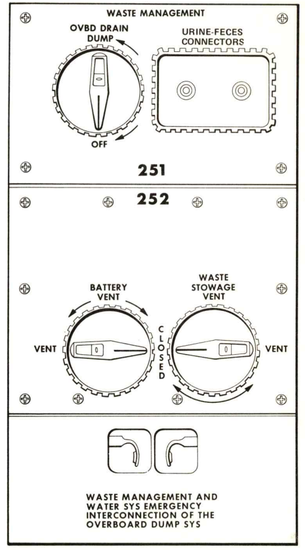


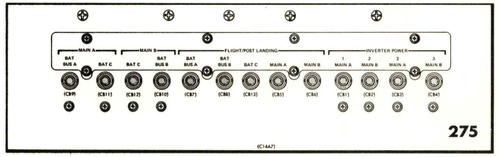





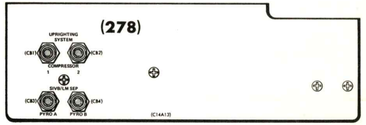


SM-2A-2213B

Figure B-1. Crew Displays and Controls (Sheet 3 of 5)

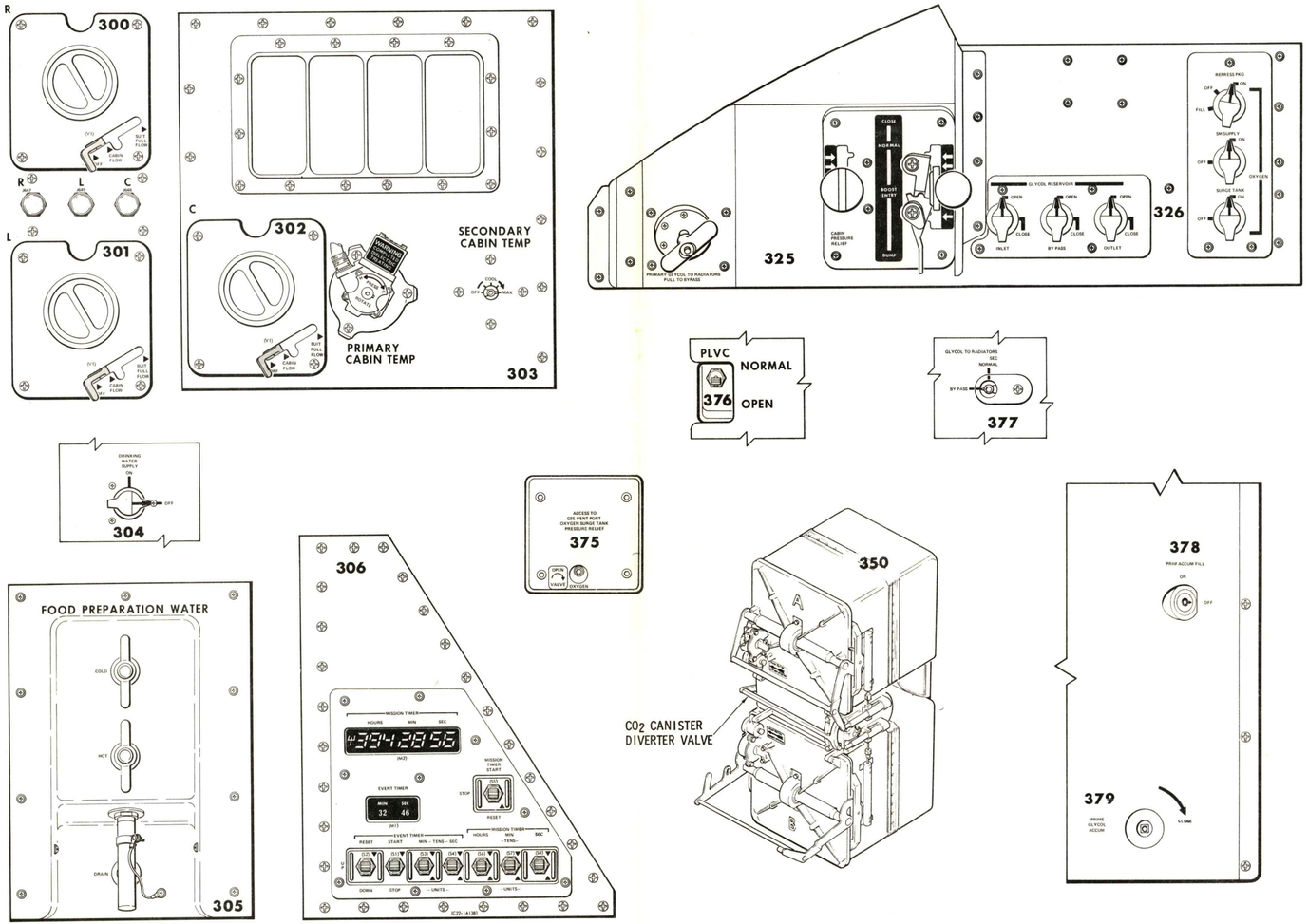


*$CO_2$ CANNISTER DIVERTER VALVE ASSEMBLY (350) AND COOLANT CONTROL PANEL (382) LOCATED BEHIND ATTENUATION PANELS.

SM-2A-2214 A

Figure B-1. Crew Displays and Controls (Sheet 4 of 5)

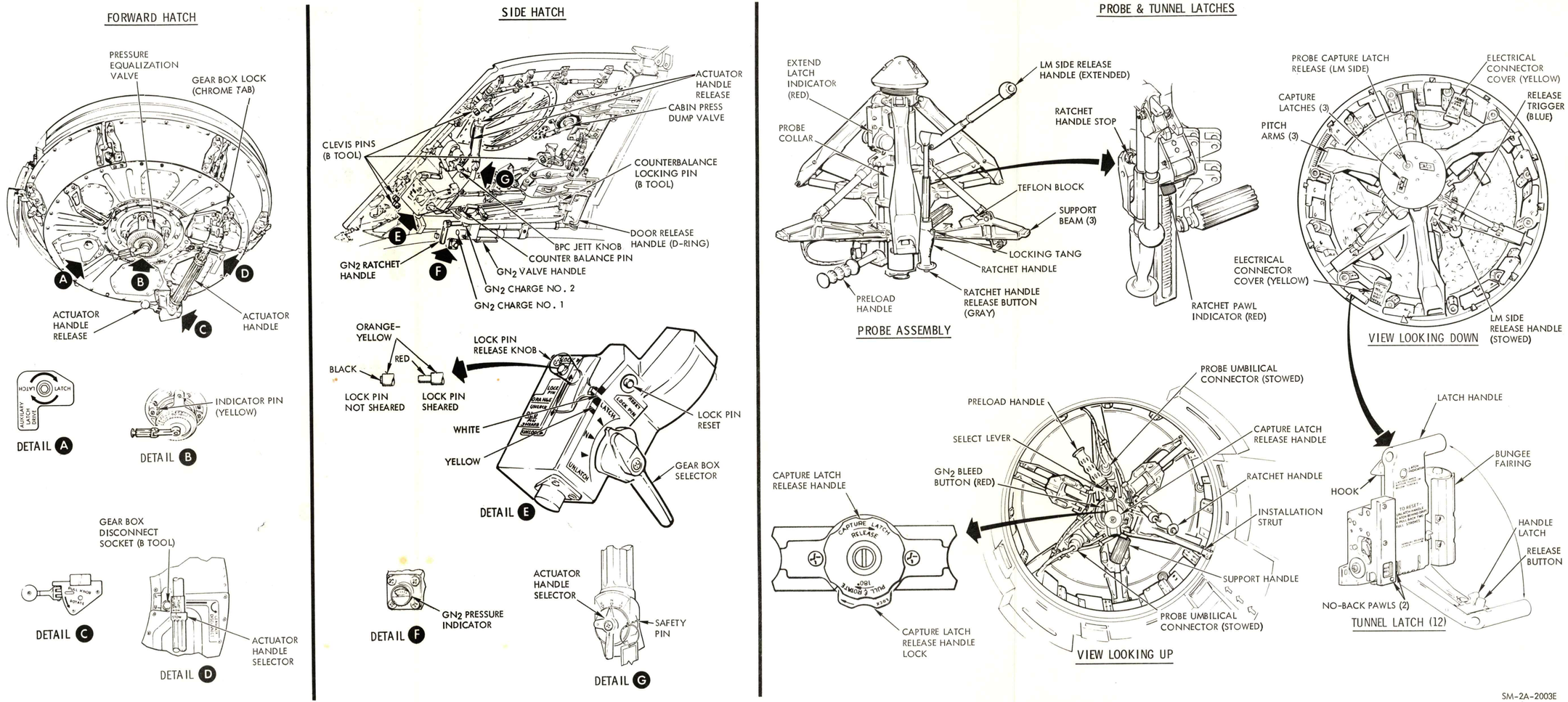


**Figure B-1. Crew Displays and Controls (Sheet 5 of 5)**

# APPENDIX C

## FLIGHT OPERATIONAL CHECKLIST DEVELOPMENT

The CSM Apollo Operations Handbook Procedures are formatted so as to make possible direct development of flight operational checklist material.

Figures C-1 through C-3 indicate a method of arranging material from the procedures column of the normal/backup and contingency sections of the AOH to provide three relatively compact and convenient checklists ordered and oriented to specific Apollo mission phases. Material is arranged to provide a minimum of redundancy and cross referencing, while at the same time allowing optimum procedure sequencing for each phase.

The LAUNCH CHECKLIST, figure C-1, contains flight crew procedures from prime crew ingress through translunar injection, including aborts and applicable pad and flight emergency procedures.

Backup crew prelaunch procedures can be made a carry-off item at the time of backup crew egress and are therefore not included. Prime crew prelaunch procedures could conceivably be excluded as well from the launch checklist by use of task communication to the crew via hardline.

The FLIGHT OPERATIONS CHECKLIST, figure C-2, includes CSM/LM/SIVB interface, rendezvous, formation flight, docking and docked operations, and flight emergency procedures for use during all phases of Earth-Lunar orbital operations. These procedures are also used for TEI and for MCC burns during translunar and transearth coast periods.

The ENTRY CHECKLIST, figure C-3, includes preparation for deorbit and entry through postlanding procedures including flight emergency procedures and postlanding emergency procedures, if any.

The SUPPORT PROCEDURES AND DATA (SPAD), detailed in figure C-4, includes G&C reference data, subprocedures, mode selection, and vehicle system management procedures used in conjunction with orbital operations and in preparation for deorbit and entry.

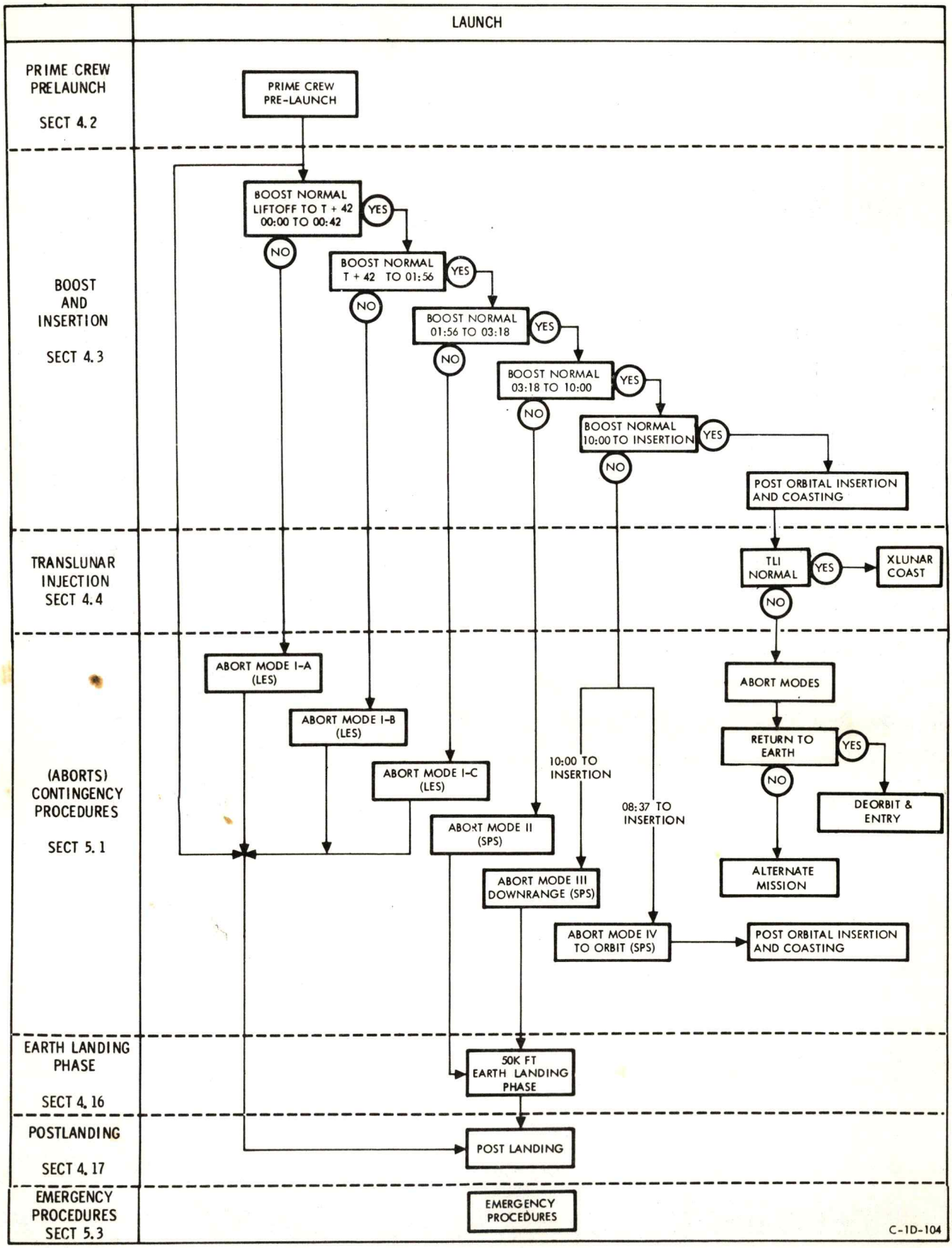


Figure C-1. Launch

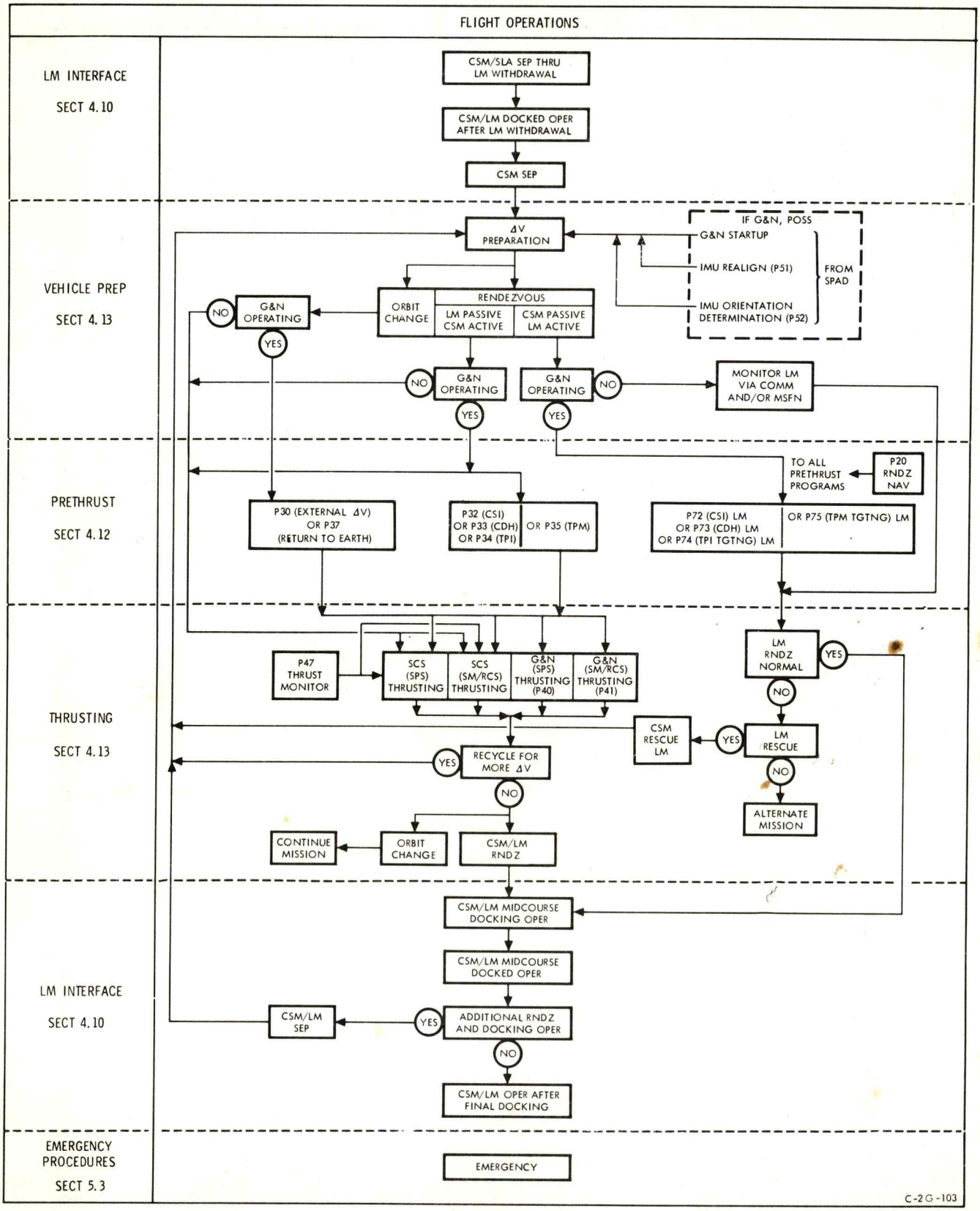


Figure C-2. Flight Operations

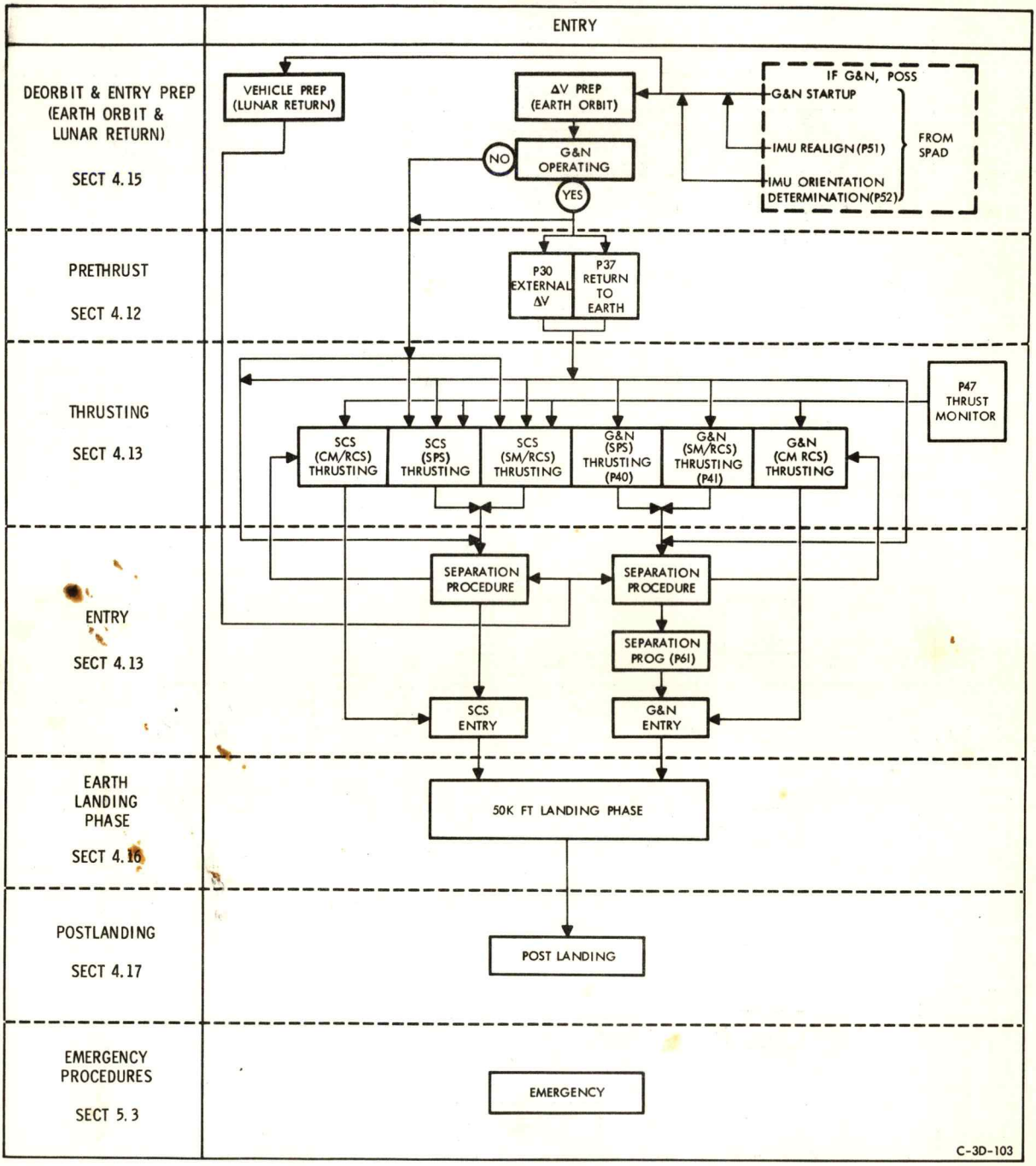


Figure C-3. Entry

## SUPPORT PROCEDURES AND DATA

### REFERENCE DATA — SECT 4.6

G&C GENERAL INSTRUCTIONS
G&C OPERATING NOTES
G&C OPERATIONS
SCS OPERATIONS

G&N OPERATIONS
OPTICS MECHANIZATION
VERB LIST
NOUN LIST

STAR LIST
CHECKLIST CODES
OPTION CODES
ALARM CODES

CMC PROGRAM–ROUTINE CHECK
- PROGRAMS
- ROUTINES
- CMC FLAG LISTINGS

### G&C REFERENCE MODES — SECT 4.7

ATTITUDE CONTROL MODES
- CHANNEL SELECTION
- SCS MINIMUM IMPULSE
- SCS ACCELERATION COMMAND
- SCS ATTITUDE HOLD/RATE COMMAND
- CMC ACCEL CMD/MIN IMP
- CMC ATT CONTR-AUTO/HOLD
- SIVB ATT CONTR

DISPLAY MODES
- DYNAMIC DISPLAY MONITOR
- RATE DISPLAY
- ERROR DISPLAY (BMAG, CMC, ATT SET SOURCE)
- TOTAL ATTITUDE DISPLAY
- ORDEAL-LCL HORIZ ATT

GDC ALIGN

TVC MODES
- SPS THRUSTING
- TVC INITIALIZATION
- SPS GMBL CONTR
- THRUST ON-OFF CONTR

OPTICS CONTROL
- AUTO OPT POSITIONING
- MAN OPT CONTR
- MAN OPT DRIVE

ENTRY MONITOR SYSTEM (EMS)
- ΔV TEST AND NULL BIAS CHECK
- ΔV SETUP

### G&C GENERAL PROCEDURES — SECT 4.8

G&N GENERAL
- (P00) CMC IDLING PROGRAM
- (P06) CMC/IMU POWER DOWN PROCEDURES
- STARTUP PROCEDURE
- OPTICS POWER CONTROL
- (P27) CMC UPDATE
- (P47) G&N THRUSTING MONITOR PROGRAM
- CMC SELF-CHECK PROCEDURE
- MEASUREMENT AND LOADING OF PIPA BIAS
- (R33) CMC/LGC CLOCK SYNC ROUTINE
- ΔR AND ΔV THRESHOLD CHANGE PROCEDURE
- A OR B ERASABLE VALUE CHANGE PROCEDURE
- FLAGWORD MONITOR AND CHANGE PROCEDURE
- (V79) ORBRATE/PTC (BBQ MODE - R64)
- G&N PASSIVE THERMAL CONTROL PROCEDURE
- G&N +X LANDMARK TRACKING
- SATURN RATE CHANGE
- (R02) IMU STATUS CHECK
- (R05) S BAND ANTENNA ROUTINE
- DSKY 88888 CLEAR PROCEDURE

DIGITAL AUTO PILOT (DAP)
- (V48) DAP DATA LOAD ACTIVATION (R03)
- RCS DAP ATTITUDE DEADBAND CHANGE PROCEDURE
- RCS DAP ORBITAL RATE PROCEDURE

EXTENDED VERBS
- (V35) DSKY CONDITION LIGHT CHECK
- (V42) TORQUE GYROS
- (V43) LOAD FDAI ERROR NEEDLES
- (V49) CSM CREW DEFINED MANEUVER (R62)
- (V67) START W-MATRIX RSS ERROR DISPLAY
- (V74) INITIALIZE ERASABLE DUMP VIA DOWNLINK
- (V91) DISPLAY BANKSUM

SCS GENERAL
- SCS POWER DOWN
- SCS POWER UP
- DRIFT RATE ADJUST
- MINIMUM POWER SCS ATTITUDE HOLD (THREE OR TWO AXES)
- SCS ATTITUDE MANEUVER
- GDC ALIGNMENT TO IMU GIMBAL ANGLES
- ATTITUDE REFERENCE SYSTEM COMPARISON
- ORDEAL INITIALIZATION
- SCS PASSIVE THERMAL CONTROL USING WOBBLE MODE
- SCS PASSIVE THERMAL CONTROL USING BAR-B-Q MINIMUM POWER MODE

### NAVIGATION — SECT 4.11

ORBITAL NAV
- (P21) GROUND TRACK DETERMINATION
- (P22) ORBITAL NAVIGATION
- (P23) CISLUNAR MIDCOURSE NAV
- (P24) RATE AIDED OPTICS
- (R30) ORBIT PARAMETER DISPLAY

RENDEZVOUS NAV
- (P20) CSM RENDEZVOUS NAV
- (V83) RENDEZVOUS PARAMETER DISPLAY NO. 1 (R31)
- (V85) RENDEZVOUS PARAMETER DISPLAY NO. 2 (R34)
- (V90) RENDEZVOUS OUT OF PLANE DISPLAY (R36)
- (V89) RENDEZVOUS FINAL ATTITUDE (R63)
- (P76) TARGET DELTA V

### ALIGNMENTS — SECT 4.14

G&N ALIGNMENTS
- (P51) IMU ORIENTATION DETERMINATION
- (P52) IMU REALIGN
- (P53) ALTERNATE LOS IMU ORIENTATIONS DETERMINATION
- (P54) ALTERNATE LOS IMU REALIGN
- (V40 N20) ZERO ICDU EXTENDED VERB
- (V41 N20) COARSE ALIGN ICDU EXTENDED VERB
- (V41 N91) COARSE ALIGN OCDU EXTENDED VERB
- INFLIGHT COAS CALIBRATION

SCS ALIGNMENTS
- ALTERNATE SC INERTIAL ATTITUDE DETERMINATION AND GDC ALIGNMENT
- INPLANE GDC ALIGNMENT
- BACKUP GDC ALIGNMENT WITH COAS

BACKUP GDC AND/OR IMU ALIGNMENT

### EXPERIMENTS — SECT 4.19

(1) S160–GAMMA RAY SPECTROMETER
(1) S161–X-RAY FLUORESCENCE
(1) S162–ALPHA-PARTICLE SPECTROMETER
(1) S163–OPTICAL BAR PANARAMIC CAMERA
(2) S164–S-BAND TRANSPONDER
(1) S165–MASS SPECTROMETER (SMOG)
(2) S166–3-IN. MAPPING CAMERA
(3) S167–SOUNDING RADAR
(3) S168–EM SOUNDER "A"
(3) S169–FAR ULTRA-VIOLET SPECTROMETER
(3) S170–BISTATIC RADAR
(3) S171–IR SCANNING RADIOMETER
(3) S173–SUBSATELLITE-PARTICLE MEAS
(3) S174–SUBSATELLITE-MAGNETOMETER
(2) S175–LASER ALTIMETER

(1) CSM 112-114 (2) CSM 112-115A (3) CSM 115-115A

### SYSTEMS MANAGEMENT — SECT 4.5

PROPULSION
- SPS
- RCS

EPS

ECS
C&WS
TELECOM

MECH SYS
FLOODLIGHT OPERATING MODES
GEN DATA

C-4H-104

Figure C-4. Support Procedures and Data