MARTIN MARIETTA

)JECT GEM

amiliarization manual

MARTIN COMPANY

SEDR 300
VOLUME II

NASA
PROJECT GEMINI
familiarization manual

RENDEZVOUS and DOCKING CONFIGURATIONS

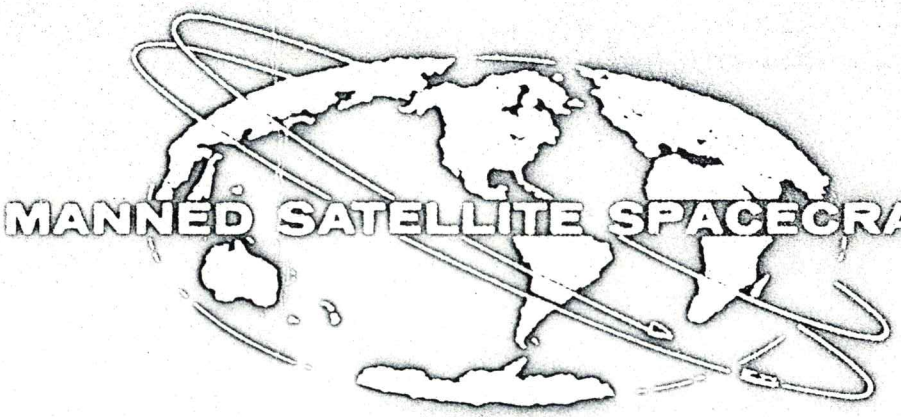

MCDONNELL

NASA

PROJECT GEMINI

familiarization manual

SEDR 300

COPY NO. 63

RENDEZVOUS and DOCKING CONFIGURATIONS

SECTION 8 IS CONTAINED IN A CONFIDENTIAL SUPPLEMENT TO THIS MANUAL

MCDONNELL

31 MAY 1965

LIST OF EFFECTIVE PAGES

INSERT LATEST CHANGED PAGES. DESTROY SUPERSEDED PAGES.

NOTE: The portion of the text affected by the changes is indicated by a vertical line in the outer margins of the page.

TOTAL NUMBER OF PAGES IN THIS PUBLICATION IS 800 CONSISTING OF THE FOLLOWING:

Page No.	Issue
Title	Original
A thru E	Original
1-1 thru 1-5	Original
1-6 blank	Original
2-1 thru 2-20	Original
3-1 thru 3-27	Original
3-28 blank	Original
4-1 thru 4-61	Original
4-62 blank	Original
5-1 thru 5-35	Original
5-36 blank	Original
6-1 thru 6-52	Original
7-1 thru 7-21	Original
7-22 blank	Original
8-1	Original
8-2 blank	Original
8-3 thru 8-275	Original
8-276 blank	Original
8-277 thru 8-335	Original
8-336 blank	Original
9-1 thru 9-77	Original
9-78 blank	Original
10-1 thru 10-20	Original
11-1 thru 11-80	Original
12-1 thru 12-19	Original
12-20 blank	Original
13-1 thru 13-44	Original

*The asterisk indicates pages changed, added, or deleted by the current change.

FOREWORD

The purpose of this manual is to present, clearly and concisely, the description and operation of the Gemini spacecraft systems and major components. The primary usages of the manual are as a familiarization-indoctrination aid, and as a ready reference for detailed information on a specific system or component.

The manual is sectionalized by spacecraft systems or major assemblies. Each section is as complete as is practical to minimize the necessity for cross referencing.

The information contained in this manual (SEDR 300, Vol. II) is applicable to rendezvous missions only, and is accurate as of 31 May 1965. Subsequent issues will reflect design changes as required. For information pertaining to Long Duration Mission Spacecraft (Non-Rendezvous) refer to SEDR 300, Vol. I.

PREPARED BY MAINTENANCE ENGINEERING PROJECT GEMINI

Reviewed by R A Brink
Supervisor - Maintenance Engineering

Reviewed by S. T. Emery
Section Supervisor - Maintenance Engr.

Reviewed by W Gray
NASA Resident Manager

INTRODUCTION

Initiated by the NASA and implemented by McDonnell Aircraft Corporation, Project Gemini is the next logical step in the field of manned space exploration. Closely allied to Project Mercury in concept, and utilizing the knowledge gained from the Mercury flights, Project Gemini will orbit a two-man spacecraft considerably more sophisticated than any employed so far.

The Gemini spacecraft is maneuverable within its orbit and will rendezvous with and connect to a second orbiting vehicle. Depending upon the specific mission objective, it can stay in orbit up to fourteen days. Finally, upon re-entry, the re-entry portion of the spacecraft can be controlled in a relatively conventional landing.

SECTION INDEX

	PAGE
SECTION I	
SPACECRAFT MISSION	1-1
SECTION II	
MAJOR STRUCTURAL ASSEMBLIES	2-1
SECTION III	
CABIN INTERIOR ARRANGEMENT	3-1
SECTION IV	
SEQUENCE SYSTEM	4-1
SECTION V	
ELECTRICAL POWER SYSTEM	5-1
SECTION VI	
ENVIROMENTAL CONTROL SYSTEM	6-1
SECTION VI	
COOLING SYSTEM	7-1
SECTION VIII	
GUIDANCE AND CONTROL SYSTEMS	8-1
SECTION IX	
COMMUNICATIONS SYSTEM	9-1
SECTION X	
INSTRUMENTATION AND RECORDING SYSTEM	10-1
SECTION XI	
PYROTECHNICS AND RETROGRADE ROCKET	11-1

PAGE

SECTION XII

LANDING SYSTEM ---------- 12-1

SECTION XIII

DOCKING SYSTEM ---------- 13-1

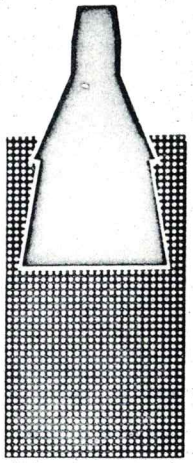

SPACECRAFT MISSION

Section I

TABLE OF CONTENTS

TITLE	PAGE
MISSION DESCRIPTION	1-3
SPACECRAFT DESCRIPTION	1-4
LAUNCH VEHICLE DESCRIPTION	1-5
CREW REQUIREMENTS	1-5
SPACECRAFT RECOVERY	1-5

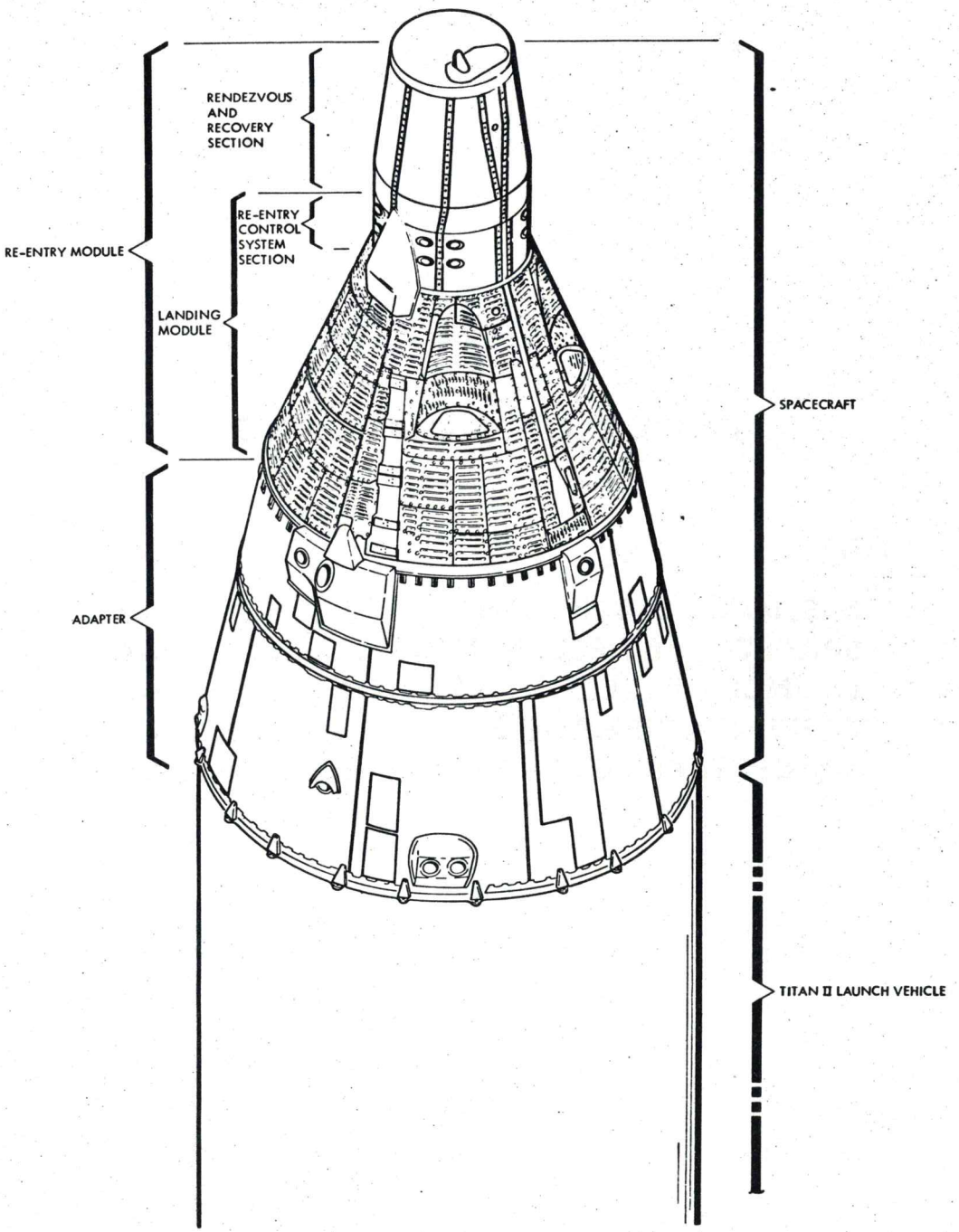

Figure 1-1 Spacecraft Pre-Launch Configuration

SECTION I SPACECRAFT MISSION

MISSION DESCRIPTION

Fundamentally, the mission of Project Gemini is the insertion of a two-man spacecraft into a semi-permanent orbit about the earth, the study of human capabilities during extended missions in space, and the subsequent safe return of the vehicle and its occupants to the earth's surface. Early missions included an unmanned orbital flight, an unmanned sub-orbital flight, a manned 3 orbit flight and a manned 4 day flight. Subsequent missions includes rendezvousing and docking with an orbiting Agena spacecraft.

MISSION OBJECTIVES

Specifically, the project will seek to:

1. Demonstrate the ability of the astronauts and spacecraft to perform in space in manual and/or automatic modes of operation.
2. Perform a simulated rendezvous (S/C 5) for system qualification, and assessment of the general problems to be encountered and rendezvous and dock with an orbiting Agena during missions of S/C 6, 8, & 9.
3. Evaluate the adequacy of the spacecraft major systems, such as environmental control system, the electrical power system, communications system, etc.
4. Verify the functional relationships of the major systems and their integration into the spacecraft.
5. Determine man's requirements necessities, and performance capabilities in a space environment, for future extended missions.
6. Determine man's interface problems, and develop operational techniques for the most efficient use of on-board capabilities.

7. Develop controlled re-entry techniques required for landing in a predicted touchdown area.
8. Develop operational recovery techniques of both spacecraft and astronauts.

SPACECRAFT DESCRIPTION

GENERAL

The Gemini Spacecraft (Figure 1-1) is a conical structure consisting basically of a re-entry module and an adapter.

RE-ENTRY MODULE

The re-entry module consists of the heat shield, the crew and equipment section, re-entry control section and the rendezvous and recovery section. The crew and equipment section contains a pressurized area suitable for human occupation, and a number of non-pressurized compartments for housing equipment. External access doors are provided for equipment compartments. The re-entry control section contains the major re-entry control system components. The rendezvous and recovery section contains the rendezvous radar equipment, the drogue chute assembly and the parachute assembly. The rendezvous and recovery section is jettisoned after re-entry along with the drogue chute.

ADAPTER

The adapter consists of the launch vehicle mating section, the equipment section and the retrograde section. The launch vehicle mating section is bolted to the launch vehicle. A portion of this section remains with the launch vehicle at spacecraft-launch vehicle separation. The equipment section contains major components of electrical power system, the maneuvering propulsion system, the equip-

ment cooling system, and the primary oxygen supply for the environmental control system. The retrograde section contains the retrograde rockets and some components of the equipment cooling system.

LAUNCH VEHICLE DESCRIPTION

The vehicle used to launch the Gemini spacecraft is the Gemini - Titan II, built by the Martin Company, which is a Titan II modified structurally and functionally to accept the Gemini adapter and to provide for the interchange of electrical signals.

CREW REQUIREMENTS

The Gemini spacecraft utilizes a two-man crew seated side by side. The man on the left is referred to as the "Command Pilot" and functions as spacecraft commander. The man on the right is referred to as the "Pilot." Crew members are selected from the NASA astronaut group.

SPACECRAFT RECOVERY

The Gemini landing module will make a water landing in a pre-determined area. A task force of ships, planes, and personnel will be standing by for locating and retrieving the spacecraft and crew. In the event an abort or other abnormal occurrence results in the spacecraft landing in a remote location, electronic and visual recovery aids and survival kits are provided in the spacecraft to facilitate spacecraft retrieval and crew survival, respectively.

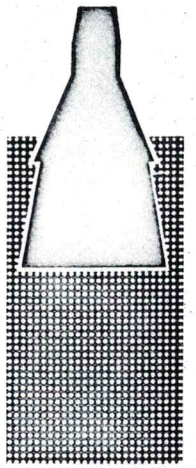

Section II

MAJOR STRUCTURAL ASSEMBLIES

TABLE OF CONTENTS

TITLE	PAGE
GENERAL INFORMATION	2-3
RE-ENTRY MODULE	2-3
RENDEZVOUS AND RECOVERY SECTION	2-3
RE-ENTRY CONTROL SYSTEM SECTION	2-8
CABIN	2-8
ADAPTER	2-17
RETROGRADE SECTION	2-19
ADAPTER EQUIPMENT SECTION	2-19

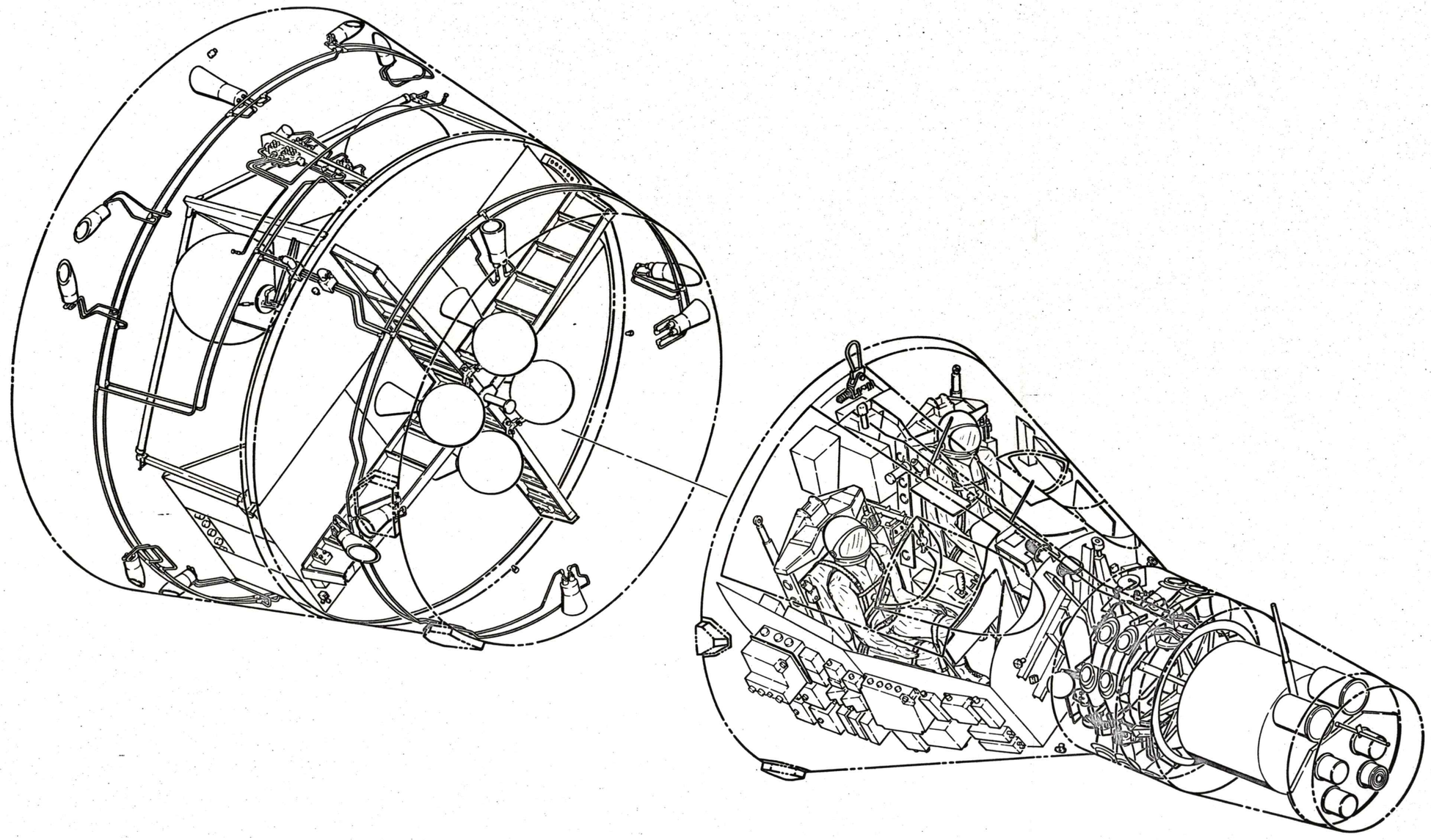

Figure 2-1 Interior Arrangement (Typical) FM2-2-1

SECTION II MAJOR STRUCTURAL ASSEMBLIES

GENERAL INFORMATION

The Gemini Spacecraft is basically of a conical configuration (See Figure 2-1) consisting of a re-entry module and an adapter as the two major assemblies. Spacecraft construction is semimonocoque utilizing titanium for the primary structure. It is designed to shield the cabin pressure vessel from exessive temperature variations, noise and meteorite penetration (See Figure 2-2). During spacecraft flight, the spacecraft adapter is aft with respect to flight path. See Figures 2-3 and 2-4 for spacecraft orientation.

RE-ENTRY MODULE

The re-entry module (Figure 2-5) is separated into three primary sections which include the rendezvous and recovery section (R & R), re-entry control system section (RCS) and the cabin section. Also incorporated in the re-entry module is the heat shield which is attached to the cabin, and a nose fairing which is attached to the forward end of the rendezvous and recovery section. The nose fairing is ejected during launch.

RENDEZVOUS AND RECOVERY SECTION

The rendezvous and recovery section (R & R) (See Figure 2-5), the forward section of the spacecraft, is semi-conical in shape and is attached to the re-entry control system section with twenty-four bolts. Incorporated in this joint is a pyrotechnic device which severs all bolts causing the rendezvous section to separate from the re-entry control system section on signal for parachute deployment. A drogue parachute will assist in the removal of this section. The R & R section utilizes rings,

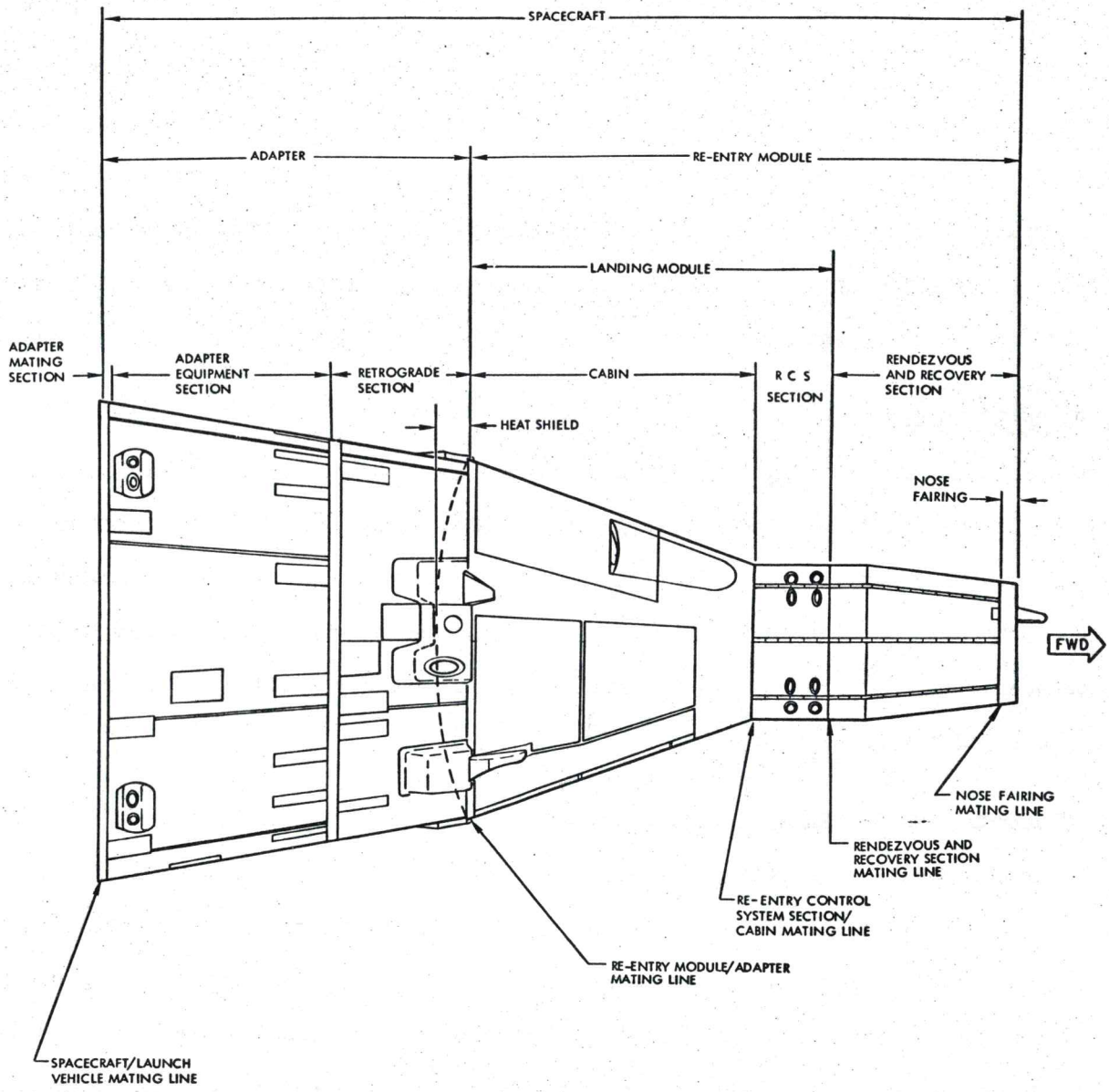

FM 2-2-2

Figure 2-2 Spacecraft General Nomenclature

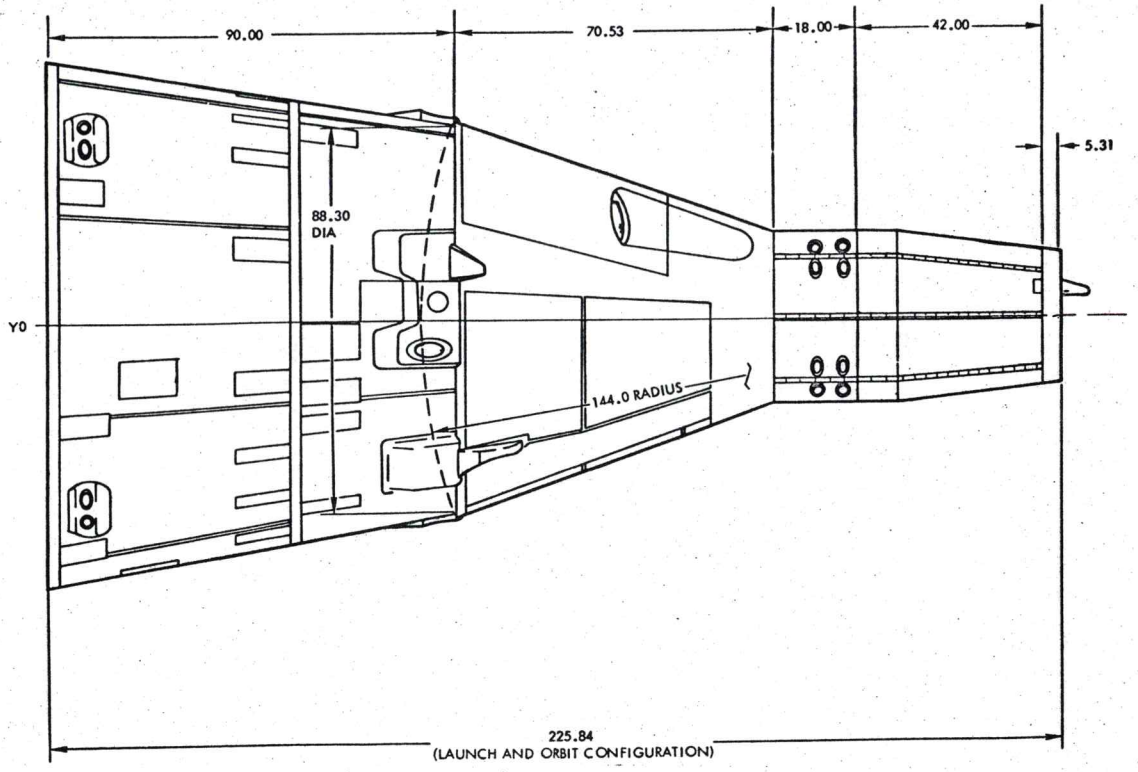

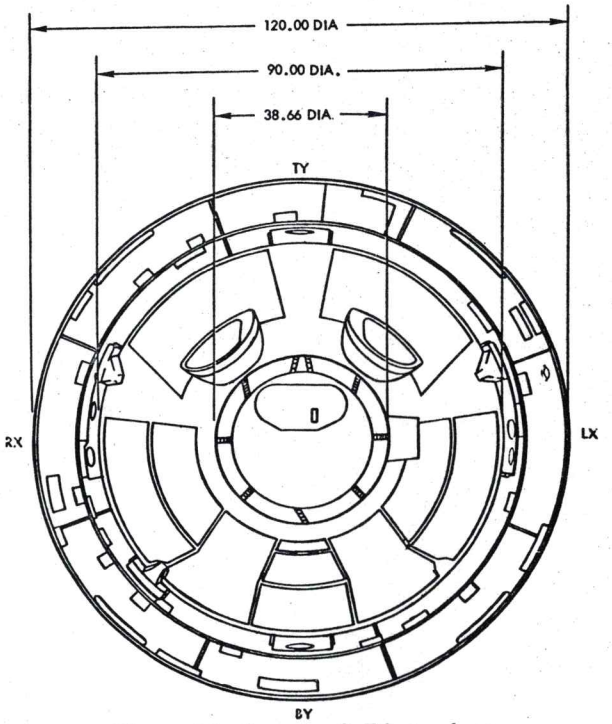

FM 2-2-3

Figure 2-3 Spacecraft Dimensions

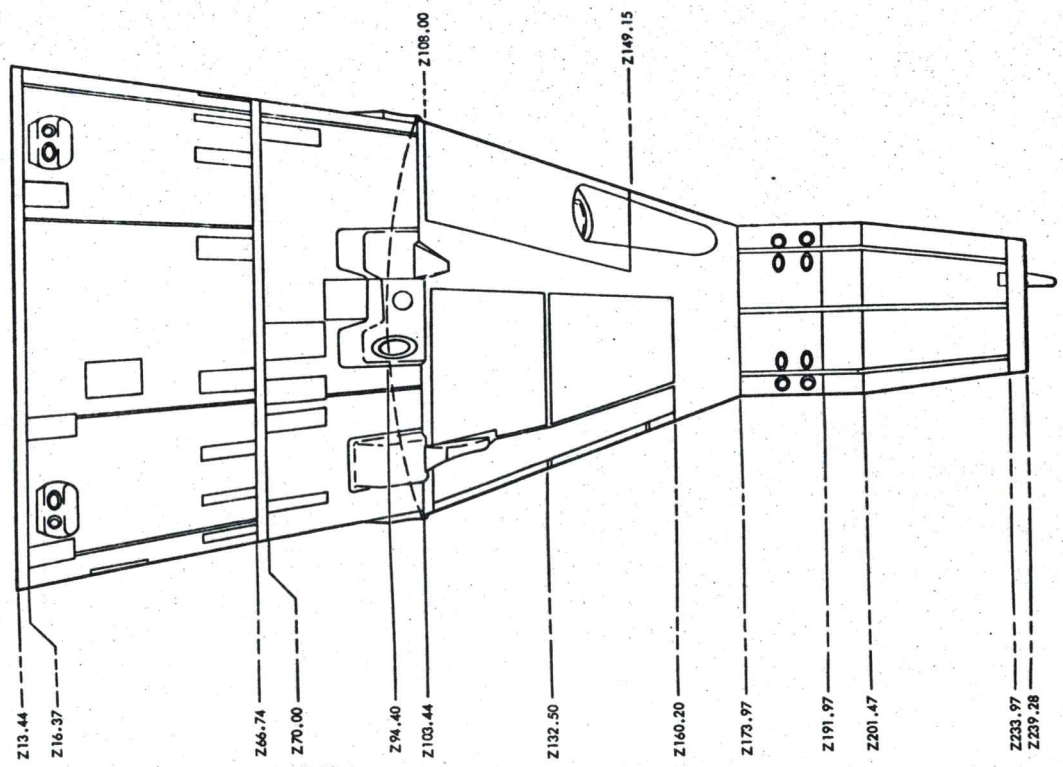

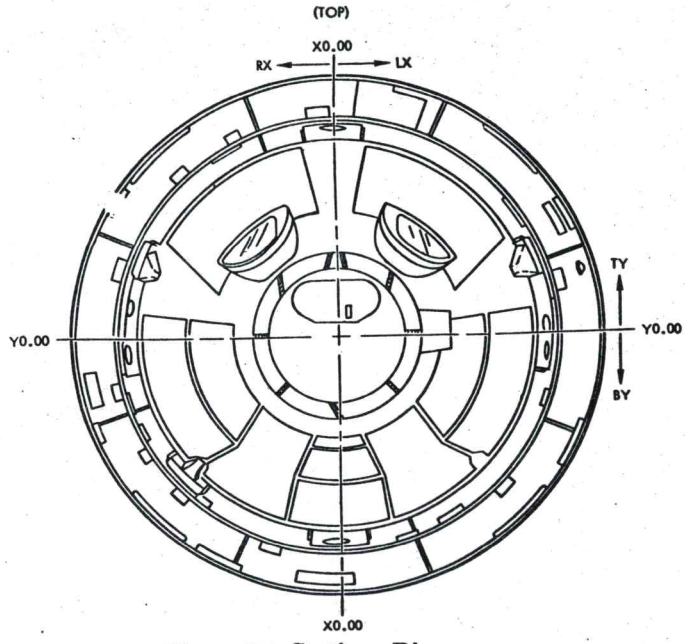

FM 2-2-4

Figure 2-4 Stations Diagram

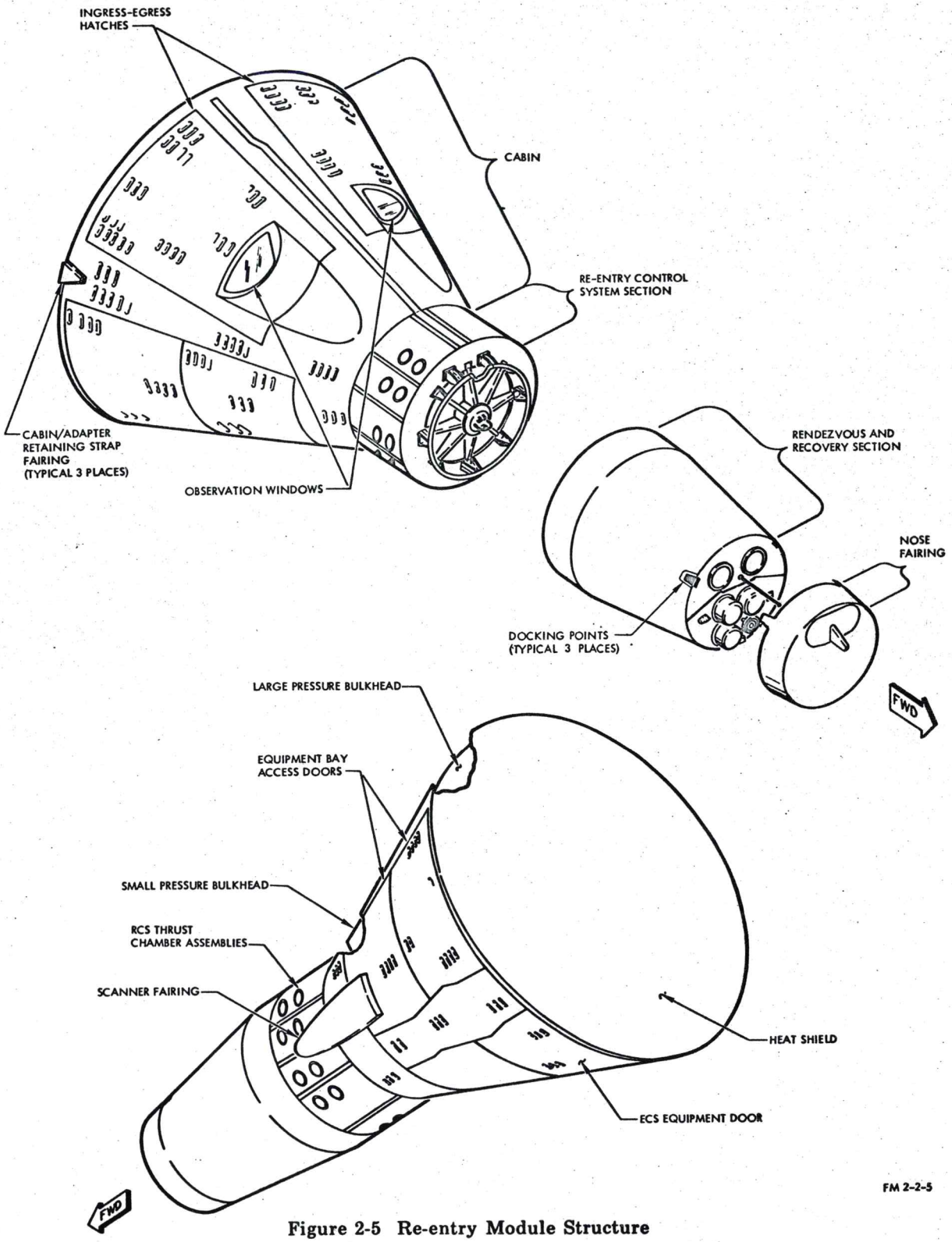

Figure 2-5 Re-entry Module Structure

stringers and bulkheads of titanium for its primary structure. The external surface is composed of beryllium shingles, except for the nose fairing. The nose fairing is composed of fiberglass reinforced plastic laminate.

RE-ENTRY CONTROL SYSTEM SECTION

The re-entry control system (RCS) section is located between, and mated to, the rendezvous and recovery and cabin sections of the spacecraft (See Figure 2-5). This section is cylindrical in shape and is constructed of an inner titanium alloy cylinder, eight stringers, two rings and eight beryllium shingles for its outer skin. The RCS section is designed to house the fuel and oxidizer tanks, valves, tube assemblies, and thrust chamber assemblies (TCA) for the re-entry control system.

A parachute adapter assembly is installed on the forward face of the RCS section for attachment of the main parachute.

CABIN

The cabin (Figure 2-5), similar in shape to a truncated cone, is mated to the re-entry control systems section and the adapter. The cabin has an internal pressure vessel (Figure 2-6) shaped to provide an adequate crew station with a proper water flotation attitude. The shape of the pressure vessel also allows space between it and the outer conical shell for the installation of equipment.

The basic cabin structure consists of a fusion welded titanium frame assembly to which the side panels, small and large pressure bulkheads and hatch sill are seam welded. The side panels, small and large pressure bulkheads are of double skin construction and reinforced by stiffeners spotwelded in place. Two hatches are hinged to the hatch sill for astronaut ingress and egress. For heat protection, the

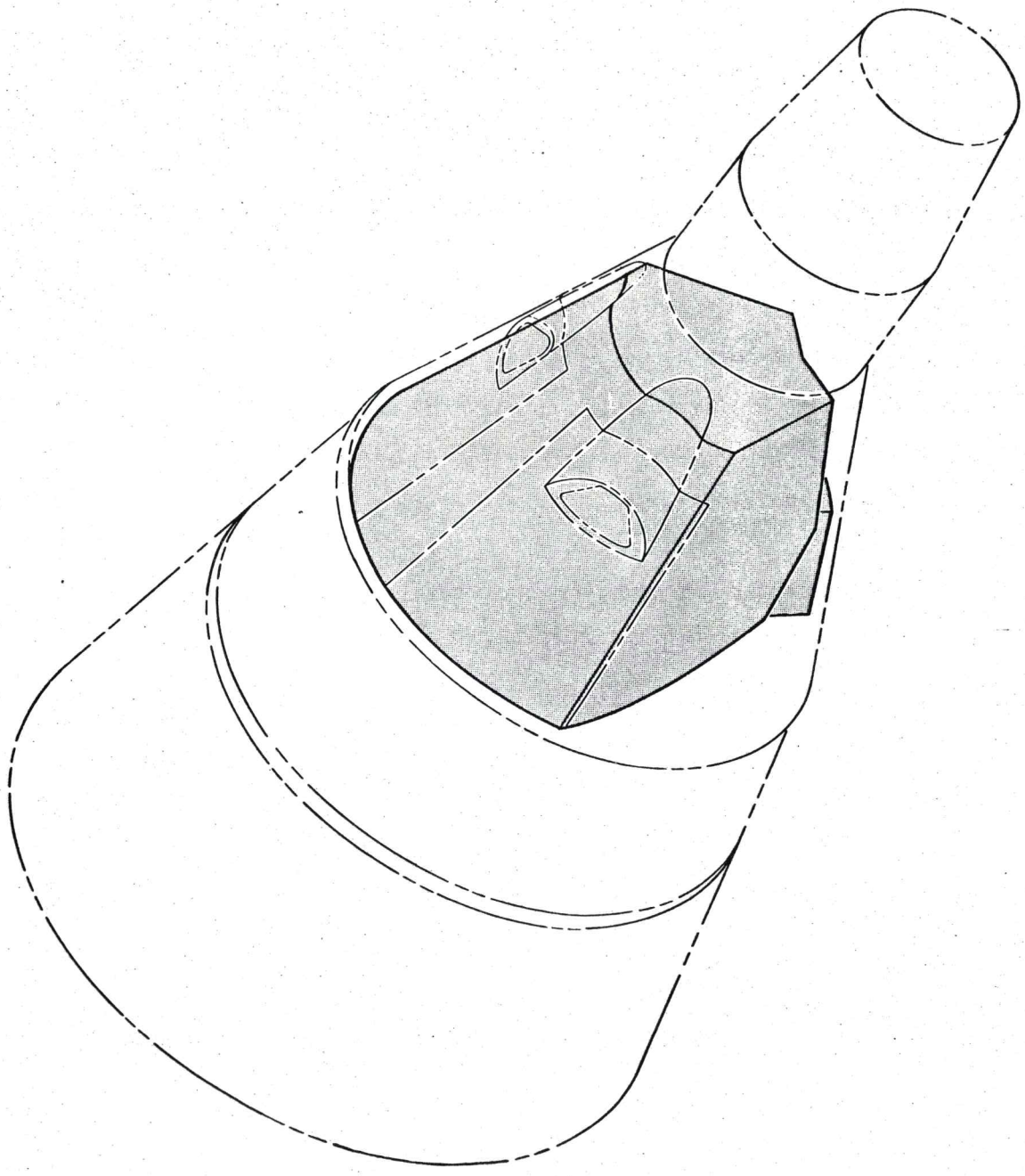

FM 2-2-6

Figure 2-6 Cabin Pressure Vessel

outer conical surface is covered with Rene' 41 shingles and an ablative heat shield is attached to the large end of the cabin section.

A spring loaded hoist loop, located near the heat shield between the hatch openings, is errected after landing to facilitate engagement of a hoisting hook for spacecraft retrieval.

Equipment Bays

The equipment bays are located outside the cabin pressure vessel (Figure 2-7). Two bays are located outboard of the side panels and one bay beneath the pressure vessel floor. The bays are structurally designed for mounting of the equipment.

Doors

To enclose the side equipment bays, two structural doors are provided on each side of the cabin (Figure 2-7). These doors provide access to the components installed in the equipment bays. The main landing gear bays, located below the left and right equipment bays, are each enclosed by one door. The landing gears are not installed but fittings are provided for the attachment of the gears for future spacecraft. On the bottom of the cabin, between the landing gear doors, two additional doors are installed. The forward door allows access to the lower equipment compartment and the aft door provides access to the ECS compartment which is a portion of the pressure vessel.

Hatches

Two large structural hatches (Figure 2-8) are incorporated for sealing the cabin ingress or egress openings. The hatches are symmetrically spaced on the top side of the cabin section. Each hatch is manually operated by means of a handle and

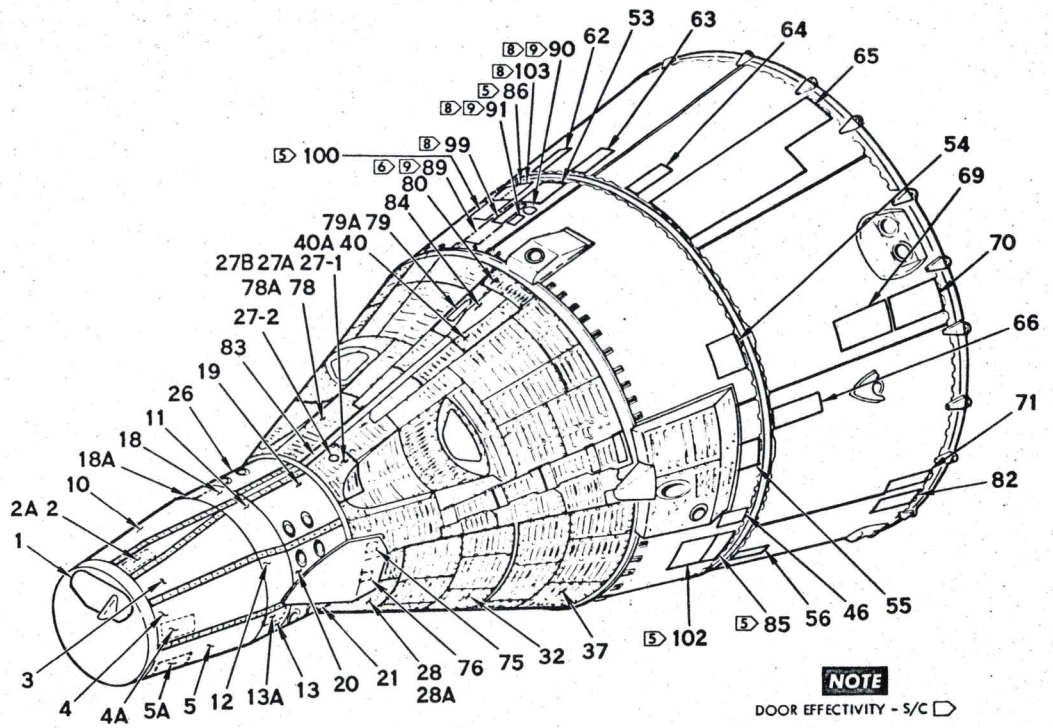

NOTE

DOOR EFFECTIVITY - S/C ▷

NO.	DESCRIPTION	NO.	DESCRIPTION	NO.	DESCRIPTION
1	DROGUE CHUTE DOOR	28	SHINGLE	79	RECOVERY LIGHT DOOR
2	DOCKING BAR CARTRIDGE ACCESS	28A	Z160.20 EQUIPMENT ACCESS	79A	RECOVERY LIGHT DOOR RELEASE MECHANISM
2A	PYRO ELECTRICAL DISCONNECT ACCESS	32	FORWARD EQUIPMENT BAY DOOR - LEFT	80	HOIST LOOP DOOR
3	SHINGLE	37	AFT EQUIPMENT BAY DOOR - LEFT	82	SHAPED CHARGE DETONATOR ACCESS
4	EMERGENCY DOCKING RELEASE CART. AND GUILLOTINE CARTRIDGE ACCESS	40	SHINGLE	83	COVER ASS'Y - PARACHUTE CONTROL CABLES
4A	PILOT CHUTE DEPLOY SENSOR SWITCH ACCESS	40A	RECOVERY LIGHT AND HOIST LOOP RIGGING AND CARTRIDGE ACCESS	84	COVER ASS'Y. - PARACHUTE CONTROL CABLES
5	SHINGLE	46	SEPARATION SENSING SWITCH ACCESS	85	RADIOMETER
5A	RADAR ACCESS	53	OAMS LINE GUILLOTINE ACCESS	86	CRYO SPECTROMETER/INTERFEROMETER
10	SHINGLE	54	F.L.S.C. TUBING CUTTER ACCESS	89	MICROMETEORITE EXPERIMENT
11	INTERFACE ACCESS	55	FORWARD MANEUVERING ENGINE ACCESS	90	UHF - VHF POLORIZATION
12	INTERFACE ACCESS	56	FUEL CELL SERVICE ACCESS	91	UHF - VHF POLORIZATION ACCESS
13	INTERFACE ACCESS	62	OAMS OXIDIZER PURGE ACCESS	99	NUCLEAR EMULSION
13A	GUILLOTINE CARTRIDGE ACCESS	63	OAMS LINE GUILLOTINE ACCESS	100	CRYO SPECTROMETER/INTERFEROMETER ACCESS
18	INTERFACE ACCESS	64	OAMS OXIDIZER PURGE ACCESS	102	RADIOMETER ACCESS
18A	PYROTECHNIC SWITCH CARTRIDGE AND BRIDLE DISCONNECT CARTRIDGE ACCESS	65	OAMS MODULE SERVICE ACCESS	103	SPACE POWER TOOL ACCESS
19	RE-ENTRY CONTROL SYSTEM ACCESS	66	ECS SERVICE ACCESS		
20	RE-ENTRY CONTROL SYSTEM ACCESS	69	ECS PUMP MODULE SERVICE ACCESS		
21	RE-ENTRY CONTROL SYSTEM ACCESS	70	ECS PUMP MODULE SERVICE ACCESS		
26	RE-ENTRY CONTROL SYSTEM ACCESS	71	SEPARATION SENSING SWITCH ACCESS		
27-1	SHINGLE	75	ELECTRICAL DISCONNECT ACCESS		
27-2	FRESH AIR DOOR	76	ELECTRICAL DISCONNECT ACCESS		
27A	Z160.20 EQUIPMENT ACCESS	78	SHINGLE		
27B	Z160.20 EQUIPMENT ACCESS	78A	Z160.20 EQUIPMENT ACCESS		

FM2-2-7

Figure 2-7. Access Doors, Spacecraft 4 and Up (Sheet 1 of 2)

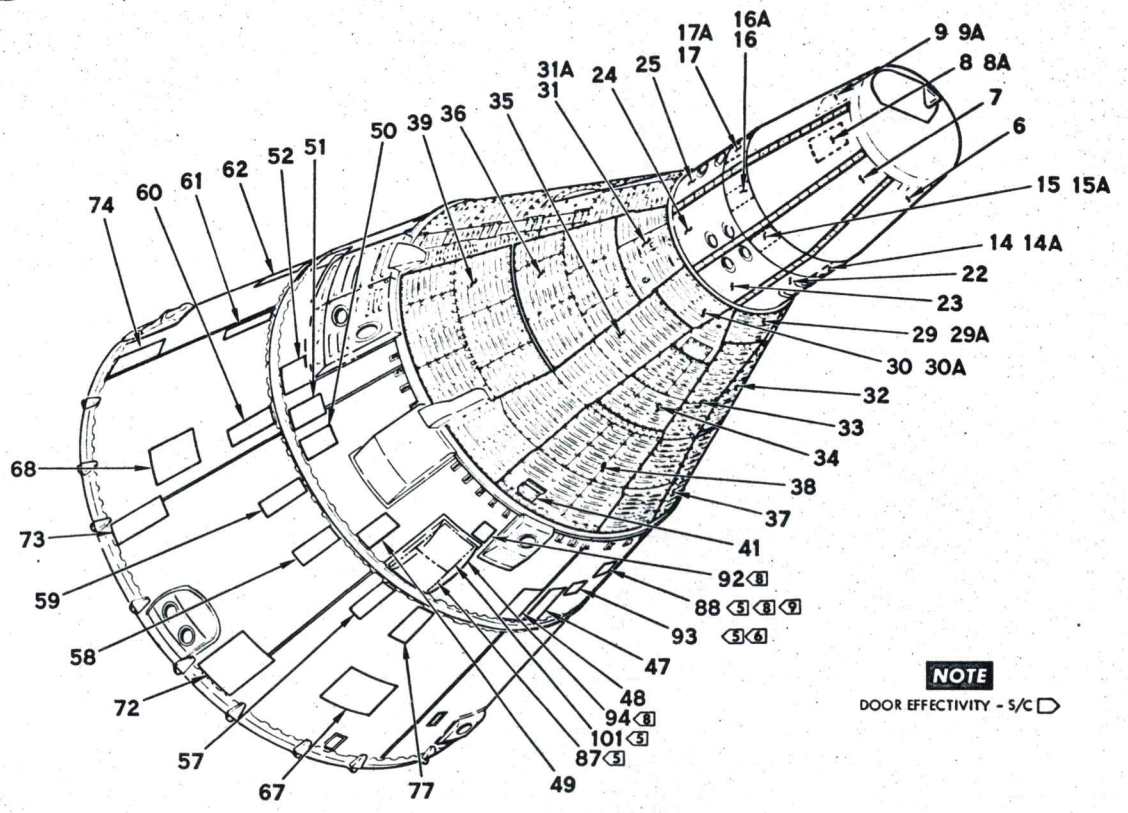

NO.	DESCRIPTION	NO.	DESCRIPTION	NO.	DESCRIPTION
6	EMERGENCY DOCKING RELEASE CARTRIDGE AND GUILLOTINE CARTRIDGE ACCESS	29A	Z160.20 EQUIPMENT ACCESS	51	B.I.A. RELAY PANEL ACCESS
7	SHINGLE	30	SHINGLE	52	FORWARD MANEUVERING ENGINE ACCESS
8	SHINGLE	30A	Z160.20 EQUIPMENT ACCESS	57	SHAPED CHARGE DETONATOR ACCESS
8A	RADAR ACCESS	31	SHINGLE	58	FUEL CELL SERVICE ACCESS
9	EMERGENCY DOCKING RELEASE CARTRIDGE AND GUILLOTINE CARTRIDGE ACCESS	31A	Z160.20 EQUIPMENT ACCESS	59	GUILLOTINE CARTRIDGE ACCESS
9A	DROGUE CHUTE DEPLOY SENSOR SWITCH ACCESS	32	FORWARD EQUIPMENT BAY DOOR - LEFT	60	GUILLOTINE CARTRIDGE ACCESS
14	INTERFACE ACCESS	33	MAIN LANDING GEAR DOOR - LEFT	61	OAMS FUEL PURGE ACCESS
14A	GUILLOTINE ANVIL ACCESS	34	CENTER EQUIPMENT BAY DOOR - FORWARD	67	ENGINE TO SCUPPER INTERFACE ACCESS
15	INTERFACE ACCESS	35	MAIN LANDING GEAR DOOR - RIGHT	68	ELECTRONIC MODULE TEST ACCESS
15A	GUILLOTINE ANVIL ACCESS	36	FORWARD EQUIPMENT BAY DOOR - RIGHT	72	GUILLOTINE CARTRIDGE AND LAUNCH VEHICLE ELEC. CONN. ACCESS
16	INTERFACE ACCESS	37	AFT EQUIPMENT BAY DOOR - LEFT	73	SEPARATION SENSING SWITCH ACCESS
16A	GUILLOTINE CARTRIDGE ACCESS	38	E.C.S. BAY DOOR	74	SHAPED CHARGE DETONATOR ACCESS
17	INTERFACE ACCESS	39	AFT EQUIPMENT BAY DOOR - RIGHT	77	FUEL CELL PURGE ACCESS
17A	ELEC. DISCONNECT ACCESS	41	PURGE FITTING ACCESS	87	SPECTROMETER/INTERFEROMETER
22	RE-ENTRY CONTROL SYSTEM ACCESS	47	RELAY PANEL ACCESS	88	ELECTROSTATIC CHARGE SENSOR
23	RE-ENTRY CONTROL SYSTEM ACCESS	48	RELAY PANEL ACCESS	92	LLTV ACCESS
24	RE-ENTRY CONTROL SYSTEM ACCESS	49	SEPARATION SENSING SWITCH ACCESS	93	ELECTROSTATIC CHARGE ACCESS
25	RE-ENTRY CONTROL SYSTEM ACCESS	50	GUILLOTINE CARTRIDGE ACCESS	94	LLTV FAIRING
29	SHINGLE			97	PITCH SENSOR SYSTEM
				101	SPECTROMETER/INTERFEROMETER ACCESS

Figure 2-7 Access Doors, Spacecraft 4 and Up (Sheet 2 of 2)

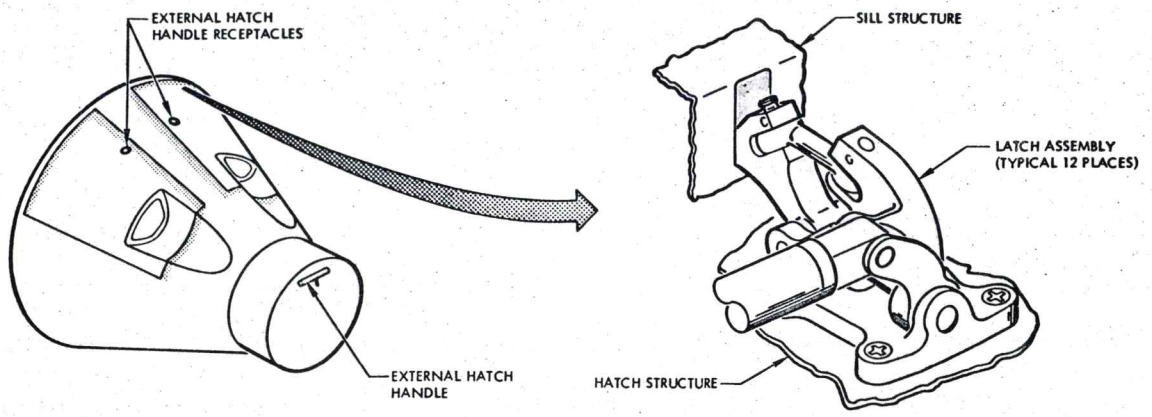

HATCH LATCH SHOWN IN LATCHED POSITION

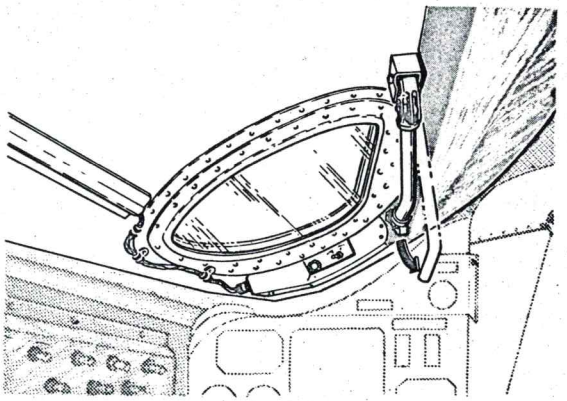

HATCH INTERIOR VIEW

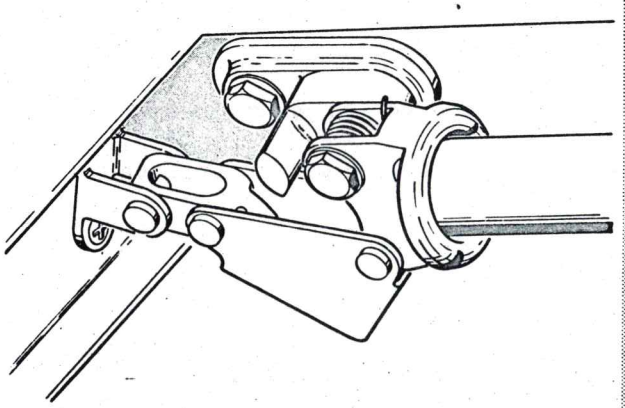

HATCH HANDLE SHOWN IN STOWED POSITION

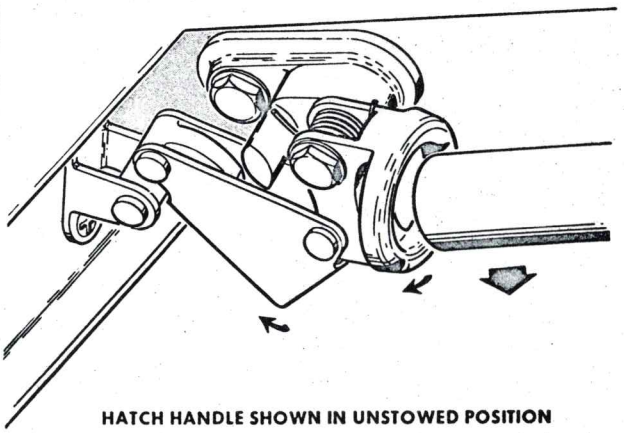

HATCH HANDLE SHOWN IN UNSTOWED POSITION

FM 2-2-8

Figure 2-8 Spacecraft Ingress/Egress Hatches

mechanical latching mechanism. Each is hinged on the outboard side. In an emergency, the hatches are opened in a three sequence operation employing pyrotechnic actuators. When initiated, the actuators simultaneously unlock and open the mechanical latches, open the hatches and supply hot gases to ignite the ejection seat rocket catapults. An external hatch linkage fitting is incorporated to allow a recovery hatch handle to be inserted for opening the hatches from the outside. The recovery hatch handle is stowed on the main parachute adapter assembly located on the forward face of the RCS section. A hatch curtain (Figure 3-9) is stowed along the hinge of each hatch. After water landing, when the hatches are open, the curtains are installed to help prevent water from entering the cabin.

Windows

Each of the ingress/egress hatches incorporates a visual observation window (Figure 2-10). Each window consists of an inner and outer glass assembly. The outer assembly is a single flat pane and the inner panel assembly consists of two flat panes. The panes consist of vycor (96% silica). The panes in the right window are optically ground for better resolution. Each surface of each pane, with the exception of the outer surface of the outer pane, is coated to lessen reflection and glare from cabin lights and to aid in impeding ultraviolet radiation into the cabin compartment.

Heat Shield

The heat shield is a dish-shaped structure composed of silicone elastomer filled phenolic impregnated fiberglass honeycomb. It is an ablative device, 90 inches in diameter with a spherical radius of 144 inches. The shield is designed to protect

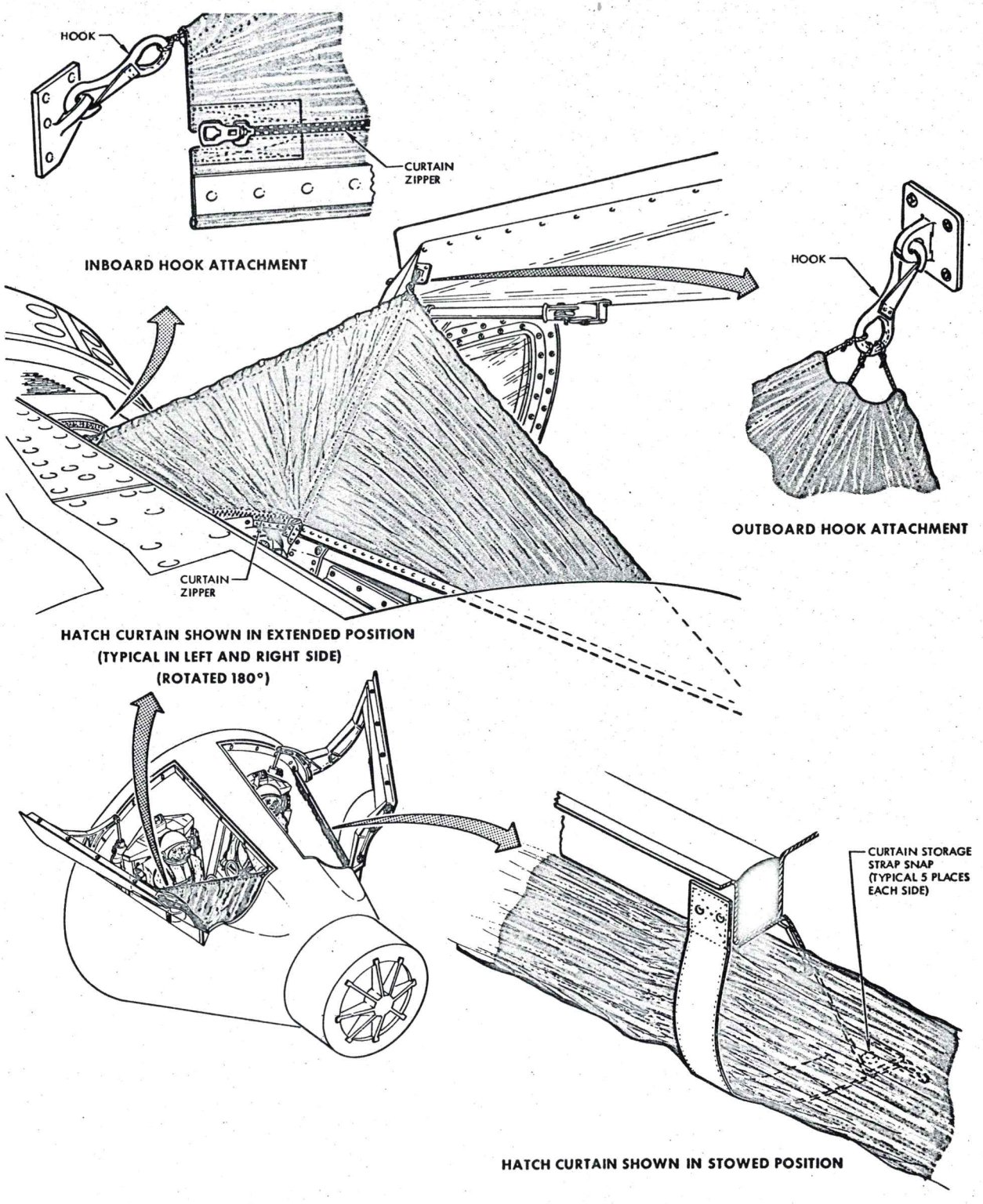

Figure 2-9 Hatch Curtain

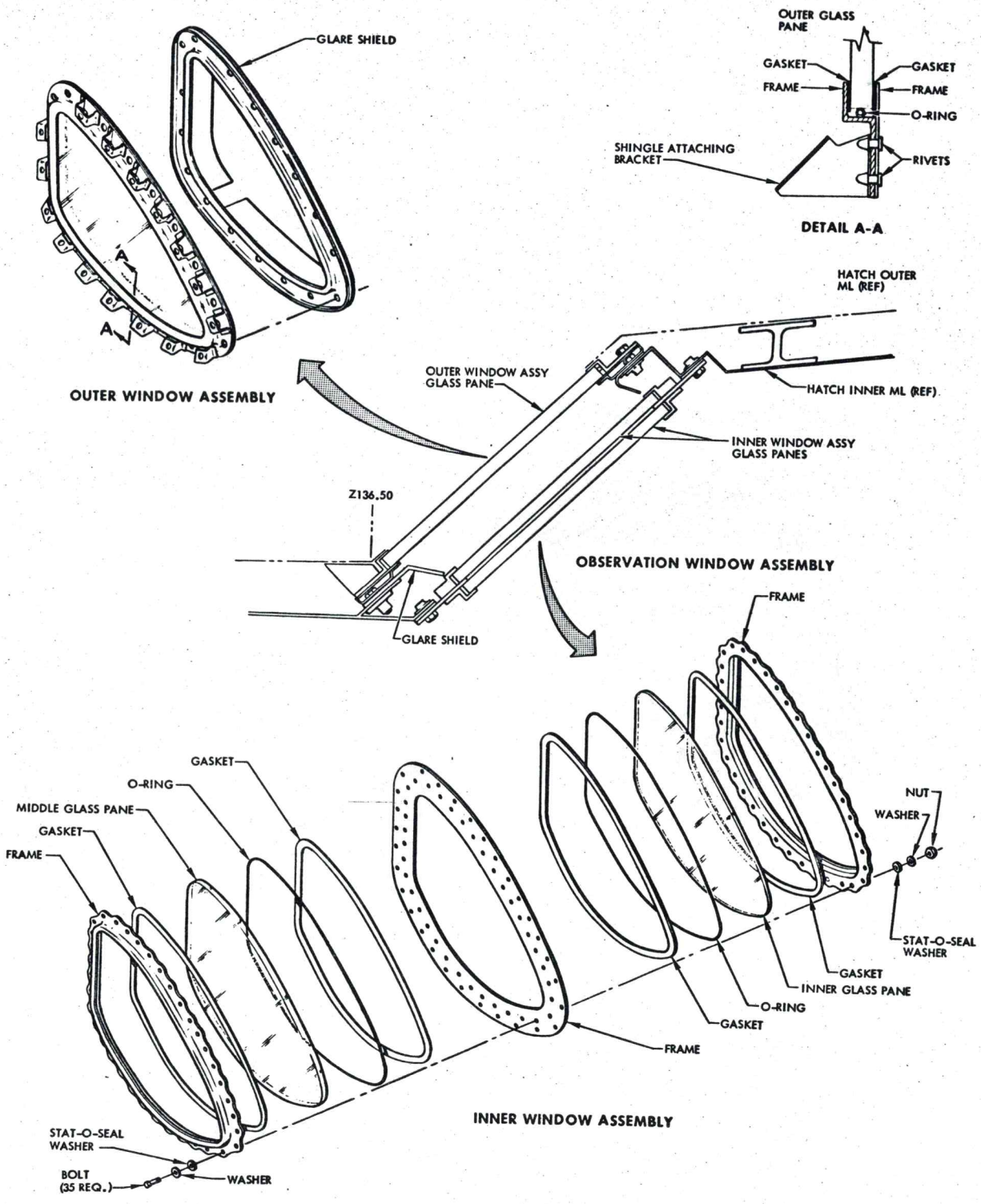

Figure 2-10 Observation Window

the re-entry module from extreme thermal conditions during re-entry into the atmosphere. The device is attached to the large diameter end of the cabin structure by 1/4 inch bolts.

Shingles

The external surface of the cabin is made up of beaded shingles of Rene' 41. The R & R and RCS section surfaces are made up of unbeaded shingles of beryllium. The shingles protect the re-entry module structure from excessive heat and provide additional rigidity for the cabin. The shingles are black on the outer surface to control thermal radiation. The inner surface of the beryllium shingles are coated with gold to provide a low emissivity surface.

ADAPTER

In the spacecraft configuration, the adapter functions to mate the spacecraft to the launch vehicle, to provide provisions for mounting equipment, and to serve as a radiator for the spacecraft coolant system. The adapter (See Figure 2-2) is a truncated cone-shape, semimonocoque structure consisting of circumferential aluminum rings, extruded magnesium alloy stringers, and magnesium skin. The extruded stringers are designed in a bulb-tee shape to provide a flow path for the liquid coolant which transfers heat to the adapter skin for radiation to space. The outer surface of the skin is coated with white ceramic type paint and the inner surface is covered with aluminum foil. The inner surface of S/C 9 adapter is gold plated. The forward end of the adapter is coupled to the aft end of the re-entry module by utilizing three titanium tension straps (See Figure 2-11).

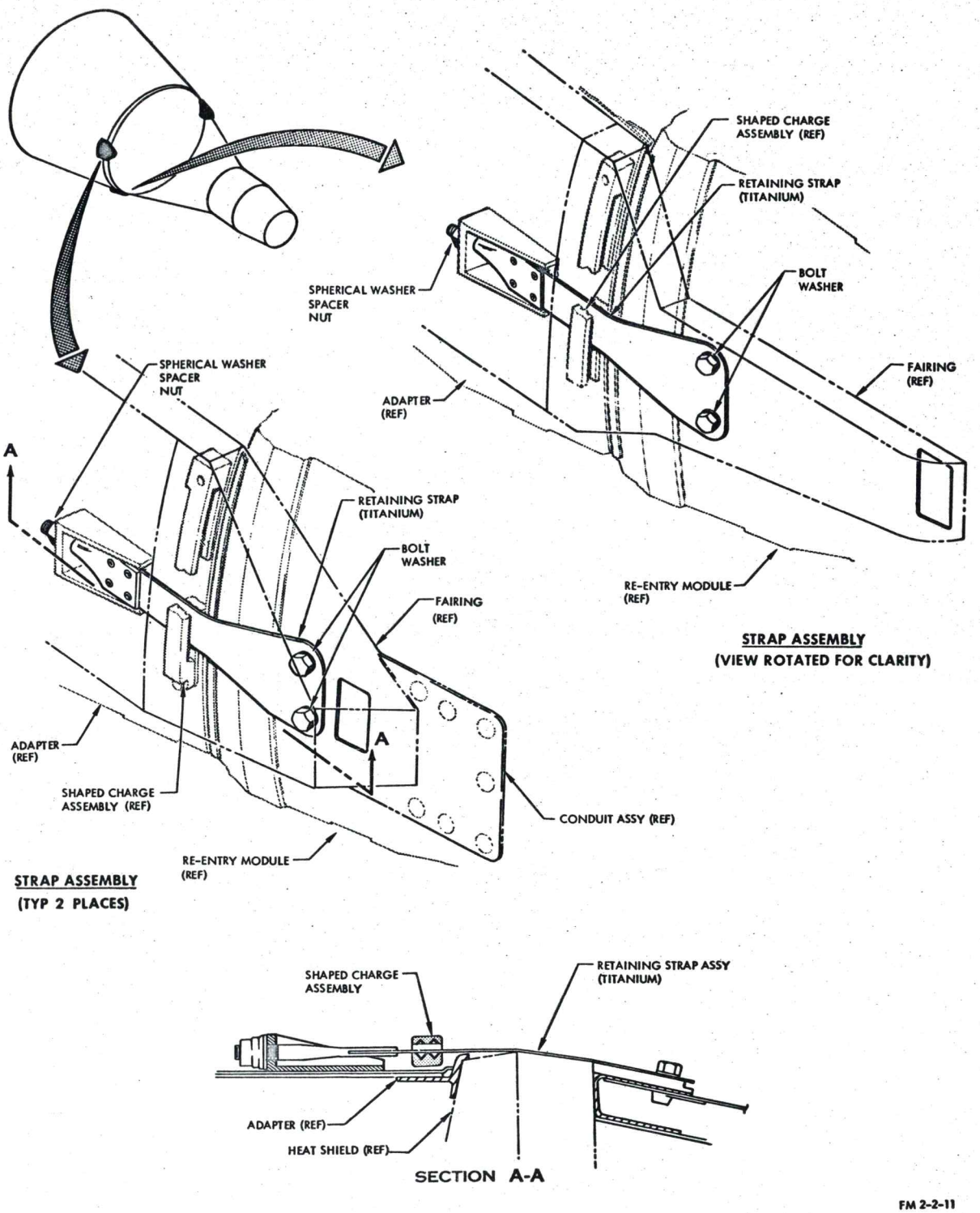

Figure 2-11 Re-Entry Module-Adapter Retaining Straps

RETROGRADE SECTION

The retrograde section, the smaller end of the adapter, provides for installation of four retrograde rockets and six OAMS thrust chamber assemblies. To provide for the installation of the retrograde rockets, the retrograde section employs an aluminum "I" beam support assembly. The "I" beams are assembled in the form of a cruciform with one retrograde rocket mounted in each quadrant.

ADAPTER EQUIPMENT SECTION

The adapter equipment section is the larger diameter end of the adapter. The section provides hard points for the attachment of structural modules for the OAMS tanks, E.C.S. primary oxygen supply, fuel cell (battery on S/C 6), coolant, electrical and electronic components and rendezvous evaluation pod on S/C 5 only. A honeycomb blast shield is provided above the modules to shield the equipment section and booster dome from excessive heat during retro-rocket firing under abort conditions. Ten OAMS thrust chamber assemblies are mounted on the large diameter end of the equipment section. A gold deposited fiberglass temperature control cover protects the equipment from solar radiation thru the open end of the adapter after separation from the launch vehicle.

Spacecraft-Launch Vehicle Mating

The spacecraft is mated to the Titan II launch vehicle with a machined aluminum alloy ring (See Figure 2-12). This ring, 120 inches in diameter, mates with the launch vehicle mating ring. Twenty bolts secure the rings together. To provide for alignment, the launch vehicle incorporates one steel 3/26 inch diameter alignment pin located at "TY" and four index marks. To separate the spacecraft from the launch vehicle, a pyrotechnic charge is fired, severing the adapter section approximately 1 1/2 inches above the launch vehicle/spacecraft mating point.

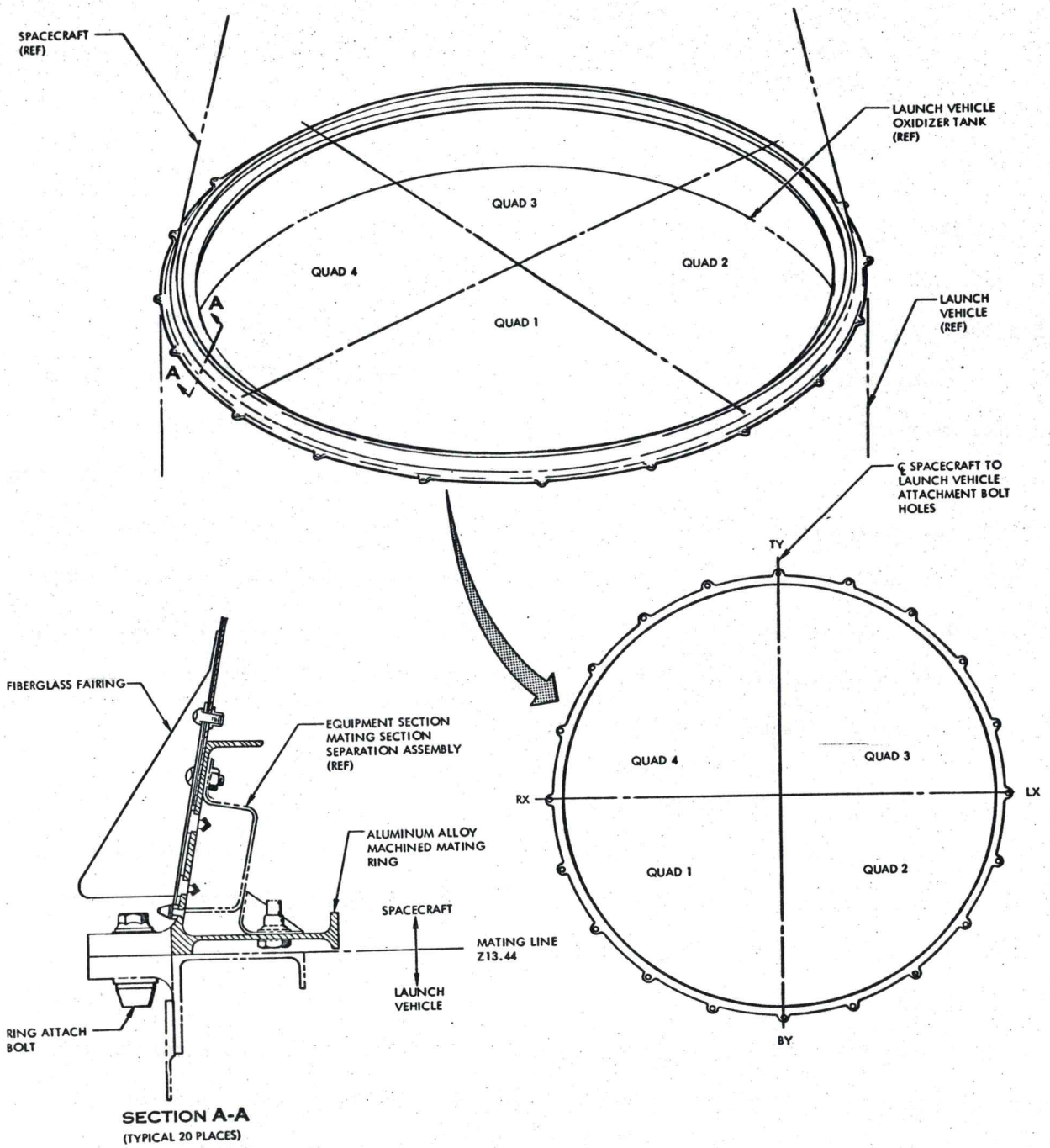

FM 2-2-12

Figure 2-12 Spacecraft/Launch Vehicle Mating Ring

CABIN INTERIOR ARRANGEMENT

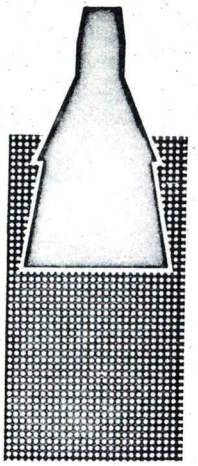

Section III

TABLE OF CONTENTS

TITLE	PAGE
GENERAL	3-3
CREW SEATING	3-3
SEAT DESCRIPTION	3-3
SEAT EJECTION SYSTEM	3-5
RESTRAINT SYSTEM	3-10
EGRESS KIT	3-13
BACKBOARD ASSEMBLY	3-14
PELVIC BLOCK	3-14
BALLUTE SYSTEM	3-15
PERSONELL PARACHUTE	3-15
PARACHUTE DROGUE MORTAR	3-15
HARNESS ASSEMBLY	3-16
SURVIVAL KIT	3-16
PYROTECHNIC DEVICES	3-18
INSTRUMENT PANELS	3-19
CABIN INTERIOR LIGHTING	3-19
STATIC SYSTEM	3-22
FOOD, WATER and EQUIPMENT STOWAGE	3-22
WASTE DISPOSAL	3-27
STOWAGE PROVISIONS	3-27

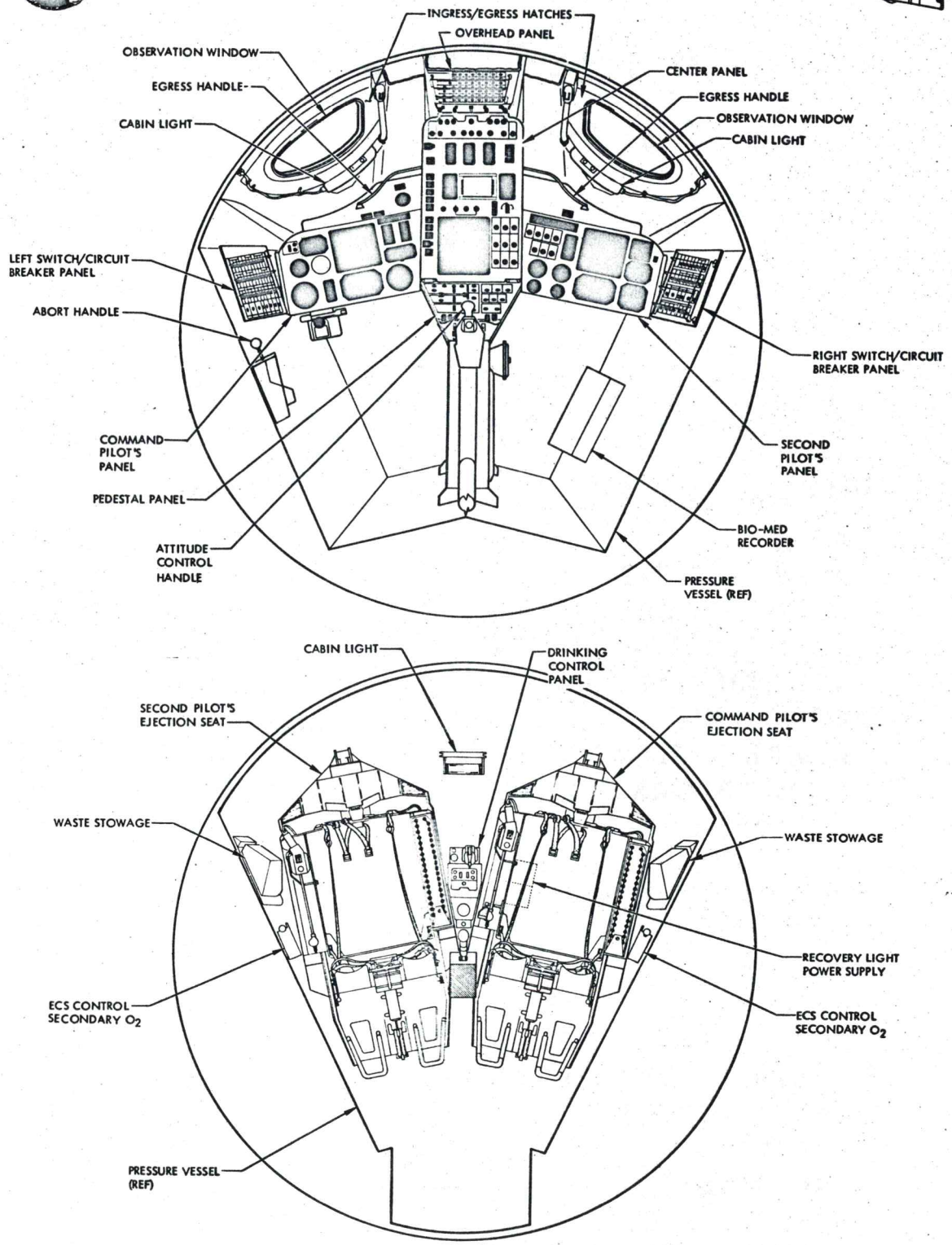

Figure 3-1 Cabin Equipment (Typical)

FM2-3-1

SECTION III CABIN INTERIOR ARRANGEMENT

GENERAL

The equipment within the cabin is arranged to permit the Command Pilot, seated to the left, and the Pilot, seated to the right, to operate the controls and observe displays and instruments in full pressure suits in the restrained or unrestrained position. The cabin air outflow is regulated during launch to establish and maintain a 5.5 psi differential pressure between the cabin and outside air. The cabin is maintained at a nominal 5.1 psia throughout the flight by a cabin pressure regulator. The cabin equipment (Figure 3-1) basically consists of crew seats, instrument and control panels, controls, lighting, food, water, waste collection, and miscellaneous equipment.

CREW SEATING

The crew members are seated in the typical pilot and co-pilot fashion, faced toward the small end of the re-entry module. The seats are canted 12° outboard and 8° forward to assure separation and to provide required elevation in the event an off the pad ejection is necessitated.

Crew seating provisions include seats, seat supports, restraint mechanisms, ejection devices, seat man separator, survival gear, and egress kit assembly.

SEAT DESCRIPTION

The crew seats (Figure 3-2) are all metal built-up assemblies consisting of a torque box framed seat bucket, channeled backs and arm rests. The seat has lateral and vertical stiffeners, designed for a single moment of thrust. The

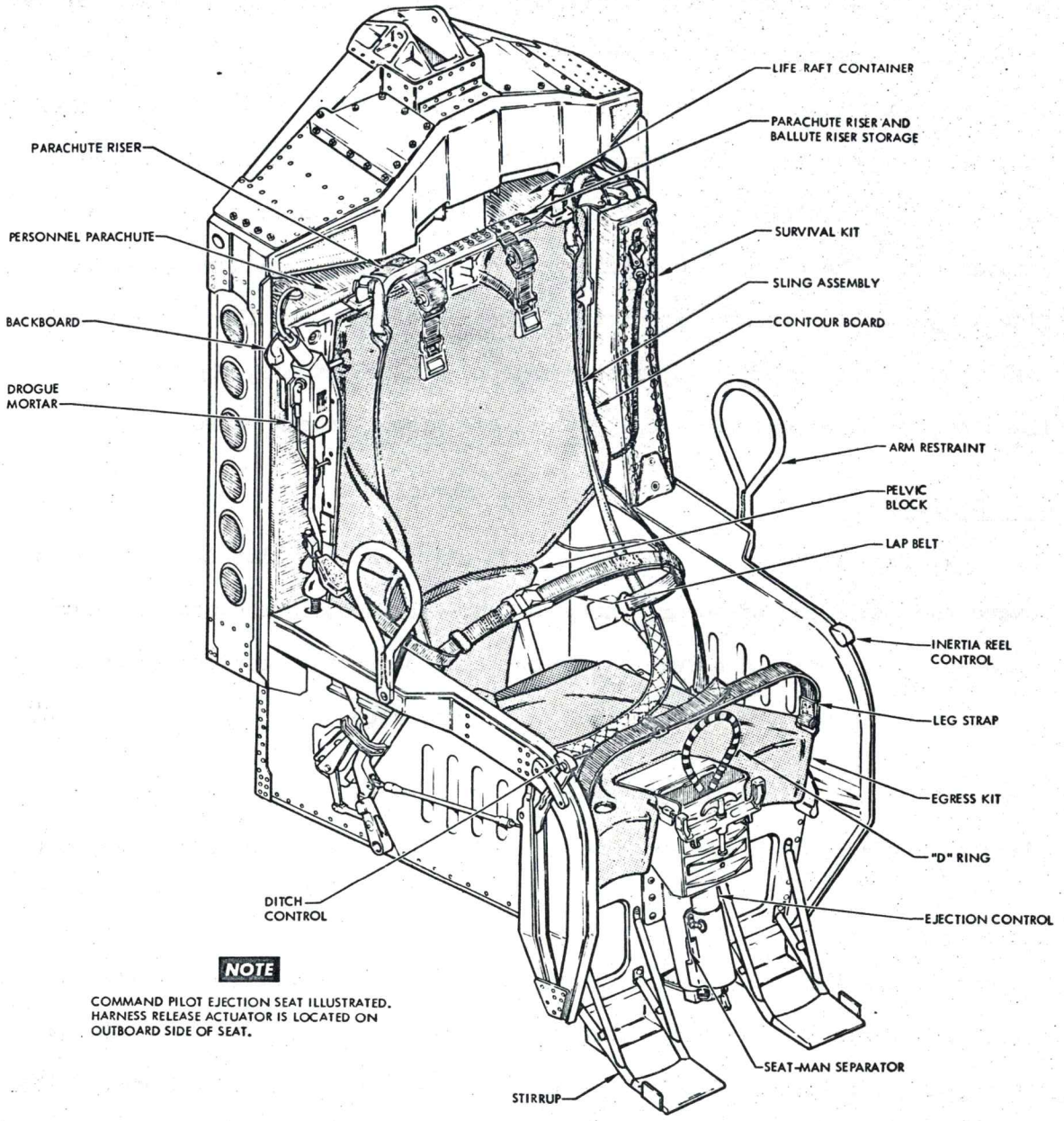

Figure 3-2 Gemini Ejection Seat Assembly

seat is supported at a single point at the top of the seat back. At this point, the seat bolts to the rocket/catapult. Each seat is supported against fore, aft, and side movement by slide blocks mounted on the seats and retained in tee type rail assemblies attached to the large pressure bulkhead. The seats incorporate a padded contoured headrest to support the pilots helmet. Each seat also incorporates a restraint system, harness release system and a seat-man separator.

SEAT EJECTION SYSTEM

The seat ejection system (Figure 3-3) provides the pilot with a means of escaping from the vicinity of the spacecraft in the event of an abort or in an emergency condition during launch or re-entry. Crew member seats are ejected by means of rocket catapults. Hot gas from each of the hatch actuators is routed to the appropriate seat catapult where dual firing pins strike dual percussion primers, thereby igniting the seat rocket catapult main charge and ejecting the seats from the spacecraft. Hot gas from the rocket catapult main charge ignites the sustainer rocket and the rocket provides additional separation from the spacecraft. In the event ejection becomes necessary, after deployment of main landing system parachute and while descending in the two point suspension, it is mandatory that the main landing system parachute be jettisoned before ejecting from the spacecraft.

The ejection sequence is initiated by manually pulling either "D" ring located on front of the seat buckets. During the launch phase of flight, each pilot erects and holds on the "D" ring. This action aids in stabilizing the pilots' arms and at the same time places them in a position for instant response. The "D" rings are normally stowed under a sliding door on the egress kit and are locked into

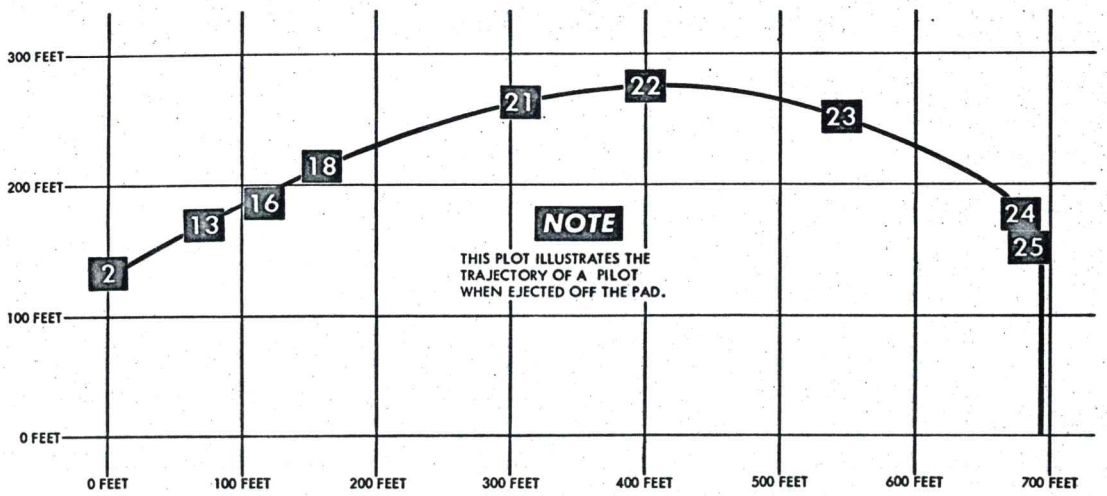

EJECTION SEAT TRAJECTORY PLOT

WARNING

EITHER PILOT CAN EJECT BOTH SEATS. ASSURE EACH PILOT IS PROPERLY POSITIONED BEFORE INITIATION.

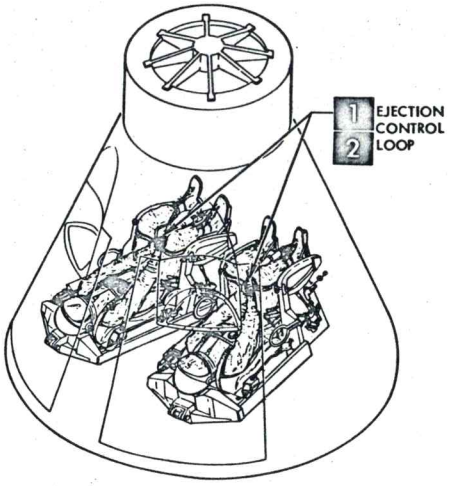

1 BOTH PILOTS WILL HOLD THE EJECTION CONTROL LOOP FIRMLY.

WARNING

THE CONTROL LOOP WILL BE HELD FIRMLY TO KEEP ARMS WITHIN EGRESS AREA LIMITS.

2 INITIATE EJECTION

EVENT TIME
0

INDIVIDUAL ACTION	
TIME	TOLERANCE
0	

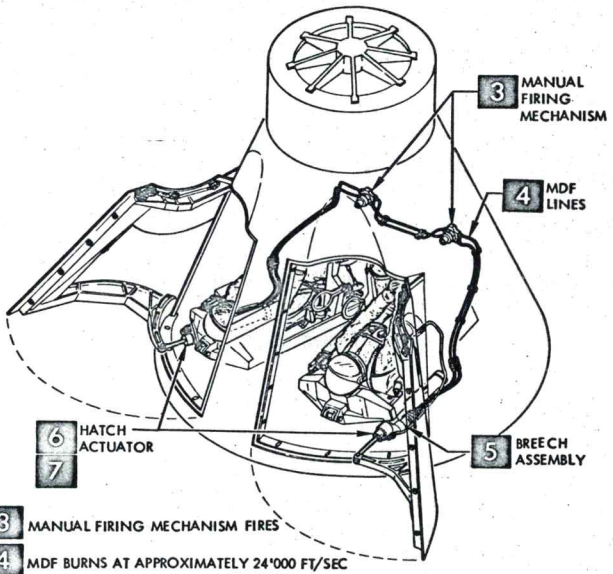

3 MANUAL FIRING MECHANISM FIRES

4 MDF BURNS AT APPROXIMATELY 24'000 FT/SEC

NOTE

MDF CROSSOVER NETWORK INITIATES SECOND SEAT INITIATOR. IMPULSE TRAVELS TO HATCH ACTUATORS IN 4 SEPARATE LINES.

EVENT TIME
.010

INDIVIDUAL ACTION	
TIME	TOLERANCE
.010	

5 BREECH ASSEMBLY IGNITES.

6 HATCH IS UNLATCHED.

7 HATCH IS OPENED.

EVENT TIME
.260

*VARIABLE-DEPENDS ON HATCH LOAD

INDIVIDUAL ACTION	
TIME	TOLERANCE
* .250	+.075 -.05

Figure 3-3 Ejection Seat Sequence Of Operation (Sheet 1 of 4)

FM 2-3-3
1 OF 4

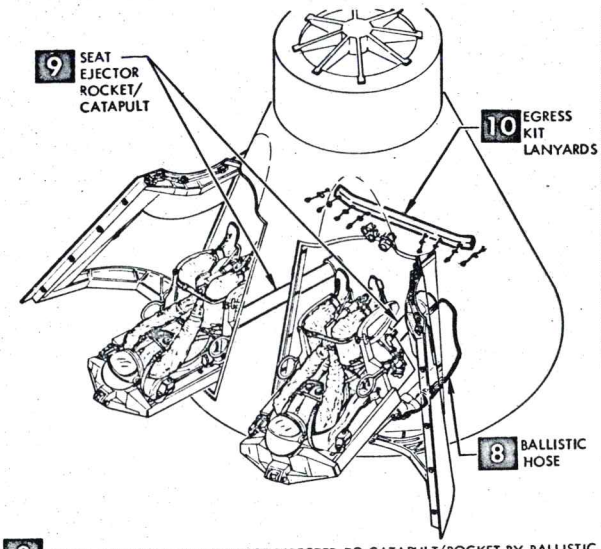

8 HATCH ACTUATOR GAS IMPULSE DIRECTED TO CATAPULT/ROCKET BY BALLISTIC HOSE.

9 CATAPULT FIRES

10 HARNESS RELEASE ACTUATORS INITIATED. EGRESS KIT LANYARDS PULLED. PILOT SUPPLIED WITH EGRESS OXYGEN PRESSURE. COMMUNICATION SEVERED.

EVENT TIME
.333

INDIVIDUAL ACTION	
TIME	TOLERANCE
.073	+.007 -.008

11 EJECTION SEAT MOVING UP, IGNITES EJECTION ROCKET APPROXIMATELY 4 INCHES FROM END OF RAIL TRAVEL.

EVENT TIME
.394

INDIVIDUAL ACTION	
TIME	TOLERANCE
.134	+.009 -.008

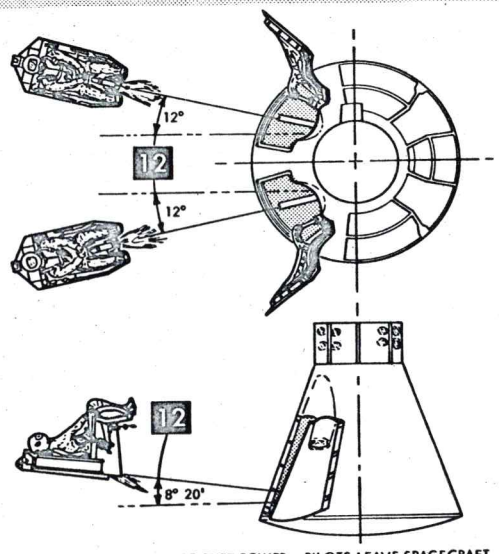

12 EGRESS CONTINUES UNDER ROCKET POWER. PILOTS LEAVE SPACECRAFT AT 12° OUTBOARD OF "X" AXIS AND 8° 25' FORWARD OF "Z" AXIS.

13 ROCKET BURN OUT.

EVENT TIME
.664

INDIVIDUAL ACTION	
TIME	TOLERANCE
.270	± .02

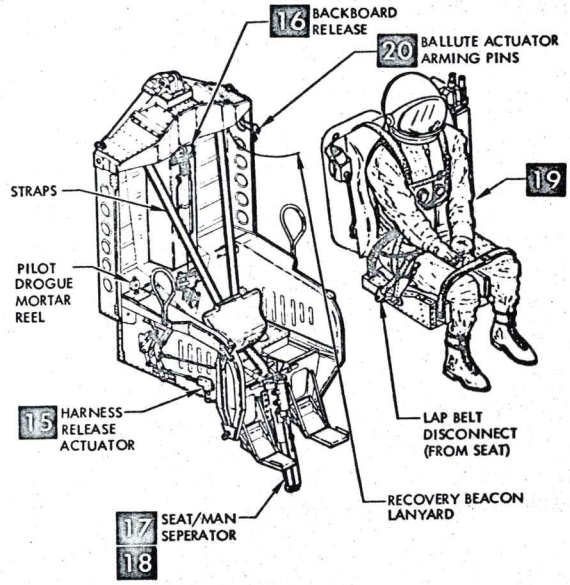

14 EJECTION SEAT CONTINUES ON TRAJECTORY

15 HARNESS RELEASE ACTUATOR FIRES

16 LAP BELT RELEASE ASSEMBLY ACTIVATED. BACKBOARD AND SURVIVAL GEAR ASSEMBLY RELEASED FROM SEAT.

EVENT TIME
1.418

INDIVIDUAL ACTION	
TIME	TOLERANCE
1.085	± .162

17 HARNESS RELEASE ACTUATOR GAS IMPULSE DELIVERED TO SEAT/MAN SEPARATOR BY BALLISTIC HOSE.

18 SEAT/MAN SEPARATOR SHOE EXTENDS AND REMOVES SLACK FROM STRAP ASSEMBLY.

19 PILOT WITH BACKBOARD AND SURVIVAL GEAR, AND EGRESS KIT SEPARATE FROM SEAT.

20 PILOT DROGUE MORTAR, BALLUTE SYSTEM AND RECOVERY BEACON INITIATED BY LANYARDS CONNECTED TO SEAT STRUCTURE.

EVENT TIME
1.508

INDIVIDUAL ACTION	
TIME	TOLERANCE
.090	± .015

FM 2-3-
2 OF 4

Figure 3-3 Ejection Seat Sequence Of Operation (Sheet 2 of 4)

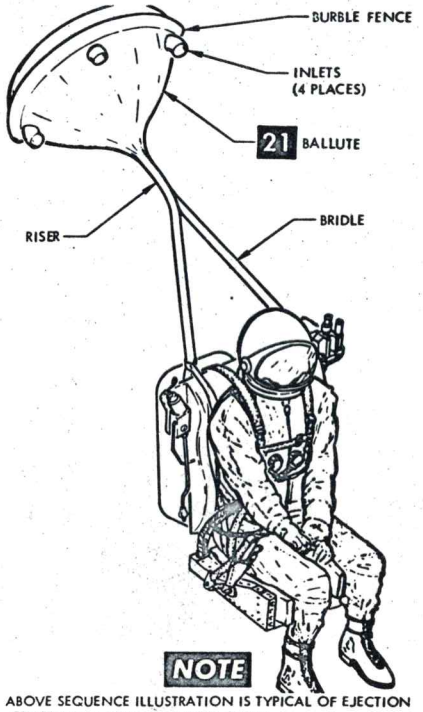

NOTE

ABOVE SEQUENCE ILLUSTRATION IS TYPICAL OF EJECTION BETWEEN 7500 AND 40,000 FEET ONLY.

21 BALLUTE DEPLOYS AFTER A 5 SECOND DELAY.

NOTE

1. BALLUTE BAROSTAT HAS BEEN ACTIVATED TO JETTISON THE BALLUTE AT 7500 FEET.
2. TIME CHART APPLICABLE TO EJECTION ABOVE ONLY.

EVENT TIME
6.508

INDIVIDUAL ACTION	
TIME	TOLERANCE
5.00	

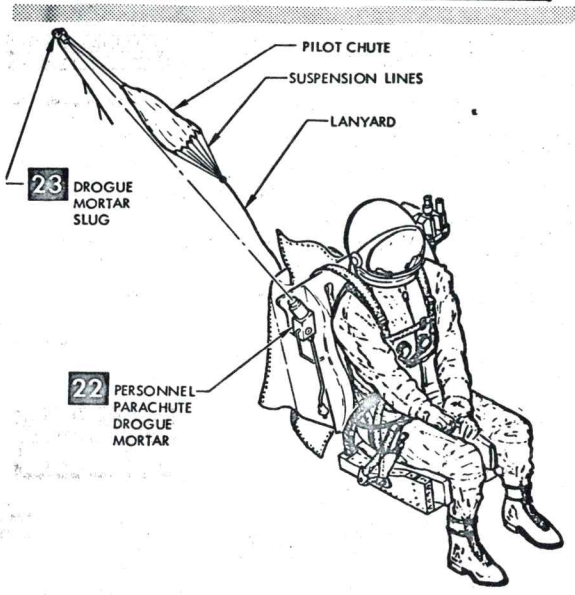

NOTE

DROGUE MORTAR BAROSTAT IS ACTIVATED DURING SEAT/MAN SEPARATION TO DEPLOY THE PARACHUTE AT 5700 FEET OR BELOW.

22 DROGUE MORTAR FIRES.

EVENT TIME
3.808

INDIVIDUAL ACTION	
TIME	TOLERANCE
2.3	+.575 -.460

NOTE

EVENT TIMES ARE FOR EJECTION BELOW 5700 FEET ONLY.

23 MORTAR SLUG DEPLOYES AND INFLATES PILOT AND MAIN PARACHUTES.

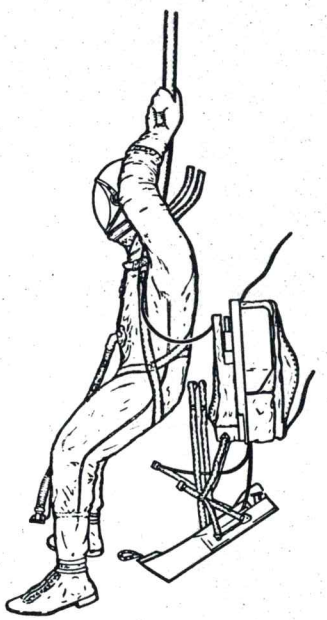

24 PARACHUTE FULLY INFLATED.

* VARIABLE-DEPENDS ON DYNAMIC PRESSURE.

EVENT TIME
6.808

INDIVIDUAL ACTION	
TIME	TOLERANCE
3.0	*

25 BACKBOARD AND EGRESS KIT SEPARATED FROM PILOT.

EVENT TIME
8.808

INDIVIDUAL ACTION	
TIME	TOLERANCE
5.0	+1.25 -1.00

Figure 3-3 Ejection Seat Sequence Of Operation (Sheet 3 of 4)

FM 2-3-3
3 OF 4

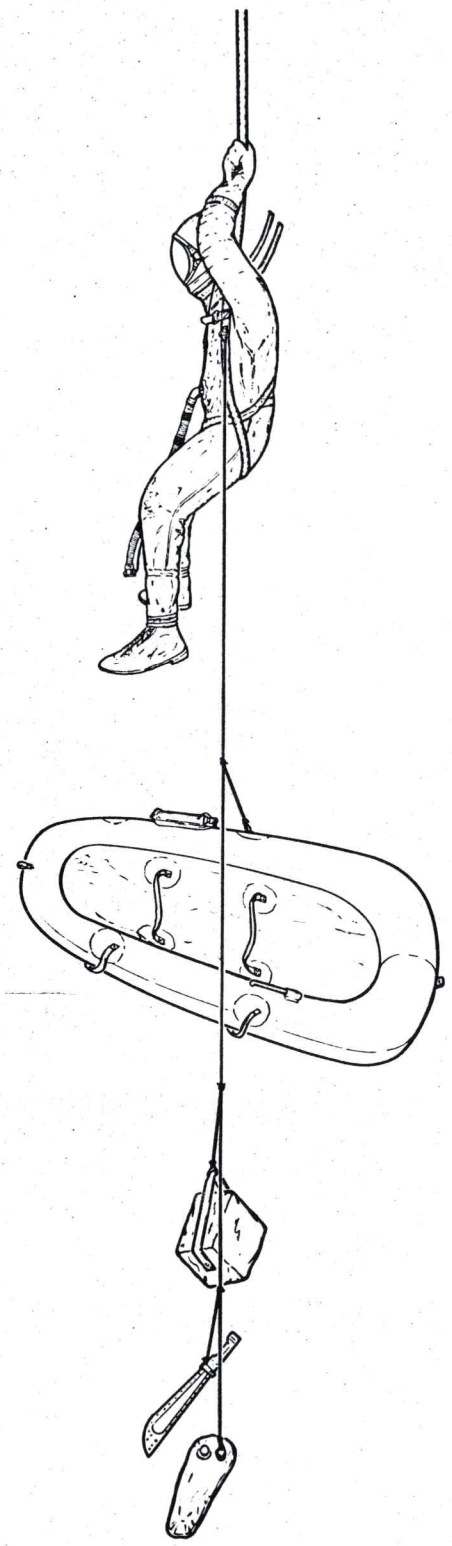

NOTE

SURVIVAL EQUIPMENT DEPLOYED AS BACKBOARD FALLS FROM PILOT. THE LIFE RAFT IS INFLATED MANUALLY DURING PARACHUTE DESCENT ALL SURVIVAL EQUIPMENT IS SECURED TO PILOT BY A LANYARD.

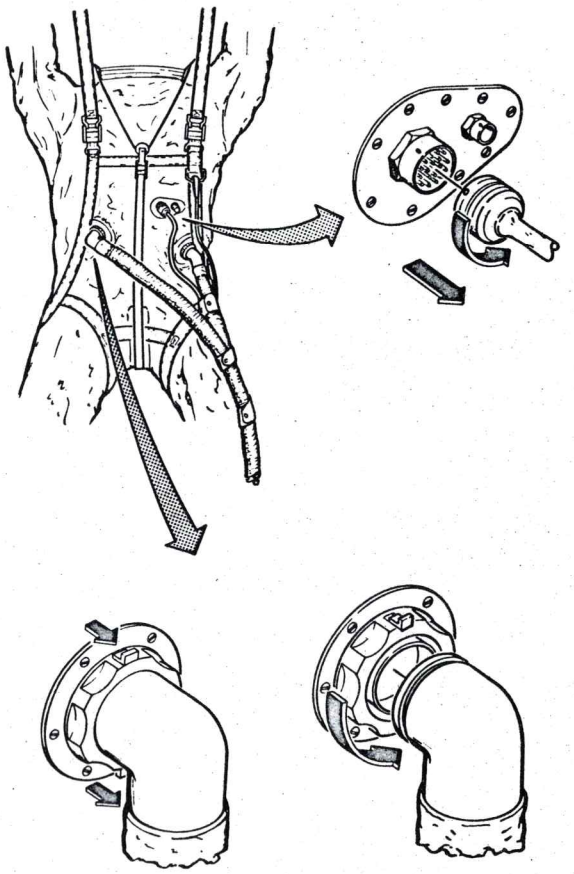

NOTE

PILOT DISCONNECTS OXYGEN INLET AND OUTLET HOSES. OXYGEN CONNECTION IN PRESSURE SUIT IS SEALED CLOSED WHEN OXYGEN HOSE IS REMOVED.

Figure 3-3 Ejection Seat Sequence Of Operation (Sheet 4 of 4)

FM 2-3-3
4 OF 4

place via a pip pin on the front of the structure. This pin is removed during launch and replaced for spaceflight. The pip pin is removed for re-entry.

RESTRAINT SYSTEM

Each pilot is restrained in his ejection seat by a restraint system (Figure 3-4) consisting of arm restraint loops, leg restraint straps, foot stirrups, elbow restraint, lap belt, shoulder harness and inertia reel assembly. The restraint system provides adequate support and restraint during conditions of maximum acceleration and deceleration.

INERTIAL REEL

The inertia reel (Figure 3-4) is a two position locking device, located on the rear of the backboard. Two straps connect the inertia reel and the pilot's harness to restrain the pilot's forward movement. The inertia reel control handle is located on the front of the left arm rest and has two positions, "manual lock" and "automatic lock." Orbital flight is accomplished with the inertia reel in the "automatic lock" position. Manual lock position is used during launch and re-entry. The manual lock position prevents the pilot's shoulders from moving forward.

To release his shoulders, when the inertia reel is in the manual lock position, the pilot must position the control handle to the automatic position. The "automatic lock" allows the astronaut to move forward slowly but will lock with a shock movement of 3 "G's." When the automatic lock has engaged, the lock will ratchet and permit movement back into the seat, but will not permit forward movement. The release of the automatic lock is accomplished by cycling the control handle to manual and back to automatic lock.

Maximum extension of the shoulder strap from the inertia reel is 18 inches.

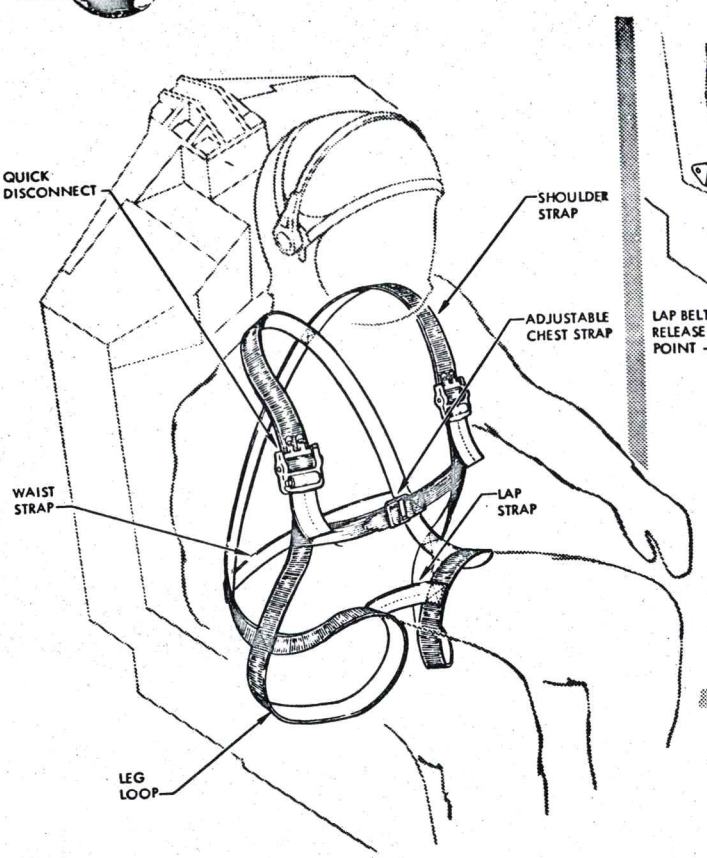

1 PERSONAL HARNESS

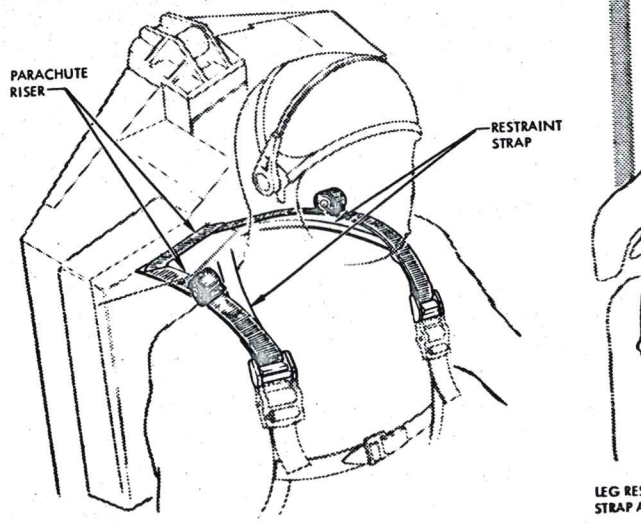

2 SHOULDER RESTRAINT

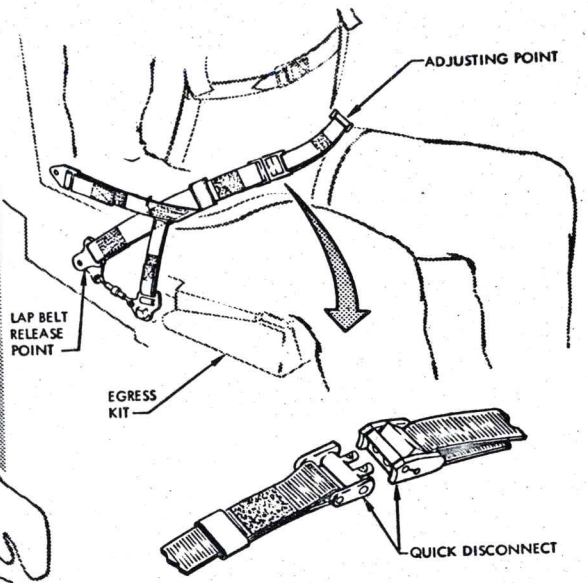

3 LAP BELT ASSEMBLY

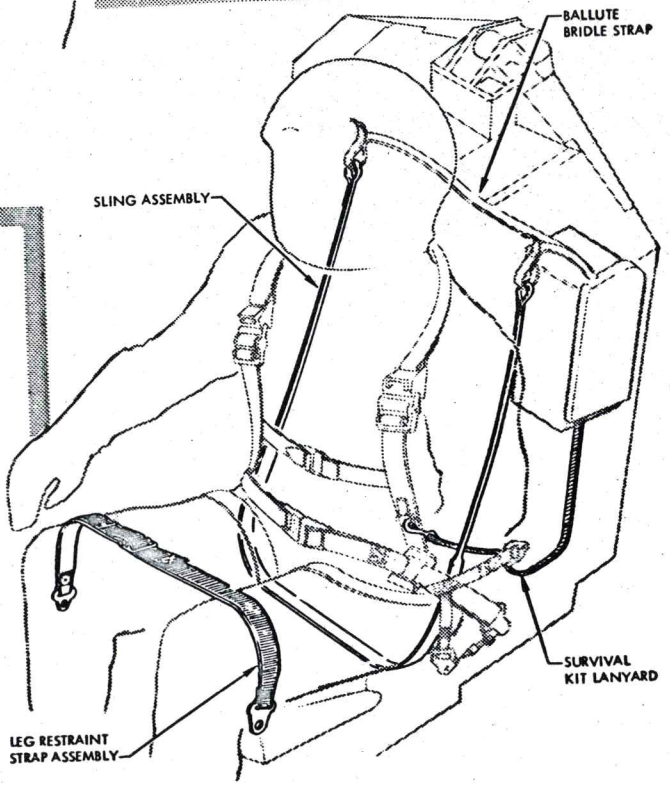

4 LEG RESTRAINT AND SURVIVAL KIT LANYARD

Figure 3-4 Restraint System

ARM RESTRAINT

The arm restraint (Figure 3-4) is a welded, 1/2 inch diameter tube assembly made up in the form of a loop. A loop is installed on each arm rest to retain the pilot's arms within the ejection envelope. When the arm restraint loop is not required, it may be rotated back and down.

ELBOW RESTRAINT

An elbow restraint is provided for the command pilot only. It is used to stabilize his forearm during manual re-entry.

LEG RESTRAINT STRAP

The leg restraint (Figure 3-4) consists of two straps of dacron webbing. One end of each strap is secured to the egress kit by round metal eyelets. The left strap of each leg restraint has a metal end assembly that permits the right strap to fold back on itself. Velcro tape on the right strap is used to secure the strap in position when the strap is drawn tight over the pilot's legs. During seat/man separation, the restraint strap eyelets are automatically released from the egress kit.

EJECTION SEAT FOOT STIRRUP

The ejection seat foot stirrups (Figure 3-2) consist of two welded frames attached to the front of the ejection seat. Each stirrup has a short protruding platform with small vertical edges rising along the outboard side. The stirrup is so constructed that the pilot's shoe heel will lock in place and prevent forward movement of the foot while the small vertical edges will prevent side movement. During seat ejection, the pilot's feet must be in place.

LAP BELT

The lap belt (Figure 3-4) is an arrangement of dacron and nylon straps, designed to restrain the pilot in the seat structure. Load carrying straps from the lap belt are fastened to the backboard and egress kit. The lap belt has a manual quick disconnect and a pyrotechnic release fitting near the center of the pilot's lap. The manual quick disconnect can be released with one finger. Lap belt tension is adjusted by sliding excess strap through the pyrotechnic release. During ejection, the lap belt ends attached to the seat structure are released just prior to seat/man separation. During separation, the lap belt remains with the pilot. Five seconds after the backboard drogue mortar fires, the pyrotechnic lap belt release activates and allows the lap belt, backboard and egress kit to fall free.

A second manual release for the lap belt is also available to the pilot. It is located forward on the right arm rest and is referred to as the ditch handle. Releasing the lap belt with the ditching handle allows the pilot to egress from the landing module with the backboard and egress kit.

EGRESS KIT

The egress kit assembly contains the bail out oxygen for an ejected pilot. The egress kit rests in the ejection seat bucket and forms a mounting surface for the egress kit cushion. The egress kit contains an oxygen supply, for breathing and suit pressurization; a composite disconnect, which when separated closes the port and prevents escape of egress oxygen; a relief valve, to prevent pressure build up in the pressure suit; a regulator, to reduce high pressure to a controlled flow of low pressure oxygen;a pressure gage, for visually checking egress oxygen pressure; and connecting lines. Three lanyards are attached between the egress kit and

the spacecraft. These lanyards pull release pins to allow the composite disconnect to separate, allow the oxygen to flow through the pressure regulator and allow the relief valve to control the pilot's suit pressure. When the drogue mortar deploys the pilot parachute, a 5 second pyrotechnic time delay is initiated and at burn out the egress kit with the backboard is separated from the pilot.

EGRESS KIT CUSHION

The egress kit cushion (Figure 3-2) has a universal type of contour and is attached to the top of the egress kit. The cushion is positioned forward of the pelvic block and up to the access door to the ejection control "D" ring.

BACKBOARD ASSEMBLY

The backboard assembly (Figure 3-2) is machined aluminum, designed and stressed to retain the inertia reel, ballute, ballute release and deploy mechanism, drogue mortar, parachute and survival kit. A cushion, contoured to the individual pilot's body requirements, is positioned on the forward surface of the backboard. The cushion is provided to supply support and comfort to the pilot's back. The inertia reel straps and lap belt secures the pilot to the backboard. The backboard accompanies the pilot through seat ejection to parachute deployment. Five seconds after parachute deployment, the backboard with the egress kit is separated from the pilot.

PELVIC BLOCK

The pelvic block (Figure 3-2), contoured to the lower torso of each pilot, is positioned between the backboard assembly and the egress kit. The block supports the pilot's lower vertebra and pelvic structure. It remains with the seat structure upon seat man separation.

BALLUTE SYSTEM

The ballute system (Figure 3-2) consists of a barostat controlled pyrotechnic initiator, combined with a pyrotechnic gas generator, cutters and a packaged ballute. The ballute, located on the back and lower left side of the pilot's backboard, is an aluminized nylon fabric enclosed cone. It is inflated by ram air passing through four inlets located symmetrically around the upper periphery. The ballute is connected to the backboard through an 8" riser, a 5 ft. dual bridle, and by a 1.00 inch wide dacron webbing passing through a pyrotechnic actuated cutter. The ballute provides the pilot with a stabilized, feet into the wind, attitude for all ejections over 7500 feet. The system is fully automatic and is actuated at seat man separation. At altitudes below 7,500 feet, the barostat prevents deployment of the ballute.

PERSONNEL PARACHUTE

The personnel parachute (Figure 3-2) is a standard 28 ft. dia. nylon parachute. The parachute is located on the right rear of the pilot's backboard. It is deployed by the drogue mortar slug and pilot chute. The parachute risers are attached to the pilot's personal harness.

PARACHUTE DROGUE MORTAR

The parachute drogue mortar (Figure 3-2) is a pyrotechnic device designed to eject a 10 oz. drogue slug with sufficient velocity to deploy the pilot chute of the personnel parachute. The drogue mortar is a barostat operated firing mechanism, but can be fired manually. It will fire and deploy the parachute at or below 5700 feet plus a 2.3 seconds time delay from seat/man separation. An MDF chain is initiated by the drogue mortar and separates the backboard and egress kit from the pilot.

HARNESS ASSEMBLY

The harness assembly (Figure 3-4) provides a light, strong, and comfortable arrangement to attach the personnel parachute to the pilot. The harness is constructed from nylon webbing formed into a double figure "8." The two figure "8's" are joined by two cross straps, the waist strap, and the chest strap. Only the chest strap is adjustable. A quick disconnect is placed forward and below each shoulder for connection of the parachute risers and inertia reel straps. Below the left quick disconnect, a small ring is incorporated to attach the survival equipment lanyard.

SURVIVAL KIT

The survival kit (Figure 3-2) is a packaged group of specially designed equipment for the use of a downed pilot. Articles in this kit are intended to aid in preserving life under varying climatic conditions. Deployment of the survival kit is automatic if the pilot ejects and is also available to the pilot if he lands with the re-entry vehicle.

Deployment of the survival kit during the ejection cycle takes place as the backboard and egress kit falls away from the parachuting pilot. As the backboard falls, the survival equipment lanyard, connected to the pilot's harness, pulls a pin on the life raft container. When the pin is removed, the "daisy chain" loops are disengaged and the life raft and rucksack are extracted from the container. The survival equipment lanyard repeats the extraction process in removing the machete and water bottle from the second container. The machete and water bottle are stowed in a survival equipment container on the left front side of the backboard.

During seat/man separation, a lanyard between the seat structure and the rucksack activates the radio/beacon. As the pilot descends on his parachute, the survival equipment is suspended below and the radio beacon transmits on emergency frequency. Direction finding equipment on aircraft and aboard ship can plot the pilot's position.

Survival equipment is divided into two major stowage containers. The life raft container mounted on the left rear of the backboard has the following items:

Life raft container

1 Lift Raft

1 Sea Anchor

1 4 x 4 Foam Rubber Pad

1 CO_2 Cylinder

1 Sea Dye Marker

1 Sun Bonnet

Rucksack

1 Survival light

1 Strobe light
1 Flash light

4 Fish hooks

Fish line

2 Sewing Needles

Thread

1 Compass

1 Fire Starter

4 Fire Fuel

1 Whistle
1 Signal Mirror
14 Water Purification tablets
1 De-salter kit (less can)
8 De-salter tablets
1 Water Bag
1 Repair kit
1 Medication kit
6 Tablet Packets
1 Small Injector (1 CC)
1 Large Injector (2 CC)
1 3 x 3 Compress
1 12x12 Aluminum Foil
1 Tube Zink Oxide
1 pr Sunglasses
1 Radio/Beacon

The forward survival kit, mounted on the forward surface of the backboard to the left of the pilot's shoulder, contains the following;

1 Water container with 3 lb of water
1 Machete with sheath

PYROTECHNIC DEVICES

There are 18 pyrotechnic devices incorporated in the cabin all of which pertain to seat ejection, restraint release and parachute deployment. The pyrotechnic devices are 2 hatch actuators, 2 seat rocket catapults, 2 ballute deployment and release mechanisms, 2 backboard and egress kit jettison, 2 drogue mortars, 2 harness

release actuators, 2 seat/man separator actuators, 2 hatch actuator initiators and 2 hatch MDF harnesses. The pyrotechnic devices, except the drogue mortar, are safetied by stowing the ejection control handle and installing a safety pin through the mechanically actuated initiator and a pip pin through the egress kit. The safety pins will prevent seat ejection if control handle is inadvertently pulled.

INSTRUMENT PANELS

Instrument panels, switch and circuit breaker panels and pedestal (Figure 3-5)are arranged to place controls and indicators within reach and convenient view of each crew member while in a full pressure suit. A swizzle stick, stowed by the overhead circuit breaker panel, enables a pilot to position switches and rotate selectors on the opposite side of the cabin. With this arrangement,one pilot can control the complete spacecraft and temporarily free the second pilot of all duties.

CABIN INTERIOR LIGHTING

Basic lighting provisions consists of three incandescent flood lamps. One lamp is located at each side of the crew compartment and one in the center for crew station interior and instrument panels. Full range intensity control is available through a rheostat on each lamp. A three position selector switch on each of the hatch-mounted panel floodlights allows selection of WHITE-OFF-RED. The center floodlight WHITE-OFF-RED control switch is in the forward row of the overhead panel. The rheostat is located on the lamp fixture. The units contain individual bulbs for red and white light, with permanent filters and lenses to prevent light leakage. Fingertip lights are provided on the gloves of the NASA furnished pressure suits. Mechanically dimmed red utility lights are stowed in quick release mounts on each cabin wall immediately aft of the switch/circuit breaker panels. These lights are

lea

DETAIL "A"
S/C 6, 8, 9 ONLY

DETAIL "B"
S/C 9 ONLY

6 OVERHEAD SWITCH AND CIRCUIT BREAKER PANEL

11 WATER MANAGEMENT PANEL (S/C 5 ONLY)

11 WATER MANAGEMENT PANEL (S/C 6, 8, 9 ONLY)

DETAIL "C"
S/C 8, 9 ONLY

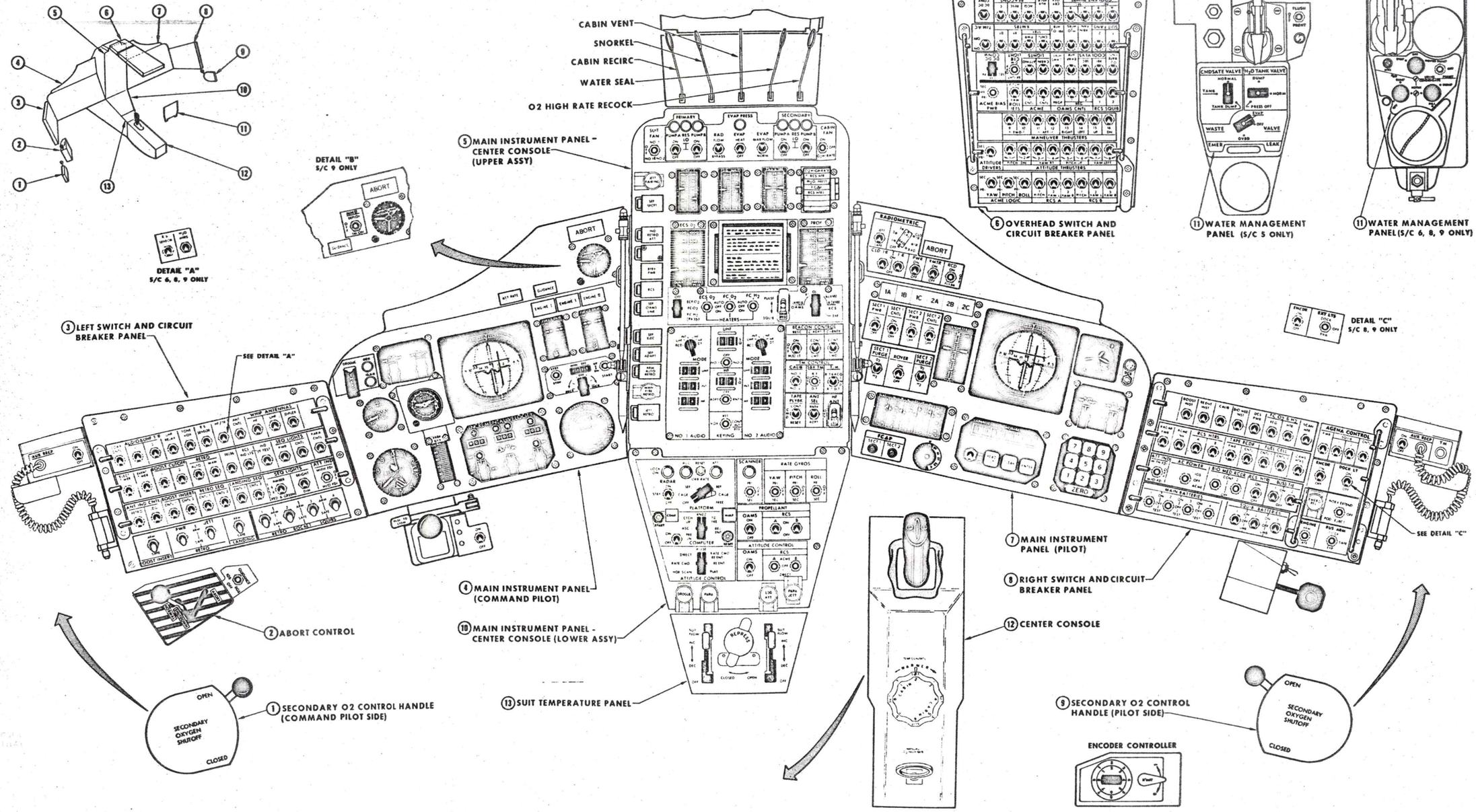

Figure 3-5 Instrument Panels and Displays- S/C 5, 6, 8 and 9 (Sheet 1 of 2) FM2-3-5(1)

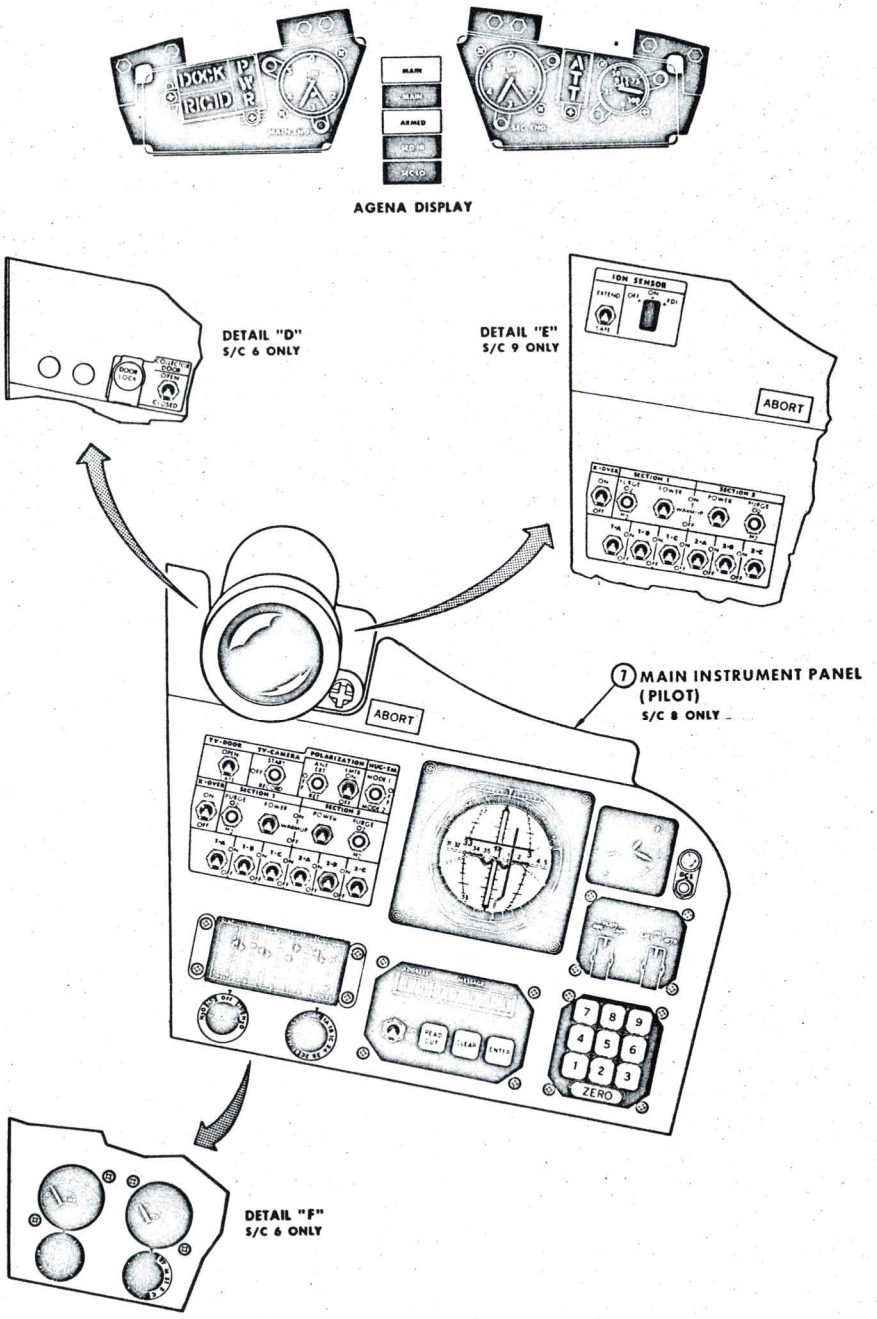

Figure 3-5 Instrument Panels and Displays- S/C 5, 6, 8 and 9 (Sheet 2 of 2) FM2-3-5(2)

powered from the spacecraft utility electrical outlets through a spiral retracting cord which is stowed when not in use.

ELECTRICAL OUTLETS

The two receptacles, powered by the spacecraft electrical system, are installed on brackets immediately aft of the left and right switch/circuit breaker panels. These receptacles are controlled by adjacent on-off switches and are used for powering the utility light or other electrical equipment.

STATIC SYSTEM

The static pressure system is employed to operate the rate of descent indicator, altimeter, and to supply pressure to the static pressure transducer for instrumentation. The static system is also utilized to provide a differential pressure for the cabin pressure transducer. The static ports (Figure 3-6), used for atmospheric pressure pick-up, are located in the small end of the spacecraft conical section. The static port (Figure 3-6), used for differential pressure pick-up, is located on the forward surface of the small pressure bulkhead.

FOOD WATER AND EQUIPMENT STOWAGE

Containers to left, right and aft of pilots (Figure 3-7) are provided for equipment and food storage. Although minor changes in storage containers are dictated by mission requirements, the main containers are as follows: Center line stowage box, used for delicate instruments; right aft stowage box, used to stow easily packaged equipment; left aft stowage box, used to stow food packages; right and left sidewall stowage boxes, used to stow small pieces of equipment; left and right fabric covered sidewall stowage boxes, used to stow lightweight head sets and sidewall stowage box extensions. The sidewall stowage box extensions are not

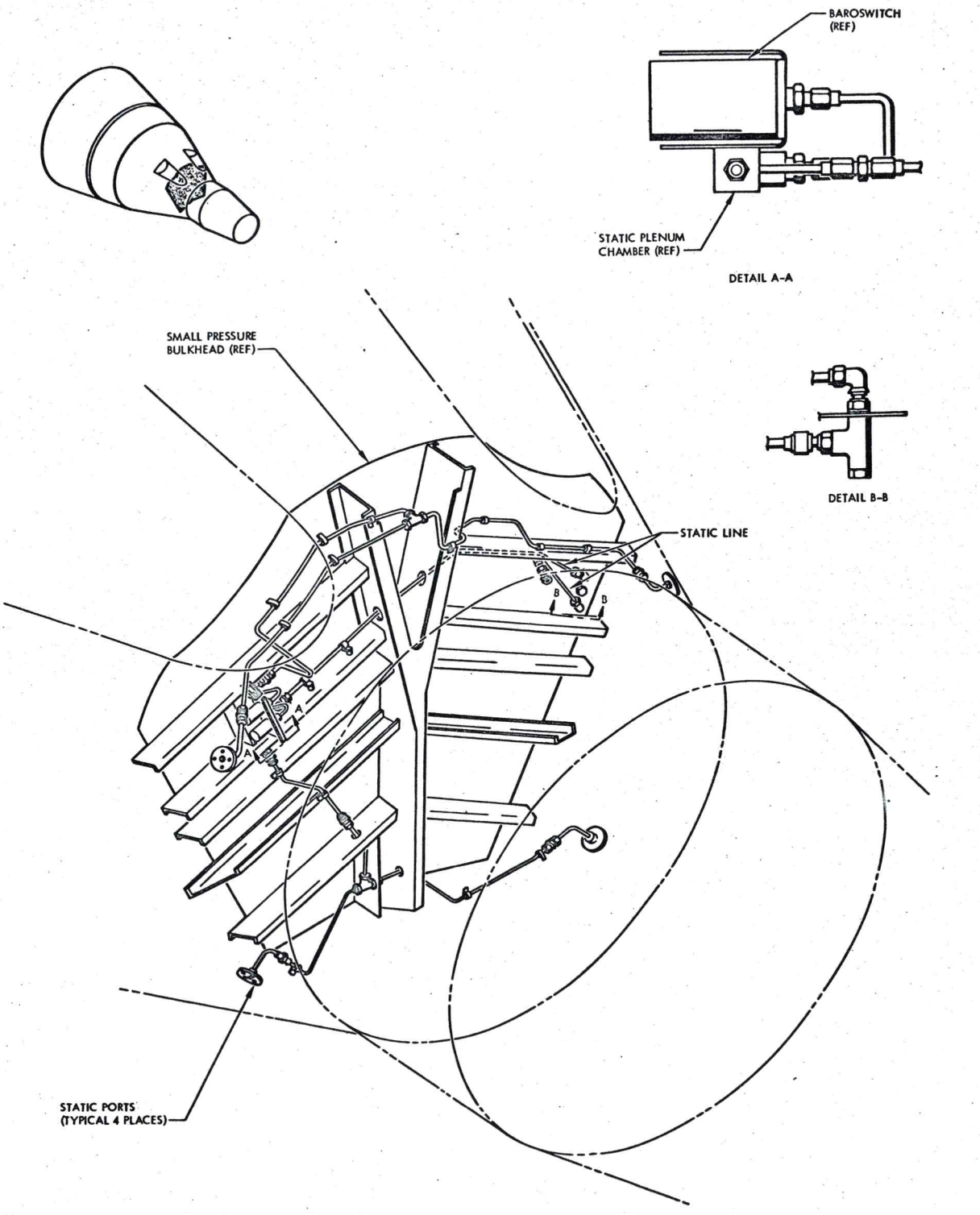

Figure 3-6 Static System

FM2-3-7

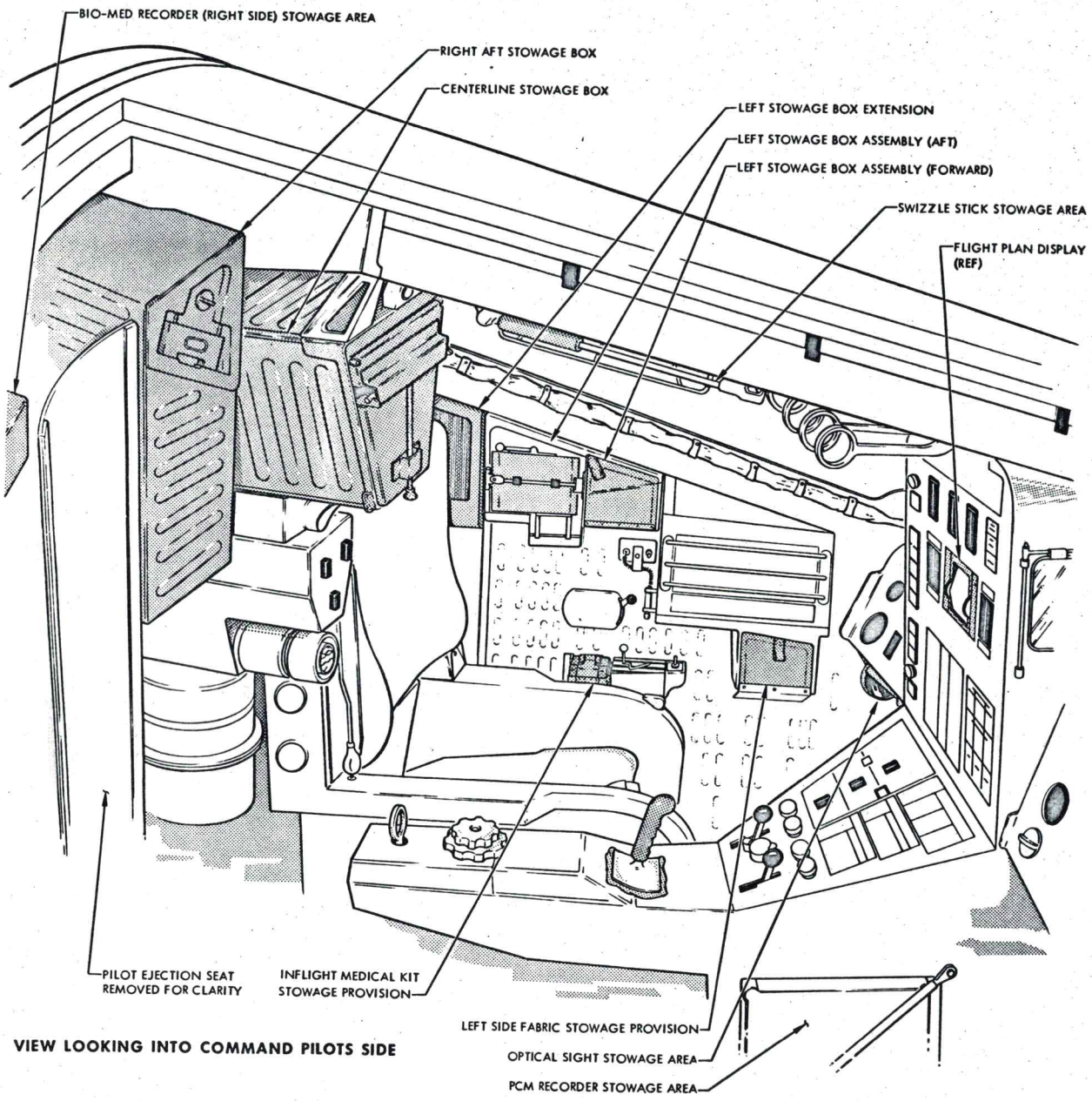

Figure 3-7 Cabin Stowage Areas (Typical) (Sheet 1 of 2)

FM2-3-4(1)

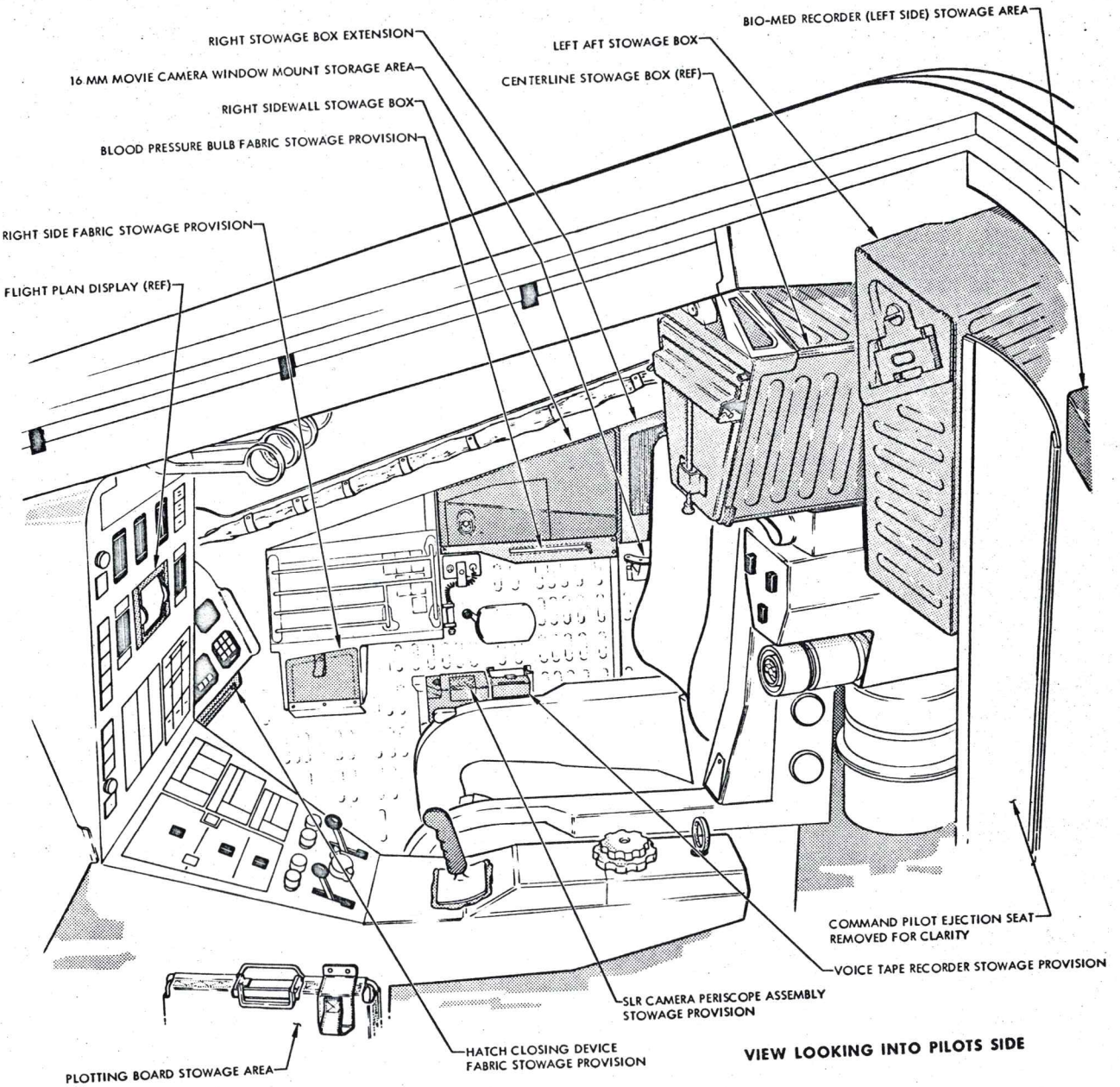

Figure 3-7 Cabin Stowage Areas (Typical) (Sheet 2 of 2)

FM2-3-4(2)

required for mission equipment at this time. Equipment stowed in the above boxes may change with each mission.

Larger pieces of equipment, emergency equipment or equipment used on every flight have special stowage brackets or fabric pouches positioned throughout the interior of the spacecraft. Examples of specific stowage brackets are as follows: adapter mirror assembly, stowed on centerline stowage box door; inflight medical kit, stowed aft of abort control handle; and the optical sight, stowed under command pilot's instrument panel. Without counting the food packages, stowage facilities are furnished for more than 125 pieces of equipment.

During flight, the right aft stowage box is cleared and the equipment is stowed with velcro tape on the spacecraft sidewalls, and on the inside surfaces of the egress hatch. As debris accumulates during flight, it is placed in the right aft stowage box. Prior to descent, the equipment is re-stowed. Only a general rule can be applied to stowage at this time. Exposed film is placed in insulated containers, previously occupied by cameras and lens, in the center line stowage box. The left aft stowage box is filled and the remainder of the loose equipment is divided among the sidewall stowage boxes on a planned basis. The right aft stowage box, with the flight debris, is only used when necessary.

A water storage container, with a 16-pound capacity, is located forward of the aft pressure bulkhead, between the seats. As the water is used from the main storage container, it is replenished by the water stowed in the adapter section. Drinking is accomplished by means of a tube and manual valve system. Control of the manually operated water system is by means of a tube and manual valve system. Control of the manually operated water system is by means of a 3-knob panel located

between the pilots at approximately shoulder level. Food and water will be sufficient for the mission and a postlanding period of 48 hours.

WASTE DISPOSAL

Feces will be collected in a glove-like plastic bag. Provisions are incorporated in the food containers for the placement of used and unused feces collector bags. Urine will be collected by means of a horn-shaped receptacle with a self-adjusting opening and directed into an intermediate bellows type container. Urine is disposed of by directing the liquid overboard.

STOWAGE PROVISIONS

Personal stowage facilities are provided for retaining removed portions of the pressure suit and other equipment as required. These provisions consist of Velcro covered areas on the floor of the pressure vessel, adjacent to the pilot's feet and attached to the structure wall outboard and forward of the pilots. Items to be stowed shall incorporate mating Velcro patches.

SEQUENCE SYSTEM

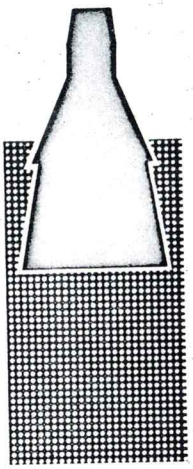

Section IV

TABLE OF CONTENTS

TITLE	PAGE
SYSTEM DESCRIPTION	4-3
SYSTEM OPERATION	4-4
PRELAUNCH	4-6
LIFT OFF	4-6
BOOST AND STAGING	4-7
SEPARATION AND INSERTION	4-9
ORBIT	4-12
PREPARE TO GO TO RETROGRADE	4-15
TIME TO RETROGRADE MINUS 30 SECONDS	4-18
RETROGRADE	4-20
RE-ENTRY	4-24
LANDING	4-24
POST - LANDING	4-27
ABORT MODES	4-27
SYSTEM UNITS	4-34
LEFT SWITCH/CIRCUIT BREAKER PANEL	4-35
CONTROLS AND INDICATORS	4-41
RELAY PANELS	4-55
SEPARATION SENSORS	4-60

PROJECT GEMINI

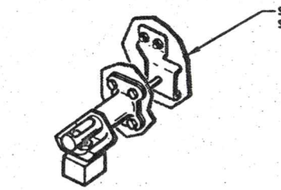

TYPICAL SEPARATION SENSOR

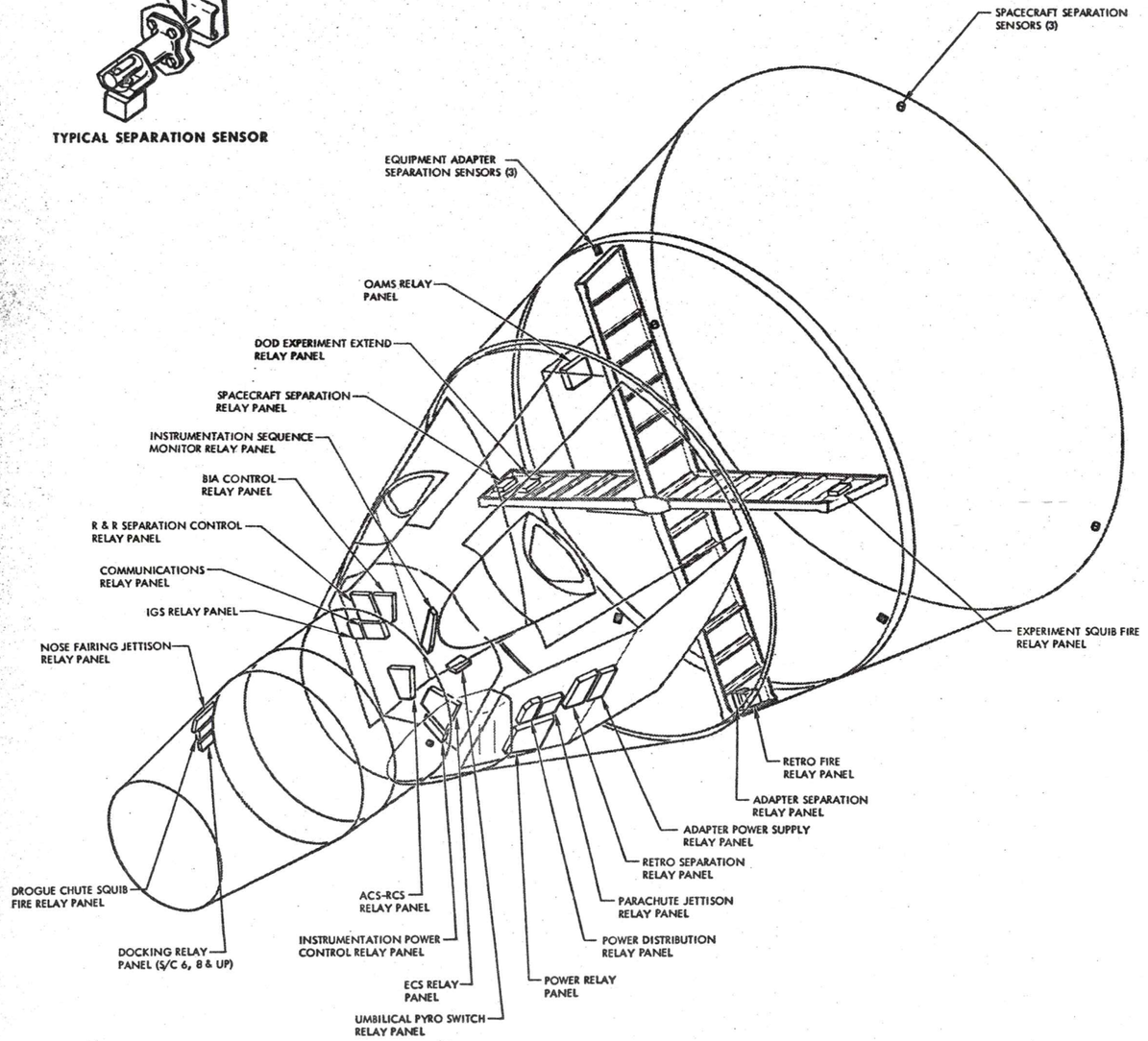

MAIN INSTRUMENT PANEL (UPPER ASSEMBLY)

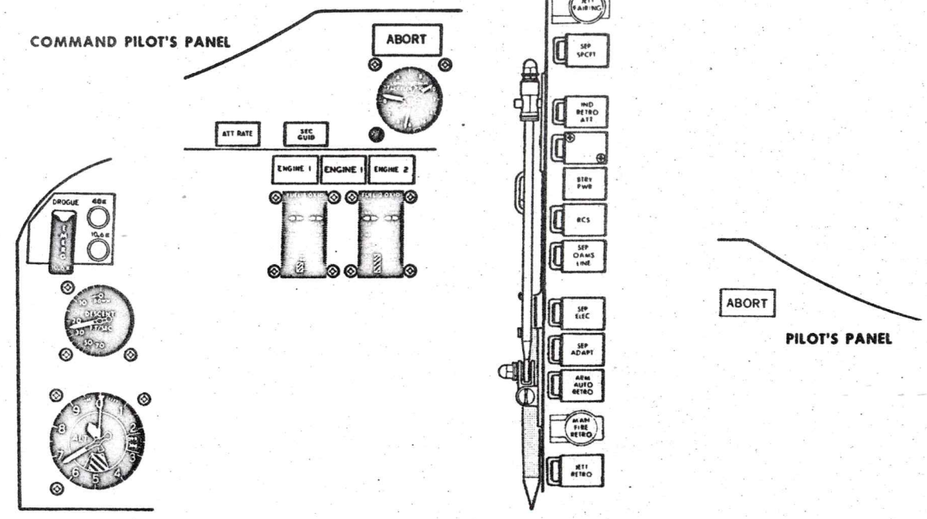

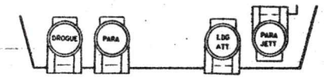

MAIN INSTRUMENT PANEL (LOWER ASSEMBLY)

LEFT SWITCH/CIRCUIT BREAKER PANEL

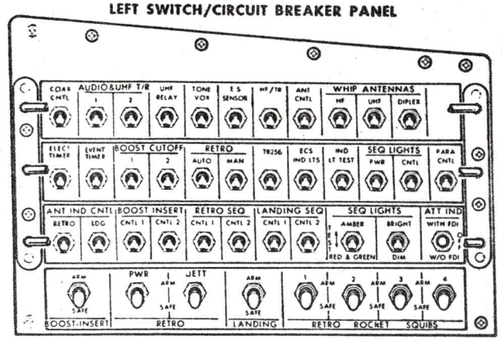

RIGHT SWITCH/CIRCUIT BREAKER PANEL

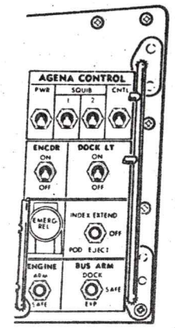

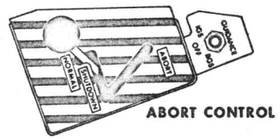

ABORT CONTROL HANDLE

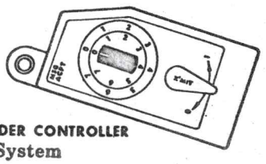

ENCODER CONTROLLER

Figure 4-1 Sequential System

FM2-4-1

SECTION IV SEQUENCE SYSTEM

SYSTEM DESCRIPTION

The sequence (or sequential) systems of Gemini Spacecrafts 5, 6, 8 and 9 comprise those controls, indicators, relays, sensors and timing devices which provide semi-automatic control of the spacecraft and/or launch vehicle during the critical control times, but which are not parts of other systems. (See Figure 4-1.) The critical times are: the time from booster engine ignition thru insertion into orbit; the time to prepare to go to retrograde thru postlanding; and the time to abort.

The Gemini crew do not fly the spacecraft during boost and insertion. The spacecraft is controlled by radio guidance or by the inertial guidance system. The crew, however, do monitor certain cabin indicators to keep informed of the operation of the launch vehicle to anticipate a crisis if one should develop, and to know if and when mission abort is mandatory. The crew assume more control of the spacecraft after second stage engine cutoff (SSECO). Spacecraft separation from the launch vehicle and the final thrust required for the desired orbit is accomplished by the crew.

During orbit, Spacecraft 5 executes a simulated rendezvous exercise with the Rendezvous Evaluation Pod (REP). Spacecrafts 6, 8 and 9 rendezvous and dock with the Agena target vehicle (ATV).

At 4 minutes and 16 seconds before retrograde time, (TR-256), a sequence system relay is actuated, and several sequential system indicators illuminate amber. These indicators provide the crew with cues for necessary operations. Again at 30 seconds before retrograde time, the crew is reminded to separate the adapter

section. The sequential system, if properly armed, will initate retrograde automatically. The crew redundantly initiates retrograde manually as a safety precaution. During descent, altitude indicators illuminate as cues to deploy the chutes. After splash down, the main parachute is jettisoned, and the sequence system is shut down.

The abort system is part of the sequence system. The abort system comprises the abort indicators, controls, relays, and pyrotechnics. The four abort modes are seat ejection, ride-it-out abort, modified re-entry and normal re-entry. The mode of aborting used is related to the spacecraft altitude when the command to abort is given.

SYSTEM OPERATION

The Sequence System is divided into twelve parts in order to simplify the explanation. These parts are prelaunch, lift-off, boost and staging, telemetry and guidance, abort, separation and insertion, orbit, prepare to go to retrograde, retrograde, re-entry, landing, and post-landing. Figure 4-2 shows these sequential parts, and the detailed functions which each part includes. This simplified block diagram is explained in the following paragraphs.

Prelaunch, lift-off, boost and staging, separation and insertion and orbit are explained first. Telemetry and guidance are discussed elsewhere in this manual, and therefore they are not explained in this Section. Prepare to go to retrograde, retrograde, re-entry, landing and post-landing are discussed next. Abort is discussed last. Many of the sequential operations of abort modes II and III are normal parts of the retrograde sequence.

PROJECT GEMINI

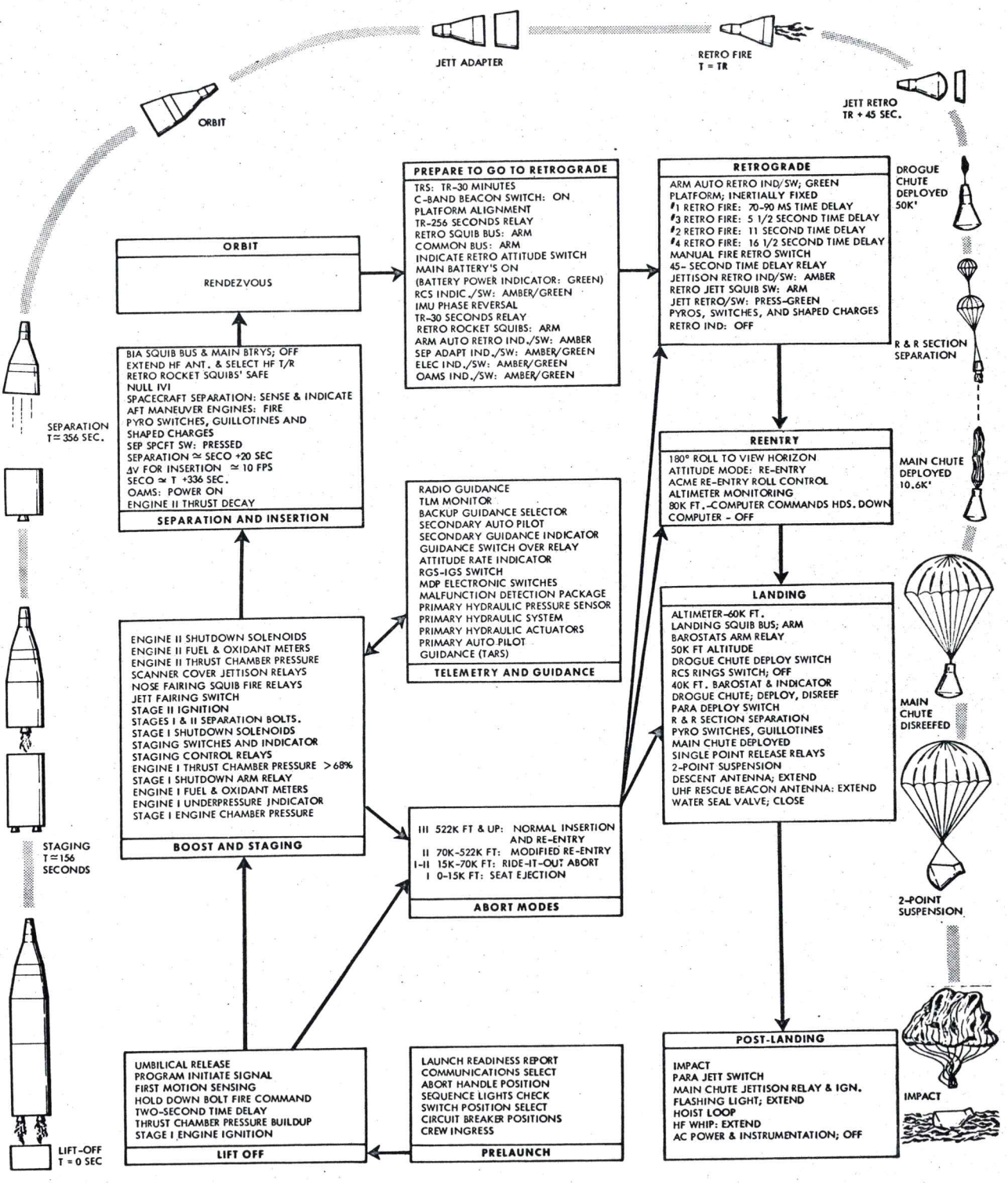

Figure 4-2 Sequential System Simplified Block Diagram

FM2-4-2

PRELAUNCH

The Command Pilot and the Pilot ingress the Gemini cabin and take their assigned crew stations. The hatches are closed and locked. The crew checks that both "D" rings are unstowed. The Command Pilot makes sure that the abort control handle is in the NORMAL position; the maneuver controller is stowed; the altimeter is set; and the incremental velocity indicator is zeroed. He verifies that the nine Sequence Panel telelights, the two ABORT lights, the attitude overrate light, the secondary guidance light, both ENGINE 1 lights, and the ENGINE 2 light are extinguished. He places the top three rows of circuit breakers on the Left Switch/ Circuit Breaker Panel to the closed (up) position. He places the BOOST-INSERT and RETRO ROCKET SQUIB switches in the bottom row to ARM, and the RETRO and LANDING switches to SAFE. He tests the nine Sequence Panel telelights with the SEQ. LIGHTS TEST switch. He selects switches for gyro run-up and platform alignment, and performs computer checkout.

The Pilot places the four MAIN BATTERIES switches and the three SQUIB BATTERIES switches to ON. Both pilots select and check their intercom and UHF communications. The remaining controls and indicators are also monitored or positioned as required. The crew verifies and reports all systems ready for launch.

LIFT OFF

When the prelaunch countdown reaches zero, the first stage engine ignition signal is given from the blockhouse. Both first stage engines (SA1 and SA2) begin thrust chamber pressure buildup. Both ENGINE 1 indicators illuminate red but extinguish in about one second. When the thrust chamber pressure (TCP) of these

two engines exceeds 77 percent of rated pressure, a two-second time delay is initiated in the blockhouse. If all systems remain "go" during this delay, the hold down-bolt fire command is given and the launch vehicle is committed to flight. First motion sensors detect launch vehicle ascent one and one-half inches off the pad, and energize time-zero relays in the blockhouse and in the spacecraft. A 145-second shutdown arm time delay is initiated to prevent accidental booster engine shutdown prior to the scheduled staging time. The umbilical release command is given, disconnecting re-entry umbilical. The environmental control system (ECS) umbilical is sheared at lift-off. The spacecraft computer is switched from the guidance inhibit mode to the guidance initiate mode and enabled to accept acceleration data. The lift-off signal is also applied to the electronic timer and event timer. The electronic timer begins to count down the time to retrograde. The event timer begins to count up the time from lift-off.

BOOST AND STAGING

As the missile continues to climb, the crew monitor the malfunction detection system and abort indicators. The two ENGINE 1 under pressure indicators, the ATTITUDE overrate indicator and both ABORT indicators must remain extinguished. The ENGINE 2 indicator illuminates amber. The STAGE 1 FUEL and OXIDIZER needles must indicate pressures within the required limits, and the ACCELEROMETER must indicate an increasing acceleration within prescribed limits for the flight time indicated by the event timer. The pilots monitor their indicators and report via UHF link to the ground. Abort mode I prevails during the first 50 seconds of flight. Ground stations notify the pilots when abort mode I is no longer applicable, and when abort mode I - II becomes applicable. Abort mode I-II is in

effect during approximately the next 45 seconds of flight. At T+95 seconds, the crew receives and acknowledges changeover to abort mode II.

At T+145 seconds, when the acceleration has climbed to nearly 6G, the first stage engine shutdown arm relays are energized. At approximately T+153 seconds, the thrust chamber pressure drops to less than 68 percent. The two ENGINE 1 indicators illuminate red, and the staging control relays are energized. The staging switches are closed. The stage 1 shutdown solenoids energize and both engines are shutdown. Acceleration drops sharply to approximately 1.5G The booster sequential system immediately ignites the second stage engine. The explosive bolts which unite stage 1 and stage 2 are detonated, and the stages separate. Both ENGINE 1 indicators are extinguished. Fuel injector pressure of the second stage engine rapidly increases above 55 percent, extinguishing the ENGINE 2 underpressure indicator. The accelerometer begins to climb slowly. The crew reports the results of the staging sequence to the ground station.

Approximately 45 seconds after staging, the Command Pilot depresses and releases the JETTISON FAIRING switch on the Sequence Panel. This switch energizes nose fairing jettison relays K3-13 and K3-17 on the boost insert abort (BIA) nose fairing jettison relay panel. The switch also energizes scanner cover jettison relays K3-18 and K3-19 on the Attitude Control System (ACS) Scanner and Re-entry Control System (RCS) Squib Fire Relay Panels. These jettison relays ignite the nose fairing squibs and scanner cover squibs, which eject the fairing and cover.

The STAGE 2 underpressure indicator, the Attitude Overrate (ATT RATE) indicator, and the two ABORT indicators must remain extinguished. The STAGE 2 FUEL and OXIDIZER

needles must indicate the required pressures, and the ACCELEROMETER must show the required increase.

At approximately T+310 seconds, the spacecraft has climbed above 522,000 feet and its velocity exceeds 80 percent of orbital velocity. The ground station notifies the crew that abort mode III now replaces abort mode II. Both pilots acknowledge the change of abort modes.

SEPARATION AND INSERTION

At T+330 seconds, the acceleration has climbed to almost 7G, and the spacecraft has nearly reached orbital velocity and altitude. Approximately 337 seconds after lift-off, the blockhouse computer transmits the second stage engine shutdown command tones via the digital command system (DCS) to the launch vehicle. The second stage engine shutdown solenoids energize, second stage engine cutoff (SSECO) occurs, thrust decays, and acceleration falls rapidly. The on-board computer begins to compute the delta-V required for insertion. The Command Pilot places the OAMS PROPELLANT switch to ON, and waits 20 seconds for launch vehicle thrust to decay. Then he depresses and releases the SEP SPCFT telelight/switch on the Sequence Panel shown on Figure 4-1. When the SEP SPCFT switch closes, BIA squib bus #1 power is applied thru the closed BOOST-INSERT CONT 1 circuit breaker to relays K3-22, K3-24, and K3-42. (Refer to Figure 4-3). K3-22 is the spacecraft shaped charge ignition relay. K3-24 is the launch vehicle/spacecraft wire guillotine relay. K3-42 is the UHF whip antenna extend relay. Redundant contacts of the SEP SPCFT switch energize redundant relays with power from a redundant squib bus. For simplicity's sake, redundant elements are not shown.

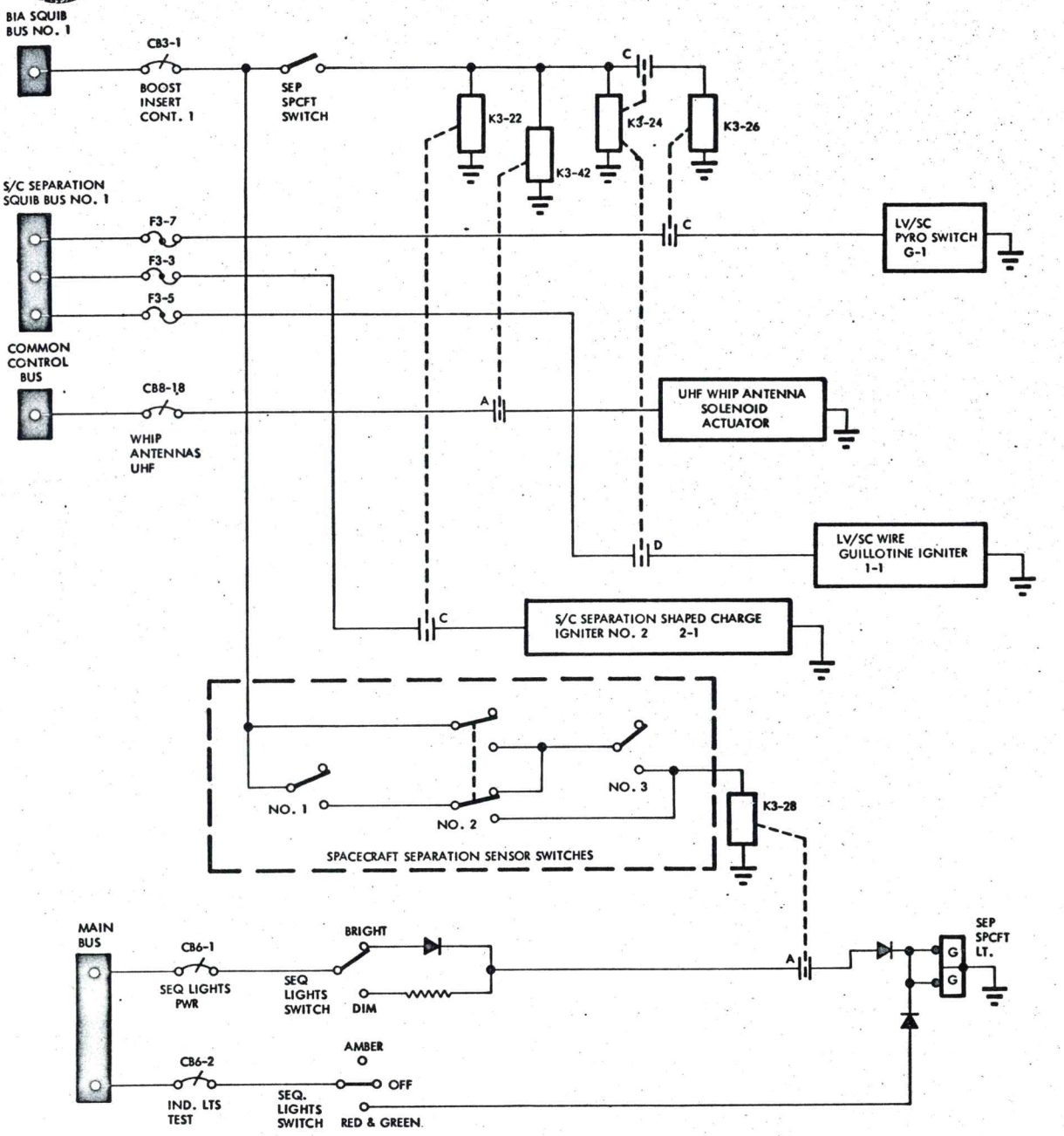

RELAY	REDUNDANT RELAY	NOMENCLATURE	RELAY PANEL
K3-22	K3-23	SPACECRAFT SHAPED CHARGE IGNITION	BIA S/C SEPARATION CONTROL
K3-24	K3-25	LAUNCH VEHICLE/SPACECRAFT GUILLOTINE	BIA S/C SEPARATION CONTROL
K3-26	K3-27	LAUNCH VEHICLE/SPACECRAFT PYRO SWITCH	BIA CONTROL
K3-28	K3-29	SPACECRAFT SEPARATION SENSOR	BIA CONTROL
K3-42	K3-43	UHF WHIP ANTENNA ACTUATOR	COMMUNICATIONS
K4-30	K4-48	LV/SC PYRO SWITCH ABORT	BIA CONTROL

Figure 4-3 Spacecraft Separation Sequence

FM2-4-3

Time delays in the relays and pyrotechnics cause the separation events to occur in the following sequence. K3-24/contacts C energize the launch vehicle/spacecraft pyro switch relay K3-26. K3-26/contacts C immediately fire the pyro switch, open-circuiting the wires on the battery side of the guillotine. Next the wire guillotines are fired, severing the launch vehicle spacecraft wires at the interface. Finally the spacecraft shaped charges are ignited, breaking the structural bond between the launch vehicle and the spacecraft. The operation of these and all other pyrotechnics mentioned in this section is explained in Section XI.

The launch vehicle may now separate from the spacecraft, or OAMS thrust may be required to effect separation. When 2 inches of separation exist at the interface, the spacecraft separation sensors close. The spacecraft separation sensor relay K3-28 is energized when two of the three sensor switches are actuated. Contacts A of K3-28 apply main bus power thru the closed SEQ. LIGHTS PWR circuit breaker and the SEQ. LIGHTS BRIGHT-DIM switch to the telelights. The SEP SPCFT telelight illuminates green.

The Command Pilot observes the delta-V required for insertion which is now displayed on the Incremental Velocity Indicator (IVI). He fires the aft thrusters until the IVI is nulled. The spacecraft is in the required orbit. The crew places the following switches to these positions: RETRO ROCKET SQUIB to SAFE; BOOST-INSERT SQUIB to SAFE; and MAIN BATTERIES 1, 2, 3 and 4 to OFF. For the communication switches positioned at this time, refer to Section IX.

ORBIT

On the Gemini Spacecraft 5 mission, the pilots use a rendezvous evaluation pod (REP) to perform a rendezvous practice exercise. Near the end of the first orbit, the crew maneuver the spacecraft to the pod eject attitude. Figure 4-1 shows the BUS ARM switch, the SQUIB 1 circuit breaker, and the POD EJECT - OFF - INDEX EXTEND switch on the AGENA CONTROL panel which the Pilot operates to eject the REP. Figure 4-4 shows what happens electrically when the Pilot operates these controls.

The Pilot places the BUS ARM switch to EXP, the SQUIB 1 and 2 circuit breakers to ARM, and the POD EJECT - OFF - INDEX EXTEND switch to POD EJECT. Experiment squib bus power energizes the REP and thermal cover eject relay, K3-82.
The B contact of K3-82 applies the squib power to the REP thermal cover jettison igniter. This pyrotechnic releases the thermal cover at a relatively high velocity. The C contact of K3-82 applies power to the REP eject igniter which after a short delay detonates the ejection charge. The pod leaves the spacecraft at a relatively low velocity. This electrical sequence is duplicated with redundant power, switch contacts, relays, and pyrotechnics as a back-up measure.

On Gemini Spacecrafts 6, 8, and 9 missions, the crew performs actual rendezvous and dockings with Agena target vehicles. The Agena target vehicle (ATV) or target is inserted into a circular orbit before the Gemini is launched. The Gemini is inserted into a smaller elliptical orbit coplanar with and trailing the ATV. The pilots rely on ground station guidance data and their on-board guidance and control system to overtake and rendezvous with the ATV. One of the on-board aids to rendezvous is the Rendezvous Radar. Besides tracking the target, the radar also

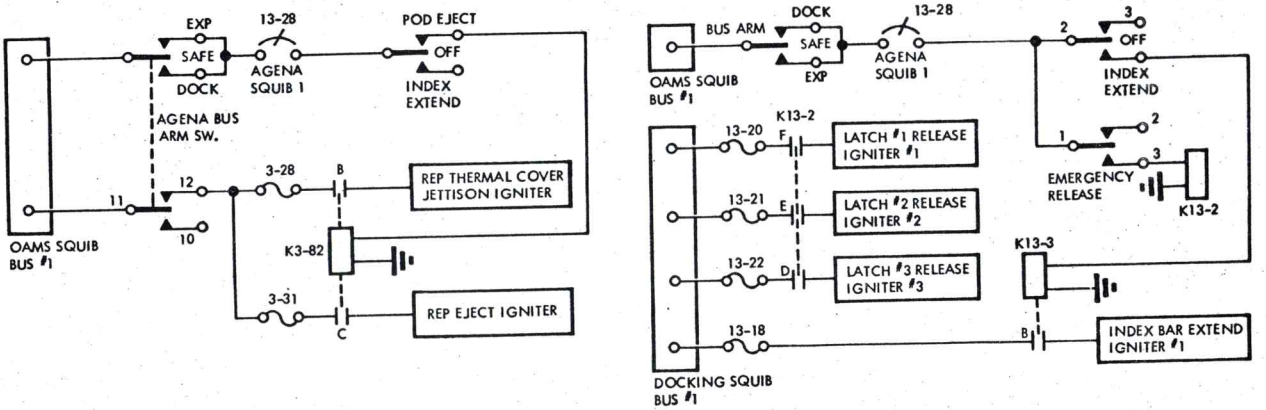

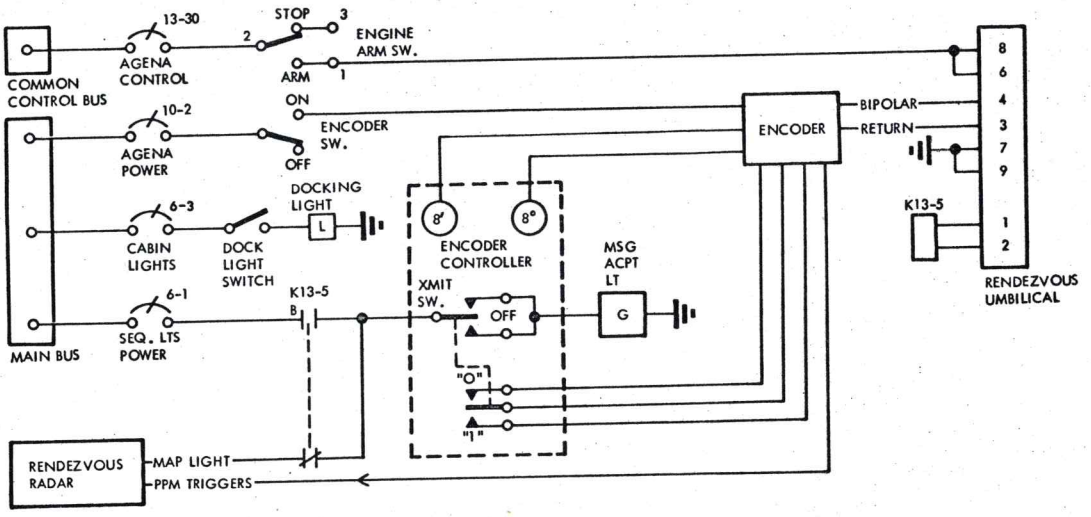

RELAY SHOWN	REDUNDANT RELAY	NOMENCLATURE	RELAY PANEL
K3-82	K3-83	RENDEZVOUS EVALUATION POD (REP) AND THERMAL COVER EJECT RELAY	LV/SC
K3-86	K3-87	NOSE FAIRING JETTISON LATCH RELAY	DOCKING
K4-69	K4-68	LATCH RELEASE RELAY	DOCKING
K4-73	K4-72	INDEX BAR JETTISON AND LATCH DOOR RELEASE RELAY	DOCKING
K13-2	K13-1	EMERGENCY LATCH RELEASE RELAY	DOCKING
K13-3	K13-4	INDEX BAR EXTEND RELAY	DOCKING
K13-5		MESSAGE ACCEPTANCE PULSE (MAP) LIGHT RELAY	DOCKING

Figure 4-4 Rendezvous Sequence

FM2-4-4

provides an RF command link with it. Figure 4-1 shows the AGENA CONTROL Panel and Encoder Controller used in conjunction with the radar for the rendezvous and docking sequence. Figure 4-4 shows what happens electrically when these units are operated.

Main bus power is applied thru AGENA POWER circuit breaker 10-2 and the ENCODER switch to energize the Encoder. The concentric rotary switches 8^1 and 8^0 of the Encoder Controller are used to dial a message, and the XMIT switch is placed to the "0" or "1" position to transmit it. The Encoder translates the switch positions into pulse position modulation (PPM) trigger pulses which key the radar. The Agena transponder receives and detects the message, then relays it to the Agena programmer. The programmer decodes it, excutes the command, and gives the transponder a message acceptance pulse (MAP) to send back to the radar. The radar detects the pulse-width-modulated MAP from the ATV and generates the MAP voltage. This voltage is applied thru the normally closed B contacts of K14-5 and the XMIT switch to the MSG ACPT light. The operation from XMIT thru MSG ACPT takes less than one second. When the Pilot sees the MSG ACPT light on, he releases the XMIT switch and the light extinguishes.

As the Gemini gets within viewing distance of the ATV, the Pilot places the BUS ARM switch to DOCK and closes the AGENA SQUIB 1 and 2 circuit breakers. He places the POD EJECT-OFF-INDEX EXTEND switch to INDEX EXTEND. Docking squib bus 1 power energizes the index bar extend relay K13-3. The B contacts of K13-3 apply docking squib bus power to the index bar extend igniter. The index bar on the Rendezvous and Recovery (R & R) section of the spacecraft extends.

The Command Pilot maneuvers the R & R section of the Gemini spacecraft into the target docking adapter (TDA) of the Agena target vehicle. The TDA docking clamps grip the R & R docking latches, and the rigidize sequence is initiated. Rigidizing the spacecraft in the TDA also mates the docking umbilical. The latter action electrically connects the bipolar return-to-zero (RZ) circuit of the encoder and the message acceptance pulse (MAP) relay to the radar transponder. The ENGINE ARM switch is also connected to the Agena flight command logic package. Thru the rendezvous umbilical, the Pilot can send hardline commands to control the arming of the Agena engines. Commands to start the ATV main engines are countermanded when the ENGINE ARM switch is at STOP. With the umbilical mated, the MAP signal is sent hardline from the transponder to the MAP relay. The hardline command link can also accomplish unrigidizing and normal release from the TDA. If normal release is impossible due to some malfunction, the emergency release (EMERG RLS) switch can be used. The EMERG RLS switch applies OAMS squib bus power thru the BUS ARM switch and the AGENA SQUIB 1 circuit breaker to emergency latch release K13-2. The F, E and D contacts of K13-2 apply docking squib bus power to the release igniters of the docking latches, and the spacecraft is freed from the ATV.

PREPARE TO GO TO RETROGRADE

Approximately 30 minutes before retrofire time (T_R), the crew places the C-band beacon switch to ON and performs the platform alignment procedures.

At TR-256 seconds (4 minutes and 16 seconds before retrofire time), the electronic timer energizes TR-256 second relay K8-16. (See Figure 4-5) The A contacts of K8-16 close and energize K8-17, K8-19 and K8-29. K8-17 is the power system TR-256 relay, and its A contacts now close to illuminate the BTRY PWR telelight

PROJECT GEMINI

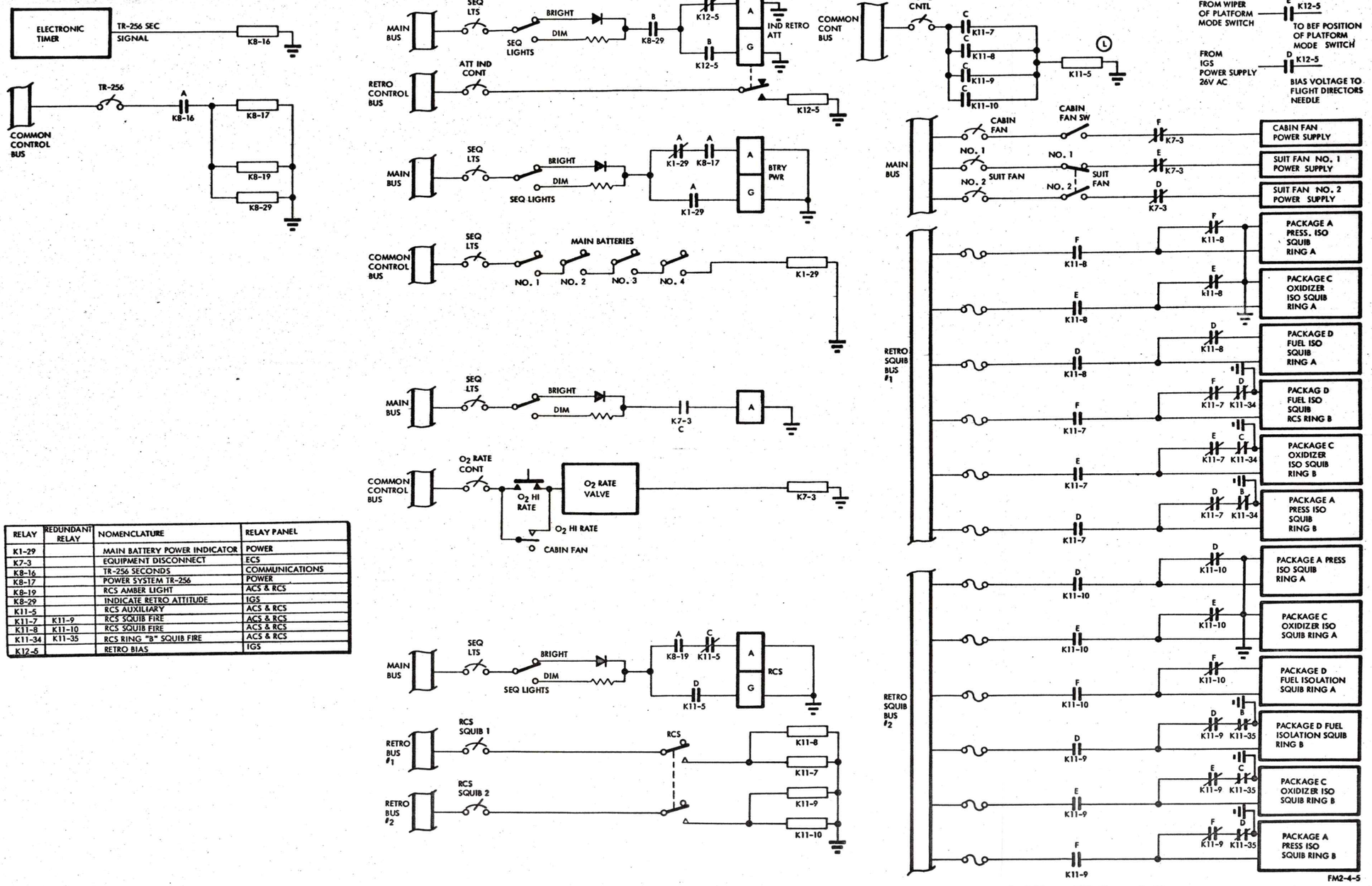

RELAY	REDUNDANT RELAY	NOMENCLATURE	RELAY PANEL
K1-29		MAIN BATTERY POWER INDICATOR	POWER
K7-3		EQUIPMENT DISCONNECT	ECS
K8-16		TR-256 SECONDS	COMMUNICATIONS
K8-17		POWER SYSTEM TR-256	POWER
K8-19		RCS AMBER LIGHT	ACS & RCS
K8-29		INDICATE RETRO ATTITUDE	IGS
K11-5		RCS AUXILIARY	ACS & RCS
K11-7	K11-9	RCS SQUIB FIRE	ACS & RCS
K11-8	K11-10	RCS SQUIB FIRE	ACS & RCS
K11-34	K11-35	RCS RING "B" SQUIB FIRE	ACS & RCS
K12-5		RETRO BIAS	IGS

Figure 4-5 Time To Retrograde Minus 256 Seconds Sequence

amber. K8-19 is the Re-entry Control System (RCS) amber light relay, and illuminates the RCS telelight amber. K8-29 is the indicate retro attitude relay, and illuminates the IND RETRO ATT telelight amber.

The amber IND RETRO ATT telelight reminds the Command Pilot to place the spacecraft in a retro attitude, and to apply retro bias so that the flight director indicator (FDI) needles can be used to orient the spacecraft in this attitude. He maneuvers the spacecraft to the blunt end forward (BEF) position, and presses the IND RETRO ATT telelight/switch. Pressing the switch energizes the retro bias relay K12-5. K12-5 extinguishes the amber and illuminates the green lamps of the telelight. K12-5 also applies the retro bias voltage to the FDI, and electrically places the inertial platform in the BEF position.

The amber BTRY PWR telelight tells the pilot to turn on the main batteries by placing the four MAIN BATTERIES switches to the ON position. Relay K1-29 is energized through the ON positions of the four battery switches. The BTRY PWR telelight illuminates green.

Depressing the RCS telelight/switch energizes the four RCS squib fire relays K11-7, K11-8, K11-9 and K11-10. Relays K11-7 and K11-8 are energized from retro bus #1 while K11-9 and K11-10 are energized from retro bus #2. When any of the four RCS squib fire relays energize, the RCS auxiliary relay K11-5 is latched, changing the RCS indicator from an amber to a green indication. Relays K11-7 and K11-9 both fire the package A,B,C pressure isolation, oxidizer isolation, and fuel isolation squibs of ring B. Relays K11-8 and K11-10 fire the package A,B,C, pressure isolation, oxidizer isolation, and fuel isolation squibs of ring A. The RCS RING A and RING B switches are now placed to ACME, and the Attitude Controller is operated

to fire and test the RCS thrusters.

O_2 high rate flow is initiated after the T_R-256 second sequences at the option of the crew. When the CABIN FAN switch is placed to the O_2 HI RATE position, the O_2 high rate valve is energized. When the O_2 high rate valve opens, equipment disconnect relay K7-3 is energized. K7-3 removes power from the cabin fan power supply and the two suit power supplies, and illuminates the amber O_2 HI RATE indicator.

TIME TO RETROGRADE MINUS 30 SECONDS

After the T_R-256 sequence, re-entry communications are selected, as discussed in Section IX.

At thirty seconds prior to retrofire (T_R-30), the electronic timer initiates a contact closure. This closure energizes the retro T_R-30 seconds relay K4-46, which illuminates the SEP OAMS LINE, SEP ELEC, SEP ADAPT, and ARM AUTO RETRO indicators amber. Figure 4-6 shows a logic presentation of the T_R-30 second sequence. Some of the subsequences shown in Figure 4-6 such as SEP OAMS LINES and SEP ADAPT subsequences are performed redundantly. However, for simplicity only the sequences powered from retro squib bus #1 is shown.

As soon as the Command Pilot observes that the four indicators have illuminated amber, he depresses and releases the SEP OAMS LINE switch-indicator. This switch closure energizes the OAMS propellant line guillotine relay K4-23 and the retro abort pyro squib relay K4-30. K4-23 changes the SEP OAMS LINE indication from amber to green, fires the OAMS propellant lines guillotine 1-1, and energizes pyro switch relays K4-25 and K4-26. Relay K4-25 and K4-26 energize pyro switches B,C,D,E,F, and J.

PROJECT GEMINI

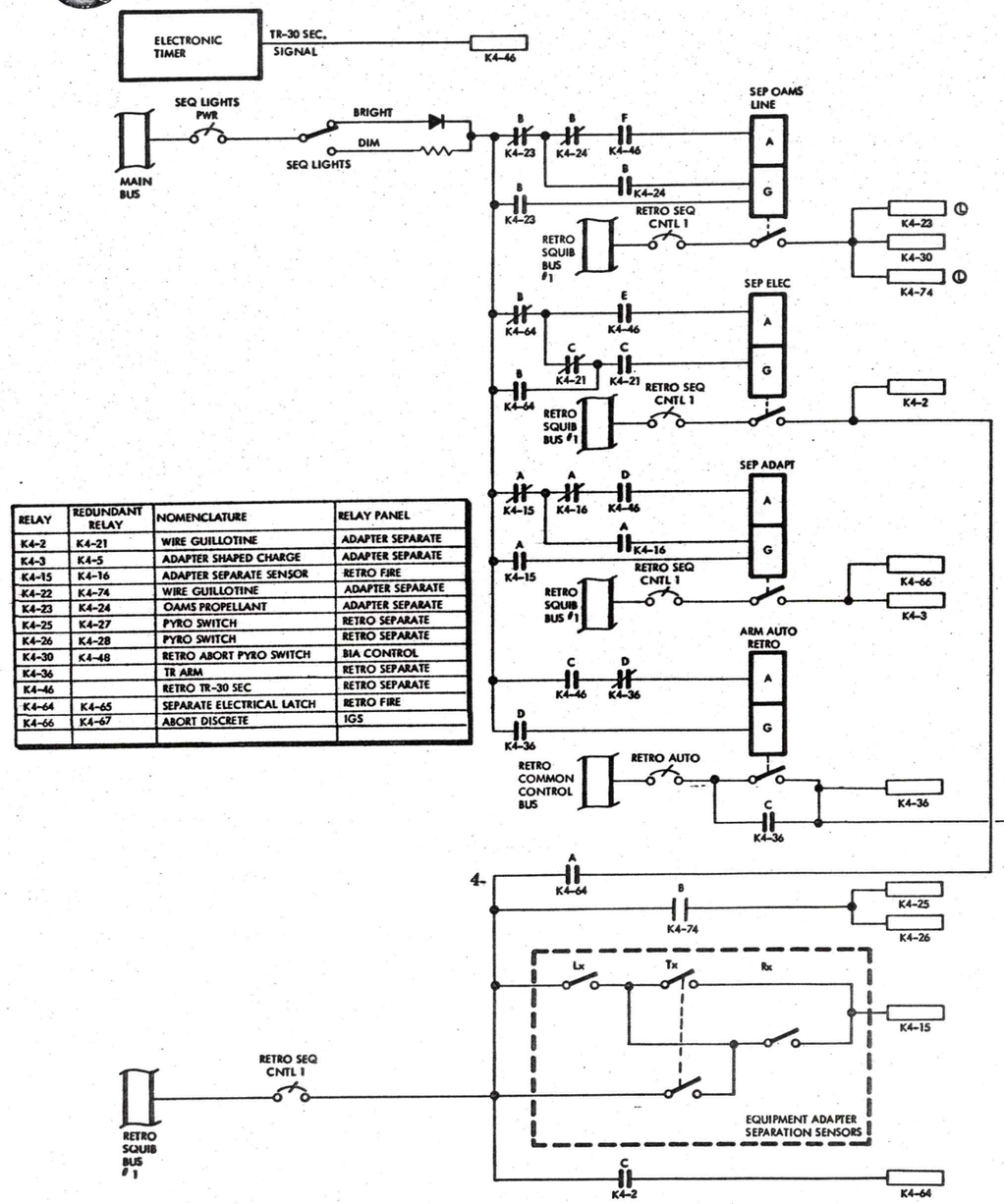

RELAY	REDUNDANT RELAY	NOMENCLATURE	RELAY PANEL
K4-2	K4-21	WIRE GUILLOTINE	ADAPTER SEPARATE
K4-3	K4-5	ADAPTER SHAPED CHARGE	ADAPTER SEPARATE
K4-15	K4-16	ADAPTER SEPARATE SENSOR	RETRO FIRE
K4-22	K4-74	WIRE GUILLOTINE	ADAPTER SEPARATE
K4-23	K4-24	OAMS PROPELLANT	ADAPTER SEPARATE
K4-25	K4-27	PYRO SWITCH	RETRO SEPARATE
K4-26	K4-28	PYRO SWITCH	RETRO SEPARATE
K4-30	K4-48	RETRO ABORT PYRO SWITCH	BIA CONTROL
K4-36		TR ARM	RETRO SEPARATE
K4-46		RETRO TR-30 SEC	RETRO SEPARATE
K4-64	K4-65	SEPARATE ELECTRICAL LATCH	RETRO FIRE
K4-66	K4-67	ABORT DISCRETE	IGS

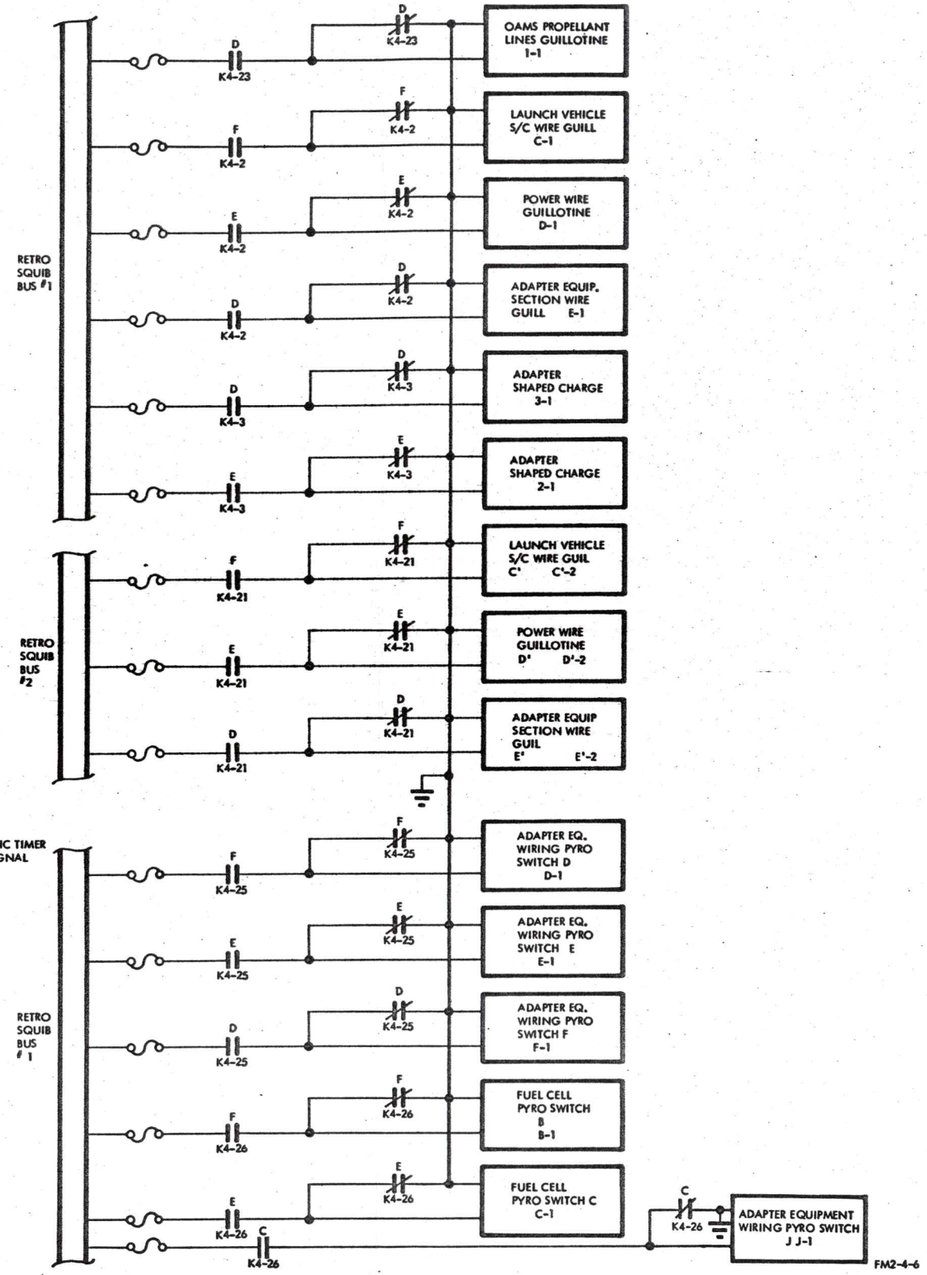

Figure 4-6 Time to Retrograde Minus 30 Seconds Sequence

Next, the Command Pilot depresses and releases the SEP ELEC switch-indicator which energizes wire guillotine relay K4-2. K4-2 ignites wire guillotines C, D and E and energizes the separate electrical latch relay K4-64. When K4-64 energizes, the SEP ELEC indicator changes from amber to green. Then, the Command Pilot initiates the equipment adapter separation sequence by depressing and releasing the SEP ADAPT switch-indicator. Closure of the SEP ADAPT switch energizes the adapter shaped charge relay K4-3 and abort discrete relay K4-66. K4-3 detonates shaped charge igniter 2-1 and 3-1. The adapter equipment section separates, and separation is sensed by three toggle sensor switches. The switches close when the physical separation is 1-1/2 inches. The closure of any two switches energizes the adapter separate sensor relay K4-15. K4-15 changes the SEP ADAPT indicator from amber to green. The green SEP ADAPT light informs the crew that the adapter equipment section has been jettisoned from the spacecraft. K4-66 sends the abort transfer discrete to the spacecraft digital computer.

Lastly, the Command Pilot depresses and releases the ARM AUTO RETRO switch-indicator. The ARM AUTO RETRO switch latches the T_R arm relay K4-36. This relay changes the indication from amber to green and arms the electronic timer for the T_R relay contact closure. The four RETRO ROCKET SQUIB switches are now moved to ARM.

RETROGRADE

A logic diagram of the retrograde sequence is shown in Figure 4-7. As discussed previously, whenever a sequence initiated from retro squib bus #1, there is an identical redundant sequence initiated from retro squib bus #2. The retrograde sequence is initiated by the T_R signal from the Electronic Timer. The redundant sequence is initiated manually by the crew.

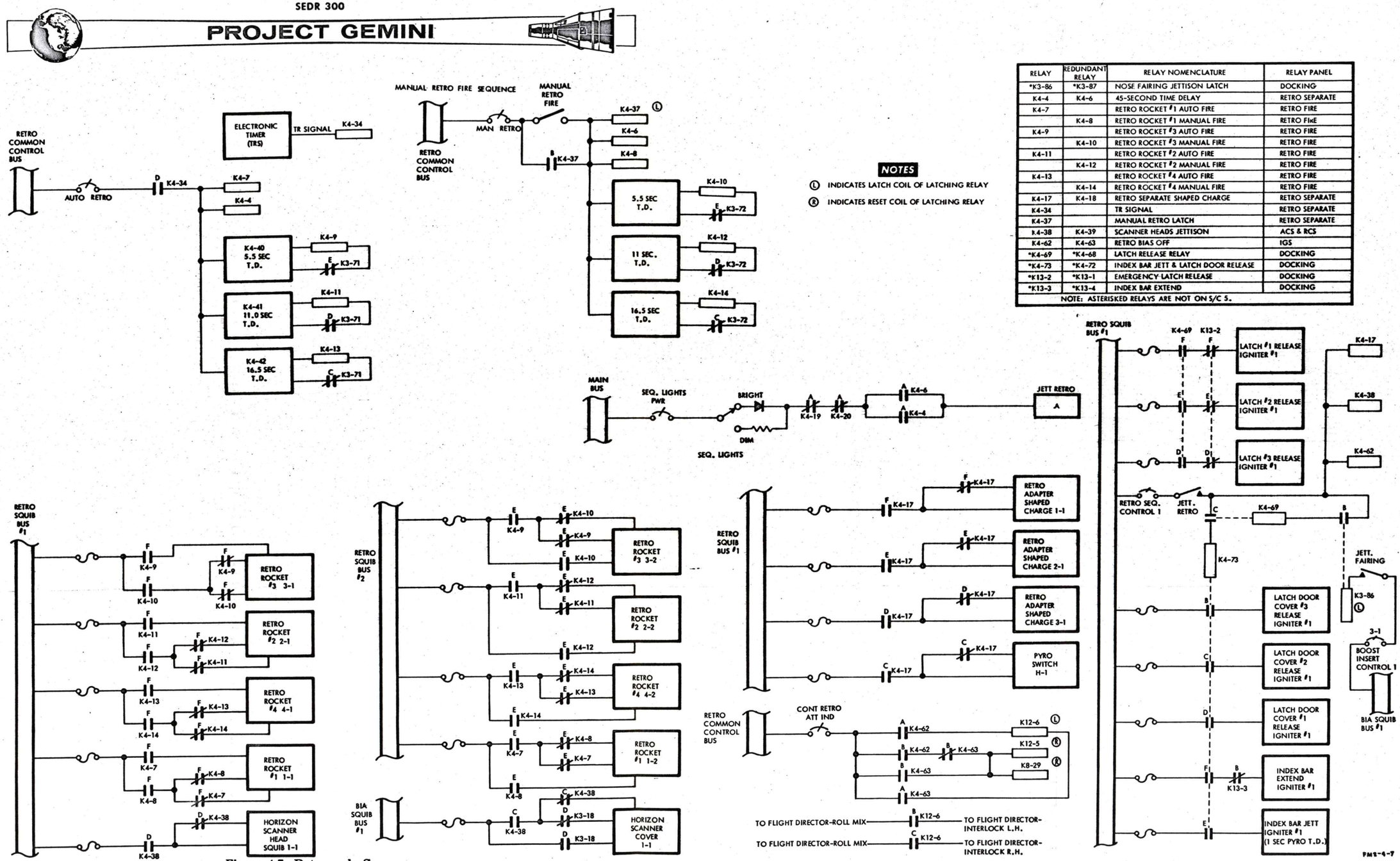

NOTES

Ⓛ INDICATES LATCH COIL OF LATCHING RELAY

Ⓡ INDICATES RESET COIL OF LATCHING RELAY

RELAY	REDUNDANT RELAY	RELAY NOMENCLATURE	RELAY PANEL
*K3-86	*K3-87	NOSE FAIRING JETTISON LATCH	DOCKING
K4-4	K4-6	45-SECOND TIME DELAY	RETRO SEPARATE
K4-7		RETRO ROCKET #1 AUTO FIRE	RETRO FIRE
	K4-8	RETRO ROCKET #1 MANUAL FIRE	RETRO FIRE
K4-9		RETRO ROCKET #3 AUTO FIRE	RETRO FIRE
	K4-10	RETRO ROCKET #3 MANUAL FIRE	RETRO FIRE
K4-11		RETRO ROCKET #2 AUTO FIRE	RETRO FIRE
	K4-12	RETRO ROCKET #2 MANUAL FIRE	RETRO FIRE
K4-13		RETRO ROCKET #4 AUTO FIRE	RETRO FIRE
	K4-14	RETRO ROCKET #4 MANUAL FIRE	RETRO FIRE
K4-17	K4-18	RETRO SEPARATE SHAPED CHARGE	RETRO SEPARATE
K4-34		TR SIGNAL	RETRO SEPARATE
K4-37		MANUAL RETRO LATCH	RETRO SEPARATE
K4-38	K4-39	SCANNER HEADS JETTISON	ACS & RCS
K4-62	K4-63	RETRO BIAS OFF	IGS
*K4-69	*K4-68	LATCH RELEASE RELAY	DOCKING
*K4-73	*K4-72	INDEX BAR JETT & LATCH DOOR RELEASE	DOCKING
*K13-2	*K13-1	EMERGENCY LATCH RELEASE	DOCKING
*K13-3	*K13-4	INDEX BAR EXTEND	DOCKING

NOTE: ASTERISKED RELAYS ARE NOT ON S/C 5.

Figure 4-7 Retrograde Sequence

At time to retrograde TR, the electronic timer latches the TR signal relay K4-34, the TR signal relay in the latched condition energizes the retro rocket auto fire relay K4-7. K4-34 also energizes the 45-second time delay relay K4-4, initiates a 5.5-seconds, 11.0-second, and a 16.5-second time delay, and deactivates the IGS platform "free" mode. The retro rocket auto fire relay redundantly fires retro rocket #1 from retro squib bus #1 and #2. At the end of the 5.5-second time delay, the retro rocket auto fire relay K4-9 is energized. K4-9 ignites retro rocket #3 from retro squib bus #1 and #2. Retro rocket #2 is redundantly ignited from retro squib bus #1 and #2 when the retro rocket auto fire relay K4-11 energizes at the end of the 11.0 second time delay. Retro rocket auto fire relay K4-13 is energized at the end of the 16.5 second time delay. K4-23 redundantly fires retro rocket #4 from retro squib bus #1 and #2.

In order to assure retro fire, the Command Pilot initiates manual retro fire by depressing and releasing the MAN FIRE RETRO switch-indicator approximately one second after automatic retro fire initiation. The MAN FIRE RETRO switch latches the manual retro latch relay K4-37, energizes retro rocket manual fire relay K4-8, and initiates the 45-second time delay relay K4-6. This switch also initiates the 5.5-second, 11-second and 16.5-second time delays. The 5.5, 11 and 16.5-second time delays energize retro rocket manual fire relays K4-10, K4-12 and K4-14 respectively which in turn fire retro rockets #3, #2, and #4 respectively. Retro rocket #1 is fired by K4-8. As in auto retro rocket fire, each retro rocket is fired from retro squib bus #1 and #2. Twenty-two seconds after retrofire is initiated, the last retro rocket ceases firing. The Command Pilot moves the JETT RETRO SQUIB ARM switch on the Left Switch/Circuit Breaker Panel from SAFE to ARM. Forty-five seconds after retrofire began, K4-4 or K4-6 energizes and illuminates

the JETT RETRO lamp on the Sequence Panel.

As soon as the Command Pilot observes the the JETT RETRO indicator is amber, he depresses and releases this switch-indicator. The switch energizes the retro separate shaped charge relay K4-17, the retro bias off relay K4-62, and the scanner heads jettison relay K4-38. Relay K4-17 fires retro adapter shaped charge igniter 1-1, 2-1, and 3-1 and pyro switch H-1. Relay K4-62 latches the re-entry roll display relay K12-6 removing roll mix interlock from the flight director controller. K4-62 also resets two latches relays: the retro bias relay K12-5 and the indicate retro attitude relay K8-29. Relay K8-29 extinguishes the IND RETRO ATT indicator. K4-38 fires horizon scanner cover squib 1-1 if it was not fired previously during the boost phase. K4-38 ignites the horizon scanner head squib 1-1 thru and 80-millisecond pyro time delay and jettisons the scanner head. The firing of pyro switch H-1 extinguishes the SEP ELEC, SEP ADAPT, SEP OAMS, ARM AUTO RETRO and JETT RETRO indicators.

On spacecrafts 6, 8 and 9, the JETT RETRO switch also energizes latch release relay K4-69 thru the B contacts of the nose fairing jettison latch relay K3-86. K4-69 fires the release igniters of docking latches 1, 2 and 3 to jettison them. K4-69 also energizes the index bar jettison and latch door release relay K4-73. K4-73 fires three latch door cover release igniters. These igniters release the latch doors which cover the ports left by the jettisoned docking latches. K4-73 also jettisons the docking index bar. If the bar was not extended previously, it is first extended and then jettisoned. These functions are not a part of the retrograde sequence during an abort if the abort occurs prior to nose fairing jettison.

RE-ENTRY

After the retro adapter and scanner heads have been jettisoned, the Command Pilot places the RETRO PWR and RETRO JETT squib switches to SAFE. Using the attitude controller and the flight director indicator needles he rolls the spacecraft 180° so that the horizon is visible in the upper portion of his cabin window. He changes the ATTITUDE CONTROL mode select switch on the Pedestal Panel from PULSE to RATE CMD (RE-ENT). The Command Pilot uses ACME and the Attitude Controller to control the roll attitude during approximately the next 10 minutes in which the altitude diminishes to 400,000 feet. At this altitude the FDI roll needles start to move, the Computer START light illuminates, and the computer begins to calculate the point of impact. The Command Pilot changes the ATTITUDE CONTROL mode select switch from RATE CMD (RE-ENT) to RE-ENT. The computer now computes the roll attitude for optimum re-entry lift and also automatically controls the roll attitude. During approximately the next 10 minutes, the altitude decreases to 100,000 feet. At this altitude, the altimeter indicator begins to come off the peg. At 80,000 feet, the computer commands the spacecraft to assume the best attitude for drogue deployment. Then the Command Pilot places the COMPUTER switch to OFF.

LANDING

After de-energizing the on-board computer, the crew performs the various landing sequence functions as Figure 4-8 shows. At approximately 50,000 feet the Command Pilot deploys drogue chute by depressing the HI ALT DROGUE switch. Closure of the drogue switch energizes the drogue chute relays K5-83 and K5-84 and cabin air inlet relays K5-93 and K5-94. These relays are energized redundantly from landing squib buses #1 and #2. Actuation of K5-83 and K5-84 ignites the drogue chute mortar from both buses. K5-93 and K5-94 fire the cabin air inlet squibs.

PROJECT GEMINI

RELAY	REDUNDANT RELAY	NOMENCLATURE	RELAY PANEL
K5-5	K5-6	R & R SECTION SEPARATION	R & R SEPARATION CONTROL
K5-7	K5-8	R & R SECTION GUILLOTINE	R & R SEPARATION CONTROL
K5-17	K5-18	MAIN CHUTE SINGLE POINT RELEASE	PARACHUTE JETTISON
K5-21	K5-22	MAIN CHUTE JETTISON	PARACHUTE JETTISON
K5-51	K5-52	DESCENT ANTENNA SELECT	COMMUNICATION
K5-61		BAROSTAT SWITCH ARM	R & R SEPARATION CONTROL
K5-83	K5-84	DROGUE CHUTE	DROGUE CHUTE CONTROL
K5-85	K5-86	EMERGENCY CHUTE DEPLOY	DROGUE CHUTE CONTROL
K5-87	K5-88	DROGUE CHUTE DISCONNECT	DROGUE CHUTE CONTROL
K5-89	K5-90	MAIN CHUTE DEPLOY	R & R SEPARATION CONTROL
K5-91	K5-92	CHUTE DEPLOY - 2.5 SEC T.D.	R & R SEPARATION CONTROL
K5-93	K5-94	CABIN AIR INLET	PARACHUTE JETTISON
K5-95	K5-96	PYRO SWITCH	UMBILICAL PYRO SW. CONTROL

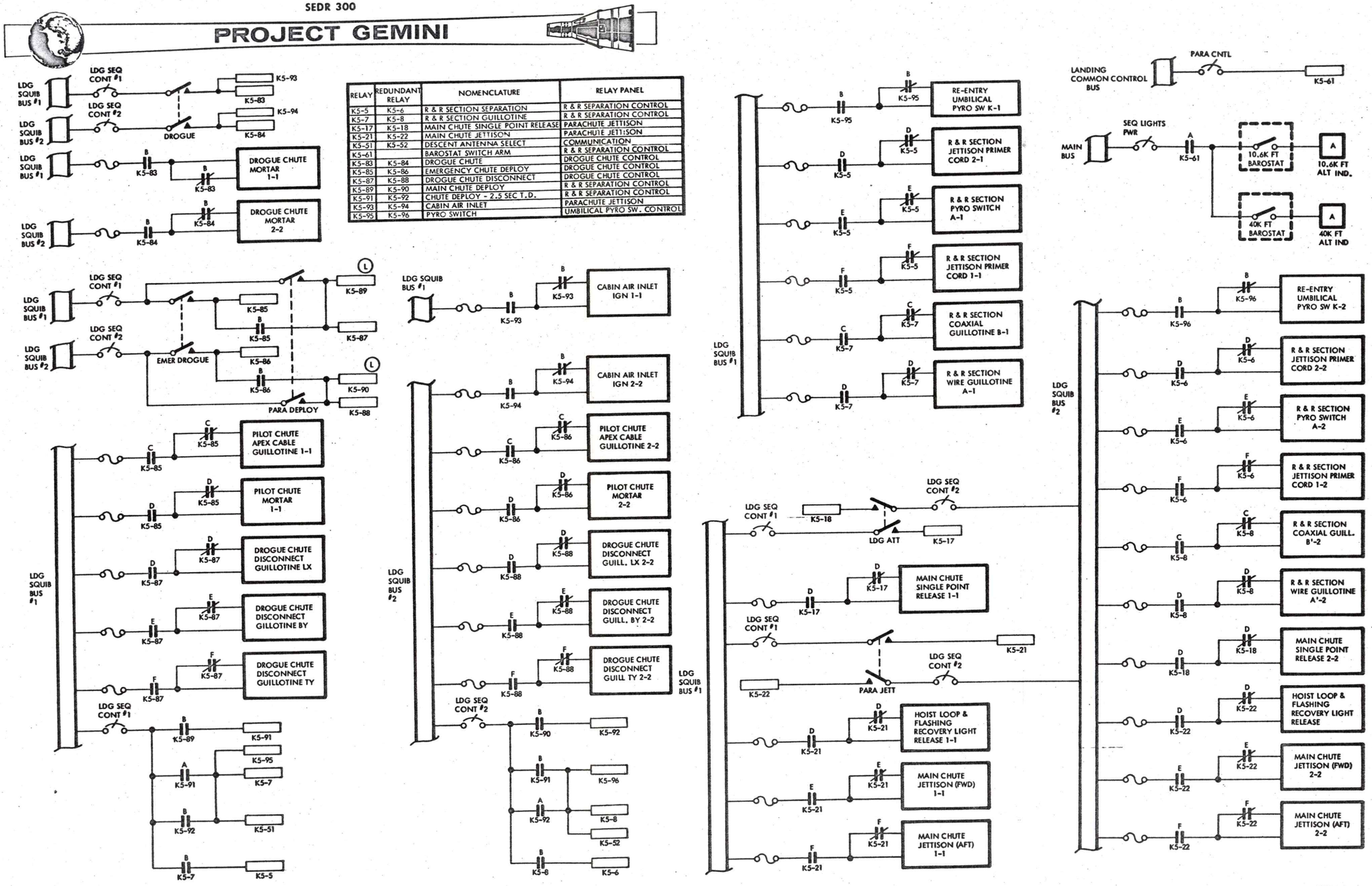

FM2-4-8

Figure 4-8 Landing Sequence

In case the Command Pilot did not depress the drogue switch at 50,000 feet, a barostat switch illuminates a 40,000-foot altitude indicator to remind him to deploy the drogue chute.

In the event the drogue parachute did not deploy, or deployed improperly, the Command Pilot depresses and releases the EMERG 10.6K DROGUE switch at an altitude of approximately 10,600 feet. Closure of this switch energizes the emergency chute deploy relay K5-85 and K5-86. This switch also fires the pilot chute apex guillotine and the pilot chute mortar, energizes the drogue chute disconnect relays K5-87 and K5-88, and latches the main chute deploy relay K5-98 and K5-90.

The drogue chute disconnect relays fire the three (L_X, B_Y, T_Y) drogue chute disconnect guillotines while the main chute deploy relays energize the chute deploy 2.5-second time delay relays K5-90 and K5-91.

When K5-90 and K5-91 energize after 2.5 seconds, they energize the R & R section guillotine relays K5-7 and K5-8, the descent antenna select relays K5-51 and K5-52 and pyro switch relays K5-95 and K5-96. The R & R section guillotine relays fire the R & R section coaxial guillotine B and the R & R section wire guillotine A, and energize the R & R section separation relay K5-5 and K5-6. K5-95 and K5-96 fire the two pyro switch K igniters. Relays K5-5 and K5-6 redundantly connect landing squib bus #1 and #2 to pyro switches A-1 and A-2 and the four jettison primer cord igniters at the R & R section interface.

In the event that the Command Pilot did not utilize the emergency drogue chute deploy mode, he depresses the PARA DEPLOY switch at 10,600 feet. The 10,600-foot altitude indicator, which is illuminated by a 10,600-foot barostat, reminds the Command Pilot to depress this switch.

The PARA DEPLOY switch energizes the drogue chute disconnect relays K5-87 and K5-88, and latches the main chute deploy relays K-89 and K-90. These relays then perform the functions described previously under the emergency mode.

Following main parachute deployment, the Command Pilot selects two-point suspension by depressing the LDG ATT switch. The LDG ATT switch energizes the main chute single-point release pyrotechnics. At the time the main parachute aft bridle is pulled out of the bridle trough, the UHF recovery and UHF descent antennas are extended.

POST-LANDING

After splash down, the Command Pilot jettisons the main parachute by depressing the PARA JETT switch. This switch energizes the main chute jettison relays K5-21 and K5-22. The main chute jettison relays fire the hoist loop and flashing recovery light release pyrotechnics and the main chute jettison (forward and aft) pyrotechnics. The UHF recovery beacon is turned on without lights, if rescue is carried out under daylight conditions.

The crew extends the HF whip antenna and establishes either HF or UHF voice communications with recovery forces. AC power and instrumentation are turned off.

ABORT MODES

An abort is an unscheduled termination of the spacecraft mission. An abort may be initiated at any time during the spacecraft mission. In all cases the actual abort sequence has to be initiated by the crew after an abort command has been received. An abort indication consists of illumination of the ABORT indicators located on either side of the Center Panel. The ABORT indicator may be illuminated by three

different methods. During pre-launch prior to umbilical disconnect, the abort indicator may be illuminated from the blockhouse via hardline through the launch vehicle tail plug. After umbilical release, the abort indicator may be illuminated by ground command to the spacecraft via channel #10 of the Digital Command System, or by ground command to the launch vehicle to shutdown the booster.

The abort system is part of the sequential system. The abort system comprises the abort indicators, controls, relays, and pyrotechnics. The part of the abort system which the crew use is determined by the abort mode in effect at the time when the abort command is received or the decision to abort is made. The abort mode to be used at any time during the mission is determined by calculations made on the ground and depends on the altitude and velocity attained of the spacecraft. The critical abort altitudes are 15,000 feet, 70,000 feet, and 522,000 feet. The spacecraft reaches 15,000 feet approximately 50 seconds after lift off, 70,000 feet approximately 95 seconds after lift off, and 522,000 feet approximately 310 seconds after lift off. Below 15,000 feet, seat ejection (Mode I) is used. Between 15,000 and 70,000 feet, ride-it-out abort (Mode I - II) is used. Between 70,000 and 522,000 feet, modified re-entry (Mode II) is used. Above 522,000 feet, normal re-entry (Mode III) is used, except that the spacecraft electronic timer does not illuminate the sequential lights amber when the time to press them occurs unless the timer is updated by ground command. Figure 4-9 presents a simplified block diagram of the abort sequences in each of the three modes.

Abort Mode I

When an abort becomes necessary during pre-launch, it is accomplished by using abort mode I. The abort command is given from the blockhouse by hardline thru the

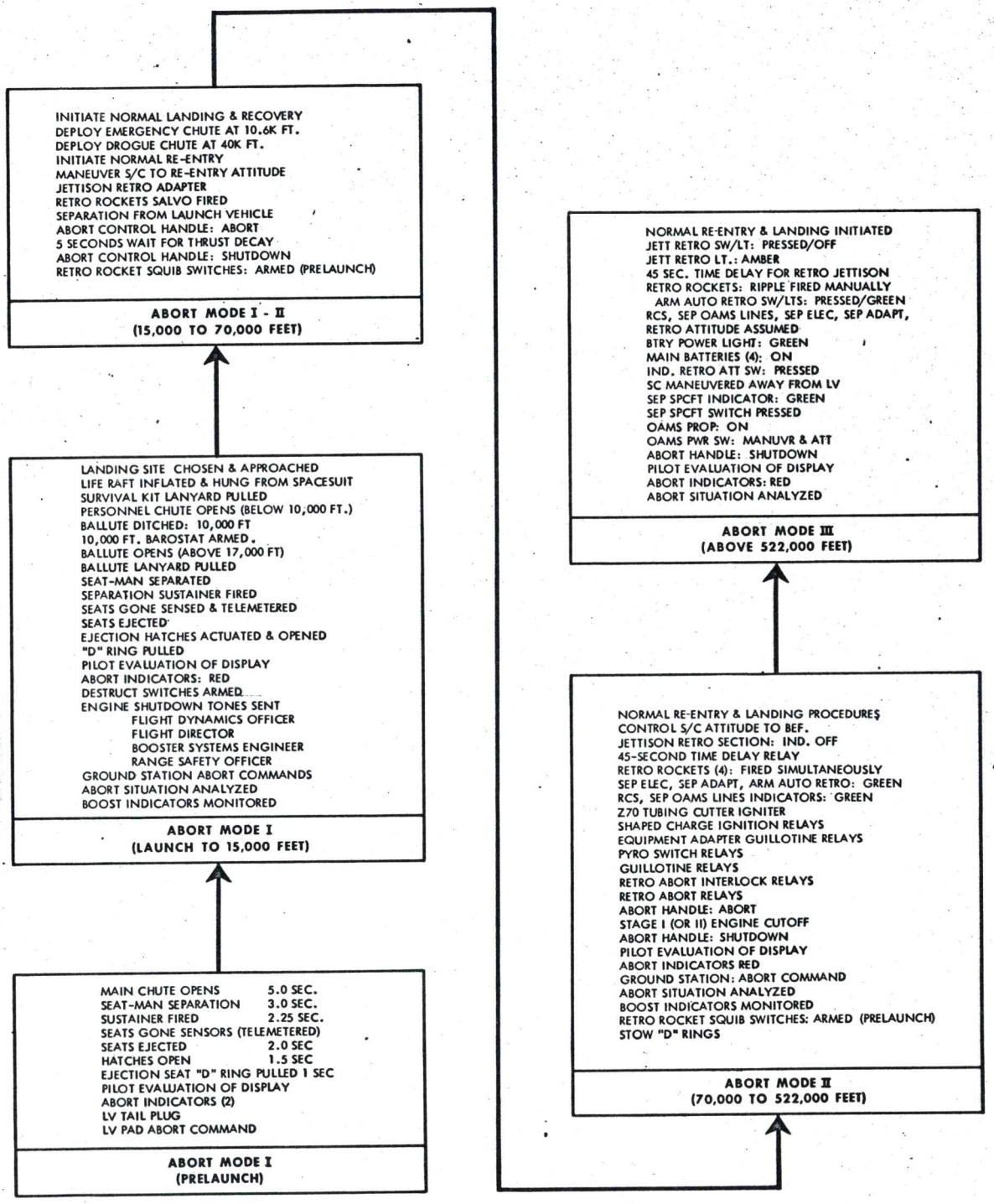

Figure 4-9 Abort Modes Simplified Block Diagram

FM2-4-9

launch vehicle tail plug connector. The command lights both ABORT indicators on the Command Pilot and Pilot's Panels. When the pilots see this display, they immediately pull the "D" rings attached to their ejection seats. When one "D" ring is pulled, both ejection systems are energized. One second after the ABORT indicators light, the "D" rings have been pulled. One-half second later, the hatches are open, and one-half second after that the seats have been ejected. Sensors detect the ejection of the seats and notify the blockhouse that the pilots are out of the spacecraft. One-quarter second after the seats are ejected, a sustainer rocket under each seat is fired, which extends the distance between the pilots and the launch vehicle. Then a pyrotechnic ignites and separates the ejection seat from the pilots. Two seconds after sustainer ignition, the main chutes have opened and the pilots are lowered safely to the ground. For illustrations and fuller descriptions of the equipment used for seat ejection abort, refer to Section III of this manual.

After normal lift off, and before the Gemini-Titan reaches an altitude of 15,000 feet, an abort condition could develop. The crew monitor their booster indicators so that they are aware at all times of the manner in which the flight is proceeding. Booster operation data is telemetered to the ground for analysis and interpretation. The range safety officer, the booster systems engineer, the flight director, or the flight dynamics officer, who are on the ground, may decide that danger is imminent and an abort mandatory.

Channel 10 of the Digital Command System is used to send the abort command to the spacecraft and ground commands are sent to the launch vehicle to shutdown the booster engines. When the engine shutdown tones are received, the destruct switches

of the launch vehicle are armed. The two ENGINE 1 indicators and both ABORT indicators illuminate red. The Command Pilot and Pilot evaluate these displays and pull the "D" rings. The hatches open and the pilots in their seats are ejected. Refer to Section III for a description of the remainder of this sequence.

Abort Mode I - II

Abort Mode I - II is the "ride-it-out" abort mode. It is effective at altitudes between 15,000 and 70,000 feet approximately 50 seconds to 95 seconds after lift-off. Abort mode I - II is used when a mode I abort is inadvisable and when a delay to permit entry into the mode II conditions is impractical. The crew however has the option to eject or to ride-it-out depending upon their assessment of the abort conditions. Therefore the D-rings are not stowed during the I - II mode.

Abort mode I - II begins during stage I boost approximately 50 seconds after lift-off. If an abort condition develops, and the crew elect to ride it out, the Command Pilot moves the abort control handle from NORMAL to SHUTDOWN. He waits 5 seconds for booster thrust to decay, then moves the handle from SHUTDOWN to ABORT.

The retro abort relays and the retro abort interlock relays are energized. These relays arm the buses needed for abort action. The retrograde common control bus is armed from the common control bus. Retro squib buses #1 and #2 are armed from OAMS squib buses #1 and #2. On S/C 5 only, S/C separation squib buses #1 and #2 are armed from BIA squib buses #1 and #2. Two parallel circuits are used for redundancy. This arming of buses by means of relays eliminates the motion of throwing the switch ordinarily required to arm the buses. Then, in rapid sucession, wire guillotine relays, pyro switch relays, and shaped charge igniter relays

are energized. The relays ignite the pyrotechnics at the equipment adapter/retrograde adapter mating line, and the vehicles separate. Then, the four retro rockets are salvo fired and the spacecraft thrusts away from the launch vehicle.

If the abort altitude is between 15,000 and 25,000 feet, the retro adapter is jettisoned 7 seconds after retro rocket salvo fire is initiated. If the abort altitude is between 25,000 and 70,000 feet, the retro adapter is jettisoned 45 seconds after salvo fire.

After retro adapter jettison, the spacecraft is maneuvered to the re-entry attitude. If the abort altitude is above 40,000 feet, the drogue chute is deployed at 40,000 feet, and the main chute at 10,600 feet. If the drogue chute fails or has not been deployed before the spacecraft descends to 10,600 feet, the emergency sequence is used to deploy the main chute.

If one of the two first stage engines should fail and the launch vehicle is above 40,000 feet, the pilots may elect to remain with the spacecraft until the operating engine has boosted them to 70,000 feet. At this altitude, abort mode II would become effective.

Abort Mode II

Abort mode II becomes effective above 70,000 feet. At approximately 95 seconds after lift off on a normal mission, the launch vehicle has boosted the spacecraft to an altitude of 70,000 feet. Ground station computers calculate the time for changeover from abort mode I - II to abort mode II. The ground station notifies the crew via the UHF Communications link of the change to abort mode II. Both the Command Pilot and Pilot acknowledge the change via the same link, and stow the

ejection seat handles (D-rings). Initiation of abort mode I above 70,000 feet could be disastrous.

Abort mode II begins during stage 1 boost before BECO and ends during stage 2 boost before SECO. The crew continue to monitor the booster indicators. If they should notice an abort situation developing, they analyze it. The decision to abort may be theirs or it may come from the ground. If a ground station sends the command to abort, both ABORT indicators illuminate red. In abort mode II, the Command Pilot must act. He moves the ABORT handle to the SHUTDOWN position. The operating engine is cut off. Since launch vehicle destruct is imminent and escape from the fireball is urgent, he moves the ABORT handle to abort. The spacecraft is separated from the launch vehicle at the equipment adapter-retrograde adapter mating line. The retro rockets, armed by four RETRO ROCKET SQUIB switches during prelaunch checkoff, are salvo fired, propelling the spacecraft away from the launch vehicle.

Since orbital velocity could not have been reached below 522,000 feet, the spacecraft immediately begins a re-entry trajectory. The spacecraft is maneuvered to the retro (BEF) attitude, the retrograde section is jettisoned, and normal landing procedures are initiated.

Abort Mode III

At approximately 310 seconds after lift off, the launch vehicle reaches the altitude of 522,000 feet and a velocity of approximately 21,000 feet per second. The ground station commands a change from abort mode II to abort mode III via the UHF radio.

If an abort after this time should become necessary, the ABORT indicators would be illuminated red. The Command Pilot responds and moves the ABORT handle to the SHUTDOWN position. The shutdown command is thus given to the second stage engine. The ABORT HANDLE remains in the SHUTDOWN position. The Command Pilot then presses the SEP SPCFT telelight/switch on the Sequence Panel. This switch fires the shaped charges and severs the wiring at the launch vehicle/spacecraft mating line as described earlier. OAMS thrust is applied to put distance between the second stage and the spacecraft. The crew perform the TR-256 seconds and the TR-30 seconds procedures, using the sequence panel telelight/switches. After retrofire has been initiated manually, normal re-entry, landing, and post-landing procedures are followed.

SYSTEM UNITS

The Sequence System as shown in Figure 4-1 comprises the following units:

Left Switch/Circuit Breaker Panel, consisting of three rows of circuit breakers and one row of switches.

Boost and Staging Indicators, consisting of seven lights and three meters on the top of the Command Pilot and Pilot's Panels.

Sequence Panel, consisting of two pushbutton switches, eight telelight/switches, and one telelight located on the left side of the Center Panel.

Re-entry and Landing Switches and Indicators, consisting of four switches on the Pedestal Panel and one switch, two lights, and two meters on the Command Pilot's Panel.

Abort Controls, consisting of two "D" rings on the ejection seats and one Abort Control Handle on the left side of the cabin.

Relay Panels, consisting of fourteen relay panels in the re-entry module and six in the equipment adapter and retrograde sections, and two in the re-entry and recovery (R & R) section.

Separation Sensing Devices, consisting of three each in the equipment adapter section and the retrograde section.

The components of the sequence system are described below.

LEFT SWITCH/CIRCUIT BREAKER PANEL

The switches and circuit breakers on the Left Switch and Circuit Breaker Panel perform important functions in the operation of the sequential system. The top row of circuit breakers however pertain largely to communications. The second row of circuit breakers perform functions related to the operation of the sequential system. Their functions are as follows:

ELECTRONIC TIMER Circuit Breaker

The electronic timer circuit breaker CB8-15 applies main bus power thru contact A of lift-off relay K3-11 to start the electronic timer when the lift-off signal energizes K3-11. The timer begins counting the time to go to retrograde.

EVENT TIMER Circuit Breaker

The event timer circuit breaker CB8-14 applies main bus power thru contact b of lift off relay K3-11 to start the event timer when the lift-off signal energizes K3-11. The event counter counts the time since lift-off occured.

BOOST CUTOFF 1 Circuit Breaker

The boost cutoff 1 circuit breaker CB3-8 applies BIA common control bus power to the booster shutdown switch on the Abort Control Handle and to the Secondary Guidance (RGS-IGS) switch. This circuit breaker arms the booster shutdown circuit and the secondary guidance manual switchover circuit.

BOOST CUTOFF 2 Circuit Breaker

The boost cutoff 2 circuit breaker CB3-21 applies BIA common control bus power redundantly to the booster shutdown switch, and supplies power for the sustainer engine cutoff (SECO) signal input to the computer.

RETRO AUTO Circuit Breaker

The retro fire automatic circuit breaker CB4-1 applies retro common control bus power to the ARM AUTO RETRO switch. It provides power to salvo fire the retro rockets during the abort sequence. If CB4-1 is not closed, the electronic timer T_R contact closure will not automatically fire the retro rockets.

RETRO MAN Circuit Breaker

The retro manual circuit breaker CB4-2 provides retro common control bus power for manually firing the retro rockets, and salvo firing the retro rockets with the abort control handle.

TR-256 Circuit Breaker

The time to retrograde minus 256 seconds circuit breaker CB8-16 applies common control bus power to relay contacts in the electronic timer and contacts of the TR-256 second relay. CB8-16 enables the TR-256 second signal to illuminate amber the IND RETRO ATT, BTRY PWR, and RCS telelights on the Sequence Panel.

SEQ. LIGHTS POWER Circuit Breaker

The sequence lights power circuit breaker CB6-1 applies main bus power to the Sequence Lights (BRIGHT-DIM) switch and to open contacts on the barostat switch arm relay and the MAP relay.

SEQ. LIGHTS CONTROL Circuit Breaker

The sequence lights control circuit breaker CB1-13 applies common control bus power thru the four MAIN BATTERIES switches to relay K1-29. When the main battery power indicator relay K1-29 is energized, the BTRY PWR indicator on the Sequential Panel is illuminated green.

PARA CNTL Circuit Breaker

The parachute control circuit breaker CB5-80 applies the landing common control bus power to the barostat switch arm relay K5-61. K5-61 when energized applies main bus power from CB6-1 (SEQ. LTS. POWER) to the 40K and 10.6K foot indicators. CB5-80 must be closed, or the barostat switches cannot illuminate the indicators.

The third row of circuit breakers on the Left Switch/Circuit Breaker Panel perform functions related to the sequential system. The functions are the following.

ATT IND CNTL RETRO Circuit Breaker

The attitude indicate control retro circuit breaker CB12-7 applies retro common control bus power to the IND RETRO ATT telelight/switch and to contacts of retro bias off relays K4-62 and K4-63. Power from CB12-7 energizes retro bias relay K12-5 when the JETT RETRO teleswitch is pressed.

ATT IND CNTL LDG Circuit Breaker

The attitude indicate control landing circuit breaker CB12-8 gets power from the common control bus. CB12-8 provides proper scale factor for the flight director indicators (FDI's) during ascent, and permits the scanner ignore signal to be sent to the Inertial Measurement Unit (IMU) and the Attitude Control Electronics (ACE).

BOOST-INSERT CONTROL 1 Circuit Breaker

The boost-insert control 1 circuit breaker CB3-1 provides BIA squib bus #1 power to initiate the abort sequence with the abort control handle, jettison the nose fairing and scanner cover, separate the spacecraft from the launch vehicle, sense launch vehicle/spacecraft separation, extend the UHF and diplexer whip antennas, and initiate several experiments.

BOOST-INSERT CONTROL 2 Circuit Breaker

The boost-insert control 2 circuit breaker CB3-11 connects BIA SQUIB BUS #2 power redundantly to the same switches to which CB3-1 connects power.

RETRO SEQ. CNTL 1 Circuit Breaker

The retro sequence control 1 circuit breaker CB4-3 connects the retro squib bus #1 to the SEP OAMS LINES teleswitch, the SEP ADAPT teleswitch, the SEP ELEC teleswitch, and the JETT RETRO teleswitch on the Sequence Panel. It also arms the abort discrete relays and the equipment adapter separation sensor switches and relays.

RETRO SEQ. CNTL 2 Circuit Breaker

The retro sequence control 2 circuit breaker CB4-28 connects the retro squib bus #2 redundantly to the same switches to which the retro sequence control 1 circuit breaker connects power and arms the same circuits.

LANDING SEQ. CNTL 1 Circuit Breaker

The landing sequence control 1 circuit breaker CB5-2 is armed by the LANDING (SAFE-ARM) switch and applies landing squib bus #1 power to the EMERG DROGUE switch, the DROGUE switch, the PARA switch, the PARA JETT switch, and the LDG. ATT. switch. CB5-2 provides for drogue chute deployment, R & R section separation, pilot chute and main chute deployment, single - point release, extension and selection of the UHF descent antenna, main chute jettison, and extension of hoist loop and recovery light.

LANDING SEQ. CNTL 2 Circuit Breaker

The landing sequence control 2 circuit breaker CB5-33 is armed by the same switch as CB5-2 and applies landing squib bus #2 power redundantly to the same switches to which CB5-2 applies power.

SEQ. LIGHTS TEST (AMBER-OFF-RED & GREEN) Switch

The sequence lights test switch connects main bus power to all amber-colored sequence lights and to all lights on the Annunciator Panel in the AMBER positions, and to all red or green sequence lights in the RED & GREEN position.

SEQ. LIGHTS (BRIGHT-DIM) Switch

The sequence light bright-dim switch is a single-pole, double-throw toggle switch. It connects the main bus thru a diode to all sequence light circuits in the BRIGHT position. It connects the bus thru a resistor to the same circuits in the DIM position.

The fourth row on the Left Switch/Circuit Breaker Panel contains eight switches. These switches arm or safety the various squib buses used by the sequential system. Their functions are as follows.

BOOST-INSERT (ARM-SAFE) Switch

The boost-insert squib bus arm-safe switch is a four pole, double throw toggle switch. In the ARM position, this switch arms the boost-insert-abort (BIA) squib buses 1 and 2 and the BIA common control bus. These buses arm the SEP SPCFT tele-switch, the BOOST CUT-OFF 1 and 2 circuit breakers, the BOOST INSERT CNTL 1 and CNTL 2 circuit breakers, and the relay contacts which fire the nose fairing jettison, scanner cover jettison, orbit attitude maneuver system (OAMS) activate, re-entry control system (RCS) activate, spacecraft separate, guillotine, and pyro switch pyrotechnics.

RETRO POWER (ARM-SAFE) Switch

The retro power squib bus arm-safe switch is a four-pole, double-throw switch. In the ARM position, it arms retro squib bus 1 and 2 and the retro common control bus. Thru these buses it arms the RETRO JETT ARM-SAFE switch, the RETRO ROCKET SQUIBS ARM-SAFE 1, 2, 3 and 4 switches, the ATT IND CNTL RETRO, RETRO SEQ. 1 and 2, and RETRO AUTO and MAN circuit breakers on the Left Switch/Circuit Breaker Panel, and the RCS SQUIB 1 and 2 circuit breakers on the Overhead Switch/Circuit Breaker Panel.

RETRO JETT (ARM-SAFE) Switch

The retro jettison squib bus arm-safe switch is a two-pole double-throw toggle switch. In the ARM position, it arms retro jettison squib buses #1 and #2. From these buses, the retro jettison relays get the power to fire the retro adapter shaped charges and retro pyro switch H.

LANDING (ARM-SAFE) Switch

The landing squib bus arm-safe switch is a four-pole double-throw switch. In the safe position, it prevents deploying the drogue, pilot, and main chutes, and jettisoning the chutes and the rendezvous and recovery section. In the arm position, this squib bus switch connects common control bus power to the landing common control bus from which the barostat switches are armed. The squib bus switch also connects the OAMS squib buses #1 and #2 to landing squib buses #1 and #2 respectively. These squib buses supply power to the DROGUE, EMER. DROGUE, PARA, and PARA JETT switches, to the relays they control, and to their associated pyrotechnics.

RETRO ROCKET SQUIB 1, 2, 3, 4 (ARM-SAFE) Switches

The four retro rocket squib arm switches apply the voltages which ignite the four retrofire rockets to open contacts of the retro rocket automatic and manual fire relays. In the safe position of these four switches, the ignition voltage is removed from the relays. When both the RETRO POWER squib arm switch and the four RETRO ROCKET SQUIB arm switches are placed to the ARM position, the OAMS squib buses #1 and #2 are connected redundantly to the retro rocket fire relays.

BOOST-INSERT-ABORT CONTROLS AND INDICATORS

Seven telelights, three meters and four controls are provided for the boost-insert-abort phase of the spacecraft mission.

ENGINE 1 Indicators

The two ENGINE 1 indicators are provided on the Command Pilot's Panel to indicate thrust chamber underpressure of the first stage booster engines. Each indicator illuminates red when the thrust chamber pressure of the engine is 68 percent of rated pressure or less. Both indicators illuminate red at stage 1 ignition but

extinguish 0.91 to 1.25 seconds later as the pressure increases above 68 percent. Both indicators illuminate red at booster engine cutoff and extinguish quickly at staging.

ENGINE 2 Indicator

The ENGINE 2 indicator on the Command Pilot's Panel illuminates amber to indicate the fuel injector underpressure (or off) condition of the second stage engine. The critical pressure for engine 2 is 55 percent of rated value. The indicator illuminates when the first stage engine is ignited and stays amber through first stage boost. Approximately one second after both ENGINE 1 indicators extinguish, the ENGINE 2 indicator also extinguishes, indicating normal staging and engine 2 fuel injector pressure build up.

ATT RATE Indicator

The attitude rate indicator on the Command Pilot's Panel indicates an evaluation of the launch vehicle attitude rates during the boost phase. The indicator is extinguished if the attitude rates remain within acceptable limits, but illuminates red if the rates exceed these limits. Acceptable limits for stage 1 flight differ somewhat from those for stage 2 flight. For stage 1, limits in pitch are +2.5°/second nose up and -3.0°/second nose down; in yaw, +2.5°/second right and -2.5°/second left; and in roll, +20°/second clockwise and -20°/second counterclockwise. For stage 2, pitch limits are +10°/second and -10°/second and yaw limits are +10°/second and -10°/second. Roll limits for stages 1 and 2 are the same.

SEC GUID Indicator

The secondary guidance indicator on the Command Pilot's Panel indicates which guidance system is in operation. The indicator is extinguished to indicate that

primary guidance is being used. The indicator illuminates amber to indicate that secondary guidance has been selected.

ABORT Indicators

Two ABORT indicators are provided, one for each pilot. Both indicators illuminate red when the abort command is transmitted. When the ABORT indicator is illuminated, immediate and appropriate action is imperative. The indicator signals the crew to initiate immediately the abort mode appropriate for the altitude and velocity of the spacecraft. These modes are described under Sequential System Operation. During the boost phase, the crew has been reminded via the UHF communications link of the abort mode in effect.

STAGE 1 FUEL/OXIDANT Meters

The stage 1 fuel and oxidant meters on the Command Pilot's Panel enable the crew to monitor the instantaneous conditions and progress of the boost phase, and to permit them to anticipate an abort condition if one should develop. These meters indicate the gas pressures in PSIA of the stage 1 fuel and oxidant tanks. Dual indicating needles are provided for redundancy. The range of the stage 1 meters is 35 to 5 PSIA. A time-versus-pressure scale near the bottom of the meter shows the minimum required pressure at 20, 40, and 60 seconds after lift off. Critical fuel tank pressure is indicated by a shaded column at the low end of the scale. After staging with no signals applied, the meters indicate maximum PSIA.

STAGE 2 FUEL/OXIDANT Meters

The stage 2 fuel and oxidant meters on the Command Pilot's Panel indicate stage 2 fuel and oxidant tank pressures over a 70 to 10 PSIA range. Redundant pointers are used. Critical fuel tank pressures are indexed by a shaded column at the low

end of the scale. The S-flag at the 30-PSIA mark indicates the minimum acceptable stored pressure in the tank before pressurization. After spacecraft separation, the meters indicate maximum PSIA.

Accelerometer

The accelerometer on the Command Pilot's Panel indicates the rate in G's at which the launch vehicle engines are changing the velocity of the spacecraft. The range of the accelerometer is -6G to 16G. The meter has positive and negative memory pointers. The accelerometer enables the crew to monitor the effectiveness of the engines. It is a secondary indicator of staging.

RGS-IGS Guidance Switch

The guidance switch above the Abort Control Handle permits the Command Pilot to manually change from primary guidance (RGS) to secondary backup guidance (IGS). When backup guidance has been selected either manually or automatically during stage 1 boost, and the ground station determines that primary guidance is feasible during stage 2 boost, primary guidance can be selected again by momentarily placing the guidance switch to the RGS position.

"D" Rings

A "D" ring is provided on the ejection seat of each pilot. These rings are pulled to initiate Mode I Abort at altitude below 70,000 feet. Refer to Section III of this volume for the location and operation of these devices.

Abort Control Handle

The abort control handle is located on the Command Pilot's side of the cabin. It is used for spacecraft re-entry in Abort Modes I - II, II and III. These modes are effective above 25,000 feet. The three positions of this handle are NORMAL, SHUT-

DOWN and ABORT. In NORMAL, the handle is inoperative. When the handle is moved to SHUTDOWN, the engine cutoff command is sent to the operating launch vehicle engine. When the ABORT handle is moved to ABORT, the spacecraft is separated from the launch vehicle at the adapter-retrograde interface, and the retrofire rockets are simultaneously fired.

SEQUENTIAL PANEL CONTROLS AND INDICATORS

The switches, telelights, and telelight/switches on the Sequential Panel have the following nomenclature, place in the sequence system and functions.

JETT FAIRING Pushbutton Switch

The jettison fairing switch is used in the boost-staging phase of the mission sequence. The Command Pilot presses the switch approximately 45 seconds after staging occurs. This switch ejects the nose fairing and the scanner head cover.

SEP SPCFT Telelight/Switch

The separate spacecraft telelight/switch is used in the separation-insertion phase of the sequence. The Command Pilot presses the switch approximately 20 seconds after second stage engine cutoff when the Incremental Velocity Indicator displays the delta-V required for insertion. Pressing the switch causes several things to happen. Primarily, it detonates pyrotechnic devices which separate the spacecraft from the launch vehicle. Secondarily, it extends the UHF and diplexer antennas and readies the acquisition aid beacon for use. As the spacecraft moves away from the launch vehicle, separation sensors close and energize the spacecraft separation relays. The relays illuminate the telelight green.

IND RETRO ATT Telelight/Switch

The indicate retro attitude telelight is illuminated amber when the electronic timer energizes the T_R-256 second relay in the prepare-to-go-to-retrograde phase five minutes prior to retrograde. The amber light cues the crew to press the telelight/switch at this time. When pressed, the switch changes the FDI electronics to permit orienting the spacecraft in the retro (BEF) attitude to the FDI needles in the same manner as in normal (SEF) flight. The telelight also changes from amber to green, indicating that the FDI can be used in the retro attitude.

BTRY PWR Telelight

The battery power telelight is illuminated amber by the T_R-256 second relay. The amber light cues the Pilot to place the MAIN BATTERIES switch to ON, and the fuel cell switch or ADAPTER BATTERIES switch to OFF. This change must be made because the adapter section will be jettisoned at retrograde (T_R). When all of the main battery switches are on, the telelight changes from amber to green.

RCS Telelight/Switch

The re-entry control system telelight is illuminated amber by the T_R-256 second relay. The amber light cues the Command Pilot to activate the re-entry control system by firing the fuel, oxidant, and pressurant isolation squibs. Pressing the telelight/switch energizes relays which fire the squibs. The telelight changes from amber to green, indicating that the RCS has been activated.

SEP OAMS LINES Telelight/Switch

The separate OAMS lines telelight is illuminated amber by the T_R-256 second relay in the prepare-to-go-to-retrograde phase. The amber light cues the crew to seal and sever the OAMS lines before jettisoning the adapter. Pressing the telelight/

switch energizes relays which ignite the pyrotechnics used to seal and sever the lines. The relays also fire pyro switches and wire guillotines severing some of the adapter-retro mating line wiring. The telelight changes from amber to green.

SEP ELEC Telelight Switch

The separate electrical telelight is also illuminated amber by the T_R-30 second relay. The amber light cues the crew to sever all the wiring at the adapter/retro mating line. Pressing the telelight/switch energizes the wire guillotine relay. The pyrotechnics are detonated and the wiring is cut. The telelight changes from amber to green to indicate that electrical separation has been accomplished.

SEP ADAPT Telelight/Switch

The separate adapter telelight is illuminated amber by the T_R-30 second relay. The amber light cues the crew to jettison the equipment adapter section. Pressing the telelight/switch causes the adapter shaped charge and the Z70 tubing cutter pyro to be detonated, and the adapter severed. Separation of the adapter is sensed by the equipment adapter separation sensors. Two closed sensors energize the sensor relay and change the telelight from amber to green.

ARM AUTO RETRO Telelight/Switch

The arm automatic retrofire telelight is illuminated amber by the T_R-30 second relay. The amber light cues the crew to arm the automatic retrofire circuits so that when the electronic timer closes the T_R contacts at T_R time, the retro rockets will fire automatically. Pressing the telelight/switch completes the path from the retro common control bus to the timer T_R contact, and also energizes the T_R arm relay. The relay changes the light from amber to green. Contact closure at

TR time energizes the TR signal relay. The signal relay energizes the 45-second time delay relay, fires the retro rockets at 5.5-second intervals, and puts the platform in the free mode.

MAN FIRE RETRO Pushbutton Switch

The manual fire retro rockets switch connects the retro common control bus to the manual retro latch relay. Contacts of this relay energize the 45-second time delay relay, fire the retro rockets at 5.5-second intervals, and place the platform in the free mode of operation.

JETT RETRO Telelight/Switch

The jettison retro adapter telelight is illuminated amber by the 45-second time delay relay 45 seconds after retrofire begins. The amber light cues the crew to jettison the retro adapter. Pressing the telelight ignites pyro switch H and other pyrotechnic devices which disconnect and guillotine the wires at the retro adapter/re-entry vehicle mating line. It fires the shaped charges which sever the retro adapter from the re-entry vehicle. It energizes the scanner head jettison relays which fire the jettison squibs and jettison the scanner head. It removes the retro attitude signals applied to the flight director needles at T_R-256 seconds. It switches the FDI roll channel to the mix mode for re-entry. Finally by igniting pyro switch H it extingushes the IND RETRO ATT, SEP OAMS LINE, SEP ELEC, SEP ADAPT and ARM AUTO RETRO green telelights and the JETT RETRO amber telelight.

RENDEZVOUS SEQUENCE CONTROLS AND INDICATORS

The controls and indicators used during the rendezvous sequence are located on the Agena Control Panel and the Encoder Controller (Figure 4-1). The Agena Control Panel is part of the Right Switch and Circuit Breaker Panel. The Encoder

Controller is located below the Right Switch and Circuit Breaker Panel.

For Gemini Spacecraft 5, only the AGENA BUS ARM switch, the AGENA SQUIB 1 and 2 circuit breakers, and the POD EJECT - INDEX BAR EXTEND switch are required. These controls provide for the ejection of the Rendezvous Evaluation Pod (REP) and the REP thermal cover.

For Gemini Spacecraft 6, 8 and 9, all the rendezvous sequence controls and indicators are required. These controls provide for arming the docking squib buses 1 and 2; extending the docking index bar; energizing the command link encoder; encoding and sending commands to the Agena target vehicle (ATV) via the RF link and the hardline; illuminating the docking light; verifying that the ATV has accepted the message; arming and stopping the ATV engine; and emergency release of the Gemini spacecraft from the target docking adapter (TDA).

AGENA POWER Circuit Breaker

The Agena power circuit breaker CB10-2 arms the ENCODER switch which applies main bus power to the encoder.

AGENA SQUIB 1 Circuit Breaker

The Agena squib 1 circuit breaker CB13-28 arms the POD EJECT - INDEX EXTEND switch with OAMS squib bus 1 power when the BUS ARM switch is in either the DOCK or EXP position.

AGENA SQUIB 2 Circuit Breaker

The Agena squib 2 circuit breaker CB13-29 arms the redundant contacts of the POD EJECT - INDEX EXTEND switch with OAMS squib bus 2 power when the BUS ARM SWITCH is in either the DOCK or EXP position.

AGENA CONTROL Circuit Breaker

The Agena control circuit breaker CB13-30 arms the ENGINE ARM switch with power from the common control bus.

ENCODER Switch

The encoder switch applies man bus power to the command link encoder when the AGENA POWER circuit breaker is closed.

DOCK LIGHT Switch

The dock light switch applies main bus power to the dock light outside the spacecraft when the CABIN LIGHTS circuit breaker is closed.

EMERGENCY RELEASE Switch

The emergency release switch provides the capability of releasing the Gemini spacecraft from the target docking adapter of the ATV in case the command link malfunctions and fails to effect target docking separation. The switch applies OAMS squib bus power to emergency latch release igniters. The igniters blow the latches loose.

INDEX EXTEND - POD EJECT Switch

The index extend - pod eject switch provides the capability of ejecting the rendezvous evaluation pod (REP) and REP thermal cover on the Spacecraft 5 mission, and extending the docking index bar on the Spacecraft 6, 8 and 9 missions. On spacecraft 5, the switch connects experiment squib bus power to the REP and thermal cover eject relays. These relays apply the same power to the REP eject igniters and the thermal cover jettison igniters. The igniters cause the pod and cover to be ejected from the spacecraft. On spacecrafts 6, 8 and 9, the index extend - pod

eject switch applies docking squib bus power to the index bar extend relays. These relays connect docking squib bus power to the index bar extend igniters. Pyrotechnics extend the docking index bar.

ENGINE ARM - STOP Switch

The engine arm - stop switch provides an emergency stop capability for the main engine of the ATV when the Gemini Spacecraft 6, 8 or 9 and the Agena target vehicle are docked. The engine arm-stop switch in the STOP position connects no power to the ATV programmer. In the ARM position, common control bus power is applied thru the rendezvous umbilical connector to the engine stop circuit in the flight control logic package. The ENGINE STOP signal stops the ATV main engine if the engine has been started, and prevents execution of the start command if this command is sent.

MSG ACPT Light

The message acceptance pulse (MAP) light is illuminated by the Agena programmer when the Programmer accepts and executes a command sent to it from Gemini Spacecraft 6, 8 or 9 via the RF or hardline command link. The Agena programmer generates the MAP signal when a command which it is programmed to execute is sent to it. The programmer, as it starts to carry out the command, generates the message acceptance pulse. If the RF link is being used, the pulse causes the radar transponder aboard the ATV to widen three consecutive return pulses to the radar. A MAP detector in the radar detects the change in pulse width and operates a 2.5 second light driver. The driver applies main bus power for approximately 2.5 seconds to the closed contacts of the MAP relay. The XMIT switch of the Encoder Controller in the "0" or "1" position applies the power to the MSG ACPT light. If the rendezvous umbilical hardline is used to send commands, Agena power is applied

thru the umbilical to the MAP relay. The normally open contacts of the MAP relay close, applying main bus power thru the SEQUENCE LIGHTS POWER circuit breaker and the XMIT switch to the MSG ACPT light.

8^1 - 8^0 Encoder Controller Switches

The eight-one (8^1) and eight-zero (8^0) concentric rotary switches are used to dial the first two digits of the command link code. Sixty-four combinations (00X thru 77X) are possible with these two switches, 128 combinations altogether using the XMIT switch. The encoder translates the switch position into pulse position modulation triggers for the radar, or into bipolar return-to-zero (RZ) pulses for the hardline when the XMIT switch is operated to add the last digit (0 or 1) of a command.

XMIT Switch

The transmit (XMIT) switch of the encoder controller is a spring-loaded, return-to-center, 3-position switch. It performs three functions. First, it provides the last digit (0 or 1) of the command link code (XX0 or XX1) depending upon the position to which the Pilot places the switch. Secondly, it transmits the message by causing the Encoder to encode the message. Thirdly, it arms the MSG ACPT light circuit so that a MAP signal via the radar or umbilical can illuminate the light. Since every message is composed of 60 subbits spaced 3.9 milliseconds apart, approximately one-quarter second is required for a complete message transmission. The pilot holds the XMIT switch in the 0 or 1 position for approximately one second to send a message. The Agena programmer acknowledges message acceptance promptly and lights the MSG ACPT light. The XMIT switch extinguishes the MSG ACPT light when released and returned to the center position.

LANDING SEQUENCE SWITCHES AND INDICATORS

Four switches on the Pedestal Panel and one switch on the Command Pilot's Panel control the landing sequence events. Two indicators and two meters on the Command Pilot's Panel provide the crew with important descent data. Figures 4-1 and 4-8 show the landing sequence switches and indicators. These components and their functions are as follows.

HI ALT DROGUE Switch

The high altitude drogue switch on the Pedestal Panel deploys the drogue chute and opens the cabin air inlet.

PARA Switch

The PARA switch is pressed at approximately the 10,600 - foot altitude to deploy the pilot chute and main parachute. The parachute deploy switch disconnects the drogue chute cables from the R & R section, and allows the drogue chute to deploy the pilot chute. The switch guillotines the R & R section wire bundles and severs the R & R section from the cabin vehicle by means of a mild detonating fuse. It allows the pilot chute to pull the R & R section away from the landing module, thus deploying the reefed main parachute.

LDG ATT Switch

The landing attitude switch changes the descent attitude of the spacecraft by changing the suspension from single-point to two-point (bridle) suspension. When the LDG ATT switch is pressed, power is applied to the main chute single-point release igniters. The main chute single-point disconnect assembly is unlatched, and the

main chute riser pulls out of this assembly. The riser, which is attached to the bridle, pulls the aft leg of the bridle out of the trough. The spacecraft is suspended from the forward and aft bridle disconnect assemblies.

PARA JETT Switch

The main parachute jettison switch jettisons the main parachute after landing by pyrotechnically operating the forward and aft bridle disconnect assemblies. When the PARA JETT switch is pressed, power is applied to two forward main chute jettison igniters and two aft main chute jettison igniters. The four jettison igniters fire the disconnect assembly pyrotechnics and unlatch the assemblies. The bridle legs pull out of the disconnect assemblies. A hoist loop and recovery light is also extended. The recovery light flashes when the BEACON CONTROL RESC switch is put in the ON position.

EMERGENCY DROGUE Switch

The emergency drogue chute on the Command Pilots's Panel is a guarded toggle switch. It is used if the high altitude drogue chute fails to deploy or deploys improperly. When the spacecraft has descended to an altitude of approximately 10,600 feet without the braking effect of the drogue, the Command Pilot lifts the guard and closes the EMERG DROGUE 10.6K switch. Thru relays, pyrotechnics, and time delays the switch causes the following things to happen. It severs the high altitude drogue chute risers and apex line. It fires the pilot chute mortar and ejects the pilot chute. It separates the R & R section from the spacecraft landing module. It deploys the reefed main chute.

40K FEET Indicator

The 40,000-foot indicator illuminates amber when the re-entering spacecraft has descended to an altitude of 40,000 feet. The indicator is illuminated by the 40K-foot barostat switch, when the SEQ. LIGHTS PWR and PARA CONT circuit breakers have been previously closed.

10.6K FEET Indicator

The 10,600-foot indicator illuminates amber when the SEQ. LIGHTS PWR and PWR CONT circuit breakers have been previously closed and the spacecraft has descended to the 10,600-foot altitude.

DESCENT RATE Meter

The descent rate meter is a conventional pneumatic unit driven from a static pressure source. It visually indicates the vertical velocity of the re-entry module during the landing phase.

Altimeter

The altimeter located on the left side on the Command Pilot's Panel is a standard aircraft altimeter. It is used to monitor the altitude of the re-entry module during the landing phase.

RE-ENTRY VEHICLE RELAY PANELS

Twenty-two relay panels are installed in Gemini S/C 5. Fourteen relay panels are located in the re-entry vehicle, five in the retrograde adapter, one in the equipment adapter, and two in the re-entry and recovery (R & R) section. See Figure 4-1. In S/C 6, 8 and 9 there are twenty-three relay panels, including three in the R & R section. The following relay panels are in the re-entry module.

Power Relay Panel

In Gemini S/C 5, 8 and 9 the power relay panel contains fourteen relays ten of which pertain to fuel cell operations. Fuel cell operation is discussed in Section V of this manual. In S/C 6 fuel cells are not used and these ten relay are not operative. The four remaining relays are used: to arm OAMS squib bus #1 (K1-2); to arm OAMS squib bus #2 (K1-90); to indicate that the four main batteries should be selected at 256 seconds before retrofire (K8-17); and to indicate that the four main batteries have been selected (K1-29).

Adapter Power Supply Relay Panel

The adapter power supply relay panel has twelve relays all of which perform functions related to the operation of the fuel cells.

Power Distribution Relay Panel

In the event of an abort, the spacecraft separation, retro squib and retro common buses are armed by means of the four relays of the power distribution relay panel.

IGS Relay Panel

The inertial guidance system (IGS) relay panel contains eleven relays to perform the following IGS functions: abort command transfer, re-entry roll display, retro bias application, retro attitude indication, guidance switch-over fade-in, and flight director indicator (FDI) ascent scale factoring.

BIA Control Relay Panel

The boost-insert-abort (BIA) control relay panel contains six relays to perform spacecraft separation indicator control and launch vehicle/spacecraft pyro switch firing.

Retro Separation Relay Panel

The necessary functions required for adapter retro section separation are performed by the fourteen relays of the retro separation relay panel. The relays perform such functions as pyro switch and shaped charge ignition, TR-30 second indication, automatic IGS "free" mode selection, and arming of the TR contacts of the time reference system (TRS).

Parachute Jettison Relay Panel

The parachute jettison relay panel contains two relays to perform each of the following functions: main chute single-point release, main chute jettison, and cabin air inlet door guillotine ignition.

ACS Scanner and RCS Squib Fire Relay Panel

Re-entry control system (RCS) squib firing, scanner cover and scanner heads jettison, abort interlock, RCS amber light actuation, and RCS ring B squib firing test prior to launch are provided by the sixteen relays of the attitude control system (ACS) scanner and RCS squib fire relay panel.

Communication Relay Panel

The communication relay panel consists of ten relays to perform the following functions: lift-off sensing, TR minus 256 seconds indication, descent antenna select, acquisition aid disable, and UHF whip antenna actuate.

ECS Relay Panel

The relay panel has one relay which functions as the O_2 Hi-Rate indicator, power control and suit and cabin fan power disconnect relay.

R & R Section Separation Control Relay Panel

The nine relays of the R & R section separation control relay panel perform such functions as guillotine ignition, barostat arming, and R & R section shaped charge firing.

Instrumentation Sequence Monitor Relay Panel

The instrumentation sequence monitor relay panel contains nine relays to initiate instrumentation system parameter telemetry transmission. This is accomplished by sensing such signals as main chute jettison, drogue chute deploy and launch vehicle engine shut down.

Instrumentation Power Control Relay Panel

The instrumentation power control relay panel has three relays which control the telemetry transmission functions.

Umbilical Pyro Switch Control Relay Panel

The umbilical pyro switch relay panel contains two relays which apply landing squib bus #1 and #2 power to re-entry umbilical wiring pyro switch K.

ADAPTER RELAY PANELS

The retrograde adapter contains the following five relay panels which control spacecraft separation, retrofire, equipment adapter separation, DOD experiments, and experiment squib firing. The equipment adapter contains the OAMS squib fire relay panel.

Spacecraft Separation Control Relay Panel

The spacecraft separation control relay panel contains six relays to perform the following functions: shaped charge ignition, and launch vehicle/spacecraft guillotine firing.

Retro Fire Relay Panel

The retrofire relay panel has twenty relays. These relays control the automatic, manual and salvo firing of the retro rockets, and time the 5.5-second firing sequence.

Retro Sequence Adapter Separate Relay Panel

The retro sequence adapter separate relay panel contains twelve relays. The relays are used for equipment adapter shaped charge ignition, OAMS propellant line guillotine, electrical wire guillotine, and retro abort.

DOD Equipment Extend Relay Panel

The Department of Defense (DOD) equipment extend relay panel contains six relays which control the initiation of the DOD experiments.

Experiment Squib Fire Relay Panel

The experiment squib fire relay panel contains two relays used to initiate the MSC-1 experiment during orbit.

OAMS Squib Fire Relay Panel

The orbit attitude maneuver system (OAMS) squib fire relay panel contains six relays for firing the OAMS squibs and controlling the regulator valves.

R & R SECTION RELAY PANELS

The Rendezvous and Recovery (R & R) section of S/C 5 contains two relay panels: the nose fairing jettison relay panel and the drogue chute control relay panel. The R & R section of S/C 6, 8 and 9 contains the two S/C 5 panels and in addition the docking relay panel.

Nose Fairing Jettison Relay Panel

The nose fairing jettison relay panel contains two relays which control the jettisoning of the nose fairing.

Drogue Chute Control Relay Panel

The drogue chute control relay panel has six relays which control drogue chute deployment, drogue chute guillotining, and emergency deployment of the pilot and main chutes.

Docking Relay Panel

The docking relay panel has eleven relays which extend the docking index bar, illuminate the MSG ACPT light, effect emergency release of the docking latches, release and jettison the docking latches at retrograde, jettison the index bar, and cover the docking latch ports.

SEPARATION SENSORS

The sequence system contains two sets of separation sensors. These are the launch vehicle/spacecraft separation sensors and the equipment adapter/re-entry vehicle separation sensors. Figure 4-1 shows their configuration and location. Figure 4-3 shows how the launch vehicle/spacecraft separation sensors operate.

Figure 4-6 shows how the equipment adapter/re-entry vehicle separation sensors operate. Separation sensors are toggle switches which are normally open before separation is initiated. The separating structure will close the sensors as it moves away from the spacecraft or re-entry module. The closure of any two of a set of three sensors is sufficient to sense and indicate separation.

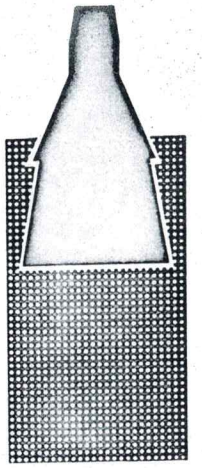

Section V

ELECTRICAL POWER SYSTEM

TABLE OF CONTENTS

TITLE	PAGE
SYSTEM DESCRIPTION	5-3
SYSTEM OPERATION	5-11
PRE-LAUNCH	5-11
ORBIT	5-12
RE-ENTRY	5-13
MONITOR AND DISPLAY	5-14
SYSTEMS UNITS	5-17
SILVER-ZINC BATTERIES	5-17
POWER SYSTEM RELAY PANEL	5-18
ADAPTER POWER SUPPLY RELAY PANEL	5-18
AMMETERS	5-18
VOLTMETER	5-19
POWER SYSTEM MONITOR	5-19
FUEL CELL BATTERIES	5-20
REACTANT SUPPLY SYSTEM	5-29

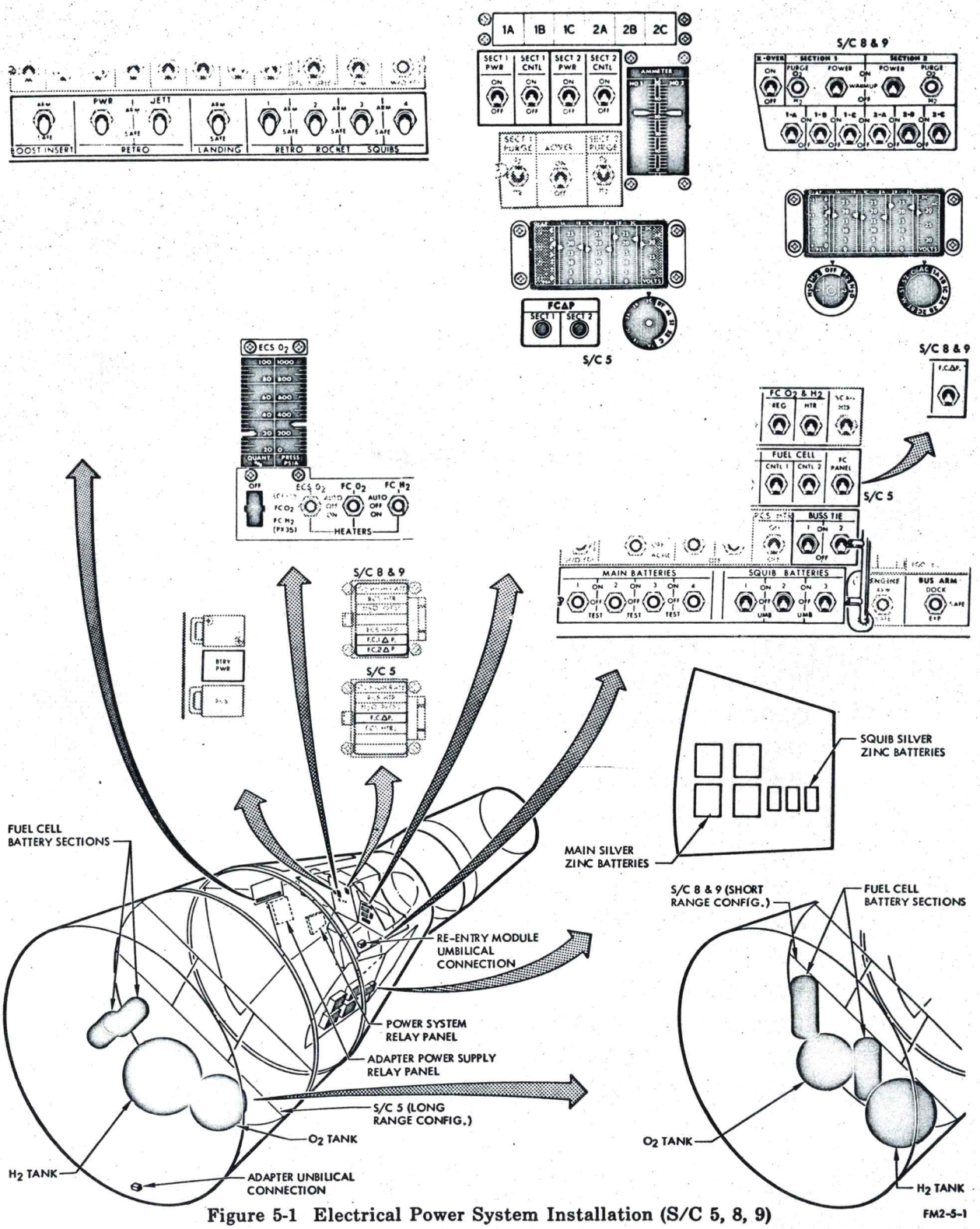

Figure 5-1 Electrical Power System Installation (S/C 5, 8, 9)

SECTION V ELECTRICAL POWER SYSTEM

SYSTEM DESCRIPTION

The electrical power system for the Gemini spacecraft basically consists of two (2) fuel cell battery sections, four (4) silver-zinc main batteries and three (3) silver-zinc squib batteries. (Spacecraft No. 6 uses three (3) 400 ampere/hour silver-zinc batteries in lieu of the fuel-cell batteries) See Figure 5-1 for Spacecraft No. 5, 8 and 9 configuration and Figure 5-2 for Spacecraft No. 6 configuration.

The electrical power system includes switches, circuit breakers, relay panels, ammeters, a voltmeter and telelights which provide control, distribution and monitoring for the power system.

Also included as a power system sub system is the RSS (reactant supply system) which provides storage and control of the reactants (H_2 and O_2) used for fuel cell operation (Not applicable to Spacecraft No. 6). Provisions are made for utilizing external power and remote monitoring of the spacecraft power buses during ground tests and pre-launch operations.

The two fuel cell battery sections and four main batteries provide DC power to the spacecraft main power bus. (On Spacecraft No. 6 the three adapter module batteries and the four main batteries provide DC power to the main bus).

The three squib batteries provide DC power to the common control bus and the two OAMS (orbital attitude maneuvering system) squib buses. The OAMS squib buses in turn distribute DC power to the BIA (boost-insert-abort), retro, landing and agena

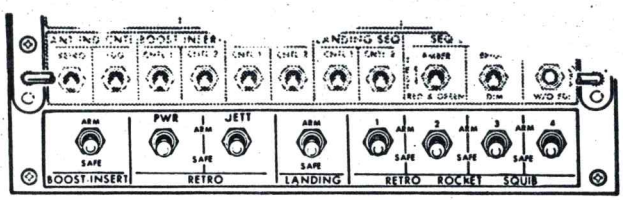

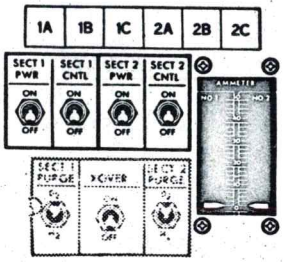

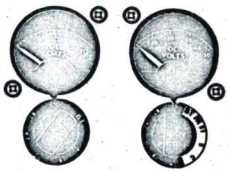

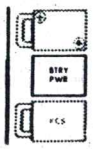

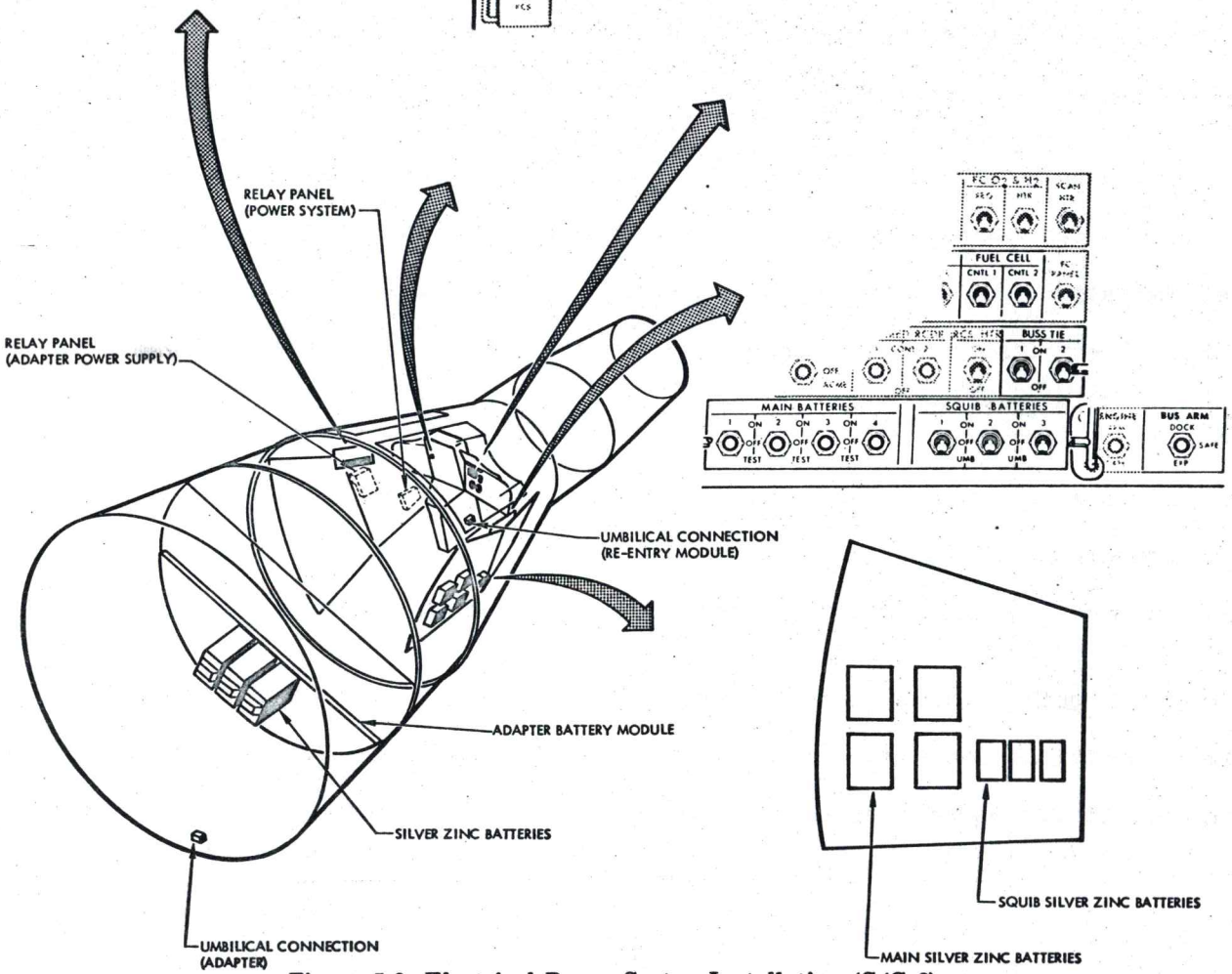

Figure 5-2 Electrical Power System Installation (S/C 6)

FM2-5-2

squib buses via the individual squib bus arming switches. See Figure 5-3 for Spacecraft No. 5, 8 and 9 configuration and Figure 5-4 for Spacecraft No. 6 configuration.

The fuel cell battery sections, along with the required RSS components, are installed in the RSS/Fuel Cell module (Figure 5-5 and 5-6) which is located in the spacecraft adapter section. (On Spacecraft No. 6 three silver-zinc batteries are installed in the adapter battery module (Figure 5-7) which is located in the spacecraft adapter section.) The main and squib batteries are installed in the right cabin equipment bay.

The fuel cell SECTION 1 and SECTION 2 POWER (PWR and CNTL switches on Spacecraft No. 5 and 6), PURGE, XOVER (crossover) and stack control switches (1A thru 2C) are located on the right instrument panel. The fuel cell switches are used to control the battery module power on Spacecraft No. 6. The PURGE and XOVER switches are inoperative on Spacecraft No. 6.

On Spacecraft No. 5 and 6 a dual-vertical-readout ammeter is located on the right instrument panel. On Spacecraft No. 5, 8 and 9 a power system monitor consisting of: a delta pressure indicator, three dual-vertical-readout ammeters and an AC/DC voltmeter, with associated selector switches, is located on the right instrument panel.

On Spacecraft No. 5 only, two delta pressure telelights are located on the right instrument panel. On Spacecraft No. 6 only, a conventional voltmeter and ammeter with associated selector switches are located on the right instrument panel.

The MAIN BATTERIES switches, SQUIB BATTERIES switches, BUS-TIE switches, agena

PROJECT GEMINI

BLOCKHOUSE

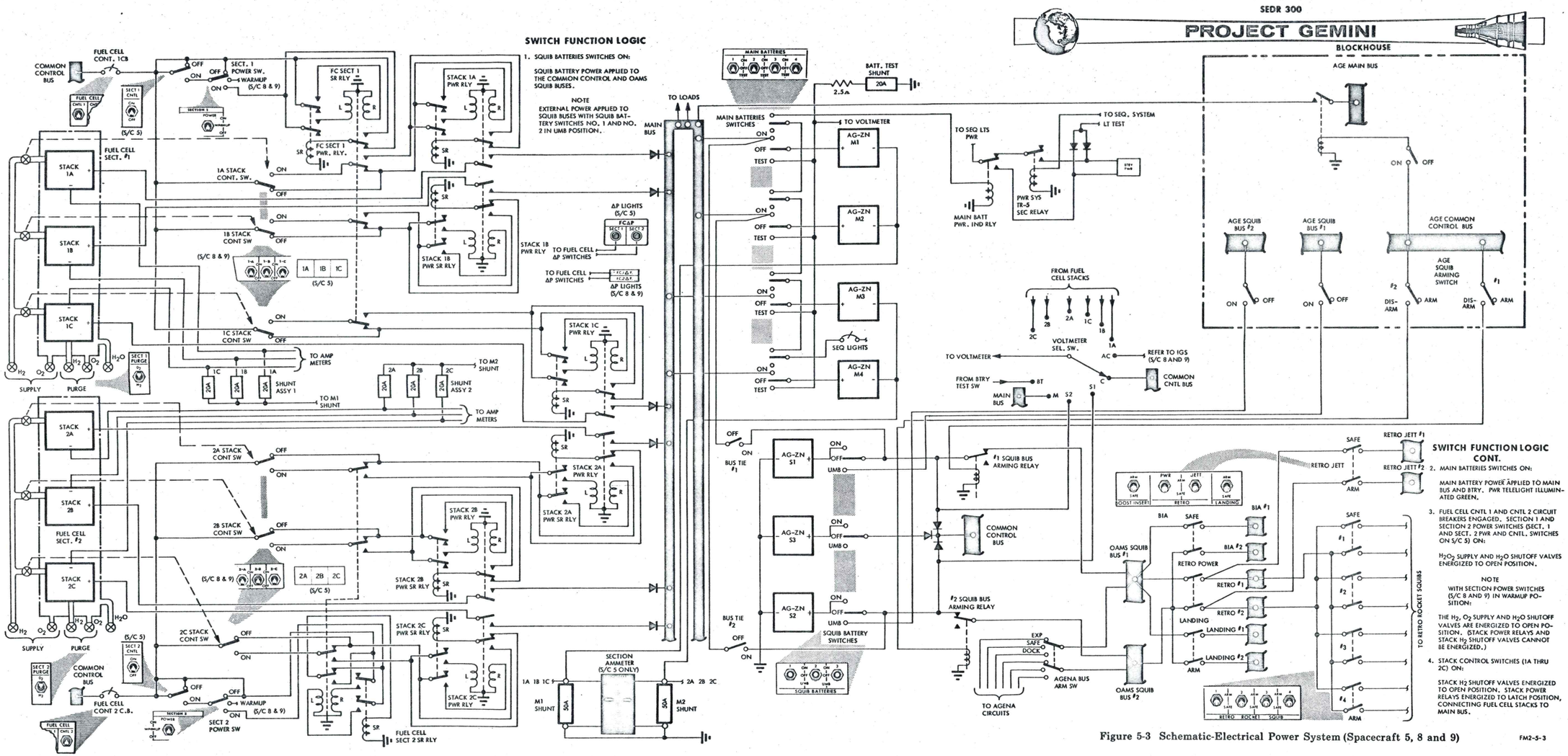

Figure 5-3 Schematic-Electrical Power System (Spacecraft 5, 8 and 9)

FM2-5-3

PROJECT GEMINI

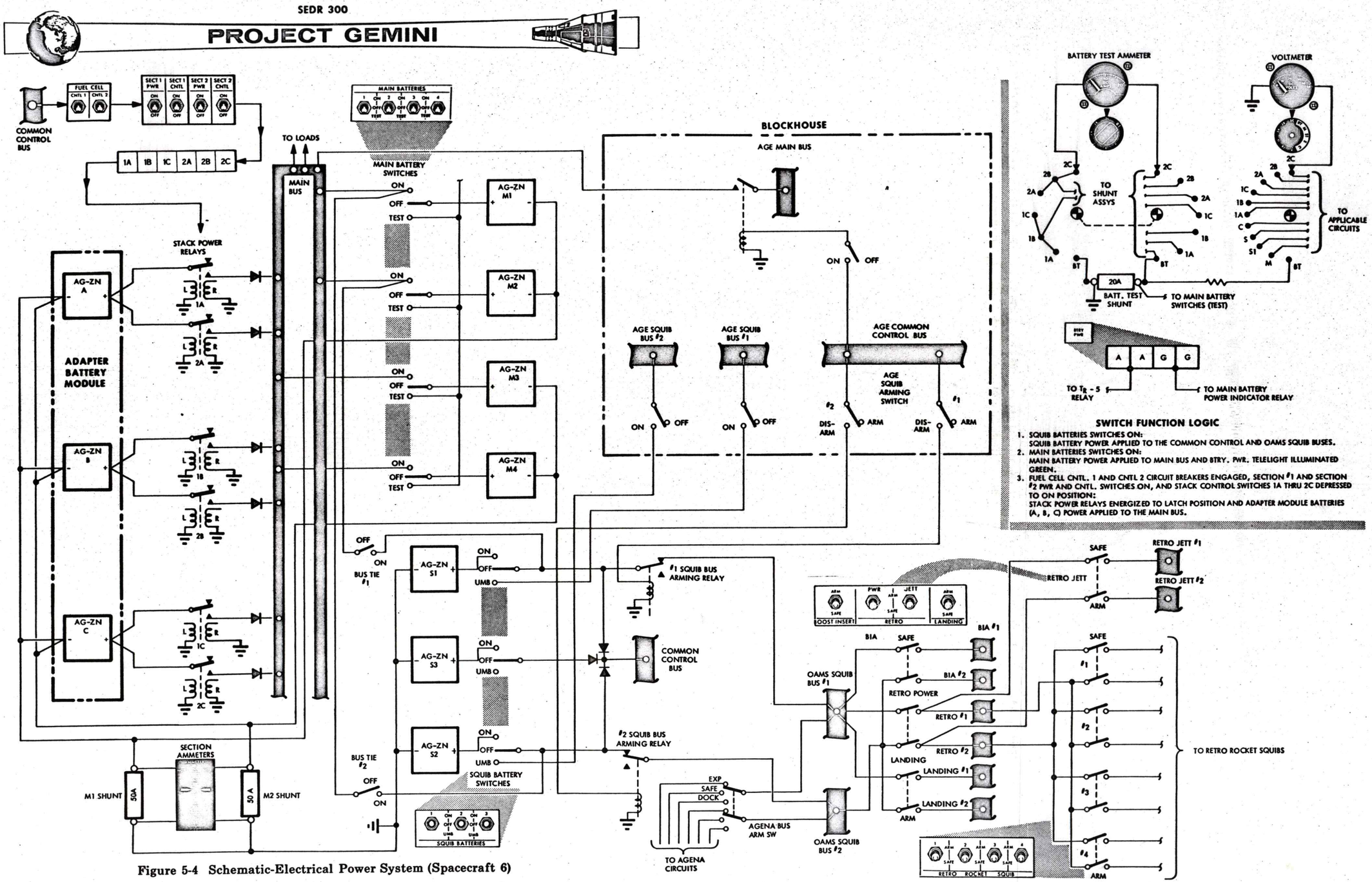

SWITCH FUNCTION LOGIC

1. SQUIB BATTERIES SWITCHES ON:
   SQUIB BATTERY POWER APPLIED TO THE COMMON CONTROL AND OAMS SQUIB BUSES.
2. MAIN BATTERIES SWITCHES ON:
   MAIN BATTERY POWER APPLIED TO MAIN BUS AND BTRY. PWR. TELELIGHT ILLUMINATED GREEN.
3. FUEL CELL CNTL. 1 AND CNTL 2 CIRCUIT BREAKERS ENGAGED, SECTION #1 AND SECTION #2 PWR AND CNTL. SWITCHES ON, AND STACK CONTROL SWITCHES 1A THRU 2C DEPRESSED TO ON POSITION:
   STACK POWER RELAYS ENERGIZED TO LATCH POSITION AND ADAPTER MODULE BATTERIES (A, B, C) POWER APPLIED TO THE MAIN BUS.

Figure 5-4 Schematic-Electrical Power System (Spacecraft 6)

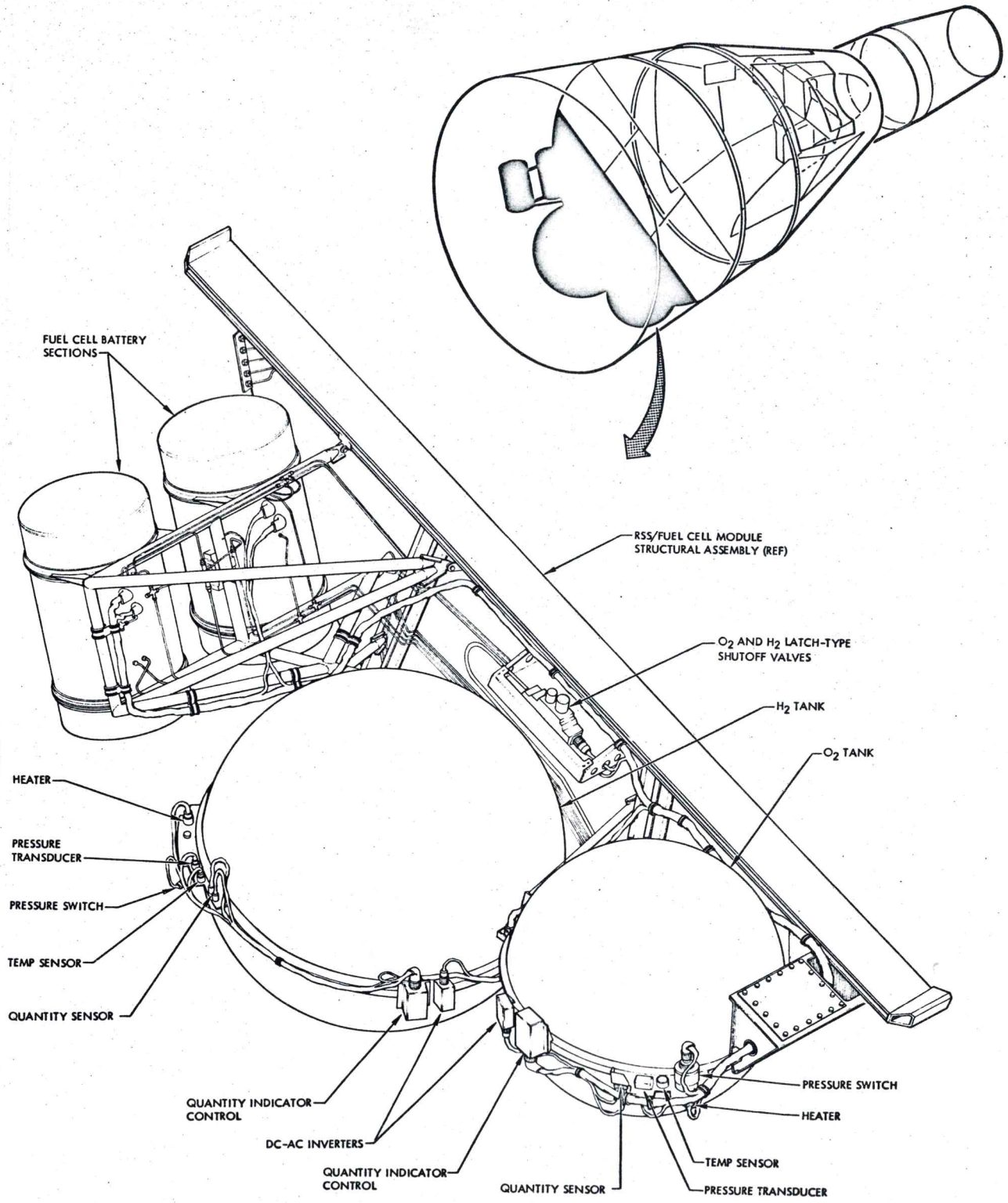

Figure 5-5 RSS/Fuel Cell Module (S/C 5)

FM2-5-5

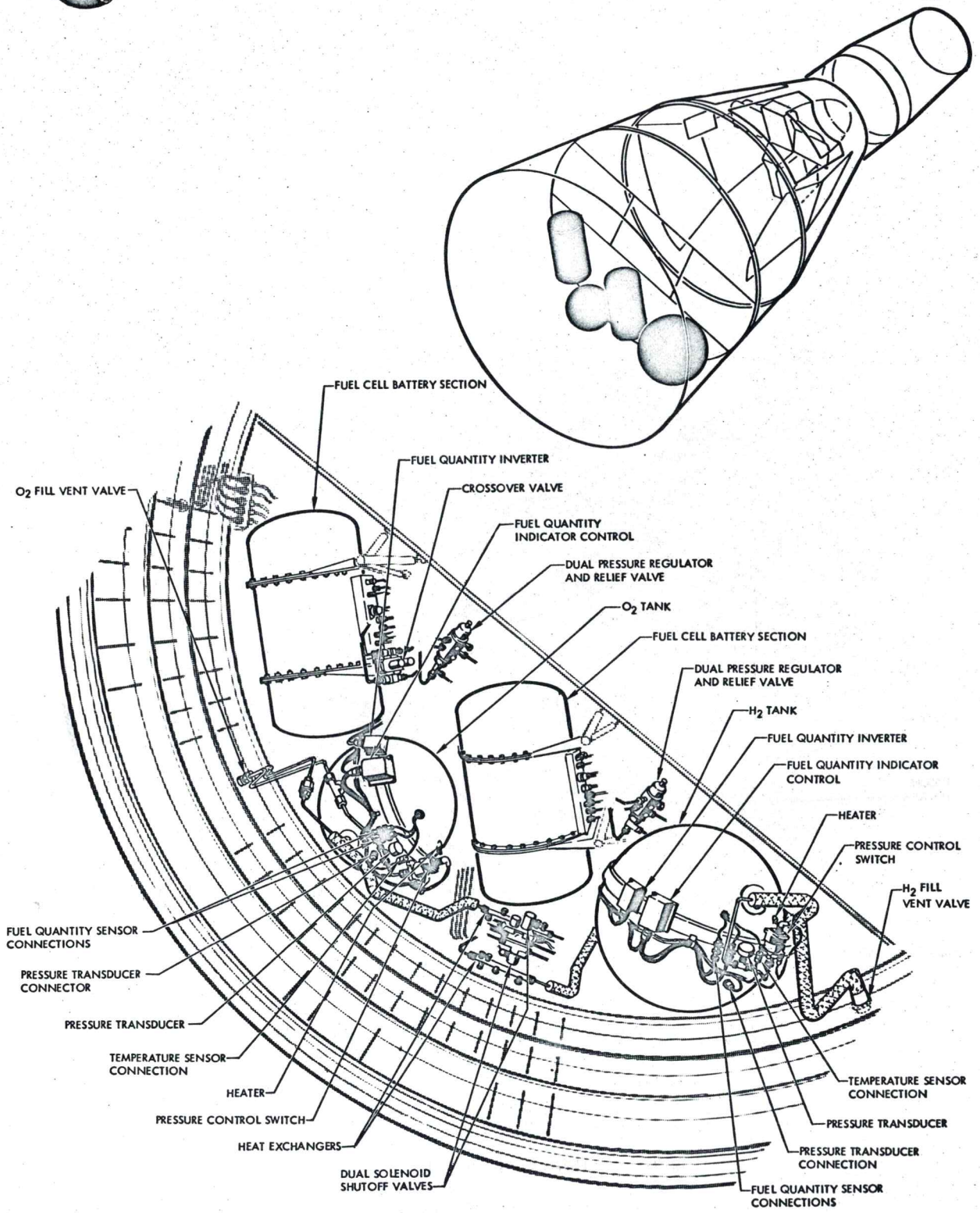

Figure 5-6 RSS/Fuel Cell Module (S/C 8 & 9)

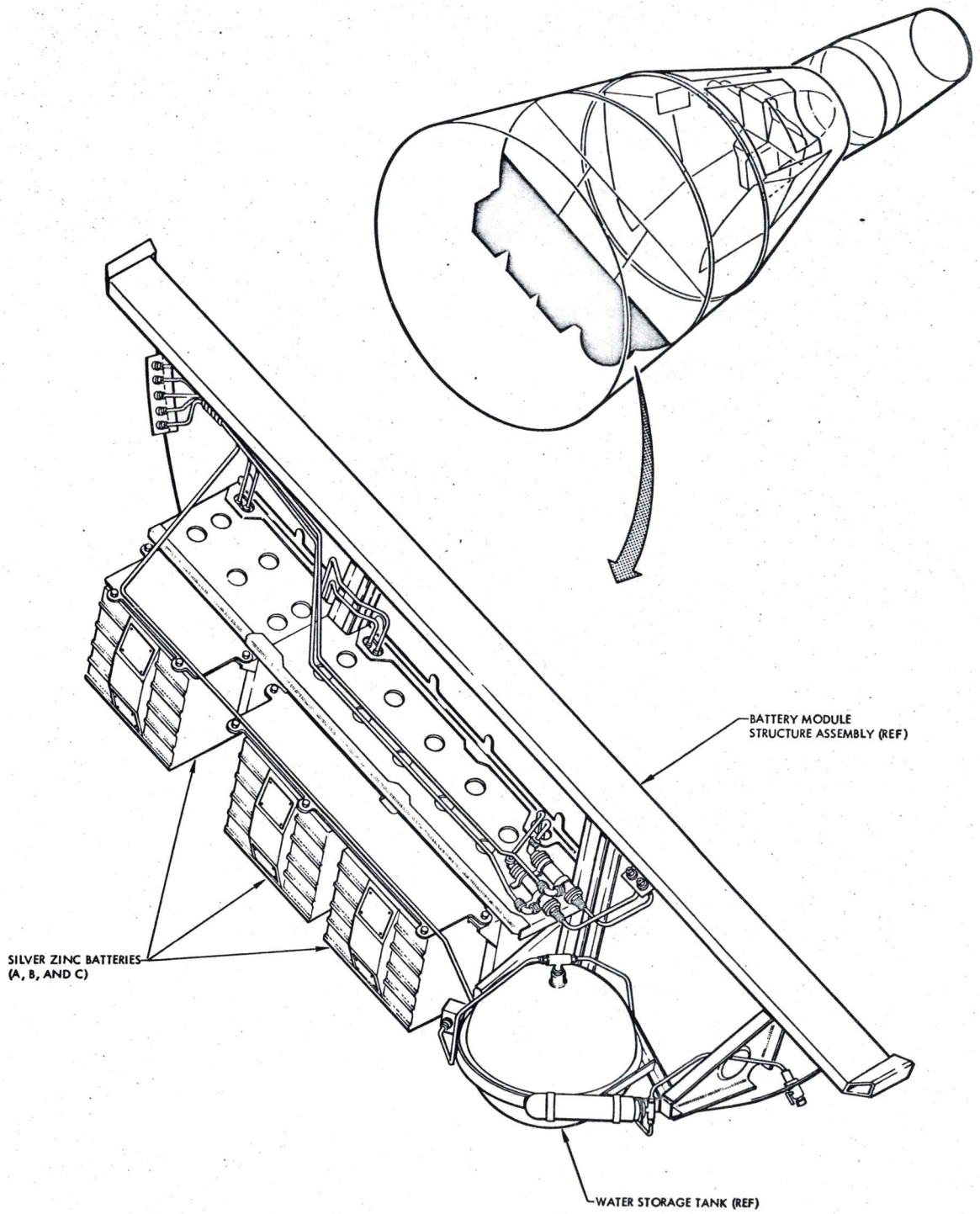

Figure 5-7. Adapter Battery Module (S/C 6)

BUS ARM switch, FUEL CELL CONT., FC PANEL, FC O_2 and H_2 regulator and heater circuit breakers are located on the right switch/circuit breaker panel. The squib bus arming switches are located on the left switch/circuit breaker panel.

The BTRY PWR (main batteries) sequence light, fuel cell delta P telelight, O_2 and H_2 heater switches, O_2/H_2 quantity indicator (integral with ECS O_2 indicator) and selector switch are located on the center instrument panel. The power system relay panel and adapter power supply relay panel are located in the left equipment area of the cabin.

SYSTEM OPERATION

PRE-LAUNCH

In order to conserve spacecraft battery power, external electrical power is utilized during the pre-launch phase of the mission. External power is supplied to the spacecraft common control, main and squib power buses through umbilical cables connected to the re-entry module and adapter section umbilical receptacles.

No. 1 and No. 2 SQUIB BATTERIES switches must be placed in the UMB (umbilical) position in order to apply external power to the spacecraft squib buses. Remote control of the spacecraft squib bus arming relays, and remote monitoring of the spacecraft power buses is also accomplished through the re-entry and adapter umbilical cables.

Prior to launch all MAIN BATTERIES and SQUIB BATTERIES switches, SECTION POWER (SECT. PWR. and CNTL. switches on Spacecraft No. 5 and 6) and stack control switches (1A thru 2C) are set to the ON position to insure maximum redundancy of the electrical power system during the launch phase of the mission. On Spacecraft No. 5, 8

and 9 the fuel cells are activated in sufficient time prior to launch to insure launch readiness of the fuel cell and RSS system.

The common control bus and the OAMS squib buses are switched from external power to the squib batteries at sufficient time prior to launch to verify the squib battery circuits. The BIA (boost-insert-abort) squib buses are armed prior to launch by setting the BOOST-INSERT ARM/SAFE switch to ARM position.

The re-entry and adapter section umbilicals are disconnected from the spacecraft at approximately T+29 seconds. Normally umbilical separation is accomplished by a lanyard initiated mechanism. In the event of a lanyard release failure a pin will be sheared at lift-off releasing the umbilical cable.

ORBIT

From launch time until booster separation and insertion into orbit both the fuel cell battery sections (module batteries on Spacecraft No. 6) and the four main batteries are connected in parallel to the main power bus. After booster separation is accomplished the MAIN BATTERIES switches are placed in the OFF position to conserve the main battery power. Also the pilots will disarm the BIA squib buses by setting the BOOST-INSERT ARM/SAFE switch to SAFE.

The SQUIB BATTERIES switches remain in the ON position throughout the entire mission until landing is accomplished. All three squib batteries are connected to the common control bus through diodes for individual fault protection. Squib batteries No. 1 and No. 2 are connected to the two OAMS squib buses via the de-energized squib bus arming relays.

The BUS TIE switches remain in the OFF position unless the necessity arises where

the pilots must use main bus power to fire the squibs. The bus tie switches provide a method of connecting the main bus to the OAMS squib buses. The agena BUS ARM switch will be used according to the mission requirements.

On Spacecraft No. 5, 8 and 9, a small percentage of the reactant gases must be purged from the fuel cell system periodically to insure that the impurities contained in the feed gases do not restrict reactant flow to the cells and to remove any accumulation of product water in the gas lines. This purging function is performed by the pilots manually actuating the O_2 and H_2 PURGE switches.

RE-ENTRY

At TR-256 seconds the pilots will arm the retro squib buses by setting the RETRO PWR ARM/SAFE switch and the individual RETRO ROCKET SQUIB No. 1, 2, 3 or 4 ARM/SAFE switches to ARM position. The retro rockets are used according to the mission requirements.

The MAIN BATTERIES switches must be returned to the ON position at TR-256 seconds also to insure continuity of main bus power at the time of separation of the adapter section, containing the RSS/Fuel Cell module (adapter battery module on Spacecraft No. 6), from spacecraft. There is no automatic switching provided for this function.

The stack control switches (1A thru 2C) and the SECTION 1 and SECTION 2 POWER switches (SECT. No. 1 and SECT. No. 2 PWR and CNTL switches on Spacecraft No. 5 and 6) are set to OFF position after the main batteries are properly connected to the main bus.

After retro rocket firing has been accomplished the pilots will set the JETT RETRO ARM/SAFE switch to ARM. This switch provides a method of arming the JETT RETRO (retro section jettison) switch, and is effectively an interlock to prevent inadvertent jettisoning of the retro section prior to firing of the retro rockets.

After the adapter and retro sections are separated from the spacecraft the pilots will disarm the retro squib buses by setting the RETRO PWR. ARM/SAFE switch, RETRO JETT ARM/SAFE switch and RETRO ROCKET SQUIBS ARM/SAFE switches to SAFE position. At this time the landing squib buses are armed by setting the LANDING ARM/SAFE switch to ARM position.

In the event of an aborted mission, all the squib buses are armed via the common control bus and squib bus abort relays (sequential system) which effectively by-pass the squib bus arming switches.

After landing is accomplished the pilots will disarm the landing squib buses by returning the LANDING ARM/SAFE switch to SAFE. At this time power will be removed from the common control bus and the OAMS squib buses by setting the SQUIB BATTERIES switches to OFF position. All unnecessary electrical equipment will be deactivated to conserve the spacecraft main batteries for recovery equipment operation. The MAIN BATTERIES switches will remain in the ON position throughout the recovery phase of the mission.

MONITOR AND DISPLAY

Throughout the mission visual displays of bus voltage and current are provided by the system voltmeter and ammeters. On Spacecraft No. 5, 8 and 9, a power system monitor, which consists of one pressure indicator, three dual ammeters and an AC/DC voltmeter is utilized.

The ammeters monitor individual fuel cell stack current (1A thru 2C). The voltmeter, used in conjunction with a selector switch, displays individual fuel cell stack voltage, common control bus voltage, OAMS squib bus No. 1 and No. 2 voltage, IGS (inertial guidance system) inverter output voltage (Spacecraft No. 8 and 9 only), main bus voltage and individual main battery voltage with the selector switch in BT position and a particular MAIN BATTERIES switch in TEST position.

The pressure indicator, in conjunction with a selector switch, provides a visual display of O_2 versus H_2 and O_2 versus H_2O delta P (differential pressure) in the fuel cell sections. In the event that the delta P exceeds the prescribed limits, the pilots must evaluate the fuel cell performance, and if a malfunction exists, shut down the malfunctioning fuel cell section by setting the applicable fuel cell power and stack control switches to OFF position. The delta pressure indicator is inoperative on Spacecraft No. 5.

An out of tolerance delta P indication is also provided by the FC Δ P (fuel cell delta pressure) telelights on the center instrument panel. The lights are illuminated red when a malfunction exists. On Spacecraft No. 5 only, two delta P telelights on the right instrument panel are illuminated red when a malfunction exists.

The reactant (O_2 and H_2) supply quantities are displayed on the ECS O_2 quantity indicator (center instrument panel) when the associated selector switch is set to FC O_2 or FC H_2 positions.

The BTRY PWR (main batteries) sequence light, located on the center instrument panel is illuminated amber at TR-256 seconds during the mission by action of the

TR-5 relay in the power system relay panel. This informs the pilots that they must return the MAIN BATTERIES switches to ON position due to the impending separation of the adapter section with the fuel cell sections (adapter module batteries on Spacecraft No. 6). With all main batteries properly connected to the main bus the battery sequence light is illuminated green.

On Spacecraft No. 5 and 6 the dual-vertical-readout section ammeter provides a display of section No. 1 and No. 2 main bus current. Section No. 1 includes 50 percent of the adapter power supply current plus main batteries No. 1 and No. 2 current. Section No. 2 includes 50 percent of the adapter power supply current plus main batteries No. 3 and No. 4 current.

The stack ammeter (used for battery test ammeter on Spacecraft No. 6) with selector switch in 1A, 1B, 1C or 2A, 2B, 2C positions, displays 50 percent of module battery current. With the selector switch in BT (battery test) position, the ammeter displays individual main battery test current as the appropriate MAIN BATTERIES switch is set to TEST position.

Displays of common control bus voltage, main bus voltage, OAMS squib bus voltage, and adapter module battery voltage is provided by the system voltmeter and selector switch. Individual main battery voltage (with the particular battery removed from the main bus) is monitored with the voltmeter selector switch in BT position and the applicable MAIN BATTERIES switch in TEST position.

The fuel cell delta P telelights and reactant quantity indications are not operative on Spacecraft No. 6.

SYSTEMS UNITS

SILVER-ZINC BATTERIES

The four main batteries are 45 ampere/hour, 16 cell, silver-zinc batteries. The three squib batteries are 15 ampere/hour, 16 cell, silver-zinc batteries. The squib batteries are special high-discharge-rate batteries which will maintain a terminal voltage of 18 volts for one second under a 75 ampere load.

On Spacecraft No. 6 only, three 400 ampere/hour, 16 cell, silver-zinc batteries are installed in the adapter battery module. These batteries are used in lieu of fuel cell batteries. All of the silver-zinc batteries have an open circuit terminal voltage of 28.8 to 29.9 volts DC.

The battery electrolyte consists of a 40 percent solution of reagent grade potassium hydroxide and distilled water. The main and squib batteries have a vent valve in each cell designed to prevent electrolyte loss and will vent the cell to atmospheric pressure in the event a pressure in excess of 40 PSIG builds up within the cell.

All of the silver-zinc batteries are equipped with relief valves which maintain a tolerable interior to exterior differential pressure in the battery cases. The batteries are capable of operating in any attitude in a weightless state. Prior to installation into the spacecraft the batteries are activated and sealed at sea level pressure. All of the batteries are coldplate mounted to control temperature.

POWER SYSTEM RELAY PANEL

The power system relay panel contains relays necessary for controlling and sequencing power system functions. The panel contains the control relays for the fuel cell and RSS system, main battery power sequence light relay, TR-5 relay and the squib bus arming relays.

ADAPTER POWER SUPPLY RELAY PANEL

The adapter power supply relay panel contains relays necessary for controlling adapter module power to the main power bus. The relay panel contains the stack power relays which connect the individual fuel cell stacks to the main bus. (On Spacecraft No. 6 the stack power relays connect the adapter module batteries to the main bus.) The panel also contains diodes used for reverse current protection between the adapter power supply and the spacecraft main power bus.

AMMETERS

The section ammeter (Spacecraft No. 5 and 6 only) is a dual-edge-readout vertical reading meter having a 0-50 ampere range with a total accuracy of two percent. The No. 1 scale displays main batteries No. 1 and No. 2 and 50 percent of the adapter power supply current. The No. 2 scale displays main batteries No. 3 and No. 4 and 50 percent of the adapter power supply current. The ammeter is shunt connected between the main power bus and spacecraft ground.

The fuel cell stack ammeter (used as a battery ammeter on Spacecraft No. 6) with associated selector switch, provides a display of individual main battery test current with the selector in BT (battery test) position and a particular MAIN BATTERIES switch in TEST position. With the selector switch in 1A, 1B, 1C, or

2A, 2B, 2C positions the ammeter displays 50 percent of the applicable adapter module battery current. The meter has a 0-20 ampere scale.

VOLTMETER

On Spacecraft No. 6 the voltmeter, used in conjunction with a selector switch, displays main bus, common control bus and squib bus voltage. Individual main battery voltage may be monitored with the voltmeter selector switch set to BT (battery test) position and a particular MAIN BATTERIES switch set to TEST position. The voltmeter displays applicable adapter module batteries (A, B and C) voltage when the selector switch is set to 1A, 1B, 1C or 2A, 2B, 2C positions. The voltmeter has a 0-50 VDC range.

POWER SYSTEM MONITOR

The power system monitor (not applicable on Spacecraft No. 6) consists of five vertical reading indicators; an O_2 delta P pressure indicator, three dual-readout ammeters and an AC/DC voltmeter. The delta P indicator (not operative on Spacecraft No. 5) and voltmeter are used in conjunction with selector switches located just below on the instrument panel.

The ammeters provide a display of individual fuel cell stack (1A thru 2C) current (reading must be multiplied by .8 on Spacecraft No. 5.). The voltmeter displays individual fuel cell stack voltage, main bus, squib bus and common control bus voltage, individual main battery voltage (with a particular MAIN BATTERIES switch in TEST position) and IGS inverter output voltage with selector switch in AC position. The AC switch position is inoperative on Spacecraft No. 5. The voltmeter has a 20-33 volt AC range and an 18-33 volt DC range.

The O_2 delta P indicator has a 0-1.5 PSI range with the selector switch in either H_2 position and a 0-6 PSI range with the selector switch in either H_2O position. This indicator displays O_2 versus H_2 differential pressure and O_2 versus H_2O differential pressure for each fuel cell section.

FUEL CELL BATTERIES

Construction

The fuel cell battery used in the Gemini spacecraft is of the solid ion-exchange membrane type using hydrogen (H_2) for fuel and oxygen (O_2) for an oxidizer. The fuel cell battery is comprised of two separate sections which are sealed in air tight pressure containers. Each section is made up of three interconnected fuel cell stacks with plumbing for transferring hydrogen, oxygen and product water. (See Figure 5-8)

Each fuel cell stack consists of 32 individual fuel cells. Each basic fuel cell is made up of two catalytic electrodes separated by a solid type electrolyte in latimated form. (See Figure 5-9)

The electrolyte is composed of a sulfonated styrene polymer (plastic) approximately 10 millimeters thick. Thin films of platinum catalyst, applied to both sides of the electrolyte, act as electrodes and support ionization of hydrogen on the anode side of the cell and oxidation on the cathode side of the cell.

A thin titanium screen, imbedded into the platinum catalytic electrode reduces the internal resistance along the current flow path from the electrode to the current collector and adds strength to the solid electrolyte.

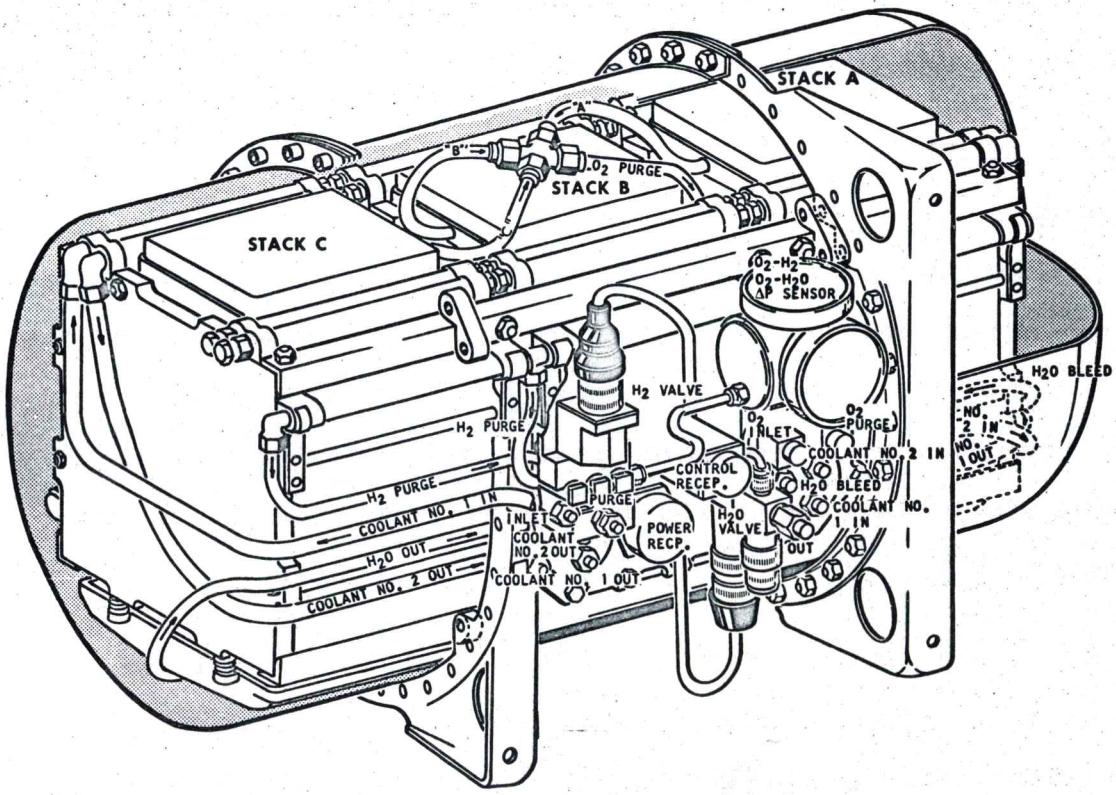

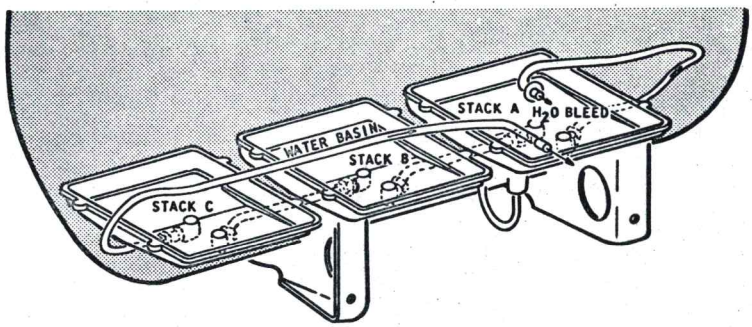

Figure 5-8 Fuel Cell Battery Section

FM2-5-7

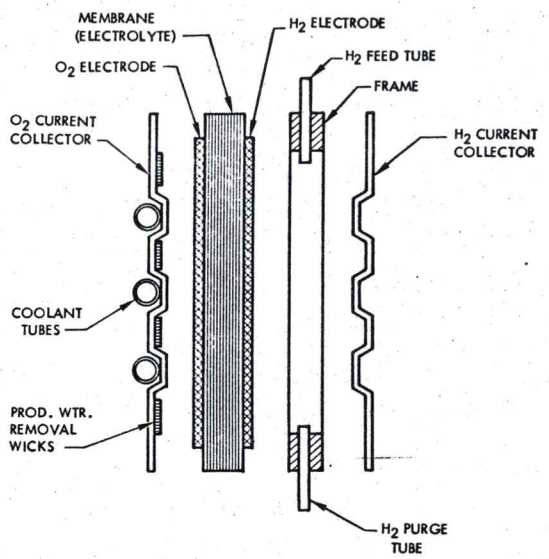

Figure 5-9 Basic Fuel Cell Assembly

FM2-5-9

On the hydrogen side of the fuel cell, a current collector is attached by means of a glass-cloth-reinforced epoxy frame which assures a tight seal around the edges of the cell, forming a closed chamber. Ribs in the collector are in contact with the catalytic electrode on the fuel cell, providing a path for current flow.

The hydrogen fuel is admitted through a 0.62 inch inlet tube in the frame of the current collector and enters each gas channel between the collector ribs by way of a series of slots in the tube. Another tube provides a purge outlet, making it possible to flush accumulated inert gases from the cell. The collector plate is made of 3.5 millimeter titanium.

On the oxygen side of the cell a current collector of the same configuration and material as the hydrogen side collector is attached. Its ribs, located at right angles to those of the other collector, provide structural support to the electrolyte-electrode structure.

A dacron cloth wick, attached between the ribs, carries away the product water through capillary action, by way of a termination bar on one side of the assembly. Oxygen is admitted freely to this side of the fuel cell from the oxygen filled area of the section container.

The cell cooling system consists of two separate tubes bonded in the cavity formed by the construction of the oxygen side current collector and the back side of the hydrogen current collector. Each tube passes through six of the collector ribs and has the cooling capacity to maintain operating temperature. The cooling of the oxygen current collector, which holds the product water transport wicks, provides the coldplate for water condensation from the warmer oxygen electrode.

The individual fuel cell assemblies are arranged in series to form a stack as shown in Figure 5-10. When assembling the cells into a stack, the ribs of the oxygen side current collector of one cell contact the solid electrolyte of the adjacent fuel cell assembly. Titanium terminal plates are installed on the ends of the two outside cells to which connections are made for the external circuit. End plates, which are honey-comb structures of epoxy-glass laminate 0.5 inch thick, are installed on the outside of the terminal plates.

Stainless steel insulated tie rods hold the stack together and maintain a compression load across the area of each cell assembly. This assures proper contact of the solid electrolyte with the ribs of each current collector. The fuel cell stacks are packaged in a pressure tight container, together with the necessary reactant and coolant ducts and manifolds, water separator for each stack, and required electrical power and instrumentation wiring.

The hydrogen inlet line, hydrogen purge line, and the two coolant lines for each cell lead from their respective common manifolds running the length of the stack. The manifolds are made of an insulating plastic material and the individual cell connections are potted in place after assembly to provide a leak-tight seal. The oxygen sides of the cells are open to the oxygen environment surrounding the fuel cell assemblies within the container.

An accessory pad is mounted on the outside of the fuel cell section container. It includes the gas inlet and outlet fittings, purge and shut-off valves, water valve and electrical power connector. Structurally, the container is a titanium pressure

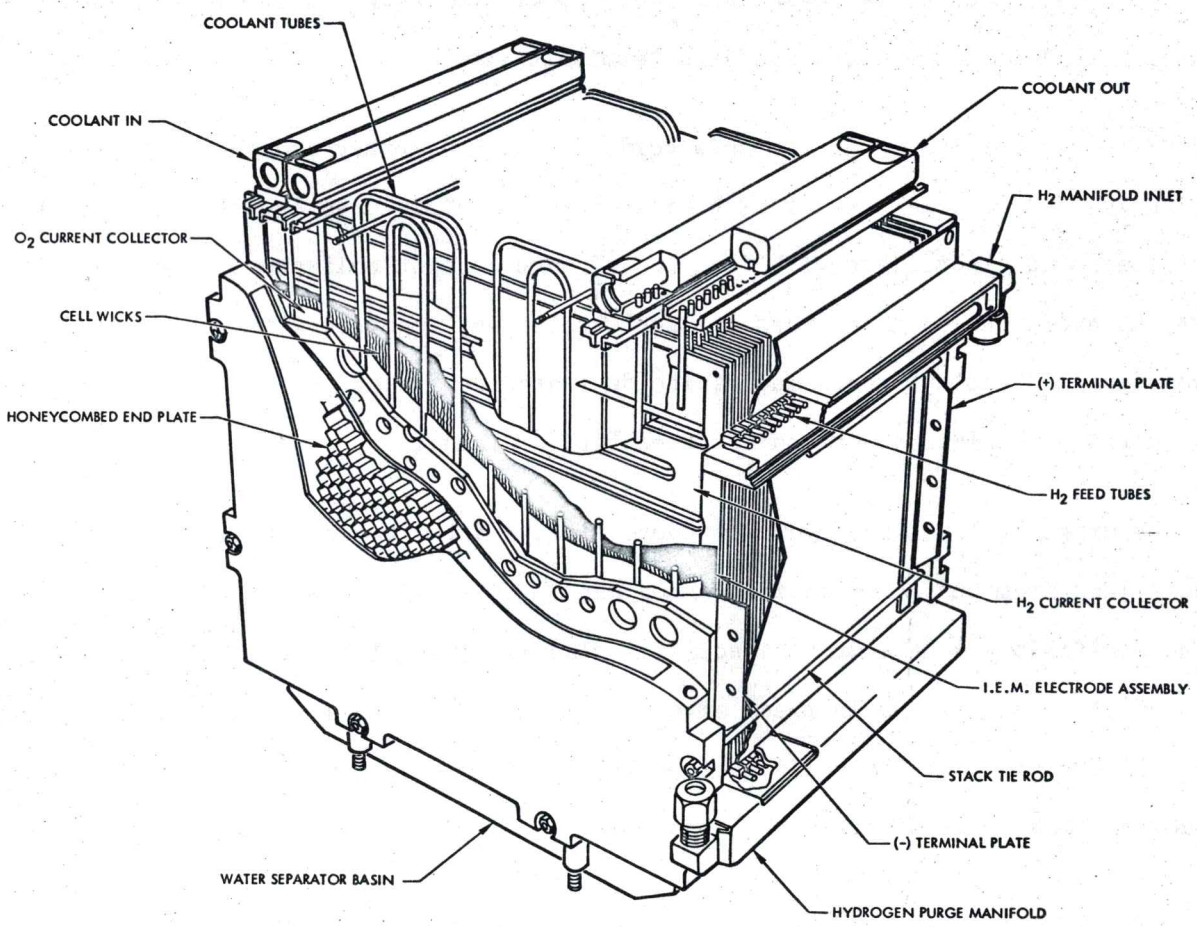

Figure 5-10 Fuel Cell Stack Assembly

FM2-5-6

vessel consisting of a central cylinder, two end covers, mounting brackets and plastic mounting rails. Within the container, the fuel cell stacks are mounted on fiberglass-impregnated epoxy rails by bolts which pass through the stack plates. These rails are in turn bolted to the mounting rings sandwiched between the two flanges on the section container.

The hydrogen manifolds on each stack within a section are parallel fed with a hydrogen shut-off valve and check valve in the feed line to each stack. Oxygen is fed into the section container so that the entire free volume of the container contains oxygen at approximately one atmosphere pressure. The coolant reaches the fuel cell battery sections by two separate isolated lines. Any malfunction in the coolant line in one section will not affect the cooling function of the coolant line in the other section.

Each stack in the section has its own water-oxygen separators which are manifolded into a single line coming out of the section container. All hydrogen, oxygen, coolant, electrical and water storage pressure line connections at the section container are fastened to standard bulkhead fittings on the accessory pad.

After the stacks are completely assembled within the container, all void spaces are filled with unicellular foam. The purpose of this foaming is for vibration dampening, accoustical noise deadening and minimizing free gas volume to prevent possible fire propagation. Thin plastic covers are placed over the top and bottom of each stack to manifold oxygen to the stack and to keep the foam material from entering areas around the coolant manifolds and oxygen water separator.

Operation

The basic principle by which the fuel cell operates to produce electrical energy and water, is the controlled oxidation of hydrogen. This is accomplished through the use of the solid electrolyte ion-exchange membrane. On the hydrogen side of the fuel cell, hydrogen gas disassociates on the catalytic electrode to provide hydrogen ions and electrons. The electrons are provided a conducting path of low resistance by the current collector, either to an external load or to the next series-connected fuel cell.

When a flow of electrons is allowed to do work and move to the oxygen side of the fuel cell, the reaction will proceed. By use and replacement, hydrogen ions flow through the solid electrolyte to the catalytic electrode on the oxygen side of the fuel cell. When electrons are available on this surface, oxygen disassociates and combines with the available hydrogen ions to form water. (See Figure 5-11)

The oxygen current collector provides the means of distributing electrons and condensing the product water on a surface to be transported away by the wick system through capillary action. The individual cell wicks are integrated into one large wick which routes the water to an absorbent material that separates the water from the gas.

By using the oxygen outlet pressure as a reference, a small pressure differential is obtained over the length of the water removal system. This pressure is sufficient to push the gas-free water toward the storage reservoir.

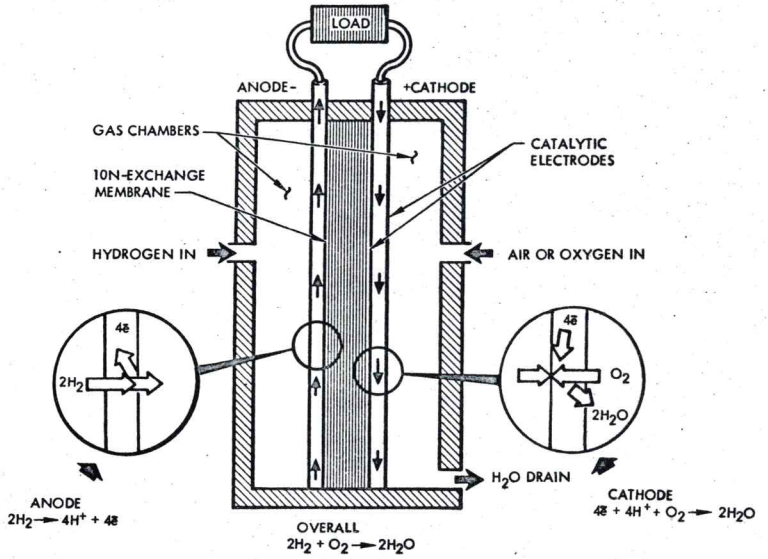

Figure 5-11 Principal of Operation.

FM2-5-10

Waste heat generated during the fuel cell battery operation is dissipated by means of the circulating coolant provided by the ECS (environmental control system). In addition, the total coolant flow provides the function of pre-heating the incoming reactant gases.

In the spacecraft the reactant gases (hydrogen and oxygen) are supplied to the fuel cell sections by the RSS (reactant supply system). This system contains the reactant supply tanks, control valves, heat exchangers, temperature sensors and heaters required for management of the fuel cell reactants. See Figure 5-12 for a functional diagram.

REACTANT SUPPLY SYSTEM

The RSS (reactant supply system) is essentially a sub system for the fuel cell sections. The system provides storage for the cryogenic hydrogen and oxygen, converts the reactants to gaseous form and controls the flow of the gases to the fuel cell battery sections. The RSS components are installed in the RSS/Fuel Cell module. See Figure 5-5 and 5-6 for component installation and Figure 5-12 for a functional diagram.

Components

Reactant Supply Tanks

Two tanks are utilized to separately contain the cryogenic hydrogen and oxygen required for the operation of the fuel cell battery sections. The tanks are thermally insulated to minimize heat conduction to the stored elements which would cause the homogeneous solution to revert to a mixture of gas and liquid. The tanks are capable of maintaining the stored liquids at super-critical pressures and cryogenic temperatures.

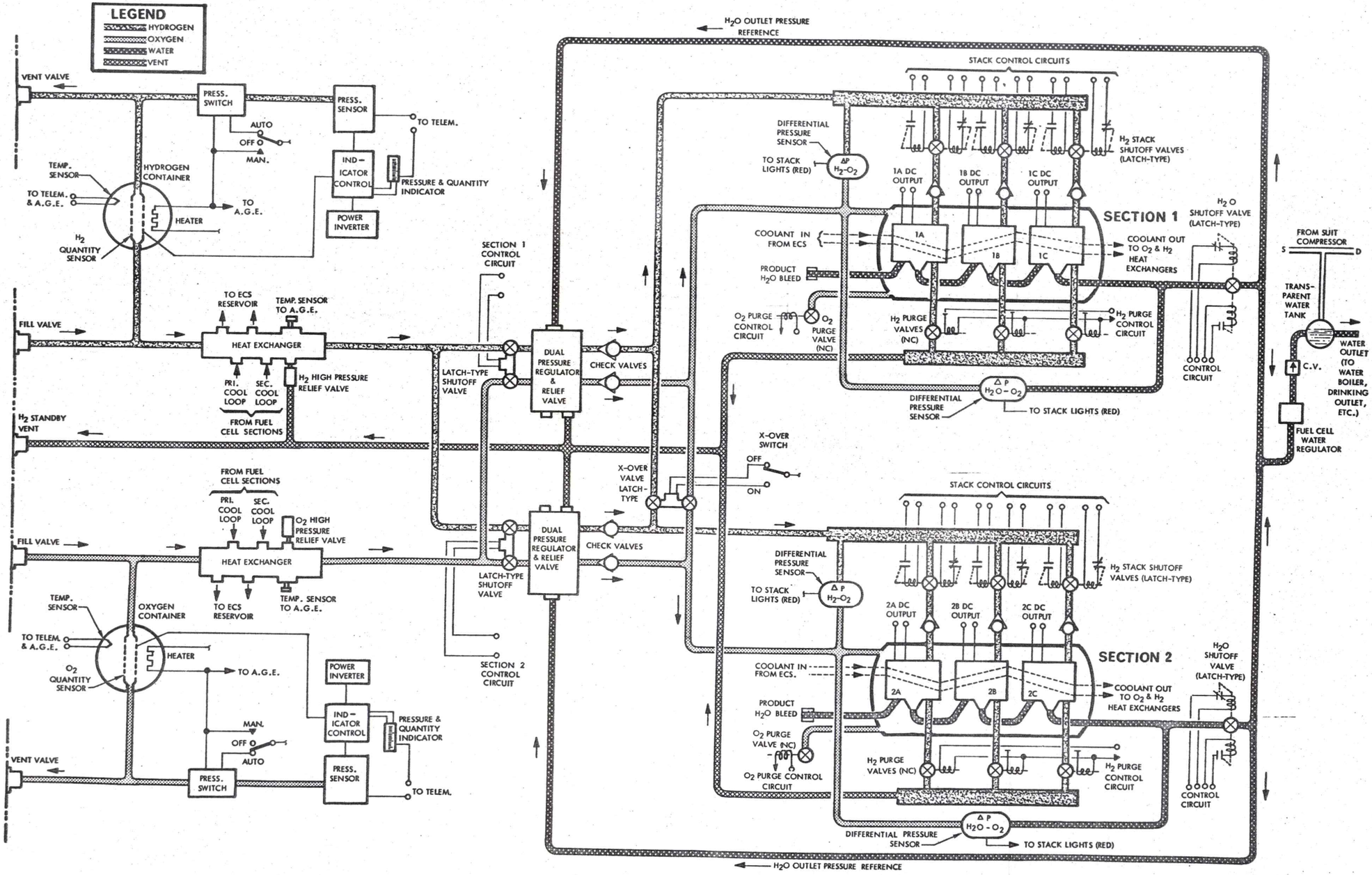

Figure 5-12 RSS/Fuel Cell System Functional Diagram (S/C 5, 8, 9)

The total amount of liquid stored in the hydrogen vessel is 22.25 lbs. for long mission configuration and 5.80 lbs. for short mission configuration. The total amount of liquid stored in the oxygen vessel is 180 lbs. for long mission configuration and 46.0 lbs. for short mission configuration.

The hydrogen vessel is composed of titanium alloy and the oxygen vessel is made of a high strength nickel base alloy. Both vessels are spherical in shape and double walled. A vacuum between the inner and outer vessel (approximately one inch) provides thermal insulation from ambient heat conduction. The inner wall is supported in relation to the outer wall by an insulating material supplemented by compression loading devices.

Each storage tank contains a fluid quantity sensor, a pressure sensor, a temperature sensor and an electrical heater installed in the inner vessel in intimate contact with the stored reactants. The fluid quantity sensor is an integral capacitance unit which operates in conjunction with an indicator control unit containing a null bridge amplifier.

The sensor varies the capacitance (in proportion to fluid level) in a circuit connected to the null bridge amplifier. The amplified signal is then used to drive a servo motor, which in turn operates a visual indicator for quantity indication. Power inverters supply 400 cycle, 26 VAC power to the fluid quantity circuits.

The temperature sensor is a platinum resistance device capable of transmitting a source signal to a balanced bridge circuit. The sensor provides cryogenic fluid

temperature monitoring for telemetry and AGE.

The pressure sensor is a dual resistive element, diaphragm type transducer. The sensor provides signals for cryogenic fluid pressure monitoring on a spacecraft meter. The electrical heaters provide a method of accelerating pressure build-up in the reactant supply tanks. The heaters may be operated either in a manual or automatic mode. In the automatic mode a pressure switch removes power from the heater element when the tank pressure builds up to a nominal 900 PSIG in the oxygen tank and a nominal 250 PSIG in the hydrogen tank. In the manual mode a spacecraft pressure meter indicates proper switch operation.

Fill and Vent Valves

The fill and vent valve provides a dual function in permitting simultaneous fill and vent operations. Quick disconnect fittings are provided for rapid ground service connection to both the storage tank fill check valve and the vent check valve. When fill connections are made, the pressure of the ground service connection against the fill and vent valve poppet shaft simultaneously opens both the fill and vent ports. When ground service equipment is removed, the valve poppet automatically returns to its normally spring loaded-closed position. The vent check valve is a single-poppet-type, spring loaded-closed check valve which opens (when system pressure exceeds 20 PSIG) to relieve through the fill and vent valve vent port.

Heat Exchangers

The supply temperature control heat exchangers are finned heat exchangers in which the supply fluid temperature is automatically controlled by absorbing heat from the recirculating coolant loop fluid of the environmental control system. The special

double-pass design precludes freezing of the environmental control system coolant and assures a reactant fluid supply at 50°F minimum and 140°F maximum.

Dual Pressure Regulator and Relief Valves

The dual pressure regulator and relief valve is a normally open poppet-type regulator which controls downstream pressure to the fuel cell sections. The regulator maintains the hydrogen pressure at approximately 21.7 PSIA and the oxygen pressure at approximately 22.2 PSIA. The oxygen side of the regulator is referenced to hydrogen pressure. The hydrogen side of the regulator is referenced to product water pressure.

The relief valve provides overpressurization protection for the regulated pressure to the fuel cell sections. This valve is pre-calibrated to operate at a pressure of approximately 10 PSIA above the normal supply level.

High Pressure Relief Valves

The high pressure relief valve is a single poppet-type, spring-loaded, normally closed valve which provides system and overpressurization protection. The valve vents system gas to ambient when pressure exceeds the system limits.

Solenoid Shut-off Valves

The solenoid shut-off valves are solenoid operated latching type valves which eliminate fluid loss during the non-operating standby periods. The valves are normally open and are closed only during fill and standby periods by applying power to the solenoids.

Crossover Valve

The crossover valve is a solenoid operated latching type valve which provides the capability of selecting both dual pressure regulators to supply hydrogen and oxygen to the fuel cell battery sections for the purpose of increasing flow rate for more effective purging . The crossover valve is controlled by the X OVER switch on the right instrument panel.

Operation

During pre-launch, the two separate reactant supply tanks are serviced (using AGE equipment) with liquid hydrogen and oxygen. After the tanks are filled, in order to accelerate pressure buildup within the tanks, the internal tank heaters are operated, utilizing external electrical power. .In approximately one hour the liquid is converted into a high density, homogeneous fluid at a constant pressure.

During the fill operation, the solenoid shut-off valves between the storage tanks and the dual pressure regulators are closed. Once operating pressure is obtained, the solenoid shut-off valves may be opened by applying power to the coil of the valves. The high density, homogeneous fluid will then flow upon demand.

The fluid flows from the supply tanks to the heat exchangers. The fluid temperature, when entering the heat exchangers is approximately -279°F for the oxygen and approximately -423°F for the hydrogen. The heat exchangers absorb heat from the recirculating coolant fluid of the adapter section cooling system. This heat, applied to the high density fluid, raises the temperature of the reactants to approximately 50°F to 140°F.

The reactants, now in gaseous form, flow through the heat exchangers, past the high pressure relief valves and AGE temperature sensors, to the supply solenoid shut-off valves. During fuel cell battery operation, if the demand on the fluid flow is inadequate to keep tank pressures within limits, the high pressure relief valves will vent, externally, the excess fluid. The AGE temperature sensors on the heat exchangers are used for pre-launch checkout only.

The reactants flow through the supply solenoid shut-off valves to the dual pressure regulator and relief valves. The dual pressure regulators reduce the pressure of the reactants to approximately 21.7 PSIA for the hydrogen and approximately 20.5 PSIA for the oxygen. The gas now flows through the manual shut-off valves and is then directed to the fuel cell battery sections at a flow rate that is determined by both the electrical load applied to the fuel cell battery sections, and the frequency of purging. The flow rate of the gases may be increased for more effective purging by opening the crossover valve.

After launch, the supply tank heaters are operated by spacecraft power. The heaters operate as required to maintain proper system pressures.

ENVIRONMENTAL CONTROL SYSTEM

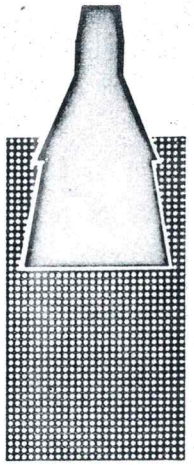

Section VI

TABLE OF CONTENTS

TITLE	PAGE
SYSTEM DESCRIPTION	6-3
OXYGEN SUPPLY SYSTEM	6-3
CABIN LOOP	6-8
SUIT LOOP	6-11
WATER MANAGEMENT SYSTEM	6-16
COOLANT SYSTEM	6-24
SYSTEM DISPLAYS AND CONTROLS	6-24
SYSTEM OPERATIONS	6-28
PRELAUNCH	6-29
LAUNCH	6-31
ORBIT	6-32
RE-ENTRY	6-35
POST LANDING	6-36
EMERGENCY	6-37
SYSTEM UNITS	6-38
DUAL SECONDARY RATE AND SYSTEM SHUTOFF VALVE	6-38
SUIT OXYGEN DEMAND REGULATOR	6-41
CABIN PRESSURE RELIEF VALVE	6-43
SUIT CIRCUIT COMPRESSOR	6-45
SOLIDS TRAPS	6-47
DUAL CABIN PRESSURE REGULATOR	6-47
PRIMARY SUPERCRITICAL OXYGEN CONTAINER	6-47
SECONDARY OXYGEN CONTAINER	6-51

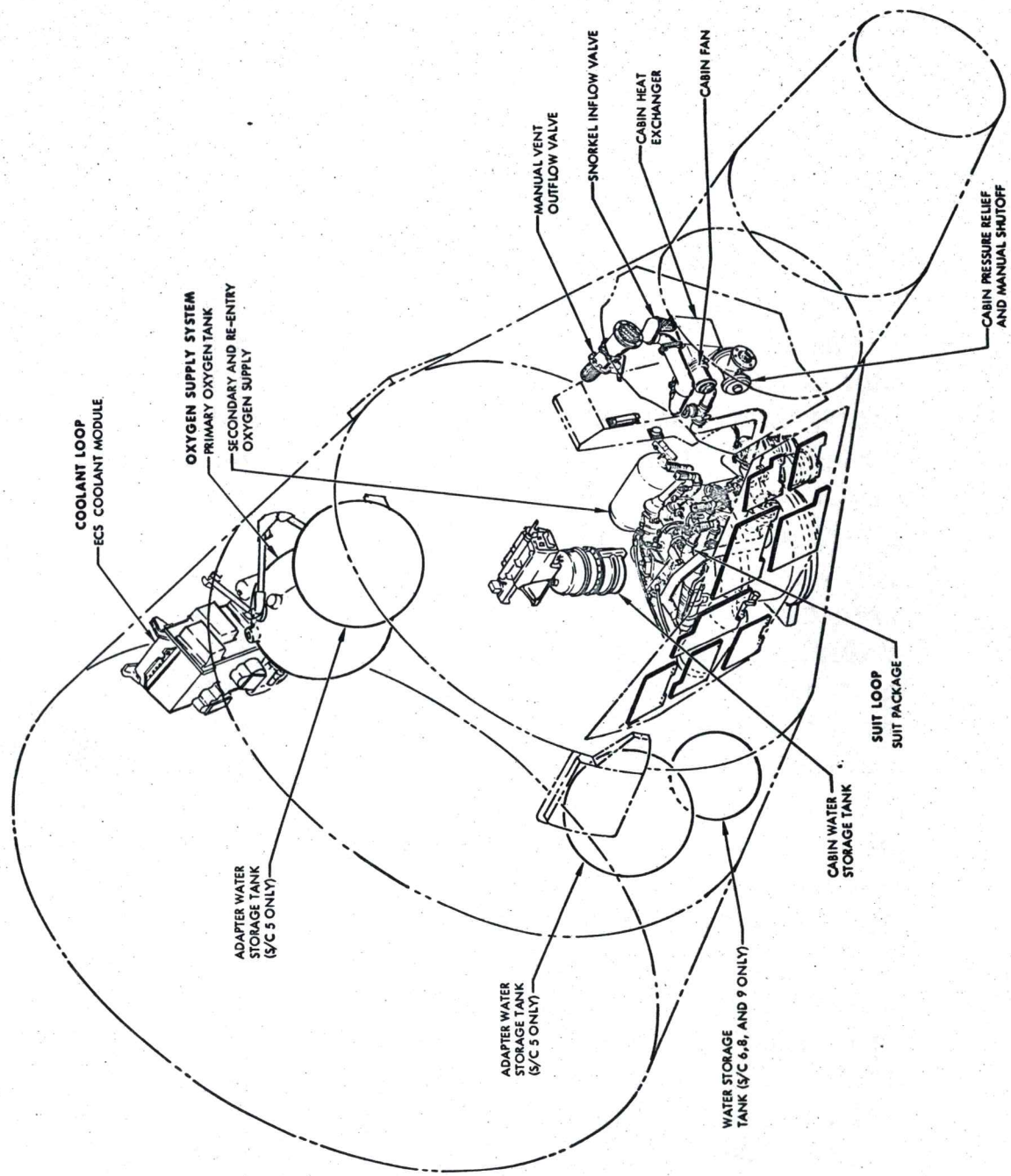

Figure 6-1 Environmental Control System

FM2-6-1

SECTION VI ENVIRONMENTAL CONTROL SYSTEM

SYSTEM DESCRIPTION

The Environmental Control System (E.C.S.) (Figure 6-1, 6-2) may be defined as a system which provides a safe and comfortable gaseous atmosphere for the pilots. The system must perform such tasks as providing fresh oxygen, pressurization, temperature control, water removal and toxic gas removal. In addition to providing atmospheric control for the pilots, the system provides equipment cooling and regulated temperatures for certain pieces of equipment.

For ease of understanding, the Environmental Control System may be separated into five systems or loops which operate somewhat independent of each other. These loops are:

(1) The oxygen supply system.

(2) The cabin loop.

(3) The suit loop.

(4) The water management system.

(5) The coolant system.

OXYGEN SUPPLY SYSTEM

There are three oxygen systems: Primary, Secondary and Egress.

Primary Oxygen (Figure 6-3, 6-4)

This system stores and dispenses oxygen for breathing and for suit and cabin pressurization.

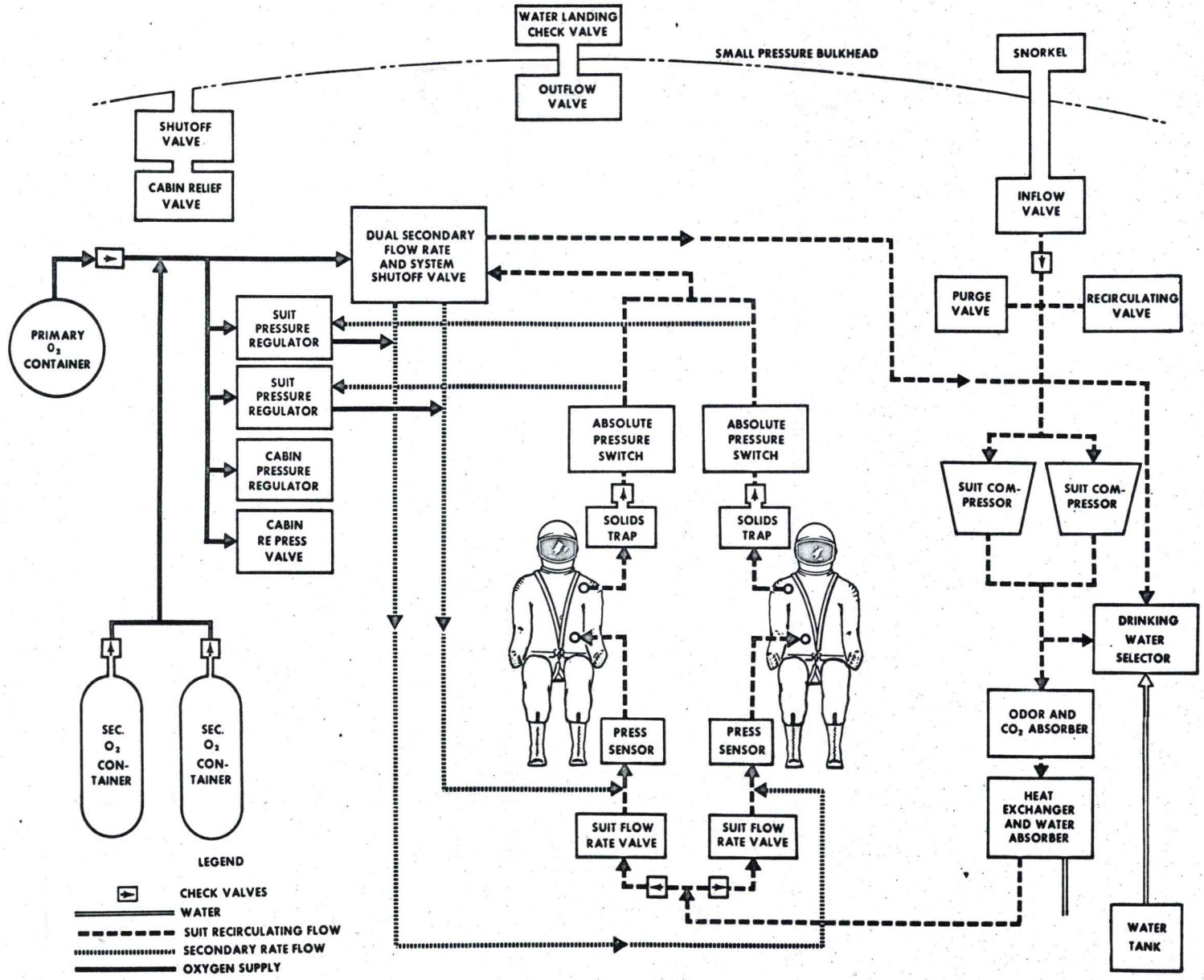

Figure 6-2 ECS Block Diagram

This system provides oxygen during the period commencing two hours prior to launch and terminating with jettison of the adapter section at retrograde.

The primary oxygen supply is stored at supercritical pressure in a cryogenic spherical container in the adapter section of the spacecraft. This container is filled with liquid oxygen at atmospheric pressure. Heat is supplied by thermal leakage through the container insulation and by activation of an electric heater in order to build pressure to the critical point of 736 psia. Above this point liquid oxygen becomes a homogeneous mixture, described for simplicity as a dense supercritical fluid. This fluid is warmed, regulated and filtered before it enters the suit or cabin loop.

The primary loop consists of the following components: primary oxygen container, pressure control switch, pressure transducer, fill and vent valves, temperature discharge sensor, pressure relief valve, pressure regulator, shutoff valve, filter, check valves, and heat exchanger.

Secondary Oxygen (Figure 6-3, 6-4)

The secondary oxygen system is capable of performing the same functions as the primary oxygen system and operates when pressure in the primary system falls below 75 $\pm$10 psi. At retrograde, when the primary oxygen container is jettisoned with the equipment adapter, the secondary oxygen system assumes the duties of the primary oxygen system.

The secondary gaseous oxygen supply is stored in two cylinders located in the re-entry module. Each tank contains 6.5 pounds of usable oxygen pressurized to

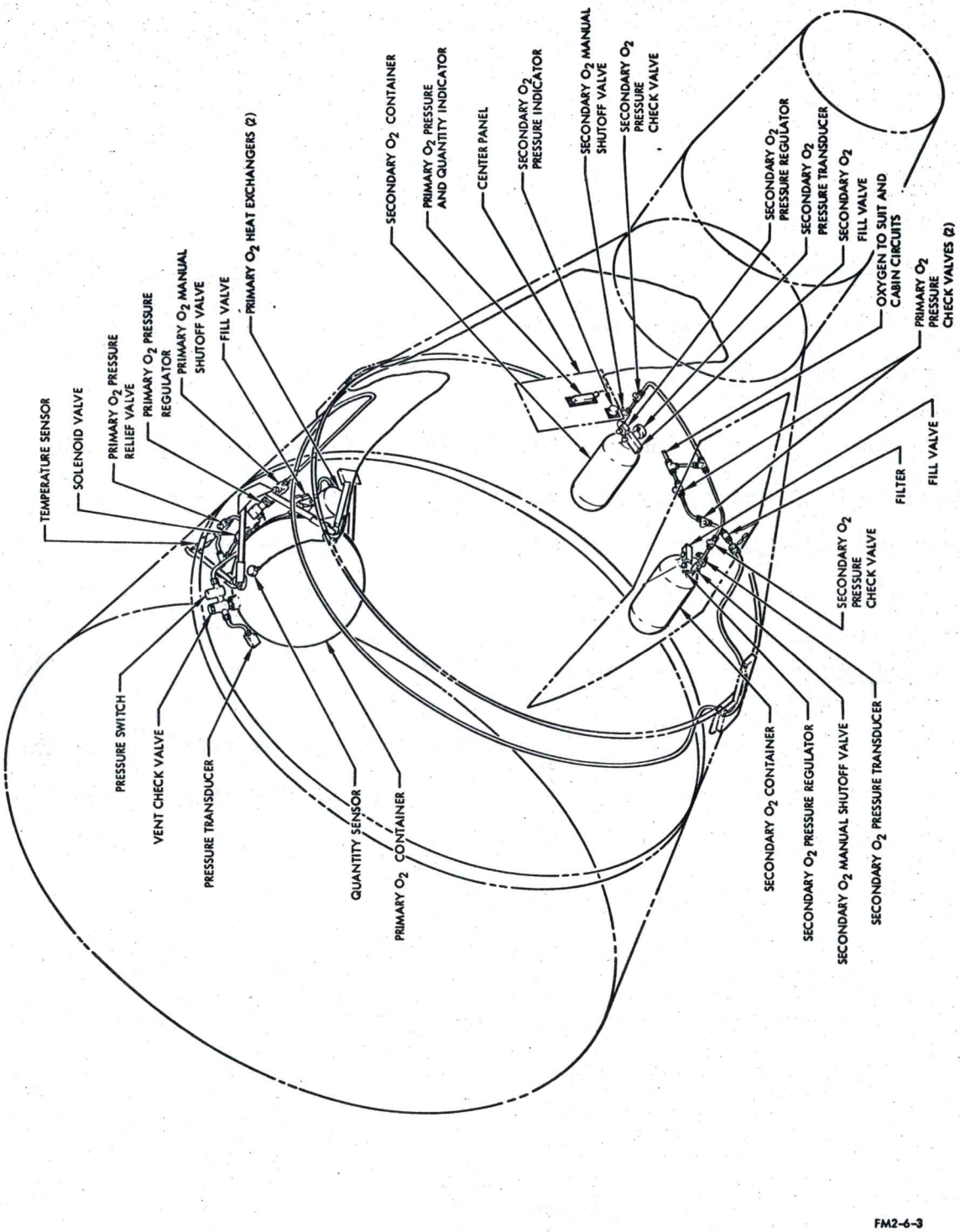

Figure 6-3 Primary and Secondary Oxygen System

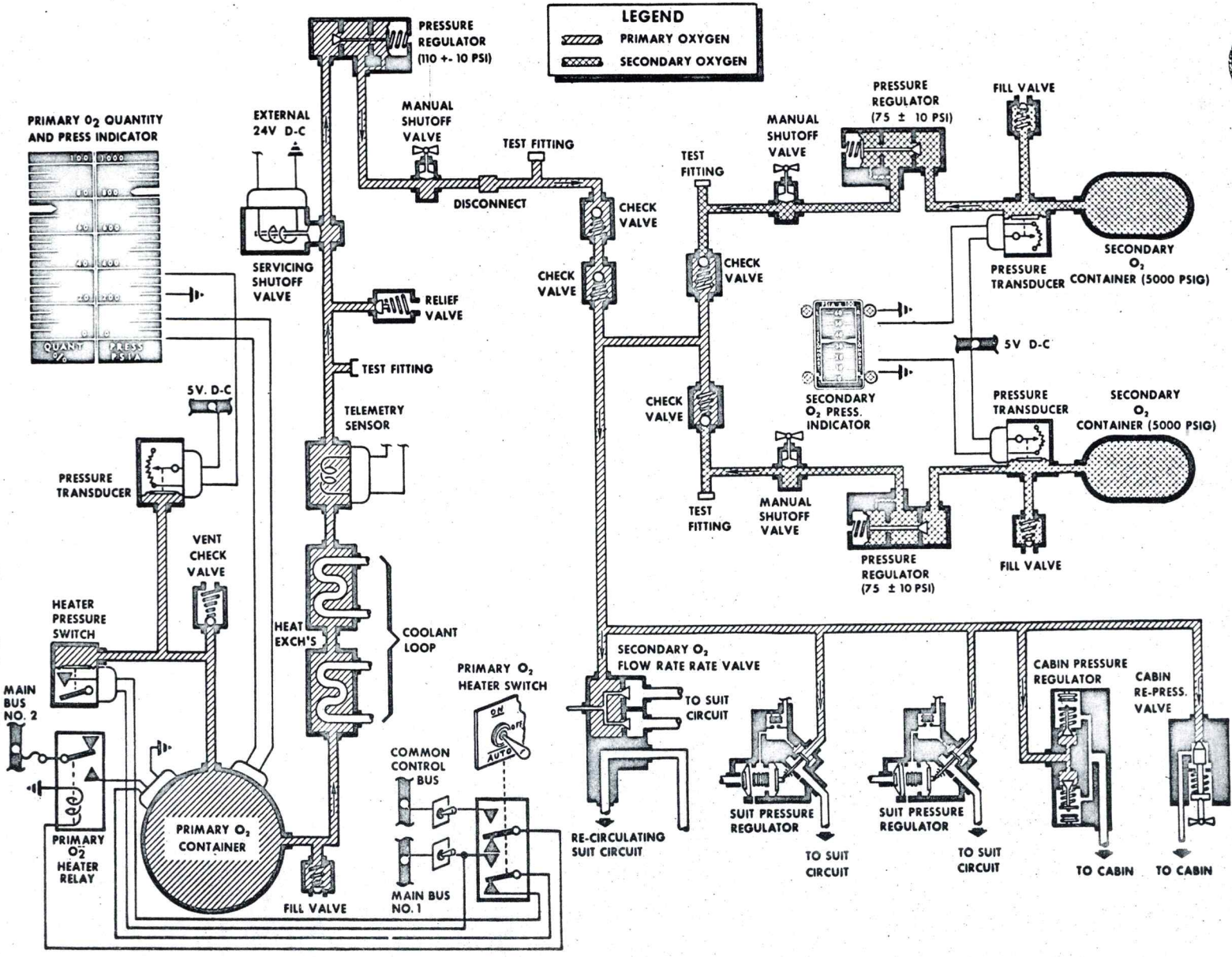

Figure 6-4 Primary and Secondary Oxygen Schematic

5000 psig maximum at 70°F. This oxygen supply is then regulated before it enters the suit or cabin loop.

The secondary system consists of two: tanks, fill valves, transducers, pressure regulators, shutoff valves and check valves.

Egress System (Figure 6-5)

This system provides each pilot with oxygen for breathing and for suit pressurization in the event that they initiate ejection procedures at 45,000 feet or below, during launch or re-entry.

The egress gaseous oxygen supply is stored in a tank located in each seat-mounted egress kit. Each tank contains 0.31 pound of usable pressurized oxygen.

Each egress system consists of a tank, pressure regulator, pressure gage, restrictor, check valve, shutoff valve, and composite disconnects.

CABIN LOOP (Figure 6-6)

Design cabin leakage at ground test conditions is 670 scc/min of nitrogen at 5.0 psig. Makeup oxygen, to maintain cabin pressure at nominal 5.1 psia level, is called for by the cabin pressure regulator. In order to obtain maximum utilization of oxygen, it first passes through the suit loop before it is dumped into the cabin through the suit pressure relief valves.

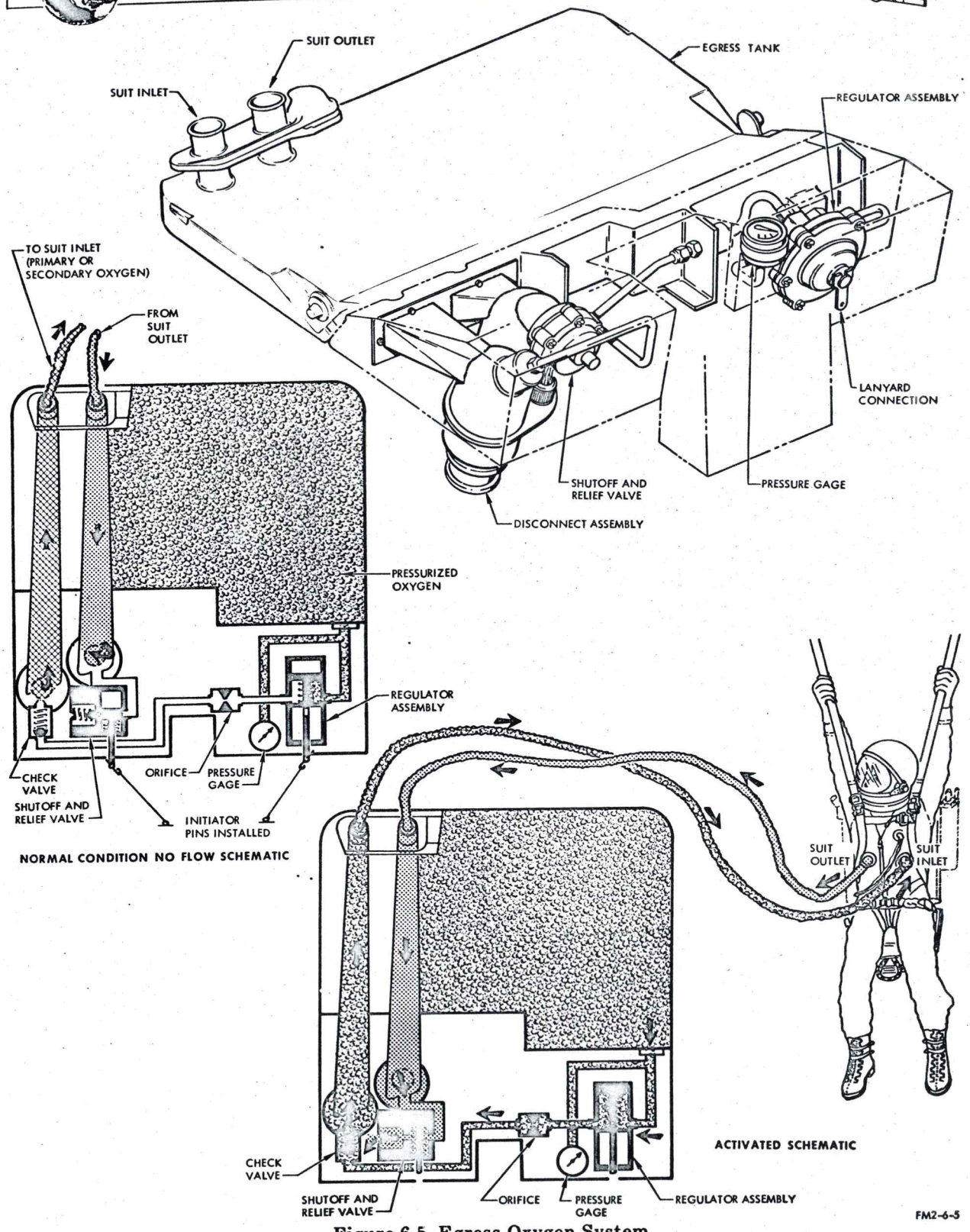

Figure 6-5 Egress Oxygen System

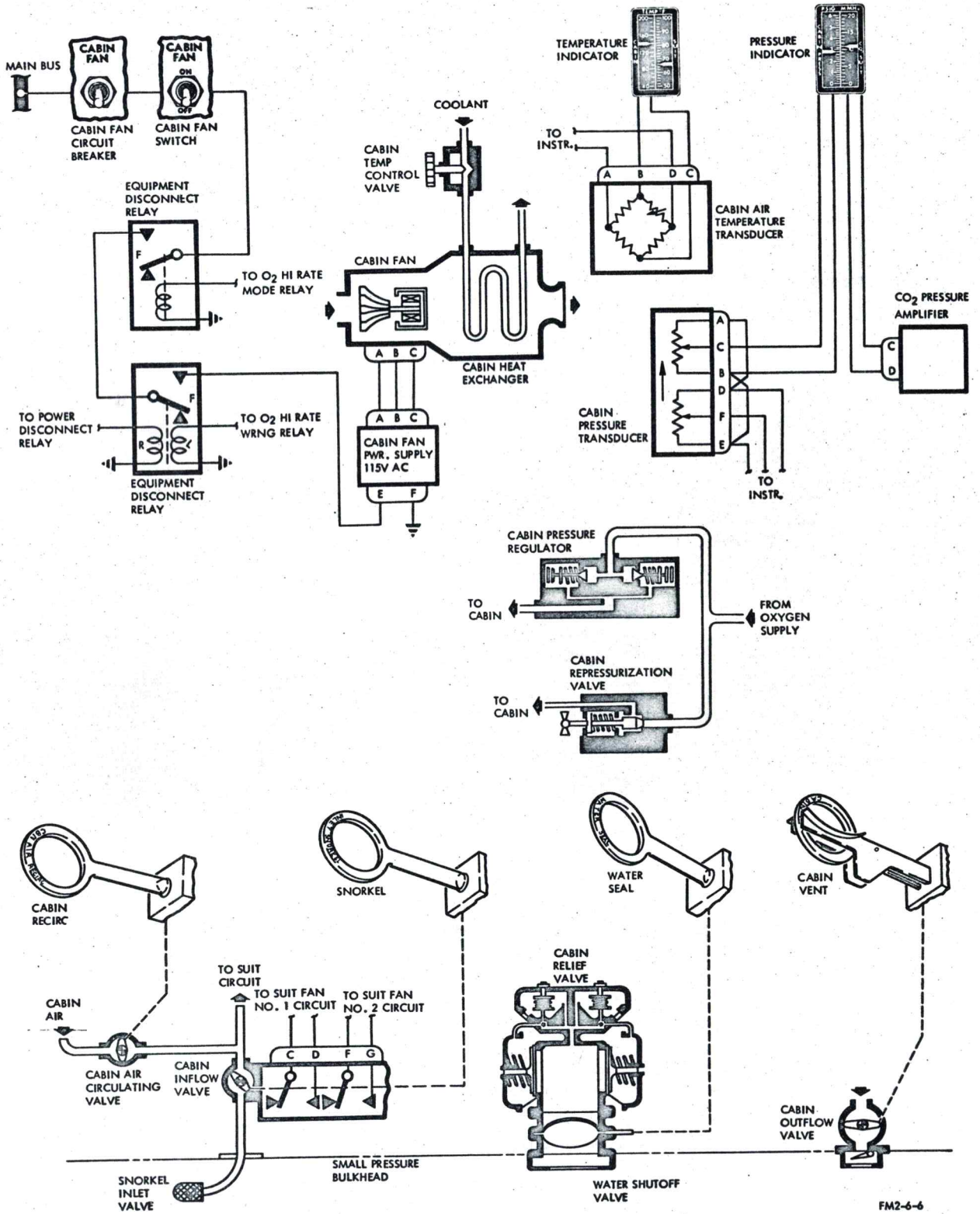

Figure 6-6 Cabin Environmental Control

Primary cabin components are a cabin heat exchanger and a fan. This loop also contains a relief valve for both positive and negative pressure relief, a pressure regulator and manual valves to either dump cabin pressure or repressurize. In the latter operation, oxygen is fed directly into the cabin.

SUIT LOOP (Figure 6-7, 6-8, 6-9)

The pilots are provided with redundant atmospheres by having a closed pressure suit circuit within the pressurized cabin. This suit circuit provides for cooling, pressurization, purification and water removal.

The suit loop is a closed system with two pressure suits operating in parallel. Circulation of oxygen through the suit is provided by a centrifugal compressor. Carbon dioxide and odors are removed by an absorber bed containing lithium hydroxide and activated charcoal. The gases are cooled in a heat exchanger by a liquid coolant, MCS 198, at a point below the dew point temperature. Water condensing within the heat exchanger is dumped overboard or routed to the water evaporator. The reconditioned oxygen is mixed with fresh makeup oxygen.

The suit circuit has two modes of operation, the normal recirculation mode which was discussed in the previous paragraph and the high rate mode which shuts off the recirculation system and dumps oxygen directly into the suit.

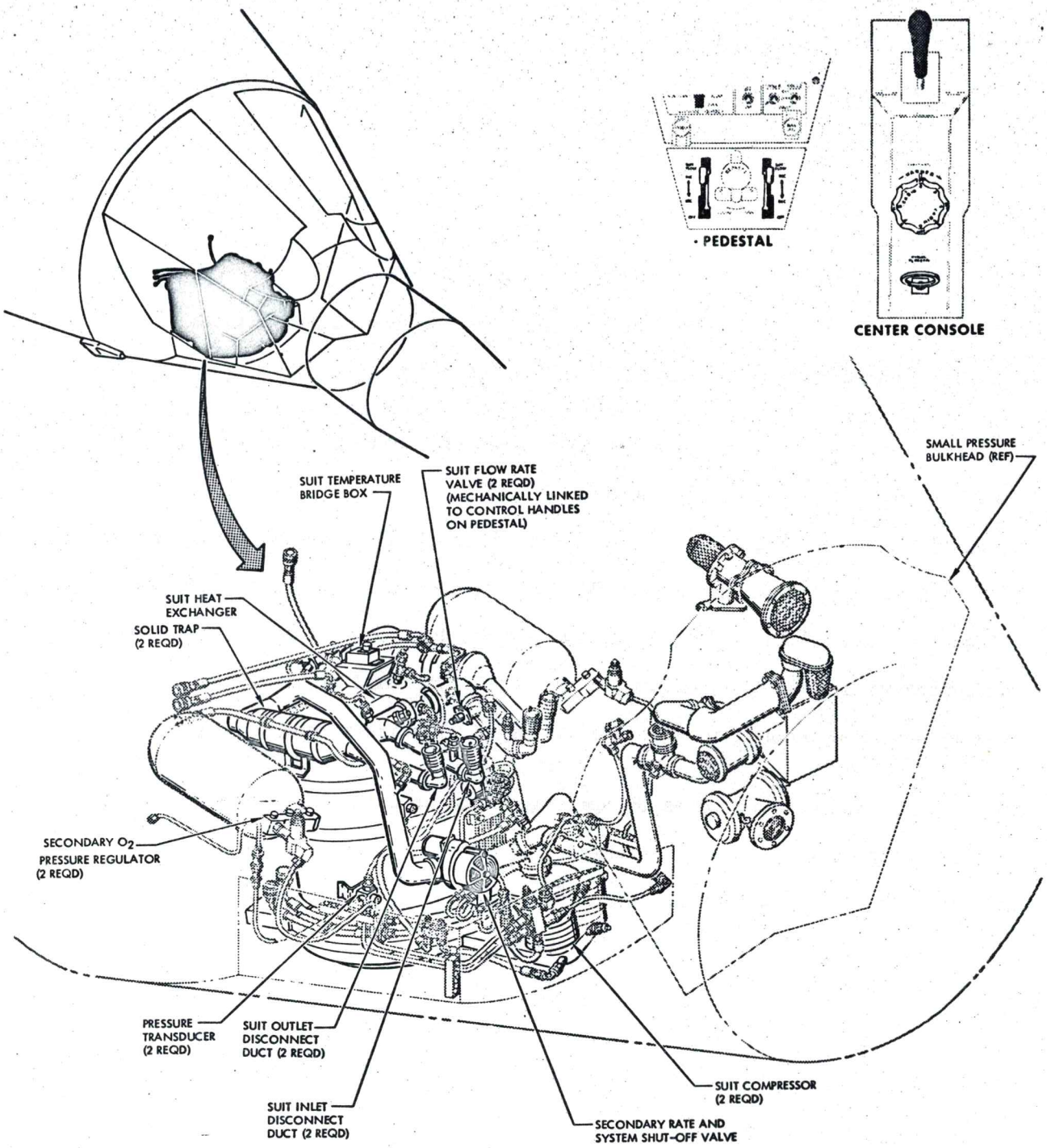

Figure 6-7 Suit Loop (ECS Package) (Sheet 1 of 2)

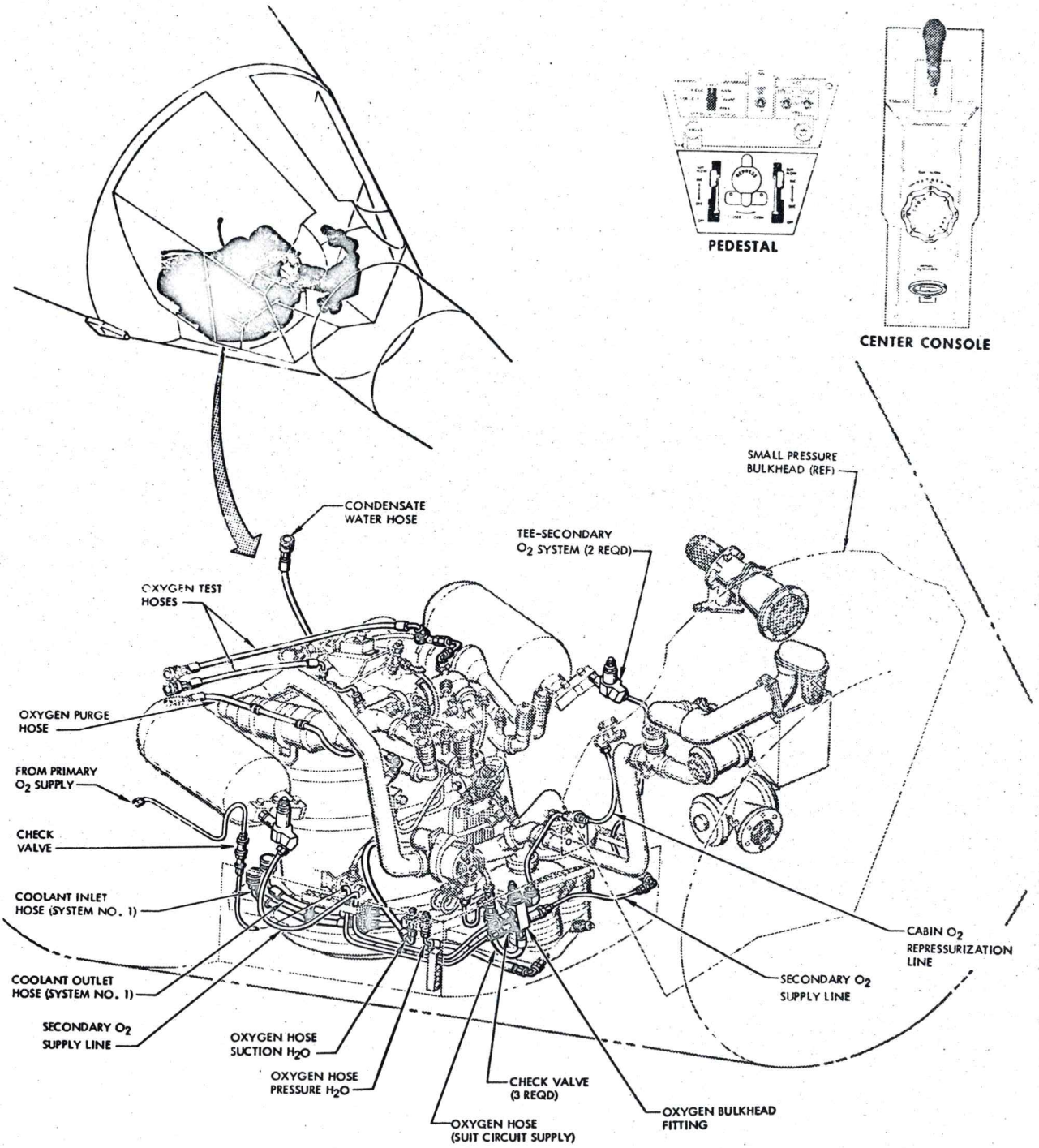

FM2-6-7-2

Figure 6-7 Suit Loop (ECS Package) (Sheet 2 of 2)

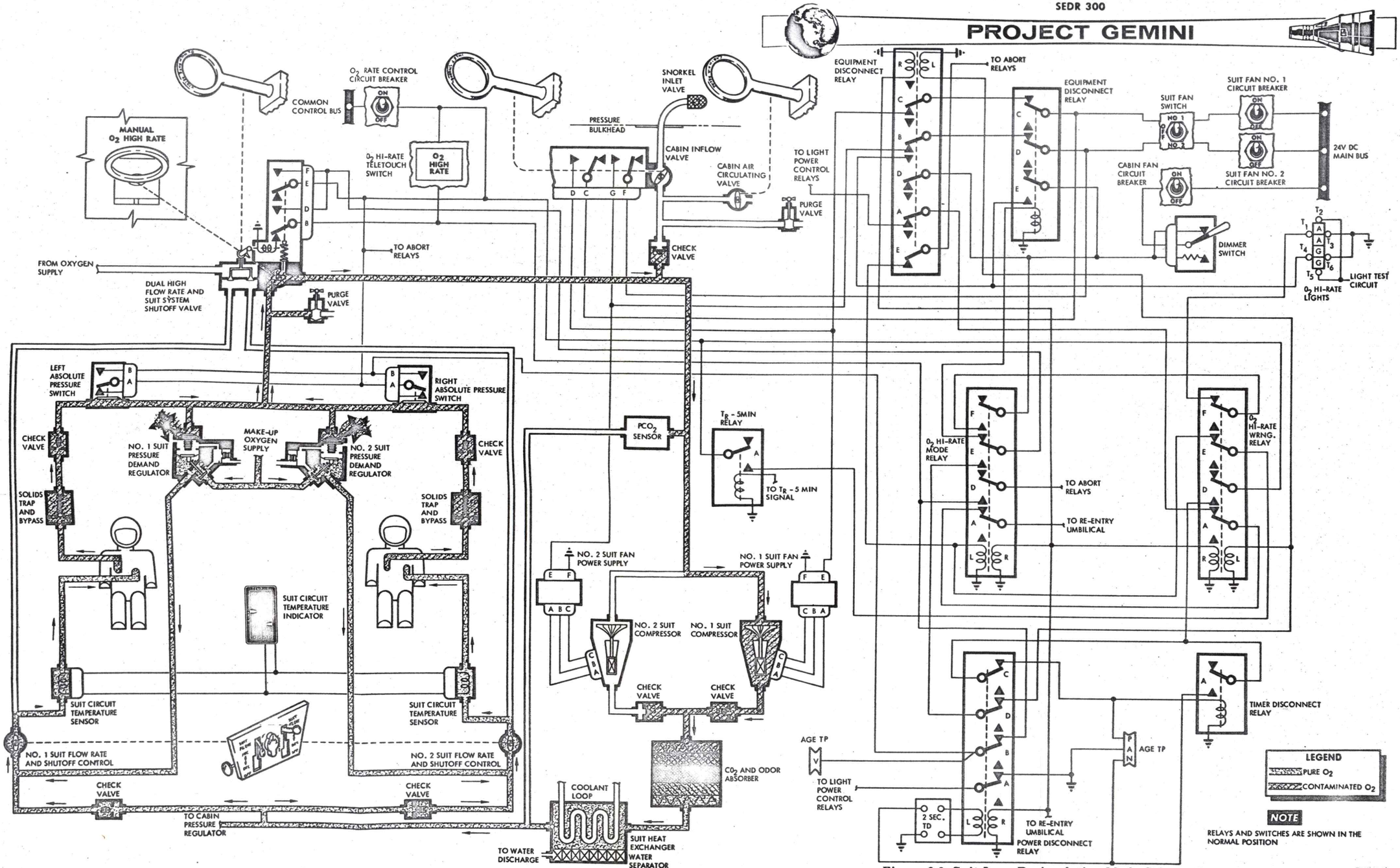

Figure 6-8 Suit Loop Recirculation Mode Schematic

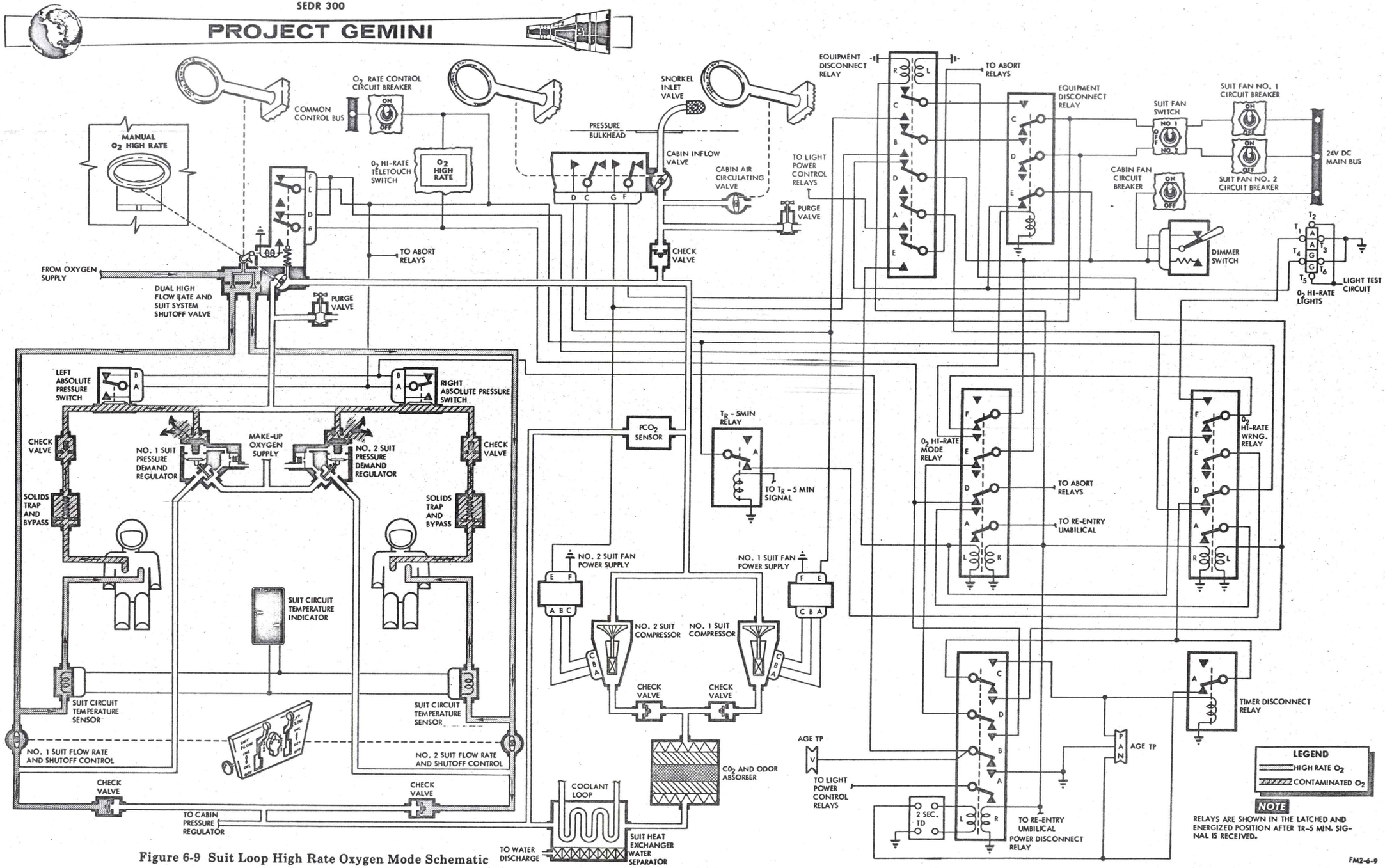

Figure 6-9 Suit Loop High Rate Oxygen Mode Schematic

The suit loop consists of two demand regulated and relief valves, four check valves, two throttle valves, two solid traps, a system shutoff and high flow rate valve, two compressors, one carbon dioxide and odor absorber, and a suit heat exchanger.

WATER MANAGEMENT SYSTEM (Figure 6-10, 6-11)

The purpose of the water management system is to store and dispense drinking water, collect and route unwanted water to the evaporator or dump overboard.

Drinking water is stored in a tank or tanks in the adapter. Each tank contains a bladder and is pressurized to supply water to the transparent tank in the re-entry module.

S/C 5 utilizes two drinking water storage tanks which store both the drinking water and the fuel cell by-product water. One tank uses a combination of oxygen and fuel cell water as the pressurant while the other tank is pressurized with oxygen.

S/C 6 has only one storage tank and uses oxygen for the pressurant.

S/C 8 and 9 utilize only one storage tank and uses fuel cell by-product water as the pressurant.

Urine and condensated water from the suit circuit heat exchanger is absorbed by the wick in the water boiler or dumped overboard.

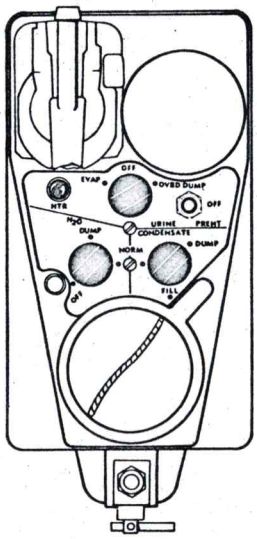

WATER MANAGEMENT PANEL
(S/C 6, 8, 9 ONLY)

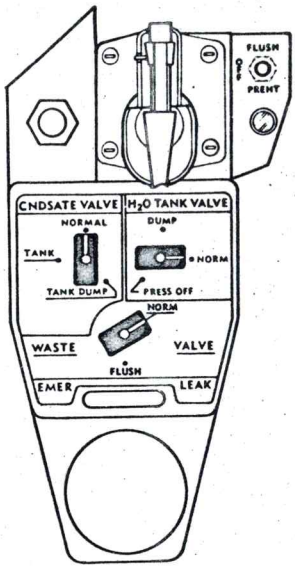

WATER MANAGEMENT PANEL
(S/C 5 ONLY)

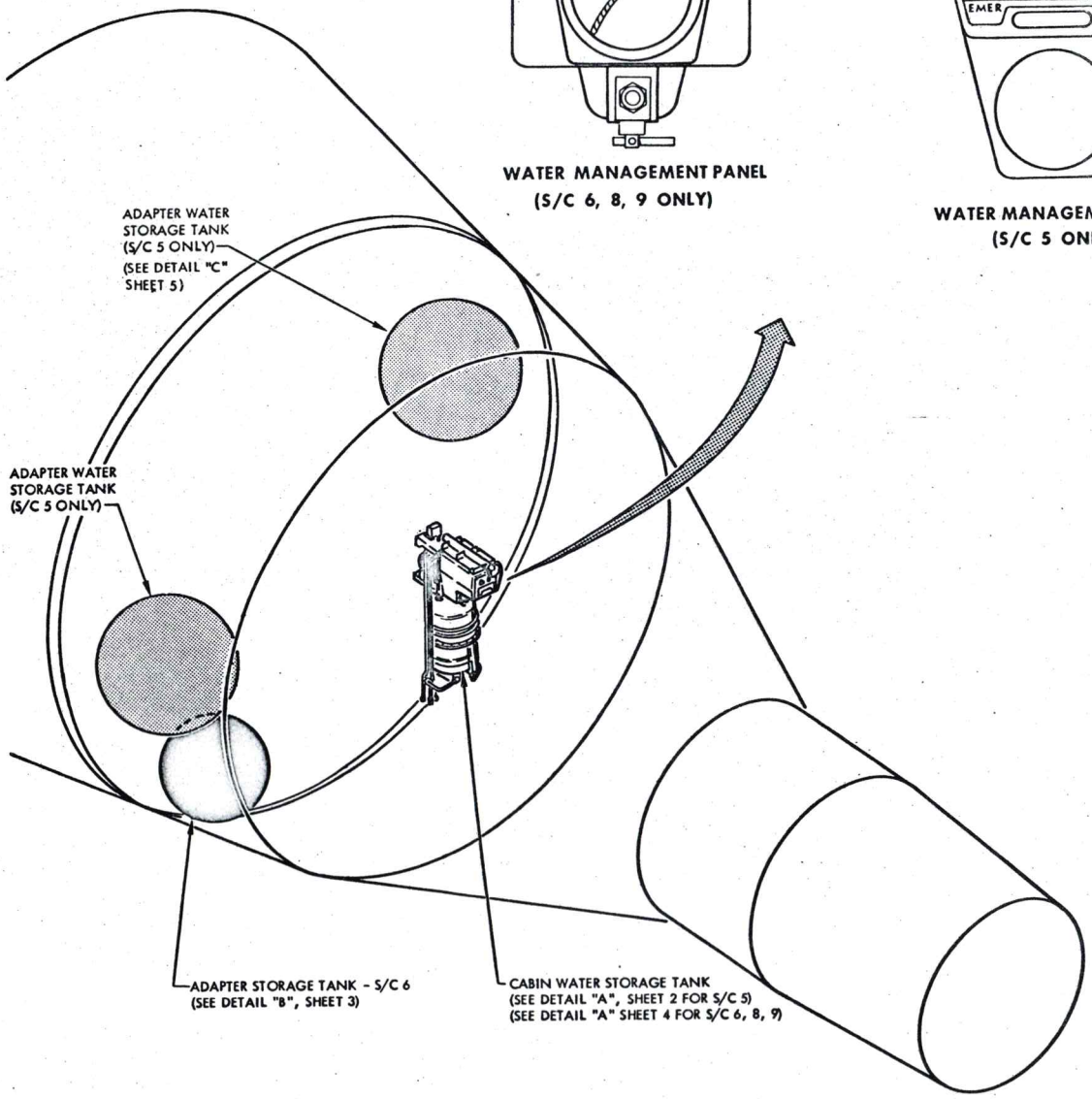

Figure 6-10 Water Management System (Sheet 1 of 5)

FM2-6-10 (1)

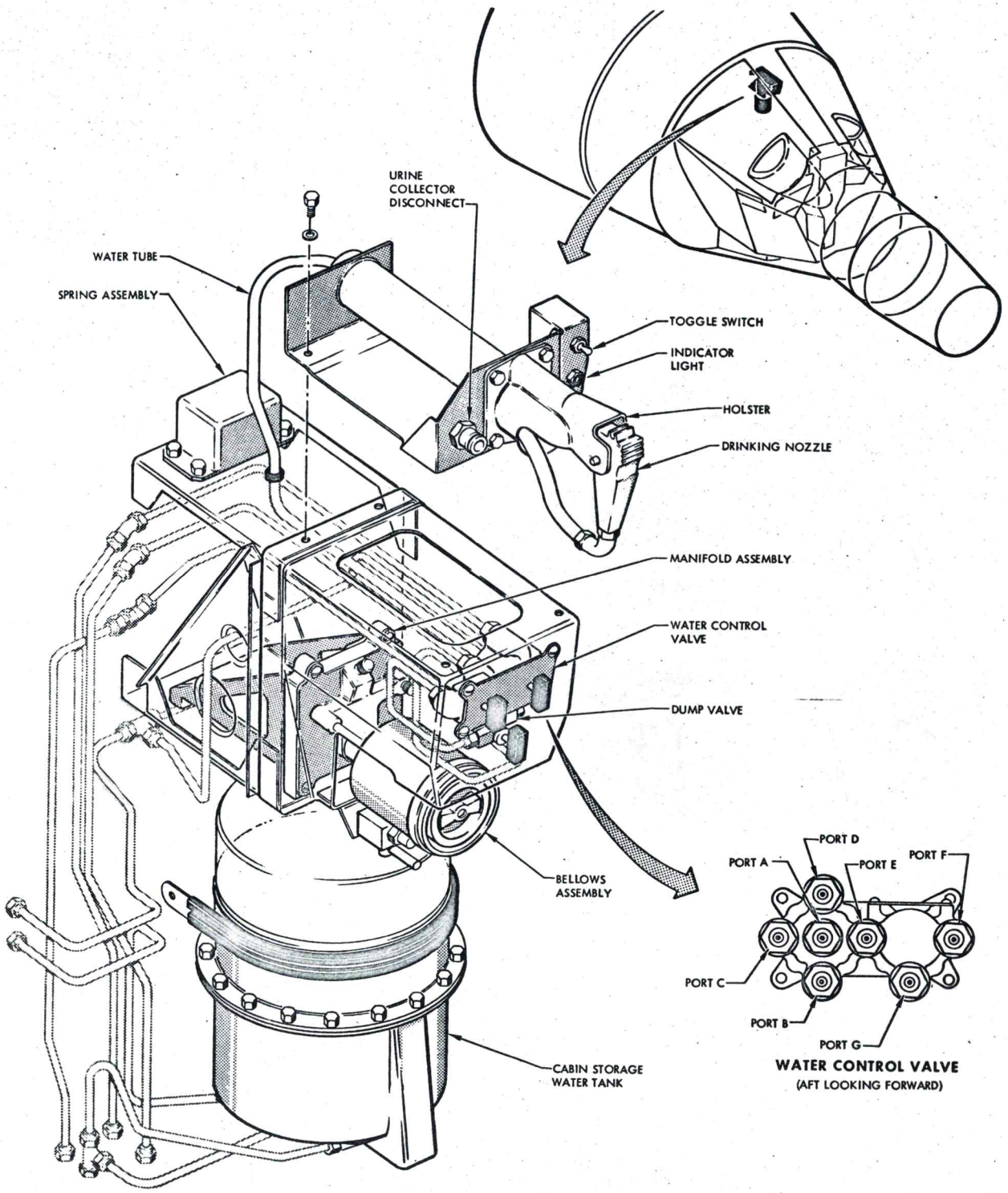

Figure 6-10 Water Management System (Sheet 2 of 5)

FM2-6-10 (2)

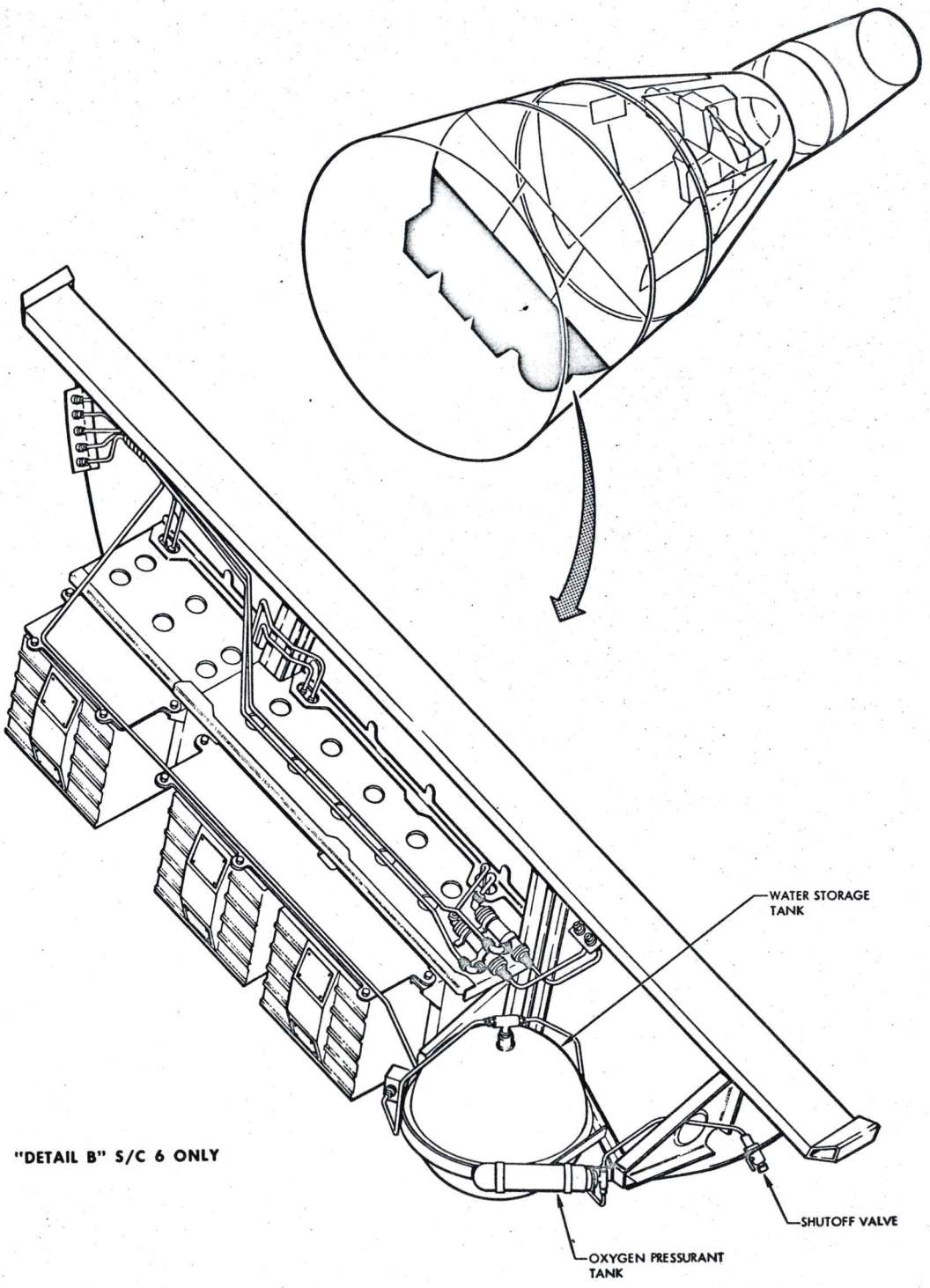

Figure 6-10 Water Management System (Sheet 3 of 5)

FM2-6-10 (3)

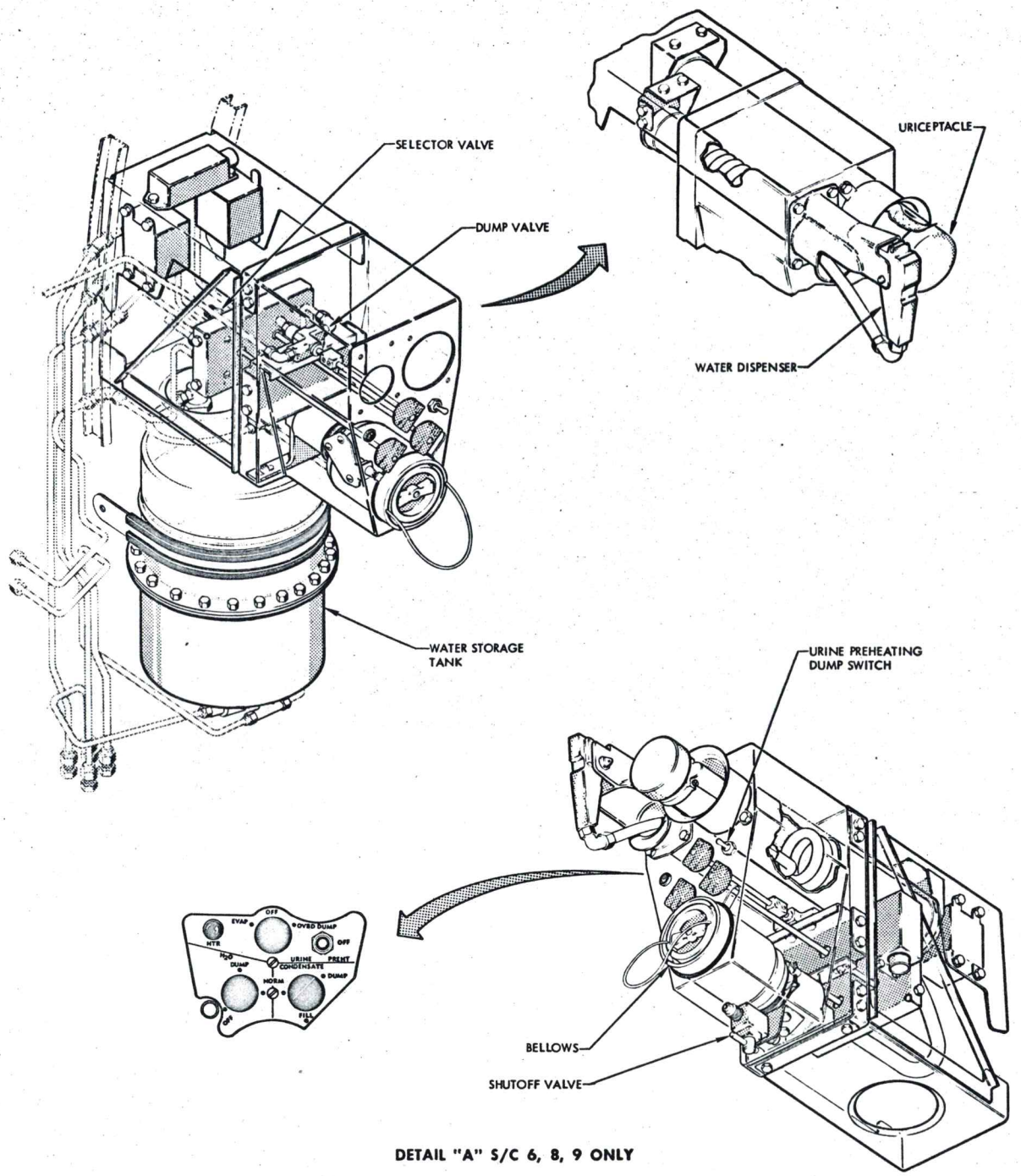

Figure 6-10 Water Management System (Sheet 4 of 5)

FM2-6-10 (4)

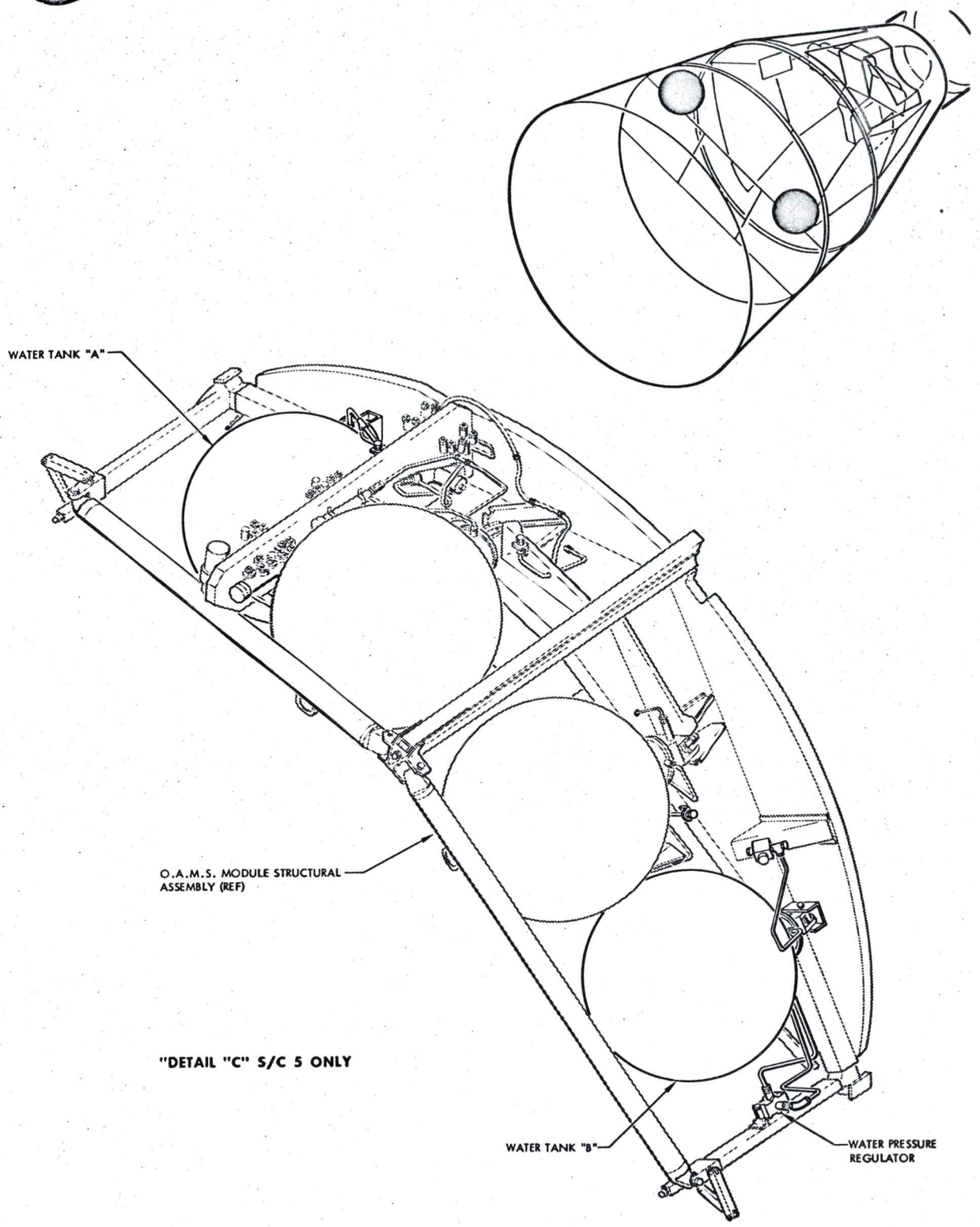

Figure 6-10 Water Management System (Sheet 5 of 5)

FM2-6-10 (5)

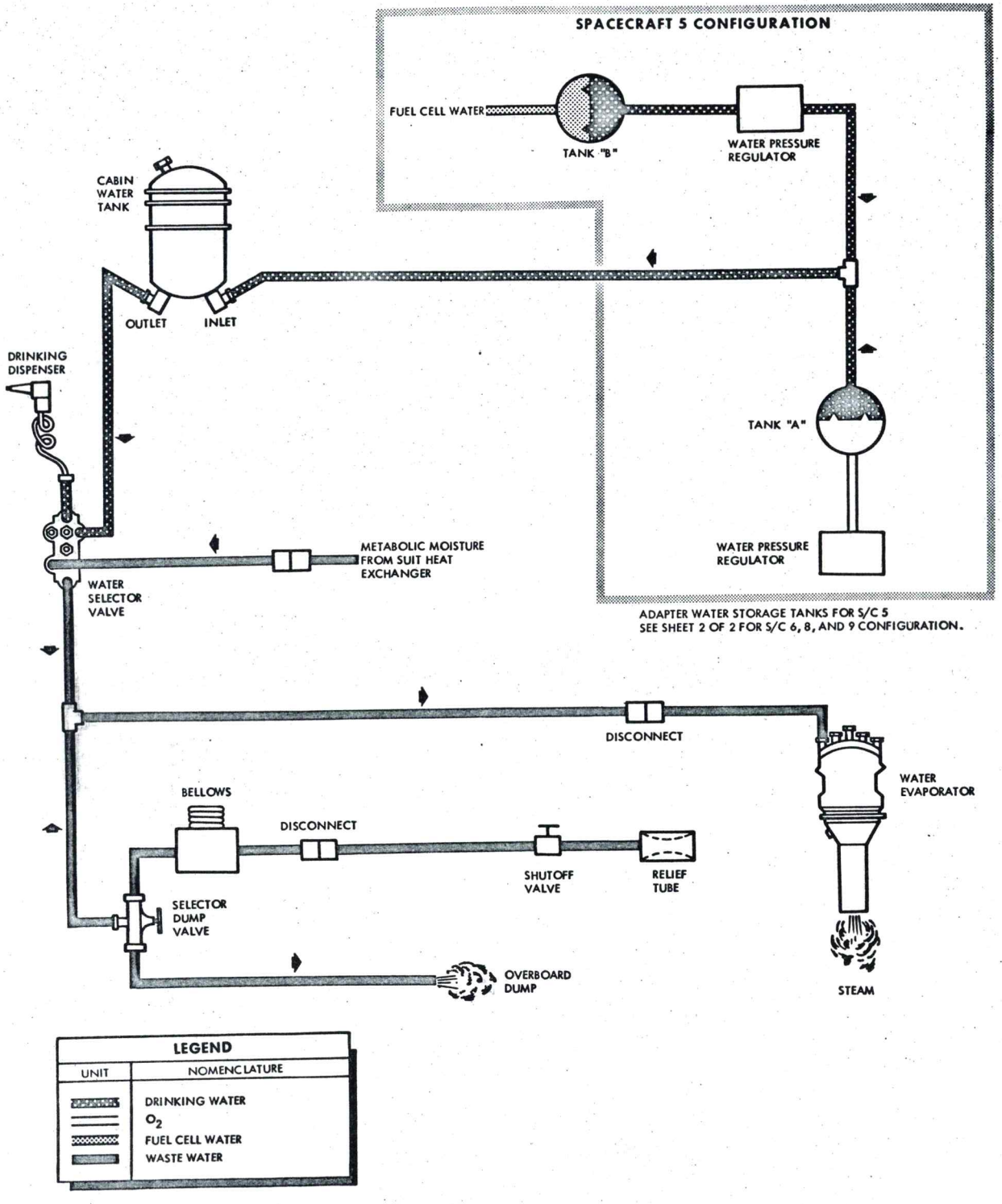

Figure 6-11 Water Management Schematic (Sheet 1 of 2)

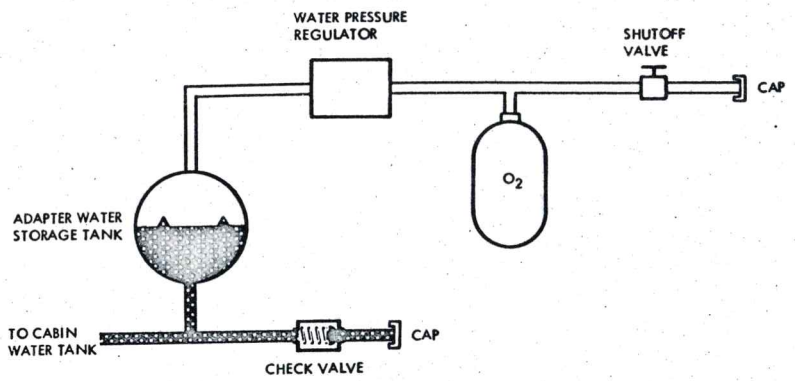

SPACECRAFT 6 CONFIGURATION

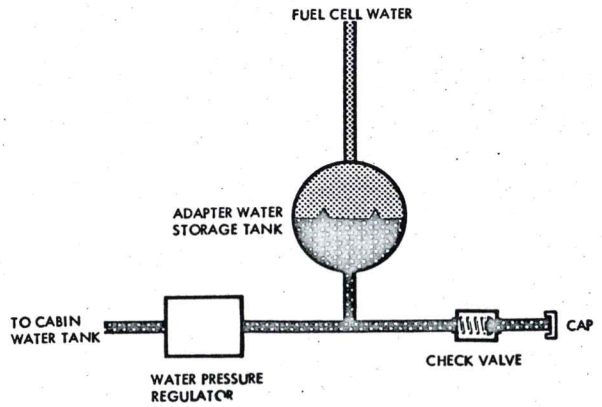

SPACECRAFT 8 AND 9 CONFIGURATION

Figure 6-11 Water Management Schematic (Sheet 2 of 2)

Components of the water management system, in addition to the water tanks, are a water control valve, dump valve, water evaporator and two manual shutoff valves.

The urine disposal equipment is government furnished equipment (GFE). It includes the urine line, bellows assembly, quick disconnect coupling, and uriceptacle.

COOLANT SYSTEM

See SECTION VII

SYSTEM DISPLAYS AND CONTROLS

The displays and controls for the Environmental Control System are provided in the cabin and function as specified. (Figure 3-6)

SECONDARY OXYGEN SHUTOFF INSTALLATION

A manual secondary oxygen shutoff handle is provided for each member of the flight crew for complete and positive shutoff of each secondary oxygen container. The handles are located aft of the right and left switch/circuit-breaker panels. The position OPEN or CLOSED is noted.

OXYGEN HIGH RATE TELELIGHT/SWITCH

Five minutes prior to retrograde initiation, an amber light in the O_2 HIGH RATE telelight/switch assembly will illuminate as a warning that high flow rate of oxygen should be initiated. After Tr-5, the light will illuminate green when the secondary oxygen rate valve is opened either manually or automatically. Oxygen HIGH RATE will be available at any time during the mission by depressing

the switch. However, the green light will not illuminate prior to Tr-5.

CABIN AIR RECIRCULATION HANDLE

This handle controls the recirculation valve which permits entry of cabin air into the suit circuit for removal of odors and carbon dioxide. This procedure will renovate cabin air without cabin decompression and reduces the possibility of carbon dioxide pockets by increasing circulation of the cabin atmosphere.

INLET SNORKEL HANDLE

This handle will control the cabin air inlet valve which provides for ventilation during landing and postlanding phases of the mission.

CABIN VENT HANDLE

This handle controls the operation of the cabin outflow valve to permit emergency decompression in orbit and cabin ventilation during the landing phase.

WATER SEAL HANDLE

This handle provides for watertight closure of the cabin pressure relief valve during a water landing.

OXYGEN HIGH RATE RECOCK HANDLE

This handle provides for the manual return of the oxygen high rate valve to the closed position, thereby restoring normal oxygen flow rate. Actuation of this handle also re-establishes the capability of initiating high rate oxygen flow

when necessary.

CABIN AND SUIT TEMPERATURE INDICATOR

A dual indicator provides for monitoring temperatures in the suit and cabin circuits. Range markings are calibrated in degrees Fahrenheit.

CABIN PRESSURE AND SUIT CARBON DIOXIDE PARTIAL PRESSURE INDICATOR

A dual indicator provides for monitoring cabin atmospheric pressure and the amount of carbon dioxide at the suit inlet. Cabin atmospheric pressure is calibrated in pounds per square inch. Carbon dioxide partial pressure is calibrated in millimeters of mercury.

SECONDARY OXYGEN PRESSURE INDICATOR

A dual indicator is provided for monitoring pressure in the individual gaseous oxygen containers in the secondary oxygen subsystem. The indicator range is from 0 to 6000 psia, divided into 500-pound increments and numbered at each 1000-pound interval. Readings must be multiplied by 100 to obtain correct values.

CRYOGENIC OXYGEN QUANTITY AND PRESSURE INDICATOR

This indicator provides for monitoring quantity and pressure of cryogenic oxygen in the primary oxygen container. The quantity scale displays from 0 to 100 per cent in 2 per cent increments, numbered at 20 per cent intervals. The pressure scale ranges from 0 to 1000 psia in 20-pound increments, numbered at

200-pound intervals. Red undermarkings are incorporated on the oxygen meter to indicate the point at which thermal pressurization may be discontinued by de-energizing the heaters.

WATER MANAGEMENT PANEL

A three knob panel is provided for managing, replenishing, and dumping waste water overboard.

SUIT AND CABIN TEMPERATURE CONTROLS

Dual concentric knobs are mounted between the ejection seats for suit and cabin temperature control. These knobs control the operation of valves regulating the flow rate of primary and secondary coolant through the suit and cabin heat exchangers. Clockwise rotation results in increased temperatures.

MANUAL OXYGEN HIGH RATE HANDLE

This handle is located on the console between the members of the flight crew and provides for manual control of the dual high oxygen rate and suit system shutoff valve. Actuation of the handle shall initiate the oxygen high flow rate and de-energize the suit compressor. Resumption of normal system operation shall be effected by actuation of the oxygen high rate recock handle.

SUIT FLOW CONTROL LEVERS

An individual lever is provided for each member of the flight crew for regulation of circulatory oxygen flow through the suit circuits. The levers are located on

the lower section of the pedestal and shall provide any selected flow valve setting from fully open to fully closed. A detent provides an intermediate position to prevent inadvertent shutoff of suit flow. This detent may be by-passed by moving the lever outboard.

CABIN REPRESSURIZATION CONTROL

A rotary handle control is provided for cabin repressurization after a decompression has occurred. The control rotates approximately 90° between fully OPEN (repressurize) and fully CLOSED (off) positions. This control is located on the center console between the suit flow control panels.

ECS HEATER TELELIGHT

This telelight, located on the annunciator panel of the center instrument panel, illuminates when the heater in the primary oxygen container has been manually activated.

SYSTEMS OPERATION

The environmental control system (Figure 6-1, 6-2) is semi-automatic in operation and provides positive control in all modes of operation. There are six operational modes:

1. Pre-Launch
2. Launch
3. Orbit
4. Re-Entry

5. Postlanding
6. Emergency

Prior to the pre-launch mode, it is necessary to service and to check the system functionally.

SERVICE AND CHECKOUT

For this operation, it is assumed that the spacecraft has been mated with booster on the launch pad and in the unserviced condition.

1. Fill primary, secondary, and egress oxygen storage tanks.
2. Fill water boiler.
3. Fill drinking water supply tank.
4. Replace cartridge in the suit loop cannister.

PRE-LAUNCH

The pre-launch phase is defined as the period after the servicing has been completed and prior to launch.

Suit Loop

The pilots in their suits, with face plates open, are connected to the suit circuit. The suit circuit compressor is actuated and the suit temperature control valve is adjusted to satisfy the pilot desiring the cooler temperature. The other pilot becomes comfortable by adjusting his suit flow rate control valve toward the closed position to obtain a warmer setting. A ground supply of pure oxygen is connected to the pressure suit circuit purge

fitting. Flow is initiated with the face plates closed. The suit circuit gas is sampled periodically until an acceptable oxygen content is attained. A suit circuit leakage test is conducted. After satisfactorily completing the suit circuit leakage test, the primary and secondary oxygen manual shutoff valves are opened and the suit circuit purge system is disconnected and removed.

Cabin Loop

The cabin hatches are closed. A ground supply of pure oxygen is connected to the cabin purge fitting, flow is initiated and the cabin is purged. The cabin fan is actuated and the recirculation valve is opened. A cabin leakage test is conducted. After satisfactorily completing the cabin purge and leakage test, the cabin purge system is disconnected and removed and the cabin purge fitting is capped.

Oxygen Loop (Figure 6-3, 6-4)

The primary and secondary oxygen manual shutoff valves are opened.

The liquid oxygen inside the primary supercritical container has been changing from a liquid to a supercritical fluid by thermal leakage and heater activation.

A pressure control switch provides for automatic or manual activation of these heaters. The manual control switch is located on the center control panel.

An indicator also on the center control panel indicates both pressure and quantity from a transducer and control unit that are attached to the container.

The oxygen fas flows from the container and is warmed to approximately 50°F in a heat exchanger. This heat exchanger also contains a relief valve that limits maximum pressure to 1000 psig. This valve opens, permitting full flow and reseats within the range of 945-1000 psig.

A discharge temperature sensor provides an indication, for telemetering only, of the temperature in the primary oxygen line downstream of the heat exchanger.

The oxygen gas is regulated from 1000 psia maximum to 110 ± 10 psig. Flow capacity of 0.35 lb/min with an inlet pressure from 800 to 1000 psia and an inlet temperature of 60°F. This regulator also contains a relief feature that limits downstream pressure to 215 psig in the event of a failed-open condition.

A 10-micron absolute rated filter provides filtration of the primary oxygen supply before it enters the suit or cabin loop.

LAUNCH

Cabin Loop

The cabin pressure relief valve opens to limit the pressure differential between cabin and ambient to $5.5 \begin{smallmatrix}+.5\\-.0\end{smallmatrix}$ psi.

Suit Loop (Figure 6-8)

Oxygen is supplied to the suit loop through the suit pressure regulator. The suit pressure is controlled to between 2 and 9 inches of water above cabin pressure by the suit pressure regulator.

Suit circuit oxygen from the suit circuit demand regulator recirculates through the suit compressor, the carbon dioxide and odor absorber, the suit heat exchanger and water separator, the pressure suits, and the suit circuit solids traps. There are two compressors in the circuit. One is an alternate to be used if a compressor failure occurs. The alternate compressor is activated by positioning the SUIT FAN switch on the center panel. The cartridge of lithium hydroxide and activated charcoal remove carbon dioxide and odors of an organic nature that could have any ill effects on the pilots. As suit circuit oxygen flows through the suit heat exchanger, the temperature is controlled as selected by the pilots.

Solid traps, located in the oxygen outlet ducts of both pilots' suits, remove particulate solids, preventing contamination of the suit circuit system. An integral by-pass opens if the traps become choked with collected solids permitting continuous oxygen flow through the suit circuit.

ORBIT

Cabin Loop

Normal cabin leakage allows the cabin pressure to decay to a nominal value of 5.1 psia. The cabin pressure control valve maintains this value automatically.

A dual cabin pressure regulator supplies makeup oxygen through the pilots' pressure suits to the cabin on demand, as sensed by two aneriod elements within the regulator. The regulator supplies the makeup oxygen at a controlled pressure

between 5.0 to 5.3 psia.

The cabin fan circulates cabin air through the cabin heat exchanger. One or both of the pilots may open their faceplates. The cabin air circulating valve is in the open position to provide for recirculation of the cabin oxygen through the suit circuit.

In the event of spacecraft depressurization, whether intentionally or by spacecraft puncture, the dual cabin pressure regulator closes when cabin pressure decreases to 4.1 $^{+0.2}_{-0.1}$ psia, preventing excessive loss of oxygen.

Suit Loop (Figure 6-8, 6-9)

The suit circuit demand regulator senses cabin pressure and maintains suit circuit pressure at 2.5 to 3.5 inches of water below to 2 to 9 inches of water above cabin pressure. Should cabin pressure decrease below 3.5 psia, the suit circuit demand regulators maintain the suit circuit pressure at 3.5 $^{+.4}_{-.0}$ psia by constant bleed orifices and sensing aneroids within the regulator. When cabin pressure is restored to 5.1 $^{+0.2}_{-0.1}$ psia, the suit circuit demand regulators return to normal operation.

In the event of cabin and suit circuit malfunction, the suit circuit will automatically revert to the high rate of operation when suit circuit pressure decreases below 3.0 $^{+0.1}_{-0.0}$ psia. A suit circuit pressure sensing switch energizes the solenoid of the dual high flow rate and system shutoff valve. This initiates a high oxygen flow rate of 0.08 $\pm$0.008 lb/min per man (total flow: 0.16 lb/min). This high flow rate flows directly into the suits by-passing the suit demand regulators. The suit recirculating system is shut off and the suit compressors

are de-activated when the solenoid of the dual high flow rate and system shutoff valve has been energized. The O_2 HI RATE light on the center panel illuminates when the suit circuit is on the high flow rate. There is also a manual control for the high flow rate and system shutoff valve located on the center console.

When the suit circuit pressure is restored to a level above 3.0 $^{+0.1}_{-0.0}$ psia, the high rate and system shutoff valve is reset manually by using the control marked O_2 HIGH RATE RECOCK located on the center panel. This returns the suit circuit to normal operation by opening the system shutoff valve and closing the high rate valve. The suit compressor is also reactivated.

Water Management System (Figure 6-11)

The drinking water system is pressurized and manually controlled by the pilots.

Water from the adapter supply is used to replenish the cabin tank water supply.

The water tank drink selector valve is set in the NORM position.

The pilots manually operate the drinking dispenser to provide drinking water from the cabin storage tank.

The water separator removes metabolic moisture through a wicking material positioned between the plates of the suit heat exchanger.

The dump selector valve is positioned to route the urine either to the water boiler or dumped overboard. The normal procedure is to dump. Before it is dumped the urine dump system is preheated by positioning its heater switch located on the water management panel. A urine dump heater light is also provided and located on the water management panel. This light illuminates when the heater is activated. The shutoff valve is opened and the bellows operated to remove urine from the system.

RE-ENTRY

Oxygen System

The primary oxygen system is disconnected when the adapter section is separated from the re-entry module. This removes the primary oxygen supply pressure which automatically activates the secondary oxygen supply.

The system shutoff and high rate valve is positioned to the high rate position before the adapter section is jettisoned.

Cabin Loop

The pressure in the suit and cabin remains constant at 5 psia (nominal) until an altitude of approximately 27,000 feet is reached.

As ambient pressure increases during descent, the cabin pressure relief valve admits ambient air into the cabin, preventing high differential pressures. The

cabin pressure relief valve begins to open when the ambient pressure is 15.0 inches of water greater than cabin pressure and opens to maximum flow when the pressure differential is 20 inches of water.

At an altitude of 25,600 feet, or below, the pilots manually open the cabin inflow and outflow valves to circulate external air through the cabin and suit circuit.

Maximum negative pressure on the cabin should not exceed 2 psi as controlled by the cabin relief valve.

Suit Loop

Prior to re-entry the face plates should be closed. The high flow rate of oxygen is flowing directly into the suit circuit.

When the cabin inflow valve is opened it activates the suit compressor and external air is circulated through the suit circuit.

POSTLANDING

Ventilation is provided by the suit compressor as long as electrical power is available (12 hours minimum).

Ambient air is drawn into the vehicle through the snorkel inflow valve, by the suit compressor, circulated through the suit circuit into the cabin, then discharged overboard through the outflow vent valve.

The snorkel inlet valve functions as a water check valve. When the snorkel inlet valve is above water level, the ball check is retained freely in a wire mesh cage, permitting ambient air to enter the suit circuit. Normal oscillations of the spacecraft in the sea may result in the snorkel valve being momentarily submerged. This will cause the ball check to seat and is held there by suction from the suit compressor. Opening the cabin air circulating valve allows the ball to drop from its seat.

To prevent water from entering the cabin through the cabin pressure relief valve, the manual shutoff section of the valve is closed.

EMERGENCY

Cabin Loop

If cabin depressurization becomes necessary due to toxic contaminants or fire, the cabin outflow valve is opened to depressurize the cabin. The cabin regulator will close, stopping the oxygen supply to the cabin, permitting the escape of toxic contaminants and preventing oxygen assistance to combustion in the event of fire. The cabin repressurization valve permits repressurization of the spacecraft cabin.

The control knob for the cabin repressurization valve is located on the lower console and is rotated counterclockwise to open the valve. It is rotated

clockwise to close the valve when cabin pressure is between 4.3 and 5.3 psia. Cabin pressure is then automatically controlled at 5.1 $^{+0.2}_{-0.1}$ psia by cabin pressure regulator valve.

Egress Oxygen (Figure 6-5)

Operation of the egress oxygen system is initiated by three of the four lanyards which are pulled when the seat leaves the spacecraft. One lanyard pulls a pin in the composite disconnect allowing it to separate and close the normal suit circuit. Two of the remaining lanyards open the container shutoff valve and circuit relief valve activating the egress oxygen system.

Each of the egress oxygen containers is pressurized to 1800 psig with gaseous oxygen. The oxygen flows from the containers through a pressure regulator, where the pressure is reduced to 40 psia. It then flows through a shutoff valve and a flow restrictor, which allows a flow of .052 to .063 lb/min, then through a check valve to the suit. After leaving the suit, the oxygen flows through the shutoff and relief valve, which dumps the oxygen overboard, as well as controls the suit pressure to 3.5 $^{+.6}_{-0}$ psia if ejection occurs at an altitude above 31,500 feet, and 2 to 8.23 inches of water above ambient at an altitude below 31,500 feet.

SYSTEM UNITS

DUAL SECONDARY OXYGEN RATE AND SUIT SYSTEM SHUTOFF VALVE (Figure 6-12)

The dual secondary oxygen rate and suit system shutoff valve provides a constant flow rate of oxygen directly to the pilot's suit during re-entry or

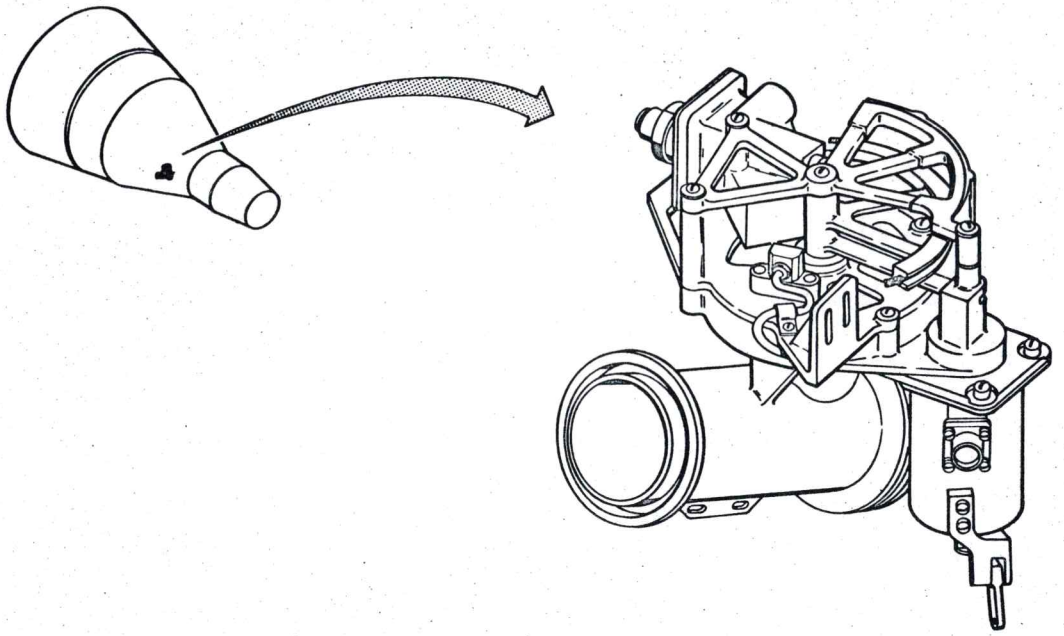

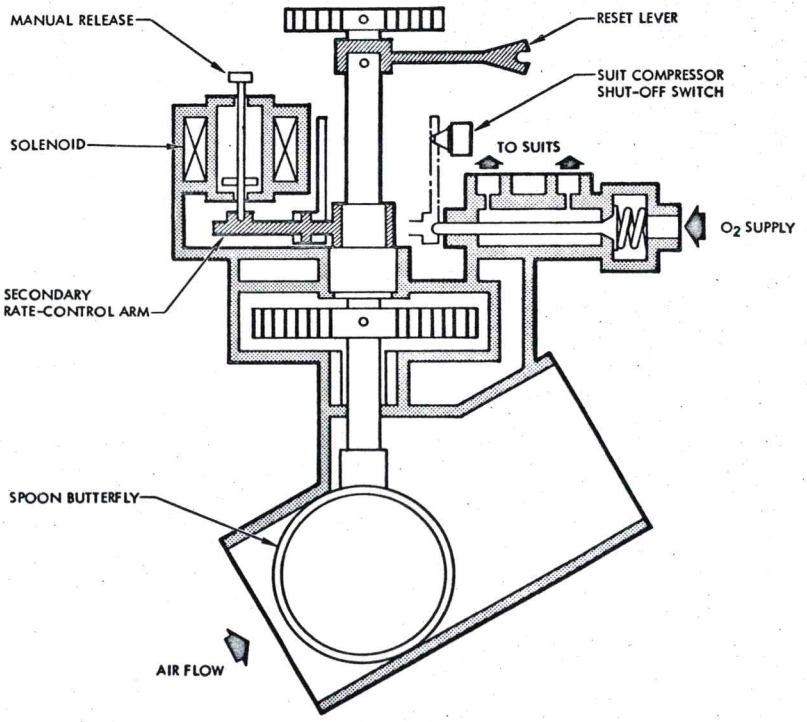

Figure 6-12 Dual Secondary Oxygen Rate and Shutoff Valve

FMG2-201

in the event the suit circuit malfunctions during launch or orbit.

The valve is designed for manual and automatic initiation. The recirculating suit oxygen circuit flows through the shutoff section of the valve, which is manually opened and is spring loaded to the closed position. The shutoff valve is held open by a 24 V D-C solenoid pin, as long as the solenoid is de-energized.

The secondary flow poppet valve, held closed by spring tension, remains closed whenever the shutoff valve is in the open position. When the solenoid is energized, the butterfly arm is released and rotates by spring tension, closing the suit circuit valve and mechanically opening the secondary oxygen flow rate poppet valves. Opening the poppet valves allows oxygen to flow to each pilot's suit through fixed orifices at a rate of 0.08 $\pm$0.008 lb/min per man (total flow 0.16 lb/min.). The butterfly arm simultaneously actuates a switch that de-energizes the solenoid, turns off the suit compressor and cabin fan, and illuminates a SECONDARY FLOW RATE lamp on the pilots' center display panel. A pressure sensor switch attached to each pilot's suit circuit will energize the solenoid if the suit circuit pressure in either suit decreases below $3.0 \begin{smallmatrix}+.1\\-0\end{smallmatrix}$ psia, automatically shutting off the suit circuit flow and initiating the secondary flow rate. A manual control is provided for resetting the valve to the normal position. The secondary flow rate is used during re-entry. Prior to retro-grade the pilots manually disengage the solenoid initiating the secondary flow rate.

SUIT OXYGEN DEMAND REGULATOR (Figure 6-13)

The suit oxygen demand regulator controls the oxygen to the suit circuit from the primary or secondary oxygen system and replenishes oxygen used by the pilots or lost by leakage.

Cabin pressure is sensed on one side of the diaphragm and suit pressure is sensed on the opposite side of the diaphragm. The differential pressure across this diaphragm opens or closes a poppet valve admitting or stopping oxygen flow into the suit circuit. With cabin pressure of 5.0 psia the suit regulator maintains suit pressure at 2.5 to 3.5 inches of water below cabin pressure.

A resilient diaphragm type valve relieves pressure in the suit during ascent and limits excess pressure to between 2.0 and 9.0 inches of water above cabin pressure. During descent, the suit demand regulator relieves the secondary oxygen rate flow through the relief portion of the valve, maintaining suit pressure 2 to 9 inches of water above cabin pressure.

A constant bleed and aneroid elements maintain the suit pressure at $3.5^{+0.4}_{-0}$ psia if cabin pressure decreases below this pressure. The bleed flow by-passes the tilt valve through a bleed orifice and is directed to the cabin pressure sensing side of the pressure demand diaphragm. A metering valve, controlled by an aneroid, regulates the reference pressure on the demand diaphragm. The regulator returns to normal operation when cabin pressure returns to $5.1\ ^{+0.2}_{-0.1}$ psia. In the event that cabin decompression and a ruptured relief diaphragm in the regulator occur simultaneously, an aneroid over the relief diaphragm extends to control suit pressure at 3.9 psia maximum.

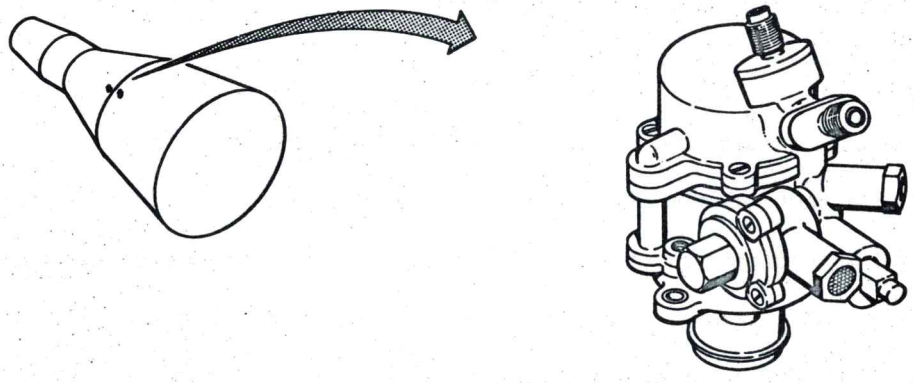

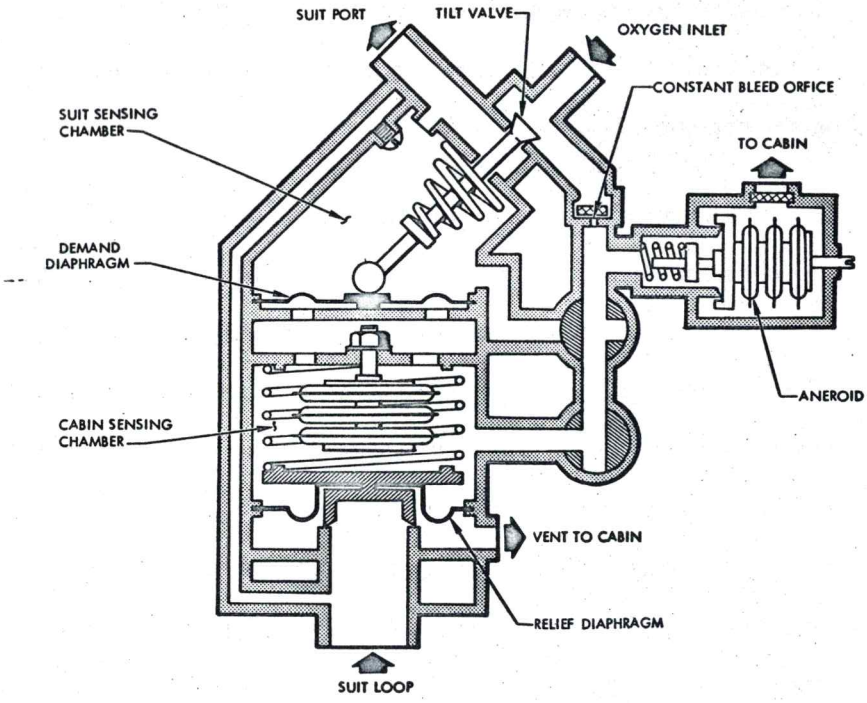

FM2-6-14

Figure 6-13 Suit Oxygen Demand Regulator

CABIN PRESSURE RELIEF VALVE (Figure 6-14)

The cabin pressure relief valve automatically controls the cabin-to-ambient differential pressure during launch, orbit and re-entry. Duplicate spring loaded poppet valves are controlled by servo elements within the valve.

The servo elements control spring loaded metering valves which determine the pressure within the diaphragm chamber behind the poppet, controlling the poppet position. A small inlet bleed orifice admits cabin pressure to the diaphragm chamber. When the poppet opens, a large orifice permits rapid change in pressure ensuring quick closure of the poppet.

During ascent the valve will relieve cabin pressure as ambient pressure decreases until cabin differential pressure is 5.5 to 6.0 psia. The valve closes maintaining differential pressure in this range. When cabin pressure decreases below 5.5 psia the servo element closes the metering valve maintaining reference pressure within the diaphragm chamber at cabin pressure. The poppet is held closed by spring force and the zero differential between the diaphragm and the cabin prevents cabin pressure release. If cabin differential pressure exceeds 5.5 psia the zero element retracts, opening the metering valves, allowing the diaphragm chamber to discharge to ambient. The discharge port being larger than the inlet bleed orifice permits the diaphragm chamber to approach external pressure. The cabin pressure reacting on the diaphragm overrides the poppet spring force, which opens permitting cabin pressure relief to ambient. During descent, as external pressure increases, ambient air is admitted to the cabin by the valve to reduce the differential pressure. As external pressure increases

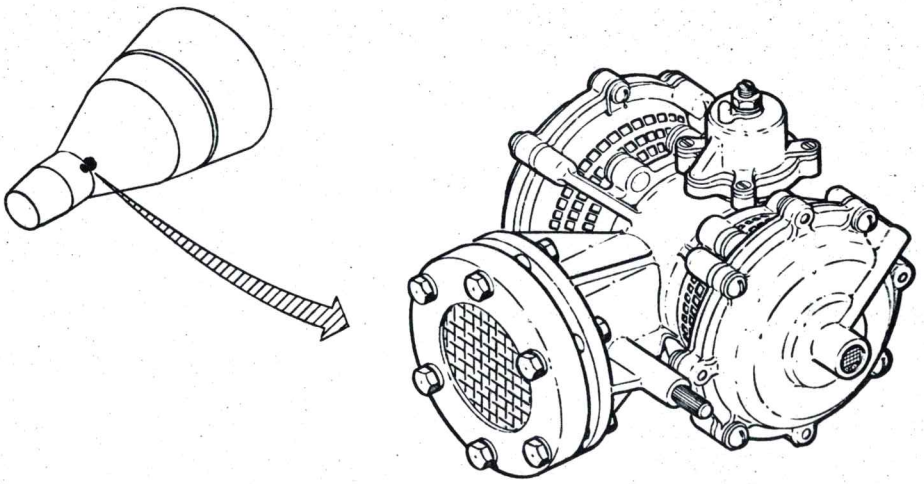

CABIN PRESSURE RELIEF VALVE

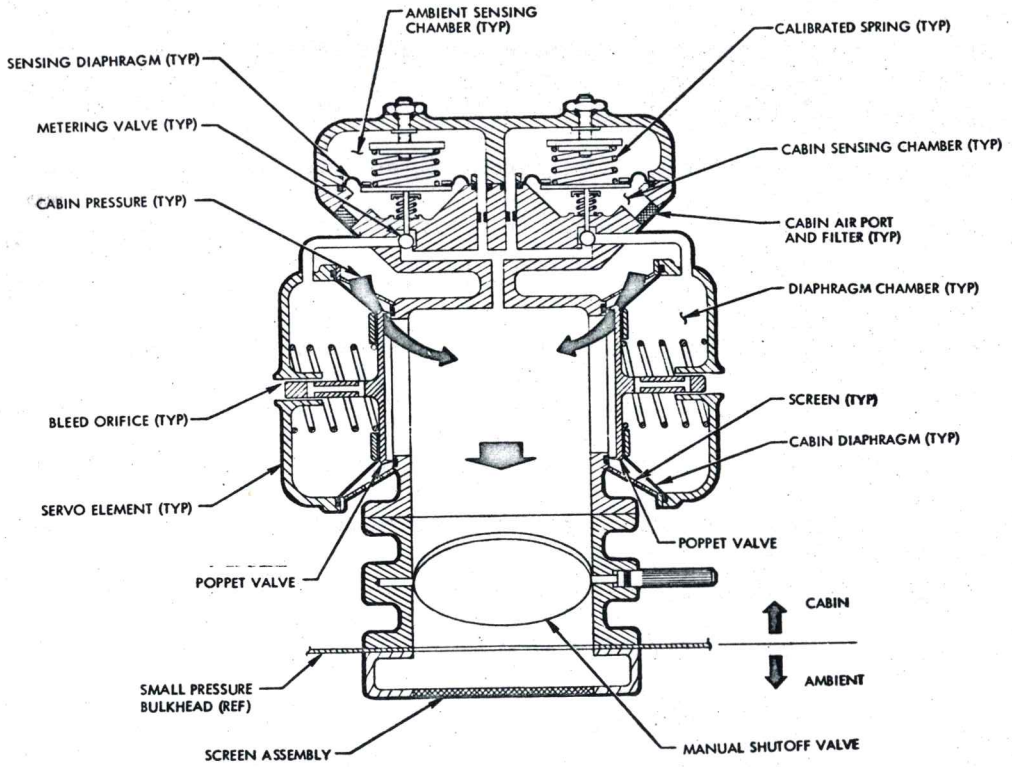

FM2-6-15

Figure 6-14 Cabin Pressure Relief Valve

above the cabin pressure the metering valves are held on their seats, preventing external pressure from entering the diaphragm chamber and retaining cabin pressure in the chamber. The poppet valve senses diaphragm chamber pressure versus ambient pressure. When the ambient pressure is 15 inches of water greater than cabin pressure the poppet begins to open permitting ambient air to enter the cabin. The poppet opens fully when the differential pressure is 20 inches of water.

To preclude water entering the cabin during postlanding, a manual shutoff valve is provided.

SUIT CIRCUIT COMPRESSOR (Figure 6-15)

Two electric motor driven, single stage compressors are incorporated in the suit circuit. One compressor is utilized for circulation of the gases within the suit circuit, supplying both suits. The other compressor remains in redundancy and is activated only by manual selection by the pilots. Either compressor can be manually selected by a switch on the center display panel, and both compressors can be selected simultaneously.

When secondary oxygen flow rate is selected, the compressor is automatically de-energized. Re-entry is made using the secondary rate. At an altitude of 25,600 feet or below the manual inflow valve is opened which re-energizes the compressor. The suit compressor provides ventilation during landing and for a twelve hour postlanding period, or until the batteries fail.

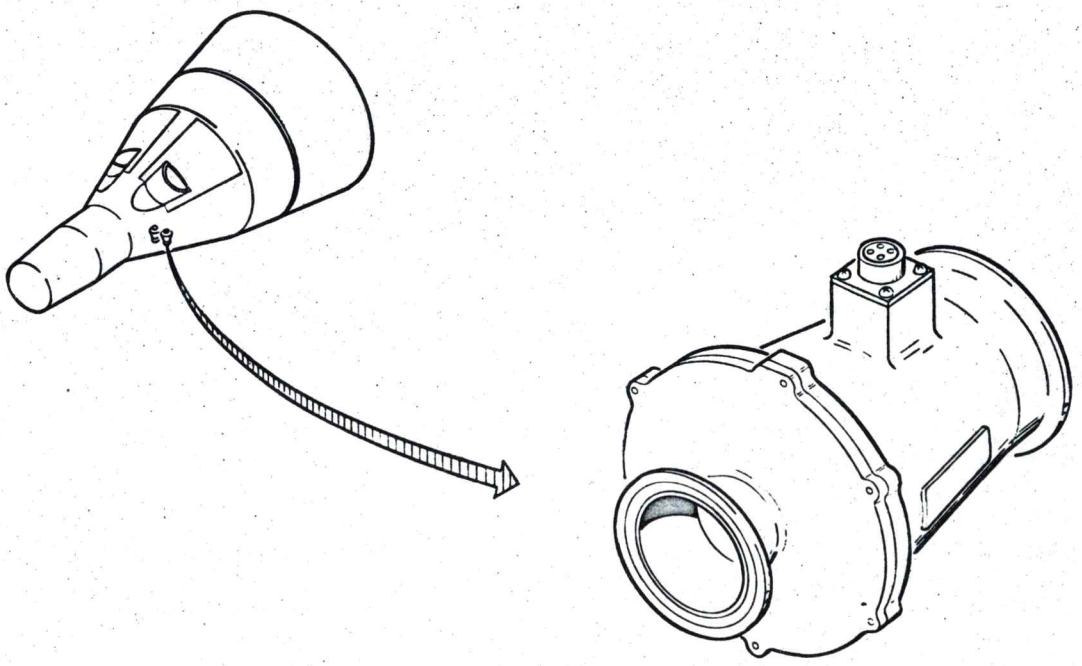

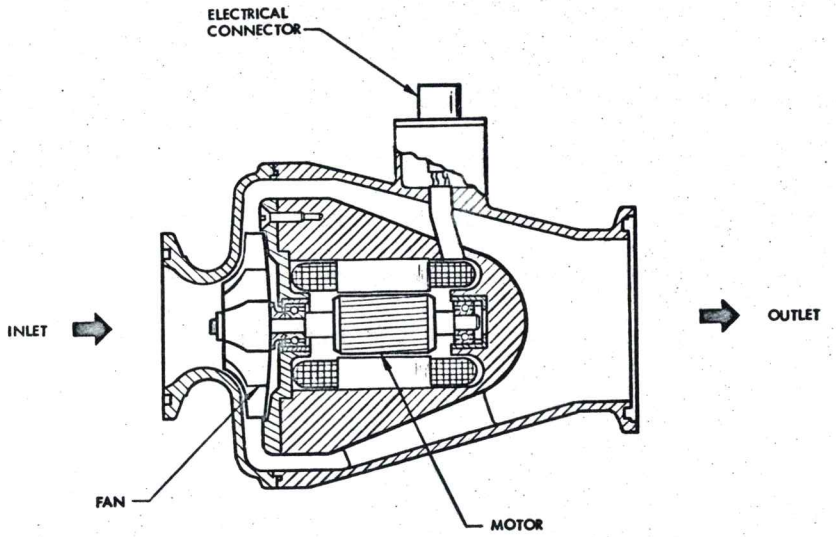

FM2-6-16

Figure 6-15 Suit Circuit Compressor

SOLIDS TRAP (Figure 6-16)

A solids trap is located in the oxygen outlet duct of each suit. A cylindrical 40 micron filter strains the gaseous flow in the suit circuit removing the solid matter. In the event that the trap becomes choked with collected solids, an integral by-pass opens when the differential pressure across the screen exceeds 0.50 inches of water.

DUAL CABIN PRESSURE REGULATOR (Figure 6-17)

The cabin pressure regulator maintains cabin pressurization by providing makeup oxygen to the cabin on demand. The regulator contains two aneroid elements which individually sense cabin pressure. When cabin pressure decreases, the aneroids expand, forcing metering pins open and permitting oxygen flow into the cabin, maintaining cabin pressure at $5.1 \begin{smallmatrix}+0.2\\-0.1\end{smallmatrix}$ psia. If the cabin is punctured or develops leakage greater than the flow capacity of the valve (4.79 ± 0.48) $10\text{-}3$ lb/min, oxygen flow to the cabin is stopped when the cabin pressure decreases to $4.1 \begin{smallmatrix}+0.2\\-0.1\end{smallmatrix}$ psia, by the aneroids expanding enough to cause the metering pins to close off the oxygen.

PRIMARY SUPERCRITICAL OXYGEN CONTAINER (Figure 6-18)

The primary oxygen container is a double walled tank. A dual concentric cylinder, quantity measuring devices, heaters and heat transfer spheres are internal to the container. The tank contains two heaters. The first is a 12.0 ± 2 watt heater which is activated either manually by a switch located on the center panel, or automatically by a pressure switch. The pressure switch controls the

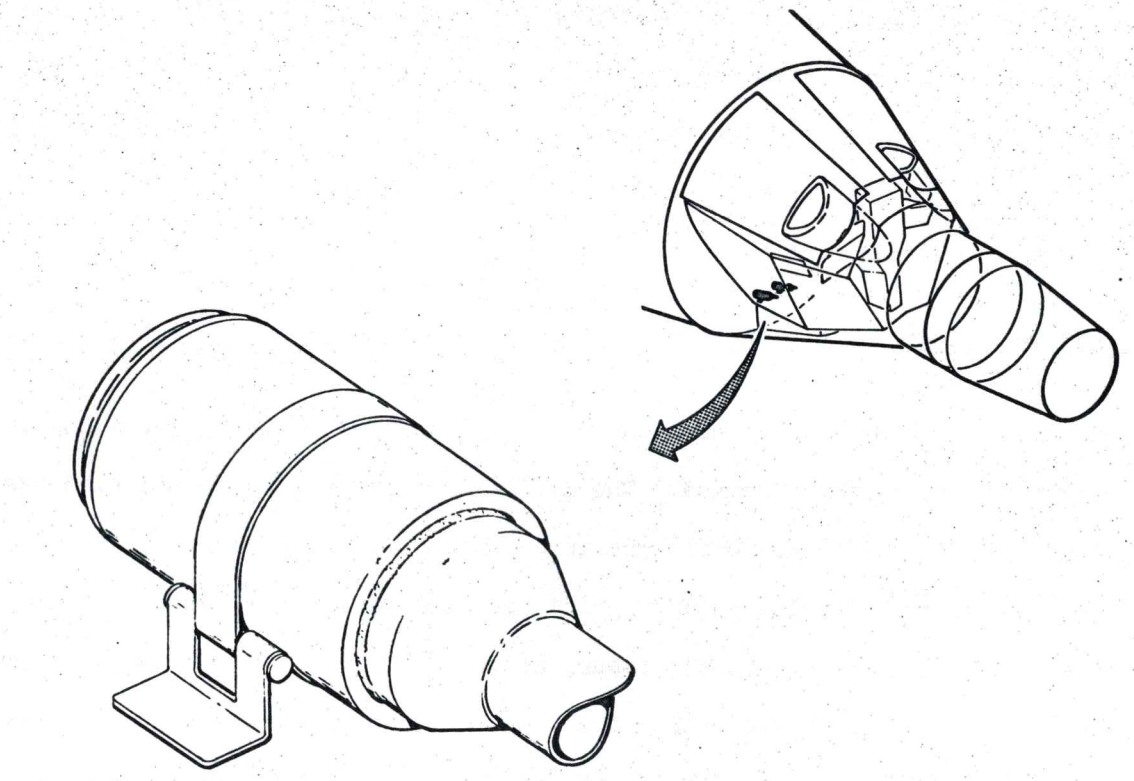

SOLIDS TRAP

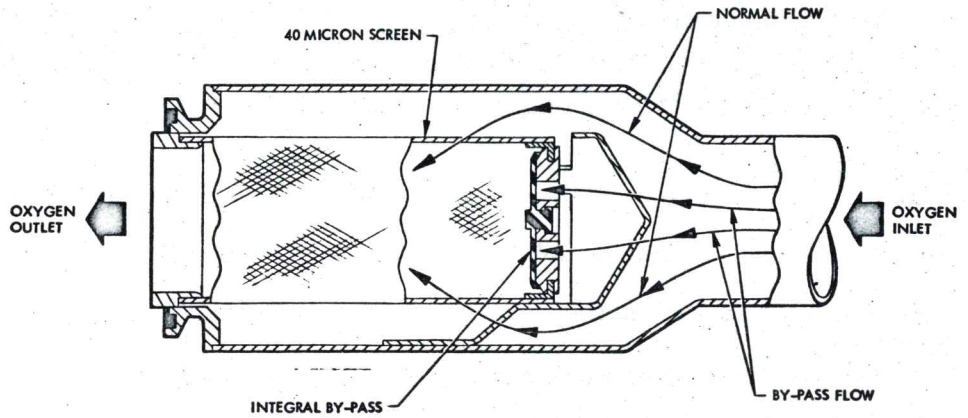

FM2-6-17

Figure 6-16 Suit Circuit Solids Trap

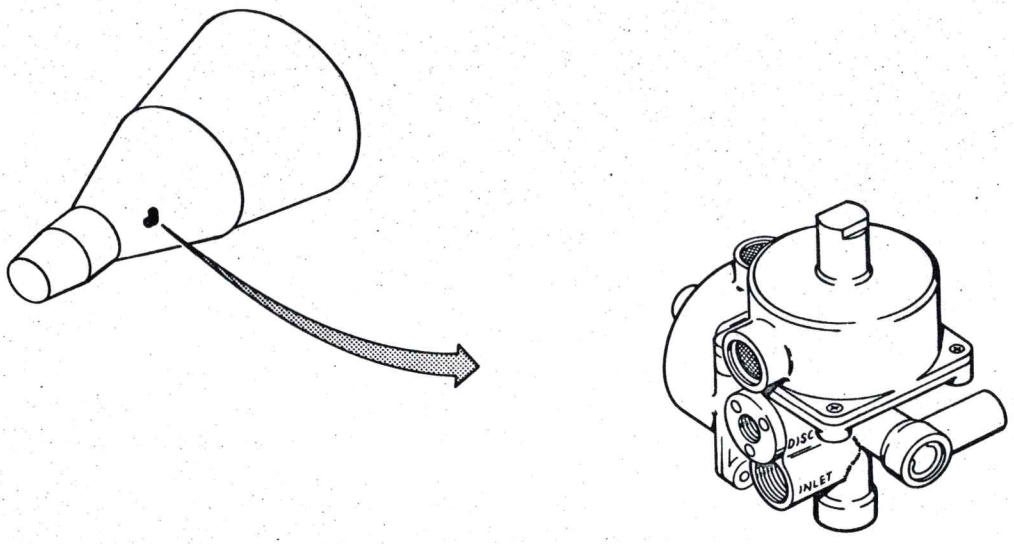

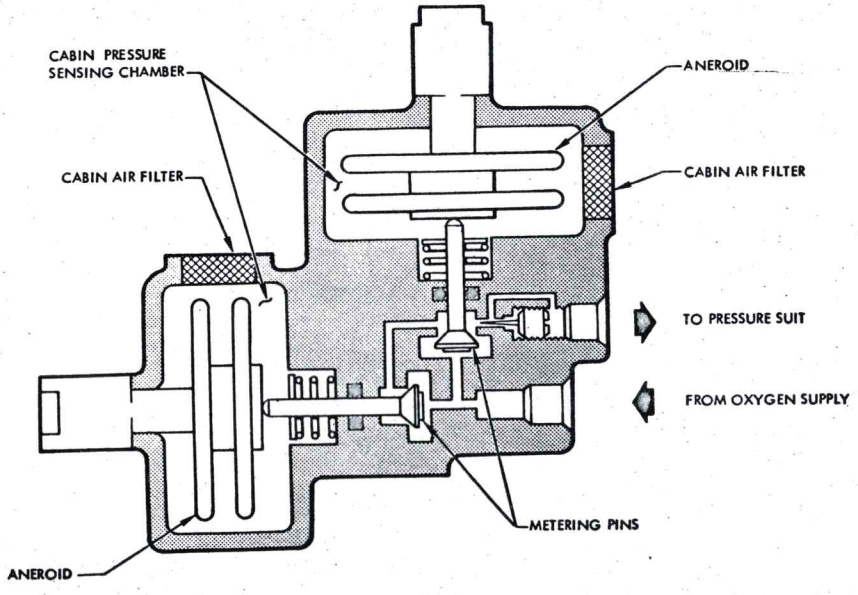

FM2-6-18

Figure 6-17 Dual Cabin Pressure Regulator

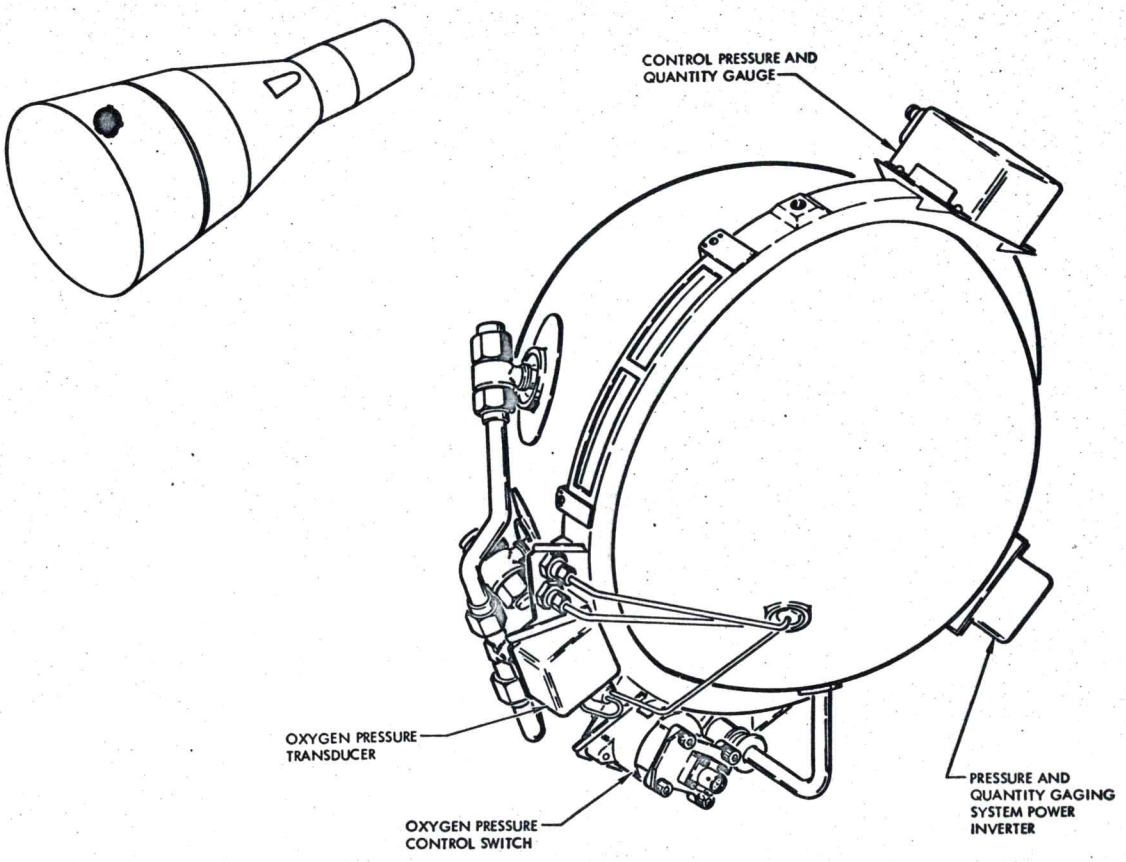

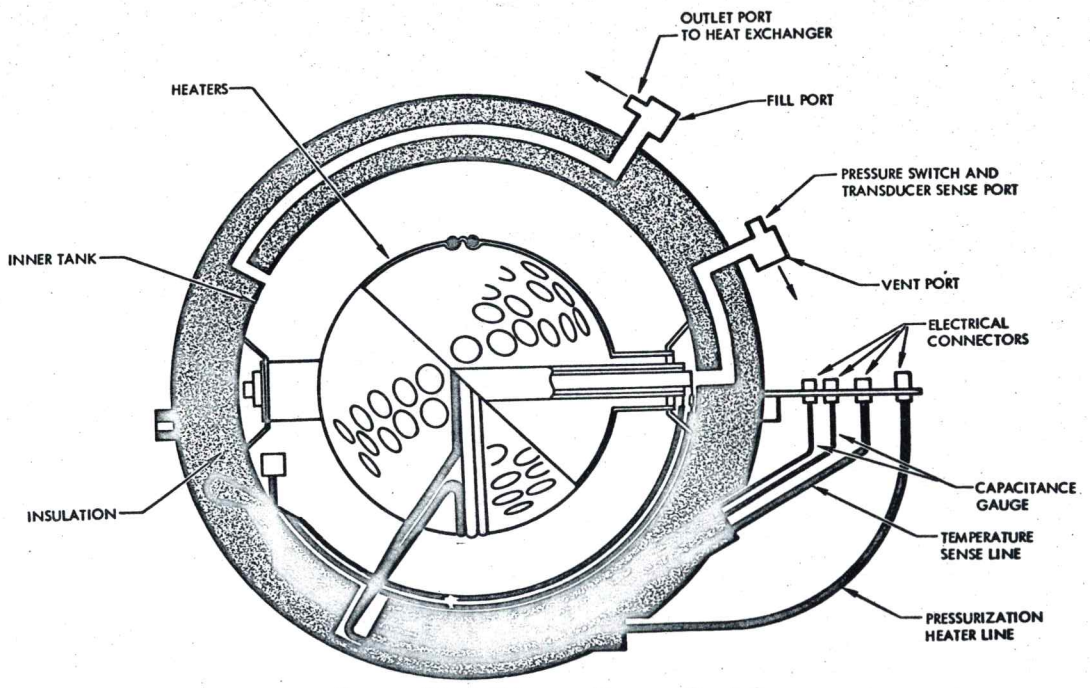

Figure 6-18 Supercritical Primary Oxygen Container

activation of the heating element in the tank to automatically maintain the cryogens in a supercritical state. The switch de-energizes the heater circuit when the pressure in the tank is between 875 to 910 psig, and closes the circuit 15 to 75 psig below the opening pressure. The second heater is a 325^{+50}_{-0} watt heater manually controlled by a switch located on the overhead switch/circuit breaker panel.

The pressure relief valve maintains the oxygen pressure within the container at 1000^{+0}_{-55} psig, and prevents overpressurization of the containers.

Provisions for servicing the primary oxygen container from a ground supply source of oxygen are provided.

SECONDARY OXYGEN CONTAINER (Figure 6-19)

The secondary oxygen container is a cylindrical shaped container, having a useful oxygen capacity of 6.5 pounds at an operating pressure of 5000 psig.

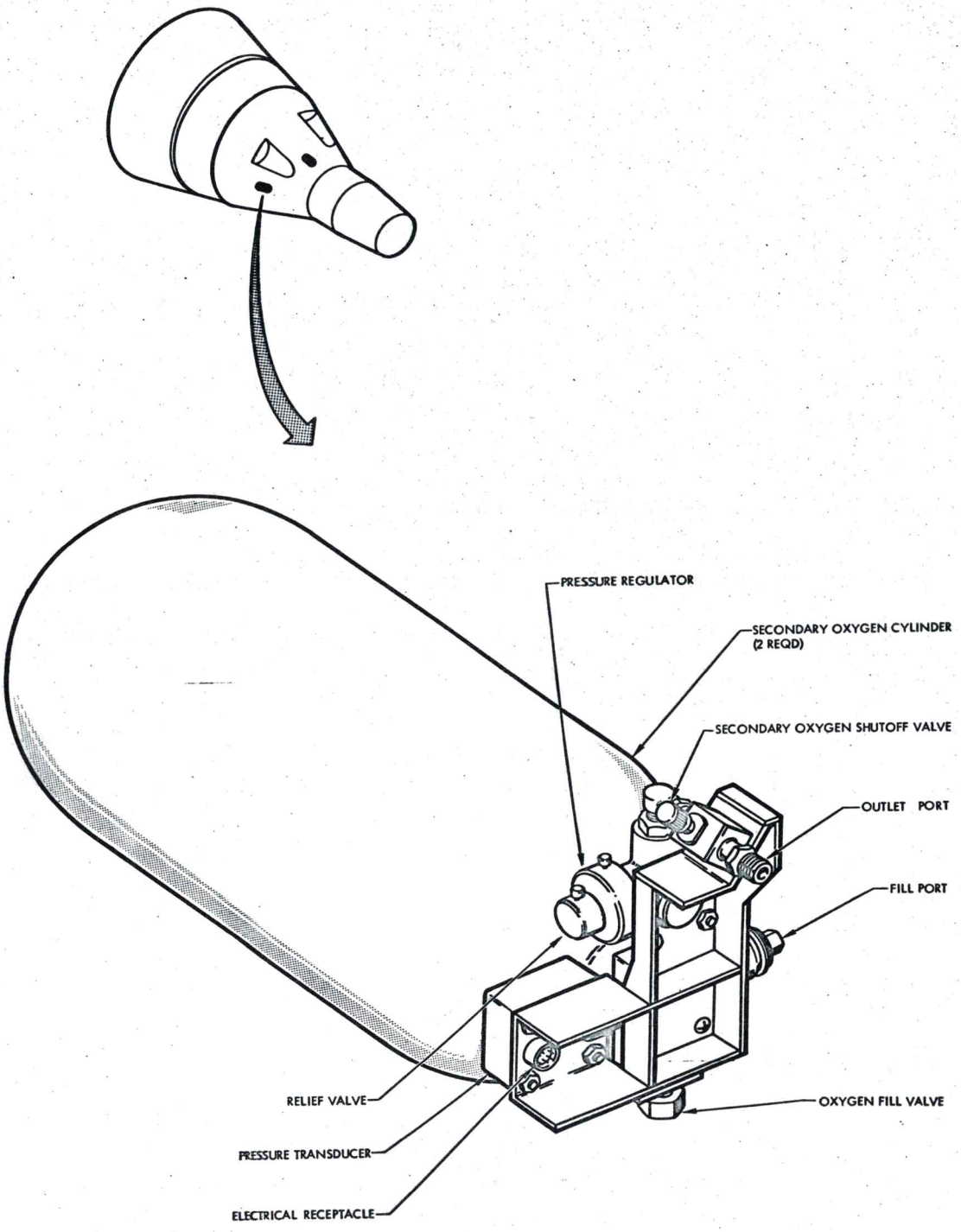

Figure 6-19 Secondary Oxygen Tank

COOLING SYSTEM

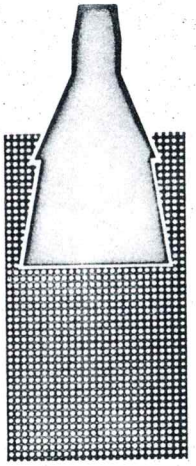

Section VII

TABLE OF CONTENTS

TITLE	PAGE
SYSTEM DESCRIPTION	7-3
SYSTEM OPERATIONS	7-4
PRELAUNCH	7-4
LAUNCH	7-7
ORBIT	7-8
SYSTEM UNITS	7-10
PUMP PACKAGE	7-10
RADIATOR	7-12
COLD PLATES	7-12
HEAT EXCHANGERS	7-12
TEMPERATURE CONTROL VALVE	7-17
LAUNCH COOLING HEAT EXCHANGER	7-19

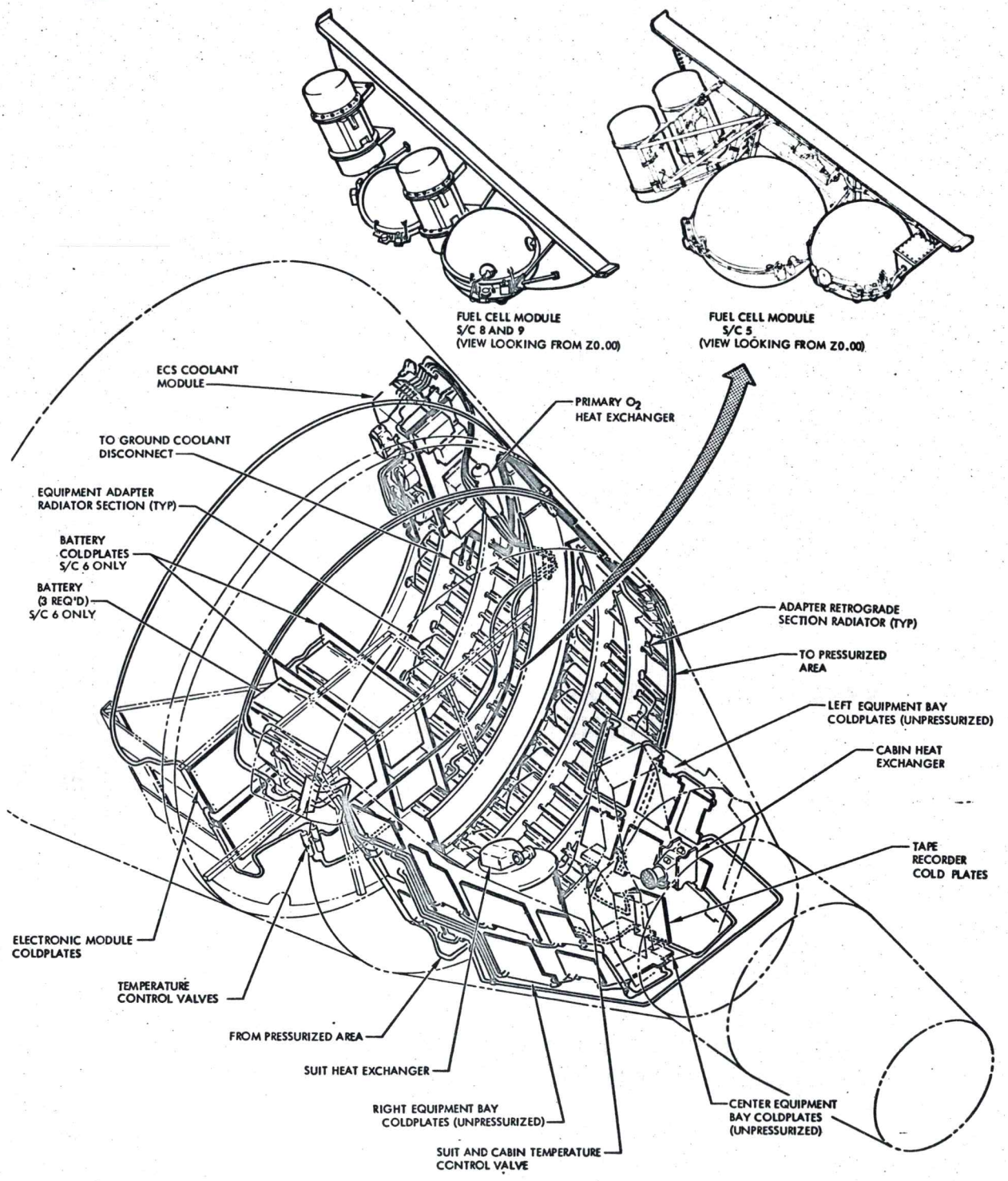

Figure 7-1 Spacecraft Coolant System

FM2-7-1

SECTION VII COOLING SYSTEM

SYSTEM DESCRIPTION (Figure 7-1)

The spacecraft cooling system consists basically of two identical temperature control circuits functioning independently of each other to provide the cooling requirements for the spacecraft. Each cooling circuit consists of a pump package, thermostatic and directional control valves, various type heat exchangers, radiators, filters, and the necessary plumbing required to provide a closed circuit. The cooling system may be operated in either the primary and/or secondary circuit, and is capable of carrying maximum heat loads in either circuit.

The equipment coldplates, cabin and suit heat exchangers are located in the re-entry module. The upper radiator panels are located in the retrograde section. The pump package, battery coldplates, filters, electronic equipment coldplates, ground launch cooling and regenerative heat exchangers and the lower radiator panels are located in the adapter equipment section. System manual controls are located on the pilots' pedestal console and the control switches, warning lights and indicators are located on the center panel.

During orbital flight, Monsanto MCS-198 coolant is supplied throughout the cooling system and thermostatic control valves regulate the coolant temperature. Temperature sensors, located in the system, provide the necessary telemetering of system temperatures to ground stations.

SYSTEM OPERATION

The cooling circuit in which the cooling system operates is dependent upon the temperature loads generated by the equipment, spacecraft phase of flight and the temperature within the spacecraft cabin. Cooling is provided throughout the mission up to pre-retrograde firing. At this time the coolant pump packages are jettisoned with the adapter equipment section, terminating spacecraft cooling.

S/C 5, 8, and 9 require both loops to be operated continuously. In S/C 6 the primary circuit operates continuously providing the required cooling during low temperature loads. The secondary circuit is used, in conjunction with the primary circuit, during phases of high temperature loads; namely - launch, rendezvous, and pre-retrograde. Under normal heat loads, the #1 pump in the primary circuit provides the required cooling. Under peak heat loads, the #1 pump in the secondary circuit is used with the primary circuit #1 pump to provide maximum cooling. In the event of a #1 pump malfunction in either circuit, the #2 pump in that circuit is used. In the event of both pumps failing in one circuit, both pumps of the remaining circuit can be used to provide the required cooling. (S/C 6 does not have the #2 pump in either circuit.)

PRE-LAUNCH (Figure 7-2)

During pre-launch an external supply of Monsanto MCS-198 coolant is circulated through the spacecraft ground cooling heat exchanger providing temperature control of the cooling system coolant. The #1 pumps of the primary and secondary cooling circuits are activated, using an external power source, to provide the required cooling for spacecraft equipment and cabin. The spacecraft radiator switch, located on the center panel, is placed in the BYPASS position so the

PROJECT GEMINI

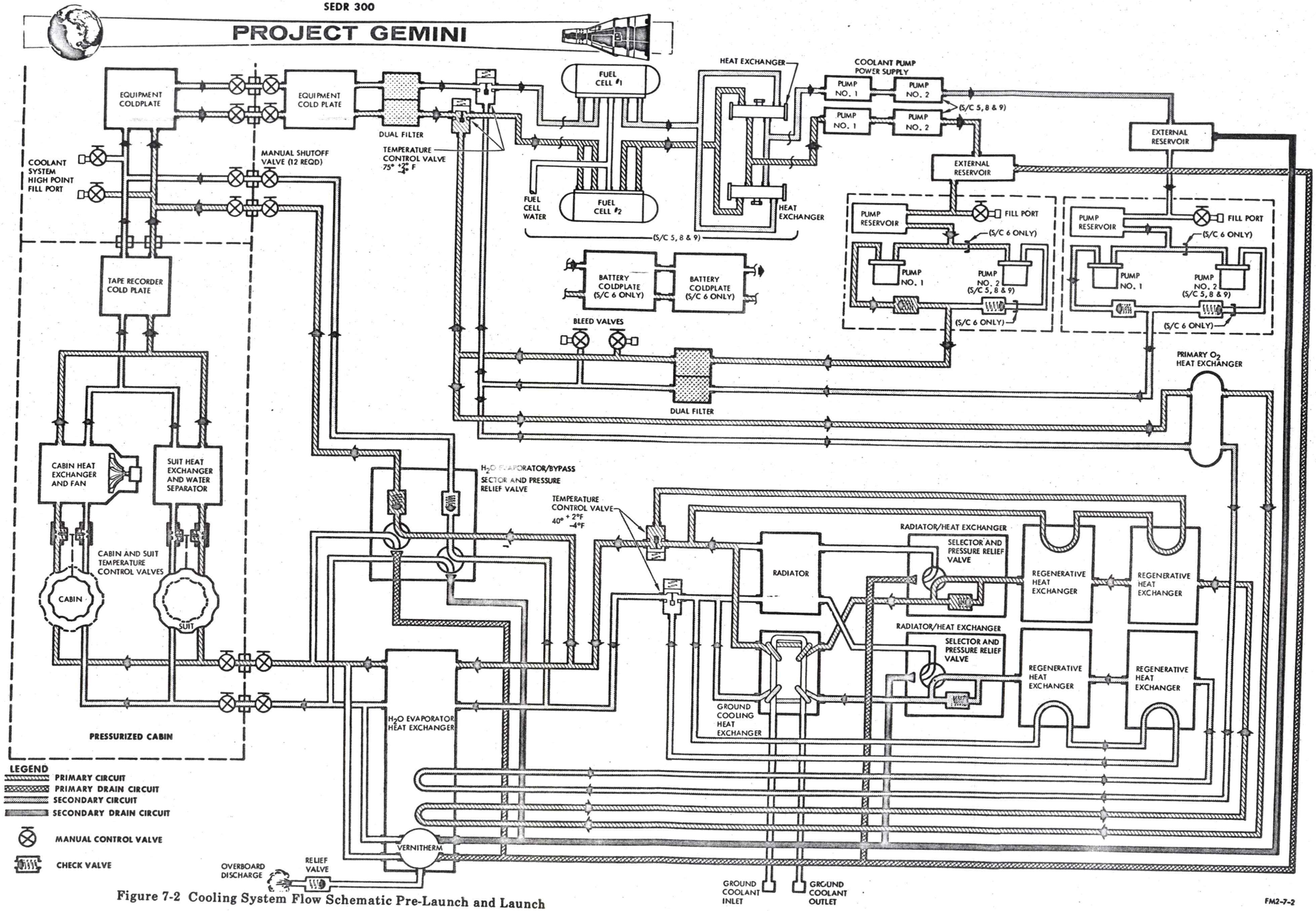

Figure 7-2 Cooling System Flow Schematic Pre-Launch and Launch

cooling system coolant by-passes the radiators and is directed through the ground cooling heat exchanger.

Coolant is circulated through each coolant loop by a positive-displacement gear pump. S/C 5, 8 and 9 are provided with 2 pumps in each loop. S/C 6 has only one pump in each loop. Selection of loops and number of pumps is controlled manually.

The coolant is filtered, as it leaves the pump, and simultaneously flows to the inlet of the battery coldplate or fuel cell temperature control valve and primary oxygen heat exchanger.

The temperature control valve maintains the cooling temperature at the fuel cell or battery coldplate inlet at 75° $^{+20}_{-4}{}^{\circ}$ F. Temperature increasing above setting will reduce by-pass flow. Coolant temperature from by-pass line varies from 80°F to 165°F. Coolant temperature from equipment lines varies from 60°F to 125°F.

Coolant enters the primary oxygen heat exchanger and then is routed around the steam discharge lines in the water boiler before it passes through the regenerative heat exchanger. It then passes through the selector and pressure relief valve. This selector valve is electrically actuated and when in the radiator by-pass position allows the coolant to pass through the ground cooling heat exchanger where the external supply of coolant flowing through the ground cooling heat exchanger absorbs the heat from the spacecraft's coolant system.

The ground coolant heat exchanger has an airborne flow capacity of 336 lb/hr, per

coolant loop, at 125°F. It has a ground coolant flow capacity of 425 lb/hr at 40°F.

The coolant is now ready to pass through the temperature control valve. This valve maintains the outlet temperature at $40^{+20}_{-4^{\circ}}$ F. If the coolant entering the valve from the ground heat exchanger is below this range, a portion of the coolant is directed through the regenerative heat exchanger and then mixed at the valve.

The coolant then flows through the water evaporator to the cabin and suit manual temperature control valves. These valves meter the coolant flow through the cabin and suit heat exchangers. The evaporator selector valve relief portion allows part of the coolant to by-pass the cabin and suit heat exchangers depending on the setting of the manual control valves. The selector portion of this valve allows the by-pass fluid to come from either downstream or upstream of the evaporator. The coolant continues through the various coldplates until it reaches the battery coldplates for S/C 6 or through the fuel cells on S/C 5, 8 and 9. The coolant has now returned to the reservoir where the cycle is ready to be repeated.

Shortly before launch, the external cooling and electrical power are disconnected.

LAUNCH (Figure 7-2)

During launch, the launch cooling heat exchanger goes into operation in the following sequences. The heat transfer characteristics and capabilities of the ground cooling heat exchanger no longer exist. The MCS 198 coolant fluid now with no place to dissipate its internal heat, which is constantly being generated

by and absorbed from the loop components, circulates about the vernatherm section of the heat exchanger. When the coolant temperature exceeds $46^{+4^{\circ}}_{-2^{\circ}}$ F the vernatherm pilot valve opens to pressurize a donut shaped bellows which unseats the poppet valve exposing the water in the heat exchanger core to reduced pressure as altitude increases during launch.

When S/C altitude exceeds 100,000 feet, water in the heat exchanger will boil absorbing heat from the coolant. This absorbed heat is then expelled overboard in the form of steam.

When the coolant reaches a temperature of 46°F, the vernatherm section repositions to relieve pressure to the donut shaped bellows holding the poppet open. As this pressure diminishes, a spring behind the poppet will reposition it to the closed position. The evaporator selector valve is positioned to allow all flow to go through the evaporator.

The water boiler water reservoir is constantly replenished from the suit heat exchanger water separator, and if the need arises, from the drinking water supply tank.

ORBIT (Figure 7-3)

After orbiting for approximately 30 minutes, to allow the radiator to cool after being subject to launch heating, the coolant flow is directed through the space radiators by manual selection of the radiator switch located on the center panel. This by-passes the ground cooling heat exchanger. The evaporator selector valve is also positioned so that only the flow to the suit and cabin heat exchangers pass through the evaporator.

PROJECT GEMINI

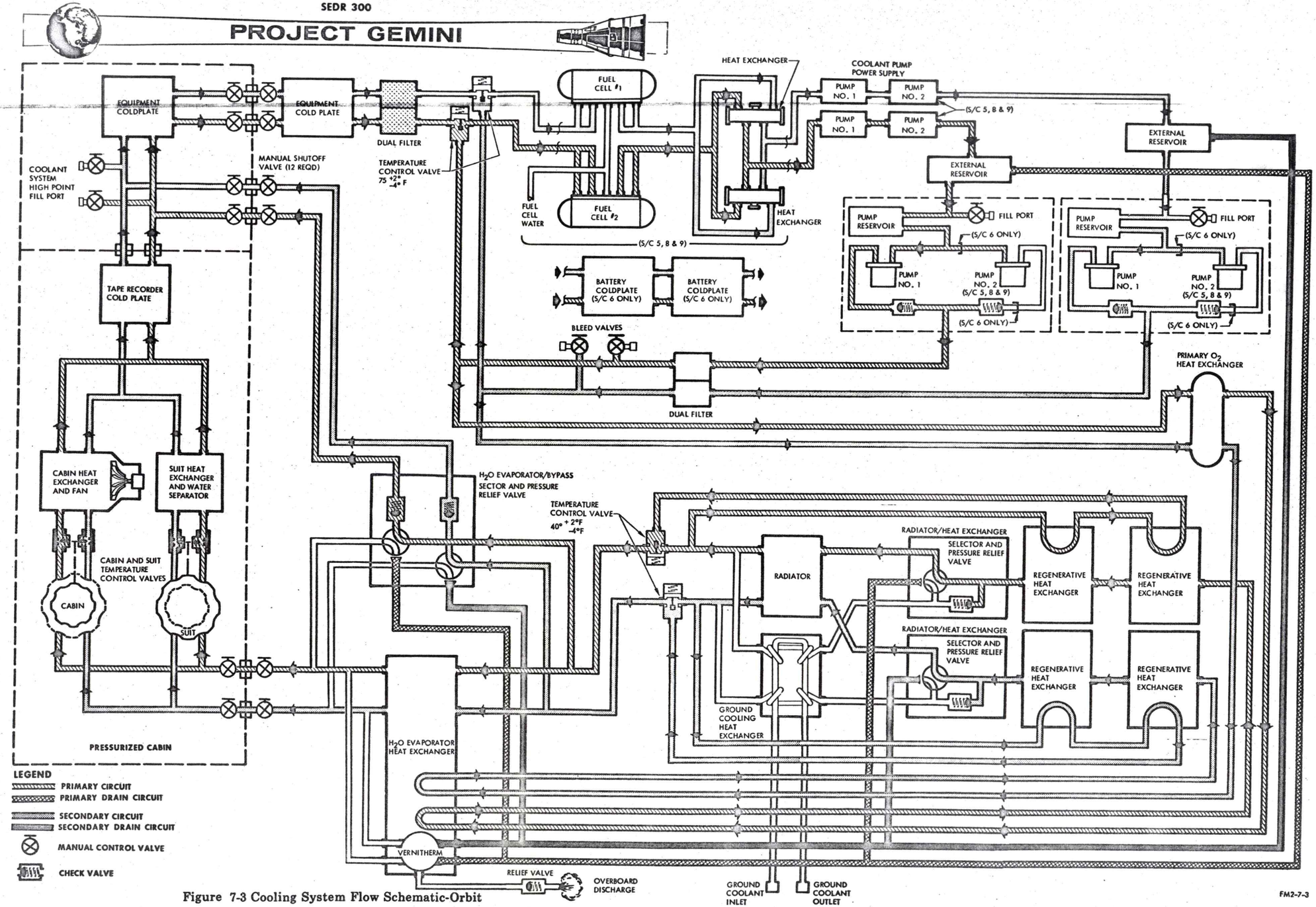

Figure 7-3 Cooling System Flow Schematic-Orbit

FM2-7-3

Prior to retrograde firing, the coolant pump packages, radiators, batteries and various heat exchangers are jettisoned with the adapter equipment section. Prior to adapter jettisoning and retrograde firing the #1 coolant pumps for both the primary and secondary cooling circuits are activated. The suit, cabin, and equipment bays are cooled to as low a temperature as possible, before the adapter equipment section is jettisoned.

SYSTEM UNITS

PUMP PACKAGE (Figure 7-4)

The pump package for each coolant circuit incorporates two constant displacement electrical pumps, two pump inverters, an external reservoir, filters, relief and check valves. The pump package is located in the adapter equipment section. Pump selection is provided by switches on the pilots' center panel. A pump failure warning light is provided on the center panel. When a pump is activated the coolant flows from the reservoir to the pump, which circulates the coolant through the cooling circuit. The coolant returns to an external reservoir that compensates for thermal expansion, contraction, and leakage of the coolant. A 100 micron filter downstream of the pump prevents contamination of the cooling system. Check valves in the pump package prevent the operating pump from pumping coolant into the redundant pump. Flow sensing switches illuminate a pump failure lamp on the pilots' center panel in the event of pump failure.

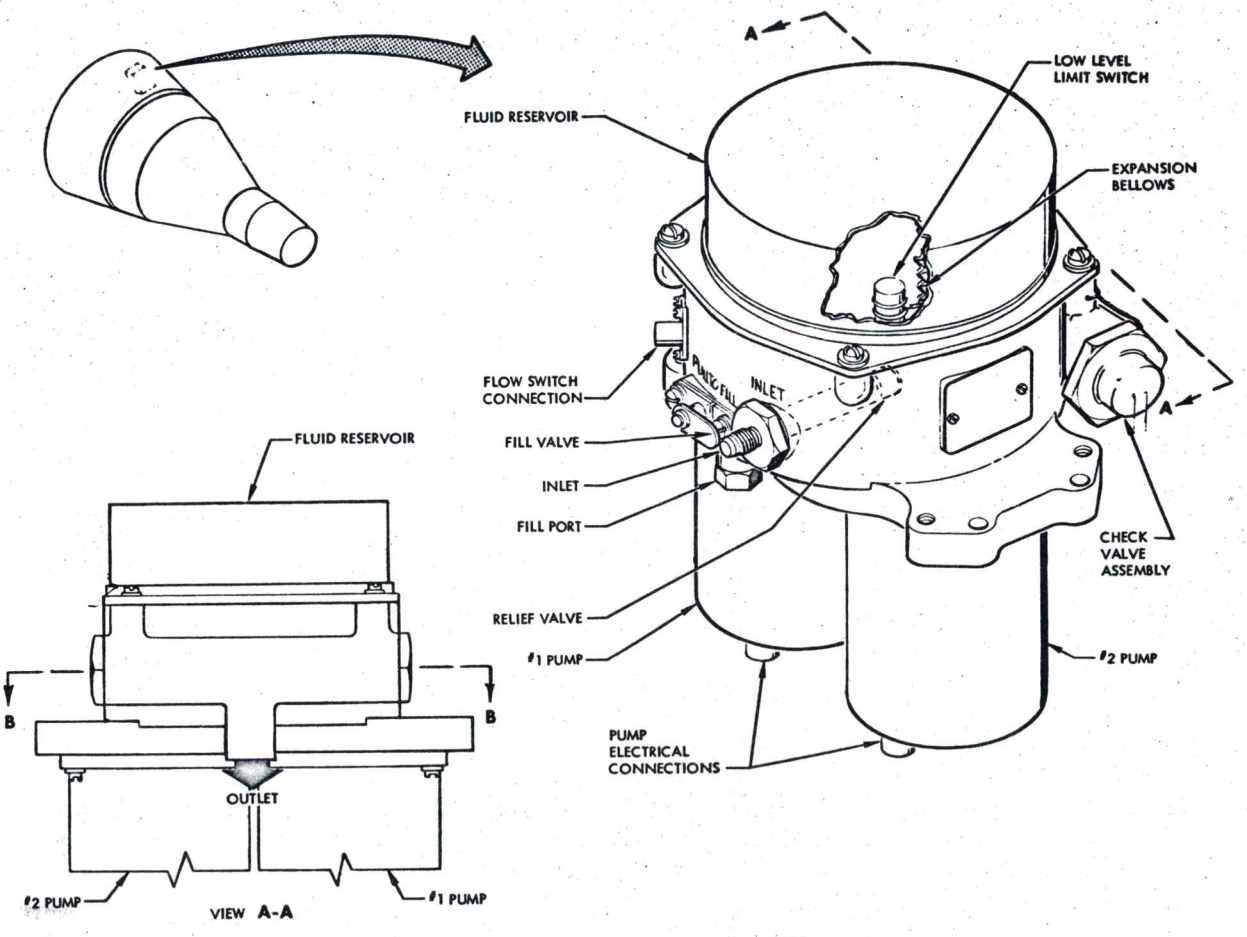

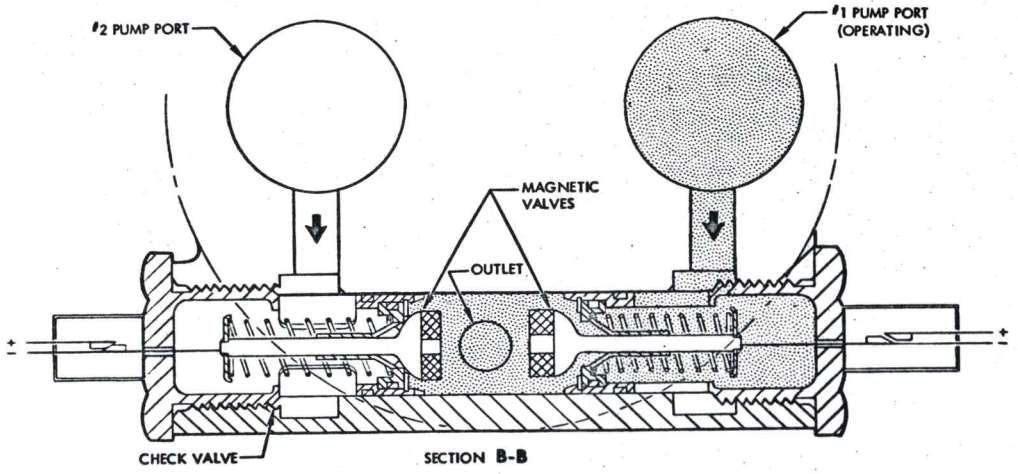

FM2-7-4

Figure 7-4 Coolant Pump Package

RADIATOR (Figure 7-5)

The spacecraft radiator consists of two circumferential radiator panels made of 0.25 inch diameter cooling tubes. There are four sections of tubing to each radiator panel. The tubing is manufactured as part of the spacecraft structure. Each panel incorporates two parallel cooling circuits, one for the primary cooling circuit and the other for the secondary circuit. During orbit the cooling system coolant is circulated through the radiator. The heat of the coolant radiates into space, lowering the temperature of the coolant.

COLDPLATES (Figure 7-6)

The coldplates, other than the battery coldplates, are plate fin constructed units incorporating parallel coolant system passages. Coldplates are fabricated from aluminum. Battery, electrical, electronic and other heat generating components are mounted on coldplates. The coolant flowing through the coldplates absorbs the heat generated by the components, preventing overheating of the operating equipment.

HEAT EXCHANGERS (Figure 7-7, 7-8)

Two types of heat exchangers are used in the spacecraft; namely, plate fin constructed and shell and tube constructed heat exchangers. The suit, cabin, water evaporator, ground cooling and regenerative heat exchangers are of plate fin construction. The primary oxygen heat exchanger is of shell and tube construction. The coolant absorbs heat from the cabin, suit and regenerative heat exchangers. The ground cooling and water evaporator heat exchangers permit

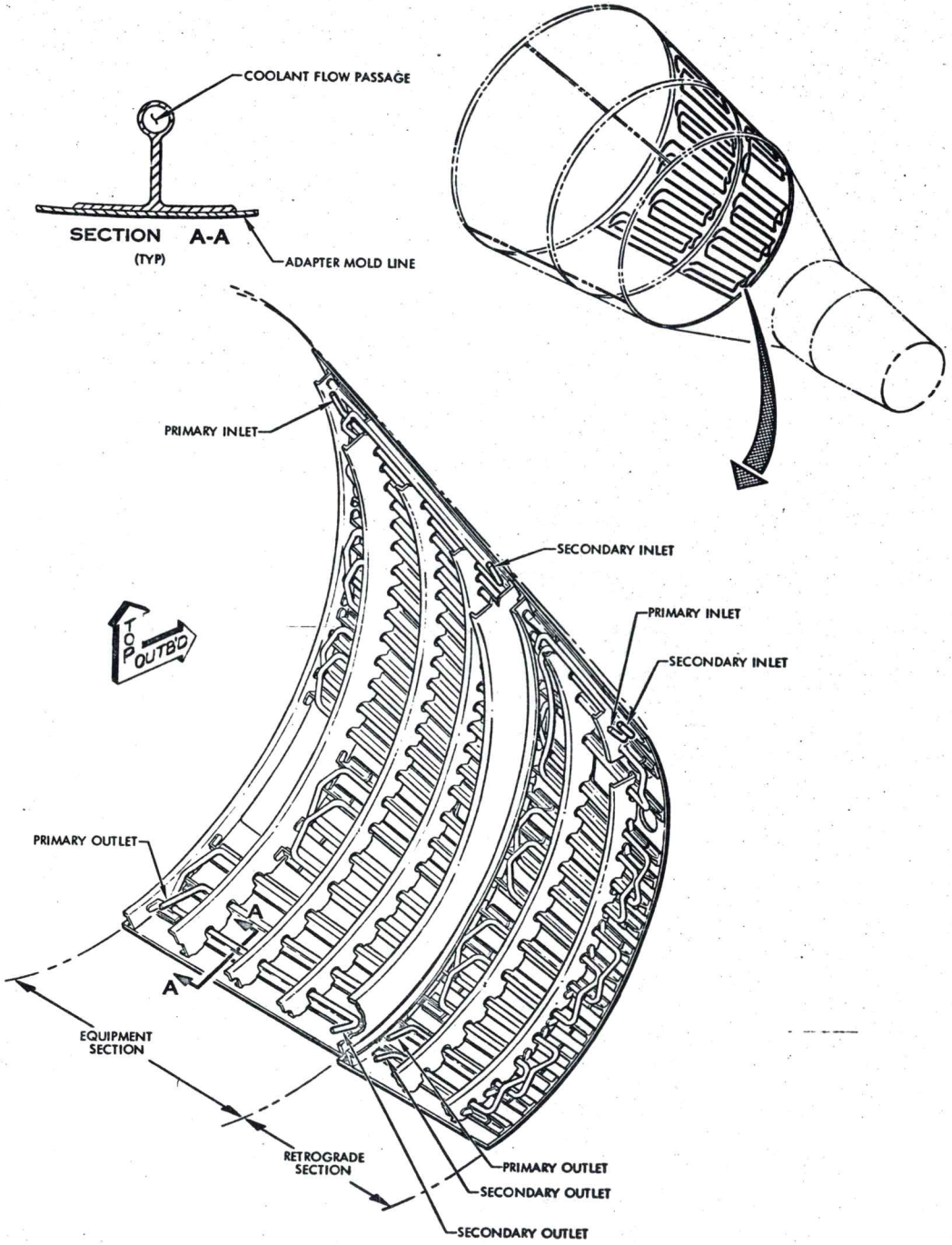

Figure 7-5 Radiator Stringer Assembly

FM2-7-5

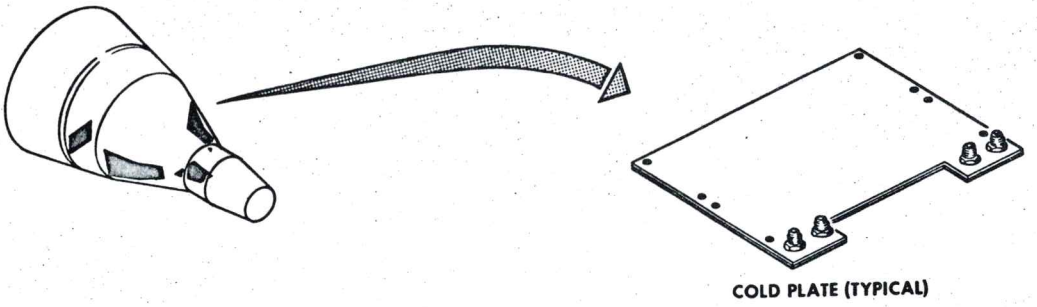

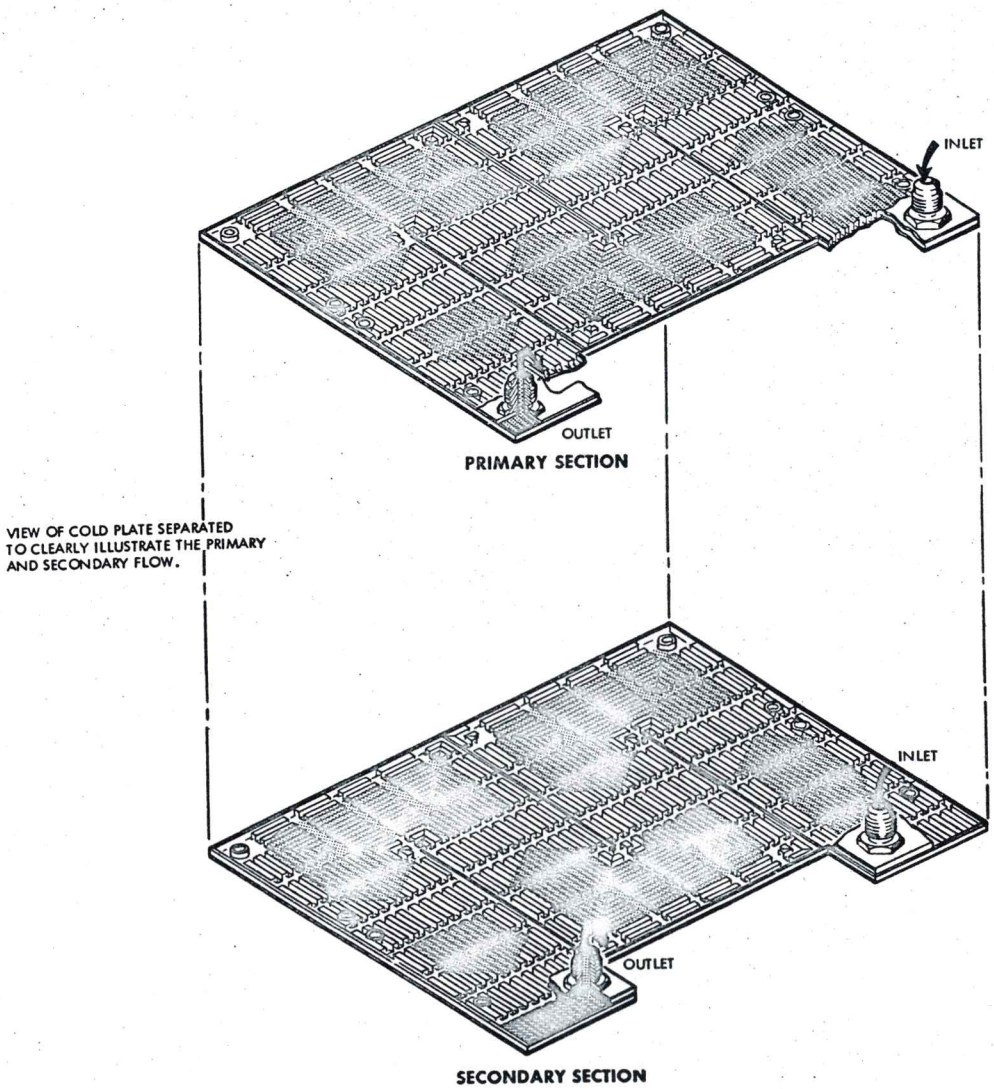

FM2-7-6

Figure 7-6 Cold Plate

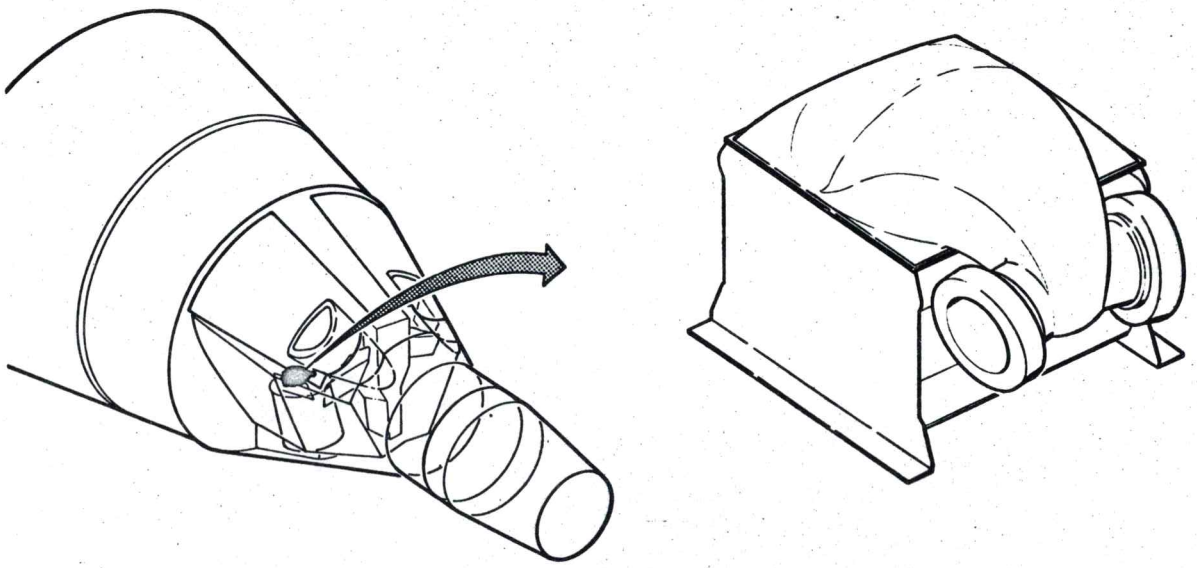

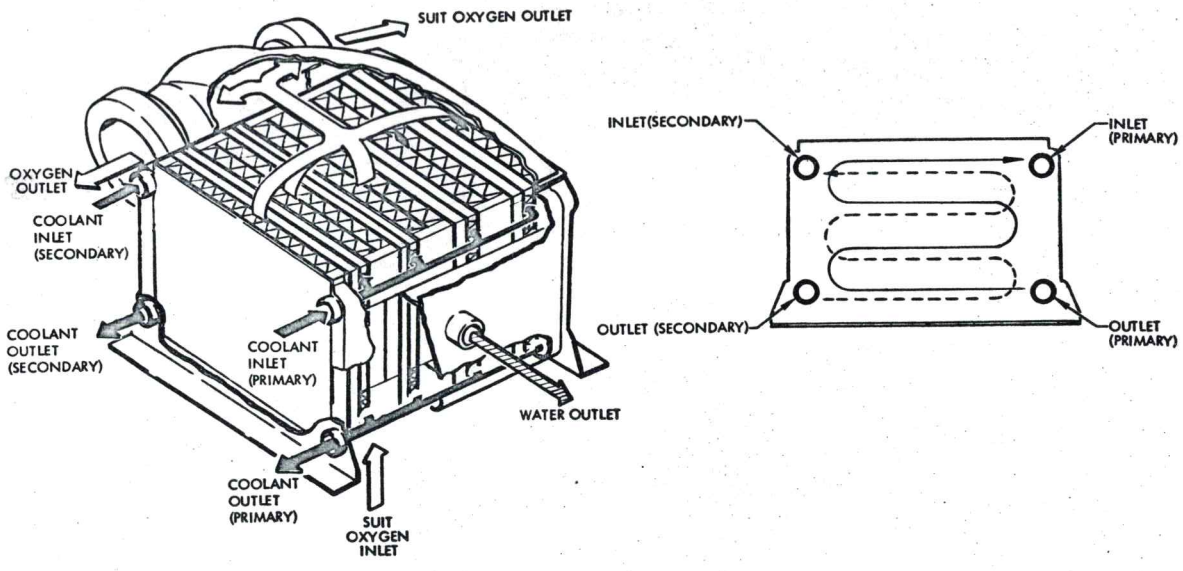

VEIW ROTATED 180°

TYPICAL PLATE FIN CONSTRUCTION

FM2-7-7

Figure 7-7 Heat Exchanger-Suit

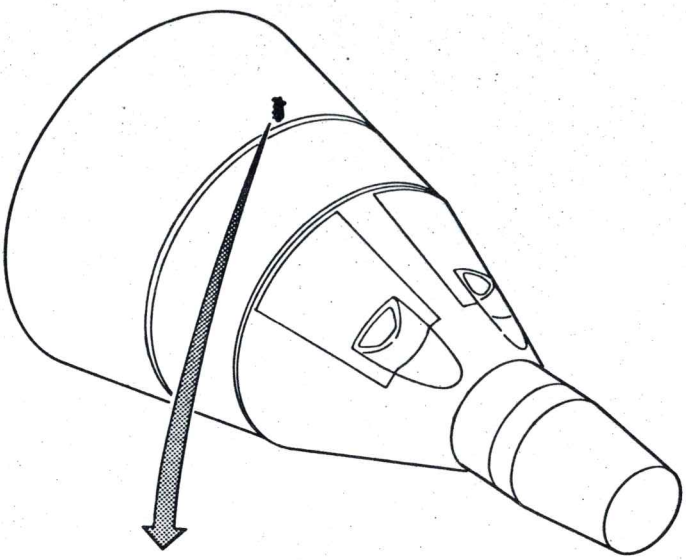

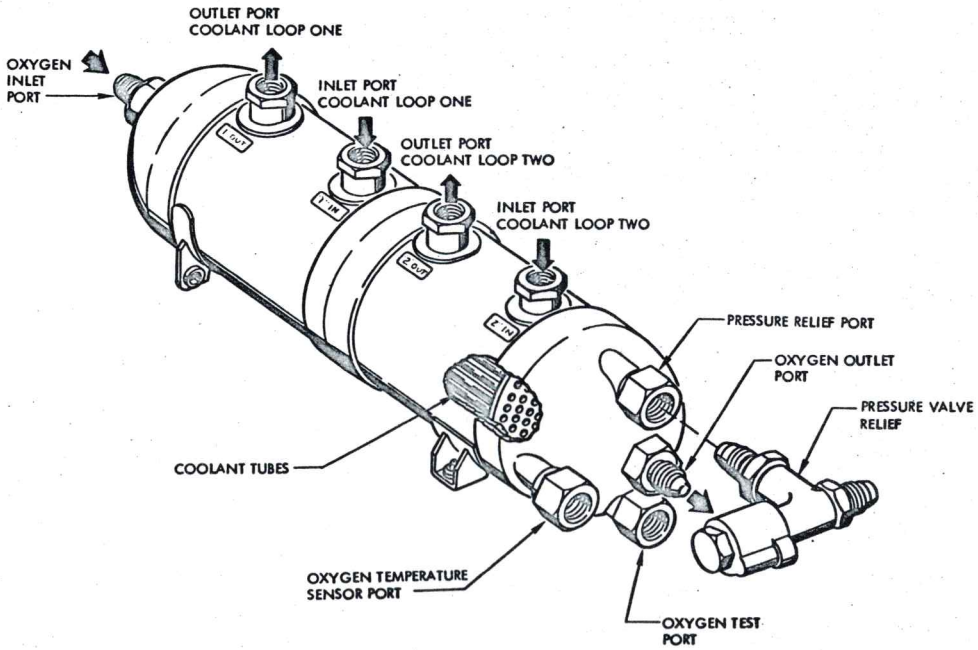

FM2-7-8

Figure 7-8 Coolant Tube Type Heat Exchanger

heat transfer to cool the coolant. The primary oxygen heat exchanger is designed so heat transfer will heat the primary oxygen to a desired temperature.

TEMPERATURE CONTROL VALVE (Figure 7-9)

Temperature control valves are provided in both the primary and secondary cooling circuits. These valves are located at the radiator outlets and at the inlets to the battery coldplates or fuel cells.

The temperature control valve located in the coolant system radiator outlet automatically maintains the coolant outlet temperature at $40\ ^{+20}_{-40}$ F as long as the radiator capacity has not been exceeded.

The temperature control valve located in the battery coldplate inlet automatically maintains the coolant inlet temperature at $75\ ^{+30}_{-40}$ F or above.

The temperature control valve contains a piston that regulates the inlet flow to the valve. The piston is spring loaded on one side. A thermostatic actuator on the opposite side of the piston determines piston movement, which in turn regulates the coolant flow through the valve. The thermostatic actuator, which is located to accurately sense mixing temperature, consists of an encapsulated wax pellet that expands or contracts as temperature varies. As temperature around the pellet increases, the wax expands exerting pressure on the diaphragm. The diaphragm moves a piston, which in turn controls the inlet flow to the valve. Temperature reduction around the wax decreases the pressure in the pellet cup allowing the spring to reposition the piston regulating the flow of coolant through the valve.

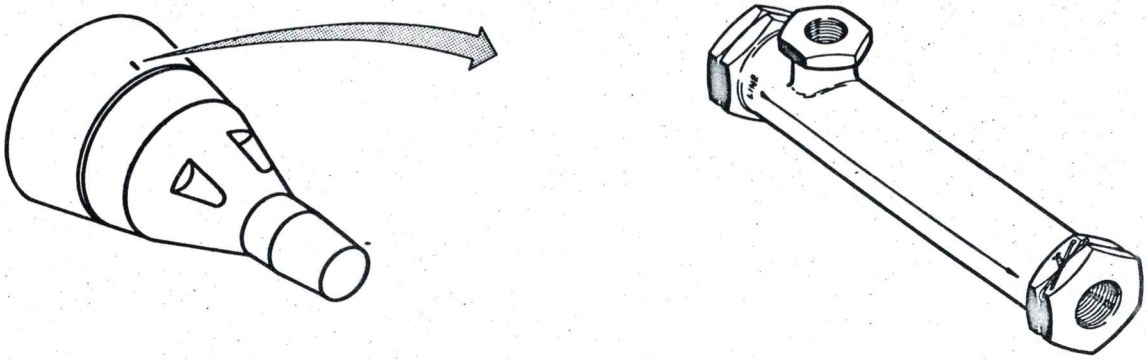

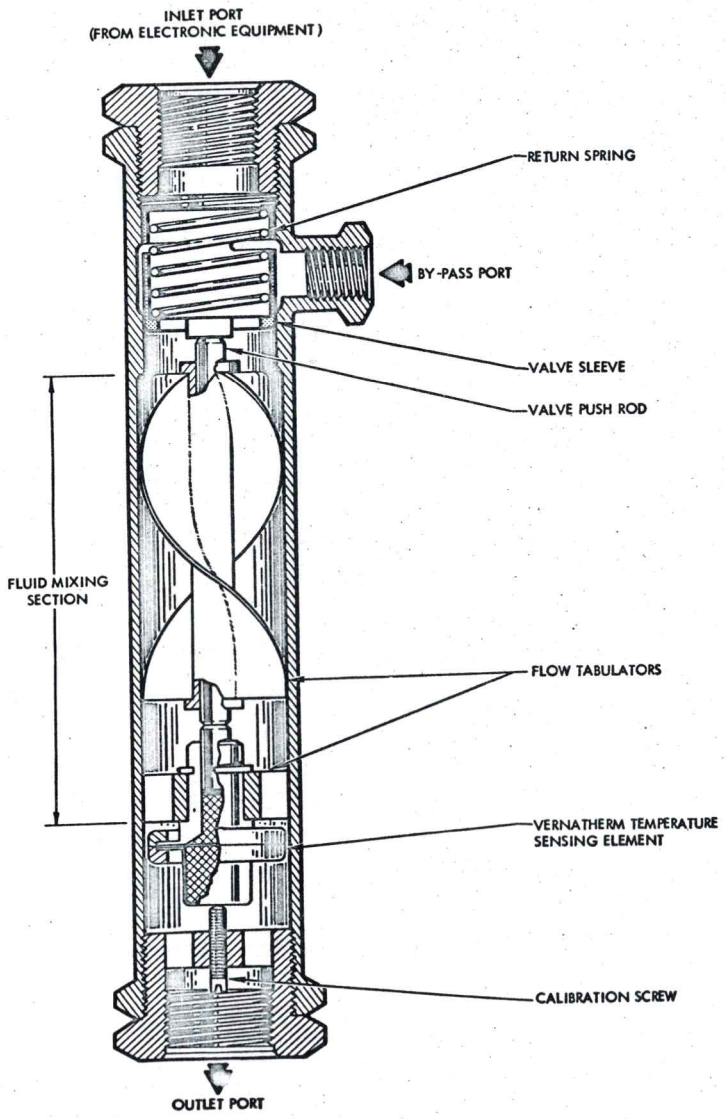

FM2-7-9

Figure 7-9 Coolant Temperature Control Valve

LAUNCH COOLING HEAT EXCHANGER (Figure 7-10, 7-11)

The launch cooling heat exchanger is located in the adapter section. Via its relief valve it can dump liquids overboard, or if the temperature control valve senses temperatures greater than 50°F, it can control the outlet temperature of the primary and secondary coolants to $46^{+40}_{-2^{o}}$ F. In addition, it serves as a water reservoir, storing water until it is needed for cooling.

This evaporator consists of a wicking type heat exchanger and is capable of storing seven pounds of water. A temperature control valve has been set to control the outlet coolant temperature to $46^{o}\ ^{+40}_{-2^{o}}$ F. A relief valve opens and allows excess water to be dumped overboard at 2.75 ± 0.25 psid and reseats at 2.0 psid minimum. An electrical heater is provided in the poppet to prevent ice formation. Coolant flow capacity is 366 lb/hr at 40°F. Water flow capacity is 3 lb/min when cooling is not required from the evaporator. Maximum operating pressure in the fluid heater coolant circuits is 230 psig, and 100 psig in the core circuits. Maximum operating pressure in the water circuit is 20 psig with exit port relief valve in normal operation.

The steam exit duct is continuously heated by coolant coming from the primary oxygen heat exchanger to prevent ice formation.

A loss of pressure in either coolant loop will not affect the operation of the valve.

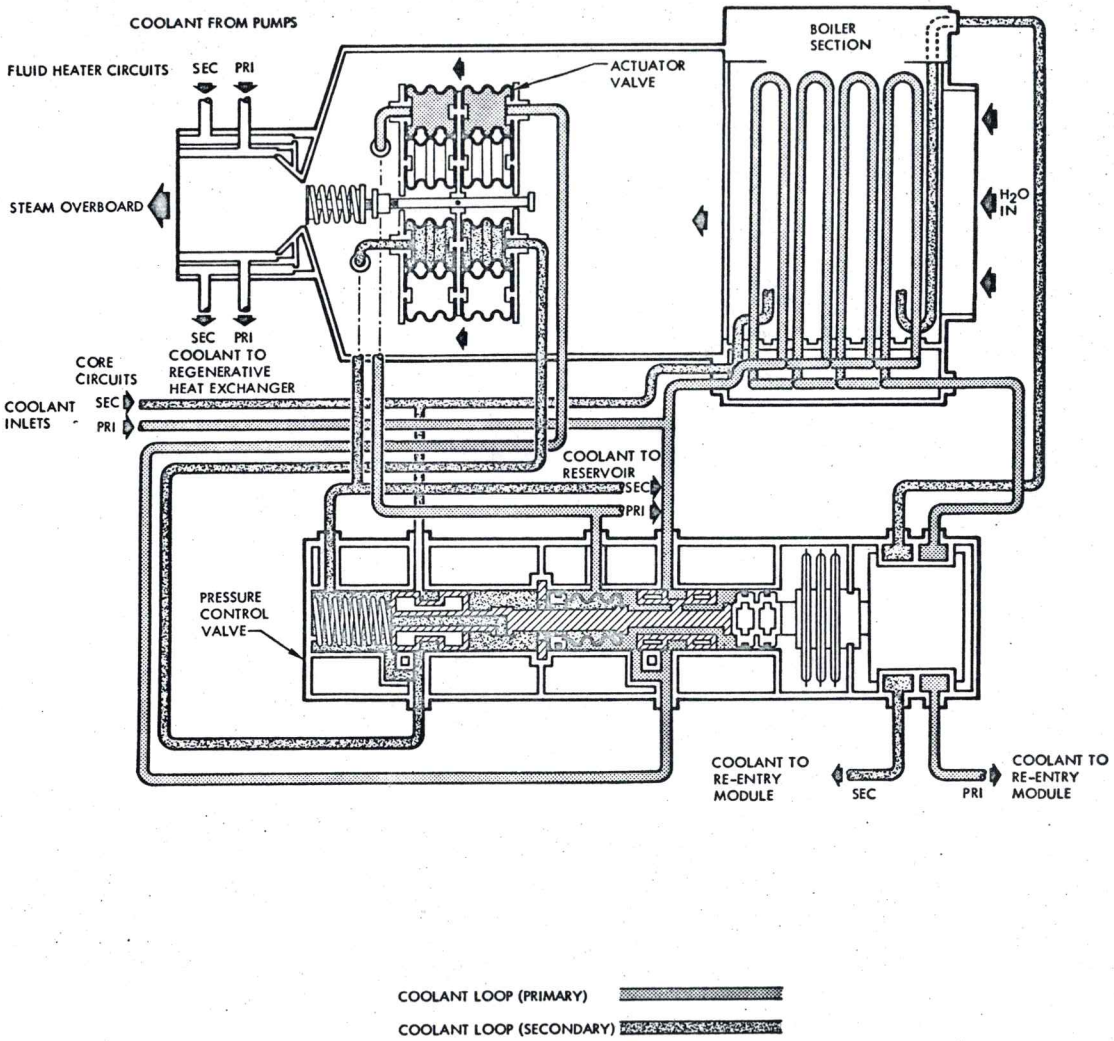

Figure 7-10 Launch Cooling Heat Exchanger Schematic

FM2-7-10

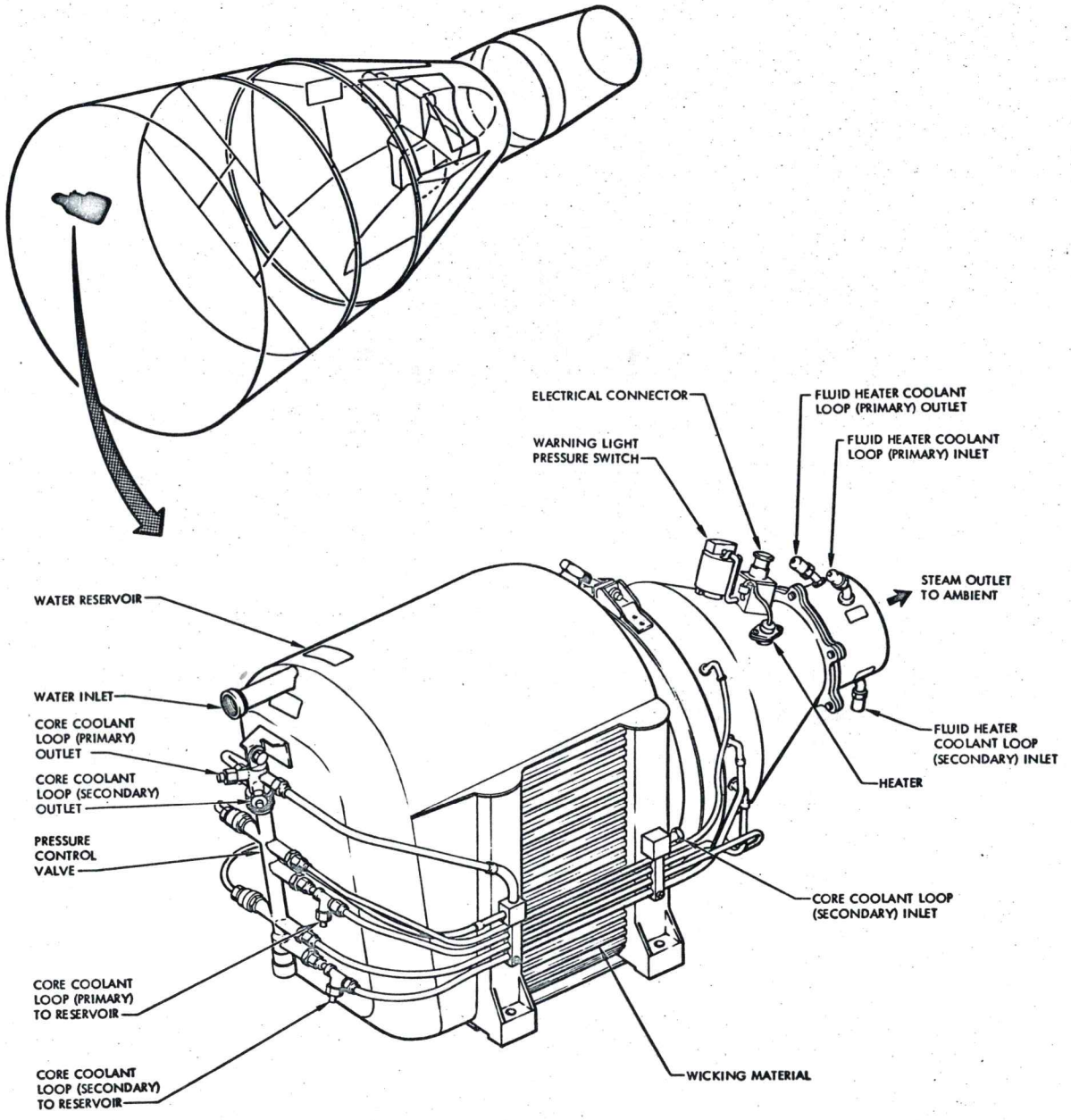

FM2-7-11

Figure 7-11 Launch Cooling Heat Exchanger

GUIDANCE and CONTROL SYSTEM

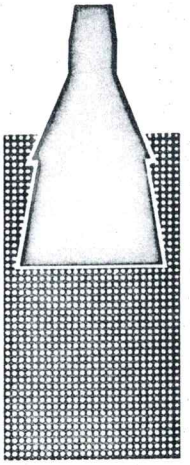

Section VIII

REFER TO THE SEDR 300 CONFIDENTIAL SUPPLEMENT FOR INFORMATION CONCERNING THE GEMINI GUIDANCE AND CONTROL SYSTEM.

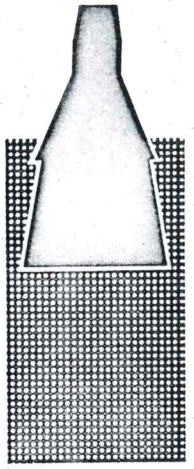

COMMUNICATION SYSTEM

Section IX

TABLE OF CONTENTS

TITLE	PAGE
SYSTEM DESCRIPTION	9-3
ANTENNAS	9-3
BEACONS	9-5
VOICE COMMUNICATIONS	9-7
TELEMETRY TRANSMITTERS	9-7
FLASHING RECOVERY LIGHT	9-8
DIGITAL COMMAND SYSTEM (DCS)	9-8
SYSTEM OPERATION	9-8
VOICE TAPE RECORDER	9-8
PRE-LAUNCH	9-9
SPACECRAFT/LAUNCH VEHICLE SEPARATION	9-12
ORBIT	9-13
ADAPTER SEPARATION	9-17
RE-ENTRY	9-18
LANDING THROUGH RECOVERY	9-19
SYSTEM UNITS	9-21
ANTENNAS	9-21
BEACONS	9-39
VOICE COMMUNICATION	9-51
TELEMETRY TRANSMITTERS	9-64
FLASHING RECOVERY LIGHT AND POWER SUPPLY	9-67
DIGITAL COMMAND SYSTEM	9-69

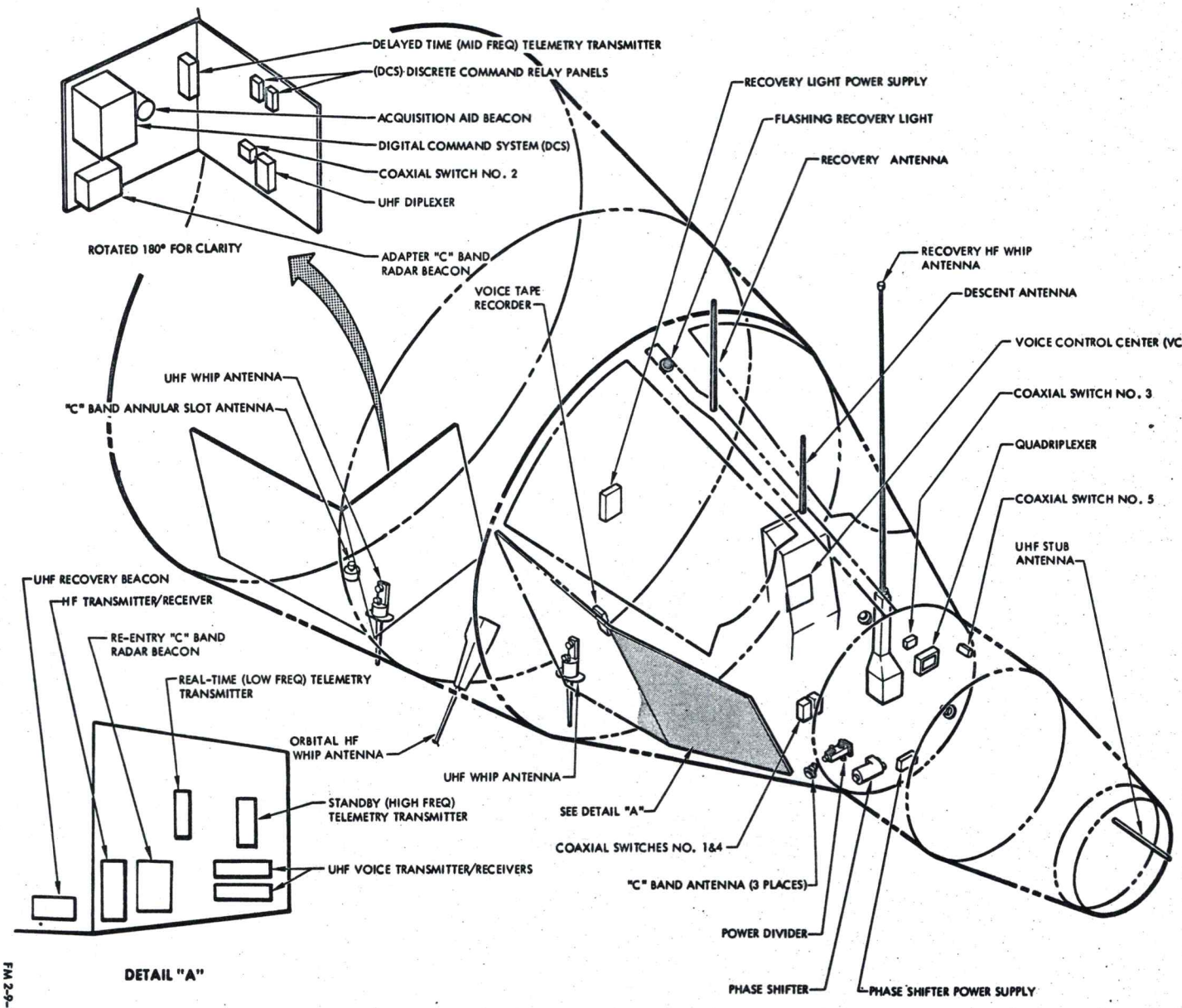

Figure 9-1 Communication System

FM 2-9-1

SECTION IX COMMUNICATION SYSTEM

SYSTEM DESCRIPTION

The communication system provides the only communication link between the ground and the Gemini Spacecraft. The system provides for the following capabilities: radar tracking of the spacecraft; two-way voice communications between the ground and the spacecraft, and between the Flight Crew; ground command to the spacecraft; instrumentation system data transmission, and postlanding and recovery aid data transmission. To make possible these various capabilities, the communication system contains components that may be divided into the following categories: antennas, including multiplexers and coaxial switches; beacons; voice communications; telemetry transmitters; flashing recovery light; and digital command system. The flashing Recovery Light and the UHF Recovery Beacon are grouped together in a category called the electronic recovery aids (ERA).

The communication system components are located throughout the spacecraft with the largest concentration being in the right equipment bay of the re-entry module and the electronic module of the quipment adapter as illustrated in Figure 9-1.

ANTENNAS

Eight antennas and one antenna system provide transmission and/or reception capabilities for the various communication system components. The spacecraft communication system (Figure 9-2) contains the following antennas: UHF Recovery; UHF Stub; UHF Descent; two UHF Whips; two HF Whips; C-Band Annualr Slot; and C-Band Antenna System consisting of a power divider, a phase shifter, phase shifter power supply,

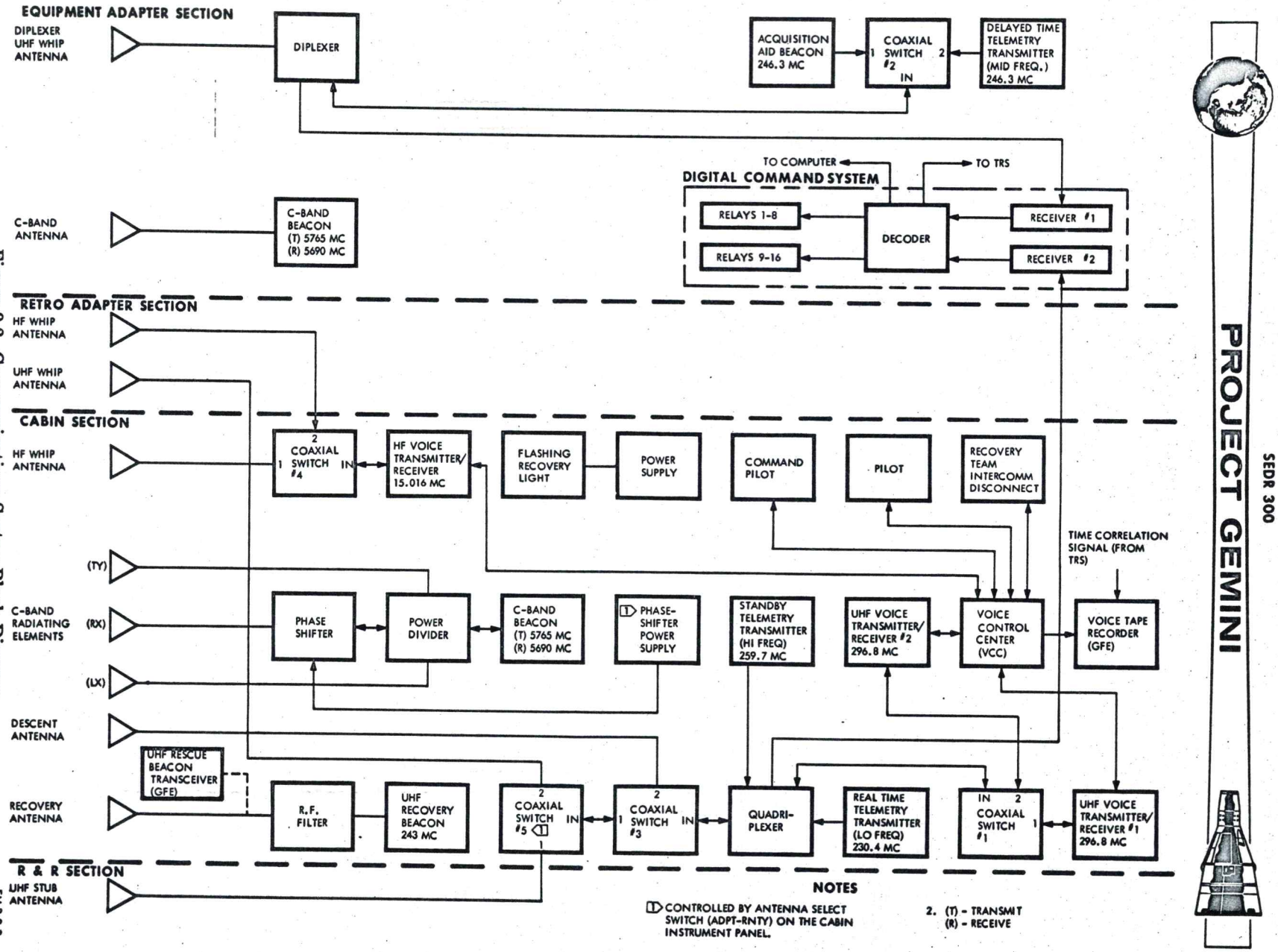

Figure 9-2 Communications System Block Diagram

and three radiating elements. Antenna usage is illustrated in Figure 9-3 and described in the individual antenna description.

To provide most efficient antenna usage, a diplexer and a quadriplexer are utilized with the UHF Whips and the UHF Stub Antenna. The multiplexers make it possible to use more than one transmitter and/or receiver with a single antenna.

Five coaxial switches allow antenna and transmitter/receiver switching for best communication coverage during the various phases of the mission (launch, orbit, re-entry and recovery).

BEACONS

Four beacons provided by the communication system establish the capability of tracking and locating the spacecraft during the entire spacecraft mission. The four beacons are: An Acquisition Aid Beacon and a Recovery Beacon used to locate the spacecraft, and two C-Band Beacons used to track the spacecraft. The Acquisition Aid Beacon, operating on a fixed frequency, is used to determine when the spacecraft is within the range of a ground tracking station, and provides information for orientating the ground station antennas during the orbital phase of the mission. The Recovery Beacon is a transmitter that operates on the international distress frequency, and is used by the recovery forces to determine the spacecraft's location.

The C-Band Beacons are transponders which, when properly interrogated by a ground station, provide signals for accurate spacecraft tracking.

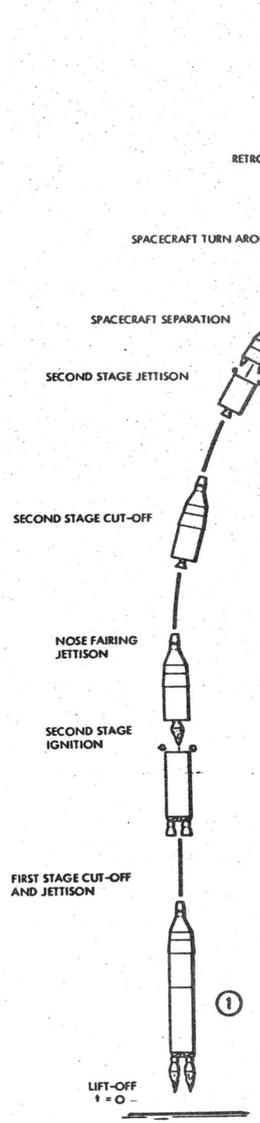

(1) PRE-LAUNCH:

RE-ENTRY C-BAND BEACON-ON (CONT.)
ADAPTER C-BAND BEACON (CMD)
RECOVERY BEACON-OFF
ACQUISITION AID BEACON-OFF
UHF T/R NO. 1 - ON
[1] UHF T/R NO. 2 - OFF
HF T/R-OFF
AUDIO NO. 1 AND NO. 2-ON
TONE GENERATOR-OFF
DIGITAL COMMAND SYSTEM (D.C.S.)-ON
REAL TIME TELEMETRY (R/T-TM)-ON
DELAYED TIME TELEMETRY (D/T-TM)-CMD
STANDBY TELEMETRY (STBY-TM) -OFF
HF WHIP ANTENNAS-RETRACTED
UHF WHIP ANTENNA-RETRACTED
DIPLEXER WHIP ANTENNA-RETRACTED
RECOVERY ANTENNA-RETRACTED
DESCENT ANTENNA-RETRACTED
FLASHING RECOVERY LIGHT-OFF

ANTENNA USAGE:
UHF VOICE T/R, R/T-TM, D.C.S. RCVR. NO. 2 } UHF STUB ANT.
RE-ENTRY C-BAND BEACON AND ANTENNA SYSTEM
[1] ADAPTER C-BAND BEACON AND SLOT ANTENNA

(2) S/C SEPARATION:

DIPLEXER WHIP ANT.-EXTENDED (AUTOMATIC)
UHF WHIP ANT.-EXTENDED (AUTOMATIC)
ACQUISITION AID BEACON-ON (AUTOMATIC)

ANTENNA USAGE:
UHF VOICE T/R, R/T-TM, D.C.S. RCVR. NO. 2 } UHF STUB ANT.
D.C.S. RCVR. NO. 1, ACQ.AID BEACON } DIPLEXER WHIP ANT.
RE-ENTRY C-BAND BEACON AND ANTENNA SYSTEM
[1] ADAPTER C-BAND BEACON AND SLOT ANTENNA

(3) ORBIT

VOICE:
HF T/R-ON
UHF NO. 1 T/R ([1] OR UHF NO. 2 T/R)-ON

TRACKING:
ADAPTER C-BAND BEACON ([4] OR RE-ENTRY C-BAND BEACON) -ON [2]
ACQ.AID BEACON-ON (WHEN D/T-TM IS OFF) [2]
RECOVERY BEACON-OFF

TELEMETRY:
R/T-TM ([1] OR STBY TM) -ON [2]
D/T-TM ([1] OR STBY TM) -ON (WHEN ACQ.AID BEACON IS OFF) [2]

COMMAND:
D.C.S. - ON

ANTENNA USAGE:
UHF VOICE T/R, R/T-TM, D.C.S. RCVR-NO. 2 } UHF WHIP ANT. [3] OR UHF STUB ANT.
HF VOICE TR-ORBITAL WHIP ANTENNA
ACQ. AID BEACON, D/T-TM, D.C.S. RCVR.NO. 1 } DIPLEXER WHIP ANT.
ADAPTER C BAND BEACON AND SLOT ANTENNA
[4] RE-ENTRY C BAND BEACON AND ANTENNA SYSTEM

(4) RE-ENTRY PREPARATION:

[4] HF T/R-OFF

ANTENNA USAGE:
UHF VOICE T/R NO. 1 ([1] UHF VOICE T/R NO. 2) } UHF STUB ANT.
R/T-TM ([1] STBY-TM)
D.C.S. RCVR.NO. 2
ACQ.AID BEACON, D/T-TM, D.C.S. RCVR. NO. 1 } DIPLEXER WHIP ANT.
RE-ENTRY C-BAND BEACON AND ANTENNA SYSTEM

(5) EQUIPMENT ADAPTER SEPARATION:

EQUIPMENT JETTISONED:
D.C.S.
D/T-TM
DIPLEXER
DIPLEXER WHIP ANT.
C-BAND SLOT ANTENNA
ADAPTER C-BAND BEACON
ACQ AID BEACON
COAXIAL SW. NO. 2

ANTENNA USAGE:
UHF VOICE T/R NO. 1 ([1] UHF T/R NO. 2) } UHF STUB ANT.
R/T-TM ([1] STBY-TM)
RE-ENTRY C-BAND BEACON AND ANTENNA SYSTEM

(6) MAIN CHUTE TWO POINT SUSPENSION:

ANTENNA USAGE:
DESCENT ANT.-EXTENDED (AUTOMATIC)
RECOVERY ANT.-EXTENDED (AUTOMATIC)
UHF RECOVERY BEACON-ON (MANUAL SWITCH)
UHF VOICE T/R NO. 1 ([1] UHF T/R NO. 2) } DESCENT ANT.
R/T-TM ([1] STBY-TM)
RECOVERY BEACON-RECOVERY ANT.
RE-ENTRY C-BAND BEACON AND ANTENNA SYSTEM

DURING THIS PERIOD COMMUNICATION IS LIMITED TO C-BAND BEACON WHILE ANTENNAS ARE AUTOMATICALLY SWITCHED AND EXTENDED

(7) POST LANDING:

RE-ENTRY C- BAND BEACON-OFF
RECOVERY BEACON-ON
UHF T/R NO. 1 ([1] OR UHF T/R NO. 2)-ON
HF T/R-ON
HF/DF (TONE GENERATOR-ON) OR VOICE
TRS-OFF
R/T-TM ([1] STBY-TM) -MANUAL OFF
FLASHING RECOVERY LIGHT-ON (MANUAL SWITCH)
RECOVERY HF WHIP ANT.-EXTENDED (MANUAL SWITCH)
RECOVERY ANT.-EXTENDED
DESCENT ANT.-EXTENDED

ANTENNA USAGE:
UHF VOICE T/R-DESCENT ANT.
HF T/R, (HF/DF OR VOICE) } RECOVERY HF WHIP ANTENNA
RECOVERY BEACON-RECOVERY ANT.

NOTES

[1] BACK-UP EQUIPMENT (USED IN THE EVENT OF A MALFUNCTION IN THE PRIMARY UNIT)

[2] EQUIPMENT TURNED ON AND OFF OVER GROUND STATIONS BY THE FLIGHT CREW OR A GROUND COMMAND TRANSMITTED TO THE D.C.S. IN THE SPACECRAFT.

[3] PREFERRED ANTENNA-USED EXCEPT DURING UNCONTROLLED FLIGHT

[4] USED DURING ORBITAL MANEUVERS AND AS BACK-UP EQUIPMENT

Figure 9-3 Communication System Sequential Diagram FM2-9-3

During the recovery phase of the mission, the UHF Rescue Beacon Transceiver, which is government furnished equipment, (GFE) may be connected to the UHF Recovery Antenna.

VOICE COMMUNICATIONS

Voice communications are provided by one HF and two UHF Transmitter/Receivers and the Voice Control Center (VCC). The VCC contains all necessary controls and switches required for various keying modes, transmitter/receiver selection, squelch, volume control, and voice recording. The HF Voice Transmitter/Receiver may also be used for direction finding (DF) purposes during the postlanding phase of the mission.

An intercom connector is provided to enable communications between the Flight Crew and Recovery Team, prior to opening the spacecraft hatches during the recovery phase of the mission. Lightweight headsets are supplied for use when the spacesuit helmets are removed during orbit, or during postlanding if the helmets or entire spacesuit is removed prior to recovery.

TELEMETRY TRANSMITTERS

Receiving inputs from the pulse code modulated (PCM) programmer and the on-board tape recorder, three telemetry transmitters transmit vital spacecraft systems parameters to the ground stations. The three transmitters operate on different frequencies and are identified as real-time, delayed-time, and stand-by transmitters. The stand-by transmitter is only used in case of real-time, or delayed-time transmitter failure.

FLASHING RECOVERY LIGHT

The Flashing Recovery Light, used during the postlanding phase of the mission, contains its own power supply and improves visual spacecraft location.

DIGITAL COMMAND SYSTEM (DCS)

The Digital Command System provides the command capability between the ground and the spacecraft. The DCS consists of two UHF receivers, a decoder, and two relay packages and is operational from pre-launch until equipment adapter section separation. Basically, the DCS receives and decodes two types of commands: a real-time command (RTC) for spacecraft equipment utilization, or stored program commands (SPC) that provide digital information for various spacecraft systems. Real-time commands operate DCS relays that control power directly or energize relays in the spacecraft electrical system that determine equipment usage. Stored program commands are received and decoded for usage by either the Time Reference System (TRS), or the Spacecraft Computer.

SYSTEM OPERATION

The Communication System is semi-automatic in operation. The sequence and theory of operation of the Communication System is as described in the following paragraphs and as referenced in Figures 9-2 and 9-3. Individual components are described in greater detail under Systems Units.

VOICE TAPE RECORDER

Voice tape recordings may be made during the mission, in accordance with the applicable flight plan, by either MODE switch on the VCC being placed to the RCD position. The TONE VOX, AUDIO & UHF T/R 1 and 2 circuit breakers must be in the

ON position. Each tape cartridge allows approximately one hour of recording time and is easily changed by the pilot. An end-of-tape light on the voice recorder illuminates for two seconds when two minutes of recording time remains on the tape. The end-of-tape light remains lighted when the end of the tape is reached. A digital timing signal is applied to one channel of the tape for time correlation of the voice recording.

PRE-LAUNCH

C-Band Radar Beacons

During pre-launch the BEACONS-C circuit breaker is placed to the ON position to arm the C-RNTY and C-ADPT BEACON CONTROL switches. The C-RNTY switch is placed in the CONT position during pre-launch to enable the Re-entry C-Band Beacon to transpond when properly interrogated by a ground station. The C-ADPT switch is placed in the CMD position during pre-launch. The CMD position enables the ground station during launch, to activate the Adapter C-Band Beacon via a DCS channel if the need arises. After the Adapter C-Band Beacon is activated, it will transpond when properly interrogated by a ground station.

The C-Band Antenna System, used with the Re-entry C-Band Beacon, is energized when the ANT SEL switch is placed in the RNTY position. The ANT SEL switch is armed when the COAX CNTL circuit breaker is positioned to ON. The ANT SEL switch controls application of power to the phase shifter power supply in the C-Band Antenna System.

UHF Transmitter/Receiver

The No. 1 UHF Voice Transmitter/Receiver will be utilized during pre-launch unless some malfunction occurs in which case the No. 2 Transmitter/Receiver can be selected. For operation of the No. 1 or No. 2 UHF Voice Transmitter/Receiver, stand-by power is applied through the AUDIO & UHF T/R 1 and 2 circuit breakers which must be in the ON position. The selected Transmitter/Receiver will be powered by placing the UHF Select Switch to either the No. 1 or No. 2 position and the MODE switch of No. 1 or No. 2 AUDIO to the UHF position. The UHF Select switch also operates Coaxial Switch No. 1 to connect the UHF Transmitter/Receiver to the quadriplexer. Coaxial switch power is obtained from the common control bus through the ON position of the UHF RELAY circuit breaker. The method of keying the UHF Transmitter/Receiver is selected by positioning the KEYING switch on the VCC to VOX (voice operated relay), PTT (push-to-talk), or CONT INT/PTT (continuous intercom/push-to-talk transmitter keying).

The desired antenna usage is determined by placing the ANT CNTL circuit breaker to the ON position. This places Coaxial Switch No. 3 to position No. 1; thus connecting the quadriplexer to the IN position of the Coaxial Switch No. 5. Coaxial Switch No. 5 was placed in position No. 1 when the ANT SEL switch was placed in the RNTY position during the C-Band Beacon operation. With Coaxial Switch No. 5 in position 1, the UHF Stub Antenna is available for UHF voice transmission and reception. Prior to umbilical release, voice communication is accomplished between the spacecraft and the ground complex through a hardline utilizing the headset and microphone amplifiers of the VCC. After umbilical

release, voice transmission to the ground complex is accomplished by means of the UHF Voice Transmitter/Receiver.

Real-Time Telemetry Transmitter

The Real-Time Telemetry Transmitter will be operating during the pre-launch phase of the mission. The Real-Time Telemetry Transmitter is powered by placing the RT XMTR circuit breaker in the ON position and placing the TM CONTROL switch to the R/T & ACQ position.

The Real-Time Telemetry Transmitter utilizes the UHF Stub Antenna via the quadriplexer and Coaxial Switch No. 3 and No. 5 the same as the UHF Transmitter/Receiver.

In case of failure of the Real-Time Telemetry Transmitter, the Stand-by Telemetry Transmitter may be used for Real-Time Transmission. To operate the Stand-by Transmitter, the STBY XMTR CNTL and PWR circuit breakers must be in the ON position. Selection can then be made by a ground command via the DCS channel, if the STBY TM CONTROL is in the OFF position. If the selection is made by the Flight Crew, the STBY TM CONTROL switch will be placed in the R/T position. The Stand-by, operating as the Real-Time Telemetry Transmitter, utilizes the UHF Stub Antenna for transmission.

Non-Operational Components

All components other than those described previously will be non-operational, except for the DCS, during the pre-launch phase of the mission. To assure the off condition of those components, the following switches should be in the position specified below:

HF Select (on VCC)	OFF
BEACON CONTROL - RESC	OFF
HF ANT	OFF

To assure proper sequential actuation of the various communication components, the following circuit breakers (in addition to those previously described) must be placed into the ON position prior to launch:

WHIP ANTENNAS	-	HF
WHIP ANTENNAS	-	UHF
WHIP ANTENNAS	-	DIPLEX
HF T/R	-	ON
BEACONS	-	ACQ
BEACONS	-	RESC
XMTRS	-	DT
TAPE RCDR	-	CNTL

SPACECRAFT/LAUNCH VEHICLE SEPARATION

Equipment usage after Spacecraft/Launch Vehicle Separation is identical to that described under pre-launch except for the following: Upon closure of any two of the three spacecraft separation sensors the Acquisition Aid Beacon will be energized. The UHF Whip Antenna solenoid actuators will be powered and initiate the release mechanism of the UHF Whip Antennas, on the retrograde and equipment adapter sections, allowing them to self extend.

The Acquisition Aid Beacon transmits via the diplexer and UHF Whip Antenna on the equipment adapter section. Placing the TAPE RCDR-CNTL circuit breaker to ON and the TM CONTROL switch to R/T & ACQ during pre-launch places Coaxial Switch No. 2 in position No. 1 to connect the Acquisition Aid Beacon to the diplexer.

ORBIT

During orbit, operation of the Telemetry Transmitters and Beacons will normally be controlled by ground commands via DCS Channels. To operate from ground commands the C-ADPT, C-RNTY and T/M CONTROL switches are placed in the CMD position.

HF Voice Transmitter/Receiver

During orbit HF communications is via the Orbital HF Whip Antenna on the retro adapter section. At orbital insertion the Flight Crew will extend the Orbital HF Whip by placing the HF ANT switch to the EXT position. This also places Coaxial Switch No. 4 in position No. 2 to allow HF voice transmission and reception via the Orbital HF Whip. On Spacecraft 5, power is also applied to the retract mechanism of the Recovery HF Whip on the re-entry module to assure it remains in the retracted position. After extension of the Orbital HF Whip (approximately one minute) the HF ANT switch is returned to the OFF position.

Stand-by power is applied to the HF Transmitter/Receiver by the HF T/R circuit breaker which was positioned to ON during pre-launch. The HF Transmitter/Receiver is powered by positioning the HF select switch (on the VCC) to RNTY and the MODE switch of No. 1 or No. 2 AUDIO to HF. The method of keying the HF Transmitter/Receiver is selected by positioning the KEYING switch on the VCC to VOX (voice operated relay), PTT (push-to-talk) or CONT INT/PTT (continuous intercom/push-to-

talk transmitter keying). During orbit either of the three keying modes may be selected by the Flight Crew.

UHF Voice Transmitter/Receiver

UHF Voice Transmitter/Receiver operation is identical to that described under pre-launch with the following exception. Preferred antenna usage during orbit for UHF transmission and reception is via the retro adapter UHF Whip Antenna. The retro adapter UHF Whip Antenna is selected by placing the ANT SEL switch to the ADPT position which places Coaxial Switch No. 5 to position No. 2. Although preferred UHF transmission and reception is via the retro adapter UHF Whip Antenna, the UHF Stub Antenna may be utilized during orbit by placing the ANT SEL switch to the RNTY position.

Delayed Time Telemetry Transmitter

The Acquisition Aid Beacon will be operating continuously throughout the orbital phase of the mission except when the Delayed-Time Telemetry Transmitter is operating. At the time the ground station receives the Acquisition Aid Beacon, the ground station will initiate the Delayed-Time Telemetry Transmitter to transmit data stored on the on-board recorder while the spacecraft was between ground stations.

Delayed-Time Transmission may also be initiated by the Flight Crew placing the T/M CONTROL switch to the R/T - D/T position. This will initiate real-time as well as delayed-time telemetry transmission.

Real-time and delayed-time transmission will normally be initiated from the ground station via DCS Channels. At the time the Delayed-Time Telemetry Transmitter is initiated, the Acquisition Aid Beacon will be turned off and Coaxial Switch No. 2 will be placed in position No. 2, allowing telemetry transmission via the diplexer and UHF Whip Antenna on the equipment adapter section.

At the time the spacecraft goes out of range of the ground station, delayed-time telemetry transmission will cease and the Acquisition Aid Beacon will resume transmission. This function will normally be performed by the ground station but may be performed by the Flight Crew. If this function is performed by the Flight Crew, the T/M CONTROL switch may be placed to either the CMD, or the R/T & ACQ position. If the R/T & ACQ position is selected, the delayed-time transmitter will be turned off and the real-time transmitter and the Acquisition Aid Beacon transmitting. If the CMD position is selected, only the Acquisition Aid Beacon will be operating; however, the ground station has the capability of energizing the Real-Time Telemetry Transmitter via a DCS Channel.

Either of the three previously described methods of disabling the Delayed-Time Telemetry Transmitter will also operate Coaxial Switch No. 2, placing it into position No. 1 to allow Acquisition Aid Beacon transmission via the diplexer and UHF Whip Antenna.

In case of failure of the Delayed-Time Telemetry Transmitter, the Stand-by Telemetry Transmitter may be used for delayed-time transmission. With the STBY TM CONTROL switch in the OFF position, the Stand-by Transmitter is switched to delayed-time transmission by a ground command via a DCS Channel. Selection by the Flight Crew is accomplished by placing the STBY TM CONTROL switch to the D/T

position. Delayed-time transmission via the Stand-by Telemetry Transmitter utilizes either the UHF Stub or the UHF Whip Antenna of the retro adapter, depending upon the setting of the ANT SEL switch.

Real-Time Telemetry Transmitter

Orbital operation of the Real-Time Telemetry Transmitter is similar to that of the Delayed-Time Telemetry Transmitter in that the Real-Time Telemetry Transmitter will only be operational during the period while the spacecraft is within range of a ground station. The Real-Time Telemetry Transmitter is actuated by a DCS command from the ground station or by the Flight Crew as described under Delayed-Time Telemetry Transmitter operation. Real-Time Transmission is accomplished by means of either the UHF Stub or the retro section UHF Whip Antenna, depending upon the position of the ANT SEL switch. In case of failure of the Real-Time Telemetry Transmitter, the Stand-by Transmitter may be used for real-time transmission. With the STBY TM CONTROL switch in the OFF position, selection is performed by the ground station via a DCS Channel. Selection by the Flight Crew is accomplished by placing the STBY TM CONTROL switch to the R/T position. The Stand-by Telemetry Transmitter transmits via the UHF Stub or the retro section UHF Whip Antenna, depending upon the position of the ANT SEL switch.

It should be noted that the Stand-by Telemetry Transmitter may only be used for delayed-time, or real-time transmission but may not be used simultaneously for both. In the event that both the real-time and delayed-time transmitters fail, it is up to the ground station to determine the purpose for which the stand-by transmitter will be used.

C-Band Radar Beacons

During orbit, the C-Band Beacons will be operational only while the spacecraft is within range of a ground station. Normally, the Adapter C-Band Beacon will be used during stabilized orbital flight and the Re-entry C-Band Beacon used during orbital roll maneuvers. Operation of the beacons is similar to that described under pre-launch. The C-RNTY and C-ADPT BEACON CONTROL switches are normally kept in the CMD position. When the spacecraft comes within range of a ground station, as determined from the Acquisition Aid Beacon signal, power to the desired C-Band Beacon will be actuated by ground command via a DCS Channel. The Flight Crew may actuate the desired beacon by placing the C-ADPT or C-RNTY BEACON CONTROL switch to the CONT position. After beacon power is actuated, the selected C-Band Beacon will transpond when properly interrogated by a ground station. When the Re-entry C-Band Beacon is selected, the ANT SEL switch should be placed in the RNTY position to energize the phase shifter and provide optimum radiation coverage.

ADAPTER SEPARATION

Shortly prior to equipment section separation the Flight Crew will, if not already using the Re-entry Module Antennas, place the T/M CONTROL switch to R/T & ACQ, the ANT SEL switch to RNTY, and the C-RNTY BEACON CONTROL switch to the CONT position. The Acquisition Aid Beacon will be operating until it is jettisoned with the equipment adapter section. The C-Band Antenna System and UHF Stub Antenna will be used for the required transmission and reception.

The Flight Crew will disable HF voice communications by placing the HF Select switch to the OFF position. On Spacecraft 5, the Orbital HF Whip on the retro adapter section will remain extended. On later spacecrafts, the Orbital HF Whip may be retracted by holding the HF ANT switch in the RET position for approximately 1.5 minutes for complete retraction.

At equipment section separation, the following communications components will be jettisoned with the equipment adapter section:

Digital Command System (DCS)
Delayed-Time Telemetry Transmitter
Diplexer
C-Band Annular Slot Antenna
Adapter C-Band Radar Beacon
Diplexer UHF Whip Antenna
Acquisition Aid Beacon
Coaxial Switch No. 2

This limits telemetry data transmission to real-time, voice communication to UHF, and tracking data to the Re-entry C-Band Beacon.

Following equipment section separation and retro firing, retro section separation will occur at which time the retro UHF Whip and the Orbital HF Whip Antennas will be jettisoned.

RE-ENTRY

During the re-entry phase of the mission two short duration communication black-out periods exist. The first period, from approximately T_R + 1310 seconds to

T_R + 1775 seconds is caused by an ionization shield around the spacecraft. This ionization is due to the extremely high temperatures created upon re-entry into the earth's atmosphere. The second blackout period occurs at rendezvous and recovery (R & R) section separation when the UHF Stub Antenna is jettisoned. This period is terminated at two-point suspension which occurs shortly after main parachute deployment.

At R & R separation, energized Chute Deploy time delay relays initiate Coaxial Switch No. 3, placing it to position No. 2. This makes the UHF Descent Antenna available for real-time telemetry transmission and UHF voice communications.

At two-point suspension the UHF Recovery and UHF Descent Antennas are automatically extended. The Flight Crew will initiate the UHF Recovery Beacon by placing the RESC BEACON CONTROL switch to the W/O LT position.

Antenna usage during re-entry will be as follows: Prior to R & R separation, real-time telemetry transmission and UHF voice communication will be via the UHF Stub Antenna. After two-point suspension, the UHF Descent Antenna will be used instead of the UHF Stub. The Re-entry C-Band Beacon and C-Band Antenna System will be used for tracking and the UHF Recovery Beacon will use the UHF Recovery Antenna.

LANDING THROUGH RECOVERY

Upon impact the Flight Crew will jettison the main parachute by actuating the PARA JETT switch. This will also extend the Flashing Recovery Light. The light is energized by changing the RESC BEACON CONTROL switch from the W/O LT position to the ON position.

The Re-entry C-Band Beacon and Real-Time Telemetry Transmitter will be turned off by the Flight Crew placing the C-RNTY BEACON CONTROL and the T/M CONTROL switch to the CMD position. If the Flight Crew selected the Stand-by Telemetry Transmitter for real-time transmission, the stand-by transmitter will be turned off by placing the STBY TM CONTROL switch to the OFF position.

The Flight Crew will extend the Recovery HF Whip Antenna by placing the HF ANT switch to the PST LDG position for Spacecraft 5, or on later spacecrafts by holding the HF ANT switch in the EXT position for approximately one minute. HF Voice Communication is then possible by placing the HF Select switch to the RNTY position and either MODE switch to HF. The HF Transmitter/Receiver can also be used to transmit a direction finding signal by placing either MODE switch to HF/DF.

During the recovery phase of the mission the UHF Rescue Beacon Transceiver may be connected to the UHF Recovery Antenna. The UHF Recovery Beacon can be turned off by positioning the RESC BEACON CONTROL switch to OFF. Lightweight headsets are provided to replace the spacesuit helmets if the helmets or spacesuits are removed and the Flight Crew remains inside the Spacecraft. A recovery team disconnect is provided for intercom conversation between the Flight Crew and Frogmen prior to opening the Spacecraft hatches.

SYSTEM UNITS

ANTENNAS

UHF Descent and UHF Recovery Antennas

Purpose: The UHF Descent Antenna provides for simultaneous transmission for the Real-Time and Stand-by Telemetry Transmitters, and transmission and reception for the UHF Voice Transmitter/Receiver. The UHF Recovery Antenna provides transmission capability for the UHF Recovery Beacon. The two antennas are only used from two-point suspension of the main parachute through final recovery of the spacecraft.

Physical Characteristics: The two antennas, being similar in physical appearance, are shown in Figure 9-4. Both antennas are mounted in the parachute cable trough where they are stowed until main parachute two point suspension during the landing phase of the mission.

The antenna element consists of two one-half inch wide gold plated steel blades bolted together at two places. The UHF Descent Antenna is approximately 16 inches long. The UHF Recovery Antenna is approximately 18 inches long.

Mechanical Characteristics: For rigidity, the antenna element is shaped in a 0.5 inch wide arc having a radius of 1.5 inches. The two laminations of steel blades, compounding a single antenna element, are rigidly secured at the lower half of the antenna. To allow a slight displacement of the two laminations with respect to each other during stowage and deployment, two nuts and bolts placed through elongated holes secure the two laminations together at the upper half of the antenna element.

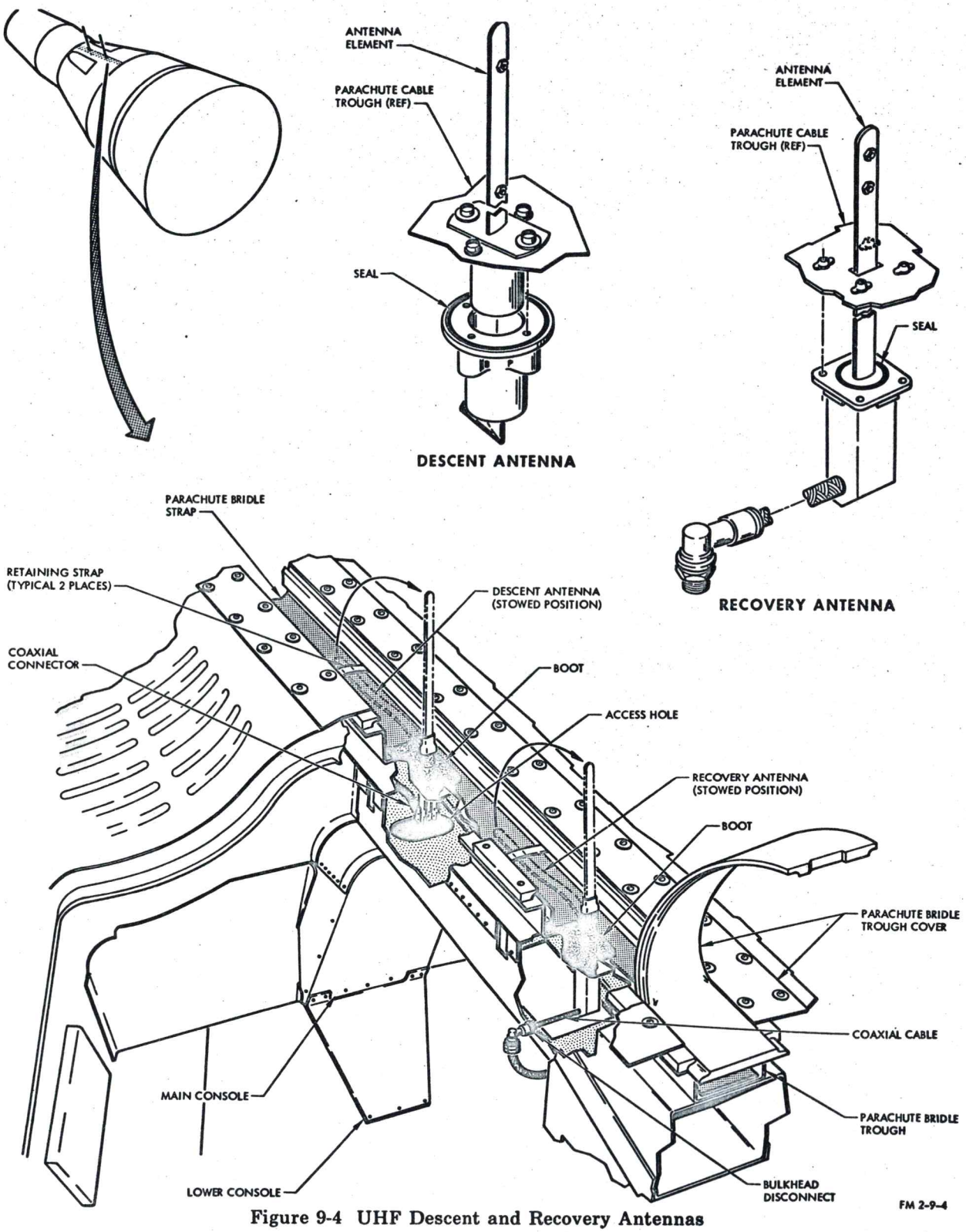

Figure 9-4 UHF Descent and Recovery Antennas

The antennas are bent towards the small end of the spacecraft for stowage and are held in place by a retaining strap. The strap is broken when the landing system shifts from single point to two point suspension, allowing the antennas to self extend.

Each of the two antennas provide a radiation pattern which is identical to that of a quarter wave stub.

UHF Stub Antenna

Purpose: The UHF Stub Antenna (Figure 9-5) provides for simultaneous transmission of the Real-Time and Delayed-Time Telemetry Transmitters; transmission and reception for the UHF Voice Transmitter/Receivers, and reception for DCS Receiver No. 2. The antenna may be used from pre-launch until separation of the R & R section during re-entry, but is normally used from pre-launch to orbital insertion and from re-entry preparation to R & R section separation.

Physical Characteristics: The UHF Stub Antenna, physically constructed as illustrated in Figure 9-5, is mounted in the nose of the R & R section. The antenna protrudes forward from the R & R section and is covered by the nose fairing during the boost phase of the mission. The antenna consists of a mast and base which weighs approximately 1.1 pounds. The mast is constructed of 3/4 inch cobalt steel, machined to tubular form, and covered by a teflon ablation shield for protection during re-entry. The antenna is approximately 13.5 inches long including the connector, and 1.25 inches in diameter over the ablation material. The mast consists of two sections. The front section is mounted on a cobalt steel ball joint and retained to the rear section by a spring loaded

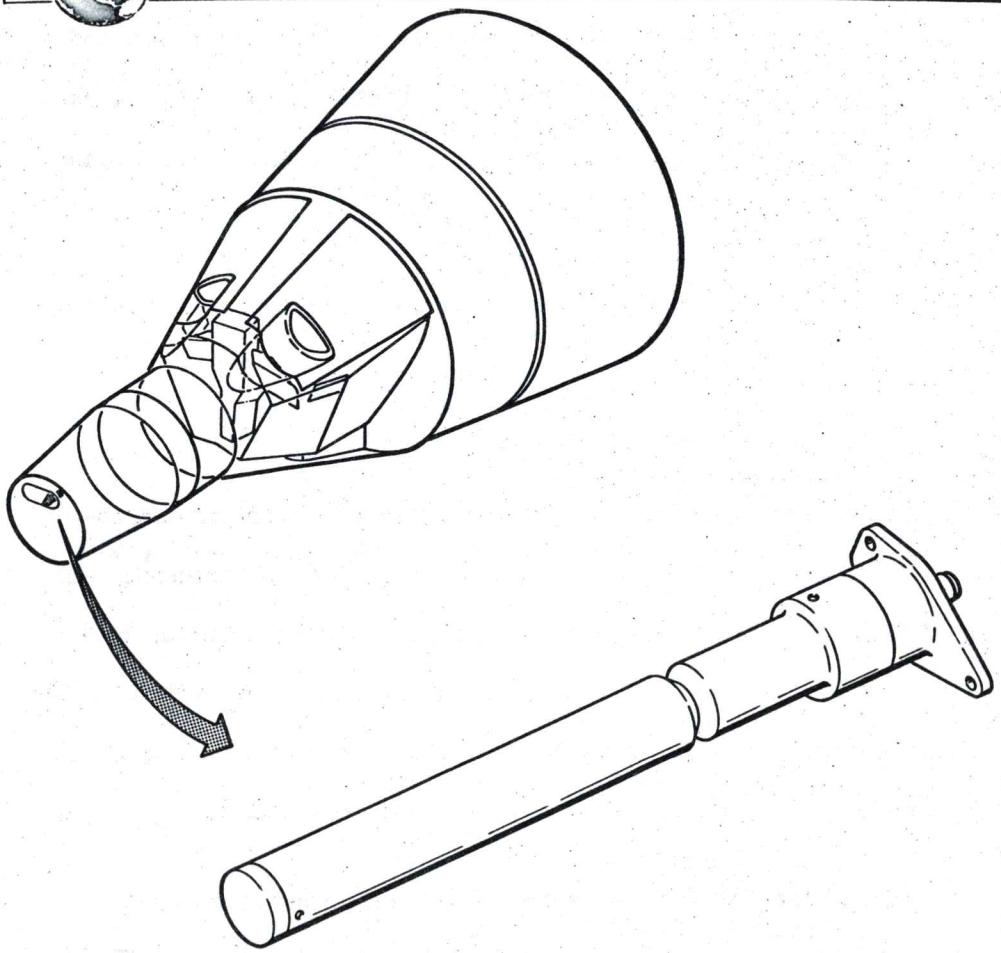

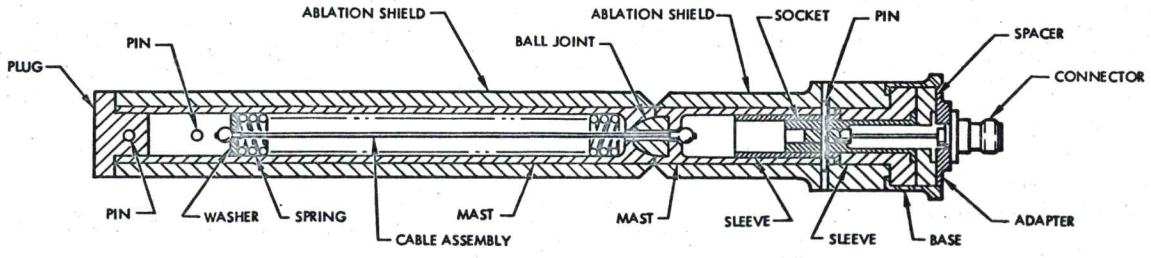

Figure 9-5 UHF Stub Antenna

cable. Electrical contact between the mast sections is made through the ball joint and the spring loaded cable assembly. The ball joint allows the front section of mast to be deflected to approximately 90 degrees in any direction around the antenna axis. The spring of the cable assembly is pre-loaded to approximately 45 pounds to cause the front section, when deflected, to return to the erected position.

The RF connector is press fitted into a socket and makes contact to the mast through the socket and sleeve, which are the same material as the mast. The shell of the RF connector is mounted to the base which is isolated from the mast by a teflon spacer and sleeve.

Mechanical Characteristics: The UHF Stub is a quarter wave length antenna. The radiating length of the antenna mounted in the R & R section is approximately 11.2 inches.

UHF Whip Antennas

Purpose: Two identical UHF Whip Antennas (Figure 9-6) provide the required UHF transmission and reception facilities during orbit. One of the UHF antennas is located on the equipment adapter section and serves the DCS Receiver No. 1, and the Acquisition Aid Beacon or Delayed-Time Telemetry Transmitter. The second UHF Antenna, mounted on the retro adapter section, serves the Real-Time and Stand-by Telemetry Transmitters, the UHF Voice Transmitter/Receivers, and DCS Receiver No. 2.

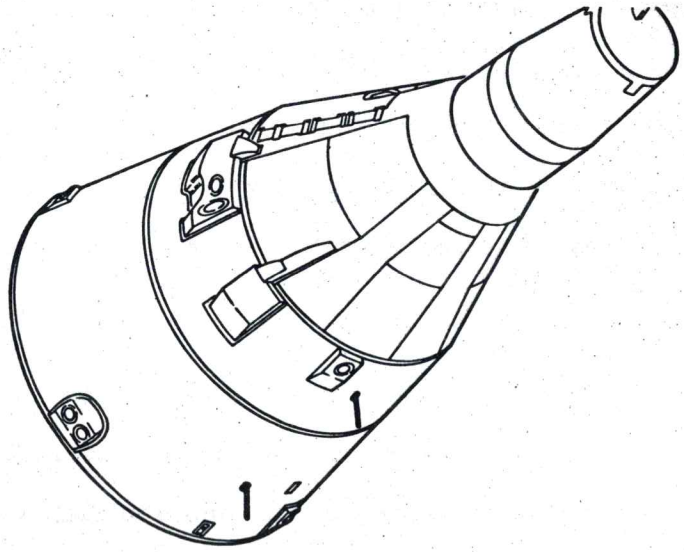

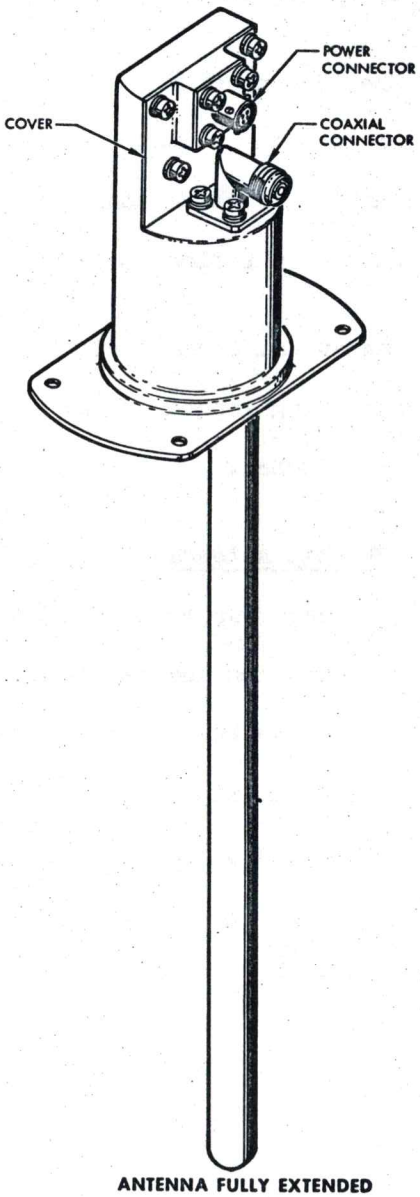

ANTENNA FULLY EXTENDED

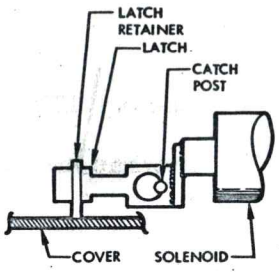

RELEASE MECHANISM
(SHOWN IN LATCHED CONDITION)

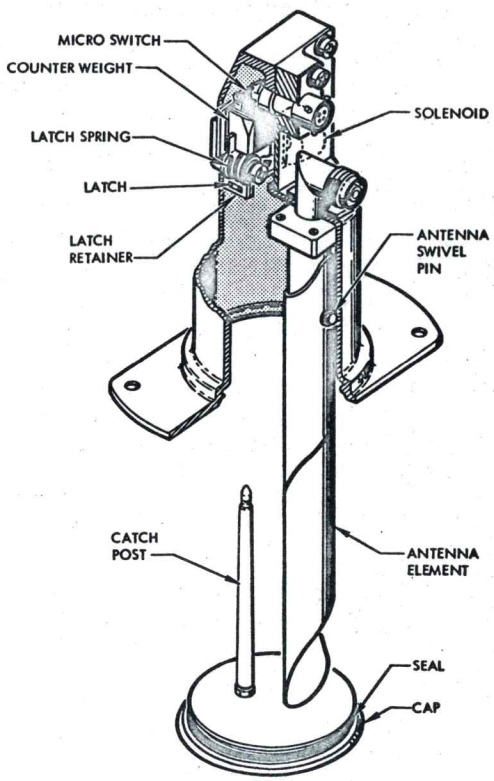

EXTENSION OF ANTENNA

Figure 9-6 UHF Whip Antennas

FM 2-9-6

Physical Characteristics: The UHF Whip Antenna is self extendable and requires no power other than that required for initial release. The antenna element is a tubular device made from a 2 inch wide beryllium copper strip processed in the form of a tube. The antenna, when fully extended, forms an element that is approximately 12 inches long and 1/2 inch in diameter. During stowage, the tube is opened flat, wound inside of a retaining drum, and latched in position. Upon release of the latch by a solenoid, the extension of the antenna depends entirely on the energy stored in the rolled strip material. This energy is sufficient to erect the antenna at a rate of 5 feet/second into its tubular form. In the stored condition, the antenna is flush with the outer skin of the spacecraft.

Mechanical Characteristics: The antenna element is retained inside the housing by a metal lid. A metal post is attached to the lid and passes through the center of the coiled antenna. The bottom of the post is grooved to accept a forked latch which holds the catch post assembly firmly in position prior to initiation. The forked latch is attached to a miniature pull-solenoid which is spring loaded in the extended position to ensure that launch shock and vibration loads will not cause inadvertent antenna extension. When a voltage from the sequence system is applied to the antenna solenoid at approximately spacecraft separation, the latch will be withdrawn allowing the antenna cap to eject and the antenna to extend. As the catch post assembly is ejected, a microswitch in series with the solenoid coil opens the circuit to the coil to prevent further current drain from the power source.

The two antennas are jettisoned with the corresponding adapter section.

HF Whip Antennas

Purpose: The HF Whip Antennas provide for transmission and reception of the HF Voice Transmitter/Receiver during the orbital and postlanding phases of the mission.

Physical Characteristics: The HF Whip Antennas are physically constructed as illustrated in Figure 9-7. The Recovery HF Whip Antenna is mounted on the small pressure bulkhead, outside the pressurized area of the spacecraft re-entry module. The Orbital HF Whip Antenna is located on the retro adapter section. The antenna mechanism housing, approximately 6.25 inches wide and 22.4 inches high, completely encloses all parts of the antenna, including storage space for the antenna elements.

The Recovery HF Whip Antenna contains six elements which, when fully extended, comprise a single antenna mast approximately 13 feet 3 inches long. The Orbital HF Whip Antenna contains three elements which, when fully extended, comprise a single antenna mast approximately 16 feet long on Spacecraft 5 and 6, and approximately 13 feet long on later spacecrafts. The mast is one inch in diameter on all spacecraft. Two connectors, supported by the antenna body, provide a means of applying power and connecting the antenna to the RF connector on the HF Voice Transmitter/Receiver. The Recovery HF Whip Antenna weighs approximately 9.0 pounds. The 16-foot version of the Orbital HF Whip Antenna weighs approximately 7.5 pounds and the 13-foot version 6.0 pounds. The main supporting structure of the antenna mechanism housing is the antenna body consisting of a thin fiber-

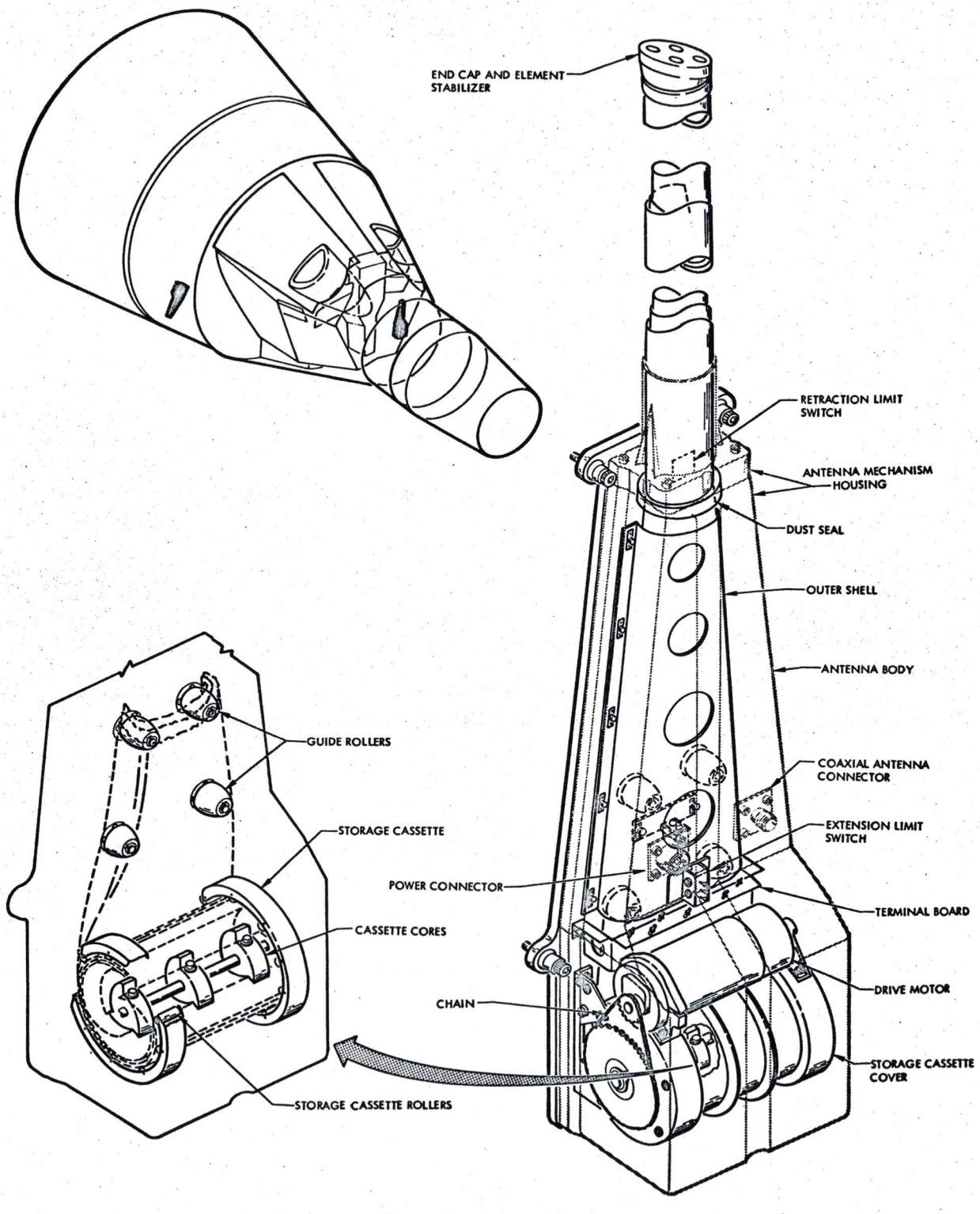

Figure 9-7 HF Whip Antenna

glass shell. The outer shell is made in two sections which mate together and form a completely sealed envelope around all moving parts. The antenna mast elements are heat treated stainless steel strips and are stored in a DC motor driven cassette.

Mechanical Characteristics: The strip material comprising the antenna elements are heat treated into a material circular section in such a manner that the edges of the material overlap approximately 180°. When the antenna is retracted, the tubular elements are continuously transformed by guide rollers into a flattened condition, and stored in a strained manner in a cassette. Extension and retraction of the antenna is accomplished by a motor which, by means of a chain, drives the storage cassette core. Because of the natural physical shape of the antenna elements, the antenna has a tendency to self-extend; thus providing an extension time of approximately 25 seconds. Retraction time is approximately 40 seconds. The antenna is stopped within its desired limits by two micro switches, one for extension and one for retraction, which automatically cut the power applied to the motor at the time the extreme limits of the antenna are reached.

The RF connection to the antenna is obtained by a wiper arm sliding on the cassette core drive shaft.

On Spacecraft 5, the HF Whip Antennas are operated as follows: Spacecraft control bus voltage is supplied through the WHIP ANTENNAS -HF circuit breaker to the HF ANT switch. The Orbital HF Whip Antenna is extended during orbit by positioning the HF ANT switch to EXT. The Orbital HF Whip Antenna is not retracted during

orbit, but is jettisoned in the extended position with the retro adapter section. After landing, the Recovery HF Whip Antenna is extended by positioning the HF ANT switch to PST LDG, and is retracted by positioning the HF ANT switch to EXT.

On Spacecraft 6 and up, extension of the HF Whip Antennas is controlled through the HF ANT switch and LANDING switch. The HF antennas are operated as follows: Spacecraft control bus voltage is supplied through the WHIP ANTENNAS - HF circuit breaker to the HF ANT switch, which has momentary type contacts. During orbit, the LANDING switch is in the SAFE position and Orbital HF Whip Antenna can be extended or retracted by holding the HF ANT switch in the EXT or RET position respectively. During re-entry, the LANDING switch is placed in the ARM position. After landing, the Recovery HF Whip Antenna can be extended or retracted by holding the HF ANT switch in the EXT or RET position respectively. The HF ANT switch should be held in the EXT position for approximately one minute for full extension of the antennas, and in the RET position for approximately 1.5 minutes for full retraction.

C-Band Annular Slot Antenna

Purpose: The C-Band Annular Slot Antenna (Figure 9-8) serves the Adapter C-Band Radar Beacon and is normally used during the stabilized orbital phase of the spacecraft mission.

Physical Characteristics: The C-Band Annular Slot Antenna is mounted on the equipment section of the adapter. The physical construction is such that the antenna is flush with the outer skin of the spacecraft. The Antenna is approximately 1.4 inches in diameter, 1.35 inches long and weighs 8 ounces maximum.

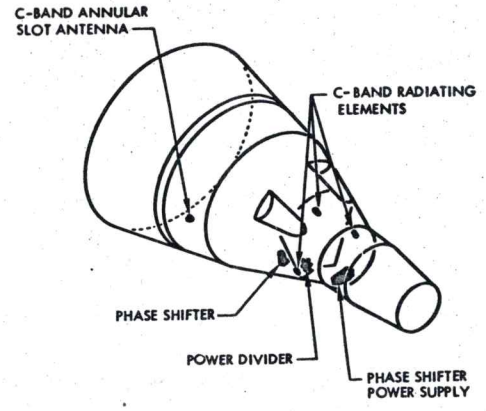

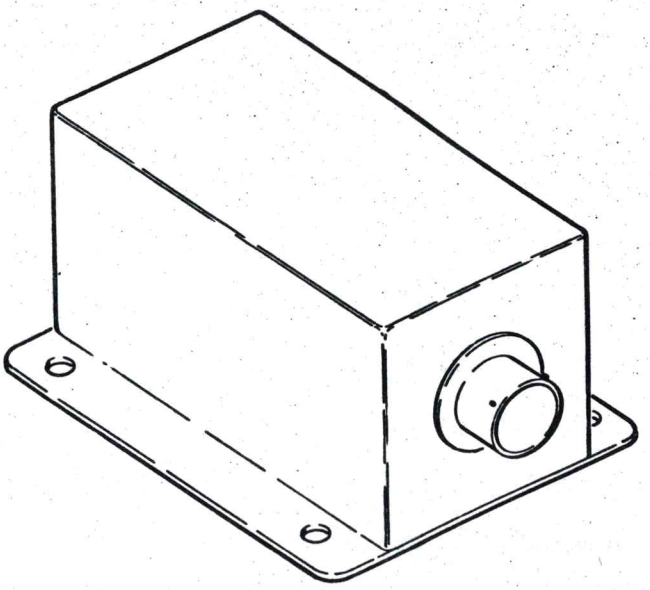

PHASE SHIFTER POWER SUPPLY

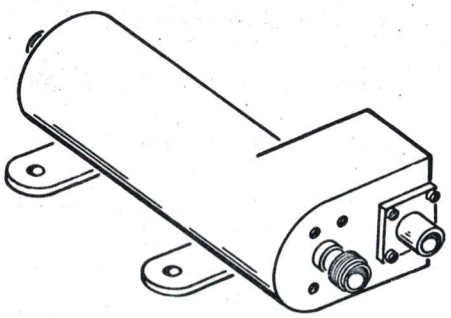

PHASE SHIFTER

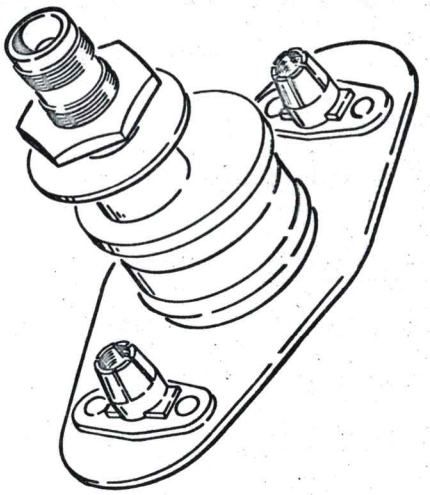

C-BAND RADIATING ELEMENTS

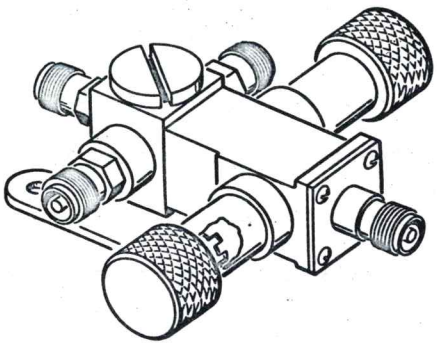

POWER DIVIDER

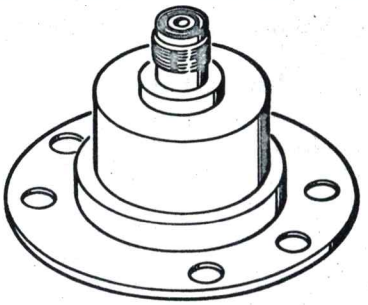

C-BAND ANNULAR SLOT ANTENNA

FM 2-9-8

Figure 9-8 C-Band Annular Slot Antenna and C-Band Antenna System

One coaxial connector is provided for connection through coaxial cable to the Adapter C-Band Beacon.

Mechanical Characteristics: The antenna radiation pattern is identical to that of a quarter wave stub on a ground plane. The antenna is used for both reception and transmission of the Adapter C-Band Radar Beacon during the orbital phase of the mission. The antenna is jettisoned with the equipment section of the adapter.

C-Band Antenna System

Purpose: The C-Band Antenna System, consisting of a power divider, a phase shifter, and three radiating elements, provides transmission and reception capability for the Re-entry C-Band Radar Beacon. The power divider provides equal transmission power to the three radiating elements. A phase shifter is in series with one of the antennas to compensate for areas of low or no radiation coverage between lobes of the three individual radiation patterns. A phase shifter power supply provides the phase shifter with 26 VAC 453 CPS power. The antenna system provides the circular radiation pattern around the spacecraft's longitudinal axis required for ascent, descent and roll spacecraft attitudes.

Physical Characteristics: The power divider, phase shifter, phase shifter power supply, and radiating elements are shown in Figure 9-8. The power divider, phase shifter, and phase shifter power supply are mounted on the small pressure bulkhead, outside the pressurized area of the spacecraft. The power divider measures approximately 3.86 inches over the connectors, 4.0 inches over the tuning knobs and weighs approximately 6.5 ounces. The phase shifter is approximately 5.8 inches long, 2.84 inches wide at the large end, 1.4 inches high, has

a diameter at the small end of about 1.5 inches, and weighs approximately 12 ounces. The phase shifter power supply measures approximately 1.5 inches wide, 1.75 inches high, 3.5 inches long over the connector, and weighs approximately 8 ounces. The three C-Band radiating elements are mounted flush with the outside skin of the spacecraft and spaced approximately 120° apart. Each antenna unit is approximately 3.4 inches long, 1.8 inches wide, has a depth of 2.21 inches over the connector, and weighs approximately 3.5 ounces.

Electrical Characteristics: The power divider, phase shifter, and radiating elements comprise an antenna system that satisfies the transmission and reception requirements for the Re-entry C-Band Radar Beacon during the launch and re-entry phases of the mission.

The power divider is basically a cavity type power splitter. During beacon transmission, power is delivered to the power divider where it is divided equally among the C-Band radiating elements. The power divider compensates for loss of power due to the phase shifter in series with the right antenna. The power divider also contains a double stub tuner to compensate for mismatch between the Re-entry C-Band Beacon, the C-Band Radiating Elements, and the Phase Shifter. Tuning is accomplished by means of a self-locking tuning shell located underneath each tuning stub cap.

The phase shifter is an AC operated device. A 26 VAC, 453 CPS input to the phase shifter, is half wave rectified and applied across a coil wound around a ferrite material. Due to the characteristics of the ferrite material, the RF signal from the power divider is delayed 0 to $180^\circ \pm 20^\circ$ at the rate of 453 cycles

per second. The changing phase shift of the RF power on one of the C-Band Radiating Elements with respect to the other two, shifts the lobe of that antenna by approximately ± 45 degrees; thus giving the effect of an almost ideal circular radiation pattern around the longitudinal axis of the spacecraft. The combination of the three antenna elements gives a radiation pattern which extends in all directions except forward and aft of the spacecraft.

The phase shifter power supply is a DC-AC Inverter which supplies a nominal 26 VAC, 453 CPS power to operate the phase shifter. The power supply is a hermetically sealed solid-state unit consisting of a voltage regulator, single-stage oscillator, buffer stage, and a push-pull output stage with transformer coupled output. The power supply provides a minimum output of 21 volts RMS at 453 ±17 CPS with an input voltage range from 20 to 30 VDC. Input voltage is applied from the spacecraft main bus via the BEACON-C circuit breaker, C-RNTY BEACON CONTROL switch and the RNTY position of the ANT SEL switch. Maximum input current is 370 milliamperes.

Multiplexers (UHF Diplexer and UHF Quadriplexer)

Purpose: The UHF Diplexer provides isolation between DCS Receiver No. 1, and the Acquisition Aid Beacon or the Delayed-Time Telemetry Transmitter operating into a common antenna. The UHF Quadriplexer provides isolation between the Standby Telemetry Transmitter, the Real-Time Telemetry Transmitter, a UHF Voice Transmitter/Receiver, and DCS Receiver No. 2 operating into a common antenna via coaxial switches.

Physical Characteristics: The physical representation and approximate location of the UHF Diplexer and the UHF Quadriplexer is shown in Figure 9-9. The Diplexer is located on the electronic module of the equipment adapter section. The Quadriplexer is located forward of the small pressurized bulkhead outside the pressurized area of the cabin.

The Diplexer is approximately 4.5 inches wide, 4 inches high, and 2.7 inches deep; contains two input and one output connectors, and weighs approximately 1.25 pounds. The UHF Quadriplexer is approximately 5.75 inches wide, 5.5 inches deep, and 4.1 inches high; weighs approximately 2.75 pounds, and has four input and one output connectors.

Electrical Characteristics: Figure 9-9 shows the schematic of the UHF Diplexer and the UHF Quadriplexer. Each channel consists of a high Q cavity, tuned to the corresponding operating frequency. All channels are isolated from each other without appreciably attenuating the RF signals passing through it. Each channel can be re-tuned if the assigned operating frequency is changed. The Diplexer isolates DCS Receiver No. 1, and the Acquisition Aid Beacon or the Delayed-Time Telemetry Transmitter, depending upon the position of Coaxial Switch No. 2. The diplexer operates into the UHF Whip Antenna on the equipment adapter section.

The UHF Quadriplexer isolates the Real-Time Telemetry Transmitter, the Stand-by Telemetry Transmitter, one of the two UHF Voice Transmitter/Receivers, and DCS Receiver No. 2. The Quadriplexer operates into one of the following three UHF antennas, depending on the position of the coaxial switches in series with the

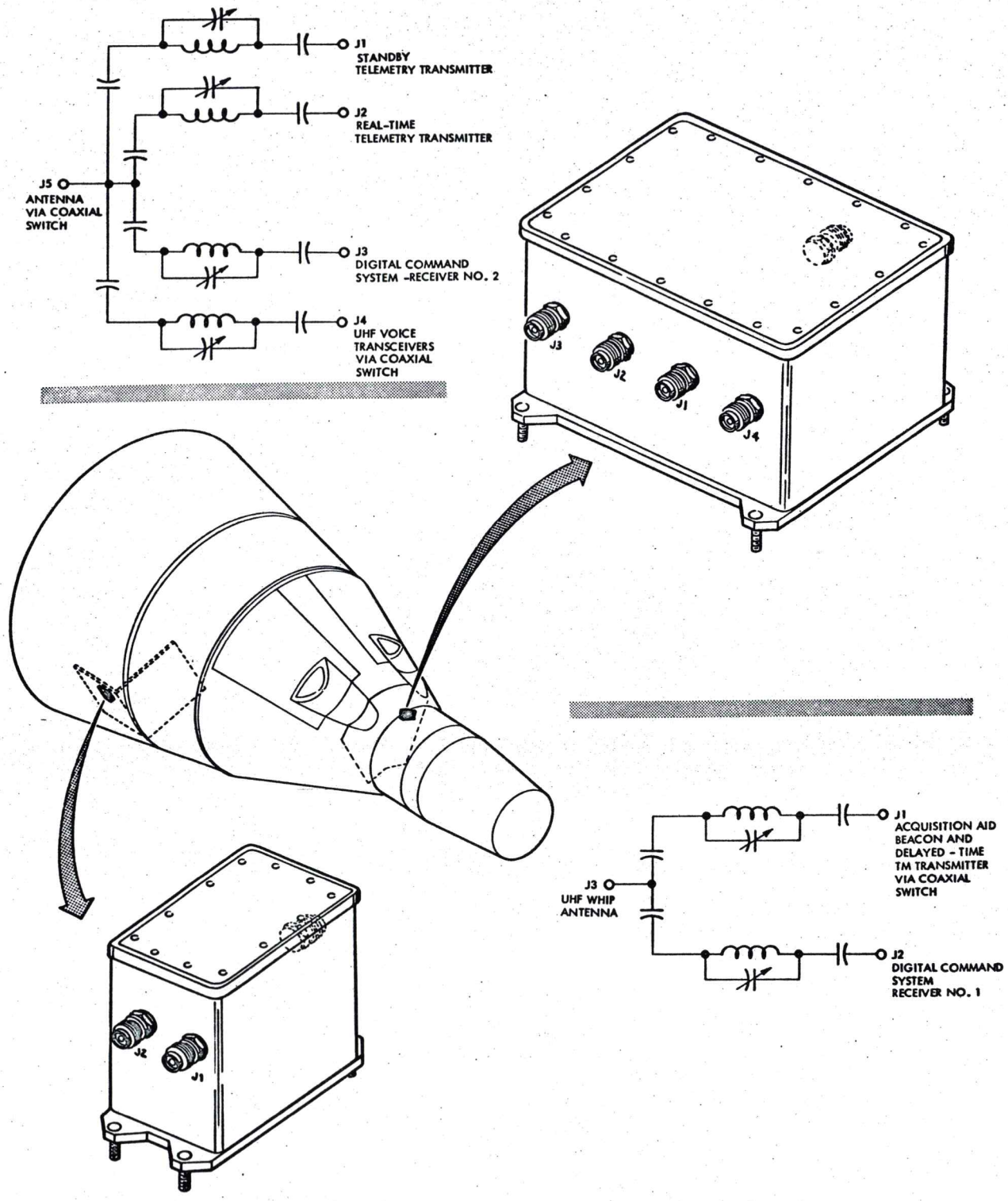

Figure 9-9 UHF Diplexer/UHF Quadriplexer

FM 2-9-9

antennas: UHF Stub Antenna, UHF Descent Antenna, or the UHF Whip Antenna on the retro adapter section.

Coaxial Switches

Purpose: Five coaxial switches are provided to perform the following functions: (1) select either the Acquisition Aid Beacon or the Delayed-Time Telemetry Transmitter output as the input to the Diplexer; (2) select one of the two UHF Voice Transmitter/Receiver outputs as the input to the Quadriplexer; (3) connect the HF Voice Transmitter/Receiver to the Orbital HF Whip Antenna on the retro adapter, or to the Recovery HF Whip Antenna on the re-entry module; (4) connect the output of the Quadriplexer to either the UHF Descent Antenna, or through Coaxial Switch No. 5 to either the UHF Stub or the retro adapter UHF Whip Antenna.

Physical Characteristics: The physical construction and approximate location of the coaxial switches is shown in Figure 9-10. The location of the switches is as follows:

Coaxial Switch No. 1; approximately five inches from the small end of the cabin, in the fourth quadrant.

Coaxial Switch No. 2; approximately 10 inches from the forward (small) end of the adapter equipment section, in the third quadrant.

Coaxial Switch No. 3; approximately 10 inches from the small end of the cabin, in the third quadrant.

Coaxial Switch No. 4; located adjacent to Coaxial Switch No. 1

Coaxial Switch No. 5; approximately 7 inches from the small end of the cabin, in the third quadrant.

Each switch contains a power connector, an input connector, two output connectors, and weighs approximately 0.5 pounds. The dimensions of each switch are approximately 2.65 inches long, 1.82 inches high, and 1 inch wide.

Electrical Characteristics: The five coaxial switches are identical and may be used interchangeably. Basically, the coaxial switches provide single pole double throw switching action as illustrated in Figure 9-10. The switch, having a 20 millisecond maximum operation time, operates on 3 amperes at 28 VDC and uses a latching solenoid break-before-make switching action. The coaxial switches are designed to operate from 15 MC to 500 MC, and from 5500 MC to 5900 MC. Pins D and E of each switch are brought out to AGE test points to permit monitoring of the switch positions prior to lift off. Pins A and B of each switch are utilized to accomplish the switching action.

BEACONS

Re-entry C-Band Radar Beacon

Purpose: The Re-entry C-Band Radar Beacon provides tracking capability of the spacecraft from lift off to orbital insertion and from pre-retro to landing. The Re-entry C-Band Beacon may also be used during orbit roll maneuvers or in the event of Adapter C-Band Beacon failure.

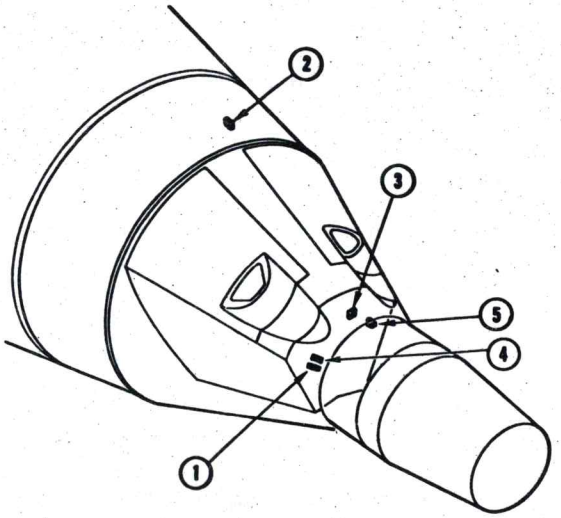

ITEM	FUNCTION
1	UHF TRANCEIVERS
2	TELEMETRY TRANSMITTER/ACQUISITION AID BEACON
3	DESCENT ANTENNA
4	HF TRANCEIVER
5	UHF WHIP/UHF STUB

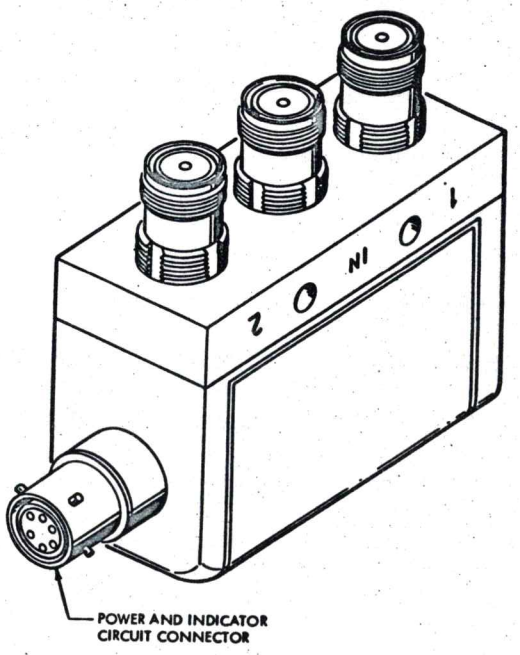

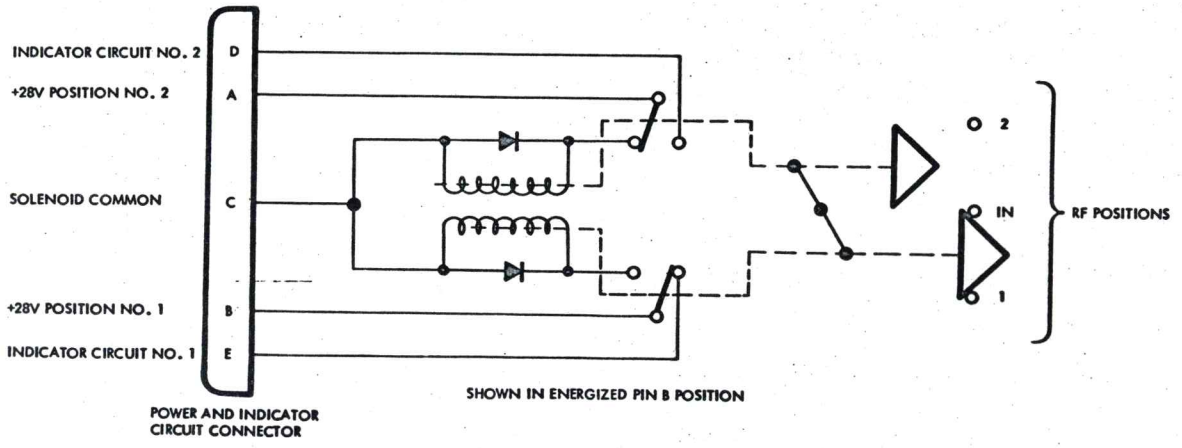

Figure 9-10 RF Coaxial Switches

FM 2-9-10

Physical Characteristics: The Re-entry C-Band Radar Beacon is a sealed unit which measures approximately 7.64 x 6.14 x 3.02 inches and weighs approximately 8.3 pounds. As shown in Figure 9-11, the beacon has power, antenna, and test connectors. Located on the rear of the beacon are various adjustments for transmitter, pre-selector, and local oscillator tuning. Solid state modular circuitry is used throughout the beacon with the exception of the transmitter magnetron and the local oscillator. The beacon is mounted on the right forward equipment bay, and uses the C-Band Antenna System for reception and transmission.

Electrical Characteristics: The Re-entry C-Band Radar Beacon is a transponder which upon reception of a properly coded interrogation signal from a ground radar tracking station, transmits a pulse modulated signal back to the tracking station. By measuring the elapsed time between transmission and reception at the tracking stations, and compensating for the time delay of the beacon, the position of the spacecraft can be determined. The block diagram of the beacon is shown in Figure 9-12. The signal arriving at the antenna is routed through the directional coupler to one half of a dual ferrite circulator. The ferrite circulator isolates the transmitter from the receiver, allowing a single antenna system to be used for both reception and transmission. The beacon utilizes a superhetrodyne receiver which is tunable, by means of a three stage pre-selector, over a range of 5600 MC to 5800 MC. The assigned receiver center frequency is 5690 MC.

The output of the pre-selector is combined with the local oscillator frequency

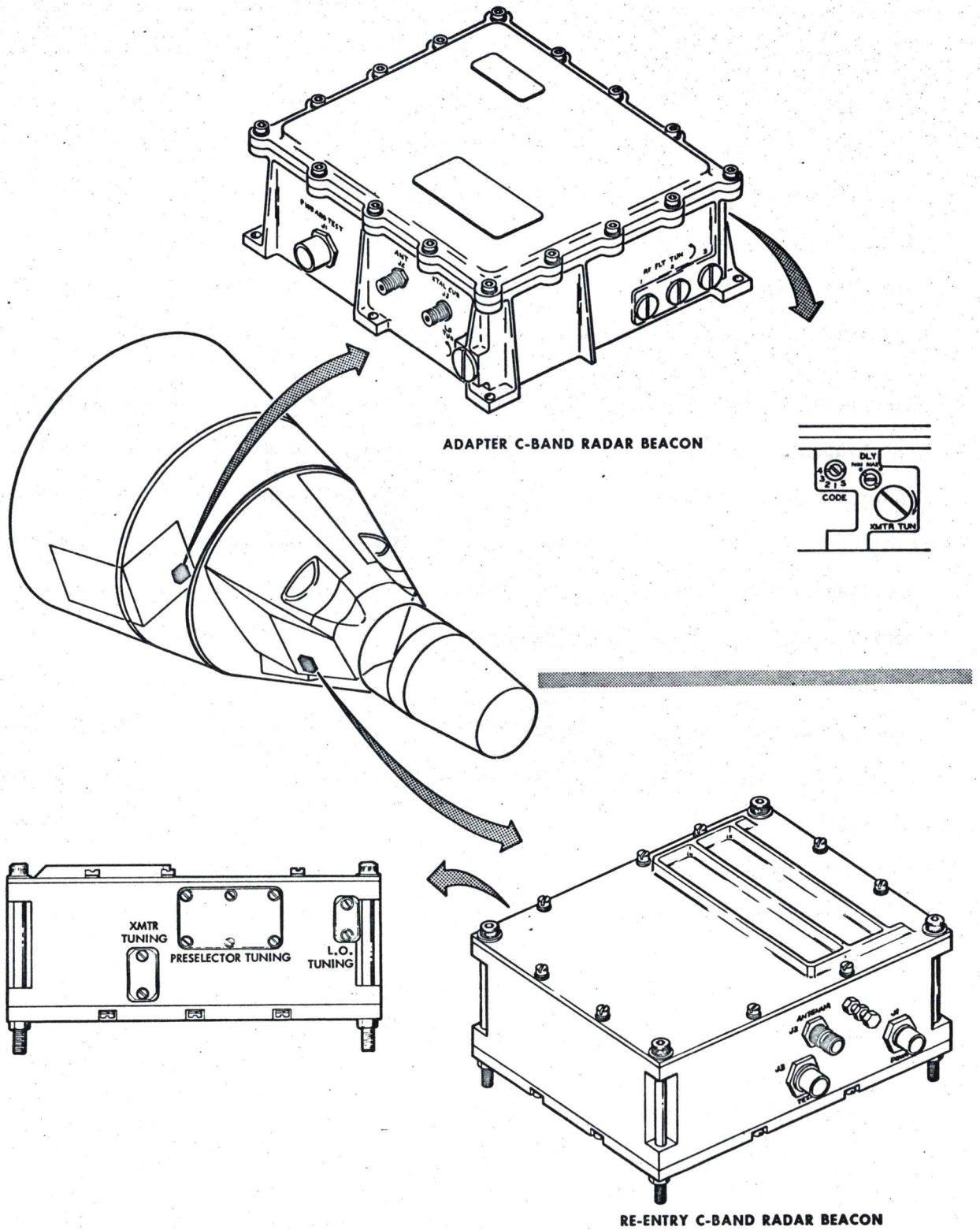

Figure 9-11 C-Band Radar Beacons

FM 2-9-11

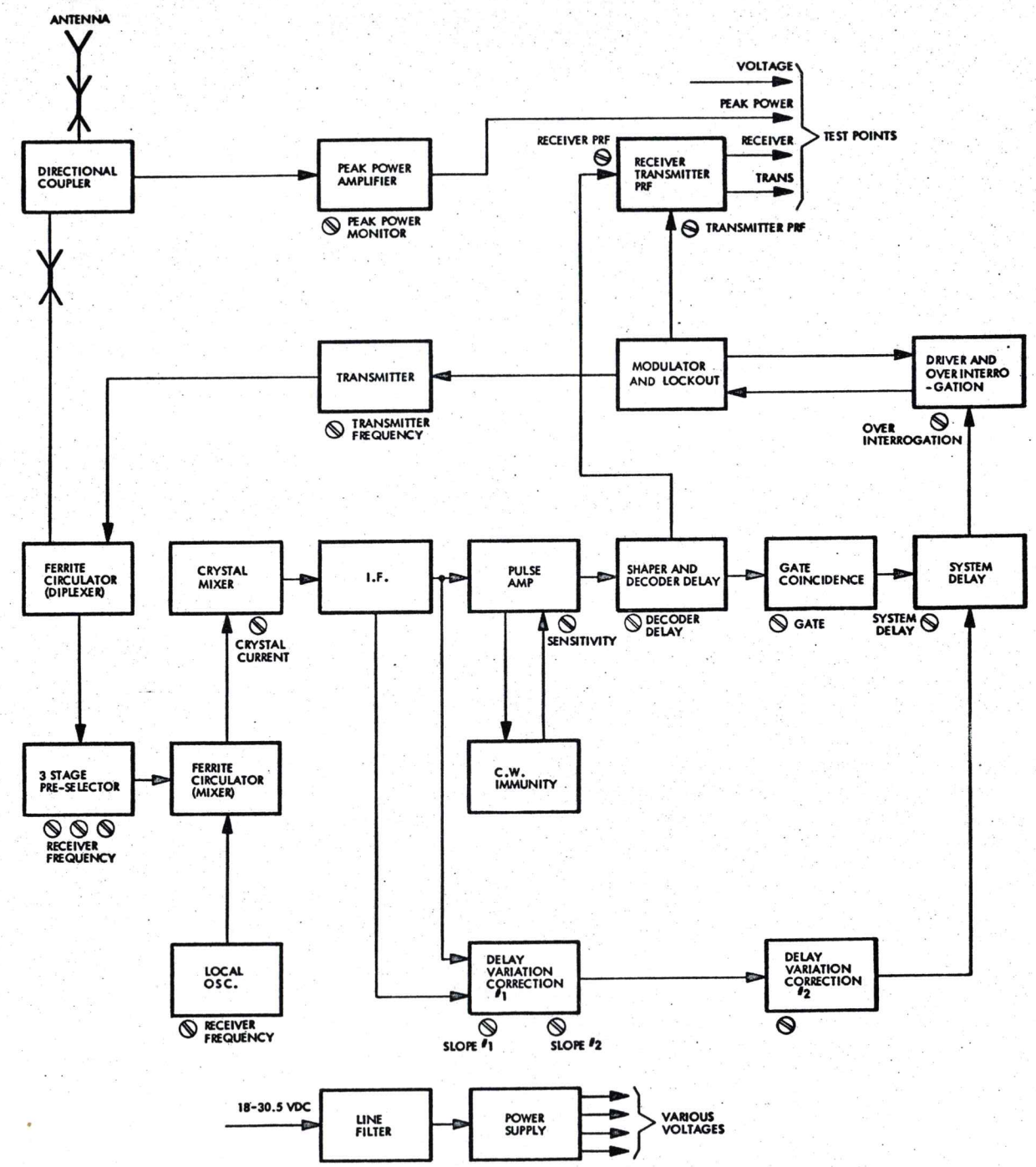

Figure 9-12 Re-Entry C-Band Radar Beacon Block Diagram

FM 2-9-12

in the crystal mixer to produce an output IF frequency of 80 MC. The local oscillator is of the metal-ceramic triode cavity type. The mixer contains a ferrite circulator for isolation between the local oscillator, mixer, and pre-selector. The output of the mixer is amplified by three tuned IF amplifier stages, followed by a video detector and a video pre-amplifier. Additional amplification is obtained by a pulse amplifier whose output is supplied to the decoder. The purpose of the decoder is to initiate triggering of the transmitter after a correctly coded signal has been received. The system delay, in conjunction with the delay variation correction circuitry, provides for a constant fixed delay used in determining the exact position of the spacecraft. The beacon incorporates a CW immunity circuit that prevents the transmitter from being triggered by random noise. The noise level is reduced below the triggering level of the transmitter by controlling the gain of the pulse amplifier. The transmitter utilizes a magnetron and provides a one kilowatt peak pulse modulated signal at a frequency of 5765 MC to the power divider. The beacon is powered by a DC-DC converter employing a magnetic amplifier and silicon controlled rectifiers. The converter provides voltage regulation for input voltage variations between 18 and 32.5 VDC. The input to the converter is filtered by a pi-type filter to minimize any line voltage disturbances.

ADAPTER C-BAND RADAR BEACON

Purpose: The Adapter C-Band Radar Beacon provides tracking capability of the spacecraft during the orbital phase of the mission and is jettisoned with the equipment adapter section.

Physical Characteristics: The Adapter C-Band Beacon is a sealed unit and measures approximately 9.34 x 8.03 x 3.26 inches. As shown in Figure 9-11, the adapter beacon has a power and test connector, an antenna connector, and a crystal current test point connector. The beacon contains external adjustments for local oscillator, pre-selector (RF filter), and transmitter tuning; switches for selecting the desired interrogation code, and one of two pre-set transponder fixed delay times. These adjustments and switches are accessible by removing pressure sealing screws. The beacon employs solid state circuitry, except for the transmitter magnetron and receiver local oscillator. The adapter beacon is located on the electronic module of equipment adapter section and uses the C-Band Annular Slot Antenna for reception and transmission.

Electrical Characteristics: The Adapter C-Band Radar Beacon is a transponder, which employs the same basic operating principles as the Re-entry C-Band Beacon to provide spacecraft location data upon receipt of a properly coded interrogation signal. A block diagram of the Adapter C-Band Beacon is shown in Figure 9-13. The interrogation signal is fed from the antenna to the duplexer. The duplexer is a ferrite circulator which couples the received signal to the RF filter pre-selector and also isolates the receiver from the transmitter to permit use of a common antenna for reception and transmission. The superhetrodyne receiver frequency is tunable from 5395 MC to 5905 MC. The assigned operating center frequency is 5690 MC and is selected by adjustment of the RF filter.

The RF filter is a three-stage pre-selector, employing three separately tuned coaxial resonator cavities to provide adequate RF selectivity and to protect the

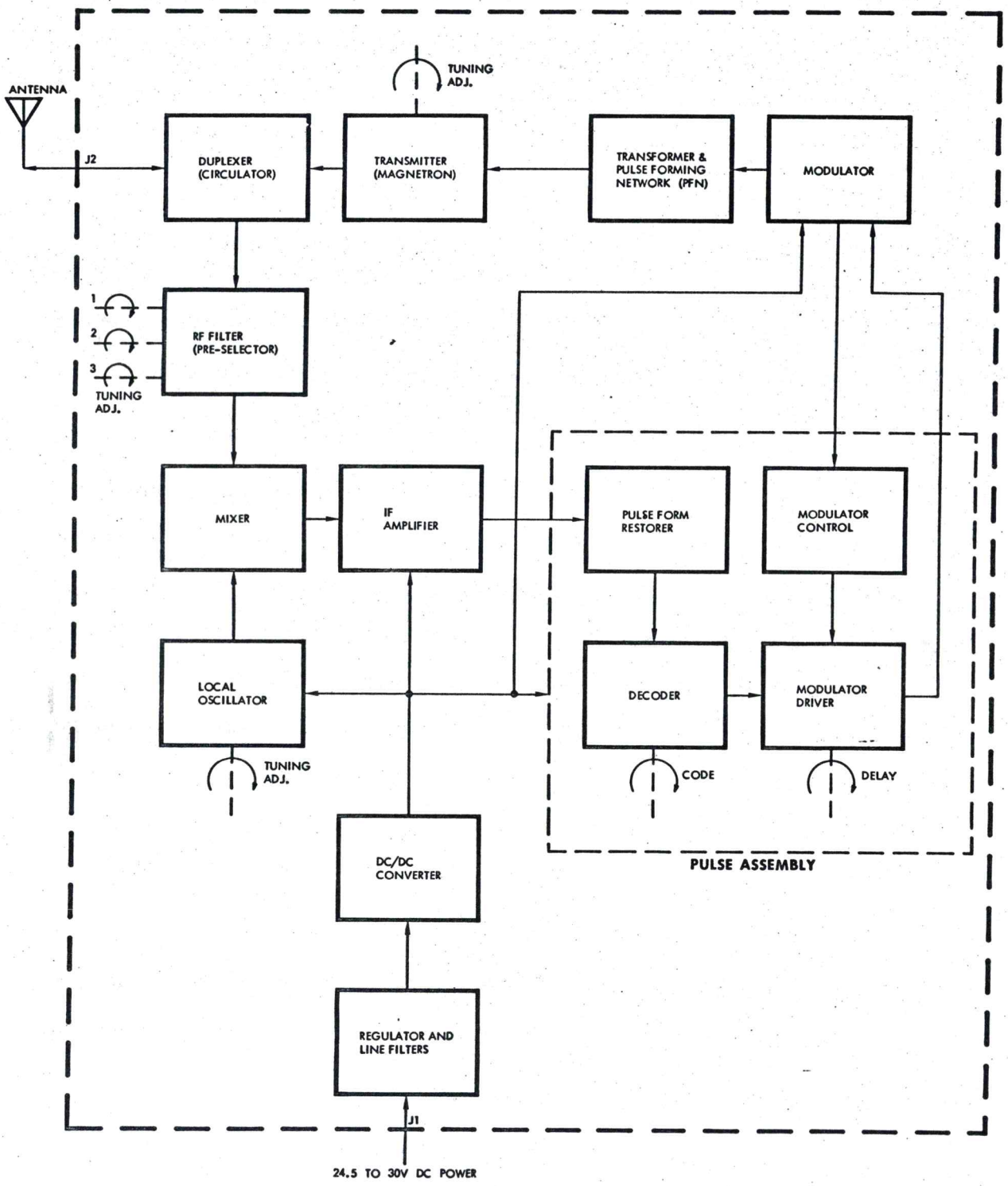

Figure 9-13 Adapter C-Band Radar Beacon Block Diagram

FM 2-9-13

mixer crystal from damage due to transmitter power reflected by the antenna.

The output of the pre-selector is combined with the local oscillator output in the mixer stage to provide a 60 MC output to the IF amplifier. The mixer consists of a coaxial directional coupler and a mixer crystal. The directional coupler isolates the local oscillator output from the antenna and directs it to the mixer crystal. The local oscillator is a re-entrant cavity type employing a planar triode to generate the CW signal required to operate the mixer.

The IF amplifier is a linear-logarithmic, high gain amplifier composed of an input stage, five amplifier stages, a summing line, and a video amplifier. The amplified video output is fed to the pulse form restorer circuits which prevent a ranging error due to variations in receiver input signal levels, and also provides a standard amplitude pulse to the decoder for each input signal exceeding its triggering threshold. The decoder determines when a correctly coded signal is received and supplies an output to the modulator driver. The type code to be accepted is selected by the CODE switch. Single pulse, two pulse or three pulse codes may be selected. The modulator driver and control circuits initiate and control triggering of the transmitter modulator. The modulator driver supplies two fixed values of overall system delay. The desired delay is selected by the position of the DLY switch. An alternate value of maximum delay is available by removing an internal jumper lead. The modulator control furnishes the trigger and turn-off pulse for the modulator and limits modulator triggers to prevent the magnetron duty cycle from being exceeded, regardless of the interrogating signal PRF. The modulator circuit employs silicon controlled

rectifiers which function similar to a thyratron, but require a much shorter recovery time.

The associated modulator pulse forming network (PFN) and transformer provide the necessary pulse to drive the transmitter magnetron. The desired pulse width is selected by the internal connections made to the PFN. The transmitter magnetron frequency is tunable from 5400 MC to 5900 MC. The assigned transmitter center frequency is 5765 MC. A minimum of 500 watts peak pulse power is supplied to the antenna under all conditions of rated operation.

The transponder power supply consists of input line filters, a series regulator, and a DC-DC converter. The power supply furnishes the required regulated output voltages with the unregulated input voltage between 21 and 30 VDC. The converter employs a conventional RL coupled multivibrator and full wave rectifier circuits.

Acquisition Aid Beacon

Purpose: Unlike the C-Band Beacons that provide accurate tracking data, the Acquisition Aid Beacon is merely a transmitter used to determine when the spacecraft comes within range of a ground tracking station. When the spacecraft comes within the range of a ground tracking station, the Acquisition Aid Beacon is disabled and remains off until the spacecraft is again out of range.

Physical Characteristics: The Acquisition Aid Beacon, shown in Figure 9-14, is cylindrical, having a diameter of approximately 2.6 inches, and a height of approximately 3.5 inches. The Acquisition Aid Beacon is located as shown in Figure 9-14. The beacon contains a power connector, a coaxial antenna connector and weighs approximately 17 ounces.

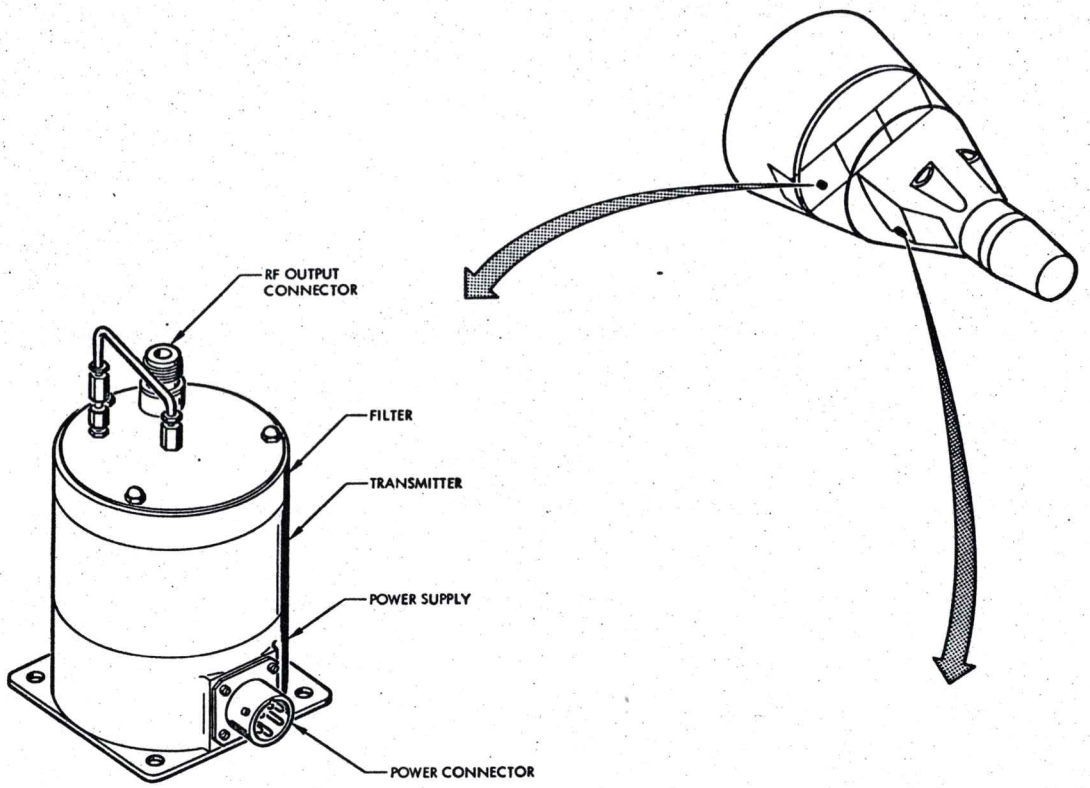

ACQUISITION AID BEACON

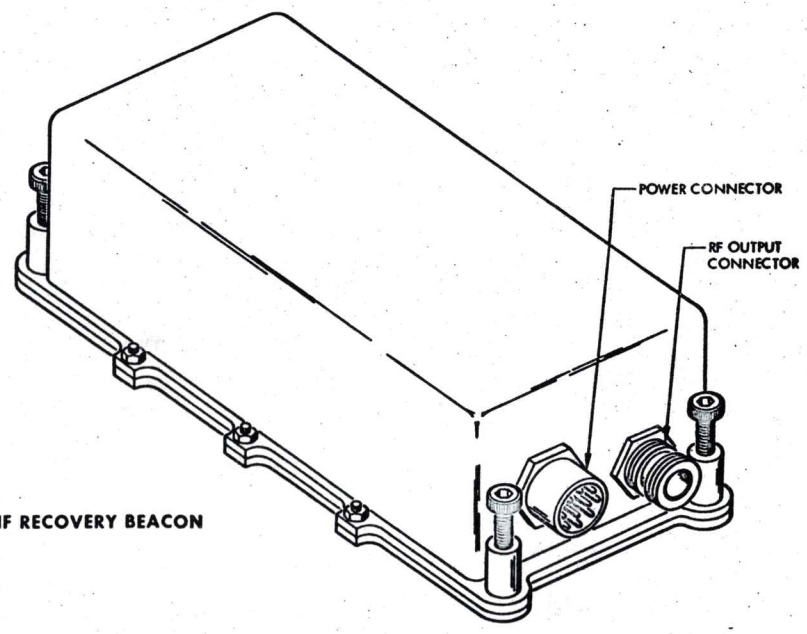

UHF RECOVERY BEACON

FM 2-9-14

Figure 9-14 Acquisition Aid and UHF Recovery Beacons

Electrical Characteristics: The Acquisition Aid Beacon consists of a transmitter, DC-DC voltage regulator, and a low pass output filter.

The transmitter is an all transistorized unit, containing a push-pull output stage to obtain a minimum output of 250 milliwatts at a frequency of 246.3 MC. The transmitter frequency is derived by taking the basic frequency of an oscillator and multiplying it through a series of tripler and doubler stages.

The transmitter is powered by a DC-DC voltage regulator. The regulator is completely transistorized and provides a regulated output voltage of 28 VDC. To reduce the probability of obtaining a spurious output signal, a band pass filter is placed in the output circuit.

UHF Recovery Beacon

Purpose: The UHF Recovery Beacon, operating on the international distress frequency of 243 MC, serves as a recovery aid by providing information regarding location of the spacecraft to the recovery crew.

Physical Characteristics: The UHF Recovery Beacon and its approximate location is shown in Figure 9-14. The Beacon is mounted on the aft right equipment bay of the spacecraft re-entry module. The Beacon is approximately 9.0 inches long, 4.0 inches wide, 2.5 inches high, and weighs 3.9 pounds maximum. The Beacon contains one multipin power connector and one coaxial type RF connector.

Electrical Characteristics: The UHF Recovery Beacon consists of a Spike Eliminator, a Regulator, a DC-DC Converter, a Pulse Coder, a Modulator, and a Transmitter.

Spacecraft main bus voltage is fed to the switching type regulator through the spike eliminator filter. The voltage regulator provides a DC regulated output voltage of 12 VDC to the DC-DC Converter, the transmitter tube filaments, and the pulse coder.

The DC-DC Converter is a solid state device providing two high voltage outputs to the transmitter and modulator. The pulse coder, a solid state device, operates with the modulator to apply correctly coded high voltage pulses to the transmitter for plate modulation of the power amplifiers.

The transmitter consists of an oscillator stage, a doubler stage, and a power amplifier. The transmitter power amplifier provides a UHF pulse coded output having a peak power of at least 50 watts to the UHF Recovery Antenna. An external RF band-pass filter is installed between the transmitter output and the antenna to reduce spurious RF radiations, especially at the UHF voice transmitter frequencies.

VOICE COMMUNICATION

Voice Control Center

Purpose: The Voice Control Center (VCC) contains switches and controls for selecting the type of voice communication and the desired operating mode. The VCC also contains microphone and headset amplifiers, an alarm tone generator, and voice actuated transmitter keying circuitry.

Physical Characteristics: The VCC and its approximate location is shown in Figure 9-15. The VCC is mounted in the center panel of the spacecraft cabin such that the controls and switches comprise a part of the center panel. The VCC is modular

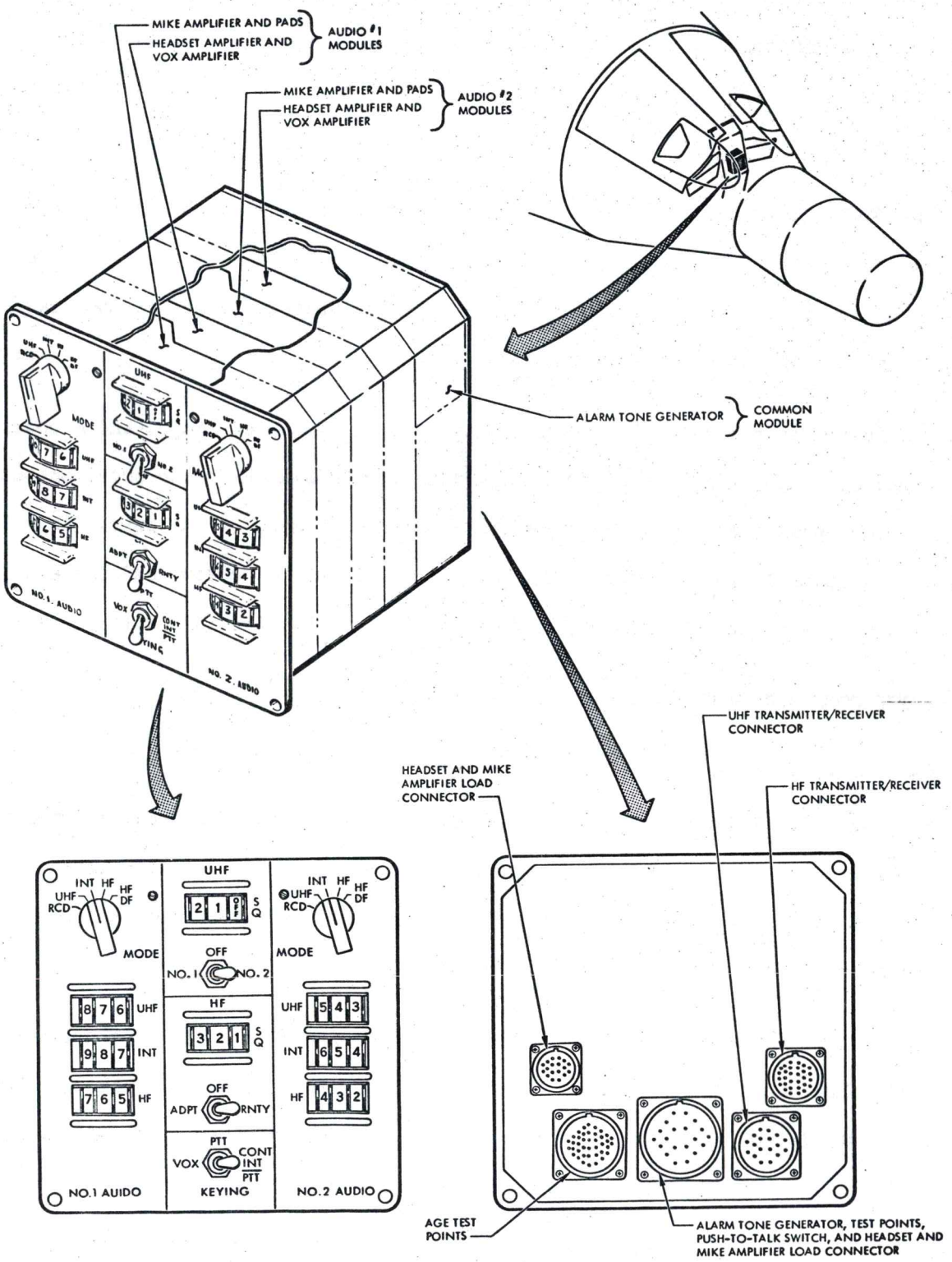

Figure 9-15 Voice Control Center

constructed, approximately 6.4 inches wide, 6.4 inches high, 5.5 inches deep, and weighs approximately 6.3 pounds.

Five connectors located on the rear of the unit provide connection to the other voice communication system components and test connectors. The function of each connector is listed on Figure 9-15. The VCC front panel consists of three groups of switches and controls. The NO. 1 and NO. 2 AUDIO groups each consist of a MODE switch for selection of voice recording (RCD), UHF, intercommunication (INT), HF, or HF/DF transmission, and three thumb-wheel-type multi-detent volume controls, one for each of the above mentioned modes.

The center group consists of a KEYING switch, a HF select switch, a UHF select switch, and thumb-wheel-type squelch controls for UHF and HF circuitry. The KEYING switch provides for selection of push-to-talk (PTT), voice operated relay (VOX), or continuous intercommunication with push-to-talk keying (CONT INT/PTT) for the voice transmitters. The UHF and HF select switches provide capability of selecting the desired transmitter/receiver. The ADPT position of the HF select switch is not used.

Electrical Characteristics: The VCC contains two headset and two microphone amplifiers for each of the two audio channels.

Figure 9-16 shows a functional block diagram of the VCC. An audio signal, from the microphone in the Flight Crew's helmets or lightweight headsets, is amplified by two microphone amplifiers and then applied to the MODE switch. With the MODE switch in the HF position, the output of the microphone amplifiers (MA) is applied

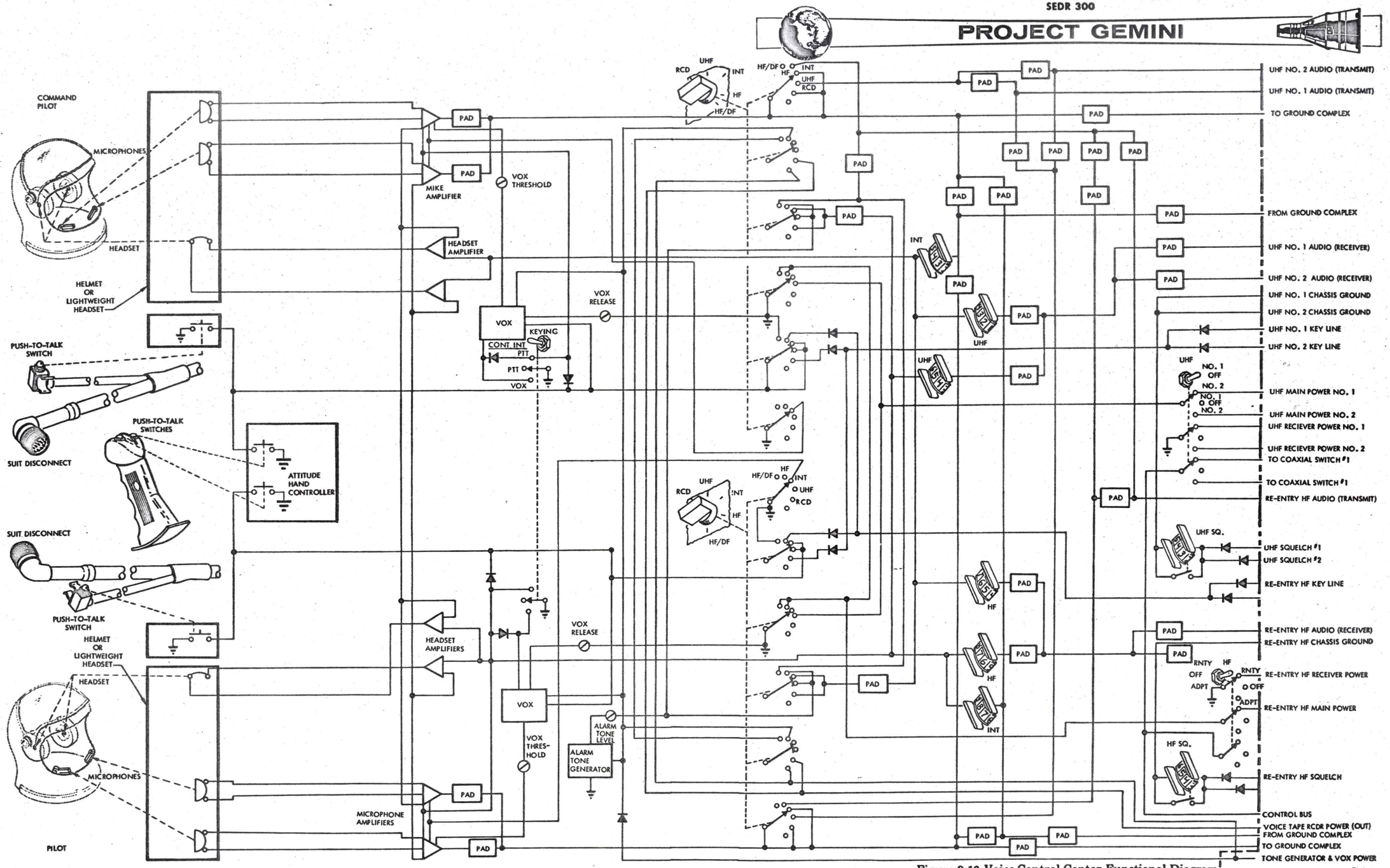

Figure 9-16 Voice Control Center Functional Diagram

FM2-9-3

to the HF transmitter. When the MODE switch is in the INT position, the output of the microphone is applied to the four headset amplifiers, via the two INT volume controls. The outputs of the headset amplifiers are applied to the headsets of the Flight Crew. With the MODE switch in the UHF position, the output of the microphone amplifiers is applied to the UHF transmitters. The UHF switch selects either UHF transmitter NO. 1 and NO. 2 and also operates Coaxial Switch No. 1 to connect the selected transmitter output to the UHF Quadriplexer. The desired keying mode is selected by a common KEYING switch. Three methods may be selected to key the voice transmitters. The VOX position enables keying of the selected transmitter at the instant the microphone provides an output signal. The PTT position enables keying of the transmitter when the push-to-talk switch, located on the suit disconnect cables or on the attitude control handle, is depressed. The CONT INT/PTT position provides continuous intercommunication between the Flight Crew and push-to-talk keying for transmission from the spacecraft to the ground station.

The VCC also controls the power supplies of the transmitter/receivers by means of ground switching. With the MODE switch in a position other than HF and the HF select switch in the RNTY position, a ground is supplied to the HF transmitter/ receiver auxiliary power supply to power the HF receiver.

With the HF select switch in RNTY and the MODE switch in the HF position, a ground is supplied to the HF transmitter/receiver main power supply to power the HF receiver and transmitter. The UHF circuitry operates on the same principle as the HF. The UHF select switch supplies power ground for the selected receiver.

The MODE switch (UHF position) together with the UHF select switch, supplies a power return for the UHF transmitter and receiver.

The HF/DF position of the MODE switch is utilized for direction finding purposes. With the MODE switch in HF/DF and the HF select in the RNTY position, the HF transmitter is modulated by a 1,000 CPS tone which is utilized to determine spacecraft locations.

UHF Voice Transmitter/Receivers

Purpose: Two UHF Voice Transmitter/Receivers are provided for redundant line-of-sight voice communication between the spacecraft and the ground.

Physical Characteristics: The UHF Voice Transmitter/Receivers and their approximate location is shown in Figure 9-17. Both transmitter/receivers are identical and are mounted side by side in the forward right equipment bay of the re-entry module. Each transmitter/receiver is a modular constructed, hermetically sealed unit approximately 7.7 inches long, 2.8 inches wide, 2.4 inches deep and weighs approximately 3.0 pounds. Each unit has a multipin audio and power connector, and a coaxial type RF connector.

Electrical Characteristics: The UHF Voice Transmitter/Receiver consists of a transmitter, receiver, and power supply.

The transmitter consists of a crystal controlled oscillator, two RF amplifiers, a driver, and a push-pull power amplifier. All stages except the driver and power amplifier are transistorized. The transmitter is fixed-tuned at 296.8 MC and is capable of producing an RF power output of 3.0 watts into a 50 ohm resistive

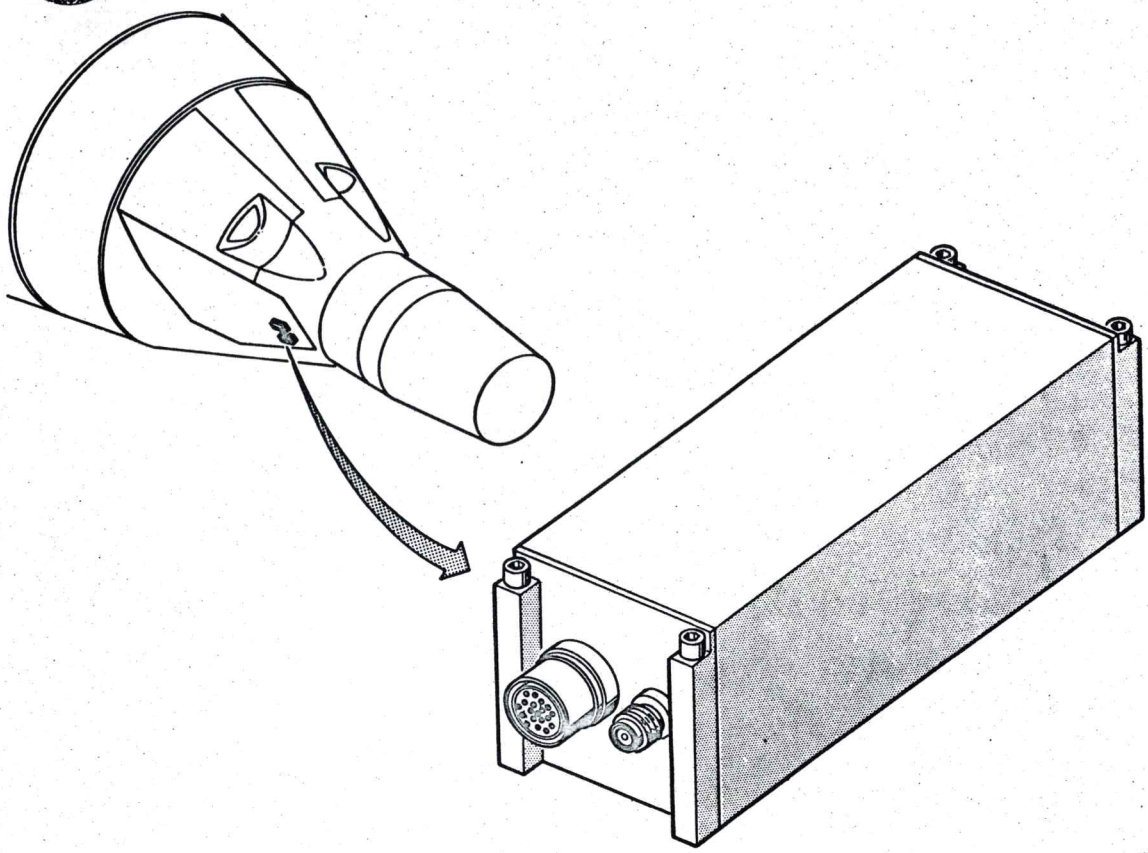

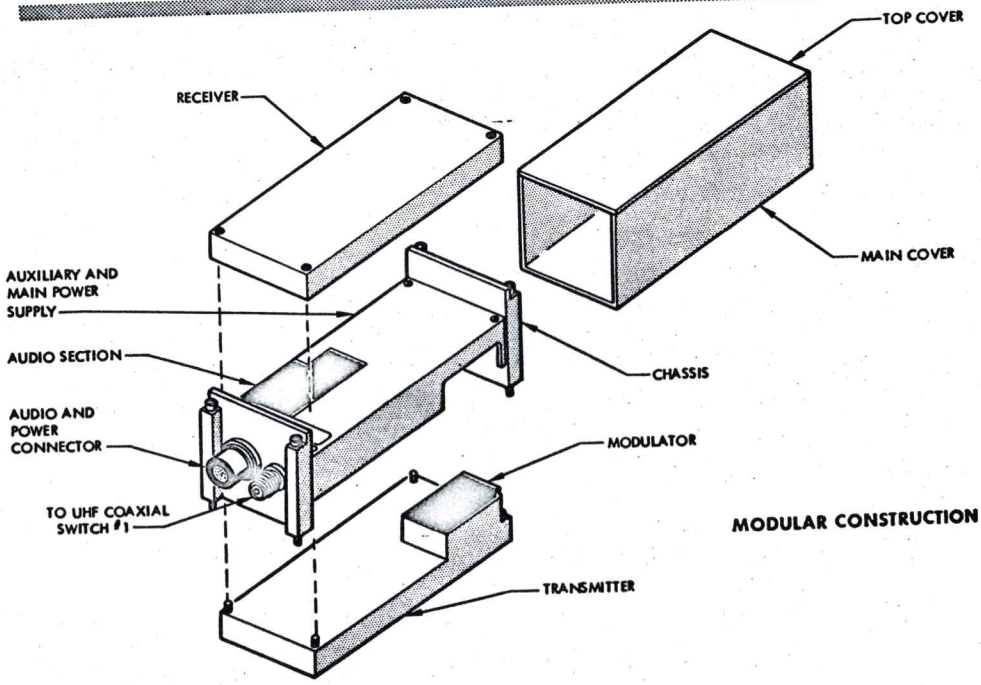

Figure 9-17 UHF Voice Transmitter/Receiver

load. The transmitter is AM voice modulated by a transistorized modulator stage.

The AM superhetrodyne receiver is fully transistorized, is fixed-tuned at a frequency of 296.8 MC, and contains a squelch circuit for noise limiting. The squelch threshold is manually controlled. An automatic volume control stage is also incorporated to provide a constant audio output with input signal variations.

The UHF Voice Transmitter/Receiver is powered by two DC-DC Converters comprising an auxiliary and a main power supply. DC operating power for the two power supplies is limited by two circuit breakers located on the left switch/circuit breaker panel. One circuit breaker is provided for each unit. Actuation of the power supplies is accomplished by ground return switching through the voice control center. If the UHF select switch is in either the NO. 1 or NO. 2 position and the MODE switch is in a position other than UHF, a ground is supplied to the auxiliary power supply only, placing the transmitter/receiver into a receive condition. With the MODE switch in the UHF position, a ground is supplied to the main power supply, placing the selected UHF Voice Transmitter/Receiver into a receive and transmit condition.

It should be noted that when the UHF transmitter is keyed, the UHF receiver is disabled and the Flight Crew cannot receive UHF voice transmissions from the ground station.

HF Voice Transmitter/Receiver

Purpose: The HF Voice Transmitter/Receiver is provided to enable beyond the line-of-sight voice communication between the spacecraft and the ground.

Physical Characteristics: Figure 9-18 shows the modular construction and approximate location of the HF Voice Transmitter/Receiver in the forward right equipment bay of the re-entry module. The unit weighs approximately 62 ounces, is approximately 8.5 inches long, 3.3 inches wide, and 2.9 inches deep. One multipin audio connector and one RF coaxial type connector are provided.

Electrical Characteristics: Basically, the HF Voice Transmitter/Receiver is electrically identical to the UHF transmitter/receiver except for the operating frequency and power output. The HF transmitter and receiver are fixed tuned to a frequency of 15.016 MC and the HF transmitter provides an RF power output of 5 watts.

Actuation of the HF receiver and transmitter is accomplished through the VCC. If the HF Select switch is in RNTY and the MODE switch is in a position other than HF, the HF Transmitter/Receiver is in a receive condition. With the MODE switch in the HF position, the HF Transmitter/Receiver is placed in a receive and transmit condition.

It should be noted that when the HF transmitter is keyed, the HF receiver is disabled and the Flight Crew cannot receive HF voice transmissions from the ground station.

Voice Tape Recorder

Purpose: The voice tape recorder is provided so the Flight Crew can make voice recordings during the spacecraft mission in accordance with the applicable flight plan.

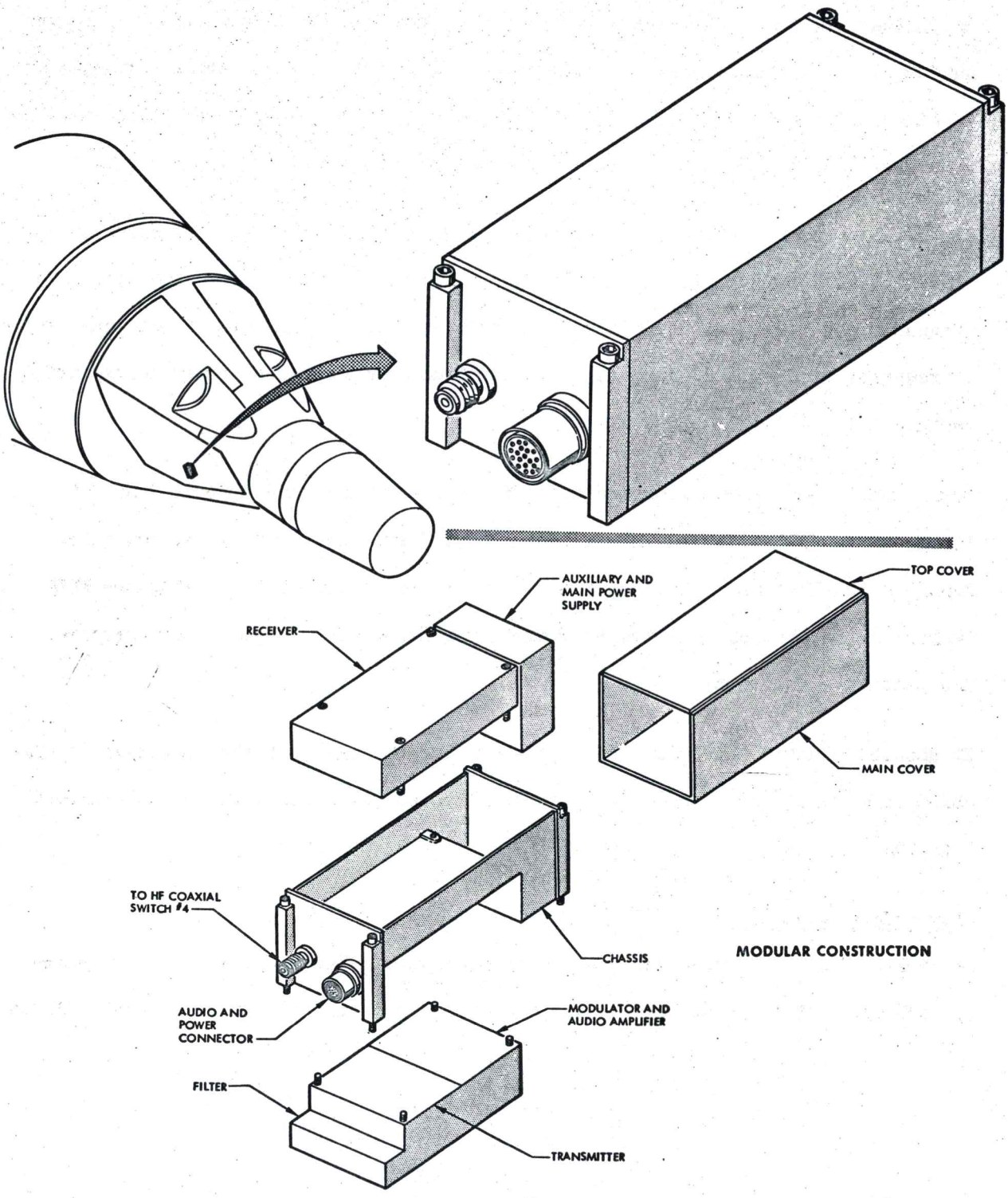

Figure 9-18 HF Voice Transmitter/Receiver

Physical Characteristics: The physical construction and approximate location of the voice tape recorder is shown in Figure 9-19. The voice tape recorder is located inside the cabin in a vertical position between the pilot's seat and the right-hand side wall. The voice tape recorder assembly consists of the recorder, tape cartridge, and shock absorber mounting plate and is supplied as GFE equipment. The recorder is approximately 6.25 inches long, 2.87 inches wide, one inch thick, and weighs 30 ounces maximum without the tape cartridge. The shock absorber mounting plate is approximately 6.3 inches long, three inches wide, and weighs 20 ounces maximum. The tape cartridge is approximately 2.25 inches square, 3/8 inch thick, and weighs two ounces.

The recorder contains a power connector and a signal connector located on the end as shown in Figure 9-19. The recorder is retained in the shock mount by guides and two Allen-head bolts for easy removal. The door contains a red plastic lens so that light from the end-of-tape bulb is visible to the pilot. A safety latch prevents accidental opening of the door. The door is opened by pressing down on the latch and sliding it sideways. When the latch is released, the spring loaded hinge causes the door to open, exposing the cartridge tab. Flat pressure springs on the door hold the inserted cartridge in place and maintains tape contact with the recorder head and end-of-tape contact.

The tape cartridge is guided into the recorder by step rails on each side of the cartridge. One step rail is slightly larger to insure correct insertion of the cartridge. When the recorder door is opened, a heavy tab on the cartridge springs

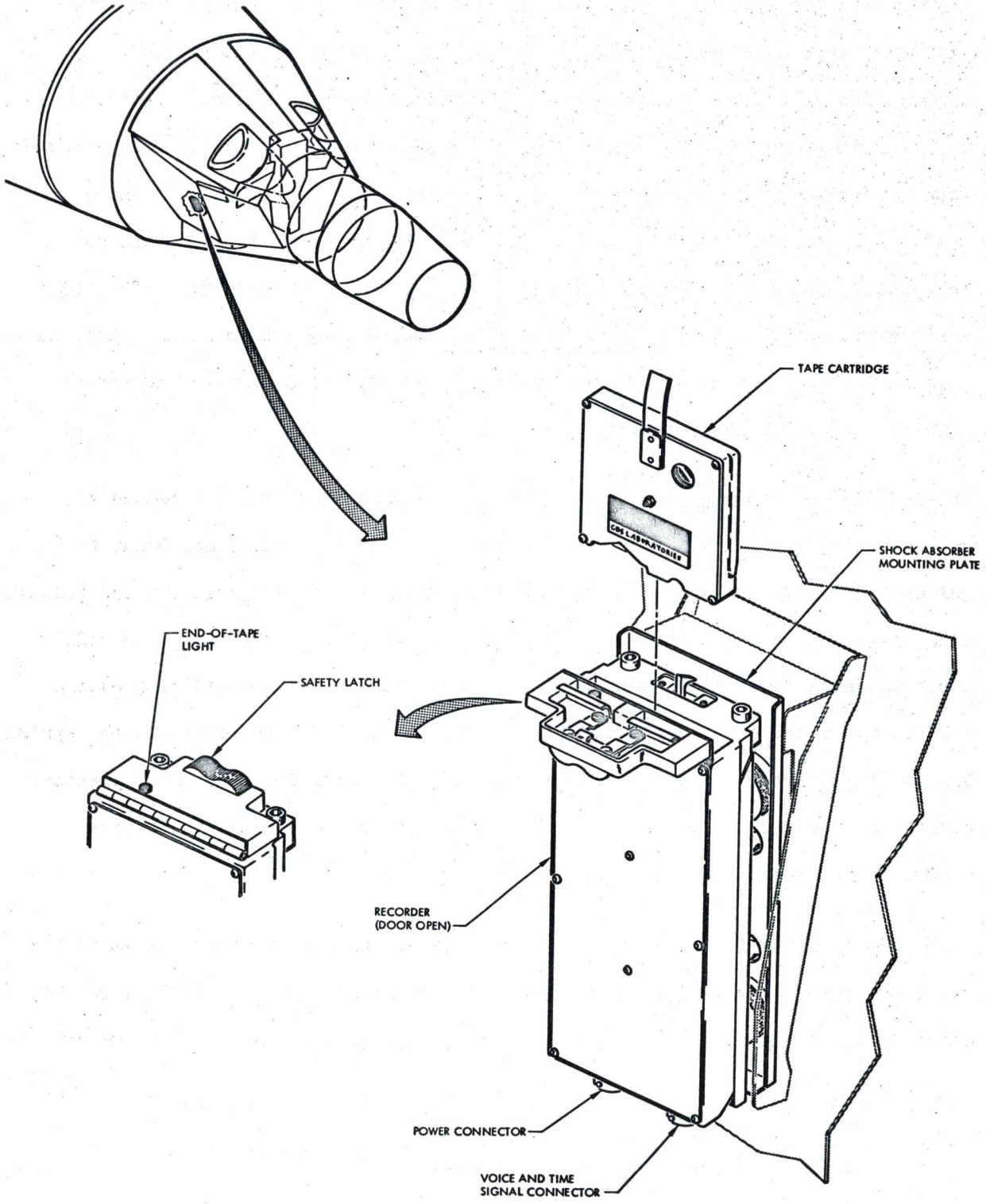

Figure 9-19 Voice Tape Recorder

FM 2-9-19

up to provide easy removal. The cartridge contains approximately 180 feet of magnetic tape, a supply reel, a take-up reel, and associated gears and clutches.

Electrical Specifications: The recorder is a two-channel transistorized unit consisting of the cartridge hold-down mechanism, voltage regulator, voice amplifier, time signal amplifier, bias oscillator, motor drive circuit, synchronous drive motor, speed reduction unit, capstan, magnetic record head, and end-of-tape circuit.

When the tape cartridge is inserted and secured in the tape recorder, the pressure roller in the cartridge contacts the capstan and the tape is pressed against the record head and the end-of-tape contact.

The voice tape recorder is energized by spacecraft main bus power applied through the TONE VOX circuit breaker and RCD position of either MODE switch on the VCC. The voltage regulator supplies 15 VDC to the motor drive circuits, bias oscillator and amplifiers. With the VCC and recorder energized, voice signals from the Flight Crews microphone are applied through microphone amplifiers in the VCC to the recorder voice amplifier. The voice signal is amplified and applied to the lower record head for recording on the magnetic tape. The time channel receives a digital timing signal from a time correlation buffer in the time reference system (TRS). The timing signal is amplified by the recorder time signal amplifier and applied to the upper record head for recording on the magnetic tape.

Simultaneously with the voice or timing signal, a 20 KC bias current from the bias oscillator is applied to the recorder heads to make a linear recording.

The motor drive circuit consists of a 133 CPS oscillator, a driver and push-pull output stage used to drive the synchronous motor. Phase-shift capacitors are connected to one motor winding for self-starting. The motor speed of 8000 RPM is reduced through the speed reduction unit to a capstan speed of 122 RPM.

The end-of-tape circuit is energized by conductive foil on the tape contacting the recorder head and end-of-tape contact, causing the end-of-tape light to illuminate. The end-of-tape light will illuminate for two seconds when two minutes of recording time remains on the tape. The light will remain illuminated when the end-of-tape is reached. Recordings cannot be made when the light is illuminated. The Pilot may remove the used tape cartridge, insert another cartridge and continue recording. Each cartridge provides approximately one hour of recording. The tape speed is approximately 0.6 inches per second.

TELEMETRY TRANSMITTERS

Purpose: The three telemetry transmitters provide a radio frequency (RF) link from the spacecraft to ground communication facilities for transmission of various data obtained by the instrumentation subsystem.

Physical Characteristics: The three telemetry transmitters are identical except for the operating frequency. The physical construction and approximate location of the transmitters in the spacecraft is shown in Figure 9-20. The transmitters are approximately 2.75 inches high, 2.25 inches wide, 6.5 inches long, and weigh approximately 41 ounces. Each transmitter contains a DC power connector, an RF output power connector, and a video input connector.

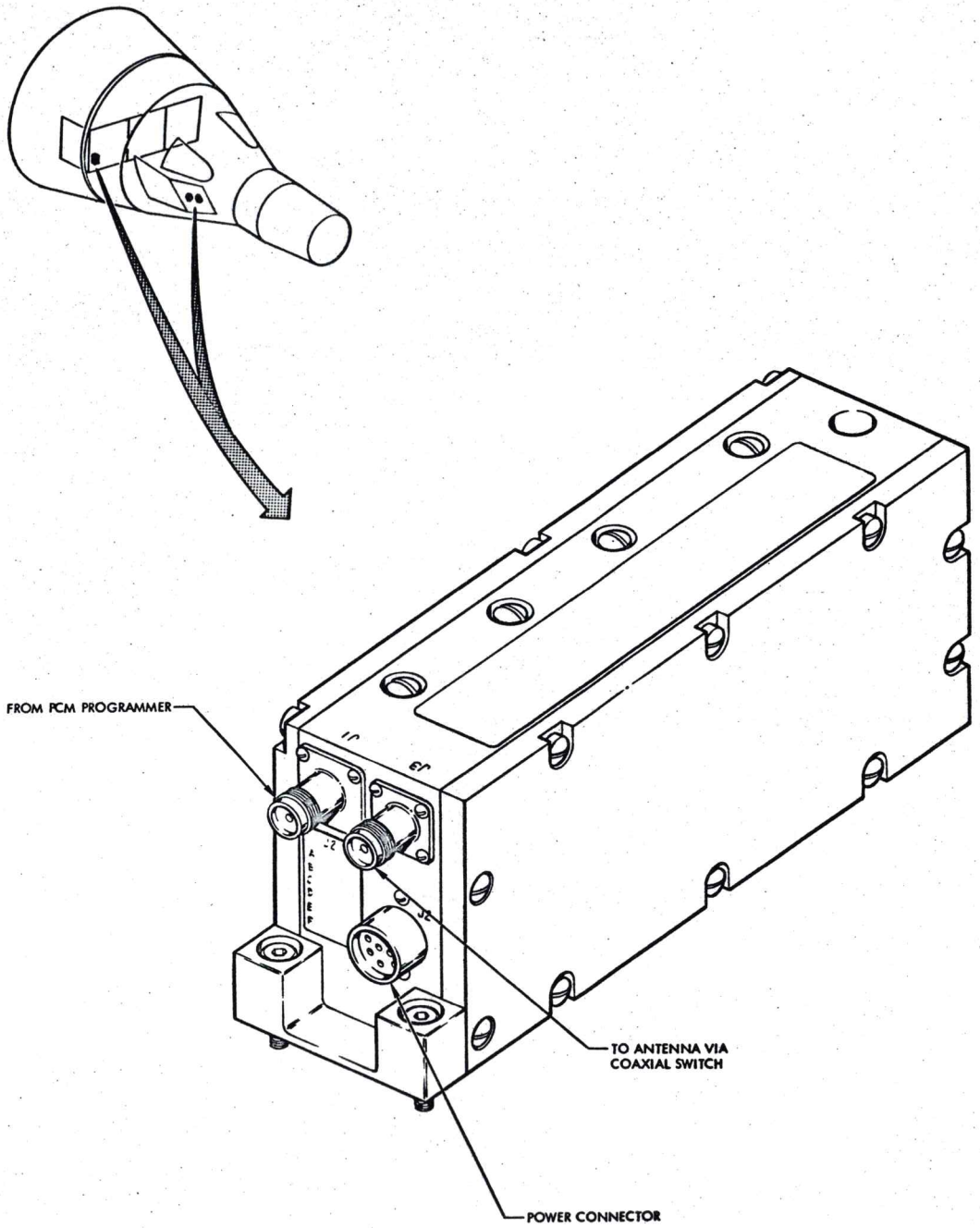

Figure 9-20 Telemetry Transmitters

FM 2-9-20

Two of the transmitters are located in the right forward equipment bay of the re-entry module, the third is located on the electronic module in the adapter equipment section.

Electrical Characteristics: The three telemetry transmitters are classified either by operating frequency (high, low, or mid) or by their function (real-time, delayed-time, or stand-by). The stand-by transmitter may be used either for real-time or delayed-time transmission depending upon the ground station command via the DCS or the setting of the STBY TM CONTROL switch. The real-time telemetry transmitter, transmitting data directly to the ground station, is actuated either by the Flight Crew or by ground command. The delayed time telemetry transmitter transmits data that has been stored previously on an on-board recorder. The delayed time telemetry transmitter is actuated either by ground command or by the Flight Crew. The TM CONTROL switch allows actuation of either the real-time telemetry transmitter (R/T & ACQ), the real-time and delayed-time telemetry transmitters (R/T-D/T), or selection of the command (CMD) position. In the CMD position, either the real-time, delayed-time, or both telemetry transmitters may be actuated by a DCS command.

The three frequency modulated (FM) transmitters provide minimum output power of two watts. The real-time (low-frequency) telemetry transmitter operates at 230.4 MC. The delayed-time (mid-frequency) telemetry transmitter operates at a frequency of 246.3 MC. The stand-by (high-frequency) transmitter, operating at 259.7 MC, may be used either for real-time or delayed-time transmission in case one of the transmitters fails.

The three telemetry transmitters receive their pulse code modulated (PCM) inputs from the spacecraft instrumentation system.

FLASHING RECOVERY LIGHT AND POWER SUPPLY

Purpose: The flashing recovery light and power supply provide visual spacecraft location information.

Physical Characteristics: Figure 9-21 shows the physical representation and approximate location of the flashing recovery light and its power supply. The light is self-extended by a torsion spring. The plug applying power to the light is kept in place by a compression spring. The recovery light will be automatically extended at the time the main parachute is jettisoned.

The flashing recovery light power supply is mounted in the cabin, aft of the ejection seats. The power supply is approximately 7 inches long, 4 inches wide, 3 inches deep and contains one connector. The flashing recovery light is approximately 1.25 inches wide, 0.75 inches thick, and 3.25 inches high, excluding tube and erecting mechanism. The overall length of the light and erecting mechanism is approximately 6.5 inches.

Electrical Characteristics: The recovery light is automatically extended at main parachute jettison. The extended recovery light is energized by positioning the RESC BEACON CONTROL switch to ON.

The power supply consists of a battery pack and transverter. The battery pack consists of several Mercury cells to comprise a power source of 6.75 VDC to a DC-DC

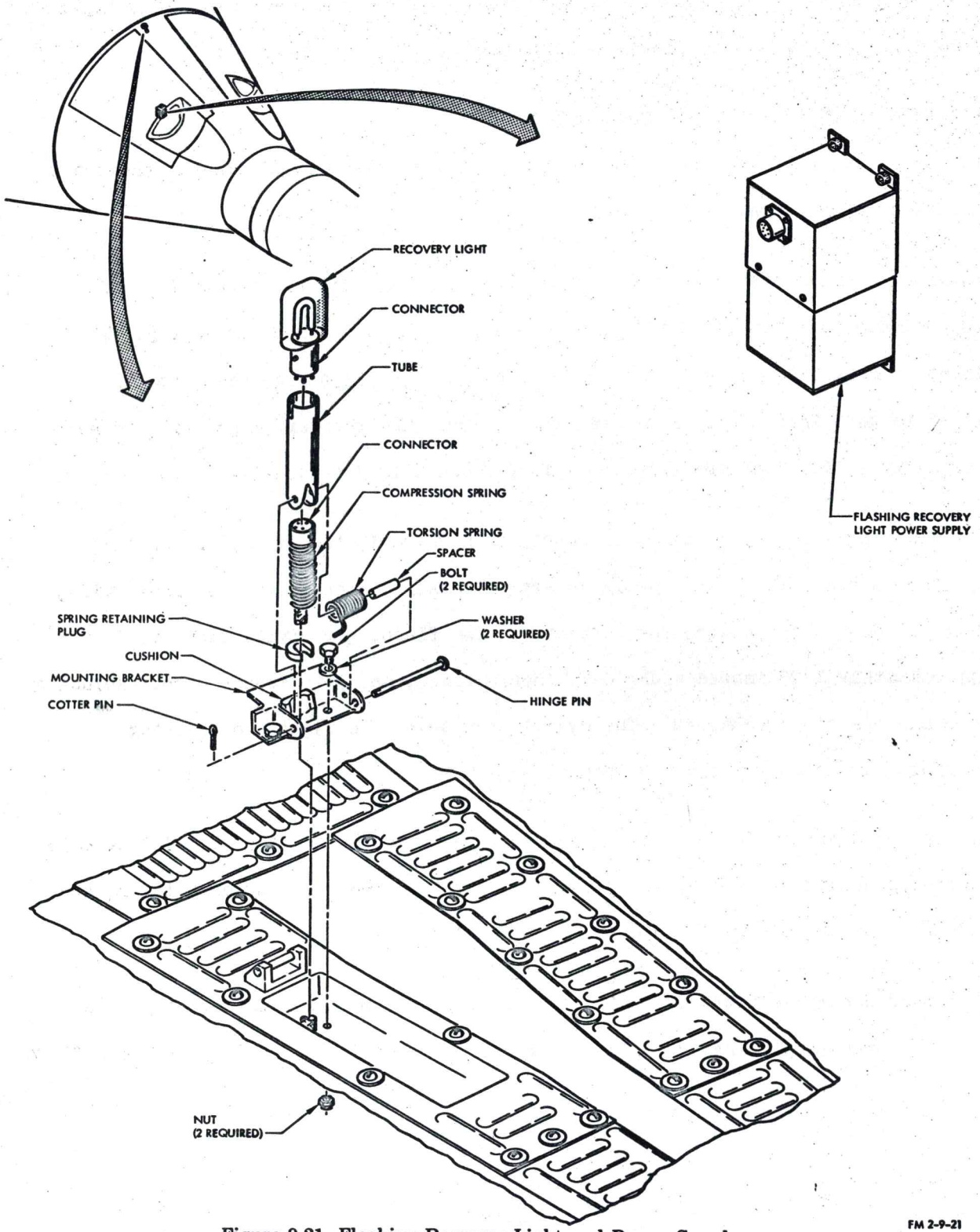

Figure 9-21 Flashing Recovery Light and Power Supply

converter whose output is fed to a voltage doubler and a capacitive network. The 450 VDC output of the voltage doubler is used to power the flashing light while the capacitive network in conjunction with a thyratron, provides trigger pulses to accomplish switching or flashing action of the light. The trigger pulses occur at a rate of 15 triggers per minute.

DIGITAL COMMAND SYSTEM

Purpose

The digital command system (DCS) provides a discrete command link and a digital data updating capability for the spacecraft computer and time reference system (TRS).

The discrete command link enables the ground to control radar tracking beacons, selection of telemetry transmitters, instrumentation data acquisition, and abort indications.

The capability of digital data updating enables the mission control center to update the spacecraft computer and TRS to bring about a controlled re-entry at a pre-determined point, and allows timed shutdown of equipment controlled by DCS relays.

Physical Characteristics

The DCS consists of a receiver/decoder package and two relay boxes as illustrated in Figure 9-22 and 9-23, respectively. The three components are located in the electronic module of the adapter equipment section.

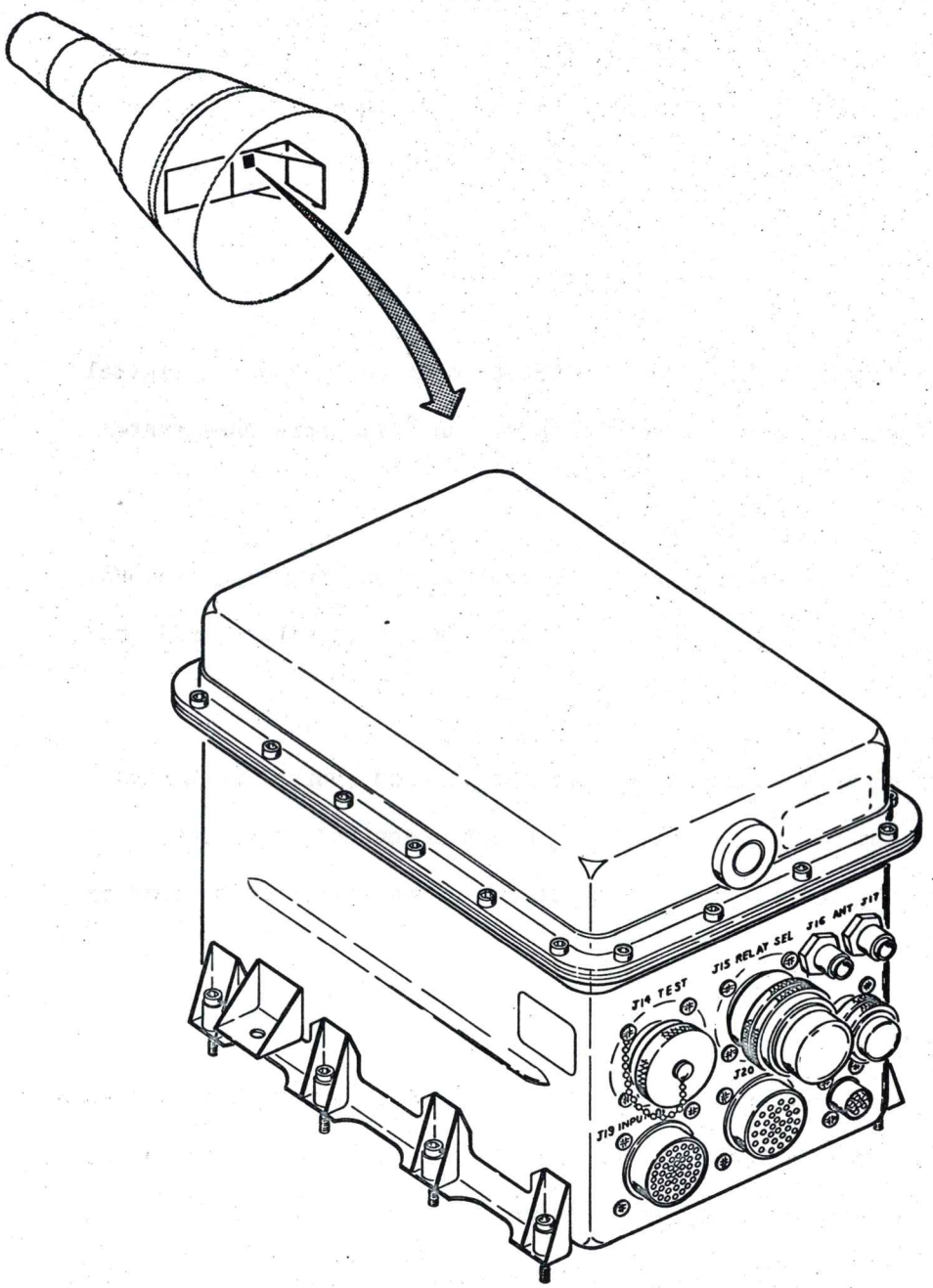

Figure 9-22 DCS Receiver/Decoder

FM 2-9-22

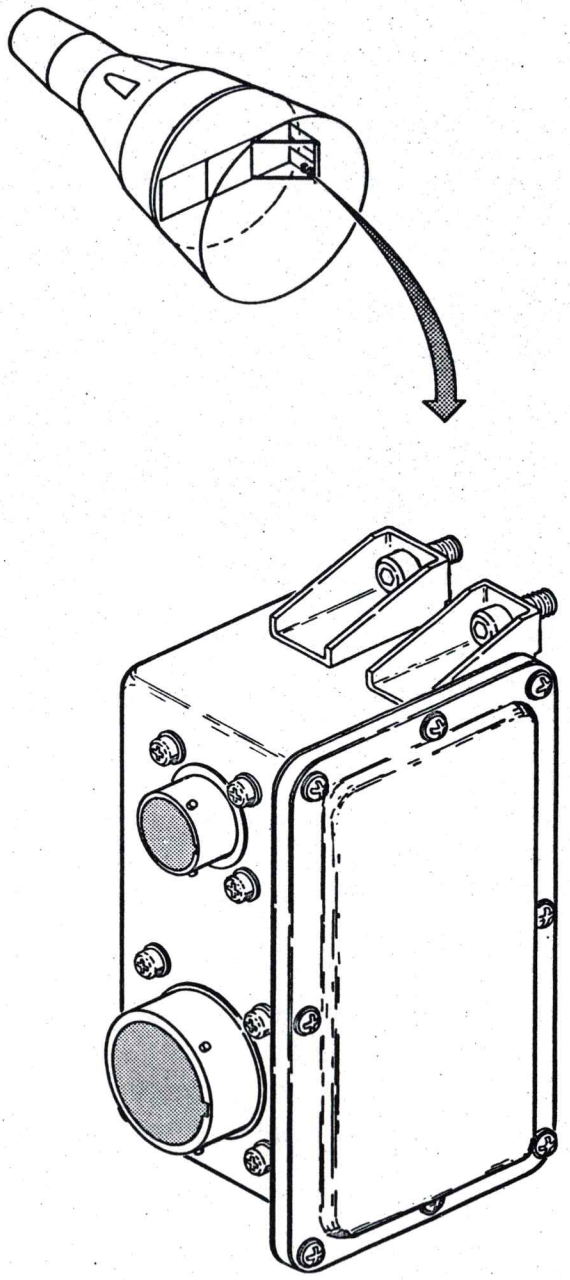

Figure 9-23 DCS Relay Box

FM 2-9-23

The receiver/decoder package is approximately 8 inches high, 8 inches wide, and 12 inches long. Both relay boxes are identical. Each relay box is approximately 2.25 inches wide, 5 inches high, and 3 inches deep. The combined weight of the receiver/decoder package and the two relay boxes is approximately 23 pounds. The receiver/decoder package contains two UHF receivers and a decoder while each of the two relay boxes contain eight relays.

General Description

The DCS receives phase shift keyed (PSK) frequency modulated (FM) signals composed of a reference and an information signal. The information signal is in phase with the reference for a logical "one" and 180° out of phase with the reference for a logical "zero"; thus establishing the necessary requirements for digital data.

Types of Commands

The DCS receives two types of digital commands: real time commands (RTC) and stored program commands (SPC). RTC causes relays within the DCS to be actuated. Nine of the 16 relays available for RTC are utilized to perform the following functions:

(1) select the stand-by telemetry transmitter for real time transmission
(2) select the stand-by telemetry transmitter for delayed time transmission
(3) select real time telemetry and acquisition aid beacon transmission
(4) select real time and delayed time telemetry transmission
(5) actuate the Adapter C-band radar beacon

(6) actuate the Re-entry C-band radar beacon

(7) illuminate the abort indicators

(8) actuate the playback tape recorder

(9) initiate calibration voltage for the PCM programmer

The remaining seven relays are not utilized and perform no mission function. DCS Channel assignments for the nine functions listed above may be different on each spacecraft.

When the spacecraft goes out of range of the ground station, equipment controlled by DCS channels may be shut-down by a signal applied from the TRS to reset the DCS relays. This condition is known as salvo. The DCS relays in one relay box may be reset by the Flight Crew momentarily positioning the TAPE PLY BK switch to RESET.

Message Format and Modulation

The ground station transmits a 30 bit message for SPC's and a 12 bit message for RTC's. Each bit consists of five sub-bits. The five sub-bits are coded to represent a logical "one" or "zero." The first three bits of each message designate the vehicle address. If the vehicle address is not correct, the DCS will reset itself and will not accept the message. If the vehicle address is accepted the sub-bit code will be automatically changed for the remainder of the message to reduce the probability of accepting an improper message.

The second three bits of each message designate the system address and identify the remainder of the message as being a RTC or one of the following SPC:

computer update, TRS TTG to T_R, or TRS TTG to T_X. If the message is a SPC, the last 24 bits will be a data word. If the SPC is a TRS TTG to T_X command, the last eight bits are ignored by the TRS. In case of a computer message, six bits of the data word contains the internal computer address and the remaining 18 contains information. Since a RTC consists of 12 bits, the six bits following the system address contain a five-bit relay number and a one-bit relay set-reset discrete.

The PSK modulation signals are 1 KC reference and a 2 KC information signal. The receiver output is the composite audio of the 1 KC and the 2 KC signals. The composite audio output is filtered to recover the 1 KC and the 2 KC signals. The phase comparator compares the 2 KC to the 1 KC signal. The output of the phase comparator is used to trigger a flip-flop to produce either a logical "one" or "zero" sub-bit. The 1 KC reference signal is used to synchronize the DCS.

Operational Description

A block diagram of the DCS receiver/decoder is shown in Figure 9-24. Basically, the block diagram consists of a receiver, a decoder, and a power supply common to both sections.

The audio outputs of the two receivers are linearly summed in an emitter follower of the sub-bit detector module. The sub-bit detector converts the audio to sub-bits. The 5-stage shift register provides buffer storage for the output of the sub-bit detector. The states of the five stages of the shift register represent the sub-bit code. When a proper sub-bit code exists in the shift register, the bit detector produces a corresponding "one" or "zero" bit. The output of

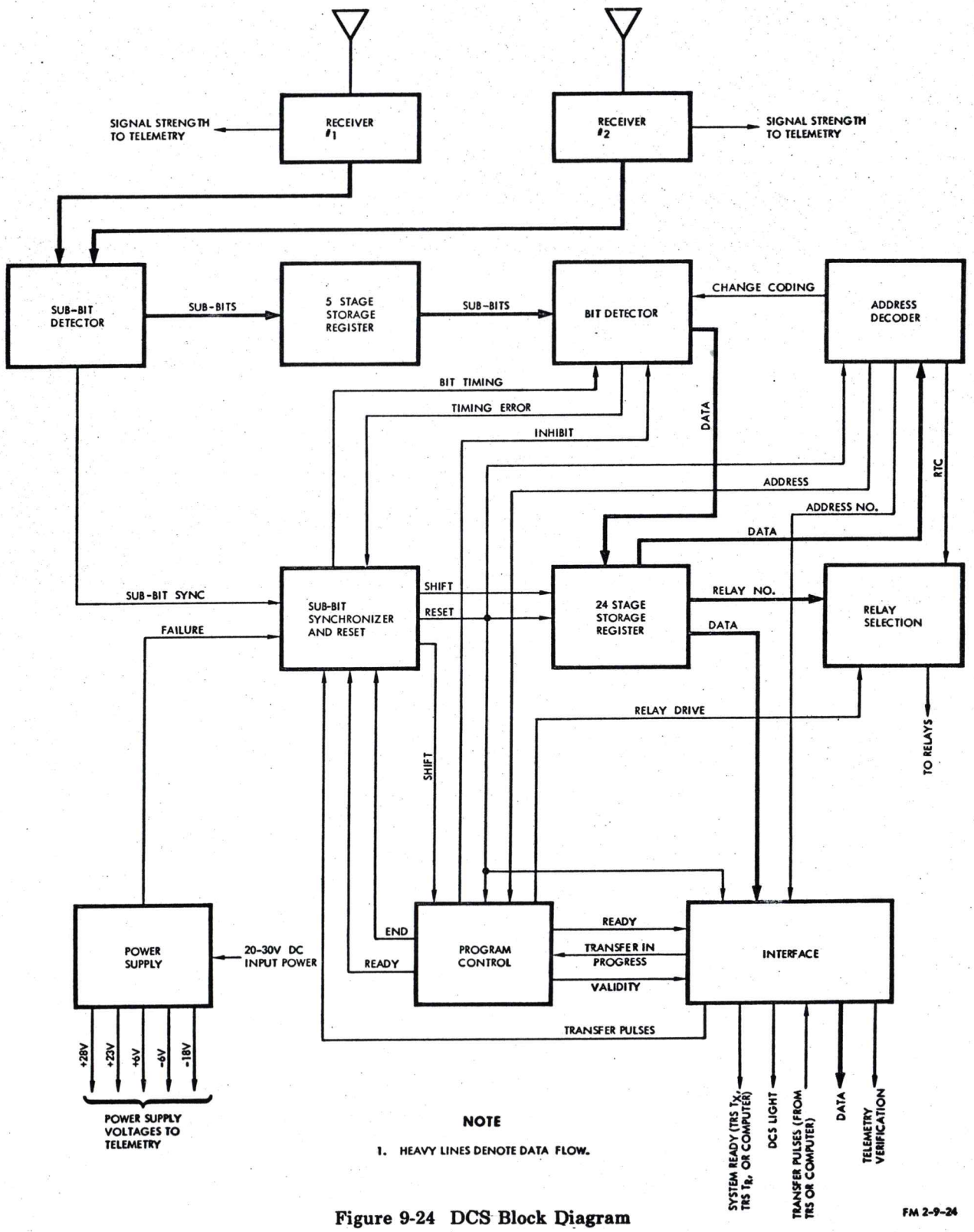

Figure 9-24 DCS Block Diagram

the bit detector is applied to the 24 stage shift register. The operation for RTC and SPC is identical up to the input to the 24 stage shift register.

The sub-bit sync counter produces a bit sync output for every five sub-bits. The bit sync is used to gate the 24 stage shift register.

When a message is received, the vehicle address is inserted into the first three stages of the 24 stage shift register. If the vehicle address is correct, the vehicle address decoder circuit will produce an output to the bit detector which changes the acceptable sub-bit code for the remainder of the message. The next three bits of the message, the system address, are inserted into the first three stages of the 24 stage shift register, displacing the vehicle address to the next three stages. The system address decoder circuit identifies the specific address and sets up the DCS to handle the remainder of the message.

When the system address is recognized to be a RTC, the message is inserted into the first six stages of the 24 stage shift register and the system address and vehicle address are shifted into the next six stages. The real time command selection circuit recognizes the first stage of the 24 stage shift register to be either a relay set or reset function and will apply a positive voltage to all set or reset relay coils, as applicable. The real time command selection gates select the proper relay from the relay number stored in the 24 stage shift register and provides an output which applies a power return to the coil of the selected relay.

When the system address is a SPC, the six address bits in the 24 stage shift registers are cleared and the remaining 24 bits of the message are placed into the register.

Assuming that the system address recognizes a TRS TTG to T_R message, the data flow would be as follows: the TRS T_R isolation amplifier, in the interface circuit, will apply a "ready" pulse to the TRS. The "ready" pulse sets up the TRS to transfer TRS TTG to T_R data from the DCS. When the TRS is ready to accept the data, it sends 24 shift pulses at the TRS data rate to the TRS input of the DCS. The data in the 24 stage shift register is then shifted out of the register through the DCS data isolation amplifier to the TRS. The DCS operations for computer updating and TRS TTG to T_X messages are similar to TRS TTG to T_R operations.

Salvo occurs when TRS TTG to T_X reaches zero. At $T_X = 0$, the TRS applies a signal to the TRS T_X input line of the DCS which causes the real time command selection circuits to reset the DCS relays.

After a SPC or RTC has been carried out by the DCS, a verification signal is supplied to the telemetry system for transmission to a ground station. The DCS indicator, on the pilots instrument panel, illuminates when a SPC is transferred to the appropriate system.

Upon completion of data transfer or if the system to which the data was transferred fails to respond within 100 milliseconds, the DCS will reset in preparation for the next message. The DCS will also reset in the event of a timing error in transmission of data, or if the DCS power supply voltages become out of tolerance.

INSTRUMENTATION SYSTEM

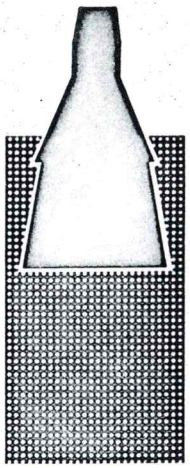

Section X

TABLE OF CONTENTS

TITLE	PAGE
SYSTEM DESCRIPTION	10-3
SYSTEM OPERATION	10-3
SYSTEM UNITS	10-6
SENSORS	10-6
INSTRUMENTATION ASSEMBLIES	10-10
MULTIPLEXER/ENCODER SYSTEM	10-15
MAGNETIC TAPE RECORDER/REPRODUCER	10-17
DC TO DC CONVERTERS	10-18
PHYSIOLOGICAL INSTRUMENTATION	10-18
GENERAL	10-18
TAPE RECORDING	10-19
TELEMETRY	10-19
POWER	10-20

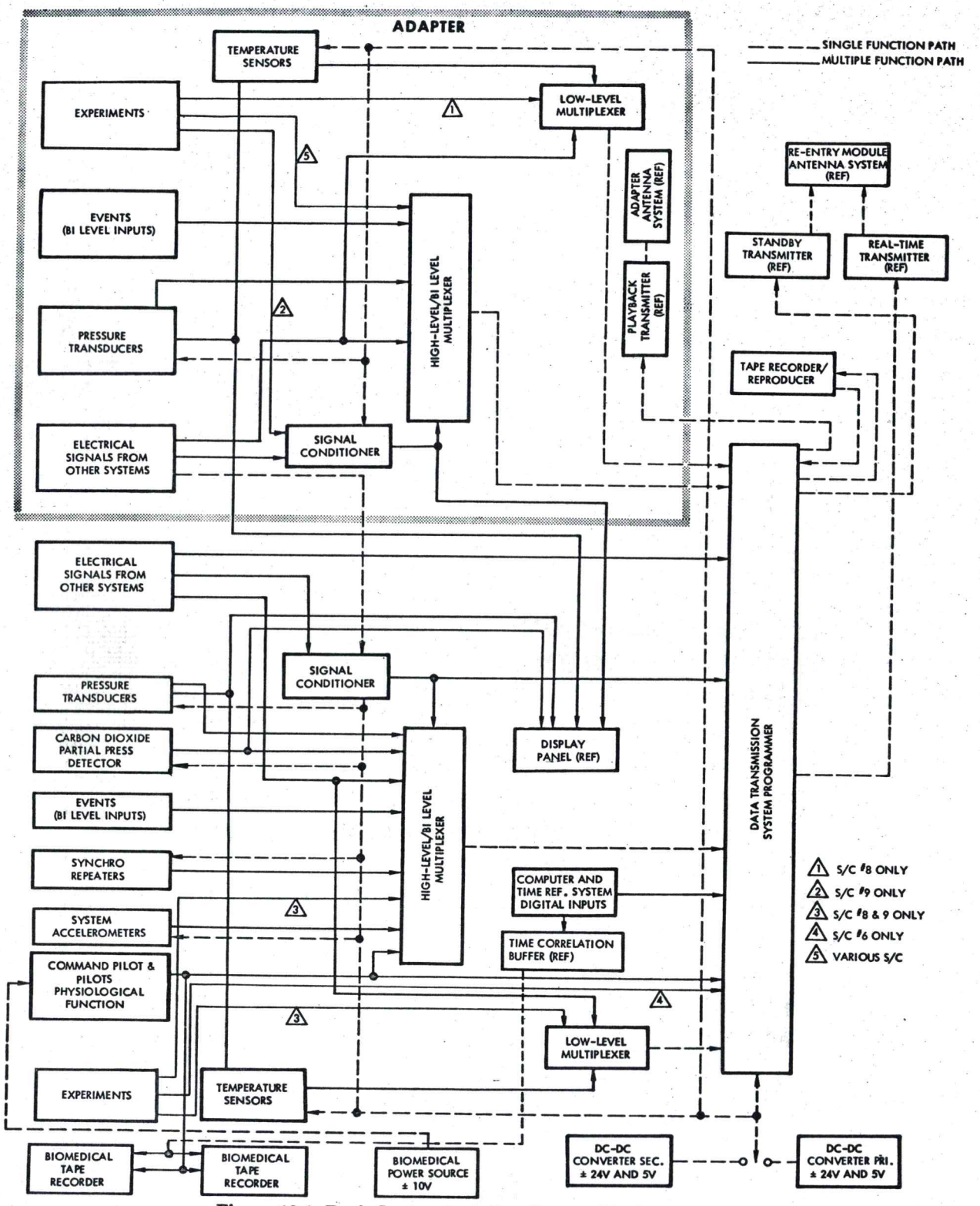

Figure 10-1 Basic Instrumentation System Block Diagram

FM2-10-1

SECTION X INSTRUMENTATION SYSTEM

SYSTEM DESCRIPTION

The Instrumentation System monitors the performance and operation of the spacecraft throughout its mission. It provides for approximately 65 measurements (Operational Measurements) which are necessary for performance of the mission and approximately 250 measurements for post-mission analysis and evaluation. The system primarily monitors structural phenomena and spacecraft system parameters. It also monitors the vital physiological functions of the pilots and receives signals from the DOD/NASA experimental equipment. Because of the various types of parameters monitored, the system components are located throughout the spacecraft.

SYSTEM OPERATION

The basic functions of the instrumentation system are to (1) sense the various conditions and functions, (2) condition the resulting signals (when necessary) to usable levels, (3) display pertinent data in the spacecraft cabin, (4) record certain data for delayed-time (data-dump) transmission, and (5) provide signals for real-time transmission to the ground stations. During pre-launch operations, data transmission is accomplished by both the use of "hardlines," attached to the spacecraft umbilicals, and telemetry. After launch, data transmission is accomplished by telemetry only. The telemetry transmitters are discussed in Section IX, "Communication System." A block diagram of the system is shown in Figure 10-1.

The system senses the prescribed parameters through the use of sensors which may be contained within the system or which may be integral parts of other systems.

Typical sensors include pressure transducers, resistance temperature sensors and accelerometers. Signals may also be obtained from such functions as switch and relay actuations and from electronic package monitor points.

The majority of the signals generated by the end items are usable for the spacecraft cabin indicators and/or the encoding equipment without alteration. Some of them, however, are routed to two signal conditioning packages (instrumentation assemblies) where their characteristics and/or amplitudes are changed. The resulting signals, as well as those from the other sensors, are of four basic types: low-level (0-20 MV DC), high-level (0-5 VDC), bi-level (0 or 28 VDC), and bi-level pulse (28 VDC or 0 VDC). Signals of selected parameters are supplied to the cabin indicators, while signals of all parameters are supplied to the PCM multiplexer/encoder system. The multiplexer/encoder system converts the various spacecraft analog and digital signals to a serial binary-coded digital signal for presentation to the data-dump tape recorder and the real-time telemetry transmitter. The tape recorder records a portion of the real-time data from the programmer at a tape speed of 1 7/8 inches per second and, upon command, will play back the data for transmission to a ground station, at a speed of 41.25 IPS (22 times the recording speed).

Five physiological functions are monitored for each pilot. All of the measurements are supplied as real-time data, while only one is supplied as delayed-time data. In addition, some of the measurements are recorded by two special (BIO-MED) tape recorders.

SYSTEM UNITS

SENSORS

A number of different types of sensors are used in the spacecraft for measurement of the various conditions. Figure 10-2 shows the locations of some of the sensors contained in the instrumentation system.

The pressure transducer is one type of sensor used in the system. Its function is to convert a fluid or atmospheric pressure to an electrical signal. The sizes of the units vary from about 1 1/4" x 1 1/4" x 3" to approximately 2 1/2" x 2 1/2" x 4"; the weights vary from approximately .45 lb. to 2 lbs. Typical transducers are shown in Figure 10-3. The unit construction utilizes a bellows or bourdon tube which varies the wiper position of a potentiometer, proportionally, with the input pressure. Two potentiometers are used in the dual-output units to separate the cabin indicator circuit from the multiplexer/encoder (Telemetry) circuit and avoid a possible loading error in the latter. With one exception, pressure transducer outputs range from 0 to 5 volts D.C. The OAMS quantity system pressure-temperature sensor, which drives a cabin indicator, has an output of 0 to 24 VDC.

Spacecraft temperatures are monitored by platinum element temperature sensors. The units vary somewhat in size but are roughly .4" x .75" x 2.0". They are pictured in Figure 10-3. There are two types of sensors: a probe type and a surface-mounted type. Probes are used to monitor fluid temperatures and surface-mounted sensors are used to monitor surface temperatures. Both types utilize a fully-annealed pure-platinum wire encased in ceramic insulation. The sensors form

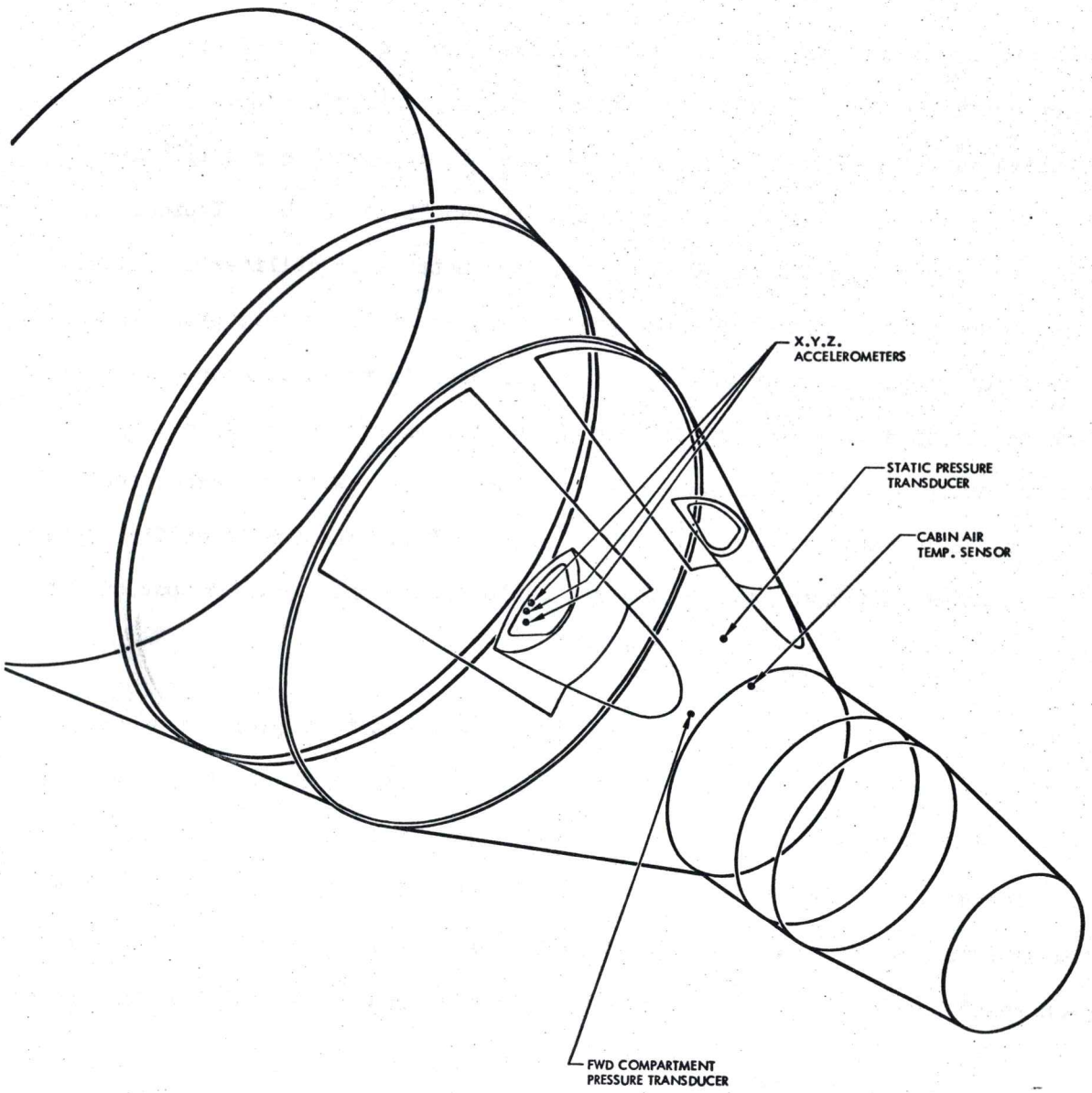

Figure 10-2 Basic Instrumentation (Temp & Pressure) Sensors

FM2-10-2

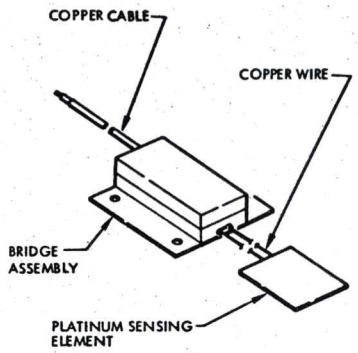

TEMPERATURE PICK-UP (0-300°F)

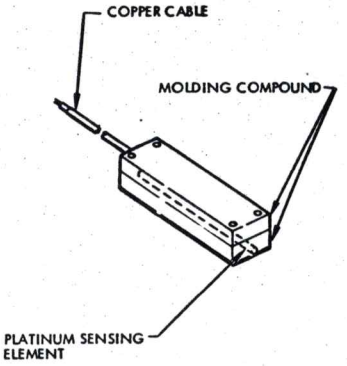

TEMPERATURE PICK-UP (0-400°F)

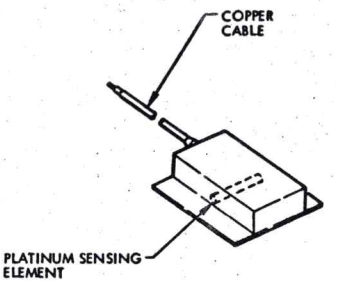

TEMPERATURE PICK-UP (0-600°F)

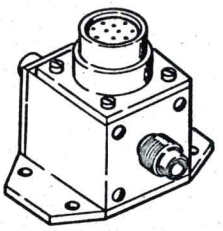

PRESSURE TRANSDUCER (0-6 PSID)

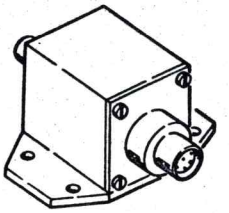

PRESSURE TRANSDUCER (0-15 PSIA)

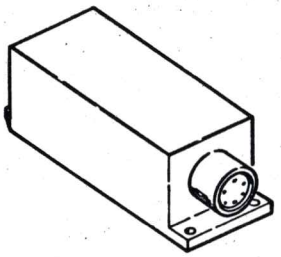

FORCE SERVO ACCELEROMETER

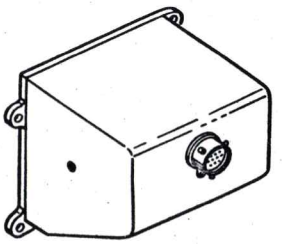

SYNCHRO REPEATER

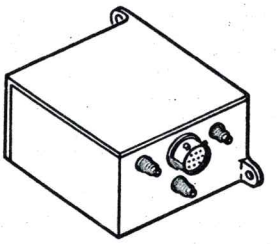

CARBON DIOXIDE PARTIAL PRESSURE DETECTOR

Figure 10-3 Instrumentation System End Items

FM2-10-3

one leg of a bridge network whose unbalance will produce an output of either 0 to 20 MV DC or 0 to 400 MV DC. The 0-20 MV DC outputs are used for data transmission purposes and the 0-400 MV DC outputs for cabin displays.

Three linear accelerometers are provided to measure the accelerations along each of the spacecraft axes. The units are approximately 1.2" x 1.2" x 3" and are pictured in Figure 10-3. The accelerometers are electrically-damped, force-balance, servo-type units with outputs of 0-5 VDC. The unit which is used for longitudinal measurements has a range of -3 to +19G's, and the other two have ranges of $\pm$3 G's. The accelerometer is a torque balanced, closed loop system with a pendulous mass supported by an extremely low friction jewel bearing. An electromagnetic position detector notes the slightest movement of the mass and supplies a directly proportional electrical signal to a servo amplifier. The output of the servo amplifier is applied to a torque generator which tends to restore the mass to its equilibrium position. The output of the accelerometer is obtained by sensing the voltage drop across the resistor in the system loop (Figure 10-4).

A carbon dioxide partial pressure detector (Figure 10-3) is utilized to insure that there is a safe level of CO_2 in the pilot suit circuits. The detector is located on the environmental control system (ECS) module. The gaseous mixture to be sampled is obtained as it exits from the ECS carbon dioxide and odor absorbers. The sample stream is divided through two separate passages, both filtering water vapor, but only one filtering carbon dioxide. The streams then pass into identical ion chambers which are polarized with $\pm$50 VDC obtained from

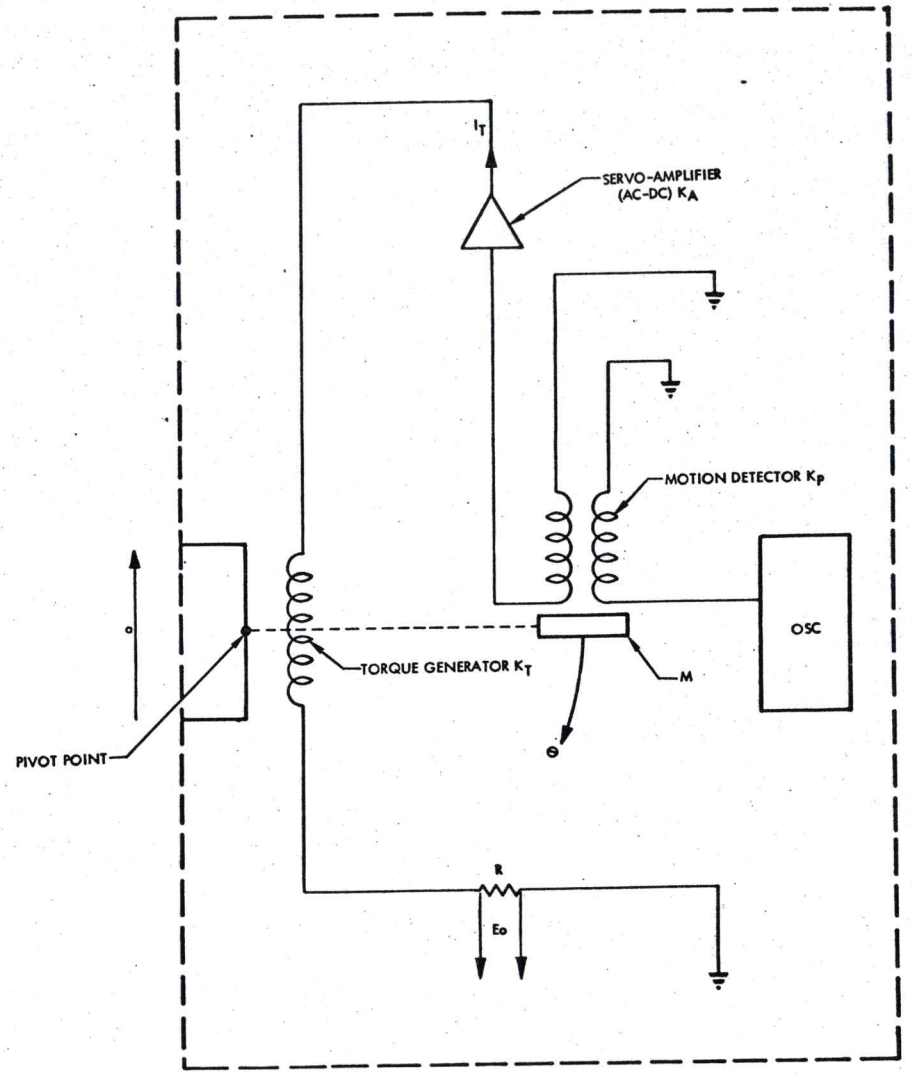

Figure 10-4 Servo Accelerometer Schematic Diagram

FM2-10-6

a DC-DC converter contained in the detector assembly. In the ion chambers, a radioactive source ionizes the gases. The difference of the electrical outputs is amplified and provides a voltage which is proportional to the partial pressure of the mixture. The gas is then returned to the inlets of the suit compressors. The system provides two outputs: 0-5 VDC into a nominal 2.5 megohm load for telemetry use, and 0-100 micro amps into a 4000 ohm cabin indicator (Figure 10-5).

Three synchro repeater assemblies (Figure 10-3), mounted in the upper portion of the left landing gear well, monitor the synchros on the inertial guidance system (IGS) platform gimbals. Each synchro repeater output is a DC signal proportional to the spacecraft roll, yaw, or pitch attitude in terms of platform coordinates. Two outputs are available from each repeater; (a) coarse output, which provides 0-5 VDC output for 0-350 degrees of synchro travel and (b) fine output, which gives 0-5 VDC output for every 35 degrees of synchro travel. Only the coarse output is monitored (Refer to Figure 10-5). Each synchro repeater potentiometer has a 10° (Max.) dead band, the center of which is located at the 135° platform position. Control of the synchro repeaters is achieved by pilot actuation of the platform mode select switch.

INSTRUMENTATION ASSEMBLIES

A number of the signals in the various spacecraft systems are not compatible with the instrumentation equipment and, therefore, must be conditioned for its use. Two signal-conditioning packages (instrumentation assemblies) are provided for this purpose. Instrumentation assembly No. 1 is approximately 8" x 10" x 3" and is located in the adapter section (Figure 10-6). Instrumentation assembly No. 2

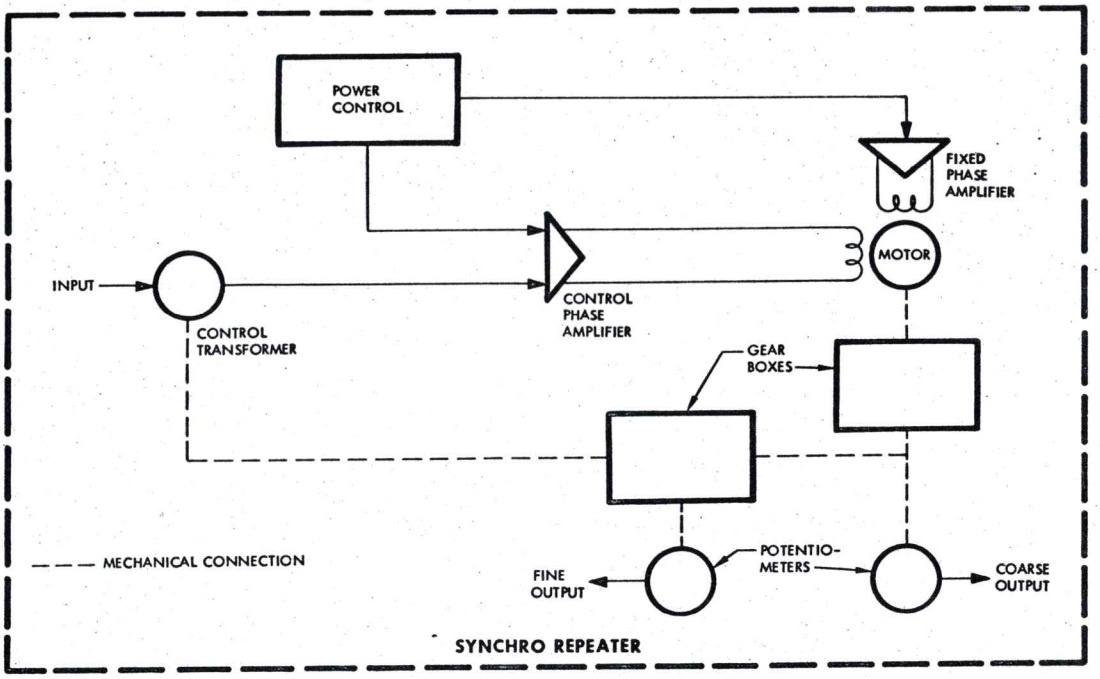

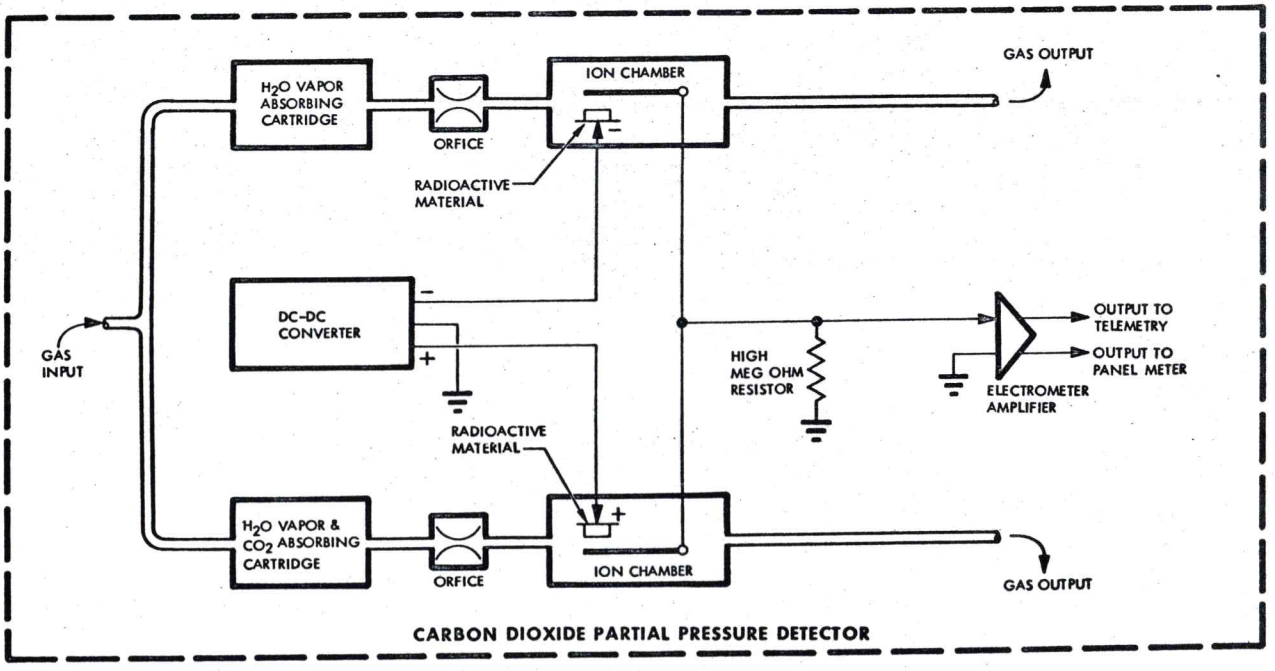

Figure 10-5 Synchro Repeater and $C0_2$ Partial Pressure Detector Schematic Diagram FM2-10-7

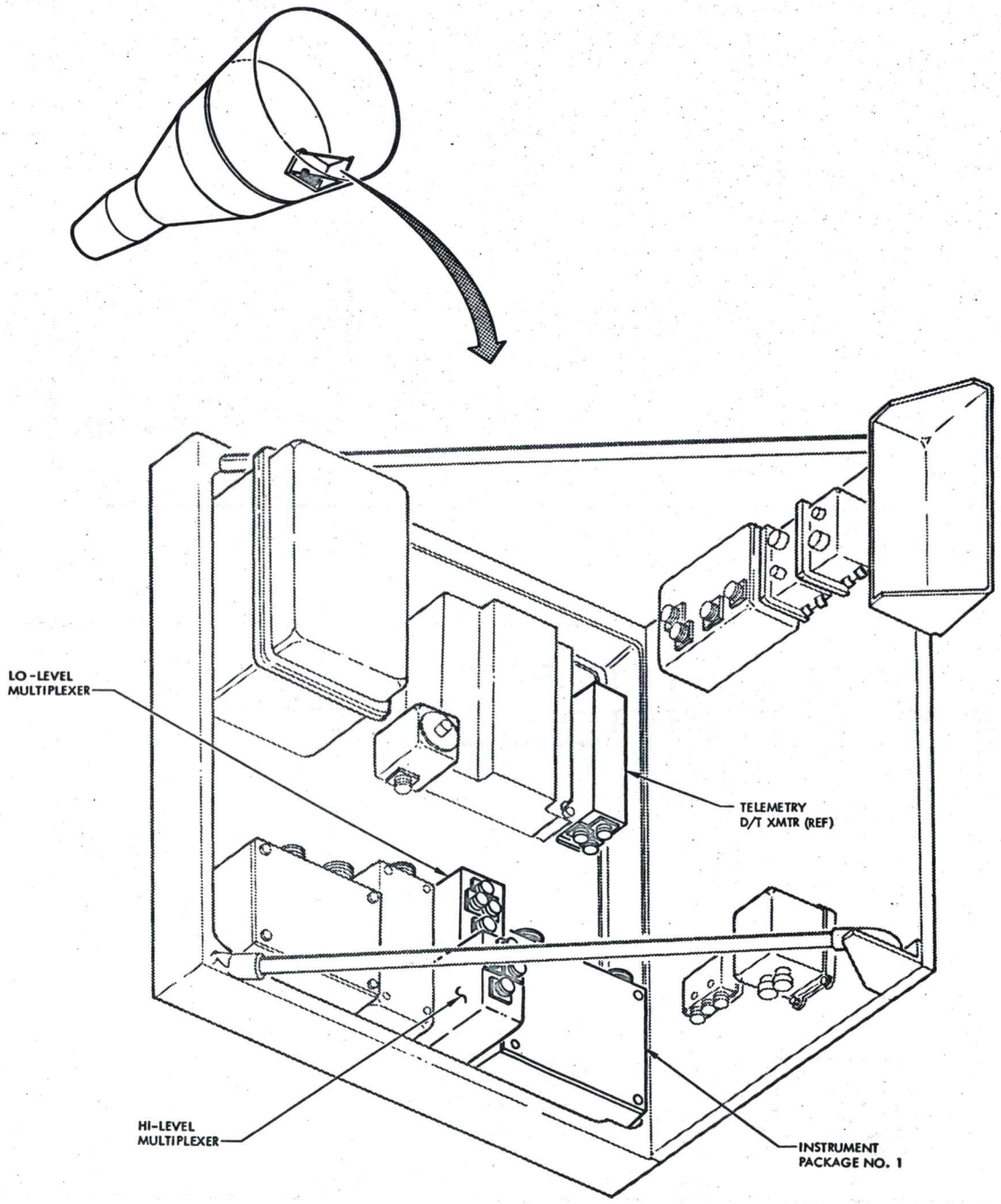

Figure 10-6 Major Instrumentation Components (Adapter Section)

FM2-10-5

is approximately 10" x 10" x 8" and is located in the upper right equipment bay of the re-entry section (Figure 10-7). Both units utilize sealed containers with an operating pressure of 4.5 PSID. The assemblies employ modular construction with plug-in modules that may be individually replaced. A module consists of one or two standard printed circuit boards with the necessary component parts and a connector for attachment to a mother board within the package. There are 18 module spaces in assembly No. 1 and 51 in assembly No. 2. Some modules provide for one data channel and others for two. There are six basic types of modules: the Phase Sensitive Demodulator, DC voltage monitor, AC voltage monitor, DC millivolt monitor, attenuators, and frequency sensor. Several of these have additional variations for different signal handling capabilities.

The Phase Sensitive Demodulator (PSD) has six variations. Basically, the PSD accepts two input voltages: one signal voltage and one reference. It provides a DC output of five volts, for a full scale input signal that is in phase with the reference, and an output of 0 volts, for a full scale signal that is out of phase with the reference. The various configurations of this unit provide different full-scale sensitivities including special calibration curves for rate gyros.

The 14 types of DC voltage monitors are designed to accept various positive and negative DC voltage inputs and provide outputs of 0 to 5 VDC.

The AC voltage monitor accepts a signal ranging for 23 to 29 volts rms over a frequency range of 380 to 420 cycles. The output is from 0-5 VDC, varying only with the input voltage.

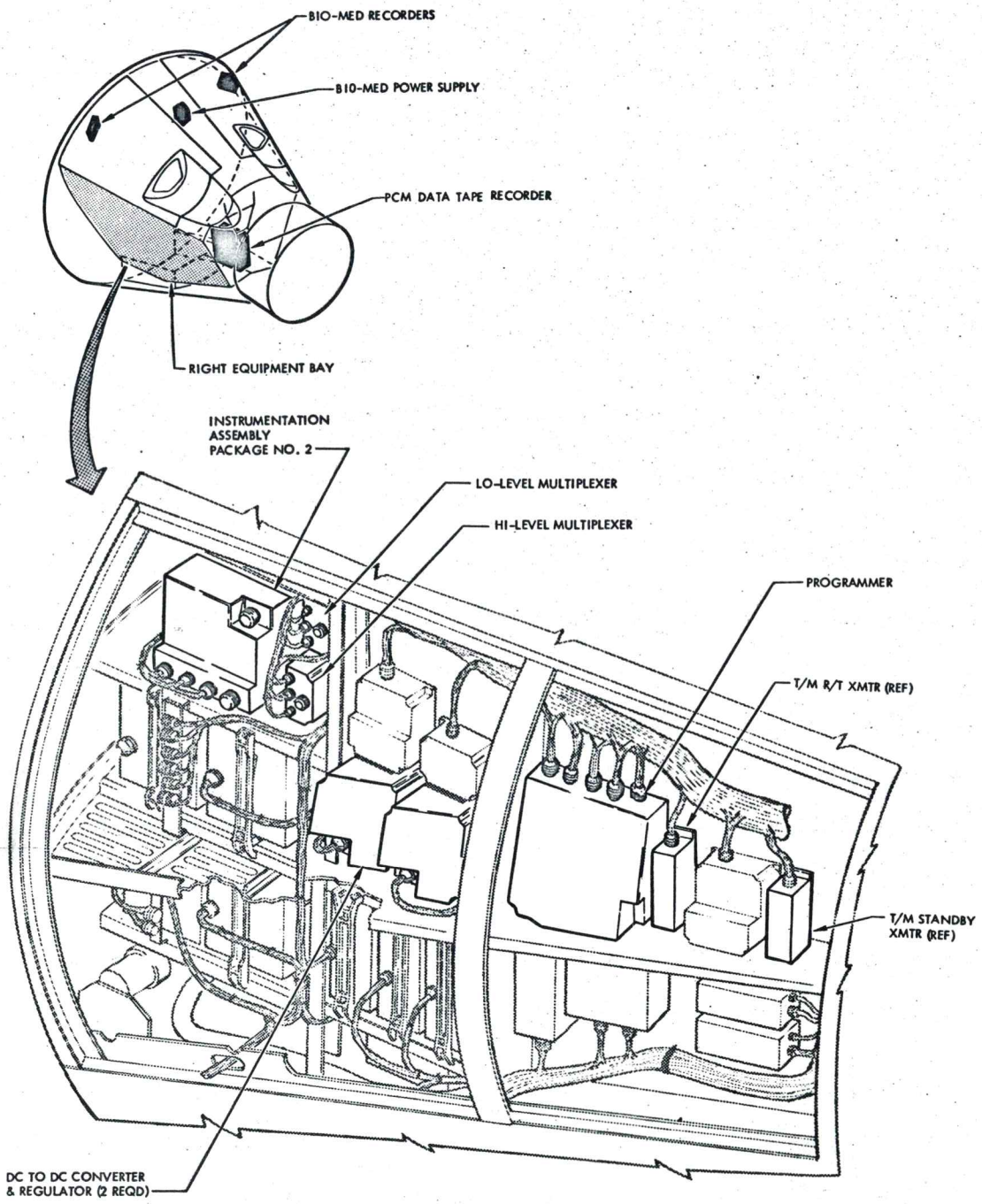

Figure 10-7 Major Instrumentation Components (Re-Entry Section)

FM2-10-4

The attenuator modules convert various DC inputs to signals in either the 0-20 MVDC range or the 0-5 VDC range. There are six types of attenuator modules for S/C 5 and five types for S/C 6. Some attenuator modules contain two data channels.

The DC millivolt monitor accepts an input of 0 to 50 MV DC and provides a proportional output of 0 to 20 MV DC.

The AC frequency sensor provides a 0 to 5 VDC output proportional to an input frequency varying from 380 cps to 420 cps. The voltage level of the input is 26 volts rms and does not affect the output of the module.

MULTIPLEXER/ENCODER

The multiplexer/encoder is divided into five packages to allow the data signals to be sampled near their sources. The units are shown in their respective locations in Figures 10-6 and 10-7. Two identical low-level multiplexers, one in the re-entry section and the other in the adapter, each sample 32 low-level signals (0-20 MVDC). Two high-level multiplexers, in similar locations, each accept 32 high-level (0-5 VDC), 24 bi-level (0 or 28 VDC), and 16 bi-level-pulse (28 or 0 VDC) signals. The programmer, located in the re-entry module, contains the balance of the multiplexing circuits, the analog-to-digital converter, program generator, sync generator, address generator, output shift register, clock rate generator, digital shift regulator, and a tape recorder input converter/conditioner.

The sampling rates of the multiplexer inputs are established by the timing chain in the programmer. In the low-level multiplexer, a group of eight input gates operates at 1.25 samples per second and another group of 24 input gates operates

at .416 samples per second. In the high-level multiplexers, all analog channels are sampled at 1.25 samples per second, and the bi-level and bi-level pulsed signals are sampled at a rate of 10 samples per second. Bi-level pulses occurring between samples are held (remembered) by the bi-level pulse gate circuitry. After sampling has occurred, the gates are reset. For bi-level signals, 15 VDC or more represents a binary "ONE" and 5 VDC or less is a binary "ZERO." Either a binary "ONE" or a binary "ZERO" can indicate that an event has occurred. For bi-level-pulsed signals, 15 VDC or more represents a binary "ZERO" (0 VDC), while 5 VDC or less for at least ten milliseconds is a binary "ONE" (5 VDC).

The serial outputs, provided by the programmer, all have positive voltages for "ONES" and zero or negative voltages for "ZEROS." The output for the tape recorder is a 5.12 K bit per second serial return-to-zero (RZ) signal with a +5 volt transition for data "ONES" and no transition for data "ZEROS." The programmer output for the "real time" transmitter is a 51.2 K bit non-return-to-zero (NRZ) signal with a voltage which is adjustable between .1 volt and 1.0 volt peak.

A clock signal of 5.12 K bits per second is also provided for the tape recorder. This output is a pulse train of 50% $^{+}_{-}$5% duty cycle at a peak-to-peak amplitude of approximately 5 volts.

Separate hardline outputs are provided to enable various test equipment to be used without degradation of either the transmitter or tape recorder outputs. The hard-line outputs are "Real Time PCM Signal," "Basic PCM Clock Rate Signal," and "Master Reset Pulse Signal." The signals are two volts peak-to-peak and are fed over twinex coaxial or video cables.

The programmer "Real Time" message format consists of Master Frame and Prime Subframe data. The output to the tape recorder is Prime Subframe data only. The Master Frame consists of 160 words, each word consisting of eight data bits, sampled 40 times per second. Ninety-six Master Frames are required to completely cycle through all data inputs. Every tenth word in the Master Frame contains Prime Subframe data. The Prime Subframe consists of 64 words sampled ten times per second. Twenty-four Prime Subframes are required to cycle through all data inputs of this part of the system. Information bits are obtained from (1) analog data, arranged with the most significant bit first; (2) digital data, broken into groups of eight bits with the most significant bit first; or (3) bi-level data grouped as eight consecutive data bits (referred to as a bi-level "set").

MAGNETIC TAPE RECORDER/REPRODUCER

The magnetic tape recorder/reproducer is approximately 10" x 10" x 4" and is located in the instrument panel pedestal in the spacecraft cabin (Figure 10-7). The package contains the necessary tape mechanism, reels, tape, and record/reproduce electronics to record the return-to-zero (RZ) signal and then reproduce it as non-return-to-zero (NRZ) for transmission to the ground station.

The recorder provides a minimum of four hours recording time at the tape speed of 1-7/8 IPS. The initial recording operation begins with the tape fully rewound. When the playback command is received, the recorder reproduces the data in reverse order and supplies it to the delayed-time telemetry transmitter. Upon removal of the playback command, the recorder stops and immediately resumes recording. Erasure of data already reproduced is accomplished, simultaneously, with recording

of new data. Reel adapters are provided so that the data on the tape can be reproduced using ground instrumentation recorders. The tape, used with the recorder, is standard 1/4" magnetic recording tape.

DC TO DC CONVERTER

The two DC to DC converters, one of which is a standby unit, supply the instrumentation system with regulated DC power. The units are approximately 5.5" x 5.5" x 7", weigh approximately seven pounds each, and are located in the right equipment bay of the re-entry section (Figure 10-7). The converters are essentially voltage regulators which operate on 18 to 30.5 VDC and supply output voltages of +5 VDC, +24 VDC and -24 VDC.

PHYSIOLOGICAL INSTRUMENTATION

GENERAL

The physiological functions of the pilots are monitored by sensors which are attached, at various points, to their skin. Signal conditioners, located in pockets of the underwear, condition the signals from the sensors to make them compatible with the recording and multiplexing equipment. The oral temperature output is then routed directly to the hi-level multiplexer. All other outputs of the signal conditioners are terminated in two jumper plugs which attach to mating connectors in the spacecraft. The mating plugs have jumper wires for programming the data signals to the bio-med tape recorders (Figure 10-7) and to the multiplexer/encoder for transmission to the ground stations.

The physiological data which are monitored by the system are: (1) Electrocardiogram No. 1 (axillary), (2) Electrocardiogram No. 2 (sternal), (3) Respiration

rate and depth, (4) Blood pressure, and (5) Oral temperature.

TAPE RECORDING

The two tape recorders used for the physiological instrumentation are identical. Each one is approximately 9" x 6.5" x 1.7" (excluding connector and mounting projections) and weighs about four pounds. One external connector provides termination points for all inputs and outputs. The circuitry is made up of 19 printed circuit boards with solid-state components. The recorder uses recording tape with a width of 0.497 $\pm$ 0.001 inches. The reel capacity is 890 feet. Some physiological functions of each pilot are recorded on separate tape recorders. Each recorder has six data channels and one timing channel. The timing input is a pulse-coded wave train obtained from the Time Reference System (TRS) through the Time Correlation Buffer (TCB). This signal is used for time correlation when the data is later analyzed. The recorders will operate for a total of 100 hours at a normal tape speed of 0.0293 inches per second. Recorder operation is controlled by the pilots during the mission without "playing back" the data. Upon completion of the mission, the records are removed from the spacecraft so that the tape can be removed and the data extracted. The total power requirement of each recorder is 1.2 watts @ 24 VDC.

TELEMETRY

All physiological data is supplied to the multiplexer/encoder system so that it may be transmitted to the ground stations. The signals for oral temperature are 0-5 VDC in amplitude and are high-level inputs to the multiplexer/encoder. They are recorded by the "data-dump" recorder and transmitted to the ground by the

delayed-time and real-time transmitters. The signals for the balance of the functions, in the 0-20 MVDC range, are supplied to the low-level inputs of the multiplexer/encoder and transmitted in "real-time" only.

POWER

Electrical power for the physiological instrumentation system is provided by the bio-medical power supply (Refer to Figure 10-7). The power supply converts 28 VDC spacecraft power to $\pm$10 VDC.

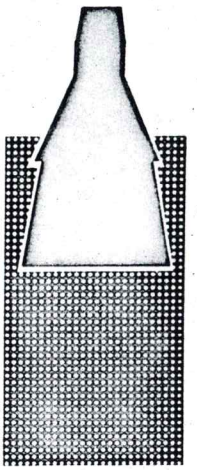

PYROTECHNICS and RETRO ROCKET SYSTEM

Section XI

TABLE OF CONTENTS

TITLE	PAGE
GENERAL INFORMATION	11-3
RECURRENT COMPONENTS	11-3
SEPARATION ASSEMBLIES AND DEVICES	11-8
EGRESS SYSTEMS AND DEVICES	11-35
PARACHUTE LANDING SYSTEM PYROTECHNICS	11-56
PYROTECHNIC VALVES	11-67
RETROGRADE ROCKET SYSTEM	11-69
DOCKING SYSTEM PYROTECHNIC DEVICES	11-76

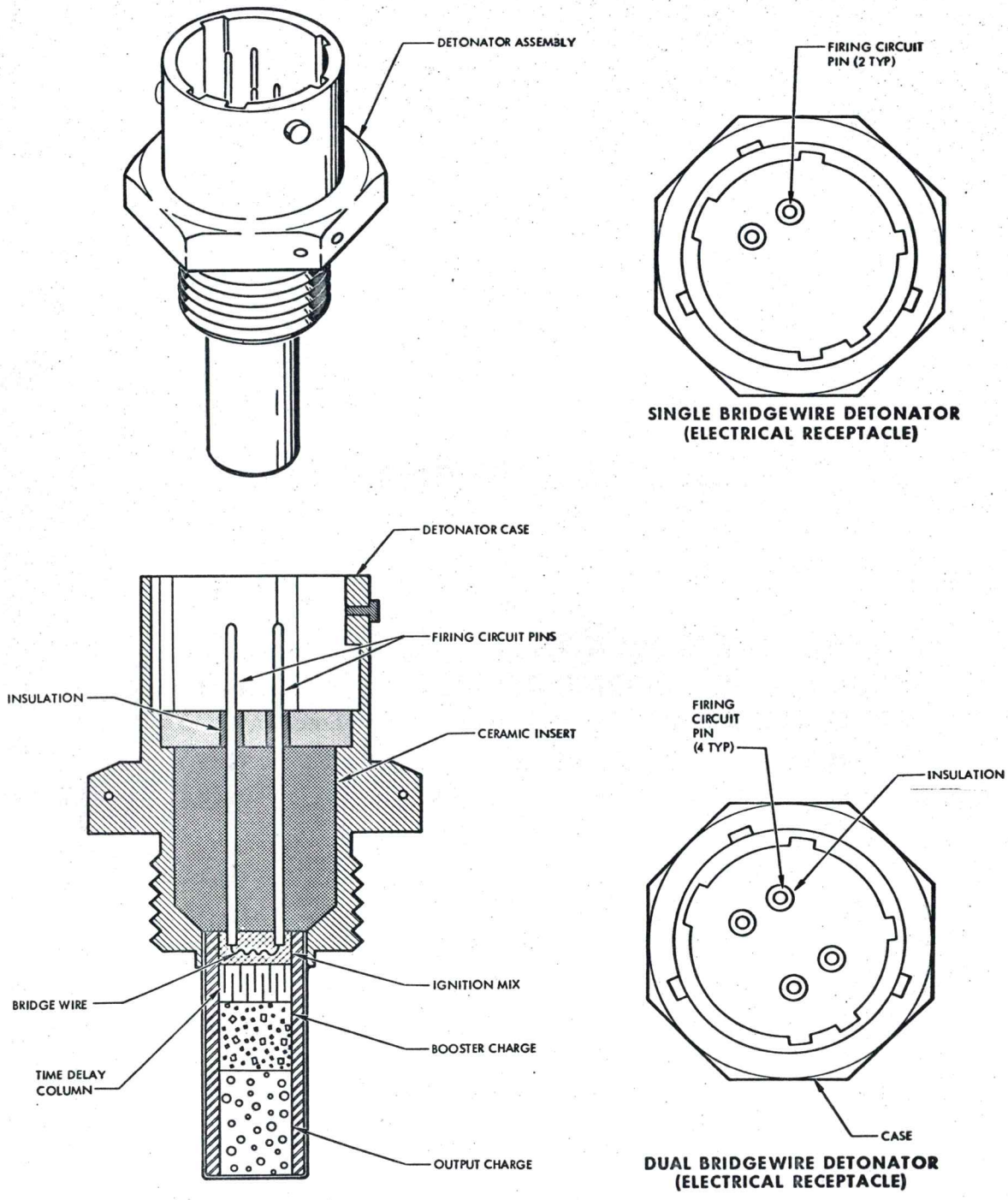

Figure 11-1 Detonator (Typical)

SECTION XI PYROTECHNICS AND RETROGRADE ROCKETS

GENERAL INFORMATION

The Pyrotechnic Devices and Retrograde Rockets, installed in the Gemini Spacecraft, perform a large part of the operational burden. They provide the escape system modes, enable and disable systems, and separate various sections and assemblies. Pyrotechnics are installed in each of the major sections, and in numerous locations throughout the spacecraft. The retrograde rockets retard the spacecraft's orbital velocity to initiate re-entry into the earth's atmosphere. The retrograde rockets are located in the retrograde section of the adapter.

RECURRENT COMPONENTS

Some pyrotechnic items are used extensively throughout the spacecraft. To avoid repetition in subsequent paragraphs, their description and operation will be presented at this time. When describing the various systems, these components shall be mentioned by name only.

DETONATOR

Description

The typical detonator (Figure 11-1) is a machined steel or aluminum cylinder containing an ignition mix, booster charge and an output charge. In some instances a pyrotechnic time delay column is used to provide a time delay between ignition and detonation. The cylinder is threaded at one end for installation purposes. An electrical receptacle is provided at the other end. Electrically, the detonators are provided in two different configurations. One incorporates two independent, identical firing circuits. The other incorporates only one firing circuit. The

circuits of both detonators are insulated from and independent of the detonator body. Each firing circuit consists of two electrical connector pins, across which a bridge wire is incorporated. The detonator is used to initiate high explosive components.

Operation

Upon receipt of the proper electrical signal, the firing circuit or circuits will cause the detonator to function. Either circuit (detonators with dual circuits) will initiate the charge with the same performance characteristics as exist when both circuits are operative. The bridge wire ignites the ignition mix which in turn ignites the booster charge. The booster charge then propagates detonation to the output charge. If a delay column is installed, the ignition mix will ignite the delay column which ignites the booster charge. The output charge detonates and transmits the detonation wave to the assembly to which it is attached.

CARTRIDGE

Description

The typical cartridge (Figure 11-2) is a machined steel cylinder containing an ignition mix and an output charge. In some instances a pyrotechnic time delay column is used to provide a specific time delay between ignition and output. The cartridge is threaded at one end for installation purposes. An electrical receptacle is provided at the opposite end. Electrically, the cartridges are provided in two different configurations. One incorporates two independent, identical firing circuits. The other incorporates only one firing circuit. The circuits of both cartridges are insulated from and independent of the cartridge body. Each firing circuit consists of two electrical connector pins with a bridge wire

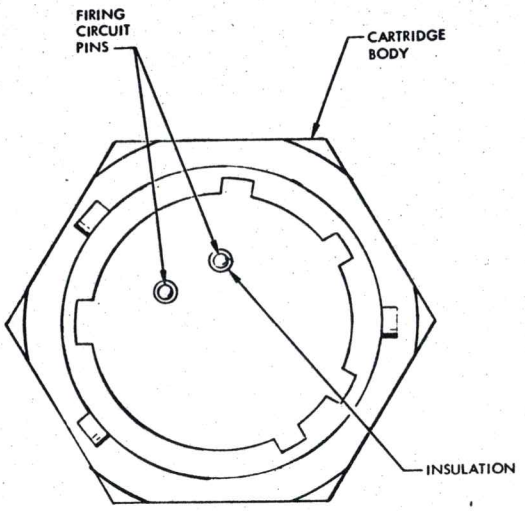

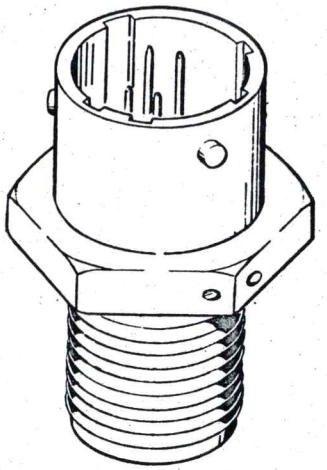

SINGLE BRIDGEWIRE CARTRIDGE
(ELECTRICAL RECEPTACLE)

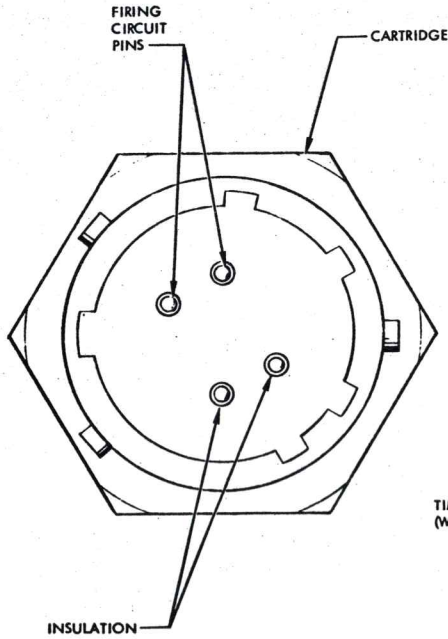

DUAL BRIDGEWIRE CARTRIDGE
(ELECTRICAL RECEPTACLE)

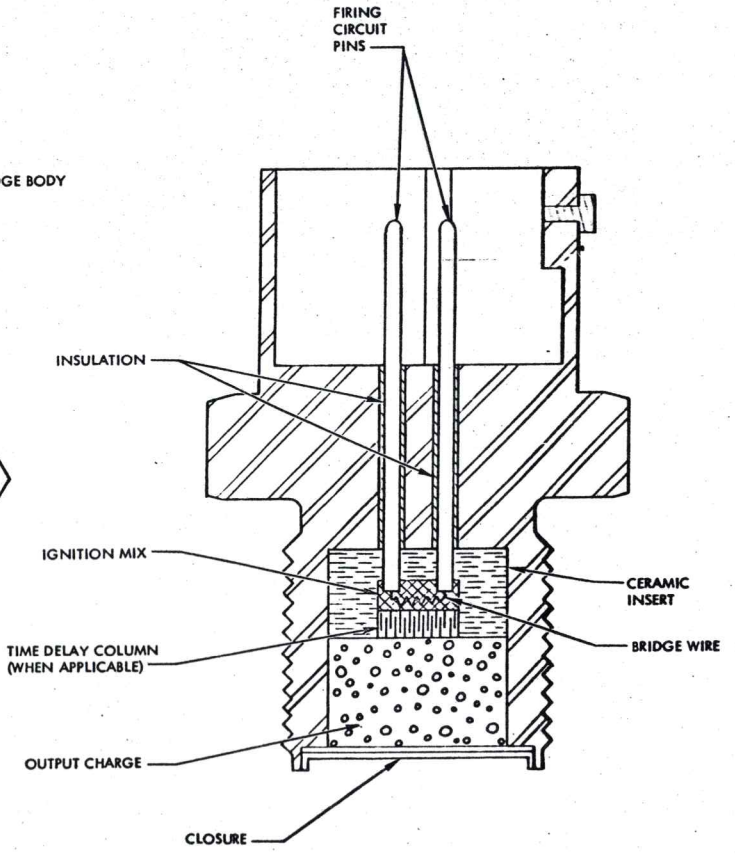

Figure 11-2 Cartridge (Gas Pressure)

attached between. The cartridge is used to produce hot gas pressure.

Operation

When initiated by the proper electrical signal, the firing circuits will cause the cartridge to function. Either circuit (cartridges with dual circuits) will fire the charge with the same performance characteristics as exist when both circuits are operative. The bridge wire ignites the ignition mix which propagates burning to the delay column, if applicable, and to the output charge. The output charge produces gas pressure that is used to operate the specific device in which the cartridge is installed.

FLEXIBLE LINEAR SHAPED CHARGE

Description

Flexible Linear Shaped Charge (FLSC) is a V-shaped, flexible lead sheathing containing a high explosive core. FLSC is used in separation assemblies to sever various types, thicknesses, and shapes of materials. The specific type, shape and thickness of the material to be separated, dictates the amount of explosive contained in the FLSC. In the Gemini Spacecraft & Agena Adapter, the FLSC is provided in four different core loadings: 7, 10, 20, and 25 grains per foot.

Operation

When installed, the open portion of the V-shaped FLSC is placed towards the item to be severed. The FLSC is detonated by a booster charge that has been initiated by a detonator. The explosive core of the FLSC detonates, resulting in collapse of the sheathing in the "V" groove, which produces a cutting jet composed of explosive products and minute metal particles. This jet produces extremely high localized pressures resulting in stress far above the yield strength of the target

material.

MILD DETONATING FUSE

Description

Mild Detonating Fuse (MDF) is a strand of high explosive encased in a lead sheathing with a circular cross section. MDF is used as a separation device and as an explosive interconnect. As a separation device, the strand contains 5 grains of explosive per foot. As an explosive interconnect, the strand contains 2 or 3.3 grains of explosive per foot. The interconnect type MDF is installed in either flexible woven steel mesh or nylon hose and rigid stainless steel tubing. Both rigid and flexible MDF have a small booster charge incorporated at each end. The booster charges are referred to as accepter and donor. The accepter being on the end that receives a detonation wave from an initiator. The donor being on the end that transmits a detonation wave to a component or another accepter. The interconnects are attached to various devices by AN type fittings or Bendix type quick disconnects.

Operation

The MDF used as a separation device is placed in a groove milled in a magnesium ring. The ring is formed to the shape of the items to be separated and is placed between the mating surfaces. The assembly to be jettisoned is attached to the main structure by frangible bolts. The bolts have been axially drilled to reduce tensile strength to a specified breaking point. When detonated, the MDF exerts a force against the mating surfaces greater that the tensile strength of the frangible bolts. The MDF, used as an explosive interconnect, is initiated when a detonator or booster charge propagates a detonation wave to the MDF booster. The

booster strengthens the wave and transmits it linearly through the length of the MDF strand. The booster, at the opposite end, propagates the detonation wave to the device to which it is attached.

SEPARATION ASSEMBLIES AND DEVICES

There are several different types of separation assemblies and devices used in the Gemini Spacecraft (Figure 11-3). These assemblies and devices are presented individually in the following paragraphs.

SPACECRAFT/LAUNCH VEHICLE SEPARATION ASSEMBLY

Description

The Spacecraft/Launch Vehicle Separation Assembly (Figure 11-4) separates the spacecraft from the launch vehicle by severing the mating ring. The separation assembly primarily consists of two flexible linear shaped charges (FLSC) installed around the periphery of the mating ring, three detonators, three detonator blocks, three dual boosters, a molded backup retainer and a back blast shield. The dual boosters are inserted in the detonator blocks. The dual booster protrude into the molded backup retainer, indexed directly above the FLSC, when the detonator blocks are installed. The detonators are inserted in the detonator blocks with the output charge adjacent to the dual boosters. The back blast shield attaches the molded backup retainer and FLSC to the mating ring.

Operation

Upon receipt of the proper electrical signal, the detonators transmit a detonation wave that is propagated to the dual boosters. The dual boosters strengthen the detonation wave to achieve proper detonation of the FLSC. The FLSC detonates and severs the mating ring redundantly. The backup retainer absorbs the shock in the

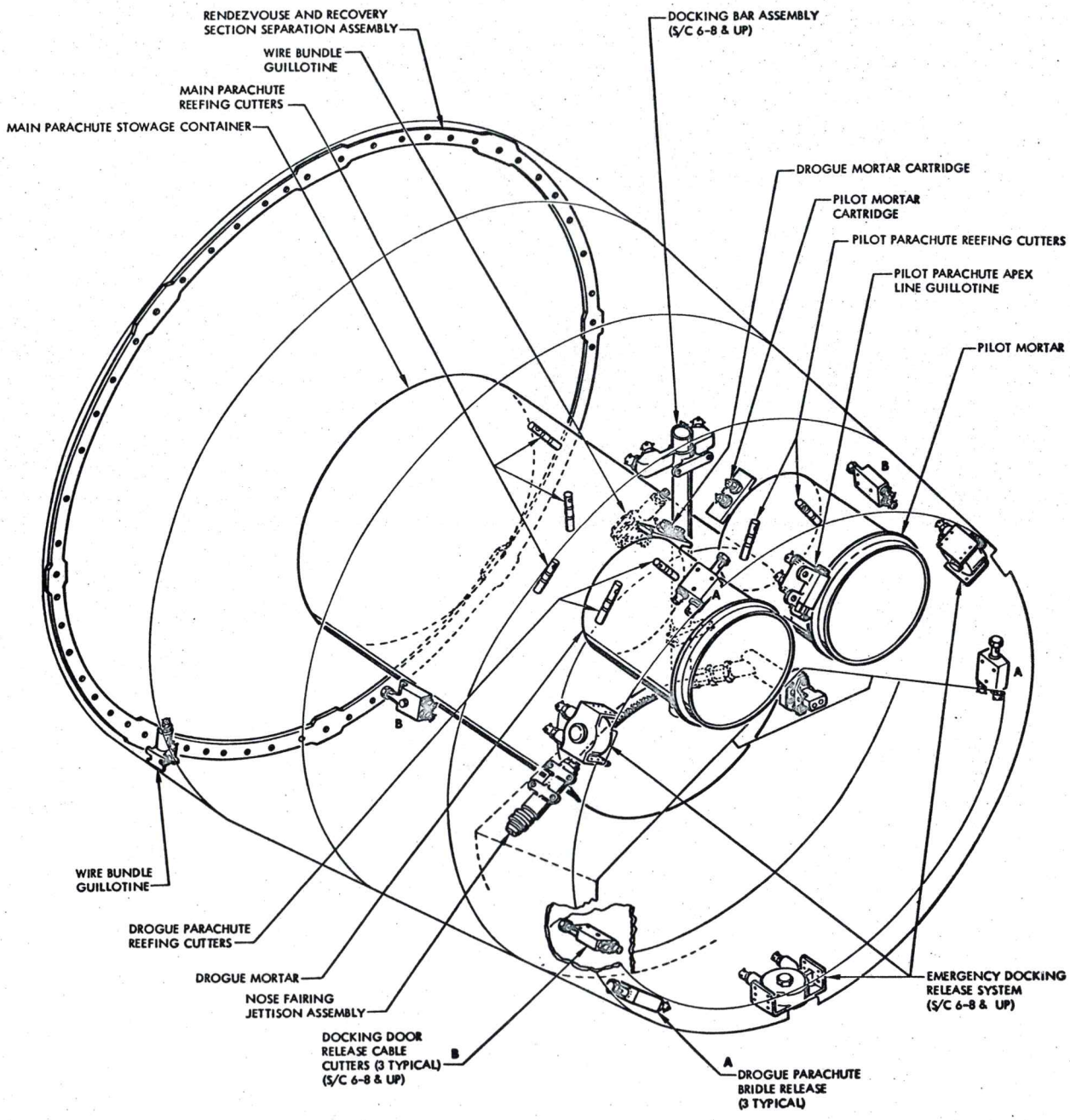

Figure 11-3 Spacecraft Pyrotechnic Devices (R & R Section) (Sheet 1 of 3) FM2-11-2

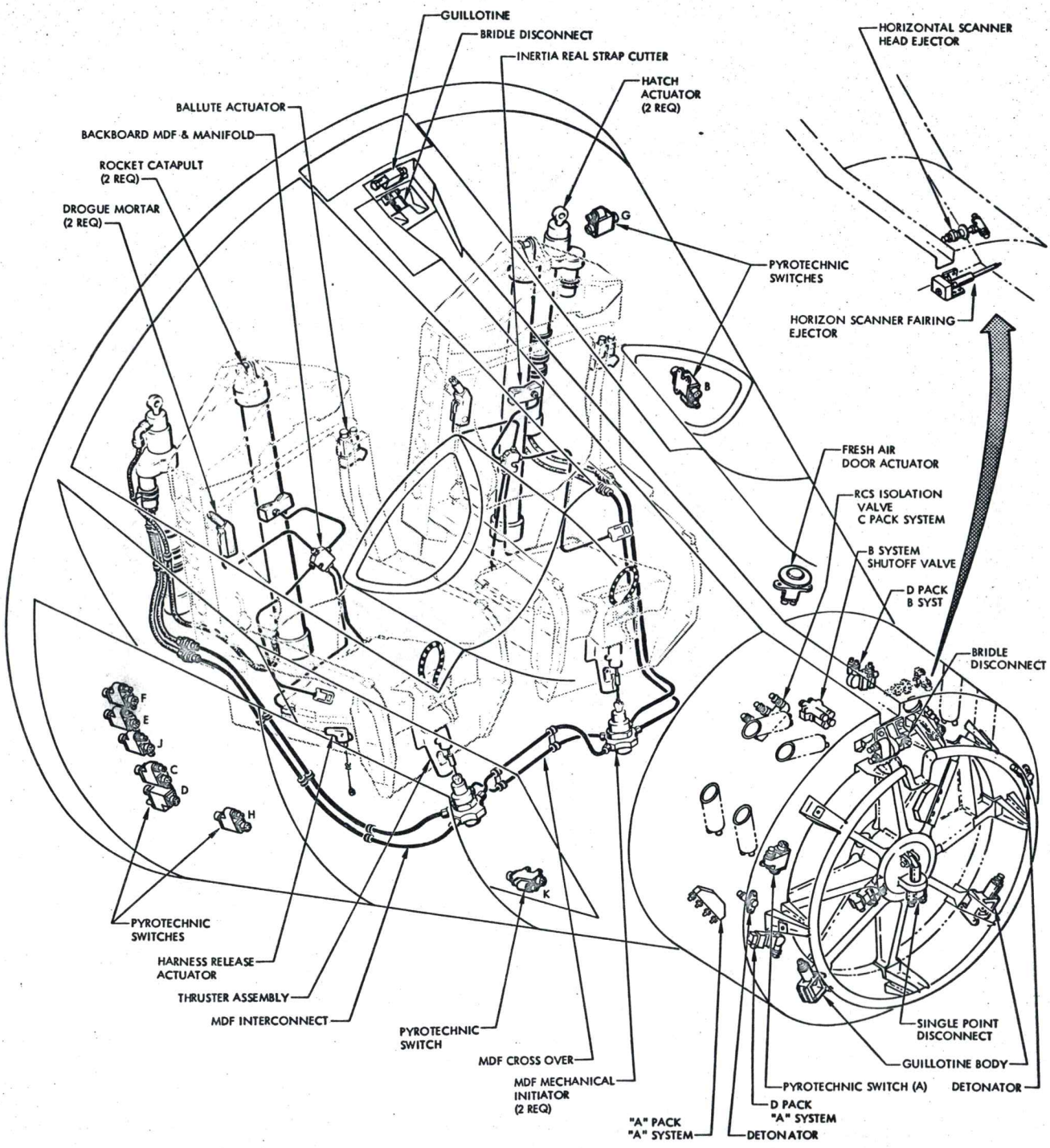

Figure 11-3 Spacecraft Pyrotechnic Devices (Landing Module) (Sheet 2 of 3) FM2-11-2

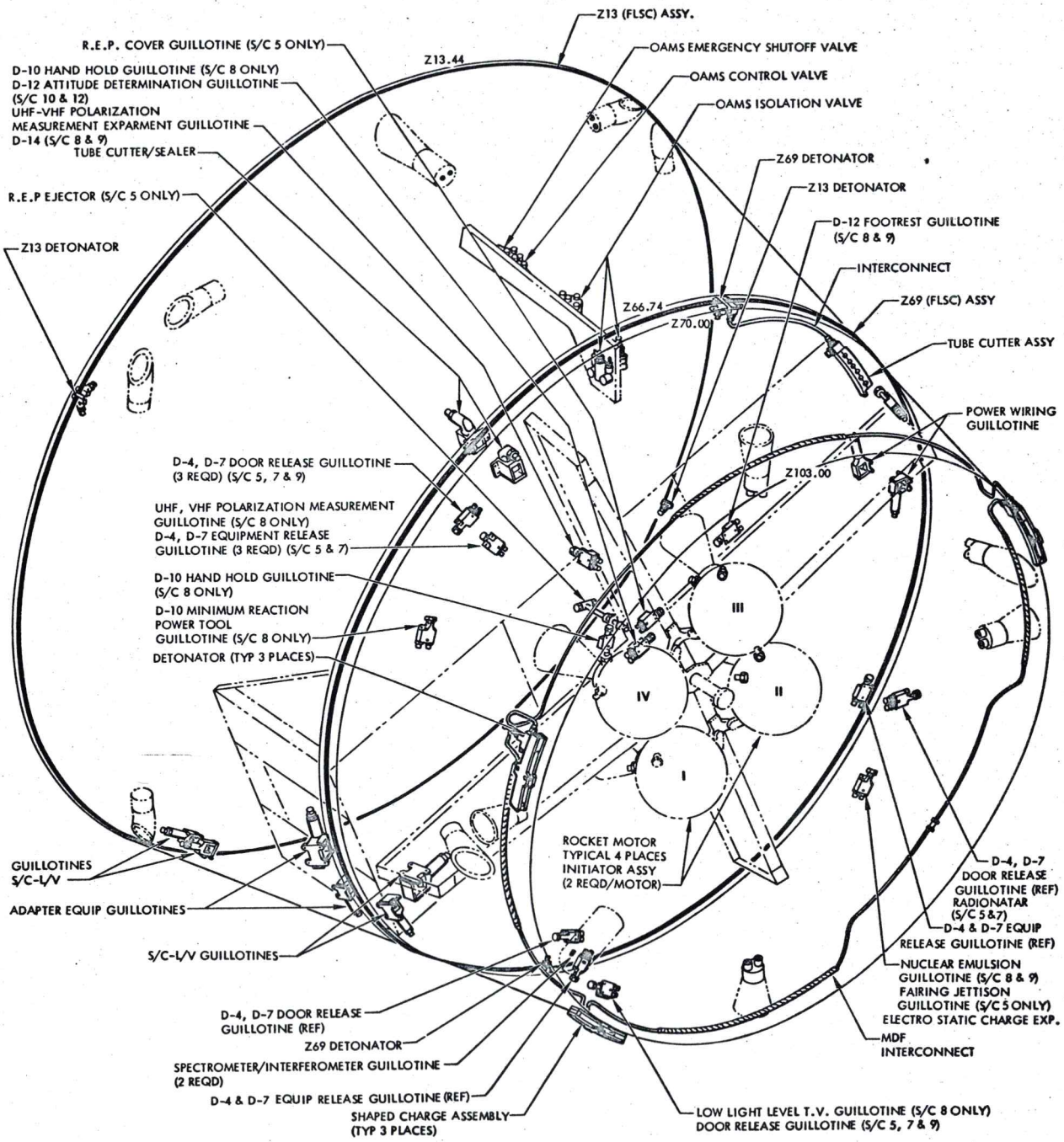

Figure 11-3 Spacecraft Pyrotechnic Devices (Adapter) (Sheet 3 of 3)

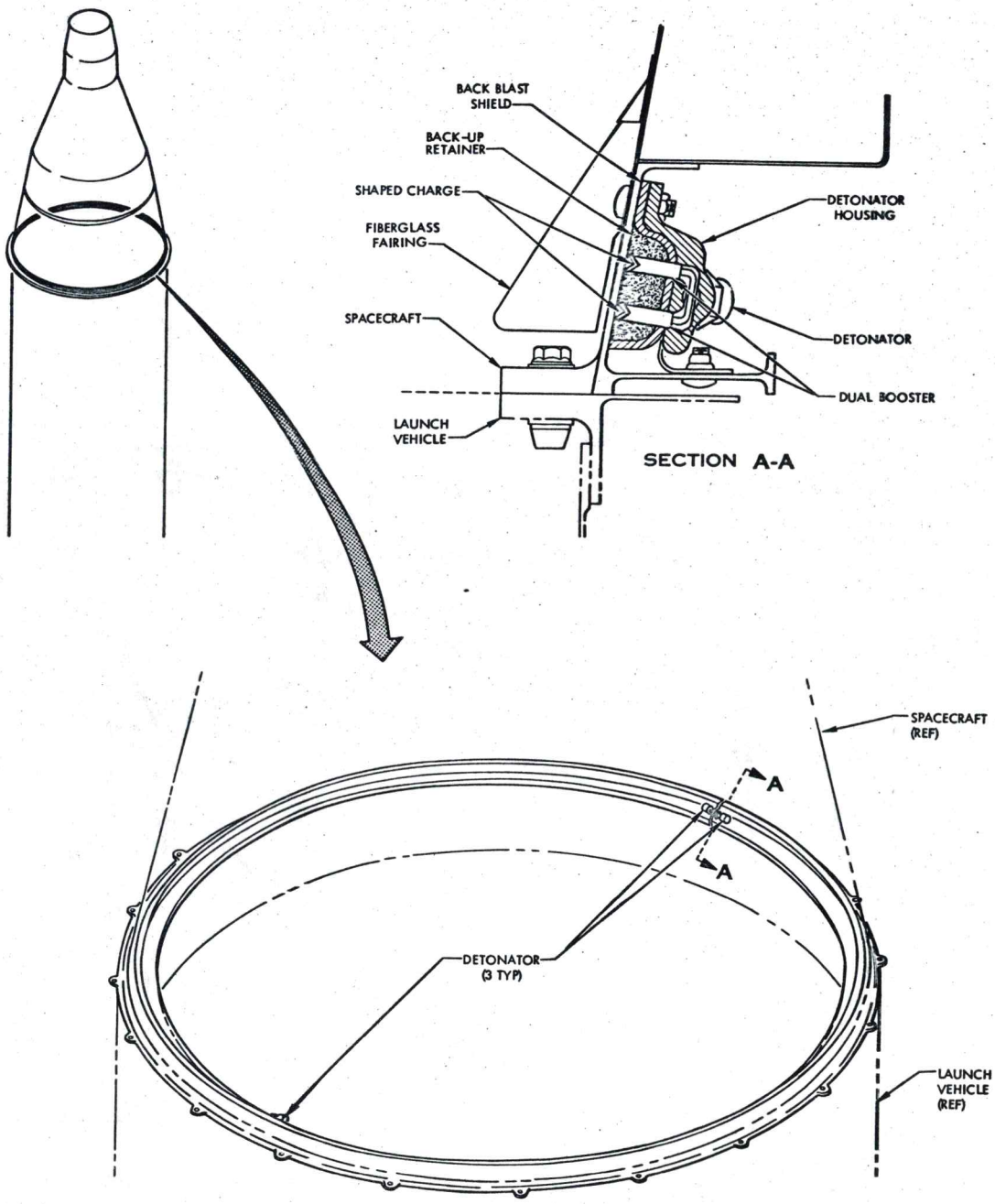

Figure 11-4 Spacecraft/Launch Vehicle Separation Assembly

back blast. The back blast shield protects the structure and equipment from shrapnel. Proper detonation of only one strand of FLSC is sufficient to sever the mating ring.

EQUIPMENT SECTION/RETROGRADE SECTION SEPARATION ASSEMBLY

Description

The Equipment Section/Retrograde Section Separation Assembly (Figure 11-5) separates the equipment section of the adapter from the retrograde section of the adapter. The assembly basically consists of two main units: the shaped charge assembly and the tubing cutter assembly. The shaped charge assembly primarily consists of two flexible linear shaped charges (FLSC), three detonator blocks, containing three crossovers and six boosters, three detonators, ten segmented backup strips and a molded backup retainer. The detonator blocks provide for installation of the detonators. One detonator block provides for the installation of the tubing cutter explosive interconnect. The tubing cutter assembly primarily consists of an explosive interconnect (MDF), two formed aluminum parallel housings, molded backup retainer, two flexible linear shaped charges with boosters attached, a detonator block and a detonator. The explosive interconnect (MDF) is a flexible nylon hose containing a strand of high explosive and end mounted booster charges. The interconnect has Bendix type connectors incorporated at each end for attaching the interconnect to the cutter and shaped charge detonator blocks. The interconnect is attached to the cutter detonator block with its booster charge adjacent to one of the boosters on the FLSC. The detonator is installed in the cutter detonator block with its output end adjacent to the other booster on the FLSC. The cutter assembly is bracket mounted to the inside of the retrograde section of the adapter forward of the parting line. The shaped charge assembly is

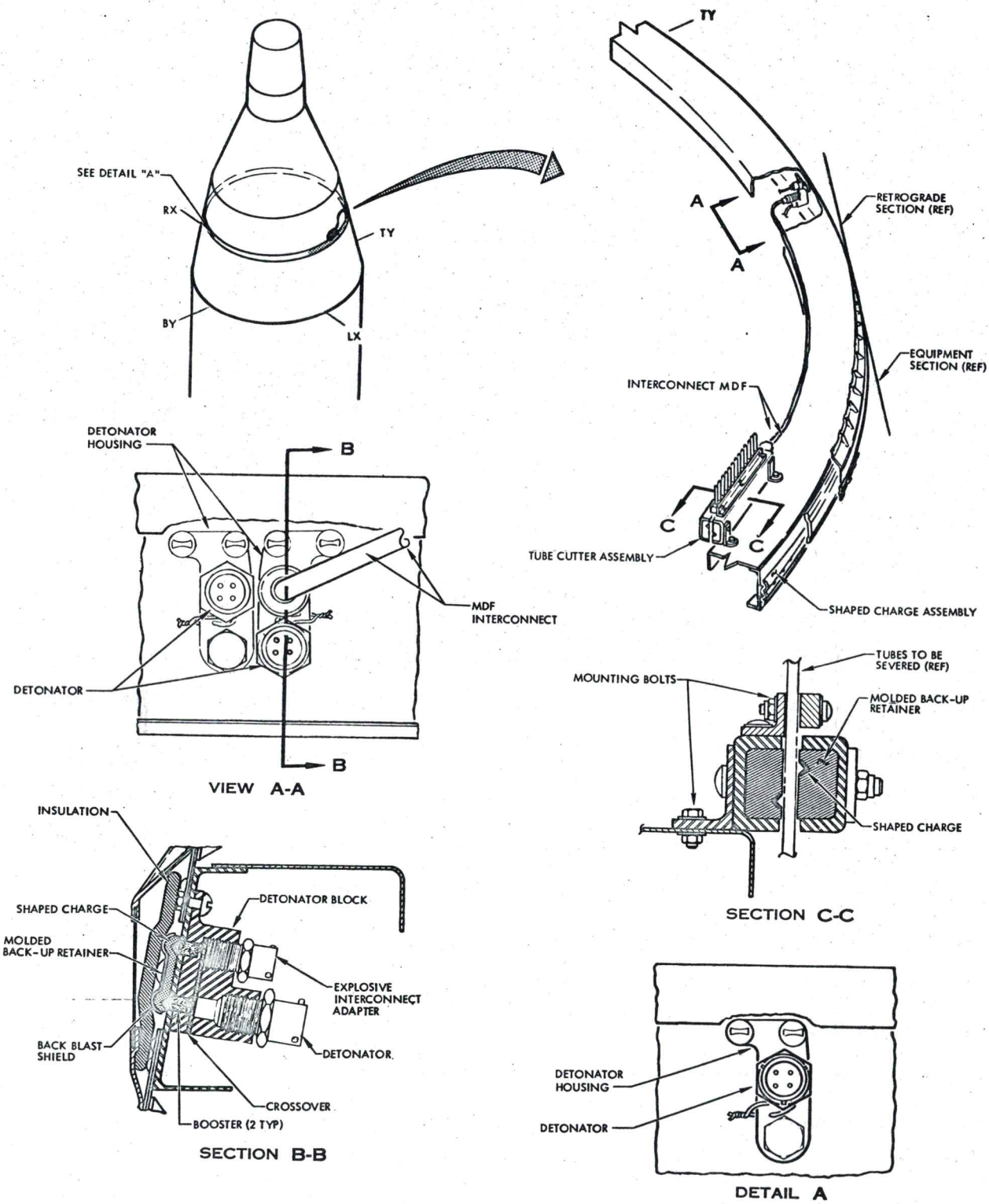

Figure 11-5 Separation Assembly-Equipment Section/Retrograde Section

installed around the outer periphery of the adapter at the equipment section/retrograde section parting line.

Operation

When initiated by the proper electrical signal, the detonators are caused to function. The detonators of the shaped charge assembly transmit a shock or detonation wave to the crossovers which in turn initiates the boosters. The boosters propagate the wave to the FLSC. The FLSC detonates and functions to sever the adapter at the parting line redundantly. The detonator of the tubing cutter assembly propagates detonation to the booster on one strand of FLSC in the cutter assembly. The explosive interconnect transmits detonation from the shaped charge assembly to the booster on the other strand of FLSC in the cutter assembly. The two boosters propagate the shock wave to the FLSC. The two strands of FLSC in the cutter assembly detonate and sever the twelve aluminum tubes and one nylon tube. Proper detonation of only one strand of FLSC, in both the shaped charge assembly and tubing cutter assembly, is sufficient to achieve separation.

RETROGRADE SECTION/RE-ENTRY MODULE SEPARATION ASSEMBLY

Description

The Retrograde Section/Re-entry Module Separation Assembly (Figure 11-6) functions to separate the retrograde section of the adapter from the re-entry module. Separation is accomplished by severing the three titanium straps and various tubes and wire bundles. The separation assembly primarily consists of three cutter assemblies, three detonator housings, three detonators, three parallel booster columns, six explosive interconnects, and three unions. The detonator housings contain a booster column and a parallel booster column. The cutter assemblies consists of

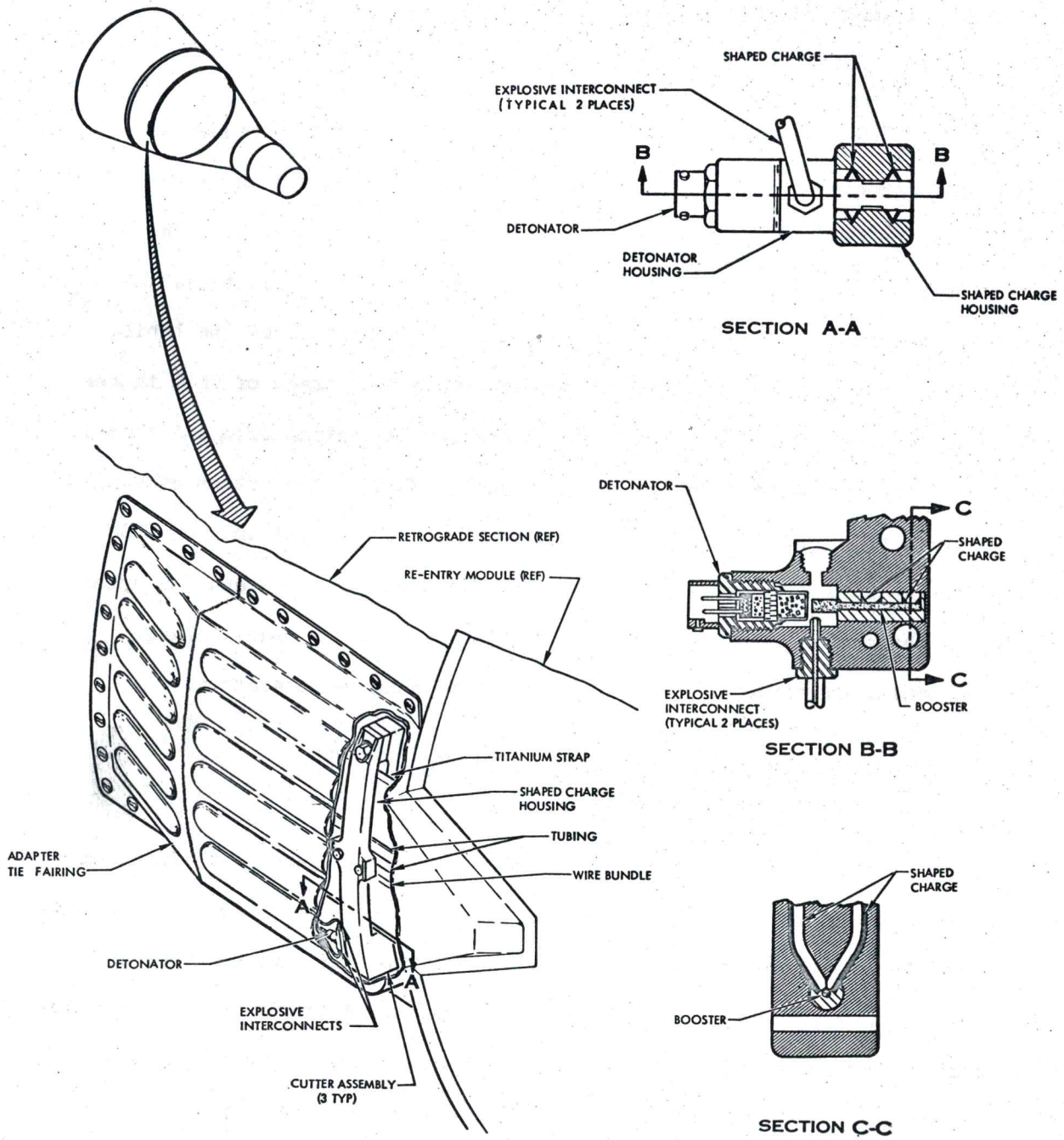

Figure 11-6 Retrograde Section/Re-Entry Module Separation Assembly

two parallel machined aluminum bars that contain four strips of FLSC. The bars are joined by the detonator housings with the parallel boosters. A detonator is installed in each of the three detonator housings. The cutter assemblies are located in three places around the parting line and are linked by the explosive interconnects.

Operation

When initiated by the proper electrical signal, the detonators propagate a detonation or shock wave to the boosters which relay propagation to cutter FLSC and simultaneously the shock wave is propagated to the explosive interconnects. The interconnects transmit the wave to all three cutter assemblies. This is to ensure detonation of all three cutters FLSC, in the event one or even two detonators do not function. Detonation of the cutter FLSC completely severs the titanium straps, wire bundles and tubing redundantly. Proper detonation of only two opposing strips of FLSC in each cutter is sufficient to achieve separation.

RENDEZVOUS AND RECOVERY SECTION SEPARATION ASSEMBLY

Description

The Rendezvous and Recovery Section Separation Assembly (Figure 11-7) separates the rendezvous and recovery (R & R) section from the re-entry control system (RCS) section. The assembly primarily consists of mild detonating fuse (MDF), MDF housing ring, two detonators, two detonator housings and two booster charges. Two strands of MDF are installed in parallel grooves milled in the housing ring face. The grooves intersect at the booster charges which are installed approximately 180° apart. The R & R section is attached to the RCS section by frangible bolts, with the MDF ring fastened to the R & R section at the mating surface. The detonator

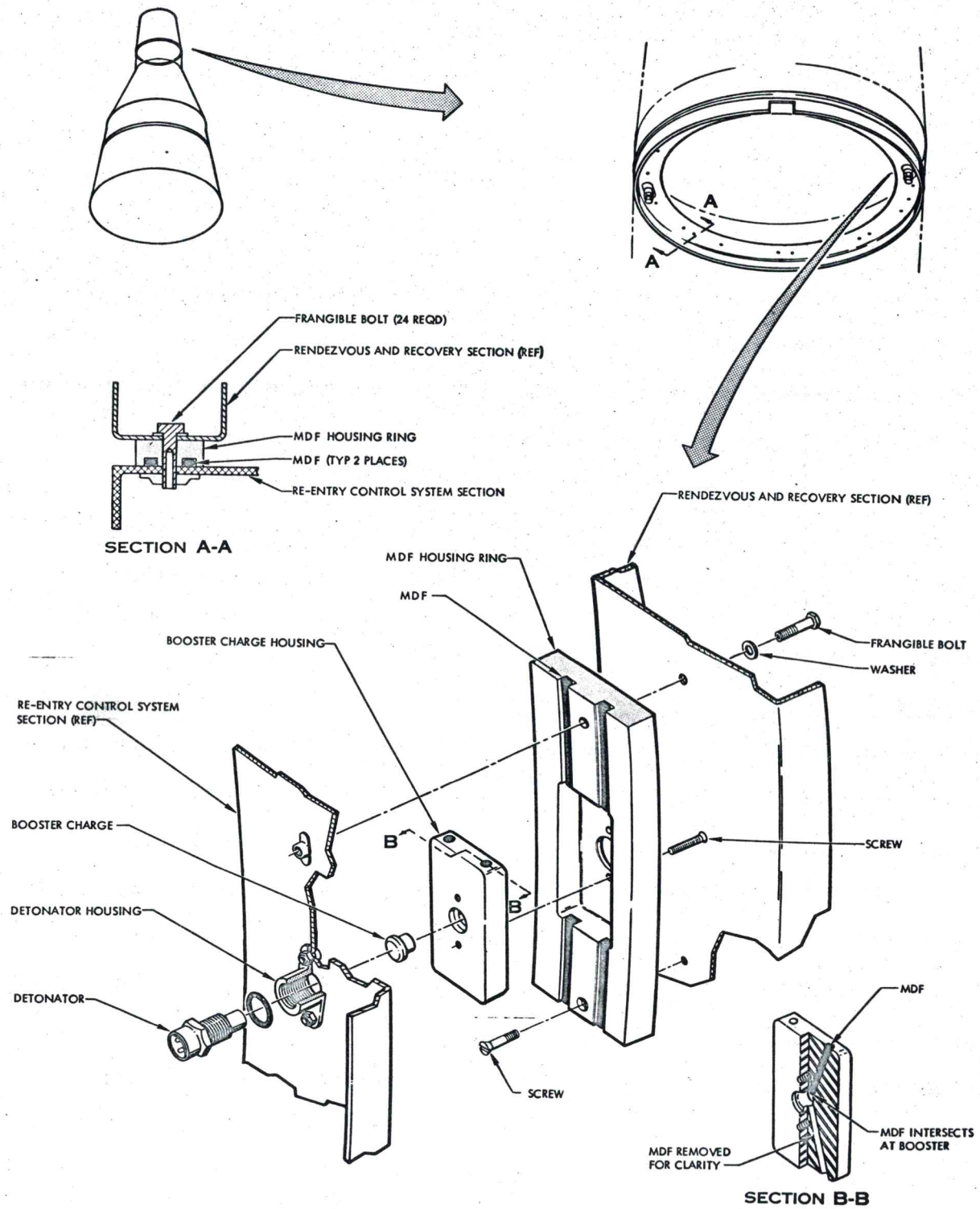

Figure 11-7 Rendezvous and Recovery Section Separation Assembly

FM2-11-5

housings are installed in the RCS section, with the detonators indexed directly above the booster charges, when the sections are mated.

Operation

When initiated by the proper electrical signal, the detonators propagate a detonation wave to the two booster charges. The booster charges strengthen the detonation wave and transmit it to the dual strands of MDF. The MDF detonates, exerting a force against the RCS and R & R section mating surfaces. The force breaks all the frangible bolts and allows the pilot chute to pull the R & R section free of the spacecraft. Satisfactory propagation of either strand of MDF will successfully separate the R & R section.

WIRE BUNDLE GUILLOTINE

Description

The Wire Bundle Guillotine (Figure 11-8) is used throughout the spacecraft to sever various sized bundles of electrical wires. The guillotines are used in two sizes. One size can sever a wire bundle up to one and one quarter inches in diameter and the other can sever a wire bundle up to two and one half inches in diameter. Both sizes are similar in design, appearance and operation. The guillotines primarily consist of a body, end cap or anvil, piston/cutter blade, shear pin(s) and an electrically fired gas pressure cartridge. The body houses the piston/cutter blade, provides for installation of the cartridge, and attachment of the anvil. The anvil is removable to facilitate removal and installation of either the guillotine or wire bundle. Two guillotines are used on a wire bundle, one on each side of the separation plane. Lugs, for attaching the guillotine to the spacecraft structure, are an integral part of the guillotine body.

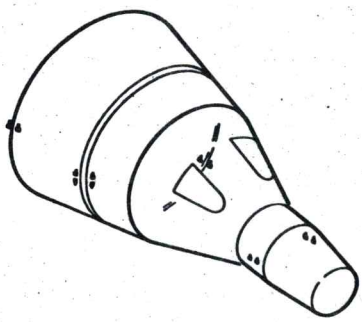

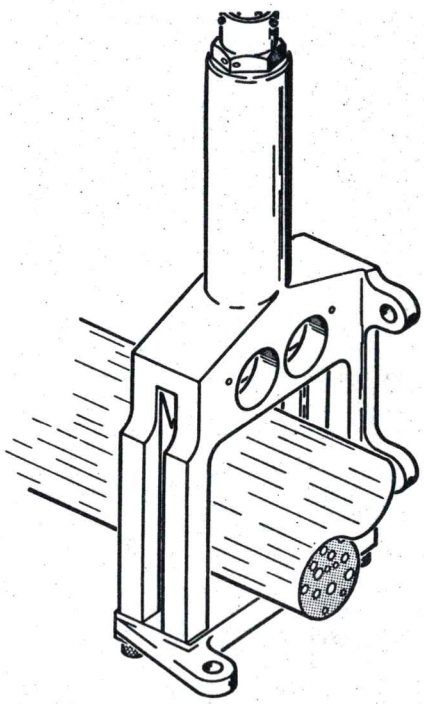

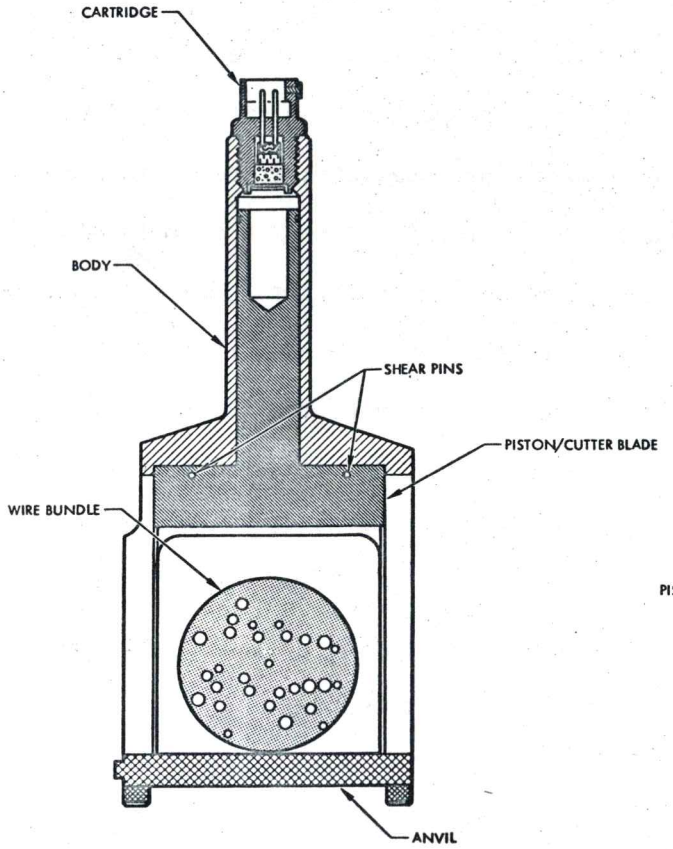

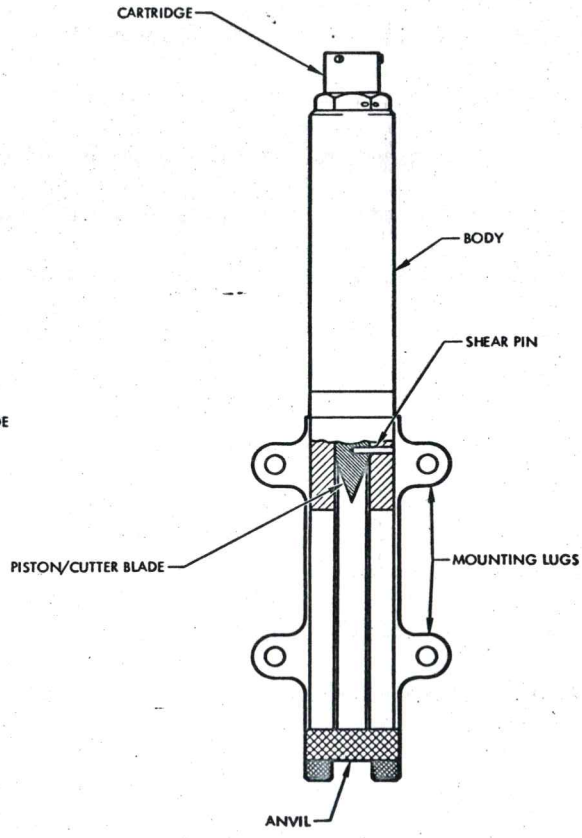

Figure 11-8 Wire Bundle Guillotine

Operation

When initiated by the proper electrical signal, the cartridge produces gas pressure. This gas pressure, exerts force on the piston/cutter blade. When sufficient force is applied, the piston/cutter blade will sever the shear pin(s). As the pin(s) shear, the piston/cutter blade strokes, and positively severs the wire bundle. The wire bundle is then free to pull out of the guillotine body.

WIRE BUNDLE GUILLOTINE (CABLE CUTTING)

Description

The Wire Bundle Guillotine (Cable Cutting) (Figure 11-9) is used to sever twisted stainless steel cables. The guillotine primarily consists of the body, piston/cutter blade, shear pin, anvil and end cap, and two electrically fired gas pressure cartridges. The body provides a piston actuation area and provides for cartridge installation. The anvil is retained in the barrel section of the body by the end cap. The anvil and end cap is removable to permit guillotine and cable installation and removal. Lugs, for attaching the guillotine to the spacecraft structure, are an integral part of the body. The shear pin is provided to retain the piston/cutter blade in a retracted position.

Operation

When initiated by the proper electrical signal, the two cartridges are caused to function and produce gas pressure. The gas pressure exerts force on the piston/cutter blade. When sufficient force is applied, the piston/cutter blade severs the shear pin. The piston/cutter blade travels the length of the barrel section and severs the cable installed in the guillotine. The cable is then free to pull out of the guillotine.

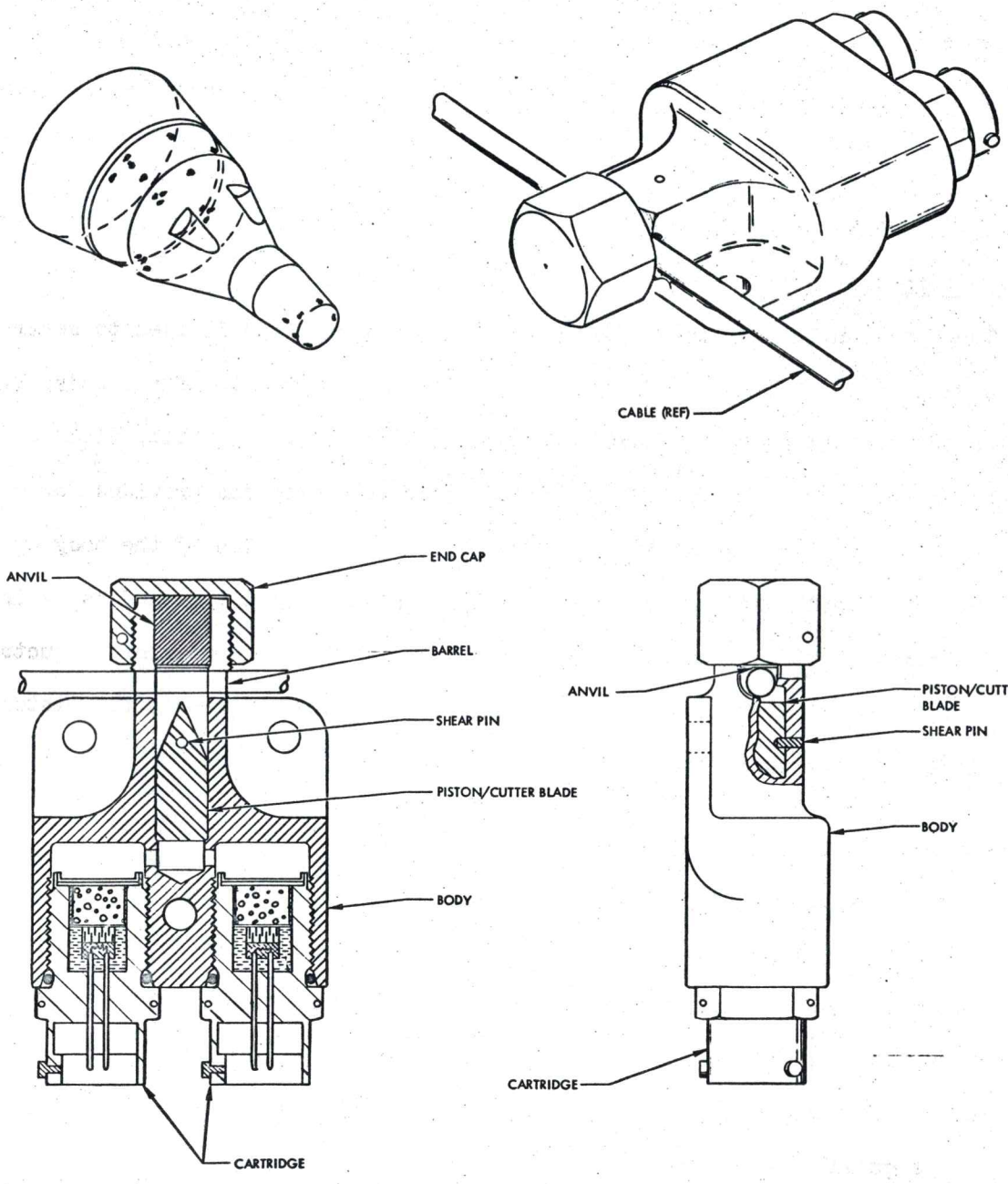

Figure 11-9 Wire Bundle Guillotine (Cable Cutting)

TUBING CUTTER/SEALER

Description

The Tubing Cutter/Sealer (Figure 11-10) is used to cut and seal two stainless steel, teflon lined tubes. The tubes contain hypergolic propellants used in the Orbit Attitude and Maneuvering System (OAMS). Two tubing cutter/sealer assemblies are located in the adapter, one on each side of the retrograde/equipment section separation line. The tubing cutter/sealer assembly primarily consists of the body, anvil, one electrically fired gas pressure cartridge, four shear pins and cutter assembly. The cutter assembly consists of the piston, crimper and blade. The crimper and blade are attached to the piston by two of the shear pins, (sequencing pins). The piston is secured in the body by the other two shear pins, (initial lock pins). The body provides for the installation of the cartridge, attachment of the anvil, and housing for the cutter assembly. Lugs, for attaching the tubing cutter/sealer to the spacecraft structure, are an integral part of the body.

Operation

When initiated by the proper electrical signal, the cartridge generates gas pressure. The gas pressure exerts a force on the piston of the cutter assembly. When sufficient force is applied to the piston, the initial lock pins are severed and the cutter assembly strokes to seal and cut the two tubes. The blade and crimper, extending past the end of the piston, contact the tubing first. As the cutter assembly moves down, the crimper flattens the tubing against the raised portion of the anvil. As the cutter assembly continues its travel,the sequencing pins are severed between the crimper and blade, stopping the travel of the crimper. The base of the piston and blade further crimp and seal the tubing with the blade severing the tubing. The sealed portion of the tubing remains in the tubing

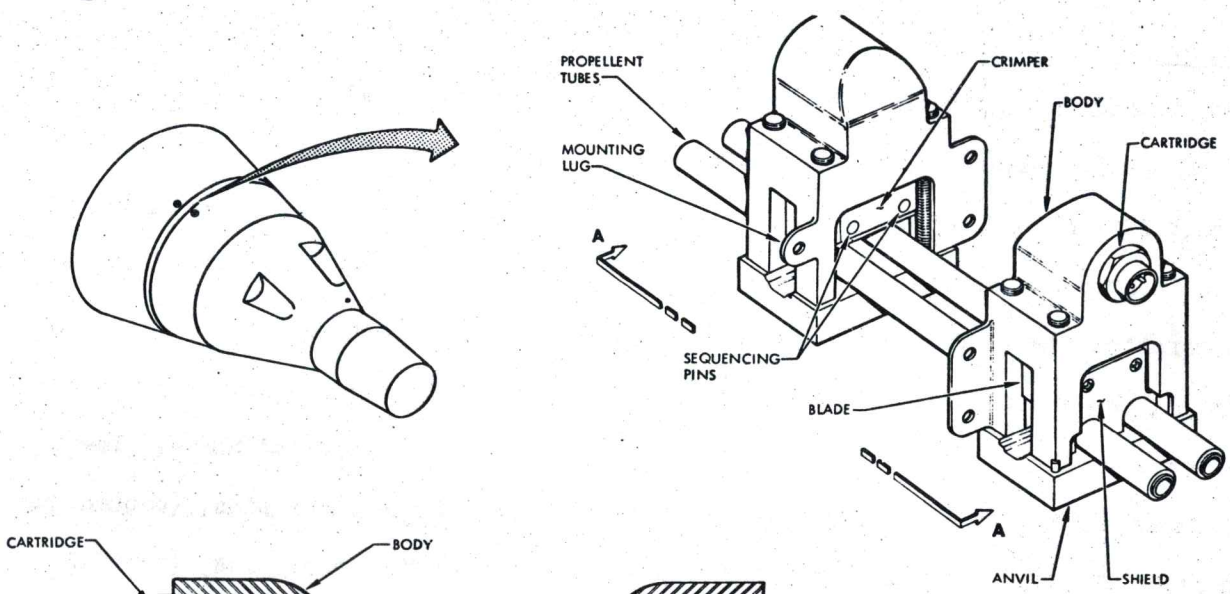

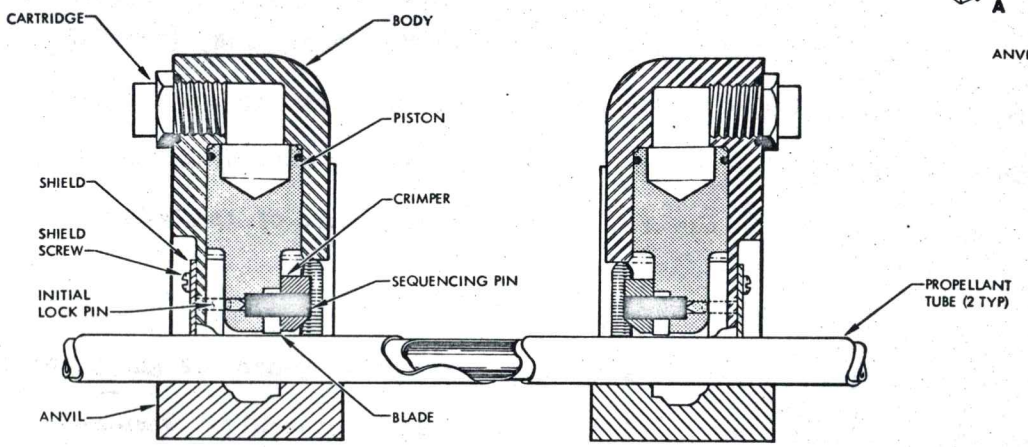

VIEW A-A (BEFORE FIRING)

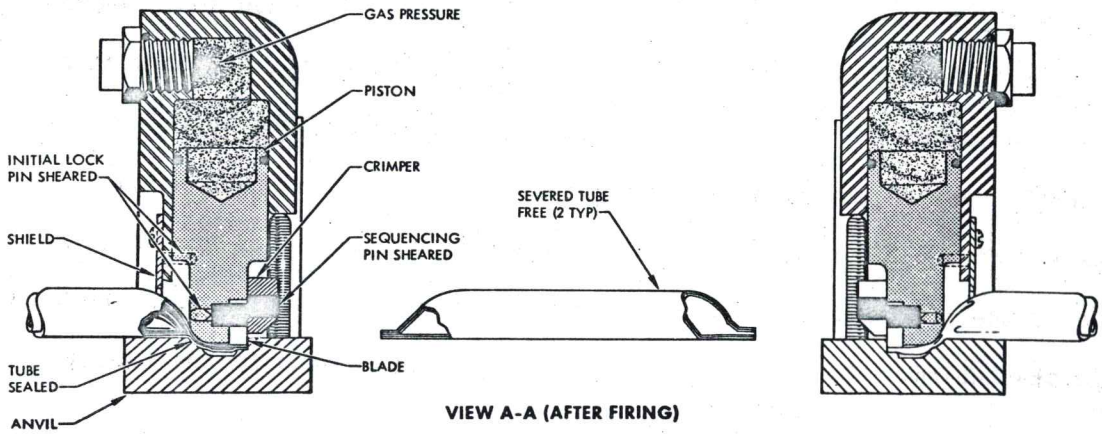

VIEW A-A (AFTER FIRING)

Figure 11-10 Tubing Cutter/Sealer

cutter/sealers at adapter separation. The severed portion of the tubing between the tubing cutter/sealers is free to pull out at adapter separation.

PYROTECHNIC SWITCH

Description

The Pyrotechnic Switch (Figure 11-11) functions to positively open electrical circuits and prevent current flow in various wire bundles prior to their being severed. The switches are located in various places throughout the re-entry module. The switches primarily consist of the body, actuator (piston), shear pin, spring lock, and electrically fired gas pressure cartridge. The shear pin secures the actuator in the switch closed position prior to switch actuation. Incorporated in opposite ends of the switch body are two electrical receptacles. The end mounted receptacles contain hollow spring leaf contacts. The contacts are axially connected by pins mounted in the actuator. All switches are identical in design and operation with the exception of the number of contacts in the receptacles. One model contains 41 contacts, and the other model contains 55 contacts. Lugs, for attaching the switch to the spacecraft structure, are an intergral part of the body.

Operation

When initiated by the proper electrical signal, the cartridge generates gas pressure that is ported through the switch body to the actuator. The pressure exerts a force against a flange of the actuator. The force causes the actuator to sever the shear pin and move axially in the body. As the actuator moves, the connecting pins mounted in the actuator are disengaged from the hollow contacts at one end and are driven further into the hollow contacts at the other end. The spring lock drops into place behind the actuator and prevents it from returning to its original

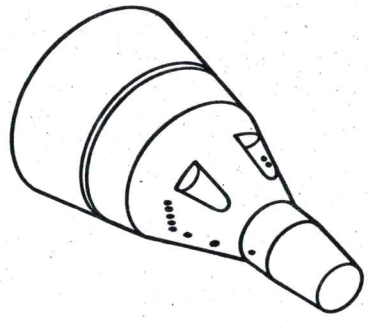

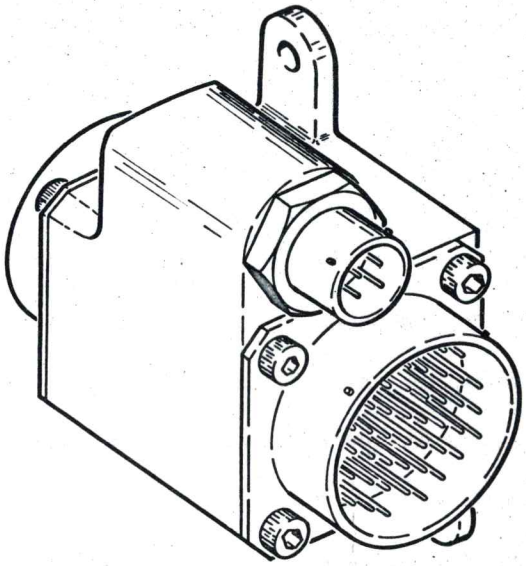

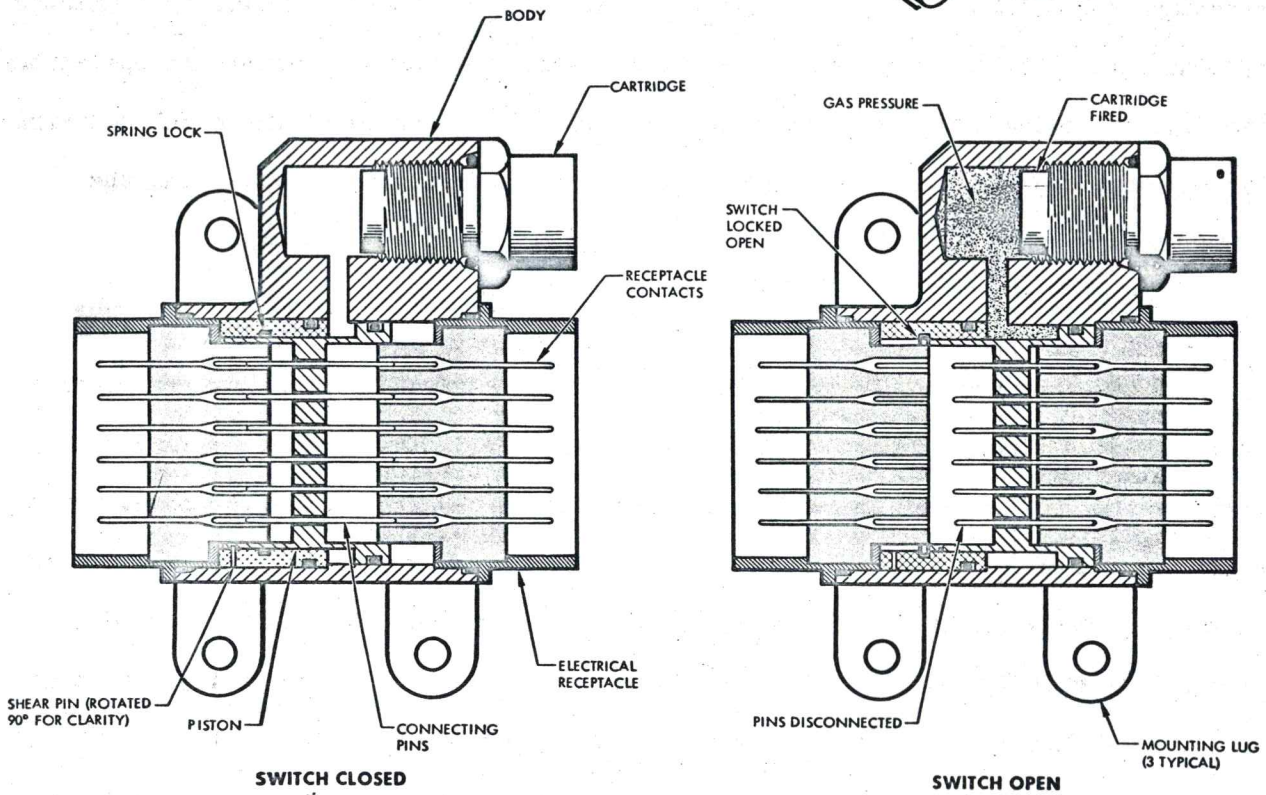

Figure 11-11 Pyrotechnic Switch

position. The actuator is thus held in the "switch open" position.

HORIZON SCANNER FAIRING RELEASE ASSEMBLY

Description

The Horizon Scanner Fairing Release Assembly (Figure 11-12) secures the horizon scanner fairing to the spacecraft, and when initiated, jettisons the fairing. The assembly primarily consists of the actuator housing, actuator, actuator extension, main piston, release piston, eight locking pins and two electrically fired gas pressure cartridges. The actuator extension forms a positive tie between the actuator and the scanner fairing. The actuator is locked to the main piston by four locking pins. The main piston is locked in the base of the actuator housing by four locking pins, that are held in place by the release piston. The release piston is spring energized in the locked position. The actuator housing provides for installation of the cartridges and mounting for the assembly.

Operation

When initiated by the proper electrical signal, the cartridges produce gas pressure. The pressure is ported through a milled passage in the actuator housing, to the base of the piston. The gas pressure moves the release piston forward, which enables the four locking pins to cam inblard, releasing the main piston. The gas pressure causes the main piston, with attached actuator, to move through the length of the actuator housing. As the piston reaches the end of the housing, a shoulder stops the piston's travel. The four locking pins, securing the actuator extension to the piston, cam outboard into a recess and release the actuator extension. The actuator extension being thus freed is jettisoned with the scanner fairing attached.

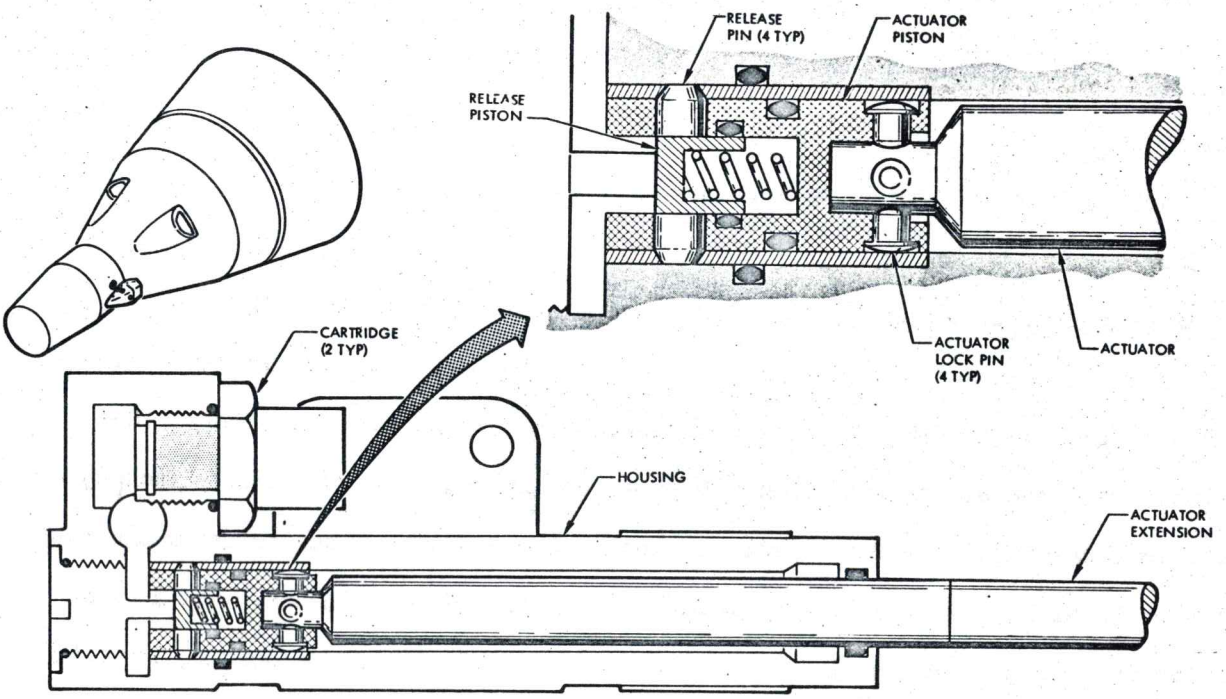

BEFORE FIRING (ACTUATOR LOCKED)

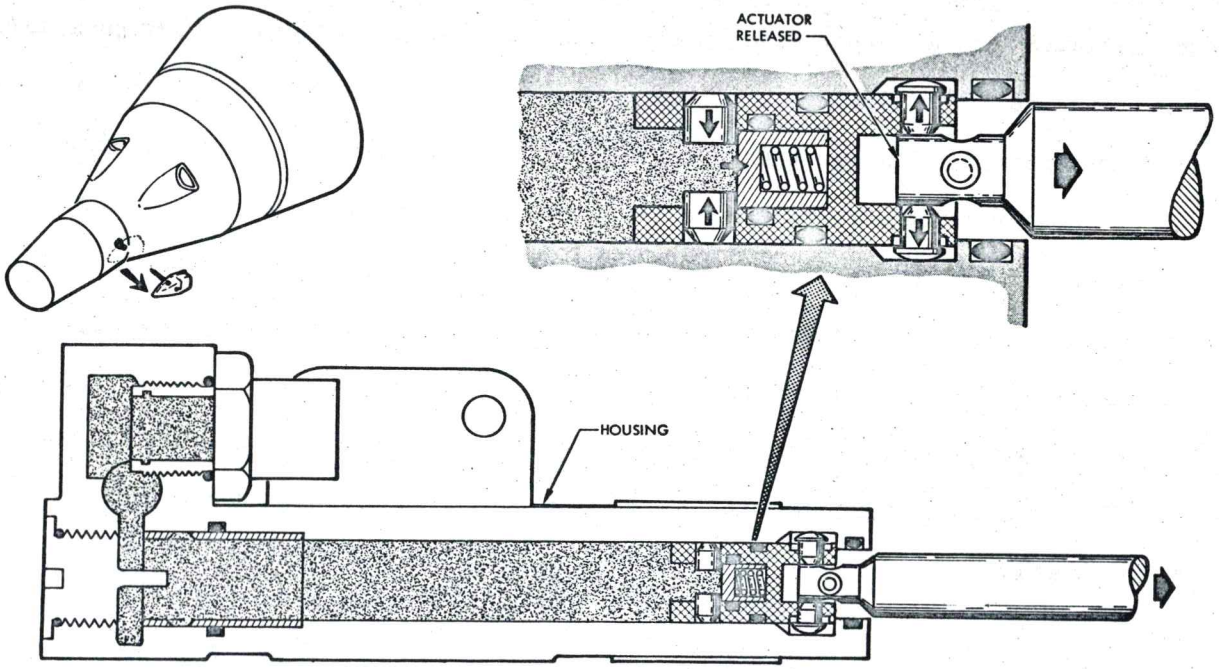

AFTER FIRING (ACTUATOR RELEASED)

Figure 11-12 Horizon Scanner Fairing Release Assembly

HORIZON SCANNER RELEASE ASSEMBLY

Description

The Horizon Scanner Release Assembly (Figure 11-13) secures the horizon scanners to the spacecraft and jettisons the scanners when initiated. The horizon scanner release assembly primarily consists of the actuator housing, actuator, locking mechanism, cartridge housing, and two electrically fired gas pressure cartridges. The actuator is secured in the actuator housing by the locking mechanism. The locking mechanism consists of a tang lock, tang lock retainer and a shear pin. The tank lock is secured to and is located in the base of the actuator housing. The actuator housing is attached to and becomes a part of the spacecraft structure. The scanner base support and mounting platform are attached to the actuator prior to installing the cartridge housing on the actuator. The two cartridges are installed in the cartridge housing.

Operation

When initiated by the proper electrical signal, the two cartridges produce gas pressure which is ported through the hollow actuator to the base of the actuator housing. Slots in the tang lock allow the gas pressure to flow to the base of the tang lock retainer. The gas pressure exerts a force against the base of the retainer. The retainer moves axially in the actuator housing, severing the shear pin and exposing the tines of the tang lock. The tines cam open, releasing the actuator and allowing the gas pressure to jettison the actuator and horizon scanners.

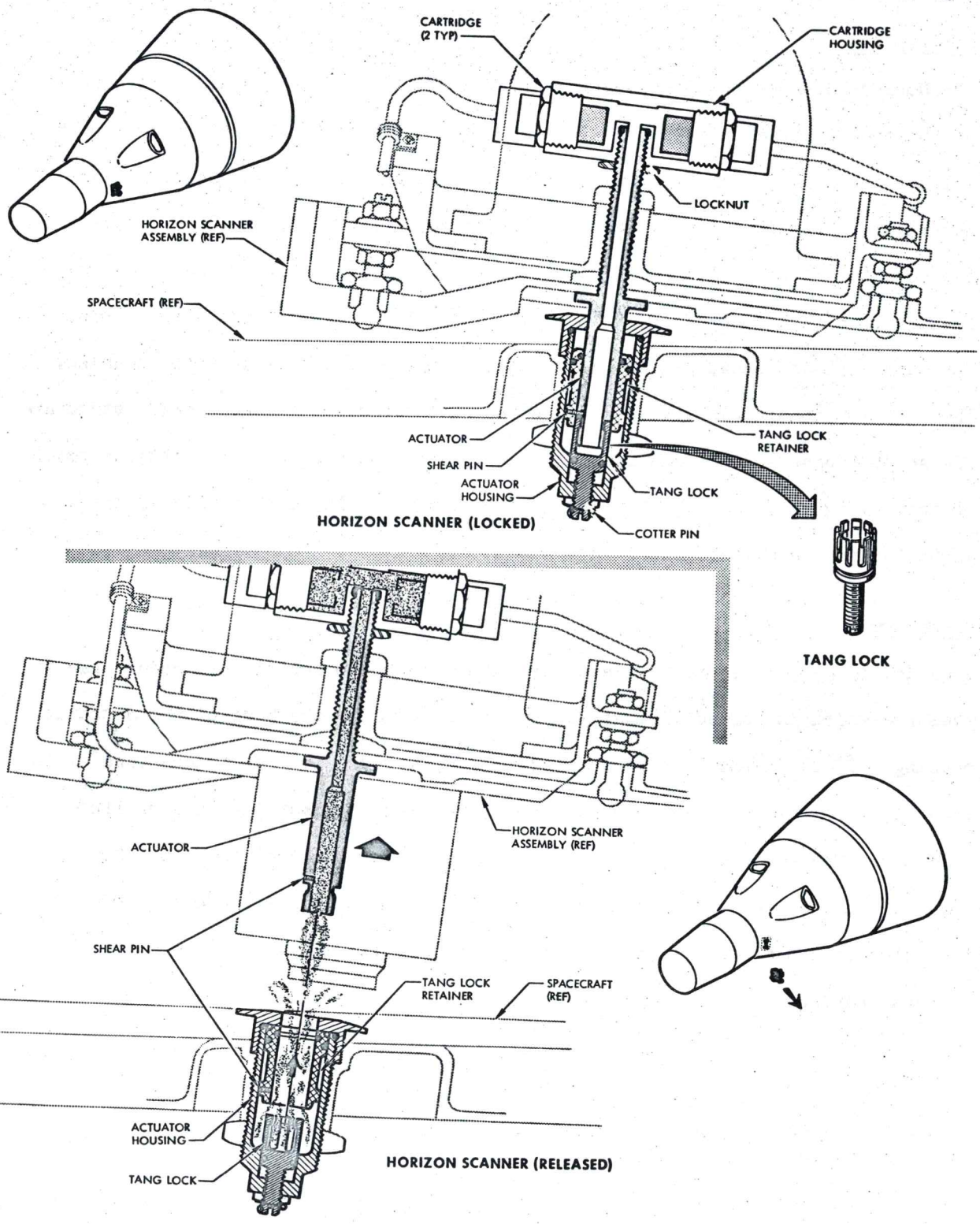

Figure 11-13 Horizon Scanner Release Assembly

FRESH AIR DOOR ACTUATOR

Description

The Fresh Air Door Actuator (Figure 11-14) is provided to retain the fresh air door to the spacecraft and to eject the door when initiated. The fresh air door actuator is located forward of the egress hatches, to the left of the spacecraft centerline and below the outer mold line. The actuator primarily consists of the breech,plunger, screw and two electrically fired gas pressure cartridges. The plunger forms a positive tie between the fresh air door and the breech. The plunger is retained in the breech by the screw which acts as a shear pin. The breech provides for installation of the two cartridges. Lugs, for attaching the actuator to the spacecraft structure, are an integral part of the breech.

Operation

When initiated by the proper electrical signal, the cartridges are caused to function. The cartridges generate gas pressure that exerts a force on the plunger. Where sufficient force is applied, the plunger severs the screw and is ejected out of the breech. The plunger and fresh air door are then jettisoned free of the spacecraft.

NOSE FAIRING EJECTOR

Description

The Nose Fairing Ejector (Figure 11-15) is used to secure the Rendezvous and Recovery nose fairing to the spacecraft until the proper electrical signal initiates a pyrotechnic response. When initiated by a proper electrical signal, the ejector shall positively jettison the nose fairing. The nose fairing ejector

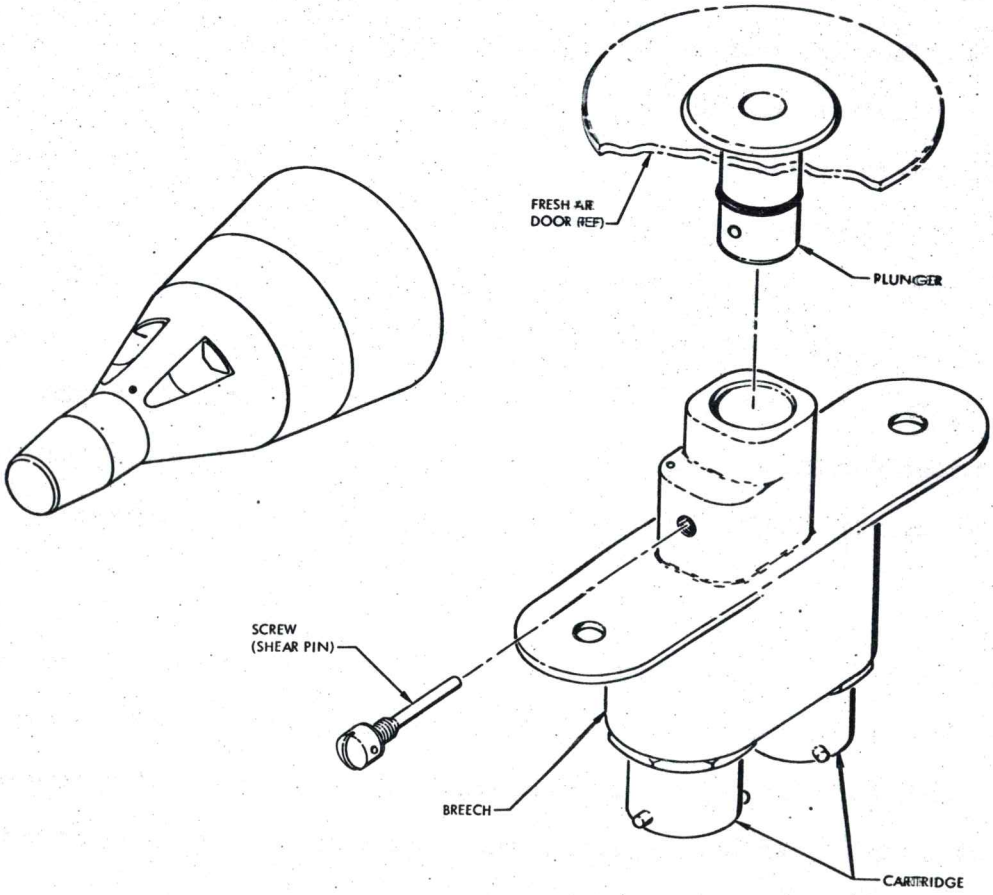

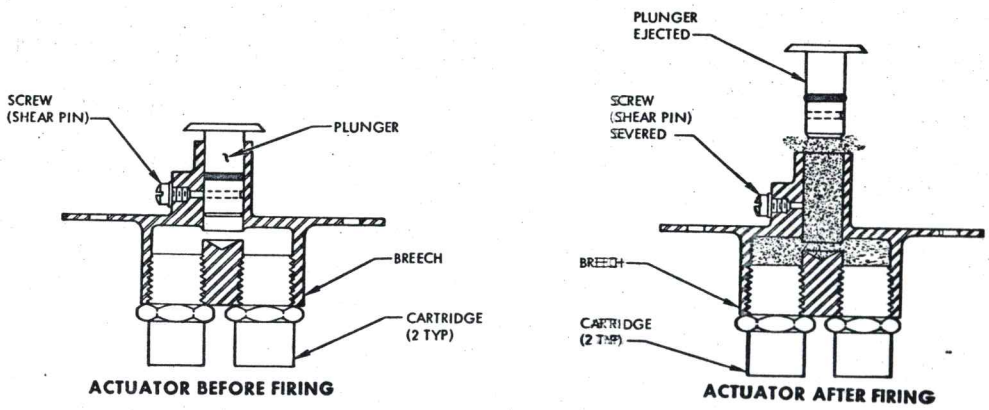

Figure 11-14 Fresh Air Door Actuator

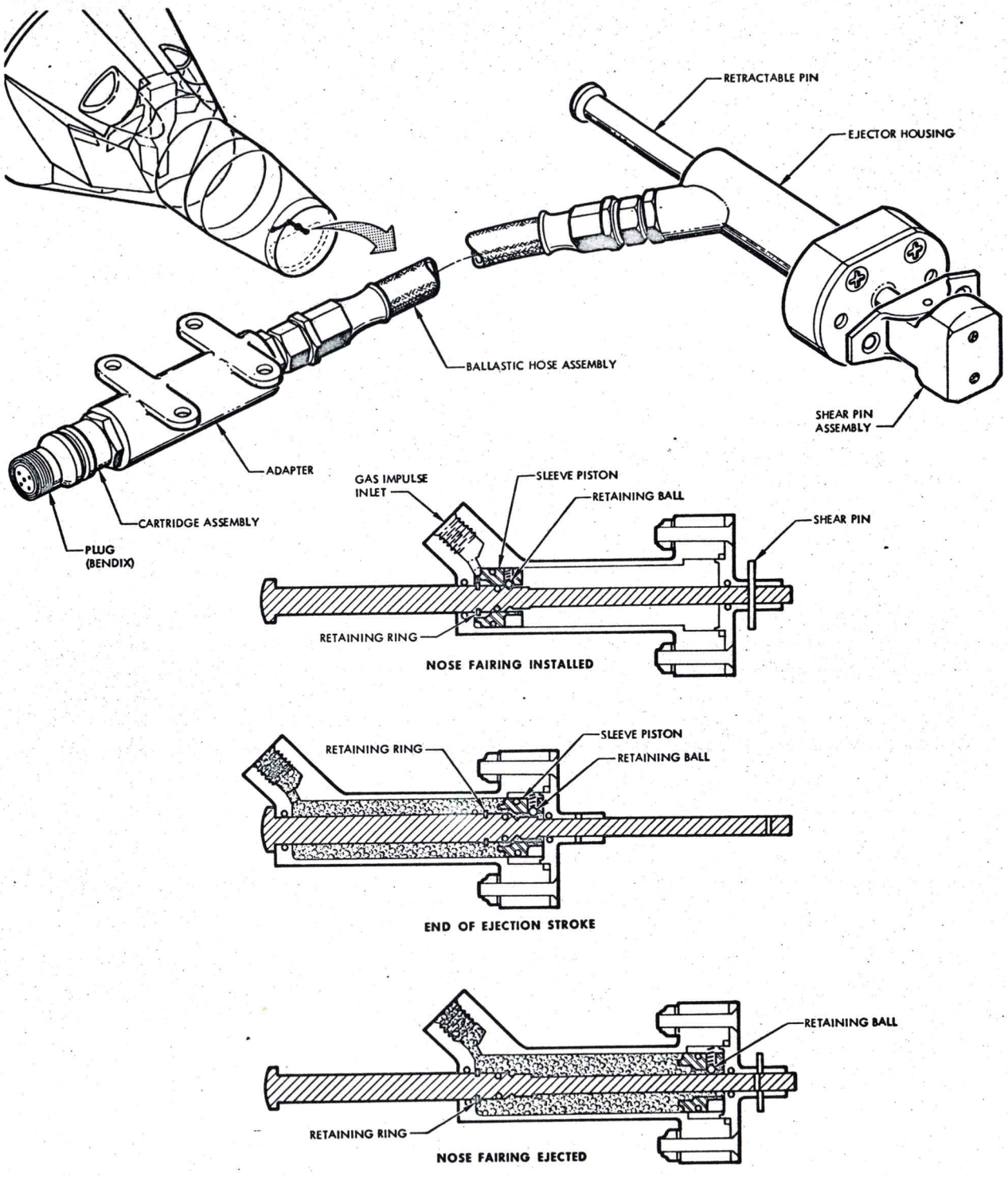

FM2-11-1

Figure 11-15 Nose Fairing Ejection Assembly

assembly consists of a cartridge, actuator assembly and a shear pin assembly. The actuator assembly consists of two major components connected by a ballistic hose. The cartridge is installed in the actuator assembly adapter and is positioned approximately nine inches from the ejector. The ejector is installed on the antenna support and fairing ejector fitting of the R & R section, and is located on the "X" axis, five inches up from "Y" zero. The shear pin assembly is installed on the nose fairing and secured to the retractor pin by a clevis pin that shears under stress.

Operation

When initiated by a proper electrical signal, the cartridge generates gas pressure that is transferred through a ballistic hose to the ejector housing. The pressure exerted on the sleeve piston causes the piston and retractable pin to move axially in the ejector body. As the piston approaches the opposite end of the ejector cylinder, the head of the retractable pin contacts the ejector body and stops. The inertia of the piston forces the retaining balls out of a detent on the retractable pin. The enlarged cylinder diameter allows the retaining balls to move away from the retractable pin and the sleeve piston continues to travel to the end of the ejector cylinder. Separation of the piston from the retractable pin allows gas pressure to act on the piston area difference along the retractable pin length. The pressure differential between the small diameter of the retractable pin near the piston and the large diameter near the pin head, forces the pin to return to the original position.

The rapid accelerating force of the retractable pin is transferred through the shear pin assembly and to the nose fairing. The deceleration of the retractable pin causes the inertia of the nose fairing to shear the clevis pin in the shear pin assembly and continue its movement away from the R & R section. A hinge on the nose fairing, located on the outer mold line, releases and directs the path of the fairing away from the spacecraft.

EGRESS SYSTEMS AND DEVICES

The Egress Systems and Devices (Figure 11-16) provide the pilots with a rapid and positive method of escaping the spacecraft, should an emergency arise. The system is manually initiated and is used below an altitude of 70,000 feet only. Each system and device is presented in the sequence of their operation.

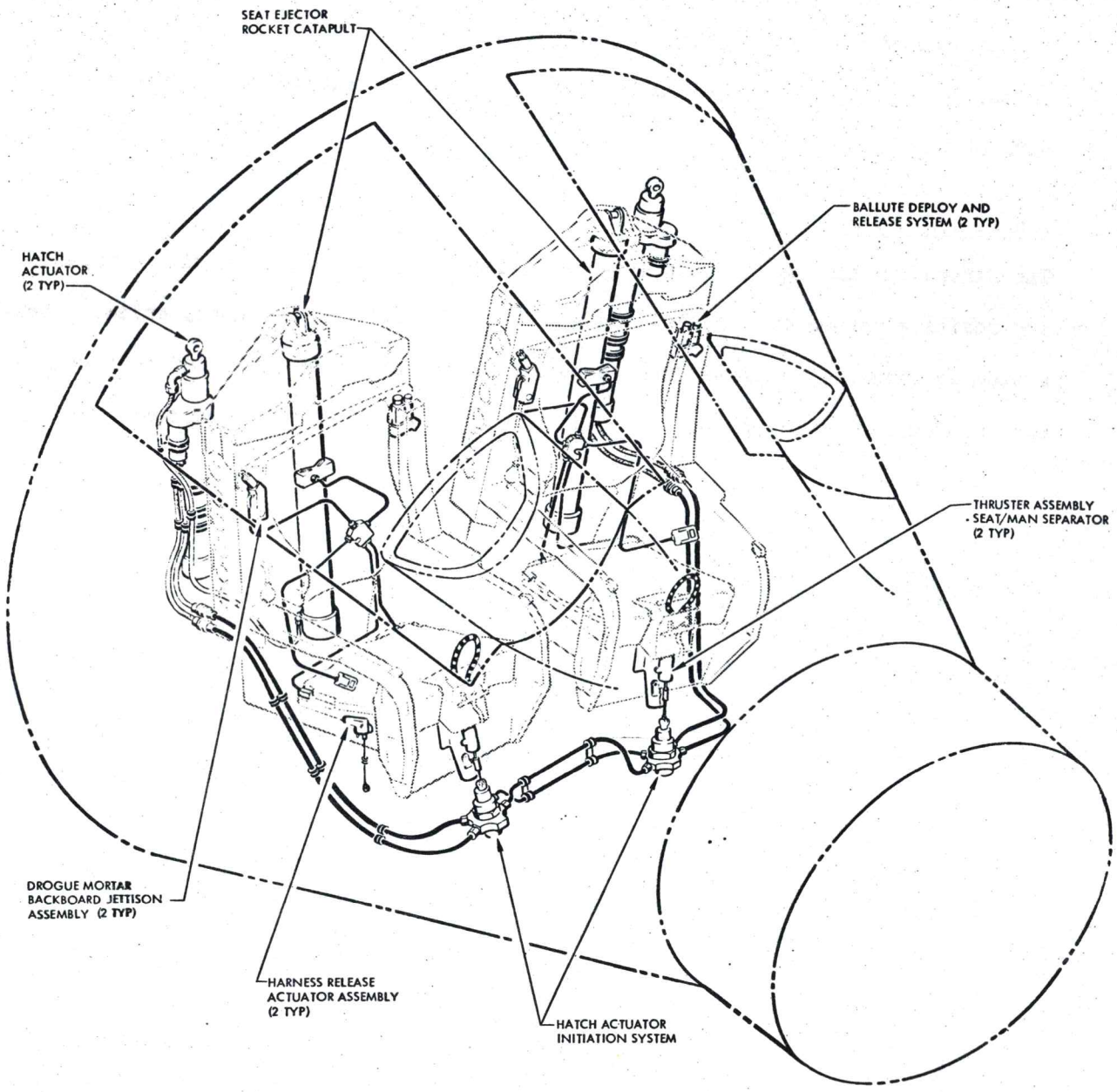

Figure 11-16 Egress System and Devices

HATCH ACTUATOR INITIATION SYSTEM (MDF)

Description

The Hatch Actuator Initiation System (Figure 11-12) is used to initiate the firing mechanisms of both hatch actuators. The system is manually activated by either pilot. The system primarily consists of 8 MDF interconnects, two MDF crossovers and two manual firing mechanisms. The interconnects consists of four rigid and four flexible MDF assemblies that connect the firing mechanisms to the hatch actuators. The two crossovers are rigid MDF assemblies that cross connect the two initiation system firing mechanisms. The firing mechanisms each contain dual firing pins, dual percussion primers, and a booster charge. The firing mechanism is drilled and tapped for installing two MDF interconnects and two crossovers. The MDF interconnects and crossovers are installed so that the small booster on the end of each MDF is adjacent to the booster charge of the firing mechanism. The firing mechanism is attached to the spacecraft structure, located below the pilot's feet.

Operation

The hatch actuator initiation system is activated when either pilot pulls the ejection control handle ("D" ring) located between the pilot's knees and connected to the firing mechanism. Approximately one-half inch travel of the lanyard connecting the ejection control to the firing mechanism will cock and release the dual firing pins. The firing pins strike the dual percussion primers, causing the booster charge to detonate. The firing mechanism booster charge propagates detonation to the four MDF ends. The interconnecting MDF propagates the detonation wave to the firing pins of the hatch actuator breech assembly. The crossover MDF propagates the detonation wave to the other pilot's firing mechanism. This

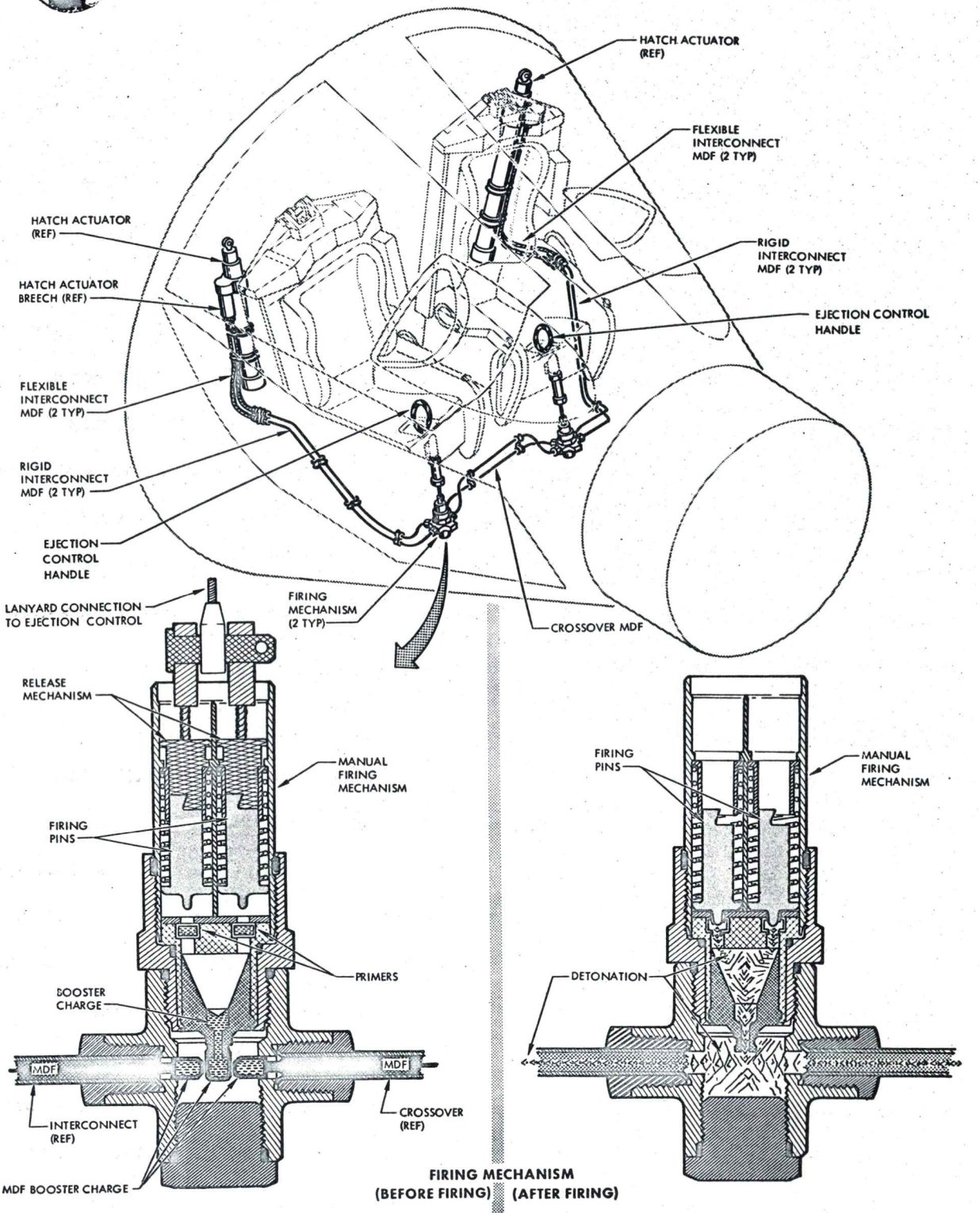

Figure 11-17 Hatch Actuator Initiation System

FM 2-11-6

insures initiation of both hatch actuators.

HATCH ACTUATOR ASSEMBLY

Description

The Hatch Actuator Assembly (Figure 11-18) unlocks, opens and mechanically restrains the egress hatch in the open position. The assembly also furnishes sufficient pressure to initiate the firing mechanism of the seat ejector rocket catapult. The assembly primarily consists of the Breech End Cap, Breech, Cylinder, Stretcher Assembly, End Cap (Base) and Rod End Assembly. The breech end cap assembly contains the locking mechanism for mechanically restraining the egress hatch in the open position; provides for installation of the seat ejector rocket catapult ballistic hose; provides for installation of the breech assembly, and is thread mounted to the top of the cylinder. The breech contains two firing pins, two percussion fired cartridges, and a gas producing propellant charge. Two interconnects, from the hatch actuator initiation system, are attached to the breech adjacent to the firing pins. The stretcher assembly primarily consists of the piston and stretch link, and is located inside the cylinder. One end of the stretch link is attached to a web inside the piston. The other end is attached to the rod end assembly. The rod end assembly connects the stretcher assembly to the egress hatch. The end cap is attached to the lower end of the cylinder, and provides for attaching the hatch actuator assembly to the spacecraft structure. The end cap contains a latch piston that actuates the egress hatch unock mechanism.

Operation

The hatch actuator functions when initiated by the initiation system MDF interconnects. The shock wave, propagated by the MDF interconnects, causes the two

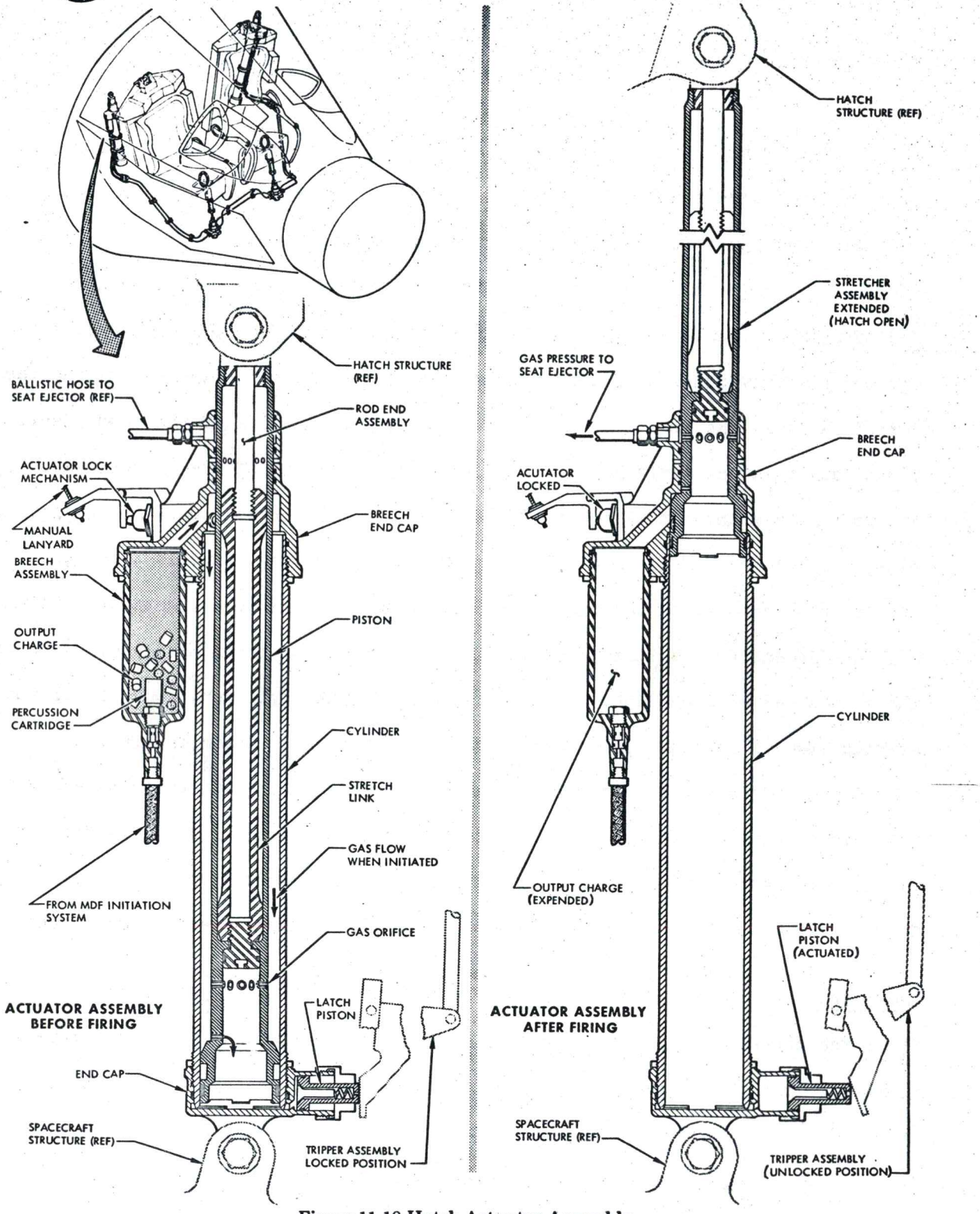

Figure 11-18 Hatch Actuator Assembly

FM 2-11-7

firing pins of the breech assembly to sever shear pins and strike the primers of the two percussion fired cartridges. The cartridges ignite and generate hot gas which ignites the main propellant charge of the breech. The propellant charge produces a large volume of high pressure gas. The gas pressure is exhausted into the area between the piston of the stretcher assembly and the cylinder. Orifices in the lower end of the piston wall admit the gas pressure to the base of the stretcher assembly. The gas pressure is ported through a drilled passage to the latch piston. The gas pressure extends the latch piston, which unlocks the egress hatch through a bellcrank/pushrod mechanism. The gas pressure then acts on the base of the stretcher assembly, moving it through the length of the cylinder. Immediately prior to the stretcher assembly reaching full extension, gas pressure is exhausted through a port to the ballistic hose. The ballistic hose delivers the pressure to the firing mechanism of the seat ejector - rocket catapult. As the stretcher assembly reaches the fully extended position, the lock pin of the locking mechanism engages the piston of the stretcher assembly and holds the hatch open. The locking mechanism is also operative when the hatch is fully opened by hand. A lanyard, attached to the locking mechanism, permits the hatch to be unlocked, when manually actuated.

SEAT EJECTOR-ROCKET CATAPULT

Description

The Seat Ejector-Rocket Catapult (Figure 11-19) is used to eject the man-seat mass from the spacecraft. The seat ejector-rocket catapult basically consists of the catapult assembly and the rocket motor assembly. The catapult assembly primarily consists of the catapult housing, firing mechanism, main charge (gas producer), and locking assembly. The catapult housing contains all of the listed components

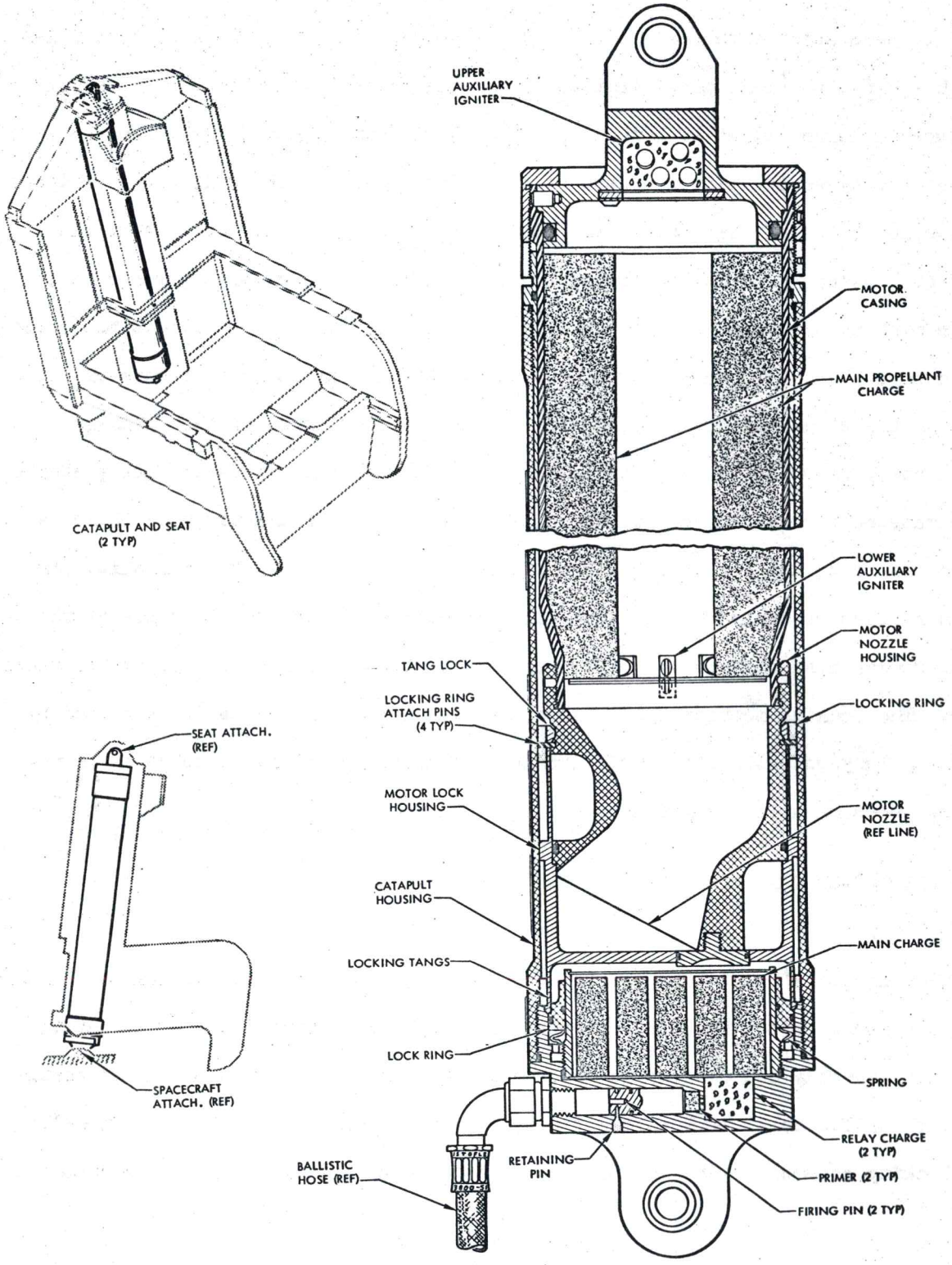

Figure 11-19 Seat Ejector - Rocket Catapult

in its base. The firing mechanism consists of dual firing pins, dual percussion fired primers, and a relay charge. The firing pins are secured in place by retaining pins. The locking assembly consists of the lock ring and a spring to hold the ring in place. The base of the catapult assembly is attached to the spacecraft structure. The rocket motor assembly primarily consists of the motor case, nozzle, motor lock housing, lock ring, shear pins, upper and lower auxiliary igniters, and the main propellant charge. The nozzle is threaded to the motor case and is secured by four set screws. The nozzle is secured to the motor lock housing by locking tangs. The locking tangs are held in place by a lock ring that is retained by four shear pins. The motor lock housing is secured in the base of the catapult by tang locks. The tangs are held in place by the lock ring of the catapult. The main propellant charge is located in the motor case with an auxiliary igniter at each end of the charge. The top end of the rocket motor assembly is attached to the seat.

Operation

The seat ejection cycle is initiated when gas pressure is received via the ballistic hose from the hatch actuator. Sufficient gas pressure will cause the dual firing pins to shear their retaining pins and strike the dual percussion primers. The primers ignite the relay and main charges. Hot gas pressure, produced by the main charge, releases the motor lock housing by displacing the lock ring against the spring through piston action. With the motor lock housing released, the gas pressure propels the rocket motor through the length of the catapult housing. Prior to complete ejection from the catapult housing, the lock ring of the motor lock housing makes contact with a stop which severs its four shear pins. The tang locks of the motor lock housing cam open and release the rocket motor. Separation of the rocket motor from the motor lock housing allows the hot gas from the catapult main charge to

enter the rocket motor nozzle opening. The hot gas ignites the auxiliary igniters and the main propellant charge. The rocket motor is thus free to perform its basic function of obtaining optimum trajectory of the man-seat for spacecraft clearance.

HARNESS RELEASE ACTUATOR ASSEMBLY

Description

The Harness Release Actuator Assembly (Figure 11-20) which is installed on the seat structure, is provided to actuate the restraint harness release mechanism and to initiate the firing mechanism of the thruster assembly. The actuator assembly primarily consists of the actuator housing, firing mechanism, percussion fired gas pressure cartridge and the unlatch rod. The unlatch rod is installed in the actuator housing with an external spring preloading the rod in the latched position. The mated cartridge and firing mechanism is installed in the base of the actuator assembly. A lanyard attaches the firing mechanism to the spacecraft structure. A fitting is provided in the actuator housing for attaching the thruster ballistic hose.

Operation

The firing mechanism is initiated by lanyard pull when the seat rises on the ejection rails. The firing pin is cocked and released to strike the cartridge. The cartridge incorporates a time delay, to allow the seat adequate time to clear the spacecraft before actuating the harness release. The gas pressure, generated by the cartridge, is routed through passages in the actuator housing to the unlatch rod. The unlatch rod actuates the mechanical linkage to release the restraint harness. As the unlatch rod approaches the end of its travel, a port is exposed that allows gas pressure to enter the ballistic hose. The gas pressure travels through the

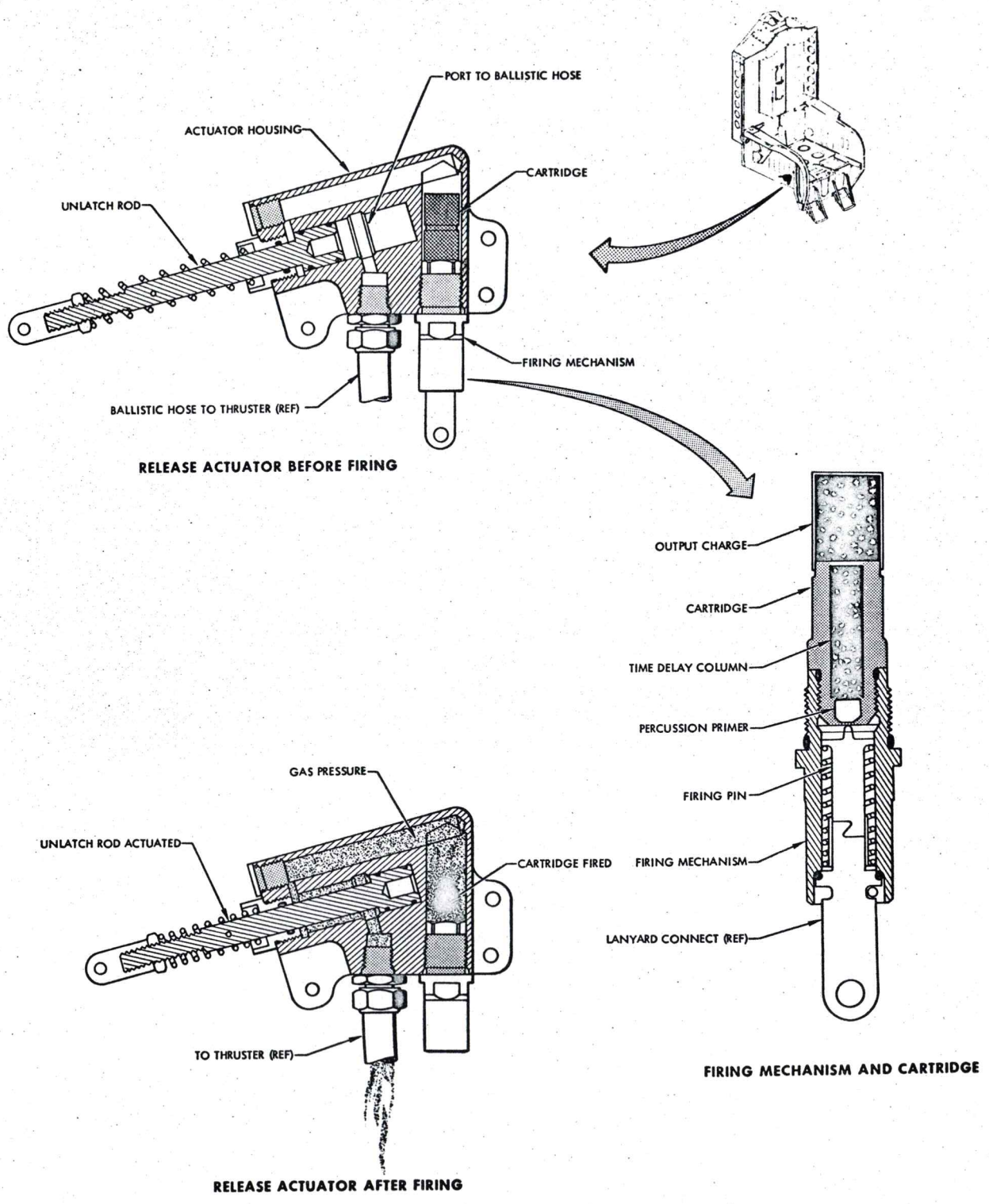

Figure 11-20 Harness Release Actuator Assembly

ballistic hose to initiate the thruster assembly.

THRUSTER ASSEMBLY - SEAT/MAN SEPARATOR

Description

The Thruster Assembly - Seat/Man Separator (Figure 11-21) is only a part of the seat/man separation assembly. The thruster supplies a stroke of adequate length and power to a webbed strap that accomplishes seat/man separation. The thruster assembly primarily consists of the Thruster Body, Thruster Piston, Firing Mechanism and Percussion Fired Gas Pressure Cartridge. The cartridge and firing mechanism is installed in the upper end of the thruster body. The firing mechanism contains a firing pin, retained by a shear pin. The ballistic hose from the harness release actuator is attached to the firing mechanism. The thruster piston is located in the thruster body and is retained in the retracted position by a shear pin. The thruster body is mounted on the front of the seat structure, between the pilot's feet.

Operation

High pressure gas from the harness release actuator is transmitted through the ballistic hose to the thruster firing mechanism. The gas pressure causes the firing pin to sever its shear pin and strike the primer of the cartridge. The cartridge is ignited and generates gas pressure. The gas pressure exerts force on the thruster piston, causing the piston to sever its shear pin. As the piston extends out of the thruster body, the strap is pulled taut effecting seat/man separation.

BALLUTE DEPLOY AND RELEASE SYSTEM

Description

The Ballute Deploy and Release System (Figure 11-22) primarily consists of the

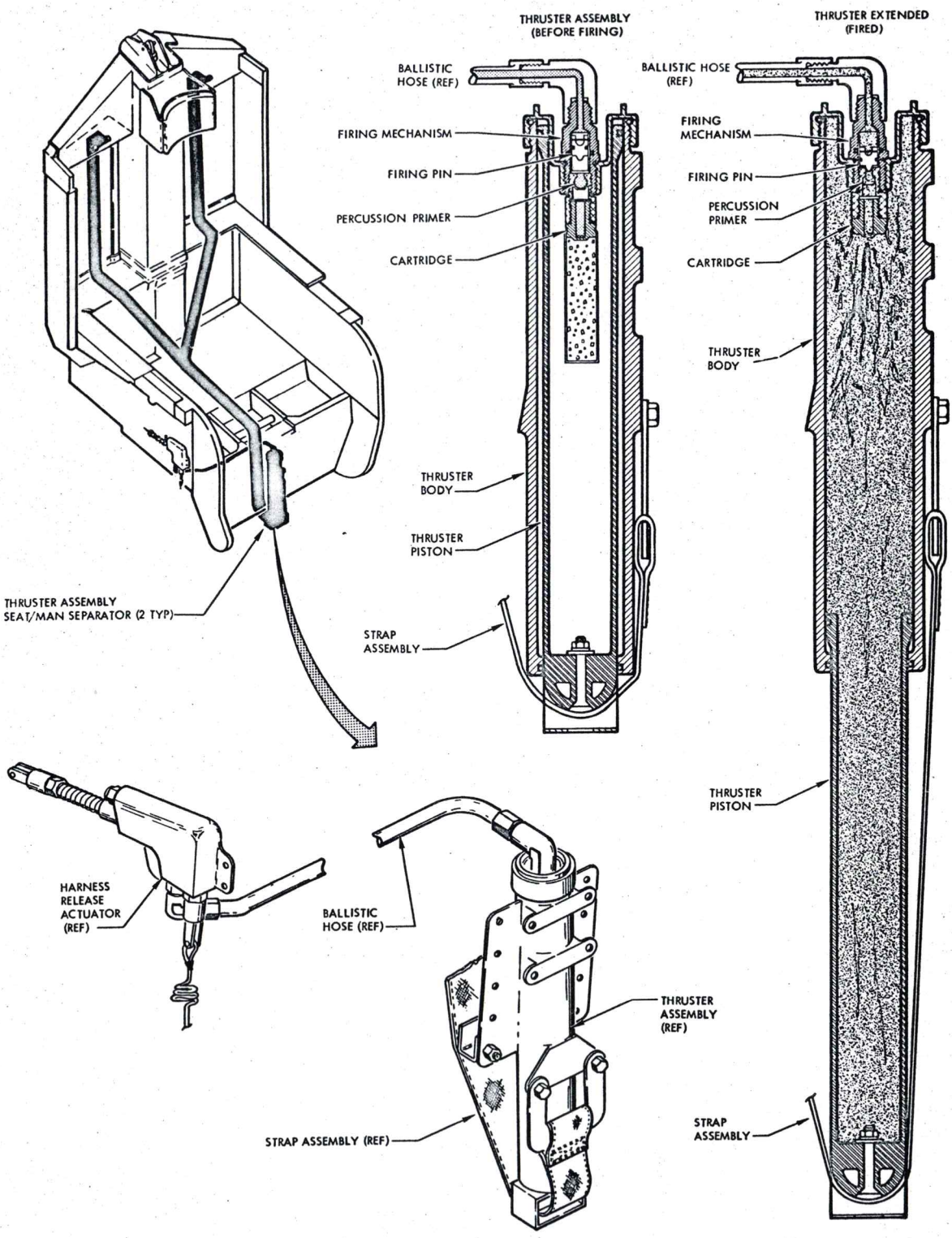

Figure 11-21 Thruster Assembly-Seat/Man Separator

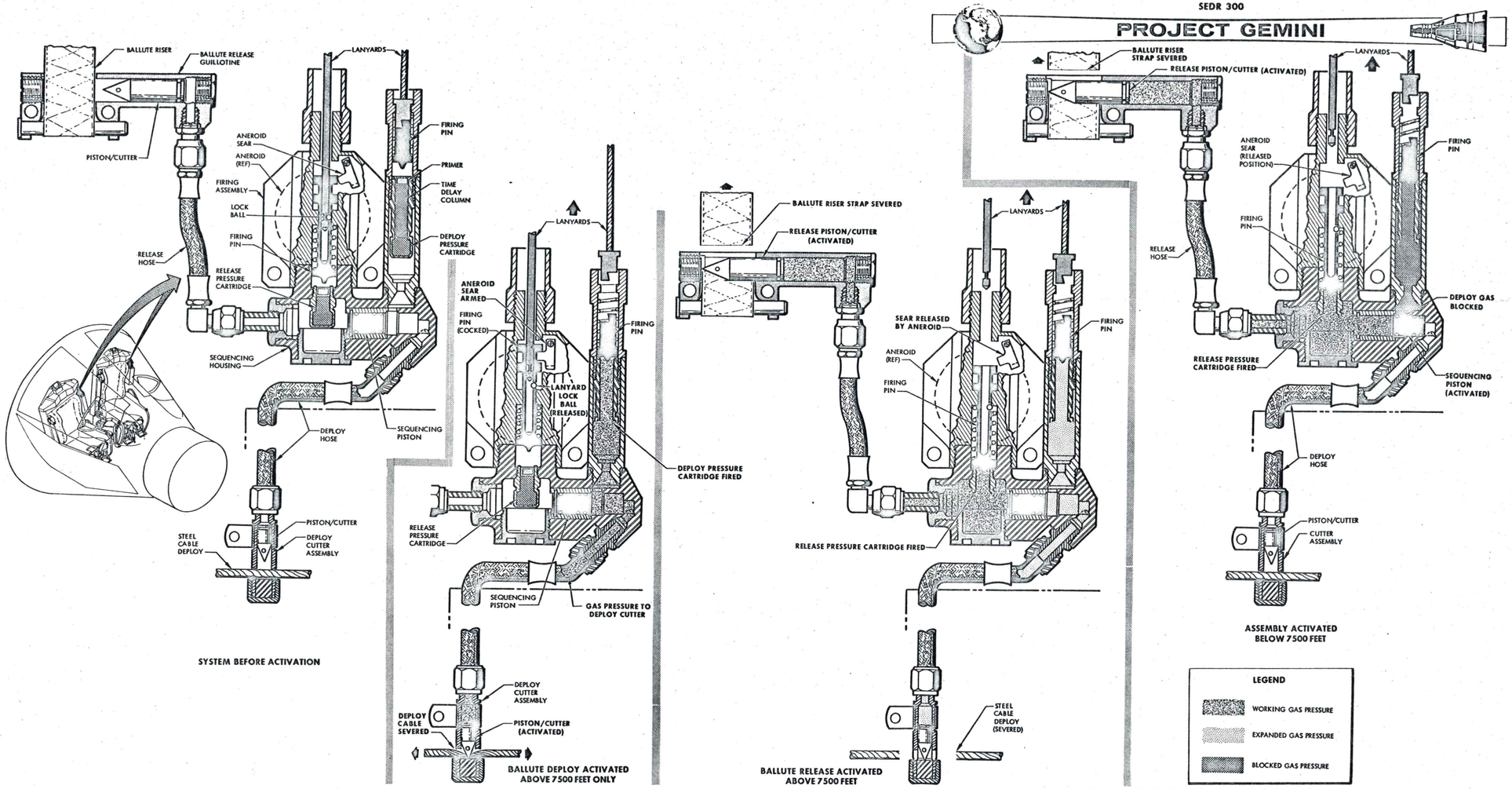

Figure 11-22 Ballute Deploy and Release System

FM2-11-9

11-48

Firing Assembly, Deploy Cutter and Hose, and Release Guillotine and Hose. Contained within the firing assembly, is the Release Aneroid Firing Mechanism and Cartridge, the Deploy Firing Mechanism and Cartridge, and the Sequencing Housing and Piston. The basic function of the system is to deploy and release the ballute between specified altitudes and prevent ballute deployment below specified altitudes. The system is located on the upper left side of each pilot's backboard. The deploy firing mechanism and the release aneroid firing mechanism is linked to the pilot's seat by individual lanyards.

Operation

The system is initiated by the lanyard pull as seat/man separation is effected. When initiated above 7500 feet, the release aneroid is armed and the deploy firing mechanism is activated. The firing pin of the deploy firing mechanism strikes the primer of the cartridge and causes ignition. The cartridge generates gas pressure after burning through the time delay column. The pressure is ported through the deploy hose to the deploy cutter assembly. The cutter severs a nylon strap that allows the ballute to deploy. The armed aneroid functions when an altitude pressure level of 7500 feet is reached. The aneroid sear releases the cocked firing pin of the ballute release firing mechanism. The firing pin strikes the primer, which ignites the cartridge and causes it to generate gas pressure. The pressure is ported through the release hose to the release guillotine. The guillotine severs the ballute riser strap and allows the ballute to be carried away. When the system is activated by the lanyard pull below 7,500 feet, both cartridges are immediately initiated. The time delay incorporated in the deploy cartridge permits the release cartridge to generate gas pressure first. The pressure is ported through the relcase hose to the release guillotine, which severs the ballute riser strap. Simultaneously

gas pressure is ported to the sequencing housing and sequencing piston. The piston is actuated, causing it to block the gas exit of the deploy cartridge. The gas pressure, generated by the deploy cartridge, does not reach the deploy cutter, preventing deployment of the ballute.

DROGUE MORTAR - BACKBOARD JETTISON ASSEMBLY

The Drogue Mortar - Backboard Jettison Assembly is provided to deploy the personnel drogue parachute and to separate the backboard and egress kit from the pilot.

Description

Drogue Mortar

The Drogue Mortar (Figure 11-23) functions to eject a weighted slug with sufficient velocity to forcible deploy the personnel parachute and to initiate the backboard jettison assembly firing mechanism. The drogue mortar primarily consists of the mortar body, mortar barrel, drogue slug, main cartridge (gas pressure), initiator cartridge (detonator), aneroid assembly, main lanyard, manual lanyard, and the main and manual firing mechanisms. The mortar barrel is threaded into the mortar body and contains the drogue slug. The drogue slug is retained in the barrel by a shear pin. The aneroid assembly is attached to the mortar body and contains the main firing mechanism. The main lanyard in enclosed in a rigid housing to prevent inadvertant pulling of the lanyard. The housing is attached to the main firing mechanism housing at one end and to a take-up reel at the other. The main lanyard, a fixed length of cable, is attached to the main firing mechanism at one end and to the take-up reel at the other. The take-up reel incorporates an extendable cable that is attached to the ejection seat. The main cartridge is threaded into the mortar body, with the primer end, adjacent to the main firing mechanism, and the output end

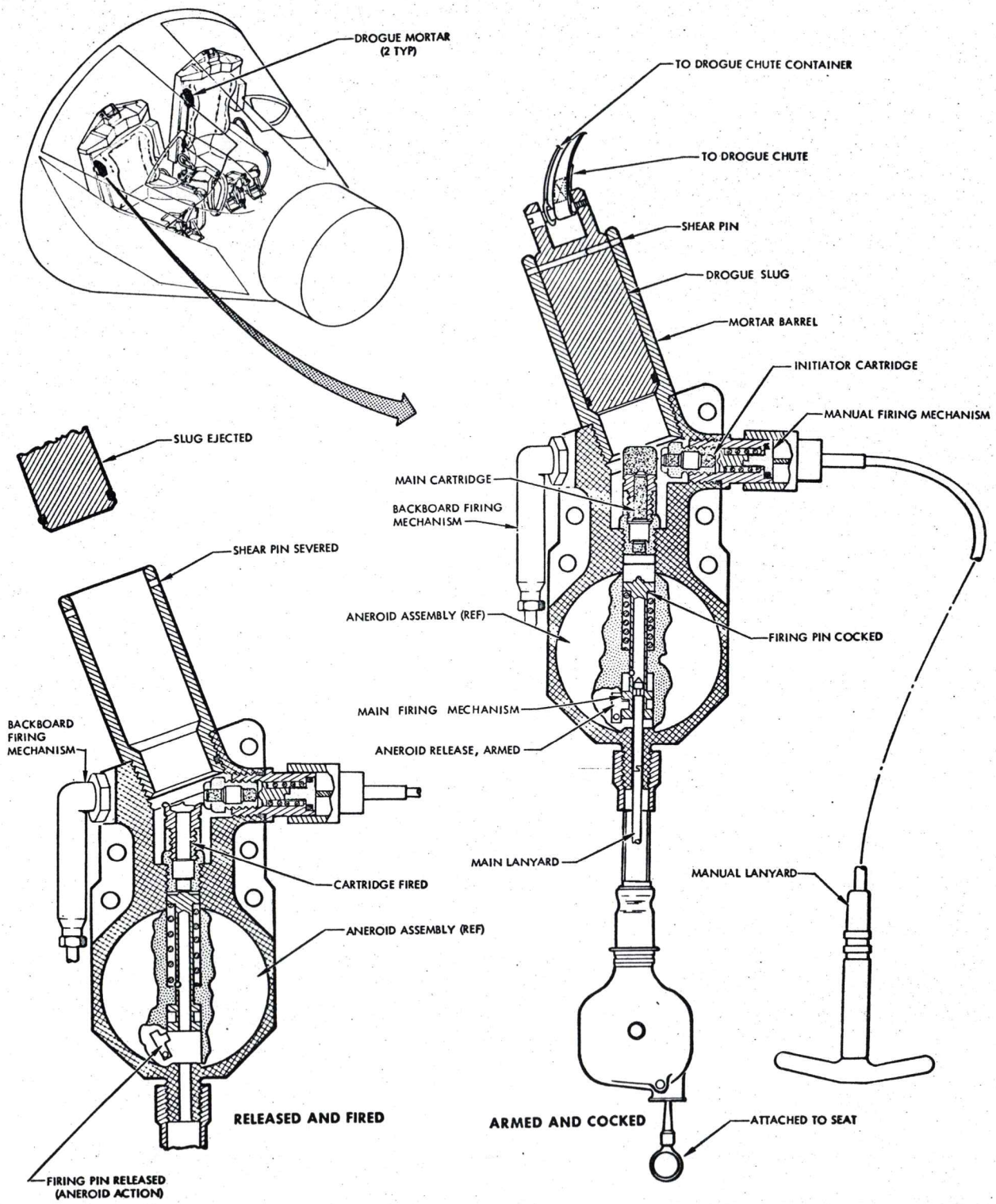

Figure 11-23 Drogue Mortar

in the mortar body pressure cavity. The manual lanyard is enclosed in a flexible conduit to prevent inadvertant pulling of the lanyard. The lanyard is attached to the manual firing mechanism at one end and to a manual pull handle at the other. The manual firing mechanism is threaded into the nortar body. The primer end of the (detonator) is threaded into the manual firing mechanism, with its output end 90° and adjacent to the main cartridge output area. The drogue mortar is attached to the upper right side of each pilot's backboard.

Backboard Jettison Assembly

The Backboard Jettison Assembly (Figure 11-24), functions to separate the backboard and egress kit from the pilot, when initiated by the pressure from the drogue mortar. The backboard jettison assembly primarily consists of the MDF firing mechanism, MDF time delay cartridge (DETONATOR), interconnect (time delay MDF), MDF manifold assembly, jetelox release pin, interconnect (jetelox pin MDF), lap belt disconnect, interconnect (belt disconnect MDF), restraint strap cutter (FLSC), and interconnect (strap cutter MDF). The MDF firing mechanism is attached to the drogue mortar body and contains a shear pin retained firing pin. The MDF time delay cartridge is a percussion fired cartridge and is installed in the MDF firing mechanism. The interconnect (time delay MDF) is connected to the MDF firing mechanism and the MDF manifold. The interconnect (jetelox pin MDF) is connected to the MDF manifold and the jetelox release pin. The interconnect (belt disconnect MDF) is connected to the MDF manifold and the lap belt disconnect. The interconnect (strap cutter MDF) is connected to the MDF manifold and the restraint strap cutter (FLSC). The three component interconnects terminate in the MDF manifold with their accepter end adjacent to the interconnect (time delay MDF) donor end. The jetelox release pin retains the jetelox joint to the egress kit until initiated.

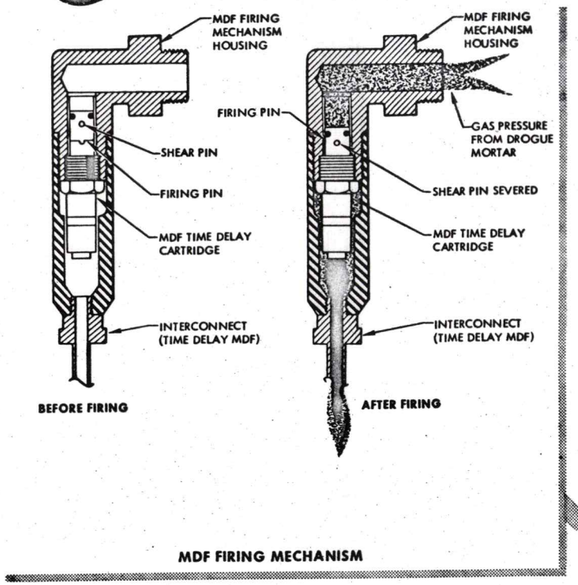

MDF FIRING MECHANISM

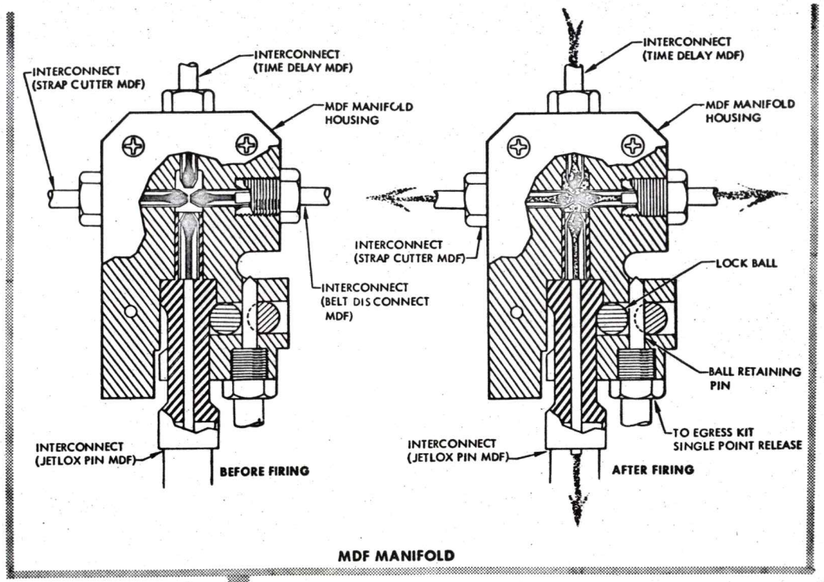

MDF MANIFOLD

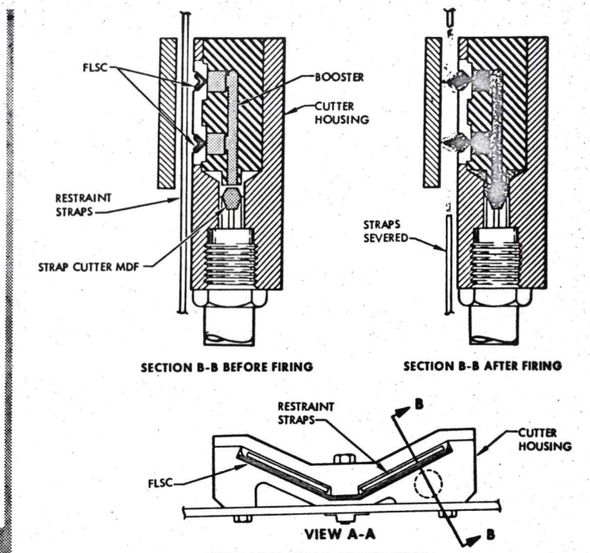

RESTRAINT STRAP CUTTER (FLSC)

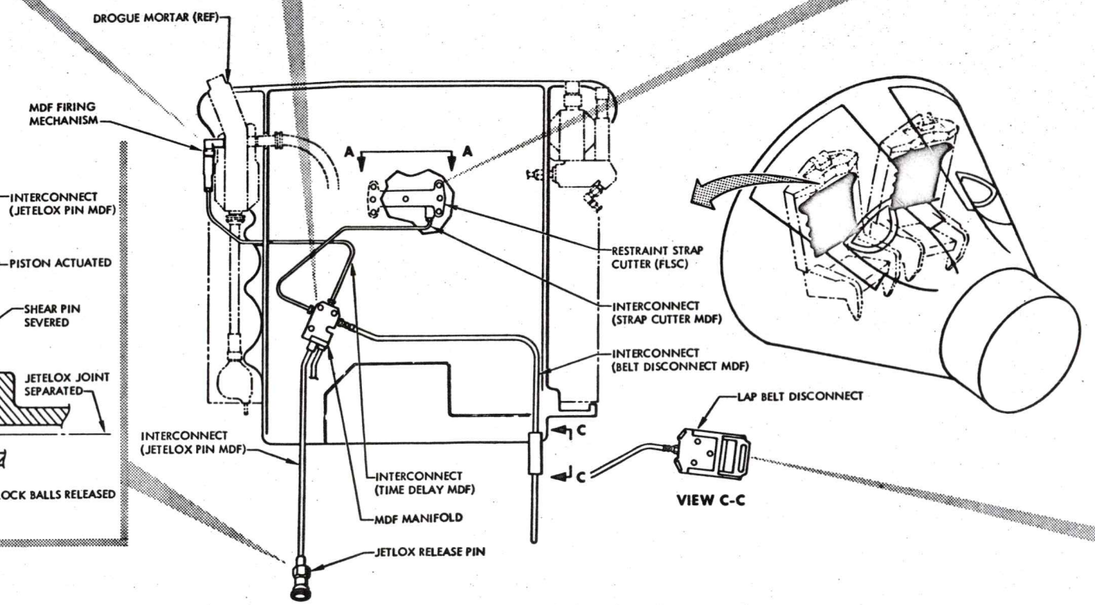

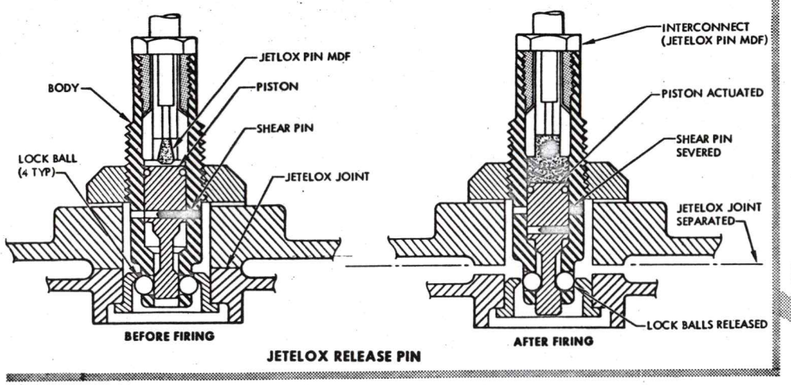

JETELOX RELEASE PIN

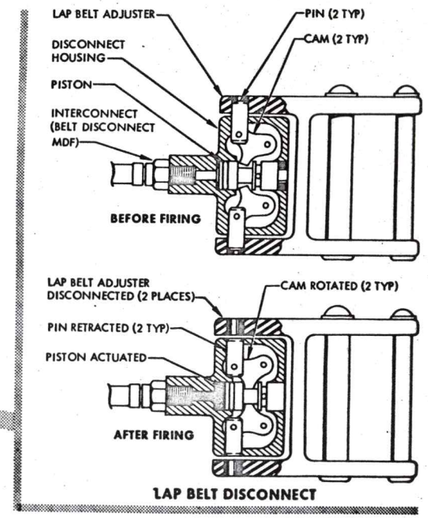

LAP BELT DISCONNECT

Figure 11-24 Backboard Jettison Assembly

The jetelox release pin primarily consists of the body, piston, four lock balls, and a shear pin. The lap belt disconnect is provided to unfasten the lap belt when properly initiated. The lap belt disconnect primarily consists of the housing, two lock pins, two cams, piston and a shear pin. The restraint strap cutter is provided to sever the pilot's shoulder harness. The cutter primarily consists of the housing, two strips of FLSC and a booster.

Operation

Drogue Mortar

The drogue mortar is initiated by the pull of the main lanyard, at seat/man separation. The extendable cable, attached to the seat, uncoils from the take-up reel. Upon reaching the end of its travel, the cable pulls the take-up reel free of the rigid housing. The fixed length main lanyard attached to the reel is pulled, and if in excess of 5700 feet, cocks the main firing mechanism and arms the aneroid. At an altitude pressure level of 5700 feet, the aneroid releases the cocked main firing pin. The firing pin strikes the primer and ignites the main cartridge, which produces gas pressure. The gas pressure causes the dorgue slug to sever its shear pin and travel out of the mortar barrel. Simultaneoulsy, the gas pressure initiates the backboard firing mechanism. When initiated by the main lanyard below 5600 feet, the main firing mechanism is cocked and immediately released to fire the main cartridge. The aneroid is in the release position because of the altitude pressure level, therefore is not armed and does not delay the cartridge firing. The drogue mortar may be initiated manually by pulling the manual lanyard handle at any altitude. The lanyard cocks and releases the manual firing pin, which strikes the primer of the initiator cartridge (detonator). The initiator cartridge

detonates and ignites the output charge of the main cartridge, which produces the gas pressure for drogue slug ejection and backboard firing mechanism initiation.

Backboard Jettison Assembly

The Backboard Jettison Assembly is caused to function when the main cartridge of the drogue mortar is fired. Gas pressure from the drogue mortar main cartridge, causes the firing pin of the backboard firing mechanism, to sever its shear pin and strike the primer of the time delay cartridge. After the proper time delay, the cartridge propagates a detonation wave to the MDF interconnect, which transmits the wave simultaneously, to the three MDF interconnects attached to the MDF manifold assembly. Simultaneously, the detonation wave is propagated by the three MDF interconnects to the restraint strap cutter (FLSC), lap belt disconnect, and the jetelox release pin. The detonation wave propagated by the interconnect (jetelox pin MDF) acts upon the piston of the jetelox pin, causing it to sever the shear pin. As the piston moves, a recess in the piston is aligned with the lock balls. The pressure exerted by the jetelox joint, forces the lock balls into the piston recess, and releases the jetelox joint and egress kit. The detonation wave, propagated by the interconnect (belt disconnect MDF), is directed against the piston of the lap belt disconnect. The detonation wave moves the piston causing it to sever the shear pin. As the piston moves, the cams rotate and retract the pins from the lap belt adjuster. The lap belt separates and permits the pilot to be partially free of the backboard. The detonation wave, propagated by the interconnect (strap cutter MDF), is transmitted to the booster of the restraint strap cutter (FLSC). The booster strengthens and increases the reliability of the detonation wave for proper detonation of the two strips of FLSC. The FLSC detonates

and severs the two restraint straps allowing the pilot to be completely free of the backboard. The egress kit may be released manually by the pilot actuating the egress kit single point release handle. A cable from the single point release, pulls a ball retaining pin from the MDF manifold. The pressure of the interconnect (jetelox pin MDF), moves the ball aside and pulls out of the MDF manifold.

PARACHUTE LANDING SYSTEM PYROTECHNICS

The Parachute Landing System (Figure 11-25) is provided to safely recover and land the re-entry module, after its entry into the earth's atmosphere. The pyrotechnic portion of the system consists of the Drogue, Pilot, and Main Parachute Reefing Cutters; the Drogue and Pilot Parachute Mortars; the Drogue Parachute Bridle Release Guillotines; the Pilot Parachute Apex Line Guillotine; and the Main Parachute Disconnects. Each of these pyrotechnic devices are presented in the following paragraphs.

DROGUE PARACHUTE MORTAR ASSEMBLY

The Drogue Parachute Mortar Assembly is provided to positively deploy the drogue chute. The assembly is similiar to the Pilot Parachute Mortar Assembly (Figure 11-25) is design and operation.

DROGUE PARACHUTE REEFING CUTTERS

The Drogue Parachute Reefing Cutters are provided to disreef the drogue chute. The cutters are similiar to the Pilot Parachute Reefing Cutters (Figure 11-26) in design, operation, and number.

DROGUE PARACHUTE BRIDLE RELEASE GUILLOTINES

The Drogue Parachute Bridle Release Guillotines are provided to sever the bridle

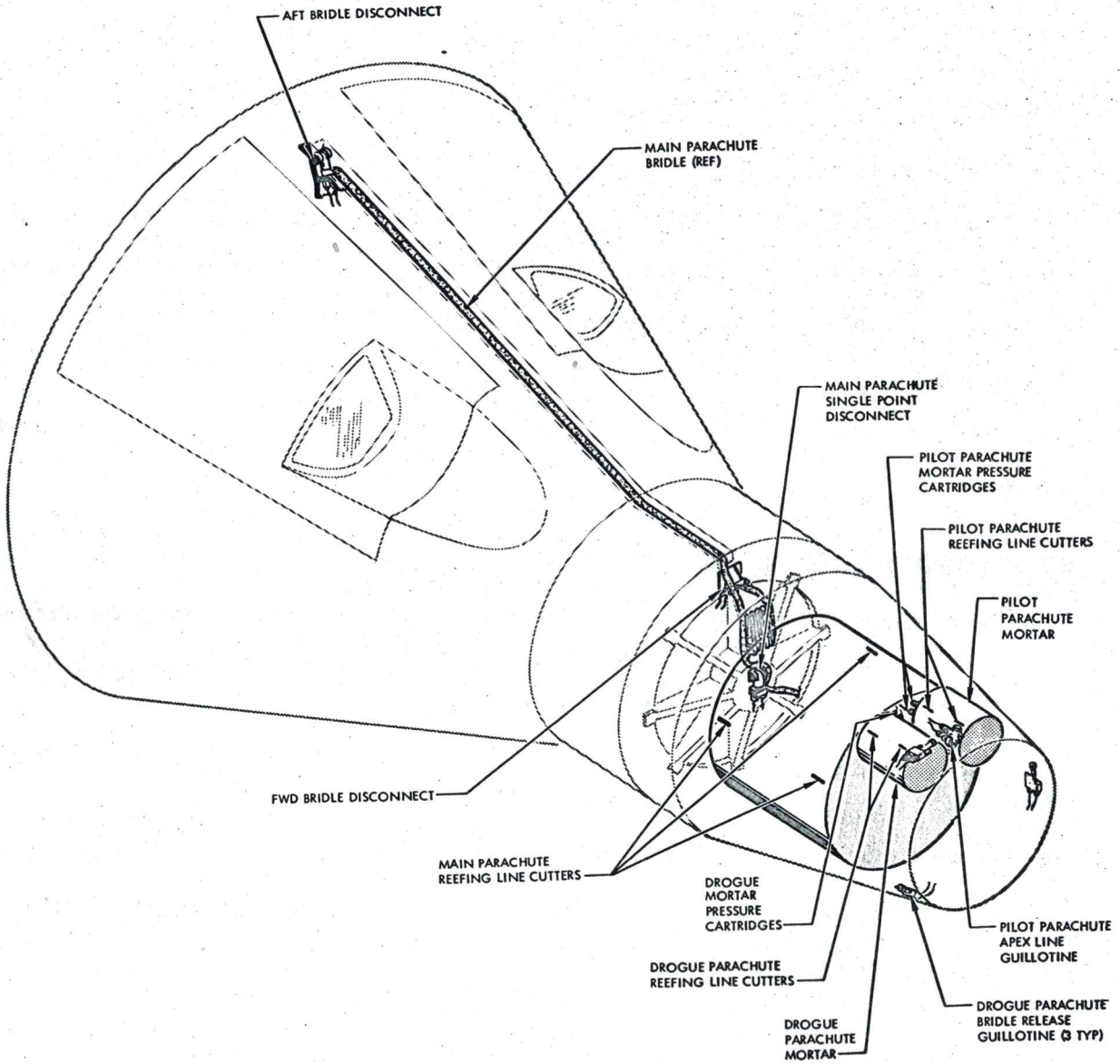

Figure 11-25 Parachute Landing System Pyrotechnics

at its three attach points. The release guillotines are similar in design and operation to the cable and wire bundle guillotines (Figure 11-9).

PILOT PARACHUTE MORTAR ASSEMBLY

Description

The Pilot Parachute Mortar Assembly (Figure 11-26) functions to deploy the pilot parachute in the event of a malfunctioning drogue chute. The mortar assembly is located in the forward end of the rendezvous and recovery section. The mortar assembly primarily consists of the mortar tube, sabot, breech, orifice, frangible bolt, washer and two electrically fired gas pressure cartridges. The base of the mortar tube is attached to the breech and the breech is attached to the rendezvous and recovery section structure. The flanged orifice passes through the base of the mortar tube and breech. The orifice is secured beneath the breech by a locknut. One end of the breech is drilled and tapped to provide for installation of the two cartridges. The sabot is located in the lower section of the mortar tube and is secured by a washer and a frangible bolt. The frangible bolt passes through the washers, the center of the sabot mortar tube base, and is threaded into the base of the orifice. The pilot chute is installed in the sabot.

Operation

The mortar functions when the cartridges are initiated by the proper electrical signal. The cartridges generate gas pressure that is ported through the breech and orifice to the base of the sabot. When sufficient pressure is exerted on the sabot, the frangible bolt will part and release the sabot. The gas pressure propels the sabot and pilot chute out of the mortar tube, thus effecting positive chute deployment.

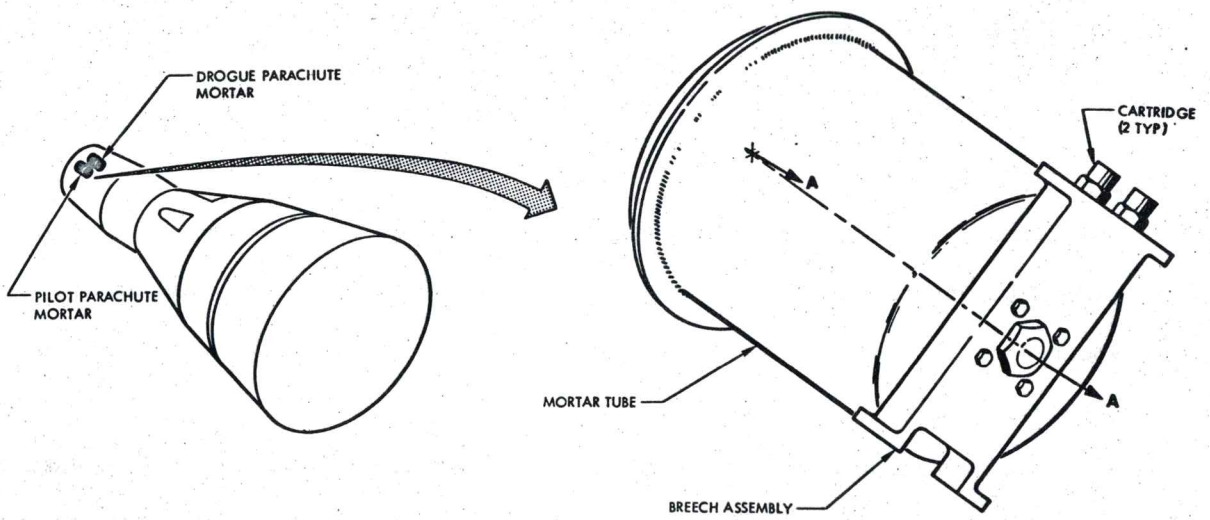

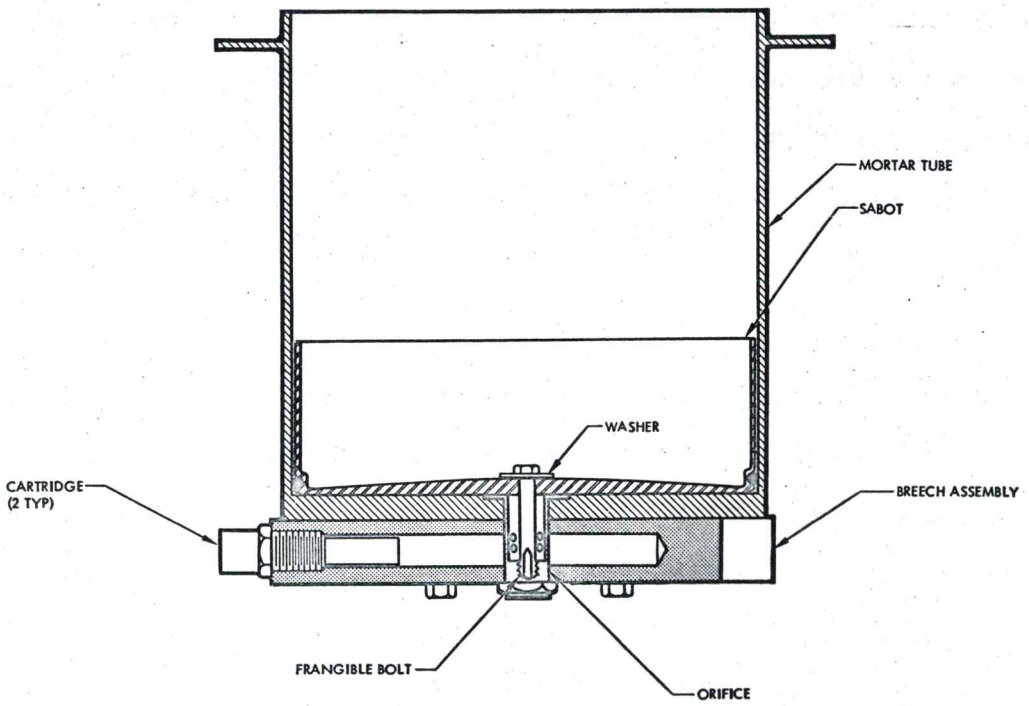

SECTION A-A

Figure 11-26 Pilot Parachute Mortar Assembly

PILOT PARACHUTE REEFING CUTTERS

Description

The Pilot Parachute Reefing Cutters (Figure 11-27) are provided to disreef the pilot chute by severing the reefing line. The reefing cutters primarily consist of the cutter body, cutter blade, firing mechanism and percussion fired time delay cartridge. Two cutter assemblies are sewn to the inside of the parachute skirt band 180° apart. The reefing cutter is a tubular device, with all its components contained within the cutter body. The firing mechanism is contained in one end of the cutter body and consists of a firing pin, lock ball, spring, and sear pin. The firing pin is retained in the cocked position by the lock ball. The lock ball is held in place by the sear pin. A lanyard is attached to the sear pin and to the parachute canopy. The spring is precocked and energizes the firing pin when the sear pin is pulled. The cartridge is installed in the center portion of the cutter body and is roll crimped in place. The cartridge consists of a percussion primer, time delay column and output charge. The cutter blade is stake locked in the cutter body, below and adjacent to the output end of the cartridge. A washer is crimp locked in the end of the cutter body, and serves as the anvil and stop for the cutter blade. A hole in each side of the cutter body, between the cutter blade and washer, permits installation of the reefing cable.

Operation

Deployment of the pilot chute causes the reefing cutters to be initiated. As the canopy extends, the lanyard is pulled taut and pulls the sear pin from the firing mechanism. The lock ball moves inboard and unlocks the firing pin. The spring energized firing pin is driven into the primer of the cartridge and ignites the

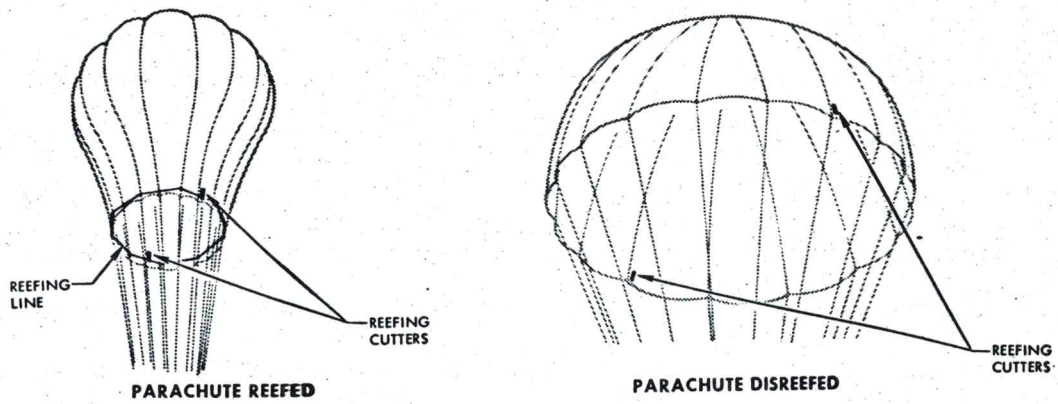

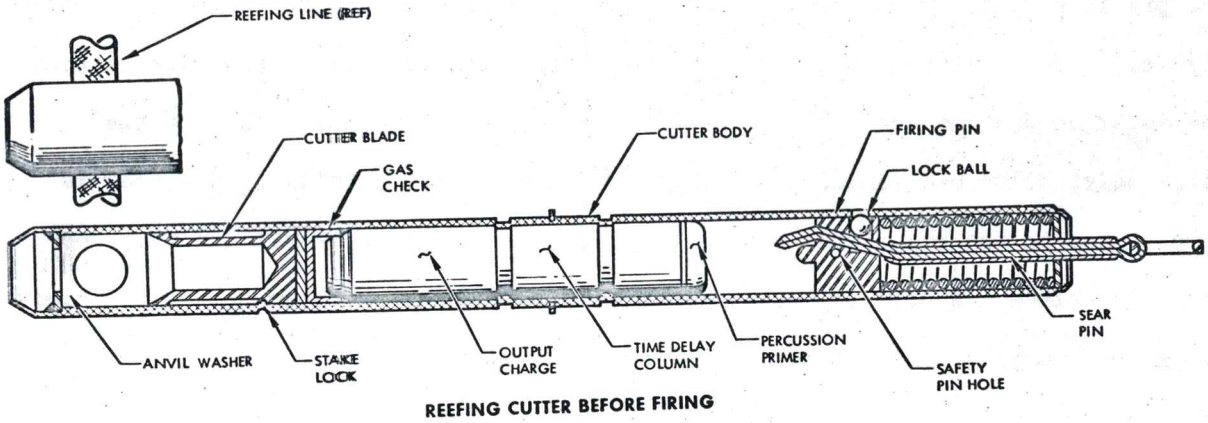

Figure 11-27 Pilot Parachute Reefing Cutters

time delay column. After the specified time delay, the cartridge produces gas pressure that exerts force on the cutter blade When sufficient force is exerted, the cutter blade shears the stake lock and strokes to sever the reefing cable. Proper functioning of only one of the two cutters is sufficient to perform pilot chute disreefing.

PILOT PARACHUTE APEX LINE GUILLOTINE

Description

The Pilot Parachute Apex Line Guillotine (Figure 11-28) is provided to sever the pilot chute apex line, in the event of a drogue chute malfunction. The guillotine primarily consists of the body, cutter blade, and two electrically fired gas pressure cartridges. The cutter blade is retained by a shear pin. The body provides for the installation of the two cartridges, and incorporates drilled passages from the cartridges to the cutter blade. Design of the guillotine allows the apex line to pull free, when the pilot chute is deployed by the drogue chute. The guillotine is located in the forward section of the rendezvous and recovery section.

Operation

When initiated by the proper electrical signal, the cartridges produce gas pressure. The pressure is ported through a drilled passage to the head of the cutter blade. Sufficient pressure causes the cutter blade to sever the shear pin and stroke to cut the apex line. The apex line is thus free of the malfunctioned drogue chute, permitting mortar deployment of the pilot chute.

MAIN PARACHUTE REEFING CUTTER

The Main Parachute Reefing Cutter (Figure 11-29) is provided to disreef the main

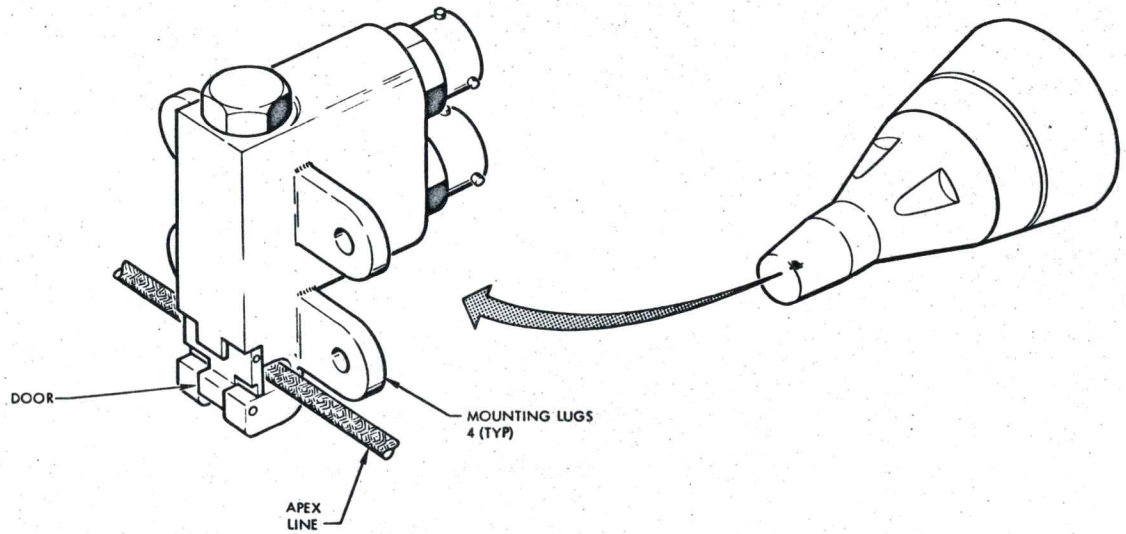

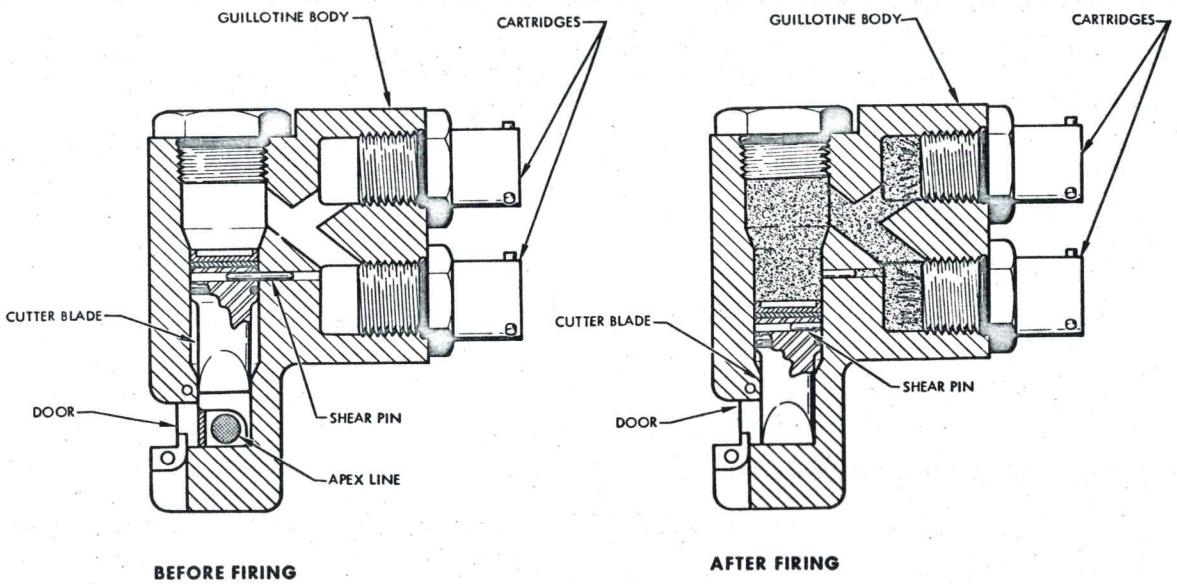

Figure 11-28 Pilot Parachute Apex Line Guillotine

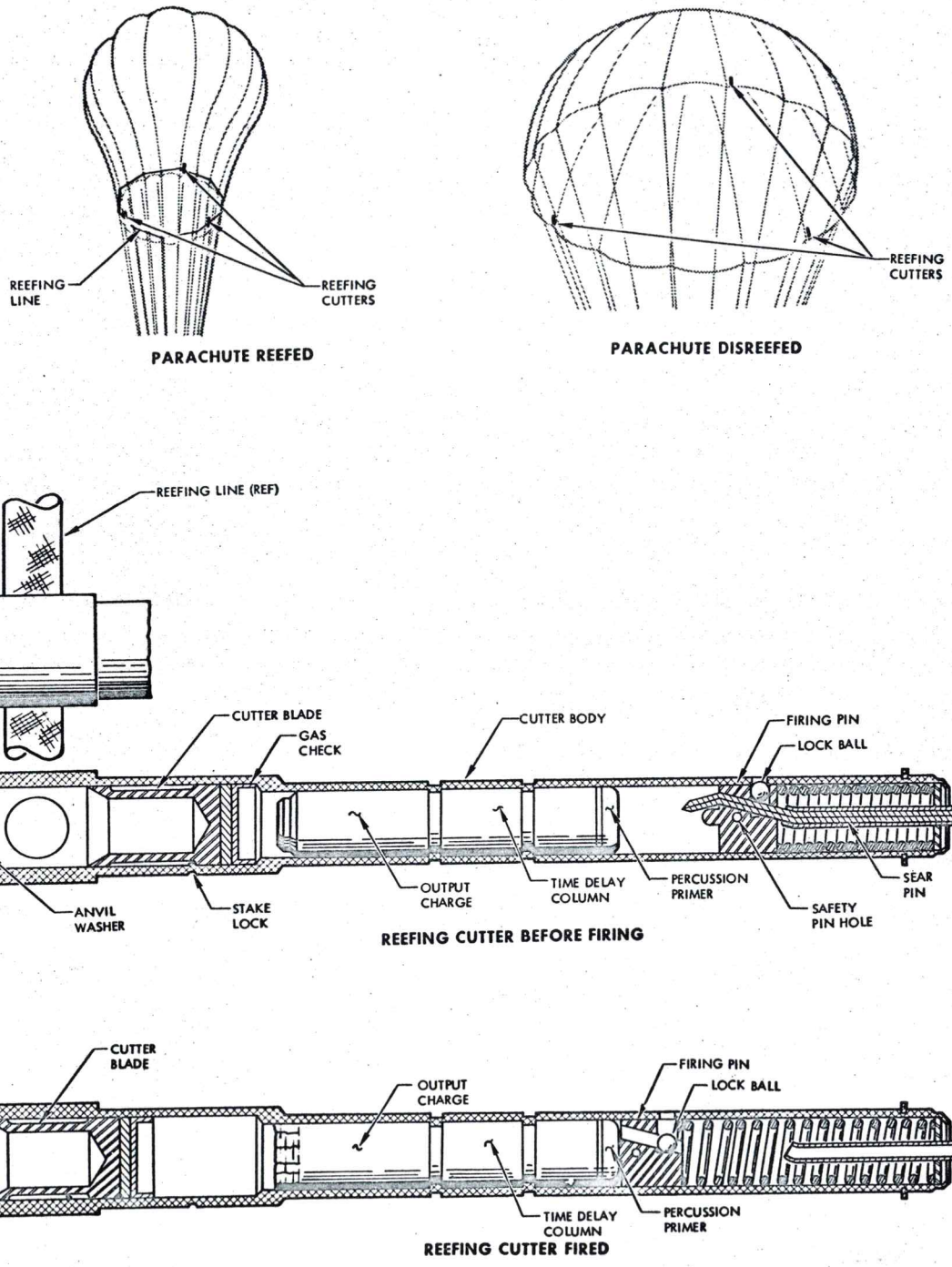

Figure 11-29 Main Parachute Reefing Cutter

parachute. Three reefing cutters are located on the inside of the canopy skirt band 120° apart. The reefing cutters are similar in design and identical in operation to the pilot chute reefing cutters. Proper operation of only one of the three cutters is sufficient to disreef the parachute.

MAIN PARACHUTE DISCONNECT

Description

The Main Parachute Disconnects (Figure 11-30) include the single point disconnect assembly and the forward and aft bridle disconnect assemblies. The disconnect assemblies are identical, in design and function. The disconnect assemblies primarily consist of the breech assembly, arm, and two electrically fired gas pressure cartridges. The breech assembly consists of the adapter, piston, lead slug, snubber disc, and plunger. The piston is retained in the adapter by a shear pin. The lead slug is located on the end of the piston. The snubber disc is located under the head of the plunger. The adapter is threaded into the spacecraft structure with the piston extending into the arm. The breech is threaded onto the adapter and the cartridges are installed in the breech. The single point disconnect is mounted on the hub of the main parachute adapter assembly. The adapter assembly is located on the forward ring of the re-entry control system section. The forward bridle disconnect is mounted at the top of the forward ring of the re-entry control system section. The aft bridle disconnect is located forward of the heat shield between the egress hatches.

Operation

When initiated by the proper electrical signal, the disconnect cartridges are ignited. The cartridges produce gas pressure that is ported through drilled passages

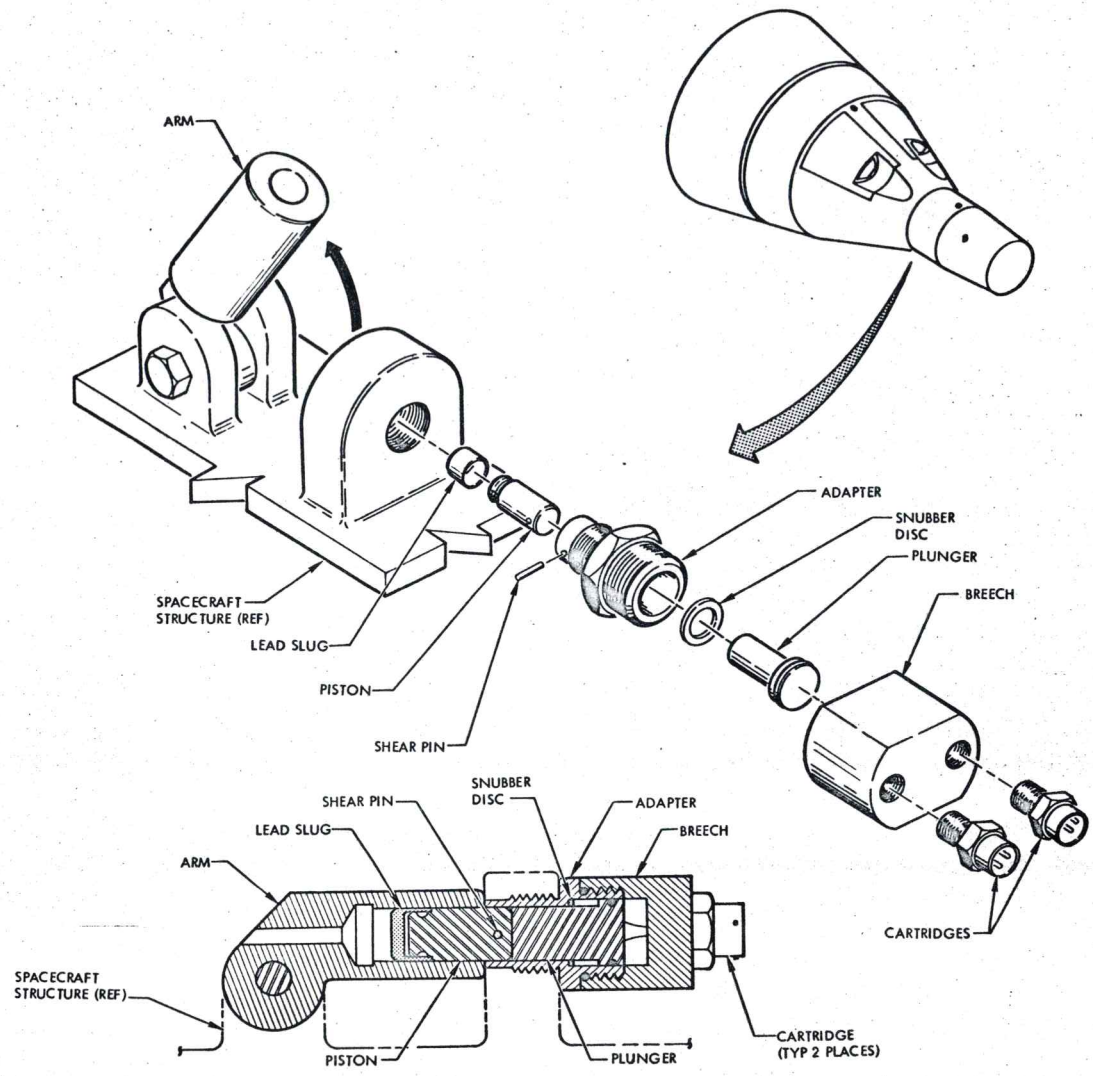

DISCONNECT ASSEMBLY BEFORE FIRING

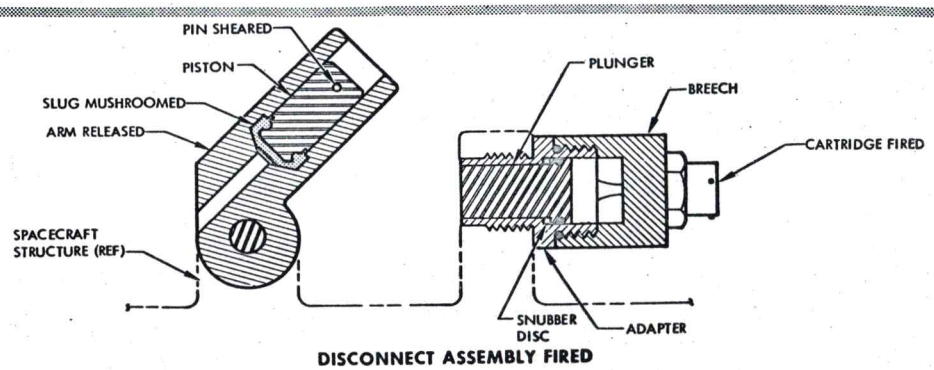

DISCONNECT ASSEMBLY FIRED

Figure 11-30 Main Parachute Disconnects

in the breech, to a common chamber at the head of the plunger. The gas pressure exerts a force on the head of the plunger, which in turn propels the piston by physical contact. The piston severs the shear pin and is driven into the arm. The plunger is prevented from following the piston, since the head of the plunger strickes a shoulder in the adapter. The sunbber disc provides a cushioning effect, to prevent shearing the plunger head. As the piston strikes the back of the arm, the lead slug at the end of the piston mushrooms. Mushrooming of the slug, retains the piston in the arm, preventing the piston from hindering arm operation. The pull of the parachute causes the arm to cam open, thus releasing the riser or bridle attached thereto.

PYROTECHNIC VALVES

DESCRIPTION

Pyrotechnic Valves (Figure 11-31) are installed in the Orbit Attitude and Maneuvering System and in the Re-entry Control System. The valves are one time actuating devices, used to control the flow of fluids. The spacecraft contains pyrotechnic valves that consist of the electrically fired high explosive cartridge, valve body, mipple, ram, seal, and screw. The nipple, either open or closed depending on the particular valve, is installed in the valve body and welded into place. The ram, incorporating the seal and screw at its head is located in the valve body, indexed directly above the center of the nipple. The cartridge is installed in the valve body at the top of the ram head. Two type of valves are used; normally open and normally closed. The "A" packages of the RCS and OAMS, contain a normally closed non-replaceable valve. The "E" package of the OAMS contain a noramlly open, and a normally closed, non-replaceable valve. If the valves in the "A" and "E"

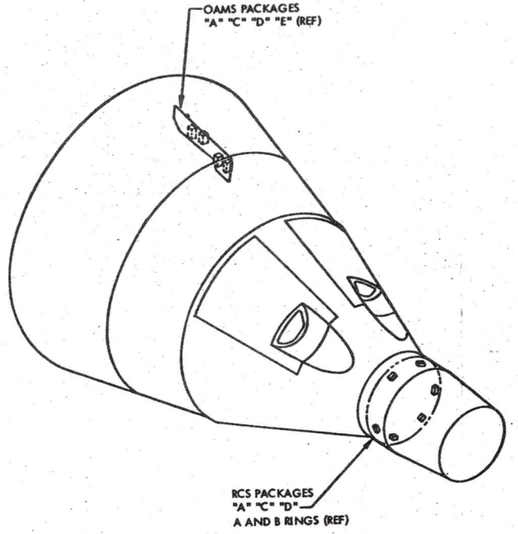

OAMS PACKAGE "E"

BEFORE FIRING

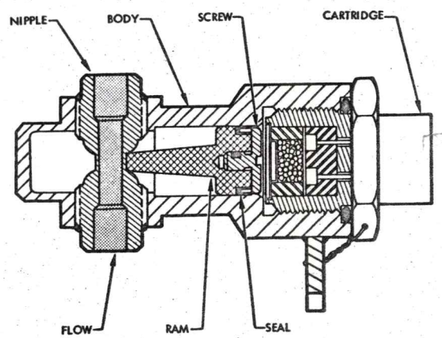

AFTER FIRING

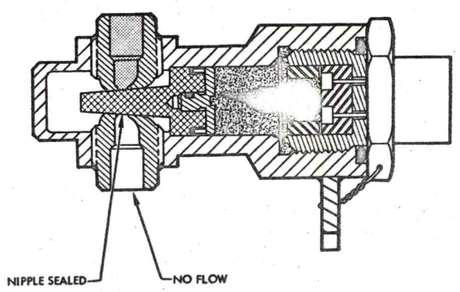

NORMALLY OPEN VALVE (NON-REPLACEABLE)

OAMS PACKAGE "A" AND "E"
RCS PACKAGE "A"

BEFORE FIRING

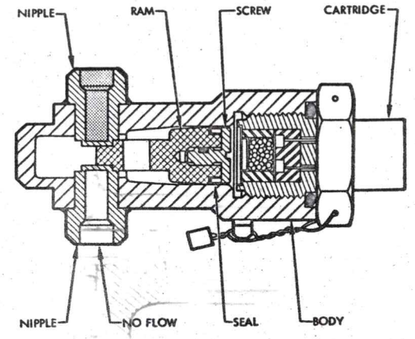

AFTER FIRING

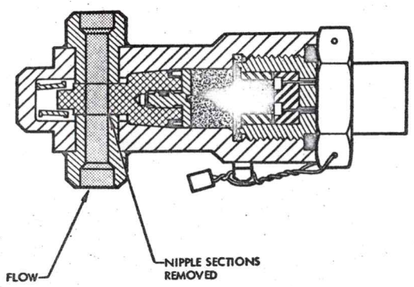

NORMALLY CLOSED VALVE (NON-REPLACEABLE)

OAMS PACKAGE "C" AND "D"
RCS PACKAGE "C" AND "D"

BEFORE FIRING

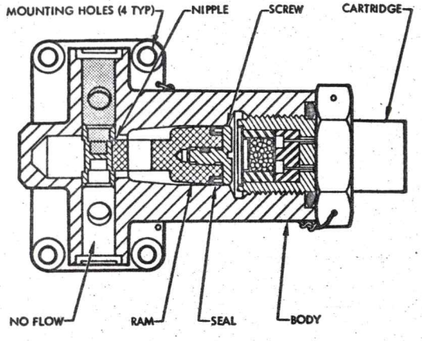

AFTER FIRING

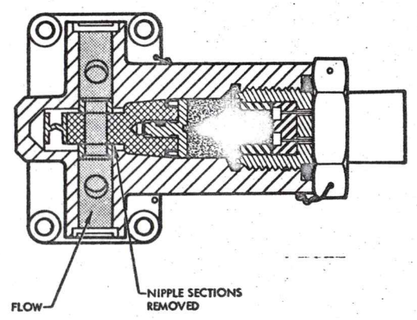

NORMALLY CLOSED VALVE (REPLACEABLE)

Figure 11-31 Pyrotechnic Valves

packages are defective, or the cartridge has been fired, the packages must be changed. The "C" and "D" packages of the RCS and the OAMS contain normally closed replaceable valves. These valves are attached to the exterior of the package, and if defective or the cartridge fired, may be changed individually.

OPERATION

Normally open valve; The pyrotechnic valve is caused to function when the cartridge is initiated by the proper electrical signal. Ignition of the cartridge produces gas pressure that acts on the head of the ram. The ram is driven down on the nipple, severing and removing a section of the nipple. The ram, having a tapered cross section, is wedged in the nippled opening, completely sealing the nipple, thus stopping the flow of fluid. Normally closed pyrotechnic valves are all basically identical except for nipple design. The non-replaceable valve has two closed end nipples butted together. The ram severs and removes the end of each nipple and wedges itself between the ends. A hole is incorporated in the ram, allowing fluid flow after ram actuation. The replaceable pyrotechnic valve has a nipple installed with a bulkhead in the cross section that stops fluid flow. The ram removes the section of the nipple containing the bulkhead and wedges itself in place. A hole incorporated in the ram allows fluid to flow.

RETROGRADE ROCKET SYSTEM

The Retrograde Rocket System (Figure 11-32) primarily consists of four solid propellant rocket motors and eight igniter assemblies. The retrograde rockets are provided to retard spacecraft orbital velocity for re-entry and to provide distance and velocity to clear the launch vehicle in the event of an abort during ascent. The rocket motors are symmetrically located about the longitudinal axis of the

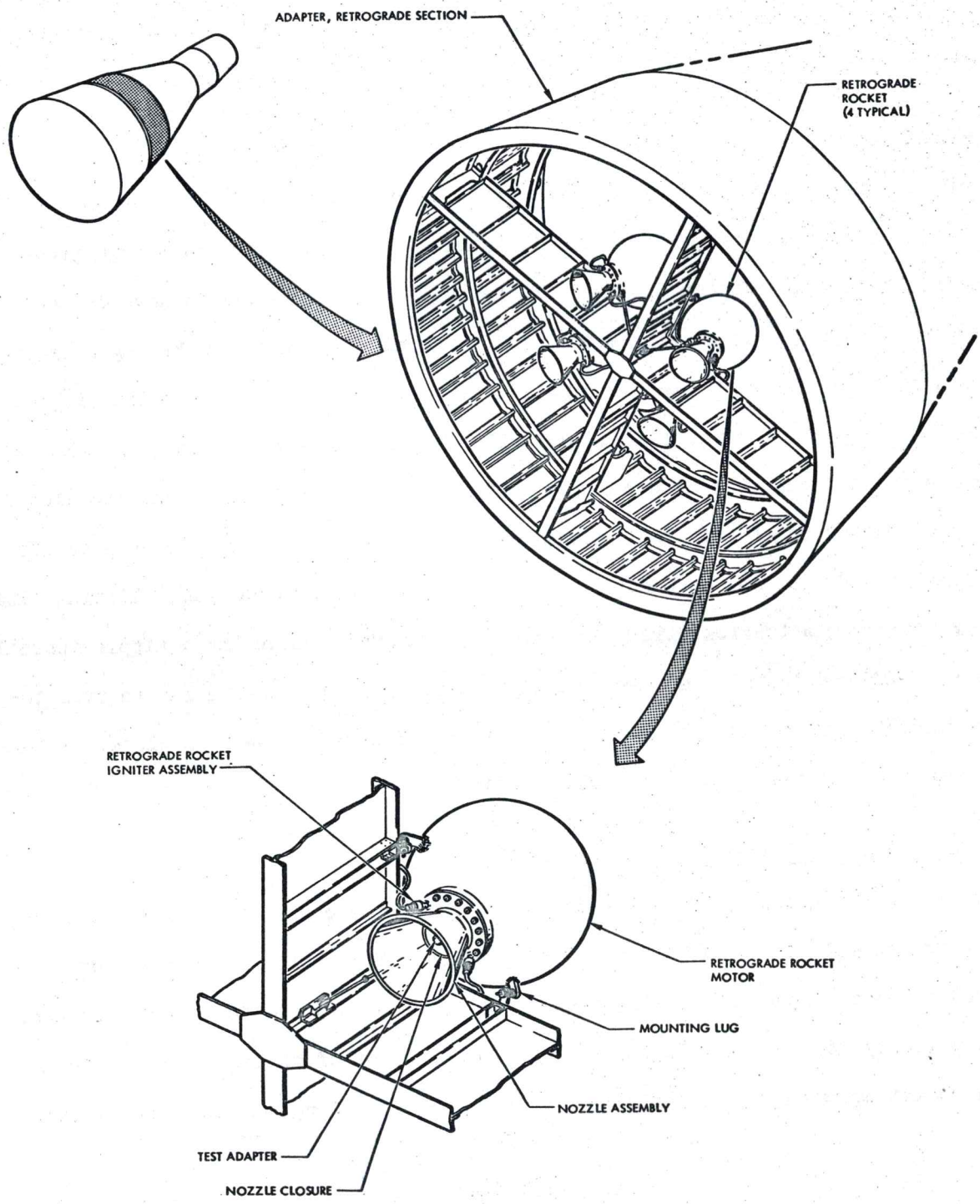

Figure 11-32 Retrograde Rocket System

spacecraft and are mounted in the retrograde section of the adapter. The rocket motors are individually, optically aligned prior to mating the adapter to the re-entry module.

RETROGRADE ROCKET MOTOR ASSEMBLY

Description

The spacecraft contains four Retrograde Rocket Motor Assemblies (Figure 11-33) that are identical in design and performance, spherical in shape, and are approximately 13 inches in diameter.

Rocket Motor Case

The motor case is formed from titanium alloy in two hemispherical halves. The halves are forged, machined, and welded together at the equator. Each hemisphere is insulated to reduce heat transfer during motor operation. The aft hemisphere is drilled and tapped to provide a mating flange for the nozzle assembly. The nozzle assembly, a partially submerged type, consists of the expansion cone, throat insert and the nozzle bulkhead. The nozzle bulkhead is a machined titanium alloy, bolted to the flange at the aft end of the motor case. The bulkhead is threaded to provide for expansion cone installation. The expansion cone is compression molded of vitreous silica phenolic resin and is threaded into the nozzle bulkhead. The throat insert is machined from high density graphite and is pressed into the nozzle bulkhead. The throat insert is insulated from the bulkhead by a plastic material to reduce heat transfer during motor operation. The throat insert is recessed into the motor case to reduce nozzle assembly length. A rubber nozzle closure is sandwiched between the throat insert and the nozzle bulkhead. The closure incorporates a shear groove that permits ejection at a predetermined internal

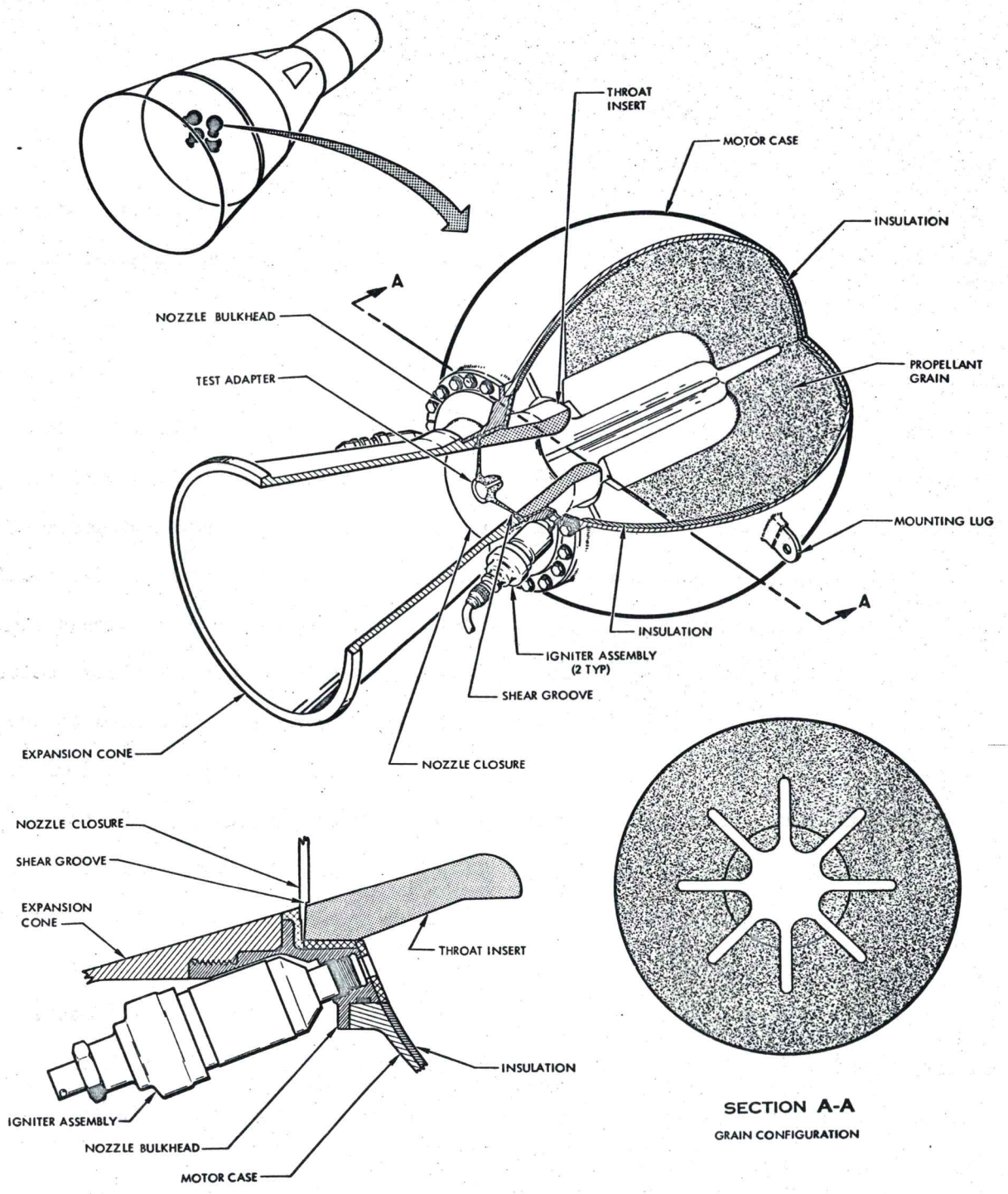

Figure 11-33 Retrograde Rocket Motor Assembly

pressure level, or basically at motor ignition. A test adapter fitting is incorporated in the closure to permit pressure checking of the rocket motor.

Rocket Motor Propellant

The motor case is lined with a rubber material that provides propellant grain to case adhesion. The rocket motor propellant is cast and cured in the motor case. The propellant grain is cast in an internal burning eight pointed star configuration. The propellant grain is ignited by the two igniter assemblies, mounted 180° apart on the aft end of the motor case, adjacent to the nozzle assembly.

Operation

The retrograde rocket motors function in two modes: Normal and abort. In the normal mode of operation, the rocket motors are used to initiate spacecraft reentry. The rocket motors are fired at 5.5 second intervals in 1-2-3-4 order. The propellant grain of the rocket motor is ignited by the hot gases from the igniter assemblies. The propellant grain burns over the entire surface of its eight pointed star configuration until exhausted. The thrust produced by the motors in transmitted to the spacecraft structure and retards spacecraft velocity. In the abort mode of operation, the rocket motors are fired in salvo or as mission requirements may direct.

RETROGRADE ROCKET IGNITER ASSEMBLY

Description

The Retrograde Rocket Igniter Assemblies (Figure 11-34) are used to ignite the propellant grain of the retrograde rocket motor. The spacecraft contains eight igniter assemblies that primarily consist of the case, head cap, grain, booster

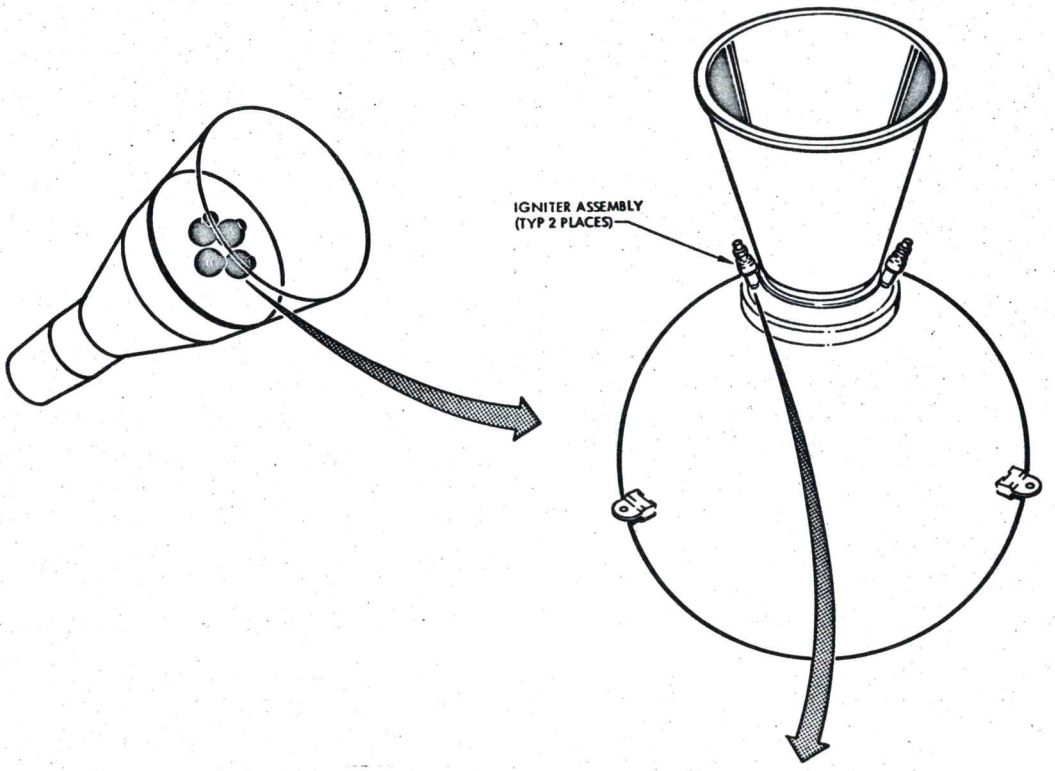

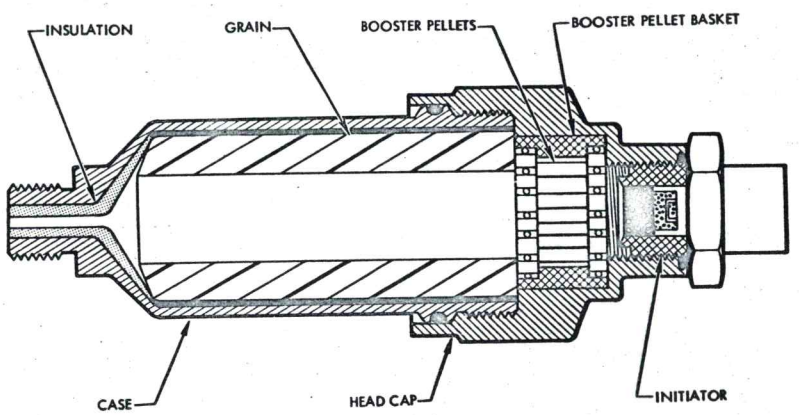

Figure 11-34 Retrograde Rocket Igniter Assembly

pellets, pellet basket, and initiator. The igniter assembly is essentially a small solid propellant rocket motor. The case and head cap are individually machined from a stainless steel alloy and have a threaded interface. On the internal surface of the case, at the gas exit, a silia-phenolic insulating material is bonded to reduce heat transfer during ingiter firing. The grain is cast and cured in a phenolic paper tube. The grain is inserted into the igniter case prior to case and head cap assembly. The booster pellets, consisting of boron potassium nitrate, are contained in the pellet basket, located in the head cap. The pellet basket is held in place by the head cap and is installed prior to case and head cap mating. The initiator cartridge consists of the body, one firing circuit (bridge wire), ignition mix, and output charge. The basic function of the initiator is to fire the igniter. The initiator is threaded into the head cap of the igniter at the time of igniter assembly build up at the vendors.

Operation

When initiated by the proper electrical signal, the initiator of the igniter assembly is activated. The initiator ignites the boron pellets, which boosts the burning to the igniter grain. The igniter grain generates hot gas which is exhausted into the retrograde rocket motor cavity. The hot gases provide the temperature and pressure for retrograde rocket motor propellant grain ignition. Either igniter is sufficient to initiate burning of the rocket motor.

DOCKING SYSTEM PYROTECHNIC DEVICES

DOCKING BAR ASSEMBLY

Description

The docking bar assembly (Figure 11-35) primarily consists of the cylinder, inner piston, inner piston extension, outer piston, indexing bar, housing/manifold, two extend cartridges, two jettison cartridges and a locking mechanism. The basic function of the assembly is to extend and lock the indexing bar prior to the docking maneuver and to jettison the indexing bar after the rendezvous operation is complete. The purpose of the indexing bar is to aid both visually and mechanically in the docking maneuver. The docking bar assembly is located in the rendezvous and recovery section and attached to the section structure. The housing manifold, mounted at the top of the cylinder, contains the two extend cartridges, two jettison cartridges and the locking mechanism. The hollow inner piston extension protrudes through the outer piston base and is attached to the inner piston, which operates in the outer piston. The indexing bar is secured to the outer piston by a shear pin.

Operation

The indexing bar is extended by gas pressure generated when the dual extend cartridges are initiated. The gas pressure is ported into the cylinder and enters an orifice in the base of the indexing bar. The gas is then ported through the hollow inner piston extension and exerts pressure on the bottom of the outer piston causing it to extend the bar. When fully extended, the indexing bar is secured in place by the pin of the locking mechanism engaging

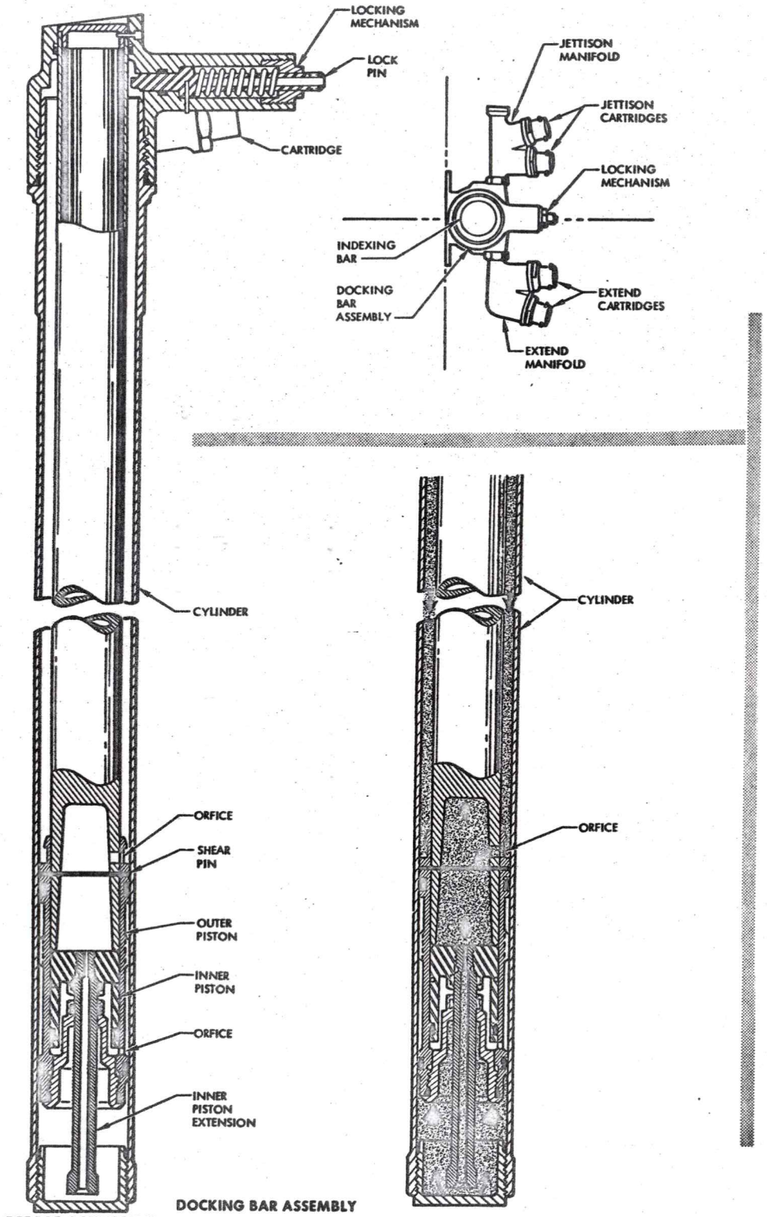

Figure 11-35 Docking Bar Assembly

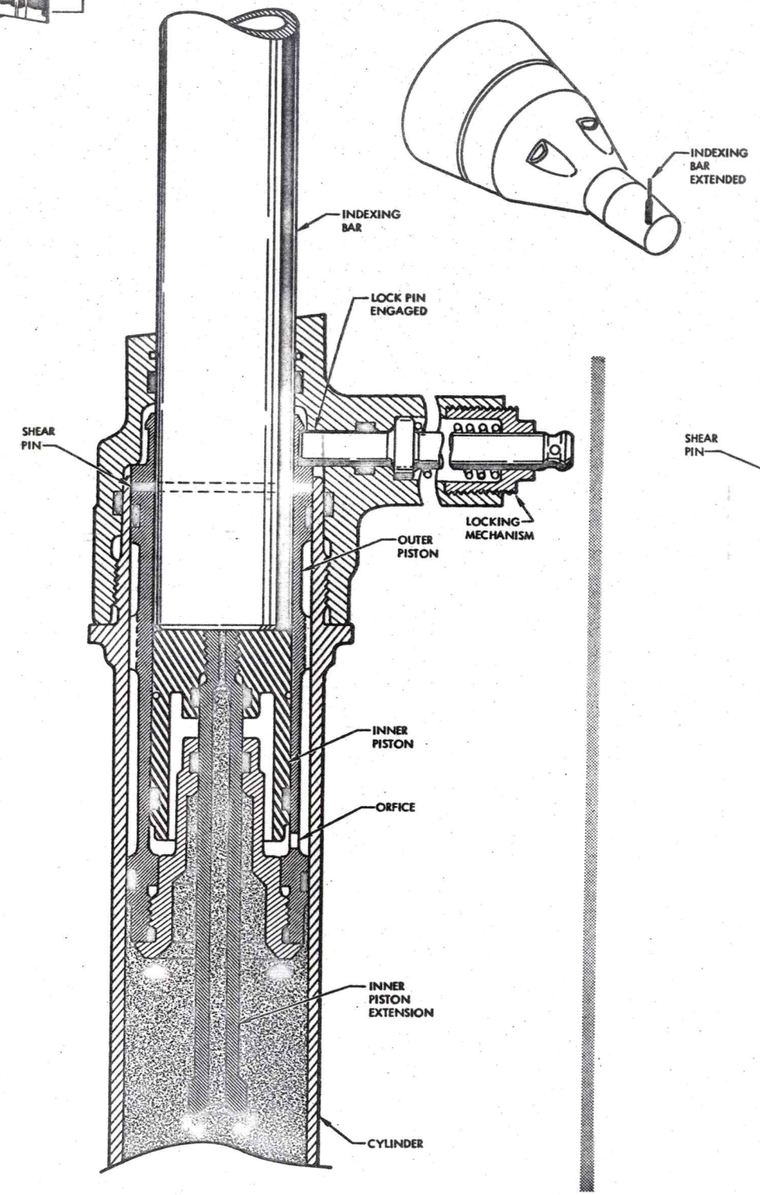

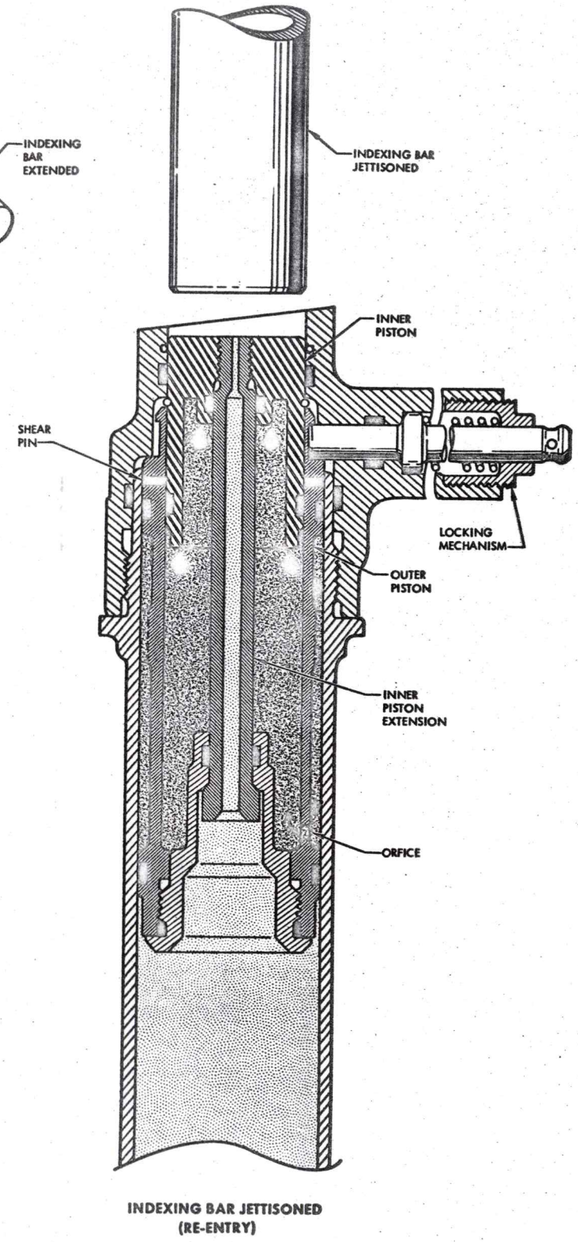

FM2-11-3

a detent in the outer piston. The indexing bar is jettisoned when the dual jettison cartridges are initiated. The gas pressure generated by the cartridges is ported into the cylinder and through an orifice in the outer piston to a cavity between the inner and outer pistons. The thrusting action of the inner piston causes the indexing bar to sever the shear pin and be jettisoned. The inner piston is prevented from being jettisoned by the inner piston extension engaging the outer piston. The inner piston seals the hole for re-entry after jettisoning the indexing bar.

EMERGENCY DOCKING RELEASE SYSTEM

Description

The Emergency Docking Release System (Figure 11-36) contains three release assemblies located symmetrically about the longitudinal axis and attached to the Rendezvous and Recovery structure at the outer mold line. The basic function of the release system is to positively release the spacecraft from the docking vehicle in the event of normal release system failure. The release assemblies primarily consist of a latch pan, body, piston, piston closure cap stud assembly and two gas pressure cartridges. The release body is attached at opposite side of a common structural member of the Rendezvous and Recovery section. A stud assembly, torqued into the docking release piston protrudes out of the unit body. The latch pan is secured on to the stud by a collar and shear pin. Installation of the closure cap seals the area above the release piston. Each unit is activated by two pyrotechnic cartridges, installed in the base of the release body.

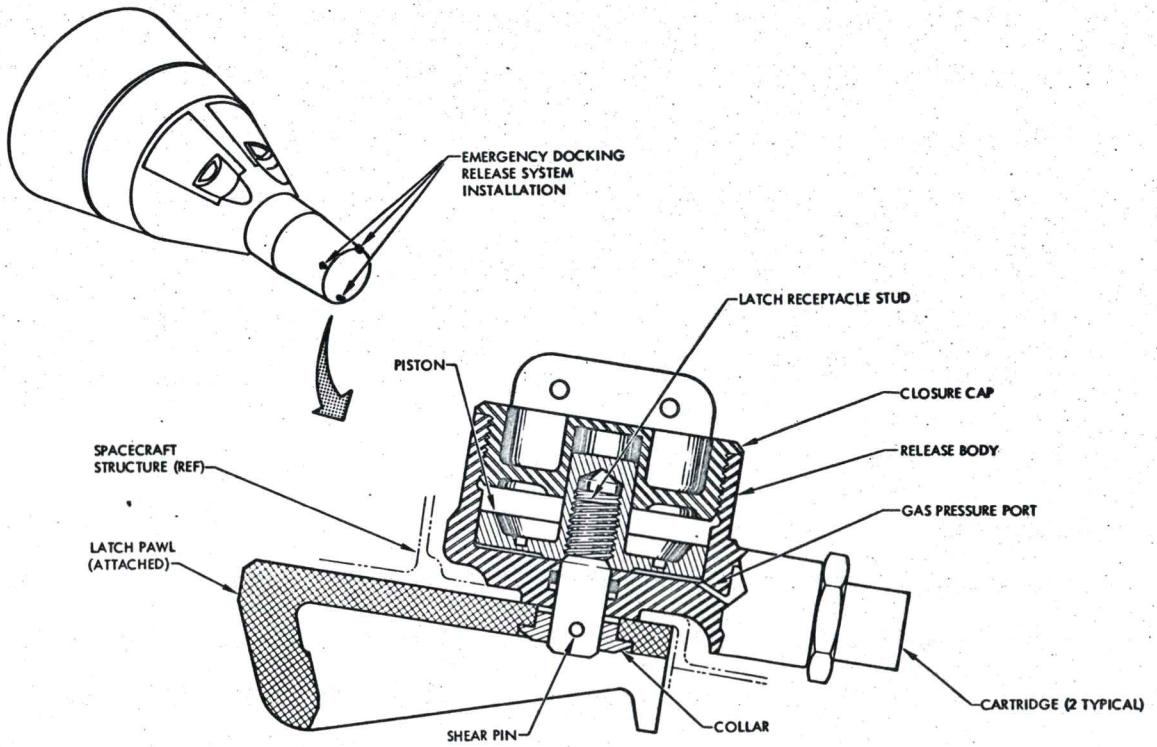

Figure 11-36 Emergency Docking Release System

FM2-11-4

Operation

Malfunction of the normal docking release system requires the use of the emergency docking release system. Upon receipt of the proper electrical signal, the cartridges are ignited in all three release assemblies. The cartridges generate gas pressure that is ported through drilled passages in the body to the underside of the piston. The pressure displaces the piston, separating the shear pin from the latch paw. The latch paw, being held by the docking vehicle latch, is thus parted from the emergency release body. The spacecraft is then free to move out of docked condition.

TRANSPONDER COVER

Description

The target docking adapter has a single Flexible Linear Shape Charge (FLSC) ring assembly to open and jettison the transponder cover. The jettison assembly consists of one FLSC, installed around the inside edge of the transponder cover, two detonator blocks, two detonators and an explosive ring. The explosive ring is bolted to the TDA under the transponder door. Detonators are inserted in the two detonator blocks, which are installed on the TDA under the explosive ring.

Operation

Upon receipt of the proper electrical signal, the detonators transmit a detonation wave that is propagated to the FLSC. The FLSC detonates, severs and jettisons the transponder door skin. The explosive ring absorbs the shock in back of the blast and protects the transponder and structure from shrapnel. One strand of FLSC is adequate to sever and jettison the transponder door.

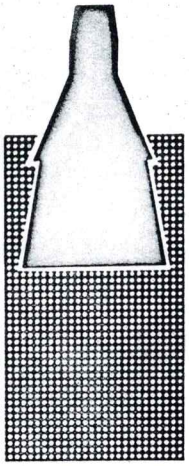

LANDING SYSTEM

Section XII

TABLE OF CONTENTS

TITLE	PAGE
SYSTEM DESCRIPTION	12-3
SYSTEM OPERATION	12-3
EMERGENCY OPERATION	12-7
SYSTEM UNITS	12-7
DROGUE PARACHUTE ASSEMBLY	12-7
PILOT PARACHUTE ASSEMBLY	12-12
MAIN PARACHUTE AND RISER ASSEMBLY	12-14

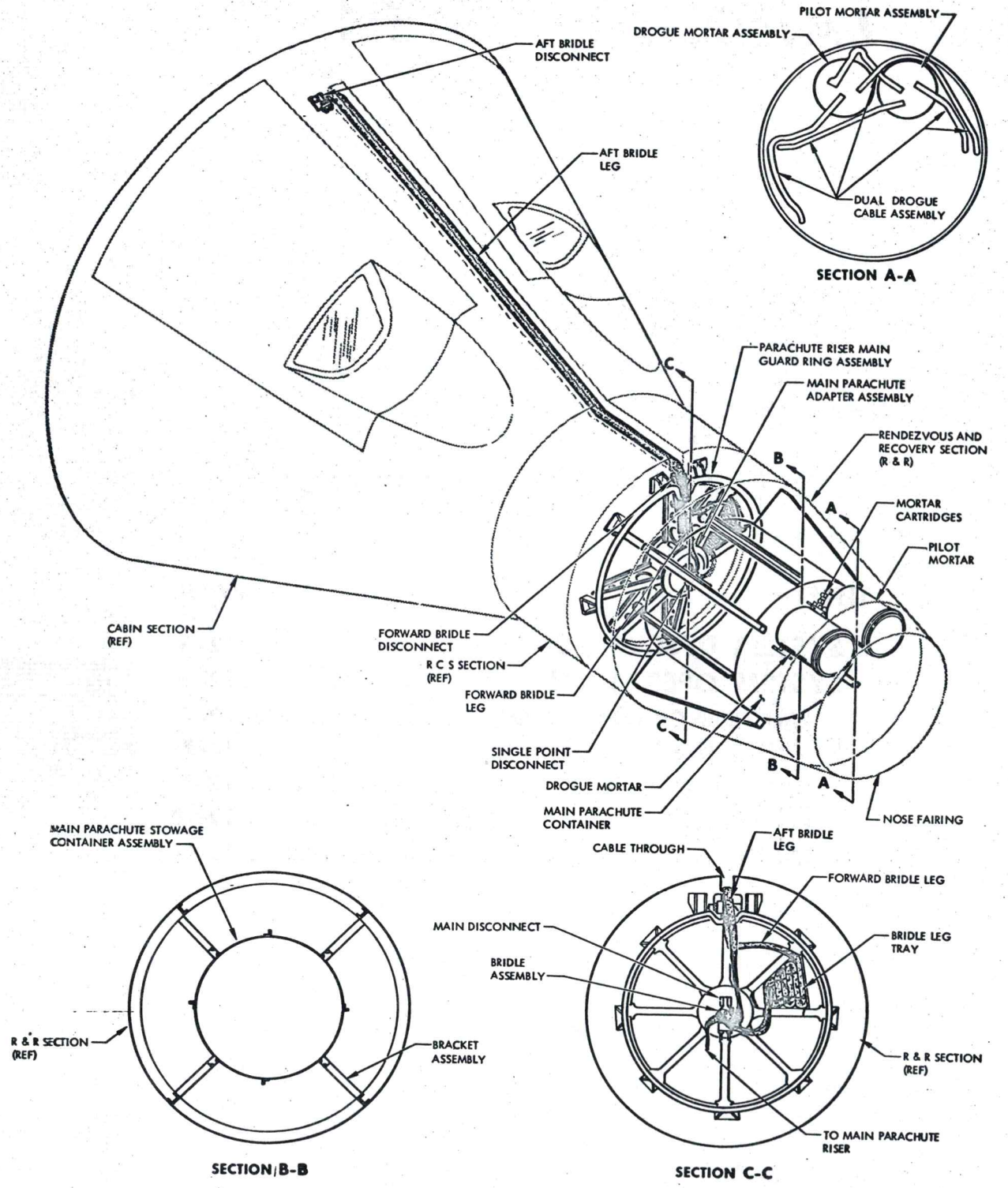

Figure 12-1 Parachute Landing System

SECTION XII LANDING SYSTEM

SYSTEM DESCRIPTION

The Parachute Landing System (Figure 12-1) provides a safe rate of descent to return the re-entry module to the earth's surface and furnishes the proper attitude for a water impact. A system of three parachutes in series is utilized for stabilizing and retarding the velocity of the re-entry module. During the final stage of descent, the main parachute suspension is inverted from a single point to a two point system in order to achieve a more favorable attitude for a water landing. The landing system consists of three parachute assemblies (a drogue parachute assembly, a pilot parachute assembly, and a main parachute assembly), two mortar assemblies, reefing cutters, disconnect assemblies, riser assemblies, and attaching hardware. The entire landing system, with the exception of the aft bridle leg and disconnect assembly, is located in the rendezvous and recovery section of the spacecraft. Figure 12-2 illustrates the sequence of events from re-entry to impact in block diagram form. Figure 12-3 illustrates the electrical sequence of the landing system.

SYSTEM OPERATION

Prior to re-entry, the landing and postlanding common control electrical buses are armed by positioning the LANDING switch to ARM. This also applies power to the two barometric pressure switches for illumination of the 10.6K and 40K warning indicators.

When the altimeter indicates an altitude of 50,000 feet, the HI-ALT DROGUE switch is manually activated. The drogue switch energizes two single pyrotechnic cartridges in the drogue mortar. The drogue mortar deploys the reefed drogue parachute. The

PROJECT GEMINI

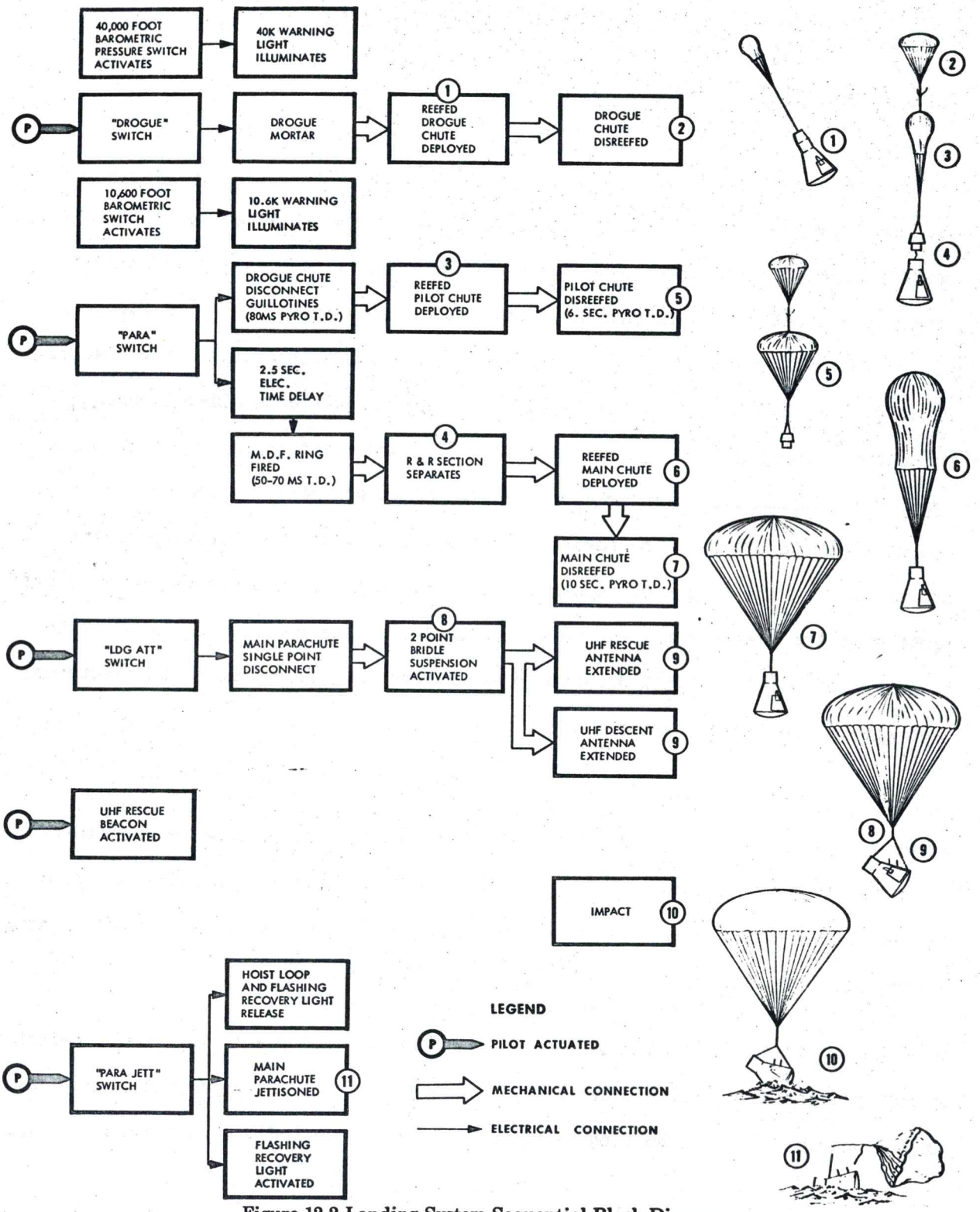

Figure 12-2 Landing System Sequential Block Diagram

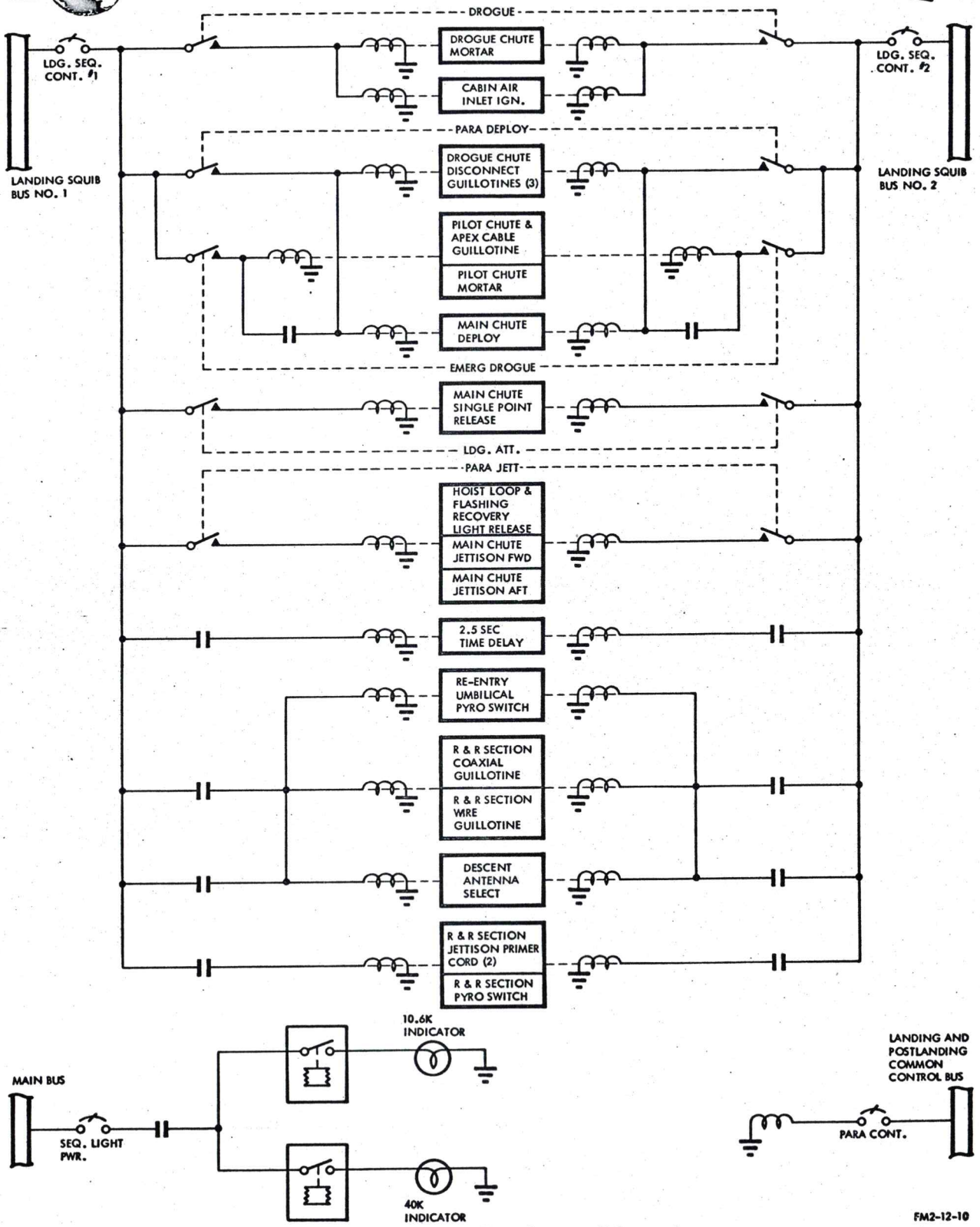

Figure 12-3 Landing System Schematic

parachute is reefed to limit the opening shock load. Sixteen seconds after deployment, two pyrotechnic reefing cutters disreef the drogue parachute. The drogue parachute stabilizes the re-entry module.

At approximately 11,000 feet, the PARA switch is activated. The PARA switch fires the three drogue cable guillotines and sets a 2.5 second time delay to the MDF ring detonators. After the drogue riser legs have been cut, the drogue parachute pulls away from the re-entry module extracting the pilot parachute from the pilot mortar tube with the apex line. When deployed, the pilot parachute is reefed to limit the initial shock load. Two pyrotechnic reefing cutters disreef the pilot chute six seconds after deployment. 2.5 seconds after the pilot chute has been deployed, the MDF ring fires separating the rendezvous and recovery section from the landing vehicle. The pilot parachute functions to decelerate the re-entry module, remove the rendezvous and recovery section, and deploy the main parachute.

As the landing module falls away from the rendezvous and recovery section, the main parachute is deployed in a reefed condition. The main parachute is disreefed by three pyrotechnic reefing cutters ten seconds after deployment. The two decelerations provided by the main parachute divide the retarding shock load. After the main parachute has been disreefed, the manually operated LDG ATT switch is actuated to change the single point suspension system to a two point suspension system. The two point suspension system provides a more favorable attitude for impact. As soon as the landing module contacts the ocean surface, the PARA JETT switch is activated. The PARA JETT switch energizes the forward and aft bridle disconnects releasing the main parachute. Upon completion of the landing, the landing module is prepared for transmitting data and recovery information.

EMERGENCY OPERATION

In the event the drogue parachute does not deploy or deploys improperly, the DROGUE EMERG 10.6K switch is actuated. The closure of this switch fires the three drogue cable guillotines, the apex line guillotine, and the pilot parachute mortar and starts the 2.5 second time delay to the MDF rings. The pilot mortar deploys the pilot parachute in a reefed condition. From this point, the emergency sequence of events is exactly the same as used during a normal landing. Figure 12-4 illustrates the emergency sequence of events in block diagram form, and Figure 12-5 illustrates the emergency deployment.

SYSTEM UNITS

DROGUE PARACHUTE ASSEMBLY

The drogue parachute assembly (Figure 12-6) stabilizes the re-entry module and deploys the pilot parachute. This assembly consists of an 8.3 ft. diameter conical ribbon parachute with twelve 750-pound tensile strength suspension lines. A three legged riser assembly attaches the parachute assembly to the rendezvous and recovery section.

When initially deployed, the drogue chute is reefed to 43% of the parachute diameter in order to reduce the opening shock load. Sixteen seconds after deployment, two pyrotechnic reefing cutters disreef the drogue chute. Initiation of the PARA switch fires three cable guillotines located at the base of the three riser legs. As the drogue chute pulls away from the rendezvous and recovery section, an apex line, which is attached to one of the riser legs, extracts the pilot parachute from the pilot mortar tube. The drogue parachute remains attached to the pilot parachute during the entire descent of the rendezvous and recovery section of the re-entry module.

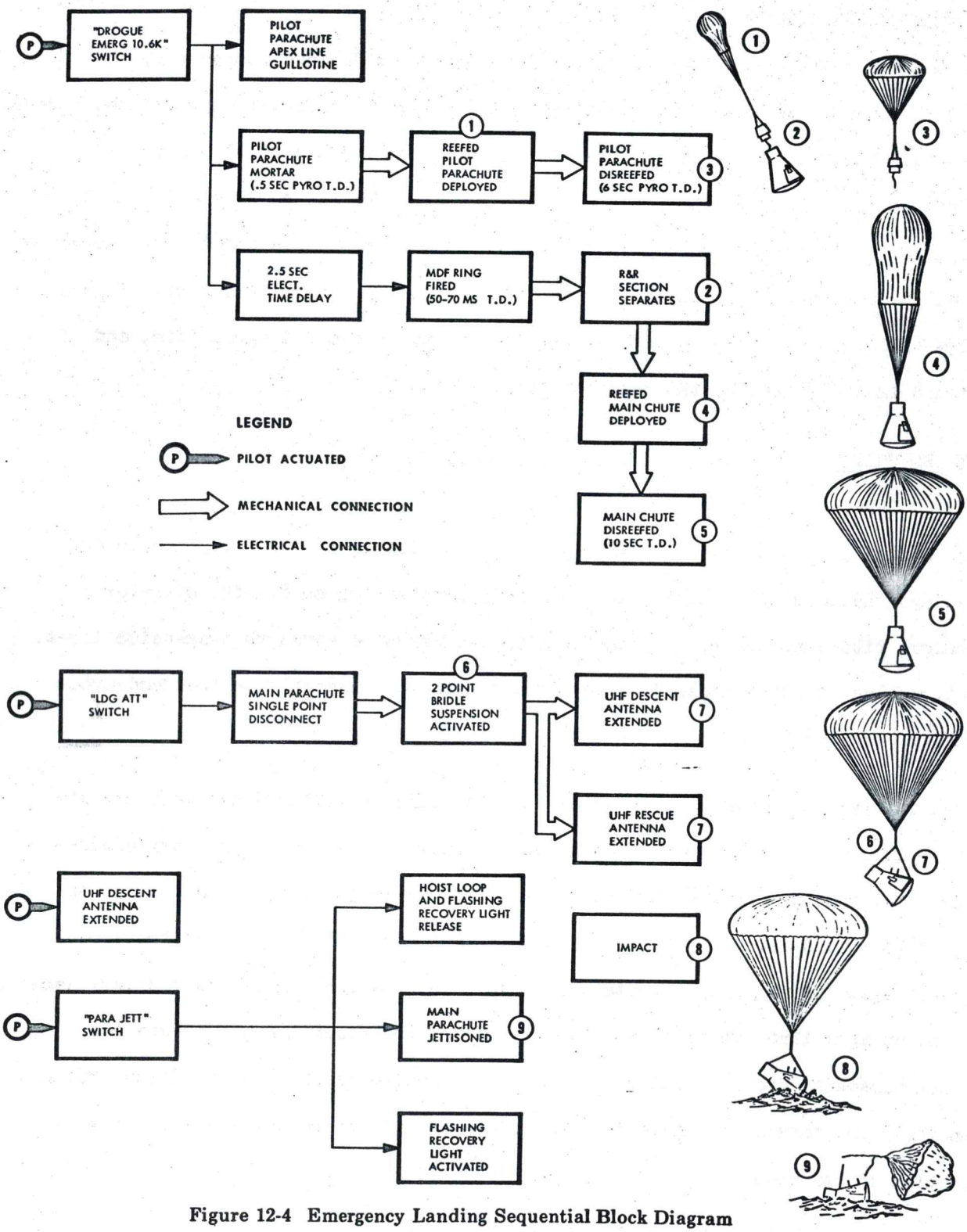

Figure 12-4 Emergency Landing Sequential Block Diagram

TANDEM DEPLOYMENT SYSTEM

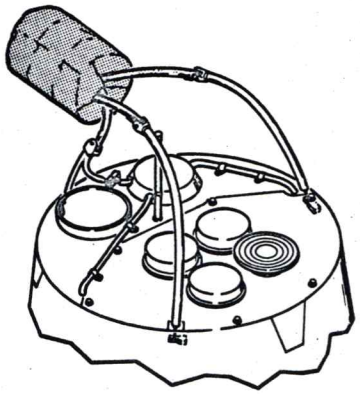

DROGUE CHUTE DEPLOYMENT

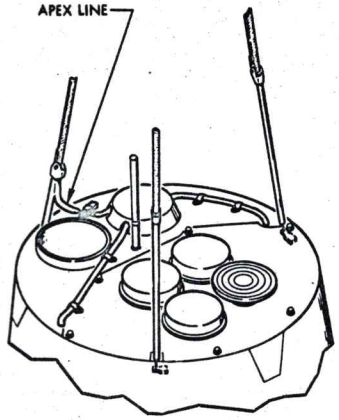

DROGUE CHUTE THREE POINT SUSPENSION SYSTEM

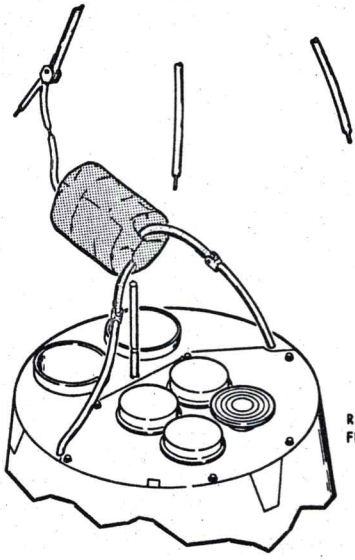

PILOT CHUTE DEPLOYMENT

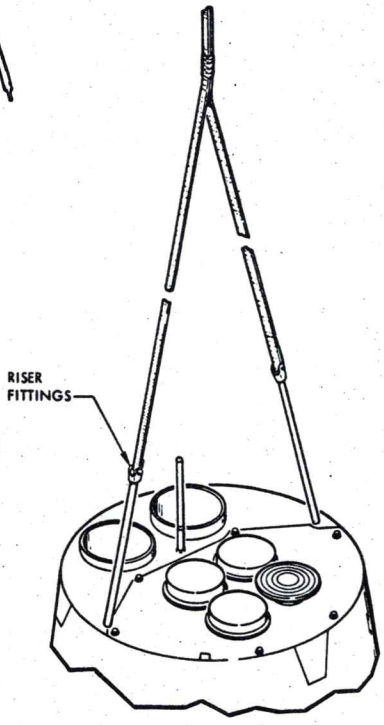

PILOT CHUTE DEPLOYMENT TWO POINT SUSPENSION SYSTEM

EMERGENCY DEPLOYMENT SYSTEM

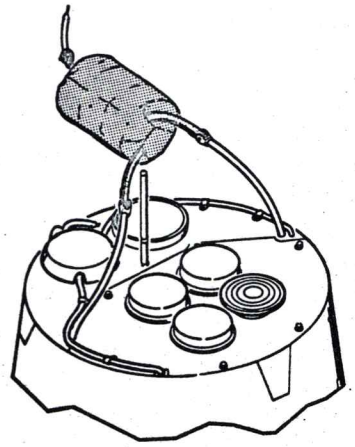

PILOT CHUTE DEPLOYMENT

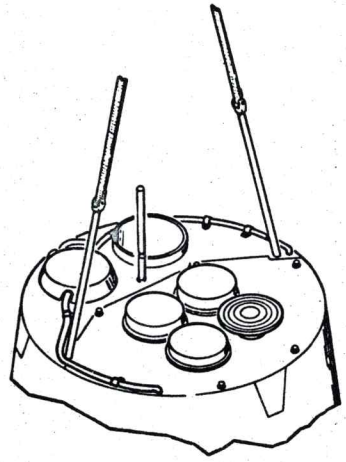

PILOT CHUTE DEPLOYMENT TWO POINT SUSPENSION SYSTEM

Figure 12-5 Tandem and Emergency Deployment System Operation

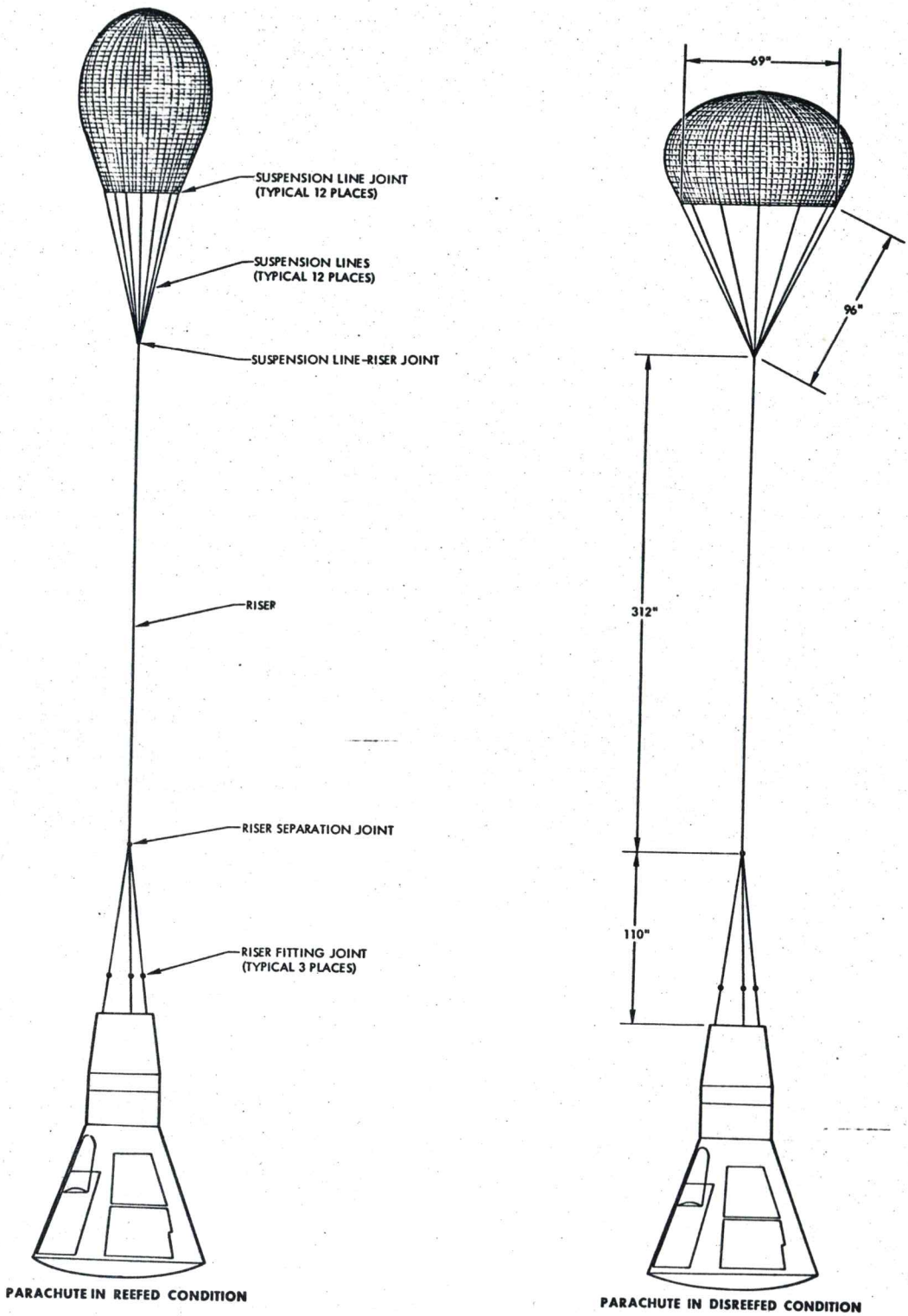

Figure 12-6 Drogue Parachute Assembly

FM2-12-5

Drogue Parachute Mortar Assembly

The drogue parachute mortar assembly stores and protects the drogue parachute during flight and deploys the drogue parachute when activated by the HI-ALT DROGUE switch. An insulated metal pan retains the parachute in the mortar tube which has a diameter of 7.15 inches and is 9.12 inches long. The breech assembly, located at the base of the mortar tube, contains two electrically actuated pyrotechnic cartridges and the orifice. The cartridges generate gases which enter the mortar tube through the orifice and eject the drogue parachute and sabot.

Drogue Mortar Sabot

The drogue mortar sabot is an aluminum cup located in the base of the mortar and functions to eject the drogue parachute with a piston like action. In order to insure the most effective ejection, the sabot is fastened to the base of the orifice by a frangible bolt, and an "O" ring, located near the base of the sabot contacts the inner wall of the mortar tube to prevent any escape of gases generated by the two pyrotechnic cartridges. When enough pressure to break the frangible bolt has built up, the sabot and parachute are expelled from the mortar tube. After ejection, the sabot remains attached to the parachute bag and aids in stripping the bag from the parachute.

Drogue Parachute Deployment Bag

The drogue parachute deployment bag protects the drogue parachute during deployment and allows for an orderly deployment of the parachute. The bag is fabricated from cotton sateen and nylon. A 0.35 pound aluminum plate, sewn into the top of the bag, aids in stripping the bag from the canopy during deployment.

PILOT PARACHUTE ASSEMBLY

The pilot parachute assembly (Figure 12-7) decelerates the re-entry module and removes the rendezvous and recovery section from the landing module which results in the deployment of the main parachute. During flight, the pilot parachute assembly is stowed in the pilot mortar tube. The 18.3 foot diameter canopy is of the ringsail type having 16 gores and fabricated from 1.1 and 2.25 ounce per square yard nylon. Sixteen nylon cord suspension lines, which are 17 foot long and have a tensile strength of 550 pounds each, attach the canopy to the riser assembly. A 10.75 foot long split riser, constructed of four layers of 2600 pound tensile strength dacron webbing, holds the pilot parachute assembly to the rendezvous and recovery section of the spacecraft. When initially deployed, the pilot parachute is reefed to 11.5% in order to limit the opening shock load to 3000 pounds. Two pyrotechnic reefing cutters disreef the parachute 6 seconds after deployment. The pilot parachute remains attached to the rendezvous and recovery section throughout the entire descent.

Pilot Parachute Mortar Assembly

The pilot parachute mortar assembly is similar in design and operation to the drogue parachute mortar assembly. During normal operation of the landing system, this assembly serves only to store and protect the pilot parachute. In the event of a failure in the deployment of the drogue parachute, the pilot parachute mortar can be activated to deploy the pilot parachute by initiation of the DROGUE EMERG 10.6K switch. Actuation of the emergency drogue switch fires the three drogue cable guillotines, the apex line guillotine, and the pilot parachute mortar. After the pilot parachute has been deployed, the landing is completed through the normal sequence of events. Figure 12-5 illustrates the pilot parachute deployment.

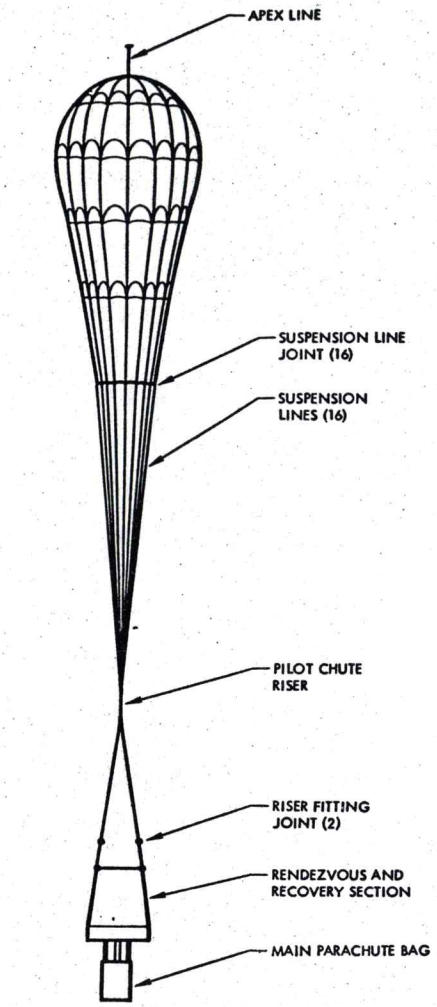

PARACHUTE IN REEFED CONDITION

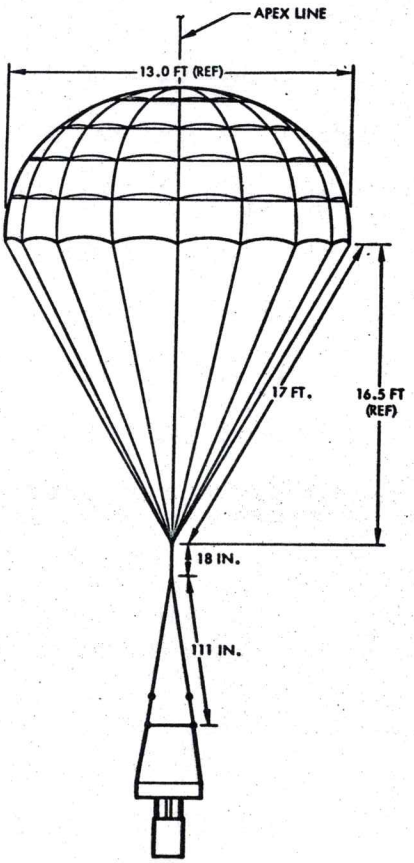

PARACHUTE IN DISREEFED CONDITION

Figure 12-7 Pilot Parachute Assembly

Pilot Mortar Sabot

The pilot mortar sabot functions are the same as those of the drogue mortar sabot. Refer to the description of the Drogue Mortar Sabot.

Pilot Parachute Deployment Bag

The pilot parachute deployment bag is similar to the drogue parachute deployment bag in design and use, except for the bag handles attached to the apex line for extraction by the drogue parachute.

MAIN PARACHUTE AND RISER ASSEMBLY

The main parachute (Figure 12-8 and 12-9) is of the ringsail type with a diameter of 84.2 feet. The nylon canopy has seventy-two gores alternating in colors of international orange and white. Seventy-two suspension lines are attached to eight legs of a single integral riser. Each suspension line has a tensile strength of 550 pounds. The 3.25 foot integral riser consists of eight layers of 5,500 pound tensile strength nylon webbing. The canopy is fabricated from 1.1 and 2.25 ounce per square yard nylon and can withstand a dynamic pressure of 120 pounds per square foot. However, by reefing the main parachute, a maximum load of 16,000 pounds is experienced at deployment. When initially deployed, the parachute is reefed to 10.5%. The disreefed main parachute allows a maximum average rate of descent of 31.6 feet per second for a module weight of 4,400 pounds.

Main Parachute Deployment Bag and Container Assembly

The main parachute deployment bag and container assembly (Figure 12-1) stows the main parachute. This assembly is located in the aft end of the rendezvous and

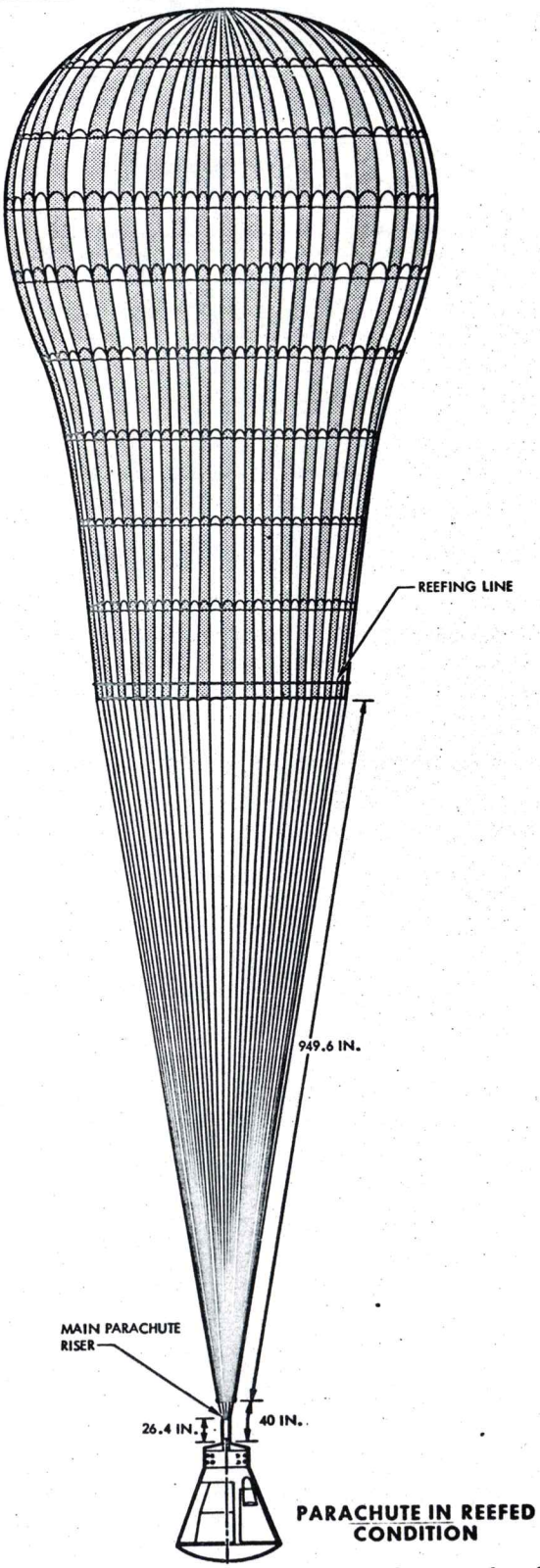

Figure 12-8 Main Parachute and Single Point Suspension System

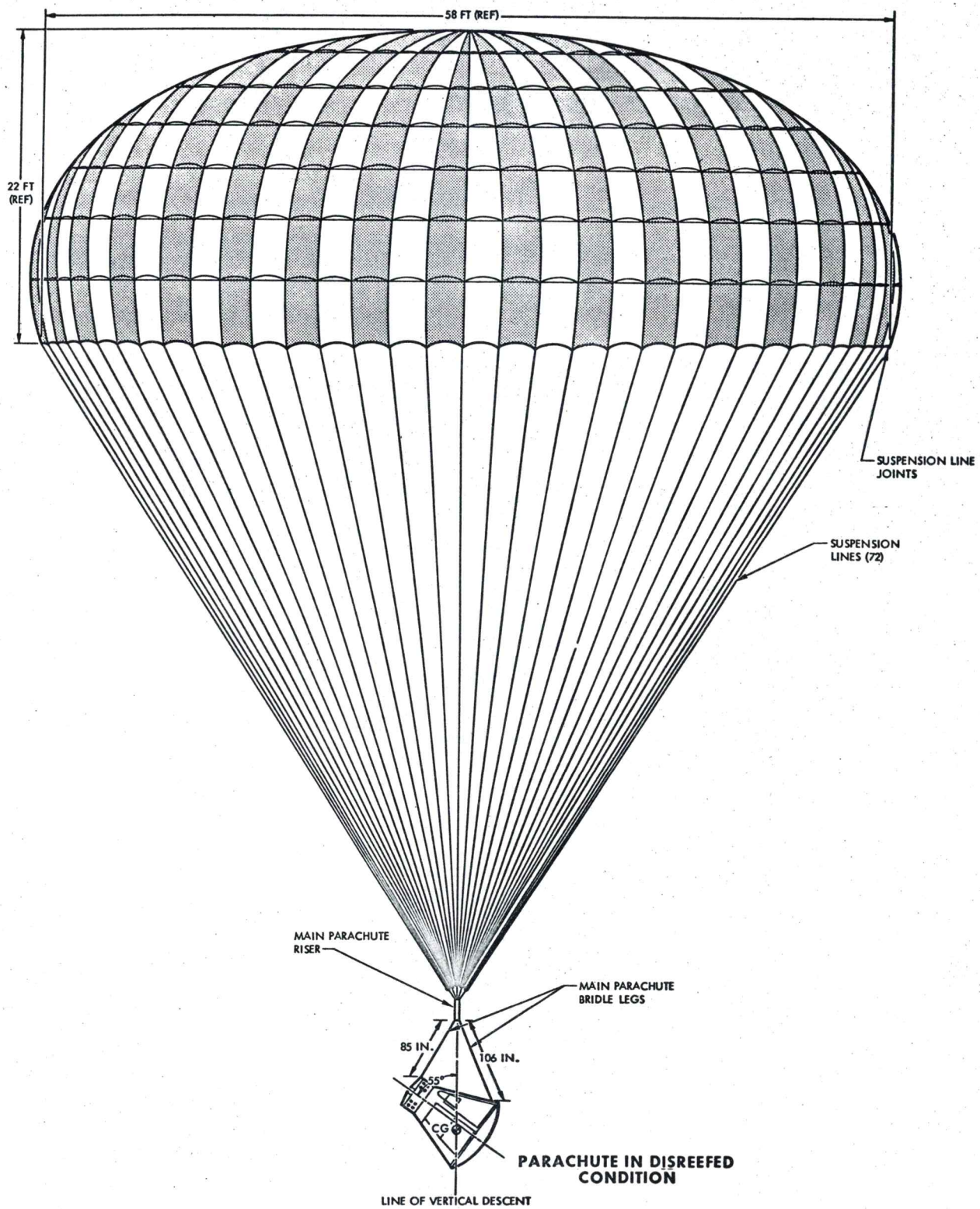

Figure 12-9 Main Parachute and Two Point Suspension System

recovery section of the spacecraft. The deployment bag is fabricated from a cotton sateen material reinforced with nylon webbing. In order to insure a full and orderly deployment of the main parachute, the suspension lines must be stretched out prior to the release of the canopy. Therefore, transverse locking flaps are incorporated in the bag to separate the canopy from the suspension lines. Four restraining straps hold the deployment bag in the container until deployment.

The main parachute container is 22.25 inches in diameter and 21.32 inches long. The container is closed on the forward end and is secured to the rendezvous and recovery section by four vertical reinforcing brackets. At deployment, the restraining straps of the deployment bag are unlocked, the risers and suspension lines are extended, and the canopy is pulled from the deployment bag. The deployment bag remains attached to the container by four bag handles.

Main Parachute Bridle Assembly

The main parachute bridle assembly (Figure 12-9) provides a two point suspension system in order to achieve the optimum attitude for a water landing. Two separate bridle straps constitute the main parachute bridle assembly. The forward bridle strap is an 85 inch long nylon strap with a looped end connected to the forward bridle disconnect. Prior to single point release, the forward bridle is stowed in the bridle tray (Figure 12-10). The aft bridle is 106 inches long and connects to the aft disconnect which is located immediately forward of the single point hoist loop (Figure 12-10). Constructed of high temperature resistant nylon, the aft bridle is stowed in a trough that extends from the front of the RCS section to the aft disconnect during flight. An insulating cover shields the aft strap

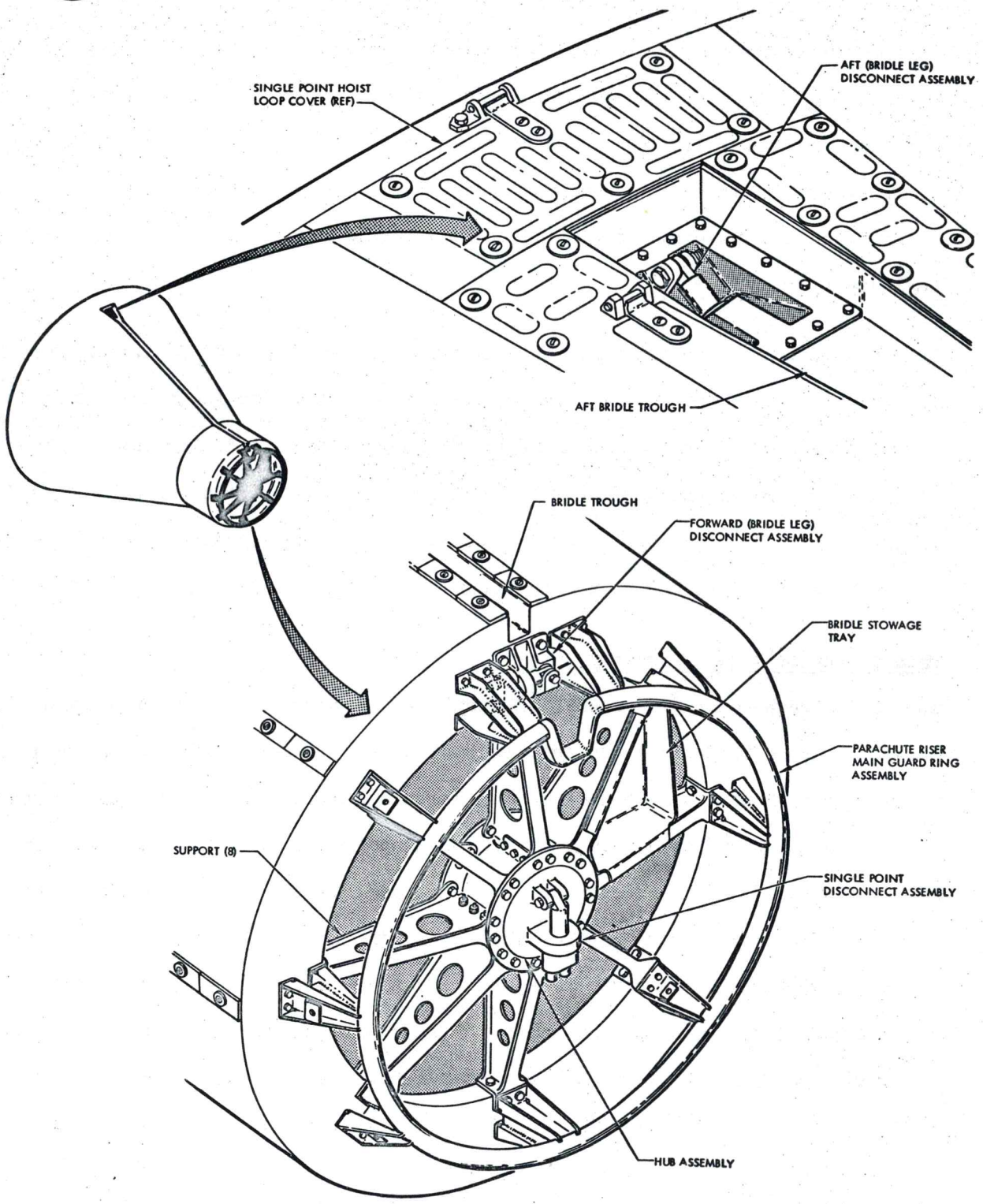

Figure 12-10 Main Parachute Support Assembly

in the cable trough until the single point suspension is released, at which time the bridle leg tears through the insulation.

Main Parachute Release

Upon landing in the water, the main parachute is released from the landing module by activation of the PARA JETT switch. This initiates the forward and aft disconnect pyrotechnics and allows the chute to pull away from the landing module.

DOCKING SYSTEM

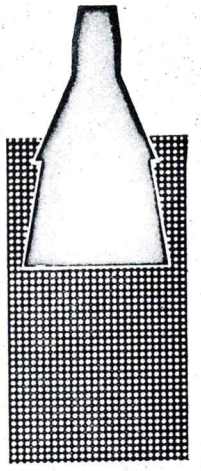

Section XIII

TABLE OF CONTENTS

TITLE	PAGE
SYSTEM DESCRIPTION	13-3
SPACECRAFT R. AND R. SECTION	13-3
DOCKING ADAPTER ASSEMBLY	13-6
DOCKING ELECTRICAL SYSTEM	13-9
SYSTEM OPERATION	13-17
DOCKING SEQUENCE	13-17
MANEUVERING SEQUENCE	13-21
SEPARATION SEQUENCE	13-23
DOCKING SYSTEM CONTROL	13-25
SYSTEM UNITS	13-33
MOORING LATCH RECEPTACLES	13-33
MOORING LATCH COVER ASSEMBLIES	13-33
UMBILICAL CONNECTOR	13-34
INDEX BAR ASSEMBLY	13-34
RADAR SYSTEM & PYROTECHNIC DEVICES	13-34
DOCKING CONE	13-36
CONE DAMPER ASSEMBLIES	13-36
APPROACH LIGHTS	13-36
MOORING LATCH ASSEMBLIES	13-38
AGENA TARGET VEHICLE DISPLAY PANEL	13-38
MOORING DRIVE SYSTEM	13-41
ACQUISITION LIGHTS	13-43
ENCODER AND ENCODER CONTROLLER	13-44

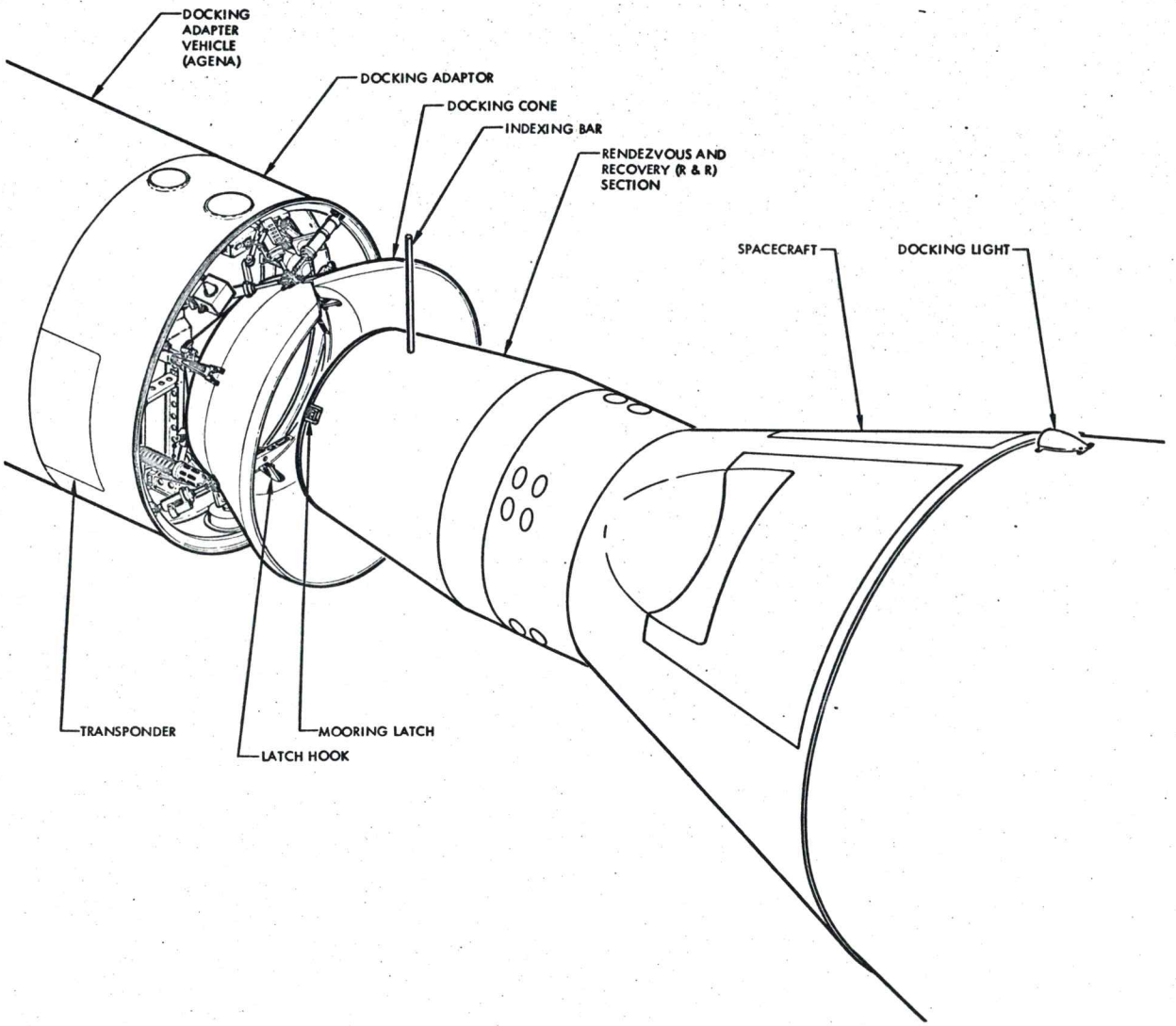

Figure 13-1 Docking System

FM2-13-1

SECTION XIII DOCKING SYSTEM

SYSTEM DESCRIPTION

The docking system (Figure 13-1) is used with spacecraft 6, 8 and 9 and consists of two major assemblies: the spacecraft rendezvous and recovery (R & R) section and the target docking adapter (TDA) assembly of the Agena target vehicle. These assemblies permit the spacecraft to mate with the target vehicle during orbital flight. The docking cone receives the spacecraft during the docking maneuvers. Electromechanical devices in the spacecraft and the docking adapter control the docking operations automatically or as directed by the pilots or the ground control stations. For convenience, these major assemblies are considered separately.

RENDEZVOUS AND RECOVERY SECTION

The R & R section of the spacecraft (Figure 13-2) consists of the following docking system units: the main structure, a nose fairing, an index bar, 3 mooring latch receptacles, 3 latch-receptacle covers, the rendezvous radar, an umbilical connector (receptacle), pyrotechnic cable cutters and ejection devices. Other components of the R & R section are not concerned with docking. The main structure is mounted to the spacecraft and in turn serves as a mounting structure for the other units.

The nose fairing is rigidly but temporarily fastened to the forward end of the R & R section. The fairing is jettisoned at staging +45 seconds approximately. A pyrotechnic igniter cuts a shear pin and swings the fairing clear of the spacecraft. The docking latches are exposed as the fairing is jettisoned.

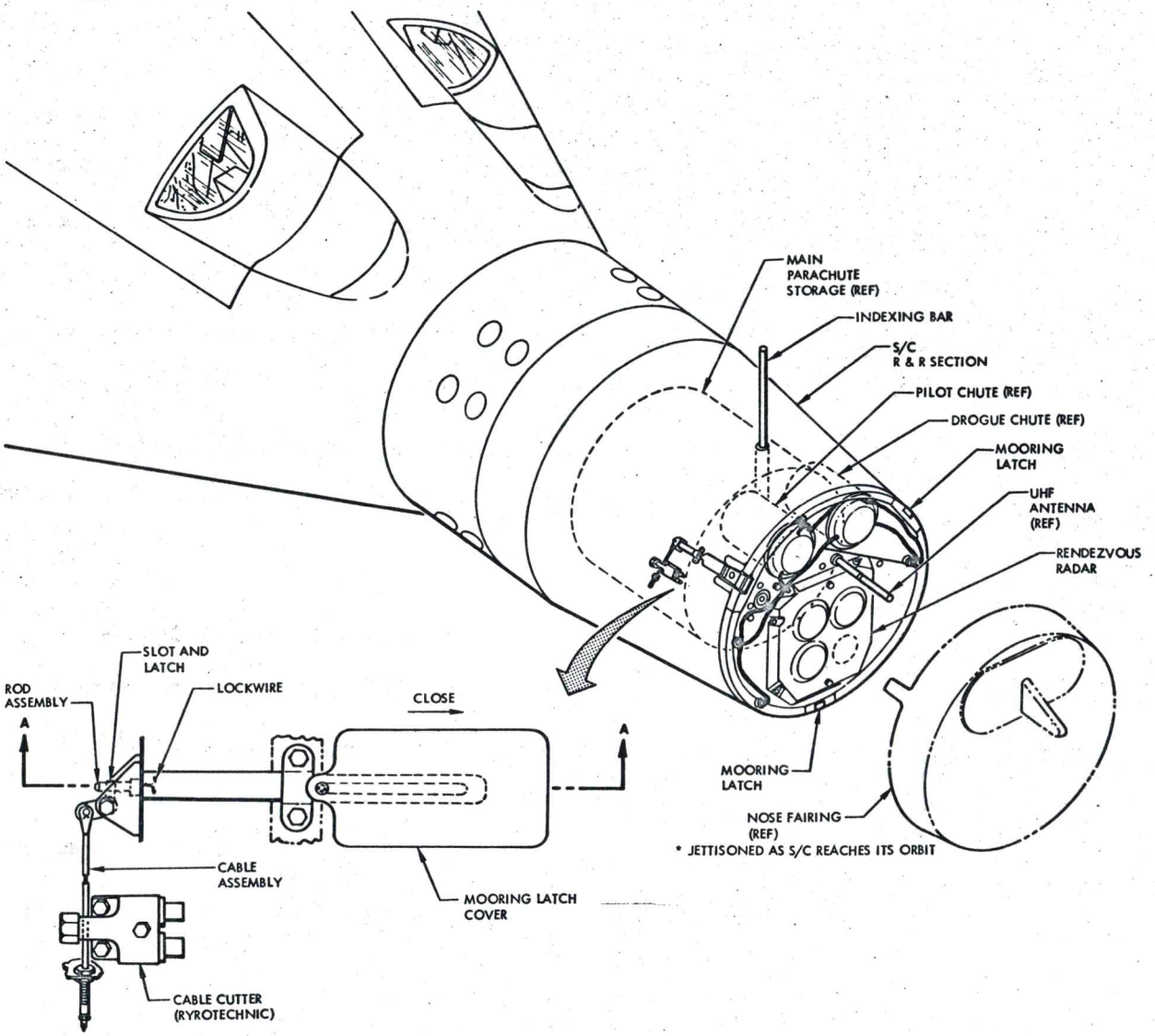

Figure 13-2 R & R Section, S/C

FM2-13-2

The index bar is so located that it coincides with the slot in the docking cone when properly aligned. The bar is extended pyrotechnically by the pilots and remains extended until jettisoned at retro adapter separation. The pilots use the bar to align the spacecraft with the docking cone. The pilots use another set of igniters to jettison the bar. The bar can neither be extended or jettisoned prior to nose fairing jettison.

The three latch receptacles are equally spaced around the forward perimeter of the R & R section. The lower latch serves as a pivot for the nose fairing when it is jettisoned. The latch receptacles are exposed when the nose fairing is jettisoned. The exposed receptacles mate with the mooring latch hooks on the docking cone as the two units come in contact during the docking maneuver. The latch receptacles will remain locked until unlatched automatically by the separation sequence. The latch receptacles are jettisoned just before re-entry or during an emergency. The cavities left by the jettisoned receptacles are covered by pyrotechnically released covers before re-entry. Relays prevent these operations until after the nose fairing has been jettisoned.

The rendezvous radar is located in the front part of the R & R section and consists of the transmitter-receiver unit plus 3 receiving antennas and one transmitting antenna. The radar (and encoder) are used to control the target vehicle before docking. The pilots can initiate a number of encoded commands via the radar link to accomplish this.

The umbilical receptacle mates with the umbilical plug during the rigidizing sequence of the docking maneuver. The umbilical connection provides direct hard-line control of the target vehicle. This control includes simple switching and

encoded commands.

Pyrotechnic igniters are used to extend the index bar, jettison the index bar and the mooring latches, jettison the nose fairing and release the latch covers. The pyrotechnic igniters are fired electrically from the crewstation.

DOCKING ADAPTER ASSEMBLY

The docking adapter assembly (Figure 13-3) consists of two major subassemblies: the docking cone and the docking adapter. The docking adapter is mounted on the Agena forward auxiliary rack and becomes the mounting structure for all other components of the target docking adapter assembly.

The docking cone is connected to the docking adapter by the three cone damper assemblies and is the mounting structure for the mooring latch assemblies, the umbilical plug assembly and the latch release actuator. The latch assemblies are released and reset by the latch release actuator as a part of the unrigidize sequence. With the cone unrigidized, ready for docking, the latch assemblies are reset. In the reset condition, the latch assemblies are spring loaded so that when the spacecraft R & R section enters the docking cone, the latch hooks engage the latch receptacles. The umbilical plug assembly is mounted on one of the cone structural members which supports one of the latch assemblies and is extended and retracted by the mooring drive system. In the extended condition, the plug mates with the receptacle in the spacecraft R & R section. The cone has a V-notch, with a slot at the bottom of the V, cut into the cone's upper surface. This notch and slot, together with the index bar, indexes the spacecraft to obtain proper alignment between the spacecraft and the docking target.

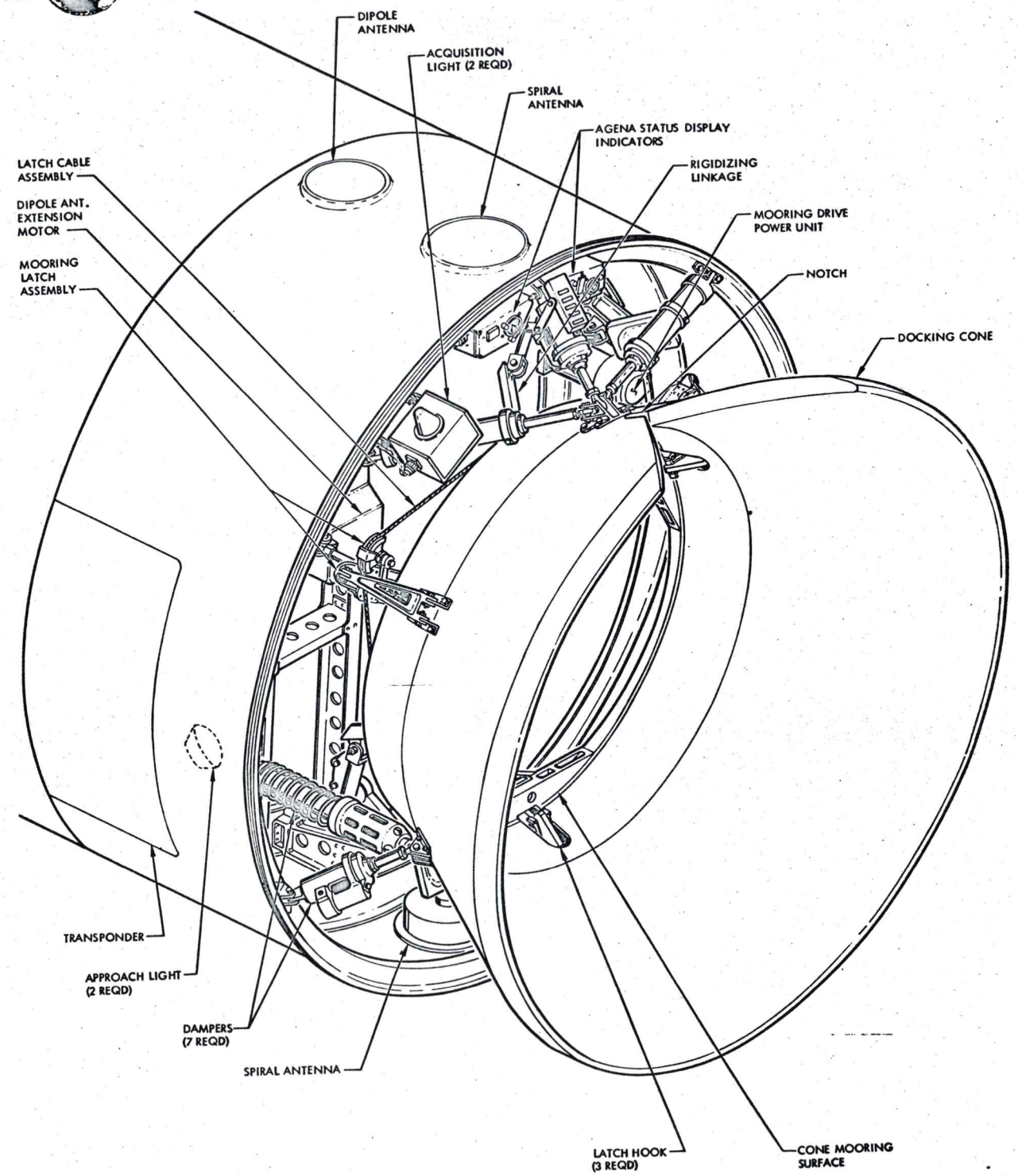

FM2-13-3

Figure 13-3 Target Docking Adapter Assembly

The cone damper assemblies are equally spaced around the rear perimeter of the docking cone with one assembly connected to the cone behind the V-notch. The dampers connect the cone to the adapter structure and absorb the shock of the actual docking thrusts. They are arranged to absorb thrust from any direction and to compensate for any misalignment of the two vehicles.

In addition to the docking cone, the following docking units are mounted on the docking adapter: the mooring drive system, the Agena target vehicle status display panel, the acquisition lights, the radar transponder, three radar antennas and two approach lights.

The mooring drive (rigidizing) system draws the docking cone tightly against the adapter structure and extends the umbilical plug. The cone is drawn into the adapter structure by the rigidizing linkages. The linkages are driven by three gear boxes. The gear boxes are driven by a single electric motor, through flexible drive cables and an H-drive gear box. The motor is started automatically and the cone rigidized when the spacecraft is latched into the cone. The docking adapter is unrigidized (motor reversed) and the spacecraft released by a single pilot command through the umbilical connection. Prior to docking, the unrigidizing process is initiated by R F command (radar-transponder link or UHF ground radio link).

The Agena target vehicle status display panel is mounted on the docking adapter structure and on one cone damper, just above the V-notch in the cone. It visually displays information to the pilot on twelve functions within the Agena target vehicle. The display consists of nine lights, two clocks and one synchro indicator. All power required by the panel is supplied from the Agena power system. The Agena target vehicle displays are as follows: DOCK (green light), RIGID (green light),

PWR (green light), MAIN (red light), MAIN (green light), ARMED (amber light), SEC HI (green light), SEC LO (green light), ATT (green light), MAIN TIME (clock display), SEC TIME (clock display) and ATT GAS (synchro display).

The two acquisition lights aid the pilots in visual tracking of the Agena target vehicle. They produce a flashing light that can be seen for approximately 20 nautical miles. They are mounted at the outer edges of the adapter structure so that they are visible to the pilots around the outer edge of the cone. The lights are mounted so that they rotate inward as the cone is rigidized. The cone should, therefore, be unrigidized for best visibility.

The radar transponder and the radar antennas (2 spiral and 1 dipole) are used for pilot command and tracking of the Agena target vehicle. The radar transponder is energized and the dipole antenna (boom) is extended by UHF ground command.

The two approach lights are mounted on the lower inside structure of the adapter. They are arranged to shine through the rear of the cone and on the upper inside surface near the V-notch. The lights are turned off and on by pilot or ground command. When on, they aid the pilot in attaining proper alignment of the spacecraft as they approach the docking cone.

DOCKING ELECTRICAL SYSTEM

The electrical system links together the various mechanical assemblies of the docking system and fires the pyrotechnic devices. In addition, it permits the pilots to become a part of the operating system. The electrical system (Figure 13-4) uses three types of links in performing its functions: pilot/switch operated links encoded command links and automatic sequence links.

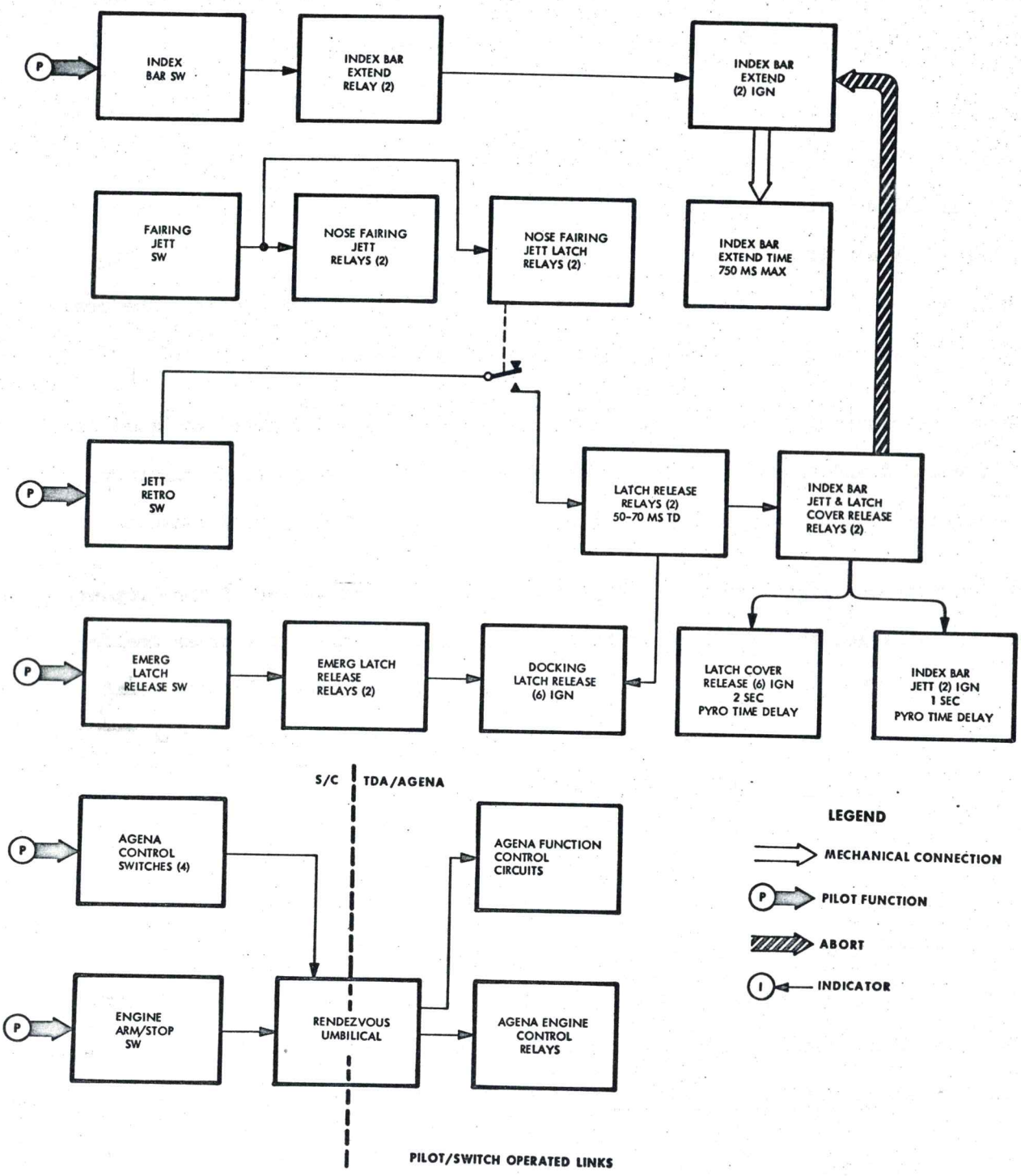

Figure 13-4 Docking and Separation Electrical Block Diagram (Sheet 1 of 3) FM2-13-8

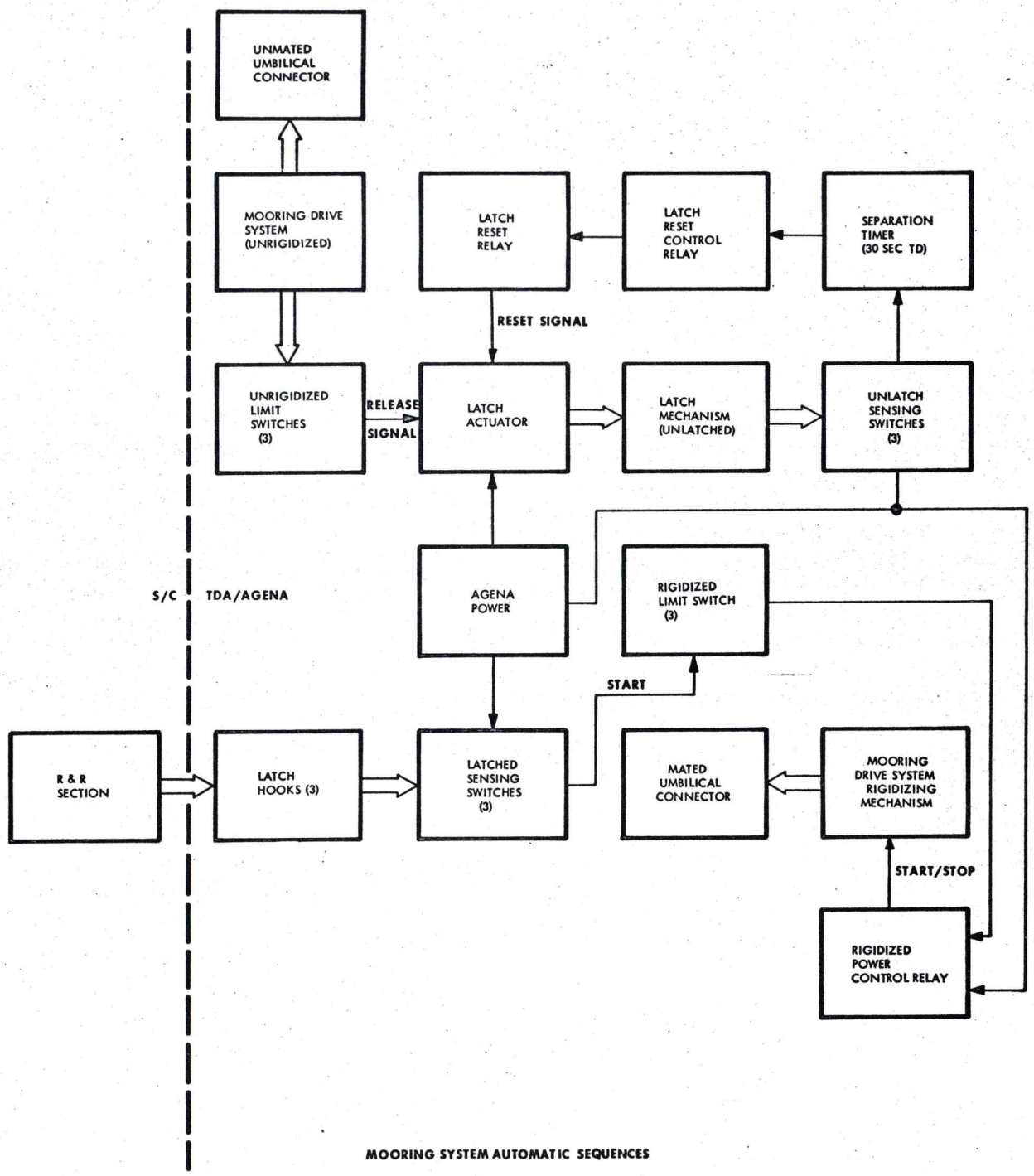

Figure 13-4 Docking and Separation Electrical Block Diagram (Sheet 2 of 3)

FM2-13-8

PROJECT GEMINI

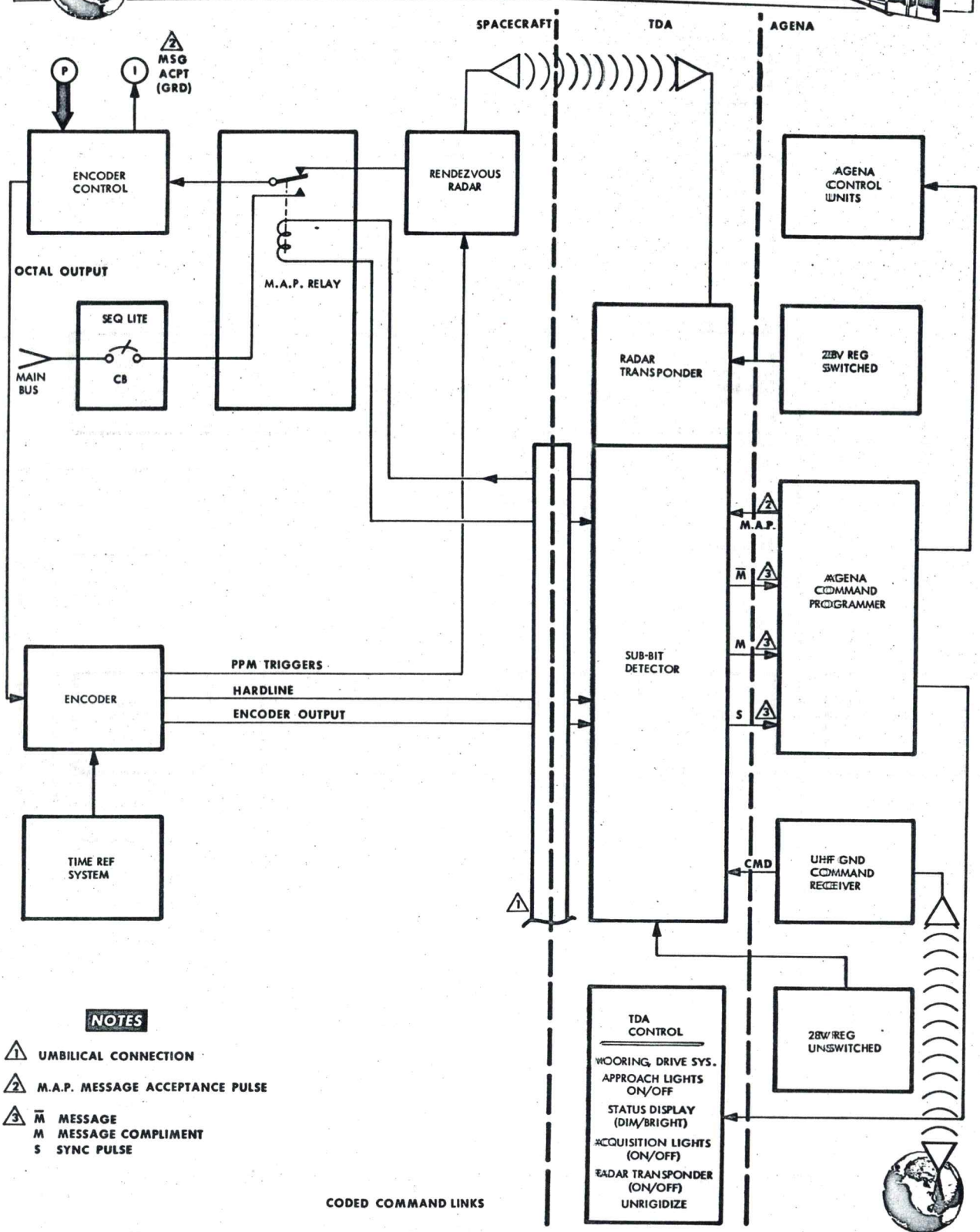

NOTES

1. UMBILICAL CONNECTION
2. M.A.P. MESSAGE ACCEPTANCE PULSE
3. $\overline{M}$ MESSAGE
   M MESSAGE COMPLIMENT
   S SYNC PULSE

Figure 13-4 Docking and Separation Electrical Block Diagram (Sheet 3 of 3)

FM2-13-8

Pilot/Switch Operated Links

Four of the pilot/switch operated links control spacecraft functions and one link controls Agena functions. Index bar extend, index bar jettison, emergency latch release and latch cover release are pilot/switch initiated functions. There are two distinct modes of operation - normal and emergency. Normally, the pilot extends the index bar prior to attempting the docking maneuver. After docking, if there is some difficulty freeing the spacecraft from the mooring latches, the pilot can release the spacecraft by pressing the EMER REL switch. This removes the latch receptacles from the R & R section. Normally, however, the receptacles are retained until operation of the JETT RETRO switch. At this time, the latch release, latch cover release and index bar jettison igniters are fired preparatory for re-entry. In the event of an abort prior to nose fairing jettison, the latch release, latch cover release, index bar extend and index bar jettison igniters are not fired. They can be fired, however, at any time after nose fairing jettison by pressing the JETT RETRO switch. The BUS ARM switch, in the DOCK position, arms the index bar extend and emergency latch release igniters. The DOCK LT (EXT LTS on S/C 8 and 9) turns the docking light off and on.

The ENGINE switch in the ARM position provides pilot control of the Agena propulsion systems when the S/C and TDA are in the rigidized condition.

Coded Command Links

The coded command links can handle 127 separate commands to the Agena/TDA system. These commands control functions during the approach, docking, joint-maneuvering and separation phases of a mission. The commands may be carried by the radar-transponder link, the UHF ground command link or the umbilical hardline link.

The radar-transponder link is used during the approach phase and can be used until the spacecraft and the docking adapter are 50 feet apart. It may also be used after vehicle separation. The UHF ground command link is used whenever required except during the time the spacecraft is actually docked. The UHF link can duplicate any radar-transponder but is, in addition, used for Agena power control, transponder turn-on and dipole antenna boom extend. The umbilical path is used while the spacecraft is docked. During this time, the umbilical plug and receptacle are mated. This connection provides an 8-conductor path to be used by the pilots in controlling the target docking vehicle and the docking adapter.

All encoded commands eventually arrive at the Agena command programmer. Whenever the programmer accepts a command from the spacecraft encoder, it causes the sub-bit detector (in the transponder) to energize the message acceptance (MSG ACPT) indicator in the crewstation. In the docked configuration, using hardline, the sub-bit detector sends a DC pulse to the spacecraft to indicate receipt of message.

The spacecraft-Agena command links function as shown in Figure 13-4. The pilots initiate the commands through the encoder controller circuit. The output from this circuit energizes the command link encoder, which in turn, sends signals to the transponder (and sub-bit detector) via either the radar-transponder link or the umbilical connection. The sub-bit detector output triggers the Agena command programmer. The programmer provides two outputs, one to the Agena/TDA control circuits and one to the sub-bit detector through the message acceptance pulse (M.A.P.) circuit. The transponder then energizes the MSG ACPT light in the crew station via either the radar-transponder or umbilical path. Not all of the 127 commands are assigned and of those assigned, only a few typical ones will be

considered here. The first commands to the Agena target vehicle will be UHF ground commands such as AGENA POWER ON, TRANSPONDER ON and BOOM EXTEND. At about 20 nautical miles separation, the pilots may command UNRIGIDIZE and ACQUISITION LIGHTS ON using the radar-transponder link . The UNRIGIDIZE command lets the acquisition lights pivot up to their most visible position and prepares the docking cone to receive the spacecraft. The pilots give the APPROACH LIGHTS ON command to light the cone docking area. As soon as the spacecraft is moored and the cone rigidized, the pilot commands go through the umbilical hardline. Among the commands given by hardline are APPROACH LIGHTS OFF, TRANSPONDER OFF, STATUS DISPLAY DIM and a number of Agena control commands. When the vehicles are separated, the UNRIGIDIZE command is given. This command may be repeated if the pilots fail to separate during the 30 second delay before latch reset. After separation, commands can be given to shut off Agena systems to conserve power until another docking maneuver is performed.

The Agena command programmer and the sub-bit detector are the central components of the system. The detector receives all inputs from the ground command link, the radar-transponder link and the umbilical (hardline) link, processes the signals and sends them to the Agena command programmer. The programmer activates the circuits (in the Agena and the docking adapter) required to execute the commands. The commands are sent to the programmer in the form of a message (M). Along with the message, a message compliment ($\underline{M}$) is sent. The message compliment is a check signal which helps the programmer decode the message accurately. Sync pulses (S) are sent to coordinate the sub-bit detector and the programmer operation. The time reference system coordinates the encoder and the sub-bit detector.

Automatic Sequence Links

The mooring-rigidize sequence and the unrigidize sequence are automatic once they are initiated. The mooring-rigidize sequence is initiated when the spacecraft R & R section contacts the latch hooks, pushes them aside and then allows the hooks to lock on to the latch receptacles. Latch engagement is sensed by three limit switches, one at each latch position. The sensing switches route Agena power through the Rigidized Limit Switches to the Rigidized Power Control Relay. The relay energizes, connecting Agena power to the mooring drive system motor. When the system is rigidized, the Rigidized Limit Switches open, de-energizing the Rigidized Power Control Relay and stopping the motor. The umbilical plug is extended during the rigidize sequence.

The unrigidize sequence is automatic once it is initiated by either ground command or by the pilots. When the mooring drive system is unrigidized, the Unrigidized Limit Switches route Agena power to the latch actuator. When the mechanism is unlatched, the Unlatch Sensing Switch routes Agena power to the separation timer. The timer, after a 30-second delay, applies power to the reset side of the latch actuator through the Latch Reset Control Relay and the Latch Reset Relay. The latch hooks are reset so that the docking maneuver can be repeated. Normally the cone does not rigidize after reset of the latch hooks but if the pilot does not back away within the 30-second delay before reset, the cone will rigidize following reset of the latch hooks. The unrigidize sequence would then have to be repeated.

SYSTEM OPERATION

The operation of the docking system consists of four basic functions: (1) Docking sequence, (2) Maneuvering sequence, (3) Separation sequence and (4) Docking system control.

DOCKING SEQUENCE

The docking sequence consists of approach, mooring, umbilical connection and rigidizing.

Approach

The pilots in coordination with the ground station control the docking system (Figure 13-5), but only after the ground station has first used the UHF ground command link to switch-on the TDA/Agena radar transponder and control circuits and to extend the dipole antenna boom. Typically the pilots will begin tracking and control of the target vehicle at about 100 nautical miles separation. When the separation is about 20 nautical miles, the pilots can use the radar transponder command link to unrigidize and to turn on the acquisition lights. At about 500 feet separation, the pilots use the radar transponder command link to turn on the approach lights and status display (bright) and to extend the index bar pyrotechnically. The pilots will also decrease the spacecraft's closing rate to 0.7 feet/second. Later, the pilots turn on the spacecraft docking light. As the target is approached, the pilots use spacecraft thrusters and the indexing bar to align the spacecraft with the docking cone.

Mooring

As proper alignment is achieved, the pilots maneuver the spacecraft to slide the indexing bar into the slot (at the tip of the V-notch) in the docking cone

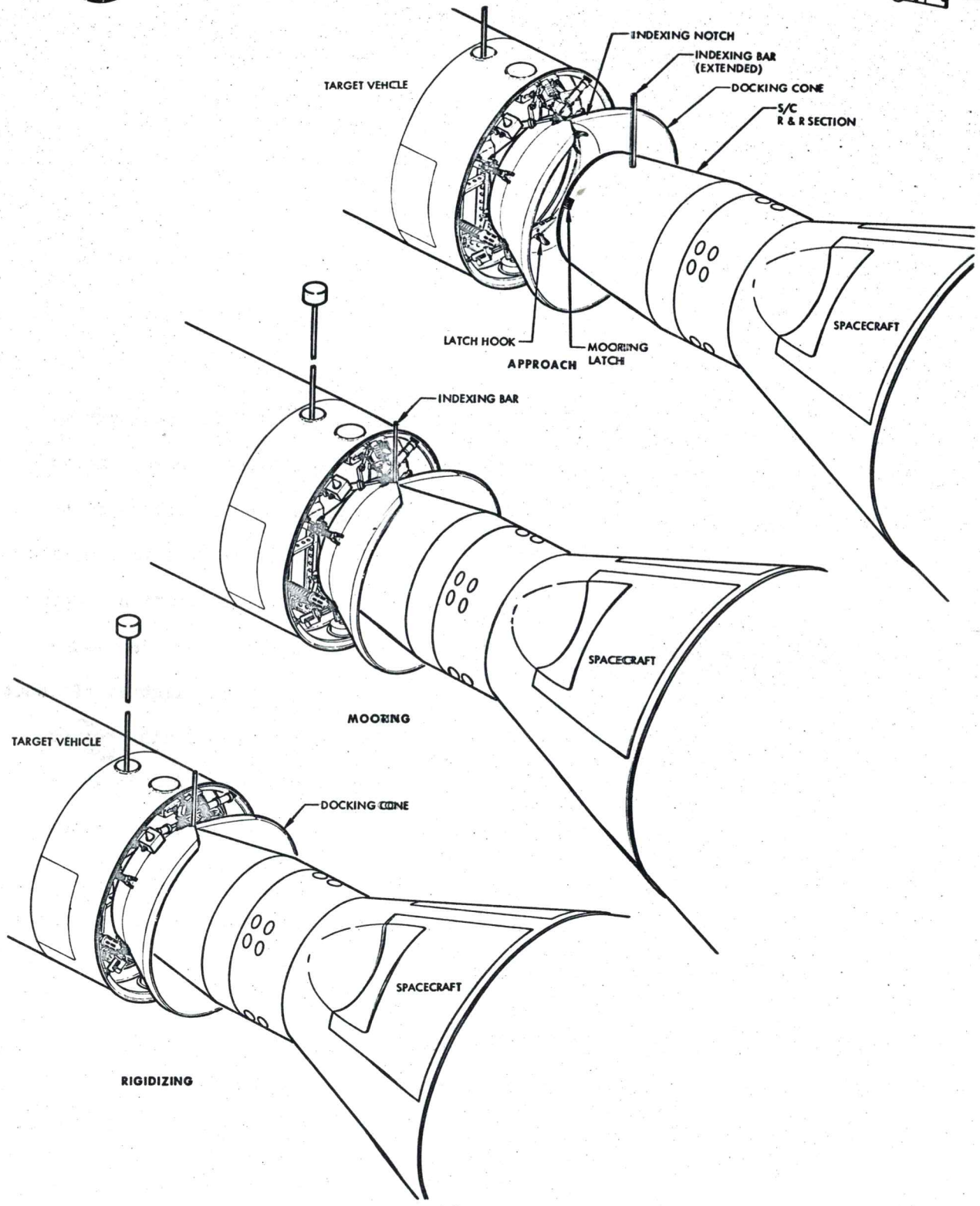

Figure 13-5 Docking System Operation

FM2-13-5

(Figure 13-5). The pilots increase the forward thrust as the spacecraft enters the docking cone. This temporary thrust increase provides enough momentum for the spacecraft R & R section to actuate the spring loaded mooring latch hooks on the interior of the docking cone. Actuation of the latch hooks captivates the spacecraft R & R section in the docking cone and initiates the rigidize sequence. The completed mooring operation connects the spacecraft firmly to the docking cone.

Rigidizing

Rigidizing (Figure 13-6) is the process of pulling the docking cone in toward the adapter main structure until it reaches a firm seating against the pads (part of the adapter main structure). This operation is required because the cone dampers form only a flexible connection between the cone and the adapter structure. Maneuvering the spacecraft-target vehicle combination is impractical under these conditions.

The docking cone is rigidized as soon as the mooring operation is completed. As mooring is completed, three limit switches mounted on the TDA latch assemblies automatically activate the mooring drive (rigidizing) mechanism motor, which in turn, drives the rigidizing linkages through the flexible drive cables, gear boxes and drive arms. The drive arms apply tension to the rigidizing linkages connected to the target docking cone. As the linkages are retracted, the docking cone is pulled toward the docking adapter main structure and the umbilical plug is extended. When the docking cone bottoms on the adapter pads, the mooring drive mechanism stops. The firm connection between the spacecraft and the target docking vehicle enables joint maneuvers with the two vehicles.

The rigidizing sequence can also be initiated by the pilots or the ground

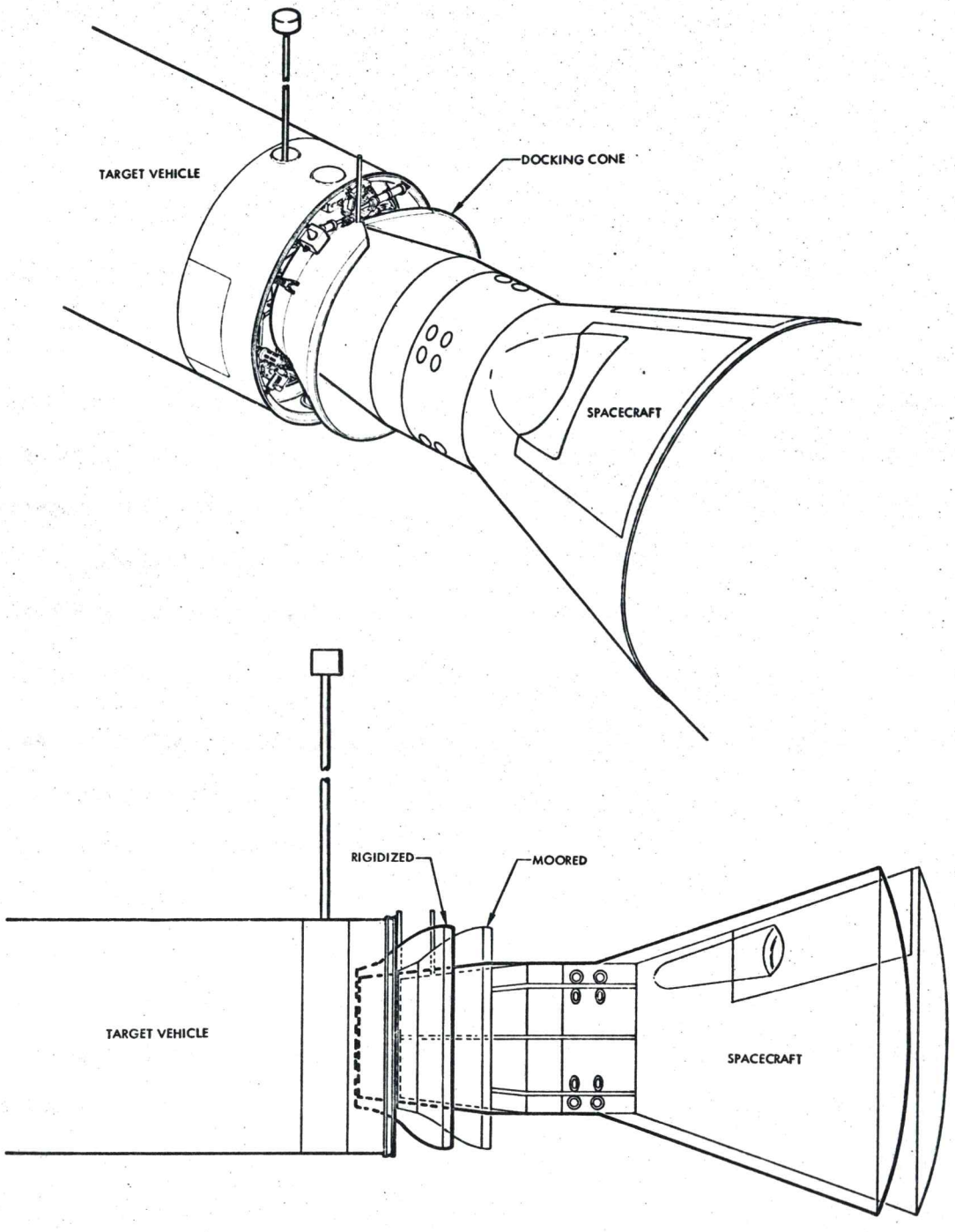

Figure 13-6 Rigidizing Operation

FM2-13-6

stations as back-up to the automatic system. In this case, the RIGIDIZE command is sent to the Agena command programmer via the RF link. The programmer then routes power to the mooring drive system motor. The remainder of the sequence is the same as when initiated automatically.

Umbilical Connection

The umbilical plug in the docking adapter assembly (Figure 13-7) is actuated by the mooring drive mechanism. In the rigidized condition, the mooring drive mechanism extends the plug out of its casing so that it mates with the receptacle on the spacecraft R & R section. The plug remains extended and mated until the cone is unrigidized.

MANEUVERING SEQUENCE

The maneuvering sequence is subject to considerable variation except for a few common operations. Most of the maneuvering sequence is subject to individual mission requirements; however, the following operations are typical on most docking missions.

When the docking cone is rigidized, the pilots can use the umbilical command link to turn off the acquisition lights,the approach lights and the target vehicle radar transponder. In addition, they will dim the status display lights. When the pilots have the ENGINE switch in the ARM position, the target vehicle propulsion systems can be used for attitude changes, orbit adjustments, etc. At the end of a maneuvering sequence, the ENGINE switch is set to STOP and the umbilical command link used to return the target vehicle to the pre-docking status if desired. A command via the UHF ground command link may be substituted for any pilot command if necessary. However, ground command cannot override pilot-switched

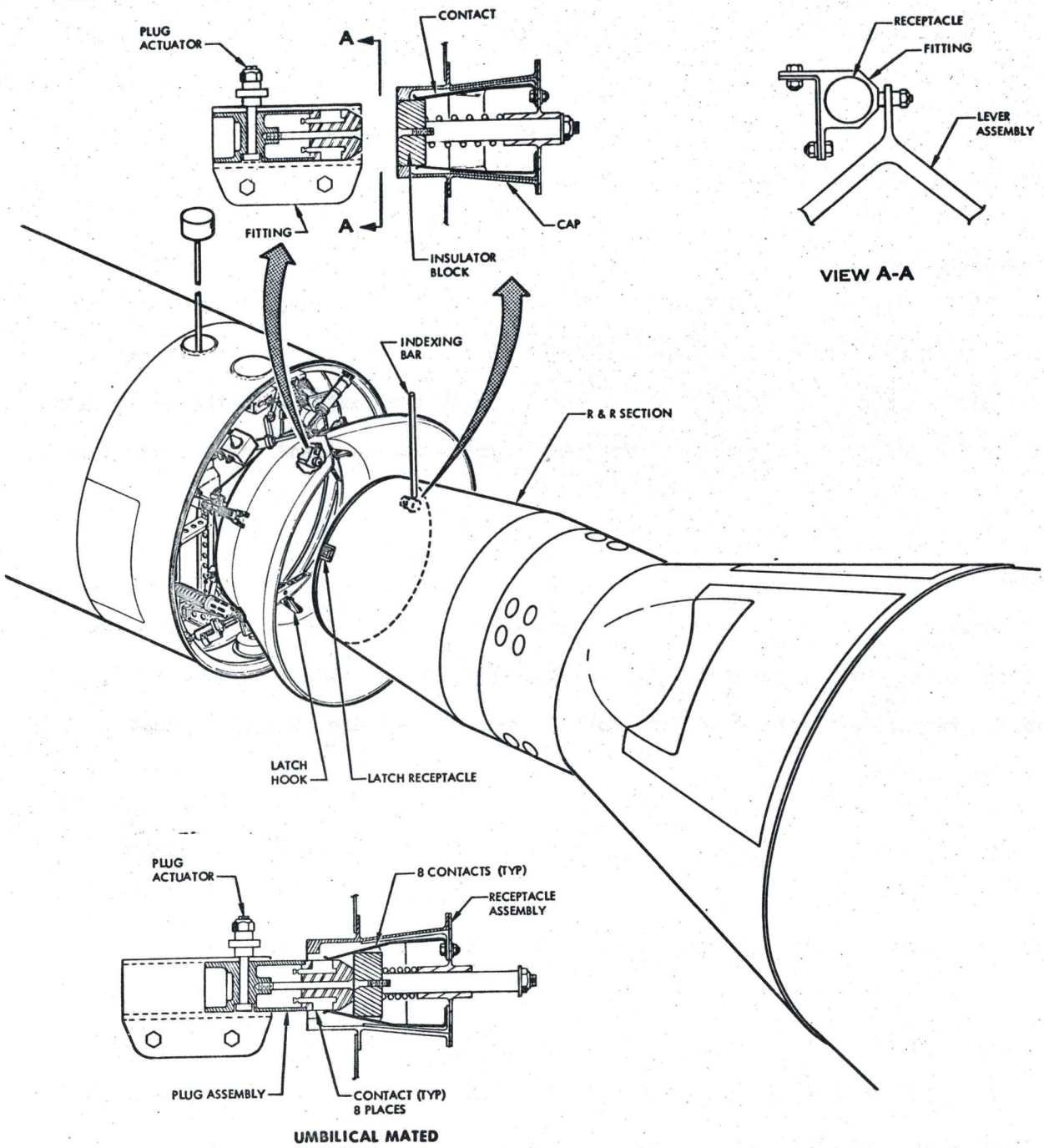

Figure 13-7 Umbilical Connector

FM2-13-10

functions such as engine arm.

SEPARATION SEQUENCE

As the maneuvering phase ends, the pilots will perform the separation sequence. Existing conditions at the time will determine whether the mode is normal or emergency (Figure 13-8).

Normal

The normal separation sequence is initiated by a command to the Agena command programmer to unrigidize the docking cone. The pilots or ground control may initiate this command. Receipt of this command by the Agena command programmer starts the mooring drive mechanism motor and lights the MSG ACPT light in the crew station. When the cone is unrigidized, the mooring drive motor stops and the latch mechanism actuator is energized to retract the latch hooks and release the spacecraft. The Unlatch Limit Switch within the latch mechanism stops the actuator and starts a 30-second time delay relay. The 30-second time delay normally allows the pilots sufficient time to back away from the docking cone before the latch hooks are reset to the mooring position. At retro adapter jettison, the pilots will jettison the index bar and the docking latches and release the docking latch covers.

An exception to the normal sequence as presented can arise if the pilots should fail to thrust clear of the docking cone during the 30-second time delay before the latch hooks are automatically reset. In this case, the rigidize sequence is initiated automatically after the latch-reset function. The pilots would then have to send the UNRIGIDIZE command a second time. The pilots will then have another 30-second period in which to thrust free of the docking cone. These

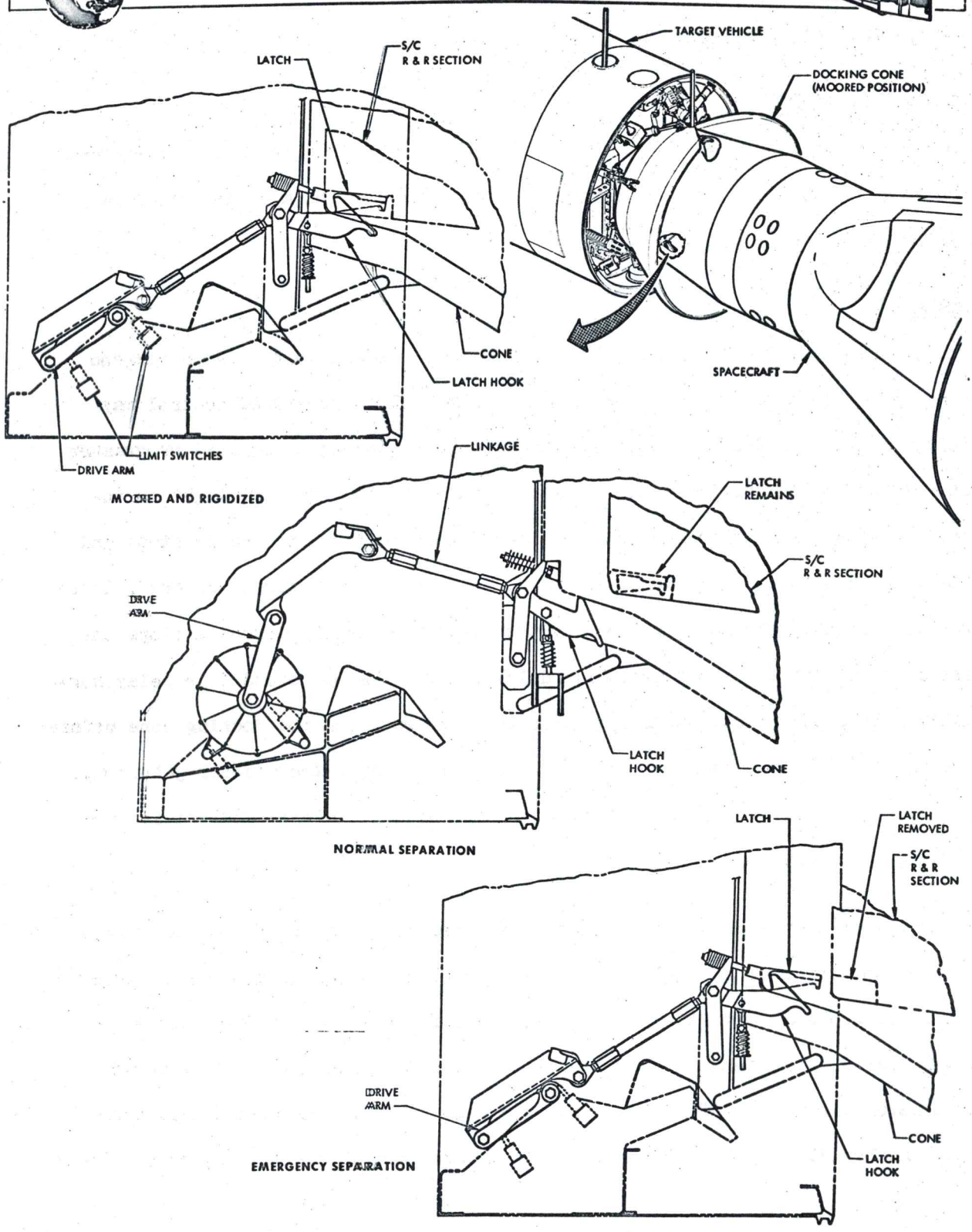

Figure 13-8 Separation Sequence FM2-13-7

operations may be repeated several times if necessary.

Emergency

If the pilots cannot thrust free of the docking cone by using the normal separation sequence or emergency conditions exist, they may employ the emergency separation sequence (Figure 13-8) to rapidly separate the spacecraft from the target vehicle. The pilots initiate the emergency separation sequence by pressing an emergency release switch in the crewstation. This switch fires pyrotechnic igniters at each of the three docking latch locations, breaking the latches loose from the spacecraft. The pilots then fire thrusters to back out of the docking cone. The latch covers are released and the index bar jettisoned at retro adapter jettison. The emergency separation sequence permanently removes the docking capabilities of the spacecraft.

DOCKING SYSTEM CONTROL

The control of the docking system (Figure 13-9) is primarily electrical but pyrotechnic devices and mechanical sensors are integrated into the system. The control circuits are conveniently thought of in two parts: those which control spacecraft functions and those which control docking adapter/Agena functions. The operation of the control circuits can best be explained by considering the following phases: nose fairing jettison, approach, mooring-rigidizing, maneuvering, separation and post-separation.

Nose Fairing Jettison

The nose fairing covers the spacecraft mooring latch receptacles and must be jettisoned before docking is possible. In addition, the nose fairing jettison electrical circuits perform switching which prevents the firing of pyrotechnic

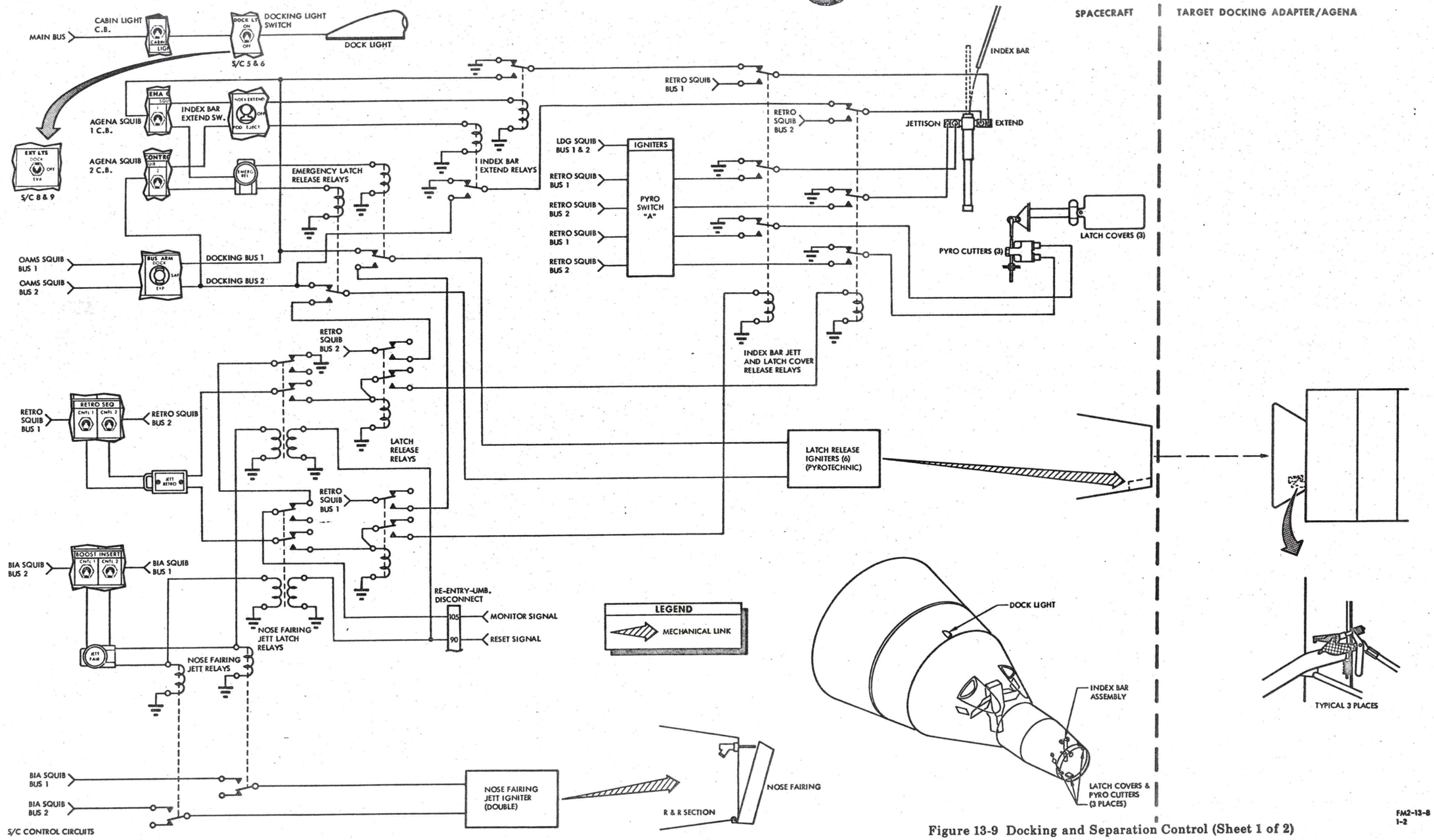

Figure 13-9 Docking and Separation Control (Sheet 1 of 2)

FM2-13-8
1-2

PROJECT GEMINI

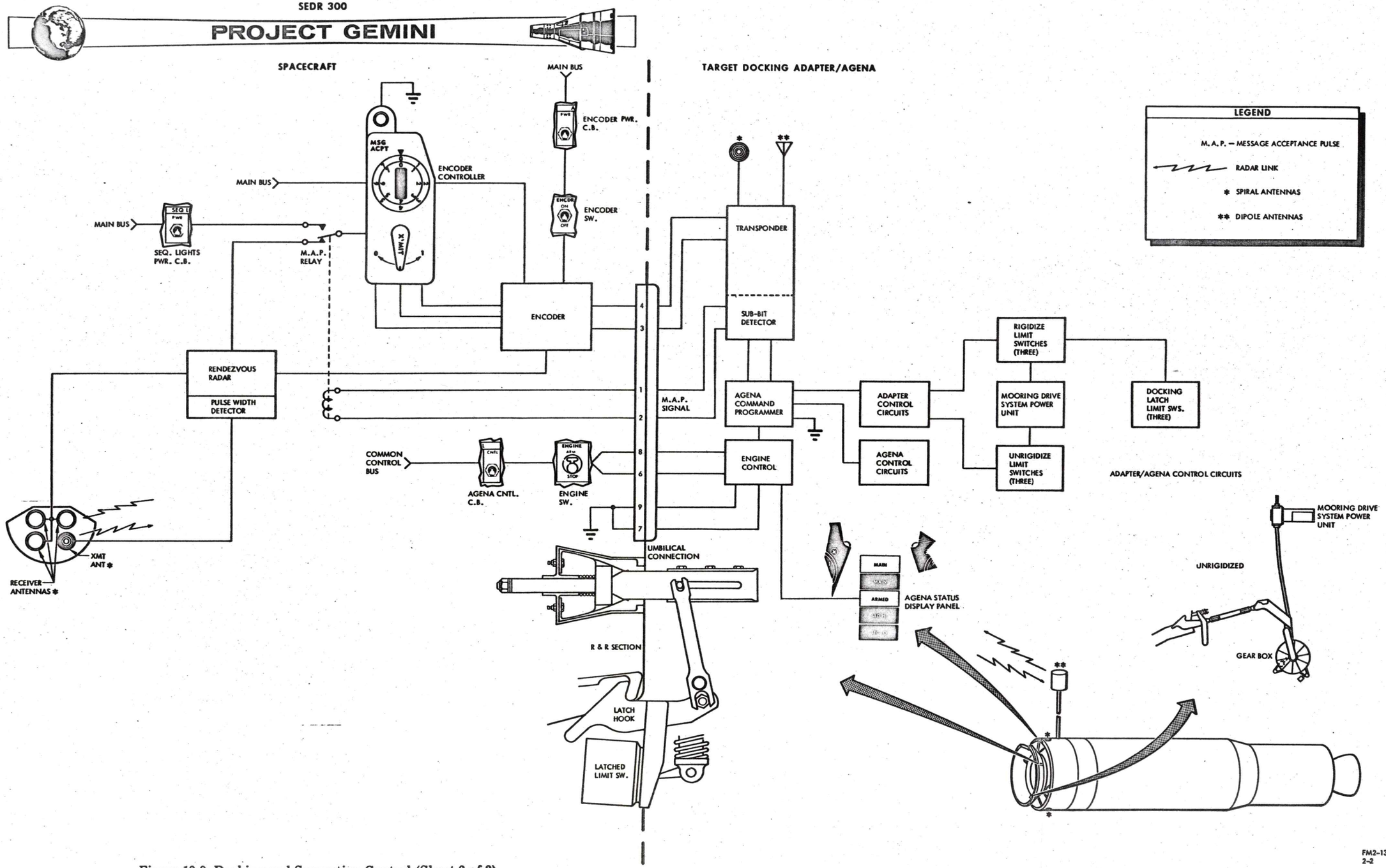

Figure 13-9 Docking and Separation Control (Sheet 2 of 2)

FM2-13-8
2-2

igniters for index bar jettison, mooring latch jettison and mooring latch cover release until the nose fairing is jettisoned (JETT FAIR switch is pressed).

The nose fairing is jettisoned at staging +45 seconds approximately. This uncovers the docking latch receptacles so that docking is possible at any time after the spacecraft is in orbit. The pilots jettison the nose fairing by pressing the JETT FAIR switch after the BOOST-INSERT CNTL 1 and 2 circuit breakers have been set to on. The JETT FAIR switch then connects BIA Squib Bus power to the Nose Fairing Jett Relays and the Nose Fairing Jett Latch Relays. The latch relays are then latched so that they connect the JETT RETRO switch to the Latch Release Relays. The JETT RETRO switch cannot be used until the latch relays are latched. The energized Nose Fairing Jett Relays connect BIA Squib Bus power to the nose fairing jettison igniters. The igniters swing the nose fairing out and away from the spacecraft.

The Nose Fairing Jet Latch Relays are unlatched during testing of the spacecraft by a circuit through the re-entry umbilical disconnect plug. The circuit, however, is not used during flight. The latch relays must remain latched in flight.

Approach

During the approach phase, the UHF ground command link is used to switch on the Agena command circuits, the docking adapter radar transponder, to extend the docking adapter dipole antenna boom and unrigidize the docking cone. With this accomplished, the pilots and the ground stations can control other docking adapter/Agena functions. To control these functions, the pilots set up commands on the encoder controller. The encoder controller (when AGENA CONTROL PWR circuit breaker

is on) causes the encoder to send position modulated pulses to the spacecraft radar unit. The radar transponder link and the sub-bit detector (a subassembly of the transponder) send the message information to the Agena command programmer. The programmer switches Agena power to the appropriate control circuit. Whenever the programmer accepts a message, it sends a message acceptance pulse (M.A.P.) through the sub-bit detector and the radar transponder link to the encoder controller in the spacecraft. This pulse lights the MSG ACPT light on the encoder controller. Typical commands sent during the approach phase are UNRIGIDIZE and ACQUISITION LIGHTS ON at about 20 nautical miles separation, APPROACH LIGHTS ON, STATUS DISPLAY ON and STATUS DISPLAY BRIGHT at near approach. When the DOCK light on the status display panel is illuminated, the system is unrigidized and the latch hooks in docking position. If the light is not on, the UNRIGIDIZE command is given again, either by the pilots or the ground station. In addition, the pilots operate the following switches during the approach phase: DOCK LT (or EXT LT on S/C 8 and 9), BUS ARM and INDEX EXTEND/POD EJECT. In the ON position, the DOCK LT (or EXT LT) switch applies Main Bus power through the CABIN LIGHTS circuit breaker to the dock light. In the INDEX EXTEND position, the INDEX EXTEND/POD EJECT switch applies OAMS Squib Bus 1 and 2 power to the Index Bar Extend Relay coils through the BUS ARM switch. The energized Index Bar Extend Relays apply Docking Squib Bus power to the extended igniters on the index bar assembly.

Mooring-Rigidizing

Mooring-rigidizing is normally an automatic sequence initiated when the spacecraft mooring latches contact the latch hooks of the docking cone. The latch hooks are pushed aside and then drop in behind the latches. In this position, a sensing

switch is actuated by the mooring latches. This Latched Sensing Switch applies Agena power to the mooring drive system motor to rigidize the cone. When the cone is rigidized, Rigidized Limit Switches shut off the power to the drive motor and light the RIGID light of the status display panel.

When the cone is rigidized, the umbilical plug mates with the receptacle. With the umbilical connection completed, control of the TDA/Agena system is through the umbilical hardline.

Maneuvering

The maneuvering phase may be considered to begin immediately after the docking cone is rigidized and the umbilical connection completed. The pilots may immediately set up on the encoder controller such commands as ACQUISITION LIGHTS OFF, APPROACH LIGHTS OFF, RADAR OFF and STATUS DISPLAY DIM. The commands now reach the TDA/Agena control circuits through the encoder, umbilical connection, sub-bit detector and Agena command programmer. When post-docking maneuvers are to be performed, the ENGINE switch is set to the ARM position, giving a direct electrical connection to the Agena engine arm circuits in the Agena vehicle. A number of maneuvering commands could now be set up on the encoder such as ATTITUDE CONTROL SYSTEM ON, PRIMARY PROPULSION SYSTEM START, PRIMARY PROPULSION SYSTEM CUTOFF, SECONDARY PROPULSION SYSTEM 16# THRUST INITIATE or SECONDARY PROPULSION SYSTEM THRUST CUTOFF. These commands are likewise sent to the Agena control circuits via the encoder controller, encoder, umbilical connection, sub-bit detector and Agena command programmer. When the maneuvers are concluded, the ENGINE switch is set to the STOP position removing power from the engine arm circuits. Commands can be set up on the encoder to return the TDA/Agena to its pre-docking status.

Separation

The separation phase is initiated by setting up the UNRIGIDIZE command on the encoder controller. The Agena command programmer causes the control circuits to switch Agena power to the mooring drive system motor which unrigidizes the mooring drive system and breaks the umbilical connection. As the unrigidized position is reached, the Unrigidized Limit Switches stop the action and apply power to the latch actuator. The actuator retracts the latch hooks until the Unlatch Limit Switches are actuated starting the reset timer. Thirty seconds later the timer applies power to the latch actuator to reset the latch hooks. If the pilots fail to back out of the cone within the 30-second interval, the presence of the latch receptacles, as the latch hooks reset, initiates the rigidize sequence. The pilots must again set up the UNRIGIDIZE command on the encoder controller to repeat the unrigidize sequence. The pilots should back out of the cone within the 30-second interval.

If the system fails to unrigidize or unlatch, the emergency separation sequence must be used. This sequence is initiated when the pilots press the EMER REL switch. This switch energizes the Emergency Latch Release Relays, connecting Docking Squib Bus power to the pyrotechnic igniters. The igniters break the latches loose from the spacecraft, allowing the pilots to back out of the docking cone. The latches will probably remain with the latch hooks in the docking cone, although they are free to fall out if there is any disturbance. The umbilical plug slips out of the receptacle as the spacecraft backs away, even though the mooring drive system remains rigidized. Further commands to the TDA/Agena can only be given by UHF ground command or by radar transponder link (after the separation is at least 50 feet).

Post-Separation

The post-separation phase includes a few operations associated with docking which must be performed before re-entry. These include index bar jettison, latch cover release and jettison of the docking latches. These operations are completed before the Landing (LDG) Bus is energized. At about 10,000 feet the Landing Bus fires pyro switch A which breaks the circuit to the index bar jettison igniters and the latch cover release igniters.

In preparing for re-entry, the pilot presses the JETT RETRO switch, connecting power from Retro Squib Bus 1 and 2 to the coils of the Latch Release Relays through latched contacts of the Nose Fairing Jett Latch Relays (latched during nose fairing jettison). RETRO SEQ CNTL 1 and 2 circuit breakers must be on. When the Latch Release Relays close, they connect Retro Squib Bus power to the coils of the Index Bar Jett and Latch Cover Release Relays. As these relays energize, they connect Retro Squib Bus power to the index bar extend igniters (these may have already been fired), to the index bar jettison igniters and the latch cover release igniters. Power is connected to the extend igniters because re-entry may be required without performing docking maneuvers and the index bar left unextended. The bar is extended before the jettison igniters are fired. The jettison igniters have a 1-second pyro delay to accomplish this.

The energized Latch Release Relays also connect Retro Squib Bus power to the mooring latch release igniters through contacts of the Emergency Latch Release Relays. The latch receptacles must be removed from the R & R section before the latch covers can slide into place. A 2-second pyro time delay is incorporated to insure jettison of the latch receptacles before cover release.

SYSTEM UNITS

The docking system units are those units which are concerned solely with docking and in addition, are not part of another system. Those units which have docking functions but are part of other systems are not discussed in detail in this section. Some units which are mounted on the R & R section of the spacecraft are not concerned with docking at all and therefore are not discussed.

MOORING LATCH RECEPTACLES

The mooring latch receptacles (Figure 13-2) are fixed units, shaped to mate with the latch hooks on the docking cone. They are securely but temporarily fastened to the main structure of the R & R section. Pyrotechnic igniters are electrically fired to break the latch receptacles loose from the R & R section. When docking, the receptacles easily push the latch hooks aside as the spacecraft enters the docking cone and then let the hooks drop behind the catches to create the latched condition. The latch receptacles are protected by the nose fairing during the boost phase.

MOORING LATCH COVER ASSEMBLIES

Each mooring latch cover assembly (Figure 13-2) consists of a cover, a spring assembly, a shaft and latch assembly, a cable and a pyrotechnic cable cutter. The shaft, latch and cable keep the spring assembly compressed and the cover retracted until the cable is cut by the pyrotechnic cable cutter (guillotine). The guillotines are electrically fired. As each guillotine cuts its associated cable, the latch drops down, allowing the spring assembly to slide the cover over the cavity left by the jettisoned receptacles. The covers prevent overheating of the latch cavities during re-entry.

UMBILICAL CONNECTOR

The umbilical connector (Figure 13-7) is a 9 conductor receptacle-plug assembly. The receptacle is designed to mate with the plug as the docking system is rigidized. The plug is extended and retracted by the rigidizing mechanism. As the plug enters the receptacle, it forces the insulator block into the receptacle. This action allows the receptacle and plug contacts to touch. Eight of the nine contacts are actually used to control the Agena target vehicle. When the plug is retracted, the spring returns the insulator block to the closed position. The insulator block covers the end of the receptacle.

INDEX BAR ASSEMBLY

The index bar assembly (Figure 13-10) includes the bar, a housing, a pyrotechnic extension mechanism and a pyrotechnic jettison mechanism. The pyrotechnic igniters are fired electrically from the crew station. The extension igniters generate a gas pressure which forces the bar up until the socket in which the bar fits reaches a stop. This is the extended position of the bar. The bar is jettisoned in the same way, except that the gas pressure forces the bar out of the socket and ejects it into space. The jettison igniters also seal off the opening left by the jettisoned bar. The jettison igniters have a 1-second pyro delay to assure that the extend igniters will be fired first.

RADAR SYSTEM AND PYROTECHNIC DEVICES

The details of the radar system units and the pyrotechnic devices are presented in Section VIII and XI respectively. The necessary information to explain how these units fit into the docking system operation is presented elsewhere in this section.

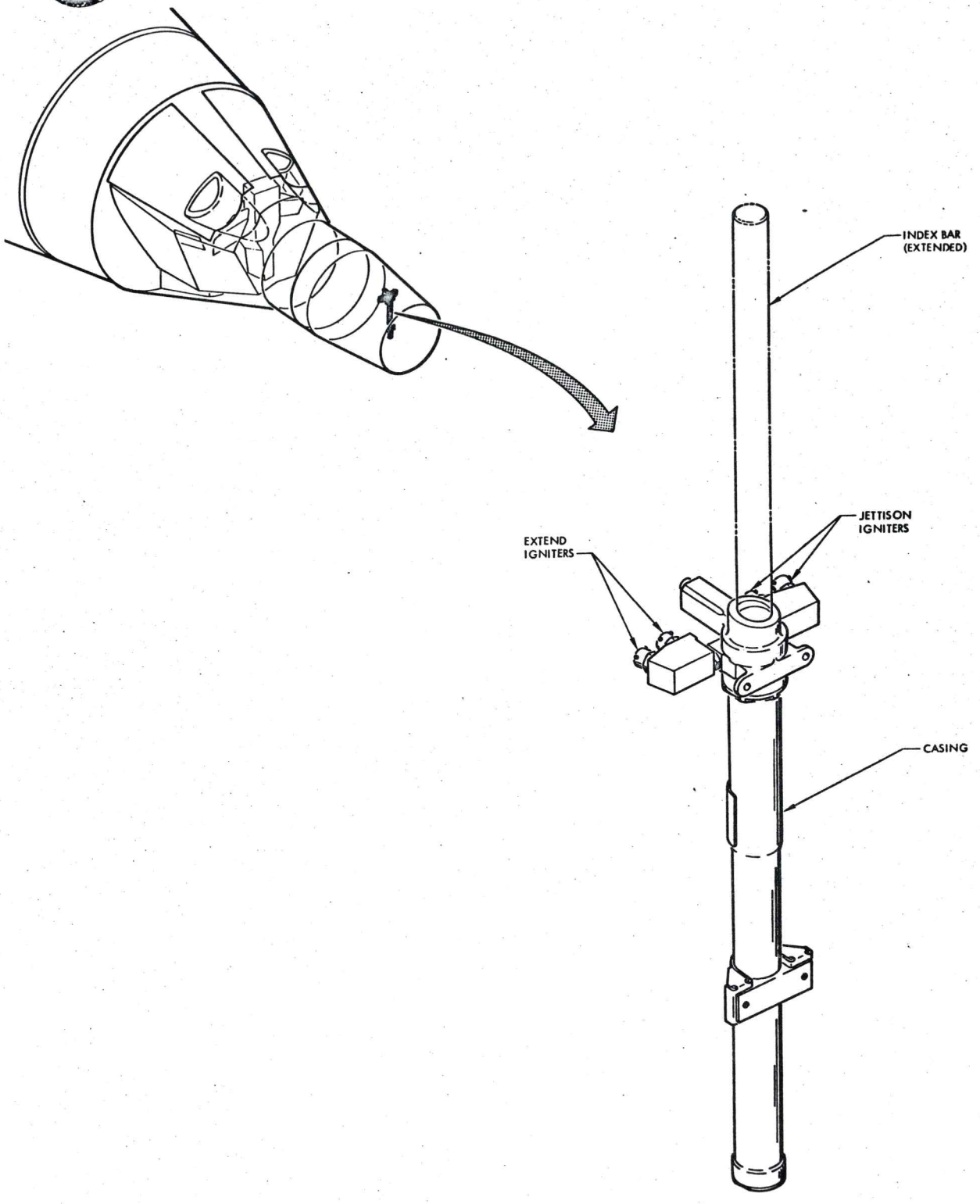

Figure 13-10 Index Bar Assembly

FM2-13-10

DOCKING CONE

The docking cone (Figure 13-3 and 13-11) is designed to mate with the spacecraft R & R section. In the moored condition, the spacecraft R & R section fits tight against the cone bottom and is held there by the mooring latch hooks. The cone shape tends to guide the spacecraft to the proper mooring position. This action is aided by a V-notch and its terminating slot. When the spacecraft index bar is aligned with the slot, the spacecraft and target vehicle are properly oriented in roll for mooring. The cone is connected to the docking adapter by three cone damper assemblies. A rigidizing linkage links the cone to the mooring drive (rigidizing) system mounted on the docking adapter main structure.

CONE DAMPER ASSEMBLIES

Two damper assemblies are composed of two dampers each and one assembly is composed of three dampers (7 dampers in all). When subjected to an impact, the dampers (Figure 13-3) compress slowly, absorbing energy as they move. In this way, most of the energy of impact is absorbed by the fluid in the dampers and very little transmitted to the target vehicle. Springs and gas pressure return the dampers to their extended positions when the impact is dissipated.

APPROACH LIGHTS

Two approach lights are mounted on the docking adapter (Figure 13-3). They are positioned so that they shine through the rear opening in the cone to illuminate the notch in cone during final approach of the spacecraft to the target docking vehicle. Some light, however, reaches the entire inner surface of the cone. The pilots turn the lights off and on by using the encoder command links. Electric power is supplied by the Agena power system.

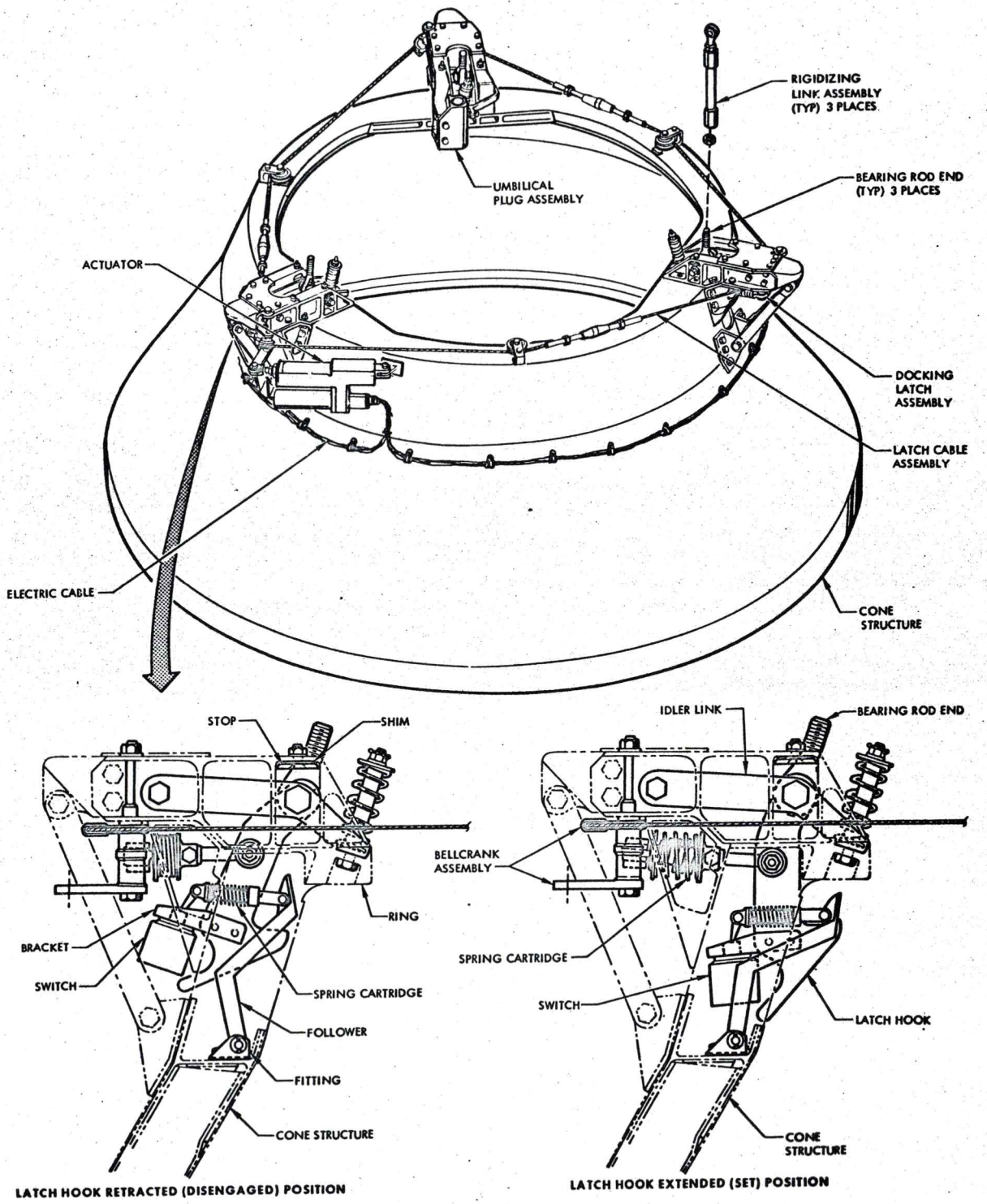

Figure 13-11 Cone Assembly

FM2-13-15

MOORING LATCH ASSEMBLIES

There are three mooring latch assemblies (Figure 13-11). Each assembly is mounted to the cone as shown in the figure. Each assembly contains a bellcrank which actuates the mechanism. The bellcranks of the three assemblies are connected together by a cable assembly. One bellcrank is connected to the latching actuator by a linkage. When the actuator is extended, the bellcranks are rotated so that the latch assemblies are in the reset condition. This is the condition which must exist just prior to mooring. As the spacecraft slides into the docking cone and contacts the latch hooks, the hooks are pushed aside to allow the latch catches to get in front of the hooks. As this happens, the hooks drop in behind the catches (elevated part of the receptacle) and hold the spacecraft in place. The umbilical plug is mounted on one of the cone structure members which supports a latch assembly. The latch actuator is electrically driven and either retracts or resets the latch hooks. Power to the latch actuator is switched by the Latched Sensing Switch, the Unlatched Limit Switch and the Unrigidized Limit Switch. During the unrigidize sequence, the actuator is energized automatically to rotate the bellcranks and retract the latch hooks to the disengaged condition. When the latches are disengaged, there is a 30-second delay before the latch hooks are automatically reset. The Latched sensing switch is operated only when the latch receptacle is present. If the latch receptacle is present, the Latched Sensing Switch will initiate the rigidize sequence when the latch hooks are reset.

AGENA TARGET VEHICLE STATUS DISPLAY PANEL

The status display panel (Figure 13-12) is located on the docking adapter just back of the V-notch in the docking cone. The notch gives the pilots a full view of the docking panel during near approach to the docking cone. The 12 displays on the panel and their functions are as follows:

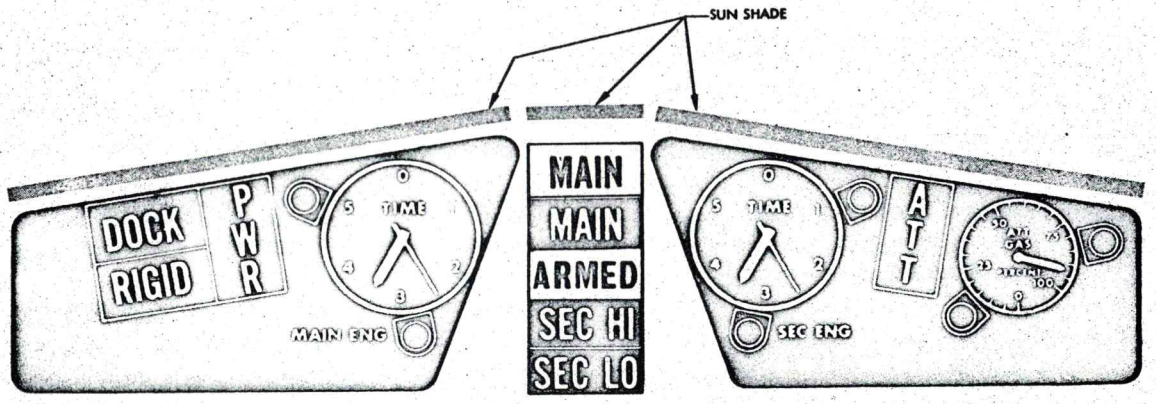

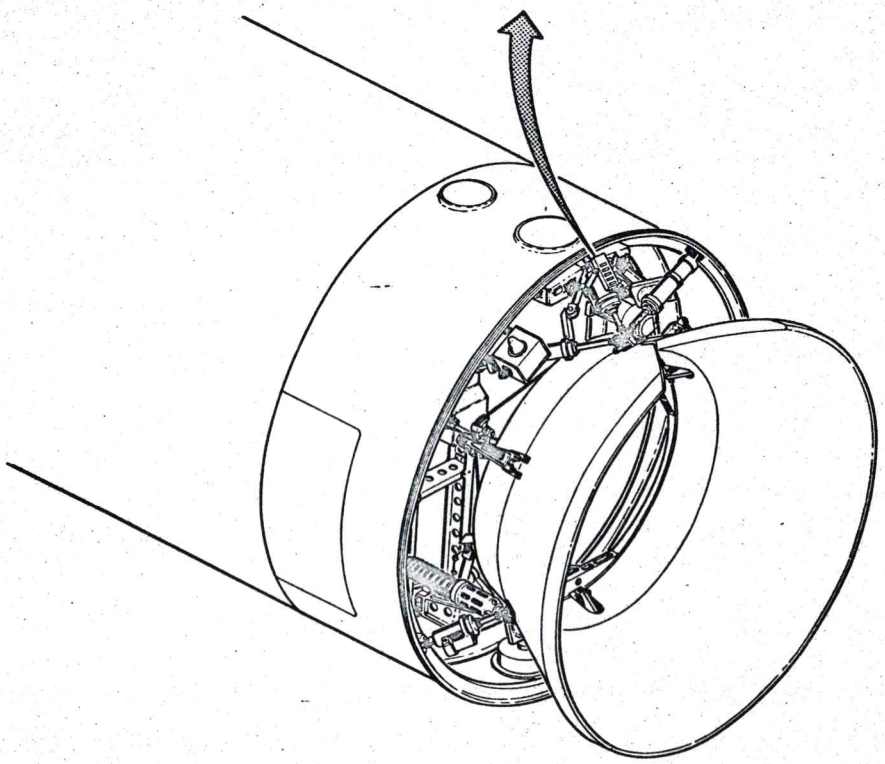

Figure 13-12 Status Display Panel

FM2-13-17

DOCK (green light) When lighted, indicates that the docking cone is unrigidized and that the latch hooks are reset.

RIGID (green light) When lighted, indicates that the docking cone is rigidized.

PWR (green light) When lighted, indicates that +28 volts DC unregulated, +28 volts DC regulated, -28 volts DC regulated, 115 volts 400 CPS single phase and 115 volts 400 CPS 3 phase power are operating.

MAIN (red light) When lighted, indicates the following:

a. With the main engine firing, the turbine has exceeded 27,000 RPM (1046 sensor level), the hydraulic pressure is below 1500 $\pm$ 20 PSI, or the differential pressure between the fuel and oxidizer tanks is below 2 $\pm$ 2 PSI.

b. With the main engine not firing, the differential pressure between the fuel and oxidizer tanks is below 2 $\pm$ 2 PSI (fuel above oxidizer).

MAIN (green light) When lighted, indicates that the main fuel tank is above 15 $\pm$ 2 PSIA, the oxidizer tanks is above 15 $\pm$ 2 PSIA and hydraulic pressure is above 50 $\pm$ 5 PSIA.

ARMED (amber light) When lighted, indicates that the engine control circuits are closed and either the main or secondary engines may be fired by command.

SEC HI (green light) When lighted, indicates that more than 1110 $\pm$ 20 PSI expulsion gas pressure exists in both nitrogen spheres for a 50 second Unit II (200 pounds) firing and that more than 170 $\pm$ 5 PSI regulated pressure exists in both propellant tank gas manifolds.

SEC LO (green light) When lighted, indicates that more than 360 $\pm$ 20 PSI expulsion gas pressure exists in both nitrogen spheres for a 150 seconds Unit I (16 pounds) firing and more than 170 $\pm$ 5 PSI regulated pressure exists in both

propellant tank gas manifolds.

ATT (green light) When lighted, indicates that the Agena attitude control system is active.

MAIN TIME (clock display) Indicates by minute and second hands the time remaining for main engine burn. The regulated 28-volt DC power is applied to the display unit when the main engine is running. This causes the display unit to decrease the time-remaining indication at a rate of one second per second of burning time.

SEC TIME (clock display) Indicates by minute and second hands the number of seconds of 200-pound secondary propulsion system (SPS) burn time remaining. The regulated 28-volt DC power is applied on separate wires for high and low thrusters of the SPS. This causes the display unit to decrease the time-remaining indication at a rate of one second per second of burn time for the high consumption and a rate of one twelfth (1/12) second per second of burn time for the low consumption rates.

ATT GAS (synchro display) Indicates the percentage of total pressure remaining in the Agena attitude control system gas spheres.

MOORING DRIVE SYSTEM

The mooring drive system (Figure 13-13) is composed of a power unit (DC motor and gears), four flexible drive shafts, an H-drive, three gear boxes, six limit switches and a mooring drive linkage. A drive arm is attached to the output shaft of each gear box.

The power unit supplies power to the gear boxes through the flexible drive shafts and the H-drive unit. The gear boxes rotate the drive arms which in turn, retract

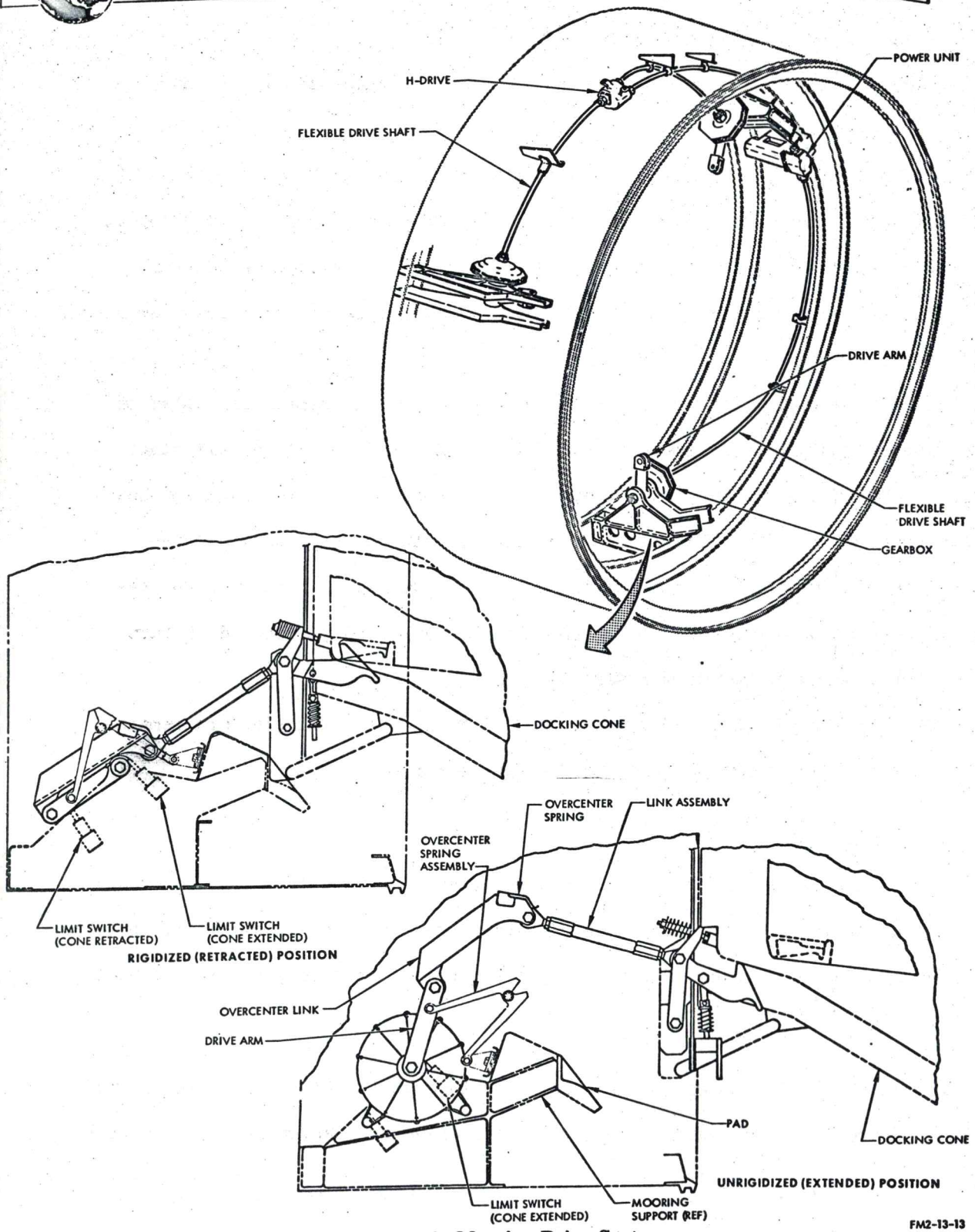

Figure 13-13 Mooring Drive System

or extend the rigidizing linkage. When the linkage is retracted, the docking cone is rigidized to the docking adapter and the spacecraft/Agena combination can be operated as a single unit. The linkage also moves an actuator which extends the umbilical plug out of its casing. When the linkage is extended, the umbilical plug is retracted into its casing and the docking cone is moved away from the adapter so that it is completely supported by the dampers. The limits switches sense when the linkage is either fully extended or fully retracted and in each case remove power from the drive motor when the limit is reached.

The power unit is operated to retract (rigidize) the system by the actuation of three sensing switches on the mooring latch assemblies. The sensing switches energize the mooring drive power unit when the spacecraft is latched to the docking cone. The linkage can also be retracted by the RIGIDIZE command to the Agena command programmer. Limit switches stop the power unit when the linkage is fully extended. The same limit switches also apply power to the unlatch side of the latch release actuator of the mooring latch assemblies.

ACQUISITION LIGHTS

The acquisition lights (Figure 13-3) are used for visual guidance and tracking of the target vehicle when the vehicles are 20 nautical miles or less apart.

Two lights are provided. They are mounted on the docking adapter and are held in the retracted position during the boost and insertion phases of a mission. The docking cone holds the lights in the retracted position until the cone is unrigidized by the pilots via the radar transponder command link.

Each light consists of a capacitor discharge flashing light system. The lamp

flashes at a rate of 65 flashes per minute and has a minimum of 100 candles effective intensity through an included angle of ± 90 degrees from the lamp longitudinal axis. A reflector increases the intensity so that the lamp is visible from 20 nautical miles with the intensity of a third magnitude star. The pilots turn the lights off and on via the encoded command links.

ENCODER AND ENCODER CONTROLLER

The encoder and the encoder controller are part of another system, the details of which are presented in Section IV and VIII.