J. strickland FS4

SM2A-03-SC014

SID 66-1073

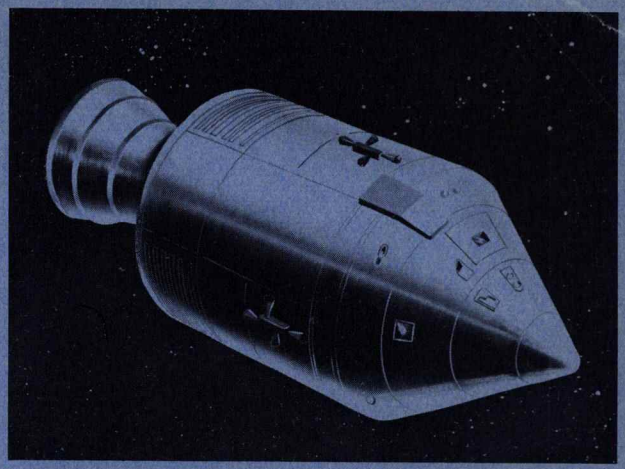

VOLUME I

APOLLO OPERATIONS HANDBOOK

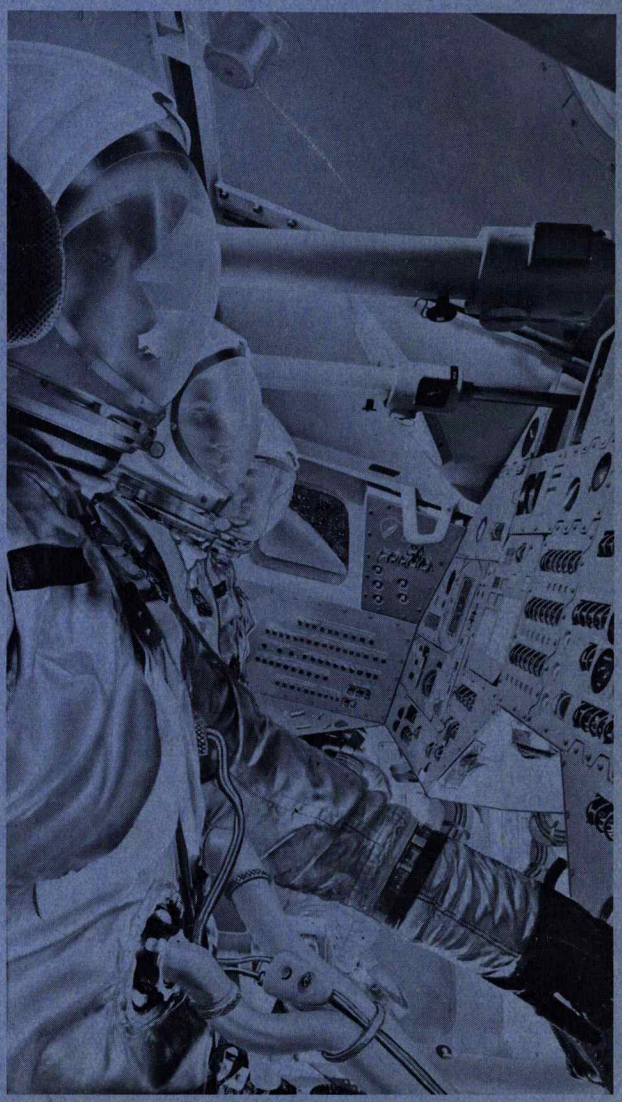

COMMAND AND SERVICE MODULE

SPACECRAFT 014

Prepared Under Direction of
NASA-MSC MISSION OPERATIONS BRANCH
FLIGHT CREW SUPPORT DIVISION

NORTH AMERICAN AVIATION, INC.
SPACE and INFORMATION SYSTEMS DIVISION

SM2A-03-SC014

APOLLO OPERATIONS HANDBOOK

COMMAND AND SERVICE MODULE

SPACECRAFT 014

VOLUME 1

SPACECRAFT AND SYSTEMS DESCRIPTION

Contract NAS9-150
Exhibit I; Paragraph 10.3

PREPARED BY NORTH AMERICAN AVIATION, INC.
SPACE AND INFORMATION SYSTEMS DIVISION

PUBLISHED UNDER AUTHORITY OF THE NATIONAL AERONAUTICS AND SPACE ADMINISTRATION

SID 66-1073

17 OCTOBER 1966

LIST OF EFFECTIVE PAGES

NOTE: The portion of the text affected by the current changes is indicated by a vertical line in the outer margins of the page.

TOTAL NUMBER OF PAGES IN THIS PUBLICATION IS 778, CONSISTING OF THE FOLLOWING:

Page	Page
Title	2.7-1 thru 2.7-48
A thru C	2.8-1 thru 2.8-70
i thru vi	2.9-1 thru 2.9-38
1-1 thru 1-22	2.10-1 thru 2.10-12
2-1 thru 2-2	2.11-1 thru 2.11-6
2.1-1 thru 2.1-12	2.12-1 thru 2.12-58
2.2-1 thru 2.2-40	3-1 thru 3-214
2.3-1 thru 2.3-74	4-1 thru 4-34
2.4-1 thru 2.4-36	A-1 thru A-6
2.5-1 thru 2.5-42	I-1 thru I-8
2.6-1 thru 2.6-46	

CHANGE INFORMATION

This handbook is subject to continuous change or revision on a priority basis to reflect current engineering or spacecraft configuration changes, or to improve content or arrangement. The content and changes are accounted for by the above List of Effective Pages, and by the following means:

Record of Publication. The publication date of the basic issue and each change issue is listed on page B as a record of all editions.

Page Change Date. Each page in this handbook has space for entering a change date. The latest publication date will be entered in this space each time a page is changed from the basic issue.

*The asterisk indicates pages changed, added, or deleted by the current change.

Manuals will be distributed as directed by the NASA Apollo Program Office. All requests for manuals should be directed to the NASA Apollo Spacecraft Program Office at Houston, Texas.

RECORD OF PUBLICATION

This issue of the Apollo Operations Handbook, Spacecraft 014, Volume I, dated 17 October 1966, constitutes the first and basic issue of the handbook - Volume I. Subsequent changes may be issued to maintain information current with the spacecraft configuration through completion of its mission. This record will reflect the publication date of any released changes.

FOREWORD

Volume 1 constitutes the description portion of the Apollo Operations Handbook. Volume 2 is separately bound and contains performance data and crew operational procedures.

This document has been derived from the most current available Apollo Block I information and its contents are restricted to the specific requirements of Spacecraft 014. The handbook is designed primarily for use by the flight crew, mission flight controllers, flight planners, and trainer operators.

NASA comments or suggested changes to this handbook should be addressed to the Flight Planning Section, FCSD, MSC, Office Code CF 32, Telephone HU3-4271.

TABLE OF CONTENTS

Section		Title	Page
1		SPACECRAFT	1-1
		Introduction	1-1
	1.1	Spacecraft 014 Configuration	1-1
	1.1.1	LES Assembly	1-1
	1.1.2	Command Module	1-4
	1.1.3	Service Module	1-17
	1.1.4	Spacecraft LEM Adapter	1-19
	1.1.5	Spacecraft Systems	1-19
	1.2	Launch Vehicle Configuration	1-19
	1.2.1	First Stage	1-21
	1.2.2	Second Stage	1-21
2		SYSTEMS DATA	2-1
		Introduction	2-1
	2.1	Guidance and Control	2.1-1
	2.1.1	Systems Interface - G&N	2.1-1
	2.1.2	Coasting Flight	2.1-2
	2.1.3	Powered Flight	2.1-2
	2.1.4	Atmospheric Flight	2.1-2
	2.2	Guidance and Navigation System	2.2-1
	2.2.1	Guidance and Navigation (G&N) System	2.2-1
	2.3	Stabilization and Control System (SCS)	2.3-1
	2.3.1	Introduction	2.3-1
	2.3.2	Functional Description	2.3-3
	2.3.3	Flight Control Profiles	2.3-42
	2.3.4	Major Components/Subsystem Description	2.3-53
	2.3.5	Performance and Design Data	2.3-67
	2.3.6	Operational Limitations and Restrictions	2.3-67
	2.3.7	Telemetry Measurements	2.3-72
	2.4	Service Propulsion System (SPS)	2.4-1
	2.4.1	Functional Description	2.4-1
	2.4.2	Major Component/Subsystem Description	2.4-2
	2.4.3	Performance and Design Data	2.4-30
	2.4.4	Operational Limitations and Restrictions	2.4-34
	2.4.5	Telemetry Measurements	2.4-34
	2.5	Reaction Control System (RCS)	2.5-1
	2.5.1	S/M RCS Functional Description	2.5-3
	2.5.2	S/M RCS Major Component/Subsystem Description	2.5-4
	2.5.3	S/M RCS Performance and Design Data	2.5-16
	2.5.4	S/M RCS Operational Limitations and Restrictions	2.5-18

Section	Title	Page
2.5.5	S/M RCS Telemetry Measurements	2.5-18
2.5.6	Command Module Reaction Control Subsystem Functional Description	2.5-21
2.5.7	C/M RCS Major Components/Subsystem Description	2.5-22
2.5.8	C/M RCS Performance and Design Data	2.5-37
2.5.9	C/M RCS Operational Limitations and Restrictions	2.5-39
2.5.10	C/M RCS Telemetry Measurements	2.5-39
2.6	Electrical Power Subsystem	2.6-1
2.6.1	Introduction	2.6-1
2.6.2	Functional Description	2.6-1
2.6.3	Major Component/Subsystem Description	2.6-5
2.6.4	Performance and Design Data	2.6-34
2.6.5	Operational Limitations and Restrictions	2.6-37
2.6.6	Telemetry Measurements	2.6-39
2.7	Environmental Control System	2.7-1
2.7.1	Introduction	2.7-1
2.7.2	Functional Description	2.7-2
2.7.3	Major Component/Subsystem Description	2.7-3
2.7.4	Performance and Design Data	2.7-27
2.7.5	Operational Limitations and Restrictions	2.7-36
2.7.6	Telemetry Measurements	2.7-40
2.8	Telecommunication System	2.8-1
2.8.1	Introduction	2.8-1
2.8.2	Functional Description	2 8-2
2.8.3	Major Component/Subsystem Description	2.8-13
2.8.4	Performance and Design Data	2.8-62
2.8.5	Operational Limitations and Restrictions	2.8-67
2.8.6	Telemetry Measurements	2.8-69
2.9	Sequential Systems	2.9-1
2.9.1	Introduction	2.9-1
2.9.2	Functional Description	2.9-1
2.9.3	Major Component/Subsystem Description	2.9-15
2.9.4	Performance and Design Data	2.9-33
2.9.5	Operational Limitations and Restrictions	2.9-35
2.9.6	Telemetry Measurements	2.9-36
2.10	Caution and Warning System	2.10-1
2.10.1	Introduction	2.10-1
2.10.2	Functional Description	2.10-1
2.10.3	Major Component/Subsystem Description	2.10-1
2.10.4	Performance and Data Design	2.10-3
2.10.5	Operational Limitations and Restrictions	2.10-4
2.10.6	Telemetry Measurements	2.10-10
2.11	Miscellaneous Systems Data	2.11-1
2.11.1	Introduction	2.11-1
2.11.2	Clocks	2.11-1
2.11.3	Accelerometer (G-Meter)	2.11-1
2.11.4	Command Module Interior Lighting	2.11-1
2.11.5	Command Module Uprighting System	2.11-2

Section		Title	Page
	2.12	Crew Personal Equipment	2.12-1
	2.12.1	Introduction	2.12-1
	2.12.2	Crew Compartment Configuration and Crew Environment	2.12-1
	2.12.3	Sighting Aids	2.12-3
	2.12.4	Space Suit Assembly (GFP)	2.12-8
	2.12.5	Crew Couches	2.12-17
	2.12.6	Crewman Restraints	2.12-27
	2.12.7	Flight Data File (GFP)	2.12-32
	2.12.8	Crewman Inflight Toolset and Workshelf (GFP)	2.12-34
	2.12.9	Crew Water	2.12-42
	2.12.10	Food	2.12-44
	2.12.11	Personal Hygiene (GFP)	2.12-46
	2.12.12	Medical Supplies (GFP)	2.12-48
	2.12.13	Survival Kit (GFP)	2.12-52
	2.12.14	Stowage	2.12-55
3		CONTROLS AND DISPLAYS	3-1
	3.1	Introduction	3-1
	3.2	Controls/Displays Locator Index	3-2
4		EXPERIMENTS AND SCIENTIFIC EQUIPMENT	4-1
		Introduction	4-1
	4.1	Scientific Equipment	4-1
	4.1.1	Medical Data Acquisition System (MDAS)	4-1
	4.1.2	Electrical Cables and Adapters	4-6
	4.1.3	Scientific Experiments Airlock	4-8
	4.2	Medical Experiments	4-10
	4.2.1	In-Flight Phonocardiogram (M-4A) (M004)	4-10
	4.2.2	Bioassays Body Fluid (M005)	4-13
	4.2.3	Bone Demineralization (M006)	4-15
	4.2.4	Calcium Balance Study (M007)	4-16
	4.2.5	Cytogenetic Blood Studies (M011)	4-17
	4.2.6	Exercise Ergometer (M012)	4-18
	4.2.7	Metabolic Rate Measurement (M019)	4-20
	4.2.8	Pulmonary Function (M020)	4-21
	4.2.9	Lower Body Negative Pressure	4-23
	4.3	Scientific Experiments	4-24
	4.3.1	Orbital Frog Otolith Function (S014)	4-24
	4.3.2	Zero-G Single Human Cell (S015)	4-27
	4.3.3	Trapped Particles Asymmetry (S016)	4-30
	4.3.4	X-Ray Astronomy (S017)	4-32
	4.3.5	Micrometeorite Collection (S018)	4-33
Appendix			
A		SYMBOLS AND DEFINITIONS	A-1
		ALPHABETICAL INDEX	I-1

SECTION 1

SPACECRAFT

INTRODUCTION.

This section contains information relating to Spacecraft 014 configuration, and a description of the launch vehicle and boosters used for the mission.

1.1 SPACECRAFT 014 CONFIGURATION.

Spacecraft 014 (figure 1-1) conforms to a Block I CSM configuration consisting of a launch escape system (LES) assembly, command module (C/M), service module (S/M), and the spacecraft lunar excursion module adapter (SLA). This spacecraft, designed for an earth orbital mission, does not contain a lunar excursion module (LEM) within its adapter. (For a description of the launch vehicle used with spacecraft 014, refer to paragraph 1.2.)

NOTE The Block I configuration missions for the Apollo program provide the following:

- Command module and service module development for earth orbital missions
- Demonstration of systems operational capabilities including all types of aborts, land and water recovery, Saturn IB and Saturn V operation and capability, and systems operation during earth orbit
- Development of qualified teams for checkout, launch, manned space flight network (MSFN), recovery, and flight analysis.

1.1.1 LES ASSEMBLY.

The LES assembly (figure 1-1) provides the means for separating the C/M from the launch vehicle during pad or suborbital aborts. This assembly consists of a Q-ball instrumentation assembly (nose cone), ballast compartment, canard surfaces, pitch control motor, tower jettison motor, launch escape motor, a structural skirt, an open-frame tower, and a boost protective cover (BPC). The structural skirt at the base of the housing, which encloses the rocket motors, is secured to the upper portion of the tower. The BPC (figure 1-2) is attached to the lower end of the tower to

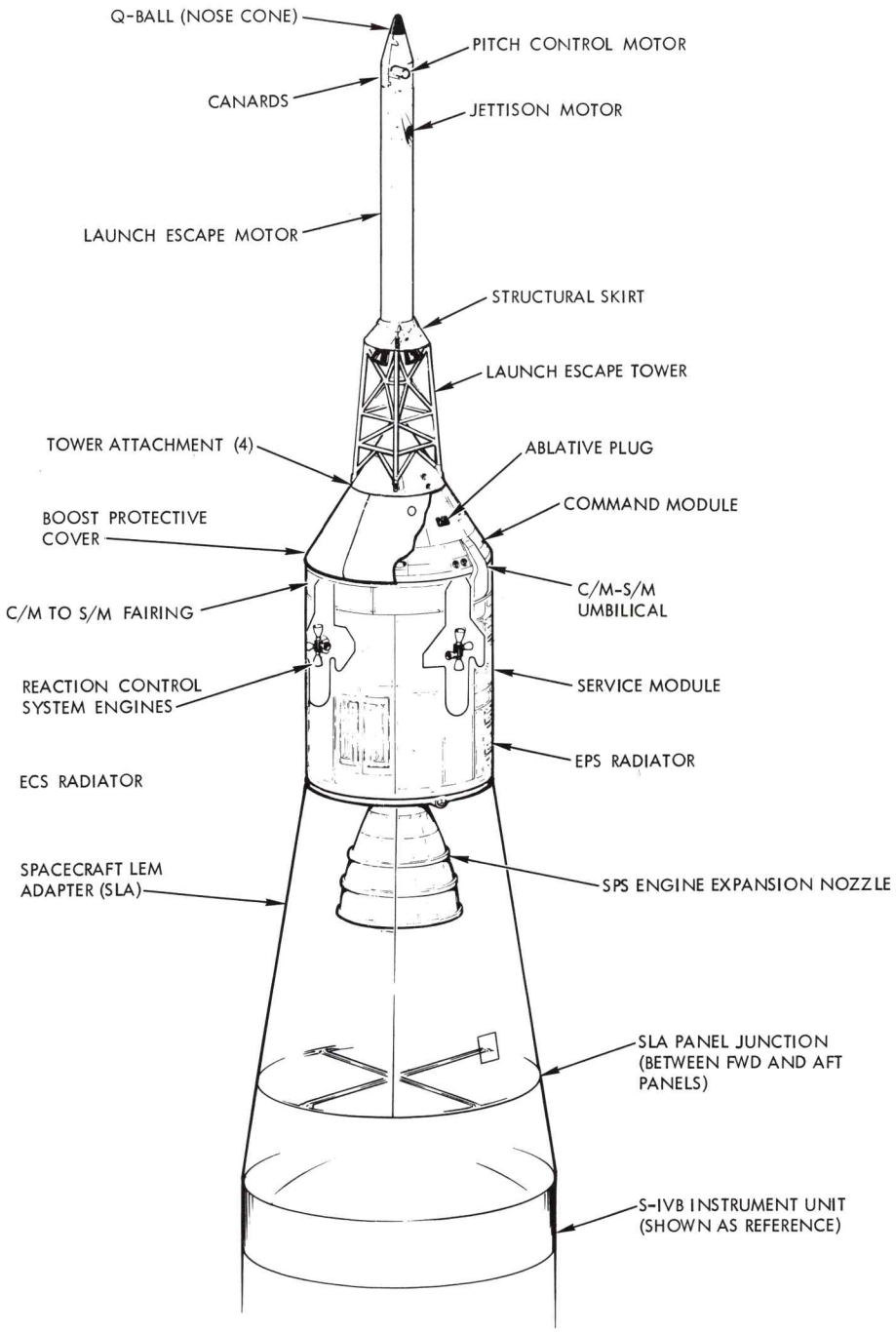

Figure 1-1. Spacecraft 014 Configuration (Sheet 1 of 2)

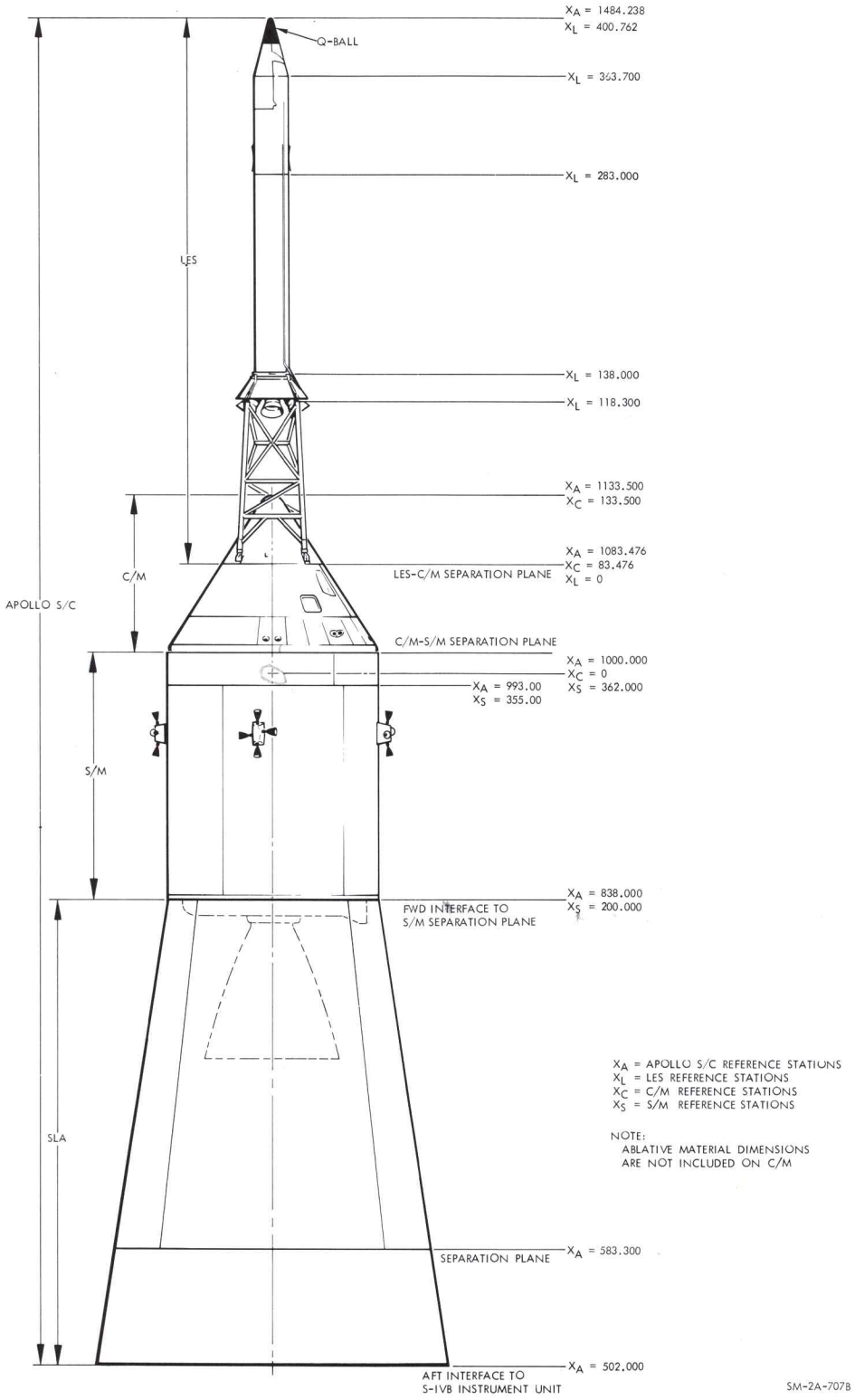

Figure 1-1. Spacecraft 014 Configuration (Sheet 2 of 2)

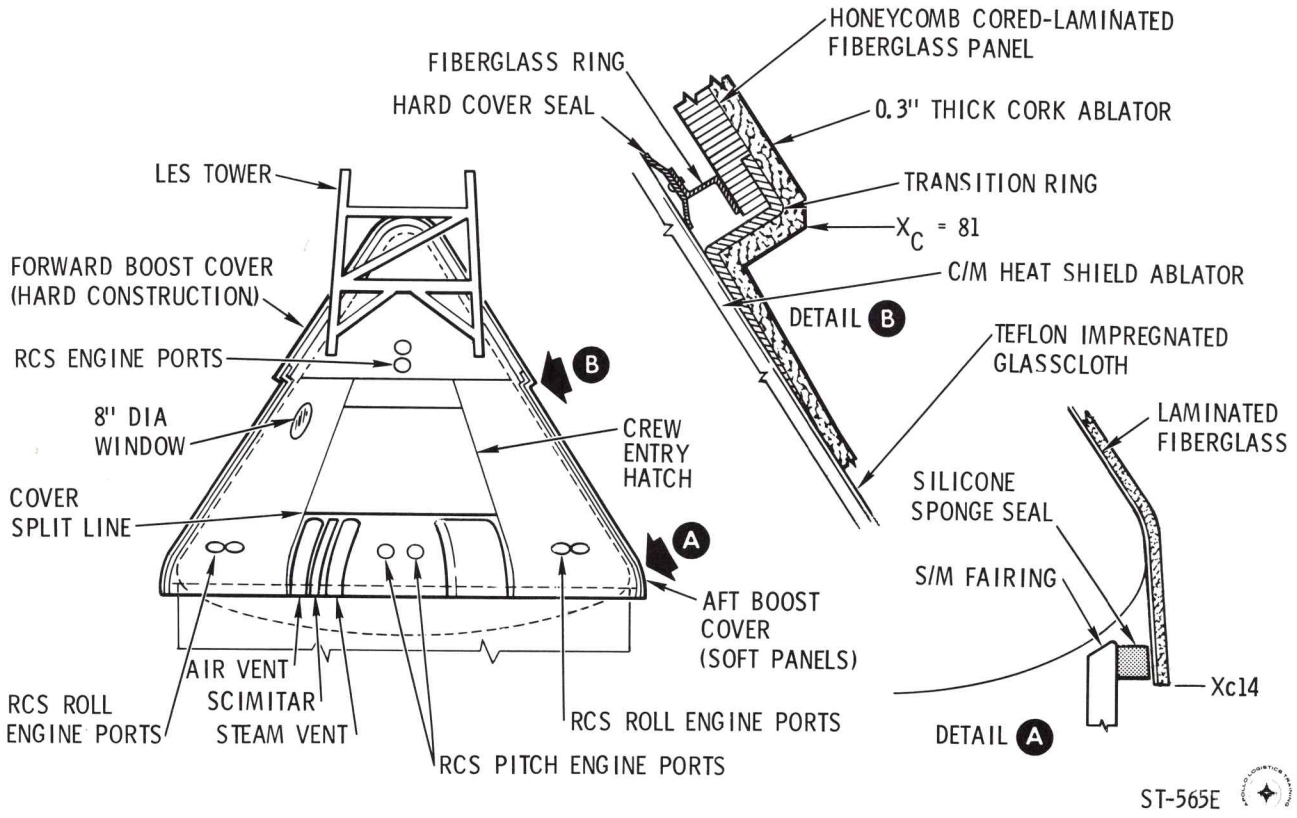

Figure 1-2. Boost Protective Cover

protect the C/M from thermal heat during boost and from exhaust damage by the launch escape and tower jettison motors. Explosive nuts, one in each tower well leg, secure the tower to the C/M structure. (For additional information, refer to the sequential systems in section 2, subsection 2.9.)

1.1.2 COMMAND MODULE.

The C/M (figure 1-3) forms the spacecraft control center, contains necessary automatic and manual equipment to control and monitor the spacecraft systems, and contains the required equipment for safety and comfort of the crew. The module is an irregular-shaped, primary structure encompassed by three heat shields (coated with ablative material and joined

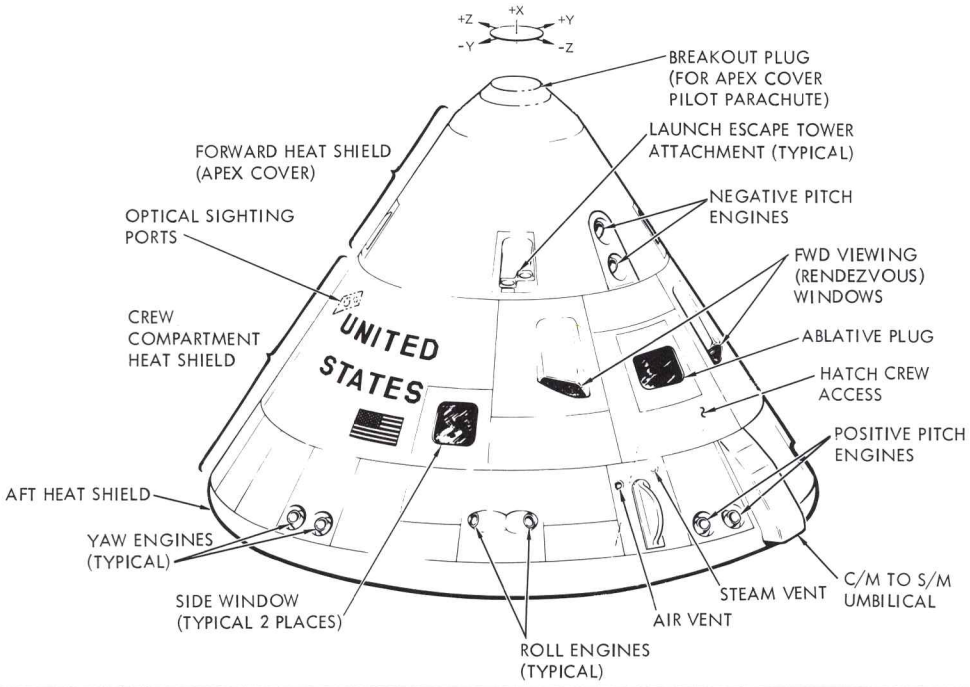

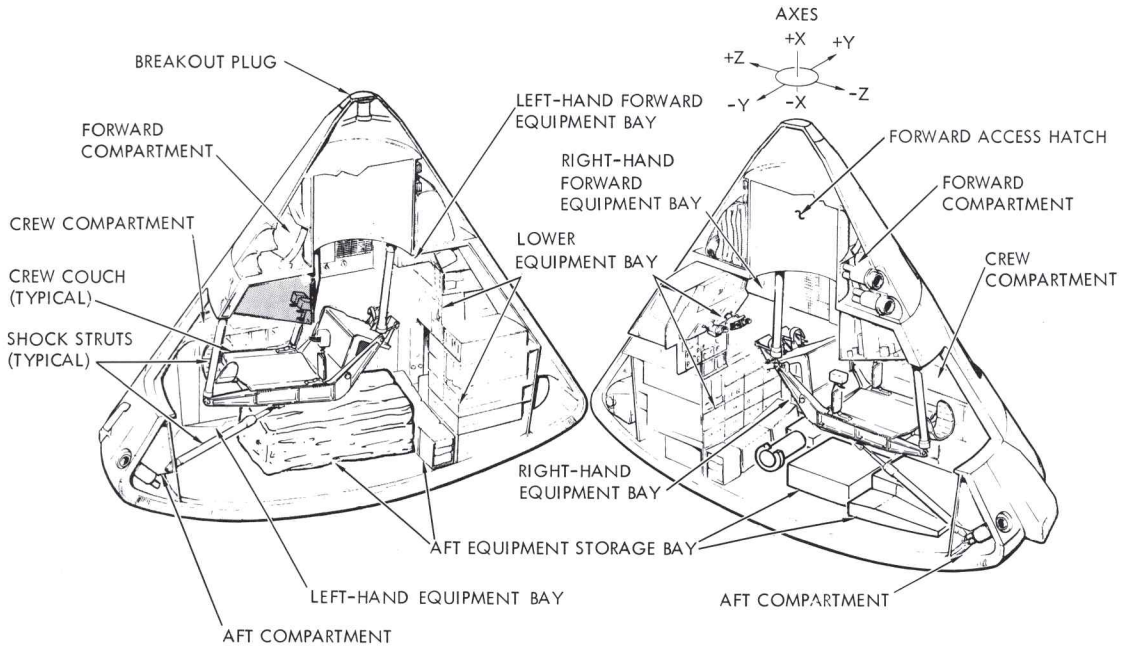

NOTE:
CENTER COUCH REMOVED FOR CLARITY.

SM-2A-642G

Figure 1-3. Spacecraft 014 Command Module

or fastened to the primary structure) forming a conical-exterior shape. The C/M consists of a forward compartment, a crew compartment, and an aft compartment.

1.1.2.1 Forward Compartment.

The forward compartment (figure 1-3) is the area outside the forward access tunnel, forward of the crew compartment forward bulkhead and is covered by the forward heat shield. Four 90-degree segments around the perimeter of the tunnel contain the recovery equipment, two negative-pitch reaction control system engines, and the forward heat shield release mechanism. Most of the equipment in the forward compartment consists of earth landing (recovery) system components.

The forward heat shield, or apex cover, is made of brazed stainless-steel honeycomb and covered with ablative material. It contains four recessed fittings which permit the launch escape tower to be attached to the C/M inner structure. Jettison thrusters separate the apex cover from the C/M after entry or after the launch escape assembly is separated during an abort. (For additional information, refer to the sequential systems in section 2, subsection 2.9.)

1.1.2.2 Crew Compartment.

The crew compartment or inner structure (figure 1-3) is a sealed cabin with pressurization maintained by the environmental control system (ECS). The compartment, protected by a heat shield, contains controls and displays for operation of the spacecraft and spacecraft systems; contains mechanical adjustments for the crew couches, restraint harness assemblies, hatch covers, window shades, etc.; and is provided with crew equipment, food and water, waste management provisions, survival equipment, and scientific experiments equipment. Access hatches, observation windows, and equipment bays are attached as part of the compartment structure.

The crew compartment heat shield, like the apex cover, is made of brazed stainless-steel honeycomb and covered with ablative material. This heat shield, or outer structure, contains the S/C umbilical connector outlet, ablative plugs, and a copper heat sink for the optical sighting ports in the lower equipment bay, two side observation windows, two forward viewing windows, and the outer cover for the side access hatch which also contains an observation window.

1.1.2.3 S/C Controls and Displays.

Information relating to controls and displays for operation of the spacecraft and its systems is provided in section 3.

1.1.2.4 C/M Mechanical Controls.

Mechanical controls (figure 1-4) are provided in the crew compartment for manual operation of the crew couch assembly, side access hatch covers, forward access hatch cover, and manual override levers for the ECS cabin pressure regulator. Tools for opening or securing the hatch covers are in the stowage area under the worktable in the lower equipment bay; the tools are components of the in-flight tool kit.

1.1.2.4.1 Crew Couch Controls.

Crew couch manual controls for each headrest, armrest, and seat pan assembly are provided for individual crew comfort. The crew couch assembly can also be manually adjusted for crew positioning during simulated docking maneuvers, crew convenience in getting in and out of the couches, and crew access to all equipment bays in the C/M. (For additional information, refer to crew couch assembly in section 2, subsection 2.12.)

1.1.2.4.2 Couch Attenuation Struts.

Eight attenuation struts are provided for connecting the crew couches to the C/M inner structure. (See figure 1-5.) Each strut is capable of absorbing energy at a predetermined rate through crushable aluminum honeycomb cores contained within the strut cylinders. In effect, the strut piston action during C/M impact absorbs energy that the crew is not capable of absorbing.

Two Y-Y axis struts are located at the outer extremities of the couch assembly at the hip beam. The cylinder end of each strut is firmly attached to the unitized couch while the piston end, containing a flat circular foot, reacts against a flat bearing plate (attenuation panel) attached to the structure.

Two Z-Z axis struts are attached to the main couch beams under the unitized backrest and the aft bulkhead of the structure, just below the side access hatch. In addition to the crushable cores within the struts, friction brake snubbers are provided on the end of the pistons for additional breaking action. During a compression stroke or initial tension load, these friction brakes act in conjunction with the inner pistons which simultaneously crush the cylinder inner cores. Additional tension loads are absorbed by a combination of the outer and inner friction mechanisms which continue the crushing action on the cylinder cores.

Four X-X axis struts are attached to the forward C/M structure and the beam extremities of the couch. These struts, except for the addition of lockout mechanisms, are basically the same as the Z-Z axis struts. A lockout mechanism, is provided on each strut to prevent any strut

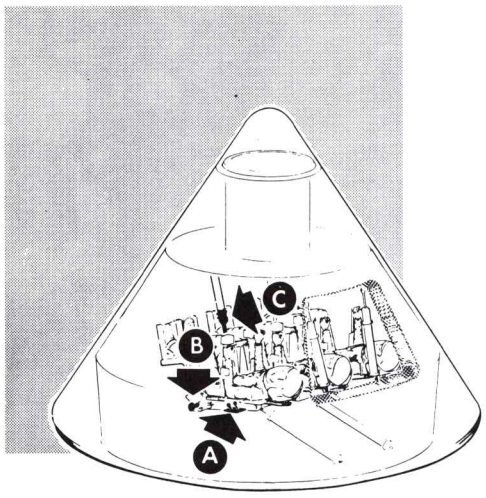

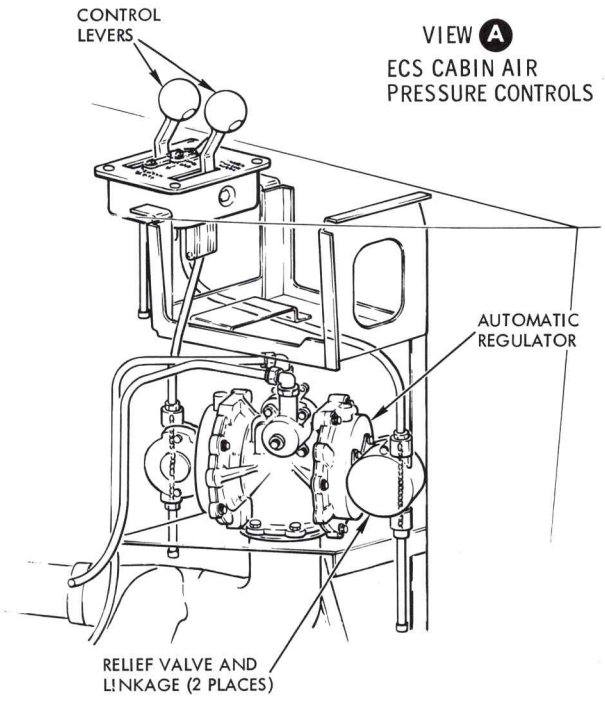

VIEW C
X-X ATTENUATION STRUT LOCKOUT MECHANISM (4 PLACES)

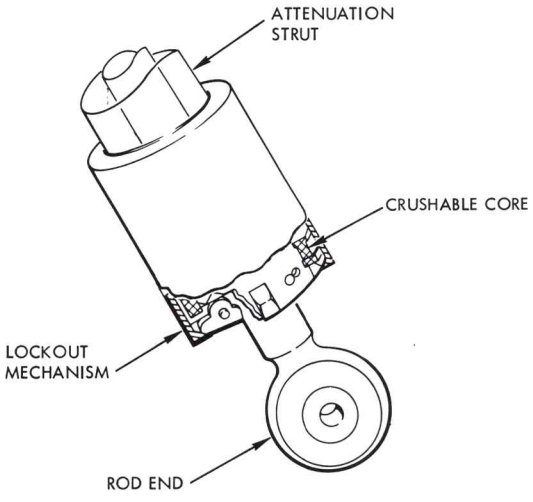

VIEW B
Y-Y ATTENUATION STRUT (2 PLACES)

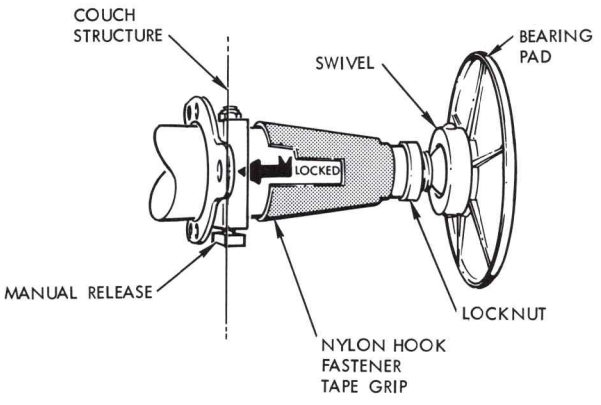

SM-2A-752E

Figure 1-4. C/M Mechanical Systems (Sheet 1 of 4)

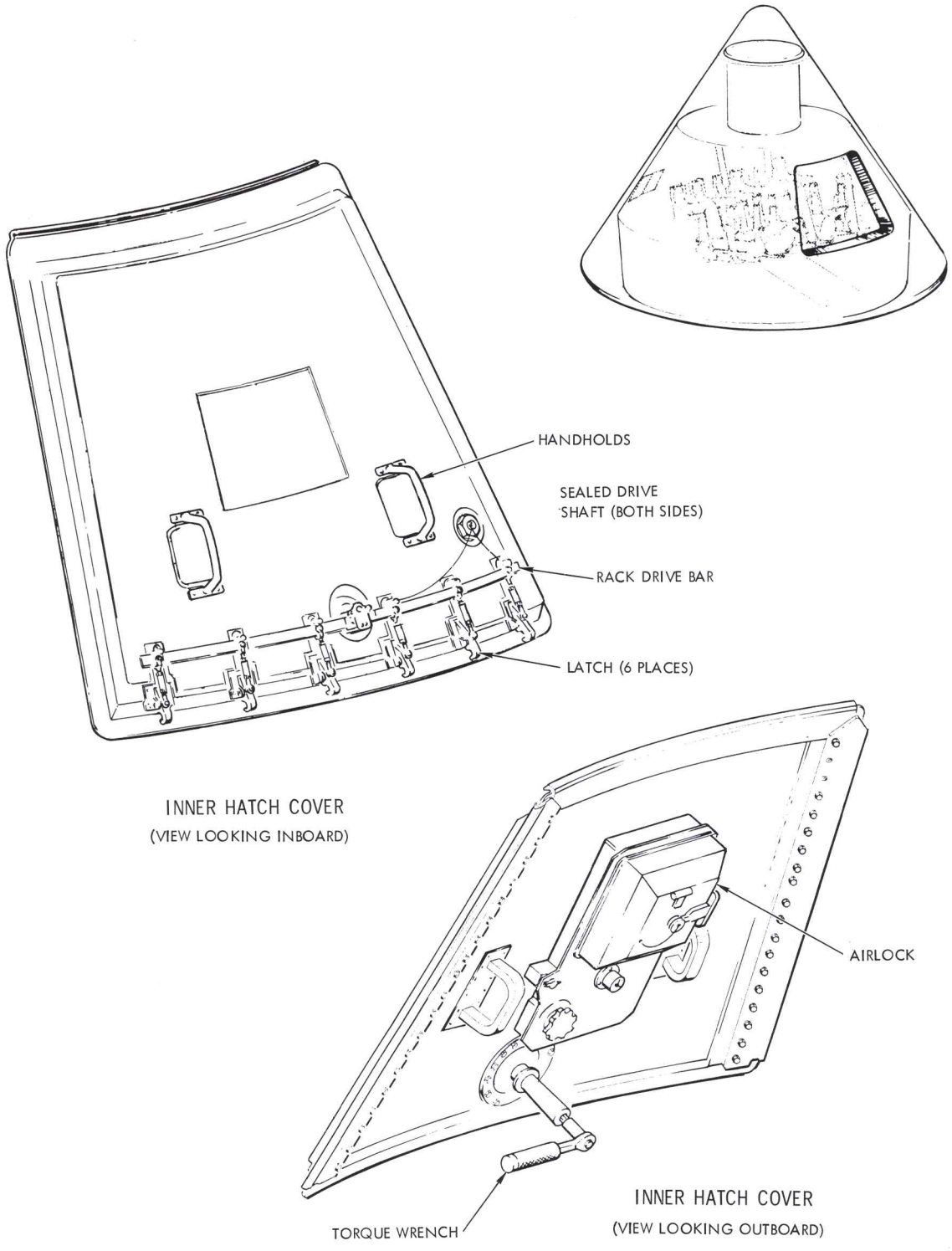

Figure 1-4. C/M Mechanical Systems (Sheet 2 of 4)

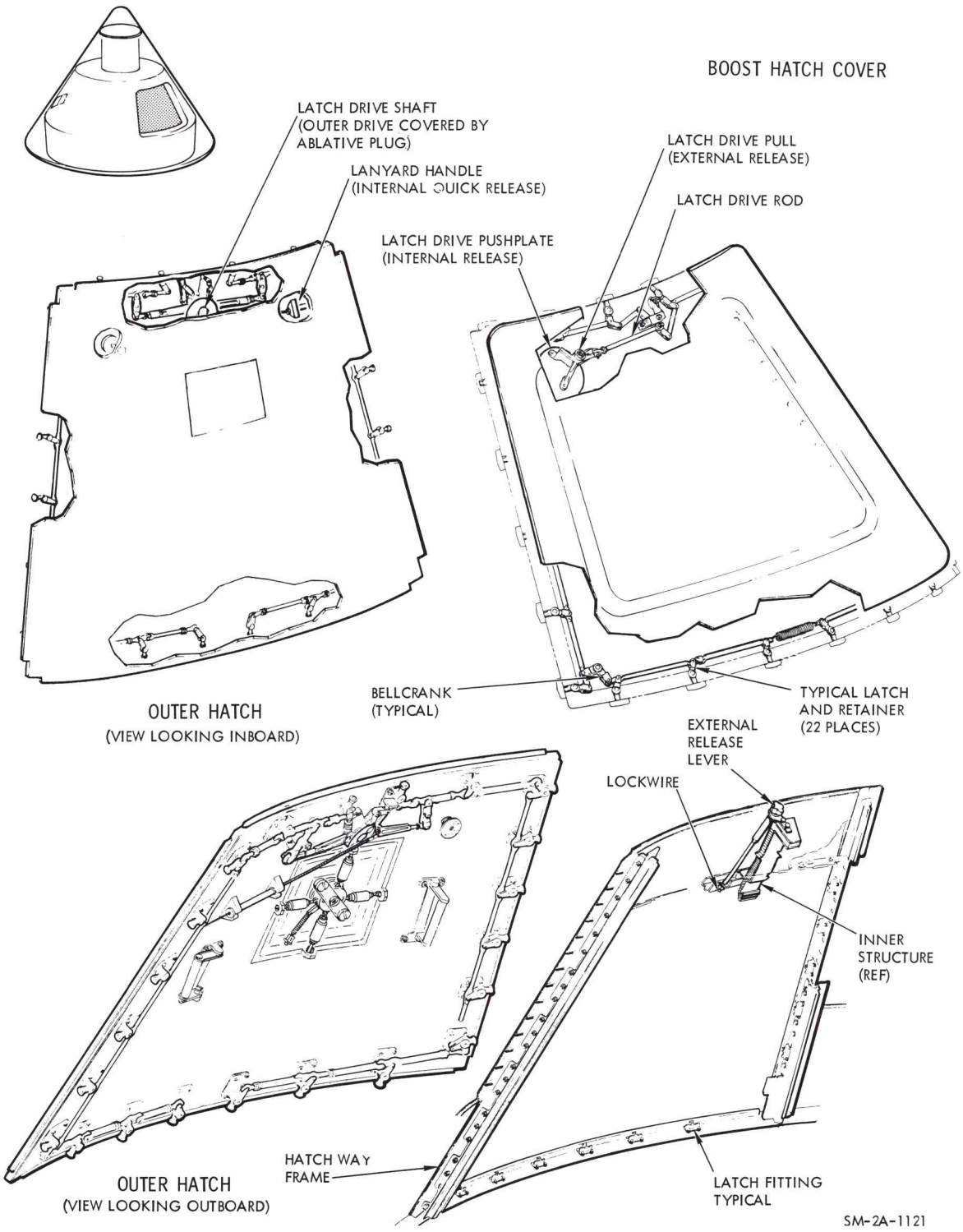

Figure 1-4. C/M Mechanical Systems (Sheet 3 of 4)

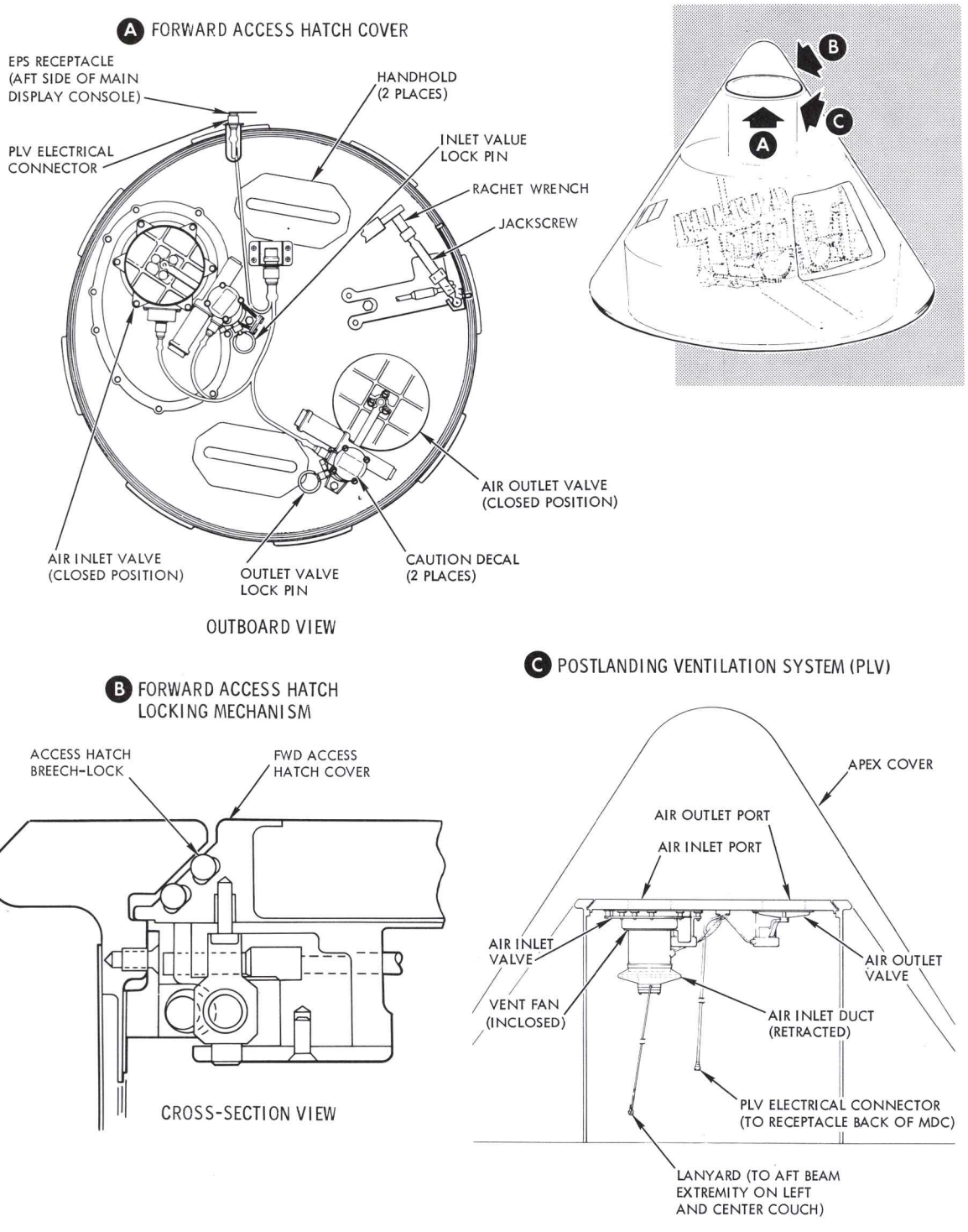

Figure 1-4. C/M Mechanical Systems (Sheet 4 of 4)

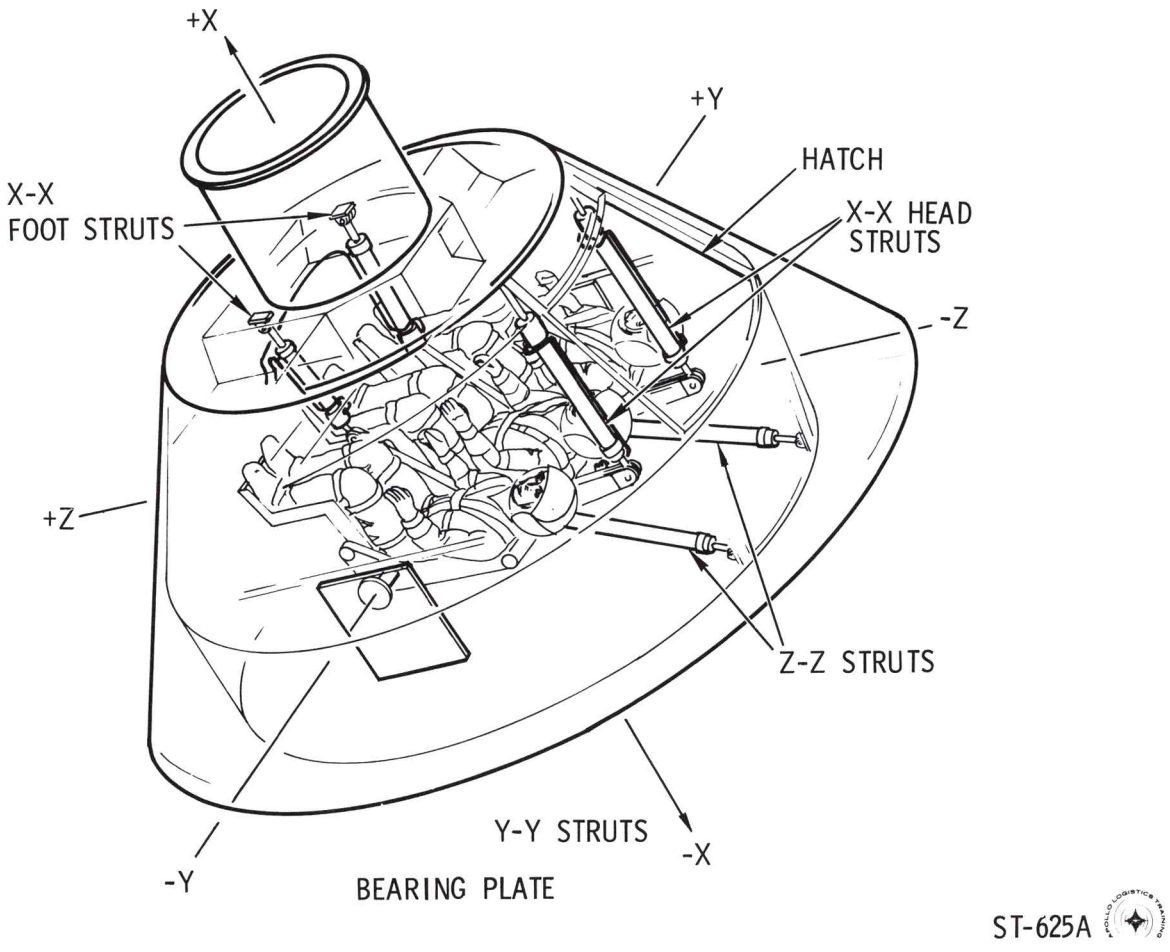

Figure 1-5. Internal Attenuation System

attenuation prior to impact (during normal mission flight loads). Upon impact, the honeycomb core will be crushed allowing the piston rod to stroke.

1.1.2.4.3 Crew Access Hatch Covers.

The C/M crew access hatch is provided with three covers (inner, outer, and boost) and the necessary latching mechanisms for securing the covers to the C/M. (See figure 1-4.) Latches for these covers can be manually operated from either side of the hatch by a removable handcrank or torque wrench with a 7/16-inch drive. The inner cover is equipped with a sealed drive, a rack-drive bar, and six latches which engage fittings on

the C/M inner structure (to preload the hatch for sealing). Also, an airlock is provided in the hatch. (See figure 1-4.) The airlock chamber and mechanisms provide for experiments to be passed through the airlock and conducted outside the C/M during the space flight. (For additional information, refer to the scientific experiment section, section 4). The outer cover is equipped with bellcranks, rollers, and push-pull rods, an overcenter lock, and 22 latches which engage fittings on the C/M outer structure. An ablative screw-in plug is used to protect the outer drive shaft in the outer hatch cover. This plug must be removed before a handcrank can be inserted into the drive shaft from outside the C/M. An emergency latch release is also provided for the outer hatch cover, but can only be operated by personnel outside the C/M during recovery procedures. To open the hatch by this means after landing, the bolt will be unscrewed until the assembly is lengthened about 1-1/2 inches. This will allow sufficient clearance for opening the hatch. The boost hatch cover is also equipped with mechanical components (including 22 latches) for installing it flush with the boost protective cover. This hatch cover makes it possible for the crew to get in and out of the S/C during prelaunch operations. A ground support tool (G15-824105 handle) is used to remove (pull) the boost cover from outside the C/M. A plunger on the inside of the outer hatch engages a latch drive push plate to release the boost hatch cover from inside the C/M.

1.1.2.4.4 Forward Access Hatch Cover.

The C/M forward access hatch is provided with a cover that can be operated from either the inside or outside the crew compartment. (Outside operation is possible only after the LES, boost protective cover, and forward heat shield have been jettisoned.) (See figure 1-4.) A breech-lock method is used to engage and rotate the cover into the forward end of the tunnel ring. The internal pressure of the C/M will assist to seal the hatch cover by forcing it against its seat. A jackscrew (with a hex socket at one end) is mounted on the cover and will bear against a bracket on the tunnel wall. When turned by a handcrank or torque wrench with a 5/32-inch drive, the jackscrew will extend and allow the cover to be rotated and removed. The cover is rotated by use of the inside handholds or the outside by an item of GSE and can only be retrieved from within the crew compartment end of the tunnel.

1.1.2.4.5 Windows and Shades.

Five windows are provided through the inner structure and heat shield of the C/M; two forward viewing, two side observation, and the crew access hatch windows. (See figure 1-3.) During orbital flight, photographs of external objects will be taken through the viewing and observation windows. The inner windows (including the circular inner hatch window) are made of tempered silica glass with 0.25-inch-thick double panes, separated

by 0.1 inch of space, and have a softening temperature point of 2000°F. The outer windows (including the square outer hatch window) are made of amorphous fused silicon with a single 0.7-inch-thick pane. Each pane contains an antireflecting coating on the external surface, and has blue-red reflective coating on the inner surface for filtering out most infrared and all ultraviolet rays, a softening temperature point of 2800°F, and a melting point of 3110°F.

Shades are provided for controlling external light entering the C/M through the triangular forward viewing windows, the square side observation windows, and the circular inner hatch window. These shades, individually designed for each window configuration, are made of mylar film which has been heat-treated to roll up when not held flat. The shades are opaque for zero light transmittal, have a nonreflective inner aluminized surface, two snap fasteners and fabric handles for attaching or removing from a particular window, and a 3/4-inch strip of Velcro hook material around the outer surface for holding the shade against the Velcro pile around the perimeter of the window. If desired, a shade can be peeled back from the Velcro pile material and stowed in place on one side of the window.

1.1.2.4.6 Cabin Pressure Controls.

Two control levers for manually operating the ECS cabin pressure relief valves are located near the C/M left couch and left side window. (See figure 1-4.) These levers are provided as a mechanical override for opening and closing the redundant sides of the automatic cabin pressure regulator. (For additional information, refer to the environmental control system in section 2.)

1.1.2.5 Crew Equipment and Equipment Bays.

Each crewmember has personal and accessory equipment provided for his use in the crew compartment. Major items of personal equipment consist of a pressure garment assembly (PGA) with attaching hose and umbilical, a communications assembly, a constant-wear garment, biomedical sensors, and radiation dosimeters. Major items of accessory equipment shared by the crew consist of an in-flight tool set and a medical kit. (For a detailed list of crew equipment, refer to section 2, subsection 2.12.) (Specific items contained in the C/M equipment and storage bays are listed in figure 1-5.)

1.1.2.6 Food and Water.

Food and water provisions, including water delivery and food preparation equipment, are available in the crew compartment LHEB and LEB (figure 1-6) for the length of the mission. Food may be prepared by adding water to plastic bags containing the dehydrated food and kneading the mixture. Prepared food can be squeezed directly into the mouth of an

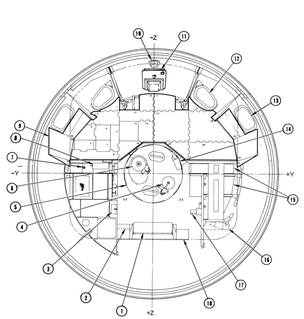

FORWARD REFERENCE VIEW

1 Optics shroud
2 LEB lighting control panel
3 Food reconstitution device
4 Postlanding ECS air outlet duct
5 Forward access hatch cover
6 Postlanding ECS air inlet duct
7 Water delivery valve
8 Water delivery unit
9 Main display console (MDC panels 1 through 26)
10 Crew access hatch actuator (inner cover)
11 Scientific Airlock
12 Forward viewing or rendezvous window (2 places)
13 Side window (2 places)
14 TV camera (launch and entry)
15 Survival provisions
16 TV camera mount (optional)
17 Measurement system instrumentation
18 Apollo guidance computer navigational display keyboard

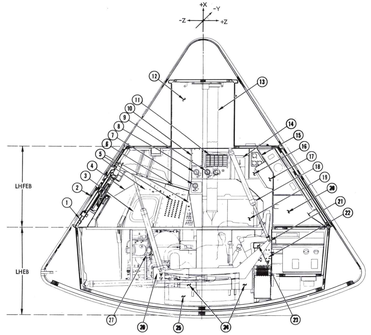

LEFT-HAND FORWARD EQUIPMENT BAY (LHFEB) AND LEFT-HAND EQUIPMENT BAY (LHEB)

1 Inner hatch cover
2 Outer hatch cover
3 Side window
4 Rendezvous window housing
5 Side console panels (left)
6 Main display console (mf)
7 Comdr suit connector panel and electrical connector
8 Sr pilot suit connector panel and electrical connector
9 Pilot suit connector panel electrical connector
10 Scientific equipment compartment D
11 Cabin air recirculation fan
12 Forward access hatch or egress tunnel (mf)
13 Postlanding ECS air inlet duct (extended)
15 Clock and event timer panel
16 G&N loose parts stowage
17 Sextant and telescope compartment (mf)
18 Crew attenuation strut (X-Y-K axis)
19 Clothing stowage compartment
20 Inertial measurement unit (mf)
21 Left crew couch (attenuated)
22 Oxygen control panel
23 Medical kit (left couch)
24 Side shock attenuation panels (removable)
25 Spacesuit stowage bag and scientific equipment stowage (mf)
26 ECS valves
27 ECS oxygen, water, and glycol equipment

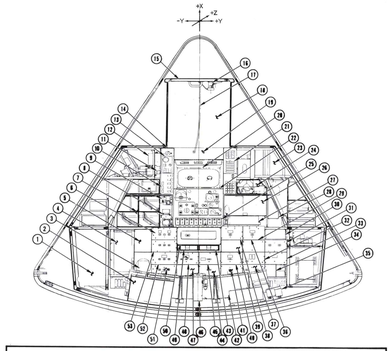

LOWER EQUIPMENT BAY (LEB)

1 ECS components (mf)
2 Spacesuit stowage bag and scientific equipment stowage (mf)
3 Gas chromatograph
4 Flight qualification tape recorder
5 Scientific equipment compartment A
6 Display/attitude gyro-accelerometer (ECA)
7 Food stowage (5 containers)
8 Attitude gyro and accelerometer
9 Rate gyros
10 Coupling and displays panel
11 Sr pilot suit connector panel and electrical connector (mf)
12 Cabin air recirculation fan (mf)
13 IMU control panel
14 Lighting control
15 Forward access hatch cover (mf)
16 Postlanding ECS air outlet duct
17 Postlanding ECS power cable
18 Forward access hatch (mf)
19 Sextant telescope eyepiece stowage
20 Sextant and telescope panel
21 Computer display and control panel
22 G&N control panel IMU
23 Survival provisions (mf)
24 Clinical monitoring instrument set compartment
25 Power servo assembly (PSA)
26 Data storage equipment
27 Towel stowage
28 Towel stowage
29 VHF multiplexer
30 Data wiring
31 Premodulation processor
32 VHF recovery beacon and VHF-AM transmitter-receiver
33 Audio center
34 Central timing
35 TV optics storage (mf)
36 Pulse-code modulation (PCM) unit 2 telemetry equipment
37 VHF-FM transmitter and HF transceiver
38 Pulse-code modulation (PCM) unit 1 telemetry equipment
39 Scientific equipment compartment C
40 S-band power amplifier
41 C-band transponder
42 CO_2 absorber canister (mf)
43 Food and work table (in-flight tool set)
44 Digital up-data link
45 Unified S-band equipment
46 Fecal canister (pushboard)
47 Scientific equipment compartment B
48 Ball channel ECA
49 Data package container (also on outboard couch beams)
50 G&N computer
51 Pitch channel ECA
52 Auxiliary ECA
53 Yaw channel ECA

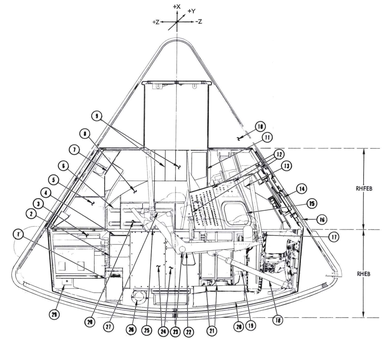

RIGHT-HAND FORWARD EQUIPMENT BAY (RHFEB) AND RIGHT-HAND EQUIPMENT BAY (RHEB)

1 CO_2 absorber canister (mf)
2 Waste management system
3 Computer
4 Vacuum cleaner compartment
5 IMU compartment (mf)
6 Medical accessories kit
7 Sextant and telescope compartment (mf)
8 Food stowage
9 Survival provisions
10 ECS pitch control engine area (mf)
11 TV camera mount
12 Side console panels (right)
13 Rendezvous window housing
14 Inner hatch cover
15 Side window
16 Outer hatch cover
17 Crew attenuation strut (X-X axis)
18 Crew attenuation strut (Z-Z axis)
19 Phase correcting capacitor fuse box
20 Compartments T, S and Z (mf)
21 Circuit interrupter
22 Right crew couch
23 Crew attenuation strut (Y-Y axis)
24 Side shock attenuation panels
25 Waste stowage inlet (on bulkhead)
26 Stowed fecal canister (mf)
27 Sanitation supply stowage
28 Scientific equipment compartment E
29 Battery charger (mf)

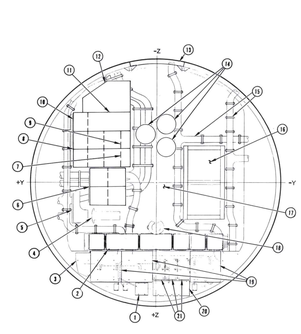

AFT EQUIPMENT STOWAGE BAY (AESB)

1 Battery charger
2 CO_2 absorber canisters
3 Pyro batteries and circuit breaker panel
4 Fecal canister (stowed)
5 TV lens stowage
6 CO_2 absorber canisters (4)
7 Pen lights compartment Z
8 CO_2 absorber canisters (6)
9 Compartment V
10 Compartment T
11 Compartment S
12 PGA and sleep restraint stowage bag
13 Crew access hatch (mf)
14 PGA helmet, comm soft hat, flight wt headset stowage
15 Bulkhead wireways (typical)
16 Spacesuit (2), life vest (2), sleeping restraint (1) stowage bag
17 Aisleway (under center couch)
18 Fecal canister (stowage position)
19 Electrical inverters
20 AC power box
21 Spacecraft storage batteries

SM-2A-817F

Figure 1-6. C/M Equipment and Stowage Bays

astronaut. Hot or cold water is available at the potable water supply panel for food reconstitution. Chilled drinking water is supplied to the crew through a flexible hose from the water delivery unit. The potable water is a by-product of the EPS fuel cells.

1.1.2.7 Waste Management.

Waste management provisions in the crew compartment RHFEB and AESB (figure 1-6) consist of equipment for collecting, sterilizing, and storing human fecal matter and personal hygiene wastes (such as used cleansing pads, towels, etc.). Fecal matter and personal hygiene wastes are collected in polyethylene bags, disinfected, and stored in a vented area. Urine is expelled overboard into space.

1.1.2.8 Survival Equipment.

The survival kits stowed in the crew compartment RHFEB (figure 1-6) are available for the postlanding phase of the mission (land or water). The major items contained in each kit include 6 pounds of water, a desalter kit, a one-man life raft, radio transceiver, portable light, sunglasses, and a machete. Life vests worn by the crew during lift-off and entry are stowed in the space suit stowage bag during the orbit phase of the mission. (See figure 1-6.)

1.1.2.9 Aft Compartment.

The aft compartment (figure 1-3) is the area encompassed by the aft portion of the crew compartment heat shield, aft heat shield, and aft portion of the primary structure. This compartment contains 10 reaction control engines, an impact attenuation structure, instrumentation, and storage tanks for water, fuel, oxidizer, and gaseous helium. (Four crushable ribs, along the S/C +Z axis, are provided as part of the impact attenuation structure to absorb energy during a land impact.)

The aft heat shield, which encloses the large end of the C/M, is a shallow spherically contoured assembly. It is made of the same type of materials as other C/M heat shields. However, the ablative material on this heat shield has a greater thickness for the dissipation of heat during entry. External provisions are made on this heat shield for connecting the C/M to the S/M.

1.1.3 SERVICE MODULE.

The S/M is a cylindrical structure formed by 1-inch-thick aluminum honeycomb panels. Radial beams, from milled aluminum alloy plates, separate the structure interior into six unequal sectors around a circular center section. (See figure 1-7.) Equipment contained within the service

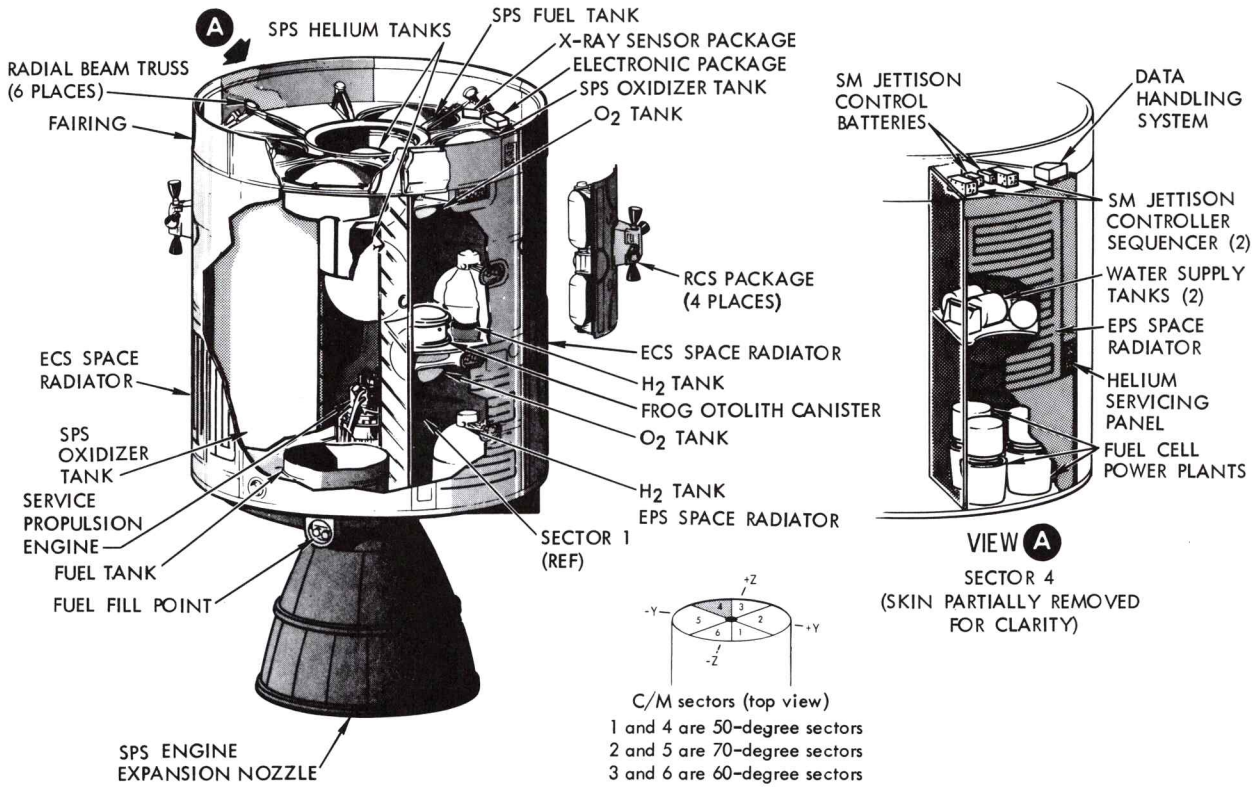

SERVICE MODULE ITEMS

Sector 1
- Electrical power system space radiator
- Super-critical oxygen tank (two)
- Super-critical hydrogen tank (two)
- Frog Otolith Canister

Sector 2
- Environmental control system space radiator
- Service propulsion system oxidizer tank
- Reaction control system package (+Y-axis)
- Space radiator isolation valve (two)

Sector 3
- Service propulsion system fuel tank
- Reaction control system package (+Z-axis)
- Service propulsion system helium tanks (two)

Sector 4
- Electrical power system space radiator
- Fuel cell power plant (three)
- Helium servicing panel
- Reaction control system control unit
- Electrical power system power control relay box
- Service module jettison control battery (two)
- Service module jettison controller sequencer (two)
- Water supply tank (two)

Sector 5
- Environmental control system space radiator
- Service propulsion system oxidizer tank
- Reaction control system package (-Y axis)

Sector 6
- Space radiator selection valve, (two)
- Glycol shutoff valves (two)
- Reaction control system package (-Z axis)
- Service propulsion system fuel tank

Center section
- Service propulsion system helium tank (two)
- Service propulsion system engine

SM-2A-643 F

Figure 1-7. Spacecraft 014 Service Module

module is accessible through maintenance doors located strategically around the exterior surface of the module. Specific items, such as flight control system (SPS and RCS) and most of the S/C on-board consumables (and storage tanks) contained in the S/M compartments, are listed in figure 1-7.

Radial beam trusses on the forward portion of the S/M structure (figure 1-7) provide a means for securing the C/M to the S/M. Alternate beams, one, three, and five, have compression pads for supporting the C/M. Beams two, four, and six, have shear-compression pads, and tension ties. A flat center section in each tension tie incorporates redundant explosive charges for S/M-C/M separation. These beams and separation devices are enclosed within a fairing (26 inches high and 13 feet in diameter) between the C/M and S/M.

1.1.4 SPACECRAFT LEM ADAPTER.

The spacecraft LEM adapter (SLA) is a truncated cone which connects the CSM to the S-IVB instrument unit on the launch vehicle. (See figure 1-1.) This adapter, constructed of eight 2-inch-thick aluminum panels, is 154 inches in diameter at the forward end (C/M interface) and 260 inches at the aft end. Separation of the spacecraft from the SLA is accomplished by means of explosive charges which permit the four SLA forward panels (above station 583.3) to disengage from the CSM and rotate outward 45 degrees from vertical. The four aft panels remain attached to the S-IVB instrument unit. A cross-shaped stiffener is installed within the SLA in place of a LEM. The S/M SPS nozzle extends into the SLA which also houses an umbilical cable for connecting circuits between the launch vehicle and the spacecraft.

1.1.5 SPACECRAFT SYSTEMS.

Data relating to the operational spacecraft systems and interface information are presented in section 2 of this handbook.

1.2 LAUNCH VEHICLE CONFIGURATION.

A two-stage Saturn IB launch vehicle, consisting of an S-IB booster and an S-IVB second stage, is scheduled to provided the required thrust for inserting S/C 014 into orbit (figure 1-8). An instrumentation unit, located between the S-IVB and the SLA, controls each of the two boost stages during flight. The total length of the Saturn IB launch vehicle, including the spacecraft, is approximately 224 feet. An emergency detection system sequencer display panel, in the C/M, enables the crew to monitor launch vehicle engine performance during lift-off. (Refer to the sequential systems in section 2, subsection 2.9.)

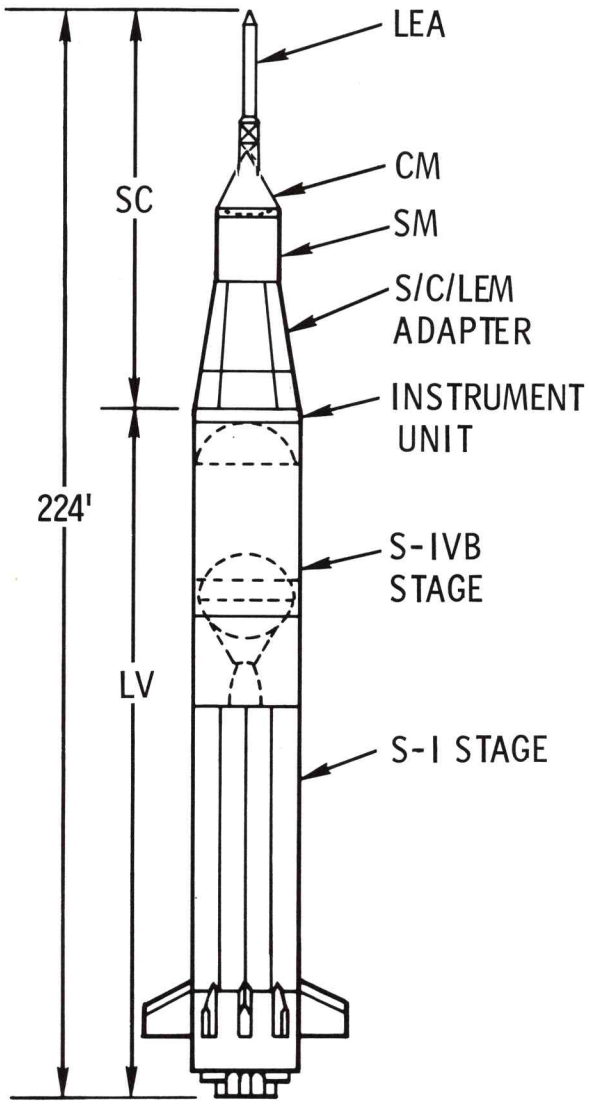

Figure 1-8. Apollo Launch Vehicle Saturn IB

Saturn IB, the second of the class of vehicles, will place 17 tons of payload into low earth orbit, compared to the 11-ton capability of Saturn I. Its improved booster will develop 1,600,000 pounds of thrust - 100,000 pounds more than Saturn I. The second stage will develop 200,000 pounds of thrust, or over twice that of the second stage of Saturn I. The instrument unit will be located between the second stage and payload. Saturn IB and Saturn V will have identical instrument units.

1.2.1 First Stage.

The Saturn IB booster will be essentially the same as Saturn I. Design improvements of the Saturn IB will reduce its weight by more than 16,000 pounds over that of the Saturn I. Eight H-1 Rocketdyne engines are also used on Saturn IB, but an increase in thrust is realized for each engine from 188,000 to 200,000 plus pounds.

1.2.2 Second Stage.

The S-IVB second stage, manufactured by Douglas Aircraft Company, is of an entirely different configuration than the S-IV; it is longer, heavier, and of a larger diameter. S-IVB employs a single Rocketdyne J-2 engine, burning liquid hydrogen and liquid oxygen to produce 200,000 pounds of thrust.

SECTION 2

SYSTEMS DATA

INTRODUCTION.

This section includes spacecraft systems/components description and design data, operational limitations and restrictions, and telemetry measurements. This section consists of subsections 2.1 through 2.12.

GUIDANCE AND CONTROL

GUIDANCE AND NAVIGATION SYSTEM

STABILIZATION AND CONTROL SYSTEM

SERVICE PROPULSION SYSTEM

REACTION CONTROL SYSTEM

ELECTRICAL POWER SYSTEM

ENVIRONMENTAL CONTROL SYSTEM

TELECOMMUNICATION SYSTEM

SEQUENTIAL SYSTEMS (SECS, EDS, LES, ELS)

CAUTION AND WARNING SYSTEM

MISCELLANEOUS SYSTEMS DATA

CREW PERSONAL EQUIPMENT

SECTION 2

SUBSECTION 2.1

GUIDANCE AND CONTROL

2.1.1 SYSTEMS INTERFACE - G&N.

Apollo CSM atmospheric and space flight is achieved by application of controlled translation forces and rotational force moments. Guidance and control initiates and terminates the thrust and rotational forces and force moments as a function of the magnitude of the change required. Guidance and control provides the following basic functions:

- Attitude Control
- Guidance
- Navigation

Attitude control is a function associated with spacecraft orientation with respect to an inertial reference or a known coordinate system. Guidance is a function requiring a combination of attitude control with rate stabilization and steering commands for the purpose of modifying spacecraft trajectory via major velocity changes. Navigation determines spacecraft position and velocity, and predicts future position.

To accomplish mission requirements, the guidance and navigation, stabilization and control, service propulsion, and reaction control systems, plus the astronauts, are integrated into an automatic/manual closed loop control system.

Guidance and control activity is grouped into three profiles of flight: coasting, powered, and atmospheric. The primary control loops involved are illustrated in figures 2.1-1 through 2.1-4. Figure 2.1-1 is an abbreviated integration of all major equipments necessary to accomplish the activities in all three flight profiles. Figures 2.1-2 through 2.1-4 divide the equipment into the proper perspective for each profile.

It must be noted that in figure 2.1-1, the loops are closed that represent coasting flight (CF) functions. For powered flight (PF) or atmospheric flight (AF), open the coasting flight loops and close contacts representing the desired loops.

2.1.2 COASTING FLIGHT

The guidance and control activities involved in coasting flight are accomplished through the basic functional loops shown in figure 2.1-2. These loops provide attitude reference, attitude control, attitude hold, and automatic and manual maneuver capabilities necessary to accomplish the several tasks involved during coasting flight. They are also the central reference and control loops required for all phases of flight.

A reference attitude frame is established by the G&N inertial measurement unit (IMU), and/or by the SCS body-mounted attitude gyros (BMAGs), and attitude gyro coupling unit (AGCU). Inertial sensors sense S/C motion contrary to the reference frame. The sensed attitude errors and rates are conditioned through servo electronics and logic to initiate countermotions via the reaction jet control (RCS) which nullifies the original motion. The AGC inserts automatic control and maneuver commands into the loop. The rotation, translation, and attitude impulse controls insert manual commands into the loop. The flight director attitude indicator (FDAI) is the S/C attitude visual display.

2.1.3 POWERED FLIGHT

Powered flight is considered that which will use the S/M service propulsion system (SPS) engine to intiate a major velocity change. Figure 2.1-3 illustrates those basic loops necessary for the tasks involved. As shown, the loops are an extension of those required for coasting flight. Added, are the (SPS) engine on-off thrust logic and the SPS gimbal control loops. In coasting flight, all attitude control is through the RCS. Powered flight, by the SPS engine, requires roll control through the RCS, and pitch and yaw control by gimbaling the SPS engine nozzle. Primary control of thrusting is by the AGC. However, figure 2.1-3 shows how various manual controls can be used instead of or to backup automatic functions.

2.1.4 ATMOSPHERIC FLIGHT

Atmospheric flight is encountered during the entry phase of the mission at which time the S/C experiences aerodynamic forces. Figure 2.1-4 illustrates the basic loops required for control of the S/C during this phase. The central loop is identical to that in figure 2.1-2. The main difference is that service module/command module (S/M-C/M) separation has taken place, and the command module RCS system is used. Another difference is that the aerodynamic forces will stabilize the C/M in pitch and yaw, and the entry g-level (lift vector control) will increase or decrease through roll control. Primary control is automatic, with manual rotation control available, in event of automatic control malfunctions.

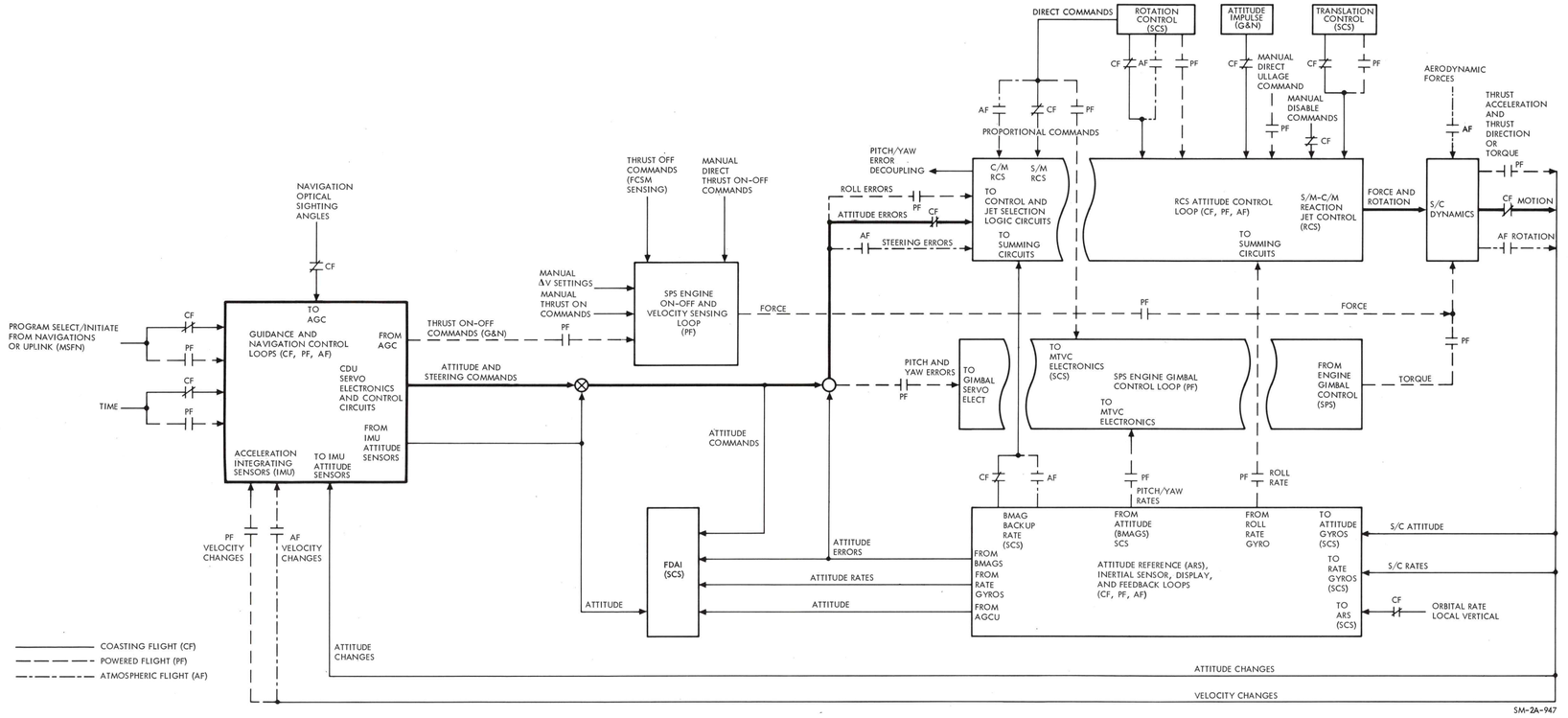

Figure 2.1-1. Integrated Flight Profile Functional Flow Diagram

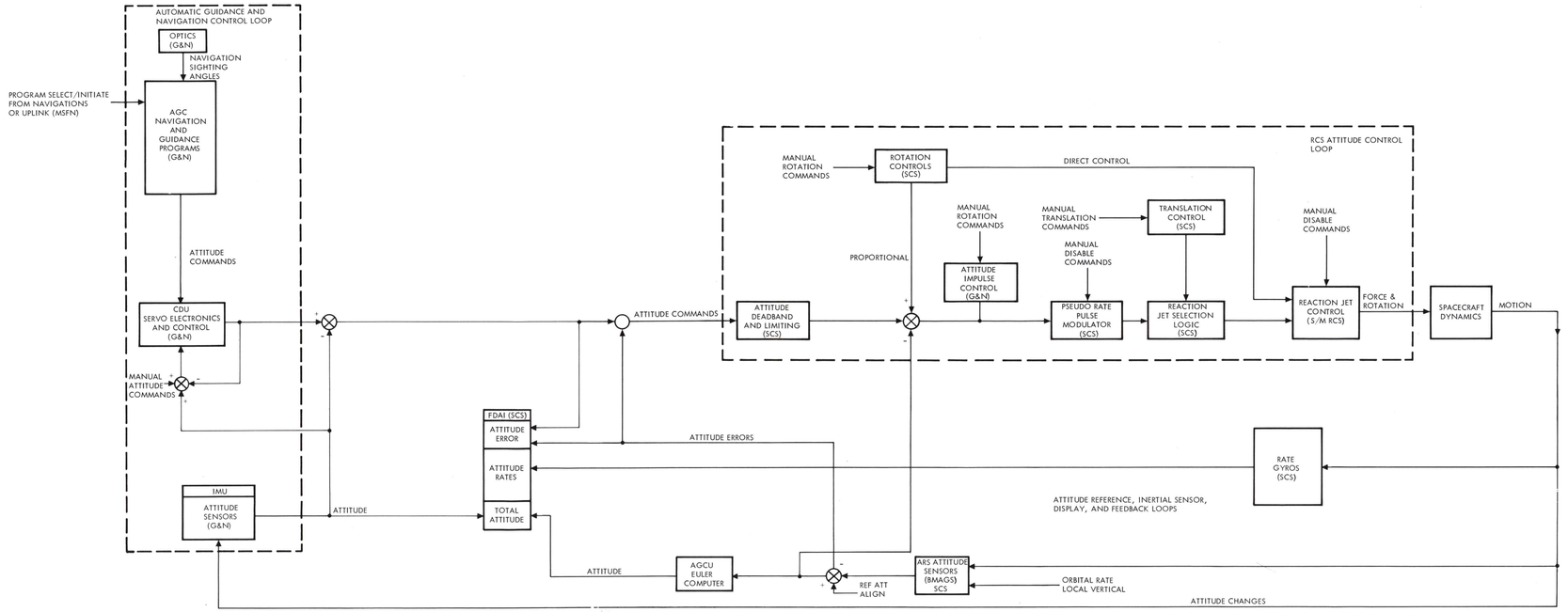

Figure 2.1-2. Coasting Flight Profile Functional Flow Diagram

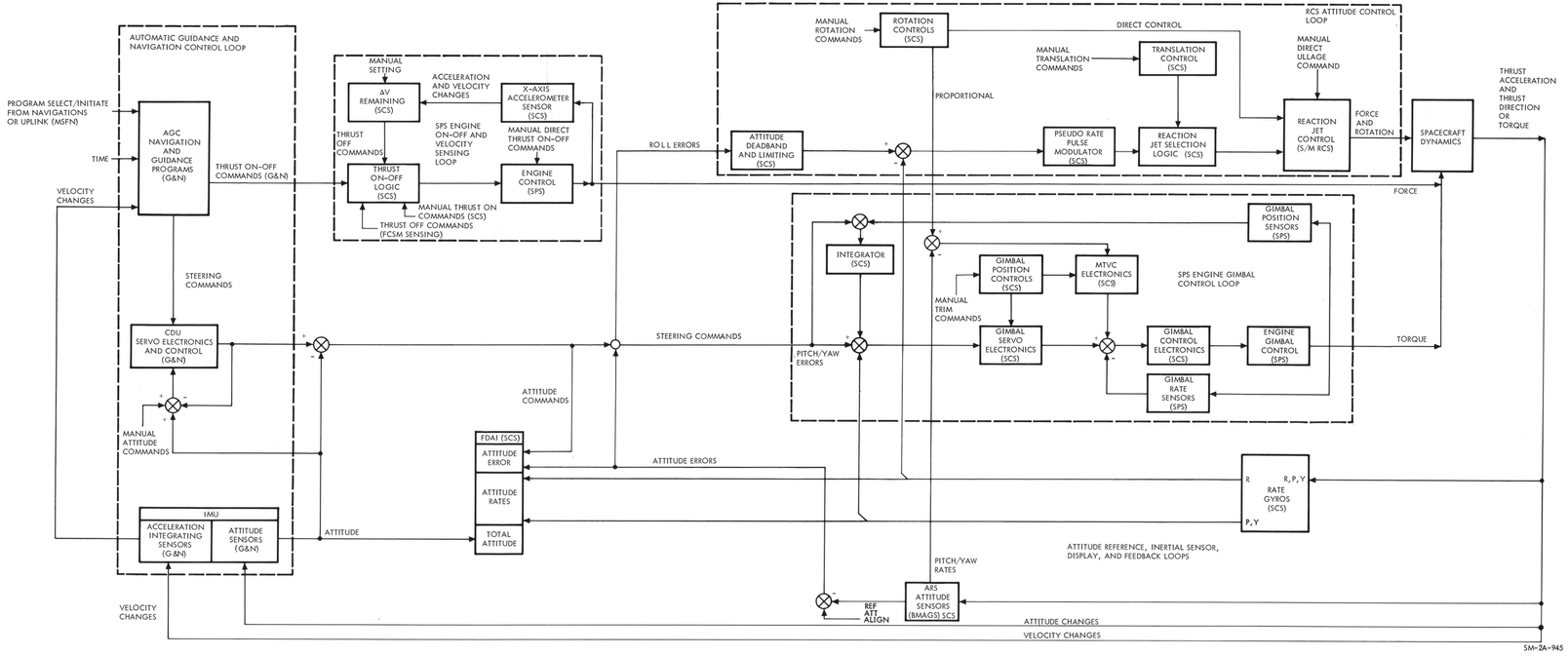

Figure 2.1-3. Powered Flight Profile Functional Flow Diagram

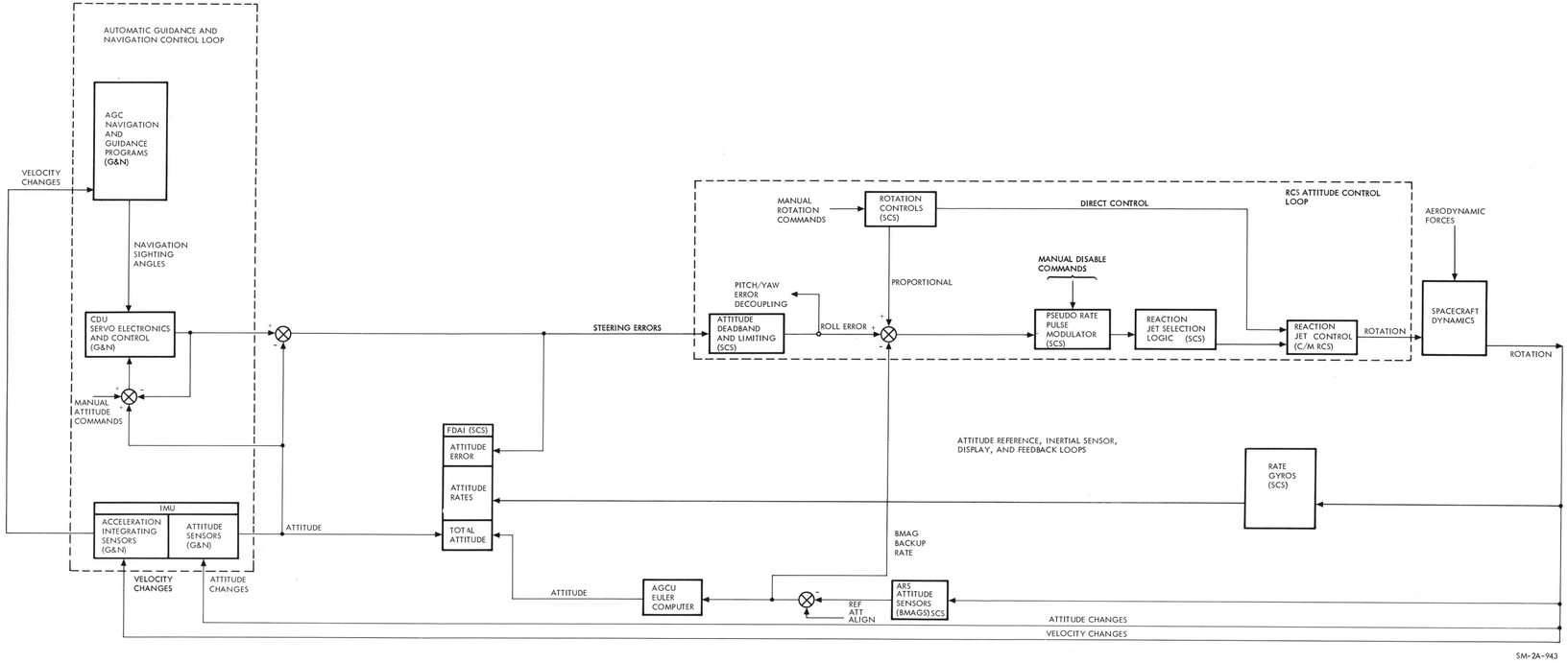

Figure 2.1-4. Atmospheric Flight Profile Functional Flow Diagram

For detailed operation of the several loops involved in guidance and control, refer to the descriptions of the guidance and navigation system, paragraph 2.2, and the stabilization and control system, paragraph 2.3.

SECTION 2

SUBSECTION 2.2

GUIDANCE AND NAVIGATION SYSTEM

2.2.1 GUIDANCE AND NAVIGATION (G&N) SYSTEM

The guidance and navigation (G&N) system measures spacecraft attitude and velocity, determines trajectory, controls spacecraft attitude, controls the thrust vector of the service propulsion engine, and provides abort information and display data. Primary determination of the spacecraft velocity and position, and computation of the trajectory parameters is accomplished by the manned space flight network (MSFN).

The G&N system consists of three subsystems as follows:

- Inertial subsystem (ISS)
- Computer subsystem (CSS)
- Optics subsystem (OSS)

The inertial subsystem is composed of an inertial measurement unit (IMU), part of the power and servo assembly (PSA), part of the controls and displays, and three inertial coupling display units (CDUs). The IMU provides an inertial reference with a gimbaled six-degree-of-freedom, gyro stabilized stable platform.

The computer subsystem is composed of an Apollo guidance computer (AGC), and two display and keyboard panels (DSKYs) which are part of the controls and displays. The AGC is a digital computer which processes and controls information to and from the IMU and optics, and stores programs and reference data.

The optics subsystem is composed of a scanning telescope (SCT), a sextant (SXT), drive motors for positioning the SCT and SXT, parts of the PSA, part of the controls and displays, and two optics CDUs. The SCT and SXT are used to determine the spacecraft position and attitude with respect to stars and/or landmarks.

The three G&N subsystems are configured such that the CSS and OSS may be operated independently. This allows continued use of the CSS and/or OSS in the event of a malfunction in one of these subsystems or the ISS. System power requirements and reference signals are provided by the power and servo assembly (PSA). Major components of the system are located in the command module lower equipment bay (figure 2.2-1).

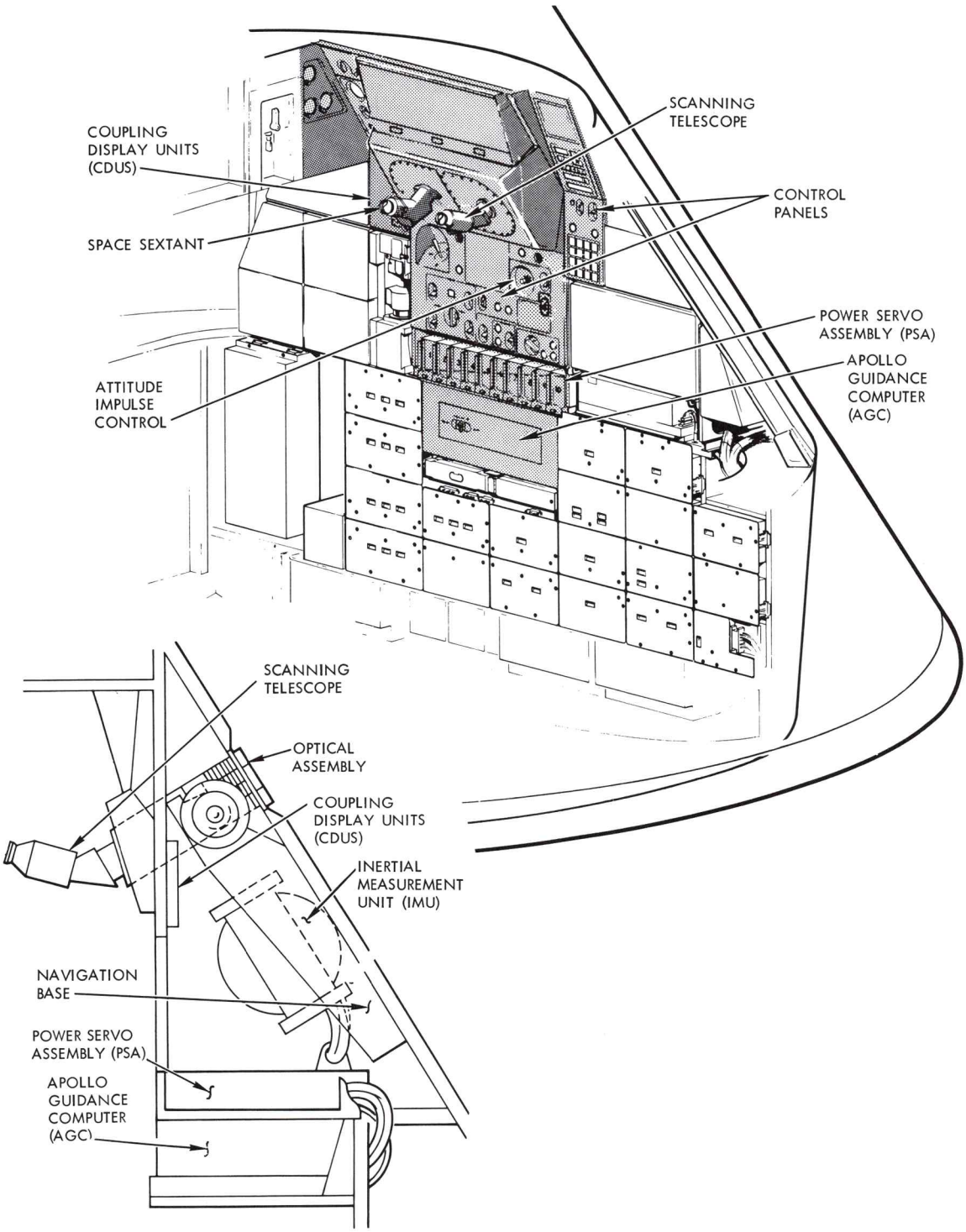

Figure 2.2-1. G&N Equipment Location

System circuit breakers, caution and warning indicators, and one of the DSKYs are located on the main display console

2.2.1.1 Functional Description

The guidance and navigation system provides capabilities for the following:

- Inertial velocity and position (state vector) computation
- Optical and inertial navigation measurements
- Spacecraft attitude measurement and control
- Generation of guidance commands during CSM-powered flight and C/M atmospheric entry.

The G&N system is initially activated and aligned during the prelaunch phase. During the ascent phase, the system measures velocity and attitude, computes position, compares the actual spacecraft trajectory with a predetermined trajectory, and displays pertinent data. The flight crew uses the displayed information as an aid for decision to abort or continue the mission. However, spacecraft control is maintained by the S-IVB guidance until CSM/S-IVB separation. Upon separation, the G&N system assumes the guidance and navigation functions using the data acquired during ascent.

During periods when onboard velocity and/or attitude change sensing is not required, the IMU is placed in standby operation to conserve electrical power. The AGC is used more extensively than the IMU; however, it will also be placed in standby operation to conserve electrical power. When the guidance and navigation function is to be restored, the IMU and AGC are reactivated, with the AGC using the last computed velocity as the basis for further velocity computations. New positional data must be acquired from optical sightings or MSFN through telemetry or voice communications.

Initial position and attitude information as well as periodic updating of this information is made through use of the optics. This is accomplished by the navigator making two or more landmark and/or star sightings. The sightings are made by acquiring the star-landmark with the SCT and/or SXT. When the viewed object is centered, a mark command is initiated. The AGC reads the optics angles, IMU angles, and time, in conjunction with internal programs to determine the spacecraft position. This position information and the spacecraft velocity are used to compute an estimated trajectory. This estimated trajectory is compared with previous trajectory data to generate the trajectory error, if any, for further reference. Optical measurements are also used in aligning the IMU to a specific inertial orientation.

The IMU (figure 2.2-2) contains three inertial rate integrating gyros (IRIGs), three angular differentiating accelerometers (ADAs), and three pulsed integrating pendulous accelerometers (PIPAs). The IRIGs, PIPAs,

and one ADA are mounted on the stable platform which is gimbaled to provide six degrees of freedom. The two remaining ADAs are mounted on the middle gimbal. The stable platform inertial reference is maintained by the IRIGs and ADAs in conjunction with electronic stabilization loops. Any displacement of the platform is sensed by the IRIGs which produce output signals representative of the magnitude and direction of displacement. The ADAs sense the displacement rate and produce output rate control signals to maintain correct stabilization loop control response. The IRIG and ADA signals are applied to servo amplifiers, which condition the signals to drive gimbal torque motors. The gimbal torque motors then restore the initial platform orientation by driving the gimbals until the IRIG signals are nulled.

The PIPAs are orthogonally mounted and sense changes in spacecraft velocity. An acceleration or deceleration results in output signals which are representative of the magnitude and direction of the velocity change. The output signals are applied to the AGC which uses the information to update spacecraft velocity data. Continual updating of velocity information, with respect to the initial spacecraft position and trajectory, enables the AGC to provide current velocity, position, and trajectory information.

The IMU also provides a space stabilized reference for spacecraft attitude sensing and control. Attitude change sensing is accomplished by monitoring the spacecraft attitude with reference to the stable platform. Resolvers are mounted at the gimbal axes to provide signals representative of the gimbal angles. Inertial CDUs contain resolvers which repeat the platform attitude. Attitude monitoring is afforded by comparing the IMU resolver output signals with the CDU resolver signals. If the angles differ, error signals are generated and applied to the stabilization and control system. If the attitude error is larger than the selected deadband limits, the SCS fires the appropriate RCS engines. The spacecraft is rotated back to the initial reference attitude and the error signals are nulled (within deadband limits).

The AGC provides automatic execution of internal programs, automatic control of ISS and OSS modes, and, in conjunction with the DSKYs, manual control of ISS and OSS modes and computer displays. The AGC contains a two-part memory which consists of a 24,576 word, non-erasable section and a 1024 word erasable section. Non-erasable memory contains mission and system programs and other predetermined data which are wired in during assembly. Data readout from this section is non-destructive and cannot be changed during operation. The erasable section of memory provides for data storage, retrieval, and operations upon measured data and telemetered information. Data readout from this section is destructive, permitting changes in stored data to be made as desired. Information within the memory may be called up for display on the two DSKYs. The DSKYs enable the flight crew to enter data or instructions into the AGC, request display of data from AGC memory, and offer an interrupt control of AGC operation. The AGC timing section provides timing signals of various frequencies for internal use and to other onboard

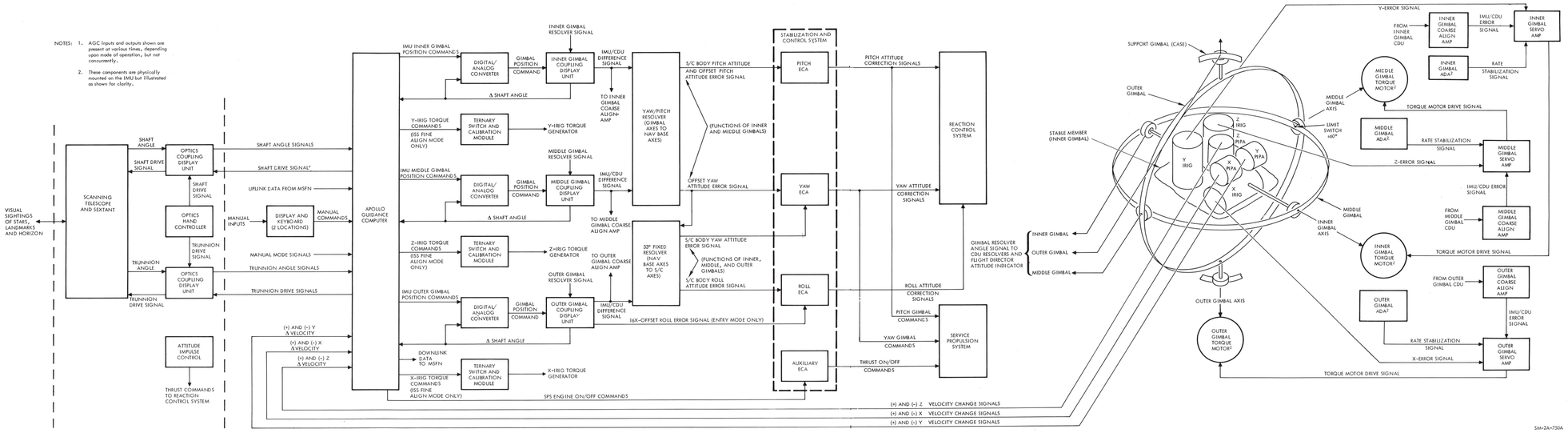

Figure 2.2-2. G&N System Functional Block Diagram

systems which require accurate or synchronized timing. Data within the AGC is transmitted to MSFN through a "downlink" telemetry function. Telemetered data is transmitted as a function of an AGC program or by request from MSFN. Data within the AGC may be updated through an "uplink" telemetry function controlled by MSFN. The AGC performs guidance functions by executing internal programs using predetermined trajectory parameters, attitude angles from the inertial CDUs, velocity changes from the PIPAs, and commands from the DSKYs (crew) to generate control commands. The navigation function is performed by using stored or inserted star-landmark data, optics angles from the optics CDUs, and velocity changes from the PIPAs in the execution of navigation programs.

The optics provide accurate star and landmark angular measurements. Sightings are accomplished by the navigator using the SXT and SCT. The optics are positioned by drive motors commanded by the AGC, optics hand controller, or manually using a universal tool, as desired. The shaft axes are parallel. Trunnion axes may be operated in parallel or offset, as desired. The SCT is a unity power instrument providing an approximate 60-degree field of view. Light loss, through the SCT, is approximately 60 percent. It is used to make landmark sightings and to acquire and center stars or landmarks prior to SXT use. The SXT provides 28-power magnification with a 1.8-degree field of view. Light loss along the SXT star LOS is approximately 65 percent. Light loss along the landmark LOS is approximately 95 percent. The SXT has two lines of sight, enabling it to measure the included angle between two objects. This requires two lines of sight which enable the two viewed objects to be superimposed. For a star-landmark sighting, the landmark line of sight is centered along the SXT shaft axis. The star image is moved toward the landmark by rotating the shaft and trunnion axes until the two viewed objects are superimposed. The shaft and SXT trunnion angles are repeated by the optic CDUs. When the navigator is satisfied with image positions, he issues a mark command to the AGC. The AGC reads the optics CDU angles, IMU CDU angles, and time, and computes the position of the spacecraft. The AGC bases the computation on stored star and inserted landmark data which may also be used by the AGC to request specific stars or landmarks for navigational sightings. Two or more sightings, on two or more different stars, must be taken to perform a complete position determination.

2.2.1.1.1 Operational Modes.

The G&N system is operated in six basic operational modes. Selection of any one mode is accomplished manually by the flight crew or automatically by the AGC. The basic modes are as follows:

- Monitor (initiated by SCS mode selection)
- Zero encode
- Coarse align
- Fine align
- Manual CDC

- Attitude control
- Entry

The system configuration necessary to operate in any of the modes is established by relay switching

The monitor mode is used at launch, ascent, and during orbit until CSM/S-IVB separation, to provide flight path data for crew displays. The coarse align, fine align, manual CDU and zero encode modes are used to align the IMU after standby periods or to acquire a new stable platform orientation. The attitude control mode provides for spacecraft attitude control and navigation computations to measure position and velocity. The entry mode provides control of the spacecraft lift vector during entry phase.

The ISS and CSS will be operated in on-standby cycles to conserve electrical power. During standby operation, the ISS maintains IMU temperature, and the CSS maintains AGC timing functions. The OSS is shut off when not in use. Since standby operation time varies for each of the subsystems, standby is not considered as basic mode.

Monitor Mode. During prelaunch operations, the G&N system is aligned to the desired launch reference attitude and gyro compasses to maintain this attitude. Approximately 5 seconds prior to launch, the gyro compassing is stopped and the system becomes inertially referenced. Upon lift-off the AGC begins monitoring the flight path angles by driving the Inertial Coupling Display Units (ICDUs) through programmed attitude changes. The ICDU angles are compared with the IMU gimbal angles to produce flight path error signals which are displayed by the FDAI error needles. Total spacecraft attitude, with respect to the IMU orientation, is displayed by the FDAI ball. During boost prior to launch escape tower (LET) jettison, the AGC displays the following:

REGISTER 1 - Inertial flight path angle; inertial velocity with respect to local horizontal in degrees.

REGISTER 2 - Inertial velocity in ft per sec.

REGISTER 3 - Altitude above launch pad in nautical miles (NMs).

Upon receipt of LET jettison signals the displays change to the following:

REGISTER 1 - Predicted Gs for free-fall and entry at 60-degree bank angle.

REGISTER 2 - Altitude of perigee above the mean equatorial radius in NMs.

REGISTER 3 - Time of free-fall to 300,000 ft above mean equatorial radius in minutes and seconds.

This displayed data provides the flight crew with sufficient information to make abort or continue decisions; however, if time is not critical, the decision is made by the flight crew and MSFN jointly.

Zero Encode Mode. The zero encode mode enables correction of the CDU data stored in AGC. This mode is used to ensure that the reference angles contained in the CDU registers of the AGC correspond with the actual CDU angles. This is accomplished by driving the CDUs to zero, then clearing the AGC CDU registers. This starts the AGC CDU registers at zero and enables the registers to maintain correct CDU angles by counting pulses from the CDU digital encoders. The IMU remains fixed during this mode.

Coarse Align Mode. The coarse align mode holds and aligns the stable platform to within 1-5 degrees of the ICDU angles. This mode is initiated manually, by AGC command, or automatically for 100 seconds when the IMU is switched from standby as off to operation. The ICDU angles are commanded by the AGC output signals which positions the ICDU's to angles within AGC registers. Any difference in angle between the IMU gimbal resolvers and the ICDU resolvers is applied as an error signal to the coarse align amplifiers. This signal drives the gimbal torque motors until the IMU gimbal angles are aligned with the ICDU angles.

The stable platform orientation will normally be such that the X-axis lies along the spacecraft +X-axis during all powered phases, except ascent and deorbit, and along the spacecraft stability axis during entry.

Fine Align Mode. The fine align mode completes stable platform orientation to the required degree of accuracy. The navigator makes two or more star sightings, using on-board data and the optics to acquire the desired stars. Upon recept of the sighting angles the AGC computes the IMU angles necessary to complete the alignment. In the fine align mode, the IMU angles are repeated by the inertial CDUs which are monitored by the AGC to determine the actual IMU orientation. The AGC generates torquing signals to cancel any error between the actual IMU orientation and the desired orientation. These torquing pulses are applied to the IRIG torquing coils. The IRIGs in conjunction with the stabilization loops, reposition the stable platform until the desired orientation is attained. Upon completion of fine alignment, the IMU/CDU resolver signals and the stabilization loop signals are at null.

The system configuration required for fine align mode also applies IMU resolver signals to the SCS as apparent attitude error signals. To prevent these signals from appearing as actual spacecraft attitude errors, the SCS must be operated in an SCS mode which rejects G&N derived signals.

Manual CDU. The manual CDU mode provides the capability to align the IMU to an accuracy equal to coarse align. This mode requires that the CDU front panel be removed by using a universal tool to remove 18 screws. This will only be performed as a contingency procedure.

Manual IMU alignment is accomplished by positioning the ICDUs to a desired orientation by manual use of the slew switches and thumbwheels. When the desired ICDU angles are set, the crewman will press the MANUAL ALIGN pushbuttons. The IMU/CDU error signals are applied to the coarse align amplifiers. This signal drives the gimbal torque motors until the IMU gimbal angles are aligned with the ICDU angles.

Attitude Control Mode. The attitude control mode provides spacecraft attitude change sensing, generates error signals for spacecraft attitude control, thrust vector control, velocity change signals for updating AGC velocity information, and signals for timing SPS engine thrust termination commands.

During spacecraft attitude control, the IMU gimbal resolvers sense any displacement of the spacecraft with respect to the stable platform orientation and produce corresponding error signals. The error signals are applied directly to the SCS-FDAI ball for error display and to the inertial CDU resolvers. The IMU-CDU error signals are displayed on the IMU control panel, resolved into spacecraft axes, and applied to the SCS. If the error signals indicate an attitude error larger than the selected deadband, appropriate RCS engines are fired and the desired spacecraft attitude is restored.

For delta V maneuvers, the G&N system provides thrust vector control, velocity change sensing, and total velocity change control by generating thrust termination commands. Prior to thrusting, the IMU is aligned so that the stable platform X-axis is along the spacecraft +X-axis. The AGC determines time-to-ignition and total velocity change desired, and performs mode verification routines. At ignition time the AGC flashes the DSKY displays to the crew for initiation of ignition (manual DSKY entry is required). During thrusting, the CDU applies attitude error signals to the SCS. Roll error signals are applied to the RCS engines; however, pitch and yaw error signals are applied to the RCS engines; however, pitch and yaw error signals are applied to the SPS engine gimbals rather than RCS engines. This ensures alignment of the thrust vector through the spacecraft center-of-gravity and along the correct trajectory. The PIPAs on the stable platform sense the velocity changes and apply proportional output signals to the AGC. The AGC computes and updates spacecraft velocity, and counts down a preset counter with the PIPA signals. When the counter reaches zero, a thrust termination signal is generated and applied through the SCS electronics to the SPS engine.

Entry. The entry mode provides for generation of attitude error and steering signals, sensing of deceleration, and computation of velocity changes during the entry phase of the mission. The steering signals provide for control of the spacecraft lift vector through the SCS, to inhibit excessive G-loadings and heat buildup, and to control the flight path to enable landing at a preselected site. Attitude error signals are applied to the FDAI attitude error needles.

Entry configuration is similar to attitude control with the exceptions that the roll response time is reduced, one step of axis resolution is not needed, and the AGC will produce steering signals to the SCS by driving the roll CDU. From initiation of entry mode until 0.05G switching, roll, pitch, and yaw error signals provide attitude control. Upon 0.05G switching, (a crew function) the pitch and yaw error signals provide display and rate damping only. Prior to entry, the IMU X-axis is aligned along the spacecarft entry velocity vector. This alignment eliminates the need for navigation base-to-spacecraft body axis resolution. Deceleration is sensed primarily by the IMU X-axis PIPA, although changes in lift vector orientation cause some lateral movement which is sensed by the Y and/or Z PIPAs. The outer gimbal, or roll, 1X resolver is connected to the 16X resolver in the ROLL CDU, giving a 16:1 increase in attitude error signal and reducing the response time of the roll channel. The AGC will produce steering signals by executing a programmed lift vector up entry then generate further steering signals with respect to G forces, heat buildup, and range needed. These sterring signals are routed to the roll CDU where an IMU-CDU resolver error is generated and routed to the SCS for FDAI display and/or RCS engine control. The entry may be performed manually with the pilot flying to the steering signals as displayed on the FDAI, or automatically with the AGC steering signals routed to the roll RCS engines for spacecraft control.

2.2.1.2 Major Component/Subsystem Description.

2.2.1.2.1 Inertial Subsystem.

The function of the inertial subsystem is to provide a space-stabilized inertial reference from which velocity changes and attitude changes can be sensed. It is composed of the inertial measurement unit (IMU), the navigation base (NB), parts of the power and servo assembly (PSA), parts of the control and display panels, and three coupling display units (CDUs).

Navigation Base. The navigation base (NB) is the rigid, supporting structure which mounts the IMU and optical instruments. The NB is manufactured and installed to close tolerances to provide accurate alignment of the equipment mounted on it. It also provides shock mounting for the IMU and optics.

Inertial Measurement Unit. The inertial measurement unit (IMU) is the main unit of the inertial subsystem. It is a six-degree-of-freedom stabilized platform assembly, containing three inertial reference integrating gyros (IRIGs), three pulsed integrating pendulous accelerometers (PIPAs), and three angular differentiating accelerometers (ADAs). The stable member itself is machined from a solid block of beryllium with holes bored for mounting the PIPAs, IRIGs, and one of the three ADAs. Three gimbal and six intergimbal assemblies which house torque motors and resolvers, are also part of the IMU assembly, together with preamplifiers and gimbal-mounted electronics. Figure 2.2-2 shows how the IRIGs and the PIPAs are

mounted relative to each other on the stable member (or inner gimbal). The three gimbal axes, about which each of the gimbals rotate, are also shown.

The stable platform attitude is maintained by the IRIGs, ADAs, stabilization loop electronics, and gimbal torque motors. Any displacement of the stable platform or gimbal angles is sensed by the IRIGs and ADAs, which generate error signals. IRIG error signals are resolved and amplified at the IMU and applied to stabilization loop electronics. ADA-produced rate signals are summed with the IRIG error signals. The resultant signal is conditioned and applied to the gimbal torque motors, which restore the desired attitude.

The stable platform provides a space-referenced mount for three PIPAs, which sense velocity changes. The PIPAs are mounted orthogonally to sense the velocity changes along all three axes. Any translational force experienced by the spacecraft causes an acceleration or deceleration which is sensed by one or more PIPAs. Each PIPA generates an output signal proportional to the magnitude and direction of velocity change. This signal, in the form of a pulse train, is applied to the AGC. The AGC will use the signal to update the velocity information and also generate signals to torque each PIPA ducosyn back to null.

The temperature of the IRIGs and PIPAs is maintained within required limits during both standby and operating modes of the IMU. The IMU temperature control system contains circuits to supply normal proportional temperature control with the capability of backup or emergency control in case of a proportional control malfunction. The porportional temperature control circuit is the primary means of maintaining the IRIG and PIPA temperature and provides the most accurate control. This type of control is available when either the proportional or auto-override mode is selected with the IMU TEMP MODE selector switch. The purpose of the auto-override mode is to provide automatic switching from that mode to emergency control if there is a malfunction in the proportional control circuit. If a malfunction occurs in the proportional mode, the switching to emergency control must be performed manually. In the proportional mode, the temperature is controlled by the proportional temperature control bridge and is maintained at 135 ± 0.5°F. While in the emergency mode, it is controlled by the mercury thermostat and is held within ±5°F.

The backup temperature control and indicator circuit is intended for use in the event the proportional control fails. The control sensing elements for this system are three PIPA indicating sensors (connected in series) and six IRIG sensing elements (connected in series) in two separate bridges. This system can maintain the temperature to within ±1°F. In this mode of operation, an alarm indication is not available to the astronaut because of modifications to the temperature alarm amplifier circuit.

Coupling and Display Units. There are five CDUs mounted below the IMU control panel at the lower equipment bay. Three CDUs function as part

of the ISS, while the two remaining CDUs function with the OSS. The optic CDUs (OCDUs) are described in paragraph 2.2.2.2. The three inertial CDUs (ICDUs) are identical and may be interchanged. Display dials on the front panel of each provide a 6-digit readout. Positioning of the ICDUs is accomplished by the AGC. Each ICDU contains a 1/4-speed, 1/2-speed, 1-speed, and 16-speed resolver, the functions of which depend upon the ISS mode of operation. The angular movements of the resolvers are converted into digital signals by a digital encoder, processed by encoder electronics, and routed to AGC registers which maintain current ICDU angles as desired. The AGC commands CDU movements by applying digital drive commands to digital-to-analog converters. The drive signals are converted from digital to analog and applied to CDU motor drive amplifiers which position the CDUs. The 1-speed and 16-speed resolvers function as receivers of signals produced by 1-speed and 16-speed resolvers mounted on the IMU. The 1/2-speed resolvers are used to zero the CDUs and the 1/4-speed resolvers are not used. The resolvers provide input signals to selector circuits which provide motor drive signals or spacecraft attitude error signals, depending upon ISS mode of operation. The IMU outer gimbal 1-speed resolver signals are applied to the roll CDU 16-speed resolver to increase roll control rates during entry.

Power and Servo Assembly. The power and servo assembly (PSA), located just below the display and control panel in the lower equipment bay, serves as a central mounting point for most of the G&N electronic units such as power supplies and amplifiers. It also contains the backup electronics used to supply timing pulses to the IMU in case of an AGC timing malfunction. It consists of 10 removable trays mounted adjacent to each other and connected to a junction box. The PSA trays utilize three wiring harnesses to provide electrical connection: one for module-to-module connection, another for module-to-junction box connection, and a third for module connection to a 38-pin female test plug on the front of the PSA tray.

2.2.1.2.2 Optical Subsystem.

The optical subsystem is used for taking precise optical sightings on celestial bodies and for taking fixes on landmarks. These sightings are used for aligning the IMU and for determining the position and attitude of the spacecraft. The system includes the navigational base, two of the five CDUs, parts of the power and servo assembly, controls and displays, and the optics, which include the scanning telescope (SCT) and the sextant (SXT).

Optics. The optics consist of the SCT and the SXT mounted in two protruding tubular sections of the optical base assembly. The SCT and SXT shaft axes are aligned parallel to each other and afford a common line-of-sight (LOS) to selected targets. The trunnion axes may be parallel or the SCT axis may be offset depending upon mode of operation.

The sextant is a highly accurate optical instrument capable of measuring the included angle between two targets. Angular sightings of two targets are

made through a fixed beam splitter and a movable mirror located in the sextant head. The sextant lens provides 1.8-degree true field of view with 28X magnification. Light loss along the sextant star LOS is approximately 65 percent-light loss along the landmark LOS is approximately 95 percent. The movable mirror is capable of sighting a target to 57 degrees LOS from the shaft axis. The mechanical accuracy of the trunnion axis is twice that of the LOS requirement due to mirror reflection which doubles any angular displacement in trunnion axis.

The scanning telescope is similar to a theodolite in its ability to accurately measure elevation and azimuth angles of a single target using an established reference. The lenses provide 60-degree true field of view at 1X magnification. Light loss through the telescope is approximately 60 percent. The telescope allowable LOS errors are 1 minute of arc rms in elevation with maximum repeatability of 15 arc/seconds and approximately 40 arc/seconds in shaft axis.

Coupling Display Units. The function of the OCDUs is to position and repeat angles of the SCT and SXT shaft and trunnion axes. The OCDUs are similar to the ICDUs, but may not be interchanged due to internal mechanical differences allowing higher OCDU rates. Each OCDU has a 6-digit display readout and can be positioned automatically by AGC command. CDU angles are converted to a digital signal by a digital encoder, processed by encoder electronics, and routed to an AGC register. AGC positioning commands are applied to a digital-to-analog converter, converted to a representative analog signal, and applied to a motor drive amplifier in the SXT. Resolvers in the SXT function as transmitters to CDU resolvers which receive the position signals and apply the commanded angles to the CDU motor drive amplifiers to position the CDU motor.

Trunnion CDU 1/4-speed and 16-speed resolvers function as receivers and provide drive signals to the trunnion CDU motor. The SXT trunnion resolvers which drive the CDU resolvers are 1-speed and 64-speed respectively, providing a 1:4 SXT trunnion to CDU trunnion ratio. Visual readouts on the trunnion display dials are thus four times the trunnion angle and two times the star line-of-sight angle from zero position. The 1/2-speed resolver, in conjunction with the cosecant amplifier, provides a variable gain computing resolver which is used in the RESOLVED mode of operation. The 1-speed resolver is not used in the trunnion CDU.

Shaft CDU 1/2-speed and 16-speed resolvers function as receivers and produce drive signals to the shaft CDU motor. SXT resolvers used as transmitters are also 1/2-speed and 16-speed resolvers, affording a 1:1 ratio; thus, the display dials provide direct readouts of the shaft angles. The 1-speed resolver resolves polar coordinates into rectangular coordinates for the RESOLVED mode of operation. The 1/4-speed resolver is not used in the shaft CDU.

Operational Modes. Optics positioning is accomplished automatically by the AGC or manually by the crew. Overall mode control is established

by crew selection of the ZERO OPTICS, MANUAL, or COMPUTER modes on the OPTICS panel.

ZERO OPTICS mode enables automatic drive of the SXT shaft and trunnion motors to zero. This is accomplished by applying the SXT resolver output signals to the input of the SXT motor drive amplifiers. The drive signals are applied to the CDU and SCT resolvers which follow the SXT shaft and trunnion axes to zero. After 60 seconds, the AGC optics position registers are cleared. This mode may be selected by AGC program or manually.

MANUAL mode enables positioning control of the optics by manual manipulation of the optics hand controller. The hand controller is mechanized such that, right-left movement generates shaft commands, and up-down movement generates trunnion commands. Hand controller drive rates are selected by the position of the CONTROLLER SPEED switch. Positions HI, MED, and LO control the amplitude of the drive signal to the hand controller. Hand controller drive signals are applied to the SXT shaft and trunnion drive amplifiers through the CONTROLLER MODE switch for selection of DIRECT or RESOLVED mode. In DIRECT mode, the image motion is presented in a polar coordinate reference frame; in RESOLVED mode, the image motion is presented in a rectangular coordinate reference frame.

In DIRECT mode, shaft commands move the image in a circular path around the center of the field of view. Trunnion commands drive the image in a straight line across the center of the field of view. The angular orientation of the trunnion commanded straight line movement is a function of the shaft angle; therefore, direction of image movement with respect to the direction of hand controller movement is also a function of shaft angle. The rate of image movement, for shaft commands, is a function of trunnion angle, wherein increasing trunnion angles result in increasing image movement rates.

In RESOLVED mode, shaft commands move the image left-right in a straight line. Trunnion commands move the image up-down in a straight line. Image movement is in the same direction as hand controller movement and the rate of movement is constant for varying angles.

In COMPUTER mode, the AGC positions the optics to a star or landmark determined by AGC programming. This mode is performed by an AGC routine which is called up automatically by various alignment programs. The target star or landmark may be defined by AGC programming or by the crew. If the target star or landmark is not selected by AGC programming, the crew makes a DSKY entry defining either the latitude, longitude, and altitude for a landmark or the star code for a star. The AGC determines the spacecraft attitude by monitoring the ICDUs, and computes the angles necessary to drive the optics to the desired target. (If the angles necessary to acquire the target are beyond the capabilities of the optics, the AGC flashes the DSKY displays.) When the necessary

angles are computed, the AGC displays the desired shaft and trunnion angles on the DSKY and initiates OCDU drive to these angles. When the AGC has completed driving the CDUs, the crew checks the DSKY-displayed angles against the 6-digit CDU displays and the SCT counters. The crew then locates and identifies the target in the SCT, enables manual control, and completes the sighting. The AGC can also perform zero optics functions, if desired, by the AGC program.

The SCT trunnion may be operated in three alternate modes, with respect to the SXT trunnion, as desired. The SLAVE TELESCOPE switch enables crew selection of STAR LOS, LANDMARK LOS 0°, or OFFSET 25°. The STAR LOS position is normally used. In this position, the SCT trunnion is slaved to the SXT trunnion. The LANDMARK LOS 0° position, applies a fixed voltage to the SCT trunnion position loop causing it to null at zero. This holds center of the SCT 60° field of view parallel to the SXT landmark line of sight. The OFFSET 25° position applies a fixed voltage to the SCT trunnion position loop, causing it to null at 25 degrees off-center. This holds the SCT field of view so that the SXT landmark line of sight remains visible while sweeping the SCT shaft through 360 degrees of rotation, providing an approximate 110-degree total field of view.

2.2.1.2.3 Computer Subsystem.

The computer subsystem (CSS) consists of the Apollo guidance computer (AGC) and two display and keyboard panels (DSKYs). The AGC and one DSKY are located at the lower equipment bay. The other DSKY is located on the main display console. The AGC mounts one switch on the front panel which applies partial or full power to the computer to enable standby or full operation of the CSS. All other AGC controls and displays are located on the DSKYs. The keyboards on the DSKYs are similar; however, the displays on the DSKY in the lower equipment bay are more extensive.

Apollo Guidance Computer. The Apollo guidance computer (AGC) is a digital computer using a two-part rope core memory. (See figure 2.2-3.) The AGC processes various data to provide control and computation functions. Input data is received from the crew, ISS, OSS, MSFN, and other spacecraft systems. This data is processed by various programs to provide outputs to the crew, ISS, OSS, MSFN, and other spacecraft systems in the form of commands and displays. The control functions performed by the AGC consist of the following:

- Align the IMU stable platform.
- Position the optics for navigation sightings.
- Commanded reaction control system engine firings to maintain specific attitude.
- Request initiation and command termination of service propulsion engine firings.

- Provide synchronization pulses to the central timing equipment.
- Command telemetry transmission to MSFN.
- Command ISS moding.
- Command OSS moding.

The reference data used to generate controls may be acquired externally or generated within the AGC. Initiation of the controls may be accomplished by the crew using the DSKYs, by MSFN via telemetry, or by an AGC program. Computations are performed to generate the proper control commands, maintain navigation parameters, and complete various other operations under program control. AGC programs are stored in memory. The memory contains two sections, erasable and non-erasable. The erasable section provides storage for transient data. Readout is destructive; thus, if the data is to be retained, it must be written back into memory. Otherwise, the location is cleared for further use as desired. Non-erasable memory contains programs, routines, constants, star and landmark coordinates, and other pertinent data. Readout is non-destructive; thus, the data contained in this section is not lost and cannot be altered. AGC programs are performed by controlling the flow of data within the six basic sections listed as follows:

- Power supply
- Input
- Output
- Central processor
- Memory
- Timing

Power Supply. The power supply consists of two parts. Input to the power supply is +28 vdc from the spacecraft main d-c bus. The two sections provide +13 vdc and +3 vdc. The +13-vdc output provides power to the DSKYs and, in conjunction with the +3-vdc power, to the logic circuits. The +3-vdc supply provides power to the timing section as well as to the logic circuits. During standby mode of operation, the +3-vdc section only is operated; thus, power consumption is reduced by approximately 100 watts.

Input. The input section consists of four registers which enable intercommunication between the AGC and the other G&N subsystems, the stabilization and control system, the mission sequencer, the S-IVB guidance, and MSFN. The utilization of the registers is such that each bit position in each register is assigned a specific task. For example, bit positions 1, 2, 3, 4, and 5 of input register 0 are assigned to receiving the five bit code generated when a DSKY key is pressed. Data received from the various sources are conditioned by the input registers such that, when it is transferred into the

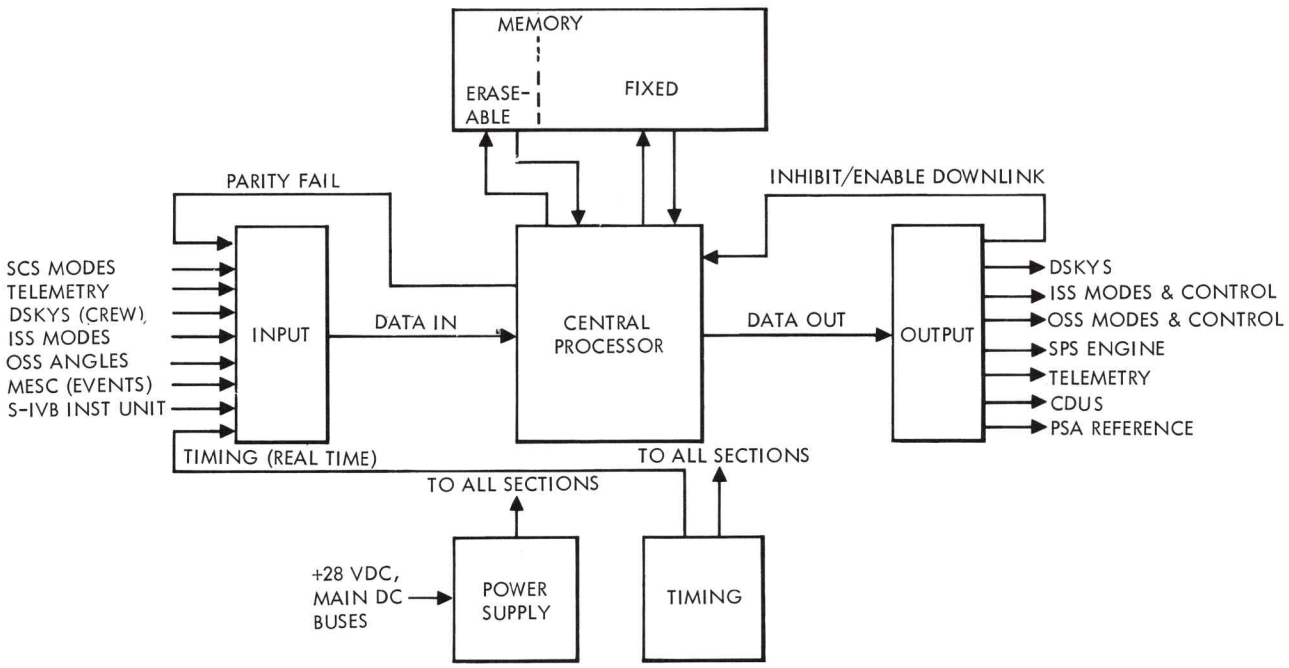

Figure 2.2-3. AGC Functional Block Diagram

logic circuits, the signal levels and timing are correct. The data received by the four input registers are as follows:

Input 0 Register receives 5-bit code from the DSKYs, block uplink signal from the UPTEL switch, control signals from the SCS mode control panel, and mark commands from the MARK pushbutton. Also monitors the signal from the telemetry bit rate detecting circuits.

Input 1 Register is formed by the Scaler A register of the timing section which maintains real time during standby operation, and provides update information to the real time counters when full operation is resumed.

Input 2 Register receives 200, 400, 800, and 1600 pps signals from the Scaler A section of the timing section forming an extension of the real time counters for use by other spacecraft systems which require timing of this order. Also receives discrete event signals from the S-IVB instrument unit, CM/SM separation signals from the master events sequence controller, failure signals from the ISS, mode signals from the SCS, and parity fail signals.

Input 3 Register receives ISS mode signals from the ISS mode relays and mode signals from the OSS, monitors the position of the TRANSFER switch, and provides a logic OR gate for 33 DSKY relays.

Output. The output section consists of four registers which enable the AGC to communicate with the flight crew, ISS, OSS, and other spacecraft systems. The utilization of the registers is similar to that used for the input section (i. e., each bit position, or group of bit positions is assigned a specific task). The tasks assigned to the various registers and bit positions are as follows:

Output 0 Register provides the transmission link from the AGC to the DSKYs by control of 14 banks of relays which provide display of data and routing of control signals to the ISS, OSS, and SCS.

Output 1 Register receives internal AGC alarm signals and causes alarm indicators on the DSKYs to illuminate. Receives KEY RLSE request from an AGC program and causes the KEY RLSE indicator to illuminate and flash until the DSKY is released. Receives AGC signal indicating improper DSKY operation and causes the CHECK FAIL indicator to illuminate. Receives SPS engine firing signal from an AGC program, causing the DSKY to flash a request for crew initiation of engine firing. Receives SPS engine off command from an AGC program, removing the engine on signal. Also provides signal to reset the error interrupt trap circuits, identifies the type of word being transmitted by downlink telemetry, and inhibits further loading of telemetry words when the telemetry word rate exceeds 50 words per second.

Output 2 Register controls application of 3200 pps control pulses to the ISS and OSS.

Output 3 Register serves as a spare register for the central processor when needed.

Output 4 Register contains the next word to be transmitted by downlink telemetry.

Central Processor. The central processor contains the logic circuits and registers which perform the programs. Programs are executed by performing instructions in a sequence controlled by the sequence generator. There are two basic types of instructions. The first is the machine instruction which consists of regular, involuntary, and miscellaneous instructions. Regular instructions are contained within the program and are part of the data words being processed. Involuntary instructions are performed as interrupts to the program and are generated externally to the AGC. Miscellaneous instructions are used in the computer test only. The second basic type of instruction is the interpretive instructions and are a programmer convenience which are converted under program control to machine instructions. The execution of the instructions is a function of the sequence generator. The sequence generator combines basic timing pulses with the instruction portion of a data word and performs the program in the necessary sequence. Regular machine instructions are processed by the sequence generator initiation of the instruction. The instruction will perform one or more subinstruction, the last of which will be a subinstruction to proceed to the next instruction. Involuntary instructions are initiated by an interrupt from an external source, after which the instruction is performed in the same manner as a regular instruction. After completion of the involuntary instruction, a "resume" command is executed and the sequence generator returns to the program which was interrupted. The central processor performs the data manipulation by adding, subtracting, shifting, etc., within a group of central registers, adder, and parity block. The functions of the registers are as follows:

A Register (Accumulator). Stores the results of arithmetic processing.

LP Register stores the least significant portions of the product of a multiply instruction.

B Register is used to complement (by reading the reset side of the register), as temporary storage, and as a buffer.

C Register is complement of B register.

Z Register (Program counter). Contains address of next instruction. Incremented by one as each instruction is performed. (Instructions are usually stored in memory sequentially.)

Q Register. If transfer control occurs the contents of Z are read into and stored in Q until interrupt is completed. Enables interrupted program to restart at the proper instruction. Also used in division. Stores remainder in complemented form.

Input 0, 1, 2, 3. Refer to Input section description.

Output 0, 1, 2, 3. Refer to Output section description.

G Register provides access to and from memory. Shifting, under program control, takes place in this register. Parity bit is removed and restored in this register.

S Register contains address of word to be called from memory. If word is in fixed memory, this selects word in conjunction with BANK register.

BANK Register selects bank in fixed memory. Operates in conjunction with S register.

SQ Register stores 4 bit order code of instruction word.

X, Y, U Registers. These registers from the adder. Two numbers to be added are placed in X and Y. The result is stored in U.

Parity Circuit. The parity circuit checks the parity of words coming from memory to be odd. If parity is not correct, this circuit generates a parity alarm. Words being returned to memory are given the proper parity bit by this circuit.

Data flow within the central processor is initiated by an instruction. A data word is brought from memory to the G register. The G register provides temporary storage of the word until it is needed. If the word came from erasable memory, it will usually be written back into the same location during the same memory cycle time it is transferred to the G register. (This is not necessary for words from fixed memory, as readout is not destructive.) The word is then routed to the parity circuits for a parity check and to have the parity bit removed. The sequence generator next controls the transfer of the data word to the other registers for processing. If the result of the processing is to be written back into memory, the word is transferred back into the G register, the parity bit is added, and the word transferred back to memory. If the processing consists of arithmetic functions, it is performed in the adder (X, Y, and U registers). The AGC has the capability to add only; therefore, subtraction, multiplication, and division are performed by complementing and/or shifting, then adding.

Memory. The AGC memory consists of two sections. The ~~largest~~ LARGER section is the fixed memory. This is a rope core type having a capability of 24,576 sixteen bit words. Readout is non-destructive and the data contained cannot be changed. All permanent, pre-determined data, such as programs, tables, constants, star and landmark angles, etc., are contained in this section. Addressing the data contained in the fixed section is accomplished by the S and BANK registers. A smaller erasable section provides temporary storage for transient data. Erasable memory is a coincident-current core array with a capacity of 1024 sixteen bit words. Readout is destructive,

so if data is to be retained, it is necessary to write the data back into the location when it is read out. Addressing the data contained in erasable memory is done by the S register.

Timing. The timing section generates the synchronization pulses for AGC operations and timing pulses for other spacecraft systems. The timing section is divided into the following functional groups:

Clock Divider. This group contains the basic clock oscillator which has a 2.048 mc frequency divided to time various AGC logic functions and certain outputs, clock the time pulse generator, and drive Scaler A.

Scalers A and B. Scaler A contains 17 binary dividers producing signals of various frequencies used within the AGC logic, as reference to the PSA, and to drive Scaler B. Scaler B contains 16 binary dividers producing timing signals to the Input 1 register for maintaining real time when the AGC is in standby.

Scalers A and B are used in conjuction with the Input 0 register, TIME 1, and TIME 2 counters to provide real time.

Time Pulse Generator produces 12 basic timing pulses which define action times. These pulses are used to control internal sequencing of data processing.

Memory Pulse Generator. This group provides timing pulses to fixed and erasable memory to synchronize read and write operations.

Start-Stop Logic. The start-stop logic generates three commands. A monitor stop command inhibits the time pulse generator and stops AGC data word flow. A monitor start command generates the third signal which is a clear command to the sequence generator.

Display and Keyboard. The DSKYs facilitate intercommunication between the flight crew and the AGC. (See figure 2.2-4.) The DSKYs operate in parallel, with the main display console DSKY providing AGC display and control while the crew are in their couches. The two condition lights provided at the main display console DSKY are COMPUTER FAIL, which is a gross AGC failure indicator, and KEY RLSE, which is a request to the crew to release the DSKY circuits to internal AGC program use. The main display console DSKY also has an UPTEL switch which enables the AGC to accept or block telemetered data from MSFN. The DSKY at the lower equipment bay contains the remainder of the condition lights: PROG ALM, RUPT LOCK, PARITY FAIL, TC TRAP, TM FAIL, COUNTER FAIL, SCALER FAIL, CHECK FAIL and KEY RLSE. All the condition lights except KEY RLSE are failure indicators. (KEY RLSE is a request for the crew to release the DSKY circuits to internal AGC program use.) This DSKY also has a TEST ALARM pushbutton which is wired to the alarm relays to provide a check of the warning lights. The electroluminescent

displays are identical on each DSKY and always display identical data. The intensity of these displays is controlled by the BRIGHTNESS thumbwheels.

The exchange of data between the flight crew and the AGC is usually initiated by crew action; however, it can also be initiated by internal computer programs. The exchanged information is processed by the DSKY program. This program allows the following four different modes of operation:

- Display of Internal Data — Both a one-shot display and periodically updating display (called monitor) are provided.
- Loading External Data — As each numerical character is entered, it is displayed in the appropriate display panel location.
- Program Calling and Control — The DSKY is used to initiate a class of routines which are concerned with neither loading nor displays. Certain routines required instructions from the operator to determine whether to stop or continue at a given point.
- Changing Major Mode — The initiation of large scale mission phases can be commanded by the operator.

The data involved in both loading and display can be presented in either octal or decimal form as the operator indicates. If decimal form is chosen, the appropriate scale factors are supplied by the program. Decimal entries are indicated by entering a sign (+, -).

Keyboard Operation. The basic language of communication between the operator and the AGC is a pair of words known as verb and noun. Verb and noun codes are defined in figures 2.2-5 and 2.2-6, respectively. Each of these is represented by a two-character octal number. The verb code indicates what action is to be taken (operation); the noun code indicates to what action is applied (operand). Typical verbs are those for displaying and loading. Nouns usually refer to a group of erasable registers within the computer memory. The PROGRAM, VERB, and NOUN displays provide two digit numbers which are coded octal numbers describing the action being performed. The REGISTER 1, 2, and 3 displays provide display of the contents of registers or memory locations. These displays are numbers which are read as decimal numbers if a sign (+, -) is present and octal numbers if no sign is used. The REGISTER displays operate under program control unless the contents of a specific register or memory location is desired. The crew may request display of the contents of a specific register or memory location by commanding the display from the keyboard. The only other displays are the ACTIVITY lights which indicate whether the computer is computing or accepting telemetry from MSFN.

The keyboard provides 18 keys which, when pressed, generate a five bit signal representative of the key pressed. The +, -, and 0-9 keys are

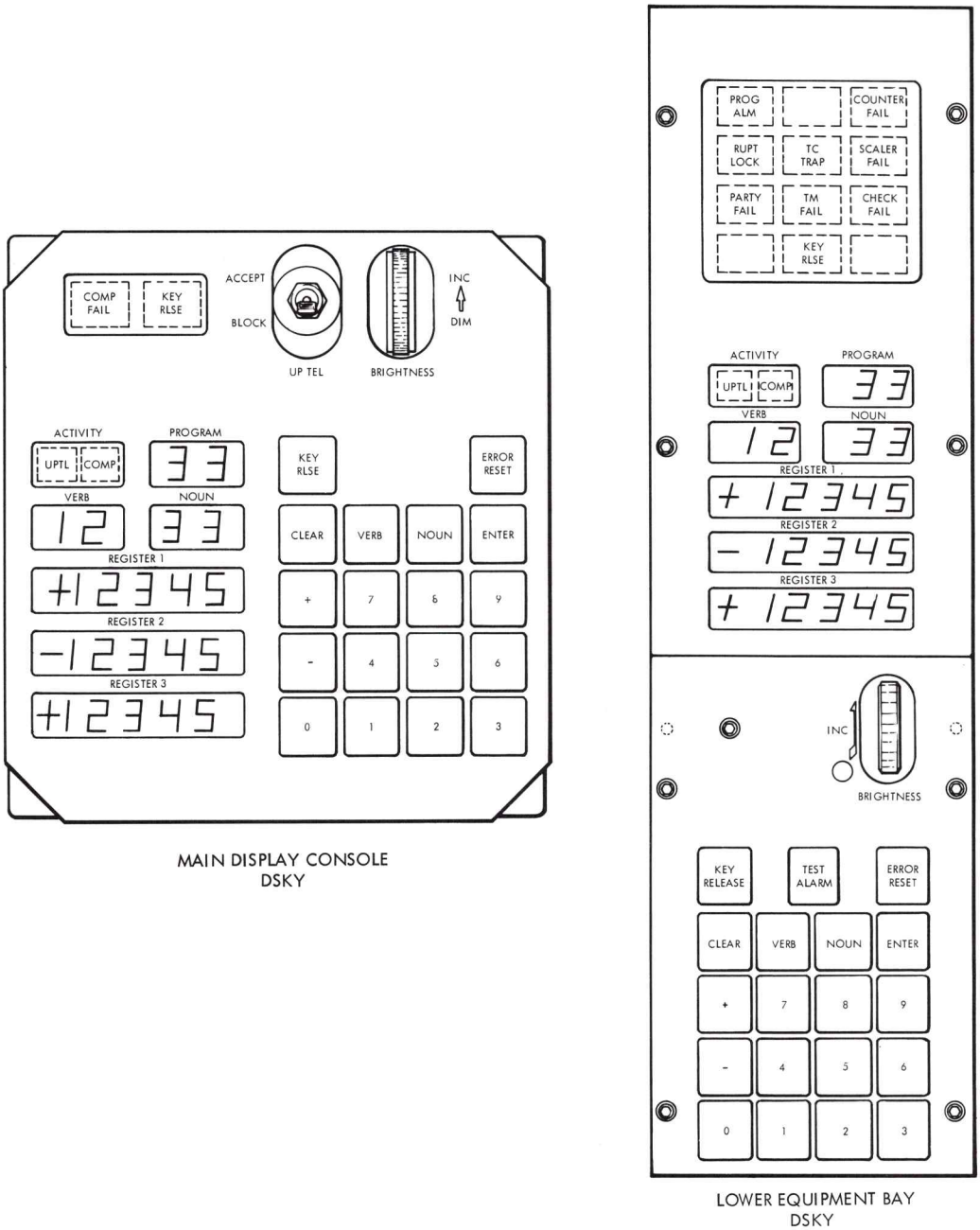

MAIN DISPLAY CONSOLE
DSKY

LOWER EQUIPMENT BAY
DSKY

SM-2A-894

Figure 2.2-4. Display and Keyboard Panels

used for numerical entries, while the CLEAR, ENTER, VERB, NOUN, KEY RELEASE, and ERROR RESET keys provide instructions. The TEST ALARM key is wired to the alarm relays and provides a check of the warning indicator lights with the exception of SCALER FAIL. The main display console DSKY UPTEL switch enables or inhibits the acceptance of telemetry from MSFN. The function of each of the keys is as follows:

0-9	Enter numerical data, addresses, and action codes.
VERB	Commands AGC to accept the next two numbers as verb code data. Verb display is blanked until numbers are entered.
NOUN	Commands AGC to accept the next two numbers as noun code data. Noun display is blanked until numbers are entered.
ENTER	Instructs AGC to accept keyed-in data as completed and intiate operation specified by data word.
CLEAR	Enters all zeros in data register being loaded. Each successive pressing of this key clears the next higher register.
KEY RLSE	Release the DSKY circuits and displays for use by the AGC program being executed.
ERROR RESET	Momentarily resets AGC failure lights.
(+) and (-)	Denotes sign of data to follow. Denotes that following data is decimal.
TEST ALARM	Sets relays to illuminate LEB DSKY condition lights (except SCALER FAIL) to ensure proper operation. (LEB DSKY only.)
UPTEL	Sets AGC input registers to accept or inhibit telemetered data from MSFN. (MDC DSKY only.)
BRIGHTNESS	Provides control of intensity of electroluminescent displays.

The lower equipment bay DSKY provides nine condition lights of which eight are failure indicators and the remaining light a request for action. The function of each is as follows:

PROG ALM	The AGC program being executed has detected an error.
COUNTER FAIL	Detected failure in input timing pulses. Either interrupt or circuitry failed. Interrupt failure is denoted by RUPT LOCK failure indicator illumination.
RUPT LOCK	Interrupt failed to occur or was not completed within specified time.
TC TRAP	Transfer control instruction has not occurred, or has occurred but was not completed within a specified time.
SCALER FAIL	Failure detected in AGC timing section.
PARITY FAIL	Parity failure detected in data read from memory.
TM FAIL	Telemetry word rate to MSFN either too high or too low. Telemetry word rate from MSFN too high or incorrect transmission of data.
CHECK FAIL	Attempted illegal DSKY operation. Normally operator error.
KEY RLSE	Flashes to indicate AGC program in operation requires DSKY circuitry to continue.

The standard procedure for the execution of keyboard operations consists of a sequence of seven key depressions:

VERB V_2 V_1 NOUN N_2 N_1 ENTER

Pressing the VERB key blanks the two verb lights on the DSKY and clears the verb code register in the AGC. The next two numerical inputs are interpreted as the verb code, in octal form. Each of these characters is displayed by the verb lights as it is inserted. The NOUN key operates similarly with the DSKY noun lights and AGC noun code register. Pressing the ENTER key initiates the program indicated by the verb-noun combination displayed on the DSKY. Thus, it is not necessary to follow a standard procedure in keying verb-noun codes into the DSKY. It can be done in reverse order, if desired, or a previously inserted verb or noun can be used without rekeying

it. No action is taken by the AGC in initiating the verb-noun-defined program until the ENTER key is actuated. If an error is noticed in either the verb code or noun code prior to actuation of the ENTER key, it can be corrected simply by pressing the corresponding VERB or NOUN key and inserting the proper code. The ENTER key should not be actuated until it has been verified that the correct verb and noun codes are displayed.

If the selected verb-noun combination requires data to be loaded by the operator, the VERB and NOUN lights start flashing on and off (about once per second) after the ENTER key is pressed. Data is loaded in five-character words and, as it is keyed in, it is displayed character-by-character in one of the five-position data display registers, REGISTER 1, REGISTER 2, or REGISTER 3. Numerical data is assumed to be octal unless the five-character data word is preceded by a plus or minus sign, in which case it is considered to be decimal. Decimal data must be loaded in full five-numeral character words (no zeros may be left out); octal data may be loaded with high order zeros left out. If decimal is used for any component of a multicomponent load verb, it must be used for all components of that verb. In other words, no mixing of octal and decimal data is permitted for different components of the same load verb. The ENTER key must be pressed after each word. This tells the program that the numerical word being keyed in is complete. The on-off flashing of the VERB-NOUN lights terminates after the last ENTER key actuation of a loading sequence.

The CLEAR key is used to remove errors in loading data as it is displayed in REGISTER 1, REGISTER 2, or REGISTER 3. It does nothing to the PROGRAM, NOUN, or VERB lights. (The NOUN lights are blanked by the NOUN key, the VERB lights by the VERB key.) For single-component load verbs or "machine address to be specified" nouns, the CLEAR key depression performs the clearing function on the particular register being loaded, provided that the CLEAR key is depressed before the ENTER key. Once the ENTER key is depressed, the CLEAR key does nothing. The only way to correct an error after the data is entered for a single-component load verb is to begin the load verb again. For two- or three-component load verbs, there is a CLEAR backing-up feature. The first depression of the CLEAR key clears whichever register is being loaded. (The CLEAR key may be pressed after any character, but before its entry.) Consecutive CLEAR key actuations clear the data display register above the current one until REGISTER 1 is cleared. Any attempt to back up (clear) beyond REGISTER 1 is simply ignored. The CLEAR backing up function operates only on data pertinent to the load verb which initiated the loading sequence. For example, if the initiating load verb were a "write second component into" type only, no backing up action would be possible.

The numerical keys, the CLEAR key, and the sign keys are rejected if depressed after completion (final entry) of a data display or data load verb. At such time, only the VERB, NOUN, ENTER, ERROR RESET, or KEY RELEASE inputs are accepted. Thus, the data keys are accepted only after the control keys have instructed the program to accept them. Similarly,

the + and - keys are accepted only before the first numerical character of REGISTER 1, REGISTER 2, or REGISTER 3 is keyed in and at no other time. The 8 or 9 key is accepted only while loading a data word which is preceded by a + or - sign.

The DSKY can also be used by internal computer programs for subroutines. However, any operator keyboard action (except ERROR RESET) inhibits DSKY use by internal routines. The operator retains control of the DSKY until he wishes to release it. Thus, he is assured that the data he wishes to observe will not be replaced by internally initiated data displays. In general, it is recommended that the operator release the DSKY for internal use when he has temporarily finished with it. This is done by pressing the KEY RELEASE key.

Verb-Noun Formats. The verb-noun codes are defined in figures 2.2-5 and 2.2-6. A noun code may refer to a device, a group of computer registers, or a group of counter registers, or it may simply serve to convey information without referring to any particular computer register. The noun is made up of 1, 2, or 3 components, each component being entered separately as requested by the verb code. As each component is keyed, it is displayed on the display panel with component 1 displayed in REGISTER 1, component 2 in REGISTER 2, and component 3 in REGISTER 3. There are two classes of nouns: normal and mixed. Normal nouns (codes 01 through 54) are those whose component members refer to computer registers which have consecutive addresses and use the same scale factor when converted to decimal. Mixed nouns (codes 55 through 77) are those whose component members refer to nonconsecutive addresses or whose component members require different scale factors when converted to decimal, or both.

A verb code indicates what action is to be taken. It also determines which component member of the noun group is to be acted upon. For example, there are five different load verbs. Verb 21 is required for loading the first component of the selected noun; verb 22 loads the second component; verb 23 loads the third component; verb 24 loads the first and second component; and verb 25 loads all three components. A similar component format is used in the display and monitor verbs. There are two general classes of verbs: standard and extended. The standard verbs (codes 01 through 37) deal mainly with loading, displaying, and monitoring data. The extended verbs (codes 40 through 77) are principally concerned with calling up internal programs whose function is system testing and operation.

Whenever data is to be loaded by the operator, the VERB and NOUN lights flash, the appropriate data display register is blanked, and the internal computer storage register is cleared in anticipation of data loading. As each numerical character is keyed in, it is displayed in the proper display register. Each data display register can handle only five numerical characters at a time (not including sign). If an attempt is made to key in

more than five numerical characters at a time, the sixth and subsequent characters are simply rejected but they do appear in the display register.

The + and - keys are accepted prior to inserting the first numerical character of REGISTER 1, REGISTER 2, or REGISTER 3; if keyed in at any other time, the signs are rejected. If the 8 or 9 key is actuated at any time other than while loading a data word preceded by a + or - sign, it is rejected and the CHECK FAIL light goes on.

The normal use of the flash is with a load verb. However, there are two special cases when the flash is used with verbs other than load verbs.

- Machine Address to be Specified — There is a class of nouns available to allow any machine address to be used; these are called "machine address to be specified" nouns. When the "ENTER," which causes the verb-noun combination to be executed, senses a noun of this type the flash is immediately turned on. The verb code is left unchanged. The operator should load the complete machine address of interest (five-character octal). This is displayed in REGISTER 3 as it is keyed in. If an error is made in loading the address, the CLEAR key may be used to remove it. Pressing the ENTER key causes execution of the verb to continue.

- Change Major Mode — To change major mode, the sequence is VERB 37 ENTER. This causes the noun display register to be blanked and the verb code to be flashed. The two-character octal mode code should then be loaded. For verification purposes, it is displayed as it is loaded in the noun display register. The entry causes the flash to be turned off, a request for the new major mode to be entered, and a new major mode code to be displayed in the PROGRAM display register.

  The flash is turned off by any of the following events:

- Final entry of a load sequence
- Entry of verb "proceed without data" (33)
- Entry of verb "terminate" (34).

It is important to conclude every load verb by one of the aforementioned three, especially if the load was initiated by program action within the computer. If an internally initiated load is not concluded validly, the program that initiated it may never be recalled. The "proceed without data" verb is used to indicate that the operator is unable to, or does not wish to, supply the data requested, but wants the initiating program to continue as best it can with old data. The "terminate" verb is used to indicate that the operator chooses not to load the requested data and also wants to terminate the requesting routine.

SYSTEMS DATA

Verb Code	Description	Remarks
		NOTE Verb codes 01 through 37 denote standard verbs.
01	Display octal component 1	Performs octal display of data on REGISTER 1.
02	Display octal component 2	Performs octal display of data on REGISTER 1.
03	Display octal component 3	Performs octal display of data on REGISTER 1.
04	Display octal components 1, 2	Performs octal display of data on REGISTER 1 and REGISTER 2.
05	Display octal component 1, 2, 3	Performs octal display of data on REGISTER 1, REGISTER 2, AND REGISTER 3.
06	Display decimal	Performs decimal display of data on appropriate registers. The scale factors, types of scale factor routines, and component information are stored within the machine for each noun which it is required to display in decimal.
07	DP decimal display	Performs a double precision decimal display of data on REGISTER 1 and REGISTER 2. It does no scale factoring. It merely performs a 10-character, fractional decimal conversion of two consecutive, erasable registers, using REGISTER 1 and REGISTER 2. The sign is placed in the REGISTER 1 sign position with the REGISTER 2 sign position remaining blank. It cannot be used with mixed nouns. Its intended use is primarily with "machine address to be specified" nouns.
10	Enter request to waitlist (Used only during ground checkout.)	Enters request to "waitlist routine" for any machine address with delay involved. This verb assumes that the desired number of 10-millisecond units of delay has been loaded into the low order bits of the prio/delay register (noun 26). This verb is used with the "machine address to be specified" noun. The complete address of the desired location is then keyed in. (Refer to "Machine address to be specified" in paragraph on Verb/Noun Formats.)
11	Monitor octal component 1	Performs octal display of updated data every 1/2 second on REGISTER 1.
12	Monitor octal component 2	Performs octal display of updated data every 1/2 second on REGISTER 1
13	Monitor octal component 3	Performs octal display of updated data every 1/2 second on REGISTER 1.
14	Monitor octal component 1, 2	Performs octal display of updated data every 1/2 second on REGISTER 1 and REGISTER 2.
15	Monitor octal component 1, 2, 3	Performs octal display of updated data every 1/2 second on REGISTER 1, REGISTER 2, and REGISTER 3.
16	Monitor decimal	Performs decimal display of updated data every 1/2 second on appropriate registers.
17	Monitor DP decimal	Performs double precision display of decimal data on REGISTER 1 and REGISTER 2. No scale factoring is performed. Provides 10-character, fractional decimal conversion of two consecutive erasable registers. The sign is placed in the sign-bit position of REGISTER 1. REGISTER 2 sign bit is blank.
20	Enter request to executive (Used only during ground checkout.)	Enters request to executive routine for any machine address with priority involved. This verb assumes that the desired priority has been loaded into bits 10-14 of the prio/delay register (noun 26). This verb is used with the noun, "machine address to be specified". The complete address of the desired location is then keyed in. (Refer to "Machine address to be specified" in paragraph on Verb/Noun Formats.)
21	Load component 1	Performs data loading. Octal quantities are unsigned. Decimal quantities are preceded by + or - sign. Data is displayed on REGISTER 1.

Figure 2.2-5. Verb List (Sheet 1 of 3)

SYSTEMS DATA

Verb Code	Description	Remarks
22	Load component 2	Performs data loading. Octal quantities are unsigned. Decimal quantities are preceded by + or - sign. Data is displayed on REGISTER 2.
23	Load component 3	Performs data loading. Octal quantities are unsigned. Decimal quantities are preceded by + or - sign. Data is displayed on REGISTER 3.
24	Load component 1, 2	Performs data loading. Octal quantities are unsigned. Decimal quantities are preceded by + or - sign. Data is displayed on REGISTER 1 and REGISTER 2.
25	Load component 1, 2, 3	Performs data loading. Octal quantities are unsigned. Decimal quantities are preceded by + or - sign. Data is displayed on REGISTER 1, REGISTER 2, and REGISTER 3.
26	(Spare)	
27	(Spare)	
30	(Spare)	
31	Bank Display	This verb is included to permit displaying the contents of fixed memory in any bank. Its intended use is for checking program ropes and the BANK position or program ropes.
32	(Spare)	
33	Proceed without data	Informs routine requesting data to be loaded that the operator chooses not to load fresh data, but wishes the routine to contine as best it can with old data. Final decision for what action should be taken is left to requesting routine.
34	Terminate	Informs routine requesting data to be loaded that the operator chooses not to load fresh data and wishes the routine to terminate. Final decision for what action should be taken is left to requesting routine. If monitor is on, it is turned off.
35	(Spare)	
36	Fresh start	Initializes the program control software and the keyboard and display system program.
37	Change program (major mode)	Change to new major mode. (Refer to "Change major mode" in paragraph on Verb-Noun Formats.) NOTE Verb codes 40 through 77 denote extended verbs.
40	Zero	Must be used with noun 20 (ICDU) or noun 55 (OCDU) only. Sets the CDU registers to zero.
41	Coarse align IMU	Must be used with noun 20 (ICDU) or noun 55 (OCDU) only.
42	Fine align IMU	Calls up programs that perform the indicated G&N system procedures.
43	Lock IMU	Calls up programs that perform the indicated G&N system procedures.
44	Set IMU to ATTITUDE CONTROL	Calls up programs that perform the indicated G&N system procedures.
45	Set IMU ENTRY	Calls up programs that perform the indicated G&N system procedures.
46	Return IMU to coarse align	Calls up programs that perform the indicated G&N system procedures.

Figure 2.2-5. Verb List (Sheet 2 of 3)

SYSTEMS DATA

Verb Code	Description	Remarks
47	(Spare)	
50	Please perform	This verb is used only by internal routines that wish the operator to perform a certain task. It should never be keyed in by the operator. It is usually used with noun 25, "checklist." The coded number for the checklist item to be performed is displayed in REGISTER 1 by the requesting routine.
51	Please mark	This verb is used only by internal routines that request the operator to "mark". It should never by keyed in by the operator. It is usually used with noun 30, "star numbers". The numbers of the stars to be marked are displayed in REGISTER 1, REGISTER 2, and REGISTER 3 by the requesting routine. The operator should indicate completion of each valid mark by pressing the MARK button. He should never press ENTER with verb 51.
52	Mark reject	Rejects "mark" and returns to verb 51.
53	Free	Calls up programs that perform the indicated G&N system procedures. Used only with noun 20 (ICDU) or noun 55 (OCDU).
54	Pulse torque gyros	Calls up programs that perform the indicated G&N system procedures.
55	Align time	
56	Perform Banksum	
57	System test (Used only during ground checkout.)	
60	Prepare for standby	
61	Recover from standby	
62	(Spare)	
63	(Spare)	
64	Calculate orbital parameters	
65	Calculate time of arrival at longitude	
66	Calculate latitude and longitude at specified time	
67	Calculate maximum declination and time of arrival there.	
70	Manual attitude maneuver	
71	MTCU takeover	
72	Minimum inpulse aim point	
73	Return to Earth aim point update	
74	Orbit change aim point update	
75	Manual lift-off for flights	R. V. T. denotes position, velocity, and time.
76	R. V. T. update (state vector	
77	Time update	

Figure 2.2-5. Verb List (Sheet 3 of 3)

SYSTEMS DATA

Noun Code	Description	Scale/Units
	NOTE Noun codes 01 through 54 denote normal nouns.	NOTE In Scale/Units column: X = significant digit 0 = zero (always) B = blank.
01	Specify machine address	.XXXXX
02	Specify machine address	XXXXX.
03	(Spare)	
04	(Spare)	
05	Angular error	XXX.XX degrees
06	Pitch angle	XXX.XX degrees
	Heads up-down	±00001
07	Change of program or major mode (Used only with verb 50, "Please perform".)	
10	(Spare)	
11	Engine on enable (Used only with verb 50, "Please perform".)	
12	Spare	
13	Delta V measured (Vector magnitude.)	XXXXX. ft/sec
14	Delta V counter setting.	XXXXX. ft/sec
15	Increment address (Used only during ground checkout.)	Octal only
16	AGC clock time: REGISTER 1 REGISTER 2 REGISTER 3	 00XXX. hours 000XX. minutes 0XX.XX seconds
17	Desired future ICDUs: Outer Inner Middle	 XXX.XX degrees XXX.XX degrees XXX.XX degrees
20	Present ICDUs: Outer Inner Middle	 XXX.XX degrees XXX.XX degrees XXX.XX degrees
21	PIPA counters: X- Y- Z-	 XXXXX. pulses XXXXX. pulses XXXXX. pulses
22	Desired present ICDUs: Outer Inner Middle	 XXX.XX degrees XXX.XX degrees XXX.XX degrees
23	Delta angles I: Outer Inner Middle	 XXX.XX degrees XXX.XX degrees XXX.XX degrees
24	Delta time for AGC clock:	00XXX. hours 000XX. minutes 0XX.XX seconds
25	Checklist (Used only with verb 50, "Please perform".)	XXXXX.
	Checklist code numbers (appear in REGISTER 1.)	
	00001 SCS mode to G&N attitude control	
	00002 SCS mode to G&N Delta V	
	00003 SCS mode to G&N entry	
	00004 SCS mode to SCS attitude control	
	00007 Manual attitude maneuver	
	00011 Automatic optics positioning	
	00012 Target data entry	
	00013 Switch OSS to computer control	
	00014 Fine align check	
	00015 Perform star acquisition	
	00016 Terminate mark sequence	
	00031 Engine on	
	00035 Prepare AGC for thrusting	
	00036 Thrust terminate	
	00041 C/M-S/M separation	
	00051 Final IMU/Fired vehicle	
	00052 Final IMU/Interior vehicle	

Figure 2.2-6. Noun List (Sheet 1 of 3)

SYSTEMS DATA

Noun Code	Description	Scale/Units
	00053 Interim IMU/Final vehicle	
	00054 Interim IMU/Interim vehicle	
	00061 IMU power down	
	00062 AGC power down	
26	Prior/delay (Used only during ground checkout.)	XXXXX.
27	Self test ON-OFF switch	XXXXX.
30	Star number	XXXXX.
31	Failure register code	
	NOTE	
	Error codes are defined in paragraph 2.2.2.3.3.	Octal only
	Self-test diagnosis REGISTER 2	Octal only
	Self-test diagnosis REGISTER 3	Octal only
32	Spare	
33	Spare	
34	Event time:	00XXX. hours 000XX. minutes 0XX. XX seconds
35	Delta event time:	00XXX. hours 000XX. minutes 0XX. XX seconds
36	Delta event time (Display only.)	XXBXX. minutes, seconds
37	Sighting identification	
40	Boost gamma (Inertial flight path angle.)	XXX. XX degrees
	Inertial velocity	XXXXX. ft/sec
	Altitude above launch pad	XXXX. X nautical miles
41	Maximum acceleration	XXXX. X g's
	Perigee altitude	XXXX. X nautical miles
	Free-fall time	XXBXX. minutes, seconds

Noun Code	Description	Scale/Units
42	Miss distance	XXXXX. X nautical miles
	Perigee altitude	XXXX. X nautical miles
	Free-fall time	XXBXX. minutes, seconds
43	Apogee altitude	XXXX. X nautical miles
	Perigee altitude	XXXX. X nautical miles
	Free-fall time	XXBXX. minutes, seconds
44	Latitude	XXX. XX degrees
	Longitude	XXX. XX degrees
	Altitude (Above mean equatorial radius.)	XXXX. X nautical miles
45	Apogee altitude	XXXX. X degrees
	Perigee altitude	XXXX. X degrees
	Delta velocity required	XXXXX. ft/sec
46	Time to event	XXBXX. minutes, seconds
	Velocity to be gained	XXXXX. ft/sec
	Perigee altitude	XXXX. X nautical miles
47	Flight path angle	XXX. XX degrees
	Miss distance	XXXX. X nautical miles
50	Time to event	XXBXX. minutes, seconds
	Delta time of burn	XXBXX. minutes, seconds
51	Time to event	XXBXX. minutes, seconds
	Velocity to be gained	XXXXX. ft/sec
	Measured velocity change along spacecraft X-axis	XXXXX. ft/sec
52	Time to event	XXBXX. minutes, seconds
	Velocity to be gained	XXXXX. ft/sec
	Free-fall time	XXBXX. minutes, seconds

Figure 2.2-6. Noun List (Sheet 2 of 3)

SYSTEMS DATA

Noun Code	Description	Scale/Units
53	Maximum acceleration	XXXX. X g's
	Free-fall time	XXBXX. minutes seconds
54	Commanded roll angle	XXX. XX degrees
	Present acceleration	XXXX. X g's
	Altitude	XXXX. X nautical miles
	NOTE	
	Noun codes 55 through 77 denote mixed nouns.	
55	OCDUs:	
	X (Shaft angles)	XXX. XX degrees
	Y (Trunnion angles)	XX. XXX degrees
56	Uncalled mark data:	
	X (Shaft angles)	XXX. XX degrees
	Y (Trunnion angles)	XX. XXX degrees
57	New angles-OCDUs:	
	X (Shaft angles)	XXX. XX degrees
	Y (Trunnion angles)	XX. XXX degrees
60	IMU mode status (Used only during ground checkout.)	Octal only
61	Target: (Used only during ground checkout.)	
	Azimuth	XXX. XX degrees
	Elevation	XX. XXX degrees
62	Delta velocity insertion	XXXXX. ft/sec
	Miss distance	XXXX. X nautical miles
	Free-fall time	XXBXX. minutes, seconds
63	Latitude	XX. XXX degrees
	Longitude/2	XX. XXX degrees
	Altitude	XXX. XX nautical miles
64	Latitude splash point	XXX. XX degrees
	Longitude splash point	XXX. XX degrees
	Time of free fall	XXBXX minutes, seconds
65	Sampled time (Fetched in interrupt.)	
		00XXX. hours
		000XX. minutes
		0XX. XX seconds
66	System test results (Used only during ground checkout.)	
67	Delta gyro angles:	
	X-IRIG	XX. XXX degrees
	Y-IRIG	XX. XXX degrees
	Z-IRIG	XX. XXX degrees
70	Pitch trim	XXX. XX degrees
	Yaw trim	XXX. XX degrees
	Delta velocity tailoff	XXXXX. ft/sec
71	(Spare)	
72	Delta position (Used only during ground checkout.)	
73	Delta velocity (Used only during ground checkout.)	
74	ΔU allowable	XXXXX. ft/sec
	ΔU tailoff	XXXXX. ft/sec
75	Delta position magnitude	XXXX. X nautical miles
	Delta velocity magnitude	XXXXX. ft/sec
76	R-position (Used only during ground checkout.)	
77	V-velocity (Used only during ground checkout.)	

Figure 2.2-6. Noun List (Sheet 3 of 3)

2.2.1.2.3.1 Error Codes.

Error code numbers appear in REGISTER 1 with noun 31.

OSS Errors

00101	Optics mode control switched from ZERO OPTICS before end of 30 seconds.
00102	AGC unable to achieve desired optics mode.
00103	Function not valid for SC 012.
00104	No vacant area available for marks.
00105	Internal mark request while mark system is busy.
00106	Function not valid for SC 012.
00107	Mark reject while mark system is not in use.
00110	Mark reject with all requested marks accepted or no marks since initiating last mark reject.
00120	Too many marks.

ISS Errors

00201	Zero encode ended before end of 30 second wait.
00202	AGC unable to achieve desired ISS mode.
00203	No ISS mode indicated to AGC
00204	ISS mode changed while TRANSFER switch is in COMPUTER position, but AGC did not command mode change.

Procedural Difficulties

00401	Desired gimbal angles will produce gimbal lock. (Middle gimbal angle greater than 60°.)
00402	Star out of field of view.
00403	Same as 00402.
00404	IMU orientation unknown.
00405	SCS mode monitor failure.
00406	Navigation program busy.
00407	Navigation program needed internally.
00411	Desired IMU/Desired vehicle unknown.

AGC Hardware Malfunctions

01101	Unused interrupt (RUPT 2) occurred
01102	AGC self-test error.
01103	Unused count, compare, and skip (CCS) branch executed.
01104	C-relay failed during C-relay test.
01105	Star search failure.
01106	IMU orientation no good for entry.

List Overflows

01201	Executive overflow-no vacant areas.*
01202	Executive overflow-no core sets.*
01203	Waitlist overflow-too many tasks.*
01204	Same as 01203.*
01205	Master control overflow-too many jobs waiting.*
01206	DSKY waiting line overflow.*
01207	No vacant area for marks.*
01210	Something already waiting in IMU stall.*

Interpreter Errors

01301	Arccos-arcsin input angle too large.*
01302	Square root called for with a negative argument.*

Display Alarms

01401	VG increasing-loss of control
01402	Delta V too low-engine not on.

DSKY Program Errors

01501	Check fail alarm during internal use.*

*These alarms are "aborts" and define alarms which initiate a restart of the AGC program which was in progress when the alarm appeared.

2.2.1.3 Performance and Design Data

(TBD)

2.2.1.4 Operational Limitations and Restrictions.

2.2.1.4.1 S/C Attitude.

The S/C should not be maneuvered to an attitude which will align the inner circle of either red area on the FDAI ball under the navigation axis marker. Failure to avoid this condition can result in IMU gimbal lock. Specifically, the following maneuvers should be avoided:

- Yaw maneuver greater than ±75 degrees when roll angle is 0 degree or 180 degrees.
- Pitch maneuver greater than +42 degrees or -108 degrees when roll angle is ±90 degrees.

2.2.1.4.2 IMU Operation

- The AGC will be ON before the IMU is placed in operation by engaging the IMU circuit breakers.
- The AGC will be ON or in STANDBY before the IMU is placed in standby mode.
- Allow 15 seconds for the stabilization loops to completely stabilize the platform after applying operating power, i.e., after engaging the IMU circuit breakers.
- The inertial components will suffer a loss of calibration if the temperature falls below 120°F or exceeds 140°F. Damage will occur if the temperature falls below 40°F or exceeds 160°F.
- Do not operate the IMU such that the middle gimbal angle reaches or exceeds 70 degrees.

2.2.1.4.3 Optics Operation.

- Do not slew the SXT or SCT into the mechanical stops.
- Do not drive the 2X TRUNNION CDU in excess of 180 degrees as read on the CDU display dials. Insure that this display dial indicates less than 180 degrees before engaging the ZERO OPTICS mode of operation.

2.2.1.5 Telemetry Measurements.

The following is a complete list of all G&N system telemetry data that is monitored by flight controllers and ground support personnel. The last column contains the name and type of S/C crew display. The display utilizes the same pickoff or signal source as telemetry, unless a separate measurement number is included in the display column.

An asterisk (*) by the measurement number denotes information which is not available for recording or telemetry transmission during PCM low bit rate operation.

Measurement Number	Description	Sensor Range	Crew Display
CG 0001 V	Computer digital data 40 bits	+4/+132 vdc	None
CG 1101 V	-28 VDC supply	-30/0 vdc	None
CG 1110 V	2.5 VDC TM bias	TBD	None
CG 1503 X	IMU +28 vdc operate	Event	None
CG 1513 X	IMU +28 vdc standby	Event	None
CG 1523 X	AGC +28 vdc	Event	None

Measurement Number	Description	Sensor Range	Crew Display
CG 1533 X	Optics +28 vdc	Event	None
CG 2110 V	IGA torque motor input	TBD	None
*CG 2112 V	IGA 1X res output sine in phase	TBD	None
*CG 2113 V	IGA 1X res output cos in phase	TBD	None
*CG 2117 V	IGA servo error in phase	0/0.5 vrms	None
CG 2140 V	MGA torque motor input	TBD	None
*CG 2142 V	MGA 1X res output sine in phase	TBD	None
CG 2143 V	MGA 1X res output cos in phase	TBD	None
*CG 2147 V	MGA servo error in phase	0/0.5 vrms	None
CG 2170 V	OGA torque motor input	TBD	None
*CG 2172 V	OGA 1X res output sine in phase	TBD	None
*CG 2173 V	OGA 1X res output cos in phase	TBD	None
*CG 2177V	OGA servo error in phase	0/0.5 vrms	None
*CG 2206 V	IGA CDU 1X res error in phase	0/0.2 vrms	None
*CG 2236 V	MGA CDU 1X res error in phase	0/0.2 vrms	None
*CG 2266 V	OGA CDU 1X res error in phase	0/0.2 vrms	None
CG 2300 T	PIPA temp	TBD	None
CG 2301 T	IRIG temp	TBD	None
CG 2302 C	IMU heater current	0/+5 amps	None
CG 2303 C	IMU blower current	0/+5 amps	None
*CG 3102 V	SXT trun motor drive in phase	TBD	None
*CG 3112 V	SXT shaft motor drive in phase	TBD	None
*CG 3133 V	SCT trun motor drive	TBD	None
*CG 3141 V	Trun CDU 16X res error in phase	TBD	None
*CG 3200 V	Trun CDU motor drive in phase	TBD	None
*CG 3220 V	CDU motor drive RMS	TBD	None
*CG 4300 T	AGC temp monitor	TBD	None
CG 5000 X	PIPA fail	Event	ACCEL FAIL, G&N ACCEL FAIL C&W lights (2).
CG 5001 X	IMU fail	Event	IMU FAIL C&W lights (2).
CG 5002 X	CDU fail	Event	CDU FAIL C&W lights (2).

SYSTEMS DATA

Measurement Number	Description	Sensor Range	Crew Display
CG 5003 X	Gimbal warning	Event	GIMBAL LOCK, GMBL LOCK C&W lights (2).
CG 5005 X	Error detect	Event	PGNS, G&N ERROR C&W lights (2).
CG 5006 X	IMU temp light	Event	IMU TEMP C&W lights (2).
CG 5007 X	Zero encode light	Event	ZERO ENCODER, ZERO ENC. C&W lights (2).
CG 5008 X	IMU delay light	Event	IMU DELAY. C&W light.
CG 5020 X	AGC alarm 1 (Program)	Event	PROG ALM, COMP FAIL (DSKY lights).
CG 5021 X	AGC alarm 2 (AGC activity)	Event	COMP DSKY lights (2).
CG 5022 X	AGC alarm 3 (TM)	Event	TM FAIL, COMP FAIL. (DSKY lights).
CG 5023 X	AGC alarm 4 (prog ck fail)	Event	CHECK FAIL, COMP FAIL. (DSKY lights).
CG 5024 X	AGC alarm 5 (scaler fail)	Event	SCALER FAIL, COMP FAIL. (DSKY lights).
CG 5025 X	AGC alarm 6 (parity fail)	Event	PARITY FAIL, COMP FAIL. (DSKY lights).
CG 5026 X	AGC alarm 7 (counter fail)	Event	COUNTER FAIL, COMP FAIL. (DSKY lights).
CG 5027 X	AGC alarm 8 (key release)	Event	KEY RLSE (DSKY lights)(2).
CG 5028 X	AGC alarm 9 (rupt lock)	Event	RUPT LOCK, COMP FAIL (DSKY lights).
CG 5029 X	AGC alarm 10 (TC trap)	Event	TC TRAP, COMP FAIL. (DSKY lights).
CG 5030 X	Computer power fail light	Event	AGC PWR FAIL (DSKY lights) (2).
*CG 6000 P	IMU pressure	TBD	None
*CG 6020 T	PSA temp 1 tray 3	TBD	None
*CG 6021 T	PSA temp 2 tray 2	TBD	None
*CG 6022 T	PSA temp 3 tray 4	TBD	None

SCS

SECTION 2

SUBSECTION 2.3

STABILIZATION AND CONTROL SYSTEM (SCS)

2.3.1 INTRODUCTION.

The stabilization and control system (SCS) provides a capability for controlling rotation, translation, and thrust vector forces with additional capability of rate stabilization.

The SCS is divided into three basic subsystems: attitude reference, attitude control, and thrust vector control. These subsystems contain the elements which provide for manual attitude control, automatic attitude control, and thrust vector control, plus manual backup provisions for all automatic functions.

The subsystem/control capability allows the free selection of several modes of operation which fall within the boundaries of three entirely different flight control profiles. These include coasting flight (earth orbital environment), powered flight (atmospheric - ascent, and earth orbital environment), and atmospheric flight (entry - unpowered).

Spacecraft displays provide a capability for monitoring S/C attitude, S/C rates, attitude errors, cautions, and warnings. Controls provide switch arrangements for commanding modes, commanding inputs to change operating status and to permit manual override to all automatic functions.

The SCS interfaces with the following S/C systems. (See figure 2.3-1.)

- Telecommunications System (T/C)

  Provides clock reference frequency for measurement of changes in S/C velocity

  Receives all down-link telemetry from SCS

  Provides up-data position information via AGC or voice

- Electrical Power System (EPS)

  Provides primary power for SCS operation

- Environmental Control System (ECS)

  Transfers heat from SCS electronics

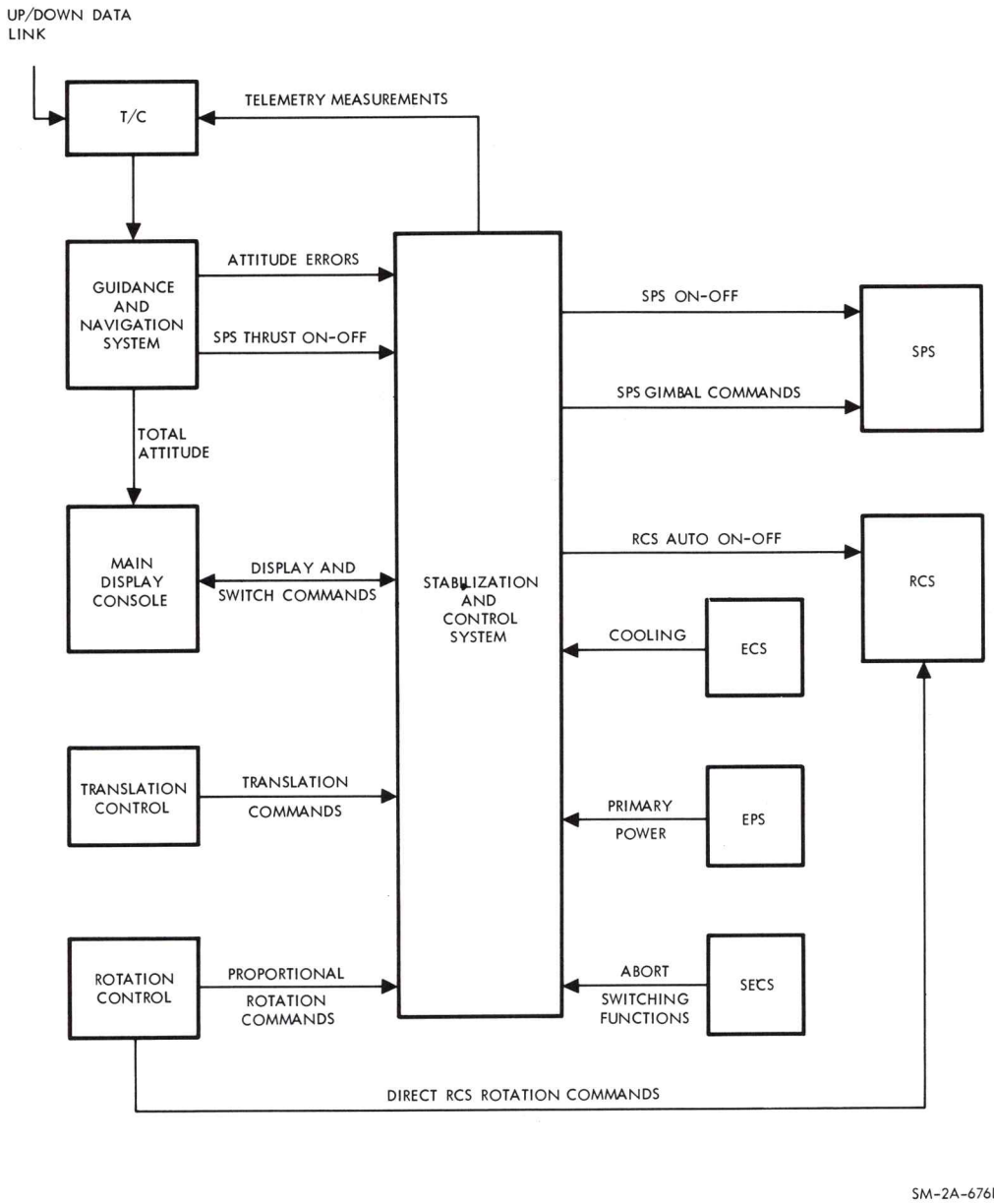

Figure 2.3-1. SCS Functional Interface

- Sequential Events Control System (SECS)

  Provides abort switching function

  By switch control in SCS, initiates abort and enables control functions in SCS

- Guidance and Navigation System (G&N)

  Provides roll, pitch, and yaw total attitude inputs to SCS

  Provides attitude error signals

  Provides thrust on/off command for SPS engine

  Provides steering commands to TVC during G&N ΔV

- Propulsion Systems (SPS, RCS).

  The service propulsion system generates internal forces for large velocity changes

  The reaction control system generates the internal forces required for rotation, and translation.

A detailed description and function of the SCS controls and displays referred to is provided in section 3.

2.3.2 FUNCTIONAL DESCRIPTION.

The functional description of the SCS covers the major areas of control capabilities, Apollo reference axes, and subsystem description.

2.3.2.1 Control Capabilities.

Control capability exists for the manual attitude control, automatic attitude control, and thrust vector control functions. The following paragraphs provide a brief discussion of each control function.

2.3.2.1.1 Manual Attitude Control.

Manually commanded inputs converted to electrical signals, directly or indirectly, cause the propulsion systems to maneuver the spacecraft to a desired attitude and/or change the flight path (trajectory) of the spacecraft. Manual controls include two independent rotation controllers (figure 2.3-8), two translation controllers (figure 2.3-8), and an arrangement of panel-mounted controls and displays.

The rotation controllers command discrete on-off signals for the reaction control system to initiate angular rotations about the S/C X-, Y-, and Z- axes or combinations of these axes. The X-, Y-, and Z-axes are synonomous with the S/C geometric coordinate system of roll (ϕ), pitch (θ), and yaw (ψ), respectively. (See figure 2.3-2.) These commands are primarily used for S/C attitude (orientation) control. The translation controllers, when operated, command signals for the reaction control system to initiate translations (acceleration) along the S/C X-, Y-, and Z-axes or combinations of these axes. These commands are primarily initiated to perform ullage maneuvers prior to SPS thrusting. Panel-mounted switches are used for attitude set control functions, application of electrical power, evaluating system status, and selection of operating modes.

The displays provide indications of total attitude, attitude errors, angular rates, and caution and warnings.

2.3.2.1.2 Automatic Attitude Control.

Automatic attitude control is a capability whereby attitude errors and rotational rates are sensed by gyroscopic devices which, in association

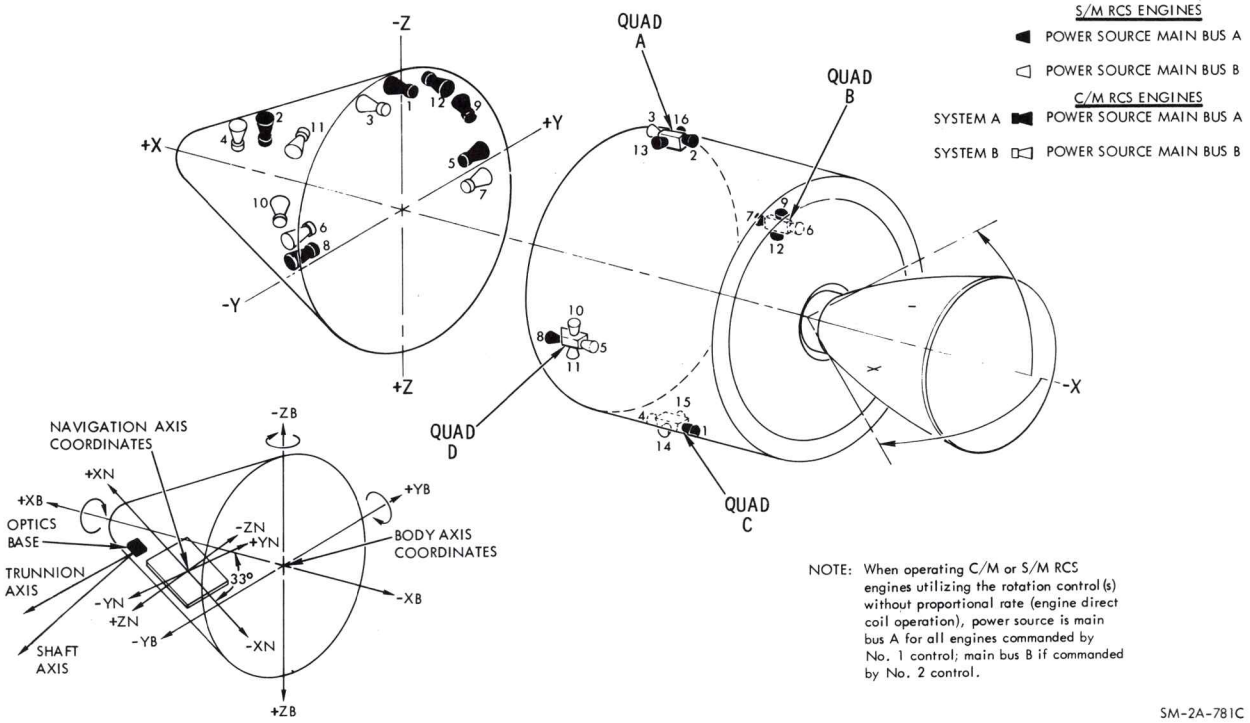

Figure 2.3-2. C/M-S/M-RCS Engine Location/Apollo Reference Axes

with electronic and logic circuits, automatically induce the propulsion systems to maintain a desired inertially fixed attitude. Translation capability is not an automatic control function.

Two methods of automatic attitude control are available. One method requires the use of components of the SCS to establish desired attitude references, and for sensing attitude changes and rates of change. Three orthagonally mounted rate gyros sense angular rates about the S/C X-, Y-, and Z-axes. Body-mounted attitude gyros (BMAGS) and attitude gyro coupling unit (AGCU) establish attitude reference and determines attitude error. The attitude error signals and rate gyro signals are electronically conditioned and subsequently provide a rate-damped automatic attitude hold with respect to an inertially fixed attitude. The attitude is held with drift rates kept within acceptable limits (deadband) for the three axes. A maximum or minimum deadband may be selected by the ATT DEADBAND switch on the SCS control panel (MDC-8). Maximum deadband allows drift limits of ±5 degrees from reference attitude. Minimum deadband is ±0.5 degree from reference attitude.

When a manual maneuver is initiated, the automatic attitude control function is interrupted. When the manual maneuver ceases, the automatic attitude control function is reinstated and the new attitude will be the new inertial attitude.

The other method of automatic attitude control incorporates components of the G&N system; whereby, the combined G&N/SCS systems establish attitude references, and sense attitude change and rate of change. In addition, the Apollo guidance computer (AGC) can be commanded through the computer keyboard to automatically establish new attitude references and maintain attitude hold at the new reference. When this is done, attitude change data is taken from on-board charts or received via the manned space flight network (MSFN).

The inertial measurement unit (IMU) in the G&N system provides the inertial reference and senses attitude errors. The rate gyros in the SCS determine the rates of change. The attitude error signals sensed by the IMU and SCS rate gyro signals are electronically conditioned and subsequently provide a rate-damped automatic attitude control with respect to the IMU inertially fixed reference. Again, drift rates about the three S/C axes are held within acceptable limits.

Manual maneuvers can also be performed when using G&N attitude control, providing proper switch configuration is established. The automatic hold function is interrupted until the manual maneuver ceases, at which time the automatic function continues to hold at the new inertial attitude. Inputs to the AGC via the computer keyboard can command the AGC to realign the IMU to a selected inertial reference. The S/C can then be automatically maneuvered to and be maintained at the new attitude.

When automatic attitude control functions are in process, displays are required only for monitoring and comparing attitude with external or known references, and for indications of systems failures.

2.3.2.1.3 Thrust Vector Control.

Thrust vector control (TVC), primarily, accomplishes three main objectives. The first objective is to either manually or automatically initiate thrusting of the SPS engine when large velocity changes are required. The second is to control the thrust vector of the SPS engine such that the vector force is essentially maintained through the S/C center of gravity (c.g.) in the direction of the velocity correction. The third objective requires the automatic, with manual backup, termination of SPS thrusting when a required velocity change has been attained.

When SPS thrusting occurs, thrust vector control uses the same basic commands that are used for the attitude control function, plus additional commands to control the SPS pitch and yaw gimbal actuators. This combination establishes the three-axes attitude control and stability while thrusting. The commands to the pitch and yaw gimbal actuators will hold the SPS thrust vector through the S/C c.g. in the direction of velocity correction, and roll attitude is maintained by the roll attitude control circuits and the RCS roll engines.

There are three methods, or modes, of thrust vector control: G&N delta V, SCS delta V, and manual thrust vector control (MTVC). G&N delta V is the primary mode of control for velocity changes. The G&N system inserts commands into the SPS gimbal servo circuits to control the thrust vector and to automatically initiate SPS thrusting. The G&N/SCS attitude control sensors and electronics perform the remainder of the control functions.

The SCS delta V is normally used as a backup system in the event of G&N failure. When in G&N mode of operation, the SCS BMAG/AGCU loop is aligned to the IMU reference attitude and, therefore, follows the attitude changes sensed by the IMU prior to selecting the ΔV mode. After selecting a ΔV mode, the BMAG/AGCU loop is opened. In the event of G&N failure or IMU failure, a transfer to SCS delta V will allow continuation of the velocity change using attitude error signal inputs originating from the BMAGS. For SCS delta V, there are no major differences in operation of the gimbal servo loop and the rate loops.

Manual thrust vector control is a control function utilizing panel-mounted controls, translation controls, and rotation controls. MTVC is primarily used to limit excessive rate changes that may be created by malfunctions in the SCS or G&N systems. Manipulation of the controls allows velocity changes by the selection of redundant electronics and redundant actuator motors to control gimbal action.

Displays allow monitoring the character of a delta V, monitoring system performance, and detecting system malfunctions.

2.3.2.2 Apollo Reference Axes.

In Apollo, there are two sets of axes, or coordinates, which are used for measuring changes in S/C attitude. (See figure 2.3-2.) One set of coordinates represent the geometric axes of the S/C and are the body axes X_B, Y_B, and Z_B. The other set of coordinates represent the geometric axes of the IMU-optic base or navigations base. They are the navigations axes X_N, Y_N, and Z_N. The inertial sensors are mounted and aligned relative to these two sets of coordinates. The BMAG roll, pitch, and yaw gyros are aligned to the S/C body axes and the IMU is aligned to the navigations axis.

2.3.2.2.1 Body Axes.

As shown in figure 2.3-2, the longitudinal (X_B) axis passes through the geometric center of the S/C. The $+X_B$ is toward the apex of the command module; $-X_B$ is the opposite. Looking in the direction of the apex, the $+Y_B$-axis is to the right; $-Y_B$ is to the left. The $+Z_B$ is in the direction of the footrest of the center couch and $-Z_B$ is toward the headrest of the center couch. The S/C c.g. is included in the plane formed by the X_B- and Z_B-axes.

A + roll rotation is a clockwise rotation about the X-axis, looking from -X to +X; a + pitch rotation is a clockwise rotation about the Y-axis, looking from -Y to +Y; and a + yaw rotation is a clockwise rotation about the Z-axis, looking from -Z to +Z.

2.3.2.2.2 Navigations Axes.

The navigations axes are rotated +33 degrees in pitch about the Y_B-axis. The X_N-axis is parallel to the side of the S/C; the Y_N-axis is parallel to the Y_B-axis; and the Z_N-axis is normal to the side of the S/C and is rotated +33 degrees in pitch about the Y_N-axis. The Z_B-axis lies in the same plane as the X_N-axis. The $\pm X_N$-, $\pm Y_N$-, and $\pm Z_N$-axes point in the same relative directions as the body axes. The IMU +X-, +Y-, and +Z-axes are aligned to the $+X_N$- and $+Z_N$-axes.

2.3.2.2.3 Optics Base Axes.

A line-of-sight telescope and sextant, mounted on the optics base, are used in conjunction with the G&N system to determine S/C inertial attitude and position. The optics base axes are measured in terms of the shaft and trunnion angles of the telescope and sextant. The shaft axes of the two are parallel to the Z_N-axis and trunnion axes are parallel to the Y_N-axis.

2.3.2.3 Subsystems.

The attitude reference, attitude control, and thrust vector control subsystems are described in the following paragraphs. The description covers the purpose and functions of each subsystem, and the integrated association with other systems. Figures 2.3-3 and 2.3-4, provide simplified block, and flow diagrams of the three subsystems and figure 2.3-5 shows the switching logic and functions which affect the three subsystems.

2.3.2.3.1 Attitude Reference Subsystem.

The purpose of the attitude reference subsystem (figures 2.3-4 and 2.3-5) is to relate the S/C attitude in terms of its geometric X, Y, and Z coordinate system to an arbitrarily chosen coordinate system with a fixed reference frame. The relation between the two coordinate systems represents inertial attitude and is presented to the astronauts by visual display.

Visual observation of inertial attitude is necessary to perform manual maneuvers or for monitoring automatic operations. The flight director attitude indicator (FDAI), located on the S/C main display console, displays the information required for the manual and automatic operations. The information displayed includes S/C total attitude, attitude error in three axes, and rotational rates in three axes. The information displayed by the FDAI is obtained from either the G&N system or the SCS.

There are two attitude references associated with the attitude reference subsystem: primary and backup. The primary reference is obtained through the mechanization of subsystems within the G&N system. The backup reference is mechanized within the SCS. Each of the attitude reference loops contain three basic elements: a computer, an inertial reference device, and a visual display.

Attitude Reference/G&N. To obtain an inertial reference using the G&N system, the astronauts, the G&N optics subsystem, the inertial and computer subsystems, and the MSFN are integrated to form a closed loop system.

The G&N system is used to determine inertial attitude and position and initiates alignment of the stable element of the IMU to the desired inertial reference initially established by optical sightings.

After IMU alignment, the IMU in conjunction with the AGC can provide inertial-referenced attitude hold and, if required, inertial-referenced velocity changes. Translational velocities are sensed by accelerometers mounted on the IMU stable element. The AGC processes the accelerometer signals to update velocity and change information for TVC functions.

In addition to the optical alignment of the IMU, the astronauts can use the computer subsystem to establish IMU alignment.

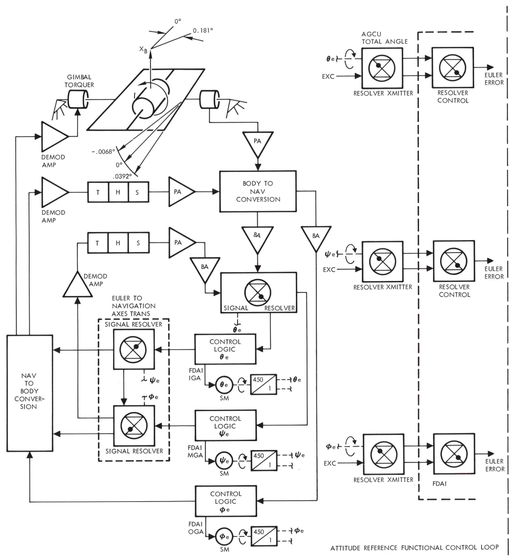

ATTITUDE REFERENCE FUNCTIONAL CONTROL LOOP

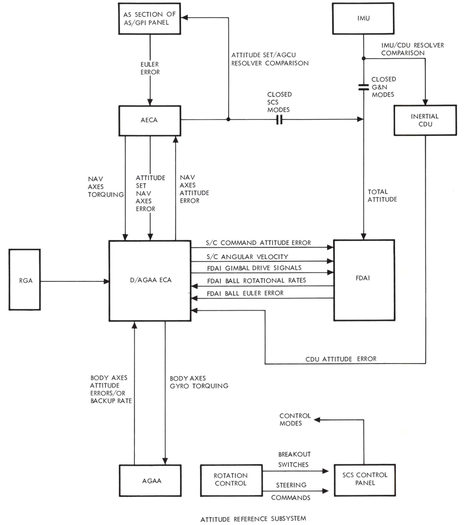

ATTITUDE REFERENCE SUBSYSTEM

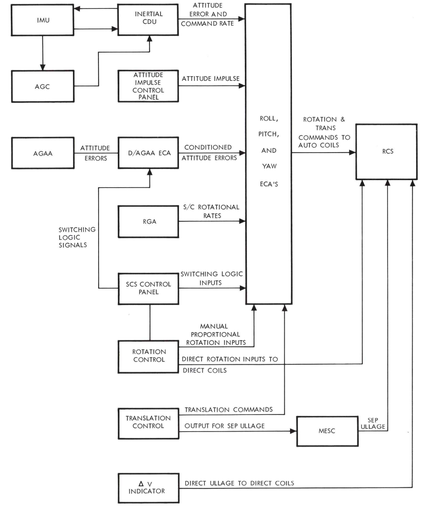

ATTITUDE CONTROL SUBSYSTEM

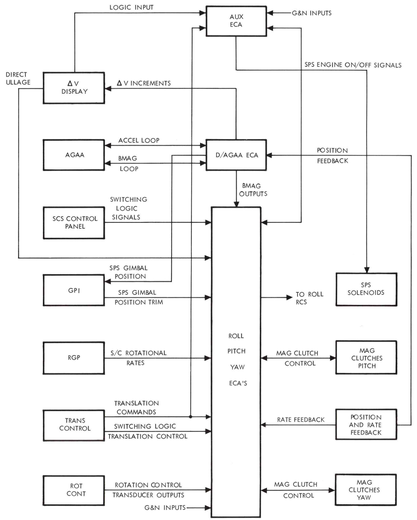

THRUST VECTOR CONTROL SUBSYSTEM

SM-2A-935B

Figure 2.3-3. SCS Functional Block Diagram

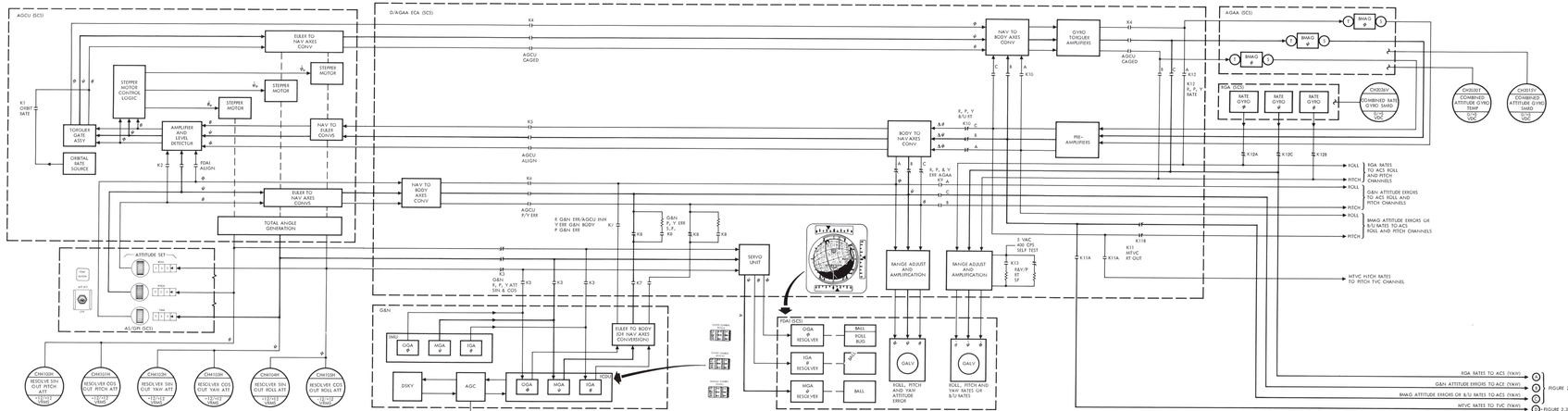

MAJOR MODE	K1	K2	K3	K4	K5	K6	K7	K8	K9	K10	K11	K12	K13
MONITOR			•	•	•		•	•	•	•			
G&N ATTITUDE CONTROL			•	•	•		•		•				
SCS ATTITUDE CONTROL													
SCS LOCAL VERTICAL	•			•									
G&N Δ V			•				•		•				
SCS Δ V													
G&N ENTRY			•	•	•		•		•				
SCS ENTRY													•
INTEGRATED MODE FUNCTIONS													
CSS				•	•								
MINIMUM IMPULSE CONTROL				•	•								
TRANSLATION CONTROL "ON" SWITCH				•	•								
MTVC									•	•	•	•	
B/U RATE = R, P, & Y									•	•		•	
.05G MANUAL (SCS ENTRY)				•	•				•				
CHANNEL DISABLE (SCS ATT CONT)				•	•								
ATT SET SW ON (SCS MODES)						•			•				
FDAI ALIGN		•											
SELF TEST												•	•

NOTE: For Switching Logic Details, See Figure 2.3-5, Sheet 2

Sht-2A- 10318

Figure 2.3-4. SCS Functional Flow Diagram (Sheet 1 of 4)

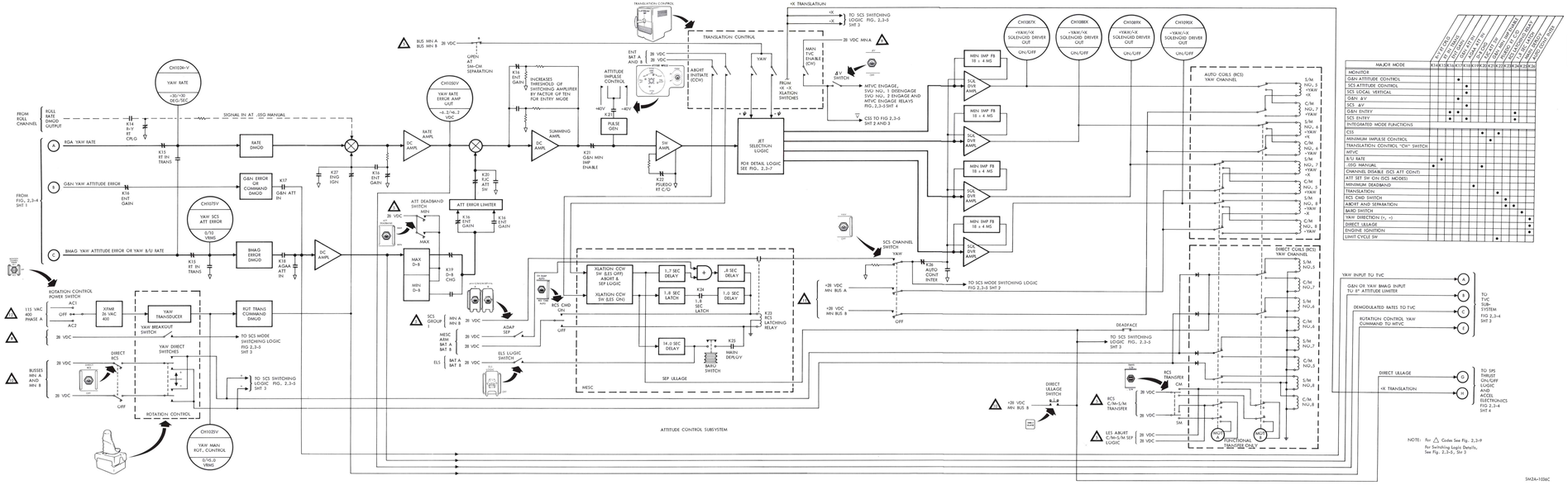

MAJOR MODE	RATE CMD	ATT HOLD	SCS ATT CONTROL	SCS TRANS CONTROL	DIRECT ULLAGE	MTVC ENGAGE	SCS/CSM SEPARATION	SCS/LEM SEPARATION	SCS ENTRY CONTROL	SCS/ENTRY SEPARATION	DROGUE DEPLOY	MAIN DEPLOY
MONITOR												
G&N ATTITUDE CONTROL			•									
SCS ATTITUDE CONTROL			•									
SCS LOCAL VERTICAL			•									
G&N ΔV		•										
SCS Δ V		•										
G&N ENTRY	•	•							•			
SCS ENTRY	•	•							•			
INTEGRATED MODE FUNCTIONS												
CSS				•	•							
MINIMUM IMPULSE CONTROL					•							
TRANSLATION CONTROL "ON" SWITCH				•								
MTVC						•						
B/U RATE	•											
-SSG MANUAL	•											
CHANNEL DISABLE (SCS ATT CONT)					•							
ATT SET SW (ON SCS MODES)												
MINIMUM DEADBAND					•							
TRANSLATION												
RCS CMD SWITCH												
ABORT AND SEPARATION												
BMAG SWITCH												
YAW DIRECTION (+, -)												
DIRECT ULLAGE												
ENGINE IGNITION												
LIMIT CYCLE SW												

Figure 2.3-4. SCS Functional Flow Diagram (Sheet 2 of 4)

MAJOR MODE	K27 ENG IGN	K28 SYS GRD CK	K29 SCS Δ V MODE	K30 ENGINE IGN	K31 MTVC ENGAGE	K32 TVC ELEC TRANS	K33 SERVO NO. 1 DISENGAGE	K34 SERVO NO. 2 ENGAGE
SCS Δ V			•					
INTEGRATED MODE FUNCTIONS								
ENGINE IGNITION	•			•				
SYSTEM GRD CHECK		•						
MTVC ENGAGE					•		•	•
TVC MONITOR						•	•	•
TVC NO. 1 OFF						•	•	•

NOTE:

1. For Switching Logic Details, See Figure 2.3-5, Shts 3 & 4
2. For △Codes, See Figure 2.3-9

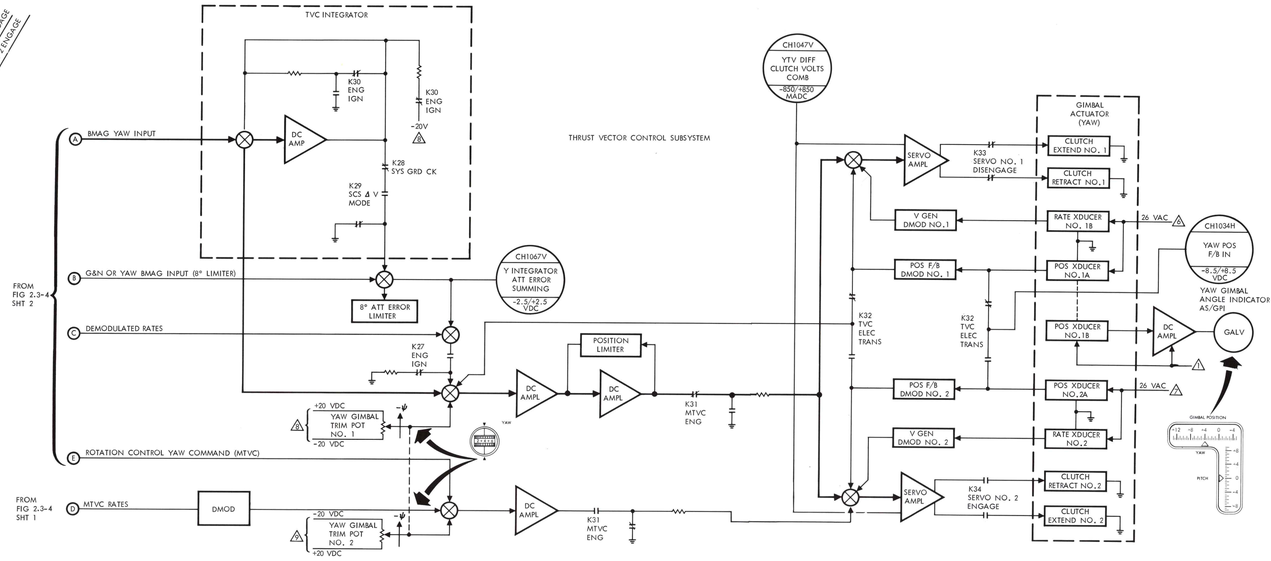

5M-2A-1037C

Figure 2.3-4. SCS Functional Flow Diagram (Sheet 3 of 4)

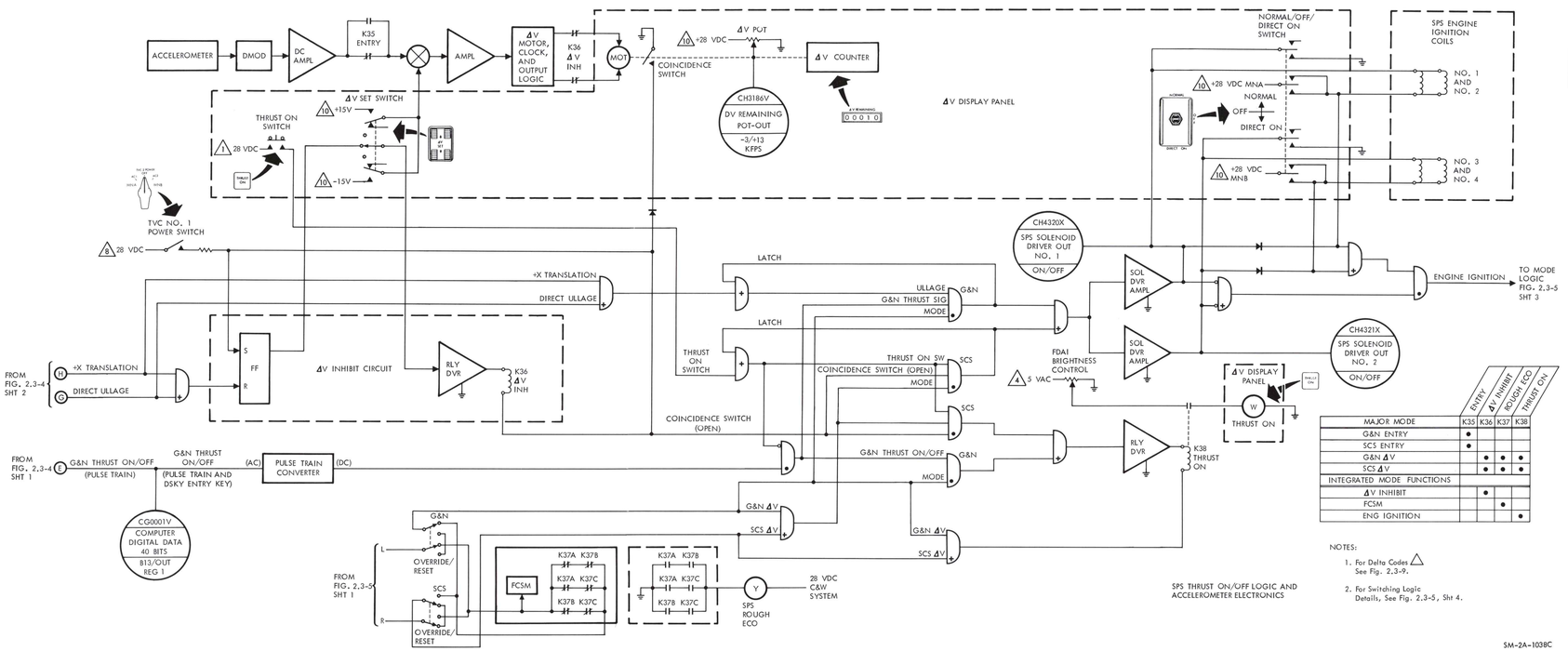

Figure 2.3-4. SCS Functional Flow Diagram (Sheet 4 of 4)

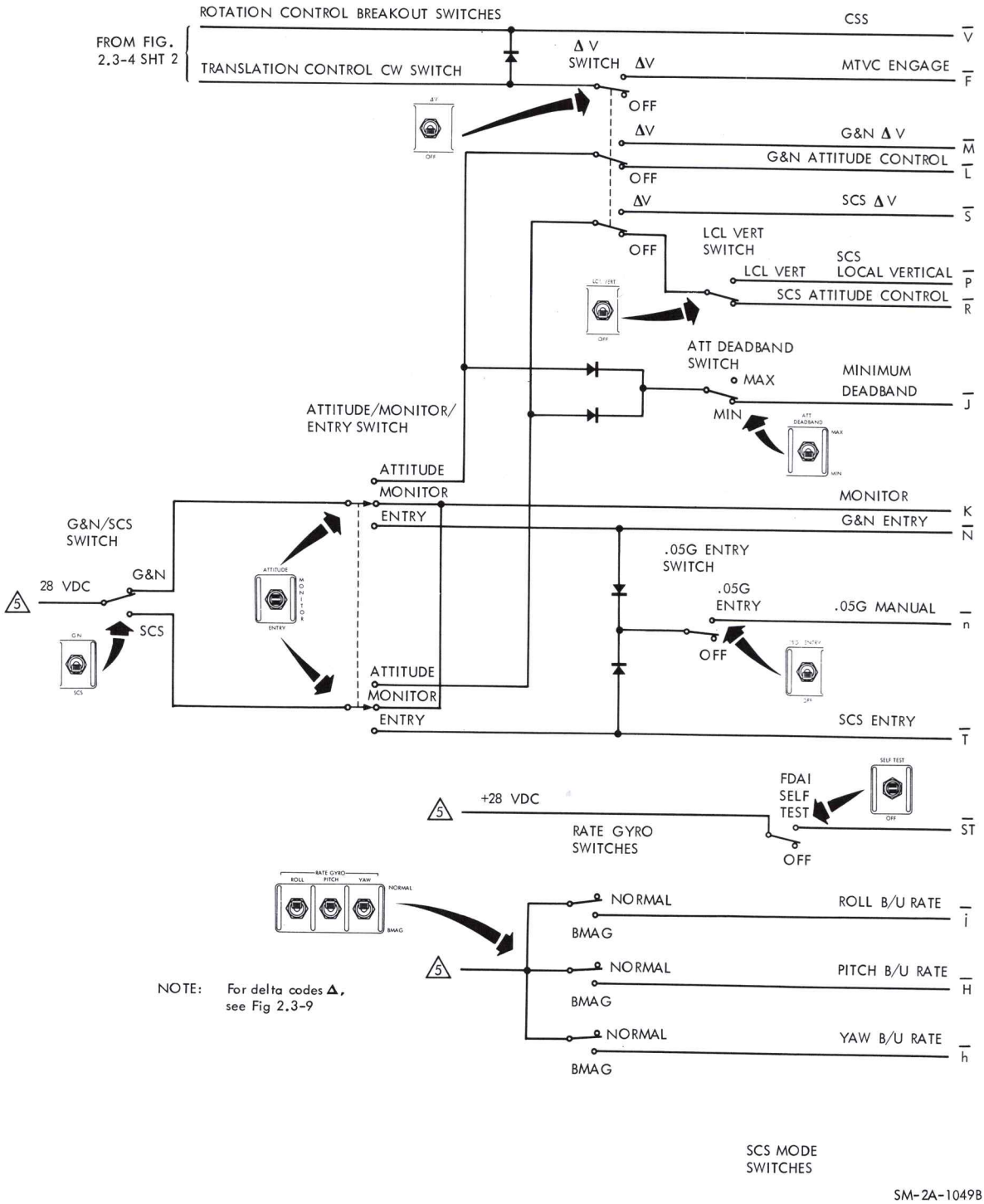

Figure 2.3-5. SCS Switching Logic (Sheet 1 of 4)

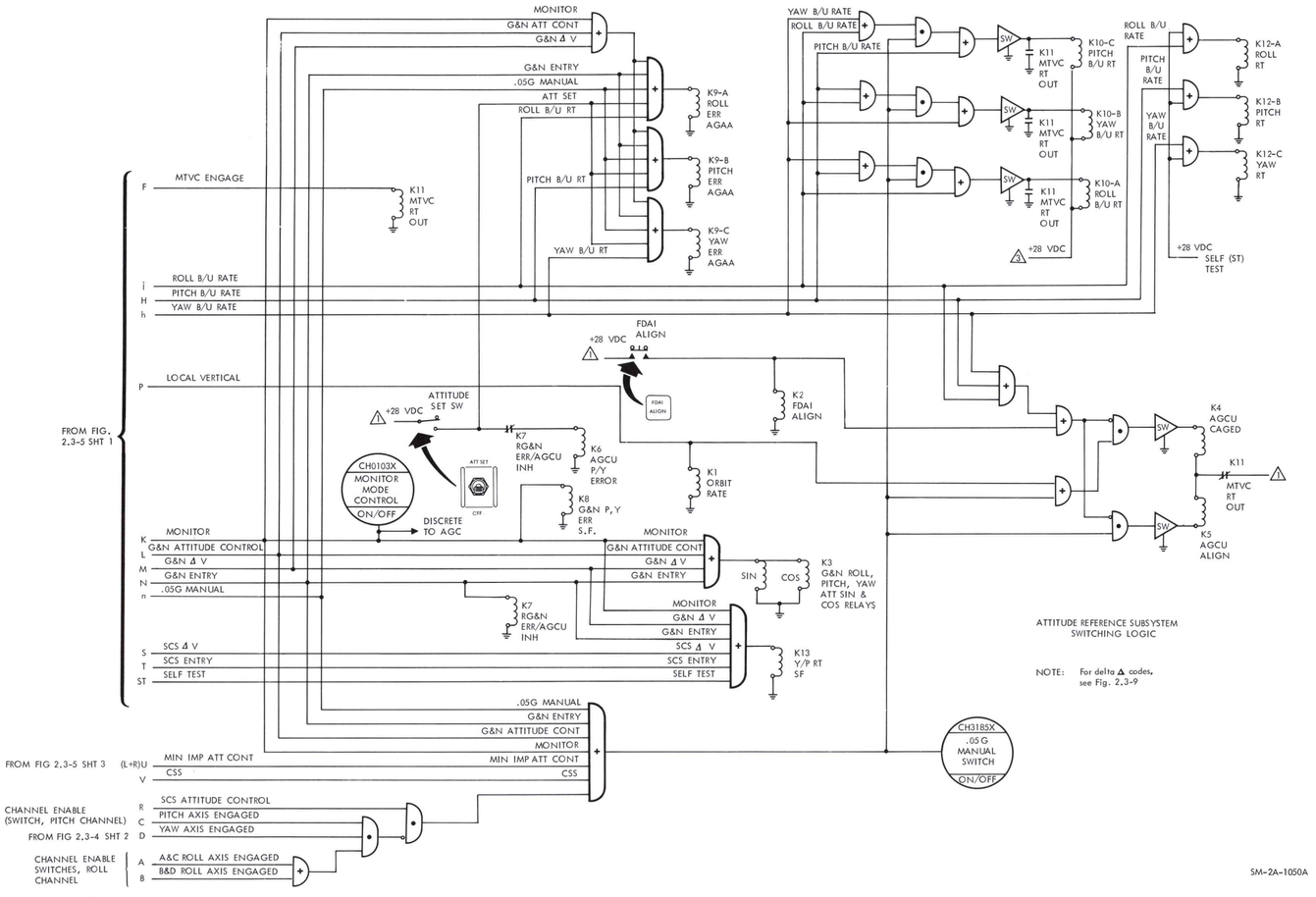

Figure 2.3-5. SCS Switching Logic (Sheet 2 of 4)

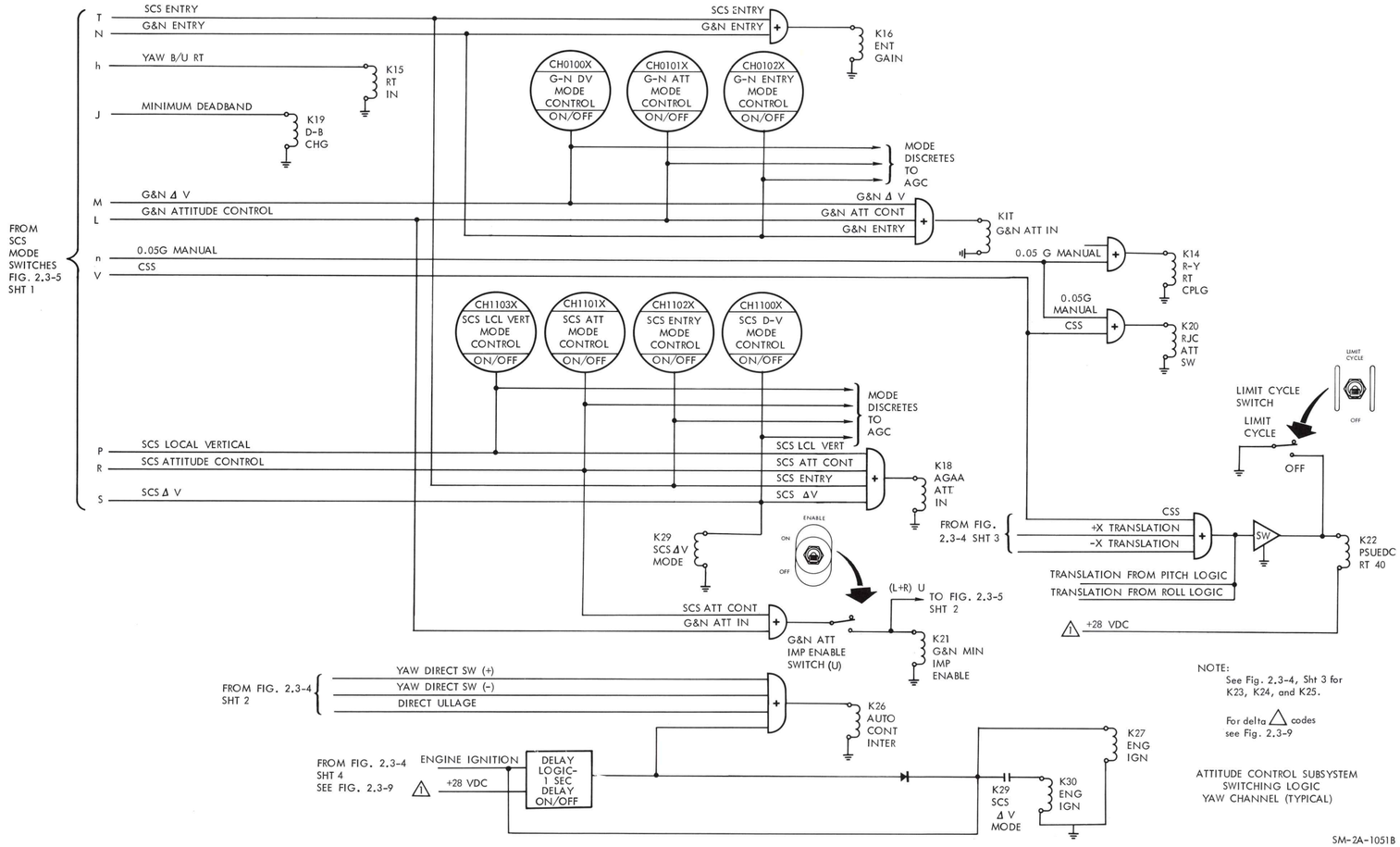

Figure 2.3-5. SCS Switching Logic (Sheet 3 of 4)

SCS

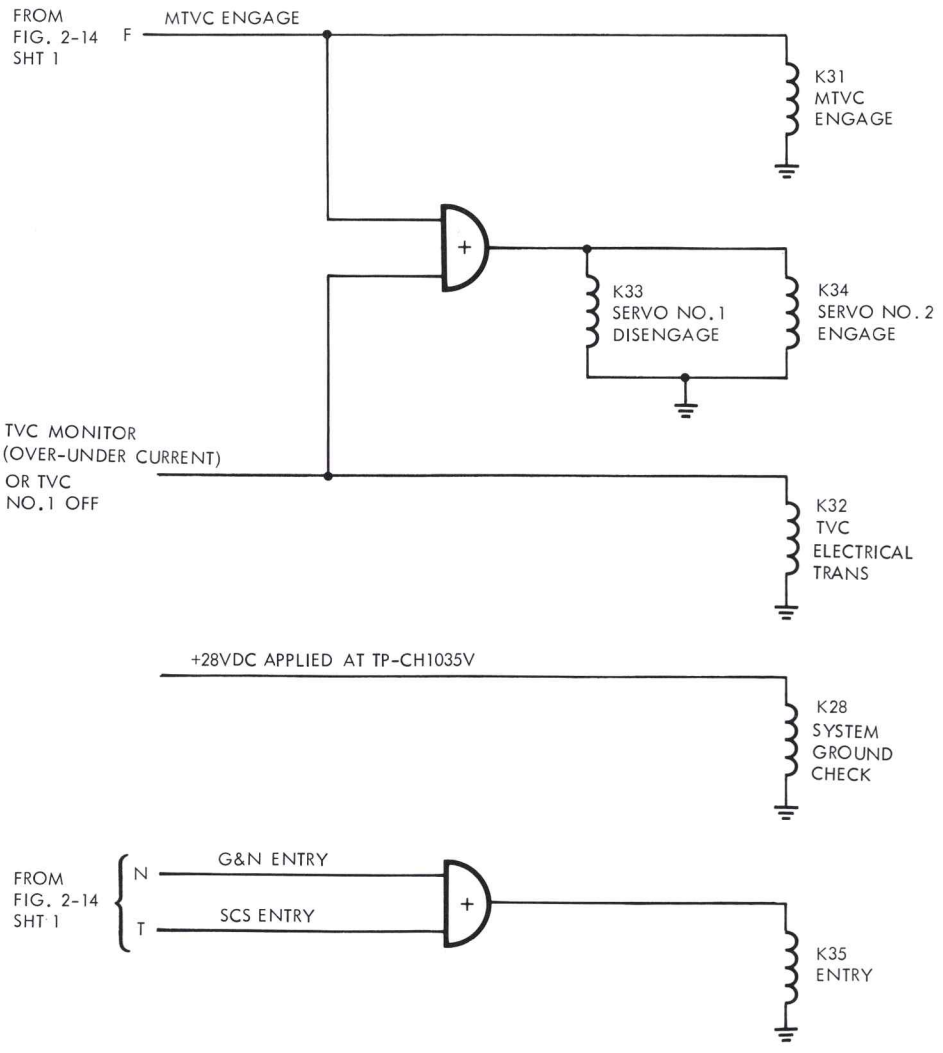

NOTE: See Fig. 2-13 Sht 5 for relays K36, K37, & K38.

SM-2A-1052

Figure 2.3-5. SCS Switching Logic (Sheet 4 of 4)

Inertial reference data may also be received by the astronauts via the MSFN voice link for AGC updating and/or for IMU alignment. With the computer subsystem in the G&N loop, automatic maneuvers and/or G&N-controlled velocity changes are possible.

The FDAI receives total attitude and attitude error information from the G&N system. The FDAI indicates S/C total attitude (S/C reference attitude) and attitude error. Total attitude represents the gimbal angles of the IMU; and attitude error is the difference between the IMU gimbal angles and the desired attitude. The desired attitude is obtained by maneuvering the S/C either manually or automatically in the directions that null out the indicated errors. This establishes S/C attitude to the desired inertial reference. The FDAI also displays rotational rates obtained from the SCS rate gyros. The SCS rate gyros supply rate information for all G&N and SCS control and display functions.

In G&N modes, the FDAI ball is continuously controlled by signals from the IMU gimbal angle resolvers. In SCS modes, the ball is controlled by the AGCU total angle resolvers. AGCU signals are applied to the ball only during manually initiated attitude changes (assuming none of the BMAGs are rate caged) and in the SCS entry mode after 0.05 G switching. At all other times, the ball remains stationary. The ball is always driven with reference to the IMU axes with the AGCU providing the conversion for the BMAGS from body axes to IMU axes.

Attitude Reference/SCS. If the IMU cannot be used for attitude reference, a backup or strapdown attitude reference comprised of assemblies contained within the SCS will provide inertial attitude reference. The strapdown reference is mechanized within the following:

- Attitude Gyro Accelerometer Assembly (AGAA)

Contains the body-mounted attitude gyros (BMAGS), X-axis accelerometer, and self-contained electronics. Provides attitude error signals for the attitude control subsystem, AGCU, and FDAI. The BMAGS are also a source for backup rate signals, if required.

- Rate Gyro Assembly (RGA)

Provides angular rate signals to the attitude control (ACS) subsystems and to the FDAI.

- Attitude Set/Gimbal Position Indicator (AS/GPI)

The AS section provides a capability to set in desired reference attitudes and align the ARS to those attitudes. The GPI section allows the astronauts to manually position the SPS engine gimbals to a trim position prior to a delta V maneuver.

- Display/Attitude Gyro Accelerometer Assembly Electronic Control Assembly (D/AGAAECA)

  AGAA section: Contains electronics required to operate the BMAGS and to interface with the AGCU

  DECA section: Provides the interface electronics between all sensors and corresponding displays

- Auxiliary Electronic Control Assembly (AECA)

  AGCU section: Performs the mathematical computations and contains the transformation matrices required to display attitude and attitude errors of the S/C. The AGCU is the primary control device for the SCS ARS.

  The remainder of the AECA contains circuitry for the SPS engine thrust ON/OFF control function.

- Flight Director Attitude Indicator (FDAI)

  The FDAI (figure 2.3-12) provides the visual displays for S/C attitude; included is total attitude readout (FDAI ball) gimbaled in three axes: roll, pitch, and yaw.

  Pitch and yaw total attitude is read from either the body axes index (ν) or the navigation axes index ($\oplus$). The indices are fixed to the instrument faceplate. Roll is indicated by a roll bug (indicator needle driven by the roll gimbal through a gear mechanism). Roll attitude is read by comparing the roll bug position with reference to a scaled bezel ring about the instrument periphery.

  Attitude errors are indicated by three fly-to needles.

  Angular rates are indicated by three fly-to needles.

  A + roll rate or + roll error will cause those needles to deflect left. A - roll rate or - roll error will cause the needles to deflect right.

  A + pitch rate or + pitch error will cause those needles to deflect down. A - pitch rate or - pitch error will cause the needles to deflect up.

  The yaw rate and error needles deflect in the same directions as the roll needles.

  To correct the error, the S/C is automatically or manually rotated in the direction of needle deflection.

The SCS attitude reference subsystem is mechanized such that it is used primarily for monitoring S/C attitude. Consequently, automatic maneuvering is not possible when SCS modes of operation are selected. However, by using the FDAI as a monitor and by proper selection of controls, precision manual maneuvers can be performed.

The subsystem, acting as a strapdown reference, will supply all of the attitude data normally available from the IMU. These data are subsequently applied to the FDAI for presentation of S/C attitude.

Basically, the body-mounted attitude gyros (BMAGS), attitude gyro coupling unit (AGCU), and the FDAI are the primary inertial sensing, computing, and display elements of the strapdown system. Attitude errors in roll, pitch, and yaw body axes are sensed by the body-mounted attitude gyros. The error signals are conditioned and subsequently directed to the FDAI for display of total attitude and attitude error. The major part of the conditioning takes place in the AGCU which provides signal inputs to the FDAI comparable to that of the IMU.

The AGCU section of the auxiliary electronic control assembly is the primary control or computing device for the SCS attitude reference subsystem. It performs most of the inertial reference computations and performs the mathematical conversions and transformations required to display total attitude and attitude error. The attitude gyro torquing loop, that the AGCU electromechanical elements are a part of, perform the following:

- Generate a pulse train that is equivalent to the total change in S/C attitude
- Provide two-directional control of resolver shaft angles
- Provide torquing current for the attitude gyros
- Provide forward and reverse conversion of gyro and attitude set error signals to appropriate axes representation for FDAI display, and for gyro torquing.

The SCS rate gyros sense vehicle angular velocity, and supply angular rate signals to the system for rate stabilization and to the FDAI rate indicators. The proper selection of switches will place the BMAGS in a backup-rate condition, and provide rate signals to the FDAI rate indicators. Whenever manual thrust vector control is selected, the BMAGS will automatically be placed in the backup-rate condition.

Attitude Reference Control. After a maneuver or a series of maneuvers, the S/C attitude (body axes) is, each time, different with respect to the inertial reference frame. Therefore, the requirement exists for a method of resolving the rotations about the different body axes, and

establish a relationship between the body axes and the axes of the fixed reference frame. This relationship is established through an Euler angle transformation process obtained from either the IMU (stable element) or the strapdown attitude reference subsystem. The Euler angle, then, is the resolved difference between the S/C body axes coordinates and the coordinates of the fixed inertial reference. The Euler angle attitude of the S/C, as displayed on the FDAI, is with respect to the coordinates of the fixed reference frame.

The conversion from body axes to Euler angle readout on the FDAI, basically, consists of a forward transformation and a reverse transformation. (See figure 2.3-3.) The forward transformation is essentially body-to-navigation axes conversion, then navigation axes-to-Euler angle transformation by resolvers in the AGCU. The resolvers and gimbal servos in the FDAI position the total attitude displays, resulting from the Euler errors. The reverse transformation is essentially Euler angle-to-navigation axes transformation by resolvers in the AGCU, then navigation-to-body axes conversion for signal application to the attitude gyro torquing amplifiers. After amplification, the signals are demodulated and applied to the gyro torquing coils which torque the gyros to null the original error.

After initial alignment to the IMU reference, the BMAG/AGCU loop is opened by relay action and further positioning of the FDAI ball is prevented. However, if the rotation control, for example, is displaced, the loop will be closed and the FDAI ball will follow S/C motion until the control is neutralized. The BMAG/AGCU loop will open and the ball will again be stationary. If in G&N mode, the FDAI ball is always coupled to represent and follow IMU gimbal angles.

Attitude Errors. The FDAI attitude error indicators represent the difference between actual S/C attitude and the inertial reference. The error is referenced to the S/C body axes in all modes of operation, except for G&N entry mode.

Signals that position the attitude error indicator of the FDAI come from three possible sources. (See figures 2.3-3 and 2.3-4.) In SCS modes, either the BMAGS or the AGCU provide body axes error signals to the error indicator meter movements. AGCU signals are applied when ATT SET is selected on the attitude set section of the AS/GPI. This applies the body axes equivalent of the difference between the attitude set resolver shaft and the AGCU resolver shaft.

When ATT SET is not selected, the outputs of the three BMAGS are applied to the attitude error meter movements of the FDAI. Whether from the BMAGS or the AGCU, the error signals are directed to the meter

movements through scaling, range adjust, demodulator, and amplifier circuits. The following chart provides mode versus full-scale error indications as read on the FDAI.

Mode	Roll	Pitch	Yaw
Monitor	±25°	±15°	±15°
SCS and G&N entry	±25°	±5°	±5°
All other modes	±5°	±5°	±5°

When G&N modes are selected, the error signals are directed to the FDAI via the inertial coupling display units (CDUs) and the attitude reference conversion circuitry. The roll and yaw channel signals are referenced to either the navigation base axes or the S/C body axes. Conversion in the pitch channel is not required. The capability to reference the roll and yaw channel signals to either the navigation base of S/C body axes is required to facilitate roll and yaw channel cross-coupling control. This is required when G&N entry maneuvers are performed; in which case, reference is to the navigation base axes.

Rates. The following chart provides mode versus full-scale rate indications as read on the FDAI.

Modes	Roll	Pitch	Yaw
Monitor SCS entry G&N entry	±25°/sec	±5°/sec	±5°/sec
SCS LCL vert or SCS ATT cont or G&N ATT cont	±1°/sec	±1°/sec	±1°/sec
SCS and G&N V	±5°/sec	±5°/sec	±5°/sec

SCS Attitude Reference Alignment. Alignment of the attitude reference subsystem is performed by comparing the outputs of the total attitude set resolvers in the AGCU with the attitude set resolvers of the AS/GPI. The attitude set resolver shaft can be positioned by using the attitude set dials (thumbwheels) on the front of the AS/GPI. The dials indicate Euler angle of the attitude set resolver shaft, and the output of the resolver is the Euler angle difference between the attitude set resolvers and the total attitude resolvers in the AGCU.

When the FDAI ALIGN switch on the AS/GPI panel is pressed, the AGCU resolvers will align to the attitude set resolvers. Euler-to-navigation axes transformation, and navigation axes-to-body axes conversion takes place for the FDAI attitude error display functions. In SCS control modes, the attitudes indicated on the attitude set dials will be indicated on the FDAI with respect to the navigation axes symbol and the roll index.

SCS

2.3.2.3.2 Attitude Control Subsystem.

The attitude control subsystem (ACS) (figures 2.3-4 and 2.3-5), essentially, provides the means for controlling spacecraft motion. Control is either manual or automatic when using controlled inputs from the G&N system. Spacecraft motion, other than drift, is initiated through the use of the S/M RCS jets prior to C/M-S/M separation. After separation (entry), the C/M RCS jets are used. An attitude control logic chart is presented in figure 2.3-6.

There are four types of controls that the ACS contends with which to satisfy mission requirements. (See figures 2.3-4 and 2.3-7.) These are rotation, translation, attitude hold, and rate damping only. Rotational motion is required to establish navigational sightings with the G&N optics subsystem telescope and sextant for S/C alignment prior to a velocity change for TVC functions, for antenna orientation, for T/C transmission and reception, and for lift vector control (roll control plus pitch and yaw rate stabilization) during entry.

Translation control is required for the ullage function prior to SPS engine ignition.

Holding attitude (attitude hold) to a fixed reference (established by the ARS) is necessary for navigational sightings, preparing for a velocity change and ullage maneuvers. After establishing attitude hold, the S/C motion involved is the amount of drift that the S/C is allowed to rotate about its axes. The drift is limited to a selectable minimum or maximum deadband about all three axes.

Rate damping only provides rate stabilization during entry or in the event of an abort prior to launch escape system (LES) jettison. The motions involved here are the finite firings of the RCS jets when rotational rates exceed certain limits. The RCS jet firings will decrease the rates to within predetermined limits. The rates are limited to 0.2 degree/sec for all modes, except SCS and G&N entry modes when the rates are increased to 2 degrees/second.

The ACS includes the roll, pitch, and yaw electronic control assemblies (ECAs), the delta V indicator, attitude impulse section of the G&N optics control panel and, in addition, utilizes all of the physical elements and functions of the attitude reference subsystem.

		S/M RCS ENGINES														C/M RCS ENGINES											
ROLL QUAD & C/M SYSTEM		QUAD A				QUAD B				QUAD C				QUAD D				SYSTEM A						SYSTEM B			
ENGINE NO.		2	3	13	16	7	6	9	12	1	4	14	15	8	5	10	11	1	2	5	8	9	12	3	4	6	7	10	11
ROTATION	PITCH UP		●							●								●						●					
	PITCH DOWN	●									●								●						●				
	YAW RIGHT					●									●					●							●		
	YAW LEFT						●							●							●					●			
	ROLL RIGHT			●				●					●				●					●							●
	ROLL LEFT				●				●			●				●							●					●	
TRANSLATION	+X	●					●			●					●														
	-X		●			●					●			●															
	+Y			●								●																	
	-Y				●								●																
	+Z							●								●													
	-Z								●								●												
		TRANSLATION MANEUVERS NOT APPLICABLE TO C/M RCS																											
SCS CIRCUIT BREAKERS *		MN A	MN B	M A N		MN A	MN B	M A N		MN A	MN B	M B N		MN A	MN B	M B N		M A N		M A N		M A N		M B N		M B N		M B N	
		PITCH		A&C ROLL		YAW		B&D ROLL		PITCH		A&C ROLL		YAW		B&D ROLL		PITCH		YAW		B&D ROLL		PITCH		YAW		B&D ROLL	
SCS CHANNEL PITCH AND YAW SWITCHES		PITCH		A&C ROLL		YAW		B&D ROLL		PITCH		A&C ROLL		YAW		B&D ROLL		PITCH		YAW		B&D ROLL		PITCH		YAW		B&D ROLL	

* CIRCUIT BREAKER TABULATION IS APPLICABLE TO RCS ENGINES AUTOMATIC COIL OPERATION ONLY. FOR MANUAL DIRECT COIL OPERATION, POWER IS APPLIED FROM SCS DIRECT CONT CIRCUIT BREAKERS MN A OR MN B BY ACTUATION OF THE PILOTS OR CO-PILOTS HAND CONTROLLER, RESPECTIVELY.

NOTES: 1. Combinations of translation and rotation maneuvers requiring the simultaneous firing of identical S/M RCS engines is prohibited by jet selection logic circuit design.

2. Minimum impulse operation is accomplished in the roll axis by two engines only. Remaining engines are disabled by setting the A&C ROLL CHANNEL switch to OFF and pulling one B&D ROLL circuit breaker; or setting the B&D ROLL CHANNEL switch to OFF and pulling one A&C ROLL circuit breaker.

3. Fuel conservation and/or consumption balance between quads may be accomplished by using applicable SCS CHANNEL switches and circuit breakers to select single-engine operation in each direction.

SM-2A-782D

Figure 2.3-6. SCS Attitude Control Logic Chart

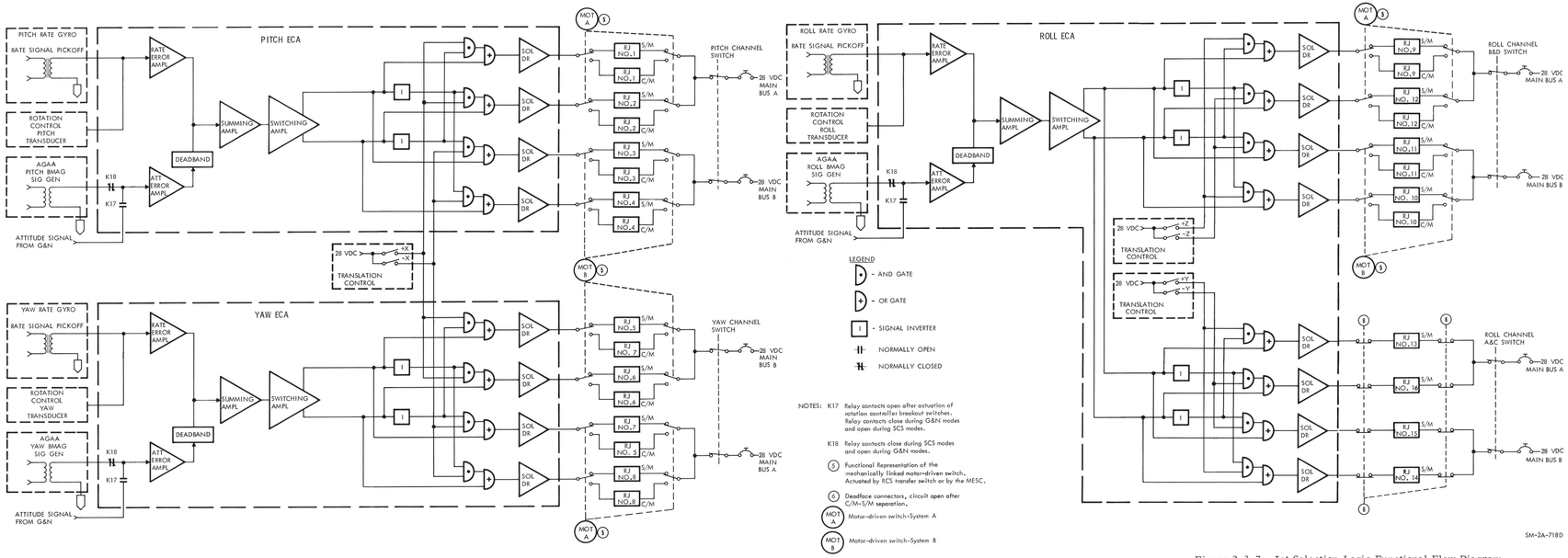

Figure 2.3-7. Jet Selection Logic Functional Flow Diagram

The attitude control subsystem electronics is contained within the roll, pitch, and yaw ECAs. The ECAs accept the manual and automatic inputs, conditions them, and directs on-off electrical command signals through jet selection logic to appropriate automatic (normal) coils of the RCS jets. The output of the jet selection logic will be either a time-modulated signal or a steady-state +20-vdc signal.

There are basically two types of inputs to the attitude control subsystem: manual and inertial sensor (AGAA, RGA, IMU). Manual inputs are provided by the rotation and translation controls, switches on the SCS control panel, attitude impulse switch on the attitude impulse section of the G&N optics control panel, and the direct ullage switch on the delta V display panel. These controls can be used for manual ullage maneuvers or as a backup during automatic delta V functions. The attitude impulse switch commands inputs to the ACS and subsequently to the RCS jets for small angular accelerations.

The inertial sensor inputs are provided by the AGAA, RGA, and the IMU via the G&N system. The AGAA (BMAG) and rate gyros (RGA) inputs are used for attitude hold, rate stabilization, and manual rotation control. The IMU inputs provide G&N attitude hold and command rate signals for manual or automatic rotational maneuvers.

Rotation Maneuvers. Rotation maneuvers can be performed by using four different types of manual controls or automatically by using the G&N computer subsystem. Manual rotation maneuvers are accomplished by using the rotation control, commonly called control stick steering (CSS), direct or emergency control which is a function of the rotation control, attitude impulse control, and positioning of the inertial CDUs. Automatic maneuvers result from astronaut inputs to the AGC via the DSKY. The AGC, according to computer program, automatically positions the CDUs and will command S/C motion to the programmed attitude.

Normal CSS is a proportional manual function and is available at any time in all operational modes. The maximum CSS proportional rates that can be commanded are as follows:

- 19 degrees per second (roll axis) entry mode
- 5 degrees per second (pitch and yaw axes) entry mode
- 0.79 degree per second (all axes) all other modes.

Even though CSS commands greater rates, the SCS electronics will limit the rates to those values given. Proportional control is obtained by using the rate gyro output to cancel the output of a transducer within the rotation control. CSS proportional commands are always directed to the automatic solenoid coils of the RCS engines.

When the rotation control (stick) is displaced, a transducer within the stick will command a rotation proportional to the amount of stick displacement. The rotational rates are limited to predetermined values, depending on the operational mode.

When in SCS attitude control mode and as the stick is displaced approximately 2.5 degrees from neutral, breakout switches within the stick close causing the BMAG and the AGCU to become closed loop. It also inhibits BMAG error signals to the SCS electronics. As the S/C rotates, the AGCU applies torquing current to the BMAG torquer coils. The gyros, then, are torqued at a rate proportional to the magnitude of BMAG error, keeping attitude error at approximately zero. Thus, the AGCU will follow S/C motion and establish a new attitude reference when the stick is returned to neutral.

When in G&N attitude control mode, a G&N SYNC switch must be energized to enable the attitude hold function when the control stick is returned to neutral. The G&N sync function provides IMU/CDU closed loop operation which keeps attitude errors at approximately zero during the maneuver. Consequently, the S/C will hold the new attitude when the stick is returned to neutral. If G&N sync is not enabled, the S/C will return to the attitude established before stick displacement.

NOTE The G&N SYNC switch will remain OFF for the entire mission.

The computer program will control the actual maneuver rate, but the SCS will limit the maximum. The maximum non-entry maneuver rate is 10 degrees per second and entry maneuver rate is 17 degrees per second in all axes.

Direct rotation control is a nonproportional function whereby initiated commands are applied directly to the RCS direct coils. To accomplish direct rotation, the DIRECT RCS/OFF switch (MDC-8) is set to DIRECT RCS; the SCS-CHANNEL switches (MDC-8) are set to OFF; if high rates are to be maintained, and the control stick is rotated about the desired axis or axes to hardstops. Just prior to engaging the hardstops, a switch closes and applies a direct command to the RCS direct coils. Rate feedback is not used to cancel stick movement. The breakout switches, however, close the BMAG/AGCU loop, and attitude error output to the SCS electronics is inhibited. With proper control and switch configuration, direct control is available at any time.

The attitude impulse control (G&N optics control panel) provides the capability for commanding low-rotational rates about all three axes. Attitude impulse control is available only in SCS or G&N attitude control modes and is used primarily for precise attitude maneuvers during navigational or star sighting periods. After the control is enabled and displaced, a switch closure in the control and an RC network combination generate one

pulse, which is applied to the RCS jet selection logic. One pulse is generated for each attitude impulse switch closure (control displacement). It is not a proportional control and attitude hold is not available when the control is returned to neutral. When the control is enabled, relay action removes all rate, attitude error, and rotation control inputs to the SCS electronics.

Automatic positioning of the CDUs is accomplished by using the DSKY. This method of control is primarily used during G&N entry.

Translation Maneuvers. There are three methods of initiating translation maneuvers: normal translations, using the translation control; direct ullage, using the direct ullage button on the delta V control panel; and separation ullage, using the translation control.

Translation commands are not proportional; operation is through switch closure only and is available during all modes of operation prior to C/M-S/M separation. During normal translation, switch closures within the translation control provide commands to the jet selection logic which fire the appropriate jets for the desired direction of translation. The commands are directed to the automatic RCS engine coils. A primary function of normal translation is the ullage maneuver, which is necessary in preparation for a velocity change. Ullage maneuvers require translation along the +X-axis.

Direct ullage is accomplished by using the DIRECT ULLAGE pushbutton on the delta V control panel. When pressed, switch closures command the appropriate direct RCS coils to initiate translation along the +X-axis. Direct ullage is available at any time prior to C/M-S/M separation. Upon C/M-S/M separation, the direct ullage function to the C/M pitch and yaw direct coils is inhibited by deadfacing. It is primarily a backup operation in the event of normal translation failure. Ullage will continue as long as the DIRECT ULLAGE pushbutton is pressed.

The separation ullage function requires a CCW rotation of the translation control into a detent position. Ullage commands are directed to the direct RCS coils. The separation ullage maneuver is performed when SPS aborts are necessary or when S-IVB separation is required. If the LES has been jettisoned, the signal from the translation control in CCW detent will command the sequential events control system (SECS) to sequence the separation ullage and consequent separation from the S-IVB. If the LES is attached to the S/C, the same command will initiate a LES abort.

In G&N and SCS modes, a clockwise rotation of the translation control into a detent generates a CSS logic signal that inhibits attitude gyro signals from the SCS electronics, and provides BMAG/AGCU closed loop operation. It also initiates manual thrust vector control (MTVC).

The CW rotation enables capability for manual roll control by the rotation controller during G&N entry. This is normally an automatic function of the G&N system and entry program.

Attitude Hold. Attitude hold is a capability of the ACS to hold S/C attitude within selected deadband limits of a fixed reference attitude. The deadband (amount S/C is allowed to drift either side of reference attitude) is selected by setting the ATT DEADBAND switch on MDC8 to either MAX or MIN. In the G&N or SCS entry modes, however, the deadband will be maximum regardless of deadband switch position.

The ACS accomplishes attitude hold by inputting summed attitude error and rate gyro signals to the jet selection logic, which will turn on appropriate jets to keep the S/C within the selected deadband. The attitude error signal is conditioned by a deadband circuit and rate limiter before it is summed at the input of a summing amplifier with the rate gyro signal. When the summed input to the amplifier is greater than its threshold, the amplifier will cause a switching amplifier to pulse the jet selection logic. The lower the angular rates, the closer the S/C is allowed to drift to the deadband limits. As angular rates increase, the summed error/rate signal increases in magnitude proportionate to time. Therefore, the sooner the threshold of the summing amplifier is reached, the sooner the jets will fire, damping the oscillation.

A limit cycle switch on MDC8 can be used to provide time modulated pulses to the jet selection logic. Limit cycle is primarily used for fuel conservation purposes. The limit cycle switch enables a psuedo rate feedback circuit at the output of the switching amplifier previously discussed. The psuedo rate, and consequently the time-modulated pulses, is a function of signal magnitude at the switching amplifier input. For large signal inputs, the output pulses will cause the RCS jets to pulse at a higher frequency and for longer periods. As the error decreases, the pulse widths and frequency decrease proportionately until the error is nulled.

The psuedo rate loop is normally used at all times (limit cycle on) when an inertial attitude is being maintained.

Attitude hold is available at all times in three axes, except during monitor mode and SCS entry mode after the 0.05 G switching. During G&N entry after 0.05 G switching, roll attitude hold is still enabled. Yaw and pitch attitude hold is inhibited.

Rate Damping Only. In addition to attitude control and maneuvering capabilities, the ACS provides a rate damping only capability. Although rate damping is a normal function during attitude control modes, rate damping can be used to limit S/C rotational rates (rate stabilization) when attitude hold is not being used. Normally, when S/C rotational rates exceed 0.2 degree per second in any axis, the rate gyros or the BMAG in

backup rate sense the angular accelerations. The signals, conditioned via the roll, pitch, and yaw ECAs and through jet selection logic, are applied to applicable RCS engines to keep the S/C rates within the 0.2-degree-per-second rate deadband. If in SCS or G&N entry mode, the rate deadband is increased to 2 degrees per second. Rate stabilization, in addition to the attitude control functions, is available when any of the following conditions exist:

- Selection of monitor mode after S-IVB separation
- Selection of monitor mode for LES aborts
- Clockwise rotation of translation control after S-IVB separation
- SCS entry mode after 0.05 G switching
- G&N entry mode after 0.05 G switching (pitch and yaw axes only).

2.3.2.3.3 Thrust Vector Control Subsystem.

The purpose of the thrust vector control (TVC) subsystem (figures 2.3-4 and 2.3-5) is to align or position the gimbaled SPS engine to a trim position prior to SPS thrusting and maintain this trim during the acceleration period. The S/C experiences a changing center of gravity (c.g.) caused by the consumption of fuel and oxidizer during acceleration. The TVC subsystem maintains the SPS engine thrust vector through the c.g. and holds S/C attitude so that the thrust vector will remain in the desired direction. This compensates for undesirable forces that affect S/C stability because of the shifting c.g. Thrust vector control, in addition to the TVC subsystem, utilizes the functions of the G&N system, the propulsion systems, and the SCS attitude reference and attitude control subsystems.

The TVC subsystem essentially controls the SPS engine gimbals, and consequently the thrust vector, by energizing the gimbal actuators; one for pitch and one for yaw.

The normal method for controlling thrust is through the G&N delta V mode. This provides the most accurate control. The accelerometers on the IMU stable element and the AGC provide steering commands to the SPS engine gimbals and continuous trajectory corrections to compensate for undesired accelerations. The AGC also compensates for the near-body orbital and gravity affects on the S/C. So, the actual versus required velocity change will result in a curved trajectory.

Normally, both G&N delta V and SCS delta V modes operate by driving No. 1 and No. 2 servo electronics. If a failure occurs in No. 1, an automatic switchover to drive No. 2 servo electronics and No. 2 gimbal motor will occur. Or, No. 2 will drive if No. 1 is switched off or if manual thrust vector control is initiated.

A manual method of thrust vector control is provided to control the position of the SPS engine gimbal. When operating manually, inputs from the rotation control, translation control, and the BMAGs are directed to redundant servo electronics No. 2 and the No. 2 gimbal actuator motor. The nominal authority from either rotation controller is ±6 degrees of SPS gimbal engine deflection.

The gimbal position display section of the AS/GPI panel, the delta V display, SCS control panel, rotation control, translation control, and the SPS switches on MDC-3 are the principle controls and displays associated with TVC. They provide the capability for control and monitoring of system performance.

Thrust Vector Control. When G&N delta V mode is selected, automatic thrust on-off, attitude, and steering commands initiate in the G&N system. However, before the ullage maneuver and thrust-on, the gimbal position trim control thumbwheels on the AS/GPI are used to position the engine gimbals. The engine position is verified on the AS/GPI visual display. The gimbals are aligned such that, at the moment of thrust-on, the thrust vector will be through the S/C c.g. This is necessary before any delta V to prevent undesirable rotational movements about the c.g. when thrusting begins.

In addition to initial positioning of the gimbals, the amount of acceleration required for the velocity change less tailoff is set into the delta V remaining counter on the delta V display. This allows the crew a method of monitoring delta V remaining and, when in SCS ΔV mode, provides automatic thrust-off capability. A coincidence switch in the delta V display will, by inhibiting the thrust on logic, automatically terminate thrust when the ΔV remaining counter indicates zero. The accelerometer in the AGAA senses +X acceleration, and supplies acceleration signals to timing and output logic which subsequently drives the delta V remaining potentiometer to zero. The accelerometer threshold is 1×10^{-4} g, but the ΔV counter will only step once for each 0.25 +t/sec velocity change.

NOTE It is possible, but not recommended, to have SPS engine ignition without ullaging when in SCS ΔV mode.

Prior to SPS ignition, the G&N system inputs attitude error information to the ACS to hold the S/C at a constant attitude in all three axes. Attitude errors from the G&N system and rate information from the SCS rate gyros are also applied to the SPS gimbal servo loops. Upon engine ignition, the combined attitude error and rate gyro inputs, conditioned by the servo electronics, reposition the gimbals as necessary to rotate the S/C to compensate for c.g. shift. The gimbal position is also modified by steering commands from the AGC so that the thrust vector will point in the right direction for the curved trajectory.

The BMAG/AGCU loop remains open and follows IMU changes so that the SCS will have the same inertial reference in the event a switchover to SCS delta V mode is necessary.

Normally, G&N delta V mode utilizes the primary gimbal servo and actuator motor No. 1. If the gimbal motor switches on MDC-3 are activated, a TVC monitor signal generator (over-undercurrent sensor) in the actuator will sense a failure of motor No. 1. If motor No. 1 fails, the sensor will automatically cause a switchover to motor No. 2 in the actuator. Since the No. 2 servo electronics are driven simultaneously with No. 1, an interruption during the velocity change will not occur. Motor No. 2 also contains a TVC monitor signal generator, but is not used. In the event of motor No. 2 failure, causing an excessive current drain on the d-c bus, a 70-ampere circuit breaker in the line will disconnect the motor from the d-c supply bus. Motor No. 2 has no switchover or warning light capability.

In SCS delta V mode, the gimbal servo loops function the same as in G&N delta V mode. Attitude error information, however, is derived from the BMAGS. The rate loop is identical, unless in backup rate condition. SCS delta V will not function if the BMAGS are required for backup rate because of the loss of attitude error information.

SCS delta V keeps the thrust vector through the c. g. by first comparing the trim position commands set by the gimbal position thumbwheels and the position transducer feedback signals. The difference, combined with attitude error information from the BMAGs, conditions the servo electronics to energize the actuator clutches.

Except for mode selection and thrust-on requirements, the same prerequisites for thrust-on, and the control and display functions are the same as for G&N delta V. The SCS system does not provide automatic thrust-on. A thrust-on switch on the delta V display provides the thrust-on command for SCS delta V mode. Thrust-off, however, is automatic by closing of the coincidence switch. A NORMAL-OFF-DIRECT-ON switch on the delta V display is also provided for manual thrust-on and serves as a manual backup for all automatic thrust-off commands.

If the translation controller cannot be used for the ullage maneuver prior to thrust-on, a DIRECT ULLAGE switch on the delta V display provides a manual backup to initiate ullage.

A manual delta V can be performed, providing a delta V mode has been selected and the translation control is rotated CW into detent. This removes all normal inputs into the TVC servo loops, allows commanded inputs from the rotation control, and rate data from the BMAGs in backup-rate condition, into the redundant No. 2 servo electronics and motor No. 2 of the gimbal actuators. This provides rate-stabilized manual control of the thrust vector. Thrust-on is initiated by the momentary thrust-on switch located on the delta V display.

The rotation control must be held to a given displacement to control the gimbals about the initial trim position established by the settings of the AS/GPI. The GPI provides the only indication of the position of the gimbal angles with respect to the S/C body axes.

2.3.3 FLIGHT CONTROL PROFILES.

There are three basic flight control profiles associated with this mission. These include powered flight, coasting flight, and entry. Within these profiles, various modes of operation are established either within the atmosphere or in earth orbital environment. Because of the division of powered flight, i.e., ascent and earth orbital environment, the description is divided as follows:

- Ascent (including aborts)
- Coasting flight (earth orbital)
- Powered flight (earth orbital)
- Entry (nonpowered atmospheric flight).

As the various operational modes are discussed, reference will be made to figures 2.3-4, 2.3-5, and 2.3-6. A typical control channel yaw is shown in figure 2.3-4, sheet 2; therefore, differences not typical to the yaw channel will be clarified.

It should be noted that relays in figures 2.3-4, 2.3-5, and 2.3-7 are not relays of the actual system by number. However, the relay nomenclature is system oriented and may be cross-referenced by using the following chart.

Fig. 2.3-4, 2.3-5, 2.3-7 Relays	Function	SCS System Relay
K1	ORBIT RATE	24A14K3
K2	FDAI ALIGN	24A14K1
		24A14K2
K3	G&N ROLL, PITCH, YAW ATT SIN AND COS	22A16A3K4
		22A16A3K6
		22A17A3K4
		22A17A3K6
		22A18A3K4
		22A18A3K6
K4	AGCU CAGED	22A8K1
		22A8K2
		22A8K4
		22A8K5
K5	AGCU ALIGN	22A8K6
		22A8K7

SCS

Fig. 2.3-4, 2.3-5, 2.3-7 Relays	Function	SCS System Relay
K6	AGCU P/Y ERROR	21A3K2
K7	R G&N ERR/AGCU INH	22A3K3
	G&N P ERR	20A3K3
	Y ERR G&N BODY	21A3K3
K8	G&N P, Y, ERR S.F.	22A20A3K1
		22A21A3K1
K9	ROLL, PITCH, YAW ERR	22A20A3K4
	AGAA	22A21A3K4
	MONITOR + G&N ΔV + G&N ATT CONTR + G&N ENTRY +.05G MANUAL + AS + YAW B/U RATE	22A23A3K2
K10	ROLL, PITCH, YAW, B/U RATE	22A9K1
		22A9K2
		22A13K1
		22A13K2
		22A11K1
		22A11K2
K11	MTVC RT OUT	22A9K3
		22A11K3
		22A12K3
K12	ROLL, PITCH, YAW RATE	22A23A3
		22A20A3
		22A21A3K
K13	Y/P RT SF	22A22A3
K14	R-Y RT CPLG	23A11K2
K15	RT IN TRANS	23A19K1
		23A19K1
		19A26K1
K16	ENT GAIN	23A15K1
		23A15K2
		23A17K2
K17	G&N ATT IN	23A19K2
K18	AGAA ATT IN	23A19K3
K19	D-B CHG	23A15K3
K20	RJC ATT SW	23A11K1
K21	G&N MIN IMP ENABLE	23A13K
K22	PSUEDO RT CO	23A13K
K23	RCS LATCHING RELAY ARMED (JET DVRS ENABLED) SAFE (JET DVRS DISABLED)	MESC Z19
K24	1.8 SEC LATCH	MESC Z8

Fig. 2.3-4, 2.3-5, 2.3-7 Relays	Function	SCS System Relay
K25	MAIN DEPLOY	MESC Z12
K26	AUTO CONT INTER	23A11K3
K27	ENG IGN	23A21K2
K28	SYS GRD CK	23A21K3
K29	SCS ΔV MODE	23A21K1
K30	ENG IGN	23A27K1
K31	MTVC ENGAGE	23A18K2
K32	TVC ELEC TRANS	23A25K1
K33	SERVO NO. 1 DISENGAGE	23A14K1
K34	SERVO NO. 2 ENGAGE	23A18K1
K35	ENTRY	22A8K8
K36	ΔV INH	22A21A3K6
K38	THRUST ON LAMP	22A20A3K6

2.3.3.1 Ascent.

During the ascent phase, capability exists for monitoring boost vehicle stability. The SCS is in a monitor mode with all subsystems active, but supplies no active commands for control purposes for the first 61 seconds of flight. After 61 seconds, if aborts are required, the SCS will be used to supply signals for S/C stabilization and control.

2.3.3.1.1 Monitor Mode.

The monitor mode provides the capability of monitoring deviations from programmed launch vehicle attitude prior to S-IB separation and CSM attitude after S-IVB separation. The S-IVB utilizes a different guidance technique and monitoring C/M instruments relative to S-IVB operation provides no useful purpose. Monitor mode also provides rate stabilization, when required, any time during the mission.

Normal Ascent. At time of launch, RCS latching relays in the SECS system will be open to inhibit commands to the RCS jets. Relays K4 and K5 will be closed, providing BMAG/AGCU closed loop. The FDAI will be following IMU gimbal angle changes. The motor-driven switch 5 (figure 2.3-7) is set to the S/M position when the REACTON CONTROL SYS—TRANS C/M-S/M switch on MDC - 16 is set to S/M.

Total attitude and attitude error signals from the IMU and inertial CDU (figure 2.3-4, sheet 1) are applied to the FDAI through relays K3, K7, and K8, respectively. Attitude error signals represent deviations from the trajectory for the first stage booster only. The SCS rate gyros apply attitude rates to the SCS electronics directly and to the FDAI via relay K12.

The X-axis accelerometer will be active, but its output will be used only if an abort delta V is required. The TVC subsystem is activated to hold the SPS engine thrust vector through the c. g. in the event of an SPS abort, and to keep the nozzle centered and stationary within the adapter. The SPS engine gimbals are aligned to null offset (pitch +0. 4 degrees and yaw +3. 6 degrees) prior to launch. Quiecsent current on the gimbal motor clutches maintains these angles during ascent.

LES Abort. If an LES abort is initiated (61 seconds or more after lift-off) requiring SCS operation, the SCS is enabled one second after LES ignition. The SCS is enabled by the arming of the RCS latching relays in the SECS, and the S/M-C/M transfer switch will be driven to the C/M position. The RCS latching relay will open by the operation of a barometric switch at approximately 24, 000 feet during descent and will disable active commands to the C/M RCS. Besides rate stabilization, specific command inputs to the SCS above 24, 000 feet will depend on altitude and other factors.

SPS Abort. An SPS abort would be initiated after the LES jettison. The translation control is rotated CCW into detent and the switch closure will cause the MESC to command a +X translation (separation ullage) via the direct coils of the S/M RCS. The direct coils are activated through the RCS transfer switch.

Before separation from the S-IVB, a delta V mode must be selected. For an SPS abort, alignment of the SPS engine gimbals is not required since they were preset prior to launch and no propellant has been consumed. At separation, an abort can be made into earth orbit or to a downrange landing site.

2. 3. 3. 2 Coasting Flight (Earth Orbital).

The coasting flight profile ranges from a free-drift configuration (no control) to monitor mode (passive) to attitude hold (active control). The following paragraphs describe the various modes relative to the earth orbital environment.

2. 3. 3. 2. 1 G&N Attitude Control.

G&N attitude control will provide inertially stabilized attitude by utilizing the attitude reference and attitude control subsystems. Attitude data is obtained from the inertially referenced IMU. Relays K4 and K5 provide BMAG/AGCU closed loop so that if SCS attitude control is selected, the AGCU will have the same reference as the IMU for control and display purposes.

Attitude errors from the inertial CDU through relays K7 and K8 are applied to the FDAI and SCS electronics for attitude error display, and to provide attitude corrections. The errors from the CDU are the difference between the IMU gimbal angles and the commanded output of the AGC. Total attitude from the IMU is applied to the FDAI via relay K3. The

attitude rates from the SCS rate gyro and relay K12 will drive the FDAI rate indicator at a scale range of ±1 degree/second.

The maximum deadband limit is normally set for G&N attitude control. If navigation sightings are required, the minimum deadband may be selected. The G&N system and SCS attitude control subsystem will maintain attitude within the selected deadband limits.

Maneuvering. Automatic maneuvers may be executed by inserting commands into the AGC via the DSKY. The S/C will automatically maneuver to the computer-commanded attitude. The SCS will follow the attitude error signal inputs from the CDU in response to AGC inputs for maneuvering to the commanded attitude. Manual maneuvers can be commanded with or without attitude hold.

In G&N mode, relay K18 (figure 2.3-7) is open. Relay K17 is closed. Relay K18 inhibits BMAG inputs and allows G&N attitude error signals into the jet selection logic for the attitude hold function. When the rotation control is displaced, the breakout switches open K17, inhibiting G&N signals and allowing proportional command (rotation control plus rate gyro) signals into the jet selection logic. When the control is returned to neutral, relay K17 closes and the G&N attitude hold function is restored, provided G&N sync is active.

Translation in all axes can be commanded by the translation control. As shown in figure 2.3-5, switch closures within the control apply command signals directly to the jet selection logic and, subsequently, to the auto RCS coils. Attitude hold is a normal function when translations are initiated, using the translation control.

The direct ullage switch on the delta V display is a backup for +X translations. When this switch is activated, the signal is applied directly to the RCS direct coils. Attitude hold is not a function of direct ullage.

Attitude impulse control (panel 105, LEB) is a manual control capability for G&N and SCS attitude control modes only. Each displacement of the attitude impulse control (figure 2.13-4, sheet 3) provides an output attitude impulse command to two RCS engines for a duration of 18±4 ms. The pulses command body angular rates of approximately 3 arc min/sec.

2.3.3.2.2 G&N Local Vertical.

The G&N local vertical mode is an extension of G&N attitude control. The purpose of this mode of operation is to accurately maintain the S/C X-axis at a fixed angle with respect to the local vertical (relative to the earth surface) while maintaining the S/C Y-axis normal to the orbital plane. The G&N local vertical mode is an AGC-commanded function. A computer program (not available for this mission) is called by the astronaut by DSKY entry. After IMU alignment, with the S/C X-axis in the direction of the desired orbital path, the computer program provides an orbit rate

source to command torquing of the IMU at a rate that will maintain the local vertical attitude. This mode may be used to make navigational sightings of earth landmarks by keeping the G&N optics within the area of the earth surface.

2.3.3.2.3 SCS Attitude Control.

SCS attitude control mode will hold the S/C at an inertial-referenced attitude and will limit S/C drift to the selected deadband limits, normally, ±5 degrees in earth orbit. If SCS attitude control is selected after a G&N attitude control function, the attitude reference subsystem is aligned to the IMU (BMAG/AGCU closed loop). If not, an FDAI/AGCU align function is required.

When SCS attitude control is selected, G&N inputs are removed from the FDAI and SCS electronics. The following relay contacts (figure 2.3-4, sheet 2) are activated to supply SCS-generated commands for display and control purposes.

- Relay K4 open—FDAI ball stationary
- Relay K12—Applies body rates to FDAI
- Relay K3 closed to AGCU—Applies attitude errors to FDAI
- Relay K11B—Applies attitude errors to SCS electronics

FDAI/AGCU Align. If the AGCU has not been aligned to the IMU or if a new attitude reference is desired while in SCS attitude control mode, the astronaut will determine S/C attitude from star sightings or from the MSFN. Inertial angles are dialed into the AS/GPI with the ATTITUDE SET dials and the FDAI ALIGN pushbutton is pressed. Relay K2 closes and the AGCU and FDAI ball will drive to the selected attitude.

Manual Maneuvers. After AGCU reference has been established, the S/C can be maneuvered to the desired attitude reference by flying out the errors, using CSS. The ATT SET/OFF switch is activated, relay K23 is activated, the RCS latching relays are closed to the S/M RCS, relays K6 and K9 close, and K20 will open. Attitude error, equal to the difference between ATTITUDE SET dial position and AGCU resolver shaft position, is then applied to the FDAI from the AGCU through K6. Attitude error from the BMAG is removed from the FDAI when K9 activates. When the rotation control is moved out of detent, CSS commands are applied through the ACS to the jet selection logic and auto coils of the RCS engines. At the same time, relays K4 and K5 close providing BMAG/AGCU closed loop. The BMAGs follow S/C rotation and repositions the FDAI ball. When the rotation control is returned to neutral, the BMAG/AGCU loop is opened, relays K4 and K5 open, and the new attitude will hold within the selected deadband.

When the ATT SET/OFF switch is OFF, relays K6 and K9 de-energize and attitude error signals from the BMAGs are now applied to the FDAI and ACS. If further attitude changes are desired, they can be accomplished by using CSS. The BMAG/AGCU loop will be closed, and opened when the rotation control is returned to neutral. The attitude error needles will indicate the difference between the AGCU and the S/C attitude. The error needles are fly-to needles and will be at full scale if the error is greater than 5 degrees. To fly out the error, the astronaut must fly-to the needles or use the FDAI ball markings until the needles come off full scale, and then fly-to the needle to null the remaining error.

Free Drift. Free drift is normally used during extended periods of time when power and RCS propellant conservation is desired. Free drift can be established in either attitude control mode by placing the SCS CHANNEL switches to OFF, inhibiting all command signals to the RCS auto coils. With an SCS attitude mode selected and an SCS CHANNEL switch to OFF (PITCH or YAW or A&C ROLL and B&D ROLL), relay action closes the BMAG/AGCU loop and updates the ARS while drifting. However, if one BMAG is placed in backup rate and a channel switch is off, relay action rate cages the remaining BMAGs and opens the BMAG/AGCU loop, thus, preventing the ARS from being updated.

2.3.3.2.4 SCS Local Vertical.

SCS local vertical mode is an extension of SCS attitude control. Its purpose is to maintain S/C attitude with respect to the local vertical. When the LCL VERT/OFF switch on MDC-8 is set to LCL VERT, relay K1 energizes and an orbit rate source with a preset level is applied to the BMAG/AGCU servo loop. At present, the preset level established for the orbit rate source is most accurate for a 100-n mi circular orbit and will maintain the attitude reference system at the local vertical with torque rates of 246 degrees per hour, or 4.1 degrees per minute. It will maintain an approximate attitude when the AGCU is aligned to represent S/C attitude when the S/C XZ plane is parallel to the orbital plane at the time LCL VERT is selected. All three RCS channels must be enabled for the local vertical mode. Modifications of the local vertical attitude can be made using CSS. The translation control is also active and available during this mode of operation.

2.3.3.3 Powered Flight (Earth Orbital).

Powered flight includes those modes that provide the capability for velocity changes using the SPS engine. Included in the following discussion are the G&N delta V, SCS delta V, and the manual delta V modes.

2.3.3.3.1 G&N Delta V.

G&N delta V mode is the normal method for velocity changes. Prior to engine ignition, however, G&N attitude control mode must be established.

System relays apply the following (G&N/SCS switch on MDC-8 set to G&N and ATTITUDE/MONITOR/ENTRY switch set to ATTITUDE (figure 2.3-5, sheet 1)):

- Relay K7 and K8—Attitude error from CDUs to FDAI
- Relay K9—Attitude error from CDUs to SCS electronics
- Relay K3—Total attitude from IMU to FDAI ball
- Body rates to FDAI and SCS electronics
- RCS latching relay in MESC closed to RCS system

The FCSM-SCS-RESET/OVERRIDE and G&N-RESET/OVERRIDE switches on MDC-2 may be set to SCS and G&N positions. These switches provide an automatic monitoring of SPS engine combustion performance. If rough combustion occurs, the SPS ROUGH ECO warning light on MDC-10 will light and engine thrust will terminate. A restart can be made by resetting the FCSM switches and then setting them back to SCS and G&N. Or, the monitor can be bypassed by setting the FCSM switches to RESET/OVERRIDE.

Attitude information from the IMU is displayed on the FDAI ball. Attitude errors from the CDUs are also applied to the FDAI (±5-degree scale) and are used by the SCS to control attitude in response to AGC commands. Rotational rates are displayed by the FDAI rate indicators with a scale range of ±5 degrees/second. The computer-controlled velocity change will be monitored on the delta V display. The required velocity less tailoff will be set into the delta V display by the ΔV SET switch, using velocity information obtained from the G&N system or MSFN. Minimum deadband is set on MDC-8, the gimbal motor switches, and the inject pre-valve switches on MDC-3 are activated. The SPS gimbal trim angles are determined, set into the AS/GPI by the gimbal position thumbwheels, and gimbal position verified on the GPI. The NORMAL/OFF/DIRECT switch on the delta V display is set to normal.

Approximately 15 seconds prior to ignition, after the digital event timer (MDC-5 and 8) has been set for countdown, the astronaut will command a +X ullage using the translation control. At T = 0, the AGC will command a signal through the thrust on-off logic and enable the solenoid drivers of the TVC subsystem. The solenoid drivers will then activate the SPS engine ignition coils and SPS thrusting will occur. The lamp portion of the THRUST ON switch on the delta V display will light, verifying the automatic computer command.

System delay (AUTO CONT INTER) logic will terminate the RCS ullage approximately one second after SPS ignition. The computer will command pitch and yaw attitude of the SPS gimbals via the TVC to control the thrust vector. Roll commands will be applied to the roll RCS during the maneuver.

When the delta V remaining counter indicates zero, thrusting will terminate and the THRUST ON light will go out. The NORMAL/OFF/DIRECT ON switch will be set to OFF and the SPS motor switches, inject pre-valves, and the TVC electronics will be de-activated. Approximately one second after thrust terminates, pitch and yaw control is transferred back to the SCS for the attitude control function.

If a malfunction occurs during the maneuver, a switchover to SCS delta V will allow continuation of the velocity change. If there is no response from the translation control at ullage initiation, the DIRECT ULLAGE pushbutton on the delta V display may be used for the ullage maneuver prior to ignition of the SPS engine. Also, if automatic thrust-on does not occur at T = 0, the THRUST ON pushbutton on the delta V display will provide engine ignition.

2.3.3.3.2 SCS Delta V.

SCS delta V mode is a primary backup for the G&N delta V. Preliminary to engine ignition, SCS attitude control is established by setting the G&N/SCS switch on MDC-8 to SCS. After SPS engine ignition, the SCS uses S/M RCS roll jets to maintain roll attitude and applies commands to the SPS engine gimbals to control the thrust vector. Relays in figure 2.3-4 apply the following (RCS latching relay in the SECS is closed to the S/M RCS throughout the maneuver):

- Relays K9 and K10—Attitude errors from BMAGs to FDAI
- Relay K11B—Attitude errors from BMAGs to SCS electronics
- Relays K4 and K5 open—FDAI ball stationary
- Body rates to FDAI and SCS electronics (RGA).

The control and display activation process that was performed for the G&N delta V will be performed for SCS delta V. The major differences are as follows:

- Control of attitude and the thrust vector is through the SCS.
- At T = 0, ignition is initiated manually by pressing the THRUST ON pushbutton on the delta V display.
- Thrust is terminated automatically when the ΔV remaining counter (delta V pot.) indicates zero.

As in the G&N delta V mode, if the required command responses do not occur, the same backup controls can be used to perform the delta V.

In SCS delta V mode, if engine ignition does not occur when the THRUST ON switch is pressed, the NORMAL/OFF/DIRECT ON switch can be set to DIRECT ON. This applies a command signal directly to the SPS engine ignition coils and will initiate thrusting. The NORMAL/OFF/DIRECT ON switch must be set to OFF to terminate engine thrust.

2.3.3.3.3 Manual Delta V (MTVC).

A manual delta V will be performed only as a backup to a G&N or SCS delta V. Manual thrust vector control is initiated by a CW rotation of the translation control into detent. At this time, relays K4 and K5 will close, providing rate caging of all three BMAGs; and relays K10 and K11B will open removing rate gyro outputs from the FDAI and SCS electronics. The rate-caged BMAGs through relay and K12 will switch BMAG backup-rate signals into the SCS electronics.

In the G&N and SCS delta V modes, TVC servo electronics No. 1 and SPS gimbal drive motor No. 1 was used. When MTVC is initiated, relays K32, K33, and K34 activate. This closes the servo loop for commanding SPS gimbal drive motor No. 2.

Gimbal trim commands are applied through relay K31. When the rotation control is moved out of detent, pitch and yaw commands are applied to motor No. 2 through relay K31 and gimbal position feedback is through relay K32.

The summation of backup rate and proportional CSS commands into the TVC provides a rate-damped manual control of the engine gimbals. The astronaut must keep the rotation control at a given displacement to keep the thrust vector through the c. g. and to fly the correct trajectory.

If CW switches of the translation control are engaged while in G&N delta V, G&N attitude control, or G&N entry mode, attitude errors are not removed from the FDAI. This allows the astronaut to monitor and, if necessary, fly a G&N programmed maneuver using CSS.

2.3.3.4 Entry.

The entry profile consists of the various methods of controlling the S/C for the entry phase of the mission. The entry mode is normally selected after S/M-C/M separation. At separation, the motor-driven RCS transfer switches are closed to the C/M RCS.

2.3.3.4.1 G&N Entry.

G&N manual mode is the primary method of control for entry into the atmosphere for this mission. Automatic entry may be used in lieu of G&N manual mode.

G&N Manual. This is normally a backup for the G&N entry automatic mode. The translation control is rotated CW into detent. This removes inertial CDU attitude errors from the SCS electronics. Normally, the astronauts will call up the entry program via the DSKY shortly after S/M-C/M separation.

The entry angle, required pullout angle, and other required entry data is presented on the computer displays. The astronaut can manually perform a controlled g-level entry by using CSS to fly out the commanded attitude errors displayed on the FDAI. The BMAG/AGCU has been closed loop for backup reference in case switchover is necessary.

After .05 g, aerodynamic forces build up sufficiently to stabilize the S/C in the pitch and yaw axes. At this time, CSS will be effective in the roll channel only. The SCS will rate-damp the pitch and yaw channels, and the astronauts will have steering capability by using roll CSS to control the lift vector.

Automatic Entry. The FDAI rate display scale range changes to ±25 degrees/second in roll, and ±5 degrees per second in pitch and yaw. Deadband is maximum. The rate deadband is ±2 degrees per second.

Prior to .05 g switching, attitude error from the inertial CDUs is applied to the FDAI error indicator through relays K7 and K8, and to the SCS electronics through relay K9. The RGA applies rate gyro body rates to the FDAI and SCS electronics. Relay K3 applies total attitude to the FDAI ball.

At .05 g, the .05 G ENTRY/OFF switch on MDC-8 is set to .05 G ENTRY. The SCS pitch and yaw channels perform rate stabilization only. The roll channel is still subject to computer-controlled roll commands. The AGC will fly the S/C according to a pre-established entry program.

2.3.3.4.2 SCS Entry.

The SCS entry mode is a primary backup to G&N entry mode. When selected, total attitude information to the FDAI is supplied throughout the entry. Prior to .05 g, the BMAGs apply attitude errors to the FDAI and SCS electronics through relays K3 and K9. After .05 g, relays K3 and K9 remove attitude errors from the FDAI and SCS electronics. Relays K4 and K5 close, providing BMAG/AGCU closed loop. For the remainder of entry, attitude errors are not displayed. There is no attitude hold capability. The rate gyros, however, provide rate signals for rate stabilization. The SCS electronics increase rates to a 2-degree-per-second rate deadband. The FDAI displays total attitude. The astronauts will initiate the necessary commands using CSS to fly a controlled g-level entry. After aerodynamics stability in pitch and yaw, steering capability will be in the roll channel only.

If, after .05 g, it is necessary to place a BMAG in backup rate, only the BMAG selected by the rate gyro select switch will have its inputs in the SCS for rate stabilization. When backup rate is selected, relays K9, K10, K12, and K15 activate, providing backup rate to the FDAI and SCS electronics. Loss of FDAI ball reference will occur. Relay K12 removes rate gyro output from the FDAI and SCS electronics. The astronauts will control the lift vector with the CSS roll channel. If they wish to decrease the g level, they will roll the S/C to keep the lift vector up. If they wish to increase the g level, they will roll the S/C so that the lift vector is down.

2.3.4 MAJOR COMPONENT/SUBSYSTEM DESCRIPTION.

The SCS consists of the following major components:

- Rate gyro assembly (RGA)
- Attitude gyro accelerometer assembly (AGAA)
- Pitch electronic control assembly (pitch ECA)
- Roll electronic control assembly (roll ECA)
- Yaw electronic control assembly (yaw ECA)
- Auxiliary electronic control assembly (aux ECA)
- Display and attitude gyro accelerometer assembly electronic control assembly (DISPLAY-AGAA ECA)
- Rotation control
- Translation control
- Flight director attitude indicator (FDAI)
- Attitude set/gimbal position indicator (AS/GPI)
- Velocity change indicator (ΔV display).

2.3.4.1 Rate Gyro Assembly.

The rate gyro assembly contains three identical rate gyros, mounted orthogonally along the spacecraft body axes, and associated gyro electronics. No provision is made for heaters or temperature control of the gyros. Each gyro is a single-axis unit, with the input axis determined by the gyro mounting fixture. Self-test capabilities are provided by torquing coils which enable the gyro to be displaced at a known rate and by spin motor rotation detection circuits which allow monitoring of the gyro spin motor speed. All self-test circuits are completely isolated from operational circuits to prevent a failure in the former from affecting gyro

operation. The gyro outputs are used by the SCS as primary damping or stabilization signals and, in addition, as negative feedback to null rotational control commands and provide a proportional maneuver rate capability. The rate gyros also provide an indication on the FDAI of the rate-of-attitude change in pitch, roll, and yaw axes. An attitude change about any of the axes results in an output signal which is representative of the rate of displacement.

Each miniature rate gyro assembly consists of a spin motor, damping system, gimbal assembly, quadrilever spring, and self-check circuitry. The gyro spin motor is a 400-cps 3-phase synchronous hysteresis motor powered by 26 volts ac. The maximum time allowed for the gyro to come up to operating speed is 17 seconds. Damping is accomplished by positive displacement of the damping fluid through temperature-controlled orifices. The quadrilever spring provides the torsional restraint required by the gyro, together with radial support for the gimbal assembly. Some important rate gyro characteristics are as follows:

Full-scale range	30°/sec
Input range (to limit stop)	30°/sec
Maximum rate without damage	600°/sec

2.3.4.2 Attitude Gyro Accelerometer Assembly.

The attitude gyro accelerometer assembly contains three body-mounted attitude gyros (BMAGs) and an accelerometer. Electronic control circuits for the gyros and accelerometer are contained in the display and attitude gyro accelerometer assembly electronic control assembly.

2.3.4.2.1 Body-Mounted Attitude Gyros.

The three BMAGs are identical units, mounted orthogonally along the spacecraft body axes, to sense attitude displacement along the pitch, roll, and yaw axes. Each gyro is a single-axis unit, with the input axis determined by the physical mounting in the S/C. A spin motor detection circuit is included in each gyro to allow monitoring of gyro spin motor speed. This will be telemetered data only.

The BMAGs provide information denoting the angular displacement of the spacecraft from a preset attitude. They are initially set to a specific space-stabilized orientation; thereafter, any displacement from this initial setting results in output signals which are representative of the amount of angular displacement. The output signals are used to produce attitude error signals for an attitude-hold mode or for display on the flight director attitude indicator. The outputs may also be applied to the attitude gyro coupler unit (AGCU) for attitude change storage and for conversion to inertial measurement unit (IMU) axes. IMU axes differ from the spacecraft body axes. The AGCU and BMAGs are used as a substitute or backup inertial reference unit for the IMU during the periods when the IMU is

turned off or has malfunctioned. The BMAGs can also be used to produce attitude rate-of-change information, as backup for the rate gyros.

The BMAGs are single-degree-of-freedom, miniature integrating gyros contained in electrically heated individual packages. The heater will maintain individual BMAG temperature at 170±2°F. Degraded gyro operation will result if this temperature is not maintained. The gyro spin motors are 3-phase 24,000-rpm synchronous devices, powered by 13.6 volts 400 cps from a supply in the attitude gyro accelerometer package electronic control assembly. With C/M temperature at 80°F and the mounting plate temperature at 55°F, the maximum time allowed for the BMAG to reach operating limits is 40 minutes. A few gyro characteristics are listed as follows.

Acceleration sensitive drift	4 deg/hr
Maximum self-torquing rate	25 deg/sec
Maximum attitude range	±20 deg
AGCU coupled torquing limits	20°/sec roll, 5°/sec pitch and yaw

2.3.4.2.2 Accelerometer.

The accelerometer is mounted along the spacecraft X-axis to sense velocity changes along this axis. It is a pendulous-type accelerometer with electronic null and balance. The temperature is maintained at 170±2°F under normal operating conditions. A signal output is generated by a velocity change along the X-axis. This velocity change causes the pendulous mass to move, resulting in a change of coupling between the primary and secondary windings of a signal generator. This results in an output signal which is demodulated and amplified to provide acceleration information in the form of digital signals to a counter in the delta V display (paragraph 2.3.4.10). The pendulous mass is returned to null by the balancing action of the electronic caging signal when the velocity change ceases.

2.3.4.3 Pitch, Roll, and Yaw Electronic Control Assemblies.

The pitch, yaw, and roll electronic control assemblies (ECAs) are nearly identical, with slight differences due to different requirements for each axis. The ECAs provide the circuitry for input control signal processing and SCS mode control and configuration. Input control signals consist of attitude error signals from the SCS BMAGs and from the G&N system, minimum impulse commands, rate gyro angular signals, translation and rotation control commands, service propulsion engine gimbal position commands, and SPS engine gimbal rate and position feedback signals. Mode control inputs are received from switches on panel 8 of the main display console (MDC). These input signals are applied to logic-controlled relays which enable circuit configurations corresponding to the desired mode. ECA output signals consist of reaction jet firing commands and SPS gimbal position commands. The reaction jet commands are generated in the jet selection logic portions of the ECAs. Preignition SPS engine gimbal position commands are generated manually at the AS/GPI by thumbwheels which provide input signals to the gimbal control circuits. Post-ignition

gimbal control is provided by automatic thrust vector control (TVC) circuitry in the pitch and yaw ECAs.

2.3.4.4 Auxiliary Electronic Control Assembly.

The auxiliary electronic control assembly contains the attitude gyro coupling unit and service propulsion system thrust on-off command circuitry. The AGCU portion of the auxiliary ECA receives BMAG signals from the DISPLAY-AGAA ECA and processes the data for display on the FDAI. It also transforms attitude set dial signals to body axes. The SPS engine on-off control circuitry in the AUX ECA receives engine on-off commands from the G&N system or the SCS. These commands are conditioned and applied to the SPS engine solenoid valves.

2.3.4.5 Display and Attitude Gyro Accelerometer Assembly Electronic Control Assembly.

The display and attitude gyro accelerometer assembly electronic control assembly provides the electronic circuitry required to control and power the displays, BMAGs, and accelerometer. The DISPLAY ECA portion consists of the circuitry necessary to receive and condition the following:

- Attitude error signals from the G&N system or the BMAGs to the FDAI attitude error indicators
- Attitude rate-of-change signals from the rate gyros or BMAGs to the FDAI attitude rate indicators
- Feedback signals from the SPS engine gimbals to the gimbal position indicators
- Accelerometer signals from the AGAA to the delta V display integrator.

The AGAA ECA portion consists of circuitry necessary to accomplish the following:

- Accept and condition BMAG inputs for the AGCU
- Accept and condition AGCU torquing commands to the BMAGs
- Control BMAG and accelerometer temperature controls
- Control and condition the accelerometer rebalance loop and inputs to the integrator
- Supply reference voltages to the BMAGs and accelerometer
- Condition the BMAG and accelerometer outputs to telemetry.

2.3.4.6 Rotation Controls.

Two identical rotation controls are provided to enable manual command of the spacecraft attitude (figure 2.3-8). Each control is a control stick containing breakout switches and transducers (figure 2.3-9) which apply control signals to the reaction jet selection logic circuitry in the pitch, yaw, and roll ECAs. When the stick is moved, the breakout switches close the loop between the BMAGs and AGCU, and control signals from the pitch, yaw, and roll transducers are applied to the appropriate control ECAs. Proportional response to the control stick movement is provided by rate gyro feedback to the ECA electronics (figure 2.3-10). The reaction jet solenoids can also be controlled via the direct application of control voltages from switches in the controller. The latter method, requiring use of the DIRECT MODE switch on MDC-8, does not provide proportional response. With the direct mode enabled and the stick commanding a rotation about one axis, the rate damping circuits in the other axes are active.

Provision is made to mount the controls at four different locations in the C/M: the right armrest of the left crew couch, both armrests of the right crew couch, and at the navigation station in the lower equipment bay. Normally, one control is attached to the left crew couch mount and the other is used at any of the other three locations. Simultaneous operation of both controls is possible but not advised; however, each control has a locking device to prevent inadvertent operation.

2.3.4.7 Translation Controls.

Two identical translation controls are provided to enable manual command of spacecraft translational maneuvers. (See figure 2.3-8.) Each control is a T-handle type control stick containing switches, which apply control signals to the reaction jet selection logic circuitry in the pitch, yaw, and roll ECSs (figure 2.3-11). The reaction jets are activated in groups of two or four, depending upon the direction of desired translation. Left-right and up-down translations are accomplished by firing two reaction control jets with the same direction of thrust. Forward and reverse translations are accomplished by firing the four forward thrusting or four rearward thrusting reaction control jets. The translation maneuver commanded is in direct response to the direction in which the T-handle is moved.

The primary control has switches which initiate a spacecraft abort if the T-handle is rotated counterclockwise. Both controls have switches which enable manual thrust vector control and disable automatic attitude control if the T-handle is rotated clockwise. Each control has a locking device to prevent inadvertent operation of the translation control.

Both controls are mounted in the C/M on the left armrest of the crew couch. The primary control is identified with yellow stripes and is the only one provided with abort switching capability.

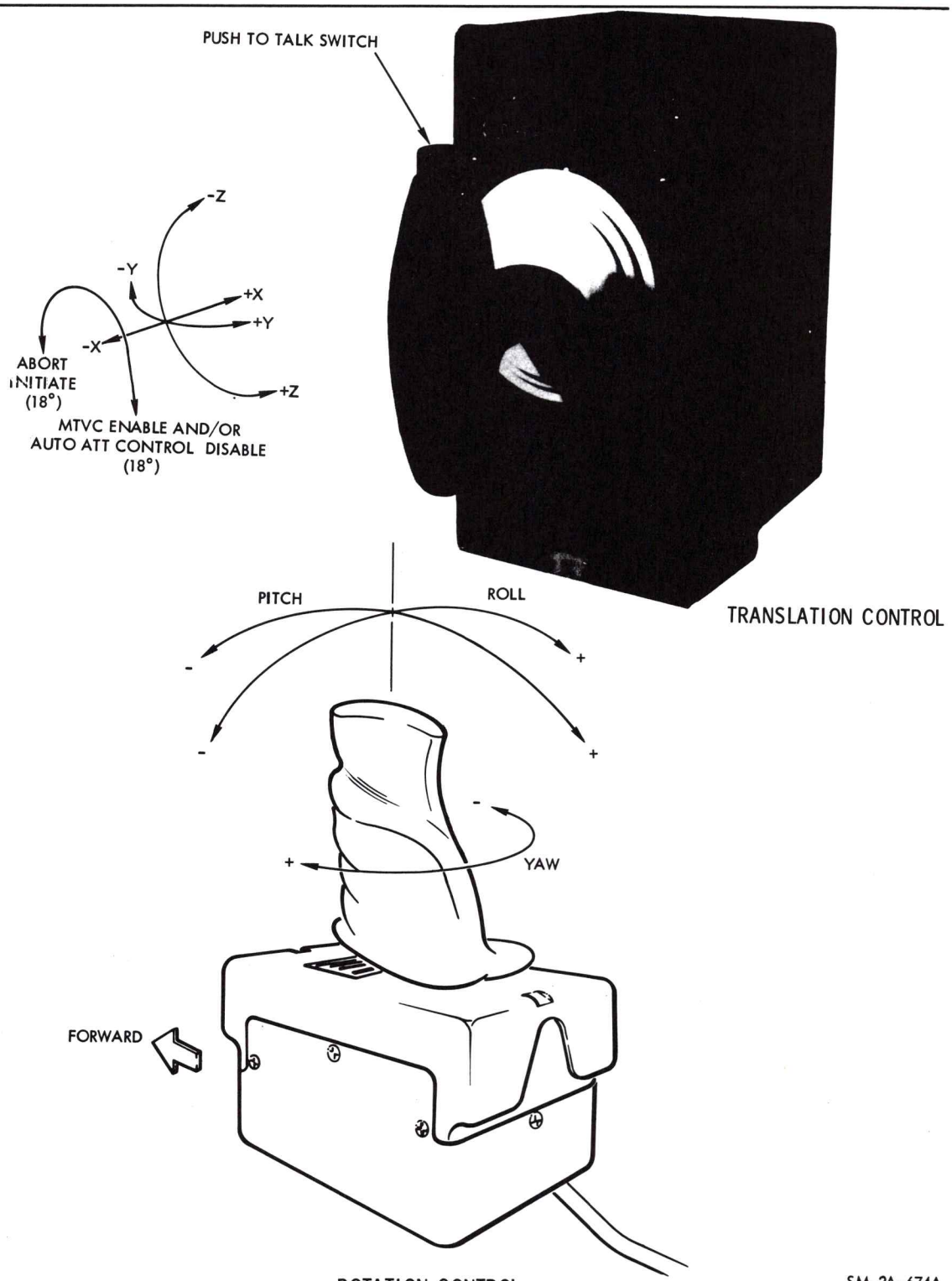

Figure 2.3-8. Rotation and Translation Controls

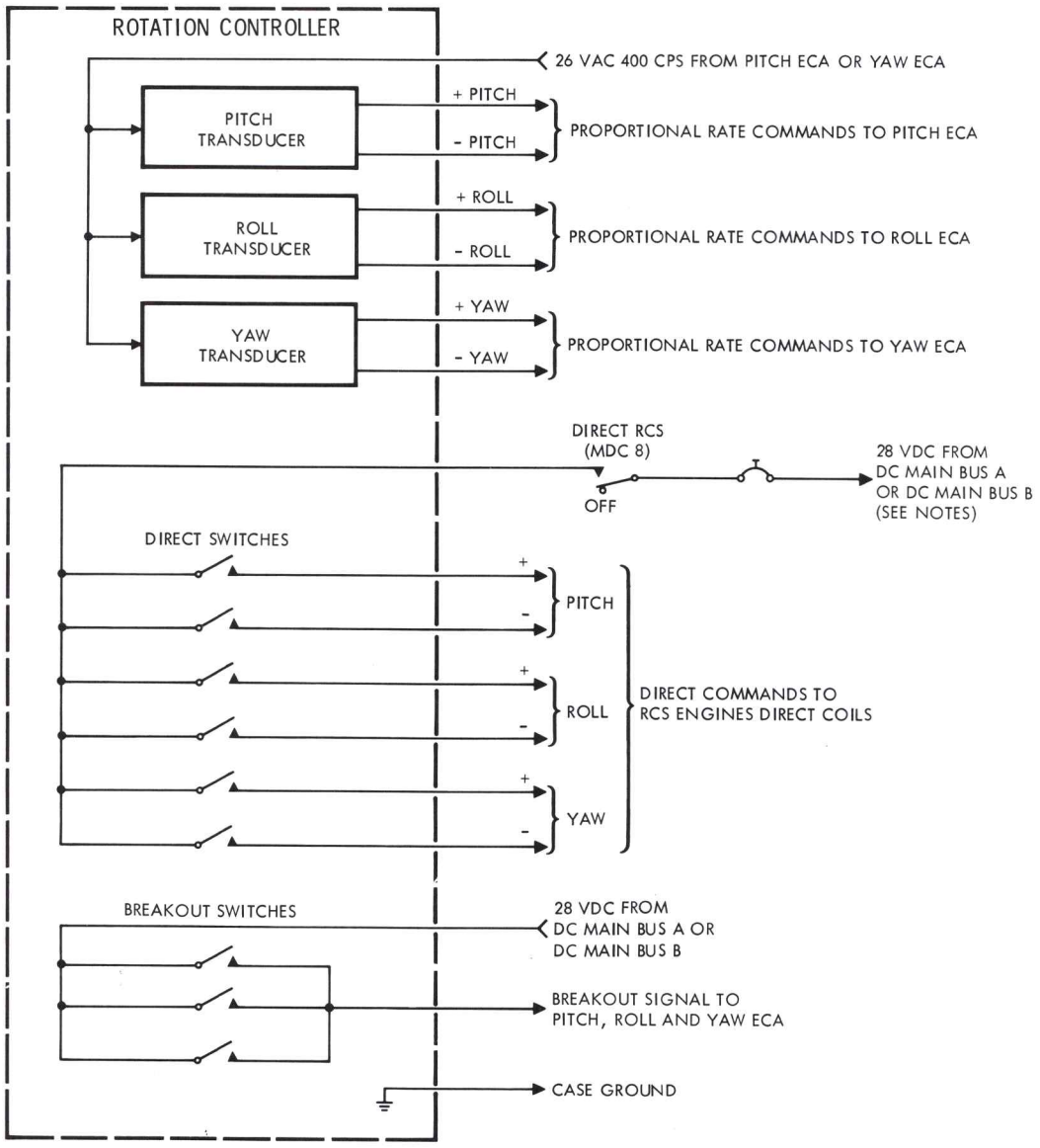

NOTES: 1. DC main bus A supplies power to direct switches in rotation control No. 1.
2. DC main bus B supplies power to direct switches in rotation control No. 2.

SM-2A-711B

Figure 2.3-9. Rotation Control Schematic

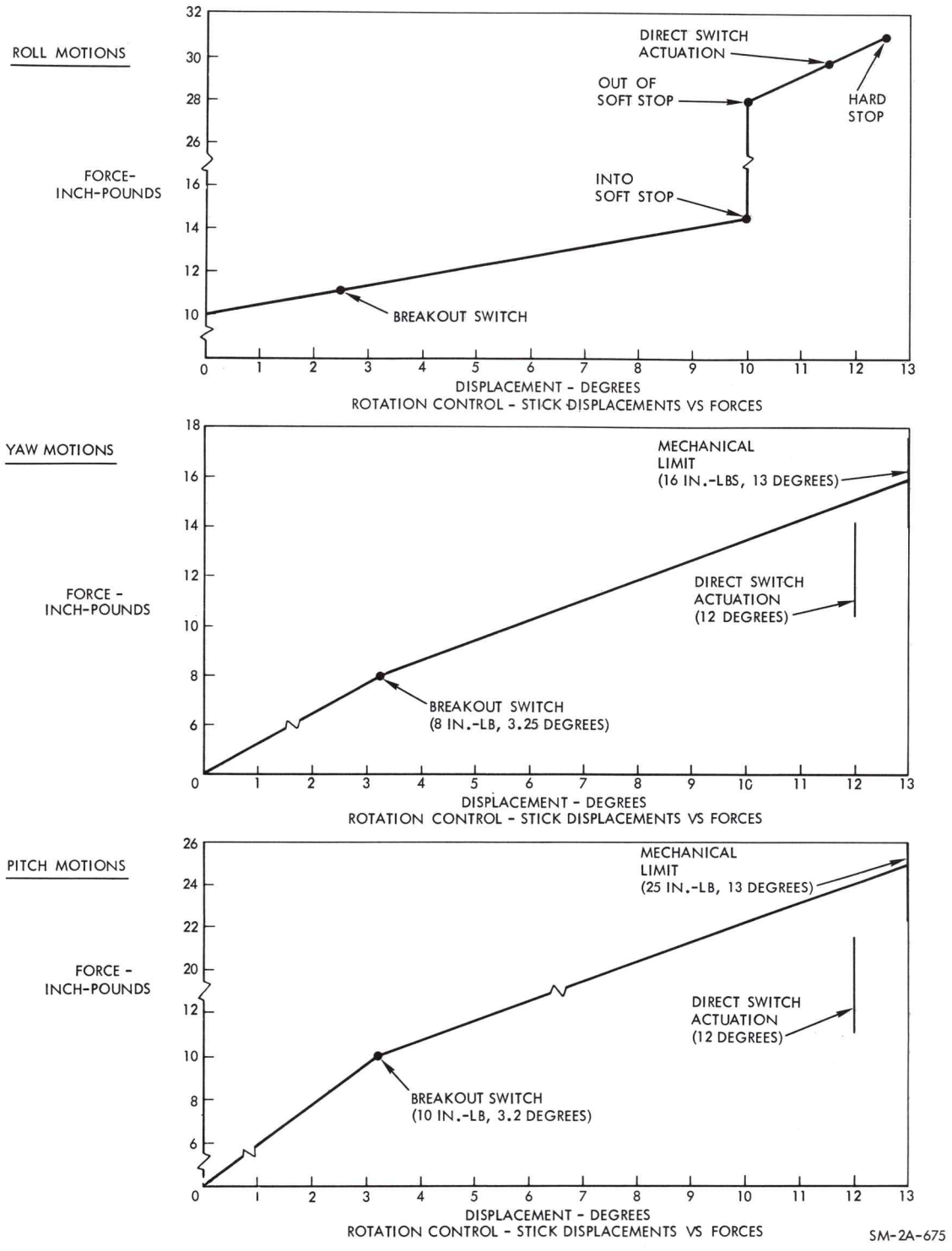

Figure 2.3-10. Rotation Control Charts

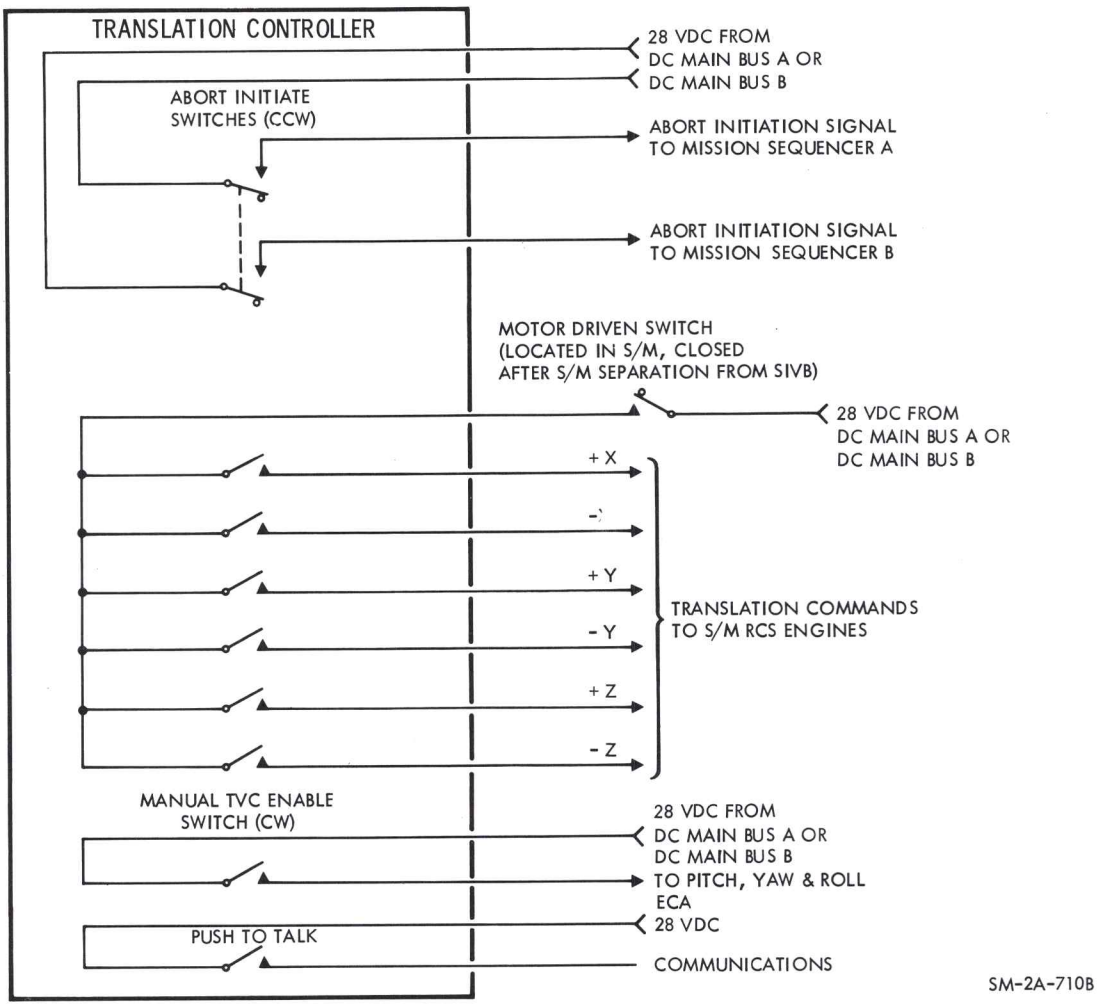

Figure 2.3-11. Translation Control Schematic

2.3.4.8 Flight Director Attitude Indicator.

The flight director attitude indicator, located on MDC-4, provides attitude, attitude error, and attitude rate-of-change display information. (See figure 2.3-12.) The FDAI indicates attitude rate of change and attitude error on indicators and spacecraft attitude on a 3 degree-of-freedom, inertially referenced ball and roll indicator. The roll rate display is located across the top of the FDAI. The pitch rate display is located along the right side of the FDAI. The yaw rate display is located across the bottom of the FDAI. The attitude error displays are pointers which move across the face of the ball. The rate and error displays are fly-to displays. The roll attitude pointer is located at the top and points down towards the center of the ball. The pitch attitude pointer is located at the right and points left toward the center of the ball. The yaw pointer is located at the

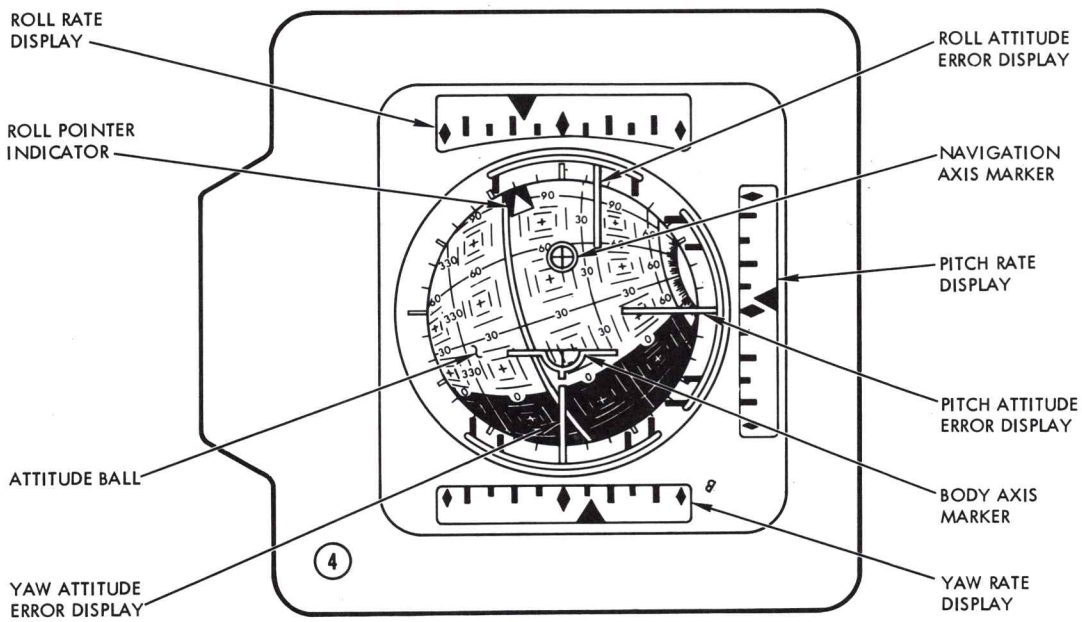

DISPLAY	AXIS		
	Pitch (θ)	Yaw (ψ)	Roll (ϕ)
Attitude Ball	+55°	+21°	
Roll "Bug"			+21°
Attitude Error Indicators	0°	0°	-2.5°
Angular Rate Indicators	-.1°/Sec	-.2°/Sec	+.3°/Sec

NOTE: On this illustration, the attitude ball display is read with reference to the navigation axis marker.

SM-2A-726C

Figure 2.3-12. Flight Director Attitude Indicator

bottom and points up toward the center of the ball. The FDAI is located in the center of the display. The ball face is marked in degrees of pitch and yaw and is referenced to the IMU axes. Two reference markers are located on the face of the display to indicate attitude in reference to either spacecraft body axes or IMU (navigation) axes. The body axes marker is on the lower face of the display. The IMU or navigation axes marker is located on the upper face of the display. Roll attitude is the IMU reference and is indicated by the roll indicator (bug) which travels around the circumference of the ball. Roll attitude zero reference is located at the top of the ball.

FDAI display operation will vary, depending upon mode. The rate display is operative at all times. Each rate indicator has a calibrated display scale, with the range of the scale dependent upon the mode selected. Maximum full-scale deflection will be as indicated in the following tabulation.

Mode	Full-Scale Deflection		
	Pitch	Roll	Yaw
Delta V modes	±5°/sec	±5°/sec	±5°/sec
Entry modes and monitor mode	±5°/sec	±25°/sec	±5°/sec
All other modes	±1°/sec	±1°/sec	±1°/sec

The attitude error display function depends upon mode. During attitude hold modes, the attitude error pointers display attitude changes within the selected deadband. The maximum deadband will allow approximately ±5 degrees of spacecraft movement in any axis, which is equivalent to full-scale deflection for the attitude error pointers. This results in easily discernible pointer movement. The minimum deadband allows approximately ±0.5 degrees of spacecraft movement in any axis, which results in very little pointer movement. In SCS control modes, the attitude error signals are derived from the BMAGs or AGCU. The AGCU alone provides the driving signals only when used in conjunction with the ATT SET switch for a dialed attitude change. In G&N modes, the attitude error signals are derived from the G&N coupling display units (CDUs). Full-scale deflection varies depending upon the mode selected, as indicated by the following tabulation.

Mode	Full-Scale Deflection		
	Pitch	Roll	Yaw
Entry modes	±5°	±25°	±5°
Monitor mode	±15°	±25°	±15°
All other modes	±5°	±5°	±5°

The gimbaled attitude ball is colored half gray and half black, with the line of separation at the 0-degree to 180-degree pitch angle. This two-color scheme permits rapid recognition of the specific pitch hemisphere being displayed. There are two concentric circles located at 90-degree yaw/0-degree pitch and 270-degree yaw/0-degree pitch. The inner circles are solid red 30-degree circles which represent the base of a cone with the apex at the center of the ball. This area denotes possible IMU gimbal lock. The outer circles enclose a red 40-degree circle which also represents the base of a cone with the apex at the center of the ball. This area denotes attitudes which result in AGCU inaccuracy. The ball is read against one of two reference marks, depending upon the mode of operation. The IMU axes reference mark is the upper marker (⊕) which indicates spacecraft attitude in pitch and yaw axes with reference to the IMU gimbals or stability axes. The body axes marker is the lower marker (⌒) which indicates spacecraft attitude with reference to the body axes. The included angle between the markers is 32 degrees. The roll indicator is referenced to the zero mark on the periphery of the ball display face in all operational modes. In SCS modes, the ball is driven only during manual maneuvers, during FDAI alignment, and after 0.05 g is sensed during entry. During these functions, the ball is driven by signals received from the AGCU. In G&N modes, the ball displays IMU gimbal angles. Figure 2.3-13 provides a tabular listing of the various FDAI display configurations.

SCS

FLIGHT CONTROL MODES	SCS Entry	SCS ΔV	SCS Local Vertical	SCS Attitude Control
Total Attitude (Ball)	Before 0.05 Gs, ball driven only during manual maneuver or FDAI alignment; after 0.05 Gs driven continuously.	Ball driven only during manual maneuver or FDAI alignment.	Ball driven only during manual maneuver or FDAI alignment.	Ball driven only during manual maneuver or FDAI alignment.
Attitude Errors	BMAGs P & Y±5° max deflection; R±25° max deflection.	BMAGs P, Y, & R±5° max deflection.	BMAGs P, Y, & R±5° max deflection.	BMAGs P, Y, & R±5° max deflection.
Attitude Rate Errors	Rate gyros (BMAGs when backup rate switch actuated). P & ° 5°/sec deflection. R 25°/sec deflection.	Rate gyros (BMA Gs when backup rate switch actuated). P, Y, & R±5°/sec deflection.	Rate gyros (BMAGs when backup switch actuated). P, Y, & R±1°/sec deflection.	Rate gyros (BMAGs when backup rate switch activated). P, Y, & R±1°/sec deflection.
Roll Bug	AGCU roll angle	AGCU roll angle	AGCU roll angle	AGCU roll angle

G&N

FLIGHT CONTROL MODES	G&N Entry	G&N ΔV	G&N Attitude Control	Monitor
Total Attitude (Ball)	Ball repeats IMU position.	Ball repeats IMU position.	Ball repeats IMU position.	Ball repeats IMU position
Attitude Errors	CDU P, Y, ±5° max deflection. R±25° max deflection.	CDU P, Y, & R±5° max deflection.	CDU P, Y, & R ±5° max deflection.	CDU P, Y±15°, & R±25° max deflection.
Attitude Rate Errors	Rate gyros (BMAGs when backup rate switch actuated). P & Y±5°/sec deflection. R±25°/sec deflection.	Rate gyros (BMAGs when backup rate switch actuated). P, Y, & R 5°/sec deflection.	Rate gyros (BMAGs when backup rate switch actuated). P, Y, & R 1°/sec deflection.	Rate gyros (BMAGs when backup rate switch actuated). P, Y, & R 5°/sec deflection.
Roll Bug	IMU roll angle	IMU roll angle	IMU roll angle	IMU roll angle

Figure 2.3-13. FDAI Display Configuration

2.3.4.9 Attitude Set/Gimbal Position Indicator.

The attitude set/gimbal position indicator (AS-GPI) provides two separate functions. The attitude set portion enables FDAI-AGCU alignment and provides a reference for acquiring new attitudes. The gimbal position display portion provides positioning control of the SPS engine gimbal angles and displays gimbal position. The attitude set portion provides a comparison of the angle between the attitude displayed on the ATTITUDE SET indicators and the position of the AGCU resolver shaft. It also provides control of the inputs to the FDAI attitude error pointers and aligns the FDAI to the attitude indicated on the ATTITUDE SET indicators. The attitude set function is controlled by manual operation of the thumbwheels. The desired position is dialed by a thumbwheel, with the display providing visual indication of the position selected by the thumbwheel. The attitude display may be used to align the FDAI-AGCU or to indicate a new attitude for the spacecraft. To accomplish FDAI-AGCU alignment, the desired position is set on the attitude set display. The FDAI ALIGN pushbutton is then pressed. This provides a signal which drives the AGCU stepper motor and control logic to position the AGCU resolver shaft. The stepper motor drives the shaft to the commanded position, resulting in an output from an angle generator to the FDAI ball, driving the ball to the commanded position. To manually maneuver the spacecraft to a predetermined attitude, the display is set to the desired attitude and the ATT SET switch is placed to ATT SET. The output signal is applied to the attitude error display pointers on the FDAI, providing a manual maneuver indication to the space crew. The display configuration is a fly-to type, with the crew manually maneuvering the spacecraft toward the pointers. (The pointers will peg if the new attitude is in excess of 5 degrees from the original attitude.)

The SPS engine gimbal position display allows positioning of the gimbals and provides indication of gimbal position. Two thumbwheels enable the pitch and yaw engine gimbals to be positioned prior to SPS engine firing. The gimbals position the engine to an attitude which ensures that the SPS engine thrust vector is through the spacecraft center of gravity. Movement of the thumbwheels results in the generation of control signals which engage the SPS gimbal ring torque motor magnetic clutches. Clutch engagement connects the gimbal torque motor and gear train to move the gimbal ring. Position transducers send a signal to the gimbal position displays to indicate the angle of the gimbal. The yaw gimbal position scale is graduated in increments of one-half degree from -5 degrees to +13 degrees. Center is located at the +4-degree position due to an inherent offset in the yaw center of gravity. The pitch gimbal position scale is graduated in increments of one-half degree from -9 degrees to +9 degrees, with the center position at 0 degrees.

2.3.4.10 Velocity Change Indicator.

The delta V display provides control and display of spacecraft velocity changes. The display portion of the panel consists of the ΔV REMAINING indicator, which is a five-digit display. The digital display is set by the variable speed ΔV SET switch. Three panel switches control the SPS and RCS engine firing commands. The DIRECT ULLAGE switch is a pushbutton, momentary-contact switch which, when depressed energizes the direct coils of the +X reaction jet solenoids. It serves as a backup for the translation control, which is used under normal conditions for +X translations for SPS fuel settling (ullage). The THRUST ON switch is an illuminated pushbutton, momentary-contact switch which is used to fire the SPS engine in the SCS delta V mode. The switch is enabled when the SPS THRUST switch is in the NORMAL position. The pitch and yaw RCS control and firing circuits are inhibited during SPS engine firing. After ignition, the SPS engine continues to fire until the ΔV REMAINING display counts down to zero. The THRUST ON switch is also used to back up the Apollo guidance computer firing commands in the G&N delta V mode in the event of an AGC failure. The SPS THRUST switch provides overall control of SPS engine firing. The NORMAL position enables normal engine firing sequences. The OFF position provides a positive off command as backup in case of a malfunction. The DIRECT ON position provides a positive firing command to the SPS engine.

The ΔV SET switch sets up the ΔV REMAINING display and logic circuits prior to delta V maneuvers. Pressing the upper section of the ΔV switch sets up logic circuitry which causes a slew motor to drive the ΔV REMAINING display in the positive direction (increasing velocity). Pressing the lower section of the switch drives the display in the negative direction (decreasing velocity). The switch has two sets of contacts in both the upper and lower positions. Pressing the switch lightly engages the first set of contacts, which results in a signal that will drive the display at a rate of two feet per second. Pressing the switch harder (past an easily felt hard/soft point) engages the second set of contacts, which results in the display being driven at a rate of 64 feet per second. As the display is driven to the desired velocity, the integrator and logic circuit is set to a logical value equal to the desired change. The translation command signal energizes a relay which applies the output of the AGAA accelerometer to the integrator and logic circuit, which compares the desired velocity increment with the actual velocity change received from the accelerometer. When the actual velocity change equals the value set, the ΔV REMAINING counter sends a signal to a coincidence detector logic circuit which, in turn, transmits a stop firing command to the thrust control logic. Although this causes the SPS engine to stop firing, some thrusting continues as a result of the tail-off inherent to the engine. The ΔV REMAINING display continues to count past zero (i.e., 99999, 99998, 99997, etc.) until no further acceleration is felt. Tail-off effects will be calculated prior to flight and compensated for by the crew when the display is being set up for delta V maneuvers.

2.3.4.11 Electrical Power Distribution.

See figures 2.3-14 and 2.3-15.

2.3.5 PERFORMANCE AND DESIGN DATA.

Figure 2.3-16 contains the latest available power consumption data for the Block I SCS. The translation controls were not included in the SCS component breakdown because they do not dissipate a significant amount of power within themselves.

The X-axis accelerometer is a servo-rebalanced pendulous accelerometer. Some of the accelerometer design characteristics are as follows.

Operating range	0.001 g to 2 g
Threshold	1×10^{-4} g (max)
Null torque	1×10^{-4} g (max)
Signal generator sensitivity	50 millivolts/millirad
Signal generator null	1 mr (max)

The body-mounted attitude gyros are single-degree-of-freedom gyros. Some of the gyro design characteristics are as follows.

Acceleration sensitive drift	4 deg/hr/g
Random drift	0.05 deg/hr
Maximum torquing rate	25 deg/sec
Maximum input attitude	±20 deg
Gyro threshold	0.02 deg/hr
Gyro transfer function	1.15 millivolts/millirad
Signal generator null	3.5 millivolts
Excitation frequency	400±0.01% cps

The rate gyros are single-axis miniature gyros. Some of the gyro design characteristics are as follows.

Full-scale range	30°/sec
Input range (to limit stop)	30°/sec
Maximum rate without damage	600°/sec
Excitation frequency	400±0.01% cps
Threshold	0.02°/sec

2.3.6 OPERATIONAL LIMITATIONS AND RESTRICTIONS.

2.3.6.1 S/C Attitude Change.

It is recommended that vehicle attitude change be held to maximum rates of less than 20 degrees per second roll and 5 degrees per second in pitch and yaw to prevent possible loss of attitude reference. Because of the AGCU digital logic, the stepping motor can be stepped at a maximum

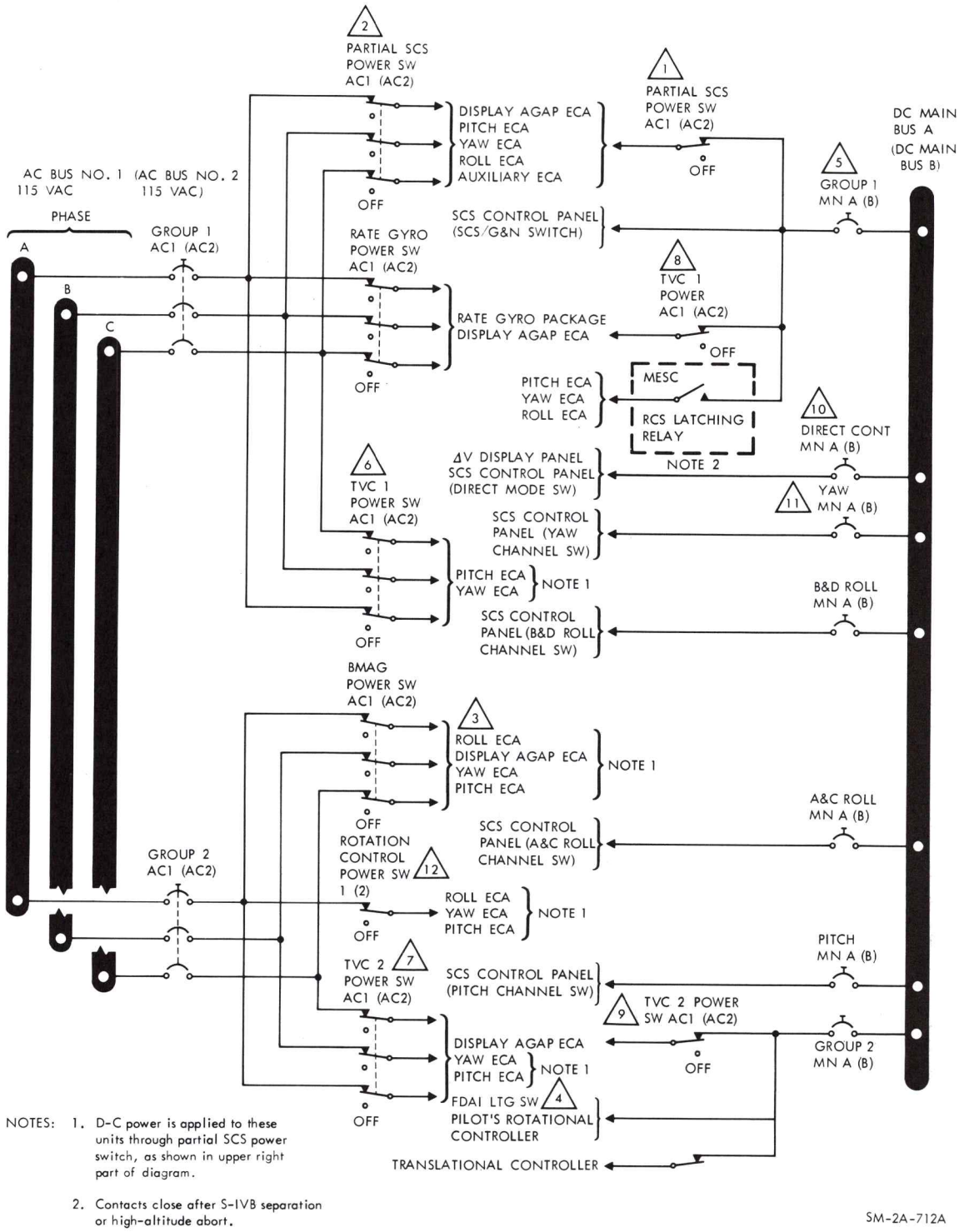

Figure 2.3-14. SCS Power Distribution

SYSTEM CAPABILITIES	SCS POWER SWITCHES					
	PARTIAL SCS POWER	RATE GYRO POWER	BMAG POWER	ROTATION CONTROL POWER	TVC 1 POWER	TVC 2 POWER
BACKUP RATE	●		●			
CHANNEL ENABLE						
DIRECT ROTATION CONTROL						
PROPORTIONAL ROTATION CONTROL	●	●	● (1)	●		
ATTITUDE IMPULSE	●					
G&N SYNC						
TRANSLATION	●					
ΔV SET					●	
SPS ENGINE IGNITION	● (2)					
MANUAL SPS GIMBAL TRIM	●				●	● (3)
DIRECT ULLAGE						
THRUST VECTOR CONTROL	●	●	● (4)		●	● (3)
MANUAL THRUST VECTOR CONTROL			●	●		●
ATTITUDE HOLD	●	● (7)	● (5)			
RATE DAMPING	●	●	● (1)			
FDAI ALIGN	●					
RATE INDICATORS VALID	●	●	● (1)			
BALL & ROLL BUG DRIVEN	●					
ATTITUDE ERROR INDICATORS VALID	● (8)		● (6)			

NOTES:
1. If backup rate has been selected in any axis. If backup rate has been selected in all 3 axes, RATE GYRO POWER need not be on.
2. PARTIAL SCS POWER must be on if ΔV switch is at NORMAL. However, SPS engine can be turned on when all power switches are off, by placing ΔV switch to DIRECT ON.
3. TVC 2 POWER switch must be on if manual TVC is engaged.
4. SCS ΔV mode only. However, in G&N ΔV mode, BMAG POWER must be on if backup rate has been selected in any axis. If backup rate has been selected in all three axes, RATE GYRO POWER switch is set to OFF.
5. SCS modes only; also G&N modes if backup rate has been selected in any axis.
6. SCS modes only, if backup rate has not been selected.
7. RATE GYRO POWER switch may be set to OFF for extended periods of attitude hold.
8. FDAI ALIGN and G&N modes only.

SM-2A-900

Figure 2.3-15. SCS Power vs System Capability

SCS COMPONENTS AND POWER SWITCH	SCS MODES																											
	MONITOR				G&N ATTITUDE CONTROL				G&N ΔV				G&N ENTRY				SCS ATTITUDE CONTROL								SCS ΔV			
																	HOLD				MANEUVER							
	AC POWER			DC	AC POWER			DC	AC POWER			DC	AC POWER			DC	AC POWER			DC	AC POWER			DC	AC POWER			DC
	ϕA	ϕB	ϕC		ϕA	ϕB	ϕC		ϕA	ϕB	ϕC		ϕA	ϕB	ϕC		ϕA	ϕB	ϕC		ϕA	ϕB	ϕC		ϕA	ϕB	ϕC	
RGA RATE GYRO SWITCH	4.3	4.9	8.1	-	4.3	4.9	8.1	-	4.3	4.9	8.1	-	4.3	4.9	8.1	-	-	-	-	-	4.3	4.9	8.1	-	4.3	4.9	8.1	-
AGGA BMAG SWITCH	2.6	2.2	2.6	25.0	2.6	2.2	2.6	25.0	3.1	2.2	2.6	30.0	3.1	2.2	2.6	30.0	2.6	2.2	2.6	25.0	2.6	2.2	2.6	25.0	3.1	2.2	2.6	30.0
FDAI PARTIAL SCS POWER	1.2	1.9	1.9	0.5	1.2	1.9	1.9	0.5	1.2	1.9	1.9	0.5	1.2	1.9	1.9	0.5	1.2	1.9	1.9	0.5	1.2	1.9	1.9	0.5	1.2	1.9	1.9	0.5
AS/GPI PARTIAL SCS POWER	0.6	-	-	-	0.6	-	-	-	1.0	0.4	0.4	-	0.6	-	-	-	0.6	-	-	-	0.6	-	-	-	1.0	0.4	0.4	-
DELTA V DISPLAY TVC 1 POWER SW	-	-	-	-	-	-	-	-	2.2	2.2	2.2	-	-	-	-	-	-	-	-	-	-	-	-	-	2.2	2.2	2.2	-
ROTATION CONTROL & SW	3.8	-	-	-	3.8	-	-	-	3.8	-	-	-	3.8	-	-	-	3.8	-	-	-	3.8	-	-	-	3.8	-	-	-
SCS CONTROL PANEL NO SWITCH	0.6	-	-	-	0.6	-	-	2.3	0.6	-	-	1.2	0.6	-	-	2.3	0.6	-	-	1.2	0.6	-	-	1.2	0.6	-	-	1.2
PITCH ECA PARTIAL SCS & TVC SWITCHES	4.5	3.6	3.7	0.6	4.5	3.6	3.7	1.9	8.5	5.9	6.5	7.6	4.5	3.6	3.7	6.7	4.5	3.6	3.7	1.9	4.5	3.6	3.7	1.9	8.5	5.9	6.5	7.5
YAW ECA PARTIAL SCS & TVC SWITCHES	4.5	3.6	3.7	0.6	4.5	3.6	3.7	1.9	8.5	5.9	6.5	7.6	4.5	3.6	3.7	6.7	4.5	3.6	3.7	1.9	4.5	3.6	3.7	1.9	8.5	5.9	6.5	7.5
ROLL ECA PARTIAL SCS POWER	7.3	5.4	5.3	0.9	7.3	5.4	5.3	3.1	7.3	5.4	5.3	3.1	7.3	5.4	5.3	9.7	7.3	5.4	5.3	3.1	7.3	5.4	5.3	3.1	7.3	5.4	5.3	3.1
AUXILIARY ECA PARTIAL SCS & TVC 1 SWITCHES	6.5	6.5	8.2	1.9	6.5	6.5	8.2	1.9	6.5	6.5	8.2	1.9	6.5	6.5	8.2	1.9	6.5	6.5	8.2	1.9	6.5	6.5	8.2	1.9	6.5	6.5	8.2	1.9
DISPLAY ECA (AGAA ELECTRONICS) BMAG POWER SW	2.8	2.2	2.4	32.8	2.8	2.2	2.4	32.5	4.2	3.6	3.8	31.6	4.2	3.6	3.8	40.9	2.8	2.2	2.4	24.4	2.8	2.2	2.4	24.4	4.2	3.6	3.8	31.6
DISPLAY ELECTRONICS PARTIAL SCS POWER	4.7	3.4	3.4	17.4	4.7	3.4	3.4	16.8	5.3	3.4	3.4	18.9	1.3	-	-	18.4	5.5	3.4	3.4	5.8	5.5	3.4	3.4	5.8	7.8	3.4	3.4	8.5
SUBTOTALS	43.4	33.7	39.3	-	43.4	33.7	39.3	-	56.5	42.3	48.9	-	41.9	31.7	37.3	-	39.9	28.8	31.2	-	44.2	33.7	39.3	-	59	42.7	48.9	-
TOTALS (SEE NOTE 1)	116.4			79.4	116.4			85.9	147.7			102.4	110.9			117.1	99.9			65.7	117.2			65.7	150.2			91.8

NOTES: 1. During an attitude or translation maneuver, an additional 26.7 watts dc is required by the SCS for each RCS engine that is switched on by the SCS.

2. All values indicated are in watts.

SM-2A-754C

Figure 2.3-16. SCS Steady-State Power Consumption Data

SCS

Mode Code	
1. Monitor	5. G&N ΔV
2. SCS attitude control (hold)	6. G&N attitude control
3. SCS attitude control (maneuver)	7. G&N entry
4. SCS ΔV	

Component	Quantity	Mode	Input Power Unit		Percent Duty Cycle	
			AC (Watts)	DC (Watts)	Common Level	Command Module Equipment
RGP		All modes	17.3		0	X
BMAG		1, 2, 3, 6	7.4	25.0	0	
		5, 7, 4	7.9	30.0	0	
FDAI		All modes	5.0	0.5	0	X
AS/GPI		1, 2, 3, 6, 7	0.6		0	X
		4, 5	1.8		0	
Delta V display		4, 5	6.6		0	X
Rotation controller		All modes	3.8		0	X
SCS control panel		6, 7	0.6	2.3	0	X
		2, 3, 4, 5	0.6	1.2	0	X
			0.6		0	
ECA Pitch		1	11.8	0.6	0	
		2, 3, 6	11.8	1.9	0	
		4, 5	20.9	7.5	0	X
		7	11.8	6.7	0	
ECA roll		1	18.0	0.9	0	
		2, 3, 4, 5, 6	18.0	3.1	0	X
		7	18.0	9.7	0	
ECA yaw		1	11.8	0.6	0	
		2, 3, 6	11.8	1.9	0	
		4, 5	20.9	7.5	0	X
		7	11.8	6.7	0	
ECA auxiliary		All modes	21.2	1.9	0	X
ECA display		1, 6	7.4	32.5	0	
		4, 5	11.6	31.6	0	X
		7	11.6	40.9	0	
		2, 3	7.4	24.4	0	
Electronics display		1	11.5	17.4	0	
		6	11.5	16.8	0	
		5	12.1	18.9	0	X
		7	1.3	18.4	0	
		2, 3	12.3	5.8	0	
		4	14.6	8.5	0	
TVC	2	Operate	20.0	30.0	0	
		Standby	20.0		0	

Figure 2.3-17. System/Component Power Level and Common Level Duty Cycle

rate of 100 steps per second in roll and 25 steps per second in pitch and yaw. This is equivalent to gyro torquing rates of 20 degrees per second in roll and 5 degrees per second in pitch and yaw. Therefore, if vehicle rates exceed the gyro torquing rates, the stepping motor will lag behind the vehicle rates. Under this condition, the BMAG-AGCU loop may not be able to maintain the SCS attitude reference.

2.3.7 TELEMETRY MEASUREMENTS.

The following is a complete listing of all SCS telemetry data that is monitored by flight controllers and ground support personnel. The last column contains the name and type of S/C crew display. The display utilizes the same pickup or signal source as telemetry, unless a separate measurement number is included in the display column.

An asterisk (*) by the measurement number denotes information which is not available for recording or telemetry transmission during PCM low-bit rate operation.

Figure 2.3-4, sheet 2, identifies telemetry measurements for the SCS yaw channel. Identical measurements in the following list, relative to the roll and pitch channels, are taken from the same circuit junctions as for the yaw channel.

Measurement Number	Description	Sensor Range	Crew Display
* CH 0024 V	Pitch rate		FDAI
* CH 0025 V	Pitch rate manual rotation control	Zero/+5 VRMS	FDAI
* CH 0034 V	Pitch pos feedback in	-6/+6 vdc	None
* CH 0047 V	PTV diff clutch volts comb	TBD	None
CH 0050 V	Pitch rate error amp out	-6.2 to +6 2 vdc	FDAI
CH 0067 V	Pitch integrator/att error summing	TBD	None
* CH 0074 V	MTVC pitch rate	TBD	None
CH 0075 V	Pitch SCS att error	Zero/+10 VRMS	FDAI
* CH 0087 X	+ Pitch/+X solenoid driver out	Off/on event	None
* CH 0088 X	- Pitch/+X solenoid driver out	Off/on event	None
* CH 0089 X	+ Pitch/-X solenoid driver out	Off/on event	None
* CH 0090 X	- Pitch/-X solenoid driver out	Off/on event	None
CH 0100 X	G-N DV mode control	Event	None
CH 0101 X	G-N DV att mode control	Off/on event	None
CH 0102 X	G-N entry mode control	Off/on event	None
CH 0103 X	Monitor mode control	Off/on event	None
* CH 1024 V	Yaw rate	-30 to +30°/sec	FDAI
* CH 1025 V	Yaw manual rotation control	Zero/+5 VRMS	FDAI
* CH 1034 H	Yaw pos feedback in	-8.5/+8.5 vdc	None
* CH 1047 V	YTV diff clutch volts comb	-85 to +85 MADC	None
CH 1050 V	Yaw rate error amp out	-6.2 to +6.2 vdc	FDAI
CH 1067 V	Y integrator/att error summing	-2.5 to +2.5 vdc	None
* CH 1074 V	MTVC yaw rate	TBD	None

Measurement Number	Description	Sensor Range	Crew Display
CH 1075 V	V yaw SCS att error	Zero/+10 VRMS	FDAI
* CH 1087 X	+ Yaw/+X solenoid driver out	Off/on event	None
* CH 1088 X	- Yaw/+X solenoid driver out	Off/on event	None
* CH 1089 X	+ Yaw/-X solenoid driver out	Off/on event	None
* CH 1090 X	- Yaw/-X solenoid driver out	Off/on event	None
CH 1100 X	SCS DV mode control	Event	None
CH 1101 X	SCS att mode control	Event	None
CH 1102 X	SCS entry mode control	Event	None
CH 1103 X	SCS local vertical mode control	Event	None
CH 1104 X	MTVC mode control	Event	None
* CH 2015 V	Combined AG SMRD	0 to 5 vdc	None
* CH 2024 V	Roll rate	TBD	FDAI
* CH 2025 V	Roll man rotation control out	Zero/+5 VRMS	FDAI
* CH 2026 V	Combined RG SMRD	-0 to +5 vdc	None
* CH 2030 T	Combined attitude gyro temp	0 to +5 vdc	AGAP TEMP LIGHT
CH 2050 V	Roll rate error amp out	-6.2 to +6.2 vdc	FDAI
* CH 2070 V	Roll attitude error amp out	-25/+25 vdc	None
CH 2075 V	Roll SCS att error	Zero/10 VRMS	FDAI
* CH 2087 X	+ Roll/+Z solenoid driver out	Event	None
* Ch 2088 X	- Roll/-Z solenoid driver out	Event	None
* Ch 2089 X	+ Roll/-Z solenoid driver out	Event	None
* CH 2090 X	- Roll/-Z solenoid driver out	Event	None
* CH 2091 X	+ Roll/+Y solenoid driver out	Event	None
* CH 2092 X	- Roll/+Y solenoid driver out	Event	None
* CH 2093 X	+ Roll/-Y solenoid driver out	Event	None
* CH 2094 X	- Roll/-Y solenoid driver out	Event	None
CH 3185 X	.05 g Manual switch	Event	None
* CH 3186 V	DV remaining pot out	-3 to +13 KFPS	ΔV Counter
CH 4100 H	Resolver sin out pitch att	-12 to +12 VRMS	None
CH 4101 H	Resolver cos out pitch att	-12 to +12 VRMS	None
CH 4102 H	Resolver sin out yaw att	-12 to +12 VRMS	None
CH 4103 H	Resolver cos out yaw att	-12 to +12 VRMS	None
CH 4104 H	Resolver sin out roll att	-12 to +12 VRMS	None
CH 4105 H	Resolver cos out roll att	-12 to +12 VRMS	None
* CH 4320 X	SPS solenoid driver out 1	Event	None
* CH 4321 X	SPS solenoid driver out 2	Event	None
CG 0001 V	Computer digital data 40 bits	Event	Delta V Display

SECTION 2

SUBSECTION 2.4

SERVICE PROPULSION SYSTEM (SPS)

2.4.1 FUNCTIONAL DESCRIPTION.

The service propulsion subsystem provides the major impulse for all major velocity changes (ΔV's) throughout a mission plus the S/M abort after the launch escape tower is jettisoned. To perform this function, the subsystem incorporates a helium pressurization system, a propellant feed system, a propellant gauging and utilization system, and a rocket engine. The oxidizer is nitrogen tetroxide, the fuel a blended hydrazine (approximately 50 percent unsymmetrical dimethyl hydrazine and 50 percent anhydrous hydrazine), and the pressurizing gas is helium. The subsystem incorporates displays and sensing devices to permit ground-based stations and the crew to monitor its operation. A functional flow diagram of the SPS is contained in figure 2.4-1.

The helium pressure is directed to the helium pressurizing valves which isolates the helium during nonthrusting periods, or allows the helium to pressurize the fuel and oxidizer tanks during thrusting periods. The helium pressure is reduced at the pressure regulators to a desired working pressure. The regulated helium pressure is directed through check valves that permit helium flow in the downstream direction when the pressurizing valves are open, and prevent a reverse flow of propellants during nonthrusting periods. The heat exchangers transfer heat from the propellants to the helium gas to reduce any pressure excursions that may result from a temperature differential between the helium gas and propellants in the tanks. The relief valves maintain the structural integrity of the propellant tank systems if an excessive pressure rise occurs.

The total propellant supply is contained within four similar tanks: an oxidizer storage tank, oxidizer sump tank, fuel storage tank, and fuel sump tanks. The storage and sump tanks for each propellant system are connected in series by a single transfer line. The regulated helium enters into the fuel and oxidizer storage tank, pressurizing the storage tank propellants and forces the propellant to an outlet in the storage tank which is directed through a transfer line into the respective sump tank standpipe, pressurizing the propellants in the sump tank. The propellant in the sump tank is directed to the exit end into a propellant retention reservoir, retaining sufficient propellants at the tank outlets to permit engine restart capability in a zero -g condition. The propellants exit from the respective sump tanks into a single line to the heat exchanger.

A propellant utilization valve is installed in the oxidizer line. The propellant utilization valve is powered only during SPS thrusting periods. The propellant utilization valve aids in maintaining the center of mass in a relatively confined area in the Y - Z plane, in addition to simultaneous porpellant depletion. The oxidizer supply and the fuel supply are connected from the sump tank to the engine interface flange.

The propellants flow from the propellant sump tank feed through their respective plumbing to the main propellant orifices and filters to the bipropellant valve. The bipropellant valve assembly contains the main propellant valves that are pneumatically controlled, and allows the propellant valves to distribute the propellants to the engine injector during thrusting periods or isolate the propellants from the injector during nonthrusting periods.

The engine injector distributes the propellants through orifices in the face of the injector where the fuel and oxidizer impinge upon each other, atomize, and ignite due to hypergolic ignition.

The ablative combustion chamber absorbs the heat generated within the chamber. The nozzle extension is attached to the ablative chamber and radiates to space.

The engine assembly is mounted to the structure of the service module, and is gimbaled to permit thrust vector alignment through the center of mass prior to thrust initiation and thrust vector control during a thrusting period. A flight combustion stability monitor system is employed to monitor the engine for instability during thrusting periods.

Propellant quantity is measured by two separate sensing systems: primary and auxiliary. The sensing systems are powered only during thrust-on periods due to the capacitance and point sensor measuring technique. The linearity would not provide accurate indications during the zero -g SPS nonthrusting periods.

The control of the subsystem is automatic with provisions for manual override.

2.4.2 MAJOR COMPONENT/SUBSYSTEM DESCRIPTION.

2.4.2.1 Pressurization Subsystem.

The pressurization subsystem consists of two helium tanks, two helium pressurizing valves, two dual-pressure regulators assemblies, two dual-check valve assemblies, two pressure relief valves, and two heat exchangers. The critical components are redundant to increase reliability.

2.4.2.1.1 Helium Tanks.

The two helium supply spherical pressure vessels are located in the center section of the service module.

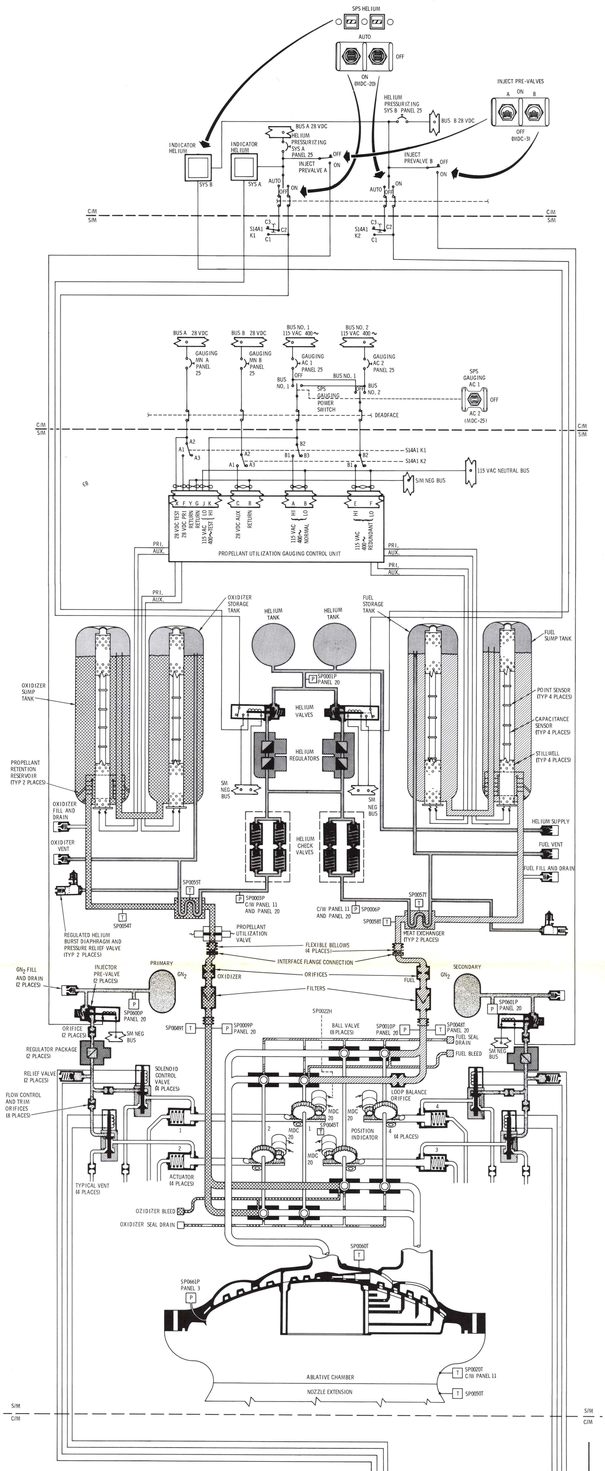

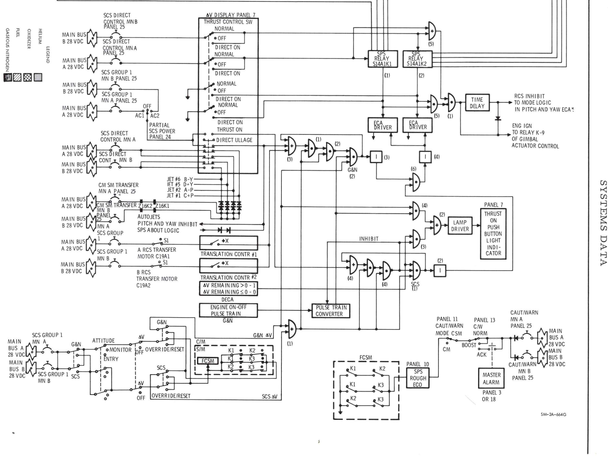

Figure 2.4-1. SPS Function Flow Diagram

2.4.2.1.2 Helium Pressurizing Valves.

These two continuous-duty solenoid-operated valves are normally closed to the helium supply pressure. The valves are energized open and spring-loaded closed. When the helium switches on panel 20 are in the AUTO position, the valves are energized and de-energized by the thrust ON-OFF signal. The valves may be manually controlled by the crew utilizing the ON and OFF position of the helium switches on panel 20. Each valve is controlled individually by a separate switch on panel 20.

Each valve contains a position switch which controls a position indicator above each switch on panel 20. When the valves are closed, the position switch is open and the indicator is gray (same color as the panel). When the valves are open, the position switch is closed and the indicator has diagonal lines, indicating the valve is open.

In the event of a failure in the automatic mode of operation, the crew manually enables the pressurizing valve, or valves, on panel 20. In the event of a problem with one of the regulating units, the crew manually isolates the required pressurizing valve.

2.4.2.1.3 Pressure Regulator Assemblies.

Pressure regulation is accomplished by two pressure regulating units in parallel, downstream of each helium pressurizing valve. Each regulator unit contains a primary and secondary regulator in series, and a pressure surge damper installed on the inlet to each regulating unit.

The primary regulator is normally the controlling regulator and the secondary is normally open during a dynamic flow condition. The secondary regulator will not become a controlling regulator until the primary, due to a problem, would allow a higher pressure than normal and allow the secondary regulator to function and become the controlling regulator. All regulator pressures are in reference to a bellows assembly vented to ambient.

One of the regulating units incorporated in one of the parallel paths is considered the working regulator. The regulating unit in the remaining parallel path is normally locked up when the system is dynamic. The regulator that is normally locked up would not function until the normal regulator allowed the regulated helium pressure to decrease, due to a problem, and allow the normally locked-up regulator to become the functioning regulator.

2.4.2.1.4 Check Valve Assemblies.

Each assembly contains four independent check valves connected in a series-parallel configuration which provides added redundancy. The check valves will not open until there is a 4-psi pressure differential between the check valve assembly inlet and outlet lines.

2.4.2.1.5 Helium Pressure Relief Valves.

The pressure relief valves consist of a relief valve, a burst diaphragm, and a filter.

In this event, excessive helium and/or propellant vapor ruptures the burst diaphragm and the filter (filter is to be of a nonfragmentation type) filters any fragmentation. The relief valve opens and vents the applicable system to space. The relief valve will close and reseal after the excessive pressure has returned to the operating level. The burst diaphragm provides a more positive seal of helium than a relief valve. The filter prevents any fragments from the diaphragm from entering onto the relief valve seat.

A pressure bleed device is incorporated between the burst diaphragm and relief valve. The bleed valve vents the cavity between the burst diaphragm and relief valve in the event of any leakage from the diaphragm. The bleed device is normally open and will close when the pressure increases up to a predetermined pressure.

2.4.2.1.6 Heat Exchangers.

Each unit is a line-mounted, counterflow heat exchanger consisting of a portion of the helium pressurization line coiled helically within an enlarged section of the propellant supply line. This arrangement causes the helium gas, flowing through the coiled line, to approach the temperature of the propellant.

2.4.2.2 Propellant Subsystem.

This subsystem consists of two fuel tanks (storage and sump), two oxidizer tanks (storage and sump), propellant feed lines, and bipropellant valve assembly.

2.4.2.2.1 Propellant Tanks.

The total propellant supply is contained within four, hemispherical-domed cylindrical tanks within the service module. The storage tanks are pressurized from the helium supply, and an outlet transfers the propellant and/or helium gas from the storage tanks through their respective transfer lines to the sump tanks. A standpipe in the sump tanks allows the propellant and/or helium gas from the storage tanks to pressurize the sump tanks. Thus, the propellants in the sump tanks are directed into the retention reservoirs and to the outlet, thus to the engine.

The retention reservoirs are installed in the exit end of the sump tanks only. The umbrella propellant retention screens retain a quantity of propellant in the exit end of the sump tanks, in addition to retaining propellant within the retention reservoir can, and in the plumbing from the sump tank outlet to the bipropellant valve of the SPS engine during zero-g

conditions. An ullage maneuver must be performed prior to the thrust-on signal to the SPS engine by the S/M RCS. The ullage maneuver is performed to ensure that no gases are retained below or aft of the retention screens in addition to settling the propellants and ensure that the retention screens are not damaged.

2.4.2.2.2 Tank Propellant Feed Lines.

The propellant feed lines have flexible bellows assemblies installed to permit alignment of the tank feed plumbing to the engine interface plumbing.

SPS

2.4.2.3 Bipropellant Valve Assembly.

The bipropellant valve assembly consists of two gaseous nitrogen (GN_2) pressure vessels, two injector prevalves, two GN_2 regulators, two GN_2 relief valves, four solenoid control valves, four actuators, and eight propellant ball valves.

2.4.2.3.1 Gaseous Nitrogen (GN_2) Pressure Vessels.

Two GN_2 tanks are mounted on the bipropellant valve assembly that supply pressure to the injector pre-valves. One GN_2 tank is in the primary pneumatic control system A and the remaining GN_2 tank is in the secondary pneumatic control system B.

2.4.2.3.2 Injector Prevalves.

The injector prevalves are two-position solenoid-operated valves, one for each pneumatic control system, identified as A and B. Each valve is energized open and spring-loaded closed. The injector prevalve is opened upon command from the crew, panel 3, prior to an engine thrusting period. The injector prevalves, energized open, allow GN_2 supply tank pressure to flow to an orifice and on into the regulator.

2.4.2.3.3 GN_2 Pressure Regulators.

A single-stage regulator is installed in each pneumatic control system between the injector prevalves and the solenoid control valves. The regulator reduces the supply GN_2 pressure to a desired working pressure.

2.4.2.3.4 GN_2 Relief Valves.

A pressure relief valve is installed in each pneumatic control system, downstream of the GN_2 pressure regulators, to limit the pressure applied to the solenoid control valves in the event a GN_2 pressure regulator malfunctioned open. The orifice between the injector prevalve and regulator is installed to restrict the flow and allow the relief valve to relieve the pressure in event the regulator fails open, thus preventing damage to the solenoid control valves and/or actuators.

2.4.2.3.5 GN_2 Solenoid Control Valves.

Four solenoid-operated, three-way, two-position control valves are utilized for actuator control. Two solenoid control valves are located downstream of the GN_2 regulators in each pneumatic control system. The two solenoid control valves in the primary system are identified as 1,and 2, and the two in the secondary system are identified as 3 and 4. The two solenoid control valves, in the primary system, control actuator and ball valves 1 and 2. The two solenoid control valves, in the secondary system, control actuator and ball valves 3 and 4. The SPS thrust ON-OFF command controls the energizing or de-energizing of all four solenoid control valves.

2.4.2.3.6 GN_2 Ball Valve Actuators.

Four piston-type, pneumatically operated actuators are utilized to control the eight propellant ball valves. Each actuator piston is mechanically connected to a pair of propellant ball valves; one fuel and one oxidizer. When the solenoid control valves are opened, pneumatic pressure is applied to the opening side of the actuators. The spring pressure on the closing side is overcome and the actuator piston moves. Utilizing a rack and pinion gear, linear motion of the actuator connecting arm is converted into rotary motion, which opens the propellant ball valves. When the engine firing signal is removed from the solenoid control valves the solenoid control valves close, removing the pneumatic pressure source from the opening side of the actuators. The actuator closing side spring pressure now forces the actuator piston to move in the opposite direction, causing the propellant ball valves to close. The piston movement forces the remaining GN_2, on the opening side of the actuator, back through the solenoid control valves where they are vented overboard.

2.4.2.3.7 Bipropellant Valves.

The eight propellant ball valves are used to distribute fuel and oxidizer to the engine injector assembly. Four linked pairs, each pair consisting of one fuel and one oxidizer ball valve controlled by a single actuator, are arranged in a series-paralleled configuration. The parallel arrangement provides redundancy to ensure engine ignition, and the series arrangement to ensure thrust termination. When the actuators are opened, each propellant ball valve is rotated, thereby aligning the ball to a position that allows propellants to flow to the engine injector assembly. The mechanical arrangement is such that the oxidizer ball valves maintain an 8-degree lead over the fuel ball valves upon opening, which results in smoother engine starting transients. Each pair of propellant valves incorporates a potentiometers drive gear and housing. Each housing contains two mechanically driven potentiometers: one provides an electrical signal converted into a visual indication of valve positions on panel 20, and the remaining provides a signal to telemetry.

2.4.2.3.8 Engine Propellant Lines.

Integral propellant lines are utilized on the engine to route each propellant from the interface points in the gimbal plane area to the propellant engine gimbaling, orifices for adjustment of oxidizer/fuel ratio, and screens for keeping particle contaminants from entering the engine.

2.4.2.4 Engine Injector.

SPS

The injector is bolted to the ablative thrust chamber attach pad. Propellant distribution to the injector orifices, on the combustion face of the injector, is accomplished through concentric annuli machined in the face of the injector assembly and covered by concentric closeout rings. Propellant distribution to the annuli is accomplished through alternate radial manifolds, welded to the backside of the injector body. The injector is regeneratively cooled and baffled to provide combustion stability. The fuel and oxidizer orifices impinge upon each other, atomize, and ignite due to hypergolic reaction.

2.4.2.5 Ablative Combustion Chamber

The ablative combustion chamber material extends from the injector attach pad to the nozzle extension attach pad. The ablative material consists of a liner, a layer of insulation, structural outer reinforcement, integral metal attach flanges for mounting the injector and nozzle extension. The only restriction on restart is dependent upon the SPS WALL TEMP HI caution and warning light on panel 11, monitoring the outside wall temperature at the throat.

2.4.2.6 Nozzle Extension.

The nozzle extension is bolted to the ablative thrust chamber exit area. area. The bell-countoured nozzle extension is radiant cooled and contains an external stiffener to provide additional strength.

2.4.2.7 Flight Combustion Stability Monitor (FCSM).

The FCSM is an accelerometer package, mounted to the SPS engine injector to monitor the engine for vibration buildup characteristic of combustion instability.

The three accelerometers provide signals into an FCSM box assembly which amplifies it; and when the vibration G - level exceeds 180 g's peak to peak for 70±20 milliseconds, a level detector triggers a power switch gating power to the summing logic. The stability monitor will monitor only in a frequency range where instability would occur (approximately 600 to 5000 cycles per second).

The summing logic will energize relays; if there are two or more rough combustion signals received, the normally closed contacts will open removing power from the G&N and SCS driver logic, and will close the normally open contacts providing a ground to the SPS ROUGH ECO caution and warning light on panel 10 informing the crew the SPS engine was shut down due to combustion instability.

The FCSM trigger circuits will provide power to the voting logic relays continuously once unstable combustion is sensed and power remains applied to the voting logic relays even through the engine is shut down, and unstable combustion is no longer sensed and the SPS ROUGH ECO remains illuminated.

When the engine is shut down to unstable combustion and to remove power from the voting logic relays, the crew would place any one of the following switches to the position indicated to reset the FCSM voting logic:

a. AUTO-OVERRIDE switches to OVERRIDE.
b. ΔV switch to OFF.
c. ATTITUDE, MONITOR, ENTRY switch to either MONITOR or ENTRY.
d. FCSM-SCS and -G&N switches to RESET/OVERRIDE

When the FCSM is reset, the SPS ROUGH ECO light on panel 10 will not be illuminated.

The RESET/OVERRIDE switches on panel 2 provide a bypass capability of the FCSM system. With the FCSM RESET/OVERRIDE switches on panel 2 in the RESET/OVERRIDE position, power is not provided to the FCSM box and summing logic assemblies, rendering the FCSM inoperative as well as the SPS ROUGH ECO caution and warning light on panel 10. If unstable combustion occurs, the engine continues to thrust.

The FCSM box and summing logic assemblies receive power from the SCS through the following switches:

a. Mode select switch to G&N or SCS mode, panel 8.
b. ATTITUDE, MONITOR, ENTRY switch to ATTITUDE, panel 8.
c. ΔV switch to ΔV position, panel 8.
d. FCSM G&N, RESET/OVERRIDE switch to G&N position, panel 2.
e. FCSM SCS, RESET/OVERRIDE switch to SCS position, panel 2.

2.4.2.8 SPS Electrical Heaters.

Twenty-six electrical strip heaters are employed on the propellant line brackets, fuel and oxidizer heat exchangers, propellant utilization valve, bipropellant valve assembly and the injector tubes. These electrical strip heaters are employed to control the temperature of the entire aft bulkhead area and engine area thus the propellants.

The strip heaters are controlled as a normal manual function of the crew on panel 19, (figure 2.4-2) utilizing the SPS heater switch. The crew will place the switch to position A or B when the propellant temperature indicator on panel 20 reads -40°F (lower red line indication) which is equivalent to a propellant temperature of +40°F. The propellant temperature readout is derived from the engine fuel-feed line measurement (figure 2.4-1). The crew will place the SPS heater switch to OFF when the propellant temperature indicator on panel 20 reads +80°F (upper red line indication) which is equivalent to a propellant temperature of +120°F.

When the SPS heater switch is placed to position A, all 26-heating elements A will receive 28 vdc. When the SPS heater switch is placed to position B, all 26-heating elements B will receive 28 vdc. The OFF position of the SPS heater switch removes all electrical power from the SPS heating elements.

2.4.2.9 Thrust Mount Assemblies.

The thrust mount assembly consists of a gimbal ring, engine-to-vehicle mounting pads, and gimbal ring-to-combustion chamber assembly supports. The thrust structure is capable of providing ±8.5 degrees inclination about the Z-axis and ±7.5 degrees about the Y-axis.

2.4.2.9.1 Gimbal Actuator.

Thrust vector control of the service propulsion engine is achieved by dual, servo, electro-mechanical actuators. The gimbal actuators are capable of providing control around the Z-Z axis (yaw) of 7(+1/2/, -0) degrees in either direction from a +4-degree null offset, and around the Y-Y axis (pitch) of 6(+1/2, -0) degrees in either direction from a zero-degree null offset.

The reason for the 4-degree offset to the +Y-axis is due to the offset center of mass in the spacecraft.

Each actuator assembly (figure 2.4-3) consists of four electromagnetic particle clutches, two d-c motors, a bull gear, jackscrew and ram, ball nut, four linear position transducers, and two velocity generators. The actuator assembly is a sealed unit and enclose those portions protruding from the main housing.

One motor and a pair of clutches (extend and retract) are identified as system 1 and the remaining motor and pair of clutches (extend and retract) are identified as system 2, within the specific actuator.

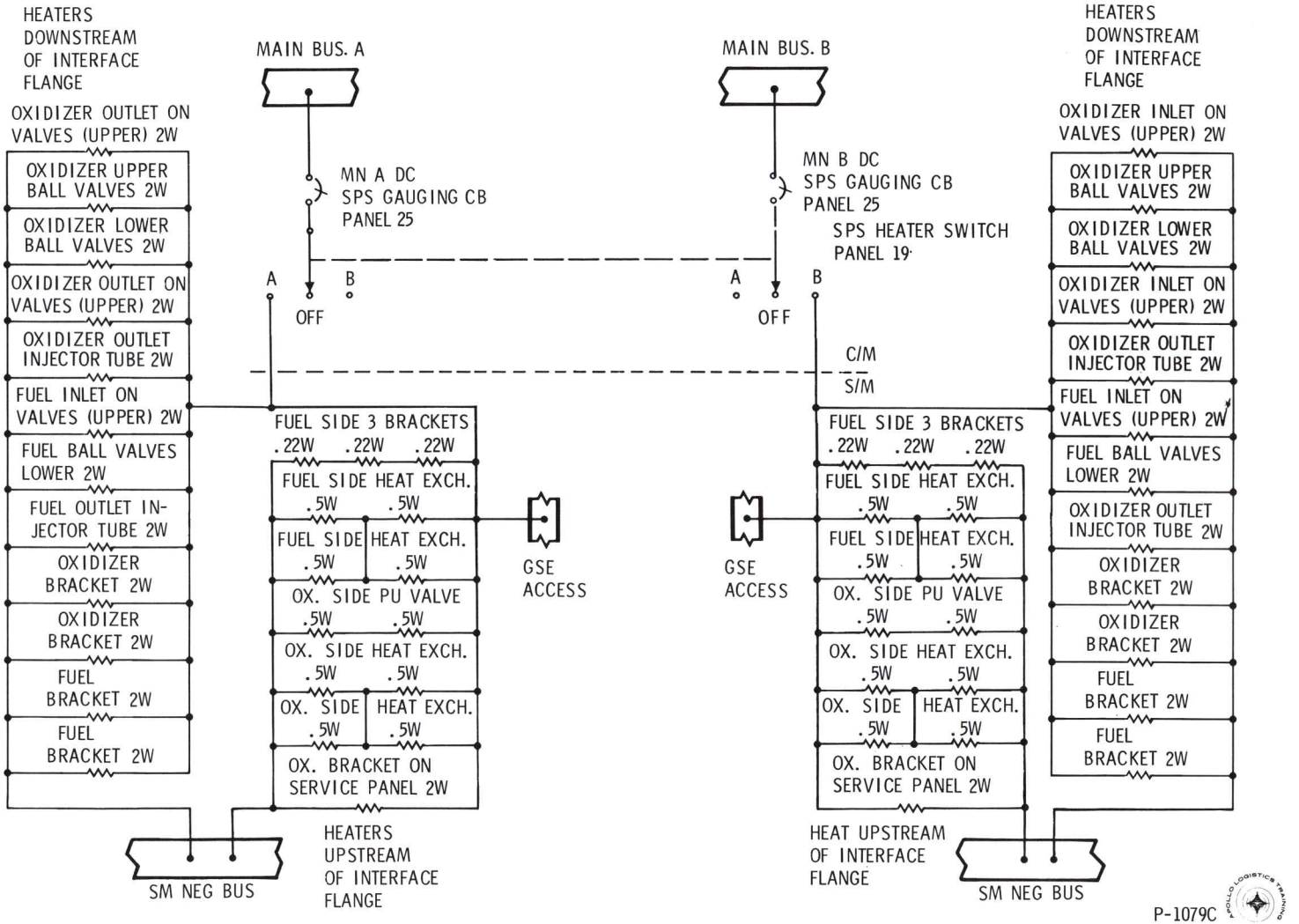

Figure 2.4-2. SPS Heaters—Electrical

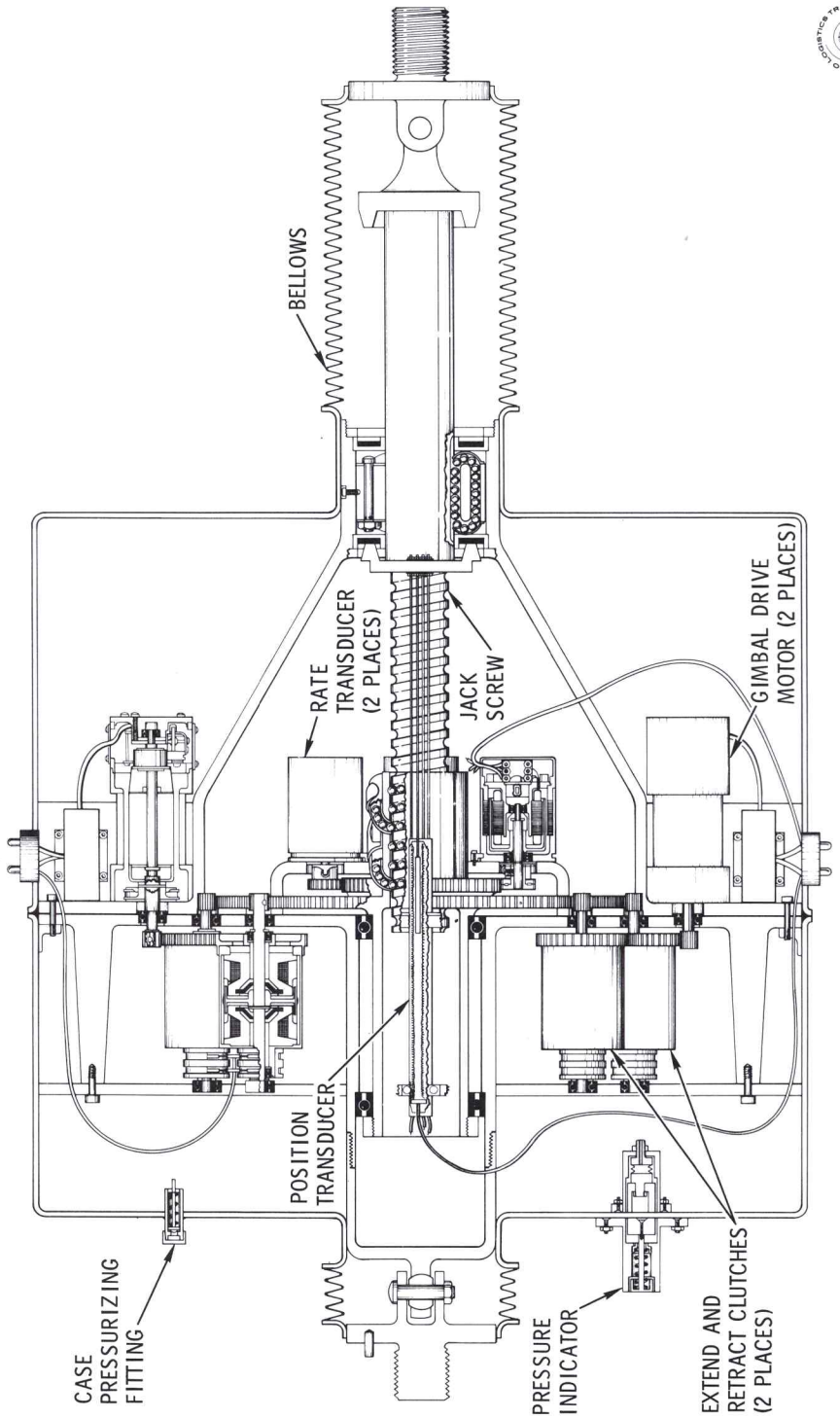

Figure 2.4-3. SPS Electro-Mechanical Gimbal Actuator

An over and undercurrent relay is employed for each primary gimbal motor (figure 2.4-4), and is controlled individually by a switch on panel 3. When the primary gimbal motor switches are placed to the START position, power is applied to the motor-driven switch within the over and undercurrent relay of the primaries. The motor switch then supplies power from the main bus A to the gimbal motor. When the switch is released, it spring-loads to the ON position which activates the over and undercurrent sensing circuitry of the primary relay that monitors the current to the gimbal motor.

The over and undercurrent relay of the primaries are utilized to monitor the current to the gimbal motor due to the variable current flow that is dependent upon the gimbal angle change required.

Using 1 yaw system as an example and identifying the upper motor and clutches in figure 2.4-3 as system 1, the operation of the current monitoring system is as follows:

a. If the relay senses an over or undercurrent to gimbal motor 1, the monitor circuitry within the relay will drive the motor-driven switch, removing power from gimbal motor 1.

b. Simultaneously a fail sense signal is sent from the relay, the SCS, which opens relay K13 removing inputs from the 1 clutches and closes relay K14 applying inputs to the 2 clutches within the same actuator, and the top contact of K12 opens and the bottom contact of K12 closes for TVC monitor.

c. Simultaneously a signal is sent to illuminate a caution and warning light on panel 11, to indicate the primary gimbal motor has failed.

The primary switches on panel 3 are then placed in the OFF position. Normally the OFF position is used to shut down the gimbal motors upon the completion of a thrusting period.

The 2 systems employ a 70-amp circuit breaker that is located in the service module near the SPS power distribution box.

Using 2 yaw system as an example figure 2.4-4, the operation of the current monitoring system is as follows:

a. When the secondary gimbal motor switches are placed to the START position, power is applied to the motor-driven switch within the over and undercurrent relay of the secondaries. The motor switch then supplies power from the main bus B through the 70-amp circuit breaker and through the motor-driven switch to the secondary gimbal motor.

b. When the secondary switch is released, it spring-loads to the ON position which performs no functions on the secondaries.

c. The 70-amp circuit breaker will monitor the current to the secondary gimbal motor and if a current of 70 amps is, sensed the circuit breaker in the service module will remove power from the secondary gimbal motor.

d. There is no fail sense signal sent to the stabilization and control system and no illumination of the caution and warning light on panel 11 from the secondary system.

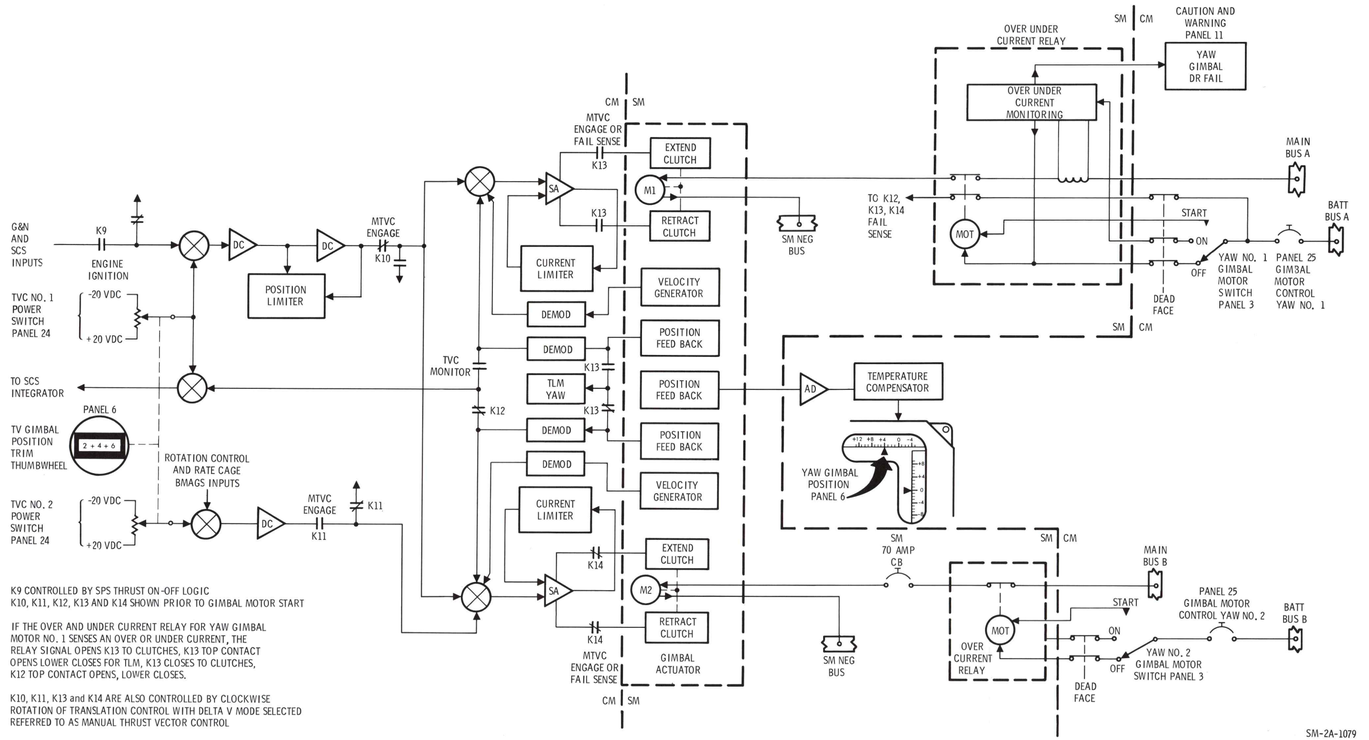

Figure 2.4-4. SPS YAW Gimbal Actuator Motor and Clutch Control

e. If the 2 system has failed due to an overcurrent, the circuit breaker removes power from gimbal motor 2 only, and that specific actuator is inoperative if the 1 system has previously failed.

The secondary switches on panel 3 are then placed to OFF position. Normally the OFF position is used to shut down the gimbal motors upon the completion of a thrusting period.

The clutches are of a magnetic particle type. The gimbal motor drive gear meshes with the gear on the clutch housing. The gears on each clutch housing mesh and as a result, the clutch housings counterrotate. The current input is applied to the electro-magnet mounted to the rotating clutch housing from the stabilization and control system or in the guidance and navigation system through the stabilization control system. A quiescent current is applied to the electro-magnet of the extend and retract clutches when the thrust vector POWER switches, on panel 24, are ON, which prevents the engine from moving during the boost phase of the mission with the gimbal motors OFF. A 246 foot-pound force would be required on the engine to overcome the quiescent current (equivalent to 1.53 g) in the clutches. The gimbal motors will be turned ON, prior to jettisoning the launch escape tower to support the SPS abort criteria after the launch escape tower has been jettisoned and will be turned OFF as soon as possible to reduce the heat problem within the clutches that occurs due to the gimbal motors during the clutch housings with quiescent current applied. This creates a friction force in the clutch housing that creates heat which if allowed to rise to a high temperature the electro-magnet would loose its magnetism capability. Thus, rendering that set of clutches inoperative. This problem occurs only during boost and not during the normal SPS burns.

Prior to any thrusting periods the thumbwheels on panel 6 can be used to position the engine. The thrust-on signal may be provided by the G&N through the SCS or by SCS only. In either mode the current input required (to maintain the engine thrust vector through the center of mass) to the clutches will increase above the quiescent current which increases the current in the electro-magnets that are rotating with the clutch housings. The dry powder magnetic particles have the ability to become magnetized very readily as well as becoming demagnetized as readily. The magnetic particles increase the friction force between the rotating housing and the flywheel, causing the flywheel to rotate. The flywheel arrangement is attached to the clutch output shaft allowing the clutch shaft to drive the bull gear. The bull gear drives a ball nut which drives the actuator jack-shaft to an extend or retract position, depending upon which clutch housing electro-magnet the current input is supplied to. The larger the excitation current, the higher the clutch shaft rotation rate.

Meshed with the ball nut pinion gear are two rate transducers of the tachometer type. When the ball nut is rotated, the rate transducer supplies a feedback into the summing network of the thrust vector control logic to control the driving rates of the jackscrew (acting as a dynamic brake to prevent over or undercorrecting), one transducer for each system.

The jackscrew contains four position transducers all arranged for linear motion and all connected to a single yoke. One of the position transducers is used to provide a feedback to the summing network of transducer feedback. The two feedbacks into the summing network reduces the output current to the clutch, resulting in a proportional rate change to the desired gimbal angle position and returns to a quiescent current.

One position transducer provides a signal to the visual display on panel 6 and one of the position transducer provides a feedback to the redundant summing network of the thrust vector logic for the redundant clutches. The remaining position transducer is not presently utilized.

The spacecraft desired motion, thumbwheel positioning, engine nozzle position, thrust vector position, gimbal position display indicator, and actuator ram movement is identified in figure 2.4-5.

A snubbing device provides a hard stop for an additional one-degree travel beyond the normal gimbal limits.

Manual thrust vector control may be obtained by the crew placing the translation control clockwise. This will open K10 and K13 and close contacts K11 and K14, allowing the rotation control to provide the crew with manual thrust vector control.

2.4.2.10 Propellant Utilization and Gauging Subsystem (PUGS).

The subsystem consists of eight propellant quantity sensors, a propellant utilization valve, a control unit and a display unit (figures 2.4-6 and 2.4-7).

2.4.2.10.1 Quantity Sensing, Computing, and Indicating System.

Propellant quantity is measured by two separate sending systems: primary and auxiliary. The primary quantity sensors are cylindrical capacitance probes, mounted axially in each tank. In the oxidizer tanks, the probes consist of a pair of concentric electrodes with oxidizer used as the dielectric. In the fuel tanks, a pyrex glass probe, coated with silver on the inside, is used as one conductor of the capacitor. Fuel on the outside of the probe is the other conductor. The pyrex glass itself forms the dielectric. The auxiliary system utilizes point sensors, mounted at intervals along the primary probes, to provide a step function impendence change when the liquid level passes their location centerline.

Primary propellant measurement is accomplished by the probes capacitance being a linear function of propellant height.

S/C MOTION DESIRED BY THE CREW	THUMB WHEEL POSITIONED ON PANEL ASSEMBLY 6 TO A	ENGINE NOZZLE MOVES TOWARDS THE	THE THRUST VECTOR OF THE ENGINE MOVES TOWARDS THE	GIMBAL POSITION INDICATOR ON PANEL ASSEMBLY 6 MOVES TO A	ACTUATOR RAM
S/C NOSE DOWN (PITCH)	+ NUMERAL (UP)	+ Z AXIS OF THE S/C	- Z AXIS OF THE S/C	+ NUMERAL	PITCH EXTENDS
S/C NOSE UP (PITCH)	- NUMERAL (DOWN)	- Z AXIS OF THE S/C	+ Z AXIS OF THE S/C	- NUMERAL	PITCH RETRACTS
S/C RIGHT (YAW)	- NUMERAL (RIGHT)	+ Y AXIS OF THE S/C	- Y AXIS OF THE S/C	- NUMERAL	YAW RETRACTS
S/C LEFT (YAW)	+ NUMERAL (LEFT)	- Y AXIS OF THE S/C	+ Y AXIS OF THE S/C	+ NUMERAL	YAW EXTENDS

THE ACTUATOR NULL POSITION IN YAW IS 4° OFFSET FROM THE S/C X AXIS DUE TO THE ENGINE MOUNTING PADS IN THE SERVICE MODULE BEING CANTED (BLOCK I VEHICLES)

THE THRUST VECTOR IS 4° TO THE +Y AXIS OF THE S/C AND THE ENGINE NOZZLE IS 4° TO THE -Y AXIS OF THE S/C.

AS A RESULT THE GIMBAL POSITION INDICATOR ON PANEL ASSEMBLY 6 WILL INDICATE A +4° WHEN THE ACTUATORS ARE IN THE NULL POSITION.

TO PARALLEL THE THRUST VECTOR AND THE ENGINE NOZZLE WITH THE X AXIS OF THE S/C, THE YAW THUMB WHEEL ON PANEL ASSEMBLY 6 MUST BE POSITIONED TO 0° AND AS A RESULT THE YAW POSITION INDICATOR ON PANEL ASSEMBLY 6 WILL INDICATE 0°.

IN THIS CASE, THE YAW ACTUATOR IS NO LONGER IN ITS NULL POSITION IN RESPECT TO THE GIMBAL RING.

THE THRUST VECTOR AND THE ENGINE NOZZLE ARE NOW PARALLEL TO THE X AXIS OF THE S/C

THE ACTUATOR NULL POSITION IN PITCH IS 0° (BLOCK I VEHICLES).

P-1073 A

Figure 2.4-5. Gimbaling of the Service Propulsion Engine

Auxiliary propellant measurement is accomplished by locating the propellant level with point sensors. Each point sensor consists of concentric metal rings, seven in the storage tanks and eight in the sump tanks. The rings present a variable impedance, depending on whether they are covered or uncovered by the propellants. When the propellants are between point sensors, the propellants remaining are integrated by a rate-flow generator which integrates the servos at a rate proportional to the normal flow rate of the fuel and oxidizer. A mode selector senses when the propellant crosses a sensor and changes the auxiliary servos from the flow rate generator mode to the position mode, the system moves to the location specified by the digital-to-analog converter for 3/4 second to correct for any difference. The system then returns to the flow rate generator mode until the next point sensor is reached. Figures 2.4-8 and 2.4-9 illustrate point sensor locations that are covered by propellants. The nonsequential pattern detector functions to detect false or faulty sensor signals. If a sensor has failed, the information from that sensor is blocked from the system, preventing disruption of system computation.

When a thrust-on signal is provided with the SENSOR select switch in the PRIMARY OR NORMAL position the crew display digital readouts will not change for 4.5±1.0 second the allow for propellant settling. However, TLM will receive the same signal as upon completion of the last firing after approximately one second of SPS Thrust-ON.

When the thrust-on signal is provided with the SENSOR select switch in AUXILIARY position, the crew display digital readouts and TLM will receive a change in information immediately, which is generated from a flow rate integrator that simulates the nominal flow rate and transmits this as quantity information to the crew displays and TLM. The crew digital readouts and TLM will not be updated to the propellant from a point sensor for 4.5±1.0 seconds after thrust-on. When the thrust-on signal is provided plus 4.5±1.0 seconds, if a point sensor is uncovered the crew digital readouts and TLM will be updated to the propellant remaining at that point sensor. The time delay of 4.5±1.0 seconds is to the point sensor system and not to the auxiliary fuel and oxidizer servos, and is to allow for propellant settling.

Any deviation from the nominal oxidizer to fuel ratio (2:1 by mass) is displayed by the UNBALANCE indicator in pounds. The upper half of the indicator is marked INC and the lower half is marked DEC, to identify the required change in oxidizer flow rate to correct any unbalance condition.

When the SENSOR select switch is in the NORMAL position, the outputs of both sensor systems are continually compared in the comparator network. If a discrepancy occurs between total primary and total auxiliary fuel of 300 pounds, or a discrepancy between total primary oxidizer and auxiliary oxidizer of 300 pounds, the caution and warning light on panel 11 is illuminated. The output of the oxidizer sump tank servo amplifier and the primary potentiometer of the unbalance indicator are compared in the comparator network and if 300 pounds of 90 percent of the critical unbalance

SPS

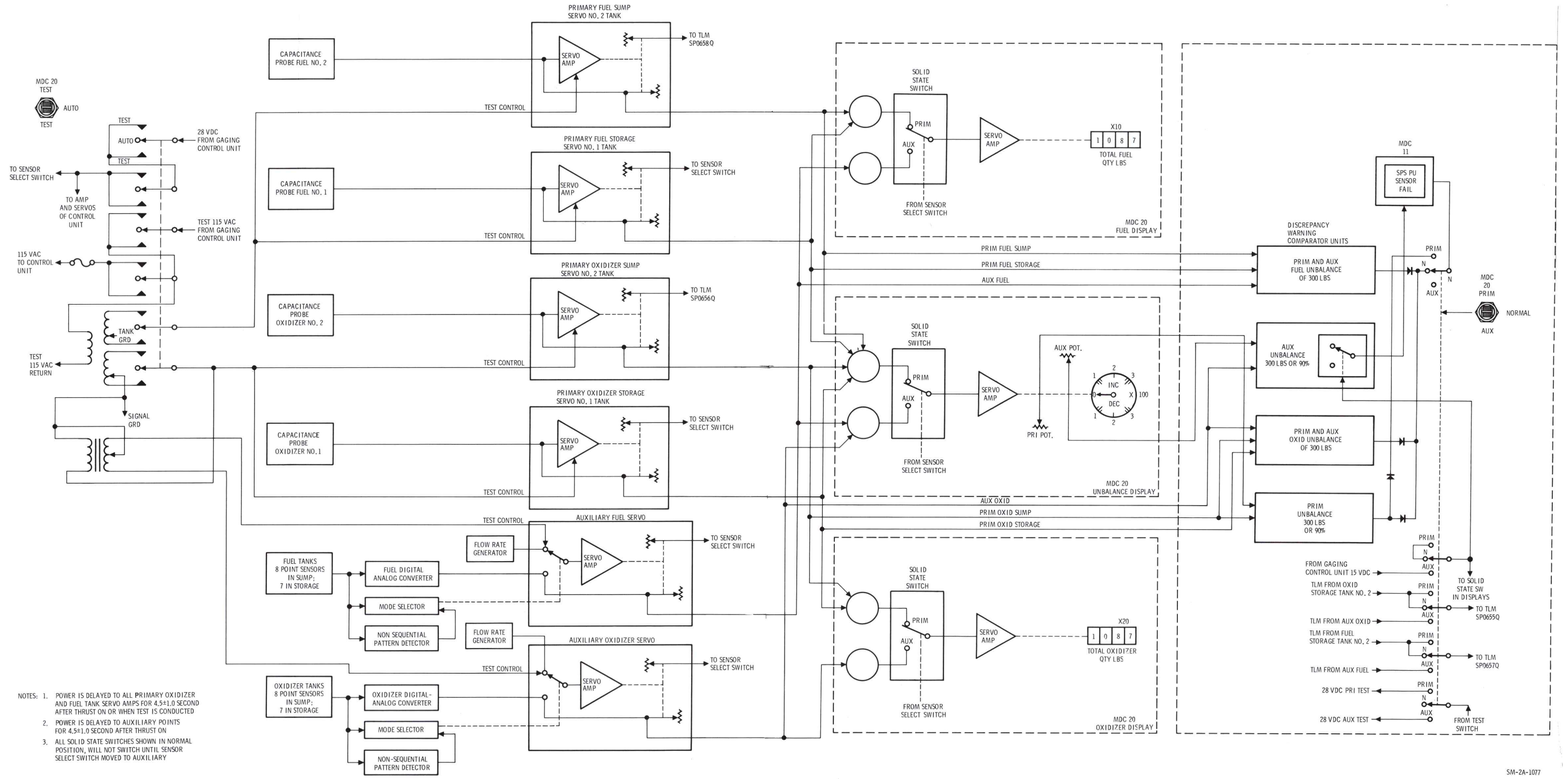

Figure 2.4-6. SPS Quantity Sensing, Computing, and Indicating System

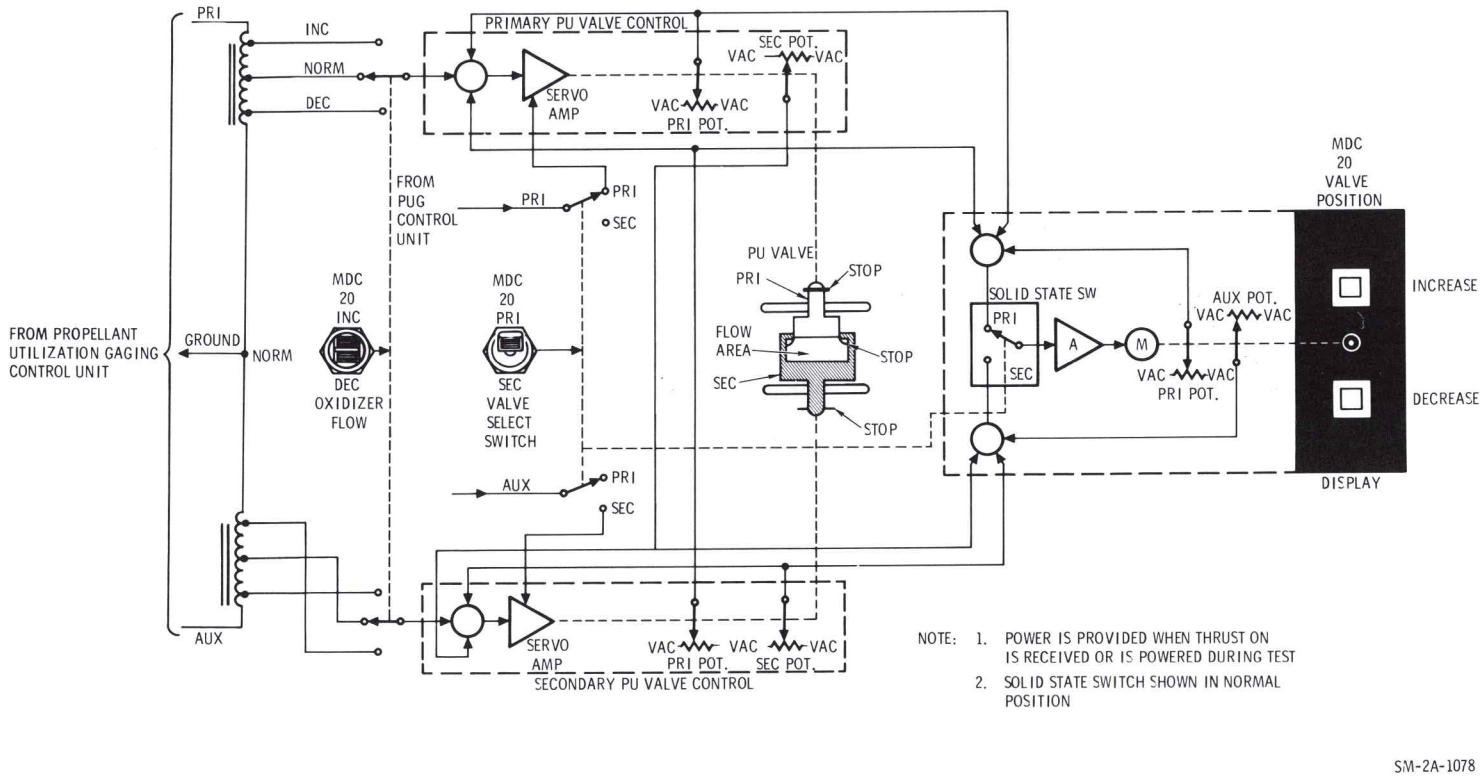

Figure 2.4-7. SPS Propellant Utilization Valve and Flag Display

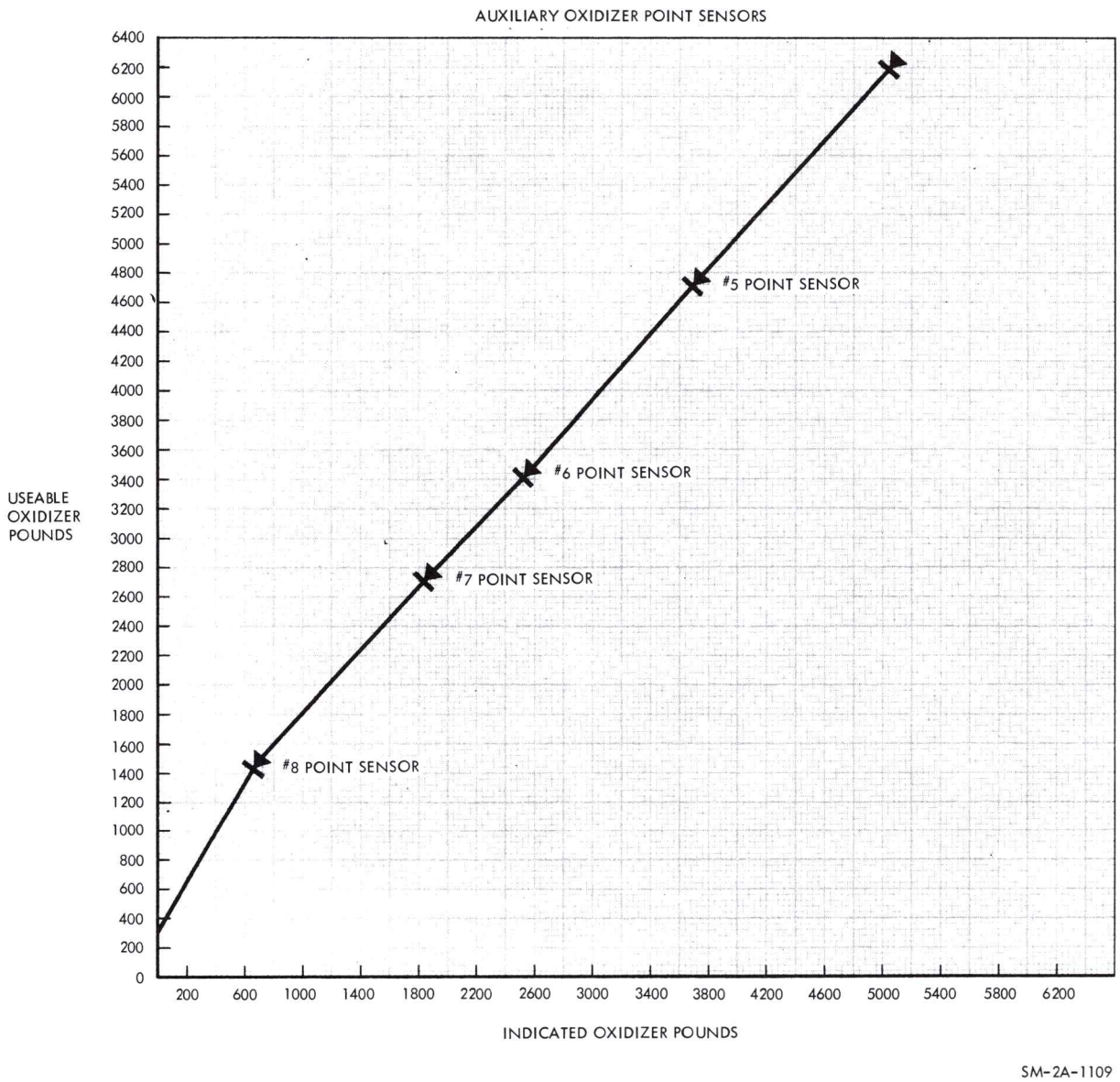

Figure 2.4-8. Auxiliary Fuel Point Sensors

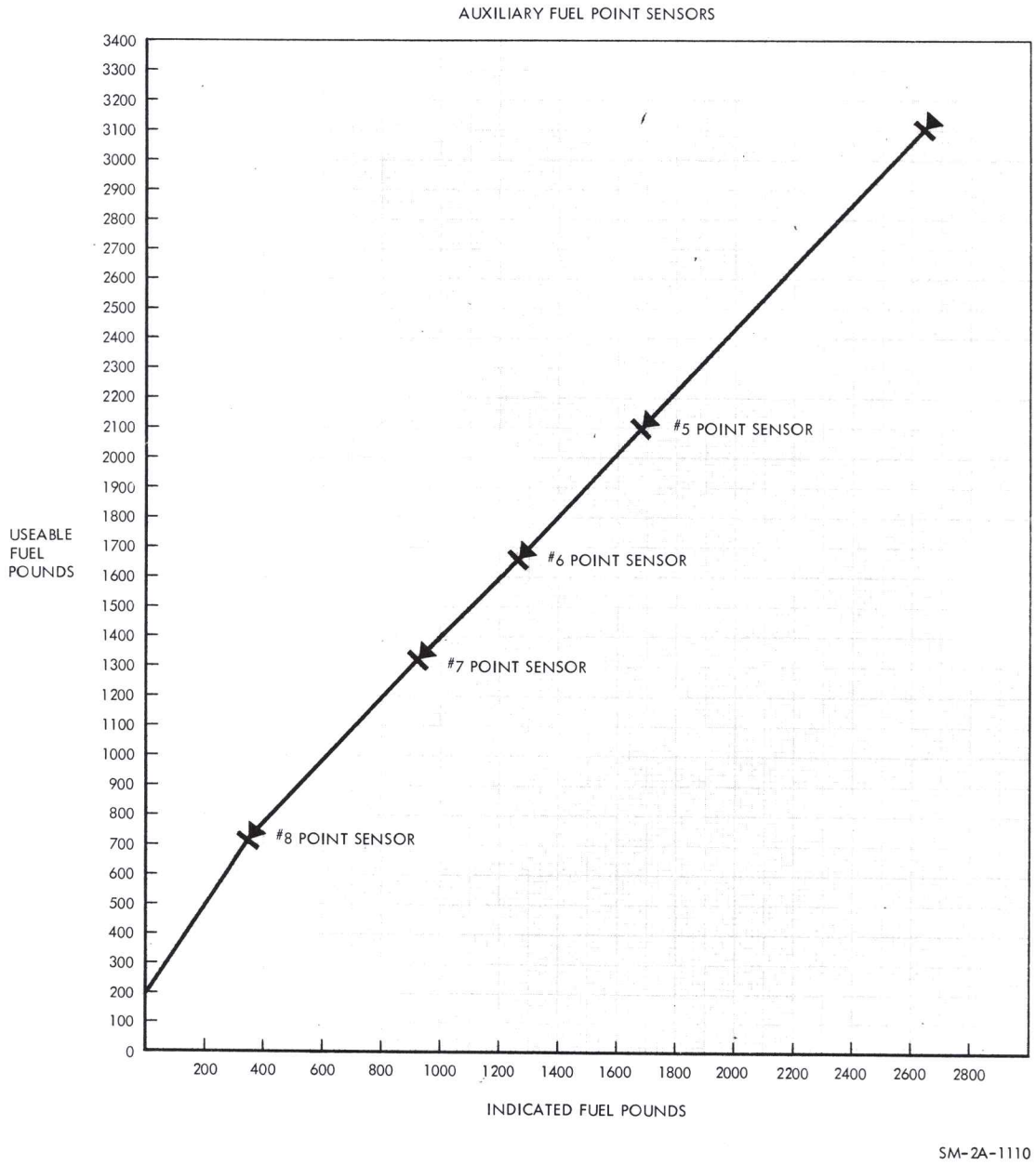

Figure 2.4-9. Auxiliary Oxidizer Point Sensors

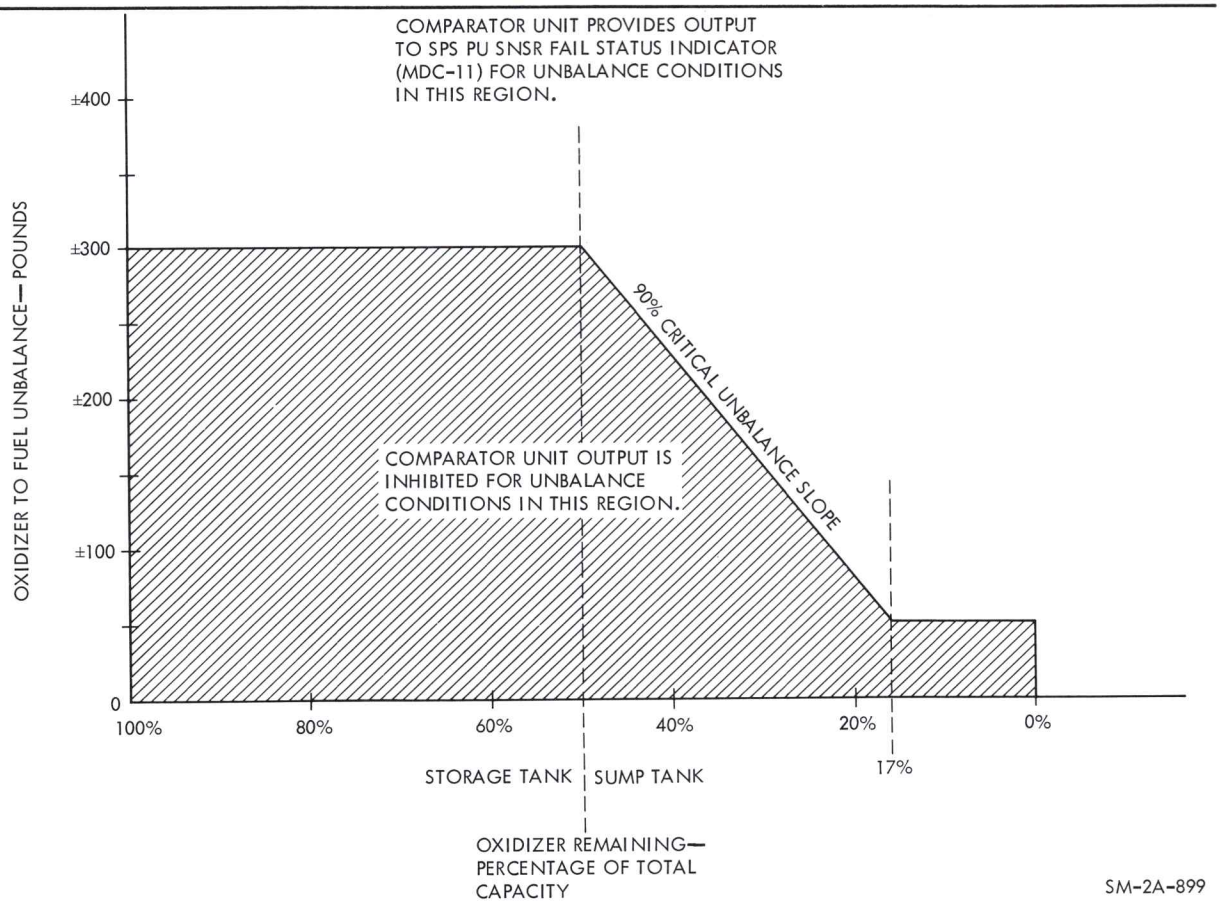

Figure 2.4-10. Propellant Unbalance Warning System Output Chart

With the SENSOR select switch in the PRIMARY position, the output of the oxidizer sump tank servo amplifier and the output of the primary potentiometer in the unbalance meter are compared in the comparator network, and if 300 pounds of 90 percent of the critical unbalance indicated versus time remaining is reached, the caution and warning light on panel 11 is illuminated.

With the SENSOR select switch in the AUXILIARY position, the output of the auxiliary oxidizer servo amplifier and the output of the auxiliary potentiometer are compared in the comparator network, and if 300 pounds or 90 percent of the critical unbalance indicated versus time remaining is reached (figure 2.4-8), the caution and warning light on panel 11 is illuminated.

Once the warning light is illuminated, the crew can determine whether there is a malfunction within the quantity and indicating systems or if there is a true unbalance condition existing by use of the self-test portion of the system. By observing the response of each system in conjunction with the TEST switch on panel 20, the crew can recognize the malfunction or determine if there is a true unbalance existing.

2.4.2.10.2 Quantity Computing and Indicating System Test.

A test of the sensing systems excluding the point sensors and probes can be implemented during thrust ON or OFF periods.

With the SENSOR select switch in PRIMARY, and the TEST switch in the TEST UP position, the test stimuli is applied to the primary system tank servo amplifiers after a 4.5±1.0-second delay. At this time, the test stimuli will drive the fuel and oxidizer displays to an increase reading at different rates (oxidizer at a rate of approximately 3 digits per second and fuel at a rate of approximately 1.5 digits per second), resulting in an unbalance and indicated on the unbalance display as an INC (clockwise rotation). TLM would receive an increase in propellant quantity from the primary system simultaneously.

Placing the TEST switch in the TEST DOWN position, and after a 2 4.5±1.0-second delay, will provide test stimuli to the tank servo amplifiers which will drive the fuel and oxidizer displays to a decrease reading, returning the crew displays close to the reading displayed prior to TEST UP, simultaneously TLM would receive a decrease in propellant quantity. If the TEST switch was again placed to TEST DOWN, after a 4.5±1.0-second delay, the fuel and oxidizer crew display readouts would drive to a decrease reading at different rates, resulting in an unbalance and indicated on the unbalance display as a DEC (counterclockwise rotation). TLM would receive a decrease in propellant quantity simultaneously. To return to the reading displayed prior to the second TEST DOWN, place the TEST switch to TEST UP and after a 4.5±1.0-second delay, the crew displays would return close to the original displayed readings; simultaneously TLM receives an increase in propellant quantity.

To test the auxiliary system, place the SENSOR select switch to AUXILIARY and utilize the TEST switch up and down positions. There is no time delay involved with the auxiliary system.

The AUTO position removes the electrical test stimuli inputs.

2.4.2.10.3 Propellant Utilization Valve.

If an unbalance condition exists, the crew will use the propellant utilization valve to return the propellants to a balanced condition. The propellant utilization valve housing contains two sliding gate valves within the housing. One sliding gate valve is the primary and the remaining sliding gate valve is the secondary (figure 2.4-7).

Stops are provided within the valve housing for the full increase or decrease positions of the primary and secondary sliding gate valves.

The secondary propellant utilization valve has twice the travel of the primary propellant utilization valve to compensate for primary propellant utilization valve failure in any position. The secondary valve is selected by the VALVE switch and is controlled by the OXIDIZER FLOW switch in the same manner as the primary.

The propellant utilization valve controls are on panel 20. The VALVE switch selects the primary or secondary propellant utilization valve. Normal position of the VALVE switch is PRI. The OXIDIZER FLOW switch is utilized to position the primary or secondary propellant utilization sliding gate valve. When the OXIDIZER FLOW switch is in NORMAL, the sliding gate valve is in the nominal flow position and the upper and lower OXID flow position indicator is gray. When the OXIDIZER FLOW switch is placed to the INCREASE position, the sliding gate valve is in the increase flow position and the upper OXID flow position indicator is striped. When the OXIDIZER FLOW switch is placed to DECREASE position, the sliding gate valve is in the decrease flow position, but does not block the oxidizer flow completely, and the lower OXID flow indicator is striped.

2.4.2.10.4 Engine Thrust ON-OFF Control.

Figure 2.4-1 illustrates the thrust ON-OFF logic in the guidance and navigation delta V mode, the stabilization control system delta V mode, and the manual direct mode.

The guidance and navigation is the primary delta V mode which provides the most accurate trajectory corrections. The G&N delta V mode of operation will require the G&N gate 2 to be completely enabled. Its required inputs will be an ullage maneuver input which could be supplied by the SPS ABORT logic or the DIRECT ULLAGE pushbutton or by translation control 1 or 2 placed to the +X, which would satisfy the OR gate 3 function and the holding input after the G&N AND gate 2 is enabled which is processed through NAND gates 1 and 2, with the G&N delta V mode selected from the SCS control panel, and the pulse train converter output of logic one commanded from the G&N computer by the crew. These inputs will enable AND gate 2 and provide the logic one input to inverter 3 which disables AND gate 6. Inverter 4 will provide a logic one signal to the solenoid drivers that provide the ground for the two sets of SPS relays. two sets of SPS relays provide power to:

a. The four solenoid control valves, which allow gaseous nitrogen pressure to be directed to four actuators that position eight ball valves in the injector valve assembly of the engine. This is due to INJECT PRE-VALVES A and B being enabled.

b. The quantity sensing and indicating system and the propellant utilization valve.

c. The system A and B helium pressurizing valves.

d. When the output of the pulse converter is a logic zero, G&N AND gate 2 is disabled which terminates a G&N delta V maneuver and removes ground from the two sets of SPS relays. (Manual backup of the THRUST CONTROL switch to OFF.)

The backup delta V mode is the stabilization control system delta V mode which has limitations and restrictions that require individual consideration. The SCS delta V mode of operation will require enabling SCS AND gate 1 to initiate thrusting of the engine. SCS AND gate 1 has three enabling inputs: the input from OR gate 1 indicating a delta V mode is selected, the output from the DECA indicating a value greater than zero on the delta V remaining display, and the input from the THRUST ON push-button light indicator after it is processed through NAND gates 3 and 4. The one logic output from SCS AND gate 1 is inverted by INVERTER 2 to a zero logic which disables AND gate 6, and is inverted by INVERTER 4 to a logic one and enables the solenoid drivers that provides ground to the two sets of SPS relays. The two sets of SPS relays provide power to the same functions as in the G&N ΔV mode.

a. When the output of the DECA Delta V REMAINING counter reaches zero velocity SCS AND gate 1 is disabled. The logic output from AND gate 1 goes to zero and INVERTER 2 goes to a one logic output which enables AND gate 6 to a one logic output and the signal is inverted by INVERTER 4 to a zero logic output and the solenoid drivers remove ground from the two sets of SPS relays terminating thrust. (Manual backup of the THRUST CONTROL switch to OFF.)

The DIRECT operating mode bypasses all electronics. The DIRECT ON position of the THRUST CONTROL switch provides power to the two sets of SPS relays the same as in the G&N ΔV mode of SCS ΔV mode.

Thrust would be terminated by placing the THRUST CONTROL switch in the OFF position.

The SPS thrust control logic provides illumination of the talk-back light in the THRUST ON switch. To illuminate the light in a G&N delta V mode, AND gate 4 must be enabled. It has two inputs which are G&N delta V mode-selected and the presence of a logic one output from the pulse train converter. With AND gate 4 enabled, OR gate 2 will trigger the lamp driver and illuminate the THRUST ON light. To illuminate the light in the SCS delta V mode, AND gate 3 must be enabled, it will also satisfy OR gate 2 and trigger the lamp driver. The SPS thrust control logic is interlocked so that AND gates 3 and 4 will never be enabled simultaneously because of the THRUST ON switch inhibited to the pulse train converter. Therefore, the THRUST ON light will be illuminated at all times when the thrust is on for normal operation. If the direct function is used to initiate thrusting, it will bypass all electronics and not illuminate the THRUST ON light.

The output from the SPS thrust control logic performs a function other than energize the fuel and oxidizer solenoid valves. It provides the logic switches required to reconfigure the SCS relays for proper thrust vector control. The thrust control switch provides both inputs to OR gate 4 if both d-c buses are operational. Either d-c bus will enable OR gate 5 to provide the upper input to INHIBIT AND gate 1. AND gate 5 provides the controlling input to the INHIBIT AND gate 1. When the solenoid drivers are not energized and the thrust control switch is in NORMAL, both inputs

to AND gate 5 are true. The true input will maintain a logic false output from the INHIBIT AND gate 1 because of the inversion on the input of the gate. When either SPS relay set is activated by a solenoid driver, or by the ground contacts of the DIRECT ON switch, AND gate 5 will be disabled by the ground or false input. The input will be inverted by INHIBIT AND gate 1 input to enable an output to the time delay. The time delay is required to permit thrust buildup from the SPS engine before the ullage maneuver is terminated; however, the pitch and yaw attitude error inputs are inserted into the TVC electronics immediately. This action assures positive g forces throughout thrust initiation of the SPS engine and gimbaling control of the SPS engine for the entire thrust buildup. The time delay is also active after INHIBIT AND gate 1 is disabled by enabling AND gate 5. AND gate 5 is enabled when both sets of SPS relays are de-energized. The time delay is active for both outputs when the signal is removed to permit continued SPS engine gimbal control, while the residual thrust is present and inhibit RCS operation in pitch and yaw until residual thrust is reduced. This reduces the tumbling induced at thrust termination. The time delay is approximately one second for application and removal of the engine ignition signal.

2.4.3 PERFORMANCE AND DESIGN DATA.

2.4.3.1 Design Data.

The following listing contains specific data on the components in the SPS:

HELIUM TANKS (2)	4000±50 psia fill pressure, 4400 maximum operating pressure 70°±10°F, capacity 19.4 cubic feet, inside diameter 40 in. and a wall thickness of 0.46 in.
REGULATOR UNITS (2)	Working regulator: primary 186±4 psig, secondary 191±4 psig; primary lockup 200 psig, secondary lockup 205 psig. Normally locked by working regulator: primary 181±4 psig, secondary 191±4 psig; primary lockup 195 psig, secondary lockup 205 psig.
PRESSURE TRANSDUCERS (2) ULLAGE PRESSURE (REGULATED HELIUM)	Fuel and oxidizer underpressure setting (SPS PRESS light, panel 11) 160 psia. Fuel and oxidizer overpressure setting (SPS PRESS light, panel 11) 200 psia.
PROPELLANT UTILIZATION	Increase position - 46.65 lbs/second.
VALVE CONTROL (2)	Normal position - 45.27 lbs/second at 70°F and 168±4 psig Decrease position - 43.87 lbs/second

	Response time - normal to increase or vice-versa, or normal to decrease or vice-versa is 3 to 4 seconds
QUANTITY SENSING SYSTEM ACCURACY	±0.35% of full tank plus ±0.35% of propellant remaining, primary system ±0.35% of full tank plus ±0.35% of propellant remaining plus 2.3% of storage tank quantity remaining, auxiliary system.
HELIUM RELIEF VALVE (2)	Diaphragm rupture at 220±7 psig Filter - 10 microns normal, 25 microns absolute Relief valve relieves at 232±8 psig Relief valve reseats at 212 psig minimum Flow capacity 3 lbs/second minimum at 60°F and 250 psig Bleed device closes at ambient to 100 psi and is manually reset open
OXIDIZER STORAGE AND SUMP TANK	Total tank capacity 30,600 lbs, usable 27,333 lbs. Each tank has a volume of 175 cubic ft. Fill pressure 110 psia. Ullage after filling, 2.4 cubic ft in storage and 8.0 cubic ft in sump tank. Ullage after pressurized to 175 psia, 6.8 cubic ft in storage and 5.0 cubic ft in sump tank. Inside diameter 51 in., length 165.4 in., and will elongate to 0.125 in. when pressurized to 240 psi and 120°F for for 336 hours. Wall thickness 0.060 in. in continuous areas, and 0.069 in. in weld buildup areas and 0.031 in. on domes. Fill tolerance of 1/4 of 1% of full tank plus 1/4% of propellant remaining.
FUEL STORAGE AND SUMP TANK	Total tank capacity 15,300 lbs, usable 13,677 lbs. Each tank has a volume of 139.7 cubic ft. Fill pressure 90 psia. Ullage after filling 1.8 cubic ft in storage and 5.8 cubic ft in sump tank. Ullage after pressurized to 175 psia, 6 cubic ft, in storage and 3.0 cubic ft in sump tank. Inside diameter 45 in.,

	length 166.8 in., and will elongate to 0.125 in. when pressurized to 240 psi and 120°F for 336 hours. Wall thickness 0.053 in. in continuous areas, 0.061 in. in weld buildup areas and .031 in. on domes. Fill tolerance of 1/4 of 1% full tank plus 1/4% of propellant remaining.
NOMINAL PROPELLANT TANK WORKING PRESSURE	175±4 psia
INTERFACE FLANGE FILTER	500 microns absolute
GASEOUS NITROGEN PROPELLANT VALVE	Storage vessel pressure: 2500±50 psi at 68°F, 2900 psi at 130°F. Support 36 valve actuations.
CONTROL SYSTEMS (2)	Regulator, single stage 130±7 psi at all flow up to 0.035 lbs/second.
	145 psi maximum lockup pressure.
	Relief valve relieves at 350±10 psi, reseats at not less than 250 PSI.
ENGINE	500-second service life on S/C 014.
	Capable of 36 restarts
	Expansion ratio -6 to 1 at ablative chamber exit area, 62.5 to 1 at nozzle extension exit area.
	Cooling chamber - Ablation and film
	Extension - Radiation
	Injector type - baffled regeneratively cooled, unlike impingement
	Oxidizer lead
	Length 152.82 inches
	Nozzle extension exit diameter 94.4 inches
	Weight approximately 650 lbs

	Ablative chamber throat temperature sensor illuminates SPS WALL TEMP HI caution and warning light on panel 11 at 380°F, one sensor per harness. SPS Pc displayed on panel 3 through L/V AOA-SPS Pc switch to L/V AOA-SPS Pc indicator, green range on indicator is 65 to 125%, normal Pc 85 to 125 psia.
GIMBAL LIMITS	About Z-Z axis ±7 (+1/2, -0)° with additional 1° for snubbing yaw. About Y-Y axis ±6 (+1/2, -0)° with additional 1° for snubbing pitch.
GIMBAL MOTOR UNDER AND OVERCURRENT RELAYS	Undercurrent below 6 amperes detected for a duration of 250±50 milliseconds or more shall interrupt the flow to the load in less than 100 milliseconds. Overcurrent dependent upon temperature during start transient and steady state of gimbal motor.
ACTUATOR CLUTCHES	Quiescent current of 60 (+10, -5) milliamps (motors off, a 246 ft-lb force required to move engine equivalent to 1.53 g)
ACTUATOR PRESSURIZED S/C SERVO ACTUATOR DEFLECTION RATE	3.5±1.0 psi dry air at -160°F at 0.23 radians per second (13.09° per second)
FLIGHT COMBUSTION	180 g's peak to peak for 70±20 milliseconds
STABILITY MONITOR SYSTEM	600 to 5000 cycles per second

SPS

2.4.3.2 Performance Data.

Refer to mission modular data book, SID 66-1177.

2.4.3.3 Power Consumption Data.

Component	Quantity	Mode	Input Power Unit		Percent Duty Cycle	
			AC (watts)	DC (watts)	Common Level	Command Module Equipment
Pilot valves (SCS)	4			42.0	0	
Gimbal actuator motors		Idle		1570.0	0	
		Boost		1692.0	0	
		Delta V		2220.0	0	
Service propulsion Propellant utilization valve					0	
Propellant utilization gauging system			62.6	16.8	0	
Injector prevalves	2			42.0	0	
He solenoid valves	2			56.0	0	
Feedline heaters	26	(All on)		33.0	0	

2.4.4 OPERATION LIMITATIONS AND RESTRICTIONS.

a. Propellant quantity gauging subsystem is operational only during engine firing. A 4.5-second firing period is required before propellant quantity information is updated, when SENSOR switch is in the NORM or PRI position. Delay is built-in to allow propellants to settle and stabilize before updating the displays.

b. A one-second time delay between actuation of GIMBAL MOTOR switches (MDC-3) is required, as simultaneous actuation may result in an excessive power drain.

c. Engine design minimum impulse control limit is 0.4 second; however, mission minimum impulse may be longer.

d. Due to adversive temperature effects, engine gimbal drive motors should not be continuously energized for periods in excess of 12 minutes.

e. Single bank mode of the bipropellant valve assembly will result in a 3% reduction in thrust.

2.4.5 TELEMETRY MEASUREMENTS.

The following is a complete listing of all SPS telemetry data that is monitored by flight controllers and ground support personnel.

Crew Display	Figure	Measurement	Measurement Number	Range	Signal Conditioner	Channel Code	Bit Rate	Operating Range
Panel 20	2.4-1	Helium Tank Supply Pressure	SP0001P	+0 +5K psia	S28AR3	11A66	H2	PCM 4000±50 psia & decrease with firings
Panel 20 & 11	2.4-1	Regulated Helium Pressure to Fuel Tank	SP0006P	+0 +300 psia	S28AR6	11A70	H2	PCM 170 to 195 psia
Panel 20 & 11	2.4-1	Regulated Helium Pressure to Oxidizer Tank	SP0003P	+0 +300 psia	S28AR5	11A68	H2	PCM 170 to 195 psia
	2.4-1 and 2.4-6	Quantity Sensing System						
		Sensor Select Switch in Normal						
		Primary Fuel Sump 2	SP0658Q	+0 +8K lbs		10A94	H1	PCM
		Primary Fuel Storage 1	SP0657Q	+0 +8K lbs		10A92	H1	PCM
		Primary Oxidizer Sump 2	SP0656Q	+0 +16K lbs		10A90	H1	PCM
		Primary Oxidizer Storage 1	SP0655Q	+0 +16K lbs		10A88	H1	PCM
		Sensor Select Switch in Primary						
		Primary Fuel Sump 2	SP0658Q	+0 +8K lbs		10A94	H1	PCM
		Primary Fuel Storage 1	SP0657Q	+0 +8K lbs		10A92	H1	PCM
		Primary Oxidizer Sump 2	SP0656Q	+0 +16K lbs		10A90	H1	PCM Variable
		Primary Oxidizer Storage 1	SP0655Q	+0 +16K lbs		10A88	H1	PCM
		Sensor Select Switch in Auxiliary						
		Primary Fuel Sump 2	SP0658Q	+0 +8K lbs		10A94	H1	PCM
		Primary Oxidizer Sump 2	SP0656Q	+0 +16K lbs		10A90	H1	PCM
		Auxiliary Fuel	SP0657Q	+0 +8K lbs		10A92	H1	PCM
		Auxiliary Oxidizer	SP0655Q	+0 +16K lbs		10A88	H1	PCM
	2.4-1	Temperature 1 Oxidizer Distribution Line	SP0054T	+0 +200°F				
	2.4-1	Temperature 2 Oxidizer Distribution Line	SP0055T	+0 +200°F				Variable
	2.4-1	Temperature 1 Fuel Distribution Line	SP0057T	+0 +200°F				
	2.4-1	Temperature 2 Fuel Distribution Line	SP0058T	+0 +200°F				
Panel 20	2.4-1	Fuel Inlet Pressure to Fuel Valve	SP0010P	+0 +300 psia	S28AR8	11A77	H2	PCM 135 to 195 psia
Panel 20	2.4-1	Oxidizer Inlet Pressure to Oxidizer Valve	SP0009P	+0 +300 psia	S28AR7	11A76	H2	PCM 135 to 195 psia
Panel 3	2.4-1	Chamber Pressure	SP0661P	+0 +150 psia	S28AR9	12A11	H1	PCM 65 to 125 psia
Panel 3	2.4-1	Injector Temperature	SP0060T	+0 +200°F		11A109	H1	FQ Variable
Panel 20	2.4-1	Primary Gaseous Nitrogen Tank Supply Pressure	SP0600P	+0 +5000 psia	S28AR41	10A78	H1	PCM 2500±50 psia & decrease with firings
Panel 20	2.4-1	Secondary Gaseous Nitrogen Tank Supply Pressure	SP0601P	+0 +5000 psia	S28AR42	11A125	H1	PCM 2500±50 psia & decrease with firings
Panel 20	2.4-1	Ball Valve Position 1	SP0022H	+0 +90 deg		11A103	H1	PCM Open or closed
Panel 20	2.4-1	Ball Valve Position 2	SP0023H	+0 +90 deg		11A105	H1	PCM Open or closed
Panel 20	2.4-1	Ball Valve Position 3	SP0024H	+0 +90 deg		11A110	H1	PCM Open or closed
Panel 20	2.4-1	Ball Valve Position 4	SP0025H	+0 +90 deg		11A111	H1	PCM Open or closed
Panel 20	2.4-1	Temperature Oxidizer Engine Feed Line	SP0049T	+0 +200°F				Variable
Panel 20	2.4-1	Temperature Fuel Engine Feed Line	SP0048T	+0 +200°F				+40°F to +120°F
Panel 20	2.4-1	Temperature Engine Valve Body	SP0045T	+0 +200°F				Variable
Panel 11	2.4-1	Temperature Combustion Chamber Outer Skin 1	SP0020T	+0 +500°F	Collins C28-1A5	10A84	H1	PCM Illuminates C&W light at 380°F

Crew Display	Figure	Measurement	Measurement Number	Range	Signal Conditioner	Channel Code	Bit Rate	Operating Range
Panel 11	2.4-1	Temperature Nozzle Outer Skin No. 1	SP0050T	-260 +2500°F	S28AR60	10A85	H1	PCM Variable
		Pitch Actuator Case Temperature	SP2055T	+0 +200°F		10A68	H1	FQ } Variable
		Yaw Actuator Case Temperature	SP2054T	+0 +200°F		11A119	H1	FQ } Variable
		SPS Solenoid Driver Out 1	CH4320X			51E-09	E1	PCME } Event
		SPS Solenoid Driver Out 2	CH4321X			51E-10	E1	PCME } Event
		Yaw Position Feedback	CH1034H	-8.5 +8.5 vdc		51A7	H1	PCM } Variable
		Pitch Position Feedback	CH0034H	-6 +6 vdc		51A3	H1	PCM } Variable

Analog measurements digitally coded into 8 bit words
Analog measurements - 0 to 5 vdc

Channel Code Example: 10A68
Significant number - 1
How many zeros after most significant number is 0 amount of samples per second. } 1 sample per second

FQ - Flight qualification measurements
H1 - High bit rate
H2 - High and low bit rate
E1 - High bit rate

Analog - A
Event - E
Channel Code - 68

SECTION 2

SUBSECTION 2.5

REACTION CONTROL SYSTEM (RCS)

The Apollo command service module consists of two separate reaction control systems completely independent, designated S/M RCS and C/M RCS. The S/M RCS is utilized to control S/C rotation in all three axis, in addition to any minor translation requirements including S-IVB separation, SPS ullage, and C/M-S/M separation maneuvers. The C/M RCS is utilized to control C/M rotation in all three axis after C/M-S/M separation and during entry maneuvers. The C/M RCS does not have translation capabilities.

Both the S/M and C/M RCS are controlled either automatically or manually from the command module. Physical location of the RCS engines is shown in figure 2.5-1. Engine firing sequence for specific maneuvers and individual engine circuit breaker power control is shown in figure 2.5-2.

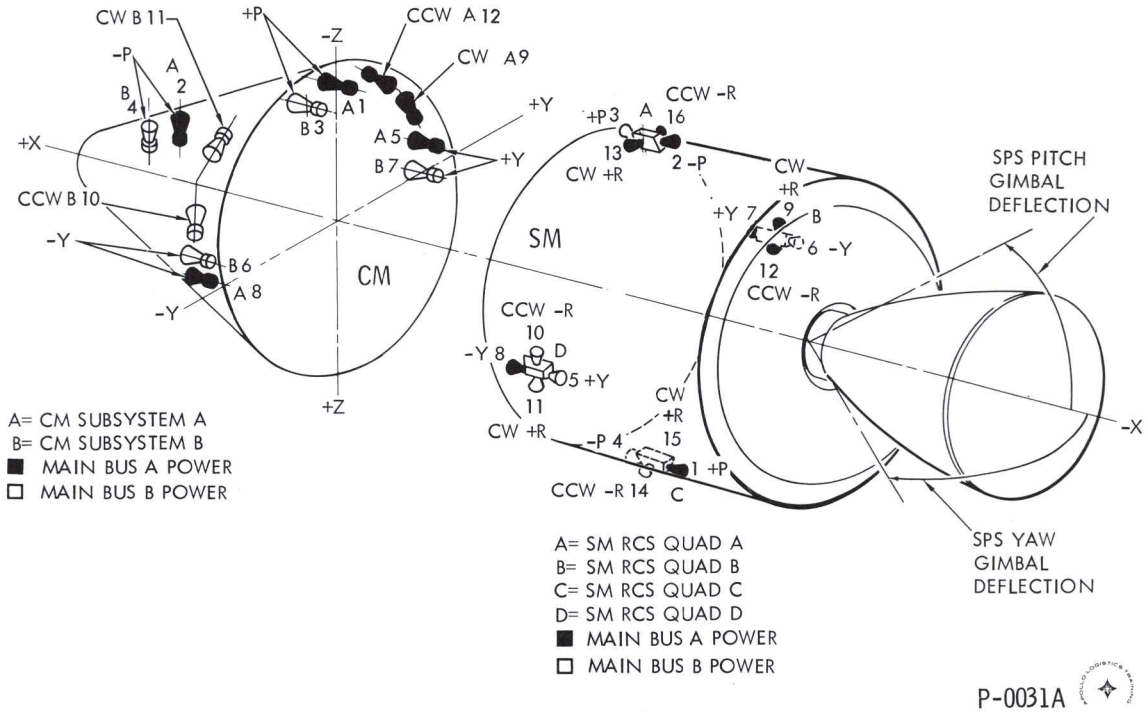

Figure 2.5-1. C/M-S/M Engine Locations

BUS POWER	CIRCUIT BREAKER	SM ENGINE				CM ENGINE				SM ENGINE UTILIZATION FOR TRANSLATION MANUEVERS						CHANNEL SWITCHES PANEL 8
		QUAD	MANUEVER	SCS NO.	PROP NO.	SYSTEM	MANUEVER	SCS NO.	PROP NO.	-X	+X	-Y	+Y	-Z	+Z	
MN A	SCS MN A 1 PITCH C15A6CB40 PANEL 25	C A	+P -P	1 2	S19A3B3 S19A1B3	A A	+P -P	1 2	C19B7 C19B11		1 2					PITCH
MN A	SCS MN A 1 YAW C15A6CB32 PANEL 25	B D	+Y -Y	7 8	S19A2B3 S19A4B3	A A	+Y -Y	5 8	C19B9 C19B1	7 8						YAW
MN A	SCS MN A B&D ROLL C15A6CB34 PANEL 25	B B	CW+R CCW-R	9 12	S19A2B2 S19A2B4	A A	CW+R CCW-R	9 12	C19B5 C19B3					12	9	B&D ROLL
MN A	SCS MN A A&C ROLL C15A6CB36 PANEL 25	A A	CCW-R CW+R	16 13	S19A1B2 S19A1B4	DEADFACED AT CM SM SEPARATION OR LES ABORT						16	13			A&C ROLL
MN B	SCS MN B 2 PITCH C15A6CB39 PANEL 25	C A	-P +P	4 3	S19A3B1 S19A1B1	B B	-P +P	4 3	C19B12 C19B8	4 3						PITCH
MN B	SCS MNB 2 YAW C15A6CB31 PANEL 25	B D	-Y +Y	6 5	S19A2B1 S19A4B1	B B	-Y +Y	6 7	C19B2 C19B10		6 5					YAW
MN B	SCS MN B B&D ROLL C15A6CB33 PANEL 25	D D	CCW-R CW+R	10 11	S19A4B4 S19A4B2	B B	CCW-R CW+R	10 11	C19B4 C19B6					11	10	B&D ROLL
MN B	SCS MN B A&C ROLL C15A6CB35 PANEL 25	C C	CCW-R CW+R	14 15	S19A3B2 S19A3B4	DEADFACED AT CM SM SEPARATION OR LES ABORT						15	14			A&C ROLL
MN A	SCS MN A DIRECT CONTROL C15A6CB42 PANEL 25	C D B	+P -Y +Y	1 8 7	S19A3B3 S19A4B3 S19A2B3	A A A	+P -Y +Y	1 8 5	C19B7 C19B1 C19B9	8 7	1					DIRECT RCS SWITCH PANEL 8
		A	CCW-R	16	S19A1B2	DEADFACED AT CM SM SEPARATION AND LES ABORTS										
		B B	CCW-R CW+R	12 9	S19A2B4 S19A2B2	A A	CCW-R CW+R	12 9	C19B3 C19B5							
		A C	CW+R CW+R	13 15	S19A1B4 S19A3B4	DEADFACED AT CM SM SEPARATION AND LES ABORTS										
		A	-P	2	S19A1B3	A	-P	2	C19B11		2					
MN B	SCS MN B DIRECT CONTROL C15A6CB41 PANEL 25	C A B D D	-P +P -Y +Y CCW-R	4 3 6 5 10	S19A3B1 S19A1B1 S19A2B1 S19A4B1 S19A4B4	B B B B B	-P +P -Y +Y CCW-R	4 3 6 7 10	C19B12 C19B8 C19B2 C19B10 C19B4	4 3	6 5					
		C	CCW-R	14	S19A3B2	DEADFACED AT CM SM SEPARATION AND LES ABORTS										
		D	CW+R	11	S19A4B2	B	CW+R	11	C19B6							

P-2058

Figure 2.5-2. S/M-C/M RCS Engine Power Supplies

2.5.1 S/M RCS FUNCTIONAL PRESCRIPTION.

The S/M RCS consists of four individual, functionally identical packages, located 90 degrees apart around the forward portion (+X axis) of the S/M periphery, and offset from the S/C Y and Z axes by 7 degrees 15 minutes. Each package configuration, called a quad, is such that the reaction engines are mounted on the outer surface of the panel and the remaining components are inside. Propellant distribution lines are routed through the panel skin to facilitate propellant transfer to the reaction engine combustion chambers. The engine combustion chambers are canted approximately 10 degrees away from the panel structure to reduce the effects of exhaust gas on the service module skin. The two roll engines on each quad are offset-mounted to accommodate plumbing in the engine mounting structure.

Each RCS package incorporates a pressure-fed, positive-expulsion, pulse-modulated, bipropellant system to produce the reaction thrust required to perform the various S/M RCS control functions. Acceptable package operating temperature is maintained by internally mounted, thermostatically controlled electric heaters. The S/M RCS propellants consist of nitrogen tetroxide (N_2O_4), used as the oxidizer, and a 50:50 blend of unsymmetrical dimethyl hydrazine (UDMH) and hydrazine (N_2H_4), used as the fuel. Pressurized helium gas is the propellant transferring agent.

The reaction engines may be pulse-fired, producing short-thrust impulses or continuously fired, producing a steady-state thrust level. The short-pulse firing permits attitude-hold modes of operation and extremely accurate attitude alignment maneuvers during navigational sightings. CSM attitude control is normally maintained by utilizing the applicable pitch, yaw, and roll engines on all four quads. However, in the event of a malfunction, complete attitude control can be maintained with only two adjacent quads operating. This two-quad capability does not include the execution of translation and ullage maneuvers.

A functional flow diagram of one S/M RCS quad is shown in figure 2.5-3. The helium storage vessel supplies pressure to two solenoid operated helium isolation valves that are normally open throughout the mission. This allows helium pressure to the pressure regulators downstream of each helium isolation valve reducing the high pressure helium to a desired working pressure.

Regulated helium pressure is directed through a series parallel combination of four independent check valves. The check valves permit helium pressure to the fuel and oxidizer tanks and prevent reverse flow of propellant vapors or liquid. A pressure relief valve is installed in the pressure lines between the check valves and propellant tanks to protect the propellant tanks from any excessive pressure increase.

Helium entering the propellant tanks creates a pressure buildup around the propellant positive expulsion bladders forcing the propellants to be expelled into the propellant distribution lines. Propellants then flow through the normally open propellant isolation valves.

Oxidizer and fuel is distributed to the eight fuel and oxidizer injector valves by a parallel feed system. The fuel valve on each engine opens two milliseconds prior to the oxidizer valve, to obtain proper engine operation. Each valve assembly contains orifices which meter the propellant flow to obtain a nominal 2:1 oxidizer/fuel ratio by weight. The oxidizer and fuel impinge, atomize, and ignite due to the hypergolic propellants. The injector valves are controlled automatically by the G&N system or the SCS. Manual override direct control is provided for rotational maneuvers and direct ullage only. The injector valves are spring-loaded closed. This system configuration maintains propellants under constant pressure at the engine injector valves providing rapid consistent response rates to thrust ON-OFF commands.

2.5.2 S/M RCS MAJOR COMPONENT/SUBSYSTEM DESCRIPTION.

The S/M RCS is composed of four separate, individual packages, each package containing the following five major subsystems:

- Pressurization
- Propellant
- Rocket engine
- Propellant quantity gauging
- Temperature control system

2.5.2.1 Pressurization Subsystem.

The pressurization and propellant feed stores, regulates, and distributes helium to the propellant tanks, and stores and distributes propellant to the engine assemblies (figure 2.5-7). It consists of storage tanks, isolation valves, pressure regulators, and the lines and valves necessary for filling, draining, and distribution of the fluids.

2.5.2.1.1 Helium Supply Tank.

The total high-pressure helium supply is contained within a single, spherical storage tank. Initial fill pressure is 4150±50 psig at 70°F. The limit working pressure is 5000 psig to accommodate pressure transients during filling. Proof pressure is 6667 psig and the burst pressure is 7500 psig.

2.5.2.1.2 Helium Isolation Valve.

The helium isolation valves are a two-solenoid valve and are mechanically latched open and spring-loaded closed. The helium isolation

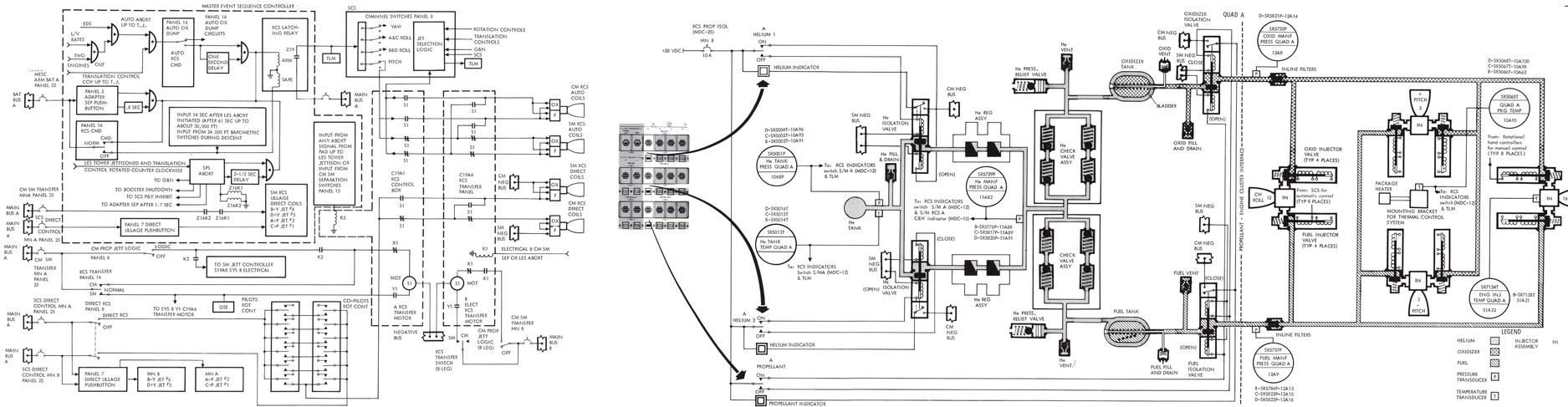

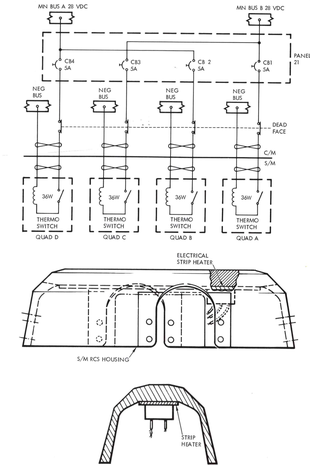

Figure 2.5-3. S/M RCS Functional Flow Diagram

valves are individually controlled by its own helium switch on panel 15. The valves are normally open in respect to system pressure substantiating the mechanical latching feature for power conservation purposes during the mission, in addition prevents overheating of the valve coil.

A position switch contained within each valve controls a position indicator below each switch on panel 15. When the valve is open, the position switch is open and the indicator on panel 15 is grey (same color as the panel), indicating the valve is in its normal position. When the valve is closed, the position switch is closed and the indicator on panel 15 shows diagonal lines, indicating the valve is in its abnormal position.

The valve is closed in the event of a pressure regulator unit problem and during ground servicing.

2.5.2.1.3 Pressure Regulator Assemblies.

Helium pressure regulation is accomplished by two regulator assemblies connected in parallel, with one assembly located downstream of each helium isolation valve. Each assembly incorporates two (primary and secondary) separate regulators connected in series. The secondary regulator remains open as long as the primary regulator functions properly. In the event of the primary regulator failing open, the secondary regulator will maintain slightly higher but acceptable pressures.

2.5.2.1.4 Check Valve Assemblies.

Two check valve assemblies, one assembly located downstream of each regulator assembly, permit helium flow in the downstream direction only. This prevents propellant and/or propellant vapor backflow into the pressurization system if seepage or failure occurs in the propellant tank bladders.

2.5.2.1.5 Pressure Relief Valves.

The helium relief valve contains a burst diaphragm, filter, a bleed device, and the relief valve. The burst diaphragm is installed to provide a more positive seal against helium than that of the actual relief valve. The burst diaphragm ruptures at a predetermined pressure. The burst diaphragm is of the nonfragmentation type, but in the event of any fragmentation, the filter filters out fragmentation and prevents particles from flowing onto the relief valve seat. The relief valve will relieve at a pressure slightly higher than that of the burst diaphragm rupture pressure, and relieves the excessive pressure overboard protecting the fuel and oxidizer tank. The relief valve will reseat at a predetermined pressure.

A pressure bleed device is incorporated between the burst diaphragm and relief valve. The bleed valve vents the cavity between the burst

diaphragm and relief valve in the event of any leakage from the diaphragm or vents the cavity upon completion of performing a checkout of the relief valve from the test port on the relief valve. The bleed device is normally open and will close when the pressure increases up to a predetermined pressure. The bleed device automatically opens when the pressure decreases to the bleed valve opening pressure.

2.5.2.1.6 Distribution Plumbing.

Brazed joint tubing is used to distribute regulated helium in each RCS quad from the helium storage vessels to the propellant tanks.

2.5.2.2 Propellant Subsystem.

This subsystem consists of one oxidizer tank, one fuel tank, one oxidizer and fuel isolation valve, and associated distribution plumbing.

2.5.2.2.1 Oxidizer Tank.

The oxidizer supply is contained in a single titanium alloy, hemispherically domed cylindrical tank. The tank is cradle-mounted to the RCS panel. The tank contains a diffuser tube assembly and a teflon bladder for positive expulsion of the oxidizer. The bladder is attached to the diffuser tube at each end of the tank. The diffuser tube acts as the propellant outlet.

When the tank is pressurized, the helium gas surrounds the entire bladder, exerting a force which causes the bladder to collapse about the propellant, forcing the oxidizer into the diffuser tube assembly and on out of the tank outlet into the manifold, providing expulsion during zero g's.

Tank has a working pressure of 248 psig, proof pressure of 331 psig.

2.5.2.2.2 Fuel Tank.

The fuel supply is contained in a single tank that is similar in material, construction, and operation to that of the oxidizer tank.

2.5.2.2.3 Propellant Isolation Shutoff Valve.

The isolation valve in the fuel and oxidizer lines are both controlled by a single switch on panel 15. The valves are two solenoid valves, and are magnetically latched opened and spring-loaded closed. The valves are normally open in respect to fluid flow. This again establishes a power conservation.

Each valve contains a position switch which is in parallel to one position indicator below the switch on panel 15 that controls both valves. When the position switch in each valve is open, the indicator on panel 15

is grey (same color as the panel) indicating to the crew the valves are in the normal position. When the position switch in each valve or one valve is closed, the indicator on panel 15 is diagonal lines indicating to the crew the valve or valves are closed.

The valves are closed in the event of a failure downstream of the valves, line rupture, runaway thruster, etc.

2.5.2.2.4 Distribution Plumbing.

Propellant distribution plumbing within each quad is functionally identical. Each quad contains separate similar oxidizer and fuel plumbing networks. Propellants, within their respective networks, are directed from the supply tanks through manifolds for distribution to the four engines in the cluster.

2.5.2.2.5 Propellant, In-Line Filters.

In-line filters are installed in the fuel and oxidizer manifolds, downstream of the propellant shutoff valves and prior to the engine manifold contained within the engine housing.

The in-line filters are installed to prevent any particles from flowing into the engine injector valves and engine injector.

2.5.2.3 Engine Assemblies.

The service module reaction control system engines are radiation-cooled, pressure-fed, bipropellant thrust generators which can be operated in either the pulse-modulated or the steady state mode. (These modes are defined as a firing of less than one-second duration, and one-second duration or more, respectively.)

Each engine consists of a fuel and oxidizer control valve, which controls the flow of propellants by responding to electrical commands (automatic or manual) generated by the guidance and navigation subsystem and/or stabilization and control subsystem, or by the crew; an injector head assembly which directs the flow of each propellant from the propellant control valves to the combustion chamber where the propellants atomize and ignite (hypergolic) to produce thrust.

2.5.2.3.1 Propellant Solenoid Injector Control Valves (Fuel and Oxidizer).

The propellant solenoid injector valves utilize two coaxially wound coils, one for automatic and one for direct manual operation. The automatic coil is used when the thrust command originates from the jet selection logic which is the electronic circuitry that selects the required automatic coils to be energized for a given maneuver. The manual coils

are used when the thrust command originates at the rotation control (direct mode), direct ullage pushbutton, SPS abort, or the C/M-S/M SEP switch (figure 2.5-3).

The solenoid valves are spring-loaded closed and energized open.

The reaction time of the valves are illustrated in figures 2.5-4 and 2.5-5.

Figure 2.5-4 illustrates a thrusting duration of 15 seconds (steady state). The electrical on signal is received within either the automatic (normal) or manual (backup) coils of the engine injector valves. The solenoid injector valves are energized open allowing fuel and oxidizer to flow through the injector into the combustion chamber. The propellants being hypergolic, ignite, providing the start transient. The engine, as a result of propellant ignition, produces chamber pressure, gas velocity, and thrust. At 15 seconds after the receipt of the thrust-on signal, the automatic or manual coils are de-energized and the injector valves spring-load closed. However, due to the closing time and residual propellant flow downstream of the injector valves into the combustion chamber, thrust output continues until the propellants have burned completely which then allows the chamber pressure, has velocity and thrust to decay to 0 pounds, establishing the cutoff transient.

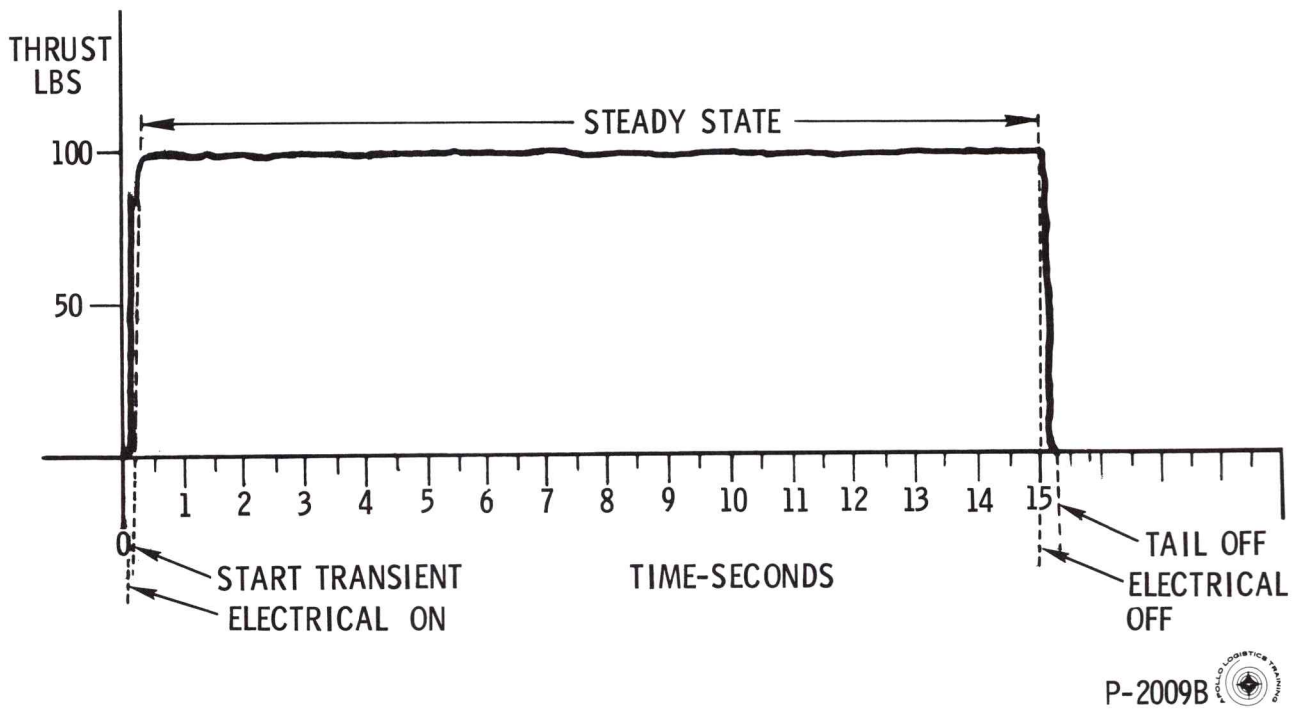

Figure 2.5-4. S/M RCS Steady State Operation (Typical 15 Seconds)

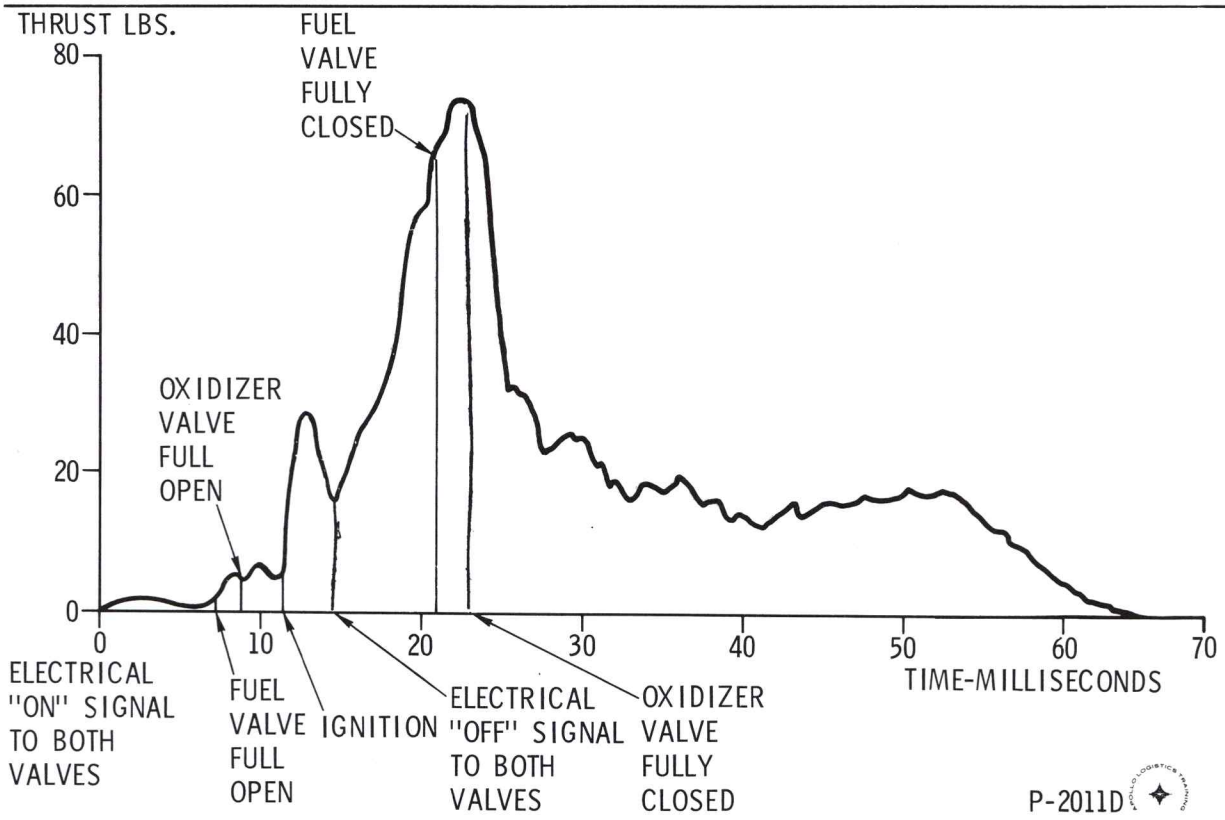

Figure 2.5-5. S/M RCS Engine-Minimum Total Impulse (Typical 18±4 Milliseconds)

Figure 2.5-5 illustrates the minimum electrical signal that can be provided to the automatic coils of the injector valves from the stabilization control subsystem jet selection logic. The following describes the sequence of operation and reasons why:

a. A time of 18±4 milliseconds (14 milliseconds minimum) will elapse before the stabilization control subsystem (SCS) can electrically provide a command off signal to the automatic coils of the injector valves on the engine.

b. When the automatic coils of the injector valves receive the electrical on signal from the SCS, the injector valves are energized to the open position.

c. The fuel injector automatic coil energizes to the full open position in 4.5±1.5 milliseconds, and the oxidizer injector automatic coil energizes to the full open position in 6.0±1.5 milliseconds establishing an approximate 2-millisecond fuel lead. This is accomplished by varying the resistance of the automatic coils in the fuel and oxidizer injector valve.

d. The propellants flow from the injector valves as soon as they both start to open to the premix igniter. However, the fuel will lead the oxidizer by two milliseconds.

e. The propellants start to flow as soon as the injector valves start to open and flow into the premix igniter, and into the combustion chamber which creates some pressure, gas velocity, and thrust in the combustion chamber even though it is very small, but the engine is operating in a space environment.

f. The pressure, gas velocity, and thrust continue to increase slightly until the valves reach the full open position.

g. At approximately 12-1/2 milliseconds, the propellants ignite (hypergolic) producing a spike of thrust upwards into the area of 70 to 80 pounds. At 14 milliseconds minimum, the SCS removes the electrical signal from the automatic coils of the injector valves.

h. The thrust of the engine continues very erratic while the valves become de-energized and spring-load closed.

i. At approximately 21 milliseconds (closing time of 7.5 milliseconds) on the fuel valve and 23 milliseconds (closing time of 8.0 milliseconds) on the oxidizer valve, the injector valves are fully closed.

j. The residual propellants downstream of the injector valves continue to flow into the combustion chamber, decreasing until complete thrust decay of 0 pounds occurs at approximately 65 milliseconds.

k. In order to determine the total impulse for this time span of operation, figure 2.5-5, everything under the entire thrust curve must be integrated.

The automatic coils are electrically connected in parallel from the SCS.

The manual coils in the fuel and oxidizer injector valves provide a manual direct backup to the SCS mode of operation. The manual coils of the injector valves are electrically connected in series. The series connection of the manual coils are explained as follows:

a. Prevent a mismatch between the opening and closing of the valves due to any heat soak back into the manual coils, which would change the resistance of the manual coils and result in a mismatch if the coils were connected in parallel. The direct manual opening time for fuel is 13 milliseconds and the oxidizer is 23 milliseconds. The closing time for fuel and oxidizer is 55±25 milliseconds.

b. The series connection from the fuel manual coil (positive to negative) to the oxidizer manual coil (negative to positive) then to ground is to increase the arc suppression, reducing the arc at rotation control in the direct RCS mode of operation.

2.5.2.3.2 Injector.

The injector contains a premix igniter. The premix igniter chamber contains a fuel and an oxidizer passage that impinge upon each other (unlike impingement) within the premix igniter chamber. The premix igniter chamber, along with the 2-millisecond fuel lead, provides a smoother start transient primarily in the pulse mode of operation and especially in the area of minimum impulse.

The main chamber portion of the injector will allow 8 fuel streams to impinge upon 8 oxidizer streams (unlike impingement) for main chamber ignition. There are also 8 fuel holes around the outer periphery of the injector which provides film cooling to the combustion chamber.

2.5.2.3.3 Combustion Chamber.

The combustion chamber is constructed of unalloyed molybdenum which is coated with a thin layer of molybdenum disilicide to prevent oxidation of the base metal. Cooling of the chamber is by radiation and film cooling.

2.5.2.3.4 Nozzle Extension.

The nozzle extension is attached to the engine by a Waspolloy Nut. The nozzle extension is machined from a cobalt base alloy and the stiffener rings are machined.

2.5.2.3.5 RCS Electrical Heaters.

Each of the RCS engine housings contain an electrical strip heater (figure 2.5-3). The electrical strip heaters provide propellant temperature control by conductance to the engine housing and engine injector valves thus the propellants.

Each heater has two therm-o switches that maintains the temperature at a given range.

2.5.2.4 Pressure Versus Temperature Measuring System.

The helium tank supply temperature measurement and helium tank supply pressure measurement (figure 2.5-3), for each quad is utilized by the crew and TLM to determine the quantity of propellants remaining in the respective quad.

The nomogram (figure 2.5-6) depicts how to determine the propellant quantity remaining in percentage. The helium supply pressure is determined by the crew on panel 12 in psia, also the helium supply temperature which reads as psia. The helium supply temperature readout of 0 psia is equivalent to 0°F and 400 psia is equivalent to 150°F.

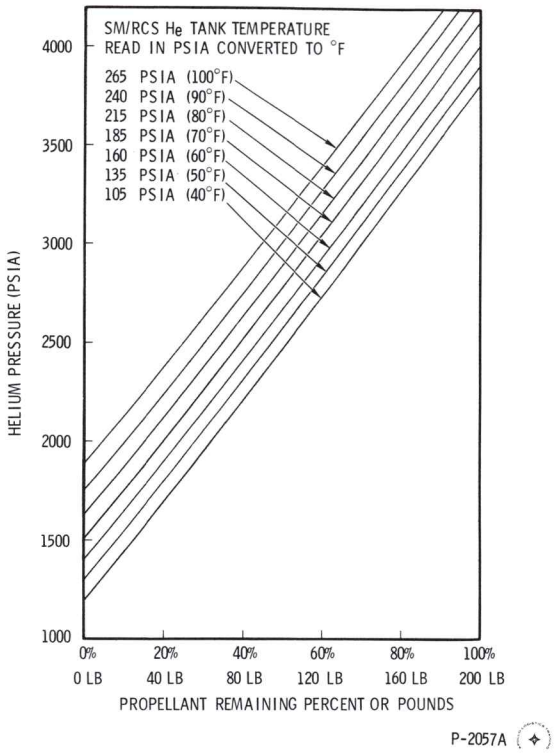

Figure 2.5-6. S/M RCS Nomogram Typical Propellant Remaining

As an example, if the crew readouts on panel 12 for a given quad reads 2800-psia helium supply pressure and 0 psia helium supply temperature (which is equivalent to 0°F), the quantity of propellant remaining is approximately 71%.

The crew would utilize the RCS indicator select switch on panel 12 to select the quad desired in order to obtain the helium tank supply pressure and temperature, and determine the propellant quantity remaining in percent.

2.5.2.5 Engine Thrusting Logic.

In the S/M RCS, the commands from the stabilization and control system cannot be supplied to the SCS channel switches until the contacts of the RCS latching relay are closed. Closing of these contacts for S/M RCS control may be initiated by the following signals (figure 2.5-3).

a. With the launch escape tower jettisoned, and the translation control rotated counterclockwise, an S/M abort or S-IVB backup separation is intiated and the following sequence of events occur.

1. Inform the G&N system of an abort initiation.

2. Initiate applicable booster shutdown.

3. Inhibit the pitch and yaw automatic jets of the SCS.

4. Initiates an ullage maneuver signal to the required manual coils of the S/M RCS engines (as long as the translation control is counterclockwise, ullage is terminated when the translation control is returned to the neutral detent).

5. Adapter separation occurs at 1.7 seconds after abort was initiated.

6. Energizes the RCS latching relay 2-1/2 seconds after abort was initiated allowing the SCS to provide electrical commands to the automatic coils of the S/M RCS engines. In the event the logic fails to energize the RCS latching relay, the RCS-CMD switch, on panel 16, placed to the ON position provides a manual backup to the automatic function. In addition, if ADAPTER SEPARATION pushbutton on panel 5 is depressed and held for approximately 1 to 2 seconds, the RCS latching relay is energized.

b. In a normal S-IVB separation sequence, the RCS-CMD switch is momentarily placed to the ON position energizing the RCS latching relay the translation control is positioned forward providing a translation through the SCS to the required automatic coils of the S/M RCS engine for a +X translation, and the ADAPTER SEPARATION pushbutton on panel 5 is held for 2 seconds to initiate adapter separation. (ADAPTER SEPARATION pushbutton depressed and held for approximately 1 to 2 seconds will also energize the RCS latching relay.)

In the event the translation controls are unable to provide an ullage maneuver, the DIRECT ULLAGE pushbutton, on panel 7, when depressed and held, provides the direct ullage signal to the manual coils of the RCS engines to be energized to provide a +X translation. This provides a manual direct backup to the two translation controls for the ullage maneuver to be performed by the S/M RCS. The ullage maneuver is terminated upon release of the DIRECT ULLAGE pushbutton.

In the event the SCS and/or jet selection logic is unable to provide commands to the automatic coils of the S/M RCS engines, placing the DIRECT RCS switch, on panel 8, to the ON position provides power to the rotation controls only. When the rotation control is positioned fully to its stops in any direction, the rotation control will energize the required manual coils for the desired maneuver.

If the SCS and/or the jet selection logic is unable to provide commands to the automatic coils of the S/M RCS engines, it is noted that translation control of the spacecraft is disabled.

2.5.3 S/M RCS PERFORMANCE AND DESIGN DATA.

2.5.3.1 Design Data.

The following listing is the design data on the S/M RCS components.

HELIUM TANKS (4)	4150±50 psig at 70°±5°F during servicing, after servicing setting on launch pad 70°±10°F. Capacity 0.57 lbs, inside diameter 8.84 in., wall thickness 0.105 in., and internal volume 0.205 cubic ft.
REGULATOR UNITS (8)	Primary - 181±4 psig with a normal lockup of 183±5 psig. From lockup pressure, not drop below 177 psig or rise above 185 psig and stabilize to 181±2 psig within 2 seconds. Secondary - Lockup of 187±5 psig. From lockup pressure not drop below 177 psig or rise above 194 psig, and stabilize at 185±3 psig within 2 seconds.
PRESSURE TRANSDUCERS (4) COMMON MANIFOLD	Illuminate caution and warning light on panel 10 (S/M RCS A, B, C, or D). Underpressure, 155 psia Overpressure, 215 psia
HELIUM RELIEF VALVES (8)	Diaphragm ruptures at 228±8 psig, filter - 10 microns nominal, 25 microns absolute. Relief valve relieves at 236.5±11.5 psig. Relief valve reseats at not less than 220 psig in the cavity and a helium flow of less than 20 standard cubic centimeters per hour across the bleed device and relief valve assembly combined. The bleed device shall reopen when decreasing pressure has reached no less than 20 psig.
FUEL TANK (4)	Combined propellant and ullage volume of 69 lbs, initially at 65°F at 30±2 psig, resulting in a tank pressure of no more than 215 psia when heated to 85°F. Outside diameter maximum 12.62 in., length 23.717 (+0.060, -0.000) in. Wall thickness 0.017 to 0.022 in. Helium inlet port 1/4 in., fill and drain port 1/2 in.

OXIDIZER TANK (4)	Combined propellant and ullage volume of 137.0 pounds, initially at 65°F at 30±2 psig, resulting in a tank pressure of no more than 215 psia when heated to 85°F. Outside diameter maximum 12.62 in., length 28.558 in. (+0.060, -0.000) in. Wall thickness 0.017 to 0.022 in.
INLINE FILTERS ENGINES (16)	5 microns nominal, 15 microns absolute, 1000-second service life, capable of 10,000 operational cycles.
	Thrust 100 lbs ±5%
	Expansion ratio 40:1 at nozzle exit
	Cooling film and radiation
	Injector type
	Premix igniter one on one unlike impingement. 8 fuel annulus for film cooling of premix igniter, main chamber 8 on 8 unlike impingement, 8 fuel for film cooling of combustion chamber wall.
	Nozzle extension L-605 material
	Nozzle exit diameter 5.6 inches
	Fuel lead
	Automatic coils connected in parallel
	Manual coils connected in series
	Weight 4.99 lbs
	Length 13.375 inches
PACKAGE TEMPERATURE TRANSDUCER (4)	Illuminate caution and warning light on panel 10 (S/M RCS A, B, C, or D), under-temperature 63°F overtemperature 175°F.

RCS

	Thermoswitch No. 1 One in Each Quad	Thermoswitch No. 2 One in Each Quad
HEATERS THERMO-SWITCHES	Close at 77 (+10, -7)°F	Close 120°±8°F
	Open at 104±14°F	Open at 129°±8°F
	36±3.6 watts per heater	36±3.6 watts per heater

2.5.3.2 Performance Data.

Refer to Mission Modular Data Book, SID 66-1177.

2.5.3.3 Power Consumption Data S/M RCS and C/M RCS.

Component	Quantity	Mode	Input Power Unit		Percent Duty Cycle	
			AC (Watts)	DC (Watts)	Common Level	Command Module Equipment
Reaction control Service module RCS:						
Engine heaters	4			36.0	62.5	
RCS engine coils	16	Automatic Direct		118.0 34.0	0 0	
He isolation valves	8			54.0	0	
Propellant isolation valves	8			49.0	0	
Command module RCS:						
Isolation valves	4			49.0	0	X
RCS engine coils	12	Automatic Direct		105.0 525.0	0 0	X

2.5.4 S/M RCS OPERATIONAL LIMITATIONS AND RESTRICTIONS.

a. Helium isolation valves and propellant isolation valves minimum energization time of 0.2 second and not to exceed 5 seconds.

b. Engine injector valve automatic coil on time not to exceed 2 minutes on time diving any 15-minute period with voltage not exceeding 32 vdc.

c. Engine injector valve direct coil on time not to exceed 45 minutes during any 60-minute period and voltage not to exceed 16 vdc to either coil separately, or 32 vdc to two coils in series.

2.5.5 S/M RCS TELEMETRY MEASUREMENTS.

The following is a complete listing of all S/M RCS telemetry data that is monitored by flight controllers and around support personnel.

Crew Display	Figure	Measurements	Measurement Number	Range	Signal Conditioner	*Channel Code	*Rate	*	Operating Range
Panel 12	2.5-3	Helium Tank Temperature A	SR5013T	0 +150°F	S28AR164(S19A1)				70±10°F on launch pad, variable during mission
Panel 12	2.5-3	Helium Tank Temperature B	SR5014T	0 +150°F	S28AR164(S19A2)				
Panel 12	2.5-3	Helium Tank Temperature C	SR5015T	0 +150°F	S28AR164(S19A3)				
Panel 12	2.5-3	Helium Tank Temperature D	SR5016T	0 +150°F	S28AR164(S19A4)				
Panel 12	2.5-3	Helium Tank Supply Pressure A	SR5001P	+0 +5K psia	S28AR36(S19A1)	10A89	H2	PCM	4150±50 psia and decreases with engine firings
Panel 12	2.5-3	Helium Tank Supply Pressure B	SR5002P	+0 +5K psia	S28AR36(S19A2)	10A91	H2	PCM	
Panel 12	2.5-3	Helium Tank Supply Pressure C	SR5003P	+0 +5K psia	S28AR36(S19A3)	10A93	H2	PCM	
Panel 12	2.5-3	Helium Tank Supply Pressure D	SR5004P	+0 +5K psia	S28AR36(S19A4)	10A96	H2	PCM	
Panels 10 & 12	2.5-3	Regulated Helium Manifold Pressure A	SR5729P	+0 +400 psia	S28AR44(S19A1)	11A82	H2	PCM	Launch pad 193 to 207 psia decreasing to 178 to 192 psia in a space environment
Panels 10 & 12	2.5-3	Regulated Helium Manifold Pressure B	SR5776P	+0 +400 psia	S28AR44(S19A2)	11A88	H2	PCM	
Panels 10 & 12	2.5-3	Regulated Helium Manifold Pressure C	SR5817P	+0 +400 psia	S28AR44(S19A3)	11A89	H2	PCM	
Panels 10 & 12	2.5-3	Regulated Helium Manifold Pressure D	SR5830P	+0 +400 psia	S28AR44(S19A4)	11A91	H2	PCM	
	2.5-3	Oxidizer Feed Line Pressure A	SR5733P	+0 +300 psia		12A8	H1	FQ	
	2.5-3	Fuel Feed Line Pressure A	SR5737P	+0 +300 psia		12A9	H1	FQ	
	2.5-3	Fuel Feed Line Pressure B	SR5784P	+0 +300 psia		12A13	H1	FQ	
	2.5-3	Oxidizer Manifold Pressure D	SR5821P	+0 +300 psia		12A14	H1	FQ	
	2.5-3	Fuel Feed Line Pressure C	SR5822P	+0 +300 psia		12A15	H1	FQ	
	2.5-3	Fuel Feed Line Pressure D	SR5823P	+0 +300 psia		12A16	H1	FQ	
Panels 10 & 12	2.5-3	Temperature Package A + P Engine 3	SR5065T	+0 +300°F	S28AR40(S19A1)	10A95	H1	PCM	Pad 115° to 134°F Flight 115° to 175°F
Panels 10 & 12	2.5-3	Temperature Package B - Y Engine 6	SR5066T	+0 +300°F	S28AR40(S19A2)	10A62	H1	PCM	

Crew Display	Figure	Measurements	Measurement Number	Range	Signal Conditioner	*Channel Code	*Rate	*	Operating Range
Panels 10 & 12	2.5-3	Temperature Package C - P Engine 4	SR5067T	+0 +300°F	S28AR40(S19A3)	10A98	H1	PCM	Pad 115° to 134°F Flight 115°F to 175°F
Panels 10 & 12	2.5-3	Temperature Package D + Y Engine 5	SR5068T	+0 +300°F	S28AR40(S19A4)	10A100	H1	PCM	
	2.5-3	Temperature Injector Head B + Y Engine	SR7128T	+0 +500°F		51A21	H1	FQ	Variable
	2.5-3	Temperature Injector Head A CCW R Engine	SR7134T	+0 +500°F		51A22	H1	FQ	Variable
	2.5-3	Direct Ullage On A (Z16 Relay)	CD0140X	OFF ON EVENT		11E12-06	E2	PCME	Event
	2.5-3	Direct Ullage On B (Z16 Relay)	CD0141X	OFF ON EVENT		11E12-08	E2	PCME	Event
	2.5-3	RCS Activate Signal A (Z19 Relay)	CD0170X	OFF ON EVENT		11E13-06	E2	PCME	Event
	2.5-3	RCS Activate Signal B (Z19 Relay)	CD0171X	OFF ON EVENT		11E13-07	E2	PCME	Event
		Tower Jettison A	CD0105X			11E28-02	E2	PCME	Event
		Tower Jettison B	CD0106X			11E28-03	E2	PCME	Event

*Analog measurements digitally coded into 8 bit words.

*Analog measurements - 0 to 5 vdc

*FQ - Flight qualification measure

*H1 - High bit rate

*H2 - High and low bit rate

*E2 - High and low bit rate

*Channel Code Example: 10A89

Significant number - 1

How many zeros after significant number is amount of samples per second: 0 → 1 sample per second

Analog - A

Event - E

Channel Code - 89

2.5.6 COMMAND MODULE REACTION CONTROL SUBSYSTEM FUNCTIONAL DESCRIPTION.

The command module reaction control subsystem provides the impulse required for controlling spacecraft attitude during the terminal phases of a mission.

The subsystems are activated normally by the crew placing the C/M-S/M SEPARATION switches to C/M-S/M SEPARATION position or by placing the C/M RCS PRESSURIZE switch to the ON position prior to initiating C/M-S/M separation (the C/M RCS PRESSURIZE switch may also be utilized as a manual backup to the C/M-S/M SEPARATION switches). The subsystems are activated automatically in the event of an abort from the pad up to launch escape tower jettison. Separation of the two modules occurs prior to entry (normal mode) or during an abort from the pad up to launch escape tower jettison.

The C/M-S/M consists of two identical and independent subsystems, identified as subsystem A and subsystem B. Both subsystems are operated simultaneously. In the event a malfunction develops in one subsystem, the remaining subsystem has the capability of providing the impulse required to perform necessary pre-entry and entry maneuvers. The C/M RCS is contained entirely within the C/M and each reaction engine nozzle is ported through the C/M skin. The propellants consist of nitrogen tetroxide (N_2O_4) used as oxidizer and monomethylhydrazine (MMH) used as fuel. Pressurized helium gas is the propellant transferring agent.

The reaction jets may be pulse-fired, producing short thrust impulses or continuously fired, producing a steady-state thrust level. The short firing permits attitude modes of operation. C/M attitude control is normally maintained by utilizing the applicable pitch, yaw, and roll engines of subsystems A and B. However, complete attitude control can be maintained with only one subsystem.

A functional flow diagram of C/M RCS subsystems A and B is shown in figure 2.5-7. The helium storage vessel of each subsystem supplies pressure to two helium isolation squib valves that are normally closed throughout the mission until C/M-S/M separation or C/M RCS pressurize switch is activated. When the helium isolation squib valves in a subsystem are initiated open, this allows pressure to the pressure regulators downstream of each helium isolation squib valve reducing the high-pressure helium to a desired working pressure.

Regulated helium pressure is directed through a series-parallel combination of four independent check valves. The check valves permit helium pressure to the fuel and oxidizer tanks and prevent reverse flow of propellant vapors or liquids. A pressure relief valve is installed in the pressure lines between the check valves and propellant tanks to protect the propellant tanks from any excessive pressure increase.

Helium entering the propellant tanks creates a pressure buildup around the propellant positive expulsion bladders forcing the propellants to be expelled into the propellant distribution lines. Propellants then flow to valve isolation burst diaphragms that rupture, and then through the propellant isolation valves. Each subsystem supplies fuel and oxidizer to six engines.

Oxidizer and fuel is distributed to the 12 fuel and oxidizer injector valves by a parallel feed system. The fuel and oxidizer injector valves on each engine contains orifices which meter the propellant flow to obtain a nominal 2:1 oxidizer/fuel ratio by weight. The oxidizer and fuel impinge, atomize, and ignite due to the hypergolic propellants. The injector valves are controlled automatically by the G&N system or the SCS. Manual override direct control is provided for rotational maneuvers and direct ullage only. The injector valves are spring-loaded closed.

Extremely cold temperature of the C/M exterior is anticipated prior to entry operations; therefore, C/M RCS engine pre-heating may be necessary before initiating pressurization due to possible freezing of the oxidizer (+11.8°F) upon contact with the engine injector valves. This is accomplished by the crew monitoring the engine temperatures and energizing the injector valve solenoids, until acceptable engine temperatures are obtained. The C/M RCS HTRS switch, on panel 97, will apply power to the injector valve solenoids for engine preheating.

Since the presence of hypergolic propellants can be hazardous upon C/M impact, the remaining propellants are burned off and the RCS purged with helium prior to C/M landing.

In the event of an abort from the pad to T + 61 seconds after lift-off, provisions have been incorporated to automatically dump the oxidizer supply overboard, followed by a helium purge of the oxidizer tanks and dumping of the remaining helium supply. The fuel is retained on-board, due to insufficient time for dumping, and the C/M impacts with fuel tanks full but depressurized.

2.5.7 C/M RCS MAJOR COMPONENTS/SUBSYSTEM DESCRIPTION.

The C/M RCS is composed of two separate, normally independent systems, designated system A and system B. The systems are identical in operation, each containing the following four major subsystems:

- Pressurization
- Propellant
- Rocket engine
- Temperature control system.

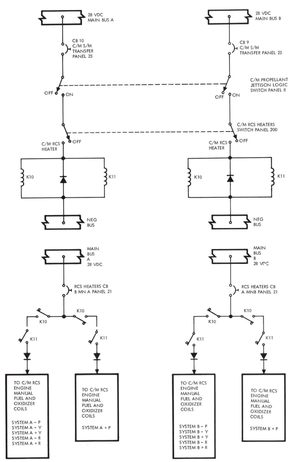

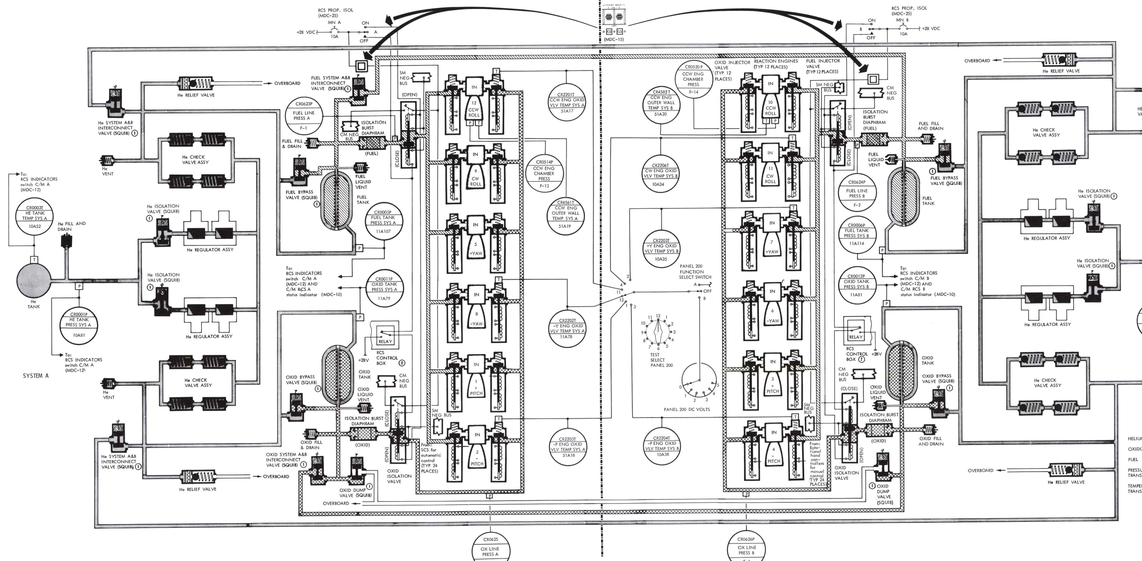

Figure 2.5-7. C/M RCS Functional Flow Diagram

2.5.7.1 Pressurization Subsystem.

This subsystem consists of a helium supply tank, two dual pressure regulator assemblies, two check valve assemblies, two pressure relief valve assemblies, and associated distribution plumbing.

2.5.7.1.1 Helium Supply Tank.

The total high-pressure helium is contained within a single, spherical storage tank. Initial fill pressure is 4150±50 psig. The limit working pressure is 5000 psig to accommodate pressure transients during filling. The proof pressure is 6667 psig and burst pressure is 7500 psig.

2.5.7.1.2 Helium Isolation (Squib-Operated) Valve.

The two squib-operated helium isolation valves are installed in the plumbing from each helium tank, to confine the helium to as small an area as possible and to reduce helium leakage during the period the system is not in use. Two squib valves are employed in each system to assure pressurization. The valves are opened by closure of the C/M PRESS switch on panel 16, or by the C/M-S/M SEP switches, panel 15, or upon receipt of an abort signal from the pad up to launch escape tower jettison.

2.5.7.1.3 Helium Pressure Regulator Assembly.

The pressure regulators used in the C/M RCS subsystems A and B are similar in type, operation, and function to those used in the S/M RCS. The difference is the regulators in the C/M RCS are set at a higher pressure than those of the S/M RCS.

2.5.7.1.4 Helium Check Valve Assembly.

The check valve assemblies used in C/M RCS subsystems A and B, are similar in type, operation, and function to those used in the S/M RCS.

2.5.7.1.5 Helium Relief Valve.

The helium relief valves used in the C/M RCS subsystems A and B, are similar in type, operation, and function to those used in the S/M RCS. The differences are: the rupture pressure of the burst diaphragm in the C/M RCS is higher than that of the S/M RCS, and the relief valve relieves at a higher pressure in the C/M RCS than that of the S/M RCS.

2.5.7.1.6 Distribution Plumbing.

Brazed joint tubing is used to distribute regulated helium in each subsystem from the helium storage vessels to the propellant tanks.

2.5.7.2 Propellant Subsystem.

Each subsystem consists of one oxidizer tank, one fuel tank, one oxidizer and fuel isolation valve, and associated distribution plumbing.

2.5.7.2.1 Oxidizer Tank.

The oxidizer supply is contained in a single, titanium alloy, hemispherical-domed cylindrical tank to each system. Each tank contains a diffuser tube assembly and a teflon bladder for positive expulsion of the oxidizer similar to that of the S/M RCS tank assemblies. The differences are the C/M RCS tank assemblies are smaller in size. The bladder is attached to the diffuser tube at each end of the tank. The diffuser tube acts as the propellant outlet.

When the tank is pressurized, the helium gas surrounds the entire bladder, exerting a force which causes the bladder to collapse about the propellant, forcing the oxidizer into the diffuser tube assembly, and on out of the tank outlet into the manifold.

Working pressure is 360 psig, proof pressure is 480 psig and the burst pressure is 540 psig.

2.5.7.2.2 Fuel Tank.

The fuel supply is contained in a single, titanium alloy, hemispherical-domed cylindrical tank for each system that is similar in material, construction, and operation to that of the oxidizer tank.

2.5.7.2.3 Diaphragm Burst Isolation Valve.

The burst diaphragms, downstream from each tank, are installed to confine the propellants into as small an area as possible throughout the mission. This is to prevent loss of propellants in the event of line rupture downstream of the burst diaphragm or injector valve leakage.

When the helium isolation squib valves are initiated open, regulated helium pressure pressurizes the propellant tanks creating the positive expulsion of propellants into the respective manifolds to the burst diaphragms, which rupture and allow the propellants to flow on through the propellant isolation valves to the injector valves on each engine. The diaphragm is of the non-fragmentation type; but in the event of any fragmentation, a filter is incorporated to prevent any fragments from entering the engine injector valves.

2.5.7.2.4 Propellant Isolation Shutoff Valves.

When the burst diaphragm isolation valves are ruptured, the propellants flow to the propellant isolation valves.

The isolation valves in the fuel and oxidizer lines, are both controlled by a single switch on panel 15. These are two solenoid valves, magnetically latched open and spring-loaded closed. The valves are normally open in respect to fluid flow. The C/M propellant switches A and B on panel 15 will be placed to ON after T + 61 seconds and will remain in that position until orbit insertion to ensure that the propellant isolation valves remain open when systems A and B are pressurized upon abort initiation. The switches will also be placed to ON prior to C/M-S/M separation, and remain in that position until completion of propellant jettison to again ensure that the valves remain in the open position. The switches are placed to center neutral position after tower jettison until prior to C/M-S/M separation, removing electrical power from the valves.

Each valve contains a position switch which is in parallel to one position indicator below the switch on panel 15 that controls both valves. When the position switch in each valve is open, the indicator on panel 15 is gray (same color as the panel) indicating to the crew the valves are in the normal position. When the position switch in each valve or one valve is closed, the indicator on panel 15 is diagonal lines indicating to the crew the valve or valves are closed. The valves are closed in the event of a failure downstream of the valves, line rupture, runaway thruster, etc.

The valve will operate at 0 to 360 psig at both the inlet and outlet ports. The proof pressure is 540 psig and the burst pressure is 720 psig. The solenoid is 28-vdc type with a pull in voltage of not more than 15 volts dc and current not to exceed 2 amperes at 30 volts dc. The valve assembly response is 200 milliseconds maximum for one cycle operation (open to close or closed to open).

2.5.7.2.5 Distribution Plumbing.

Brazed joint tubing is used to distribute pressurized helium gas to the propellant positive expulsion tanks in system A and system B. The distribution lines contain 11 explosive-operated (squib) valves which permit changing the helium distribution configuration to accomplish various functions within the C/M RCS. Each squib valve is actuated by an explosive charge detonated by an electrical hotwire igniter. After ignition of the explosive device, the valve remains open permanently. Two squib valves are utilized in each system to isolate the high-pressure helium gas supply to the storage tanks until RCS pressurization is commanded. Two squib valves are utilized to interconnect system A and system B regulated helium supply which ensures pressurization of both systems during dump-burn and helium purge operations. Two squib valves in each system permit helium gas to bypass the propellant tanks which allows helium purging of the propellant subsystem. One squib valve is installed in system B regulated helium line to permit helium depressurization in the event of a low-altitude abort pad to T + 61 seconds abort.

2.5.7.3 Engine Assembly.

The command module reaction control subsystem engines are ablation cooled, bipropellant thrust generators which can be operated in either the pulse-mode or the steady-state mode.

Each engine consists of a fuel and oxidizer control valve, which controls the flow of propellants by responding to electrical commands (automatic) generated by the guidance and navigation subsystem and/or stabilization control subsystem, or by the crew (manually), and an injector head assembly which directs the flow of each propellant from the propellant control valves to the combustion chamber and the combustion chamber in which the propellants are burned to produce thrust. Estimated engine thrust rise and decay is shown in figure 2.5-8.

2.5.7.3.1 Propellant Solenoid Injector Control Valves (Fuel and Oxidizer).

The injector valves utilize two coaxially would coils; one for automatic and one for direct manual control. The automatic coil is used when the thrust command originates from the jet selection logic. The manual coils are used when the thrust command originates at the rotation control (direct mode).

The solenoid valves are spring-loaded closed and energized open.

The reaction time of the valves, pulse mode of operation, reason for pulse mode, and thrust curve generated by the engine is similar to the S/M RCS engines.

The automatic coils in the fuel and oxidizer injector valves are connected in parallel from the SCS. The manual coils provide a manual direct backup to the automatic system, and are connected in parallel from the rotation controls.

Engine injector valve opening time is 5±2 milliseconds and closing 6±2 milliseconds for the automatic coils, and opening time 7 milliseconds and closing 16 to 18 milliseconds for the direct manual coils. The actuation time shall not vary by more than +50 or -25% operating time between +40° to +200°F.

2.5.7.3.2 Injector.

The injector contains a fuel and oxidizer passage that impinge (unlike impingement) upon a splash plate within the combustion chamber. Therefore, the injector pattern is referred to as an unlike impingement splash plate injector. There are 16 fuel and 16 oxidizer passages in the injector face.

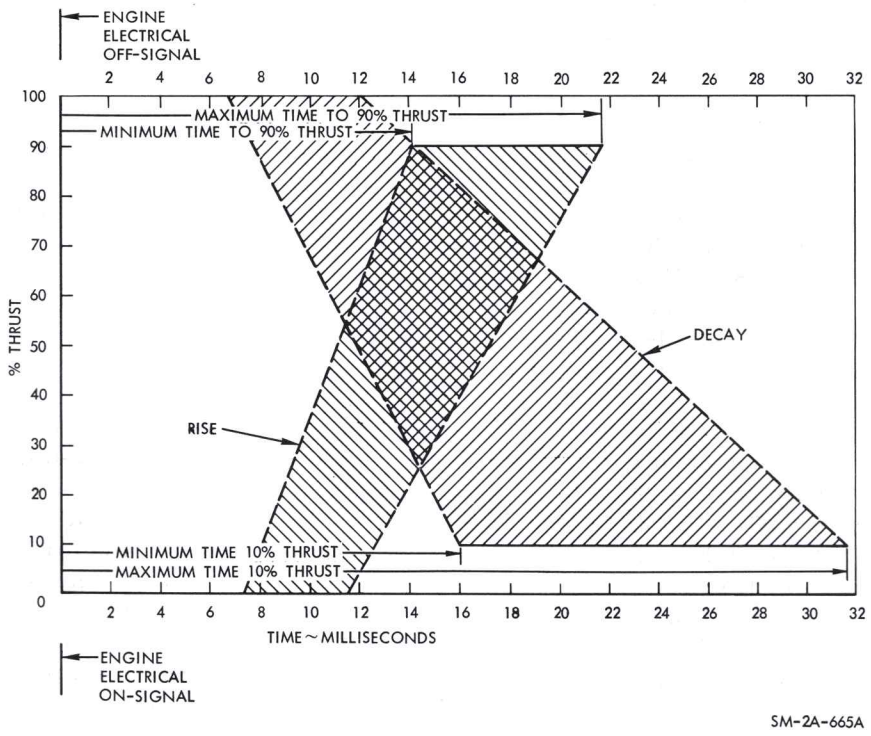

Figure 2.5-8. C/M RCS Engine Thrust Rise and Decay (Time Typical)

2.5.7.3.3 Thrust Chamber Assembly.

The thrust chamber assembly is fabricated in four segments, the combustion chamber ablative sleeve, the throat insert, the ablative material, the asbestos and the fiberglass wrap. The engine is ablative cooled.

2.5.7.3.4 Nozzle Extension.

The C/M RCS engines are mounted within the structure of the C/M. Nozzle extensions are required to transmit the gases from the engine out through the structure of the C/M. These extensions are fabricated of ablative material.

2.5.7.3.5 Engine-Solenoid Injector Valve Temperature Control System.

A temperature control system of the C/M RCS engine valves is employed by energizing the manual direct coils on each engine.

Temperature transducers are mounted on the engine injector valve oxidizer solenoids. A temperature transducer is installed on subsystem A counterclockwise roll oxidizer valve, negative yaw oxidizer valve, negative pitch oxidizer valve, and on subsystem B positive yaw oxidizer valve,

negative pitch oxidizer valve, and clockwise roll oxidizer valve. These engine-injector solenoid oxidizer valves were selected as the coldest engines.

The temperature transducers have a range from -50° to +250°F. The temperature transducers from the three subsystems A and B engine oxidizer injector valves provide inputs to the TEST SELECT switch on panel 97, located in the lower equipment bay of the command module. With the FUNCTION SELECT switch on panel 97 placed to position B and the TEST SELECT rotary switch on panel 97 placed to positions 1, 2, 3, 4, 11 and 12, respectively, the specific engine oxidizer valve temperature is monitored as a d-c voltage on the 0- to 5-vdc voltmeter. Zero vdc is equivalent to -50°F and 5 vdc is equivalent to +250°F.

A C/M RCS HEATER switch, located on panel 97, is placed to the ON position when any one of the instrumented engines are below +64°F, approximately 1.80 vdc. This must be accomplished within 26 minutes prior to C/M-S/M separation, providing the C/M propellant jettison LOGIC switch is placed to ON. The fuel and oxidizer injector valve manual coils of all C/M RCS engines are energized open (prior to pressurization of C/M RCS subsystems A and B). A 13-minute heat-up time maximum of 100°F, which is monitored on the d-c voltmeter, panel 97, as 2.50 vdc, assures engine-injector valve temperature is at +20°F minimum. If +100°F, 2.50 vdc on the d-c voltmeter, is reached from the coldest instrumented engine before 13 minutes, the C/M RCS HEATER switch is placed to OFF which de-energizes the engine injector valves and the injector valves spring-load closed. If a time of 13 minutes is reached, before +100°F, 2.50 vdc on the d-c voltmeter, the C/M RCS HEATER switch is placed to OFF. Thus, this will prevent the oxidizer from freezing at the engine injector valves upon pressurization of subsystems A and B.

The C/M RCS HEATER switch must be placed to OFF prior to C/M RCS pressurization.

The operation of the C/M RCS HEATER switch in conjunction with the d-c voltmeter and/or heating time, insures all other engine valves reach the acceptable temperature levels. The +100°F, 2.50 vdc, of 13 minutes time limit, assures that the warmest engine valve will be less than +200°F.

2.5.7.3.6 Engine Thrust ON-OFF Logic.

All thrust commands for C/M attitude pass through the stabilization and control subsystem and the jet selection logic. These commands may originate at the following:

- The rotation controls
- The stabilization and control subsystem
- The guidance and navigation subsystem

In the event the SCS and/or jet selection logic is unable to provide commands to the automatic coils of the C/M RCS engines, placing the

DIRECT RCS switch on panel 8 to the ON position provides power to the rotation control. When the rotation control is positioned fully to its stops in any direction, the rotation control energizes the required manual coils for the desired maneuver.

When the C/M-S/M SEP switches on panel 15 are placed to C/M-S/M SEP position, the switches automatically energize relays in the RCS transfer panels (C19A4) and in the RCS control boxes (C19A1) (figure 2.5-9) (providing the C/M PROP JET LOGIC switch on panel 8 is placed to ON) that transfer the SCS and direct manual inputs from the S/M RCS engine to the C/M RCS engines automatically. (These same functions may also occur on any LES ABORT.)

The transfer motors in the RCS transfer panels (C19A4) and in the RCS control boxes (C19A1) are redundant to each other, in that they ensure the SCS and direct manual inputs are transferred from the S/M RCS engines to the C/M RCS engines in addition to deadfacing of the S/M RCS engines.

The transfer motors in the RCS control boxes (C19A1) are automatically activated by the C/M-S/M SEP switches (providing the C/M PROP JETT LOGIC switch is placed to ON), in addition, they may also be activated by the manual backup of the RCS TRANSFER switch on panel 16.

The transfer motors in the RCS transfer panels (C19A4) are only activated automatically by the C/M-S/M SEP switches (providing the C/M PROP JETT LOGIC switch is placed to ON).

As an example, if the RCS transfer motor in C19A1 failed to transfer automatically at C/M-S/M SEP, the RCS transfer motor in C19A4 would still automatically transfer the SCS and direct manual inputs from the S/M RCS engines to the C/M RCS engines (providing the C/M PROP JETT LOGIC switch is placed to ON) and deadface the S/M RCS engines. In addition, the RCS TRANSFER switch on panel 16 provides a manual backup to the C19A1 RCS transfer motors only.

An another example, the C/M RCS subsystems could be checked out prior to C/M-S/M SEP by placing the RCS TRANSFER switch on panel 16 to C/M position and only the RCS transfer motors (C19A1) in the RCS control boxes would transfer the SCS and direct manual inputs from the S/M RCS engines to the C/M RCS engines. The transfer motors in (C19A4) the RCS transfer panels would not transfer until C/M-S/M SEP (providing the C/M PROP JETT LOGIC switch is placed to ON) and then start the S/M jettison controllers.

2.5.7.4 Propellant Jettison.

There are two sequences of propellant jettison. One sequence is employed in the event of an abort while the vehicle is on the launch pad and through the first 61 seconds of flight. The second sequence is employed for all other conditions, whether it be a normal or an abort mode of operation.

The sequence of events before and during a normal re-entry is as follows:

a. The crew will place the C/M-S/M SEP switches to the C/M-S/M SEP position on panel 15 or place the C/M RCS PRESS switch on panel 16 to the ON position, prior to initiating C/M-S/M separation. The C/M RCS PRESS switch or the C/M-S/M SEP switches initiate the helium isolation squib valves in C/M RCS subsystems A and B, thus pressurizing both subsystems (figures 2.5-7 and 2.5-9). The C/M RCS PRESS switch provides a backup to the C/M-S/M SEP switches and the RCS LOGIC switch on panel 8 must be placed to ON, prior to initiating C/M-S/M separation to provide an automatic RCS transfer.

b. The C/M continues to descent after re-entry into the earth's atmosphere and at 24,000 feet, a barometric switch is activated which unlatches the RCS latching relay, inhibiting any commands from the jet selection logic (figure 2.5-3) (manual backup of RCS CMD switch panel 16).

c. At main parachute line stretch, the RCS propellant jettison DUMP switch on panel 8 is placed to the DUMP position as a normal manual function by the crew initiating the following functions simultaneously, RCS LOGIC switch on panel 18 must be placed to ON prior to placing DUMP switch to DUMP position.

1. Initiates two helium interconnect squib valves.

2. Initiates fuel interconnect squib valve.

3. Initiates oxidizer interconnect squib valve.

4. The fuel and oxidizer injector valve manual coils are energized on all C/M RCS engines, excluding + pitch engines. + pitch engines are not energized due to their location being adjacent to the steam vent. Propellants are jettisoned by burning the propellants remaining in 10 of the 12 engines. The length of time to burn remaining propellants will vary, depending upon amount of propellants remaining in fuel and oxidizer tanks at 24,000 feet. If an entire propellant load remained, as an example, a nominal burn time would be 88 seconds through 10 of the 12 engines. In the worst case of only 5 of the 12 engines (manual coils energized), a nominal burn time would be 155 seconds.

d. Upon completion of propellant burn, C/M propellant jettison PURGE switch on panel 8 is placed to PURGE position as a normal manual function by the crew. When PURGE switch is placed to ON, the switch initiates four helium bypass squib valves, allowing regulated helium pressure to bypass around each fuel and oxidizer tank and purging the manifolds through 10 of the 12 engines. Purging requires approximately 15 seconds or until helium is depleted.

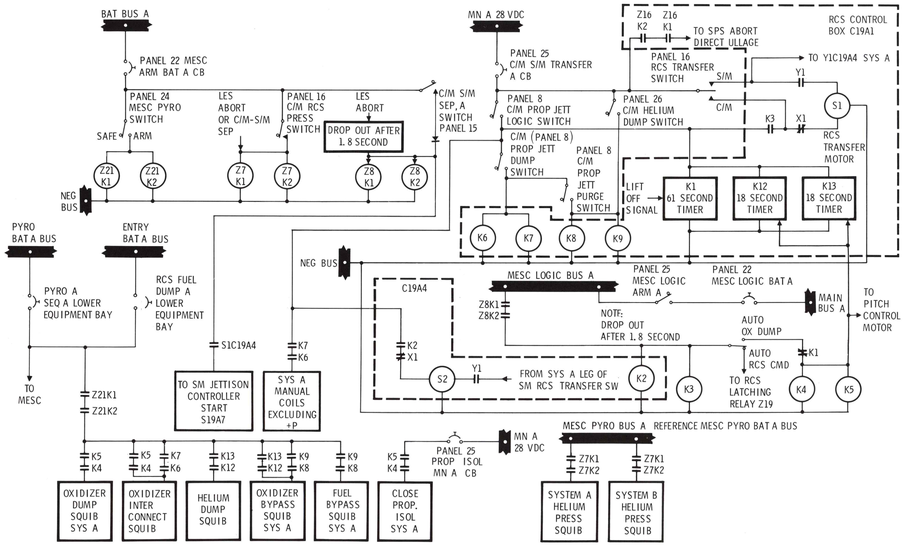

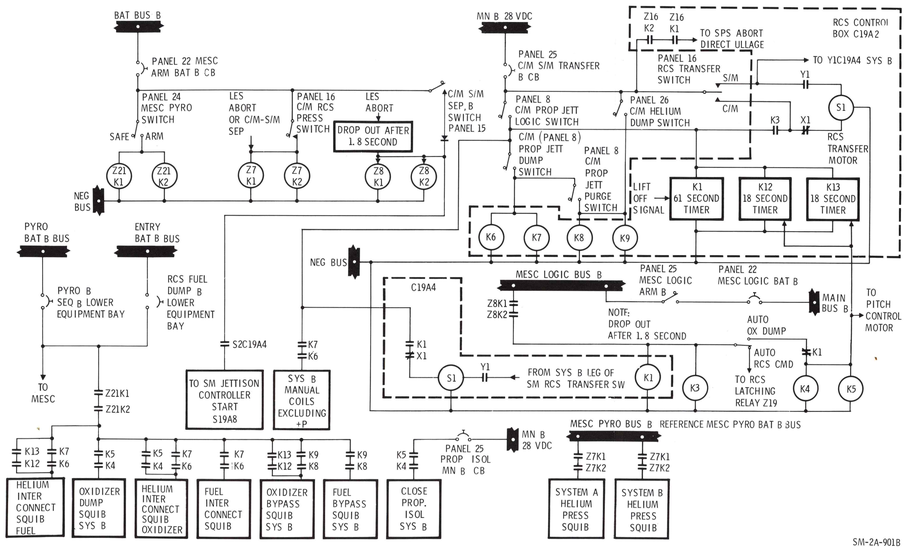

SM-2A-901B

Figure 2.5-9. C/M RCS Squib Valve Power Control Diagram

e. In the event of C/M propellant jettison LOGIC switch and/or DUMP switch failure, the remaining propellants may be burned by placing DIRECT RCS switch on panel 8 to ON and positioning two rotation controllers to CCW, CW, -Y, +Y and -P (excluding +P) positions, energizing manual fuel and oxidizer injector valve solenoid coils of 10 of the 12 C/M RCS engines burned. At completion of propellant burn, the C/M RCS HELIUM DUMP switch on panel 26 would be placed to ON initiating the four bypass squib valves, allowing regulation helium pressure to bypass around each fuel and oxidizer tank, and purging the manifolds through 10 of the 12 engines providing the two rotation controllers are positioned to CCW, CW, -Y, +Y and -P (excluding +P).

f. In the event C/M propellant jettison LOGIC switch and DUMP switch on panel 8 function correctly and the PURGE switch fails, the C/M HELIUM DUMP switch on panel 26 would be placed to ON, initiating the four helium bypass squib valves, allowing regulated helium pressure to bypass around each fuel and oxidizer tank, and purging the manifolds through 10 of the 12 engines.

g. Prior to water impact the LOGIC switch on panel 8 may be placed to the OFF position, which would de-energize the manual coils of the engine injector valves allowing the engine injector valves to spring-load closed thus preventing sea water from entering manifolds through the engine. The DUMP switch placed to the OFF position will accomplish the same function.

The sequence of events involving an abort from the pad up to 61 seconds is as follows:

a. The OXIDIZER DUMP switch on panel 16 is placed to AUTO OX DUMP position and the RCS LOGIC switch on panel 8 is placed to ON position at some time in the countdown, prior to T = 0.

b. The following events occur simultaneously upon receipt of the abort signal. The command may be generated automatically by the sequence events controller subsystem or by manually rotating the translation control counterclockwise.

1. When the abort signal is received, the two squib-operated helium isolation valves in each system are initiated open, pressurizing subsystems A and B, manual backup of the C/M PRESS switch panel 16.

2. The squib-operated helium interconnect valve for the oxidizer tanks is initiated open. If only one of the two squib helium isolation valves was initiated open, both systems are pressurized as a result of the helium interconnect squib valve interconnect.

3. The solenoid-operated fuel and oxidizer isolation shutoff valves are closed to prevent fuel and oxidizer from flowing to the thrust chamber assemblies.

4. The squib-operated oxidizer interconnect valve is initiated open. If only one of the two oxidizer overboard dump squib valves was initiated open, the oxidizer manifolds of each system are common as a result of the oxidizer interconnect squib valve.

5. The squib-operated oxidizer overboard dump valves route the oxidizer to a blow-out plug in the aft heat shield of the C/M which shears a pin, due to the pressure buildup, and blows the plug out, dumping the oxidizer overboard. The entire oxidizer supply is dumped in approximately 13 to 15 seconds.

6. The RCS latching relay will not energize in the event of an abort from 0 to +61 seconds due to the position of the AUTO OX DUMP switch (figures 2.5-3 and 2.5-9). Thus, no commands are allowed into the jet selection logic from the SCS.

7. The C/M-S/M RCS transfer motor-driven switches are automatically driven upon receipt of the abort signal allowing electrical signals to be supplied to the C/M RCS engine injector valves, manual backup of RCS transfer switch, panel 16.

c. Eighteen seconds after the abort signal is initiated, the following events automatically occur simultaneously:

1. Helium interconnect squib valve between the fuel tanks is initiated open.

2. Helium overboard dump squib valve is initiated open, dumping helium pressure overboard into the aft equipment compartment, releasing helium pressure from both fuel tanks.

3. The bypass squib valve to the subsystems A and B oxidizer tank is initiated open, purging both oxidizer systems out through overboard dump in the aft heatshield.

4. Fuel remains on-board at impact with no pressure on fuel tanks.

The sequence of events of an abort, initiated after 61 seconds up to launch escape tower jettison, are as follows:

a. At 61 seconds after lift-off, the crew as a normal manual function will place the AUTO OX DUMP switch on panel 16 to the AUTO RCS CMD position.

b. The RCS LOGIC switch was placed to the ON position prior to T + 0.

1. Initiate both helium isolation squib valves in C/M RCS subsystems A and B. Manual backup of C/M RCS PRESS switch on panel 16, thus pressurizing C/M RCS subsystems A and B.

2. Drives the C/M-S/M RCS transfer motors to the C/M RCS position. Manual backup of RCS TRANSFER switch on panel 16 for C19A1 RCS transfer motors only.

3. RCS latching relay energized one second after receipt of the abort signal.

c. At main parachute line stretch, as a normal manual function, the RCS propellant and jettison DUMP switch panel 8, is placed to the DUMP position initiating the following functions: same as a normal entry.

2.5.8 C/M RCS PERFORMANCE AND DESIGN DATA.

2.5.8.1 Design Data.

The following listing contains data on the C/M RCS components:

HELIUM TANKS (2)	4150±50 psig at 70°±5°F during servicing, setting on launch pad 70°±10°F. Capacity 0.57 lbs, inside diameter 8.84 in., wall thickness 0.105 in., and internal volume of 365±5 cubic inches at 4150±50 psig.
HELIUM ISOLATION SQUIB VALVE FILTER	Remove 98 percent of all particles whose two smallest dimensions are greater than 40 microns. Remove 100 percent of all particles whose two smallest dimensions are greater than 74 microns.
REGULATOR UNITS (4)	Primary - Initial of 291±6 psig and stabilize within 2 seconds to 291±4 psig. Lockup pressure minimum of 284 psig and not exceed 302 psig. Secondary - Lockup 287 to 308 psig and stabilize at 294.5±7.5 psig within 2 seconds.
HELIUM RELIEF VALVES (4)	Diaphragm rupture of 340±8 psi. Filter - 10 microns nominal, 25 microns absolute. Relief valves relieve at 346±14 psig. Relief valve reseats at no less than 327 psig. Flow capacity 0.3 lb/minute at 60°F and 346±14 psig.

	Bleed device closes when increasing pressure has reached no more than 179 psig in the cavity and a helium flow of less than 20 standard cubic centimeters per hour across the bleed and relief valve assembly combined. The bleed device shall reopen when decreasing pressure has reached no less than 20 psig.
PRESSURE TRANSDUCERS FUEL AND OXIDIZER	Illuminates caution and warning light on panel 10 (C/M RCS A or B) After helium isolation — underpressure 265 psia Squib valve actuation — overpressure 325 psia
FUEL TANKS (2)	Combined propellant and ullage volume of 45.2 lbs, initially at 65°F at 30±2 psig, resulting in a tank pressure of no more than 205 psia when heated to 105°F, length of 17.329 (+0.040, -0.000) inches, outside diameter maximum 12.62 in. Wall thickness 0.022 to 0.027 in.
OXIDIZER TANK (2)	Combined propellant and ullage volume of 89.2 pounds initially at 65°F at 30±2 psig, resulting in a tank pressure of no more than 205 psia when heated to 85°F. Length 19.907 (+0.040, -0.000) inches maximum outside diameter 12.62 in. Wall thickness 0.022 to 0.027 in.
VALVE ISOLATION BURST DIAPHRAGM (4)	Rupture at 241±14 psig within 2 seconds after rupture pressure is reached at any temperature between 40° to 105°F. Filter 75 microns nominal, 100 microns absolute.
ENGINE	200-second service life, 3000 operational cycles Nominal thrust — 93 pounds Expansion ratio — 9 to 1

	Cooling	Ablation
	Injector type	16 on 16 splash plate
	Combustion chamber refrasil, ablative sleeve and graphite base throat insert.	
	Automatic and manual coils - connected in parallel	
	Weight	8.3 lbs
	Length	11.65 in. maximum
	Nozzle exit diameter	2.13 inches
	Nozzle extensions	Ablative refrasil
OXIDIZER DUMP BLOWOUT PLUG	Pin shears at 100 psig	

RCS

2.5.8.2 Performance Data.

Refer to the Mission Modular Data Book, SID 66-1177.

2.5.9 C/M RCS OPERATIONAL SIMULATIONS AND RESTRICTIONS.

A propellant isolation valve switch must be placed to ON momentarily, prior to lift-off, and returned to neutral. At T + 61 seconds after lift-off, the switches must be placed to ON until orbit insertion to ensure that the valves will remain open if an LES abort is initiated. The switches may be placed to neutral at orbit insertion. The switches must be placed ON, prior to C/M RCS pressurization to ensure valves remain open throughout entry.

2.5.10 C/M RCS TELEMETRY MEASUREMENTS.

The following is a complete listing of the C/M RCS telemetry data that is monitored by the flight controllers and ground support personnel.

Crew Display	Figure	Measurement	Measurement Number	Range	Signal Conditioner	*Channel Code	Bit *Rate	*	Operating Range
Panel 12	2.5-7	Helium Tank Supply Pressure A	CR0001P	+0 +5K psia	C28AR31	10A81	H2	PCM	4150±50 psia and decrease during mission
Panel 12	2.5-7	Helium Tank Supply Pressure B	CR0002P	+0 +5K psia	C28AR32	10A83	H2	PCM	
Panel 12	2.5-7	Helium Tank Supply Temperature A	CR0003T	+0 +300°F	C28AR33	10A52	H1	PCM	70°±10°F on launch pad Variable during mission
Panel 12	2.5-7	Helium Tank Supply Temperature B	CR0004T	+0 +300°F	C28AR34	10A55	H1	PCM	
Panels 10 & 12	2.5-7	Fuel Tank A Pressure	CR0005P	+0 +400 psia	C28AR35	11A107	H2	PCM	After pressurization 287 to 308 psia until propellant purge
Panels 10 & 12	2.5-7	Fuel Tank B Pressure	CR0006P	+0 +400 psia	C28AR36	11A114	H2	PCM	
Panels 10 & 12	2.5-7	Oxidizer Tank A Pressure	CR0011P	+0 +400 psia	C28AR38	11A79	H2	PCM	
Panels 10 & 12	2.5-7	Oxidizer Tank B Pressure	CR0012P	+0 +400 psia	C28AR39	11A81	H2	PCM	
	2.5-7	Fuel Line Pressure A	CR0623P	+0 +400 psia		F-1		FQ	Flight recorder
	2.5-7	Fuel Line Pressure B	CR0624P	+0 +400 psia		F-2		FQ	
	2.5-7	Oxidizer Line Pressure A	CR0625P	+0 +400 psia		F-3		FQ	
	2.5-7	Oxidizer Line Pressure B	CR0626P	+0 +400 psia		F-4		FQ	
Panel 97	2.5-7	Temperature Oxidizer Valve CCW R Engine A	CR2201T	-50 +250°F	C28AR295	51A17	H1	PCM	Variable during mission, prior to separation turn heaters on if below 64°F, turn off in 13 minutes time or 100°F whichever is reached first.
Panel 97	2.5-7	Temperature Oxidizer Valve -Y Engine A	CR2202T	-50 +250°F	C28AR296	11A78	H1	PCM	
Panel 97	2.5-7	Temperature Oxidizer Valve -P Engine A	CR2205T	-50 +250°F	C28AR299	51A18	H1	PCM	
Panel 97	2.5-7	Temperature Oxidizer Valve +Y Engine B	CR2203T	-50 +250°F	C28AR297	10A35	H1	PCM	
Panel 97	2.5-7	Temperature Oxidizer Valve -P Engine B	CR2204T	-50 +250°F	C28AR298	10A38	H1	PCM	
Panel 97	2.5-7	Temperature Oxidizer Valve CWR Engine B	CR2206T	-50 +250°F	C28AR300	10A34	H1	PCM	
	2.5-7	CCW Roll Engine Chamber Pressure A	CR0514P	+0 +250 psia		F-13		FQ	Flight recorder
	2.5-7	CCW Roll Engine Chamber Pressure B	CR0520P	+0 +250 psia		F-14		FQ	

Crew Display	Figure	Measurement	Measurement Number	Range	Signal Conditioner	*Channel Code	Bit *Rate	*	Operating Range
	2.5-7	CCW Roll Engine Wall Temperature A	CR4561T	+0 +1000°F		51A19	H1	FQ	Variable
	2.5-7	CCW Roll Engine Wall Temperature B	CR4582T	+0 +1000°F		51A20	H1	FQ	Variable
	2.5-9	C/M-S/M SEP Relay Close A (Z9 to Z7)	CD0023X	OFF ON EVENT		11E12-03	E2	PCME	Event
	2.5-9	C/M-S/M SEP Relay Close B (Z9 to Z7)	CD0024X	OFF ON EVENT		11E12-04	E2	PCME	Event
	2.5-9	LES Abort Initiate Signal A (Z9 to Z7)	CD0002X	OFF ON EVENT		11E12-01	E2	PCME	Event
	2.5-9	LES Abort Initiate Signal B (Z9 to Z7)	CD0062X	OFF ON EVENT		11E12-07	E2	PCME	Event
	2.5-9	RCS Actuate Signal A (Z19)	CD0170X	OFF ON EVENT		11E13-06	E2	PCME	Event
	2.5-9	RCS Activate Signal B (Z19)	CD0171X	OFF ON EVENT		11E13-07	E2	PCME	Event
	2.5-9	C/M Pressurize Signal A (Z9 to Z7)	CD0173X	OFF ON EVENT		11E13-08	E2	PCME	Event
	2.5-9	C/M Pressurize Signal B (Z9 to Z7)	CD0174X	OFF ON EVENT		11E14-01	E2	PCME	Event
	2.5-9	Barometric Switch Lock In Close Relay A	CE0007X	CLOSE OPEN EVENT		11E14-08	E2	PCME	Event
	2.5-9	Barometric Switch Relay Lock In Close Relay B	CE0008X	CLOSE OPEN EVENT		11E15-01	E2	PCME	Event
	2.5-9	Lift-Off Signal A	BS0060X			11E25-03	E2	PCME	Event
	2.5-9	Lift-Off Signal B	BS0061X			11E25-04	E2	PCME	Event

*Analog measurements digitally coded into 8 bit words.
*Analog measurements -0 +.15V -0 vdc to 5 + 0 - .15 vdc

*FQ - Flight qualification measurements
*H1 - High bit rate
*H2 - High and low bit rate
*E2 - High and low bit rate

*Channel Example: 10A81

Significant number - 1
How many zeros after significant number is 0 } amount of samples per second } 1 sample per second

SECTION 2

SUBSECTION 2.6

ELECTRICAL POWER SYSTEM (EPS)

2.6.1 INTRODUCTION.

The electrical power system (figure 2.6-1) supplies all electrical power required by the spacecraft to complete its scheduled mission. D-C electrical power is provided by three fuel cell power plants, two SM jettison controller batteries located in the service module, and five batteries (2 pyro and 3 entry) located in the command module. A-C electrical power is provided by one or two of the three inverters located in the lower equipment bay of the command module. Controls and displays for the EPS are positioned in the command module near the astronaut responsible for controlling and monitoring the system. The EPS can be divided into four subsystems as follows:

- Energy storage: cryogenic storage; pyrotechnic, entry, and S/M jettison controller batteries
- Power generation: fuel cell power plants
- Power conversion: solid state inverters, battery charger
- Power distribution: d-c power distribution, a-c power distribution, sensing circuits, controls and displays.

2.6.2 FUNCTIONAL DESCRIPTION.

2.6.2.1 Energy Storage.

The primary source of energy for the EPS is provided by the cryogenic storage system. There are two hydrogen (fuel) and two oxygen (oxidizer) cryogenic storage tanks. Each tank has its associated controls, heaters, and fans designed to give, in an automatic mode, a single-phase reactant to its load throughout the tank-density range, when operating at normal pressures.

A secondary source of energy storage is provided by batteries. Various batteries supply sequencer logic and pyro power at all times, supplemental d-c power for high-peak loads, and all electrical power required during the entry and post-landing phases after CSM separation.

2.6.2.2 Power Generation.

Three Bacon-type fuel cell power plants in the service module generate the d-c power required for spacecraft systems. The fuel cell power plants are activated prior to launch and operate continuously throughout the mission until CSM separation. Normally, fuel cell power plant 1 is connected to main d-c bus A, power plant 2 is connected to main d-c bus B, and power plant 3 is connected to both main d-c bus A and B. However, the capability is provided to also connect fuel cell power plant 1 to main d-c bus B, and fuel cell power plant 2 to main d-c bus A.

Each fuel cell is rated to produce 29±2 volts dc between 563 and 1420 watts of power. Two fuel cell power plants are capable of providing the normal power requirements of all spacecraft systems. If two fuel cell power plants malfunction, some of the electrical components must be shut down to conserve power, and the remaining power plant, with battery backup, will supply sufficient power to carry the load and ensure successful mission termination. One fuel cell and one battery can provide maximum power required by mission burns, if the cryogenics are available and if fuel cell temperature is above 425°F.

2.6.2.3 Power Conversion.

Primary d-c power is converted into a-c power by solid-state inverters. The inverters provide 115-volt 400-cps 3-phase a-c power up to 1250 volt-amperes each. The a-c power is connected to the two a-c buses which supply power to a-c loads. During normal operation, one inverter will power both a-c buses while the two remaining inverters act as redundant sources. For peak loads, which occur during boost, and during delta V maneuvers, each a-c bus will be powered by a separate inverter. In case of an a-c or d-c bus failure, the inverters and remaining bus can be isolated. Inverter switching circuits prevent paralleling two inverters on one bus, but simultaneous operation of two inverters is possible if each is connected to a separate bus. A phase synchronizing unit provides for in-phase power when a separate inverter is powering each bus.

The battery charger is a secondary power conversion unit, which is used to keep entry batteries charged. The charger is a solid-state device converting a-c power from the inverters and using d-c power from the fuel cells to provide charging voltage.

2.6.2.4 Power Distribution.

Distribution of primary d-c power is accomplished by two redundant d-c buses in the command module. Additional buses consist of a separate nonessential bus for servicing nonessential loads, a battery relay bus for power distribution switching, two battery buses, and a flight and postlanding bus to service certain communications and the postlanding circuitrs. A-C power is distributed by two redundant a-c buses.

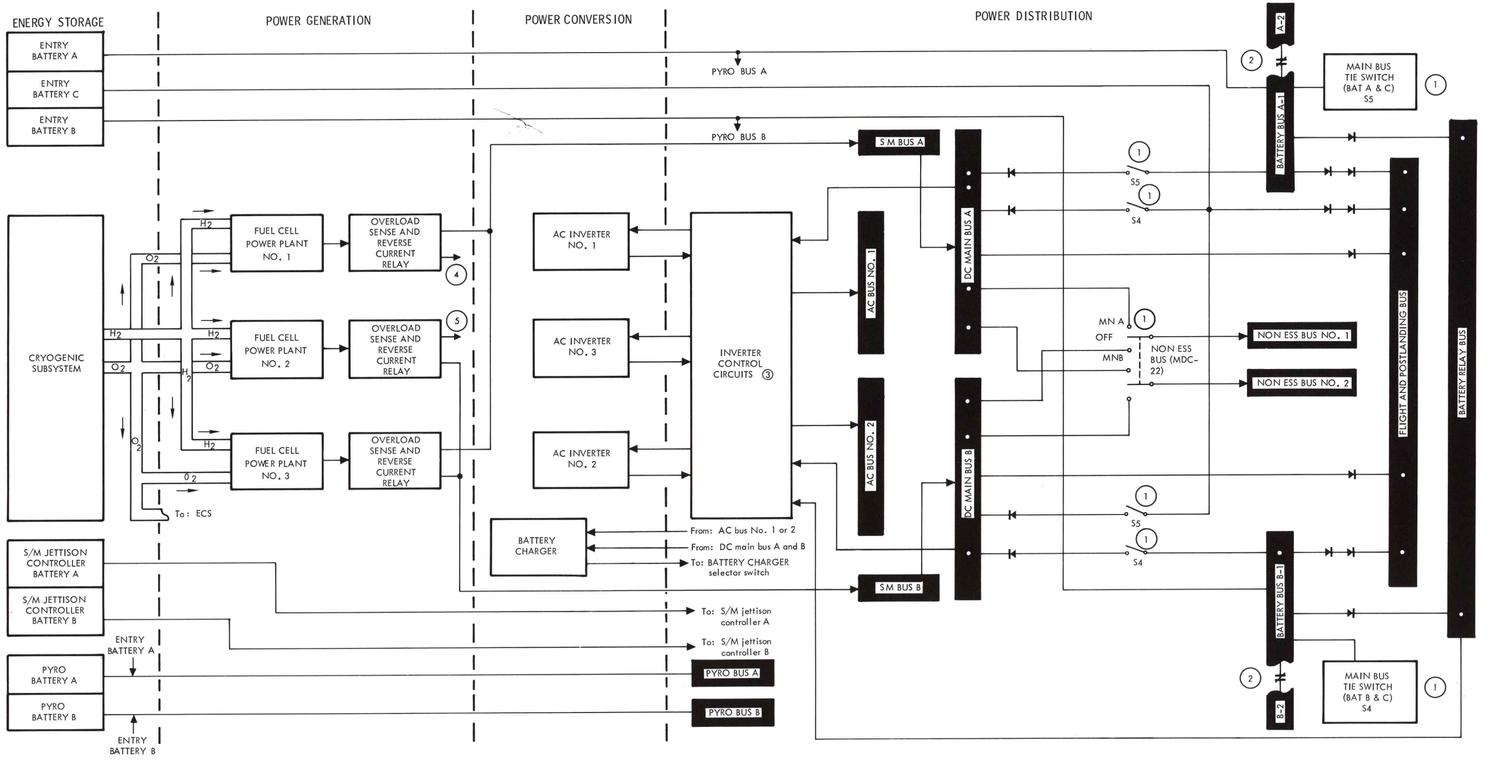

Figure 2.6-1. Electrical Power System Block Diagram

EPS

2.6.3 MAJOR COMPONENT/SUBSYSTEM DESCRIPTION.

2.6.3.1 Cryogenic Storage

The cryogenic storage system (figure 2.6-2) supplies oxygen and hydrogen reactants to the spacecraft. Hydrogen is supplied to both the EPS and oxygen is supplied to both the EPS and ECS. The design functions of the two storage systems are identical. The physical data of the cryogenic storage are as follows:

Tank Number	Weight of Useable Cryogenics (lb)	Flow Rate at Minimum dq/dm (lb/hr)	Design Storage Pressure (psia)	Minimum Allowable Operating Pressure (psia)	Approximate Tank Quantity at Minimum Heater and Fan Cycling (lb)
L012	320	0.676	900±35	150	160 to 96
XTA 0006	320	0.713	900±35	150	160 to 96
LH 23	28	0.070	245±15, -20	100	11.2 to 7
LH 25	28	0.066	245+15, -20	100	11.2 to 7

EPS

The automatic control mode is designed to give a single-phase reactant flow into the F/C and ECS feedlines at design pressures. This control is achieved, in effect, by controlling the heat transfer within the system. The heat required to maintain constant pressure varies with density. Fill density for oxygen is a little above 70 lbs/ft^3. As depletion proceeds from 70 lbs/ft^3 to approximately 45 lbs/ft^3, the cycling of the fans and heaters for repressurization will extend until they automatically deactivate at the approximate 45-lbs/ft^3 region. With the system in automatic operation, the tank quantities should remain within 15 pounds of each other for oxygen and within one pound difference for hydrogen. The pressure switches activating the heaters and fans are in series. The oxygen switches activate when pressure drops to 865 psia in both tanks. They deactivate when pressure reaches 935 psia in one of the tanks. Maintaining the design pressures permits depletion to follow predictable tank densities and respective heat requirements.

When the systems reach the point where the heater and fans cycling is at a minimum, the heat leak of the tank becomes sufficient to maintain design pressures, provided flow is within minimum dq/dm values as shown in the preceding tabulation. This realm of operation is referred to as being in the minimum dq/dm region. The minimum dq/dm point for oxygen is 23.5 lbs/ft^3 at the nominal operating pressure of 900 psia. The value for hydrogen is 1.87 lbs/ft^3 at 245 psia. The heat required for densities less than the above rises abruptly for both oxygen and hydrogen. The intrinsic flow output of the systems is a maximum at the point where minimum heat is required to maintain pressure.

The time-rate of arriving at the minimum dq/dm point is dependent on load demands, tank pressure and reactant temperature. With design pressures in the tanks, single-phase reactant is available independent of downstream system transfer. Minimum heater and fan cycling will occur when oxygen quantities are between approximately 160 and 96 pounds per tank, and H_2 quantities are between approximately 11.2 and 7 pounds per tank.

The manual mode of operation simply bypasses the pressure switches. It can be used in case of control failure or when operating with quantity unbalanced depletion. To avoid excessive temperatures, a thermal sensitive interlock device is in series with each heater element in the oxygen and hydrogen tanks. These open the heater circuits when internal temperatures reach 80°F, and close when temperatures decrease to 70°F tank pressures and quantities are monitored on meters located on MDC-13. Oxygen tank relief valves initially vent at 998 psia and reseat at 985 psia. Hydrogen relief values vent at 288 psia and reseat at 283 psia. The C/W system will alarm when oxygen pressure in either tank exceeds 950 psia or goes below 800 psia. The hydrogen system alarms the C/W system when pressure in either tank exceeds 270 psia or goes below 220 psia.

Individual tank pressures, quantities, and reactant temperatures are telemetered to MSFN.

2.6.3.2 Batteries.

A total of seven silver oxide-zinc storage batteries are incorporated in the EPS. Five of these batteries are located in the C/M lower equipment bay, the other two in sector IV of the S/M.

Three entry batteries (A, B, and C) provide the primary source of power after CSM separation and during postlanding operations. Prior to CSM separation, the entry batteries provide a secondary source of power while the fuel cells provide the primary source. The entry batteries are used for the following purposes:

- Provide C/M power after CSM separation
- Supplement fuel cell power during peak load periods (SPS gimbal motor operation)
- Provide power during emergency operations (failure of two fuel cells)
- Provide power for EPS control circuitry (relays, indicators, etc.)
- Provide sequential logic power.
- Provide power for recovery aids during postlanding phase.
- Batteries A and B can power pyro circuits upon selection.

The entry batteries can be recharged in flight.

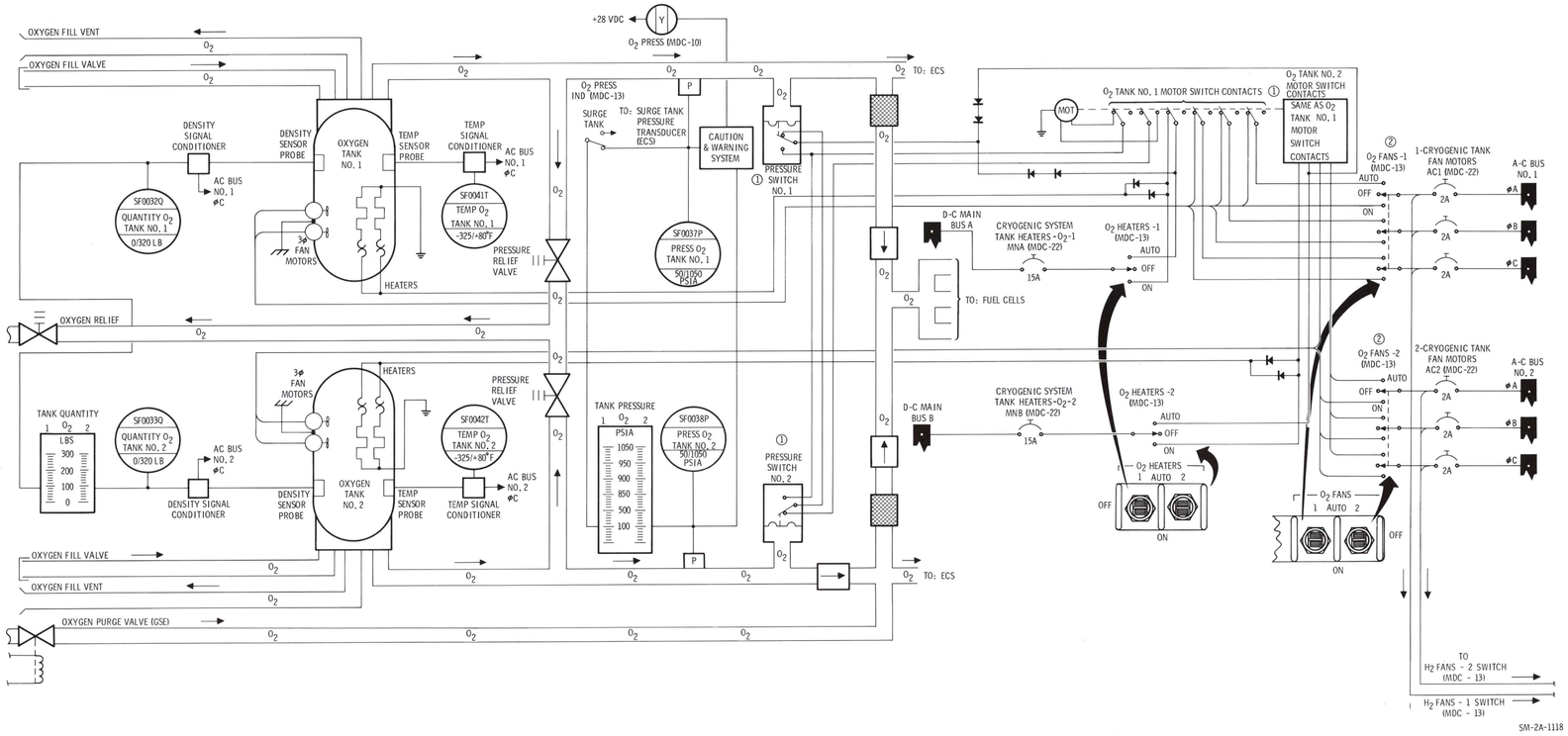

Figure 2.6-2. Cryogenic Storage Subsystem (Sheet 1 of 2)

EPS

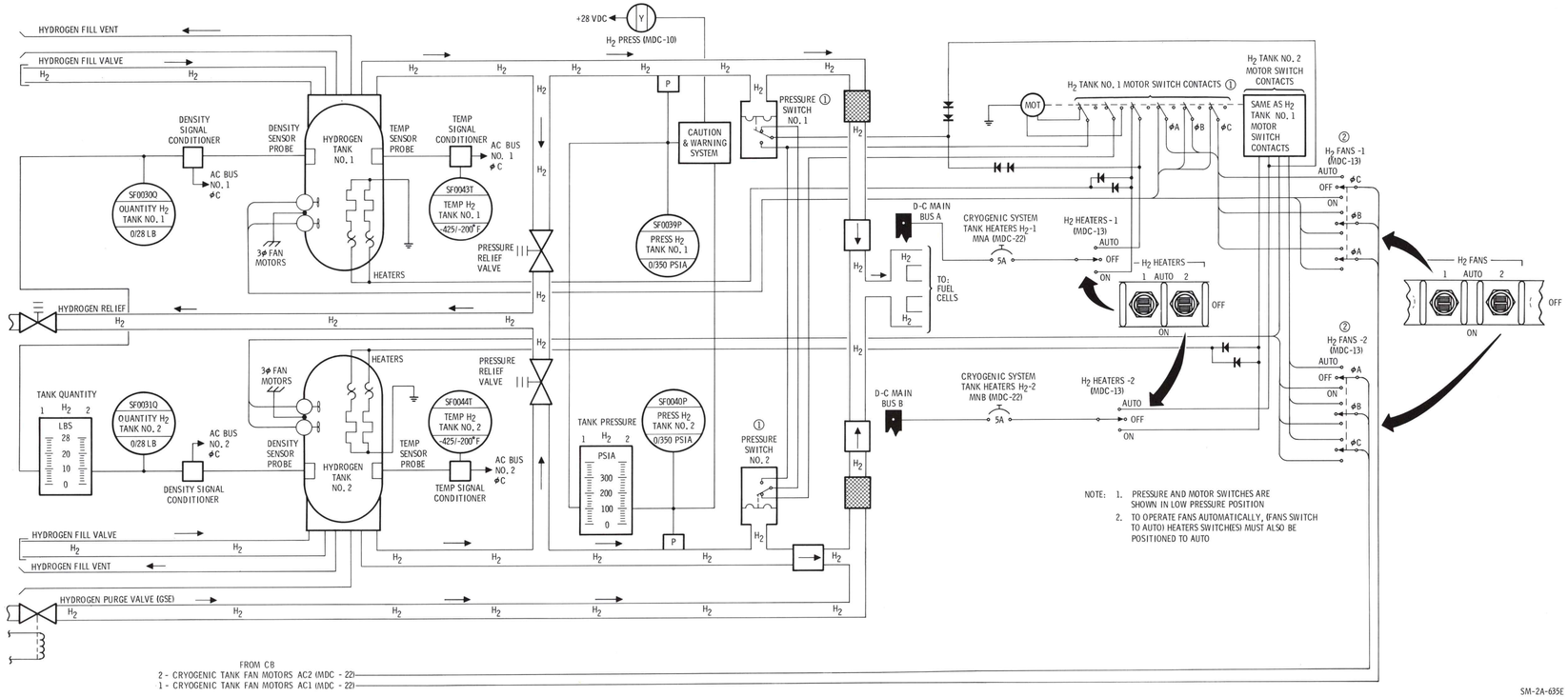

Figure 2.6-2. Cryogenic Storage Subsystem (Sheet 2 of 2)

Each entry battery is mounted within a vented plastic case. The battery cells are individually encased in plastic containers which contain relief valves that open at 40±10 psig, venting pressure and hydrogen gas into the battery case. Each battery case is vented overboard through a manifold leading to a manually operated valve (BATTERY VENT VALVE), which is connected to the ECS dump line. With the valve at its normal position of VENT, the battery cases are vented overboard through the ECS urine/water dump line. In a failure mode, this would prevent hydrogen gas from entering the C/M crew compartment. With the battery vent valve closed, which would be the position after fracture of a battery case, the possibility exists for pressure buildup in the battery manifold due to outgassing of the batteries. The vent valve will be opened at pressures slightly below C/M pressure and allow the built up pressure to vent overboard. Battery manifold pressure can be monitored using the auxiliary DC VOLTS meter, located on panel 200 in the RHFEB, and is telemetered.

The two pyrotechnic batteries supply power to initiate ordnance devices in the S/C. The pyrotechnic batteries are isolated from the rest of the EPS to prevent the high power surges in the pyrotechnic system from affecting the EPS, and to ensure source power when required. These batteries shall not be recharged in flight. Entry battery A or B can be used as a redundant source of power for initiating pyro circuits in the respective A or B pyro system, if either pyro battery fails.

The two S/M jettison controller batteries, located in the S/M, supply power to the two jettison sequencers to sustain the S/M RCS retrofire during CSM separation, as well as firing the S/M positive roll RCS engines 2 seconds after separation. These batteries are isolated from the rest of the EPS and cannot be recharged or monitored in flight.

Performance characteristics of each S/C battery are as follows:

Battery	Capacity per Battery	No. of Cells per Battery	Open Circuit Voltage (Max.)	Nominal Voltage	Minimum Voltage	Ambient Battery Temperature
Entry A, B, and C (3)	40-amp-hrs (25 ampere rate)	20	37.8 vdc (37.2 vdc in flight)	29.0 vdc (35 amps load)	27.0 vdc (35 amps load)	50° to 110°F
Pyro A and B (2)	75 amps for 36 seconds	20	37.8 vdc (37.2 vdc in flight)	23.0 vdc (75 amps load)	20.0 vdc (75 amps load) (35.0 vdc open circuit)	60° to 110°F

SYSTEMS DATA

Battery	Capacity per Battery	No. of Cells per Battery	Open Circuit Voltage (Max.)	Nominal Voltage	Minimum Voltage	Ambient Battery Temperature
S/M jettison controller A and B (2)	75 amps for 36 seconds	20	37.8 vdc (not measured in S/C or by telemetry)	23.0 vdc (75 amps load)	20.0 vdc (75 amps load)	60° to 110°F

NOTE Pyro battery load voltage is not measurable in the S/C due to the extremely short time they power pyro loads.

2.6.3.3 Fuel Cell Power Plants.

Each fuel cell power plant consists of 31 single cells connected in series and an accessory section. Each single cell generates approximately one volt. The accessory section consists of a nitrogen pressurization system, an oxygen feed, a hydrogen feed, a primary (hydrogen) loop, and a secondary (glycol) loop (figure 2.6-3). The primary and secondary loops control the temperature within the fuel cell power plant. The primary loop also extracts potable water from the power plant for use by the crew. The secondary loop radiates heat from the power plant into space through radiators located on the exterior of the S/M.

The nitrogen system establishes a reference pressure in the fuel cell. There is approximately 0.44 pounds of nitrogen contained in the nitrogen tank under a pressure of 1500 psia. The nitrogen regulator reduces this pressure to 52 psia, which is used to pressurize the glycol accumulator, the electrolyte (KOH) in the cells, and as a reference pressure for the oxygen and hydrogen regulators.

Oxygen, stored in a cryogenic state at a pressure of 900±35 psia, is supplied to the fuel cell power plants. Due to the low flow rate, the oxygen absorbs heat while flowing through the lines, absorbs additional heat in the preheater, flows to the oxygen regulator, and reaches the fuel cell power plants in a gaseous form at temperatures above 100°F. The regulator is designed to maintain a pressure differential of 10.5 psia above the nitrogen pressure, supplying the oxygen to the fuel cell at a nominal 62.5 psia. The oxygen in the system is approximately 99.99 percent pure. Over a period of time, the impurities accumulate in the reactant compartment and decrease fuel cell efficiency. This is noted by a drop in fuel cell performance. To eliminate the impurities, the fuel cell is purged. Nominally, a fuel cell will be purged every 24 hours, however, the actual purge cycle will be determined by the predicted mission power profile and the purity of the reactant as it is calculated after completion of S/C cryogenic tank fill.

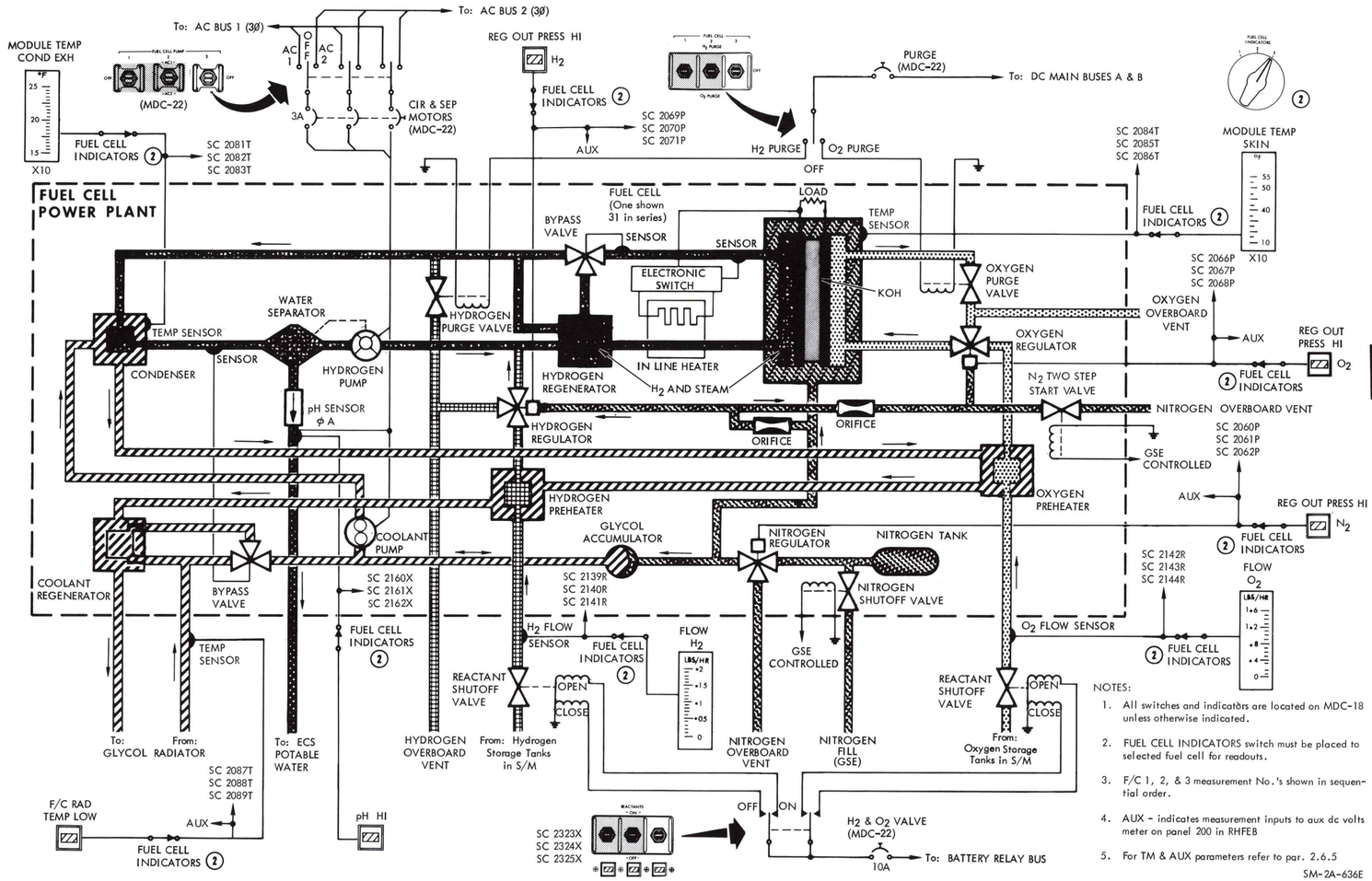

NOTES:

1. All switches and indicators are located on MDC-18 unless otherwise indicated.
2. FUEL CELL INDICATORS switch must be placed to selected fuel cell for readouts.
3. F/C 1, 2, & 3 measurement No.'s shown in sequential order.
4. AUX - indicates measurement inputs to aux dc volts meter on panel 200 in RHFEB
5. For TM & AUX parameters refer to par. 2.6.5

SM-2A-636E

Figure 2.6-3. Fuel Cell Power Plant Flow Diagram

Time required for oxygen purge is 2 minutes for each power plant. Activating the oxygen purge valve allows an additional flow of up to 0.6 lb/hr. An emergency purge can be performed if steady-state current output of a power plant decreases by approximately 3 amps. Power plant parameters must be considered to determine if an emergency purge is required.

Hydrogen, stored in a cryogenic state at a pressure of 245 +15 -20 psia and regulated down to a pressure of 60.5 psia, flows into the hydrogen regenerator loop, passing through an in-line heater and into the fuel cell. The in-line heater is an automatic device which aids the fuel cell power plant in sustaining operating temperature at low power operating levels. The hydrogen, or primary regenerator loop, is used for fuel cell thermal control and permits water removal from the fuel cell. The heat generated by the reaction is transferred to the saturated hydrogen fluid. The hot, saturated hydrogen is drawn into the hydrogen exhaust line by the hydrogen pump. A sensor in this line provides an input to an electronic switch which controls activation of the hydrogen in-line heater. Activation of this heater is accomplished automatically at a hydrogen exhaust temperature of 385±5°F., supplying additional heat to hydrogen gas flowing to the fuel cell power plant. The in-line heater is automatically deactivated at a temperature of 390±5°F. After passing the in-line heater sensor, the hydrogen and superheated steam flows to a bypass sensor control valve. This valve controls the amount of exhaust gas flowing through the hydrogen regenerator. The sensor closes the bypass valve at 425°F, allowing all the exhaust gas to flow through the regenerator. This heats the returning hydrogen and sustains operating temperature of the fuel cell. With the bypass valve in a full regenerative position (425 degree or lower), if fuel cell power plant temperature continues to decrease, the in-line heater will be activated to supply additional heat. If power plant temperature is above 425°F, the sensor causes the bypass valve to open proportionately (fully open at 495°F), allowing exhaust gas to flow directly to the condensor. A transfer of heat from the hydrogen and steam to the glycol takes place in the condensor. The temperature of the hydrogen and steam is lowered to between 155° and 175°F, thus, liquifying some of the water vapor. A sensor in the condensor exhaust controls a glycol regenerator bypass valve in the glycol radiator return line which regulates the temperature of the glycol. This, in turn, helps control fuel cell temperature and maintains the temperature of the condenser exhaust within the desired range of 155° to 175°F. The liquid water and hydrogen then flows through a centrifugal water separator pump which extracts the water and delivers it to the ECS potable water storage tank in the C/M. The amount of water produced by each fuel cell is in direct relation to the reactants consumed, which is related to power output. (See figure 2.6-4). The hydrogen pump circulates the remaining slightly moist fluid through the regenerator and back to the fuel cell. In order to maintain the desired ratio of water to KOH in the fuel cell, the condensor exhaust temperature is regulated at a level so that some of the moisture is left in the returning hydrogen as it flows back into the cell. The hydrogen in the cryogenics system is approximately 99.94 percent pure. Hydrogen purge valve activation

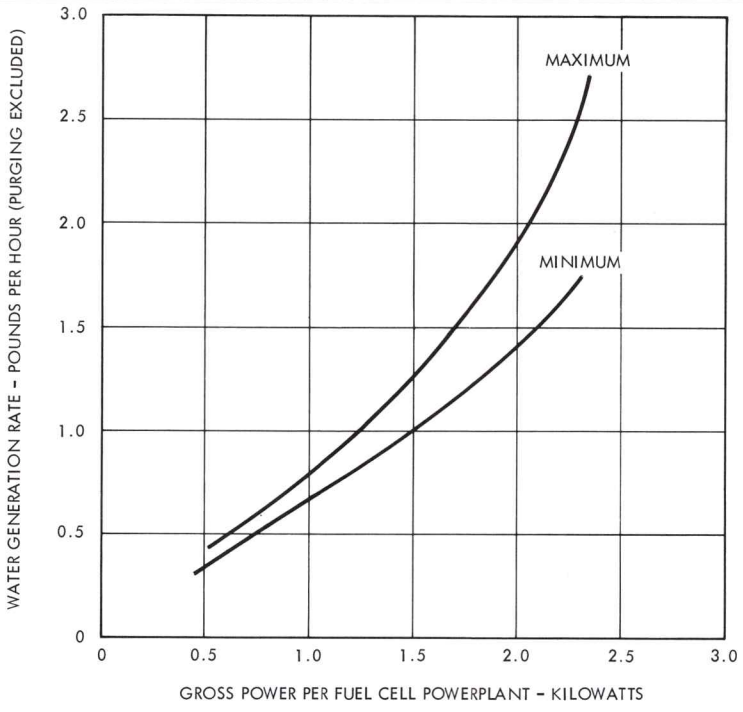

Figure 2.6-4. Water Production Rate vs Power Output

allows an additional flow of up to 0.75 lb/hr, and will be performed for a period of 80 seconds per power plant every 24 hours. The actual hydrogen purge cycle will also depend on the predicted power profile and reactant purity as calculated after cryogenic tank fill. The performance degradation participation by the hydrogen electrode is negligible and cannot be seen with on-board instrumentation (with normal degradation). If degradation is suspected to remain after an emergency oxygen purge, a purge of hydrogen may be warranted. There is some indication that periodic hydrogen purging may be eliminated altogether, thereby, only performing the degradation purge whenever it may be required. Some time prior to hydrogen purging, the H_2 PURGE LINE HTR switch (MDC-15) is placed in the UP position to energize the hydrogen fuel cell vent line heater and preclude any freezing of the moist exhaust gas in the vent line.

The secondary loop contains a 62.5 to 37.5 mixture of ethylene glycol and water, respectively. This loop serves to preheat the reactants and to transport waste heat to the space radiators. An accumulator, pressurized by the nitrogen, pressurizes the glycol loop and also acts as a buffer for the expansion and contraction of the coolant as it varies in temperature. Glycol flow through the regenerator is controlled by a bypass valve which operates in conjunction with the condenser exhaust sensor. When the condenser exhaust is at 155°F, the glycol is routed through the regenerator to increase glycol temperature and effect minimum heat transfer in the condenser. The glycol bypass valve is completely open at a condenser exhaust temperature

of 175°F, routing the glycol through the pump to the condenser and on to the oxygen and hydrogen preheaters. Since the glycol temperature is lower, a maximum transfer of heat in the condenser lowers the condenser exhaust temperature. The condenser exhaust temperature sensor regulates coolant temperature, which affects the amount of water removed from the fuel cell. The 155° to 175°F operating range will best maintain the desired ratio of water to KOH in the fuel cell.

A 400-cps, 3-phase a-c gear pump maintains glycol flow at the rate of 35 to 80 lb/hr, raising the pressure 6 psi. After the oxygen and hydrogen preheaters, the glycol is routed through the glycol regenerator and to the space radiators, where heat is radiated into the space environment.

Each fuel cell contains electrolyte (KOH) which consists by weight of 83 percent potassium hydroxide and 17 percent water on initial fill, and has a critical temperature of 300°F (figure 2.6-5). The electrolyte remains a solid to an approximate temperature of 220°F; with a temperature increase to 300°F, the electrolyte becomes a liquid and the fuel cell electrochemical reaction becomes effective. Bringing the fuel cell to critical temperature is accomplished using GSE, and cannot be performed from S/C power sources. Placing a load on the power plant will maintain it above the critical temperature.

EPS

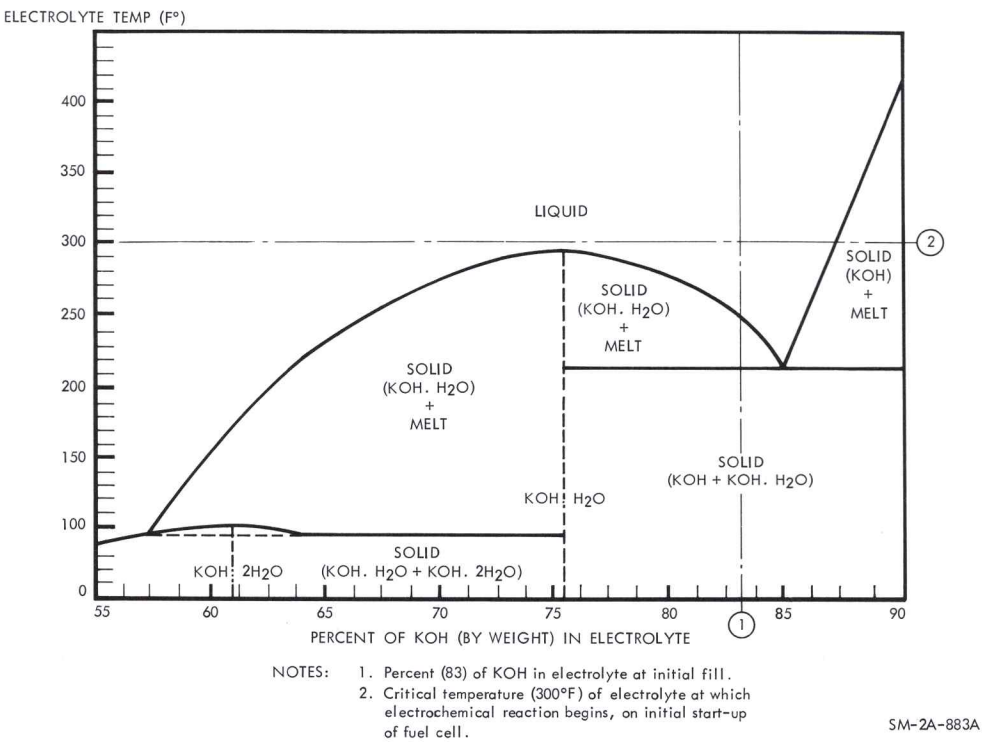

Figure 2.6-5. KOH H_2O Phase Diagram

2.6.3.4 Inverters.

Each inverter (figure 2.6-6) is composed of a clock oscillator, an eight-stage digital countdown section, a d-c line filter, two silicon-controlled rectifiers, a magnetic amplifier, a buck-boost amplifier, a demodulator, two d-c filters, an eight-stage power inversion section, a harmonic neutralization transformer, an a-c output filter, current sensing transformers, a Zener diode reference bridge, a low-voltage control, and an overcurrent trip circuit. The inverter normally uses a 6.4-kc square wave synchronizing signal from the central timing equipment (CTE) which maintains inverter output at 400±2 cps. If this external signal is completely lost, the oscillator within the inverter will provide pulses that will maintain inverter output within ±7 cps. The internal oscillator is normally synchronized by the external pulse, which is provided through the phase synchronizing unit. The following paragraphs describe the function of the various stages of the inverter.

The 6.4-kc square wave provided by the central timing equipment is applied through the phase synchronizer and the oscillator to the eight-stage digital countdown section. The oscillator has two divider circuits which provide a 1600-pps signal to the magnetic amplifier and two silicon-controlled rectifiers.

The eight-stage digital countdown section uses the 6.4-kc square wave signal to produce a series of 400-cycle square waves, each mutually displaced one pulse time from the preceding and following wave. One pulse time is 156 microseconds, and represents 22.5 electrical degrees. This series of square waves is applied to the eight-stage power inversion section.

The eight-stage power inversion section, using a controlled voltage from the buck-boost amplifier, amplifies the series of 400-cycle square waves produced by the eight-stage digital countdown section. The amplified square waves, still mutually displaed 22.5 electrical degrees, are applied to the harmonic neutralization transfomer, which is described in a subsequent paragraph.

D-C power to the inverter is supplied from the main d-c buses through the d-c line filter. This filter reduces the high frequency ripple in the input, and the 25 to 30 vdc is applied to the silicon-controller rectifiers and buck-boost amplifier.

The silicon-controlled rectifiers, using the filtered d-c power and the 1600-pps signal from the clock oscillator, produce a d-c square wave with an on-time of greater than 90 degrees from each rectifier. This is filtered and supplied to the buck-boost amplifier where it is coupled with the amplified 1600-pps output of the magnetic amplifier to develop a filtered 35 volts dc which is used for amplification in the power inversion stages.

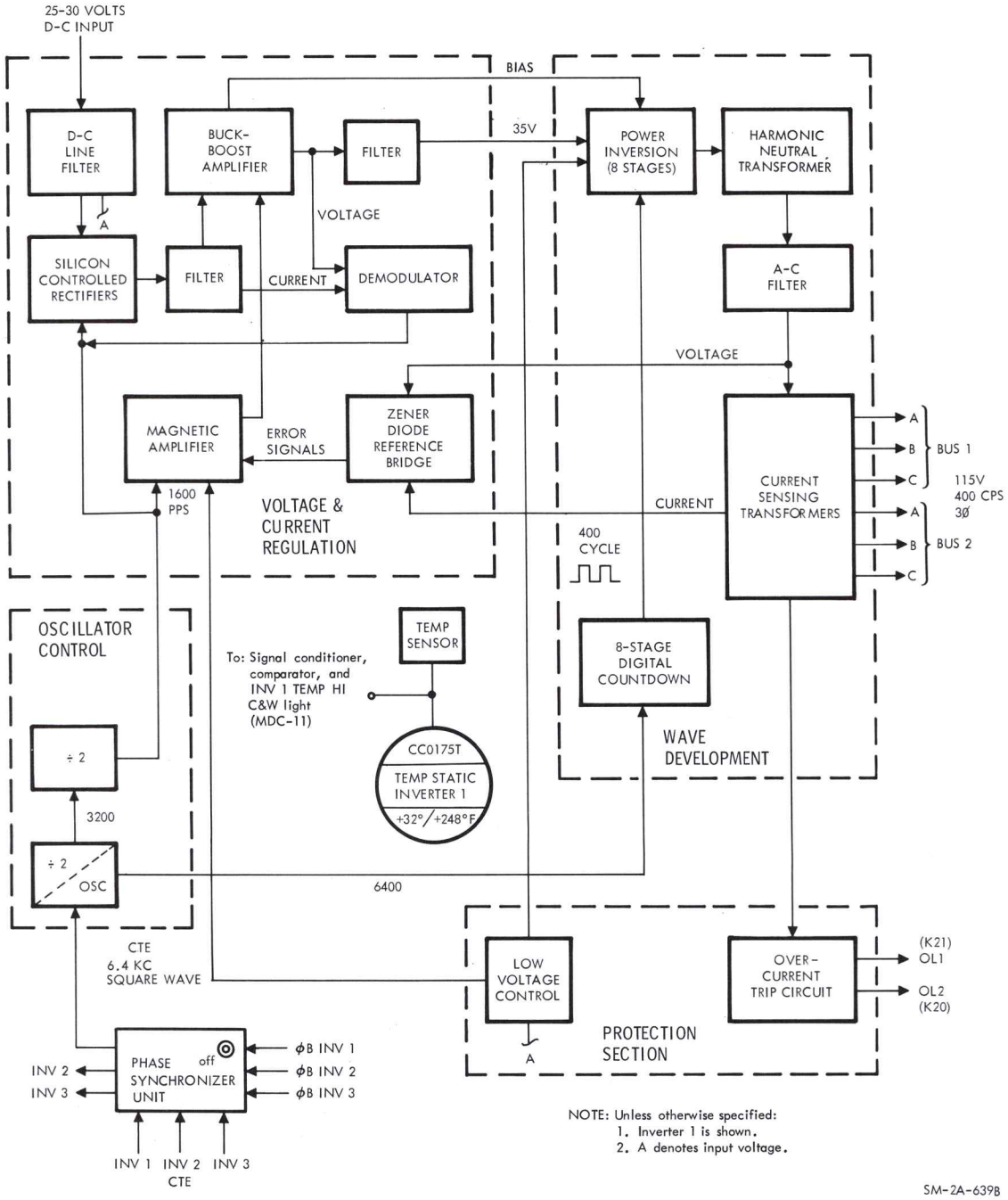

Figure 2.6-6. Inverter Block Diagram

EPS

The buck-boost amplifier, using the 1600-pps signal from the magnetic amplifier, the filtered d-c power from the main d-c buses, and an error signal feedback from the Zener diode reference bridge, provides a variable bias voltage to the eight-stage power inversion section. The amplitude of this voltage is controlled by the amplitude and phase of the feedback signal from the Zener diode reference bridge. This bias signal is varied by the error signal to regulate inverter voltage and current output.

The demodulator compensates for any low-frequency ripple in the d-c input to the inverter. The high-frequency ripple is attenuated by the filters. The demodulator senses the 35-volt d-c output of the buck-boost amplifier and the current input to the buck-boost amplifier. It will compensate for ripple in the 10- to 1000-cps range. An input voltage drop or increase will be reflected in a drop or increase in the 35-volt d-c output of the buck-boost amplifier as well as a drop or increase in current input to the buck-boost amplifier. A sensed decrease in the buck-boost amplifier voltage output would be compensated for by a demodulator output, transformer coupled, to the silicon-controlled rectifiers, causing them to conduct for a longer time, thus increasing their filtered output. A sensed increase in buck-boost amplifier voltage output, caused by an increase in the d-c input to the inverter, would cause the demodulator to produce a signal causing the silicon-controlled rectifiers to conduct for shorter periods, producing a lower filtered output to the buck-boost amplifier. In this fashion, the 35-volt d-c input to the power inversion section is maintained at a relatively constant level.

The low-voltage control samples the input voltage to the inverter and can terminate inverter operation. Since the buck-boost amplifier provides a boost action during a decrease in input voltage to the inverter in an attempt to maintain a constant 35 volts dc to the power inversion section, the high boost required during a low-voltage input would tend to overheat the buck-boost amplifier. As a precautionary measure, the low-voltage control will terminate inverter operation by disconnecting operating voltage to the magnetic amplifier and the power inversion stages when input voltage decreases to between 16 and 19 volts dc.

The harmonic neutralization section, using the 400-cycle, square-wave output of the eight-stage power inversion section, transforms it into a 3-phase 400-cycle 115-volt signal. The manner in which these transformers are wound produces flux cancellation which eliminates all harmonics up to and including the fifteenth of the fundamental frequency. The 22.5 electrical degree displacement of the square wave provides a means of electrically rotating the square wave excited primary windings around the 3-phase, wye-connected, secondary windings, thus producing the 3-phase 400-cycle output. This 115-volt signal is then applied to the a-c output filter.

The a-c output filter eliminates the remaining higher harmonics. Since the lower harmonics were eliminated by the harmonic neutralization section, the size and weight of this output filter was reduced. Circuitry in

this filter also produces a rectified signal which is applied to the Zener diode reference bridge. The amplitude of this signal is a function of the amplitude of a-c output voltage. After filtering, the 3-phase 115-volt a-c 400-cycle sine wave is applied to the a-c buses through current-sensing transformers.

The current-sensing transformer section produces a rectified signal, the amplitude of which is a direct fuction of inverter output current magnitude. This d-c signal is applied to the Zener diode reference bridge to regulate inverter current output. It is also applied to an overcurrent trip circuit.

The Zener diode reference bridge receives a rectified d-c signal, representing voltage output, from the circuitry in the a-c output filter. A variance in voltage output unbalances the bridge providing an error signal of proper polarity and magnitude to the buck-boost amplifier via the magnetic amplifier. When inverter current output reaches 200 to 250 percent of rated current, the rectified signal applied to the bridge from the current sensing transformers is of sufficient magnitude to provide an error signal and cause the buck-boost amplifier to operate in the same manner as during an overvoltage condition. The bias output of the buck-boost amplifier, being controlled by the error signal, will be varied to correct for any variation in inverter voltage or current output. When inverter current output reaches 250 percent of rated current, the overcurrent trip circuit is activated.

The overcurrent trip circuit monitors a rectified d-c signal representing current output. When total inverter current output exceeds 250 percent of rated current, this circuit will effect an inverter disconnect in 15±5 seconds. If current output of any single phase exceeds 300 percent of rated current, this circuit will effect an inverter disconnect in 5±1 seconds.

A phase synchronizer unit (PSU) located in the RHEB (Panel 208) establishes inverter outputs so they are in phase when using a separate inverter on each of the two a-c buses. The two-inverter configuration is prevelant during delta V's as a safety precaution in case of a single failure in thrust vector control.

The use of two inverters during delta V's retains redundancy in the stabilization and control subsystem, since power through a-c bus 1 is used for automatic thrust vector control and power through a-c bus 2 is used for manual thrust vector control.

Central timing equipment (CTE) trigger pulses, used for inverter operation, are supplied to the inverters through the PSU. The PSU samples ØB from each inverter output, and when an in-phase relationship is established, supplies the 6400 cps CTE trigger pulse to the inverters being used.

The in-phase relationship is acquired by initially providing out-of-phase trigger pulses (6080 to 6400 cps) until the two inverters are synchronized at which time the CTE signal is coupled to the inverters. Phase lock, with a maximum displacement of ±10 degrees, is acquired in a maximum of 2 seconds.

The synchronizer provides this function for any combination of pairs of the three available inverters. A switch on the PSU allows for direct input of CTE signals to the inverters in the event of failure of the synchronizer unit. However, in this situation, the in-phase relationship would not be realized.

A temperature sensor with a range of +32° to +248°F is installed in each inverter to provide MSFN the capability of monitoring inverter temperature. It also provides an input to the C&WS which will illuminate a light at an inverter overtemperature of 226°F.

2.6.3.5 Battery Charger.

A constant voltage, solid-state battery charger (figure 2.6-7), located in the C/M lower equipment bay, is incorporated into the EPS. The BATTERY CHARGER selector switch (MDC-18) controls power input to the charger, as well as connecting the charger output to the selected battery (figure 2.6-11). When the BATTERY CHARGER selector switch is positioned to entry battery A, B, or C, a relay (K4) is activated, completing circuits from a-c and d-c power sources to the battery charger. Also, the battery charger output is connected to the selected battery to be charged through the MAIN BUS TIE switches (MDC-22). Positioning the MAIN BUS TIE switch (A and C or B and C) to OFF for the selected battery will disconnect main bus loads from the batteries and also complete the circuit from the charger to the battery. Only one battery can be charged at a time.

The battery charger uses 25 to 30 volts dc from the main d-c buses and 115-volts, 400-cps, 3-phase ac from either of the a-c buses. All three phases of ac are used to boost the 25 to 30-volt d-c input to produce 40 volts d-c for charging. In addition, phase A of the a-c is used to supply power for the rest of the charger circuitry. The logic network in the charger, which consists of a two-stage differential amplifier (comparator), a two-stage Schmitt trigger, a current sensing resistor, and a voltage amplifier will set up the initial condition for operation. The first stage of the comparator is in the on mode, with the second stage in the off-mode, placing the Schmitt trigger first stage in the on mode with the second stage off. This condition provides maximum base drive to the current amplifier which turns the switching transistor to the on mode. With the switching transistor on, current flows from the transformer rectifier through the switching transistor, current sensing resistor, and switch choke to the battery being charged. As current flow increases, the voltage drop across the sensing resistor increases. The voltage across the sensing resistor builds to a level which turns the first stage of the comparator to the off mode and the second

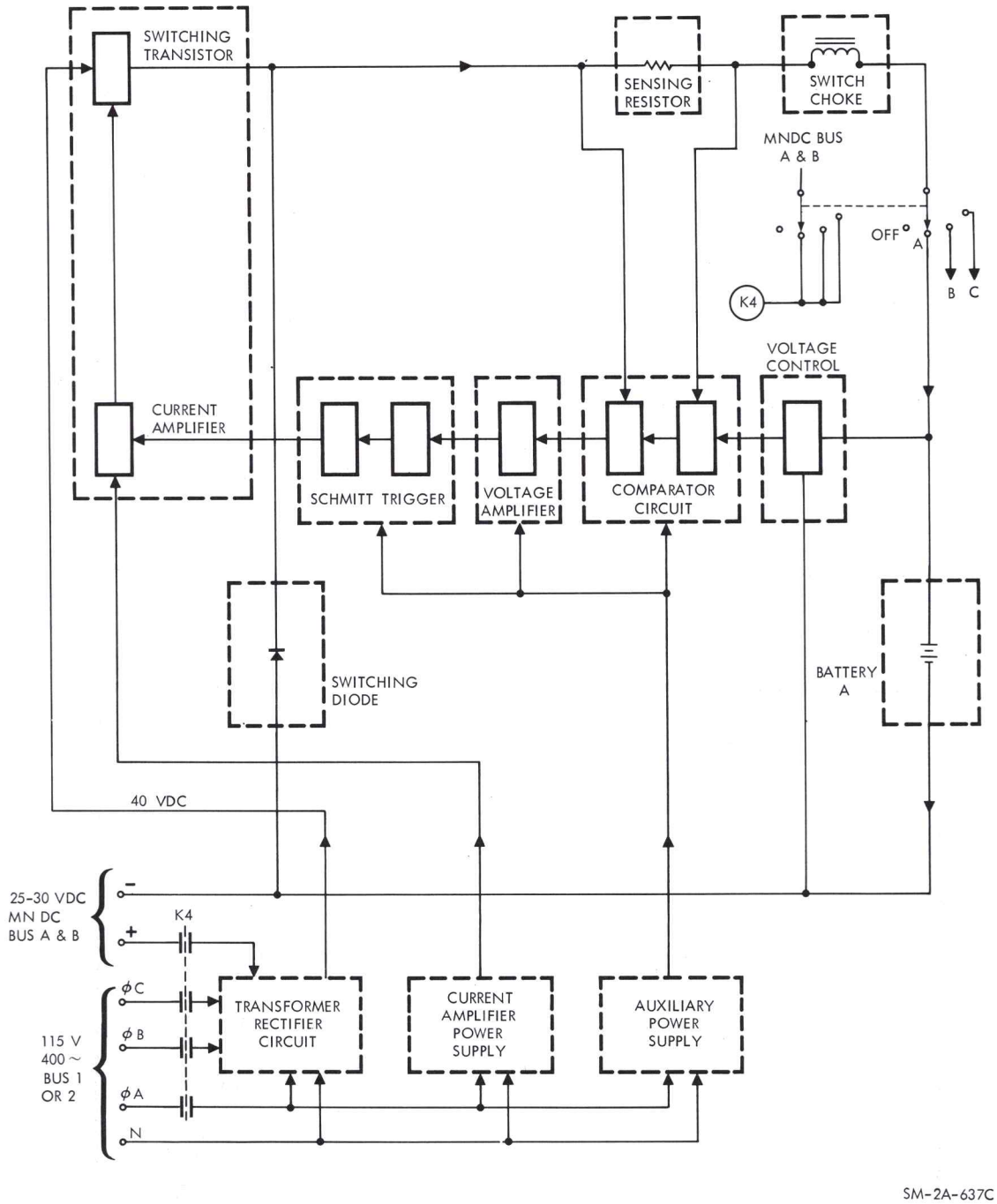

Figure 2.6-7. Battery Charger Block Diagram

EPS

stage to the on mode. This condition turns off the voltage amplifier which reverses the operation of the Schmitt trigger to first stage off and second stage on. This places the current amplifier off, which turns off the switching transistor. The switching transistor in the off mode will stop current flow from the power source, causing the field in the choke to continue collapsing and discharging into the battery then through the switching diode and the current sensing resistor. As the EMF in the choke decreases, the current through the sensing resistor decreases, reducing the voltage drop across the resistor. At some point, the decrease in voltage drop across the sensing resistor, reverses the operation of the comparator circuit, setting up the initial condition and completing one cycle of operation. The output load current, due to the action of the choke, remains relatively constant except for the small variation through the sensing resistor. This variation is required to switch the switching transistor and Schmitt trigger through the action of the comparator.

Battery charger output is regulated by the sensing resistor until the battery voltage reaches approximately 36 volts. At this time, the voltage control network is activated and, in conjunction with the sensing resistor, provides a signal for cycling the battery charger. As the battery voltage increases, the internal impedance of the battery increases, decreasing current flow from the charger. At 39 volts, the battery is fully charged and current flow becomes negligible. (See figure 2.6-8) Battery charger disconnect will be effected at a current output of approximately 0.6 amps. Battery input will be monitored by MSFN through the normal battery telemetry measurement. "BAT RLY BUS - BAT A or BAT B circuit breaker (MDC-22) must be opened when charging the respective A or B battery.

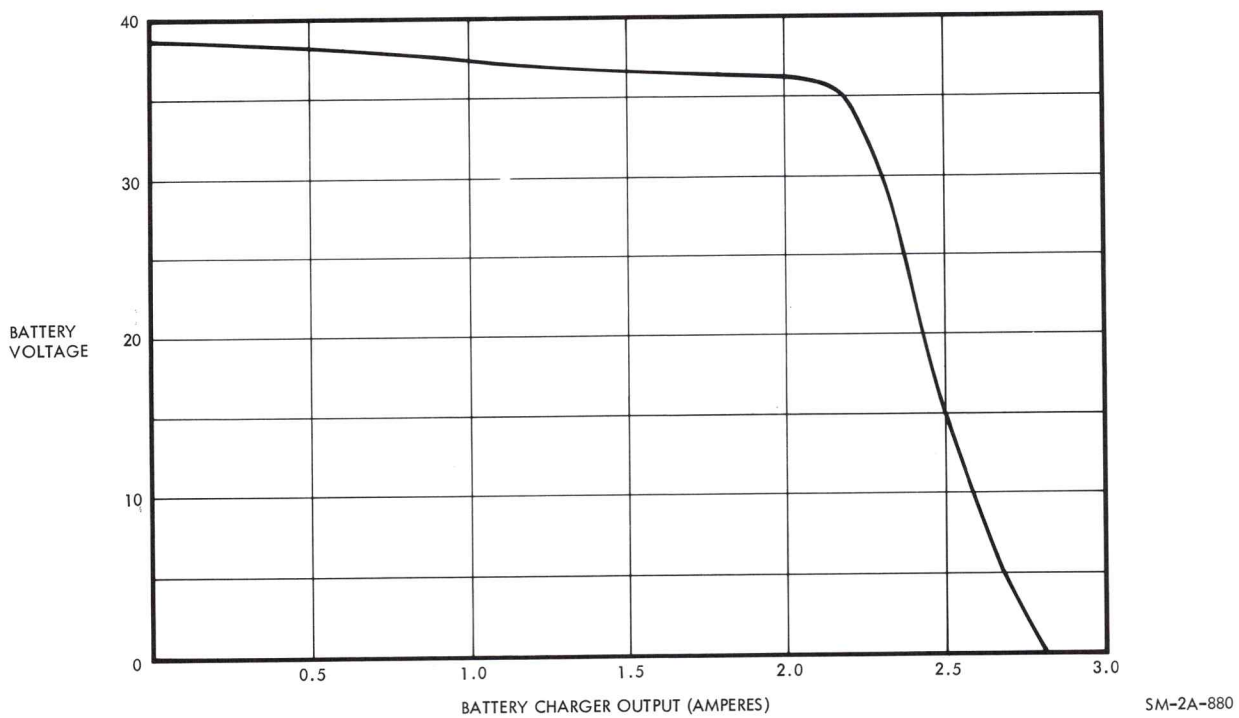

Figure 2.6-8. Battery Charging Rate Chart

2.6.3.6 Power Distribution.

D-C and a-c power distribution to components of the EPS is provided by two redundant buses in each system. A single-point ground on the spacecraft structure is used to eliminate ground loop effects. Sensing and control circuits are provided for monitoring and protection of each system.

Distribution of d-c power (figure 2.6-9) is accomplished with a two-wire system and a series of interconnected buses, switches, circuit breakers, and isolation diodes. The d-c negative buses are connected to the single-point ground. The buses consist of the following:

- Two redundant main d-c buses (A and B) powered by the three fuel cells and/or entry batteries A, B and C.
- Two battery buses (A and B) each powered by its respective entry battery A and B.
- Flight and postlanding bus, powered through the main d-c buses, and or the three entry batteries, A, B, and C.
- Two nonessential buses, powered through either d-c main bus A or B.
- Battery relay bus, powered by entry batteries A and B through individual battery buses
- Pyro buses, which are isolated from the main electrical power system when powered by the pyro batteries. A capability is provided to connect entry battery A or B to the respective A or B pyro system in case of the loss of a pyro battery.
- SM jettison controllers, powered by SM jettison controller batteries, which are completely isolated from the main electrical power system.

EPS

Power from the fuel cell power plants can be connected to the main d-c buses through six motor switches (part of overload/reverse current circuits in the S/M which are controlled by switches in the C/M located on MDC-18. Fuel cell power can be selected to either or both of the main d-c buses. Six event indicators show gray when fuel cell output is connected. When an overload condition occurs, the overload-reverse current sensing circuits in the S/M automatically disconnect the fuel cell power plants from the overloaded bus and provide visual displays for isolation of the trouble. A reverse current condition will disconnect the malfunctioning power plant from the d-c system. D-C undervoltage sensing circuits (figure 2.6-10) are provided to indicate bus low voltage conditions. If voltage drops below 26.25 volts dc, an applicable d-c undervoltage light on the caution and warning panel (MDC-11) will illuminate. Since each bus is capable of handling all EPS loads, an undervoltage condition should not occur except in an isolated

instance if too many electrical units are placed on the bus simultaneously or if a malfunction exists in the EPS. A voltmeter, on MDC-18 is provided to monitor bus voltage. An ammeter is also provided on MDC-18 to monitor current output of fuel cells 1, 2, 3, batteries A, B, C, and the battery charger. During extreme power loads or emergencies, power to the main d-c buses can be supplied from entry batteries A and B by way of battery buses and directly from battery C (figure 2.6-11). Each battery bus is separated physically into two parts (e.g., battery bus A is A-1 and A-2), but remain connected electrically by motor switch contacts which are not opened on manned S/C. Two nonessential buses permit isolating non-essential equipment during a shortage of power (two fuel cell power plants out). The postlanding bus supplies power to some of the telecommunications equipment, float bag No. 1 and No. 3 controls, and the ECS postlanding vent control. In flight and up to CSM separation, the postlanding bus receives power from the fuel cell and/or entry batteries through the main d-c buses. After CSM separation, the entry batteries supply power to the postlanding bus through the main d-c buses or directly through individual circuit breakers. Motor switch contacts which close when the MAIN BUS TIE switches are positioned ON, complete the circuit between the entry batteries and the main d-c buses and open the connection from the battery charger. The battery relay bus provides d-c power to the d-c and a-c sensing units, the fuel cell control circuits, and the inverter control circuits. The pyrotechnic batteries supply power to initiate ordnance devices for separation of the LES, forward heat shield, S/M from C/M, and for deployment of the drogue and main parachutes during a pad abort, high-altitude abort or normal mission progression. The S/M jettison controller batteries supply power through the S/M jettison controllers for the S/M separation maneuver. To operate recovery communications and other aids after landing, power is provided by the entry batteries through three circuit breakers (figure 2.6-11) which are normally open until just prior to CSM separation.

Distribution of a-c power (figure 2.6-12) is accomplished with a four-wire system via two redundant buses, a-c bus No. 1 and a-c bus No. 2. The a-c neutral bus is connected to the single-point ground. A-C power is provided by the solid-state 115/200-volt, 400-cps, 3-phase inverters. D-C power is routed to the inverters through the main d-c buses. Inverter No. 1 can be powered through d-c main bus A, inverter No. 2 through d-c main bus B, and inverter No. 3 through either d-c main bus A or B by switch selection. Each of these circuits has a separate circuit breaker and a power control motor switch. Switches for applying power to the motor switches are located on MDC-18. All three inverters are identical and are provided with overtemperature circuitry. A light indicator, in the caution/warning group on MDC-11, illuminates to indicate an overtemperature situation. Inverter operating temperature is telemetered to the MSFN. Inverter output is routed through a series of control motor switches to the a-c buses. Six switches on MDC-18 control motor switches which operate contacts to connect or disconnect the inverters from the a-c buses. The motor switches are designed to prevent connecting two inverters to the same a-c bus at the same time. A-C loads are powered through the redundant a-c buses through bus selector switches. In some instances,

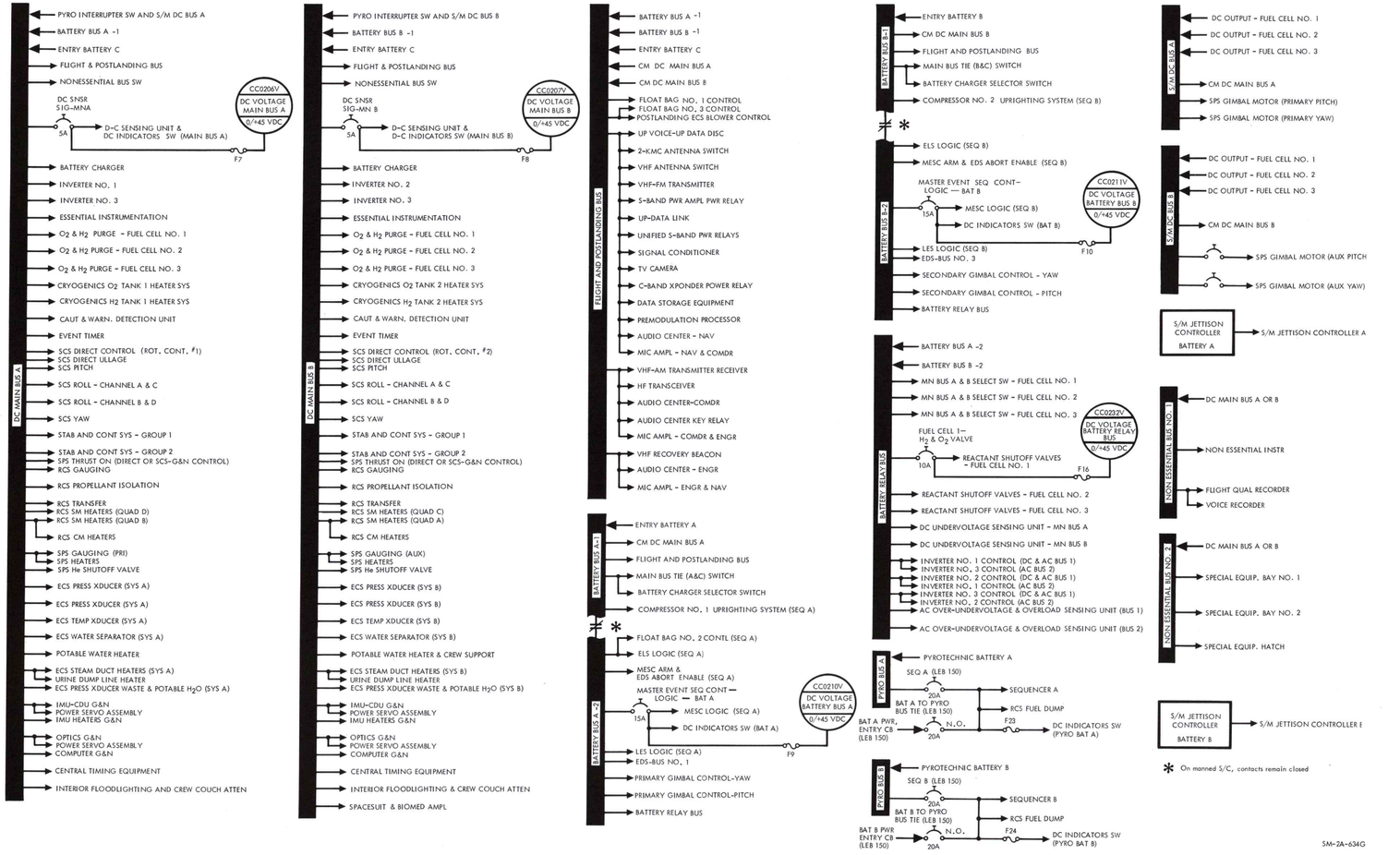

Figure 2.6-9. D-C Power Distribution

EPS

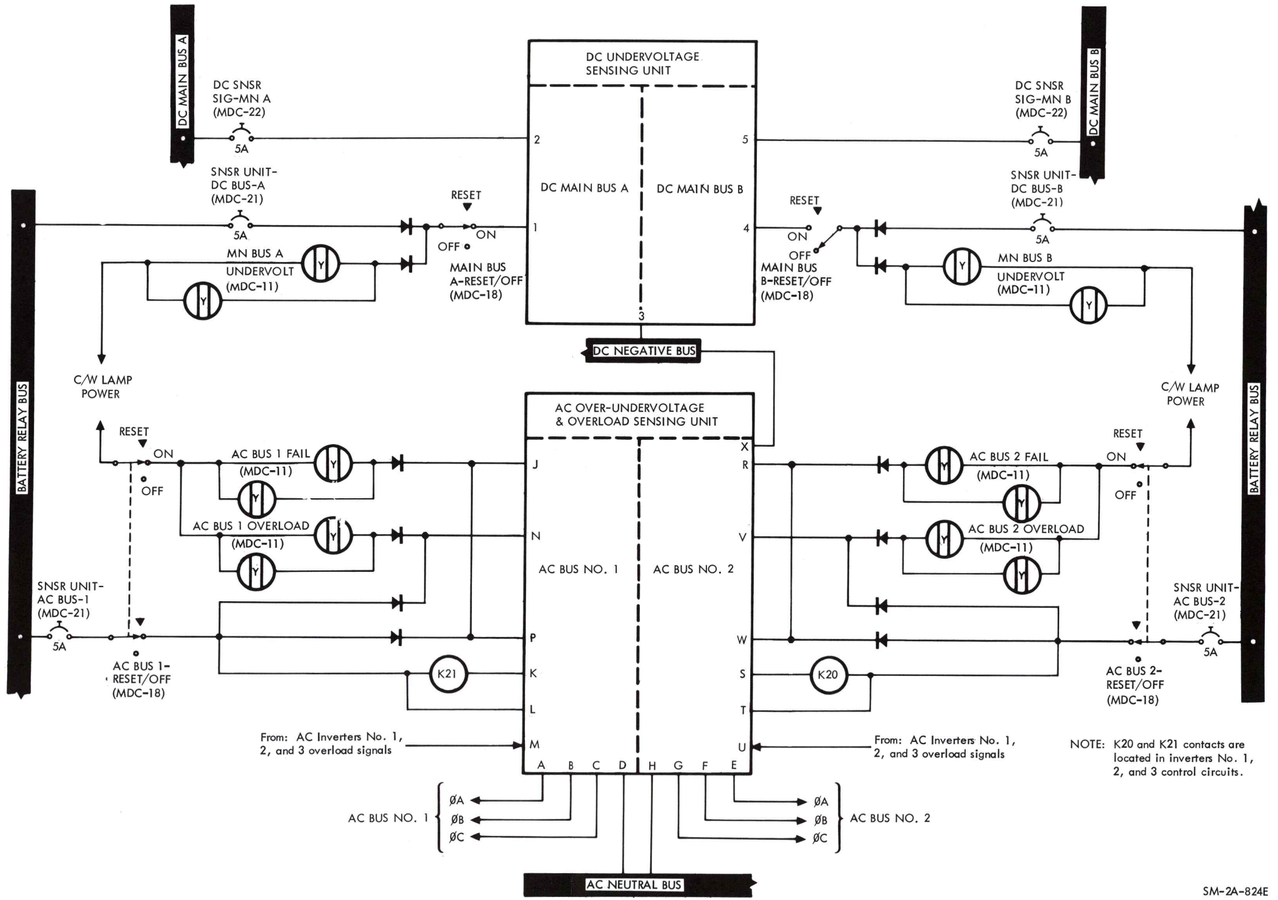

Figure 2.6-10. D-C and A-C Sensing Circuits

EPS

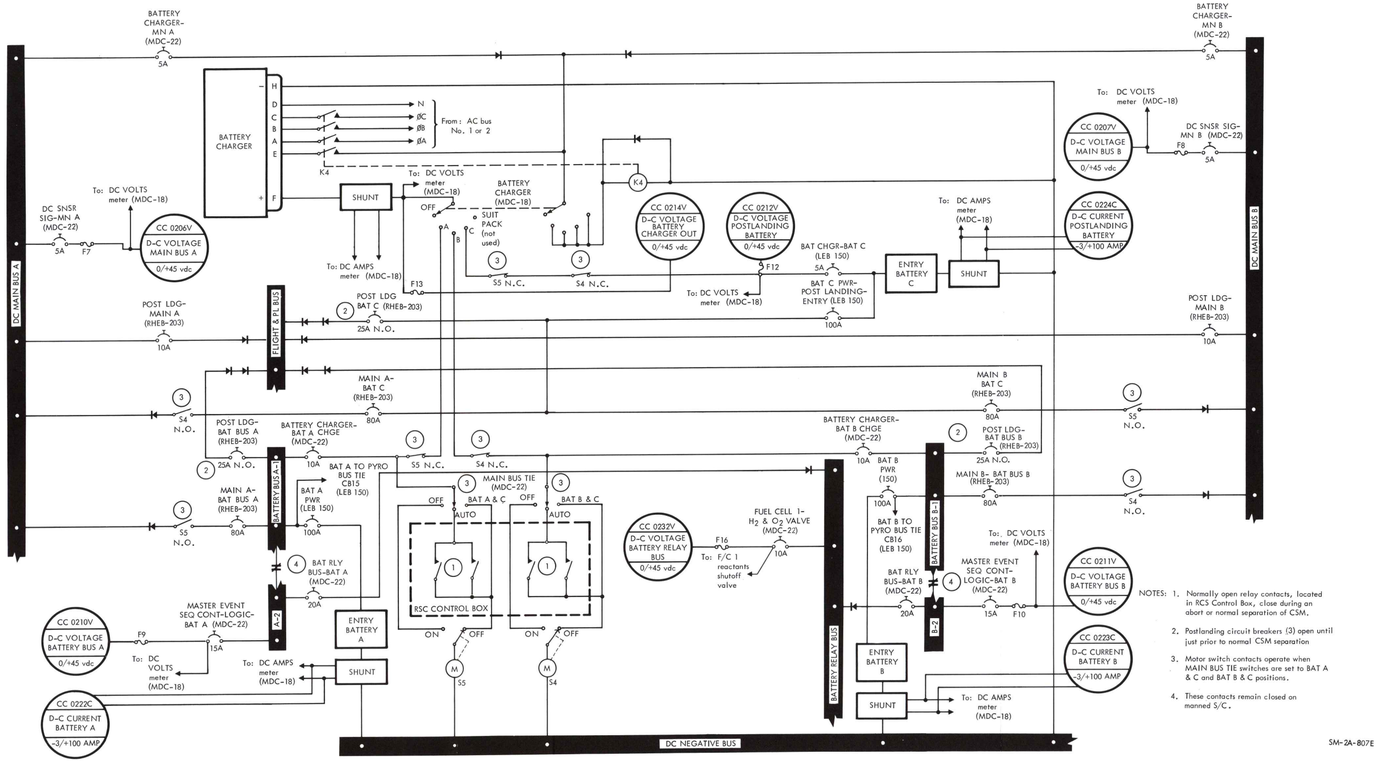

Figure 2.6-11. Battery Charger and CM D-C Bus Control Circuits

EPS

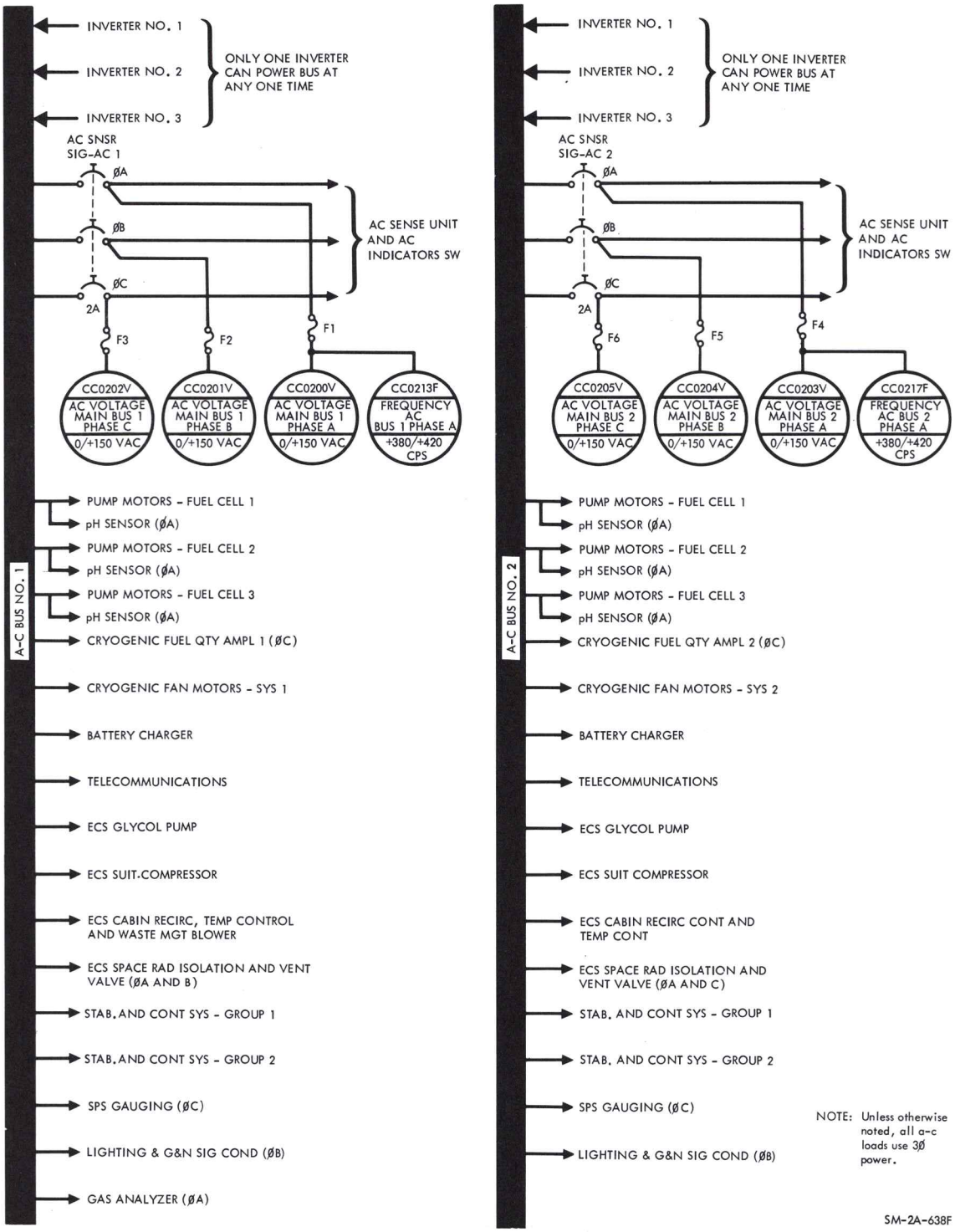

Figure 2.6-12. A-C Power Distribution

EPS

one phase is used for operation of equipment; in others, two, and in others all three. Over-undervoltage and overload sensing circuits (figure 2.6-11) are provided for each bus. A-C bus voltage fail and overload lights in the caution/warning group on MDC-11 provide a visual indication of these malfunctions. Monitoring of voltage and frequency of each phase on each bus is accomplished by selection with the AC INDICATORS switch. Readings are displayed on separate AC VOLTS and FREQUENCY meters located on MDC-18. Each phase voltage and ØA frequency is telemetered to MSFN stations.

2.6.4 PERFORMANCE AND DESIGN DATA.

2.6.4.1 AC and DC Data.

AC and DC performance and design data for the EPS is as follows:

AC

Phases	3
Displacement	120±2 degrees
Steady-state voltage	115±2 vac (average of 3 phases)
Transient voltage	115 (+35, -65) vac
Recovery	To 115±10v within 15 ms, steady state within 50 ms
Unbalance	2 vac (worst phase from average)
Frequency limits	
Normal (synchronized to central timing equipment)	400±2 cps
Emergency (loss of central timing equipment)	400±7 cps
Wave characteristics (sine wave)	
Maximum distortion	5 percent
Highest harmonic	4 percent
Crest factor	1.414±10 percent
Rating	1250 va

DC

Steady-stage voltage limits	
Normal	29±2.0 vdc

During postlanding and preflight checkout periods	27 to 30 vdc
Ripple voltage	1v p-p

2.6.4.2 Power Requirements.

Power requirements for the EPS are as follows:

Unit	Control	Unit Quantity	Unit Input Power (Watts)		Total Input Power (Watts)	
			AC	DC	AC	DC
FUEL CELLS						
Hydrogen pump	FUEL CELL PUMP-1, -2, and -3 sw (MDC-22)	3	100.0		300.0	
Glycol pump	FUEL CELL PUMP-1, -2 and -3 sw (MDC-22)	3	20.0		60.0	
pH indicator	FUEL CELL PUMP-1, -2 and -3 sw (MDC-22) and FUEL CELL INDICATORS sw (MDC-18)	3	2.0		6.0	
Power factor correction for above items		3	2.5		7.5	
Total including pf correction					373.5	
Pressure transducers	FUEL CELL INDICATORS sw (MDC-18)	9		2.0		18.0
H_2 flowmeter circuits	FUEL CELL INDICATORS sw (MDC-18)	3		1.0		3.0
O_2 flowmeter circuits	FUEL CELL INDICATORS sw (MDC-18)	3		1.0		3.0
Purge solenoid	FUEL CELL-1, -2, and -3 - H_2 PURGE/O_2 PURGE sw (MDC-18)	6		17.5		105.0

EPS

SYSTEMS DATA

Unit	Control	Unit Quantity	Unit Input Power (Watts)		Total Input Power (Watts)	
			AC	DC	AC	DC
Fuel cell in-line heater	None (Automatic ON at +385±5°F) (Automatic OFF at +390±5°F)	3		160.0		480.0
CRYOGENICS						
H_2 tank heater	H_2 HEATERS-1 and -2 sw (MDC-13)	2		20.0		40.0
O_2 tank heater	O_2 HEATERS-1 and -2 sw (MDC-13)	2		155.0		310.0
H_2 tank fan	H_2 FANS-1 and -2 sw (MDC-13)	4	5.0		20.0	
O_2 tank fan	O_2 FANS -1 and -2 sw (MDC-13)	4	14.5		58.0	
Pressure transducer	ESSENTIAL-3 (153) C/B	4		1.5		6.0
Signal conditioner	CRYOGENIC SYSTEM-QTY AMPL-1 and -2-ØC C/B	4	4.0		16.0	
BATTERY CHARGER	BATTERY CHARGER selector sw (MDC-18)	1			55.0 max.	84.0 max.
SENSING UNITS						
D-C under-voltage sensing unit (2 circuits)	MAIN BUS A and B-RESET/OFF sw (MDC-18)	1				0.5
A-C under and overvoltage and overload sensing unit (2 circuits)	AC BUS 1 and 2-RESET/OFF sw (MDC-18)	1				1.0
INVERTERS (See Note.)	AC INVERTER-1, -2 and -3 sw (MDC-18)					

NOTE With a 28-volt d-c input, each inverter will operate at an efficiency of 76 percent minimum with a 1250 volt-ampere load, 0.9 power factor, and 74 percent minimum with a 625 volt-ampere load, 0.9 power factor.

2.6.5 OPERATIONAL LIMITATIONS AND RESTRICTIONS.

2.6.5.1 Fuel Cell Power Plants.

Fuel cell power plants are designed to function under atmospheric and high vacuum conditions. Each must be able to maintain itself at sustaining temperatures and minimum electrical loads at both environment extremes. To function properly, fuel cells must operate under the following limitations and restrictions:

• External nonoperating temperature	-20° to +140°F
• Operating temperature inside S/M	+30° to +130°F
• External nonoperating pressure	Atmospheric
• Normal voltage	27 to 31 vdc
• Minimum operating voltage	
Emergency operation	20.5 vdc at 2295 watts (gross power level)
Normal operation	27 vdc
• Maximum operating voltage	31 vdc
• Fuel cell disconnect (overload and reverse current relay)	75 amperes for over 15 minutes, 112 amperes for 25 to 300 seconds
Maximum reverse current	1 second minimum
• Minimum sustaining power/fuel cell power plant (with in-line heater OFF)	563 watts
In-line heater	160 watts
• Maximum gross power under emergency conditions	2295 watts
• Nitrogen pressure	52 to 70 psia
• Reactant pressure	
Oxygen	62 to 75 psia
Hydrogen	60.5 to 75 psia

EPS

- Reactant consumption/fuel cell power plant

Power Level	563w	2295w
Hydrogen	0.0476	0.262 lb/hr
Oxygen	0.378	2.08 lb/hr

- Electrolyte water concentration — 24.3 to 28.2 percent
- Minimum stack temperature for self-sustaining operation — +385°F
- Approximate external environment temperature range outside S/C (for radiation) — -260° to +400°F
- Fuel cell power plant operating skin temperature — +385° to +500°F
- Condenser exhaust operating temperature — +155° to +175°F
- Purging frequency — Nominally every 24 hours. (dependent on reactant purity after tank fill)

O_2 switch ON time	2 minutes
H_2 switch ON time	80 seconds

- Additional flow rate while purging

O_2	Up to 0.6 lb/hr
H_2	Up to 0.75 lb/hr

2.6.5.2 Cryogenic Storage Subsystem.

The cryogenic storage subsystem must be able to meet the following requirements for proper operation of the fuel cell power plants and the ECS:

- Minimum usable quantity

Oxygen	320 lb each tank
Hydrogen	28 lb each tank

• Temperature at time of fill	
Oxygen	-297°F (approx.)
Hydrogen	-423°F (approx.)
• Operating pressure range	
Oxygen	865 to 935 psia
Hydrogen	225 to 260 psia
• Temperature probe range	
Oxygen	-325° to +80°F
Hydrogen	-425° to -200°F
• Maximum allowable difference in quantity balance between tanks	
Oxygen tanks No. 1 and 2	15 lb
Hydrogen tanks No. 1 and 2	1 lb
• Pressure relief valve operation	
Crack pressure	
Oxygen	998 psia
Hydrogen	288 psia
Reseat Pressure	
Oxygen	980 psia
Hydrogen	283 psia
Full flow, maximum relief	
Oxygen	1025 psia
Hydrogen	300 psia

2.6.6 TELEMETRY MEASUREMENTS.

The following is a complete list of all EPS telemetry data that is monitored by flight controllers and ground support personnel. The last column contains the name and type of S/C crew display. The display utilizes the same pickoff or signal source as telemetry, unless a separate measurement number is included in the display column.

An asterisk (*) by the measurement number denotes information which is not available for recording or telemetry transmission during PCM low bit rate operation.

Measurement Number	Description	Sensor Range	Normal Operating Range	Crew Display
CC 0175 T	Temp static inverter 1	+32°/+248°F	+40° to +140°F	INV 1 TEMP HI C&W light
CC 0176 T	Temp static inverter 2	+32°/+248°F	+40° to +140°F	INV 2 TEMP HI C&W light
CC 0177 T	Temp static inverter 3	+32°/+248°F	+40° to +140°F	INV 3 TEMP HI C&W light
*CC 0178 T	Temp battery A case	+32°/+212°F	+50° to 110°F (200°F entry)	None
*CC 0179 T	Temp battery B case	+32°/+212°F	+50° to 110°F (200°F entry)	None
*CC 0188 P	Press bat compartment (Manif)	Zero/+18 psia	Zero	Auxiliary DC VOLTS meter
CC 0200 V	AC voltage main bus 1 phase A	Zero/+150 vac	115±2 vac	AC VOLTS meter
*CC 0201 V	AC voltage main bus 1 phase B	Zero/+150 vac	+115±2 vac	AC VOLTS meter
*CC 0202 V	AC voltage main bus 1 phase C	Zero/+150 vac	+115±2 vac	AC VOLTS meter
CC 0203 V	AC voltage main bus 2 phase A	Zero/ +150 vac	+115±2 vac	AC VOLTS meter
*CC 0204 V	AC voltage main bus 2 phase B	Zero/+150 vac	+115±2 vac	AC VOLTS meter
*CC 0205 V	AC voltage main bus 2 phase C	Zero/+150 vac	+115±2 vac	AC VOLTS meter
CC 0206 V	DC voltage main bus A	Zero/+45 vdc	27 to 31 vdc	DC VOLTS meter
CC 0207 V	DC voltage main bus B	Zero/+45 vdc	27 to 31 vdc	DC VOLTS meter
*CC 0210 V	DC voltage battery bus A	Zero/+45 vdc	35 to 37 vdc open circuit	DC VOLTS meter
*CC 0211 V	DC voltage battery bus B	Zero/+45 vdc	27 to 29 vdc on load	DC VOLTS meter
*CC 0212 V	DC voltage post landing battery	Zero/+45 vdc	35 to 37.2 vdc open circuit 27 to 29 vdc on load	DC VOLTS meter
*CC 0213 F	Frequency ac bus 1 phase A	+380/+420 cps	400±7 cps	FREQUENCY meter
*CC 0214 V	DC voltage bat charger out	Zero/+45 vdc	38±1 vdc	DC VOLTS meter
*CC 0217 F	Frequency ac bus 2 phase A	+380/+420 cps	400±7 cps	FREQUENCY meter
*CC 0222 C	DC current battery A	-3/+100 amp	Variable	DC AMPS meter
*CC 0223 C	DC current battery B	-3/+100 amp	Variable	DC AMPS meter
*CC 0224 C	DC current post landing battery	-3/+100 amp	Variable	DC AMPS meter
CC 0232 V	DC voltage battery relay bus	Zero/+45 vdc	25 to 36.5 vdc	None
*SC 2060 P	N_2 pressure F/C 1 regulated	Zero/+75 psia	52±2 psia	F/C 1 C&W light, REG OUT PRESS HI-N_2 event indicator, and auxiliary DC VOLTS meter.

Measurement Number	Description	Sensor Range	Normal Operating Range	Crew Display
*SC 2061P	N_2 pressure F/C 2 regulated	Zero/+75 psia	52±2 psia	F/C 2 C&W light, REG OUT PRESS HI-N_2 event indicator, and auxiliary DC VOLTS meter
*SC 2062 P	N_2 pressure F/C 3 regulated	Zero/+75 psia	52±2 psia	F/C 3 C&W light, REG OUT PRESS HI-N_2 event indicator, and auxiliary DC VOLTS meter
*SC 2066 P	O_2 pressure F/C 1 regulated	Zero/+75 psia	62±3 psia	F/C 1 C&W light, REG OUT PRESS HI-O_2 event indicator, and auxiliary DC VOLTS meter
*SC 2067 P	O_2 pressure F/C 2 regulated	Zero/+75 psia	62±3 psia	F/C 2 C&W light, REG OUT PRESS HI-O_2 event indicator, and auxiliary DC VOLTS meter
*SC 2068 P	O_2 pressure F/C 3 regulated	Zero/+75 psia	62±3 psia	F/C 3 C&W light, REG OUT PRESS HI-O_2 event indicator, and auxiliary DC VOLTS meter
*SC 2069 P	H_2 pressure F/C 1 regulated	Zero/+75 psia	60.5±3 psia	F/C 1 C&W light, REG OUT PRESS HI-H_2 event indicator, and auxiliary DC VOLTS meter
*SC 2070 P	H_2 pressure F/C 2 regulated	Zero/+75 psia	60.5±3 psia	F/C 2 C&W light, REG OUT PRESS HI-H_2 event indicator, and auxiliary DC VOLTS meter
*SC 2071 P	H_2 pressure F/C 3 regulated	Zero/+75 psia	60.5±3 psia	F/C 3 C&W light, REG OUT PRESS HI-H_2 event indicator, and auxiliary DC VOLTS meter
SC 2081 T	Temp F/C 1 cond exhaust	+150°/+250°F	+157° to +172°F	F/C 1 C&W light, and MODULE TEMP COND COND-EXH indicator
SC 2082 T	Temp F/C 2 cond exhaust	+150°/+250°F	+157° to +172°F	F/C 2 C&W light, and MODULE TEMP COND-EXH indicator
SC 2083 T	Temp F/C 3 cond exhaust	+150°/+250°F	+157° to +172°F	F/C 3 C&W light, and MODULE TEMP COND-EXH indicator
SC 2084 T	Temp F/C 1 skin	+80°/+550°F	+385° to +460°F	F/C 1 C&W light and MODULE TEMP-SKIN indicator
SC 2085 T	Temp F/C 2 skin	+80°/+550°F	+385° to +460°F	F/C 2 C&W light and MODULE TEMP-SKIN indicator
SC 2086 T	Temp F/C 3 skin	+80°/+550°F	+385° to +460°F	F/C 3 C&W light and MODULE TEMP-SKIN indicator

EPS

Measurement Number	Description	Sensor Range	Normal Operating Range	Crew Display
SC 2087 T	Temp F/C 1 radiator outlet	-50°/+300°F	-30° to +300°F	F/C 1 C&W light, F/C RAD TEMP LOW event indicator and auxiliary DC VOLTS meter
SC 2088 T	Temp F/C 2 radiator outlet	-50°/+300°F	-30° to +300°F	F/C 2 C&W light, F/C RAD TEMP LOW event indicator and auxiliary DC VOLTS meter
SC 2089 T	Temp F/C 3 radiator outlet	-50°/+300°F	-30° to +300°F	F/C 3 C&W light, F/C RAD TEMP LOW event indicator and auxiliary DC VOLTS meter
SC 2113 C	DC current F/C 1 output	Zero/+100 amps	Variable	DC AMPS meter
SC 2114 C	DC current F/C 2 output	Zero/+100 amps	Variable	DC AMPS meter
SC 2115 C	DC current F/C 3 output	Zero/+100 amps	Variable	DC AMPS meter
SC 2120 X	Fuel cell 1 bus A disconnect	Off/on event	Connected	F/C BUS DISCONNECT C&W light and FUEL CELL-1-MAIN BUS A switch event indicator
SC 2121 X	Fuel cell 2 bus A disconnect	Off/on event	Disconnected	F/C BUS DISCONNECT C&W light and FUEL CELL-2- MAIN BUS A switch event indicator
SC 2122 X	Fuel cell 3 bus A disconnect	Off/on event	Connected	F/C BUS DISCONNECT C&W light and FUEL CELL-3- MAIN BUS A switch event indicator
SC 2125 X	Fuel cell 1 bus B disconnect	Off/on event	Disconnected	F/C BUS DISCONNECT C&W light and FUEL CELL-1-MAIN BUS B switch event indicator
SC 2126 X	Fuel cell 2 bus B disconnect	Off/on event	Connected	F/C BUS DISCONNECT C&W light and FUEL CELL-2-MAIN BUS B switch event indicator
SC 2127 X	Fuel cell 3 bus B disconnect	Off/on event	Connected	F/C BUS DISCONNECT C&W light and FUEL CELL-3-MAIN BUS B switch event indicator
*SC 2139 R	Flow rate H_2 F/C 1	Zero/+0.2 lb/hr	0.018 to 0.1606 lbs/hr	F/C 1 C&W light and FLOW-H_2 indicator
*SC 2140 R	Flow rate H_2 F/C 2	Zero/+0.2 lb/hr	0.018 to 0.1606 lbs/hr	F/C 2 C&W light and FLOW-H_2 indicator
*SC 2141 R	Flow rate H_2 F/C 3	Zero/+0.2 lb/hr	0.018 to 0.1606 lbs/hr	F/C 3 C&W light and FLOW-H_2 indicator
*SC 2142 R	Flow rate O_2 F/C 1	Zero/+1.6 lb/hr	0.14 to 1.276 lbs/hr	F/C 1 C&W light and FLOW-O_2 indicator

SYSTEMS DATA

Measurement Number	Description	Sensor Range	Normal Operating Range	Crew Display
*SC 2143 R	Flow rate O_2 F/C 2	Zero/+1.6 lb/hr	0.14 to 1.276 lbs/hr	F/C 2 C&W light and FLOW-O_2 indicator
*SC 2144 R	Flow rate O_2 F/C 3	Zero/+1.6 lb/hr	0.14 to 1.276 lbs/hr	F/C 3 C&W light and FLOW-O_2 indicator
*SC 2160 X	pH factor water condition F/C 1	Normal/high event	Normal	F/C 1 C&W light and pH HI event indicator
*SC 2161 X	pH factor water condition F/C 2	Normal/high event	Normal	F/C 2 C&W light and pH HI event indicator
*SC 2162 X	pH factor water condition F/C 3	Normal/high event	Normal	F/C 3 C&W light and pH HI event indicator
SC 2323 X	Fuel cell 1 shut off mon	Close/open event	Open	F/C 1 REACTANTS event indicator
SC 2324 X	Fuel cell 2 shut off mon	Close/open event	Open	F/C 2 REACTANTS event indicator
SC 2325 X	Fuel cell 3 shut off mon	Close/open event	Open	F/C 3 REACTANTS event indicator
SF 0030 Q	Quantity H_2 tank 1	Zero/+28 lb	+28 lbs to zero	TANK QUANTITY-H_2-1 indicator
SC 0031 Q	Quantity H_2 tank 2	Zero/+28 lb	+28 lbs to zero	TANK QUANTITY-H_2-2 indicator
SF 0032 Q	Quantity O_2 tank 1	Zero/+320 lb	320 lb. to zero	TANK QUANTITY-O_2-1 indicator
SF 0033 Q	Quantity O_2 tank 2	Zero/+320 lb	320 lb. to zero	TANK QUANTITY-O_2-2 indicator
SF 0037 P	Press O_2 tank 1	+50/+1050 psia	865 to 935 psia	O_2 PRESS C&W light and TANK PRESSURE-O_2-1 indicator
SF 0038 P	Press O_2 tank 2	+50/+1050 psia	865 to 935 psia	O_2 PRESS C&W light and TANK PRESSURE-O_2-2 indicator
SF 0039 P	Press H_2 tank 1	Zero/+350 psia	225 to 260 psia	H_2 PRESS C&W light and TANK PRESSURE-H_2-1 indicator
SF 0040 P	Press H_2 tank 2	Zero/+350 psia	225 to 260 psia	H_2 PRESS C&W light and TANK PRESSURE-H_2-2 indicator
SF 0041 T	Temp O_2 tank 1	-325/+80°F	-284° to -140°F	None
SF 0042 T	Temp O_2 tank 2	-325/+80°F	-284° to -140°F	None
SF 0043 T	Temp H_2 tank 1	-425/-200°F	-417° to -340°F	None
SF 0044 T	Temp H_2 tank 2	-425/-200°F	-417° to -340°F	None

EPS

The auxiliary DC VOLTS meter, FUNCTION SELECT and TEST SELECT switches located on panel 200 in the C/M RHFEB provide a means of monitoring various telemetered measurements within the S/C, and verifying certain parameters displayed only by event indicators. The following list presents the measurements that can be measured using the auxiliary DC VOLTS meter, their respective switch positions, and the range of each sensor. Normal operating parameters of measurable items are covered in the telemetry listing.

Auxiliary DC VOLTS Meter Indication (Telemetry Identity and Code No.)	Switch Positions		Sensor Range
	Function Select	Test Select	
N_2 pressure, psia	A		
F/C 1 SC 2060 P		1	0 to 75 psia
F/C 2 SC 2061 P		2	
F/C 3 SC 2062 P		3	
O_2 pressure, psia			0 to 75 psia
F/C 1 SC 2066 P		4	
F/C 2 SC 2067 P		5	
F/C 3 SC 2068 P		6	
H_2 pressure, psia			0 to 75 psia
F/C 1 SC 2069 P		7	
F/C 2 SC 2070 P		8	
F/C 3 SC 2071 P		9	
EPS radiator outlet temperature			-50 to +300°F
F/C 1 SC 2087 T		10	
F/C 2 SC 2088 T		11	
F/C 3 SC 2089 T		12	
C/M-RCS oxidizer valve temperature	B		-50 to +250°F
-P engine, sys A CR 2205 T		1	
+Y engine, sys B CR 2203 T		2	
-P engine, sys B CR 2204 T		3	
CW engine, sys B CR 2206 T		4	
CCW engine, sys A CR 2201 T		11	
-Y engine, sys A CR 2202 T		12	
PIPA temp CG 2300 T		5	+125 to +135°F
IRIG temp CG 2301 T		6	+128.5 to +138.5°F
IMU current			0 to 5 amps
Heater CG 2302 C		7	
Blower CG 2303 C		8	
Battery manifold Pressure, psia CC 0188 P		9	0 to 18 psia
ECS radiator inlet temp SF 0665 T		10	+60 to +150°F

The conversion of the previously listed telemetry measurements to the auxiliary DC VOLTS meter indication is presented as follows:

Auxiliary DC VOLTS Meter Display	N2, O2, H2 Pressure PSIA	EPS Radiator Outlet Temperature (°F)	C/M-RCS Oxidizer Valve Temperature (°F)	PIPA Temperature (°F)	IRIG Temperature (°F)	IMU Heater and Blower Current Amps	Battery Manifold Pressure PSIA	ECS Radiator Inlet Temperature (°F)
0.0	0	-50	-50	+125.0	+128.5	0.0	0.00	+60.0
0.2	3	-36	-38	+125.4	+128.9	0.2	0.72	+63.6
0.4	6	-22	-26	+125.8	+129.3	0.4	1.44	+67.2
0.6	9	-8	-14	+126.2	+129.7	0.6	2.16	+70.8
0.8	12	+6	-2	+126.6	+130.1	0.8	2.88	+74.4
1.0	15	+20	+10	+127.0	+130.5	1.0	3.60	+78.0
1.2	18	+34	+22	+127.4	+130.9	1.2	4.32	+81.6
1.4	21	+48	+34	+127.8	+131.3	1.4	5.04	+85.2
1.6	24	+62	+46	+128.2	+131.7	1.6	5.76	+88.8
1.8	27	+76	+58	+128.6	+132.1	1.8	6.48	+92.4
2.0	30	+90	+70	+129.0	+132.5	2.0	7.20	+96.0
2.2	33	+104	+82	+129.4	+132.9	2.2	7.92	+99.6
2.4	36	+118	+94	+129.8	+133.3	2.4	8.64	+103.2
2.6	39	+132	+106	+130.2	+133.7	2.6	9.36	+106.8
2.8	42	+146	+118	+130.6	+134.1	2.8	10.08	+110.4
3.0	45	+160	+130	+131.0	+134.5	3.0	10.80	+114.0
3.2	48	+174	+142	+131.4	+134.9	3.2	11.52	+117.6
3.4	51	+188	+154	+131.8	+135.3	3.4	12.24	+121.2
3.6	54	+202	+166	+132.2	+135.7	3.6	12.96	+124.8
3.8	57	+216	+178	+132.6	+136.1	3.8	13.68	+128.4
4.0	60	+230	+190	+133.0	+136.5	4.0	14.40	+132.0
4.2	63	+244	+202	+133.4	+136.9	4.2	15.12	+135.6
4.4	66	+258	+214	+133.8	+137.3	4.4	15.84	+139.2
4.6	69	+272	+226	+134.2	+137.7	4.6	16.56	+142.8
4.8	72	+286	+238	+134.6	+138.1	4.8	17.28	+146.4
5.0	75	+300	+250	+135.0	+138.5	5.0	18.00	+150.0

SECTION 2

SUBSECTION 2.7

ENVIRONMENTAL CONTROL SYSTEM (ECS)

2.7.1 INTRODUCTION.

The environmental control system (ECS) is designed to provide a controlled environment for three crewmen within the Apollo C/M for missions up to 14 days. The system also supplies several of the metabolic requirements, as well as functioning in the removal of by-products resulting from the normal metabolic process. The controlled environment consists of a pressure suit circuit for use during normal or emergency conditions, and a shirtsleeve atmosphere within the C/M cabin for use when normal conditions prevail. Oxygen and thermally controlled water are supplied for crew consumption; whereas, carbon dioxide and odors, water-production, and heat output are removed. In addition, the ECS disperses equipment heat loads and provides for venting the waste storage compartment. Controls and displays are located in several areas within the C/M cabin; these, in conjunction with automatically functioning components and sensing and protective devices, aid the crew in the operation of the system. The five subsystems composing the ECS are the oxygen supply, pressure suit circuit, cabin pressure and temperature control, water-glycol coolant, and water supply.

The oxygen supply subsystem controls the inflow of oxygen for the entire Apollo mission. This function is accomplished by pressure regulators, demand regulators, storage tanks, check valves and manual shutoff valves. The pressure suit subsystem automatically controls the flow, pressure, temperature and composition of the pressure suit gas. In conjunction with the CM pressure and temperature control subsystem, it also controls the environment conditions in the cabin when any or all the crew are out of their pressure suits. These functions are provided by water separators, temperature controls, a suit heat exchanger, a debris trap, gas compressor, CO_2 and odor absorbers, and a water-glycol-to-gas heat exchanger.

The cabin pressure and temperature control subsystem automatically maintains the pressure and temperature of the cabin within specified limits. This function is accomplished in conjunction with the pressure suit subsystem by means of regulated oxygen inflow, recirculation blowers, a heat exchanger, a temperature control and sensors, vent valves and other valves and controls required. The water glycol subsystem is an intermediate heat transfer loop which permits excess heat to be transferred from the CM interior to the space radiators where it is rejected to the cosmic sink.

This function is accomplished by pumps, heat exchangers, cold plate networks, valves and controls. The water supply subsystem collects, stores, and provides water for supplemental heat transfer operation and collects and stores potable water for consumption by the crew. These functions are accomplished by utilizing water tanks, pressure controls, cyclic accumulators, and valves.

Other than circuitry required for controls and displays or electrical power, three points of interface exist between the ECS and other S/C systems. All oxygen supplied to the ECS flows from the cryogenic storage tanks, which are considered a part of the EPS. The fuel cells, also a part of the EPS, furnished the onboard supply of potable water that is stored by the ECS. The third interface point is with the waste management system, which connects into the ECS overboard dump line.

2.7.2 FUNCTIONAL DESCRIPTION.

The ECS requires a minimum amount of crew time to be spent for normal system operation. In addition to periodically monitoring system indicators, the crew is responsible for the accomplishment of several normal tasks on an infrequent basis. For conditions other than normal, the duties of the crew will increase. Electrical and manual override and backup capabilities exist throughout the ECS to maintain the required reliability level of the system.

The oxygen supplied to the ECS from the storage tanks in the S/M (figures 2.7-11 and 2.7-12) is used to carry out a variety of system functions. Upon reaching the ECS, oxygen is automatically regulated and manually routed to various subsystem components by a network of valves and lines. Also incorporated are automatically functioning components to maintain suit and/or cabin pressure in the event of cabin decompression or equipment malfunction.

The atmosphere of the pressurized cabin, as well as that of the pressure garment assemblies (PGA), is routed through the suit circuit for contaminant removal and humidity control. The flow, pressure, and temperature control within the suit circuit are maintained by other components of the subsystem. This is accomplished automatically by using transducers, sensors, and control units to regulate these functions. Mechanical-type oxygen pressure regulators automatically maintain cabin pressure within prescribed limits. The temperature of the cabin is controlled by an automatic unit that regulates the output of the cabin heat exchanger with the aid of sensors and anticipators.

Carbon dioxide and odors are removed from the suit circuit and cabin gases by routing the gas flow through two filters in the CO_2-odor absorber canisters. Each filter contains sufficient lithium hydroxide (CO_2 removal) and activated charcoal (odor removal) for a 12-hour duty period for a crew of three. The suit circuit and cabin atmospheres are also sampled by a gas chromatograph that will identify up to 28 gas components that may be present.

Heat generated by the crew and the many items of electrical equipment located in the cabin is absorbed by recirculating water-glycol. The heat is transferred to the water-glycol as it flows through the suit heat exchanger, the cabin heat exchanger, and the coldplate network for the electrical equipment. The warm water-glycol is then routed through space radiators in the S/M, where the heat is radiated to space. Supplementing the radiators and/or as a backup mode, water evaporators are employed for any additional temperature control of suit gases or insufficiently cooled water-glycol.

Potable and waste water are generated onboard the S/C. The potable water is a byproduct of the EPS fuel cells and flows to the ECS where it is stored. Cold potable water is available to the crew for drinking, and hot or cold potable water is available for food reconstitution. Waste water is derived from the moisture that condenses in the water separator of the suit exchanger. It is collected and stored by the ECS and used for evaporative cooling in the suit heat exchanger evaporator and the water-glycol evaporator.

2.7.3 MAJOR COMPONENT/SUBSYSTEM DESCRIPTION.

Pertinent design data in regard to components, their function within each subsystem, and how they interface is contained under major component/subsystem description. The description follows the logical flow, component by component, through each subsystem of the ECS.

2.7.3.1 Oxygen Supply Subsystem.

Two cryogenic oxygen storage tanks (part of the EPS) in the S/M store supercritical oxygen. Approximately two-thirds of this supply is consumed by the EPS fuel cells, and the remaining one-third is consumed by the ECS. Relative to the ECS, the oxygen supply subsystem provides oxygen for metabolic consumption by the crewmembers and for pressurizing the C/M cabin and suit circuit. These, together with some lesser functions, are the basic requirements of the subsystem.

A capillary-type restrictor, with an in-line filter upstream, is located in each line from the storage tanks to the ECS. The restrictors are wound around a warm water-glycol line to raise the oxygen temperature, thus producing better flow control. Each restrictor allows a maximum flow of 4.5 lb per hr into the ECS, which limits the demands placed upon the cryogenic oxygen storage system. This enables the cryogenic tank heaters to maintain the prescribed tank pressure.

The flow rate will decrease later in the mission due to the decrease in density of the oxygen storage supply. The minimum flow rate will not decrease below 3.4 lb per hr. Downstream of the restrictors, the oxygen supply lines are connected and routed to the manual S/M supply shutoff valve which isolates the ECS from the S/M at CSM separation or to accommodate a S/M failure mode.

Oxygen is routed to the surge tank through a manual surge tank isolation and shutoff valve. The O_2 surge tank provides a reservoir of O_2 for entry mission modes, PLSS fill and during flow requirements above the 0.9 lb per hr maximum allowable by the restrictors. The surge tank stores approximately 3.7 lb of O_2 nominal inlet pressures of 900± psig. A surge tank pressure transducer output is displayed on the cabin instrumentation with a calibrated range of 50 to 1050 psia. To reduce the demand loads on the cryogenic storage system, high flow rates from the surge tank will maintain cabin pressure from 5 to 3.5 psia for 5 minutes, with a 0.5-inch diameter puncture in the cabin. The flow rate into the cabin is a function of regulator valves downstream of the surge tank. The 5- minute period allows unsuited crewmembers to don PGAs. When isolated by the surge tank manual shutoff valve, the tank is protected by a pressure relief and manual shutoff valve assembly. The relief portion is set between 1020 and 1070 psig. Should the relief valve fail or not reseat properly, the manual shutoff valve will isolate the relief valve function from the system.

Downstream O_2 supply is also stored in a one-pound entry O_2 tank, through a manual three-way select or valve, a check valve, and a check valve bypass. When the manual selector valve is in the FILL position, the entry O_2 supply tank receives high pressure O_2 through the check valve bypass. When the tank is charged, the selector valve may be positioned to OFF to isolate the tank supply, or to ON whereby the O_2 tank supply may augment the surge tank function. The check valve would prevent a reverse flow in case of entry O_2 tank damage. An isolation check valve between the two tanks prevent reverse flow and a manual valve permits charging PLSS oxygen tanks from the ECS.

The 900±35 psig oxygen supply, from the cryogenic tanks, is regulated to 100±10 psig by the main pressure regulator assembly (See figure 2.7-3.) The main pressure regulator assembly consists of a manual selector valve, two regulators, and two relief and check valves. NORMAL position of the manual selector valve parallels the regulators. Position No. 1 or No. 2 selects its regulator respectively.

CAUTION: The OFF position isolates all O_2 supply for the crew and cabin.

Should a regulator fail open, the relief valve for that regulator will limit the pressure to 140 psig downstream and vent a maximum flow of 0.75 lb per min into the cabin. This fault should be corrected by selecting the alternate regulator only.

A oxygen flow transducer downstream of the main regulator provides a signal to the flow indicator located on the main display console and the O_2 FLOW HI light. Although short periods of flow in excess of 0.45 lb per hr are considered normal, a continuous flow rate between 0.45 and 1.0 lb per hr should not be tolerated. Flow rates above 1.0 lb per hr activate the red O_2 FLOW HI warning light located on the caution and warning (C&W) panel. Flow rates in this range are indicative of cabin leakage, O_2 supplied subsystem leakage, or subsystem mismanagement.

Connected to the 100±10 psig regulated pressure line in a fluid tank pressure regulator and relief valve assembly. It consists of redundant pressure regulators and relief valves which provide oxygen at regulated pressure to the expulsion bladders installed in the potable water tank, waste

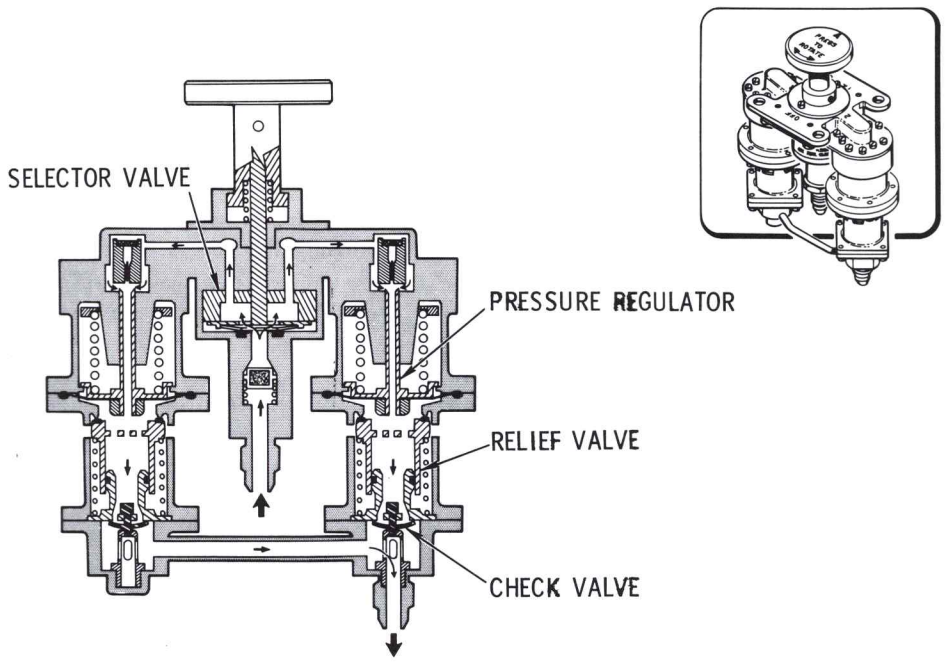

Figure 2.7-1. Main Oxygen Pressure Regulator

ECS-43C

ECS

water tank, and the water glycol (W/G) reservoir. The four-position selector valves are employed at the inlet and outlet, and enable isolation of malfunctioning elements or complete shutoff as desired. The pressure regulator is a normally opened, diaphragm-operated poppet metering valve which functions to regulate 100±10 psig supply pressure to 20±2.0 psig O_2 pressure to the fluid tanks, in relation to cabin pressure. The relief valve incorporated in the assembly outlet chamber functions to relieve O_2 pressure in excess of 25±2.0 psig into the cabin.

Should a regulator diaphragm rupture, and is isolated by the inlet manual selector valve, the manual outlet selector valve must also be positioned to isolate the relief portion of the failed regulator. This prevents a feedback from the alternate regulator flowing oxygen through the ruptured diaphragm of the failed regulator into the cabin.

Should the selector inlet valve of the assembly be placed in position 1, the selector outlet valve must also be placed to position 1 (or NORMAL). If instead, the selector outlet valve were placed to position 2, the valve port to pressurize the tanks would be closed, and the port to the relief valve would remain open. This permits the pressure relief function of the valve to remain operative but prohibits subsequent tank pressurization. Conversely, when the selector outlet valve is set to position 2, the selector inlet valve must also be set to position 2 (or NORMAL). The OFF position of the inlet and outlet selector valves is normally for ground checkout. However, if both pressure regulators malfunction during flight, the selector inlet valve must be set to the OFF position. This eliminates the tank pressurization function, but does not affect the pressure relief function. In response to the possibility of both relief valves malfunctioning, the selector outlet valve must be set to the OFF position. This action will eliminate both the pressurization and pressure relief functions.

The 100±10 psig oxygen supply is controlled by the emergency cabin pressure regulator to provide increased oxygen flow to the cabin and prevent rapid decompression. The emergency cabin pressure regulator consists of dual aneroid-operated, normally closed valves, relief valves to prevent over pressurization of the aneroids, and a manual four-position selector valve with positions designated No. 1, No. 2, NORMAL, and OFF. A PRESS-TO-TEST button, which closes the cabin pressure sense port, allows a fix bleed of 100 cc per min to pressurize an aneroid chamber and drive the valve open. Normally the 100±10 psig oxygen supply to the cabin is controlled by the cabin pressure regulator assembly. It consists of dual aneroid-absolute-type, normally closed valve, and each will deliver a minimum of 0.2 lb per hr oxygen flow at a cabin pressure of 5.0±0.2 psia. Failure mode of the valve is normally closed. A manual control valve may be opened, and allows a minimum 6.0 lb per hr flow of O_2 directly into the cabin for repressurization from 0.0 to 5.0 psia within one hour. The cabin pressure regulator and the emergency cabin pressure regulator are associated with the cabin pressure and temperature control subsystem and are illustrated and supplemented in paragraph 2.7.3.3. Oxygen distribution at 100±10 psig is routed to a manually operated metering valve for direct flow into the suit inlet duct. In the full open position, oxygen will flow from 0.6 to 0.7 lb per min.

Downstream the dual suit demand pressure regulator and relief valve compares suit compressor inlet pressure to cabin ambient pressure. When the compressor inlet pressure is 2.5 to 3.5 inches of water pressure below cabin pressure, the demand regulator controls O_2 flow into the suit circuit at flow rates up to 0.007 lb per min. When the compressor inlet pressure is above 2 to 9 inches of water pressure above cabin pressure, the relief valve vents the suit circuit gases to the cabin at a maximum flow rate of 0.66 lb per min. Normally the compressor inlet manifold is regulated to a average of 6.10 inches of water above cabin ambient pressure. When the cabin ambient pressure is less than 4 psia, a 100-ccm bleed within the demand regulator is used to maintain the suit circuit pressure at 3.75±0.25 psia. With cabin ambient pressure below 3.5 psia and a 0.66 lb per min suit leakage, the demand regulator should sustain suit circuit pressure at 3.75±0.25 psia. A four-position manual selector valve with control positions designated as No. 1, No. 2, No. 1 and No. 2, and OFF provides isolation of a fault.

Oxygen regulated at 100±10 psig pressure is used as a motive force in the removal of waste water from the suit circuit and then expelled into the suit heat exchanger. The demand pressure regulator and relief valve is supplemented in the pressure suit circuit subsystem paragraph 2.7.3.3.

2.7.3.2 Pressure Suit Circuit Subsystem.

The pressure suit subsystem is a loop or circuit designed to supply a conditioned atmosphere for a crew of three, whether they be in or out of their PGAs. The circuit provides for ventilation and cooling for the crew,

the removal of carbon dioxide and odors, and the control of relative humidity. Suit circuit pressure is maintained by controlling the amount of oxygen entering the subsystem.

A supply-return hose assembly is connected between each crewman's PGA and a suit hose connector assembly. This assembly consists of a combined supply-return connection, a three-position suit-flow control valve, which diverts oxygen into the cabin when a crew member is unsuited, and a check valve. There is also a venturi-type flow limiter located upstream in each supply line to limit flow to any one suit to a maximum of 0.7 lb per min. During the time a crewmember is in the shirtsleeve mode, the flow control valve is positioned to permit suit circuit flow into the C/M cabin.

Cabin gases are returned to the suit circuit for removal of carbon dioxide, odors, heat, and moisture. These gases enter at the suit circuit return air valve assembly, which consists of two check valves in series and a manual shutoff valve for isolating the suit circuit if the cabin becomes contaminated. The combined cabin and suit circuit atmosphere first flow through the debris trap, where small particles of solid matter are removed. The trap contains a bypass valve in the event the filter screen becomes clogged.

The two parallel suit compressors maintain circulation within the suit circuit. Normally only one compressor is operated at a time but both may be operated to provide additional suit gas flow during periods of high heat loads. A differential pressure transducer between the inlet and outlet manifolds of the compressor supply signals for indication on the main display console. Compressor output is dependent on the mode of operation. In normal space operation, the operating compressor delivers approximately 35 cu ft per min of suit gas at a pressure rise of 10 inches of water within the conditions of 4.93 psia and 88°F. When the cabin is unpressurized, the operating compressor delivers approximately 34.5 cu ft per min suit gas at a pressure rise of 6.9 inches of water when inlet conditions are 3.51 psia at 85°F temperature.

The suit demand pressure regulator (figure 2.7-2) controls suit circuit pressure in normal and emergency modes. It supplies oxygen to the suits whenever the suit circuit is isolated from the cabin and during depressurized operations. It also relieves excess gas to prevent overpressurizing the suits.

The regulator consists essentially of two redundant demand regulators and a relief valve. A selector valve is provided for selecting either or both regulators. Normally both are in operation.

Each regulator section consists of an aneroid control and a differential diaphragm housed in a reference chamber. The diaphragm is connected by a rod to the demand valve. The demand valve will be opened whenever a pressure differential is sensed across the diaphragm. In operation, there is a constant bleed flow of oxygen from the supply into the reference chamber,

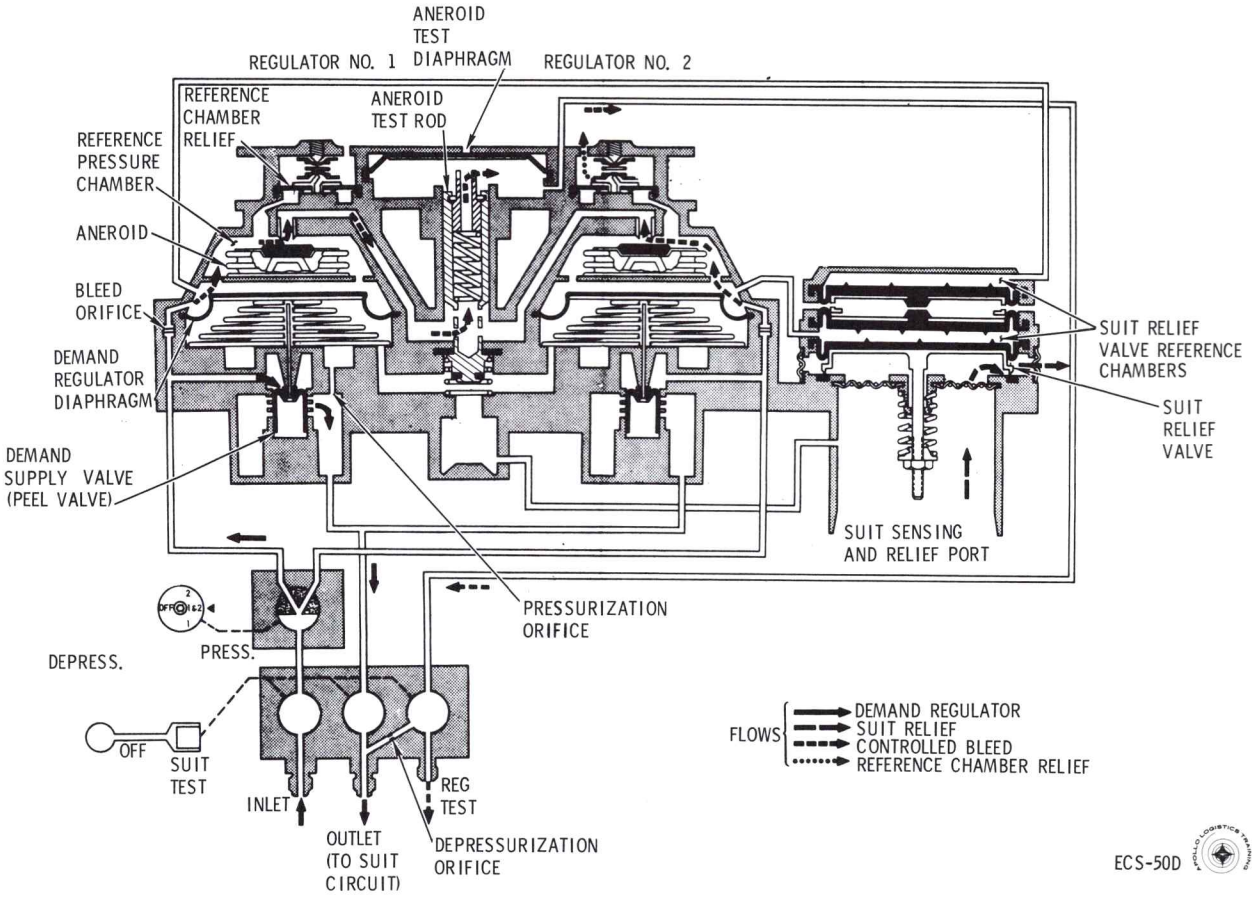

Figure 2.7-2. Suit Demand Pressure Regulator

around the aneroid, and out through the control port into the cabin. As long as the cabin pressure is greater than 3.75 psia, the flow of oxygen through the control port is virtually unrestricted, so that the pressure within the reference chamber is esentially that of the cabin. This pressure acts on the upper side of the diaphragm, while suit pressure is applied to the underside. The diaphragm can be made to open the demand valve by either increasing the reference chamber pressure or by decreasing the sensed suit pressure.

The increased pressure mode occurs during depressurized operations. As the cabin pressure decreases, the aneroid expands. At 3.75 psia, the aneroid will have expanded sufficiently to restrict the outflow of oxygen through the control port, thus increasing the reference chamber pressure.

Decreased unit pressure mode occurs whenever the suit circuit is isolated from the cabin, and cabin pressure is above 5 psia. In the process of respiration, the crew will exhale carbon dioxide and water vapor. In circulating the suit gases through the CO_2 and odor absorber and the suit heat exchanger, the CO_2 and water are removed. The removal reduces the pressure in the suit circuit which is sensed by the regulator on the underside of the diaphragm. When the pressure drops approximately 2 in. of H_2O pressure below cabin pressure, the diaphragm will open the demand valve.

The regulator assembly contains a poppet-type relief valve which is integral with the suit pressure sense port. During operations when the cabin pressure is above 3.75 psia, the relief valve is loaded by a coil spring which allows excess suit gas to be vented whenever suit pressure rises from 2 in. to 9 in. H_2O above cabin pressure. When the cabin pressure decreases to 3.75 psia, the reference chamber pressure is increased by the throttling effect of the expanding aneroid. The references chamber pressure is applied through ducts, to two relief valve loading chambers which are arranged in tandem above the relief valve poppet. The pressure in the loading chambers acts on tandem diaphragms which are forced against the relief valve poppet. The relief portion of the valve is thus increased to 3.75 psia plus 2 to 9 in. H_2O.

Two parallel CO_2-odor absorber canisters, downstream of the suit compressors, function in the removal of carbon dixoide and odors. A removable filter within each canister contains sufficient lithium hydroxide (for CO_2 removal) and activated charcoal (for odor removal) to last 1.5 man-days of operation. This operational limit requires that each filter be changed, on an alternating basis, every 12 hours. An internal bypass is incorporated within each filter to furnish the required flow during the ECS emergency mode (cabin depressurized), but will also increase the flow under normal conditions. Although 50 percent of the flow is permitted to bypass the lithium hydroxide, the total flow must pass through the charcoal filter.

The CO_2-odor absorber filter change sequence involves numerically identified filters and alphabetically identified filter stowage containers. Although the filters are replaced in numerical sequence, the stowage containers are not opened in alphabetical sequence, relative to filter replacement. Odd-numbered filters will always be installed in suit circuit canister A (upper) and even-numbered filters installed in canister B (lower). After the proper filter stowage container is located by the crewman, the correct filter is obtained and the filter change accomplished. The used filter is then stowed in the container from which the unused replacement came. Where two filters are stowed one above the other, the used filter will always be placed below the remaining unused filter. This provides a more readily accessible unused filter at the next 12-hour replacement period. Filter replacement data, such as filter number and mission time, is recorded by the crew in the flight log.

A diverter valve located at the canisters inlet is normally positioned to direct gas flow through both filters. In conjunction with check valves, located at each canister outlet, repositioning the diverter valve isolates an expended filter. A manually operated vent valve for each canister allows equalization to cabin pressure prior to the removal of a filter.

Suit circuit gases, upon leaving the CO_2-odor absorber canister assembly, are at a higher temperature and humidity level than at any other point in the suit circuit. Heat has been generated in flowing through the compressors and the canister assembly. Also, the already humid gases have picked up additional moisture due to chemical reaction between the carbon dioxide and lithium hydroxide. The suit heat exchanger removes this heat and humidity from the suit gases.

Normally the heat transfer fluid, water-glycol, flowing through the suit heat exchanger removes the suit circuit heat loads to space through space radiators. A water-glycol evaporator supplements heat transfer when the space radiators are inadequate. A suit evaporator (part of the suit heat exchanger) is provided and used only in the event of an emergency. Under all other conditions the suit evaporator controls are to remain in the OFF position. The control switch (SUIT EVAP., AUTO - MAN located on Panel 13) controls electrical power to the system. This operational change will not impose added constraints on the mission because if the water-glycol evaporator should fail when it is required for cooling of electronics, etc., this would be sufficient cause to terminate the mission.

Should the ability of the suit evaporator system demonstrate proper operation, the control switch would be placed to the AUTO position. When water-glycol inlet temperatures to the suit heat exchanger exceed 52°F or the outlet temperatures of the suit circuit gases from the heat exchanger exceed 60°F, the suit heat exchanger is bypassed by the water-glycol flow through a diverter valve. When the automatic-controlled diverter valve is in the full bypass position, an integral switch in the diverter valve assembly is activated. The diverter valve switch activates the suit evaporator steam pressure control unit. The correct steam duct pressure is automatically established for a given temperature error by the steam pressure control unit, pressure transducer, and the steam pressure control valve. Initial opening of the steam pressure control valve causes a switch in that valve assembly to activate the wetness control unit. Water inlet through a solenoid valve to the suit evaporator is automatically controlled by sensing the suit evaporator wetness and the temperature of the suit gases at the heat exchanger outlet. When suit gas temperatures return to normal, the evaporator mode is sequentially deactivated and water-glycol flow is re-established. By overriding the suit gases temperature sensor at the outlet of the heat exchanger, the system may also be activated, providing the SUIT EVAP control switch is in the AUTO position. Simulated high heat load is initiated by the SUIT HT EXCH switch (LHEB-310).

As the moisture-laden suit gases are cooled, condensation takes place within the heat exchanger. This moisture is absorbed by a wick-like material, removed by capillary action and the suction of the H_2O accumulator, and pumped into the waste water system.

The two accumulators are automatically controlled, self-cycling, reciprocating pumps. Oxygen at 100±10 psig periodically activates the pumps on the expulsion stroke, while a return spring is utilized for the suction stroke. Only one accumulator can be operated at a time, with the second for standby use in event of malfunction. A manual backup mode of accumulator operation is also incorporated. Following the discharge of suit circuit gases from the suit heat exchanger, the normal flow is to the three suit hose connector assemblies. A suit flow relief valve is incorporated in the bypass line between the outlet of the suit heat exchanger and the inlet to the suit compressor. The valve opens at a ΔP of 5.0±0.2 in H_2O and automatically maintains a nearly constant flow in the event of suit circuit flow resistance fluctuations.

2.7.3.2.1 CO_2 Sensor.

The CO_2 sensor, situated between the inlet and outlet manifolds of the suit circuit, is a compact unit that operates on the infrared absorption principle. The unit measures the amount of infrared energy absorbed by the CO_2 in the atmospheric sample passing through the sensor. This is accomplished by comparing two different wavelengths in the infrared spectrum. One wavelength is absorbed by CO_2, while the other acts as a reference. This establishes a ratio signal which is amplified and reads out as a d-c voltage proportional to the partial pressure of CO_2 in the sample gas.

ECS

The sensor is divided into the optics section and the electronics section. The optics section includes an infrared energy source (a small tungsten filament lamp) and optical lenses and mirror for focusing the beam through two wavelength filters and the atmospheric sample onto a detector. Both wavelength filters (4.3 microns for sampling and 4.0 microns for reference) are attached to a tuning fork which vibrates at 600 cps. The filters move back and forth across the focused light beam, alternately transmitting energy at the sample and reference wavelengths.

The basic purpose of the electronics section is to detect and transform signal information. Miniaturized components are mounted on seven printed circuit boards which accomplish all the electrical functions. These functions include supplying the power for the infrared source lamp and the operation of the tuning fork, the detector, and the various preamplifiers and amplifiers. The output signal activates the CO_2 PP HI systems status light (MDC-11) and the CO_2 PART PRESS indicator (MDC-13).

2.7.3.2.2 Gas Chromatograph.

The gas chromatograph is an item of GFE that is installed in several of the Apollo Block I spacecraft for flight qualification purposes. The unit is capable of identifying and measuring the concentrations of 28 gas components, and the resulting data is then telemetered to MSFN. This compact item of equipment is installed in the LEB, and it interfaces the inlet and outlet manifolds of this suit circuit in the LHEB.

The gas chromatograph operates on the basic principle of routing samples of the suit circuit and/or cabin atmosphere through three separate capillary columns and detectors. Low-pressure helium is used as the carrier gas for the sample streams. The helium supply, even under continuous demand, will last the length of any proposed mission. The helium is stored in a reservoir at 6000 psig and is regulated to its normal working pressure of 42 psia. In event of regulator malfunction, pressure relief is provided by a 200 psig rupture disc. Each capillary column and detector identifies a specific number of gas components. One column-detector will identify five of the permanent gases; namely, hydrogen, nitrogen, oxygen, methane, and carbon monoxide. Another is concerned only with the separation and detection of ammonia, carbon dioxide, and water. The third column-detector identifies 20 trace contaminants listed as follows: Freon II, methyl alchol, methylene chloride, ethyl alcohol, benzene, P-dioxane, acetone, hydrochloric acid, hydrogen sulfide, ethylene oxide, isoprene, diethyl sulphide, nitrogen dioxide, ethylene glycol, vinylidene chloride, methyl chlorofoam, acetylene, dimethyl sulfide, Freon 114, and 1, 1 trichloroethane.

Cross-section ionization-type detectors are used in conjunction with the three columns for gas component identification. The output current of the detectors produces a minimum-strength signal that must be greatly amplified, then conditioned for telemetry. The capillary columns, the detectors, and the electrometer amplifiers are housed in an oven, the temperature of which is maintained within a very close tolerance. The balance of the electronics, installed in a separate package, consists of a transformer, a programmer, and a regulated power supply. Solid-state circuitry is used exclusively throughout the electronics of the unit.

The gas chromatograph will complete one identification cycle in approximately 80 minutes, regardless of the sampling mode selected. Samples are taken from the suit circuit atmosphere, the cabin atmosphere, or from each atmosphere on alternating cycles depending on the positioning of a selector switch located on the LEB panel 120. The selector switch may be positioned to CABIN AIR/AUTO/SUIT AIR by command.

The gas chromatograph is serviced and installed by ground support personnel prior to flight crew ingress.

A three-position START/OFF/PREHEAT switch, controls power for a minimum of 30 minutes before switch is set to START. A push-type switch, AMPL-CAL, for bench calibration only, and the START/OFF/PREHEAT switch are located on panel 120.

During the mission, the flight crew will not be required to make control adjustments to the unit unless directed to do so by MSFN. During descent, the remaining helium in the reservoir is dumped into the cabin by the action of a pyro valve inside the unit. A full tank (abort condition) can be emptied in a maximum of 3 minutes. Pyro valve initiation is simultaneous with the C/M RCS propellant purge operation.

2.7.3.3 Cabin Pressure and Temperature Control Subsystem.

The pressurization and temperature control of the C/M cabin (figure 2.7-3) are primarily automatic functions with manual backup and override modes provided. Cabin pressurization is maintained by the cabin pressure regulator assembly. This unit consists of dual regulators and a manual repressurization valve operated by a knurled knob. Both regulators operate simultaneously as there is no selector valve incorporated and no off position. The regulators automatically maintain the cabin at 5±0.2 psia during normal conditions and at a maximum oxygen flow rate of 1.3 lb per hr. If the cabin should become depressurized for any reason, the regulators close at a pressure of 3.5 psia to conserve oxygen. The manual valve,

ECS

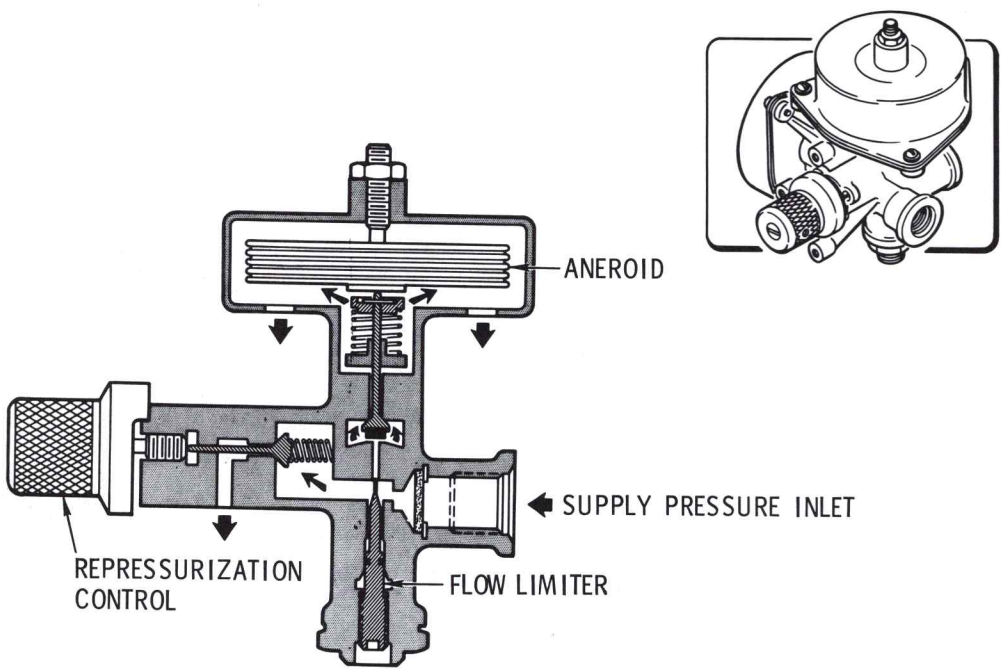

Figure 2.7-3. Cabin Pressure Regulator

with a maximum flow rate of 7.2 lb per hr, may be adjusted to maintain cabin pressure in event of regulator malfunction. However, it is primarily used to repressurize the cabin following decompression, requiring approximately 1 hour to raise the cabin pressure back to 5.0±0.2 psia.

An emergency cabin pressure regulator assembly illustrated in figure 2.7-4 will flood the cabin with oxygen to prevent rapid decompression in the event of cabin wall puncture. As cabin decompression is hazardous to life only when a crewman is in the shirtsleeve mode, the regulators are not selected for use until just prior to a crewman removing his PGA. The regulator assembly consists of a four-position manual selector valve and two redundant regulators which, when selected for use, automatically open when the cabin pressure drops to 4.5±0.1 psia. The emergency cabin pressure mode of 3.5 psia is contingent upon Apollo design limits and meteorite tests, and allows unsuited crewmen time to don their PGA. This minimum pressure can be maintained for 5 minutes, providing that meteorite holes do not exceed the total equivalent area of a hole 0.5 inch in diameter. At the end of this time, the pressure will drop more rapidly, going to 2.0 psia in 10 minutes and to 1.0 psia in 15 minutes.

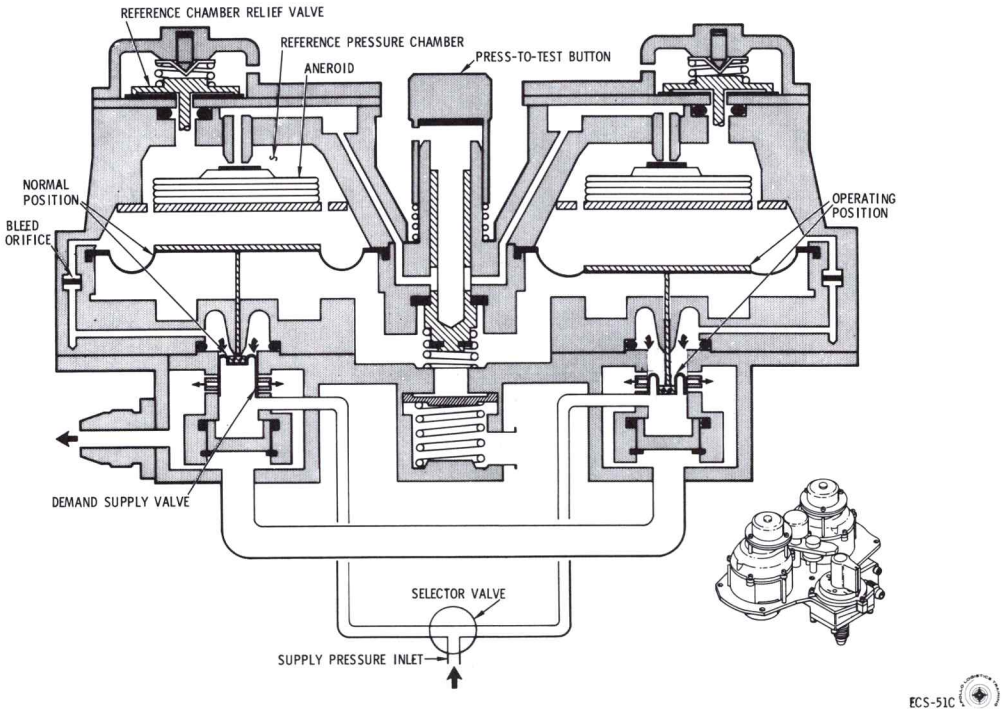

Figure 2.7-4. Emergency Inflow Regulator

Illustrated in figure 2.7-4, the dual cabin pressure relief valves provide positive and negative pressure relief for the cabin throughout the entire mission. Although they function automatically, cable-operated manual operated manual override controls located on panel 307, are provided for adjustments during flight to close relief valves for a malfunction or to prevent sea water inflow during postlanding phase and for ground checkout procedures. When the cabin pressure becomes higher than the external ambient pressure, the relief valves limit the differential pressure to 6 (+0.2, -0.4) psi. During the ascent phase, this differential pressure may go as high as 7.0 psi for a short period of time. Conversely, when the cabin pressure becomes lower than the external ambient pressure (as during descent), the relief valves limit the differential pressure to a maximum of 25 inches of water. The assembly is located in the stream duct overboard line which provides the means of venting the positive and negative cabin pressures.

Ventilation within the C/M is provided by dual fans, which circulate cabin gases through the cabin heat exchanger. Normally, both cabin air fans are selected by the crew for simultaneous operation. If either fan malfunctions or is shut down for any reason, a closure (cover) is manually installed over the inlet of the inoperative fan to prevent backflow. A cabin air control louver, located at the outlet of the cabin heat exchanger, is manually adjusted for directional flow of gases within the cabin.

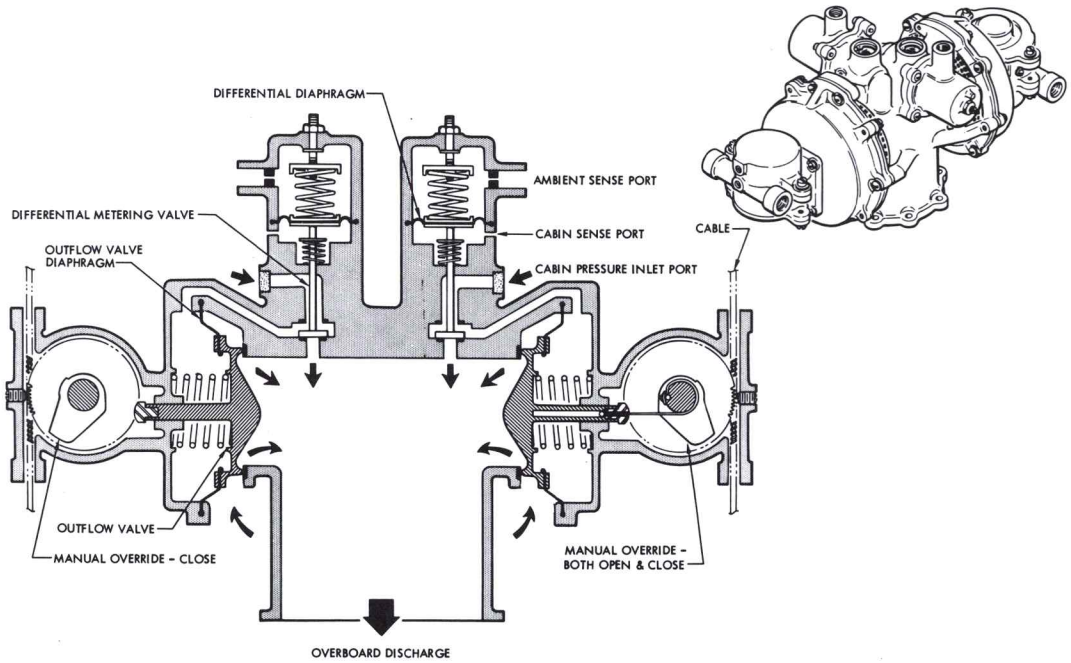

Figure 2.7-5. Cabin Pressure Relief Valve

Although cabin temperature control is normally an automatic function, manual backup and override modes of operation may be utilized. Cabin gases are heated or cooled by their circulation through the cabin heat exchanger, which uses water-glycol as the heat transfer medium. A cabin temperature control unit compares a desired temperature, selected by the crew, to the temperature that is sensed at the inlet to the cabin air fans. Any difference results in a signal that repositions the motor-operated cabin temperature control valve. This valve regulates the amount of hot or cold water-glycol flowing into the cabin heat exchanger. At each end of valve full travel, the total hot or cold flow is routed through the heat exchanger and, at intermediate valve positions, the water-glycol flow through the heat exchanger varies. A cabin temperature anticipator, located at the cabin air control louver discharge, senses the temperature rate of change and signals the cabin temperature control unit, preventing overcorrection of the control valve.

Ventilation during the postlanding phase is accomplished by circulating outside ambinet air through the cabin. All of the equipment necessary to carry out this function (other than controls) is located on the C/M forward tunnel cover. Outside air is drawn into the cabin through an inlet duct containing a shutoff valve and fan. The inlet duct includes a flexible extension for promoting more effecient ventilation. After circulating within the cabin, the air is expelled overboard through an adjacent outlet duct and shutoff valve. Both motor-operated shutoff (vent) valves and the vent fan are controlled by the VENT FAN switch on MDC-25. High- or low-speed fan operation is available, and either switch position will simultaneously activate the fan and open the cabin vent valves. An assembly consisting of a pendulum-type attitude sensing switch and an adjacent override control switch (PLVC) are installed in the LHEB. The pendulum is free to move only in the Z-axis. Should the C/M roll beyond a specified limit or become inverted (stable II condition), the attitude sensing switch activates the cabin vent valves to the closed position to prevent water ingestion. If all efforts to return the C/M to the upright (stable I) condition should fail, the PLVC switch (LHEB-141) is set to OPEN. This overrides the closing action of the attitude sensing switch by opening both cabin vent valves and flooding the forward portion of the C/M. The pressure on the tunnel hatch then becomes equalized, thus allowing its removal for the escape of the crew. The PLVC switch may also be used to open the cabin vent valves if the attitude sensing switch should fail after having closed the valves. In order to prevent the inadvertent opening of the vent valves in flight, two precautions are taken. A lockpin is installed in each vent valve, and the circuit breaker applying power to the PLV system is not engaged during flight. Therefore, before the PLV system can be operated, the lockpins must be operated, the lockpins must be removed (pulled out approximately 0.5 in.) prior to CSM separation and the applicable circuit breaker engaged after landing.

2.7.3.4 Water-Glycol Coolant Subsystem.

The water-glycol coolant subsystem is a closed loop through which an aqueous ethylene-glycol mixture (water-glycol) is continuously

circulated. The mixture ratio by weight consists of 62.5 parts of glycol to 37.5 parts of water. Basically, the subsystem provides a heat transport fluid loop for the cabin atmosphere, the suit circuit atmosphere, the electronic equipment, and a portion of the potable water. It also serves as a source of heat for the cabin atmosphere when required. All of the unwanted heat absorbed by the water-glycol is transported either to the space radiators, where it is radiated to space, or to the water-glycol evaporator, where it is rejected by the evaporation of water.

The water-glycol evaporator outlet temperature must be maintained between 40°F and 43°F (nominal 41.5°F). Sensed at the water-glycol evaporator inlet from the space radiators, water-glycol temperatures between 42.9°F and 45.9°F (nominal 45°F) activate the automatic mixing valve control system. High temperature water-glycol from the water-glycol pump is mixed with the lower water-glycol temperature from the space radiators to maintain the evaporator outlet nominal temperature of 41.5°F. The manual override switch for the mixing valve is located on the coolant control panel 311 (GLYCOL EVAP TEMP IN).

Three lines from the water-glycol pump assembly are paralleled to the water-glycol evaporator inlet. The aforementioned oxygen supply capillary restrictors are wound around the one line routed to the space radiators and relief valves. The other line is routed to the mixing valve. To insure proper operation of the oxygen supply restrictors, in the line between the cryogenic O_2 storage in the S/M to the surge tanks in the C/M, during cabin repressurization, full water-glycol flow through the line to the space radiators is required. Sufficient heat must be available to prevent cryogenic oxygen entering the C/M oxygen system. To achieve this, the mixing value must be manually placed to the full closed position 15 to 30 minutes before repressurization, and remain closed until the surge tank returns to maximum pressure after repressurization of the C/M.

High-temperature water-glycol between 48°F and 50.5°F from the space radiators and sensed at the evaporator inlet, initiates the water-glycol evaporator temperature control system. Once the evaporator mode is initiated by the evaporator inlet sensor, an evaporator outlet sensor supplies the controlled variable signals to the controller. If a heating temperature error is sensed by the evaporator outlet sensor, the steam pressure valve begins to open and repositions at a velocity proportional to the temperature error. Evaporator wicks are maintained in a wet condition to provide immediate boiling when the steam pressure valve is opened. Should the steam pressure drop below 5.0±0.2 mm Hg absolute, a pressure switch overrides the temperature signal and closes the steam pressure valve. The override pressure switch provides adequate pressure margin above the freezing pressure of 4.58 mm Hg absolute. A switch in the steam pressure valve assembly is activated when the valve is initially cracked open. The switch activates the wetness control for replenishing water to the evaporator through a water solenoid control valve. Signals from the wick temperature sensor are indicative of the relative wetness

of the evaporator wicks. As water evaporates, the wick sensor temperature increases and exceeds an evaporator inlet reference sensor signal and cycles the water control valve open. The reference input sensor varies the control as a function of heat load to maintain the desired wick temperature with no water carryover into the steam duct. When the evaporator wicks become replenished with water, the wick sensor temperature decreases and approaches the saturation temperature corresponding to the steam pressure and cycles the water control valve closed. The water control valve continues to cycle as long as water-glycol cooling by water evaporation is required.

The steam pressure control valve can be electrically repositioned to control the steam pressure for 40°F to 43°F outlet glycol temperature using pressure monitor indicator (panel 13 GLY EVAP OUTLET TEMP). The control switches (GLY EVAP - STEAM PRESS) must be set to the MAN position and set to INCR for open and DECR for closing the steam pressure valve. The H_2O FLOW switch (located on panel 13) should be in the AUTO position for the automatic wetness control to be effective. Should the wetness control fail, the water inlet control valve can be energized open by setting the H_2O FLOW switch to ON. When operating in this mode, a portable indicating unit should be used to prevent water carryover into the steam duct. The portable indicating unit consists of a four-position selector switch for selecting OFF, WICK TEMP., EVAP INLET TEMP. AND NUL. The unit has its own 175-hour battery-operated power supply. Wick temperature indicator markings are 40°F to 70°F; water-glycol inlet temperature indicator markings are 40°F to 100°F. The null indicator marking is a red line across the mid-length section of the dial face. WATER ON is decaled above the red line and WATER OFF below. A water control tabulation chart is provided, showing wick temperature versus inlet glycol temperature. The portable indication unit should also be used when manual water bypass control valve (GLY EVAP WATER CONTROL BYPASS panel 317) is used. The portable indicator unit will connect to J39 on panel 311.

Spare sensors are provided for the wick temperature sensor and the four water-glycol (two inlet and two outlet) temperature sensors. After it has been determined that any of these primary sensors have malfunctioned, the spare sensors will be put into operation. Located at the bottom of the cooland control panel .re two connectors used for the manual switchover. By disconnecting the plug from the one connector (J38) and reconnecting it to the other (J39), all spare sensors are simultaneously connected into the circuit. The same type of manual switchover applies to the temperature transducer power supply (J41) and its spare (J42). The plug and the two connectors are located below the CO_2-odor absorber canisters.

When the thermally controlled water-glycol leaves the evaporator, the flow is divided. A small portion (33 lb per hr) is routed directly to the IMU and several of the thermal coldplates. The main flow (167 lb per hr) is through the water chiller, which cools and stores a limited quantity of potable water for crew consumption. After absorbing the water chiller heat load, which is intermittent, the water-glycol flows to the diverter valve. This valve routes the full flow to the suit heat exchanger where suit circuit gases are cooled by the water-glycol mode. During the evaporative mode of suit circuit cooling, the valve bypasses the flow around the suit heat exchanger.

Although warmed somewhat when it leaves the suit heat exchanger, the water-glycol still remains cool enough to effectively absorb the heat

loads produced within the cabin. The main water-glycol flow next enters the cabin temperature control valve, where it is routed either to the cabin heat exchanger or to the remaining thermal coldplates. The action is dependent upon the temperature control unit, which automatically controls the movements of the motor-operated cabin temperature control valve. The valve is so constructed that in the cabin full cooling mode, the total flow of cool water-glycol (167 lb per hr) is routed first through the cabin heat exchanger and then through the thermal coldplates. In the cabin full heating mode, the total flow is routed through the thermal coldplates first, where the water-glycol absorbs heat, and from there flows through the cabin heat exchanger. The intermediate valve positions are for the partial cooling or partial heating modes. In the intermediate positions, the quantity of cool or warm water-glycol flowing through the heat exchanger is reduced in proportion to the demand for cooling or heating. Although the amount of water-glycol flowing through the cabin heat exchanger will vary, the total flow through the thermal coldplates will always be 200 lb per hr. (See figure 2.7-6.) An orifice restrictor is installed between the cabin temperature control valve and the inlet to the coldplates. Its purpose is to maintain a constant flow rate through the coldplates by reducing the heating mode flow rate to that of the cooling mode flow rate. Another orifice restrictor, located in the coolant line from the IMU, maintains a constant flow rate through this component regardless of system flow fluctuations.

The total flow leaving the cabin temperature control valve enters the water-glycol pump assembly which provides the continuous coolant circulation within the subsystem. The assembly consists of two water-glycol pumps, two pump outlet check valves, a full-flow filter, an accumulator, and an accumulator isolation shutoff valve. The two pumps, mounted in parallel, can only be operated one at a time with the second pump for standby redundancy. Each pump outlet check valve prevents coolant backflow through the nonoperating pump. Water-glycol entering the assembly first passes through the full-flow filter before reaching the pumps. There is also a side passage that leads to the accumulator.

The purpose of the accumulator is to maintain correct pump inlet pressure and to compensate for small amounts of leakage and/or thermal expansion/contraction. The manual shutoff valve in the side passage is closed to isolate the accumulator in case of a punctured bellows, which would permit the coolant to leak into the cabin, causing contamination. If the water-glycol accumulator quantity indicator on the main display console shows a steady decay to zero, a leak in the water-glycol system is the probable cause. However, an indication showing a slow steady decrease, which stops at a point above zero, is probably due to thermal contraction indicating the water-glycol temperature is below the nominal range. Located downstream of the pump assembly is the water-glycol pump outlet pressure transducer which measures the static pressure of the water-glycol at the pump outlet, thus giving an indication of pump performance.

At this point in the subsystem, the temperature of the water-glycol has greatly increased due to the absorption of the various heat loads. The

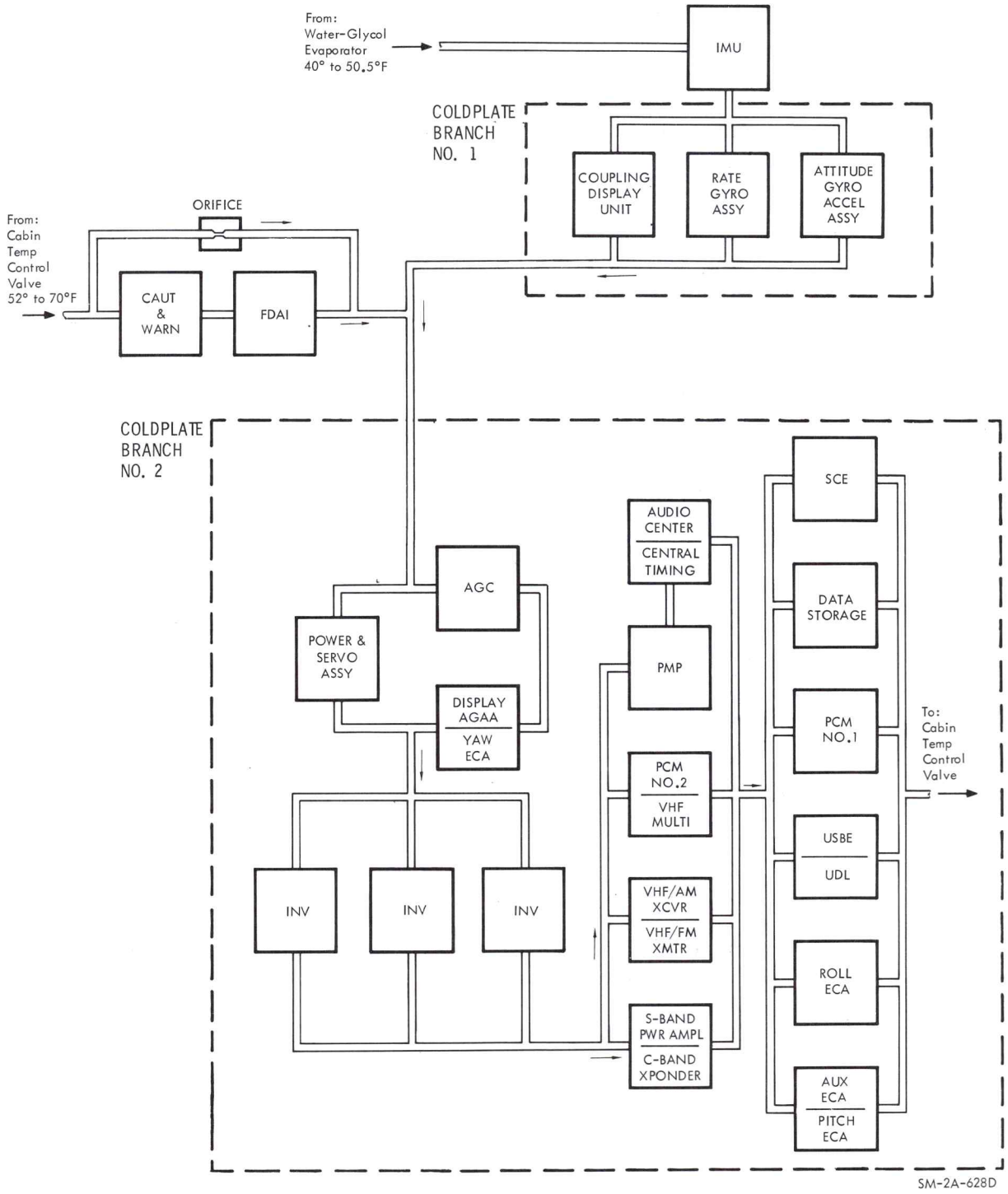

Figure 2.7-6. Equipment Coldplate Flow Diagram

total flow of hot water-glycol is routed through a passage in the steam pressure control valve to prevent ice from forming within the valve opening. Icing at this location could result in valve malfunction and/or blocking of the steam duct. To prevent ice from forming at the outlet of the steam duct, two redundant electric heaters are used. The two 3-watt heater elements inside the duct extend approximately 8 inches upstream from the outlet.

The water-glycol next flows to the water-glycol evaporator inlet temperature control valve (previously described). The hot water-glycol that is not used for mixing by this valve is routed to the space radiators for cooling. Any pressure losses in the space radiator circuit, regardless of the number of radiators in operation, will be limited by the action of the dual water-glycol pressure relief valves. These two valves are in parallel and are located between the inlet and outlet lines of the radiator circuit. Just upstream of each pressure relief valve is a manual shutoff valve. By controlling the shutoff valves, one relief valve at a time is normally selected for use with the second for standby redundancy. When a ΔP of 11 psi is reached, the relief valves open to bypass coolant to the radiator return line, closing at a ΔP of 8.5 psi. In order to preserve the water-glycol closed loop, the relief valves function as a bypass when all space radiator isolation valves are closed or when the water-glycol radiator shutoff valve is closed. This is a manual shutoff valve that controls the flow of water-glycol from the C/M to the S/M. It is placed to the closed position shortly before CSM separation to prevent the coolant in the C/M from flowing overboard after separation.

Two space radiators with an area of 30 square feet each are located on opposite sides of the S/M in sectors II and V. Each radiator panel contains two separate sets of tubes. The flow of water-glycol through the four tube circuits is individually regulated by a motor-operated radiator isolation valve located on the inlet side of each tube circuit. The four valves are remotely controlled from the C/M and give the crew some degree of latitude in their selection of cooling area. However, the primary purpose of the valves is to isolate tube circuits should they develop leaks. A check valve in each tube circuit outlet line prevents the backflow of coolant from entering any radiator tube circuit that is leaking. Freezing within the radiators is the point at which flow ceases, and may be prevented by maintaining the inlet temperature above 75°F. This temperature is obtained on the AUX DC VOLTS meter (RHFEB-97) or from MSFN if the crew is unable to leave the couches.

The water-glycol, after leaving the space radiators and re-entering the C/M, flows through a capillary restrictor. This is placed in the line to make the pressure drop through the radiators compatible with that through the water-glycol temperature control valve during the mixing mode. Upon leaving the restrictor, the water-glycol flows through two check valves in series. These valves prevent coolant from flowing overboard following CSM separation. A temperature sensor, located between these check valves, gives an indication on the main display console of the temperature of the coolant leaving the radiators. The indicator is located on MDC-13.

Under normal space flight conditions the water-glycol reservoir is isolated from the coolant subsystem by the proper positioning of three glycol reservoir manual shutoff valves. The water-glycol reservoir inlet and outlet valves are closed, and the reservoir bypass valve between the inlet and outlet lines is opened. During the prelaunch and ascent phases, however, the position of these three valves is reversed to permit coolant flow through the reservoir. The one gallon of water-glycol contained in the reservoir is then utilized as a heat sink, which becomes necessary during the ascent phase. The space radiators are not effective during ascent and evaporative cooling takes place only after the ambient pressure reaches 0.1 psia, which is approximately 150,000 ft altitude (T + 2 minutes and 10 seconds).

If a water-glycol leak should occur, the coolant subsystem may be refilled from the limited supply in the water-glycol reservoir after the leak is isolated. The glycol reserve shutoff valve, located in the line from the reservoir to the inlet side of the pump, is used for this purpose. As the reservoir contains a bladder that is under 20±2 psig oxygen pressure, positive expulsion of the coolant is assured. The pressurized reservoir may also serve as an accumulator for the coolant subsystem if the regular water-glycol accumulator becomes inoperative and is isolated. The flow of water-glycol, either through the reservoir or bypassing it, next enters the water-glycol evaporator (previously described), thus completing the coolant loop.

During prelaunch operations, the flow of temperature-controlled water-glycol is furnished by GSE through lines connected to the fill and vent couplings in the S/M. The solenoid-operated water-glycol shutoff valve, upstream of the outlet coupling, is controlled at the GSE and is opened to permit coolant flow through the spacecraft loop and back to the GSE.

2.7.3.5 Water Supply Subsystem.

The primary function of the water supply subsystem is the storage and collection of potable and waste water. Potable water produced by the fuel cells and waste water recovered from the suit heat exchanger water separator are stored in separate tanks in the C/M. Supplementing this supply are two water tanks in the S/M that contain potable water for refilling the C/M potable or waste water storage tanks. The water supply subsystem also supplies hot and cold potable water to the crew and waste water to the water-glycol evaporator and suit heat exchanger for evaporative cooling.

The water produced by the fuel cells in the S/M is a steady source of potable water and is stored in a 36-lb capacity tank located in the aft compartment of the C/M. The tank, which contains a bladder, is pressurized with oxygen at 20±2 psig by the tank pressure regulator and relief valve assembly, thus assuring positive expulsion of fluid. Fuel cell water flows into the tank at a potential pressure of approximately 64 psia, which is high enough to overcome the tank pressure. The potable water tank may

be serviced before flight by the manually operated servicing valve, which is also in the aft compartment and not accessible to the crew. A quantity indicator on the main display console gives the measurements obtained by the tank quantity transducer. Located in a waterline between the fuel cells and the potable water tank is a check valve and the potable tank inlet shutoff valve. The check valve prevents any reverse flow of potable water. The shutoff valve, when closed, prevents fuel cell water that has become contaminated from entering the C/M potable water network.

Temperature-controlled potable water is available to the crew from two components within the C/M. Cold water, which is maintained to 50°F (at the water chiller), is available at both the food preparation water supply unit and the water delivery unit. Hot water, however, is available only at the food preparation water supply unit. This component utilizes a small tank with an electric heater to raise the water temperature to 154°±4°F. By selecting the proper valve, hot or cold water is metered out for food reconstitution or other crew needs. The water delivery unit is used by the crew exclusively for drinking purposes. It consists of a housing containing a coiled flexible tube and a water delivery valve for use with the individual mouthpieces of the three crewmen. Upstream of this unit is the drinking water supply shutoff valve that is closed if the water delivery valve should leak.

Waste water collected from moisture condensate within the suit heat exchanger is drawn into one of the cyclic accumulators and from there pumped into the waste water network. If, however, there is a water demand by either the water-glycol evaporator or the suit heat exchanger-evaporator, the waste water flows directly to the water control valve of the appropriate evaporator. The 56-pound capacity waste water tank contains the pressurization and quantity measuring features of the potable water tank. A servicing valve is located on the water control panel in the C/M cabin and, therefore, is accessible to the crew, if necessary.

Although waste water never enters the potable water network, potable water may enter the waste water network under certain conditions. If the potable tank becomes full, the differential pressure between the networks will eventually overcome the 6.0±0.5 psi at the waste tank inlet valve, thus permitting water flow. Potable water also enters the waste water network if the waste tank is empty and there is a water demand by either evaporator. The low pressure created by this water demand is responsible for waste tank inlet valve activation. The valve also incorporates a manual shutoff feature for use if the relief valve portion malfunctions. Closing the valve thus prevents the premature dumping of potable water into the waste water network. A check valve, located downstream of the relief valve, separates the potable and waste water networks by permitting flow in one direction only.

To prevent overpressurizing the water supply subsystem, a pressure relief assembly is installed downstream of the check valves that separate the potable and waste water systems. The assembly consists of a selector

valve and two redundant pressure relief valves in parallel. When the potable and waste water tanks are full, the continued supply of water produced by the fuel cells will be dumped overboard by these relief valves. Normally, both valves are selected for simultaneous use, and dumping occurs when the water pressure reaches approximately 32 psi above the outside ambient pressure. Another line, with two check valves in series, bypasses fuel cell water output directly to the pressure relief assembly. However, this action will take place only in event the waste tank inlet valve fails closed. The bypass prevents fuel cell water flow from being blocked, thereby preventing total fuel cell failure due to flooding within the cells.

To provide sufficient water for a maximum duration earth orbital mission, two 56-pound water tanks are installed in the S/M. These tanks are similar to the C/M waste water tank but lack the quantity measuring capability. A separate tank pressurizing system is used for positive expulsion of the water. Nitrogen at 900 psig is stored in a small tank that is protected against overpressure by a relief valve set at 1045±25 psig. In addition to a nitrogen fill valve, there is a pressure regulator and relief valve to reduce and regulate nitrogen pressure in the water tanks. These tanks are pressurized at 40±2 psig, and the relief valve will function at 44 to 48 psig.

At the water outlet of each tank, there is a manual fill valve and a solenoid shutoff valve. The shutoff valves are controlled by the WASTE H_2O TK REFILL switch in the C/M. These valves control the flow of water from the tanks to a common line in the S/M that subsequently connects into the potable water line from the fuel cells. When the C/M water tank quantities are low, they will be refilled from these S/M water tanks at a flow rate of 2.92 lb per min. Because of water supply subsystem design, the C/M potable water tank will fill first, unless the potable tank inlet valve is closed.

2.7.3.6 ECS-Waste Management System Interface.

Although the waste management system (WMS) and C/M battery venting network are not subsystems of the ECS, they will be covered as such in the AOH because of system interface. The interface mentioned is in reference to the ECS water overflow line. All of the urine and the fecal odors of the WMS, as well as gas pressure from the C/M batteries, are also routed overboard through this single ECS water dump line. Incorporated at the outlet of the dump line (urine/water) is a 0.055 in. orifice nozzle that restricts gas flow to a maximum of 1 cfm and liquid flow to less than 1 cfm. The gas flow is limited to prevent excessive loss of cabin atmosphere during fecal canister usage. The restriction on liquid flow, in conjunction with a 5.7-watt, continuously operating dump nozzle heater, prevents the formation of ice at the nozzle, which could block all flow.

The function of controlling and/or disposing of waste solids, liquids, and gases is accomplished by the WMS. Except for the fecal canister and the other items of stowed equipment, the major portion of

the system is located in the RHEB. The WMS is basically divided into the urine/fecal and the vacuum cleaner subsystems. Several components that are no longer functional have not been removed from the WMS, as shown in figure 2.7-7. This is due to recent modifications that would not permit their removal because of schedule impact.

The components for the urine portion of the urine/fecal subsystem consist of two urine sample volume measuring system units (USVMS) for two crewmembers and a urine receptacle and transfer valve assembly for the other crewman. (Refer to section 5.) The USVMS is used for each urination in order to provide a urine sample, with the remainder of the contents being dumped overboard in the following manner. The USVMS is first attached by quick-disconnect to an inline filter, which remains attached (by quick-disconnect) to the waste management dump line. The USVMS valve is set to the DUMP position, followed by setting the WASTE MANAGEMENT-SELECTOR valve on RHEB-122 to URINE FECES and the adjacent OVBD DRAIN valve to DUMP. A 5-psi differential pressure, provided by the valve settings, will empty the contents of the collection bag overboard through the urine/water dump line. Should a USVMS unit fail, direct overboard urination may be accomplished by using the urine receptacle, which is a backup component.

The remaining crewman will use the urine receptacle and transfer valve assembly for urination. However, this unit requires a gas flow to operate. The quick-disconnect on the hose should be attached to the WMS dump line quick-disconnect, the WMS SELECTOR valve positioned to URINE FECES, and the OVBD DRAIN drain valve to DUMP. Then urination can be performed by pressing the poppet valve on the urine receptacle.

ECS

The PGA urine collection device (UCD) may be used during prelaunch and if so, is emptied in much the same way. The transfer valve (of the urine receptalce/transfer valve assembly) is inserted into the UCD after it is removed from the PGA. The urine receptacle is then attached by quick-disconnect to the filter on the waste management dump line. The WASTE MANAGEMENT-SELECTOR and OVBD DRAIN valves are set to the URINE FECES and DUMP positions respectively, emptying the contents overboard. Upon completion, the PGA UCD is stowed in the PGA storage bag. Although the WMS blower will operate whenever the SELECTOR valve is set to the URINE FECES position, functional operation of the blower is for vacuum cleaning only.

For the fecal portion of the urine/fecal subsystem, components consist only of the fecal canister and hose assembly. Normally stowed out of the way, the canister is secured to the center CO_2-odor absorber filter storage container at the LEB. The hose is then attached by quick-disconnect to the filter on the waste management dump line. The WASTE MANAGEMENT-SELECTOR valve is set to URINE FECES and the OVBD DRAIN valve is set to DUMP. Differential pressure of 5 psi is thus created, routing the odors overboard through the urine/water dump line.

The vacuum cleaner subsystem is made up of the vacuum assembly and an 8-foot flex hose, which are stowed in the vacuum stowage compartment (RHEB-121). After removing the vacuum cleaner from the storage compartment, it is placed in operation by setting the WASTE MANAGEMENT-SELECTOR valve to VACUUM CLEANER. This single action activates the WMS blower and opens the valve port that connects the vacuum cleaner line to the blower. The WMS blower provides a gas flow of 5 cfm at

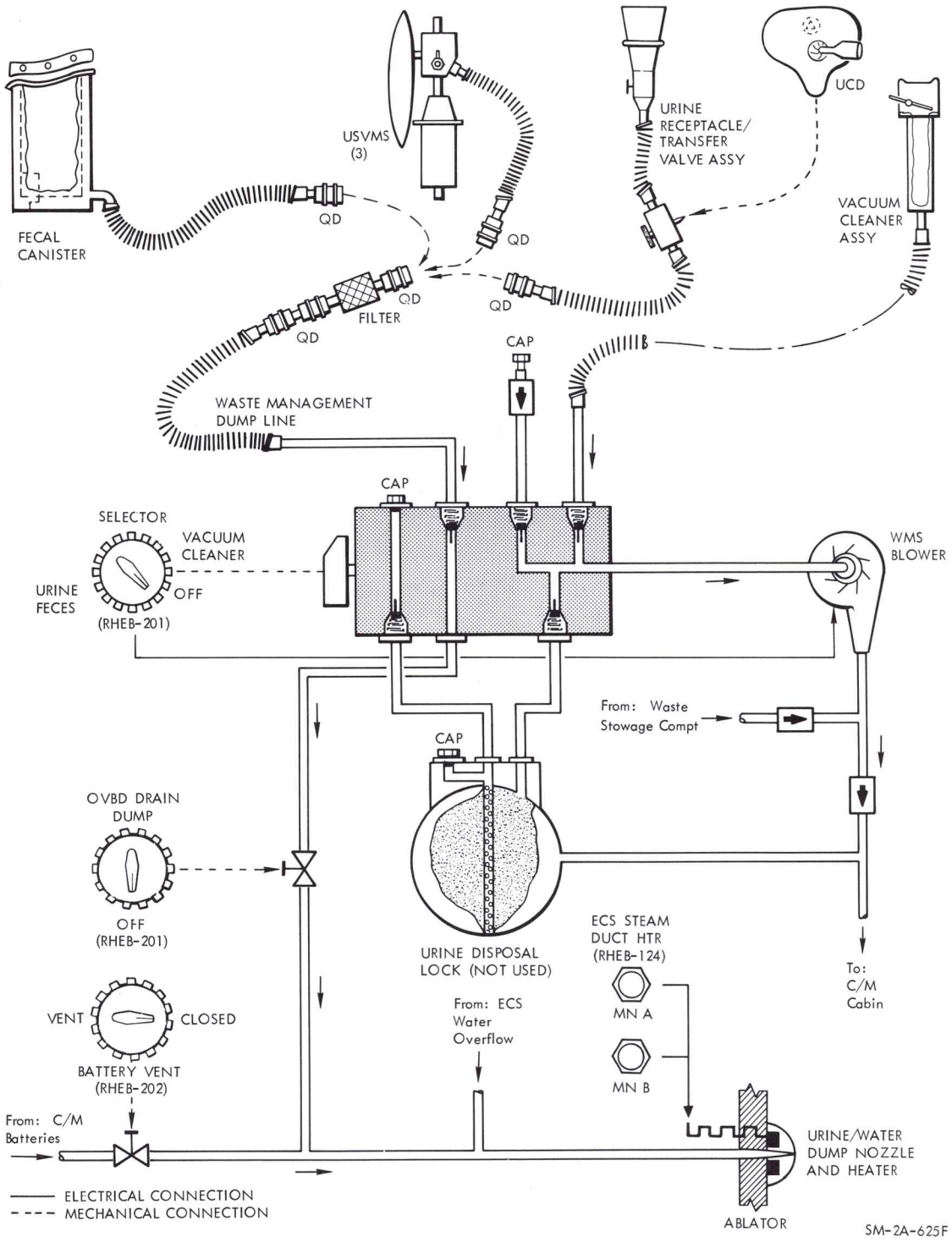

Figure 2.7-7. WMS Functional Flow Diagram

a ΔP of -4.9 in. H_2O to effectively remove debris, either solid or liquid. A porous bag, inserted into the vacuum assembly, traps the debris while the gases are exhausted into the C/M cabin.

The waste stowage compartment vent line is still installed, but the compartment is actually unvented as the line is now open to the C/M cabin. Thus, if a bag in the waste stowage compartment should rupture or leak, the odor will permeate the cabin requiring the crew to don PGAs.

The C/M battery venting network consists of a manifold, a BATTERY VENT valve (RHEB-123), and lines that are routed to connect into the urine/water dump line. The vent line is to remain in the VENT position during normal operation to provide unrestricted flow for intermittent battery relief valve operation. Only in event of a battery case rupture or vent manifold leakage will the vent valve be closed. This prevents loss of cabin atmosphere overboard, thereby conserving oxygen.

2.7.3.7 Electrical Power Distribution.

The types of electrical power required for the operation of the ECS are 28-volt dc and 115/200-volt 400-cycle 3-phase ac. (See figure 2.7-8.) The larger motors of the system utilize 200-volt 3-phase power, whereas the smaller motors and control circuits operate from a single phase of the ac of 115 volts. Except for the postlanding ventilation system, those components using 28 volts dc will receive power from the fuel cells before CSM separation and from batteries after separation. The postlanding ventilation system will operate from batteries, exclusively.

2.7.4 PERFORMANCE AND DESIGN DATA.

2.7.4.1 Metabolic Data.

The following table contains the average metabolic rates, thermal balance, and water requirements for S/C crewmembers.

Parameter	Pressurized Cabin (Normal)	Depressurized Cabin (Emergency)
Total metabolic load BTU per man/day	11,200	12,000
Water production lb per man/day	4.0	9.8
CO_2 production lb per man/day	2.12	2.27
O_2 consumption lb per man/day	1.84	1.97
Water consumption lb per man/day	6.6	12.4
Urine production lb per man/day	2.6	2.6

2.7.4.2 Oxygen Supply Subsystem.

Performance and design data for the oxygen supply subsystem are as follows:

- Maximum oxygen flow rate to ECS from cryogenic storage tanks: 9.0 lb per hr
- Surge tank quantity: 3.7 lb (approx)
  Surge tank nominal pressure: 900±35 psig
  Surge tank pressure relief setting: 1045±25 psig
- Entry tank quantity: 1 lb (approx)
  Entry tank nominal pressure: 900±35 psig
  Entry tank pressure relief setting: None
- Regulated working oxygen pressure: 100±10 psig
  Pressure relief setting: 130±10 psig
  Flow rate: 0.7 lb per min max
- Regulated tank pressurization oxygen pressure: 20±2 psig
  Pressure relief setting: 25±2 psig
  Flow rate: 0.075 lb per min (one regulator) and 0.15 lb per min (two regulators)

2.7.4.3 Pressure Suit Circuit Subsystem.

Performance and design data for the pressure suit circuit subsystem are as follows:

- Heat exchanger cooling capacity: 2100 BTU per hr max (Gly or evap)
- Water evaporation rate: 1.97 lb per hr max
- Regulated demand pressure
  Normal: 2.5 to 3.5 in. H_2O below cabin pressure
  Emergency: 3.75 ±0.25 psia
  Flow rate: 0.67 lb per min max
- Suit compressor volumetric flow
  Normal flight: 35 cfm
  Emergency flight: 33.6 cfm
- Automatic temperature control: 45° to 55°F
- Max O_2 flow into suit circuit: 0.66 lb per min (regulator or manual valve)

2.7.4.4 Cabin Pressure and Temperature Control Subsystem.

Performance and design data for the cabin pressure and temperature control subsystem are as follows:

- Heat exchanger cooling capacity: 1250 BTU per hr max
- Regulated cabin pressure: 5.0±0.2 psig
  Flow rate: 0.65 lb per hr (one regulator) and 1.3 lb per hr (two regulators)

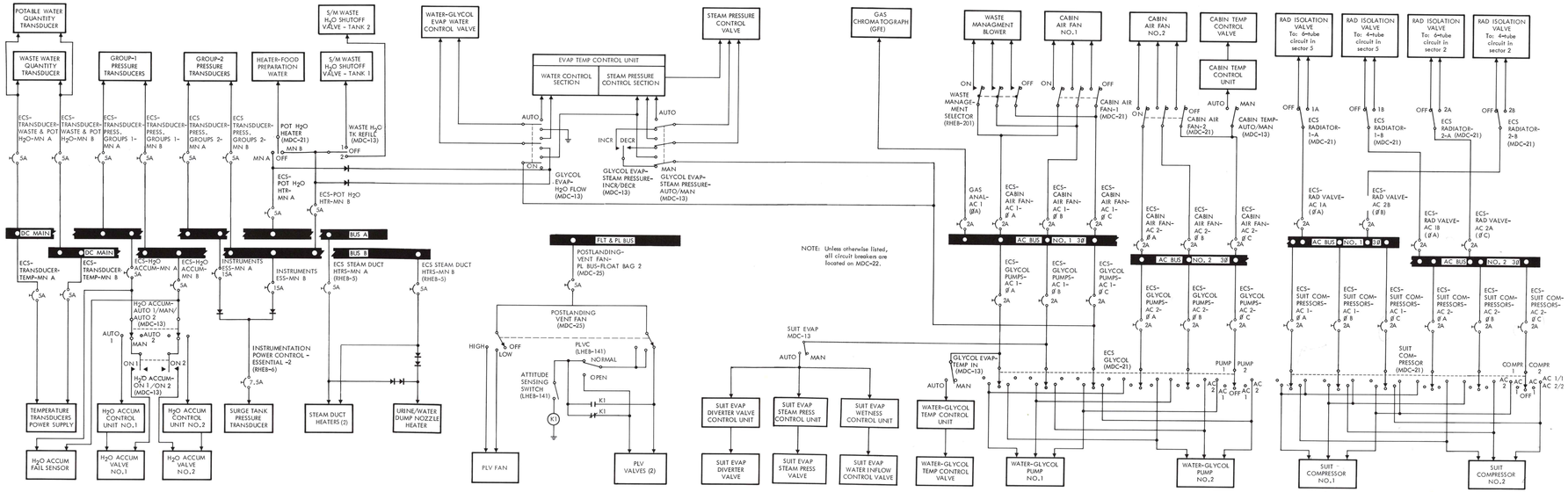

Figure 2.7-8. ECS Power Distribution Diagram

- Emergency inflow pressure (maximum of 0.5 in. diameter total leakage area): 3.5 psia for 5 minutes
  Flow rate: 0.67 lb per min max
- Cabin pressure relief
  Positive relief: 6.0 (+0.2, -0.4) psig
  Negative relief: 10 to 25 in. H_2O
- Differential pressure (C/M cabin-to-aft section)
  Normal ascent: 7.0 psig max.
  Abort ascent: 8.6 psig max.
- Automatic temperature control (flight): 70° to 80°F
- O_2 required for cabin repressurization, 0 to 5 psig at 70°F: 9.1 lb

2.7.4.5 Water-Glycol Coolant Subsystem.

Performance and design data for the water-glycol coolant subsystem are as follows:

- Reservoir quantity: 9 lb (approx)
- Total system quantity (less reservoir): 18 lb (approx)
- Evaporator cooling capacity: 7620 BTU per hr max
- Water evaporation rate: 7.5 lb per hr max
- Accumulator quantity: 1.36 lb (approx)
- Pump flow: 200 lb per hr
- Pump pressure
  Inlet: 7.5±1.5 psig
  Outlet (flight): 38(+8, -12) psia
- Automatic temperature control: 45°±3°F

2.7.4.6 Water Supply Subsystem.

Performance and design data for the water supply subsystem are as follows:

- Potable tank quantity: 36 lb
- Waste tank quantity: 56 lb
- S/M water tank quantity: 112 lb (2 tanks)
- S/M nitrogen tank quantity (pressurant): capacity of 3.7 lb, filled to 1.5 lb (approx)
- Nitrogen tank fill pressure: 900 psig
- Nitrogen tank pressure relief setting: 1045±25 psig
- Nitrogen system regulated pressure: 40±2 psig
- Nitrogen system pressure relief setting: 44 to 48 psig

- Overboard dump pressure: approx 32 psi above outside ambient
  Flow rate: 2.5 lb per min max
- Food preparation water supply unit
  Capacity: 1.9 lb
  Hot water: 154°±4°F
  Cold water: 50°F (at water chiller)

2.7.4.7 Waste Management System.

Performance and design data for the waste management system is as follows:

- Urine/water dump nozzle orifice: 0.055 in.

2.7.4.8 ECS Power Consumption Data.

The following list contains the latest available data on electrical power consumed by components of the ECS. The wattage figures are for the earth orbit phase only, and apply to operations during the normal mode (pressurized cabin).

Subsystem and Component	Control	No. of Units	Watts per Unit		Total Watts	
			AC	DC	AC	DC
OXYGEN SUPPLY						
O_2 flow transducer	ECS-TRANSDUCER-PRESS GROUPS-2 cb (2)	1		2.4		2.4
O_2 press transducer	ECS-TRANSDUCER-PRESS GROUPS-2 cb (2)	1		0.8		0.8
PRESSURE SUIT CIRCUIT						
Suit compressor	SUIT COMPRESSORS sw	2	85.0		†85.0 170.0	
ΔP sensor	ECS-TRANSDUCER-PRESS GROUPS-1 cb (2)	1		1.28		1.28
CO_2 sensor	ECS-TRANSDUCER-PRESS GROUPS-2 cb (2)	1		1.0		1.0
Diverter valve control unit	SUIT EVAP sw	1	2.5		2.5	
Diverter control valve	SUIT EVAP sw	1	*7.2		*7.2	

*Intermittent operating components
†Only one component operates at a time

SYSTEMS DATA

Subsystem and Component	Control	No. of Units	Watts per Unit		Total Watts	
			AC	DC	AC	DC
Steam press control unit	SUIT EVAP sw	1	2.5		2.5	
Steam press cont valve	SUIT EVAP sw	1	*7.2		*7.2	
Steam duct abs press sensor	SUIT EVAP sw	1		1.28		1.28
Wetness control unit	SUIT EVAP sw	1	5.0		5.0	
Water inflow control valve	SUIT EVAP sw	1		*3.0		*3.0
Wetness sensor	SUIT EVAP sw	1		0.2		0.2
Water-gly temp sensor	SUIT EVAP sw	1		0.001		0.001
Evap outlet air temp sensor	SUIT EVAP sw	1		0.001		0.001
Suit press transducer	ECS-TRANSDUCER-PRESS GROUPS-1 cb (2)	1		0.8		0.8
Suit temp sensor	ECS-TRANSDUCER-TEMP GROUP cb (2)	1	0.04		0.04	
CABIN PRESSURE & TEMP CONTROL						
Cabin air fan	CABIN AIR FAN-1&2 sw (2)	2	19.0		38.0	
Cabin temp control unit	CABIN TEMP-AUTO/MAN sw	1	2.5		2.5	
Cabin temp cont valve	CABIN TEMP-AUTO/MAN sw	1	*7.2		*7.2	
Cabin temp sensor	ECS-TRANSDUCER-TEMP GROUP cb (2)	1		0.001		0.001

*Intermittent operating components

ECS

Subsystem and Component	Control	No. of Units	Watts per Unit		Total Watts	
			AC	DC	AC	DC
Cabin temp anticipator	ECS-TRANSDUCER-TEMP GROUP cb (2)	1		0.001		0.001
Cabin press transducer	ECS-TRANSDUCER-PRESS GROUPS-2 cb (2)	1		0.8		0.8
WATER-GLYCOL COOLANT						
Water-glycol pump	ECS GLYCOL sw	2	36.0		†36.0	
Pump outlet press transducer	ECS-TRANSDUCER-PRESS GROUPS-1 cb (2)	1		0.8		0.8
Water-gly accum qty sensor	ECS-TRANSDUCER-PRESS GROUPS-1 cb (2)	1		0.8		0.8
Water-gly temp control unit	GLYCOL EVAP-TEMP IN sw	1	2.5		2.5	
Water-gly temp control valve	GLYCOL EVAP-TEMP IN sw	1	*7.2		*7.2	
Water-gly temp sensor	GLYCOL EVAP-TEMP IN sw; GLY EVAP-STEAM PRESS-AUTO/MAN sw; GLYCOL EVAP-H_2O FLOW sw	5		0.001		0.005
Steam press control unit	GLY EVAP-STEAM PRESS-AUTO/MAN sw	1	2.5		2.5	
Steam press cont valve	GLY EVAP-STEAM PRESS-INCR/DECR sw	1	*7.2		*7.2	

*Intermittent operating components
†Only one component operates at a time

SYSTEMS DATA

Subsystem and Component	Control	No. of Units	Watts per Unit		Total Watts	
			AC	DC	AC	DC
Steam duct press switch	ECS-TRANSDUCER-PRESS GROUPS-1 cb (2)	1	TBD	TBD	TBD	TBD
Water control unit	GLYCOL EVAP-H_2O FLOW sw	1	5.0		5.0	
Water control valve	GLYCOL EVAP-H_2O FLOW sw	1		*3.0		*3.0
Wick temp sensor	GLYCOL EVAP-H_2O FLOW sw	1		0.28		0.28
Rad outlet temp sensor	ECS-TRANSDUCER-TEMP GROUP cb (2)	1	0.04		0.04	
Rad isolation valve	ECS RADIATOR sw (4)	4	*14.4		*57.6	
WATER SUPPLY						
Pot water qty transducer	ECS-TRANSDUCER-WASTE & POT H_2O-MN A&B cb (2)	1		1.28		1.28
Waste water qty transducer	ECS-TRANSDUCER-WASTE & POT H_2O MN A&B cb (2)	1		1.28		1.28
Food prep water supply unit	POT H_2O HEATER sw	1		*45.0		*45.0
H_2O accum control unit	H_2O ACCUM-AUTO/MAN sw	1		3.0		3.0
H_2O accum valve	H_2O ACCUM-ON/OFF sw	2		*3.0		*3.0
H_2O accum fail sensor	ECS-H_2O ACCUM-MN A&B cb (2)	1		1.5		1.5
S/M water tank shut-off valve	WASTE H_2O TK REFILL sw	2		*160.0		*160.0

*Intermittent operating components

SYSTEMS DATA

Subsystem and Component	Control	No. of Units	Watts per Unit		Total Watts	
			AC	DC	AC	DC
MISCELLANEOUS						
WMS blower	WASTE MANAGEMENT SELECTOR valve	1	*20.0			*20.0
Urine/water dump nozzle heater	ECS-STEAM DUCT HTR-MN A&B cb (2)	1		5.7		5.7
Steam duct heater	ECS-STEAM DUCT HTR-MN A&B cb (2)	2		3.0		6.0
Temp xducer pwr supply	ECS-TRANSDUCER-TEMP GROUP cb (2)	1		10.5		10.5
Temp sensor amplifier	ECS-TRANSDUCER-TEMP GROUP cb (2)	5	0.04		0.2	
Steam duct temp sensor signal conditioner	ECS-TRANSDUCER-TEMP GROUP cb (2)	1		1.5		1.5
Gas chromatograph	GAS ANAL—AC 1 cb	1	9		9	

*Intermittent operating components

2.7.5 OPERATIONAL LIMITATIONS AND RESTRICTIONS

2.7.5.1 ECS Caution Placards.

Caution notes bordered by yellow and black stripes appear adjacent to the postlanding vent valves in the forward tunnel area. The notes read, "POST LANDING VENT VALVE—PULL PIN BEFORE OPERATING VENT FAN." If the pins were not in place during flight, inadvertent opening of the cabin vent valves would immediately dump all cabin pressure, with possible catastrophic results.

A placard on each CO_2-odor absorber canister cover cautions the crewman to "PUSH BUTTON BEFORE OPENING," and includes an arrow to indicate direction button should be pushed. This instruction must be followed any time a canister cover is to be opened. By pressing the push-button, the differential pressure is equalized and the cover may then be removed.

The caution note on LHEB-139 pertains to filling the PLSS oxygen tanks and, therefore, is not applicable to earth orbital (Block 1) missions. It reads, "CAUTION 900 PSI CLOSE VALVE BEFORE REMOVING CAP."

2.7.5.2 ECS Caution Notes.

Design restrictions require that certain procedures be followed when positioning the inlet and outlet selector valves of the tank pressure regulator and relief valve assembly. If the inlet selector valve is placed to position 1 (or 2), the outlet selector valve must also be placed to position 1 (or 2) or to NORMAL position. This prevents shutting off the supply of oxygen for pressurizing the potable and waste water tanks and the water-glycol reservoir. Conversely, if the outlet selector valve is placed to position 1 (or 2), the inlet selector valve must be placed to position 1 (or 2) or to NORMAL position.

2.7.5.3 ECS General Data.

Several ECS controls are inaccessible during the mission. Those affected are located behind the two removable Y-axis attenuator panels in the LHEB. They include all controls mounted on LHEB-136, the suit circuit return air manual valve, and the diverter valve handle for the CO_2-odor absorber canisters. The attenuator panels are in place during the entire mission, but are removed to gain access to these ECS controls, and then immediately reinstalled. They provide an adequate bearing surface for the Y-axis attenuator shock strut pad for the landing impact.

The circuit breaker for the postlanding ventilation system is not engaged until after landing impact. This precaution, in conjunction with the lockpins previously inserted in the postlanding vent valves, assures that the cabin pressure will not be inadvertently dumped during flight.

High-oxygen flow during cabin repressurization, or when filling an empty (150 psia min) surge tank, may cause water-glycol freezing. This will occur when there is less than full flow through the warm water-glycol line upon which the flow restrictors are wound. Full coolant flow at this location, therefore, may be assured in the following manner. The GLYCOL EVAP-TEMP IN switch (MDC-13) is set to MAN, and the GLYCOL EVAP TEMP IN valve (LHEB-136) is overridden to the full cool position.

2.7.5.4 Cabin Depressurization Rates.

The time required for the C/M cabin to become depressurized is contingent upon how pressure is released. If the cabin is intentionally dumped, the time it takes to reach zero pressure will be as shown in figure 2.7-9, sheet 1 of 2. However, if the pressure is lost as the result of meteoroid punctures, the time will vary according to the size and number of holes. Figure 2.7-9, sheet 2 of 2, only reflects flow rate data for meteoroid holes that do not exceed a total equivalent area of 0.5 in. in diameter. The same chart also applies to the flow rate of one cabin pressure relief valve that has failed open while in the NORMAL position.

CABIN DEPRESSURIZATION - 5 TO 0 PSIA
INTENTIONAL DUMP TIME - 6 MIN, 11 SEC

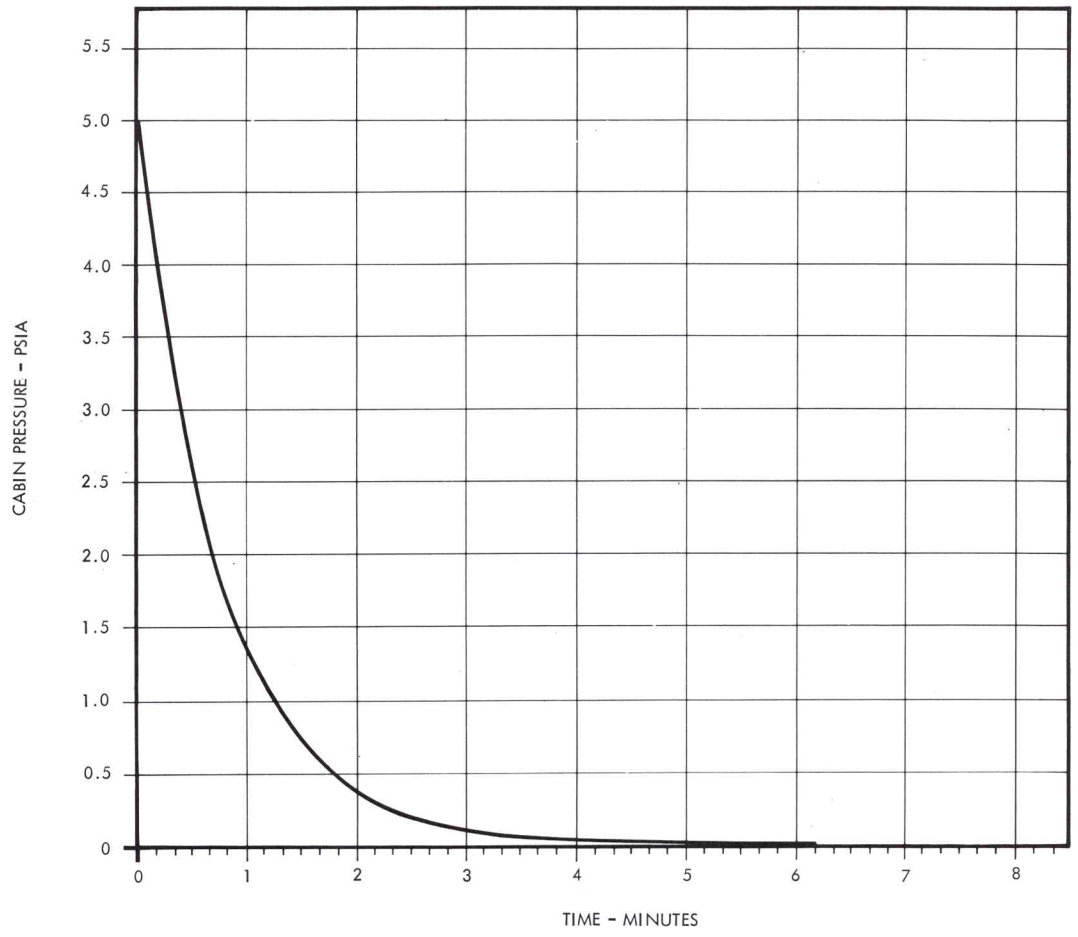

CONDITIONS:
1. EMERGENCY CABIN PRESSURE selector valve set to OFF.
2. CABIN REPRESS manual valve set to close.
3. CABIN PRESSURE RELIEF valve set to DUMP.
4. Normal cabin pressure regulators automatically close at 3.5 psia.

SM-2A-890

Figure 2.7-9. Cabin Depressurization Rates (Sheet 1 of 2)

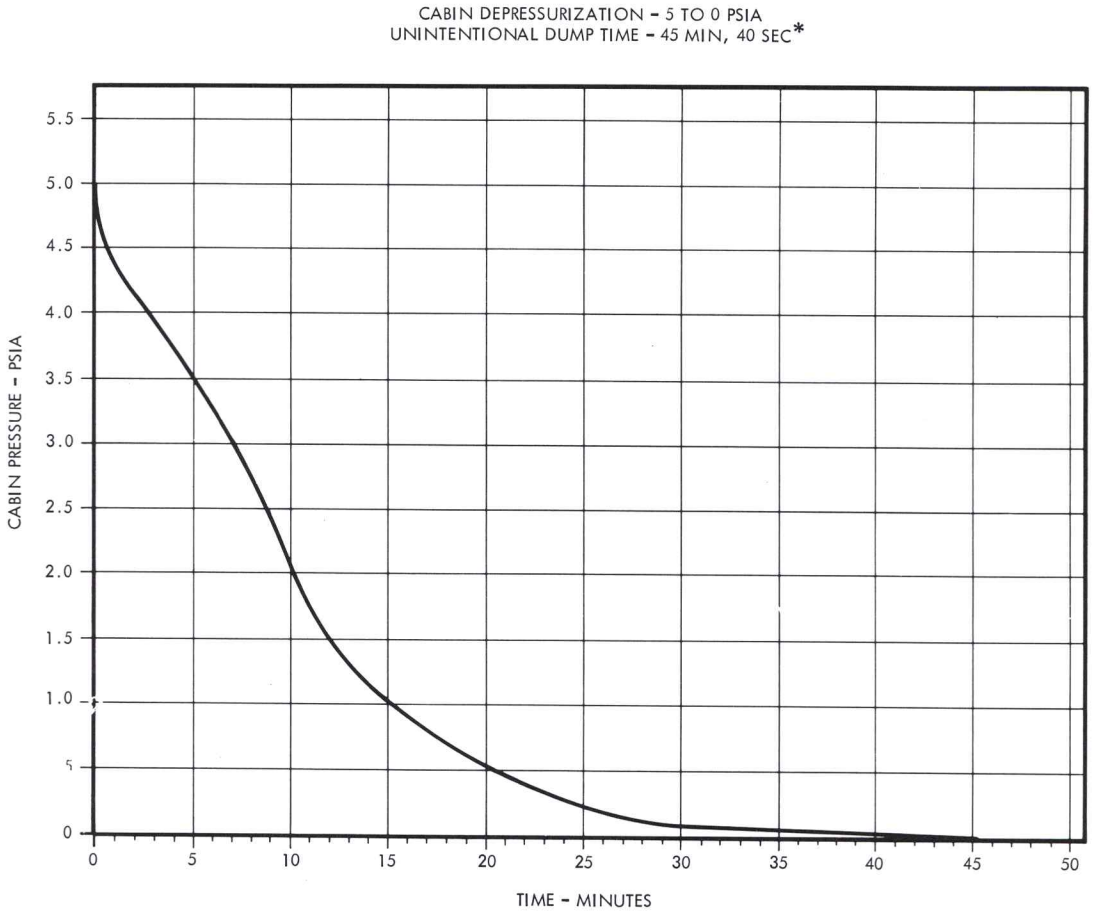

CONDITIONS:
1. EMERGENCY CABIN PRESSURE selector valve set to NORMAL.
2. CABIN REPRESS manual valve set to close
3. CABIN PRESSURE RELIEF valves set to NORMAL.
4. Normal cabin pressure regulators automatically closed at 3.5 psia.
5. EMERGENCY CABIN PRESSURE selector valve set to OFF position when pressure reaches 3.5 psia (5 minutes).

*Depressurization is through a 0.5-inch-diameter (or equivalent) meteoroid puncture, or the maximum flow through one CABIN PRESSURE RELIEF valve that fails open while in the NORMAL position.

SM-2A-888

Figure 2.7-9. Cabin Depressurization Rate (Sheet 2 of 2)

2.7.5.5 Cabin Repressurization Rates

The C/M cabin may be repressurized by using either of two flow rates. To return the cabin pressure to normal in the shortest possible time, the conditions as set forth in figure 2.7-10, sheet 1 of 2, must be complied with. The flow rate, however, is dependent upon a full supply of oxygen in the surge tank. When the surge tank is not full, or the repressurization time is not critical, the conditions for the flow rate as shown in figure 2.7-10, sheet 2 of 2, are used.

2.7.6 TELEMETRY MEASUREMENTS.

The following is a complete list of all ECS telemetry data that is monitored by flight controllers and ground support personnel. The last column contains the name and type of S/C crew display. The display utilizes the same pickoff or signal source as telemetry, unless a separate measurement number is included in the display column.

An asterisk (*) by the measurement number denotes information which is not available for recording or telemetry transmission during PCM low-bit rate operation.

Measurement Number	Description	Sensor Range	Normal Operating Range	Crew Display
CF 0001 P	Pressure cabin	0/17 psia	5.0±0.2 psia	PRESS - CABIN indicator
CF 0002 T	Temp cabin	40/125°F	70 to 80°F	TEMP - CABIN indicator
CF 0005 P	Press CO_2	0/30 mm Hg	<7.6 mm Hg	PART PRESS CO_2 indicator and CO_2 PP HI C&W light
*CF 0006 P	Press surge tank	50/1050 psia	900±35 psi	TANK PRESS - 1 - O_2 indicator
*CF 0008 T	Temp suit supply manf	20/95°F	55°F	TEMP - SUIT indicator
CF 0009 Q	Quantity waste water tank	0/100%	Variable	WATER - QUANTITY indicator
CF 0010 Q	Quantity potable H_2O tank	0/100%	Variable	WATER - QUANTITY indicator
CF 0012 P	Press suit demand reg sense	0/17 psia	3.75±0.25 psia	PRESS - SUIT indicator

SYSTEMS DATA

Measurement Number	Description	Sensor Range	Normal Operating Range	Crew Display
CF 0015 P	Press suit compressor diff	0/1 psid	0.3-0.4 psid (min)	ΔP SUIT COMPR indicator
CF 0016 P	Press glycol pump outlet	0/60 psia	37-45 psia	PRESS GLY DISCH indicator
*CF 0017 T	Temp glycol evap outlet steam	20/95°F	>45°F	None
CF 0018 T	Temp glycol evap outlet liquid	25/75°F	40-50.5°F	GLY EVAP - OUTLET TEMP indicator
CF 0019 Q	Quantity glycol accum	0/100%	40-60%	GLY ACCUM - QUANTITY indicator
CF 0020 T	Temp space radiator outlet	-50/+100°F	Variable	ECS RAD - OUTLET TEMP indicator and GLYCOL TEMP LOW C&W light
*CF 0025 P	Press pump package inlet	0/60 psia	7 psi (min.)	None
CF 0034 P	Back press glycol evaporator	0.05/0.25 psia	0.098-0.154 psia	GLY EVAP STEAM PRESS indicator
CF 0035 R	Flow rate ECS O_2	0.21/1.0 lb/hr	0.425 lb/per hr	FLOW O_2 indicator
*CF 0036 P	Press outlet O_2 reg supply	0/150 psia	100±10 psia	None
*CF 0120 P	Press H_2O and glycol tanks	0/50 psia	18-35 psid	None
*CF 0135 R	Flow rate manifold inlet to suit 1	0/0.2 lb/hr	TBD	None
*CF 0136 R	Flow rate manifold inlet to suit 2	0/0.2 lb/hr	TBD	None
*CF 0137 R	Flow rate manifold inlet to suit 3	0/0.2 lb/hr	TBD	None

SYSTEMS DATA

Measurement Number	Description	Sensor Range	Normal Operating Range	Crew Display
*CF 0148 P	DP supply and return manifold	0/0.8 psid	0.25-0.5 psid	None
*CF 0153 T	Temp compressor inlet	50/125°F	TBD	None
*CF 0184 T	Temp CO_2 absorber outlet	90/200°F	TBD	None
*CF 0245 T	Temp O_2 reg inlet	-50/+150°F	TBD	None
*CF 0326 P	Press potable H_2O tank drain	0/50 psia	18.35 psid	None
*CF 0327 P	Press waste H_2O tank drain	0/50 psia	18.35 psid	None
*CF 0481 T	Temp CP branch 1 inlet	40/150°F	TBD	None
*CF 0482 T	Temp CP branch 1 outlet	40/150°F	TBD	None
*CF 0483 T	Temp CP branch 2 inlet	40/150°F	TBD	None
*CF 0484 T	Temp CP branch 2 outlet	40/150°F	TBD	None
*CF 0549 P	Diff press coldplate branch 1	0/2.0 psid	TBD	None
*CF 0550 P	Diff press coldplate branch 2	0/10 psid	TBD	None
CT 0108 K	Gas analysis - suit and cabin	N/A	N/A	None
SF 0665 T	Temp space radiator inlet	60/150°F	Variable	None
SF 0671 T	Temp ECS radiator outlet 1	0/50°F	Variable	ECS RAD OUT TEMP-1 indicator
SF 0672 T	Temp ECS radiator outlet 2	0/50°F	Variable	ECS RAD OUT TEMP-2 indicator

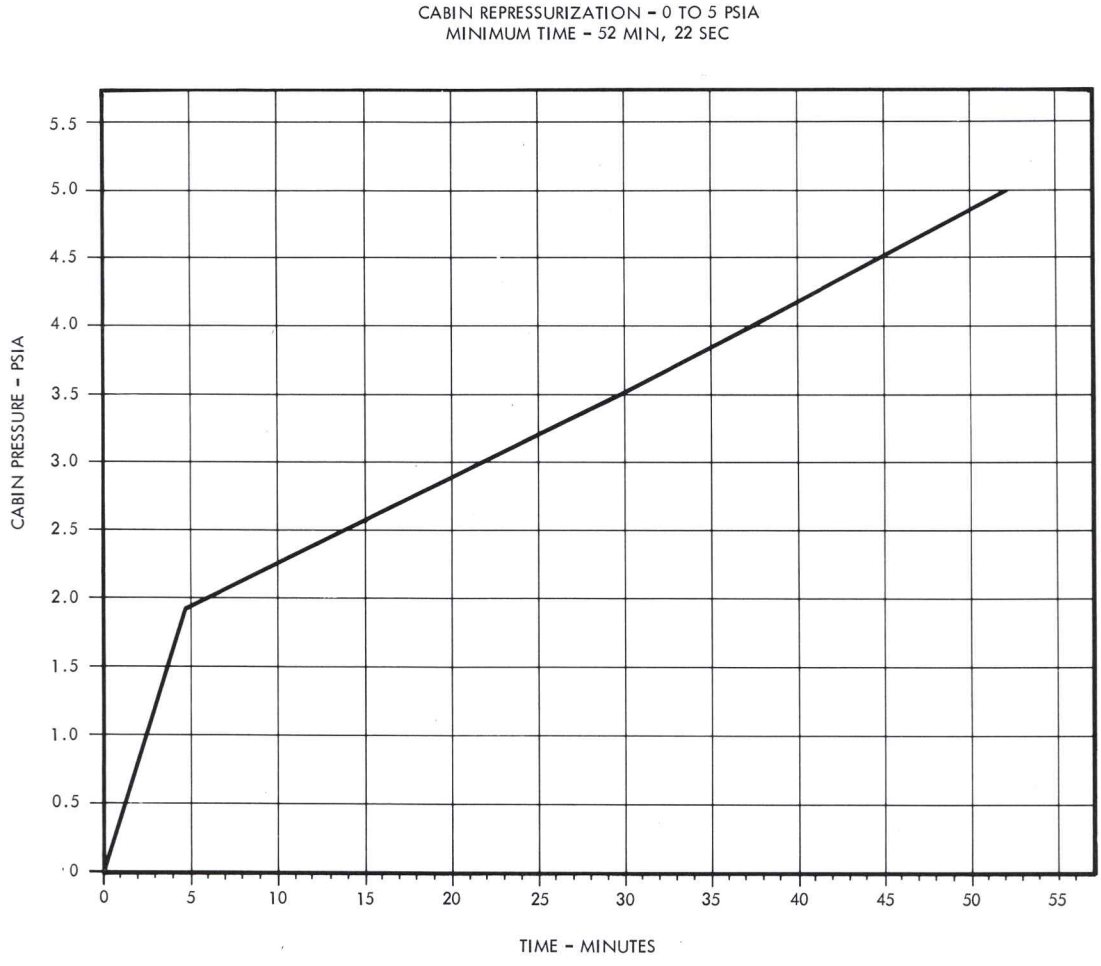

CONDITIONS:
1. EMERGENCY CABIN PRESSURE selector valve set to NORMAL.
2. CABIN REPRESS manual valve set to OPEN.
3. When surge tank pressure indicator decreases to 150 psia, EMERGENCY CABIN PRESSURE selector valve set to OFF; surge tank minimum pressure (150 psia) maintained by regulating CABIN REPRESS manual valve until valve is full open and surge tank pressure starts to increase.
4. Normal cabin pressure regulators automatically open at 3.5 psia.
5. When surge tank pressure again decreases to 150 psia, CABIN REPRESS manual valve regulated to maintain this minimum surge tank pressure.
6. When cabin pressure indicator reaches 5.0 psia, normal cabin pressure regulators automatically close and CABIN REPRESS manual valve set to close.

SM-2A-889

Figure 2.7-10. Cabin Repressurization Rates (Sheet 1 of 2)

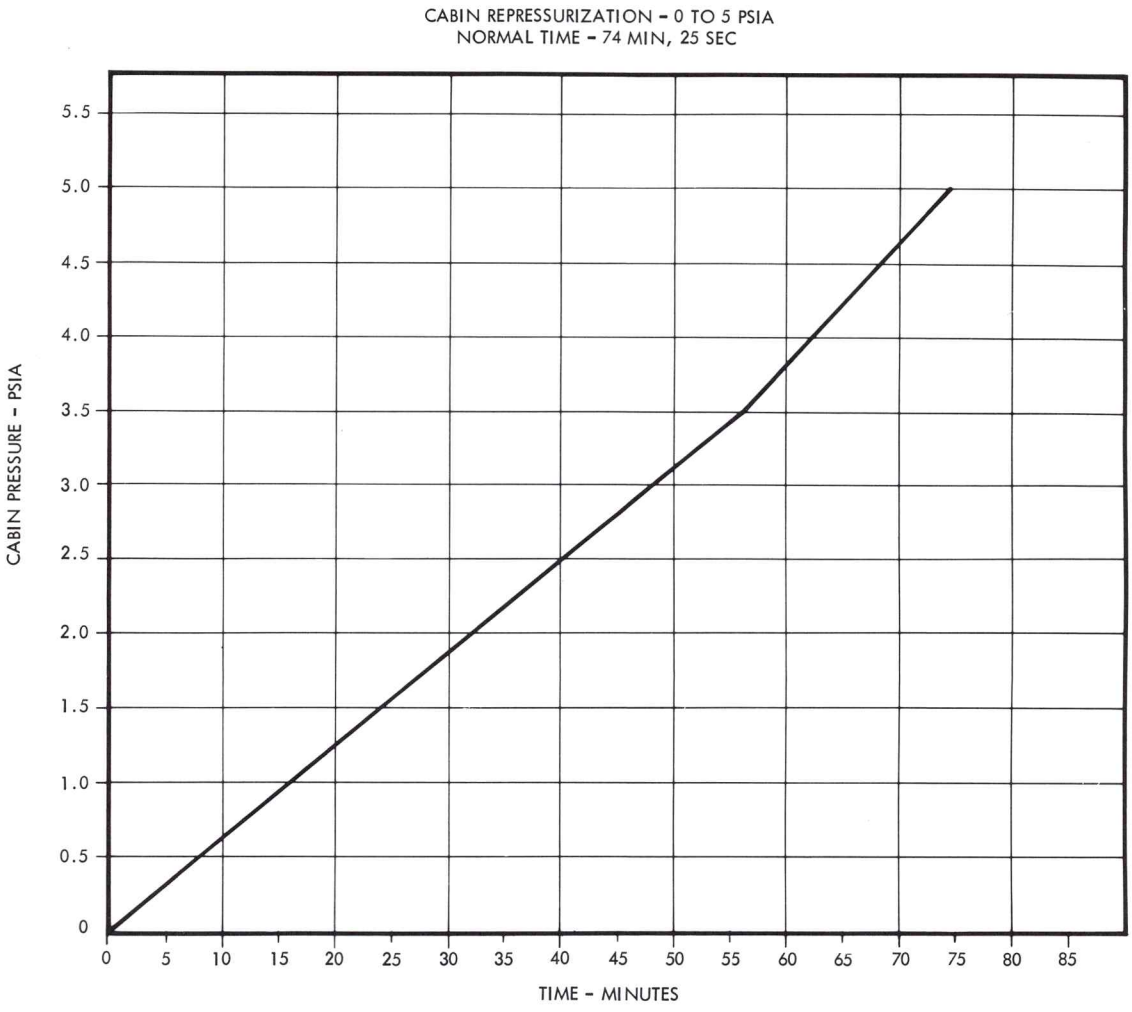

CONDITIONS:
1. EMERGENCY CABIN PRESSURE selector valve set to OFF.
2. CABIN REPRESS manual valve set to OPEN.
3. Normal cabin pressure regulators automatically open at 3.5 psia.
4. When cabin pressure indicator reaches 5.0 psia, normal cabin pressure regulators automatically close and CABIN REPRESS manual valve set to close.

SM-2A-887

Figure 2.7-10. Cabin Repressurization Rates (Sheet 2 of 2)

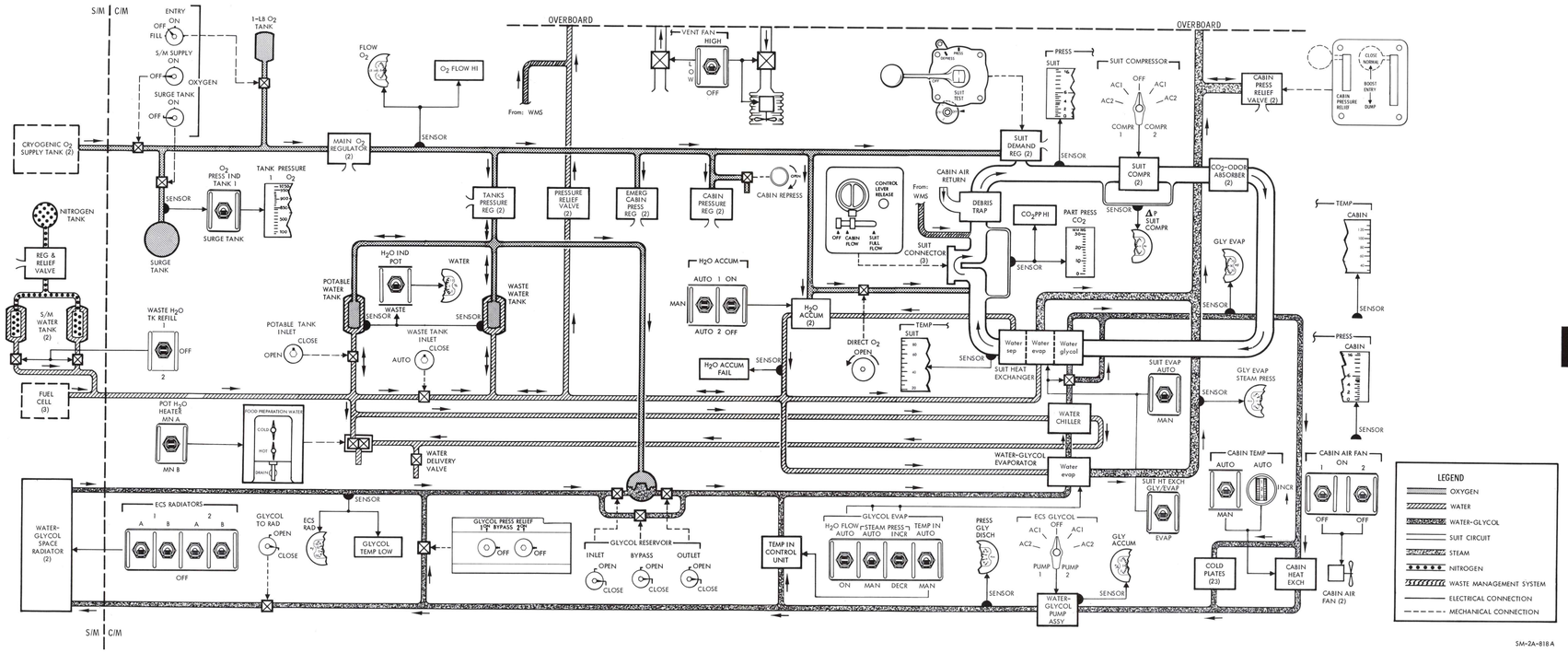

SM-2A-818A

Figure 2.7-11. CCS Functional Flow Diagram

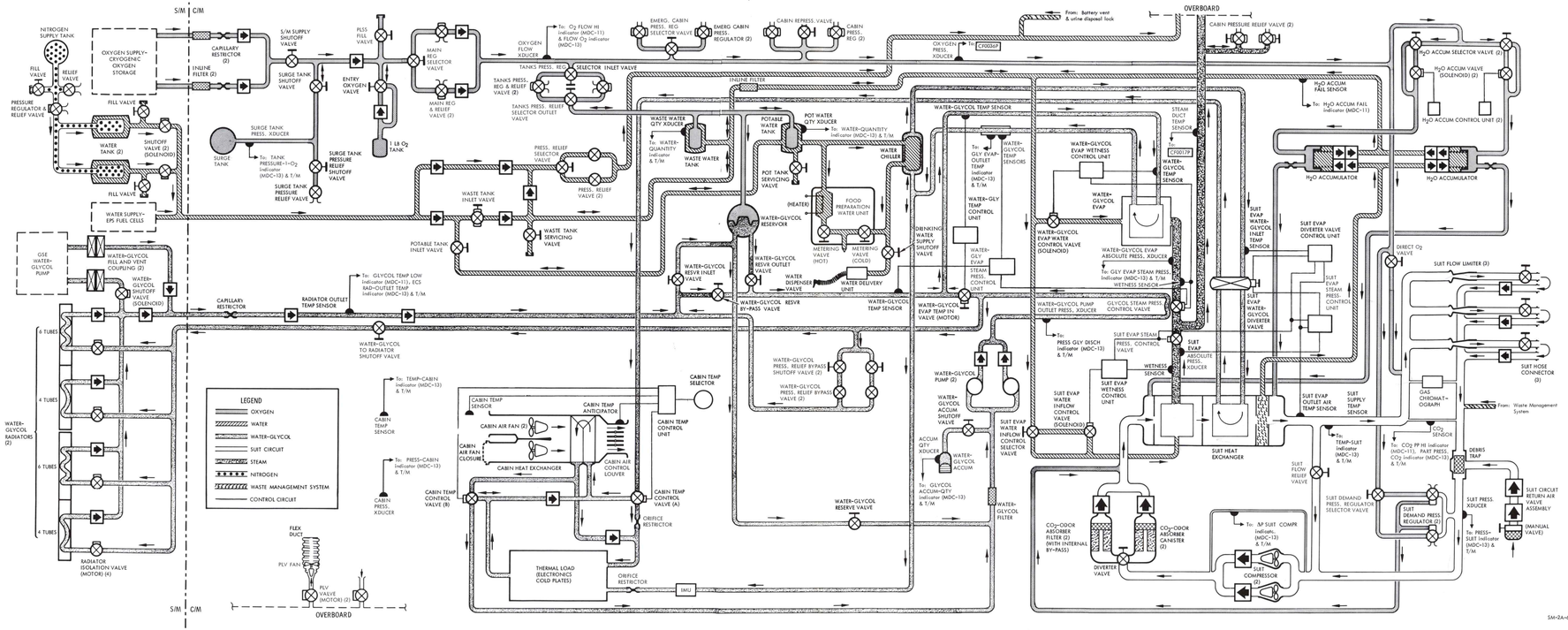

Figure 2.7-12. CCS Schematic Diagram

ECS

SUBSECTION 2.8

TELECOMMUNICATION SYSTEM

2.8.1 INTRODUCTION.

The telecommunication (T/C) system includes the spacecraft (S/C) communications and data equipment required for voice communications; acquisition, processing, storage and transmission of operational and flight qualification telemetry (TLM), television (TV), and biomedical data; reception of up-data; and transmission of appropriate tracking and ranging signals. At least part of the T/C system will be in operation during all phases of the mission—from prelaunch through recovery. The following list summarizes T/C capabilities as utilized on SC-014:

- S/C intercommunications between crewman
- Hardline voice communications and transmission of TV and TLM data to the Launch Control Center (LCC) via the service module umbilical (USM) during prelaunch
- In-flight voice communications with the manned spaceflight network (MSFN)
- Voice tape recording of comments, observations, opinions, etc., with time correlation
- Acquisition and processing of TLM, TV, and operational biomedical data from the S/C structure and systems, TV camera, and crewman biomedical sensors, respectively
- TLM data storage
- Transmission of real-time or stored TLM data
- Reception of up-data (guidance and navigation, and timing data and real-time commands) from the MSFN
- Transmission of C-band tracking pulses in response to received radar signals
- Limited capabilities for S-band operation, including transmission of voice and TLM data plus TV, stored analog, or pseudo-random noise (PRN), ranging codes, and reception of voice and up-data
- Postlanding recovery aids including voice communications and recovery beacon transmission

T/C

- Generation of timing signals for synchronization of the T/C and other S/C systems.

2.8.2 FUNCTIONAL DESCRIPTION.

The functional description of the T/C system is divided into four parts: voice communications, data operations, tracking and ranging, and S-band operations. The unified S-band subsystem (USBS), used for all S-band operations, provides back-up voice, data, tracking and ranging capabilities, and the sole means for transmission of TV or analog data.

2.8.2.1 Voice Communications.

2.8.2.1.1 General.

All S/C voice communications (figure 2.8-1) originate and terminate in the crewmen's personal communication assemblies (headsets). Each crewman has two headsets; one is located in the "bump-hat" for use while wearing the constant-wear garment; the other is located in the spacesuit helmet. Each headset is comprised of two independently operating earphones and two microphones with self-contained preamplifiers. The headsets are used for all voice transmission and reception.

Each crewman's headset is connected to the audio center (A/C) equipment by a separate electrical umbilical assembly, commonly referred to as a "cobra cable." In addition to the audio circuits, each of the three cobra cables contains wiring for the operational biomedical sensors in the constant wear garments and the push-to-talk (PTT) control circuitry. The PTT control circuitry consists of a pushbutton-type PTT key and a PTT/CW selector switch. With the PTT/CW selector switch in the PTT position, the PTT key permits manual control of voice transmission by the appropriate transmitter and mike amplifier circuit in the audio center module. The CW position is selected for two different modes of operation.

The first mode was designed to be used during the launch phase of the mission when high noise levels would preclude usage of the VOX circuitry. In this mode, the PTT key will enable the microphone amplifier, voice recorder, VHF-AM and S-Band transmitters if the latter three have their attendant control switches configured properly. The audio center power switch and the cobra cable mode switch would be in PTT position during this mode.

The second mode was also designed to be used during the high noise levels of the launch phase. In this mode, however, the VHF and S-band downvoice communications links are not enabled. This gives us a PTT controlled intercommunications. The voice recorder could also be enabled in this mode if needed. The audio center power switch would also be in the PTT position, but the mode switch on the cobra cable must be in the CW position. It should be noted that on older cobra cables, the CW position was used only for emergency key. Now, this position will be used for both

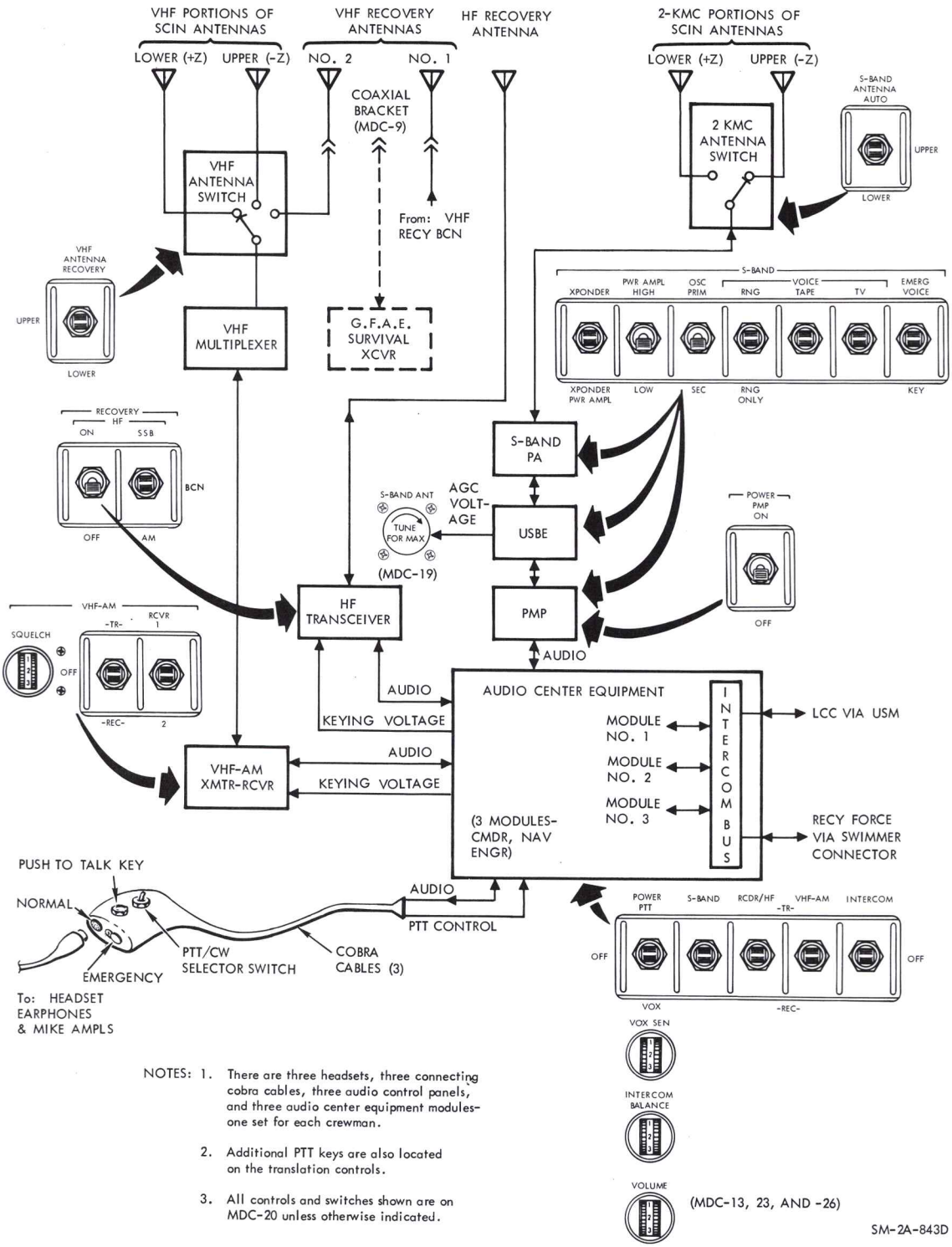

NOTES: 1. There are three headsets, three connecting cobra cables, three audio control panels, and three audio center equipment modules- one set for each crewman.

2. Additional PTT keys are also located on the translation controls.

3. All controls and switches shown are on MDC-20 unless otherwise indicated.

Figure 2.8-1. Voice Communications

T/C

emergency key and the PTT intercommunications functions. PTT keys are also located on the translation controls. Their function duplicates that of the PTT key with the PTT/CW selector in the PTT position on the cobra cable.

The head of each cobra cable has two electrical connectors, marked NORM and EMER. Normally, the connector marked NORM will be used; however, in the event of failure in one of the A/C modules, the affected crewman may connect the cable from his spacesuit to the connector marked EMER. This will connect his audio circuits to another A/C module and allow the same module to be shared by two crewmen.

A strap has been added to the cobra cable so the PTT button can be held in the ON position if desired. This would allow a continuous intercom if the Audio center POWER switch, (MDC 13, 23, 26) is in the PTT position.

The A/C equipment contains three separate but identical modules, one for each crewman, and a commonly connected intercom bus. This equipment serves as a control and distribution center for all S/C audio signals. Each of the three modules has a separate but identical set of controls located on MDC-26, -13, and -23 for the command pilot, senior pilot, and pilot, respectively. Thus each crewman is provided with independent control of all audio inputs and outputs to and from his own headset. A POWER switch on each panel controls application of power to its respective A/C module and selects the PTT or voice-operated relay (VOX mode) of operation. The PTT mode permits monitoring of incoming audio signals plus PTT activation of the microphone amplifier, voice recorder, and the enabling of any communications transmitters if their attendant control switches are properly configured.

The VOX mode permits the microphone amplifier to be activated by the voice-operated switching circuitry within the audio center. The audio output of the amplifier is then applied to isolation and switching diodes controlled in part by the audio center controls located on panels MDC-26, -13, and -23.

Voice transmission over, the activated unified S-band equipment is allowed by placing the S-BAND switch to REC (MDC-26, -13, -23), setting the cobra cable PTT/CW switch at PTT and closing the PTT pushbutton on either the cobra cable or the translation controls.

Voice transmission over, the HF transceiver is limited to the post-landing phase of the mission; however, the RCDR/HF switch (MDC-26, -13, -23) in the T/R position provides a ground for the power control relay in the voice recorder. The intercom switch (MDC-26, -13, -23) would also have to be in the T/R position so the audio signal would be available for recording.

Voice transmission over, the activated VHF-AM transmitter is allowed by placing the VHF-AM switch to T/R (MDC-26, -13, -23), setting the cobra cable PTT/CW switch to PTT, and closing the PTT pushbutton on either the cobra cable or the translation controls. Monitoring the VHF-AM is provided by placing the VHF-AM T/R/OFF/REC switch to REC.

Each audio control panel has three thumbwheel-type potentiometer controls: a VOX SENS control for adjusting the sensitivity of the VOX circuit, an INTERCOM BALANCE control for decreasing the level of the audio signals received from the RF equipment relative to that received from the intercom bus, and a VOLUME control for changing the overall level of all audio signals to the earphones. Each channel, in the A/C modules, also contains sidetone circuitry which enables a crewman to monitor his own transmission.

2.8.2.1.2 S/C Intercommunications.

S/C intercommunications and hardline voice communications are conducted via the intercom bus, which is commonly connected to each of the three A/C modules, to the LCC during prelaunch via the USM, and to recovery forces via the swimmer electrical connector during recovery operations. To communicate, a crewman must activate his A/C module by placing the POWER switch to VOX or PTT and setting the INTERCOM switch to T/R.

An A/C intercom transmission can only be initiated with the PTT key, if the PTT position of the power switch is selected. In the VOX position, either the VOX circuit or the PTT key will indicate an intercom transmission. If only an intercom transmission is desired, the PTT/CW switch on the cobra cable should be in the CW position. Normally, the A/C modules will remain activated throughout the entire mission.

2.8.2.1.3 In-Flight Voice Communications.

In-flight voice communications with the MSFN will be conducted over the USBS and the VHF-AM transmitter-receiver equipment. Controls for the S-band and the VHF-AM groups are located on MDC-20, and MDC-26, -13, and -23. The VHF-AM controls on MDC-20 consist of a T/R/OFF/REC switch that controls application of power, a RCVR switch to control which of two receiver modes 1 simplex, 2 duplex, are operational, a SQUELCH control to establish the level of RF signal required to pass audio signals to the audio center, and a VHF ANTENNA switch to manually select the upper (+Z), or lower (-Z), antenna. Voice transmission via VHF-AM is controlled by the placement of the VHF-AM switch (MDC-26, -13, or -23) to T/R, the cobra cable MODE switch to PTT, and depressing the PTT pushbutton on the cobra cable. Either T/R or REC permits voice reception from the MSFN.

T/C

Voice communication is possible in all operational modes of the USBS, with the exception of the emergency key mode, providing the S-BAND switch (MDC-26, -13, or -23) is placed at REC. Transmission is controlled by the PTT pushbutton on the cobra cable, providing the cobra cable MODE switch is in the PTT position. (Refer to paragraph 2.8.3.3.4 for additional information on the unified S-band operations.)

2.8.2.1.4 Recovery Voice Communications.

After touchdown, the HF transceiver equipment will be utilized for voice communications. It is controlled by the RECOVERY-HF switches on

MDC-20 which include an ON-OFF switch and a SSB/BCN/AM switch for selecting mode. Either the single sideband (SSB) or amplitude modulation (AM) modes may be used for voice communications. The beacon (BCN) mode is used to transmit a continuous wave beacon for tracking purposes.

Voice transmission in either the SSB or AM mode can be VOX- or PTT-controlled when the RCDR/HF switch (MDC-26, -13, -23) is placed to T/R.

The HF transceiver utilizes the HF recovery antenna. This antenna must be deployed after touchdown by setting the POSTLANDING—ANTENNA DEPLOY switches on MDC-25 to their upper positions, A and B, while the MASTER EVENT SEQ CONT switches 1 and 2 (MDC-24) are at arm and MASTER EVENT SEQ CONT ARM A and B circuit breakers (MDC-22) are closed.

The VHF/AM transmitter-receiver equipment can be used as backup by utilizing VHF recovery antenna No. 2 which can be selected by setting the VHF ANTENNA switch (MDC-20) to RECOVERY. Also, the GFAE survival transceiver can be used inside the S/C by connecting its coaxial cable to VHF recovery antenna No. 1 or No. 2 at the coaxial bracket, MDC-9. These coaxial connectors may be utilized, during the interval preceding the arrival of the recovery forces, in the most advantageous manner. Any combination of VHF recovery beacon, GFAE survival transceiver, and VHF-AM transmitter-receiver may be employed as warranted by the serviceability of the communications equipment.

2.8.2.2 Data Operations.

2.8.2.2.1 General.

T/C system data capabilities include the processing, storage, and transmission of TLM data to the MSFN; the reception and processing of up-telemetry data (up-data) received from the MSFN; and during USBE testing, the transmission of TV from the TV camera. In addition to transmitted data, verbal comments may be recorded on the voice recorder. (See figure 2.8-2.)

2.8.2.2.2 TLM Transmission and Storage.

TLM data may simultaneously be transmitted via VHF-FM and/or S-band and recorded in the DSE for delayed time transmission when requested by MSFN. The system configuration prohibits transmission or recording of real time data while transmitting stored data.

TLM data for transmission to the MSFN consists of analog and digital signals obtained from the guidance and navigation system, central timing equipment, instrumentation sensors and transducers located throughout the S/C structure and operational systems, and biomedical sensors worn by

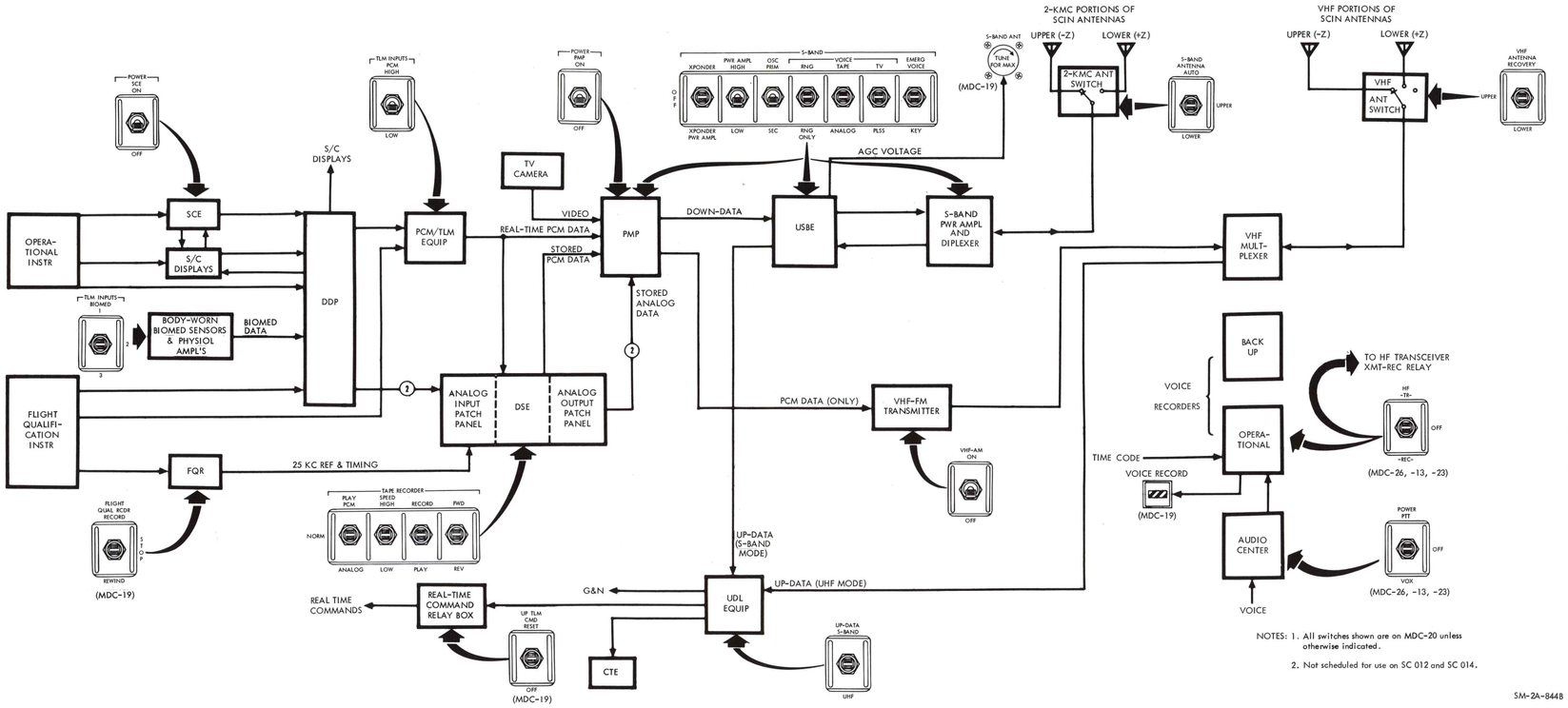

Figure 2.8-2. Data Operations

the crewman. Some of the instrumentation signals require conditioning before they can be utilized. This is accomplished by the signal conditioning equipment (SCE) activated by the POWER-SCE switch on MDC-20. The remaining TLM signals are either conditioned at their source by local signal conditioners, which requires no action on the part of crewmen, or do not need conditioning. The operational instrumentation signals are used for S/C displays and real time or delayed TLM transmission via VHF-FM and/or S-band. Those to be telemetered are routed to the pulse-code modulation-telemetry (PCM TLM) equipment. Most of the flight qualification signals are routed to the PCM TLM equipment along with the operational TLM signals. A few, however, are recorded as analog signals in the flight qualification recorder (FQR) for postflight analysis only. The FQR will be activated at brief intervals only during critical phases of the mission by the FLIGHT QUAL RCDR switch on MDC-19.

The PCM TLM equipment combines the signals to be telemetered and converts them to a single, digital, pulse train which is then fed to the pre-modulation processor equipment (PMP) and the data storage equipment (DSE). The PCM TLM equipment is activated at all times. Its only control is the TLM INPUTS – PCM switch on MDC-20. This switch is used to select the PCM bit-rate. In the HIGH (51.2 KBPS) position, all TLM inputs to the PCM TLM equipment are processed and combined into the output signal. The LOW (1.6 KBPS) position eliminates the less essential parameters and is used only when a PCM pulse train of reduced bandwidth is required. The reduced bandwidth allows PCM data to be recorded at a reduced (3.75 ips) speed when long periods of data recording are required.

The PCM signal is fed to the PMP and DSE simultaneously, for real-time (R/T) transmission and/or storage. For R/T transmission, the signal is processed through the PMP to the VHF/FM and/or S-BAND transmitters. The PMP is controlled by the POWER – PMP switch, the S-BAND group of switches, and the TAPE RECORDER – PLAY switch. When R/T transmission is not possible, the PCM data can be stored in the DSE, which is controlled by the TAPE RECORDER group of switches and the TLM INPUTS – PCM switch discussed in the previous paragraph. When played back later, the stored PCM data is also processed through the PMP to the VHF/FM and/or S-BAND transmitters for transmission. The sole function of the VHF/FM transmitter is the transmission of R/T or stored PCM data. Its only control is the VHF-FM – ON/OFF switch on MDC-20. It utilizes the same antennas as the VHF/AM transmitter-receiver, namely, the upper or lower SCIN antenna as selected by the VHF antenna switch.

T/C

Backup capability for the transmission of PCM TLM data is provided by the USBS. (Refer to a subsequent discussion of unified S-band operations.)

2.8.2.2.3 Up-Data Reception.

Up-data which can be transmitted to the S/C by the MSFN consists of three types: G&N data for up-dating the Apollo guidance computer,

timing data for up-dating the central timing equipment (CTE), and realtime commands (RTCs) for providing the MSFN with limited control of certain on-board functions.

During normal operations, up-data is received by the UHF/FM receiver contained in the up-data link (UDL) equipment. Once received, the signal is processed and decoded, and the information is routed to the G&N system, the CTE, or UDL-RTC relay box. For backup, up-data can also be transmitted by MSFN stations to the S/C via the S-band carrier. When this occurs, the up-data is received by the USBE receiver which extracts the up-data subcarrier and routes it to the PMP where the intelligence is removed from the signal and sent to UDL equipment for processing, decoding, and distribution. In this S-band mode, the UHF/FM receiver is bypassed. Selection of the UHF or S-BAND mode is made with the UP-DATA switch on MDC-20. The UP TLM CMD – RESET/OFF switch (MDC-19) enables the crew to nullify previous RTCs and return control to the S/C. An UP TLM – ACCEPT/BLOCK switch (MDC-14) is also provided so that G&N up-data can be prevented from effecting the computer and the attendant validity signal being sent to the PCM format.

2.8.2.3 Tracking and Ranging.

2.8.2.3.1 In-Flight Tracking and Ranging.

The function of the in-flight tracking and ranging equipment (figure 2.8-3) is to assist the MSFN in determining S/C position and velocity. The primary method employed is C-band tracking. The C-band transponder on-board the S/C is used for this purpose. It operates in conjunction with conventional, earth-based, radar equipment by transmitting response pulses to the MSFN when radar pulses from the earth are received. It operates in a "1-pulse" or a "2-pulse" mode, depending on the type of radar equipment being used at the nearest MSFN station. A single control, the C-BAND switch on MDC-20, is used to activate the C-band transponder in either mode.

Backup tracking and ranging capabilities are provided by the USBS.

2.8.2.3.2 Recovery Tracking.

Line-of-sight and beyond-line-of-sight beacon transmission capabilities are provided to assist recovery personnel in locating the S/C during parachute descent and after touchdown. Line-of-sight beacon transmission is accomplished using the VHF recovery beacon equipment. The beyond-line-of-sight capability is furnished by operating the HF transceiver in a beacon mode.

During parachute descent the VHF recovery beacon is activated by setting the RECOVERY – VHF-BCN switch (MDC-20) to ON. This causes a 2-second, modulated VHF pulse to be transmitted every 5 seconds from VHF recovery antenna No. 1, which is deployed automatically with VHF recovery antenna No. 2 when the main parachutes are deployed.

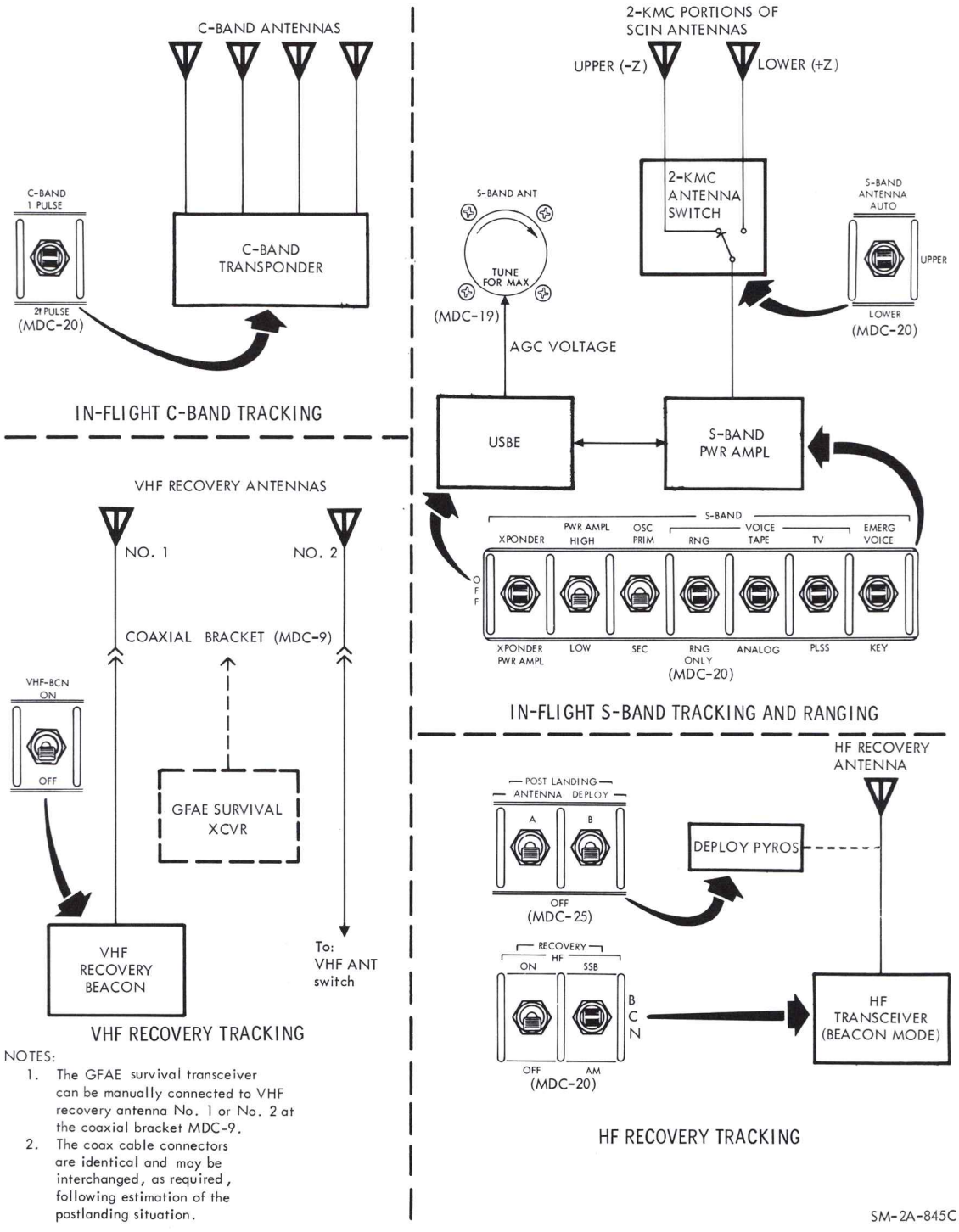

NOTES:
1. The GFAE survival transceiver can be manually connected to VHF recovery antenna No. 1 or No. 2 at the coaxial bracket MDC-9.
2. The coax cable connectors are identical and may be interchanged, as required, following estimation of the postlanding situation.

Figure 2.8-3. Tracking and Ranging

T/C

After touchdown, the HF recovery antenna must be deployed by setting the POSTLANDING – ANTENNA switches (MDC-25) to DEPLOY A and B while the MASTER EVENT SEQ CONT switches (MDC-24) are at PYRO ARM 1 and 2. HF beacon transmission at a preassigned frequency of 10.006 mc is accomplished by placing the RECOVERY – HF switch (MDC-20) to ON and the RECOVERY – HF-SSB/BCN/AM switch to BCN.

The GFAE survival transceiver (part of the crew's personal equipment) can also be operated in a beacon mode. If used inside the S/C, one of the VHF recovery antennas (No. 1 or No. 2) can be used by manually connecting it to the applicable coax connector on MDC-9.

The VHF antennas and communications equipment condition, as determined by the crew during the postlanding pre-recovery period, will decide the utilization of the coaxial cable connectors located on MDC-9. The connectors are identical and the recovery equipment coaxial cables may be interchanged to provide the most beneficial tracking configuration.

2.8.2.4 Unified S-Band Operations.

2.8.2.4.1 General.

The USBS is primarily designed to be used as a deep-space communications link between the S/C and the MSFN. Nevertheless, on mission 205 some of its capabilities will be tested and it may be called upon for use as backup equipment for voice communications, PCM data transmission, up-data reception, or S/C tracking and ranging when the S/C is within range of a MSFN station equipped for S-band operations. In addition, only the USBS is capable of transmitting TV.

The USBS consists of the S-band transmitter and receiver combined in a single electronic package called the unified S-band equipment (USBE) and the S-band power amplifier (PA). The function of the S-band PA is to provide additional power amplification of the USBE transmitter output. Two levels of amplification (high and low) are possible. A bypass mode is also possible wherein the S-band PA is turned off and the output of the USBE transmitter is sent to the S-band antenna equipment "as is." The 2-kmc portions of the upper and lower SCIN antennas are used for transmission and reception of S-band signals. Antenna selection is made by placing the S-BAND ANTENNA switch (MDC-20) to UPPER, LOWER, or AUTO. In the AUTO position, the antenna will be automatically switched if the signal falls below a minimum threshold.

The PMP is controlled in conjunction with the USBE by the S-BAND switches to provide the proper voice and data inputs to the USBE in accordance with the S-band mode selected.

When operating in a ranging mode, the MSFN can transmit a "coded" pseudo-random noise (PRN) pulse to the S/C via the S-band carrier. The S/C USBE will respond by transmitting an identical pulse to the MSFN. By

measuring the time lapse between transmission of the signal and reception of the response signal the MSFN can accurately determine the S/C range. Once established, this value can then be continually updated by measuring the doppler shift in the S-band carrier. A ranging mode can be selected again at later times, to verify or up-date the doppler data.

2.8.3 MAJOR COMPONENT/SUBSYSTEM DESCRIPTION.

To facilitate this presentation, the equipment comprising the T/C system (figure 2.8-4) has been divided into four groups designated as instrumentation equipment, voice and data equipment, RF electronics equipment, and antenna equipment. Specifically, these equipment groups contain the following:

Instrumentation equipment group

- Operational instrumentation
- Flight qualification instrumentation

Voice and data equipment group

- Audio center (A/C) equipment
- Signal conditioning equipment (SCE)
- Pulse-code modulation-telemetry (PCM TLM) equipment
- Television (TV) equipment
- Premodulation processor (PMP) equipment
- Data storage equipment (DSE)
- Flight qualification recorder (FQR) equipment
- Up-data link (UDL) equipment
- Central timing equipment (CTE)
- Voice recorder

RF electronics equipment group

- VHF/AM transmitter-receiver equipment
- HF transceiver equipment
- VHF/FM transmitter equipment
- Unified S-band equipment (USBE)
- S-band power amplifier equipment
- C-band transponder equipment
- VHF recovery beacon equipment

Antenna equipment group

- VHF/2-KMC omni-antenna equipment
- HF antenna equipment
- VHF recovery antenna equipment
- C-band beacon antenna equipment

2.8.3.1 Instrumentation Equipment Group.

The S/C instrumentation equipment consists of various types of sensors and transducers for providing environmental, operational status, and performance measurements of the S/C structure, operational systems, and experimental equipment. The outputs from these sensors and transducers are conditioned to signals suitable for utilization by the S/C displays, presentation to the PCM TLM equipment, or both. In addition, various digital signals are presented to the PCM TLM equipment, including event information, guidance and navigation data, and a time signal from the CTE.

Many of the signals emanating from the instrumentation sensors are of forms or levels which are unsuitable for use by the S/C displays or PCM TLM equipment. Signal conditioners are used to convert these signals to forms and levels which can be utilized. Some signals are conditioned at or near the sensor by individual conditioners located throughout the S/C. Other signals are fed to the signal conditioning equipment (SCE), a single electronics package located in the lower equipment bay. (Refer to signal conditioning equipment in the Voice and Data Equipment Group.) In addition to conditioning many of the signals, the SCE also supplies 5-vdc excitation power to some sensors. The SCE can be turned on or off with the POWER-SCE switch on MDC-20. This is the only control that the crew can exercise over instrumentation equipment for operational and flight qualification measurements. These two instrumentation groups are discussed in the following two paragraphs. Information on scientific and special instrumentation can be found in section 4 of this manual, Experiments and Scientific Equipment.

2.8.3.1.1 Operational Instrumentation.

Operational measurements are those which are normally required for a routine mission and include three categories: in-flight management of the S/C, mission evaluation and system performance, and preflight checkout of the S/C. The operational instrumentation sensors and transducers are capable of making the following types of measurements: pressure, temperature, flow attitude, rate, quantity, angular position, current, voltage, frequency, RF power, and "on-off" type events.

2.8.3.1.2 Flight Qualification Instrumentation.

Flight qualification measurements are those which will vary on different S/C, depending on mission objectives and state of hardware development. Most of them will be pulse-code modulated along with the operational measurements and transmitted to the MSFN. Other flight qualification measurements will be stored in the FQR for postflight analysis only.

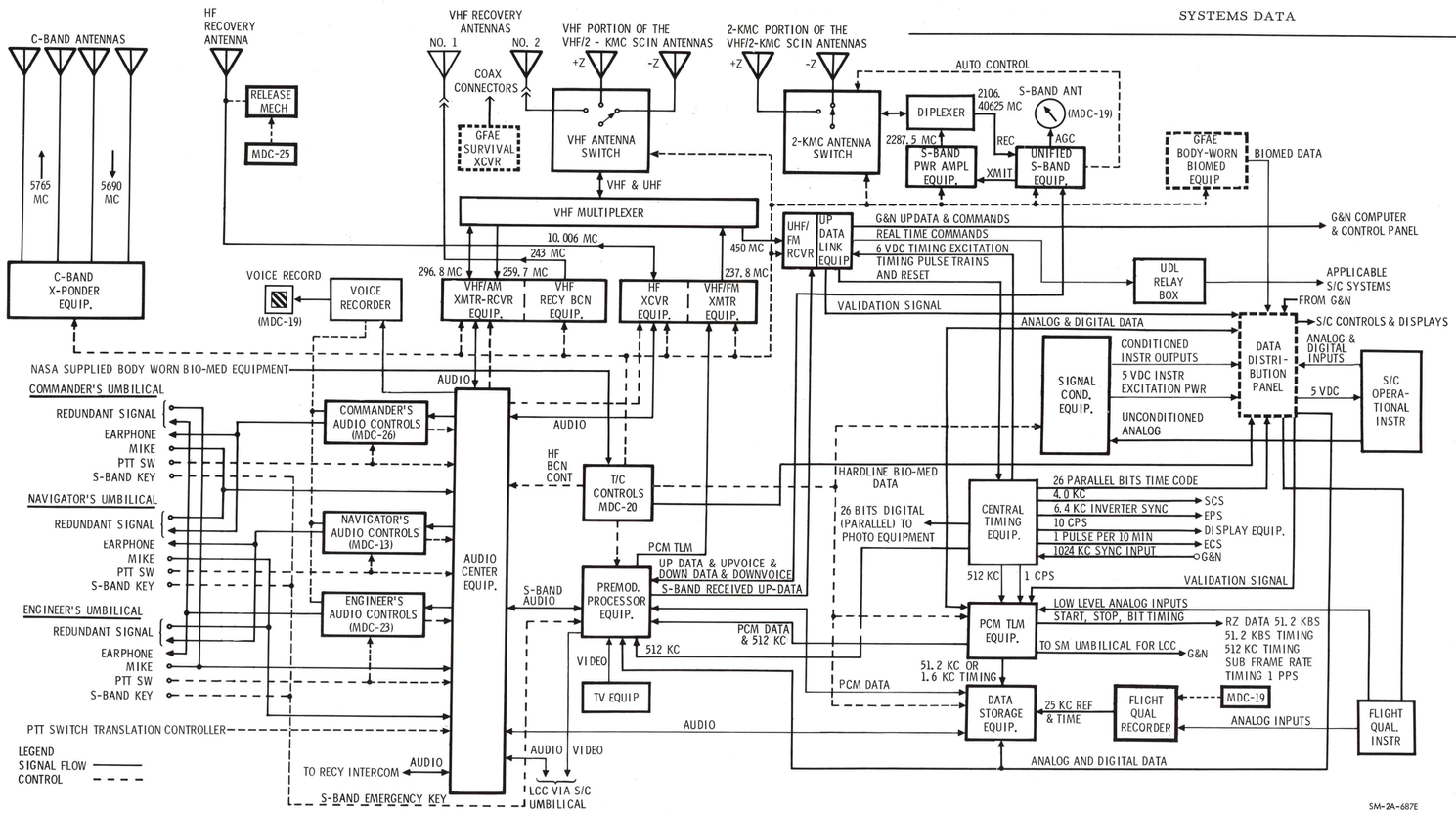

Figure 2.8-4. Telecommunications System

2.8.3.2 Voice and Data Equipment Group.

2.8.3.2.1 Audio Center (A/C) Equipment.

The A/C equipment (figure 2.8-5) consists of three separate identical modules located in a single electronics package in the lower equipment bay. Each module is controlled independently by its own control panel and supplied with 28-vdc power through separate circuit breakers. The three control panels, MDC-26, -13, and -23, are located in stations 1, 2, and 3, respectively. Each of the astronaut's headsets, containing two microphones and two microphone amplifiers, and two independently operating earphones, is connected to one of the A/C modules by a cobra cable. Thus each astronaut has a separate headset, audio center module, and audio control panel to provide him with individual control of voice transmission and reception.

Each A/C module contains a microphone amplifier, VOX circuitry, an earphone amplifier, and various signal attenuation, switching, and isolation circuits. The earphone and microphone amplifiers amplify the voice signals to and from the headset. The VOX circuitry is a voice-operated keying circuit that supplies a ground return path necessary for activating the microphone amplifier and the transmitter keying relays in the HF transceiver, intercommunication system, and the power control relay in the operating voice recorder.

Audio signals are provided to and from the HF transceiver equipment, VHF/AM transmitter-receiver equipment, USBE (via the PMP), and the intercom bus. The intercom bus is common to all three modules and provides for the hardline communications between crewmen and with the LCC and recovery forces.

T/C

Inputs and outputs are controlled by the RCDR/HF, VHF/AM, S-BAND, and INTERCOM switches on the audio control panels. Each of these switches has three positions: T/R, OFF, and REC. Setting any of the switches to T/R (except S-BAND) permits transmission and reception of voice signals over its respective equipment. REC permits reception only, and OFF disables the input and the output. The operation of the microphone amplifier in each module is controlled by the VOX keying circuit or the PTT pushbutton on the cobra cable or the translation controller. The VOX circuit is energized by the position of the POWER – PTT/OFF/VOX switch on each audio control panel. The PTT position permits monitoring and activation of the microphone amplifier, voice recorder HF, VHF/AM and S-band voice transmission circuits by the PTT key. The VOX position permits all the functions of the PTT position plus VOX activation of the microphone amplifier, voice recorder and HF transmitter.

Three potentiometer controls are also provided on each audio control panel: VOX SENS, INTERCOM BALANCE, and VOLUME. The VOX SENS control is used to adjust the sensitivity of the VOX circuitry, determining the amplitude of the voice signal necessary to trigger the VOX keying

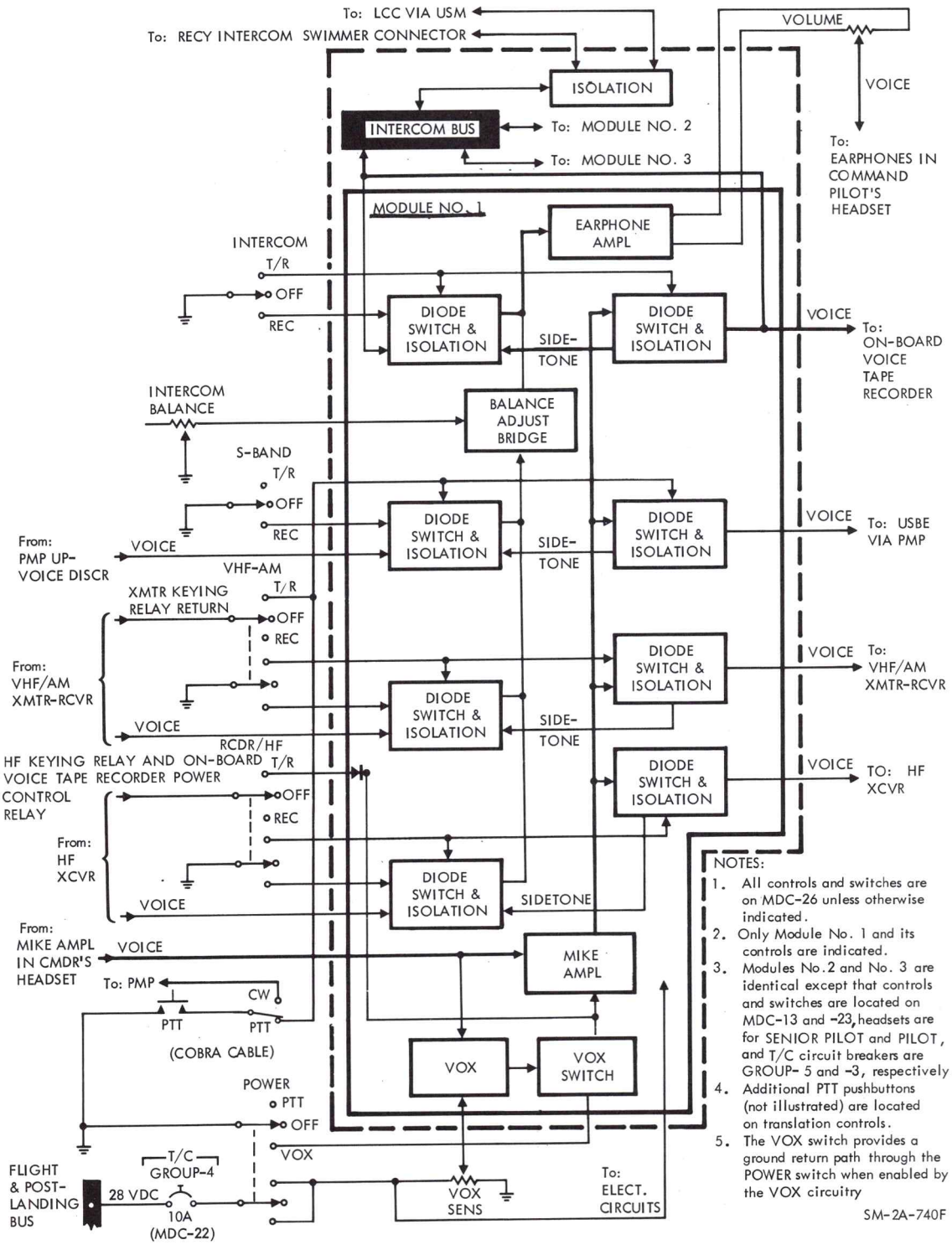

Figure 2.8-5. Audio Center Equipment

circuit. The INTERCOM BALANCE control adjusts the level of voice signal inputs from the RF equipment relative to the level of voice signal inputs from the intercom bus. The VOLUME control adjusts the output of the earphone amplifier.

2.8.3.2.2 Signal-Conditioning Equipment (SCE).

The signal-conditioning equipment (SCE) is contained in a single electronics package located in the LEB. (See figure 2.8-6.) Its functions are to convert various kinds of unconditioned signals from the instrumentation equipment into compatible, 0- to 5-volt d-c analog signals, and to provide excitation voltages to some of the instrumentation sensors and transducers.

The SCE uses the following module types: The active attenuator, to attenuate high-signal voltages; the ac-(am) to-dc converter, to detect the amplitude variations of an a-c signal; the dc differential amplifier, to amplify small signals; the dc differential bridge amplifier, to detect resistance changes; the bi-phase demodulator, to convert S/C position resolver outputs; the frequency demodulator, to detect frequency changes in an a-c signal; and the power supply, to provide +20 volts and -20 volts to the SCE circuitry, 10 volts as bridge excitation, and 5 volts to excite other S/C sensors.

The conditioned output signals from the SCE are routed to the data distribution panel (DDP). The DDP provides parallel outputs, where necessary, and routes the signals to the PCM telemetry equipment, S/C displays, and GSE connections.

The only external control for the SCE is the two-position POWER—SCE toggle switch on MDC-20. Placing this switch to ON applies 28 volts dc to the latch winding of the latching relay, which closes contacts applying 3-phase a-c power to the power supply module. In the OFF position, the relay is unlatched, removing a-c power from the power supply.

2.8.3.2.3 Pulse-Code Modulation Telemetry (PCM TLM) Equipment. T/C

The function of the PCM TLM equipment (figure 2.8-7) is to convert TLM data inputs from various sources into one serial digital output signal. This single output signal is routed to the PMP for transmission to the MSFN or to the DSE for storage. The PCM TLM equipment is contained in two separate units located in the lower equipment bay: PCM unit 1 and PCM unit 2.

Input signals to the PCM TLM equipment are of four general types: low-level analog, high-level analog, parallel digital, and serial digital. Some of the low-level analog inputs are supplied directly from the instrumentation sensors; other data inputs are routed through the data distribution panel (DDP).

Two modes of operation are possible: the high- (normal) bit-rate mode of 51.2 kilobits per second (KBS) and the low- (reduced) bit-rate mode of 1.6 KBS. Operational mode is selected by placing the TLM INPUTS—PCM switch on MDC-20 to HIGH or LOW, as applicable. When the switch is in the LOW position, the high PCM bit-rate can be commanded by the MSFN via the UDL equipment.

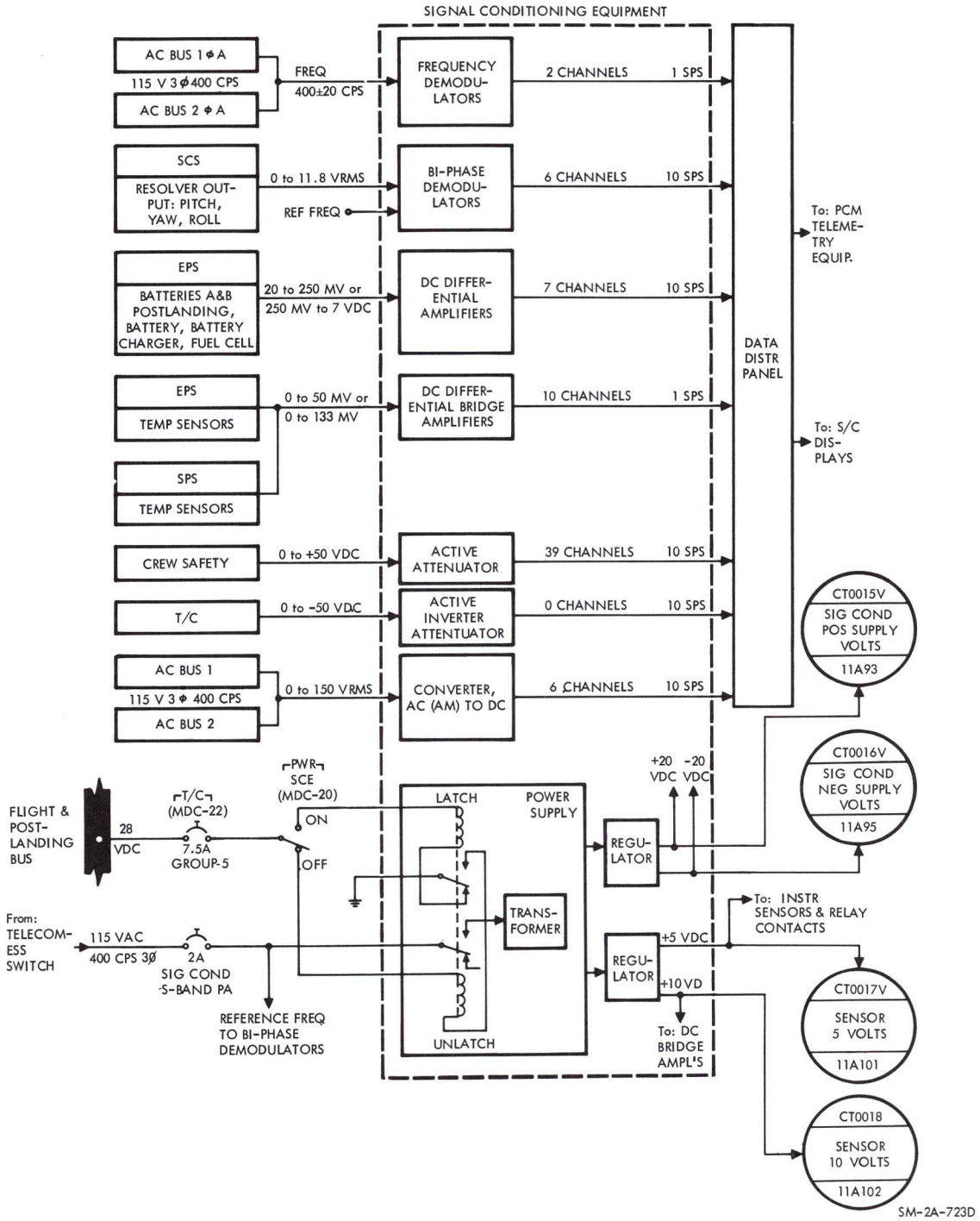

Figure 2.8-6. Signal-Conditioning Equipment

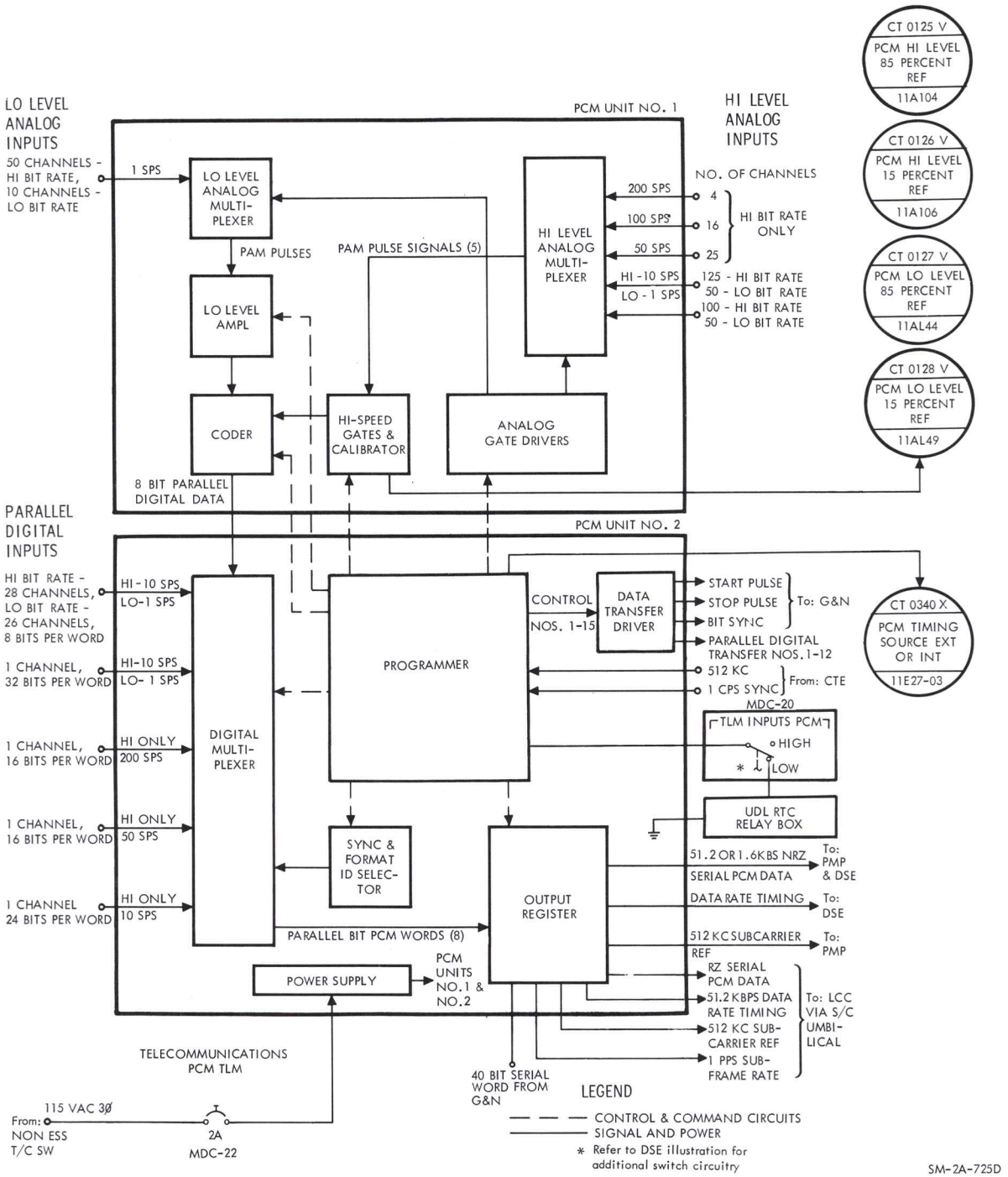

Figure 2.8-7. Pulse Code Modulation Telemetry

T/C

2.8.3.2.4 Television (TV) Equipment.

The TV equipment consists of a small, portable, TV camera (figure 2.8-8) that can be hand-held or mounted in one of four locations in the command module. Its function is to acquire real-time video information for transmission to the MSFN during S-band testing.

The first camera mounting position is located below the main display console, and will permit a front view of the crew lying in their couches. The second position is located behind the head of the center seat, and will permit viewing of crew activities in the middle of the command module. The second position is also provided with a five-foot stretch cable to permit hand-held use of the camera for coverage of any desirable target inside or outside the S/C. The third position is located in the right-hand equipment bay, and permits viewing of astronauts at work in that area. The final position utilizes a special bracket which allows the TV camera to look out the right-hand docking window.

The TV camera is connected directly to the PWR cable at the first mounting position. If the TV camera is to be used in the mounting position behind the center couch, the PWR cable must be connected to the connector marked "TV Cam to Hatch J107," and the camera, in turn, should be connected to the connector at that position (J191), by the stretch cable. If the TV camera is to be mounted by the right-hand equipment bay, the PWR cable must be connected to the connector marked "TV Cam to RHEB," and the TV camera connected to the connector at that location (J195) by the stretch cable.

The TV camera is constructed with a pistol-grip type of handle on the bottom, which can be extended to facilitate portable use. The TV camera is fitted with a fixed-focus wide-angle lens for picture taking within the command module. For taking pictures of the earth or moon through the C/M window, an interchangeable zoom lens is provided. The zoom lens has a look angle of from 9 degrees through 30 degrees. It is fitted with a through-the-lens type viewer that will enable the operator to see the change in field of view and relative size of the scene while the lens is adjusted. The electronic circuitry in the camera is equipped with an automatic gain control to allow for differences in target illumination.

The TV camera is activated by a slide switch in the pistol-grip handle, which applies 28 volts dc to the camera power supply when set to on. This energizes the entire camera and results in a video output signal that is fed to the PMP. In the PMP, the video signal is frequency multiplexed with the telemetry data and voice, which is transmitted to earth via the USBE. The USBE must be operating in a TV mode to permit this transmission. An AUTO LIGHT CONTROL switch has been added to the camera, permitting it to compensate for either peak or average scene illuminations from 0.1 to 30 foot candles.

2.8.3.2.5 Premodulation Processor (PMP) Equipment.

The PMP equipment (figure 2.8-9) functions as a data processing and distribution center providing necessary interface, where required, between the voice, data, and RF equipment. The PMP consists of ten modules mounted in a single electronics package located in the lower equipment bay. These modules contain filters, oscillators, modulators, demodulators, detectors, switching circuits, discriminators, mixing and keying networks, and a power supply.

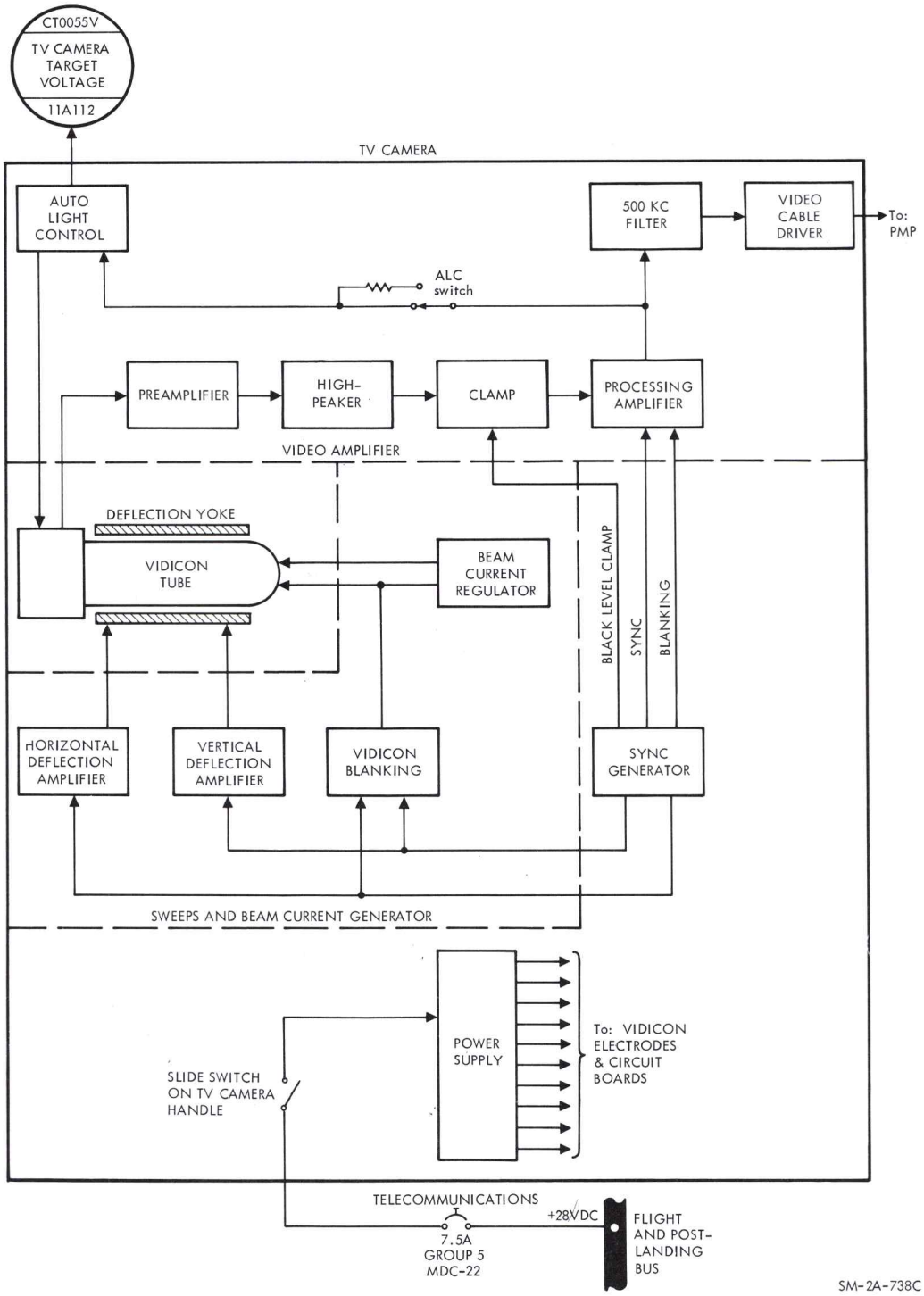

Figure 2.8-8. Television Equipment

T/C

The PMP can operate in many possible modes. All of the external controls for the PMP are switches located on MDC-20. The switches which affect the PMP consist of the POWER – PMP switch, the S-BAND – VOICE group of switches, the S-BAND – EMERG switch, and the TAPE RECORDER – PLAY and – RECORD/PLAY switches. Also, during emergency key operation, the PTT keys on the cobra cables and translation controls, control the PMP emergency key network. All of the signal inputs available to the PMP are listed in the PMP INPUTS table at the end of this paragraph. PMP outputs are dependent upon switch configuration. The PMP OUTPUTS table, also at the end of this paragraph, shows the various composite output signal possibilities along with their destinations and the switch positions required for any mode of operation. It should be noted that the S-BAND and TAPE RECORDER switches also affect the operational mode of the USBE and DSE.

One function of the PMP is to process the PCM TLM signal obtained from the PCM TLM equipment or DSE and route it to the VHF/FM transmitter equipment for transmission to the MSFN. This output will be provided whenever a PCM input is available, regardless of mode and simultaneously with other PMP outputs.

All remaining PMP functions involve interface with the USBE. Inputs to the PMP from the USBE are the 70-kc up-data and 30-kc up-voice subcarriers. These are fed into the up-data and up-voice discriminator circuits. These two circuits (as well as circuitry needed for emergency S-band modes) do not require the PWR-PMP switch to be on. They are supplied with power independently whenever the USBE is in operation. Outputs from the up-data and up-voice discriminators are fed to the UDL and A/C equipment, respectively.

The PMP supplies an output to one of the three USBE inputs, depending on S-band mode as selected by the S-BAND – VOICE group of switches and the S-BAND – EMERG switch. The USBE inputs are designated PM, FM-1, and FM-2. During normal S-band modes, the PMP supplies either a PM or FM-1 output to the USBE. The PM output supplies real-time PCM TLM and voice to the USBE when the USBE is operating in a normal voice or a ranging mode. If the USBE ranging only mode is selected, the PCM TLM portion of the output is eliminated, leaving only voice signals in the PM-1 output. When recorded data or TV data is to be transmitted along with PCM TLM and voice data, the FM-1 output is supplied to the USBE. This mode permits the greater bandwidth which is required for transmission of this data.

There are two emergency modes; emergency voice and emergency key, selected by the S-BAND – EMERG switch and used to permit emergency transmission of voice or code over the USBE with the PMP shutdown. With the S-BAND – EMERG switch in the center (OFF) position, the PWR – PMP switch controls the application of power to the PMP. However, with the S-BAND – EMERG switch set to either VOICE or KEY, a-c power is removed from the PMP. In the KEY position, a separate 28-volt d-c

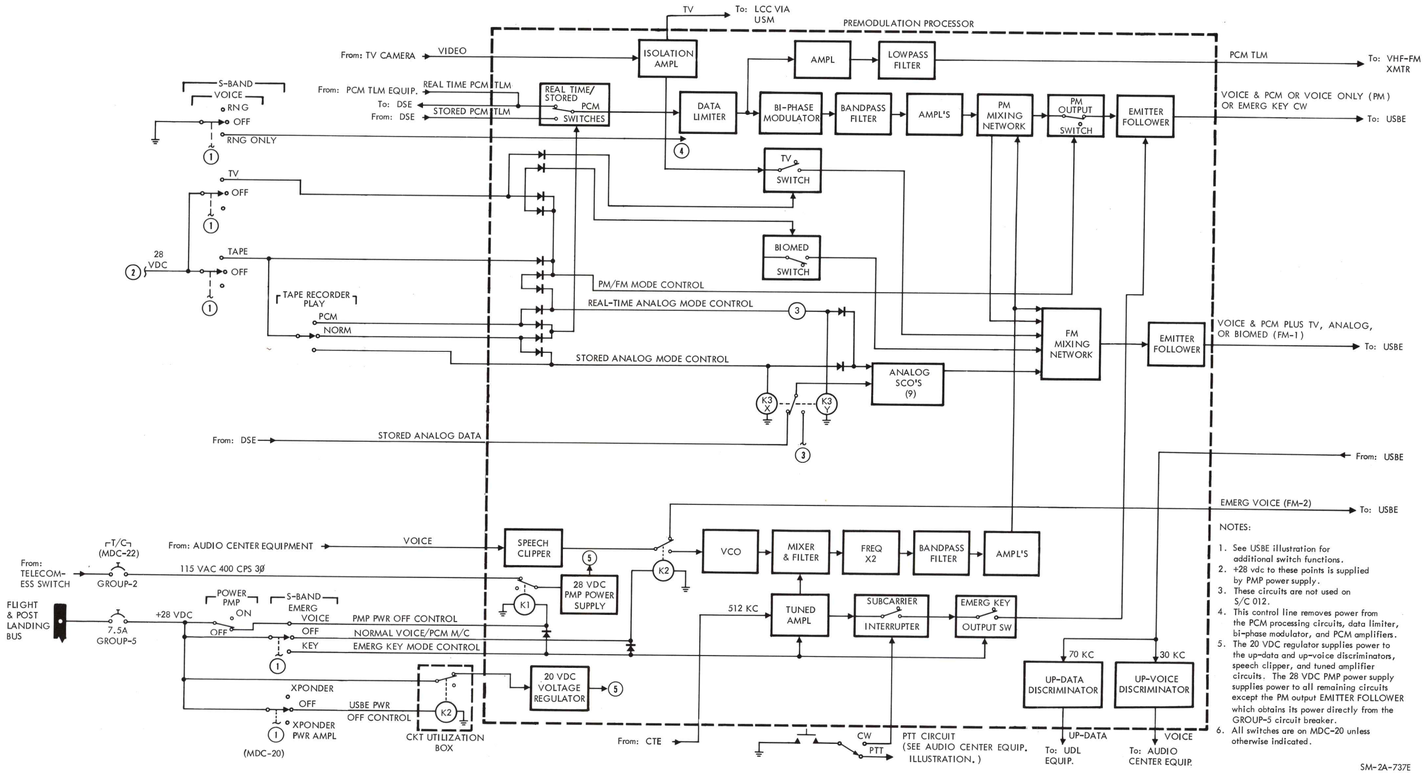

Figure 2.8-9. Premodulation Processor Equipment

T/C

source is used to enable the emergency key network only, which permits a 512-kc signal from the CTE to be keyed by the PTT key in the cobra cable. This signal is applied to the PM input of the USBE. In the VOICE position, voice signals from the audio center equipment are routed directly through the PMP and supplied to the FM-2 (emergency voice) input of the USBE.

The following matrix shows the switching configurations of the S-band system in several operational modes.

PMP Inputs

Signal Type	Source	Application
Real-time PCM TLM	PCM TLM equipment	Transmission to MSFN via USBE or VHF/FM transmitter
Video	TV equipment	Transmission to MSFN via USBE
Voice	Audio center equipment	Transmission to MSFN via USBE
Recorded PCM TLM	DSE	Transmission to MSFN via USBE or VHF/FM transmitter
512-kc square wave	CTE	CW transmission to MSFN during emergency key mode
512-kc square wave	PCM TLM equipment	Subcarrier for transmission of PCM TLM to MSFN via USBE
70-kc up-data subcarrier	USBE	Detection of up-data received from MSFN via USBE
30-kc up-voice subcarrier	USBE	Detection of up-voice received from MSFN via USBE

T/C

PMP Outputs

Output		Switch Positions (MDC-20)						
		PWR	S-BAND – VOICE Group			S-BAND	TAPE RECORDER	
Types of Data	Destination	PMP	RNG-Off-RNG ONLY	TAPE-Off	TV-Off	EMERG	PLAY	RECORD-Off-PLAY Off
Real-time voice	USBE (FM-2)	*		*		VOICE	*	*
Interrupted 512-kc carrier (keyed by PTT switch)	USBE (PM)					KEY		
Real-time PCM TLM	VHF/FM Transmitter	ON	*	Off (center)	*	Off (center)		
Recorded PCM TLM				TAPE			PCM or NORM	PLAY
Real-time PCM TLM and voice	USBE (PM)		RING or Off (center)	Off (center)	Off (center)		*	RECORD or OFF (center)
Real-time voice			RNG ONLY					
Recorded PCM and real-time voice	USBE (FM-1)		*	TAPE			NORM	PLAY

*This switch does not affect this output mode.

PMP Outputs

Output		Switch Positions (MDC-20)						
		PWR	S-BAND – VOICE Group			S-BAND	TAPE RECORDER	
Types of Data	Destination	PMP	RNG-Off-RNG ONLY	TAPE-Off	TV-Off	EMERG	PLAY	RECORD-Off-PLAY
Recorded PCM TLM and real-time voice	USBE (FM-1)	ON	*	TAPE	Off (center)	Off (center)	PCM	Play
Real-time PCM TLM and voice								
Real-time PCM TLM, voice, and TV				Off (center)	TV		*	*
Real-time PCM TLM and voice								
Up-data commands	UDL			*	*			
Up-voice	Audio Center Equipment							

*This switch does affect this output mode.

2.8.3.2.6 Data Storage Equipment (DSE).

The DSE (figure 2.8-10)is a three-speed, 14-track magnetic tape recorder and reproducer located in the LEB. It is used to store data during phases of the mission which inhibit or prevent the successful transmission of this data to the MSFN. Data can be recorded in parallel on five digital channels, and played back during a later phase of the mission for transmission to the MSFN. Each reel contains 2250 feet of one-inch-wide, magnetic, Mylar tape.

The PCM TLM data is obtained from the PCM TLM equipment as a single serial pulse train at a high bit-rate of 51.2 KBPS or a low bit-rate of 1.6 KBPS, depending on the PCM TLM mode. In the DSE, a serial-to-parallel converter circuit converts this signal into four parallel digital channels, each of which as a resulting pulse repetition rate (PRR) of only 12.8 KBPS or 0.4 KBPS (one-fourth of the original PRR). The PCM TLM equipment also furnishes a 51.2-kc or 1.6-kc square wave timing signal to the DSE, which is also divided by four. These five signals, the four channels of PCM TLM and the clock signal, are amplified by the five digital record amplifiers and fed to the digital record heads. Only one analog channel, the 25-kc reference and timing signal from the FQR, is scheduled for use on SC014.

During playback, the playback heads pick up the recorded data and present it to the digital playback amplifiers. The four parallel channels of recorded digital data and the clock signal divided by four are picked up by the five digital playback heads and presented to the five digital playback amplifiers. The amplified signals are then routed to the parallel-to-serial converter and the reproduce module. The four digital signals are converted back to a single serial pulse train which is fed to the PMP equipment. The bit-rate of this output will always be 51.2 KBPS, even if the recorded data was originally 1.6 KBPS. This is due to different speeds used in recording and reproducing. The 51.2 KBPS high bit-rate PCM signal is recorded at 15 inches per second (ips) and played back at the same speed. The low bit-rate signal of 1.6 KBPS is recorded at 3.75 ips, however, and played back at 120 ips, an increase of 32 times. This increases the 1.6 KBPS PRR to 51.2 KBPS.

The DSE is a bidirectional machine with a tape transport mechanism capable of forward or reverse operation at any of three speeds: 3.75 ips (low speed), 15 ips (normal speed), and 120 ips (high speed). The low speed of 3.75 ips is used only to record low bit-rate PCM TLM data. The DSE playback electronics is automatically disabled whenever this speed is selected. The normal speed of 15 ips is used to record and play back high bit-rate PCM TLM data. The high speed of 120 ips is used for fast dump of the low bit-rate PCM TLM data which was recorded at 3.75 ips. The high speed is also used for fast forward or reverse rewinding. Maximum operating times, to record or play back the entire 2250 feet of tape, are as follows: 2 hours at the low speed of 3.75 ips, 30 minutes at the normal speed of 15 ips, and 3.75 minutes at the high speed of 120 ips.

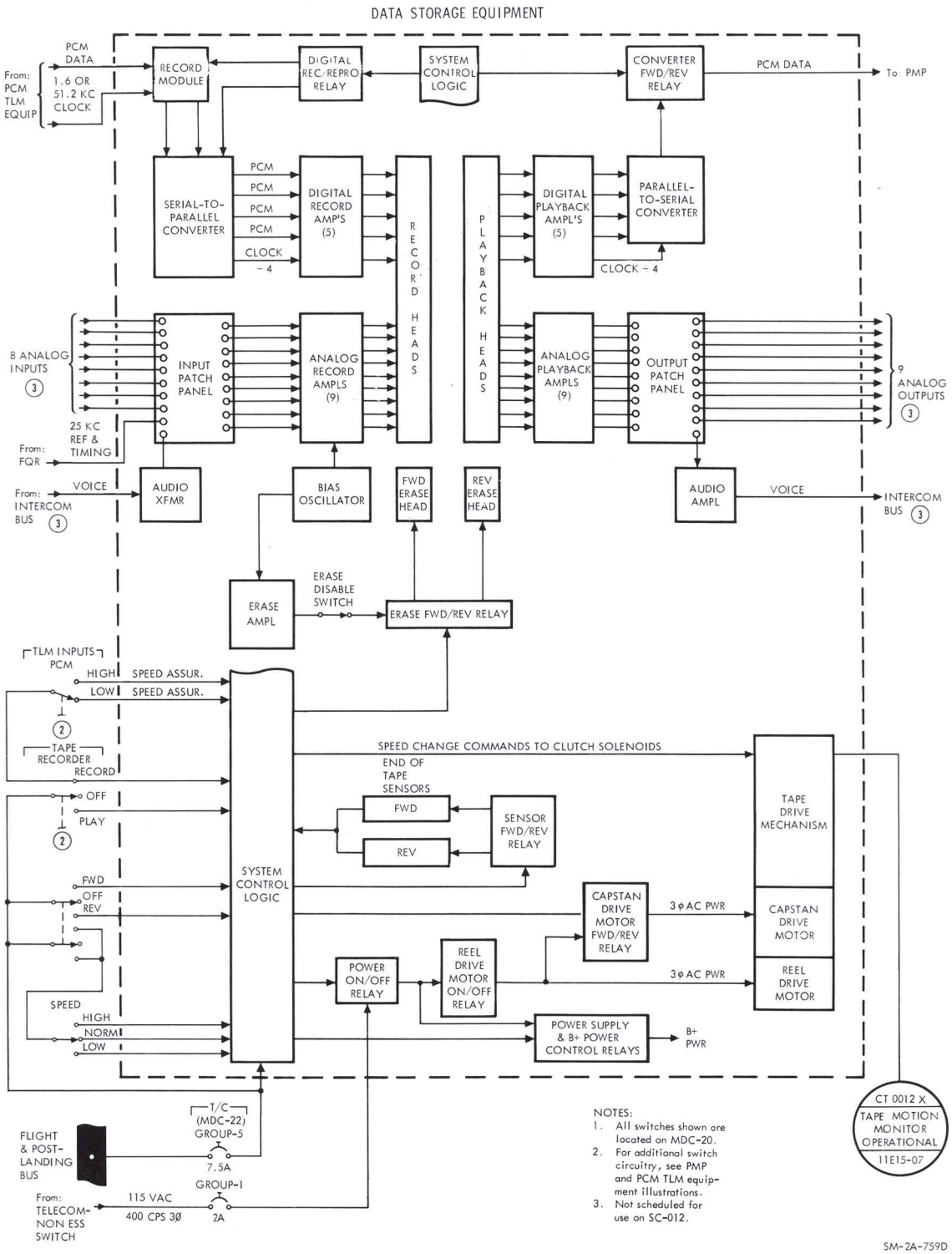

Figure 2.8-10. Data Storage Equipment

T/C

Tape speed and direction are controlled by the TAPE RECORDER – SPEED and – FWD/OFF/REV switches on MDC-20. Other TAPE RECORDER switches are the RECORD/PLAY switch which selects the record or playback mode, and the PLAY switch which selects the type of data to be reproduced. The PLAY switch has two positions: PCM and NORM. In either position, only PCM TLM data is reproduced and routed to the PMP equipment. The S-BAND – VOICE – TAPE switch must be set to TAPE before the TAPE RECORDER – PLAY switch becomes effective. The TLM INPUTS – PCM switch also affects tape recorder operation when recording. The interlock circuit in the DSE system control logic, which prevents selection of conflicting operational modes, locks the tape speed at 15 ips (normal) when the TLM INPUTS – PCM switch is set to HIGH. When set to LOW, the tape speed is locked at 3.75 ips. The proper control switch configuration for all DSE modes is shown in the table at the end of this paragraph.

An end-of-tape sensing circuit in the DSE automatically removes power from the tape drive mechanism and electronic circuits when the end of the tape is reached.

	Switch Positions					
	S-BAND–VOICE	TAPE RECORDER				TLM INPUTS
DSE Functions	TAPE-Off-ANALOG	PLAY PCM-NORM-ANALOG	SPEED HIGH-NORM-LOW	RECORD-Off-PLAY	FWD Off-REV	PCM HIGH-LOW
Record high bit rate	OFF	Any	NORM	RECORD	FWD* or REV	HIGH
Record low bit rate	OFF	Any	LOW	RECORD	FWD or REV	LOW
Playback recorded high bit rate	TAPE	PCM or NORM	NORM	PLAY	FWD or REV	Any
Playback recorded low bit rate	TAPE	PCM or NORM	HIGH	PLAY	FWD or REV	Any
Playback recorded** mixed bit rate	TAPE	PCM or NORM	NORM	PLAY	FWD or REV	Any
Reposition tape to end of reel (rewind)	OFF	Any	HIGH	PLAY	FWD or REV	Any

*Since the DSE is a bi-directional machine, it can record, play back, or rewind in either direction.
**Under present mission procedures, this mode should not be necessary.

Illegal Modes:

1. High bit rate must be recorded at normal speed or tape motion will stop.
2. Low bit rate must be recorded at low speed or tape motion will stop.
3. If tape is played back at low speed, the tape will move, but there will be no play back data available to the transmitters.
4. If tape is played back at high speed and contained high bit rate data, the play back data will be garbled.
5. If a FWD or REV command only is given to initiate a rewind, there will be no tape motion. A mode must also be selected (preferably PLAY) before tape will move.

2.8.3.2.7 Flight Qualification Recorder (FQR).

The FQR is a 14-track magnetic tape recorder which is used to record certain flight qualification measurements during critical phases of the mission. (See figure 2.8-11.) This data will be used for postflight analysis only; the FQR has no in-flight playback or transmission capability. It will be activated in a record mode during the ascent and entry phases of the mission and during SPS burns.

Flight qualification data is recorded in analog form. (Digital data cannot be recorded on the FQR.) Two recording tracks (one record head in each of two record-head stacks) are used for reference and time code recording. To accomplish this, an elapsed time code generator is used to modulate a narrow-band VCO. The output of the VCO is then mixed with the output of a 50 kc reference oscillator. This composite signal is presented to each of the two record heads through two direct record amplifiers.

The FQR operates at a record speed of 15 ips and a rewind speed of 120 ips. The 15 ips record speed allows a total of 30 minutes recording time per reel of tape. Because there are no provisions for crewmembers to change tape reels during the mission, the FQR must be used conservatively. Normally, the rewind function will not be used unless it is required to back the tape up to the beginning during prelaunch activities. End-of-tape sensing is provided, which will automatically halt the tape motion and remove power from the electronic circuits when the end of the tape is reached in either direction.

Crewman control of the FQR is provided by the FLIGHT QUAL RCDR, 3-position toggle switch on MDC-19. In the STOP position, all a-c and d-c power is removed. Placing the switch to RECORD activates all electronic circuitry and the tape transport mechanism, which moves the tape forward at 15 ips. The REWIND position activates the tape transport mechanism to move the tape backward at 120 ips.

T/C

The measurement numbers and names of the parameters stored in the FQR are presented in the following list. This does not include the two FQR channels utilized for storage of reference and timing code storage.

Measurement Number	Identity
CG 2010 V	X PIPA output, in phase
CG 2030 V	Y PIPA output, in phase
CG 2050 V	Z PIPA output, in phase
CK 0004 A	Linear acceleration structure X axis A
CK 0005 A	Linear acceleration structure Y axis A

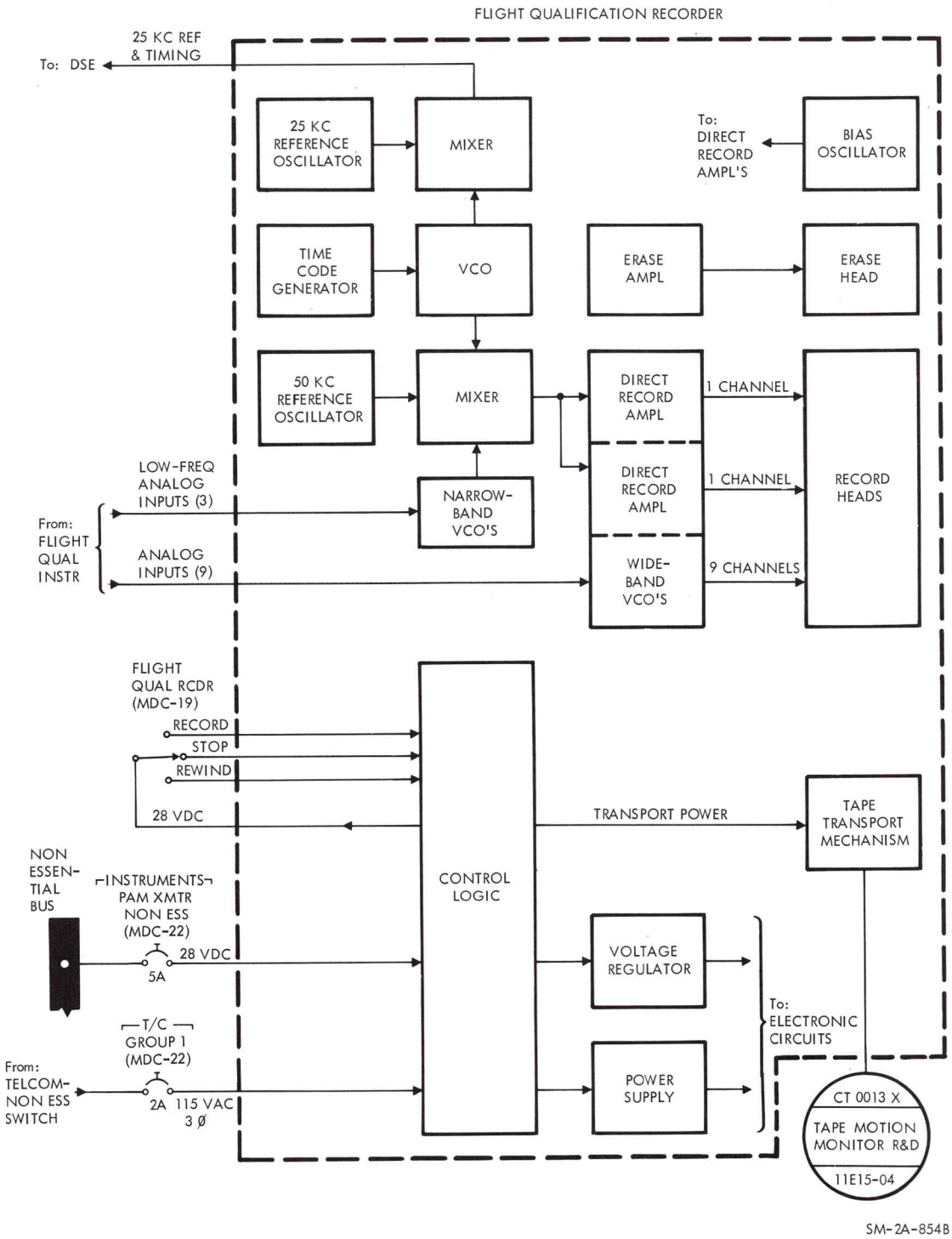

Figure 2.8-11. Flight Qualification Recorder Equipment

Measurement Number	Identity
CK 0006 A	Linear acceleration structure Z axis A
CR 0514 P	CCW roll engine pressure, system A
CR 0520 P	CCW roll engine pressure, system B
CR 0623 P	Fuel line pressure, system A
CR 0624 P	Fuel line pressure, system B
CR 0625 P	Oxidizer line pressure, system A
CR 0626 P	Oxidizer line pressure, system B

2.8.3.2.8 Up-Data Link (UDL) Equipment.

The function of the UDL equipment is to receive, verify, and distribute digital up-dating information sent to the S/C by the MSFN at various times throughout the mission to up-date or change the status of operational systems. The UDL (figure 2.8-12) consists of a UHF-FM receiver, a transistor mode switch, detecting and decoding circuitry, a buffer storage unit, output relay drivers, and a power supply. The UDL provides the means for MSFN to update the AGC, the CTE, and to select certain vehicle functions.

Two operational modes are possible: UHF and S-band. The mode normally used is UHF. In this mode, the incoming 450-mc up-data carrier is received by the VHF omni-antenna equipment and fed to the UHF receiver in the UDL. The intelligence is detected from the carrier and routed through the mode switch to the sub-bit detector, which converts it to a serial digital signal. The digital output from the sub-bit detector is fed to the remaining UDL circuitry, which stores and checks the digital data, determines the proper destination of the data, and processes it to the appropriate S/C system or equipment.

T/C

Real-time commands from the real-time command (RTC) drivers are supplied to the UDL RTC relay box which contains four, RTC, 2-position, latching relays. Thus eight real-time commands are possible: four "set" commands and four "reset" commands. The chart on the following page lists the eight commands by number and function.

The S-band up-data mode can be selected when the USBE is in operation. In this mode, the UHF receiver in the UDL is deactivated and its function is replaced by the USBE receiver and the PMP. Up-data information can be transmitted to the S/C within the 2-kmc S-band signal. When this signal is received by the USBE receiver, the 70-kc subcarrier containing the up-data information is extracted and sent to the up-data discriminator in the PMP. The resulting composite audio frequency signal is routed to the sub-bit detector in the UDL.

There are three external controls for the UDL equipment. One is the three-position, center-off, UP-DATA switch on MDC-20. When set to the

UDL Real-Time Commands				
Command	Action	UDL Relay	MDC-20 SW Position	Results
00	Deactivates system A abort request light	K1 (RESET)		MDC-3
01	Activates system A abort request light	K1 (SET)		MDC-3 turns on abort light.
02	Effect on C-band equipment operation determined by position of C-band switch on MDC-20	K3 (RESET)	C-BAND 1 PULSE	C-band equipment continues to operate in 1-pulse mode.
			OFF	C-band equipment remains off.
			2 PULSE	C-band equipment continues to operate in 2-pulse mode.
03	Turns C-band equipment on in 2-pulse mode	K3 (SET)	C-BAND 1 PULSE	C-band equipment continues to operate but switches to 2-pulse mode.
			OFF	Energizes C-band equipment which operates in 2-pulse mode.
			2 PULSE	No effect on C-band operation.
04	Effect on VHF-FM transmission of PCM data determined by position of VHF-FM-ON/OFF and TLM INPUTS-HIGH/LOW switches on MDC-20	K4 (RESET)	VHF-FM ON	No effect on VHF-FM transmitter.
			OFF	No effect on VHF-FM transmitter.
			TLM INPUTS PCM HIGH	PCM TLM remains in 51.2 KBS.
			LOW	PCM TLM output is 1.6 KBS.
05	Turns VHF-FM transmitter on and changes bit rate from low to high	K4 (SET)	VHF-FM ON	No effect on VHF-FM transmitter.
			OFF	Energizes VHF-FM transmitter.
			TLM INPUTS PCM HIGH	No effect on bit rate.
			LOW	Switches from 1.6 KBS to 51.2 KBS. NOTE If data is being recorded, DSE will automatically stop if TAPE RECORD-SPEED switch is not positioned to HIGH.
06	Deactivates system B abort request light	K2 (RESET)		MDC-3
	Activates system B abort request light	K2 (SET)		MDC-3 turns on abort light.

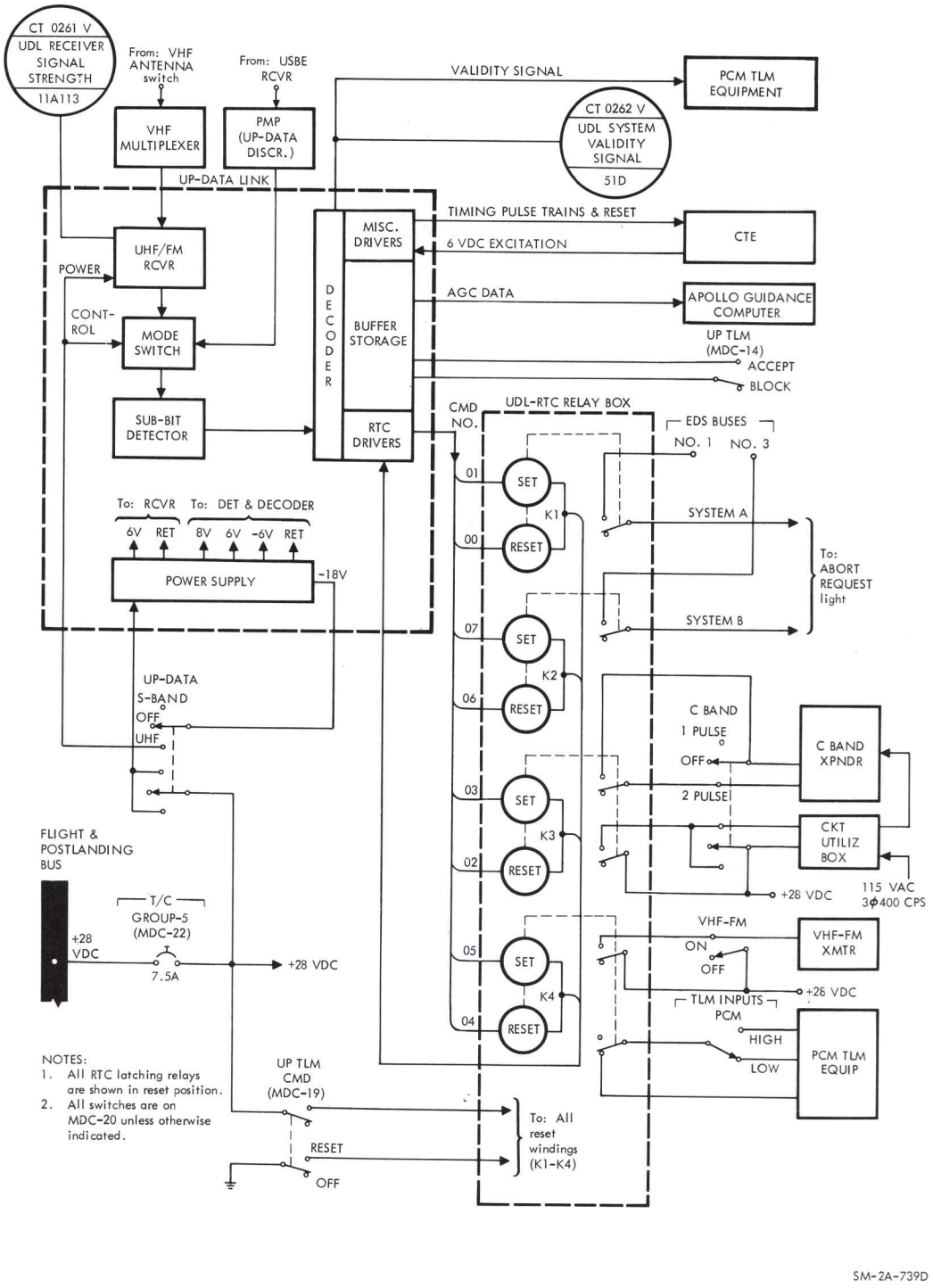

Figure 2.8-12. Up-Data Link Equipment

T/C

UHF position, the UHF up-data mode is selected and 28-volt d-c power is applied to the UDL power supply. The S-BAND position also applies 28-volt d-c power, but selects the S-band up-data mode and deactivates the UHF/FM receiver. Another control, located on MDC-19, is the two-position spring-loaded UP TLM CMD switch. When set momentarily to the RESET position, all "reset" commands listed in the UDL real time commands chart are commanded. This nullifies all "set" commands which have been received from the MSFN. An UP TLM – ACCEPT/BLOCK switch (MDC-14) is also provided which enables the crew to permit or prevent G&N up-data from affecting the guidance computer.

2.8.3.2.9 Central Timing Equipment (CTE).

The CTE provides precision square wave timing pulses of several frequencies to time-correlate all S/C time-sensitive functions. It also generates and stores the real-time day, hour, minute, and second time-from-launch (TFL) in binary-coded decimal (BCD) format for display and transmission to the MSFN. (See figure 2.8-13.)

In the primary or normal mode of operation, the Apollo guidance computer (AGC) provides a 1024-kc sync pulse to the CTE. This automatically synchronizes the CTE with the AGC and provides a stability of $\pm 2 \times 10^{-6}$ parts in 14 days. In the event of sync pulse failure, the CTE automatically switches to the secondary mode of operation with no time lapse and operates using its own crystal oscillator at a stability reduced to $\pm 2.2 \times 10^{-6}$ parts in 5 days.

The CTE contains two power supplies for redundancy. Each one is supplied from a different power source and through separate circuit breakers. These circuit breakers, CENTRAL TIMING SYS – MN A and – MN B on MDC-22, provide the only external means of control for the CTE. The two power supplies provide parallel 6-volt d-c outputs, either one of which is sufficient to power the CTE.

The timing signals generated by the CTE, and their applications, are listed in the CTE Outputs chart.

CTE Outputs

Signal	Destination	Purpose
512-kc square wave	PCM TLM equipment	Synchronization of internal clock
	PMP equipment	Modulating signal for S-band emergency key transmission
6.4-kc square wave	EPS inverters (three)	Synchronization of 400-cycle a-c power

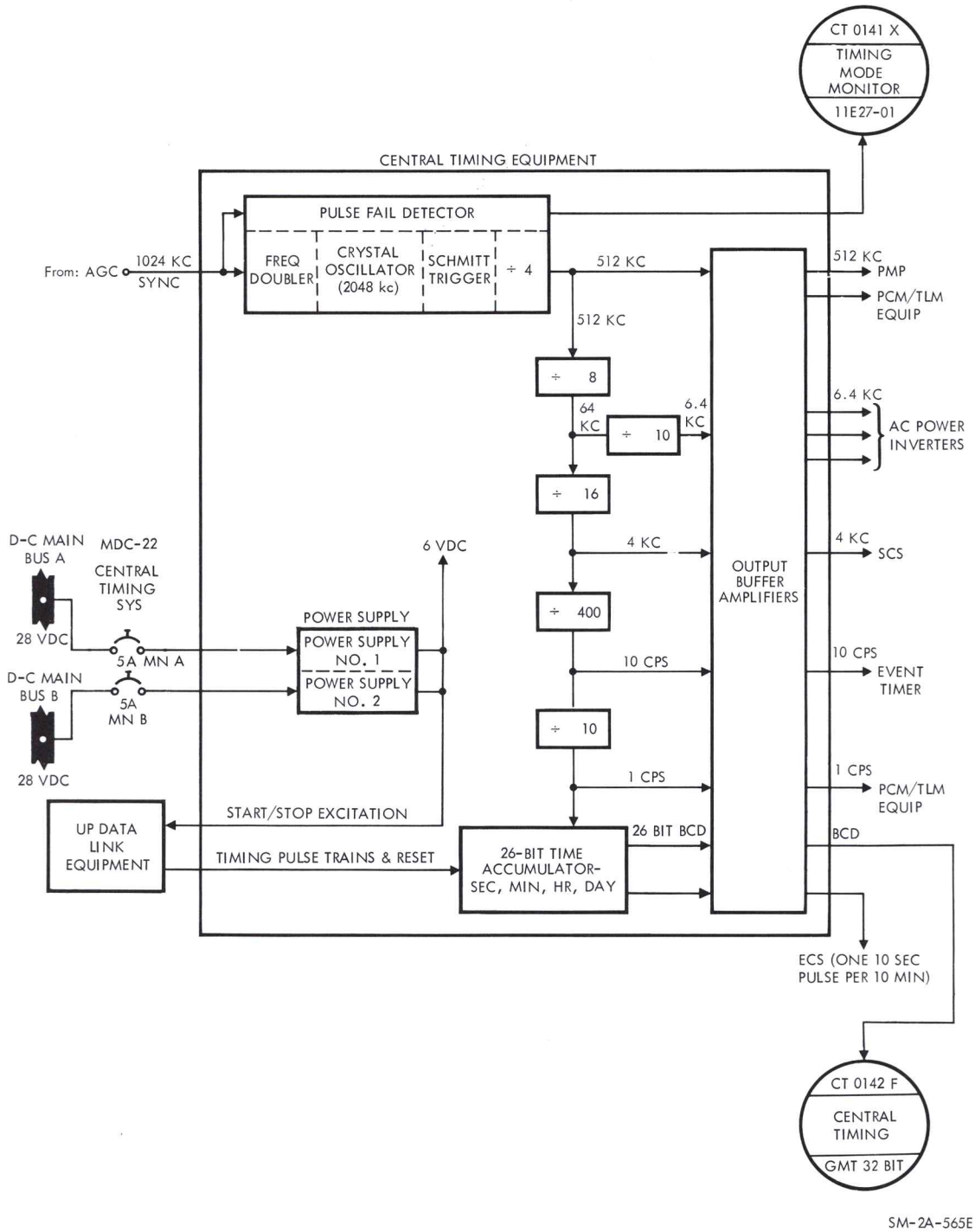

Figure 2.8-13. Central Timing Equipment

T/C

Signal	Destination	Purpose
4-kc square wave	SCS	Synchronization of X-axis accelerometer integrator
10-cps square wave	Displays	Digital event timer
1 cps	PCM TLM equipment	Synchronization of subframe of PCM data, Displays, and T-Timer
DC	PCM TLM equipment	Pulse-fail detection and indication. (Sampling rate equals 10 samples/sec, 5μ sec pulse duration.)
Binary coded decimal time code	PCM TLM equipment	Provides time code data to TLM in BCD format (TLM measurement No. CT0142F, C T-GM5 32 bit).
1 pulse per 10 minutes	ECS	Supplies pulse every 10 minutes to ECS circuitry which opens a solenoid for 10 seconds in every 10 minutes to remove water from space suits.

2.8.3.2.10 Voice Recorders

Two voice recorders have been provided to enable the crewmembers to keep a voice log of mission activites. Both units are mounted in the right-hand equipment bay, one in an operating condition and the other stowed. Changeover to the inoperative recorder is made by changing the electrical power connector.

Each tape recorder provides 450 feet of 1/4-inch tape which operates at a speed of 0.6 inches per second. The use of tape reversal, automatic head switching, and four individual recording heads provide ten hours of usable recording time per tape recorder. The information contained on the tape cannot be dumped during flight but must be played back utilizing suitable GSE.

To ready the connected voice recorder for operation, the following switch positions must be selected: the RCDR/HF switch to T/R (MDC-13, -23, -26), the intercom switch to T/R, the HF power switch to OFF (MDC-20), and the mode selector to SSB or AM. (See figure 2.8-14.) Actual activation of the voice recorder is possible three ways: two correct; one wrong. The first correct activation path has the POWER switch at PTT (MDC-13, -23, -26) and the PTT pushbutton on the cobra cable depressed. The other correct method of activation requires the POWER switch to be at VOX and the VOX circuit enabled or the PTT pushbutton

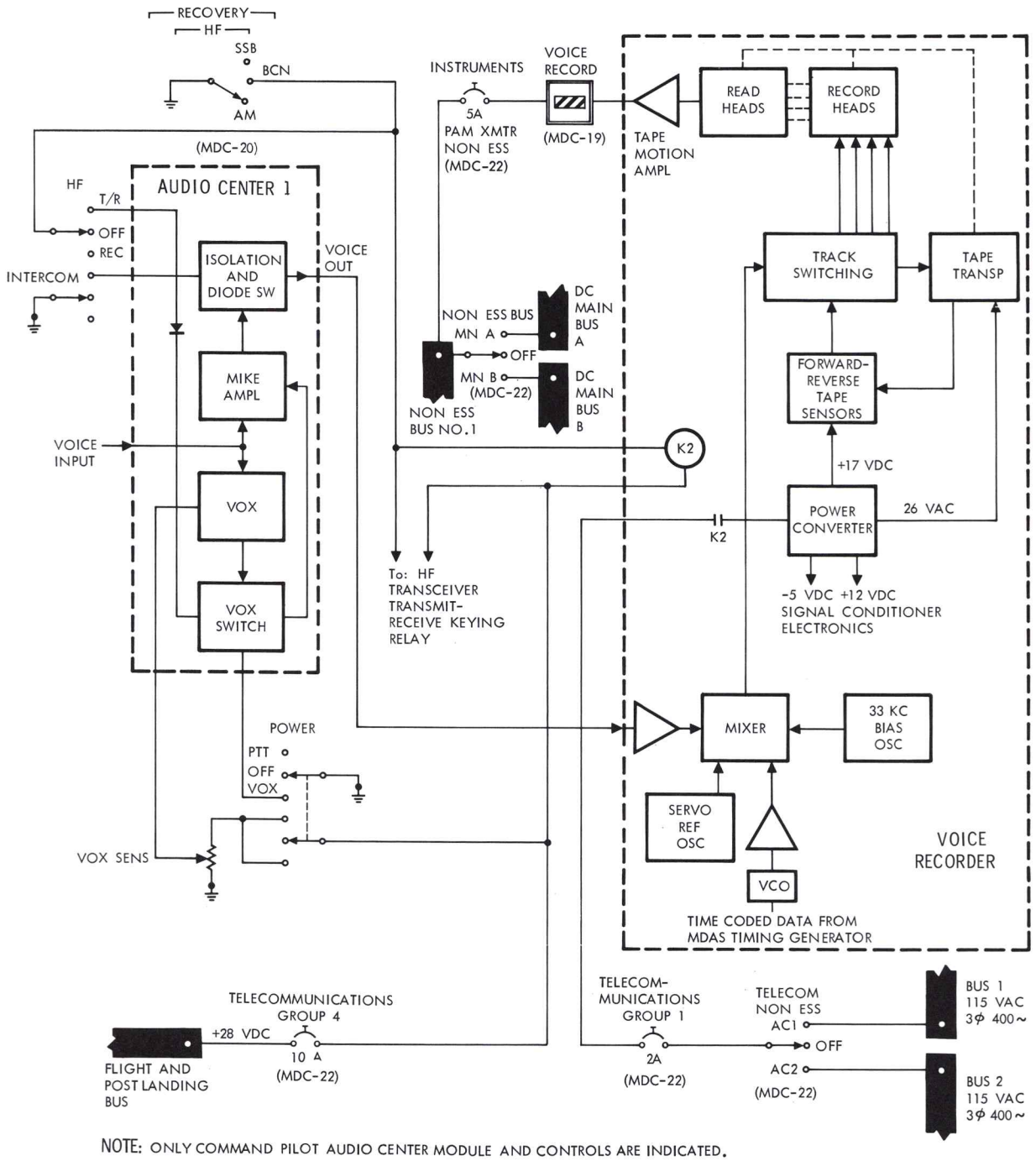

NOTE: ONLY COMMAND PILOT AUDIO CENTER MODULE AND CONTROLS ARE INDICATED.

SM-2A-955C

Figure 2.8-14. Voice Tape Recorder

T/C

depressed. The connected voice tape recorder can be inadvertently activated by positioning the HF mode switch to BCN (MDC-20). This would continuously run the connected voice tape recorder until it used up its tape. A VOICE RECORD flag indicator (MDC-19) will display the striped area when recording is in progress. The indicator grey area will be displayed when voice recording is not in progress or the tape supply has been exhausted during recording.

The stowed voice recorder may be placed in operating condition by moving the RCDR/HF switch to OFF (MDC-13, -23, and -26), removing the electrical connector from the exhausted recorder, and installing it to the connector on the stowed recorder. Operation is resumed by moving the RCDR/HF switch to T/R (MDC-13, -23, or -26).

NOTE To include the timing reference while recording on the voice tape recorder, the MDAS MAIN POWER switch must be ON (LEB compartment C) and the TIMER switch must be at "NORMAL."

2.8.3.3 RF Electronics Equipment Group.

The RF electronics equipment group includes all T/C equipment which functions as RF transmitters or receivers. The antenna used by this equipment are mentioned only briefly in this paragraph. More information on the antennas can be found in the paragraph on antenna equipment.

2.8.3.3.1 VHF/AM Transmitter-Receiver Equipment.

The VHF/AM transmitter-receiver equipment (figure 2.8-15) provides the primary means for in-flight voice communications with the MSFN. It is contained in the same electronics package as the VHF recovery beacon equipment, in the LEB.

Two modes of operation are possible: simplex and duplex. The simplex mode will normally be utilized. The duplex mode will be used on future missions for EVA and LEM communications. During recovery, the transmitter can be utilized as a backup VHF recovery beacon by holding down the PTT key.

The transmitter operates at 296.8 mc in both operational modes. The receiver contains two "front ends." The receive 1 front end operates at 296.8 mc and is used for simplex operations. For duplex operations, the receive 2 front end, which operates at 259.7 mc, is selected.

The VHF/AM transmitter-receiver is controlled by the VHF-AM controls on MDC-20. The T/R/OFF/REC switch activates the transmitter and receiver when in the T/R position; the REC position activates the receiver alone; the OFF position removes power from both. Simplex or duplex operation is selected by placing the RCVR switch to 1 or 2, respectively. The remaining, thumbwheel-type SQUELCH control can be rotated up or down to increase or decrease the sensitivity of the squelch gate.

Audio to and from the VHF-AM is controlled by the VHF-AM-T/R/OFF/REC switch on MDC-13, -23, -26. Voice transmission is possible when this switch is at T/R, the POWER switch is at PTT, the cobra cable PTT/CW switch is at PTT and the PTT key is pressed.

NOTE The POWER switch can also be at VOX, but actual keying of the VHF/AM must be via the PTT circuit.

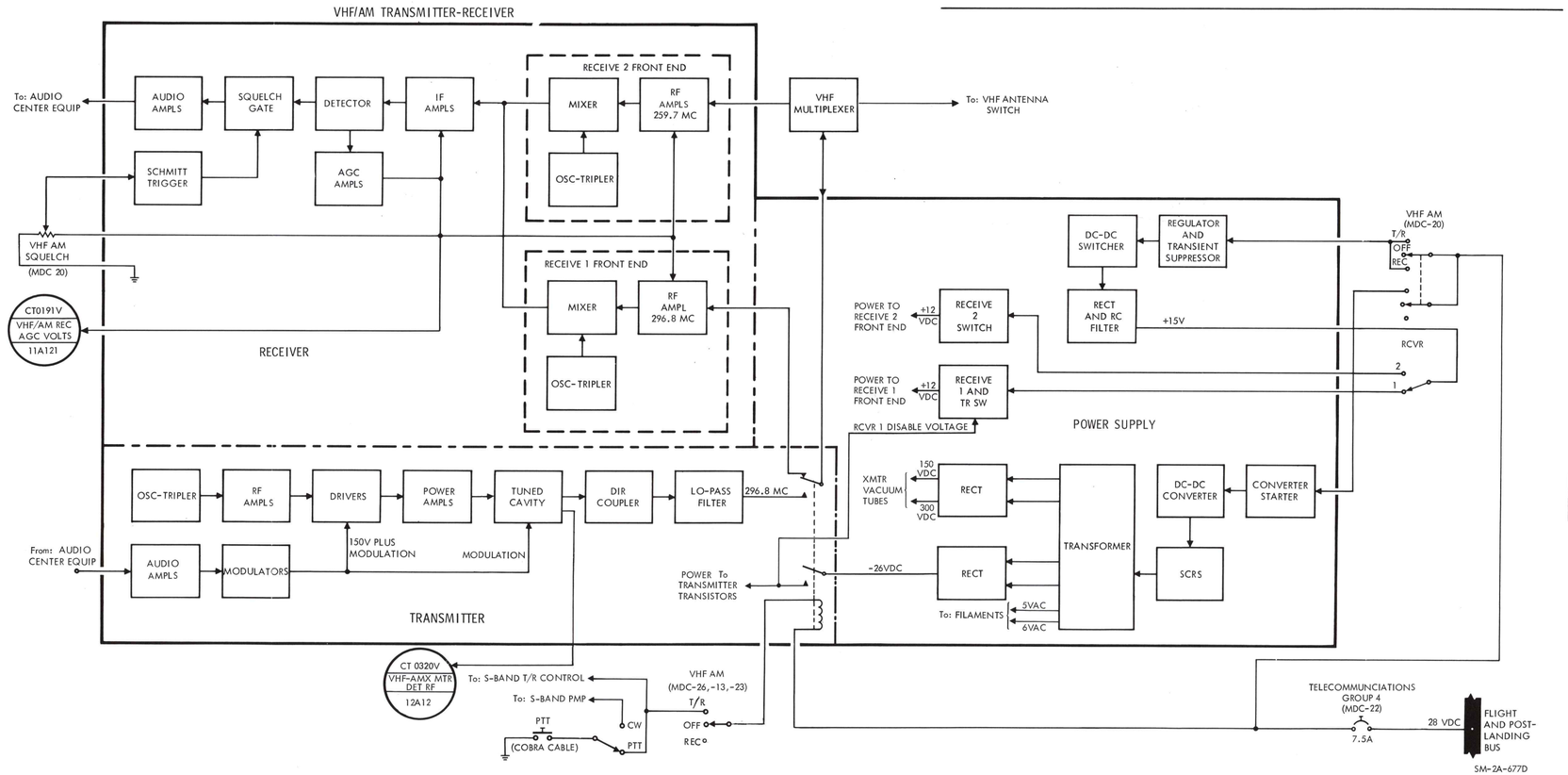

Figure 2.8-15. VHF/AM Transmitter-Receiver Equipment

T/C

The VHF portion of the upper or lower SCIN antenna is used during flight. VHF recovery antenna No. 2 is used during recovery. Antenna selection is made with the VHF ANTENNA switch on MDC-20.

2.8.3.3.2 HF Transceiver Equipment.

The HF transceiver equipment (figure 2.8-16) is the primary means to aid recovery operations during the postlanding phase of the mission by providing long-range, simplex, voice communications and beyond line-of-sight direction finding capabilities. It is contained in the same electronics package as the VHF-FM transmitter equipment in the LEB.

The HF transceiver equipment is controlled by the RECOVERY-HF switches on MDC-20. The ON/OFF switch, when placed to ON, connects d-c power to the transceiver. The SSB/BCN/AM switch is used to select the operational mode. Three modes of operation are available; single sideband (SSB), beacon (BCN), and amplitude modulation (AM). The BCN mode is used to transmit an unmodulated, continuous wave, direction finding beacon. The SSB and AM modes are used for long-range, simplex, voice communications. The operating frequency is 10.006 mc for the transmitter and receiver in all modes.

The audio center equipment supplies the audio input to the modulator in the translator module and accepts the detected audio signal from the receiver module of the transceiver. The HF transmitter is keyed by VOX or PTT.

The HF recovery antenna is used for transmission and reception and will be deployed after touchdown as part of the postlanding sequence of operations. The transceiver must not be operated prior to antenna deployment or damage may occur.

2.8.3.3.3 VHF/FM Transmitter Equipment.

The sole function of the VHF/FM transmitter equipment (figure 2.8-17) is to transmit PCM TLM data to the MSFN. These data are supplied to the VHF/FM transmitter by the PMP in the form of a 3-volt p-p pulsating d-c, modulating signal at a rate of 51,200 bits per second (bps) or 1600 bps. The bit rate depends on the PCM rate selected. T/C

The nominal (center) frequency of the emitted RF carrier is 237.8 mc. Because the transmitter is frequency modulated, the 3-volt p-p modulating signal causes a frequency deviation of ±125 kc. The resulting 10-watt RF output is fed to the VHF portion of the VHF/2-KMC SCIN antennas.

The only external control for the VHF/FM transmitter equipment is the VHF-FM — ON/OFF switch on MDC-20 which energizes a relay in the transmitter, applying a-c power to the equipment. If the switch is set to OFF, the VHF/FM transmitter can be activated from the MSFN by a real-time command via the UDL equipment,

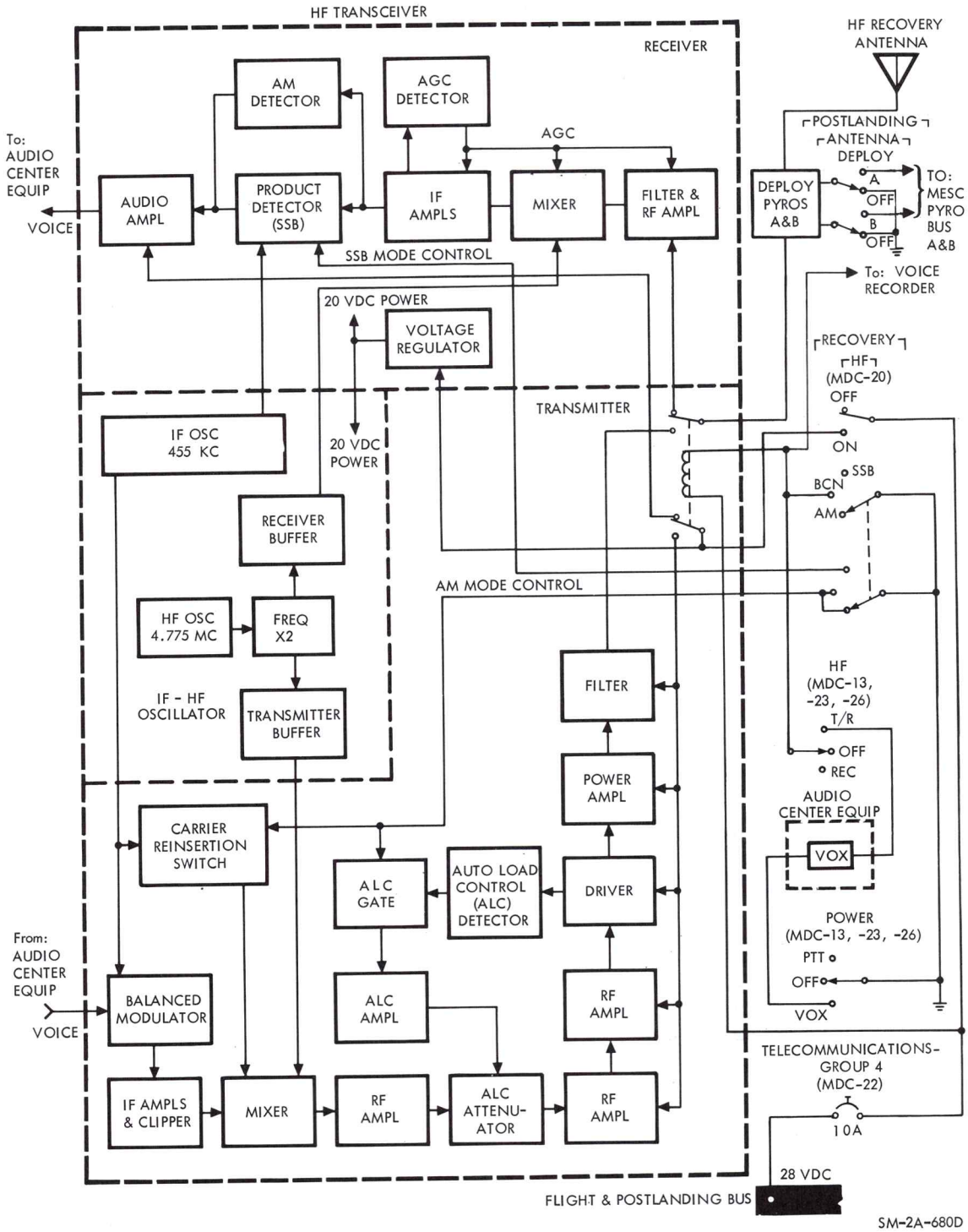

Figure 2.8-16. HF Transceiver Equipment

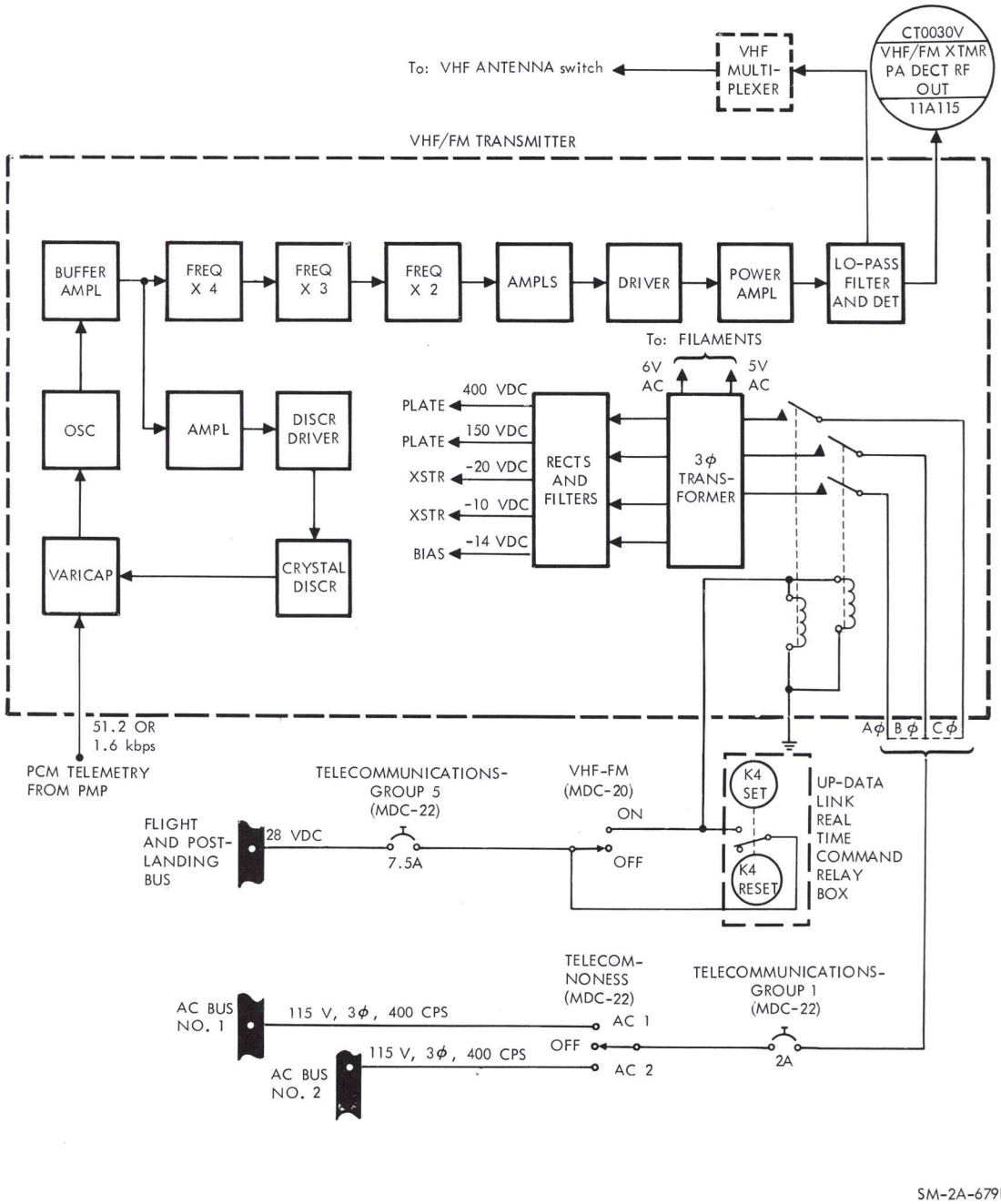

Figure 2.8-17. VHF/FM Transmitter Equipment

T/C

2.8.3.3.4 Unified S-Band Equipment (USBE).

The USBE (figure 2.8-18) consists of a receiver, transmitter, and power supply contained in a single electronics package in the lower equipment bay. Although primarily designed for deep-space communications, the USBE will be tested on mission 205 and used as backup for in-flight voice communications, tracking and ranging, transmission of PCM data, and reception of up-data. The USBE also provides the sole means for transmission of TV.

The USBE tracking method employed is the two-way or double-doppler method. In this technique, a stable carrier of known frequency is transmitted to the S/C where it is received by the phase-locked receiver, multiplied by a known ratio, and then retransmitted to the MSFN for comparison. Because of this capability, the USBE is also referred to as the S-band transponder. From the double-doppler tracking method, S/C velocity, acceleration, and range can be determined.

For determining S/C range, the MSFN phase-modulates the transmitted carrier with a pseudo-random noise (PRN) binary ranging code. This code is detected by the S/C USBE receiver and used to phase-modulate the carrier transmitted to the MSFN. The MSFN receives the carrier and measures the amount of time dealy between transmission of the code and reception of the same code, thereby obtaining an accurate measurement of range. Once established, this range can be continually up-dated by the double-doppler measurements discussed earlier. The MSFN can also transmit up-data commands and voice signals to the S/C USBE by means of two subcarriers: 70 kc for up-data and 30 kc for up-voice.

The USBE receiver is a phase-tracking receiver that accepts a 2106.4-mc, phase-modulated RF signal containing the up-data and up-voice subcarriers and a pseudo-random noice (PRN) code when ranging is desired. This signal is supplied to the receiver via the diplexer in the S-band power amplifier equipment and presented to two separate detectors: the loop phase detector and the ranging phase detector. In the ranging phase detector, the 9.531-m . IF is detected; and the 70-kc up-data and 30-kc up-voice subcarriers are extracted, amplified, and routed to the up-data and up-voice discriminators in the PMP equipment. Also, when operating in a ranging mode, the PRN ranging signal is derived, filtered, and routed to the USBE transmitter as a modulating signal input to the phase modulator. In the loop phase detector, the 9.531-mc IF signal is detected by comparing it with the loop reference frequency. The resulting d-c output is used to control the frequency of the 19.0625-mc voltage-controlled oscillator (VCO). The output of the VCO is used as the reference frequency for receiver circuits as well as for the transmitter. The receiver is also provided with automatic gain control (AGC) and antenna selector circuitry which automatically selects the proper SCIN antenna when the S-BAND ANTENNA switch is in the AUTO position. The AGC circuitry also supplies a signal to the S-BAND ANT S-meter located on MDC-19. By observing this meter and rotating the S/C, the optimum S/C attitude for S-band communications can be attained.

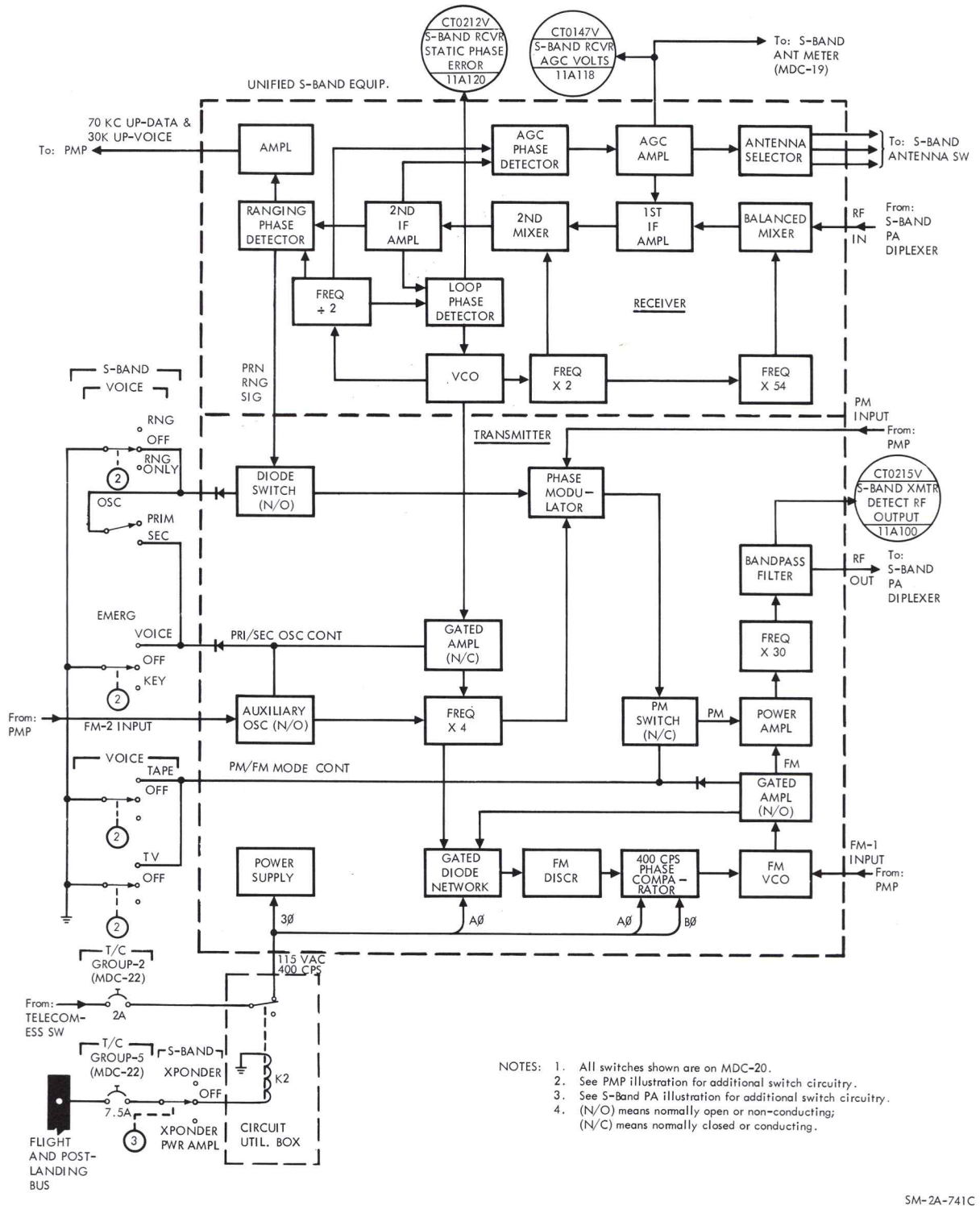

Figure 2.8-18. Unified S-Band Equipment

T/C

The USBE transmitter is capable of transmitting a 2287.5-mc signal, either phase-modulated or frequency-modulated. In the PM mode, the initial transmitter frequency is obtained from one of two sources: the VCO in the phase-locked USBE receiver or the auxiliary oscillator in the transmitter. When operating in the FM mode, the VCO or auxiliary oscillator initial frequency is not multiplied and used directly, but is used to control the frequency of a third oscillator, the FM VCO. The FM VCO is the source for the frequency-modulated 2287.5-mc signal.

Output mode and frequency source are controlled by the S-BAND group of switches on MDC-20. The VOICE and EMERG switches, contained in this group, also have an effect on PMP operation, thus ensuring compatibility between USBE and PMP modes. All data to be transmitted by the USBE is supplied by the PMP. Normally, the initial transmitter frequency is obtained from the receiver VCO. In case of failure of the VCO or S-band PA equipment, the auxiliary oscillator can be selected. This is done by moving the OSC switch from PRIM to SEC (with the RNG/RNG ONLY switch at the normal, center position) or by placing the EMERG switch to VOICE. If the latter is done, the PMP will provide a voice modulating signal directly to the auxiliary oscillator.

With all three S-BAND – VOICE switches and the S-BAND – EMERG switch set at their center positions, the USBE transmits a phase-modulated signal containing PCM TLM and voice data from the PMP. Setting the RNG/RNG ONLY switch to RNG, enables the PRN ranging code to be transmitted also. Setting this switch to RNG ONLY, adds the PRN ranging code but eliminates the PCM TLM portion of the PM input from the PMP. This mode is used to increase the strength of the PRN ranging code received by the MSFN. The other two S-BAND – VOICE switches are the TAPE and the TV switches. For PM operation, both of these switches must be at their center, off position. Setting either of them to any other position changes the USBE mode to FM for increased band-width and selects the FM-1 output of the PMP. Thus, these four switches (the three VOICE switches and the EMERG switch) are used to establish the operational mode. Only one switch at a time may be placed to any position other than center for proper operation of the USBE and PMP. For further description of PMP outputs, refer to the discussion of the PMP equipment.

The USBE is activated by the S-BAND – XPONDER/XPONDER PWR AMPL switch. Setting this switch to XPONDER or XPONDER PWR AMPL energizes a relay that applies 115 volts ac to the USBE power supply, which provides +15 volts dc and -15 volts dc outputs to the USBE transmitter and receiver. The RF output of the USBE transmitter is fed to the S-band power amplifier equipment. Here, the signal is either bypassed directly to the S-BAND ANTENNA switch or amplified and then fed to the S-BAND ANTENNA switch.

2.8.3.3.5 S-Band Power Amplifier Equipment.

The S-band power amplifier (PA) equipment (figure 2.8-19) is used to amplify the RF output from the USBE transmitter when additional signal

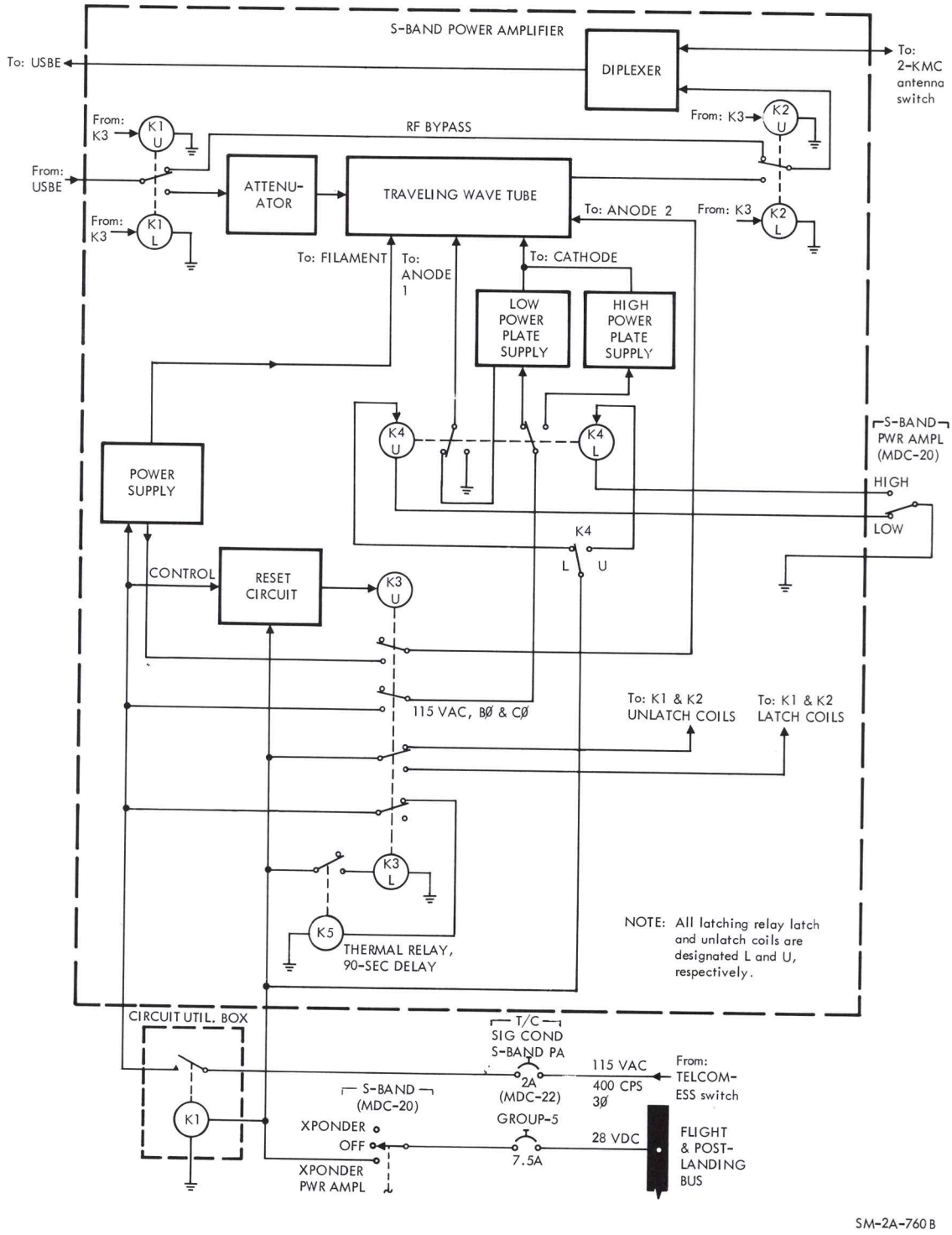

Figure 2.8-19. S-Band Power Amplifier Equipment

T/C

strength is required for adequate reception of the S-band signal by the MSFN. It consists of a diplexer, a traveling-wave tube for amplification, power supplies, and the necessary switching relays and control circuitry. The S-band PA is contained in a single electronics package located in the lower equipment bay.

All received and transmitted S-band signals pass through the S-band PA diplexer. The 2106.4-mc S-band carrier received by the S/C enters the S-band PA diplexer from the S-band antenna equipment. The diplexer passes the signal straight through to the USBE receiver. The 2287.5-mc output signal from the USBE transmitter enters the S-band PA where it is either bypassed directly to the diplexer and out to the S-band antenna equipment, or amplified first and then fed to the diplexer. There are three power amplifier modes of operation: bypass, low power, and high power.

Two of the S-BAND switches on MDC-20 are used to control the S-band power amplifier. Setting the XPONDER/XPONDER PWR AMPL switch to the XPONDER PWR AMPL position energizes the USBE power supply and applies 3-phase 115-volt a-c power to the S-band PA through relay K1 in the circuit utilization box. This also activates the 90-second time-delay relay in the S-band PA. Upon initial application of power, only the low-voltage power supply is energized, which applies power to the traveling wave tube heater. After 90 seconds, the RF signal from the USBE transmitter is switched from the bypass circuit to the amplifier circuit and 3-phase 115-volt a-c power is applied to either the low power or high power section of the high-voltage power supply, which supplies the correct operating voltages to the remaining elements of the traveling-wave tube. Selection of the low power (LOW) or high power (HIGH) mode is controlled by the S-BAND – PWR AMPL – HIGH/LOW switch.

2.8.3.3.6 C-Band Transponder Equipment

An earth-based C-band tracking and ranging system is used to provide S/C position data to the MSFN during the launch, near-earth, and entry phases of the mission. The function of the S/C C-band transponder equipment (figure 2.8-20) is to effectively extend the range of the system beyond that which would be possible using skin-tracking techniques only. Upon reception of a properly coded pulsed interrogation from the earth-based equipment at 5690 mc, the C-band transponder transmits a response pulse to the earth after a 3-microsecond delay at 5765 mc.

The C-band transponder contains four receivers, a transmitter, a power supply, and associated circuitry for comparing and decoding received signals and switching antennas. There are four C-band antennas, one for each receiver, located around the perimeter of the command module. The interrogation may be received by any one or more of the four antennas and routed through circulators to the associated receivers. If the pulses are properly coded the comparator determines which antenna received the strongest signal and activates the switch driver, which drives the RF

Switch Name / Function	S-Band Power	Pwr Ampl	OSC	Ranging	Tape	TV	Emergency UP Data S-Band Ant			Remarks
	XPONDER-OFF-XPONDER PWR AMPL	HIGH LOW	PRIM SEC	RNG-Off-RNG ONLY	TAPE-Off	TV-Off	Voice-Off-Key	S-Band-Off-UHF	AUTO-UPPER-LOWER	
S-band PM mode real time voice, telemetering and ranging	XPONDER PWR AMPL	LOW	PRIM	RNG	Off	Off	Off	As reqd	UPPER or LOWER as reqd	
S-band PM mode real time voice and data	XPONDER PWR AMPL	LOW	PRIM or SEC	Off	Off	Off	Off	As reqd	UPPER or LOWER as reqd	
S-band FM mode real time voice, data and TV	XPONDER PWR AMPL	LOW or HIGH	PRIM or SEC	Off	Off	TV	Off	As reqd	UPPER or LOWER as reqd	TV camera power switch must be on.
S-band FM mode real time voice, play back data	XPONDER PWR AMPL	LOW	PRIM or SEC	Off	TAPE	Off	Off	As reqd	UPPER or LOWER	DSE switches must be properly configured for play back.
S-band emergency voice	XPONDER PWR AMPL	LOW or HIGH	PRIM or SEC	Off	Off	Off	VOICE	As reqd	UPPER or LOWER	
S-band emergency key	XPONDER PWR AMPL	LOW or HIGH	PRIM or SEC	Off	Off	Off	KEY	As reqd	UPPER or LOWER	Cobra cable mode switch at CW and PTT button used as key.
S-band reception of up-data	XPONDER or XPONDER PWR AMPL	LOW or HIGH	PRIM or SEC	RNG Off RNG ONLY	Off	Off	Off	S-band	UPPER or LOWER	

Notes: 1. TAPE and TV switches are 3-position switches with the down position no longer performing a valid function. The down position of these switches should not be selected.

2. The TAPE and TV switches should never be in the UP position together.

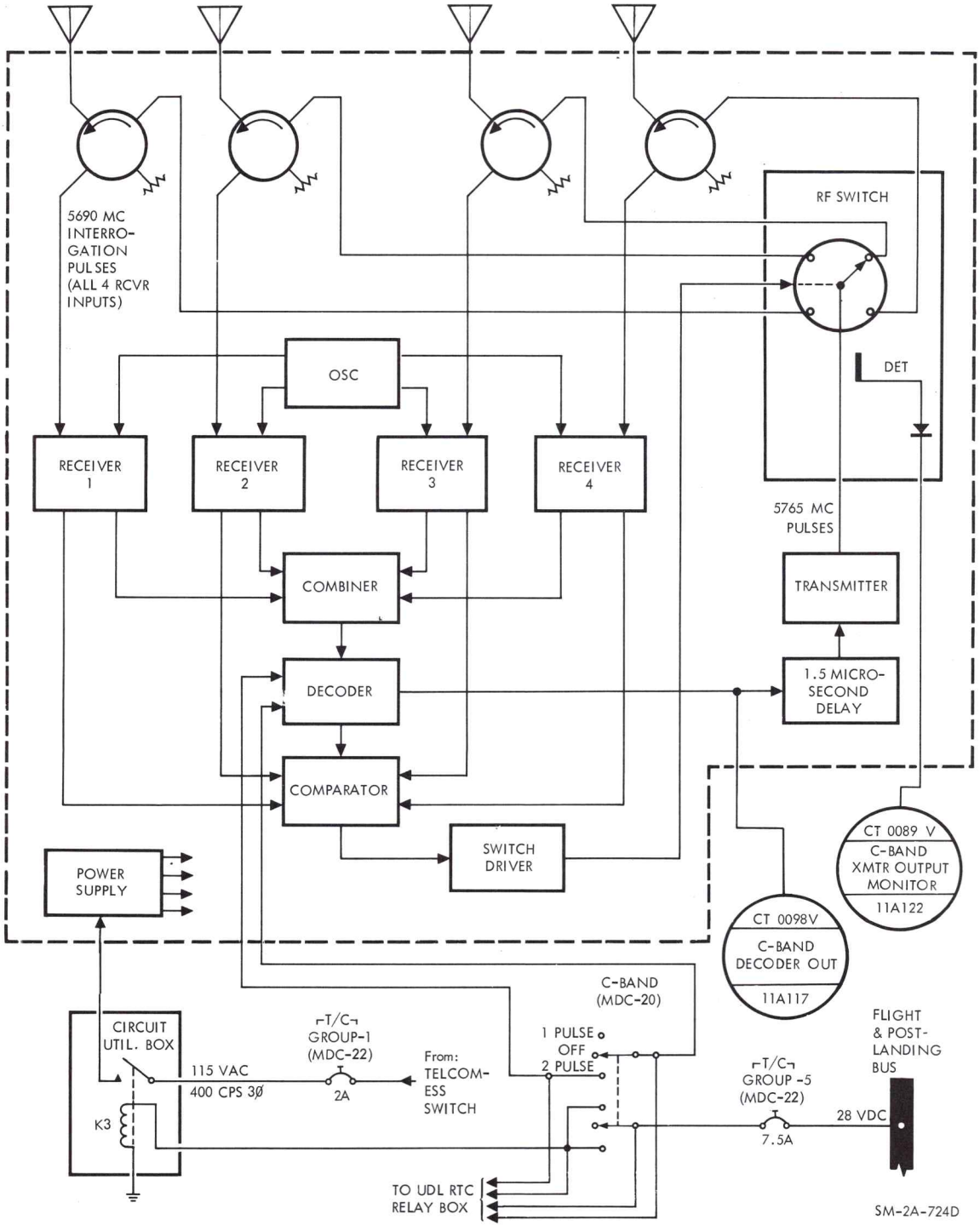

Figure 2.8-20. C-Band Transponder Equipment

switch to the proper antenna position. Three microseconds after interrogation, the transmitter sends a response pulse to the selected antenna. This 3-microsecond delay gives the RF switch time to operate. It also enables MSFN personnel to simultaneously observe the transponder reply and the skin track reply on the same visual display device (cathode ray tube) for comparison.

Two modes of operation can be selected: 1 pulse or 2 pulse. Mode selection will depend on the type of earth-based radar equipment that is being used at a particular area in the orbital path. During the launch and ascent phases of the mission, the 2-pulse mode will be used.

The only external control for the C-band transponder equipment is the C-BAND three-position toggle switch on MDC-20. The OFF position removes a-c power from the equipment; the 1 PULSE and 2 PULSE positions apply a-c power to the equipment and select the mode of operation. Activation and mode selection can also be commanded from the MSFN by a real-time command via the UDL equipment.

2.8.3.3.7 VHF Recovery Beacon Equipment.

The VHF recovery beacon equipment (figure 2.8-21) provides a line-of-sight direction finding capabilities to aid in locating the S/C during the recovery phase of the mission. It is located in the same electronics package as the VHF/AM transmitter-receiver equipment in the LEB. The beacon signal emitted is an interrupted 243-mc carrier, modulated by a 1000-cps square wave. The signal is transmitted for 2 seconds, then interrupted for 3 seconds.

Manual control of the equipment is provided by the RECOVERY — VHF-BCN, two-position ON/OFF switch on MDC-20.

The output of the VHF recovery beacon equipment is fed to VHF recovery antenna No. 1, which is deployed automatically when the main chutes are deployed.

2.8.3.3.8 GFE VHF Survival Beacon/Transceiver.

T/C

The VHF beacon/transceiver is a hand-held GFE item to be used in the recovery phase of the Apollo mission. The unit, plus an extra battery, is stored with the survival equipment.

Figure 2.8-22 shows the three major parts of the unit, the transmitter-receiver assembly, the battery pack assembly, and the quarter wave antenna.

The receiver-transmitter assembly and battery pack assembly mate to form a water-tight unit measuring 8 by 4-1/2 by 3 inches. The antenna is an 11-1/2-inch-long tapered flexible steel tape, terminated in a coaxial RF connector, and is normally stored in a retaining spool and clip on top of the radio unit.

The radio is capable of line-of-sight operation in either of two modes (beacon or voice) through use of either its own antenna or a suitable connected remote antenna. The transmitter output is protected against damage while operating due to accidental shorting of the antenna or submergence of the unit in salt water. In the beacon mode, the transmitter operates unattended, for periods up to 24 hours, to transmit an interrupted 1000-cps tone, amplitude modulated 25 percent on the 243-mc RF carrier. In the

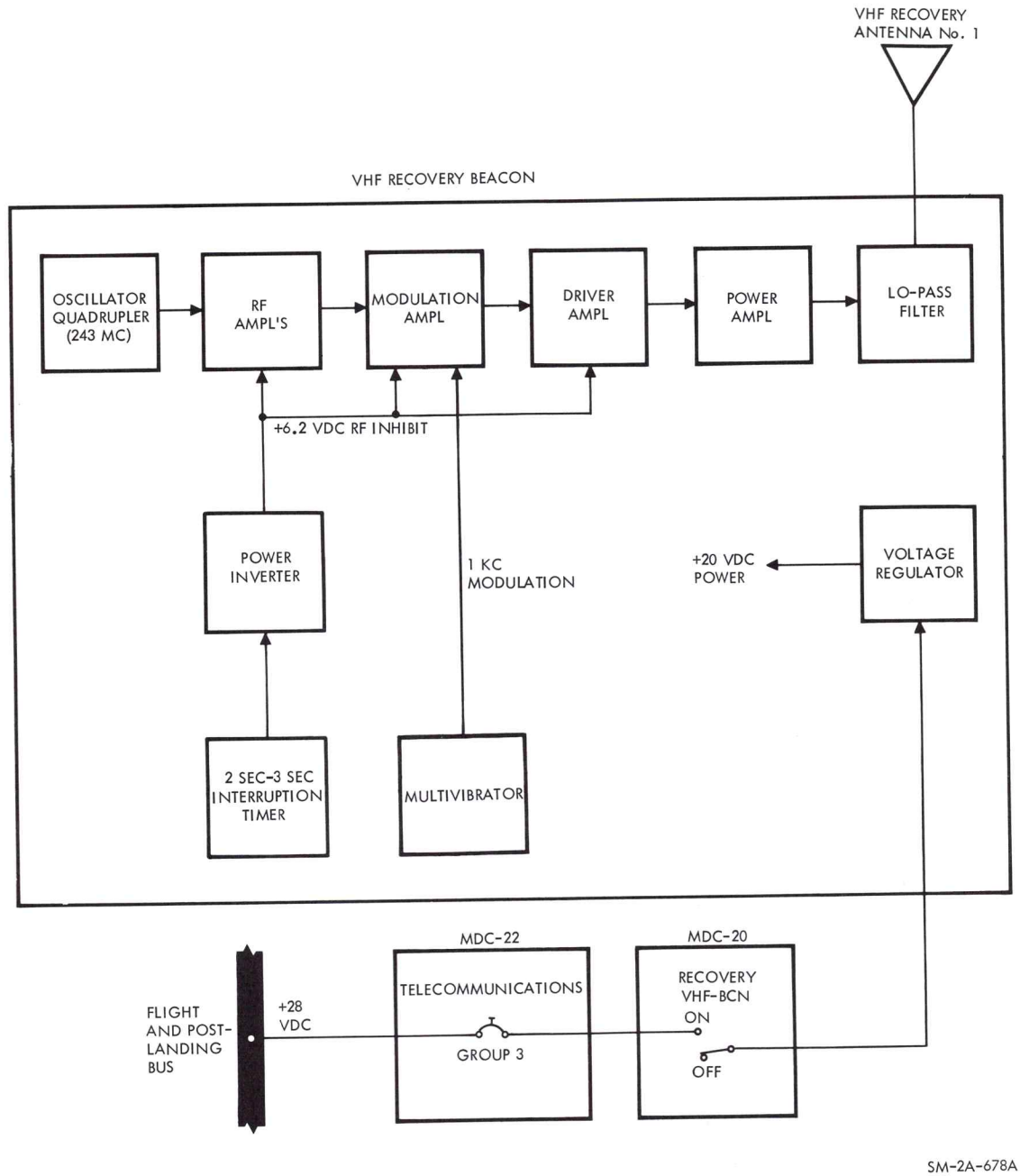

Figure 2.8-21. VHF Recovery Beacon Equipment

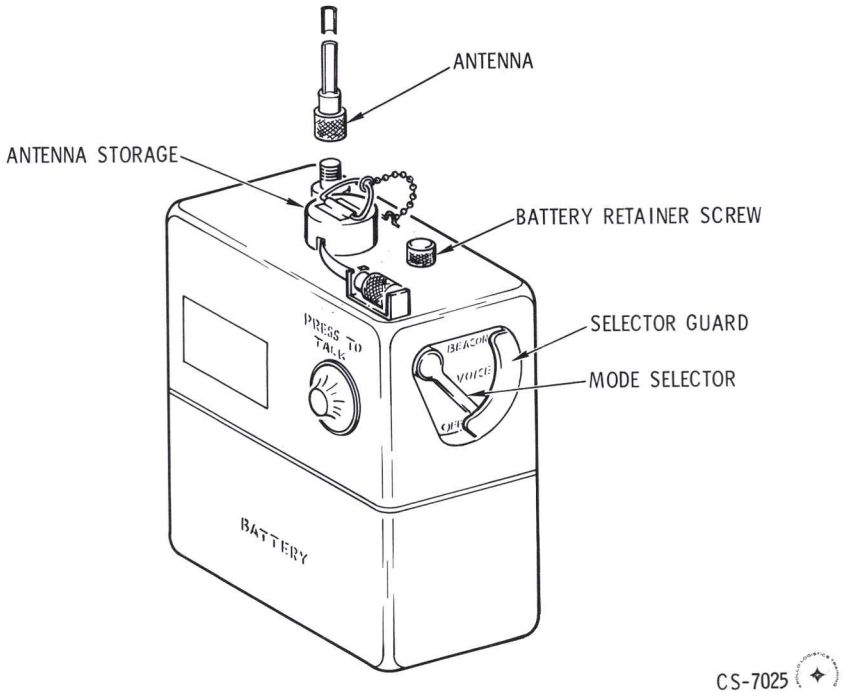

Figure 2.8-22. Survival Beacon/Transceiver Radio

voice mode, the radio provides two-way AM voice communication through use of an integral speaker-microphone and PUSH-TO-TALK switch.

2.8.3.4 Antenna Equipment Group.

T/C

The antenna equipment group contains all of the S/C antennas and ancillary equipment used in the T/C system. (See figures 2.8-23 and 2.8-24.)

2.8.3.4.1 VHF/2-KMC Omni-Antenna Equipment.

The VHF/2-kmc omni-antennas and corresponding ancillary equipment consists of two VHF/2-kmc SCIN antennas, a VHF multiplexer, a VHF antenna switch, a 2-kmc antenna switch, and the necessary signal and control circuits. The function of this equipment is to provide capabilities for radiation and pickup of RF signals in the VHF and S-band spectrums. The VHF portion of this equipment is used in conjunction with the up-data link (UDL) receiver, the VHF/FM transmitter, and the VHF/AM transmitter-receiver on two frequencies. The 2-kmc portion of this equipment is used with the USBE.

The VHF multiplexer is a passive, six-channel, filtering device which enables six items of VHF transmitting or receiving equipment to utilize one VHF antenna simultaneously. The six channel filters are composed of two or three tuned cavities, each of which function as bandpass filters. No power is required by the device and there are no external controls.

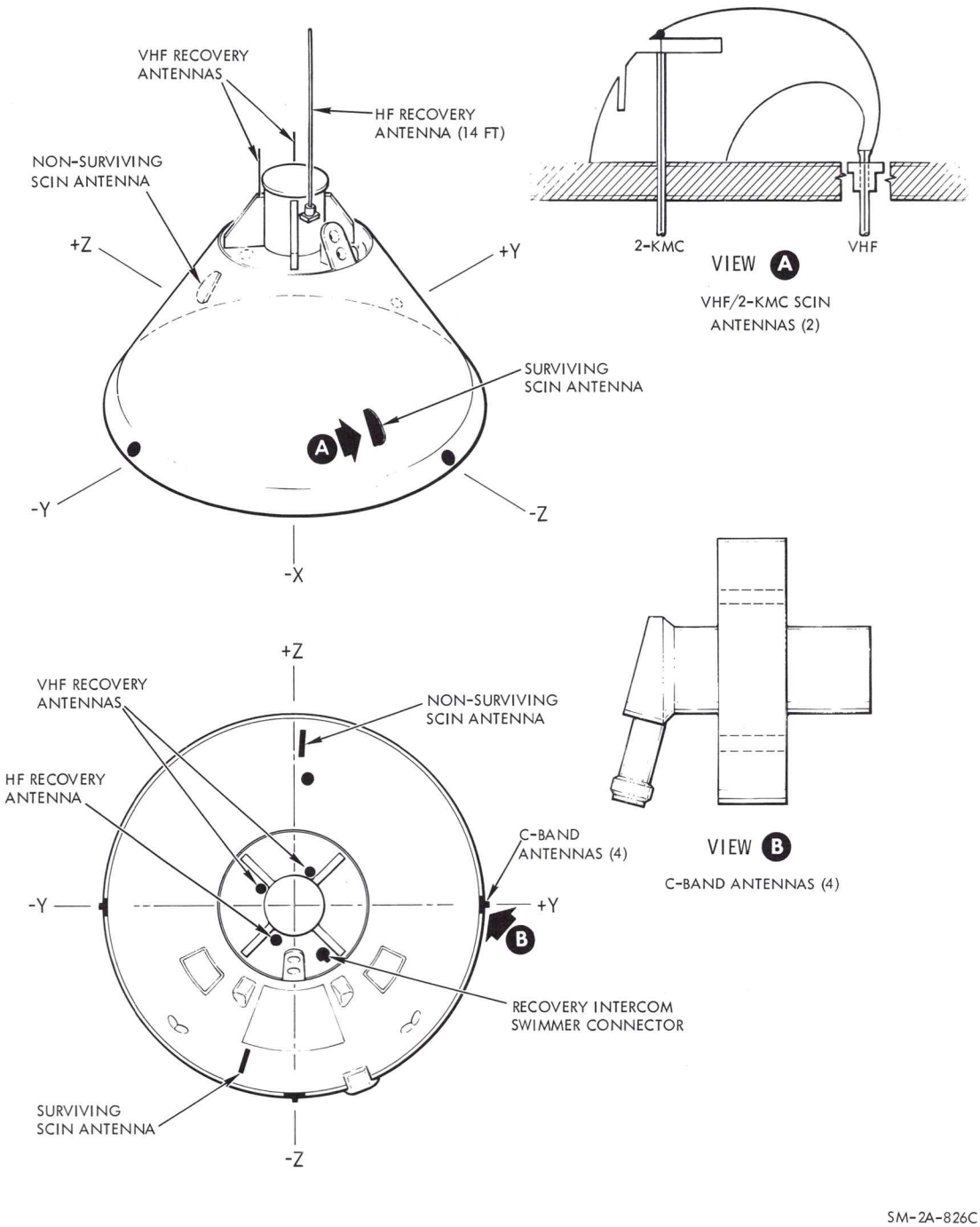

Figure 2.8-23. Antenna Locations

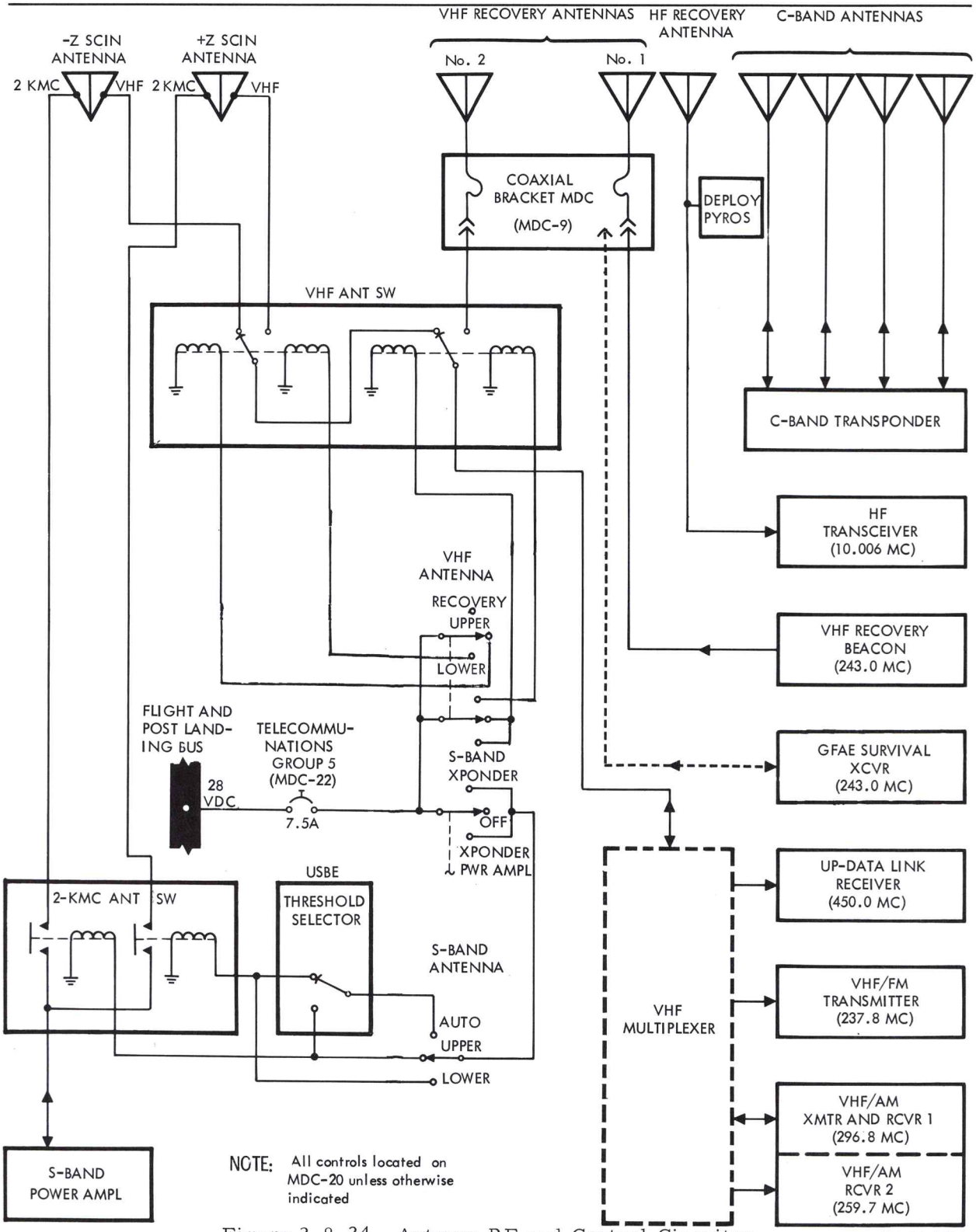

Figure 2.8-24. Antenna RF and Control Circuitry

The VHF/2-kmc SCIN antennas are dual-purpose antennas with approximately hemispherical radiation patterns. Figures 2.8-25 and 2.8-26 show the propagation patterns of the VHF-UHF and S-band portions of the antenna, respectively. The word "SCIN" is an acronym for "SCImitar" and "Notch." Because of its characteristic shape, that portion of the antenna used for VHF is called a scimitar. In the broad end of the scimitar is a notch which functions independently and is used for S-band frequencies.

There are two VHF/2-kmc SCIN antennas; they are located on opposite sides of the S/C. One is located near the +Z axis and is called the +Z or lower SCIN antenna; the other is located near the -Z axis and is called the -Z or upper SCIN antenna. Because of their approximate hemispherical radiation patterns, fully omnidirectional capabilities can be obtained only by switching from one antenna to the other. This is accomplished with the VHF ANTENNA remote control switch on MDC-20 for VHF communications, or with the S-BAND ANTENNA remote control switch, also on MDC-20, for S-band communications.

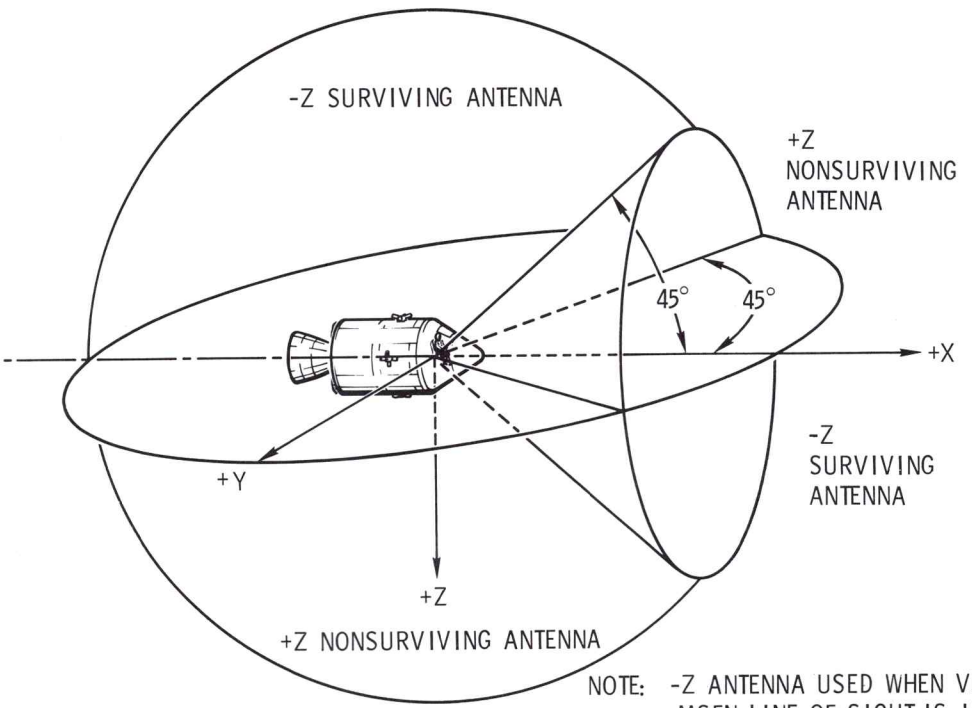

Figure 2.8-25. Antenna Switching Regions, VHF-UHF

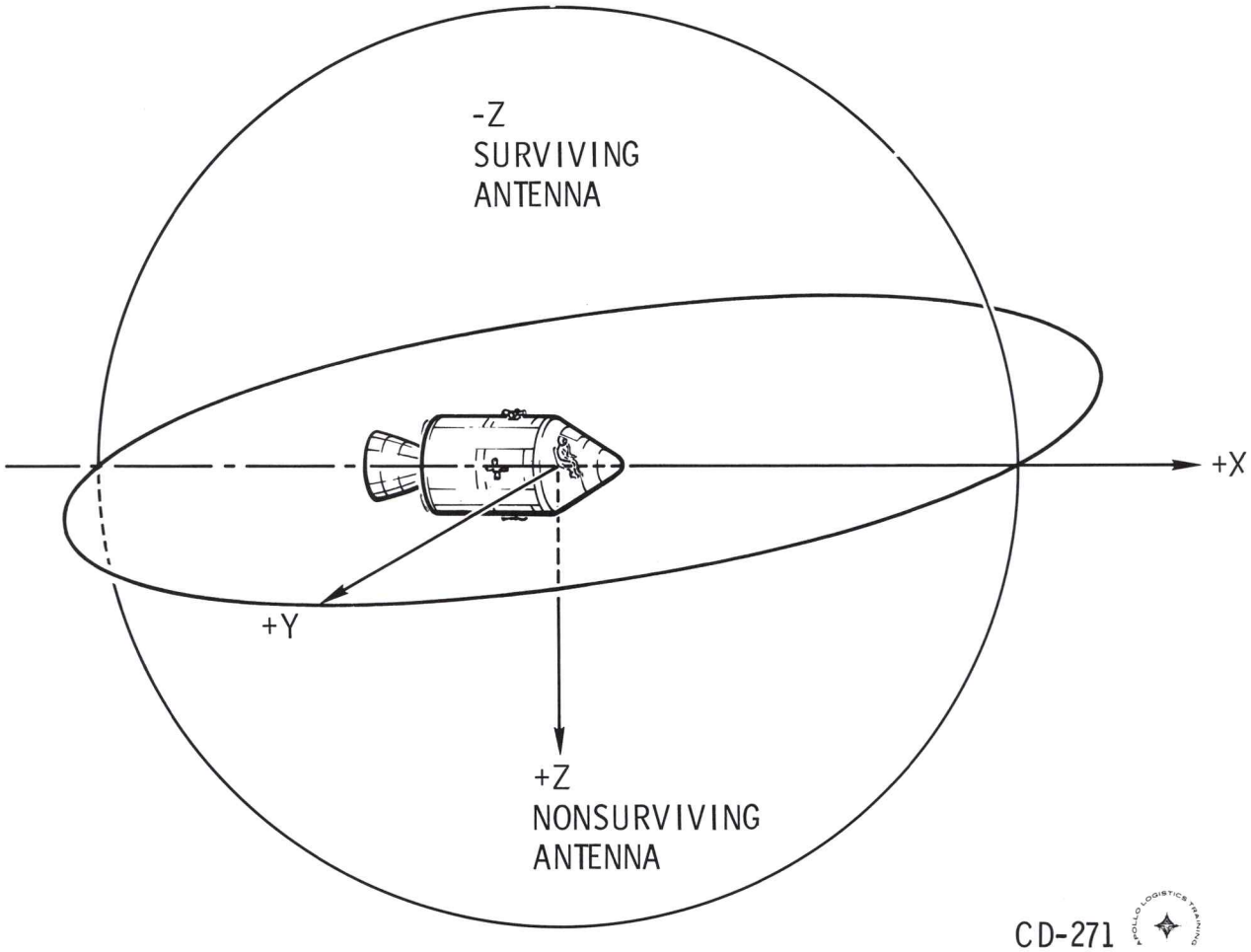

Figure 2.8-26. Antenna Switching Regions, S-Band

T/C

The lower (+Z) SCIN antenna may be burned off during entry. The upper (-Z) SCIN antenna is located at a minimum heat point and is covered with ablative material to provide thermal protection for entry survival.

2.8.3.4.2 HF Recovery Antenna Equipment

The HF recovery antenna is provided solely for use with the HF transceiver to provide for voice communication with recovery forces after touchdown. It is stowed inside a canister, located in the forward compartment of the S/C, until deployed by manual activation of a pyrotechnic device. The pyrotechnic device is activated by setting the POST LANDING — ANTENNA DEPLOY switches to their upper positions (A and B), while the MASTER EVENT SEQ CONT switches (2) are at PYRO ARM (MDC-24) position.

2.8.3.4.3 VHF Recovery Antenna Equipment.

There are two VHF recovery antennas, No. 1 and No. 2, stowed in the forward compartment of the S/C. Each antenna consists of a quarterwave

stub, 11 inches long, and a ground plane. They are automatically deployed 8 seconds after main parachute deployment during the descent phase of the mission.

VHF recovery antenna No. 1 is connected to the VHF recover beacon equipment through a coaxial connector on the coaxial bracket, MDC-9. VHF recovery antenna No. 2 is to be used with the VHF/AM transmitter-receiver equipment, thus it is connected to the VHF antenna switch, also through a connector on the coaxial bracket. The purpose of the coaxial bracket is to allow either of the VHF recovery antennas to be used with the GFAE survival transceiver. This requires that the coaxial cable from one of the antennas be manually disconnected at the coaxial bracket and reconnected to the survival transceiver.

2.8.3.4.4 C-Band Beacon Antenna Equipment.

There are four, flush-mounted, C-band beacon antennas located around the perimeter of the S/C near the four S/C axes: +Z, -Z, +Y, and -Y. All four antennas are connected at all times to the C-band transponder equipment with reception by all four antennas. Circuitry in the C-band transponder equipment determines which antenna received the strongest signal and automatically selects that antenna for transmission of response pulses.

2.8.3.5 Electrical Power Distribution.

Electrical power distribution for the voice and data, and the RF equipment groups is shown on sheet 1 of figure 2.8-27. Instrumentation equipment power distribution is shown on sheet 2. Electrical power to most of the equipment on sheet 1 is controlled by the T/C switches on MDC-20. These switches and control circuits can be found on the illustrations for the individual components in paragraphs 2.8.3.3 and 2.8.3.4.

2.8.4 PERFORMANCE AND DESIGN DATA

The following chart contains the a-c and d-c power consumption values for the T/C voice, data, and RF equipment.

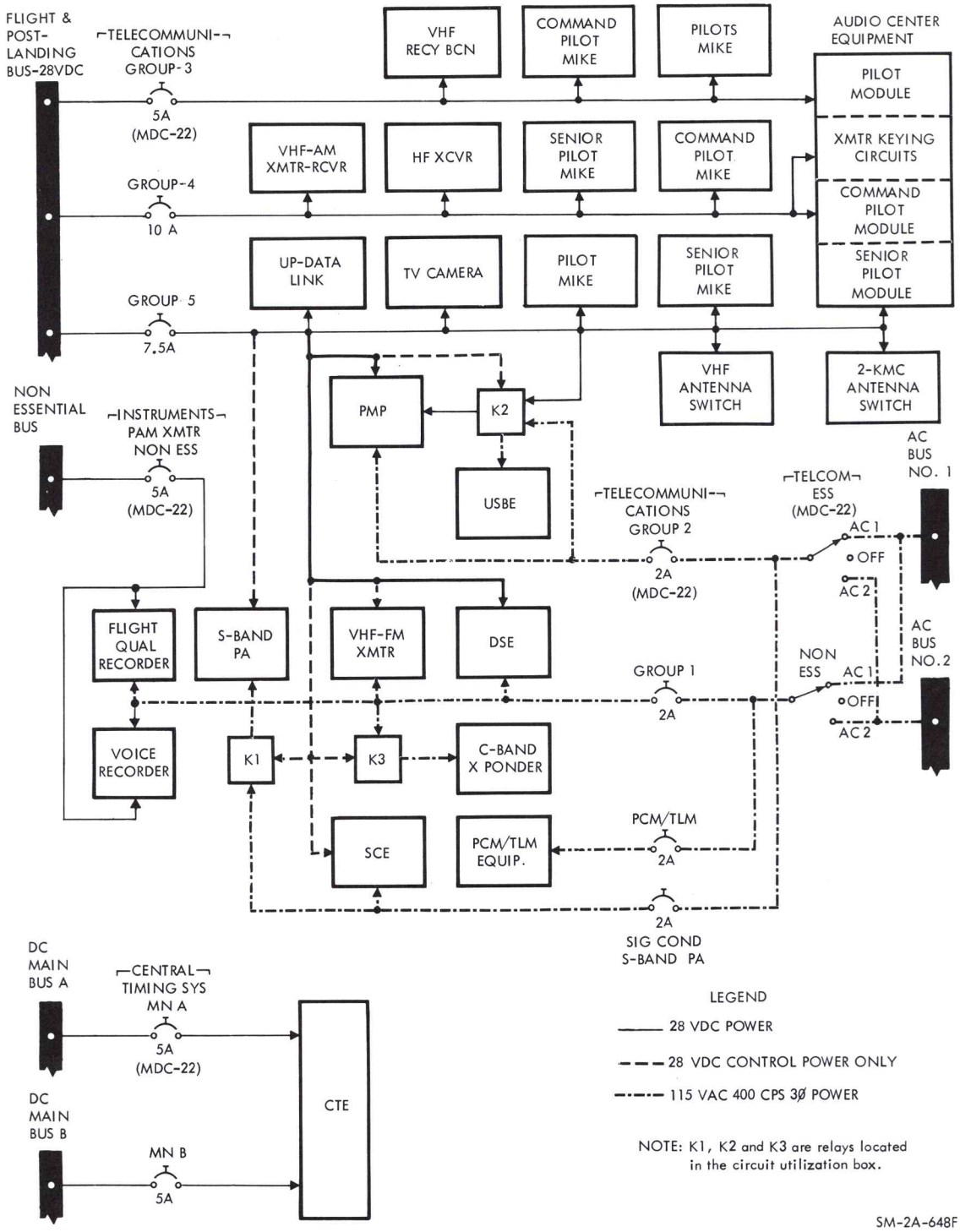

Figure 2.8-27. Telecommunications Power Distribution (Sheet 1 of 2)

T/C

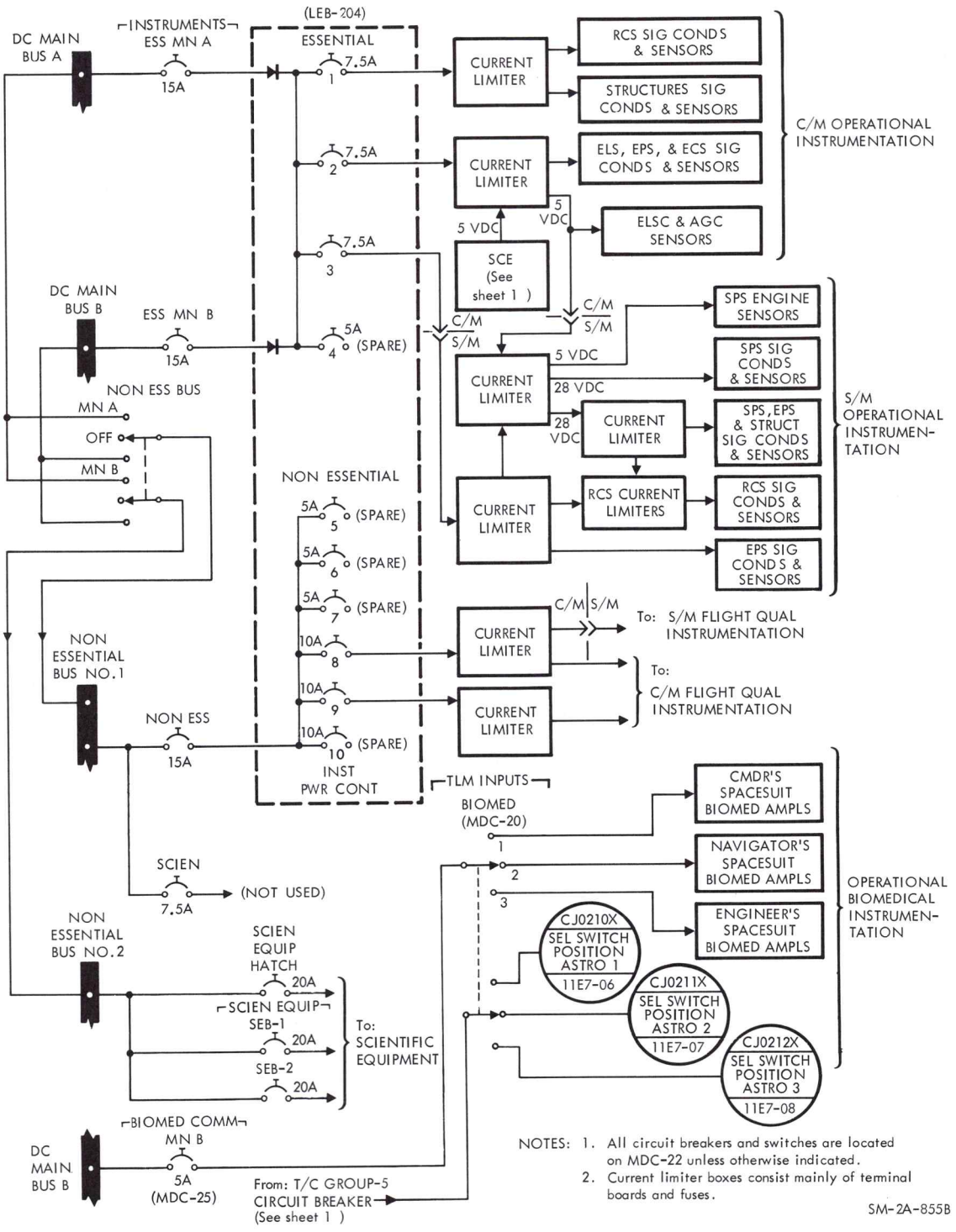

Figure 2.8-27. Telecommunication Power Distribution (Sheet 2 of 2)

T/C Equipment Power Consumption

Equipment	Quantity	Control	D-C Watts	A-C Watts	Total D-C Watts	Total A-C Watts
A-C equipment	3	PWR switch to VOX, MDC (13, 23, 26)	4.3		12.8	
SCE	1	SCE PWR switch ON, MDC 20		45.0		45.0
PCM TLM equipment	1	PCM control button ON, MDC 22		10.5		10.5
TV camera	1	PWR switch ON, TV camera handle	6.0		6.0	
PMP	1	PMP PWR switch ON, MDC 20	2.6	4.0	2.6	6.4
		+ TAPE SWITCH ON, MDC 20	2.6	6.4	2.6	6.4
		EMER VOICE switch ON, MDC 20	3.2		3.2	
		EMER KEY ON, MDC 20	3.6		3.6	
DSE	1	RECORD/PLAYBACK switch other than OFF, MDC 20	0.5	32.5	0.5	32.5
FQR	1	RECORD switch to RECORD MDC 19	34.0	15.0	34.0	15.0
UDL	1	UDL switch to VHF, MDC 20	9.6		9.6	
CTE	1	2-CTE control buttons ON, MDC 22	21.0		21.0	
VHF/AM transmitter-receiver		VHF/AM switch to REC, MDC 20	1.5		1.5	
		VHF/AM switch to T/R, MDC 20	15.5		15.5	
		VHF/AM switch to T/R, PTT button ON, cobra cable MODE switch to PTT	61.5		61.5	
HF transceiver	1	HF POWER switch ON, MDC 20	0.6		0.6	
		HF PWR switch ON, MODE switch to BCN or AM, MDC 20, cobra cable PTT button ON	29.0		29.0	
		HF PWR switch ON, MODE switch to SSB, PTT button on cobra cable ON	40.0		40.0	
VHF/FM transmitter	1	VHF FM switch ON, MDC 20	1.5	50.0	1.5	50.0

T/C

SYSTEMS DATA

Equipment	Quantity	Control	D-C Watts	A-C Watts	Total D-C Watts	Total A-C Watts
USBE	1	S-BAND XPONDER switch to XPONDER, MDC 20		13.5		13.5
S-band PA	1	S-BAND XPONDER switch to XPONDER PWR AMP, PWR AMP switch LOW, MDC 20	3.0	27.4	3.0	27.4
		S-BAND XPONDER switch to XPONDER PWR AMP PWR AMP switch HIGH	3.0	80.0	3.0	80.0
C-band transponder	1	C-BAND PWR switch 1 pulse or 2 pulse, MDC 20	3.0	75.0	3.0	75.0
VHF recovery beacon	1	VHF BCN switch ON, MDC 20	8.0		8.0	
2-KMC antenna switch	1	S-BAND XPONDER switch ON S-BAND switch changed, MDC 20	15.0		15.0	
Voice recorder	1	HF switch and INTER-COM switch to TR, MDC 20; PTT button ON on cobra cable	0.025	1.99	.025	1.99

2.8.5 OPERATIONAL LIMITATIONS AND RESTRICTIONS.

2.8.5.1 Antennas.

For S-band transmission and reception, the SCIN antenna on the side of the S/C nearest to the MSFN station must be utilized. For VHF transmission and reception, the SCIN antenna indicated in figure 2.8-25 should be utilized. This may require switching between the upper (-Z) and lower (+Z) SCIN antennas while making a single station pass. For VHF operations this must be done manually with the VHF ANTENNA switch. For S-band operations, this can be accomplished either manually or automatically with the S-BAND ANTENNA switch.

At greater slant ranges, null points may exist in the SCIN and C-band beacon overall antenna patterns along the centerline of the S/C, forward and aft of the C/M. Pointing either of these null points at the MSFN station may cause communications to be interrupted.

The lower (+Z) SCIN antenna will be burned off during entry. Thus after entry, the upper (-Z) SCIN antenna or VHF recovery antenna No. 2 must be utilized for communications via the VHF/AM transmitter-receiver.

2.8.5.2 Data Storage Equipment.

a. Maximum DSE running times for the entire reel of tape at the three operating speeds are as follows: 3.75 ips (LOW — 120 minutes, 15 ips (NORM) — 30 minutes, 120 ips (HIGH, for rewind and LBR PCM dump only) — 3.75 minutes.

b. Stored HBR and LBR PCM data, if intermixed on the tape, cannot be dumped within one station pass, due to the different playback speeds required. LBR PCM must be recorded at 3.75 ips and may be played back at 15 ips or 120 ips; HBR PCM must be recorded at 15 ips and played back at 15 ips.

T/C

c. Stored PCM TLM need not be played back in the same direction in which it was recorded. Playback in the direction of recording requires rewinding of the tape between recording and dumping.

d. There is no provision for recording TV data.

e. High-bit rate PCM must be recorded at normal speed or tape motion will stop.

f. Low-bit rate PCM must be recorded at low speed or tape motion will stop.

g. If tape is played back at low speed, the tape will move but there will be no play back data available to the transmitters.

h. If high-bit rate data is played back at high speed, the transmitter data will be garbled.

i. If only a FWD or REV command is given to initiate a rewind, there will be no tape motion. A mode (preferably PLAY), must also be selected before tape will move.

j. Refer to paragraph 2.8.3.2.6 for proper DSE operating functions.

2.8.5.3 Unified S-Band System.

a. S-band operations will be limited due to the limited number of MSFN stations that will have operational S-band capabilities.

b. If one of the S-band mode switches (TAPE - OFF - ANALOG or TV - OFF - PLSS) is moved from the OFF position, the FM selection of the S-band transmitter will be selected, reducing the circuit margins and disabling the S-band tracking.

c. TV can only be transmitted via the USBE.

d. The secondary oscillator can only be selected in normal operation with the RNG-RNG only switch in the off position and the OSC switch is SEC.

e. The TAPE and TV switches are 3-position switches with the down position no longer performing valid functions. The down position of these switches should not be selected.

f. The TAPE and TV switches should never be positioned up simultaneously.

g. Refer to paragraph 2.8.3.2.5 for valid unified S-band equipment operational modes and their attendant switching configuration.

2.8.5.4 General.

a. The maximum slant range for reliable VHF-FM TLM communications should not exceed 1500 nautical miles. Also, the maximum elevation angle from the earth to the S/C should not be less than 5 degrees.

b. Real-time and recorded PCM TLM cannot be transmitted simultaneously. One or the other, however, can be transmitted via the VHF/FM transmitter and the USBS at the same time, and real-time PCM data may be recorded while it is being transmitted.

c. The FQR has a maximum recording time of approximately 30 minutes. To maintain sufficient time for all scheduled recordings of flight qualification analog data, the FQR must be used conservatively.

d. When the PCM TLM equipment is operating in the LOW (low bit-rate) mode, approximately 34 percent of the total PCM measurements are available for transmission or storage. Also, many of these measurements are sampled at slower rates.

2.8.6 TELEMETRY MEASUREMENTS.

The following is a complete listing of all T/C telemetry data that is monitored by flight controllers and ground support personnel. The last column contains the name and type of S/C crew display. The display utilizes the same pickoff or signal source as telemetry, unless a separate measurement number is included in the display column. Additional telemetry measurements are found at the end of each system.

An asterisk (*) by the measurement number denotes information which is not available for recording or telemetry transmission during PCM low bit-rate operation.

Measurement Number	Description	Sensor Range	Crew Display
* CJ 0002 J	Pneum selector sw out sig		None
* CJ 0066 J	EKG axis 1 sel sw out sig	0.1 +5 mv	None
* CJ 0067 J	EKG axis 2 sel sw out sig	0.1 +5 mv	None
CJ 0210 X	Sel sw position ASTRO 1	Event	None
CJ 0211 X	Sel sw position ASTRO 2	Event	None
CJ 0212 X	Sel sw position ASTRO 3	Event	None
CT 0012 X	Tape motion monitor operational	Event	None
CT 0013 X	Tape motion monitor R and D	Event	None
CT 0015 V	Sig cond pos supply volts		None
CT 0016 V	Sig cond neg supply volts		None
CT 0017 V	Sensor excitation 5 volts		None
CT 0018 V	Sensor excitation 10 volts		None
* CT 0055 V	TV camera target voltage		None
* CT 0089 V	C-band XMTR output monitor		None
* CT 0098 V	C-band decoder out		None
CT 0120 X	PCM bit rate change 8 bits	Digital	None
CT 0125 V	PCM HI level 85 percent ref	0 to 5.0 vdc	None
CT 0126 V	PCM HI level 15 percent ref	0 to 5.0 vdc	None
CT 0127 V	PCM LO level 85 percent ref	0 to 0.040 vdc	None
CT 0128 V	PCM LO level 15 percent ref	0.040 vdc	None
CT 0141 X	CTE timing mode monitor	Event	None
CT 0142 F	Central timing GMT 32 bits	Digital	None
CT 0147 V	S-band rec AGC voltage		S-BAND ANT, meter
* CT 0191 V	VHF/AM rec AGC voltage		None
CT 0212 V	S-band RCVR static phase error		None
CT 0215 V	S-band XMTR detected rf output		None
CT 0261 V	UDL receiver signal strength		None
* CT 0262 V	UDL sys validity signal 8 bits	Digital	None
* CT 0320 V	VHF/AM XMTR detected rf output		None
* CT 0330 V	VHF/FM XMTR PA detected rf out		None
CT 0340 X	PCM timing source ext or int	Event	None

T/C

SECTION 2

SUBSECTION 2.9

SEQUENTIAL SYSTEMS

2.9.1 INTRODUCTION.

The sequential systems consist of control and detection systems which function during ascent and entry portions of a mission or in preorbital aborts. The control functions are sensing L/V status, displaying L/V status to the crew, automatically initiating LES aborts in an emergency during early ascent, and automatically sensing the ELS during descent. Backup controls are provided for critical functions and normal events. The systems are the sequential events control system (SECS), emergency detection system (EDS), launch escape system (LES), and earth landing system (ELS). The systems interface with the reaction control system (RCS), guidance and navigation (G&N), service propulsion system (SPS), stabilization and control system (SCS), electrical power system (EPS), telecommunications (T/C), and controls and displays (C&D).

2.9.2 FUNCTIONAL DESCRIPTION.

The purpose of the sequential systems is to provide safety for the crew during the ascent and descent phases of a mission, and to perform normal separation functions. The EDS monitors operation of the L/V and will initiate an automatic abort in an emergency. The LES is provided for use during an emergency arising from malfunction of the L/V or other systems affecting crew safety. The LES will be utilized to abort the mission in an emergency by separating the C/M from the L/V and S/M. The LES can be operational from the launch pad until the launch escape tower is jettisoned. Following second stage booster ignition, the LES tower is jettisoned from the CSM-L/V combination. The ELS is provided to stabilize and decelerate the C/M following an entry into the earth atmosphere or following an abort. The ELS parachutes will lower the C/M at a suitable velocity and attitude until time of touchdown. A functional description of the sequential systems is contained in the following paragraphs.

SEQ

2.9.2.1 Sequential Events Control System (SECS).

The SECS consists of controllers (figure 2.9-1) that provide automatic, semiautomatic, and manual control for initiation or termination of functional events during various phases of the Apollo mission. The controllers are the master events sequence controller (MESC), earth landing sequence controller (ELSC), C/M reaction control system controller (C/M RCSC), and service module jettison controller (S/M JC). Each controller consists of redundant relays, timers, and other devices to control systems operation

and automatic timing of events. Two controllers are provided in all cases for dual redundancy. The SECS will control the automatically sequenced events during a mission abort, normal CSM-SLA separation, normal C/M-S/M separation, and events during the earth landing phase. The SECS provides conditioned signals to telemetry equipment through the data distribution box so that vital information may be telemetered to MSFN.

The SECS will control the launch escape system (LES) during an abort up to the time of normal launch escape tower jettison. The SPS engine is utilized during an abort after LES tower jettison to propel the CSM away from the L/V. Normal separation of the SLA is performed by the SECS following manual initiation after earth orbit is attained. Emergency separation of the SLA is performed automatically 1.7 seconds after a SPS abort is manually initiated. C/M-S/M separation is performed by the SECS, and is manually initiated during the entry phase or subsequent to a SPS abort. During a LES abort, the C/M-S/M separation is performed automatically by the SECS. Events performed by the earth landing system are automatically controlled by the SECS during normal descent. Switches are provided for manual backup of critical events.

The basic functions performed by the SECS are as follows:

Event	Originates	Function/Input	Manual Control
Auto abort enable	MESC	Lift-off signal	EDS AUTO switch (MDC-16)
LE and PC motors fire	MESC	C/M-S/M separation relays	LES MOTOR FIRE switch (MDC-5)
Pitch motor inhibit	C/M RCSC	Lift-off + 61 seconds	ABORT SYSTEM-OX DUMP switch (MDC-16)
Auto RCS oxidizer dump inhibit	C/M RCSC	Lift-off + 61 seconds	ABORT SYSTEM-OX DUMP switch (MDC-16)
LES tower jettison	MESC	ELS armed and 24K ft baro-switch closure on LES aborts, manual 3 minutes after lift-off	ABORT SYSTEM-MODE switches 1 and 2 (MDC-16)
CSM-SLA separation	MESC	Translation control + 1.7 seconds	ADAP SEP switch (MDC-5)

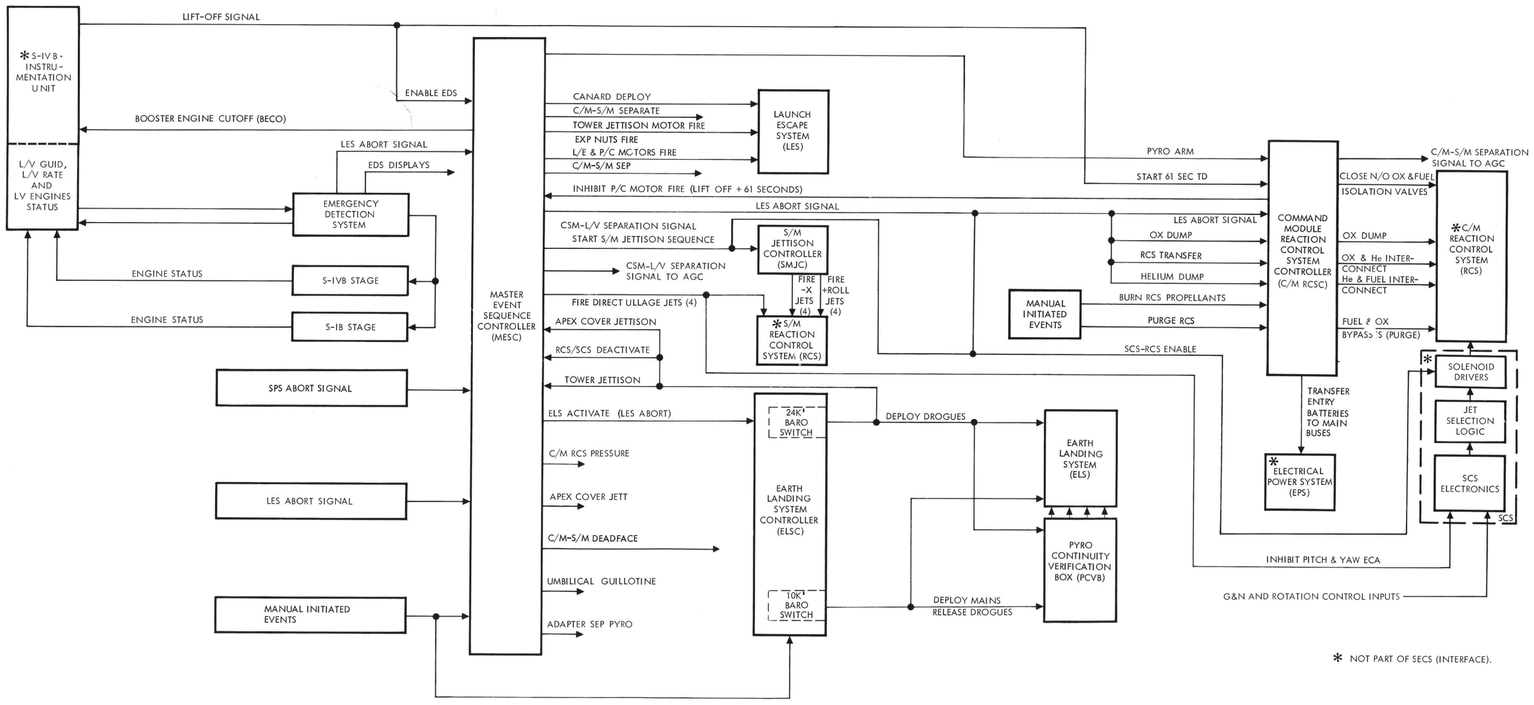

SM-2A-821C

Figure 2.9-1. SECS Controllers Interface Block Diagram

SEQ

SYSTEMS DATA

Event	Originates	Function/Input	Manual Control
RCS/SCS enable	MESC	Adapter separation +2.5 seconds or C/M-S/M deadface + 1 second	REACTION CONTROL SYSTEM-CMD switch (MDC-16)
LES abort initiation	MESC	EDS abort signal from L/V-IU	Translation control
C/M-S/M separation	MESC	C/M-S/M deadface relays + 0.1 second	C/M-S/M SEP switches 1 and 2 (MDC-15)
Canard deploy	MESC	LES abort lockup relays + 11 seconds	CANARD DEPLOY switch (MDC-5)
SPS abort initiation	MESC	Manual	Translation control
RCS/SCS disable	MESC	ELS armed and 24K ft baroswitch closure	REACTION CONTROL SYS-CMD switch (MDC-16)
Apex cover jettison	MESC	ELS armed and 24K ft baroswitch closure + 0.4 second	APEX COVER JETT switch (MDC-5)
Drogue parachutes deploy	ELSC	ELS armed and 24K ft baroswitch closure + 2 seconds	DROGUE DEPLOY switch (MDC-5)
Drogue parachutes release and main parachutes deploy	ELSC	ELS armed and 24K ft baroswitch closure + 14 seconds + 10K ft baroswitch closure	MAIN DEPLOY switch (MDC-5)
RCS propellants burn	C/M RCSC	Manual	C/M PROP JETT DUMP switch (MDC-8)
RCS purge	C/M RCSC	Manual	C/M PROP JETT PURGE switch (MDC-8)

SEQ

Event	Originates	Function/Input	Manual Control
Main parachutes release	ELSC	Manual	MAIN CHUTE release switch (MDC-16)
Postlanding antenna deploy	MESC	Manual	POST LANDING-ANTENNA-DEPLOY switches A and B (MDC-25)

2.9.2.2 Emergency Detection System.

The EDS is designed to detect and display status and emergency conditions of the launch vehicle-spacecraft combination to the astronaut. The EDS also provides automatic abort initiation, under certain conditions, after lift-off up to the normal time of LES tower jettison.

The EDS display circuitry is enabled when the EDS POWER switch (MDC-24) is in the ON position and will illuminate lights on MDC-5 to indicate L/V status. The red L/V RATE light will illuminate when L/V rates are in excess of 20 degrees per second in roll and 5 degrees/second in pitch and yaw. The rates are sensed by three rate gyros mounted on each L/V axis in the instrumentation unit (IU). The red L/V GUID light (MDC-5) illuminates to indicate failure of the guidance unit which is also located in the instrumentation unit. The yellow L/V ENGINES lights (MDC-5) illuminate when a respective S-I booster engine is developing less than 90 percent of total thrust output. The L/V ENGINES lights are monitored for engine status during thrusting periods. During staging, the L/V ENGINES lights are monitored for illumination to indicate BECO and extinguish to indicate stage separation. After staging, the number 1 L/V ENGINE light indicates the status of the S-IVB stage engine; it will be extinguished when the engine is producing 65 percent rated thrust. The ABORT light (MDC-3) is a red lamp assembly containing 4 bulbs. Two bulbs are in system A and two bulbs are in system B for dual redundancy. The ABORT light is illuminated if an abort is requested by launch control center for a pad abort or an abort during lift-off via radio. The ABORT light can be illuminated after lift-off by the Range Safety Officer transmitting a destruct arm command. The destruct arm command will also initiate BECO. An abort may also be requested via radio from the MSFN after lift-off + 10 seconds.

Figure 2.9-2 is an EDS functional schematic which illustrates one redundant system of the integrated dual redundant system. Power for three EDS buses, which are located in the S-IVB stage IU, is provided by spacecraft batteries A, B, and C. When the appropriate circuit breakers (MDC-25) and the EDS power switches (MDC-24) are closed, battery power is applied to the EDS buses. Battery power also energizes EDS bus changeover relays (Z2K2-A and Z2K2-B). When the contacts of the EDS bus changeover relays change state, batteries A and B supply power for systems A and B, respectively. If a power failure should occur in either of the

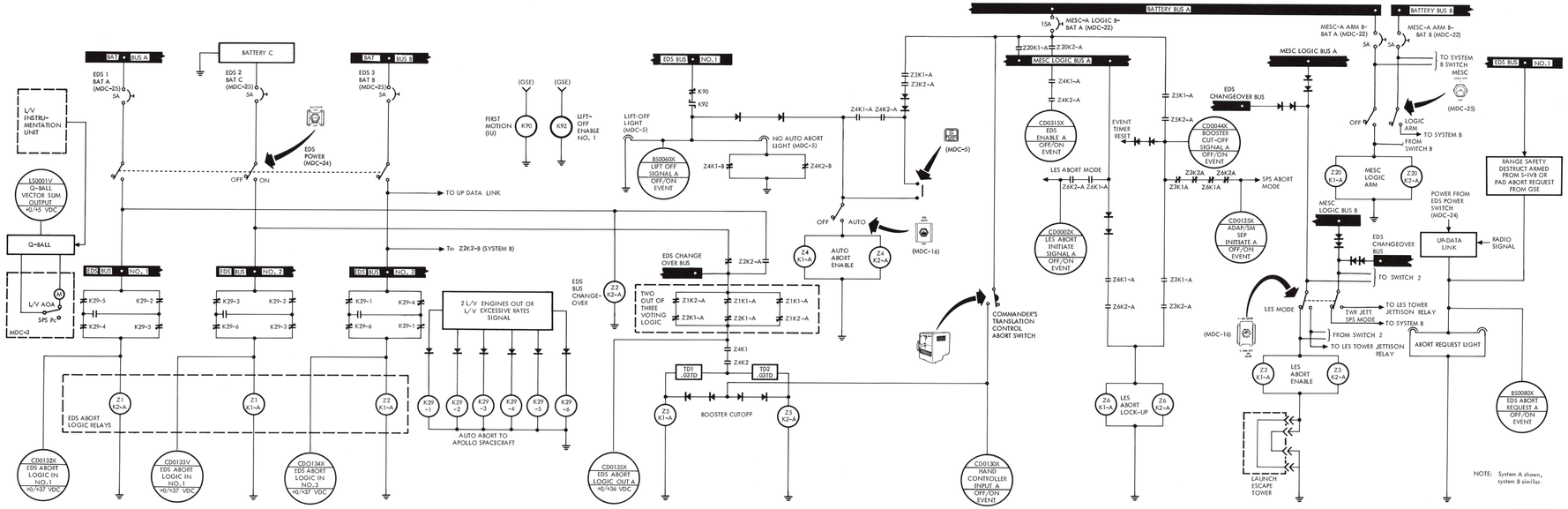

Figure 2.9-2. EDS Functional Schematic

systems the appropriate EDS bus changeover relay will become de-energized. In this event the contacts of the relay will return to their normal state, coupling battery C to the defective system.

Auto abort to the spacecraft relays (K29 series) are in the L/V IU. In flight these relays are not energized unless engines out or excessive rates malfunctions occur in the L/V. When the contacts of these relays are in their normal state, EDS abort logic relays (Z1K2-A, Z1K1-A, and Z2K1-A) in the MESC will be energized. With the EDS abort logic relays energized, all of the contacts in the two-out-of-three rating logic will be opened.

The EDS automatic abort circuitry is established at lift-off providing the EDS switch (MDC-16) is in the AUTO position. The circuit is completed through contacts of the lift-off enable and first motion relays (K90 and K92). The lift-off enable relays (K92) are latching type, and the contacts are closed when the conditions for a launch are satisfied which includes proper operation of the booster engines. The first motion relays (K90) are energized through GSE, holding the normally closed contacts open, until the GSE fly-away umbilical is separated from the vehicle. When this happens the automatic abort enable relays (Z4K1-A and Z4K2-A) are energized through the AUTO contacts of the EDS switch; also the white lift-off light (MDC-5) will be illuminated. The red NO AUTO ABORT light will not be illuminated if the automatic abort enable relays have been energized, as normally closed contacts of the relay are utilized in the ground circuit of the light. Time delays are incorporated in the IU circuitry to remove power from these lights at T + 5 seconds.

When the automatic abort enable relays are energized, a holding circuit will be established on the MESC logic bus. In order for the holding circuit to be complete, the appropriate circuit breakers (MDC-22) must be closed and the LES abort enable relays (Z3K1-A and Z3K2-A) must be energized. The LES abort enable relays are energized if the TWR JETT switches (MDC-16) are in the LES MODE position and if the tower has not been jettisoned; the ground for the LES abort enable relays is broken when the tower legs are separated from the spacecraft.

SEQ

If the automatic abort circuitry has been enabled, and the NO AUTO ABORT light is not illuminated at lift-off, the illuminated pushbutton (IPB) switch (MDC-5) should be closed. Depressing the NO AUTO ABORT light fixture will close the IPB. This action will energize the auto abort relays and establish the holding circuit.

If the lift-off light is not illuminated at the proper time, a discrepancy in interface circuitry may exist. In this event, the auto abort enable relays probably will not have been energized and the IPB should be depressed. This action will not illuminate either of the lights because of blocking diodes; but will energize the LES abort enable relays and establish the holding circuit.

The prime function of the auto abort enable relays is to enable the two-out-of-three voting logic. Normally open contacts are utilized between the matrix of voting contacts and the booster cutoff relays (Z5K1-A and Z5K2-A).

When the auto abort enable relays are energized and the automatic abort functions of the system are enabled, an abort signal will energize the booster cutoff relays. These relays will signal the L/V circuitry to perform the booster engine cutoff function. The engine shotdown signal is inhibited by circuitry in the IU for the first 40 seconds of launch because of range safety restrictions.

Maximum utilization of the auto abort circuitry may be had by leaving the EDS switch in the AUTO position until just prior to launch escape tower jettison. An abort may be initiated manually at any time by rotating the commander's transtation control counterclockwise into the detent position (20 degrees). The EDS will automatically initiate an abort when two L/V engines are out, or L/V excessive rates are sensed if these two functions are enabled. The two functions are enabled with the ABORT SYSTEM - 2 ENG OUT switch (MDC-16) and ABORT SYSTEM - RATES switch (MDC-16). The two switches are set to off to inhibit the two functions prior to S-IB staging. L/V guidance failure will not initiate an automatic abort. The crew will contact MSFN and a decision will be made on the action to be taken. If a destruct arm command is transmitted prior to inhibiting the two-engine out automatic abort capability, the EDS will detect BECO and initiate an automatic abort. If a destruct arm command is transmitted after the two-engine out auto abort capability is inhibited, a manual abort must be initiated immediately when the ABORT light illuminates. Structural breaking or separation of the structure between the IU and C/M will also be detected by the EDS and an automatic abort initiated.

The parameters being sensed by the EDS are extremely time-critical at various periods during the boost phase. When these parameters are exceeded, an LES abort is automatically initiated to propel the escaping vehicle (C/M or LES) safely away from the launch vehicle, prior to a catastrophic condition.

A Q-ball (figure 2.9-3) mounted above the LES motors, provides an electrical signal input to the L/V AOA/SPS P_C indicator on MDC-3 and an electrical signal input to ground control via telemetry.

The Q-ball has four static ports for measuring ΔP which is a function of angle of attack. The ΔP is related to pitch and yaw, and is electronically analyzed and displayed on the L/V AOA SPS P_C indicator on MDC-3. The indicator is graduated to 150 percent because of start transients of the SPS. The indicator is monitored for the L/V AOA function from 40 seconds after lift-off until approximately one minute and 40 seconds.

Position of the red line is based on vehicle structural limits and launch vehicle capabilities. A decision for manual abort initiation will be made when the indicator pointer reaches the red line and a movement is also observed on the FDAI.

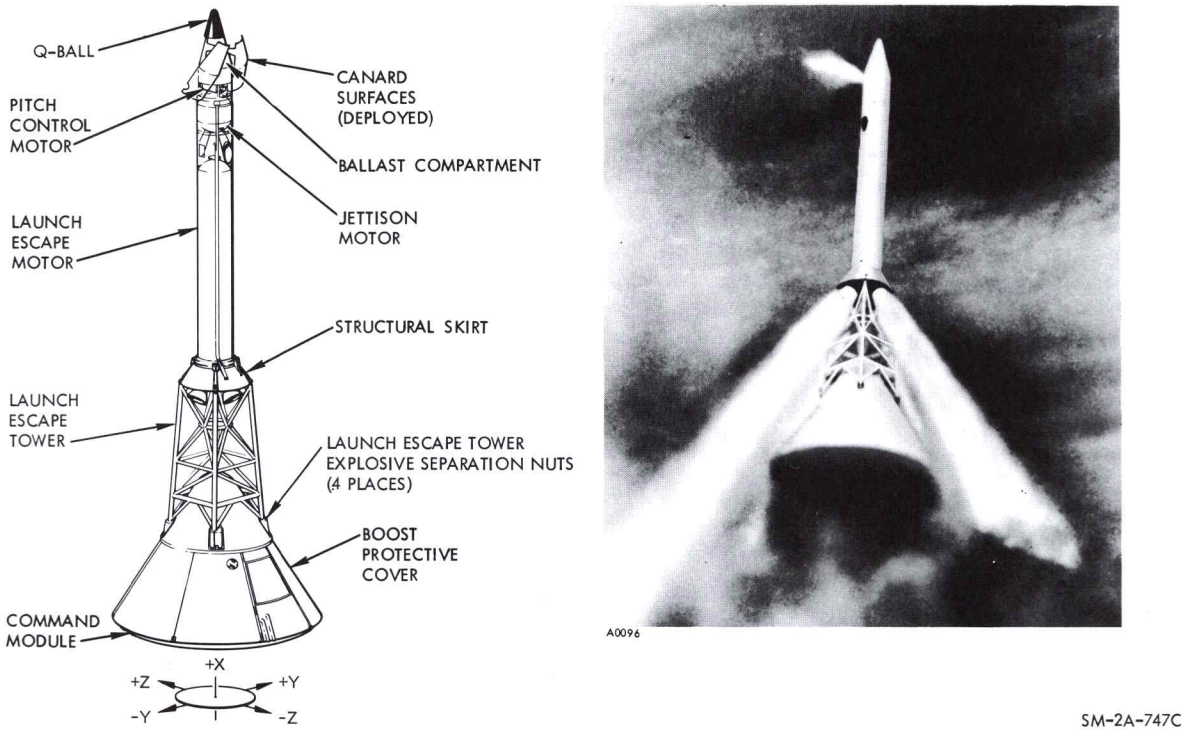

Figure 2.9-3. Launch Escape System

2.9.2.3 Launch Escape System.

Purpose of the LES (figure 2.9-3) is to provide immediate abort capabilities from the launch pad to LES tower jettison. The ABORT SYSTEM - MODE switches 1 and 2 (MDC-16) are in the LES MODE position prior to LES tower jettison, and an abort will be accomplished by utilizing the launch escape system. A manual or automatic initiated abort signal will activate both master event sequence controllers (MESC). The MESC will initiate C/M-S/M separation, and ignite the launch escape and pitch control motors. Firing of the pitch control motor is automatically inhibited 61 seconds after lift-off by a time-delay relay in the RCSC. The LES motors provide sufficient thrust for the lift and lateral translation of the C/M away from the launch pad, or trajectory of the launch vehicle. Two canard surfaces (figure 2.9-3) are automatically deployed 11 seconds after the initiation of any LES abort to orient the C/M to a blunt-end-forward attitude. The CANARD DEPLOY switch (MDC-5) is provided for manual backup. (Refer to Abort Procedures in section 9.)

SEQ

During a normal mission, the LES tower is jettisoned shortly after second stage booster (S-IVB) engine ignition. LES tower jettison is manually initiated approximately 3 minutes after lift-off by setting the ABORT SYSTEM - MODE switches 1 and 2 (MDC-16) to the TWR JETT SPS MODE position. Either switch will enable systems A and B of the redundant circuitry. Both switches should be set at the same time. Any abort, after LES tower jettison, must be manually initiated and will be in the SPS mode.

In this mode the spacecraft is automatically separated from the S-IVB stage, making it possible to utilize the SPS for subsequent maneuvering. (Refer to Abort Procedures in section 9.)

A boost protective cover (BPC) completely covers the conical section of the command module. The cover protects the command module and windows from heating during the ascent phase. It also keeps the windows clean by preventing sooting at launch escape tower jettison or in the event of an LES abort. The cover is attached to and is jettisoned with the LES tower. A removable section allows access to the C/M crew compartment hatch. The cover has one window fabricated of fused silica glass and is located over the forward viewing window.

2.9.2.4 Earth Landing System.

The ELS provides for safe return of the command module and crew following a mission or an abort. The ELS consists of two earth landing system controllers (ELSC) and five parachutes. The ELS logic circuitry is armed automatically during an abort in the LES mode, and is armed manually with the ELS LOGIC switch on MDC-8 during a SPS abort or normal entry. The ELSC contains baroswitches and time-delay relays. After the logic circuitry is armed, the ELSC automatically senses pressure altitude and initiates deployment of the parachutes at the proper time. The time-delay relays control initiation of automatic events after the 24,000 feet baroswitch closes. The parachutes (figure 2.9-4) are located in the forward compartment of the C/M, under the apex cover. During a normal entry or descent from an abort initiated above 30,000 feet, the 24,000 feet baroswitch closes and completes a circuit to the MESC which jettisons the launch escape tower. The MESC initiates apex cover jettison 0.4 seconds after launch escape tower jettison. Closing of the 24,000 feet baroswitch completes a circuit to a 2-second time delay and a 14-second time delay to jettison the drogue parachutes in 2 seconds. The 14-second time delay completes a circuit to the 10,000 feet baroswitch.

The drogue parachutes are held in a reefed condition for 8 seconds by two reefing lines. Each reefing line has two reefing line cutters. A pyrotechnic time-delay train in each reefing line cutter is ignited at the time of drogue parachute line stretch, causing automatic disreefing after 8 seconds. The drogue parachutes remain attached to the command module until descent to approximately 10,000 feet where the 10,000 feet baroswitch closes to initiate drogue parachute disconnect. Simultaneously with drogue parachute disconnect, three pilot parachutes are independently mortar deployed, which removes the main parachute packs from the C/M and extracts the main parachutes from their deployment bags. The main parachutes are reefed for 8 seconds. Disreefing then occurs, and the parachutes fully inflate to lower the C/M safely to landing. Three reefing line cutters are employed on each of the two reefing lines the main parachutes.

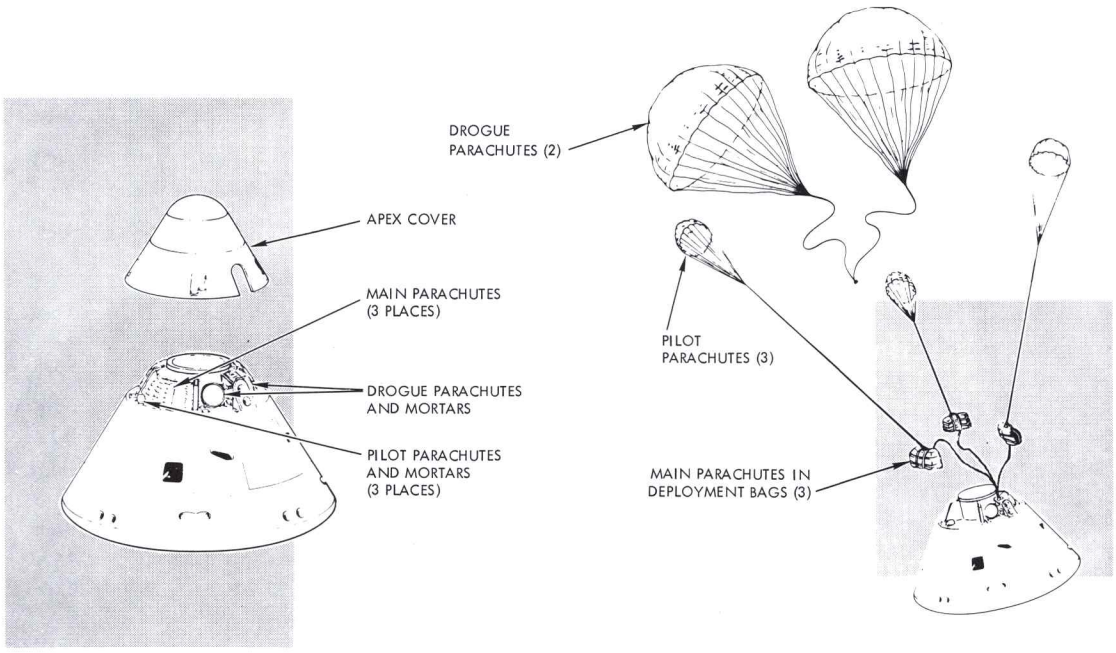

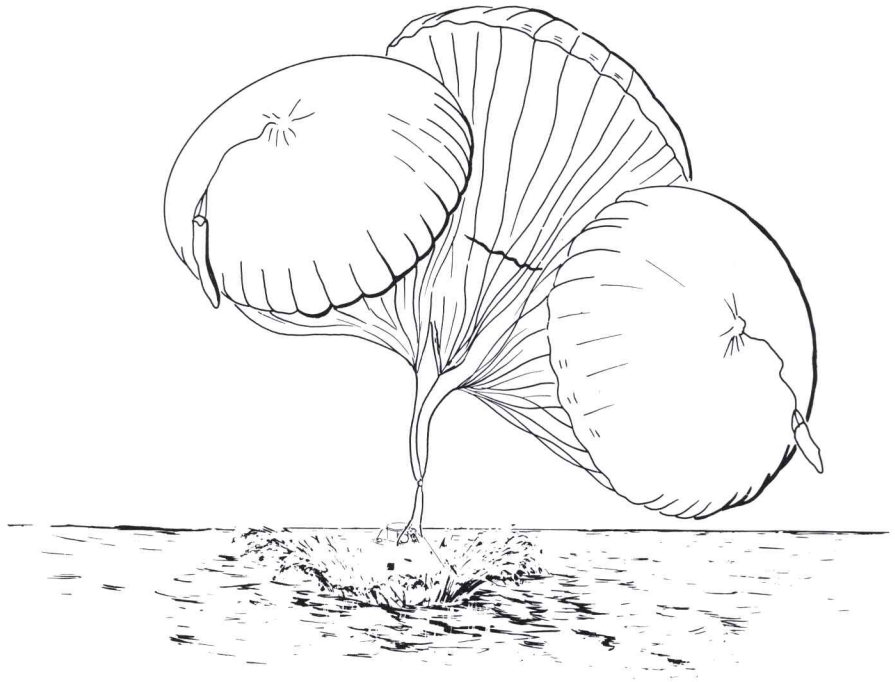

SM-2A-797C

Figure 2.9-4. ELS Parachute Equipment

SEQ

A 27-1/2-degree hang-angle of the C/M is maintained by means of the main parachutes attachment. The hang-angle contributes to the crew tolerance impact by ensuring that impact occurs at the specifically designed C/M structural attenuation point. This attenuation point is on the +Z-axis.

Special note should be made that the apex cover jettison and deployment of the drogue parachutes may be manually initiated at 45,000 feet during a normal entry if the flight characteristics of the command module become unstable. (Refer to Operational Limitations and Restrictions, paragraph 2.9.5.)

An ELS - AUTO/MAN switch (MDC-16) is provided for the crew to inhibit automatic deployment of the main parachutes during a low-altitude abort initiated prior to 61 seconds after lift-off. The switch is set to the AUTO position prior to launch. In the event of an abort prior to 61 seconds after lift-off, the crew will set the switch to MAN after drogue parachute deployment if the C/M is above an indicated altitude which will be established by mission rules. Deployment of the main parachutes will be manually initiated by pressing the MAIN DEPLOY switch on MDC-5, when the altimeter pointer reaches the adjustable marker on the altimeter face. This action will preclude the possibility of the command module drifting back on a land area. The ELS switch should be returned to AUTO after the main parachutes are deployed. This will allow a 14-second time delay to time out and permit release of the main parachutes when the MAIN CHUTE RELEASE switch is actuated after touchdown.

The postlanding recovery aids which are deployed by pyrotechnic devices of the sequential systems are: two VHF recovery antennas, one flashing beacon light, one HF recovery antenna, and one swimmer's umbilical which contains a basket for a sea dye marker.

When the parachutes are installed, the VHF recovery antennas and the flashing beacon are tied down with parachute rigging cord. The cord is laced through reefing line cutters which are activated when the main parachutes are deployed. When the lines are cut, spring mechanisms deploy the antennas and beacon.

An electrically initiated pyrotechnic device, which is controlled by the ANTENNA DEPLOY switches A and B (MDC-25), is utilized for the deployment of the HF antenna. Two switches and two initiators are incorporated for redundancy.

Deployment of the HF recovery antenna also releases a latch which allows the swimmer's umbilical and sea dye marker basket to be ejected into the water by a spring-loaded mechanical device. The sea dye marker will last for approximately 12 hours.

A recovery pickup cable is provided on the command module for retrieval by recovery forces. Both ends of this cable are attached to the command module and it is pulled into a bucket bail configuration by bungees when the main parachutes are deployed.

2.9.3 MAJOR COMPONENT/SUBSYSTEM DESCRIPTION.

Each of the sequential systems employ redundant circuits for reliability. Seven batteries are provided in the spacecraft to furnish electrical power for the spacecraft portion of the systems during operation. Entry batteries A, B, and C, and two pyro batteries are located in the command module, and two S/M jettison batteries are located in the service module. Entry batteries A, B, and C are the only batteries that are rechargeable during the mission.

Entry batteries A and B furnish power for the EDS displays and MESC logic circuitry. The pyro batteries furnish power for detonation of pyrotechnic devices during aborts, separation functions, and parachute operation during the normal landing sequence. (See figure 2.9-5 for a C/M battery bus tie-in schematic.) A description of each of the sequential systems is contained in the following paragraphs.

2.9.3.1 Sequential Events Control System.

The SECS consists of two master events sequence controllers (MESC), two earth landing sequence controllers (ELSC), two command module reaction control system controllers (C/M RCSC), and two service module jettison controllers (S/M JC). The S/M JC is located in the service module. All other controllers are located in the command module. Each controller consists of relays, timers, and other devices to provide automatic and semiautomatic control of the systems.

Many operations in the SECS are accomplished by pyrotechnic devices of various types. Apollo standard initiators (ASI) are used throughout the spacecraft to initiate firing of the pyrotechnic devices. The initiator acts as a primer, in most applications, for the main pyrotechnic device. Pins in the initiators are electrically connected with a one-ohm-resistance wire. When a current of at least 3.5 amperes at 28 volts is applied, the one-ohm-resistance wire ignites a primary explosive. The primary explosive, in turn, ignites a secondary explosive to fire a detonator, igniter, or gas cartridge assembly. The detonator assemblies are used to transfer detonation from the ASI/detonator combination to explosive components to perform a specific function. The other high explosive devices are flexible, linear-shaped charges (FLSC) and mild detonating fuzes (MDF) that are employed during module separation functions. The igniter assemblies are used to ignite the LES motors. The gas cartridges are used to actuate the apex cover thruster assemblies, canard thrusters, SLA thrusters, circuit interrupters, and parachute deployment mortars. A control relay maintains a shunt across each pyrotechnic device prior to firing and simultaneously removes the shunt upon receiving a firing command. The Apollo standard initiator (ASI) acts as a pressure cartridge for RCS pyrotechnic valves.

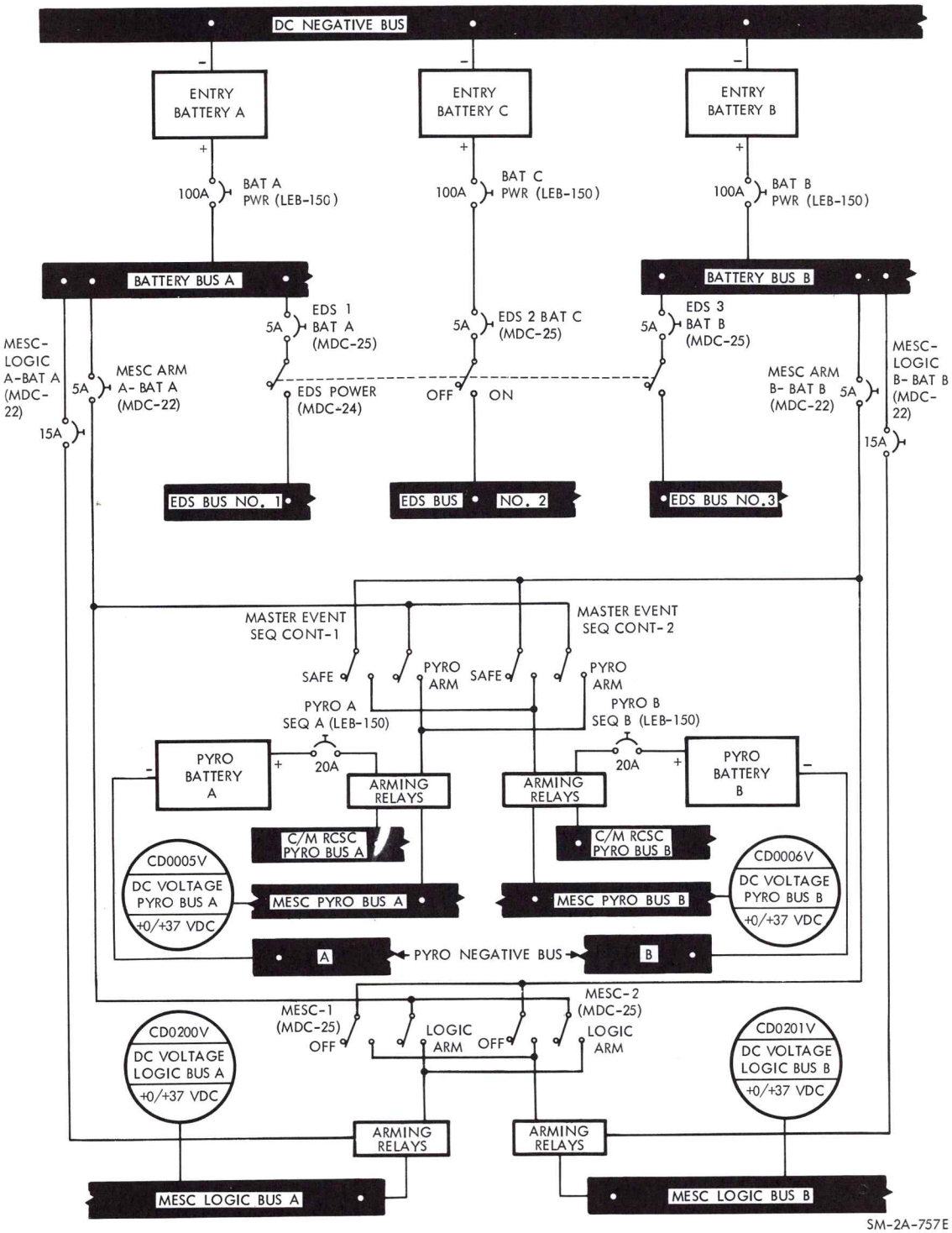

Figure 2.9-5. C/M Battery Bus Tie - Schematic

The pyrotechnic functions performed by the SECS are listed as follows:

Function and Pyro Device	Normal Actuating Control	Backup Control
Spacecraft LEM adapter (SLA) separation Umbilical disconnect Adapter separation (explosive train) Panel thrusters (8)	Automatic signal from MESC during SPS abort and manual control from ADAPT SEP switch	Command pilots translation control (left armrest)
Apex cover jettison Thruster cartridges Apex cover pilot parachute mortar	Automatic signal from MESC	APEX COVER JETT switch (MDC-5)
RCS oxidizer dump He isolation valves He interconnect valve Oxidizer isolation valve Gas chromatograph	Automatic signal from RCSC during a LES abort initiated prior to 61 seconds after lift-off.	None for fast dump.
Oxidizer and fuel burnoff He interconnect valves Fuel interconnect valve Oxidizer interconnect valve	Manual actuation of the C/M PROP JETT-DUMP switch (MDC-8)	
RCS purge Oxidizer bypass valves Fuel bypass valves	C/M PROP JETT - PURGE switch (MDC-8)	C/M RCS - He DUMP/OFF switch (MDC-26), and also opposite commands from rotational controllers one and two for roll and yaw. One controller also commands minus pitch.
Drogue parachute mortars	Automatic signal from ELSC	DROGUE DEPLOY switch (MDC-5)

SEQ

SYSTEMS DATA

Function and Pyro Device	Normal Actuating Control	Backup Control
Pilot parachute mortars	Automatic signal from ELSC	MAIN DEPLOY switch (MDC-5)
Main parachute release mechanism	Manual actuation of MAIN CHUTE RELEASE switch (MDC-16)	None
C/M-S/M separation Tension-tie cutting charges C/M RCS pressurizing valves Circuit interrupters C/M-S/M umbilical guillotine LE and PC motors igniter cartridges	Automatic signal from MESC during a LES abort or C/M-S/M SEP switches 1 and 2 during normal mission	Command pilots translation control (left armrest) for LES abort and C/M-S/M SEP switches 1 and 2 if translation control does not work.
LE tower (TWR) jettison TWR to C/M attaching nuts (explosive) TWR jettison motor igniter cartridges	Automatic signal from MESC or manual control from ABORT SYSTEM - MODE switches 1 and 2	ABORT SYSTEM - MODE switches 1 and 2 (MDC-16)
Postlanding antenna deploy	Manual actuation of POSTLANDING - DEPLOY switches A and B (MDC-25)	

2.9.3.1.1 Master Events Sequence Controllers (MESC).

The MESC (figure 2.9-6) provides the logic and timing to initiate and terminate events associated with the ascent and abort modes. Controller A is in system A and controller B is in system B of the dual redundant systems. Crossover circuitry between controllers A and B ensures correct outputs for detonating pyrotechnic devices even if one redundant circuit is inoperative. The logic circuitry is armed with the two MESC-LOGIC ARM switches 1 and 2 on MDC-25. The pyro circuitry is armed with the two MASTER EVENT SEQ CONT-PYRO ARM switches 1 and 2 on MDC-24. Backup manual controls are provided for most of the events controlled by the MESC.

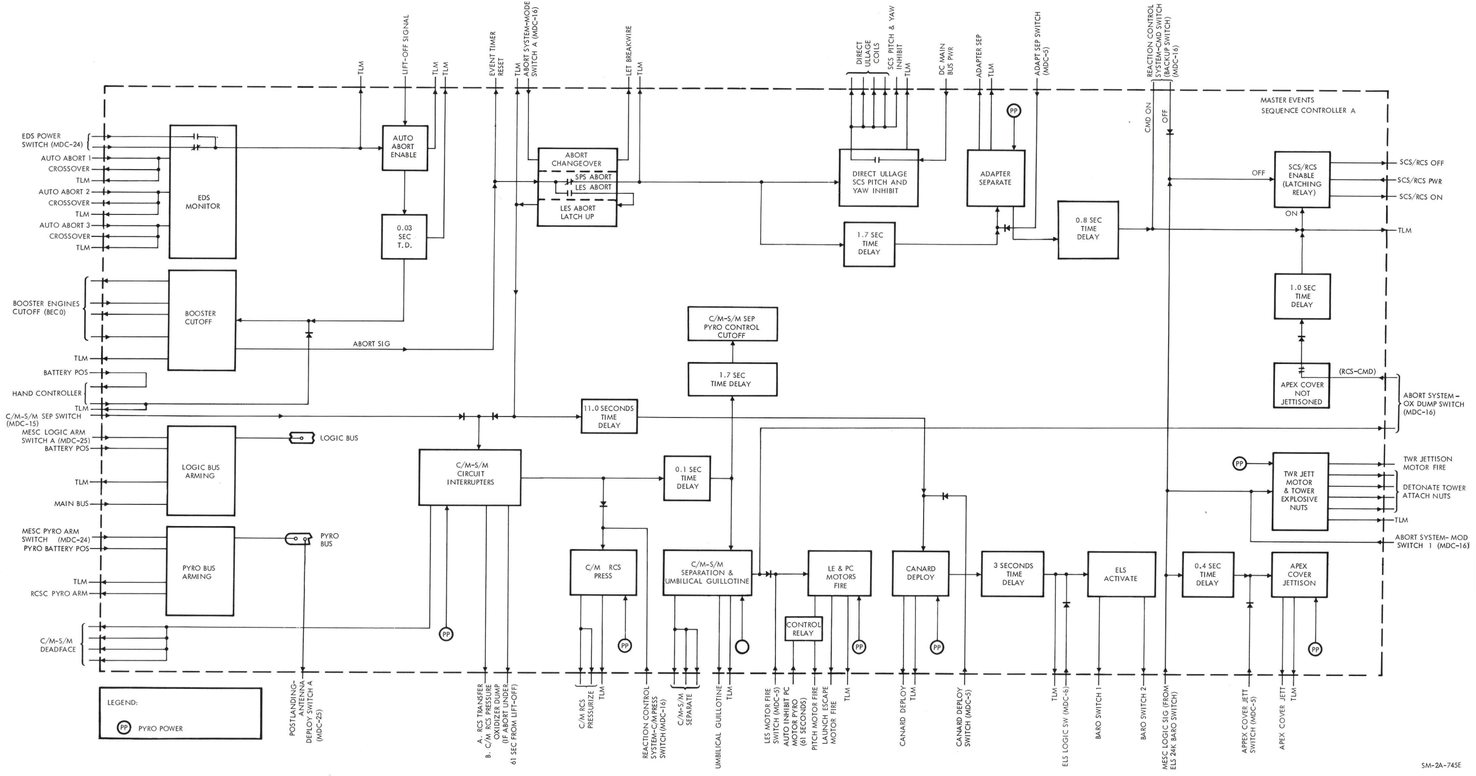

Figure 2.9-6. Master Events Sequence Controller - Block Diagram

SEQ

2.9.3.1.2 Earth Landing System Controllers (ELSC).

The ELSC (figure 2.9-7) provides automatic and manual control of drogue parachute deployment, drogue parachute release, and pilot parachute deployment. Two redundant controllers are provided for dual redundancy. Relays are energized in the ELSC and a pyro continuity verification box (PCVB) to control pyrotechnic devices and preform the events. The PCVB provides an access for checkout of pyro circuitry, and contains relays that work in conjunction with the ELSC. The ELSC contains baroswitches that inhibit automatic operation of the ELS above the baroswitch setting. Other events are controlled by time-delay relays after the baroswitches close. Refer to functional description of the ELS.

2.9.3.1.3 Command Module Reaction Control System Controllers (C/M RCSC).

The C/M RCSC (figure 2.9-8) provides automatic and manual control of events that occur in the reaction control system. Two redundant controllers are provided for dual redundancy. During an abort initiated prior to 61 seconds after lift-off, the C/M RCS oxidizer and helium are automatically dumped. When the abort signal is received, the following pyro valves are fired by initiators to pressurize and dump the RCS oxidizer:

- Two helium isolation valves
- Helium interconnect valve
- Oxidizer interconnect valve
- Two oxidizer overboard dump valves

The oxidizer overboard dump valves route the oxidizer to a blowout plug in the aft heat shield of the C/M. Pressure buildup shears a pin which releases the blowout plug and dumps the oxidizer overboard.

The helium pressure is dumped into the aft compartment 18 seconds after abort initiation when the following pyro valves are fired by initiators:

- Helium interconnect valve
- Two oxidizer tanks bypass valves
- Helium overboard dump valve

The three entry batteries are automatically connected to d-c main buses A and B during an LES abort or normal C/M-S/M separation, RCS control is transferred (S/M to C/M). (See figure 2.9-9 for RCS control schematic.) The controllers inhibit automatic oxidizer dump, helium dump, and LES pitch control motor firing automatically at 61 seconds after lift-off. RCS propellant burn and purge must be manually selected.

The pyro buses are armed when the MASTER EVENT SEQ CONT - PYRO ARM switches 1 and 2 are set to the PYRO ARM position. Backup controls are provided for most of the functions performed by the RCSC.

2.9.3.1.4 Service Module Jettison Controllers (S/M JC).

The S/M JC (figure 2.9-10) programs the operation to impart a desired motion to the service module after C/M-S/M separation. The S/M reaction control system will be controlled by the S/M JC and command continuous firing of the -X jets. It is possible that the resultant -X thrusting will be offset from the S/M X-axis; therefore, the S/M RCS + roll jets are activated for a 5.5-second inverval, 2 seconds after separation. This ensures that a major component of the jettison thrusting will be in a direction that was parallel to the CSM (-X) axis at severance. The dual controllers are powered by dual separation batteries located in the S/M. The batteries are not rechargeable during the mission.

2.9.3.1.5 C/M-S/M Separation Mechanism.

The C/M-S/M separation mechanism (figure 2.9-11) consists of electrical circuit interrupters, shear compression pads, tension ties, linear-shaped charges, and a dual-blade guillotine (umbilical severance device). Redundant systems (A and B) in the MESC provide dual redundant commands to fire dual initiators and charges to ensure sudden complete tension and umbilical severance with adequate reliability. Prior to umbilical severance, sensitive circuits in the umbilical are deadfaced by circuit interrupters. The shear compression pads are designed for interference-free separation after the tension ties are severed. A separation signal is sent to dual redundant service module jettison controllers which control the S/M after it separates from the C/M.

2.9.3.1.6 Separation LEM Adapter (SLA) Separation Mechanism.

A command for CSM-SLA separation is automatically sent to the MESC when a SPS abort is manually initiated. An ADAPT SEP switch on MDC-5 may be used as a backup and for normal CSM-SLA separation during a normal mission. Separation of the adapter into four panels (figure 2.9-12) is accomplished by an explosive train. The explosive train consists of 28 charge holders, 2 initiators and shields, 8 panel thrusters, 8 initiator pressure cartridges, and an umbilical separation system. Redundant detonator assemblies fire dual lines of mild detonating fuse (MDF) installed between the adapter panels, top and bottom, and between each panel. Either line will sever the splice plates between the four panels and around both ends. Crossover boosters are used in the charge holder joints to ensure that both lines are firing simultaneously for complete reliability. The detonating lines are continuous lead sheaths surrounding an explosive core which is virgin RDX, class G. The mild detonating fuse separates the adapter panels and fires cartridges for the panel thrusters which open the four panels. Simultaneously with this operation, umbilical disconnect takes

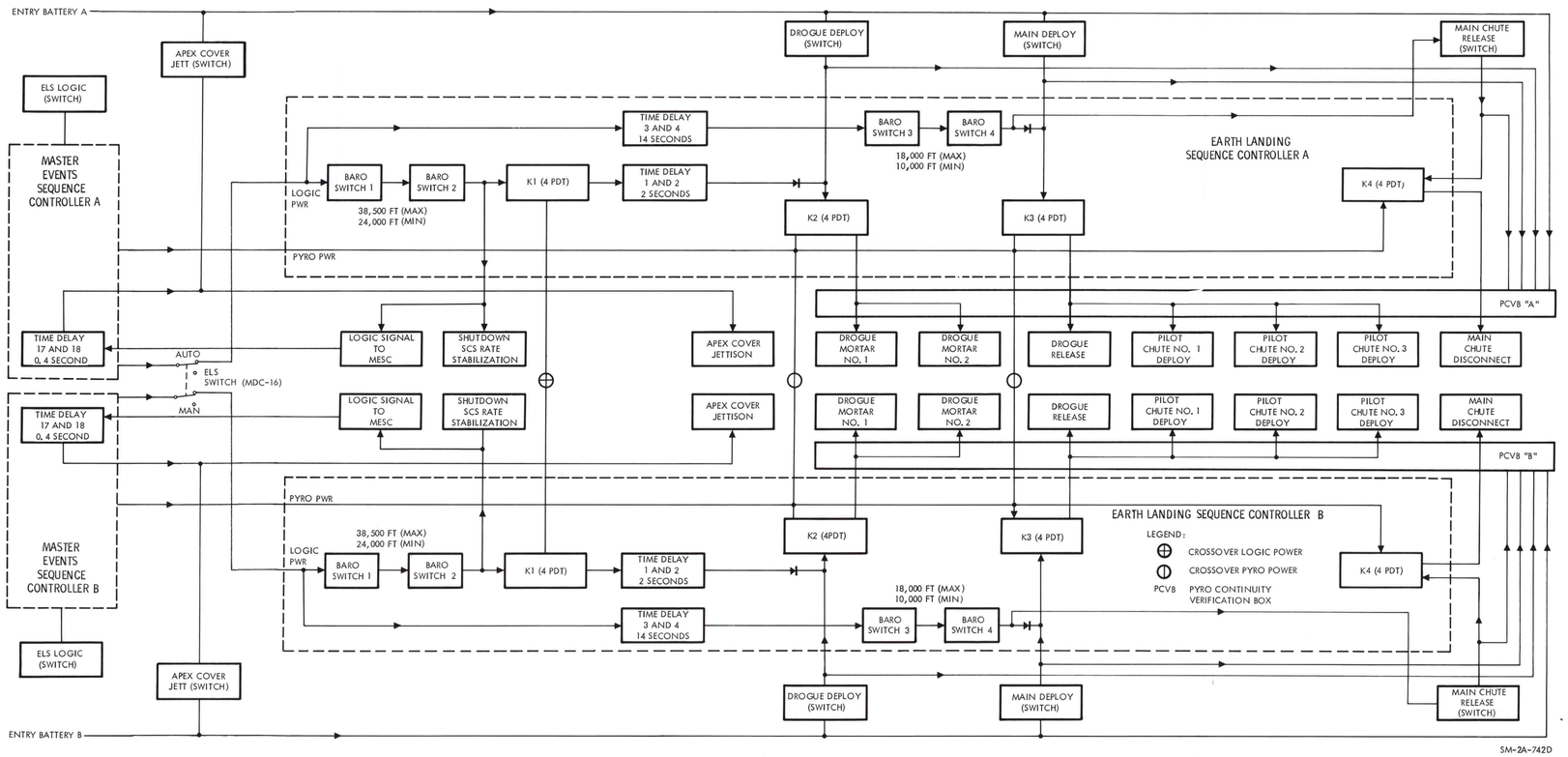

Figure 2.9-7. Earth Landing System Controller Block Diagram

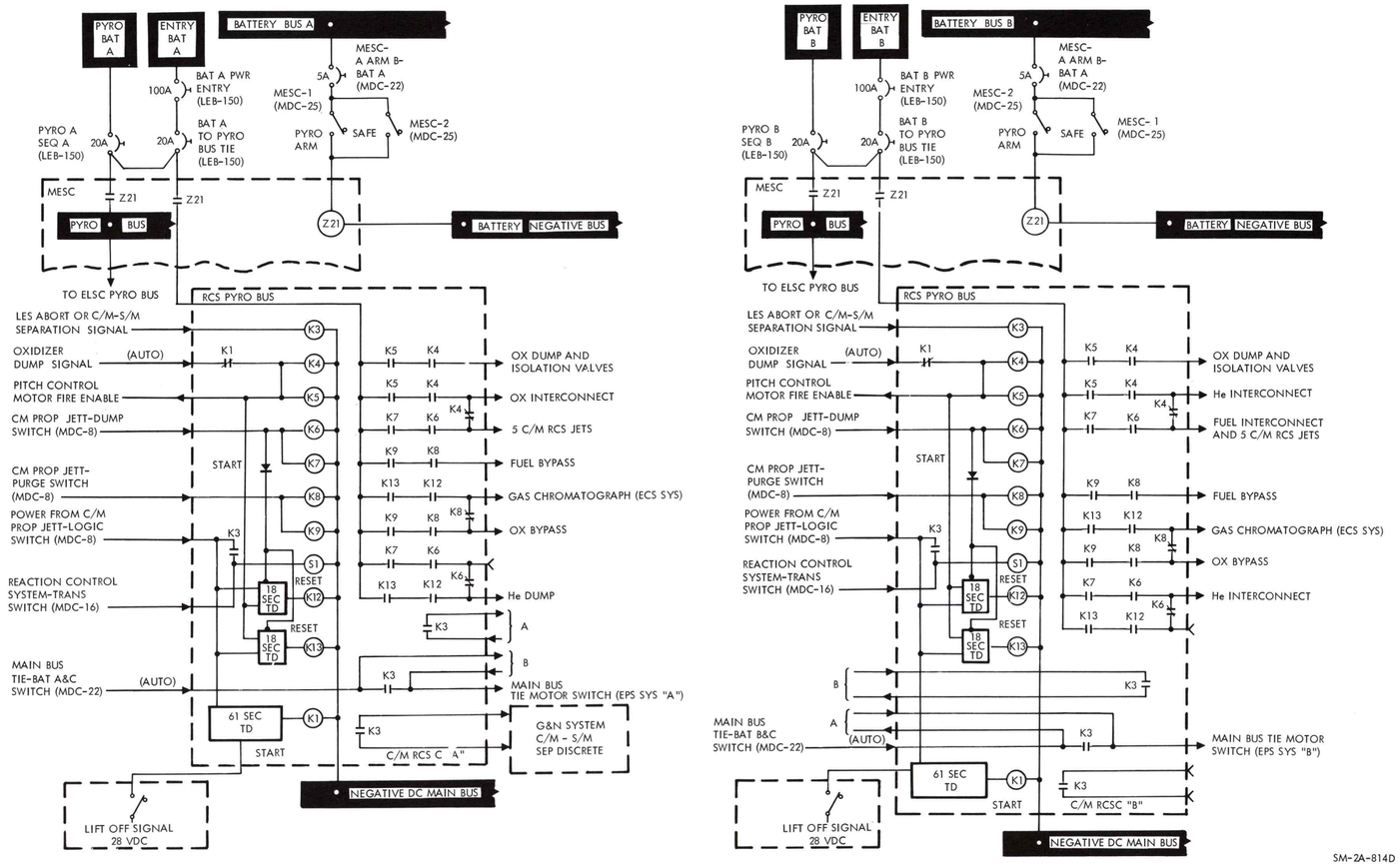

Figure 2.9-8. C/M Reaction Control System Controller Schematic

SEQ

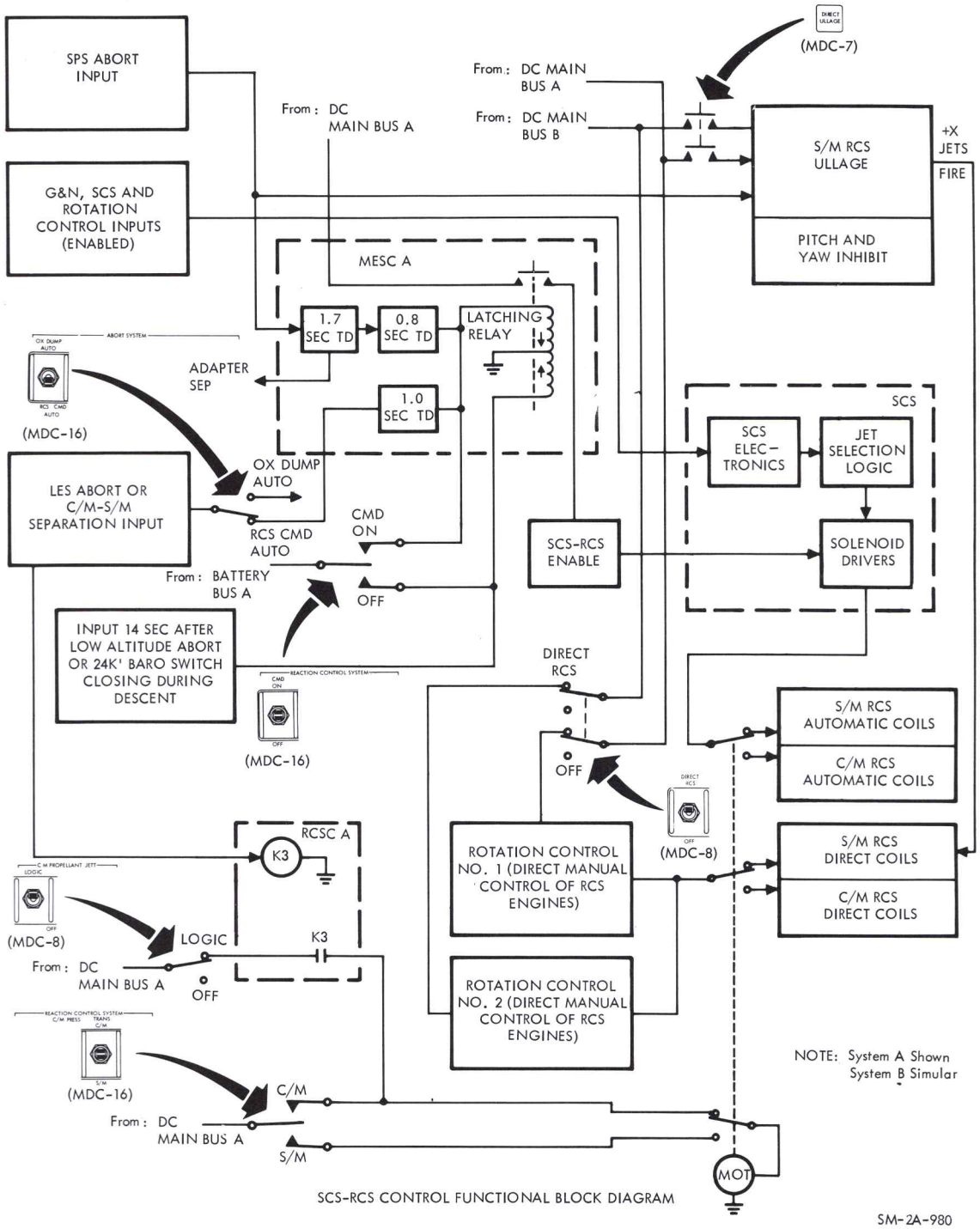

Figure 2.9-9. SCS-RCS Functional Block Diagram

SEQ

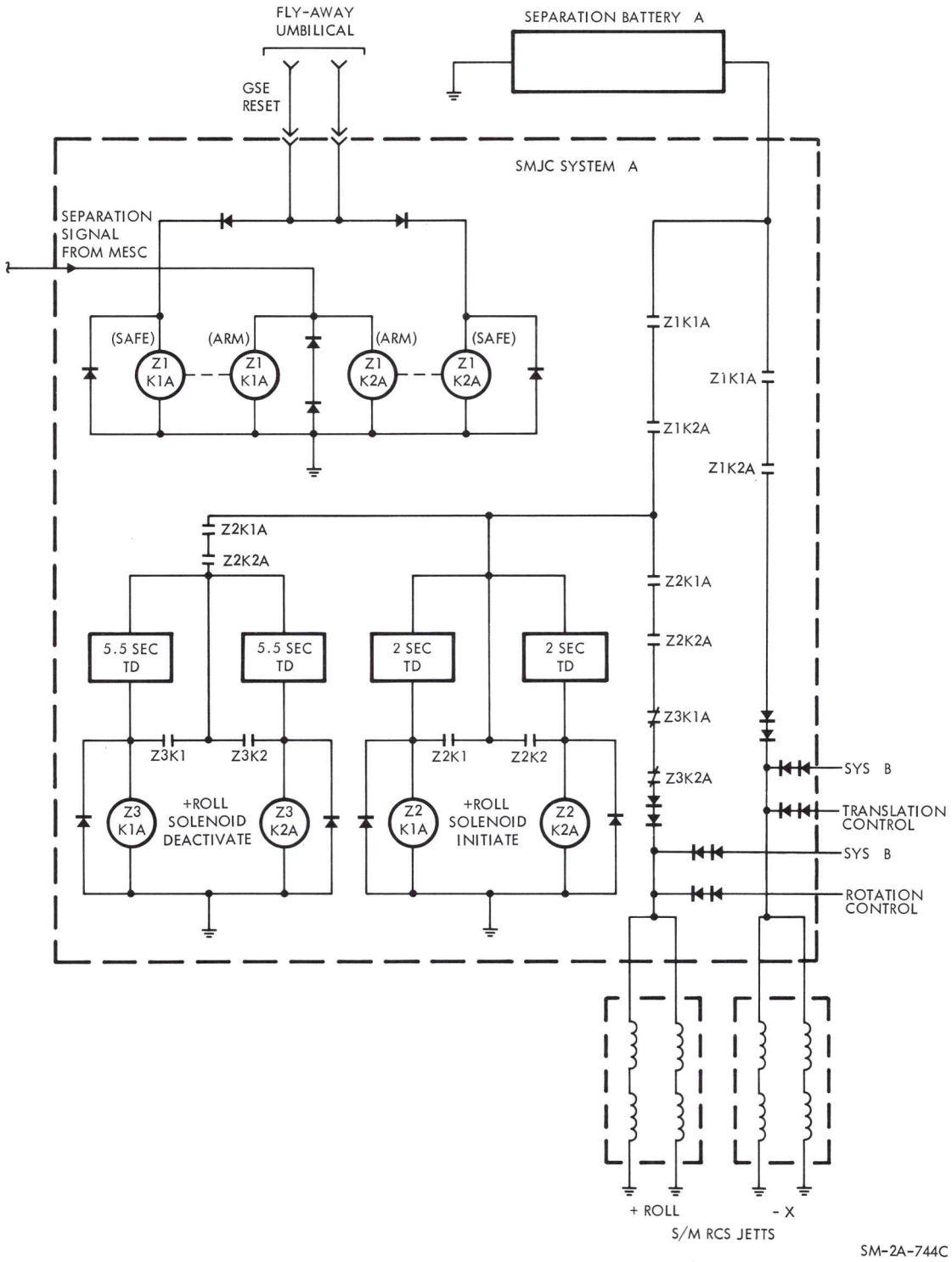

Figure 2.9-10. Service Module Jettison Controller Schematic

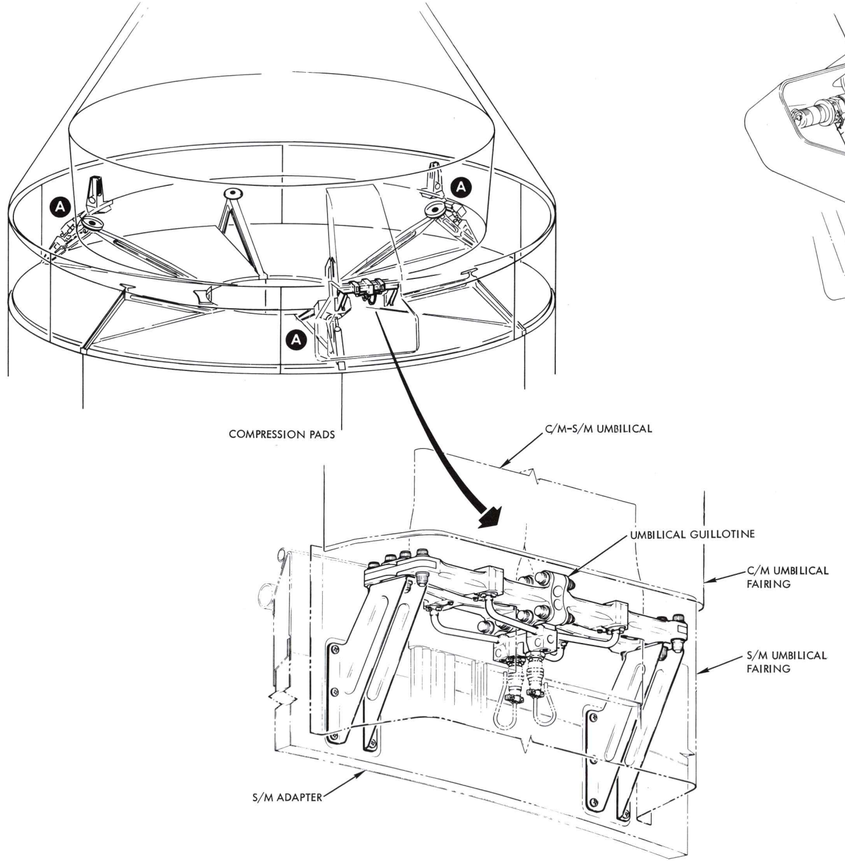

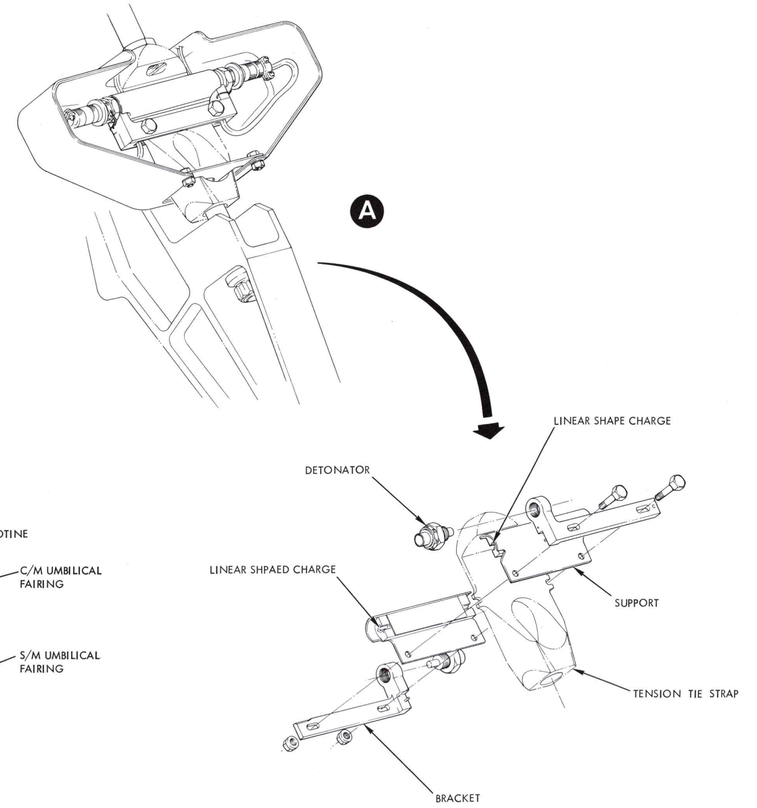

Figure 2.9-11. C/M-S/M Separation Mechanism

SEQ

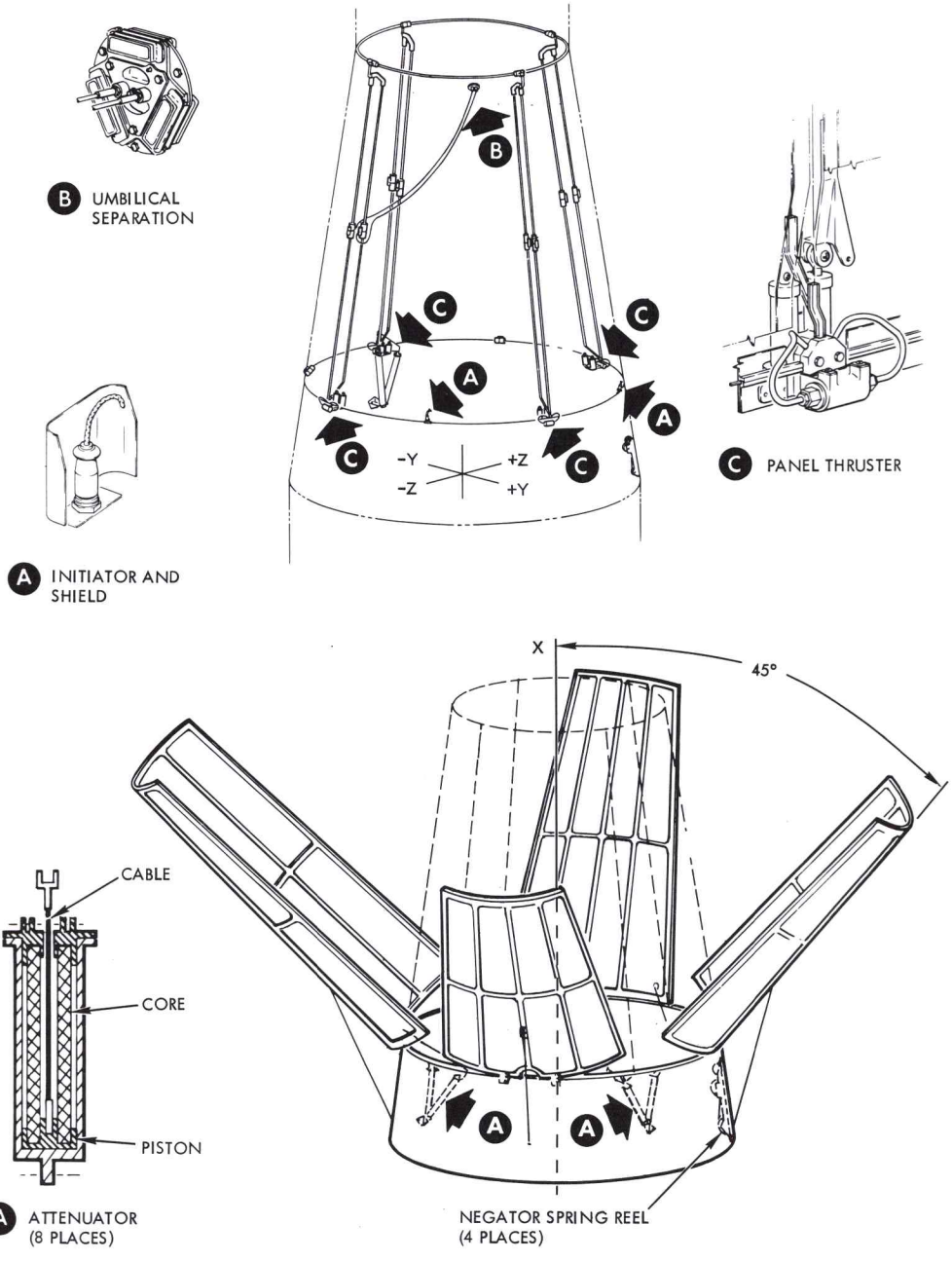

Figure 2.9-12. Adapter Separation Mechanism

SEQ

place. Four spring-loaded reels hold the panels in a 45-degree open position. The panels are stopped in the open position by eight attenuators that have honeycomb cores.

2.9.3.2 Emergency Detection System.

The ECS consists of sensors, logic circuitry, and signal conditioners located in the launch vehicle, displays and controls located in the C/M, and a Q-ball which is located on the forward tip of the LES tower above the canard. The displays and controls consist of L/V rates, L/V guidance, abort, and engines lights, along with an angle-of-attack indicator and control switches. The L/V portion of the EDS and the Q-ball are powered by eight L/V batteries. The displays are powered by two entry batteries A and B.

2.9.3.3 Launch Escape System.

The LES consists of two major assemblies (figure 2.9-3) that are installed on top of the command module prior to launch. The first structure is a four-legged, welded tubular titanium tower. The tower is attached to the command module with four frangible nuts on studs. Two detonator assemblies are installed in each nut to break it when LES tower jettison is commanded. The second structure is cylindrical in shape topped by the Q-ball, and houses the launch escape, tower jettison, and pitch control motors. A canard subsystem is installed near the forward end below the Q-ball.

2.9.3.3.1 LES Motors.

Each of the three motors in the LES (figure 2.9-3) are fired by two igniter assemblies. The three motors are the launch escape motor, tower jettison motor, and pitch control motor. The pitch control motor works in conjunction with the launch escape motor during a LES abort initiated prior to 61 seconds after lift-off. The pitch control motor has a fixed zero-degree, single-exhaust nozzle and is mounted below the ballast enclosure in a horizontal position. The motor produces approximately 2500 pounds of thrust for about 0.5 second to force the nose of the LES tower in the -Z direction. Firing of the pitch control motor is inhibited 61 seconds after lift-off by a signal from the C/M RCSC. The launch escape motor has four nozzles that have a centerline cant angle of 35 degrees. The resultant thrust vector deflection is obtained by offsizing the nozzle throat diameters and producing a thrust vector in the -Z direction. Thrust output is approximaterly 4 seconds. Lateral translation of the escape vehicle is aided by the thrust vector alignment offset during an LES abort. The tower jettison motor has two nozzles in which the thrust vector alignment is offset approximately 4 degrees to produce a thrust component in the +Z direction. Thrust output is approximately 33,000 pounds.

2.9.3.3.2 Canard Subsystem.

The canard subsystem (figure 2.9-3) consists of two deployable surfaces faired into the outer skin of the LES below the Q-ball interface. Each

surface is mounted on two hinges and is operated open by a pyrotechnic thruster with redundant gas cartridges. The surfaces are approximately 47 inches long, clam-shell shaped, and constructed of double-skin ribbed inconel. The canard surfaces are automatically opened during a LES abort and aerodynamic forces acting on the surfaces control a turnaround maneuver of the C/M. (Refer to Abort Procedures in section 9.)

2.9.3.4 Earth Landing Subsystem.

The ELS consists of the parachute subsystem (figure 2.9-4), two earth landing sequence controllers (figure 2.9-7), and the apex cover jettison mechanism.

The parachute subsystem is comprised of two fist-ribbon-type nylon drogue parachutes, 13.7 feet in diameter; three ring-slot-type nylon pilot parachutes, 7.2 feet in diameter; three ring-sail-type nylon main parachutes, 83.5 feet in diameter; deployment bags; bridles; suspension lines; mortars; and the necessary hardware for attachment to the C/M. The parachute subsystem is housed in the forward compartment under the apex cover of the C/M.

The earth landing sequence controllers are located in the right equipment bay of the C/M and control automatic operation of the ELS. Crossover circuitry between the controllers ensures correct output signals. Backup emergency switches are provided on MDC-5 for apex cover jettison and parachute deployment. The apex cover is jettisoned by four gas-operated thrusters. Two gas-type cartridges are employed for redundancy and operate two thrusters each. Either pair of thrusters will jettison the apex cover. A pilot parachute and mortar are installed in the forward end of the apex cover. The mortar is fired at exactly the same time as the apex cover thrusters to deploy the parachute. The parachute will pull the apex cover from the negative pressure area following the C/M.

2.9.4 PERFORMANCE AND DESIGN DATA.

Entry descent velocities, altitude, and time are contained in the following tabulated data. The figures are based on a command module recovery weight of 11,000 pounds and a standard day barometric pressure.

SEQ

The tabulated data states the automatic events that normally occur in the ELS during descent. Under certain entry conditions, the apex cover may be manually jettisoned, and the drogue parachutes manually deployed at 45,000 feet. Refer to operational limitations and restrictions that follow the tabulated data.

Occurrence	Altitude	Time on Parachutes	Descent Velocity
TWO DROGUE PARACHUTES			
24,000 feet baroswitch closes	24,900 to 21,500 feet		
Apex cover jettison	24,000 feet baroswitch closure + 0.4 seconds		425 ft/sec
Drogue parachutes (2) deploy	24,000 feet baroswitch closure + 2.0 seconds		410 ft/sec
10,000 feet baroswitch closes	10,950 to 9,100 feet		
Drogue parachutes (2) release and main parachutes deploy	10,000 feet baroswitch closure	45 to 46 seconds	225 ft/sec
Main parachutes open (reefed) after two drogue parachutes release			235 ft/sec
Main parachutes disreef	8400±500 feet	8 seconds after line stretch	110 ft/sec
ONE DROGUE PARACHUTE			
Drogue parachute (1) release and main chutes deploy	10,000 feet baroswitch closure	40 seconds	275 ft/sec
Main parachutes open (reefed) after one drogue parachute release			290 ft/sec
Main parachutes disreef	8200±500 feet	8 seconds after line stretch	120 ft/sec
Touchdown (3 main parachutes)		5 minutes	28 ft/sec
Touchdown (2 main parachutes)		4.2 minutes	33.5 ft/sec

2.9.4.1 Power Requirements.

The SECS requires power only during the launch and ascent phase, for CSM-SLA separation in orbit, for C/M-S/M separation during the pre-entry phase, and during the parachute descent phase. Most all events performed by the SECS occur instantaneously and not on a continuous duty cycle. In accordance with the Mission Modular Data Book (SID 66-1177), dated 1 September 1966, there are no power requirements for the SECS.

2.9.5 OPERATIONAL LIMITATIONS AND RESTRICTIONS.

Under certain entry conditions, the spacecraft may become unstable. Because of the erratic aerodynamic damping coefficients, wind gusts, and shears, the astronaut may not be able to damp the oscillations with single RCS. If this should occur, the apex cover and drogue parachutes may be manually deployed at 45,000 feet. This will stabilize and keep the C/M in a heat shield forward descending attitude. Figure 2.9-13 portrays the drogue development design envelope. The following precautions should be observed.

- Manual initiation of apex cover jettison and drogue parachute deployment should never be accomplished above 45,000 feet during entry. Excessive aerodynamic heating above that altitude will affect the structural integrity of the parachute attach fittings.
- The C/M RCS must be turned off prior to apex cover jettison. Heat from the firing of rocket engines will damage parachutes.

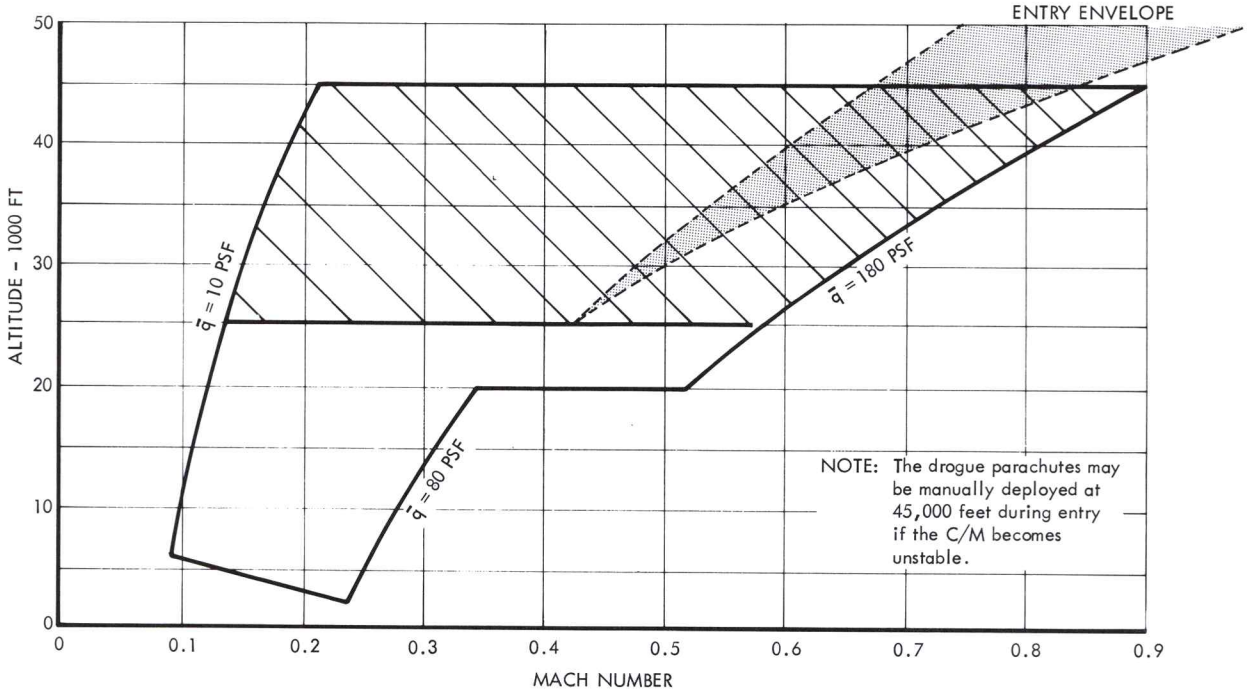

Figure 2.9-13. Drogue Parachute Deployment Design Envelope

SEQ

- Manual initiation of apex cover jettison must not be executed with LES tower attached.
- Manual initiation of drogue parachute deployment must not be executed with apex cover on the vehicle.
- Manual initiation of main parachute deployment must not be executed prior to drogue deployment.
- The LES tower and apex cover should never be manually jettisoned above the automatic mode of 24,000 feet during LES aborts.
- It is impossible to release the main parachutes with the ELS switch (MDC-16) in the MAN position. This switch must be in the AUTO position and a 14-second time delay relay energized before power is applied to the main parachute release switch (MDC-16).

2.9.6 TELEMETRY MEASUREMENTS.

The following is a complete list of all sequential systems telemetry data that is monitored by flight controllers and ground support personnel. The last column contains the name and type of S/C crew display. The display utilizes the same pickoff or signal source as telemetry, unless a separate measurement number is included in the display column.

An asterisk (*) by the measurement number denotes information which is not available for recording or telemetry transmission during PCM low bit rate operation.

Meas. No.	Description	Sensor Range	Crew Display
CD 0136 X	EDS abort logic out B	Event	None
CD 0140 X	Direct ullage on A	Event	None
CD 0141 X	Direct ullage on B	Event	None
CD 0170 X	RCS activate signal A	Event	None
CD 0171 X	RCS activate signal B	Event	None
CD 0173 X	C/M-RCS pressurize signal A	Event	None
CD 0174 X	C/M-RCS pressurize signal B	Event	None
*CD 0200 V	DC voltage logic bus A	+0/+37 vdc	None
*CD 0201 V	DC voltage logic bus B	+0/+37 vdc	None
CD 0230 X	Forward heat shield jettison A	Event	None

SYSTEMS DATA

Meas. No.	Description	Sensor Range	Crew Display
CD 0231 X	Forward heat shield jettison B	Event	None
CD 0315 X	EDS enable A	Event	None
CD 0316 X	EDS enable B	Event	None
CD 1006 X	LES motor fire initiate A	Event	None
CD 1007 X	LES motor fire initiate B	Event	None
CE 0001 X	Drogue deploy relay close A	Event	None
CE 0002 X	Drogue deploy relay close B	Event	None
CE 0003 X	Main parachute deploy-drogue release relay A	Event	None
CE 0004 X	Main parachute deploy-drogue release relay B	Event	None
CE 0007 X	Baroswitch lock-in relay close A	Event	None
CE 0008 X	Baroswitch lock-in relay close B	Event	None
*CE 0035 P	Barometric pressure static reference	+0/+15 psia	Indicator
CE 0321 X	Main chute disconnect relay A	Event	None
CE 0322 X	Main chute disconnect relay B	Event	None
*LS C001 V	Q-ball vector sum output	+0/+5 vdc	Indicator
BS 0016 X	Launch vehicle guidance fail A	Event	L/V GUID light
BS 0020 X	Launch vehicle rate excessive A	Event	L/V RATE light
BS 0030 X	Engine No. 1 out A	Event	ENGINES 1 light
BS 0032 X	Engine No. 2 out A	Event	ENGINES 2 light
BS 0034 X	Engine No. 3 out A	Event	ENGINES 3 light
BS 0036 X	Engine No. 4 out A	Event	ENGINES 4 light
BS 0038 X	Engine No. 5 out A	Event	ENGINES 5 light
BS 0040 X	Engine No. 6 out A	Event	ENGINES 6 light

SEQ

SYSTEMS DATA

Meas. No.	Description	Sensor Range	Crew Display
BS 0042 X	Engine No. 7 out A	Event	ENGINES 7 light
BS 0044 X	Engine No. 8 out A	Event	ENGINES 8 light
BS 0061 X	Lift-off signal B	Event	LIFT OFF light
CS 0080 X	EDS abort request A	Event	ABORT light
*LS 0090 X	Tower physical separation monitor A	Event	None
*LS 0091 X	Tower physical separation monitor B	Event	None
CS 0100 X	C/M-S/M physical separation monitor A	Event	None
CS 0101 X	C/M-S/M physical separation monitor B	Event	None
SS 0120 X	S/M/adapter physical separation monitor A	Event	None
SS 0121 X	S/M/adapter physical separation monitor B	Event	None

SECTION 2

SUBSECTION 2.10

CAUTION AND WARNING SYSTEM

2.10.1 INTRODUCTION.

The C&WS monitors critical parameters of most S/C systems in the C/M and S/M. When a malfunction or out-of-tolerance condition occurs in any of these systems, the crew is immediately alerted in order that corrective action may be taken.

2.10.2 FUNCTIONAL DESCRIPTION.

Upon receipt of malfunction or out-of-tolerance signals, the C&WS simultaneously identifies the abnormal condition and alerts the crew to its existence. Each signal will activate an appropriate systems status indicator and a master alarm circuit. The master alarm circuit visually and aurally attracts the crew's attention by alarm indicators on the MDC and an alarm tone in the headsets. Crew acknowledgment of an abnormal condition consists of resetting the master alarm circuit, but retaining the particular systems status malfunction indication. The capability exists for the crew to select several modes of observing systems status and master alarm indicators, and of monitoring C/M or S/M systems.

2.10.3 MAJOR COMPONENT/SUBSYSTEM DESCRIPTION.

The C&WS consists of one major component, the detection unit. It is located behind MDC-13, and therefore, is neither visible nor accessible to the crew during the mission. The balance of the system is made up of visual indicators, aural alerting and associated circuits, and those switches required to control the various system functions. Visual indicators include the five upper-most electromechanical event devices on MDC-18, as well as all systems status and master alarm lights.

The detection unit circuits consist of comparators, logic, level detectors, lamp drivers, and a master alarm and tone generator. Also incorporated are two redundant power supplies that furnish regulated +12 and -12 d-c voltages for the electronics. Inputs to the detection unit consist of both analog and event-type signals.

C&WS

The analog signals, totaling 51 inputs, are in the 0- to 5-volt d-c range. Alarm limits for these signals trigger voltage comparators, which, in turn, activate logic and lamp-driver circuits. This causes activation of the master alarm circuit and tone generator, illumination of applicable

systems status lights on MDC-10 and -11, and/or activation of applicable electromechanical event indicators on MDC-18. A total of 25 event inputs are fed to the C&WS detection unit. These signals originate from solid state and mechanical switch closures in malfunction sensing devices. Of this number, 19 signals will directly illuminate applicable system status lights, and through logic circuitry, activate the master alarm circuit (and tone generator). Two other event signals directly illuminate the system status lights, but require level detectors to activate the master alarm circuit. Each of the four remaining event signals is sent to an "or" gate, which is also fed by two analog signals. The resulting output will activate lamp drivers and the master alarm circuit. One other event signal, originating within the detection unit, directly illuminates the CAUT/WARN FAIL light, but activates only the MASTER ALARM lights of the master alarm circuit.

The master alarm circuit alerts crewmembers whenever abnormal conditions are detected. This is accomplished visually by the illumination of remote MASTER ALARM switch-lights on MDC-3 and -18, and the MASTER ALARM light on LEB-103. An audio alarm tone, sent to the three headsets, aurally alerts the crew, regardless of whether the telecom system is activated. The output signal of the tone generator is a square wave that is alternately 750 cps and 2000 cps, changing at a frequency of 2.5 cps. Although the tone is audible above the conversation level, it does not render normal conversation indistinct or garbled. When the crew has noted the abnormal condition, the three alarm lights and the tone generator are deactivated and reset by pressing either MASTER ALARM switch-light, both of which incorporate a push-switch. This action leaves the systems status lights illuminated, and resets the master alarm circuit for alerting the crew to the next abnormal condition. The individual systems status lights will remain illuminated until the malfunction or out-of-tolerance condition is corrected.

The C&WS power supplies include sensing and switching circuitry that assure unit self-protection should high-input current, or high- or low-output voltage occur. Any of these conditions will cause the illumination of the master alarm lights and the CAUT-WARN FAIL systems status light. The tone generator, however, will not be activated due to requiring the 12-volt output from the malfunctioned power supply for its operation. The crew must then manually select the redundant power supply to return the C&WS to operation. In so doing, the CAUT/WARN FAIL status light is extinguished, but the master alarm circuit is activated, thus requiring it to be reset.

Incorporated into the C&WS is the capability to test the lamps of systems status and master alarm lights. Position 1 of the C/W LAMP TEST switch tests the illumination of status lights on MDC-10 and the MASTER ALARM switch-lights on MDC-3 and MDC-18. Position 2 tests only the status lights on MDC-11. The third MASTER ALARM light is on LEB-103, and is tested along with the nine G&N condition lights on the panel, by pressing the CHECK CONDITION LAMPS push-switch on LEB-105. Although these nine lights are not part of the C&WS, all but three of them (PGNS, ZERO ENCODER, and IMU DISPLAY) are duplicated on MDC-10.

Switches on the MDC enable the crew to select C&WS operational modes. The position of the MODE switch (MDC-11) establishes the S/C systems to be monitored. Before separation and entry, systems in both the C/M and S/M are monitored for malfunction or out-of-tolerance conditions. After CSM separation, however, only those systems in the C/M are monitored. Repositioning the switch also prevents S/M systems status lights and event indicators from remaining activated after separation.

The C/W switch (MDC-13) permits three modes of status and alarm light illumination. For most of the mission the switch is set to the NORMAL position to give normal C&WS light operation; that is, upon receipt of abnormal condition signals, all systems status lights and master alarm lights are capable of illumination. During the ascent phase the switch is set to the BOOST position, so that although all other C&WS lights operate normally, the MASTER ALARM switch-light on MDC-3 will not illuminate. This prevents possible confusion on MDC-3 between the red MASTER ALARM light and the adjacent red ABORT light. The ACK switch position is selected when the crew desires to adapt their eyes to orbital darkness, or if a continuously illuminated systems status light is undesirable. While in this mode, incoming signals will activate only the master alarm lights and the tone generator. To determine the abnormal condition, the crew must press either MASTER ALARM switch-light. This illuminates the applicable systems status light, and deactivates and resets the master alarm circuit. The systems status light will remain illuminated only as long as the switch-light is pressed. However, it may be recalled as long as the abnormal condition exists by again pressing either switch-light.

2.10.3.1 Electrical Power Distribution.

The C&WS only receives power from 28-volt d-c sources. (See figure 2.10-1.) Before CSM separation, the power source is from the fuel cells in the S/M, and following separation, from batteries located in the C/M.

2.10.4 PERFORMANCE AND DESIGN DATA.

2.10.4.1 C&WS Power Consumption Data.

Power consumption by the C&WS consists of a small, variable amount. The maximum quiescent power for detection unit operation is only 7.5 watts. The remainder of the power consumed depends upon the number of system status and master alarm lights that are illuminated at any one time. Each light contains two lamps (for redundancy) requiring approximately 3.6 watts per light.

C&WS

2.10.5 OPERATIONAL LIMITATIONS AND RESTRICTIONS.

2.10.5.1 C&WS General Data.

With the C/W switch in the BOOST position during ascent, the MASTER ALARM switch-light on MDC-3 will not illuminate should a malfunction occur. The master alarm circuit reset capability of the light is also disabled during this time. This requires the MASTER ALARM switch-light on MDC-18 to be used exclusively for monitoring and resetting functions.

Several peculiarities should be noted in regard to the CAUT/WARN-POWER switch. Whenever this switch is moved from, or through, the OFF position to either power supply position, the master alarm circuit is activated, which then requires it be reset. Also, switching from one power supply to another (when there is no power supply failure) may cause the CAUT/WARN FAIL system status light to flicker as the switch passes through the OFF position.

Should the redundant power supply also fail, the C&WS is degraded to the following extent. Rendered inoperative is the complete master alarm circuit, as well as those system status lights that illuminate as the result of analog-type input signals. This leaves only those status lights operative that require event-type input signals. They include the following 22 S/M and C/M lights; CDU FAIL, G&N ACCEL FAIL, AGC PWR FAIL, IMU FAIL, G&N ERROR, IMU TEMP, GMBL LOCK, AGAP TEMP, SPS ROUGH ECO, H_2O ACCUM FAIL, PITCH GMBL DR FAIL, YAW GMBL DR FAIL, SPS PU SNSR FAIL, O_2 FLOW HI, F/C BUS DISCONNECT, AC BUS 1 FAIL, AC BUS 1 OVERLOAD, AC BUS 2 FAIL, AC BUS 2 OVERLOAD, MN BUS A UNDERVOLT, and MN BUS B UNDERVOLT. The CAUT/WARN FAIL light will be operative only while the switch is in position 1 or 2.

The CAUT/WARN-MODE switch must be in the CSM position in order to conduct a lamp test of those system status lights associated with S/M systems. The status lights of C/M systems may be tested with the MODE switch in either position. Circuit design permits a complete lamp test to be conducted with the C/W switch in the NORMAL or ACK position only. In the BOOST position all lamps except those of the MASTER ALARM light on MDC-3 may be tested.

Normally, each abnormal condition signal will activate the C&WS master alarm circuit and tone generator, and illuminate an applicable systems status light. The one exception to this concept is when the C&WS power supply fails. If this occurs, only the master alarm lights and those status lights associated with event channels are capable of functioning. Status lights requiring analog signals and the master alarm tone generator will be inoperative. This is due to these circuits requiring the +12 and -12 d-c voltage outputs of the failed power supply for their operation.

The MASTER ALARM light on LEB-103 is part of the master alarm circuit of the C&WS. As such, it is illuminated whenever the master alarm circuit is activated by an incoming abnormal condition signal. A lamp check of this light, however, is not accomplished by the C&WS. Instead, the light is checked by pressing the CHECK CONDITION LAMPS push-switch on LEB-105. The primary function of this switch is to check the lamps of the nine G&N condition lights on LEB-103, none of which are part of the C&WS.

2.10.5.2 System Status Light Data.

The following list provides the lamp trigger values and associated information for all system status lights on MDC-10 and -11.

SYSTEMS DATA

Status Light	Lamp Trigger Value	TLM Code No.	Other Indication	S/C Mode	Remarks
CDU FAIL	1. Loss (-50%) 25.6KC supply 2. Loss (-50%) motor excitation 3. ICDU error >1.2 mr for 5 seconds 4. MCDU error >1.2 mr for 5 seconds 5. OCDU error >1.2 mr for 5 seconds	CG5002X	PGNS light illuminated (LEB 103).	C/M	Light enabled in fine align mode only.
IMU FAIL	1. Loss (-50%) 3200 cps 2. Loss (-50%) 800 cps wheel power 3. IG servo air >2.9 mr for 2 seconds 4. MG servo air >2.9 mr for 2 seconds 5. OG servo air >2.9 mr for 2 seconds	CG5001X	PGNS light illuminated (LEB 103).	C/M	Inhibited (by AGC program) in coarse align mode.
IMU TEMP	1. IRIG temp <132°F 2. IRIG temp >138°F 3. PIPA temp <132°F 4. PIPA temp >138°F	CG5006X	None	C/M	IRIG temp (135°F) is internal and not end cap temp.
AGAP TEMP	1. Any BMAG <169°F 2. Any BMAG >171°F	CH2030V	None	C/M	
G&N ACCEL FAIL	1. X PIPA error >27 mr for 5 seconds 2. Y PIPA error >27 mr for 5 seconds 3. Z PIPA error >27 mr for 5 seconds	CG5000X	PGNS light illuminated (LEB 103).	C/M	
G&N ERROR	1. Down TLM word rate too high or low 2. Up TLM bit rate too high 3. Up-link data in error	CG5005X	DSKY-TM FAIL (LEB-106) and PGNS lights (LEB-103) illuminated.	C/M	
GMBL LOCK	MG angle >±60°	CG5003X	FDAI attitude ball red zone under new axis indicator.	C/M	
H_2 PRESS	1. Tank 1 <220 psia 2. Tank 1 >270 psia 3. Tank 2 <220 psia 4. Tank 2 >270 psia	SF0039P SF0040P	TANK PRESSURE-H_2-1 indicator TANK PRESSURE-H_2-1 indicator	S/M	
C/M RCS A	1. Fuel tk He press <265 psia 2. Fuel tk He press >325 psia 3. Ox tk He press <265 psia 4. Ox tk He press >325 psia	CR0005P CR0011P	C/M RCS PRESS-F indicator C/M RCS PRESS-OX indicator	C/M	Light functional only when CAUT/WARN-MODE switch in C/M.
C/M RCS B	1. Fuel tk He press <265 psia 2. Fuel tk He press >325 psia 3. Ox tk He press <265 psia 4. Ox tk He press >325 psia	CR0006P CR0012P	C/M RCS PRESS-F indicator C/M RCS PRESS-OX indicator	C/M	Light functional only when CAUT/WARN-MODE switch in C/M.
AGC PWR FAIL	1. Loss of +28 vdc supply 2. Loss of +13 vdc supply 3. Loss of -3 vdc supply	CG5030X	PGNS light illuminated (LEB 103).	C/M	
O_2 PRESS	1. Tank 1 <800 psia 2. Tank 1 >950 psia 3. Tank 2 <800 psia 4. Tank 2 >950 psia	SF0037P SF0038P	TANK PRESSURE-O_2-1 indicator TANK PRESSURE-O_2-2 indicator	S/M	

SYSTEMS DATA

Status Light	Lamp Trigger Value	TLM Code No.	Other Indication	S/C Mode	Remarks
S/M RCS A	1. Pkg temp <63°F 2. Pkg temp >175°F	SR5065T	S/M RCS TEMP-PKG indicator	S/M	
	3. Reg He press <155 psia 4. Reg He press >215 psia	SR5729P	S/M RCS PRESS-MANF indicator		
S/M RCS B	1. Pkg temp <63°F 2. Pkg temp >175°F	SR5066T	S/M RCS TEMP-PKG indicator	S/M	
	3. Reg He press <155 psia 4. Reg He press >215 psia	SR5776P	S/M RCS PRESS-MANF indicator		
S/M RCS C	1. Pkg temp <63°F 2. Pkg temp >175°F	SR5067T	S/M RCS TEMP-PKG indicator	S/M	
	3. Reg He press <155 psia 4. Reg He press >215 psia	SR5817P	S/M RCS PRESS-MANF indicator		
S/M RCS D	1. Pkg temp <63°F 2. Pkg temp >175°F	SR5068T	S/M RCS TEMP-PKG indicator	S/M	
	3. Reg He press <155 psia 4. Reg He press >215 psia	SR5830P	S/M RCS PRESS-MANF indicator		
SPS ROUGH ECO	1. 180G's for 70 m seconds 2. 360G's for 30 m seconds	None	Engine cuts off.	S/M	G-levels are peak-to-peak.
H_2O ACCUM FAIL	Three O_2 bubbles (min) in outlet water line	None	None	C/M	
F/C BUS DISCONNECT	1. Fwd current at 75 amps for 15 min, or at 112 amps for 25 to 300 seconds	SC2120X SC2121X SC2122X	MN BUS A event indicator (3)	S/M	
	2. Reverse current at 4 amps for 10 sec, or 20 amps for 1 sec	SC2125X SC2126X SC2127X	MN BUS B event indicator (3)		
F/C 1	1. H_2 flow <0.018 lb/hr 2. H_2 flow >0.16 lb/hr	SC2139R	FUEL CELL-FLOW-H_2 indicator	S/M	Event indicators pH H_1, F/C RAD TEMP LO, H_2 PRESS, O_2 PRESS, and N_2 PRESS are activated at lamp trigger values.
	3. O_2 flow <0.14 lb/hr 4. O_2 flow >1.27 lb/hr	SC2142R	FUEL CELL-FLOW-O_2 indicator		
	5. At pH factor of 9	SC2160X	pH HI event ind		
	6. Skin temp <360°F 7. Skin temp >500°F	SC2084T	MODULE TEMP-SKIN indicator		
	8. Cond exh <155°F 9. Cond exh >175°F	SC2081T	MODULE TEMP-COND EXH indicator		
	10. Rad out temp below -30°F	SC2087T	F/C RAD TEMP LOW event indicator		
	11. H_2 reg press >75 psia	SC2069P	REG OUT PRESS HI-H_2 event ind		
	12. O_2 reg press >75 psia	SC2066P	REG OUT PRESS HI-H_2 event ind		
	13. N_2 reg press >70 psia	SC2060P	REG OUT PRESS HI-H_2 event ind		
INV 1 TEMP HI	At 241°F	CC0175T	None	C/M	
GLYCOL TEMP LOW	At -30°F	CF0020T	GLY EVAP-OUTLET TEMP indicator	C/M	
SPS PRESS	1. Fuel tk He press <160 psia 2. Fuel tk He press >200 psia	SP0006P	PRESSURE-FUEL indicator	S/M	
	3. Ox tk He press <160 psia 4. Ox tk He press >200 psia	SP0003P	PRESSURE-OX indicator		

C&WS

Status Light	Lamp Trigger Value	TLM Code No.	Other Indication	S/C Mode	Remarks
F/C 2	1. H_2 flow <0.018 lb/hr 2. H_2 flow >0.16 lb/hr	SC2140R	FUEL CELL-FLOW-H_2 indicator	S/M	Event indicators pH HI, F/C RAD TEMP LO, H_2 PRESS, O_2 PRESS, and N_2 PRESS are activated at lamp trigger values.
	3. O_2 flow <0.14 lb/hr 4. O_2 flow >1.27 lb/hr	SC2143R	FUEL CELL-FLOW-H_2 indicator		
	5. At pH factor of 9	SC2161X	pH HI event ind		
	6. Skin temp <360°F 7. Skin temp >500°F	SC2085T	MODULE TEMP-SKIN indicator		
	8. Cond exh <155°F 9. Cond exh >175°F	SC2082T	MODULE TEMP-COND EXH indicator		
	10. Rad out temp below -30°F	SC2088T	F/C RAD TEMP LOW event indicator		
	11. H_2 reg press >75 psia	SC2070P	REG OUT PRESS HI-H_2 event indicator		
	12. O_2 reg press >75 psia	SC2067P	REG OUT PRESS HI-O_2 event indicator		
	13. N_2 reg press >70 psia	SC2061P	REG OUT PRESS HI-N_2 event indicator		
INV 2 TEMP HI	At 241°F	CC0176T	None	C/M	
PITCH GMBL DR FAIL	1. Under 6 amps 2. Over 40 amps	SP1000X	None	S/M	Overcurrent conditions dependent upon time and temp.
SPS WALL TEMP HI	At 378°F	SP0020T	None	S/M	
F/C 3	1. H_2 flow <0.018 lb/hr 2. H_2 flow >0.16 lb/hr	SC2141R	FUEL CELL-FLOW-H_2 indicator	S/M	Event indicators pH HI, F/C RAD TEMP LO, H_2 PRESS, O_2 PRESS, and N_2 PRESS are activated at lamp trigger values.
	3. O_2 flow <0.14 lb/hr 4. O_2 flow >1.27 lb/hr	SC2144R	FUEL CELL-FLOW-O_2 indicator		
	5. At pH factor of 9	SC2162X	pH HI event ind		
	6. Skin temp <360°F 7. Skin temp >500°F	SC2086T	MODULE TEMP-SKIN indicator		
	8. Cond exh <155°F 9. Cond exh >175°F	SC2083T	MODULE TEMP-COND EXH indicator		
	10. Rad out temp below -30°F	SC2089T	F/C RAD TEMP LOW event indicator		
	11. H_2 reg press >75 psia	SC2071P	REG OUT PRESS HI-H_2 event indicator		
	12. O_2 reg press >75 psia	SC2068P	REG OUT PRESS HI-O_2 event indicator		
	13. N_2 reg press >70 psia	SC2062P	REG OUT PRESS HI-N_2 event indicator		
INV 3 TEMP HI	At 241°F	CC0177T	None	C/M	
YAW GMBL DR FAIL	1. Under 6 amps 2. Over 40 amps	SP1001X	None	S/M	Overcurrent condition dependent upon time and temp.

SYSTEMS DATA

Status Light	Lamp Trigger Value	TLM Code No.	Other Indication	S/C Mode	Remarks
SPS PU SNSR FAIL	1. F/OX ratio unbalance over 300 lbs or 90% of critical unbalance 2. Primary and aux systems 1 to 3% discrepancy	None	UNBALANCE indicator (for over 300 lbs only)	S/M	Light functional only during SPS firing.
MN BUS A UNDERVOLT	At 26.25±0.1 vdc	CC0206V	DC VOLTS meter	C/M	
MN BUS B UNDERVOLT	At 26.25±0.1 vdc	CC0207V	DC VOLTS meter	C/M	
CO_2 PP HI	At 7.6 mm Hg	CF0005P	PART PRESS CO_2 indicator	C/M	
AC BUS 1 FAIL	1. At 95±3 vdc 2. At 130±2 vdc	CC0200V CC0201V CC0202V	AC VOLTS meter	C/M	
AC BUS 2 FAIL	1. At 95±3 vdc 2. At 130±2 vdc	CC0203V CC0204V CC0205V	AC VOLTS meter	C/M	
CAUT/WARN FAIL	1. At +11.7 or -11.7 vdc 2. At +13.9 or -13.9 vdc	None	MASTER ALARM lights (3)	C/M	Alarm tone inoperative.
O_2 FLOW HI	At 1.0 lb/hr	None	FLOW O_2 indicator	C/M	
AC BUS 1 OVERLOAD	1. 3Ø at 9 amp/Ø for 15±5 sec 2. 1Ø at 11 amp for 5±1 sec	None	AC VOLTS meter	C/M	Overload disconnects inverter from bus.
AC BUS 2 OVERLOAD	1. 3Ø at 9 amp/Ø for 15±5 sec 2. 1Ø at 11 amp for 5±1 sec	None	AC VOLTS meter	C/M	Overload disconnects inverter from bus.

C&WS

2.10.6 TELEMETRY MEASUREMENTS.

The following is a complete list of all C&WS telemetry data that is monitored by flight controllers and ground support personnel. The last column contains the name and type of S/C crew display. The display utilizes the same pickoff or signal source as telemetry, unless a separate measurement number is included in the display column.

Measurement Number	Description	Sensor Range	Crew Display
CS0150X	Master caution-warning on	Off/on event	MASTER ALARM lights

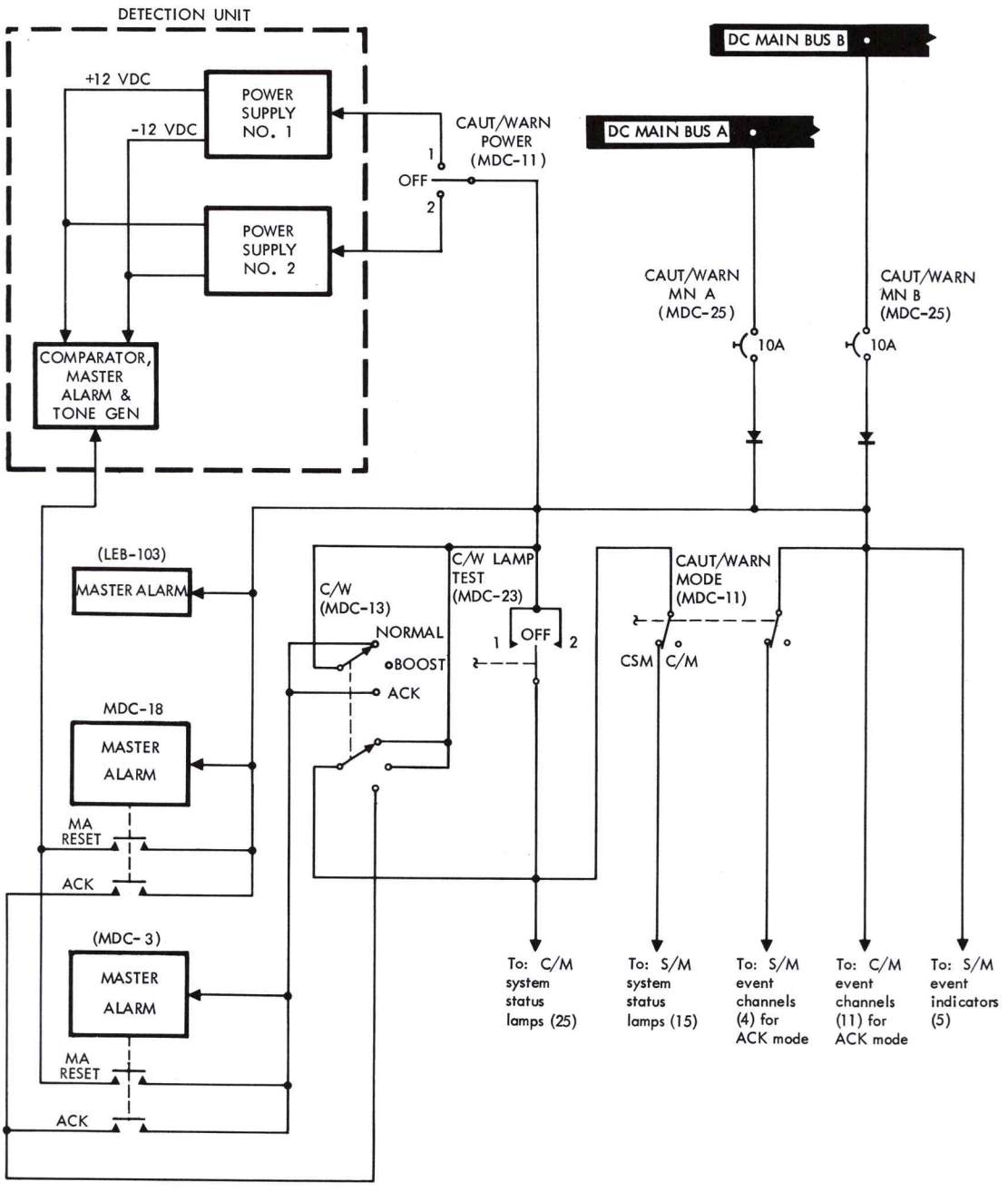

SM-2A-823C

Figure 2.10-1. C&WS Power Distribution Diagram

C&WS

SECTION 2

SUBSECTION 2.11

MISCELLANEOUS SYSTEMS DATA

2.11.1 INTRODUCTION.

Miscellaneous systems data pertains to items that were not covered in a previous system. These items consist of clocks, timers, accelerometers (G-meter), interior lighting, etc.

2.11.2 CLOCKS.

Two clocks and two clock-like event timers, all mechanical, are provided for the crew in the command module. The 400-hour clock (MDC-12), used in monitoring mission elapsed time, is illuminated by floodlights. The GMT 24-hour clock and two 10-hour event timers are located on panel LHFEB-99 in the LH forward equipment bay and lighted by integral bulbs controlled by the CLOCKS-BRT/OFF/DIM switch on LEB 98. For further information, refer to section 5.

2.11.3 ACCELEROMETER (G-METER).

The accelerometer or G-meter (MDC-2), provides the crew with a visual indication of spacecraft positive and negative G-loads. This meter is illuminated by floodlights controlled by the LH area control panel (MDC-26). For detailed information on the accelerometer (G-meter), refer to section 5.

2.11.4 COMMAND MODULE INTERIOR LIGHTING.

The interior lighting provides light for the main display console and LEB panels in the command module.

2.11.4.1 Functional Description.

The interior lighting equipment consists of eight floodlight fixture assemblies and three control panels. Each fixture assembly contains two fluorescent lamps (one primary and one secondary) and a converter. The interior lighting is powered by 28 volts dc from main buses A and B for redundancy (figure 2.11-1). This assures a power source for lights in all areas in the event that either bus fails. The converter in each floodlight fixture converts 28 volts dc to a-c power to operate the fluorescent lamps.

MISC

The floodlights are used to light three areas: the main display console (left and right areas) and the LEB area. Control panel (MDC-26) is located on the left and control panel (MDC-23) is located on the right of the main display console (figure 2.11-2). The third control panel is located in the lower equipment bay area on LEB-98. The floodlight fixtures are located around the interior of the command module. (See figure 2.11-2.)

Each control panel has a primary and secondary control for the floodlights in its respective area. The primary control is a rheostat that controls brightness of the primary floodlights. The secondary control is an ON-OFF switch for the secondary floodlights and is turned to ON when additional brightness is desired. The floodlight circuit breakers are on MDC-25. The operational use, or brightness level of the floodlights depends on two factors: the G-level and the task being performed. The floodlights should be turned up bright during ascent and entry. The floodlights will be adjusted as required while in earth orbit. The FDAI (MDC-4) is lighted by integral bulbs which are controlled by the FDAI LTG switch on MDC-25 and FDAI BRIGHTNESS rheostat on MDC-2. A switch is provided on the LEB floodlight control panel to control lighting for the clocks on LHFEB-99.

2.11.5 COMMAND MODULE UPRIGHTING SYSTEM.

The C/M uprighting system is manually controlled and operated after the C/M has assumed a stable inverted floating attitude. The system consists of three inflatable air bags, two relays, three solenoid control valves, two air compressors, control switches, and air lines. The inflatable bags are located in the C/M forward compartment and the air compressors are located in the aft compartment. The control switches and circuit breakers are located in the crew compartment. The switches are powered by the postlanding bus and the compressors are powered by battery buses A and B. (See figure 2.11-3.)

2.11.5.1 Functional Description.

POSTLANDING - FLOAT BAG switch 1 controls inflation of the air bag on +Y axis, switch 2 controls inflation of the air bag on the -Y axis, and switch 3 controls inflation of the air bag on the +Z axis of the C/M. (See figure 2.11-3.) Each bag is 43 inches in diameter and has a capacity of approximately 24 cubic feet when inflated. If the C/M becomes inverted after landing, the crewmember at station 1 initiates filling of the three bags by setting the POSTLANDING - FLOAT BAG switches 1, 2, and 3 to FILL. When the C/M is uprighted, the three FLOAT BAG switches will be set to OFF. A 4.25±0.25 psi relief valve is located in the inlet of each bag. Backup relief valves set at 13.5 psi are located in the outlet of each compressor.

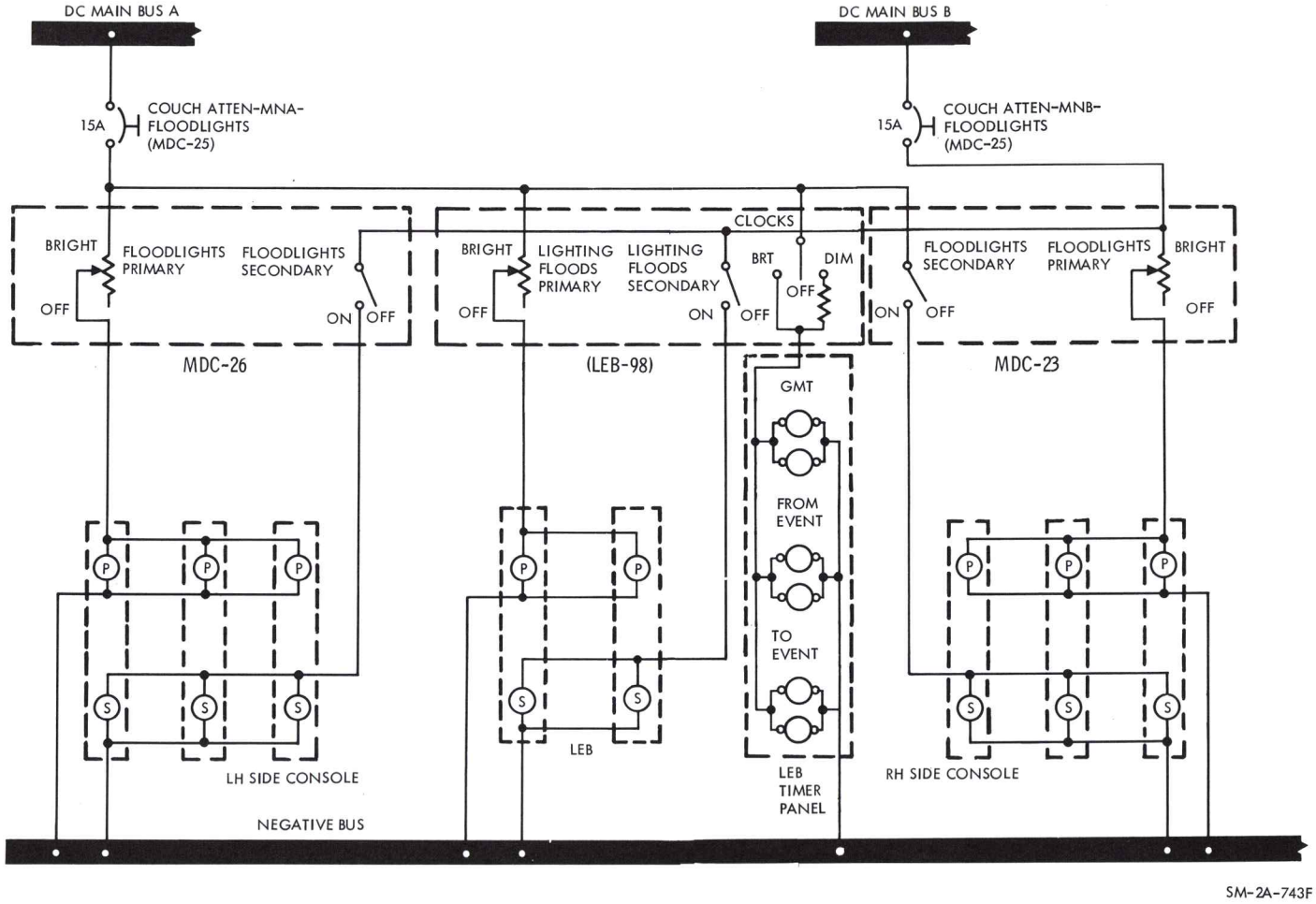

Figure 2.11-1. C/M Interior Lighting Schematic

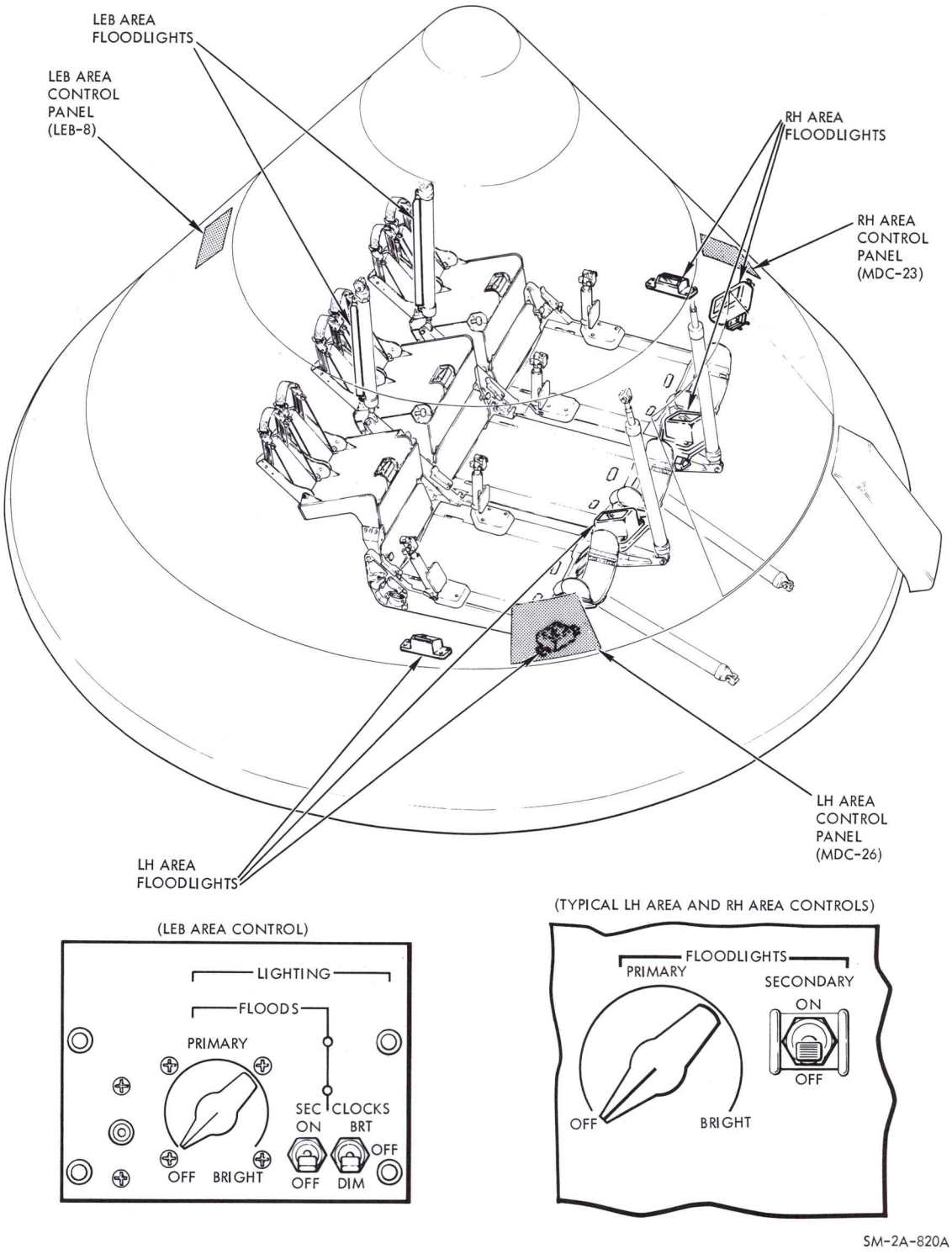

Figure 2.11-2. C/M Interior Lighting Configuration

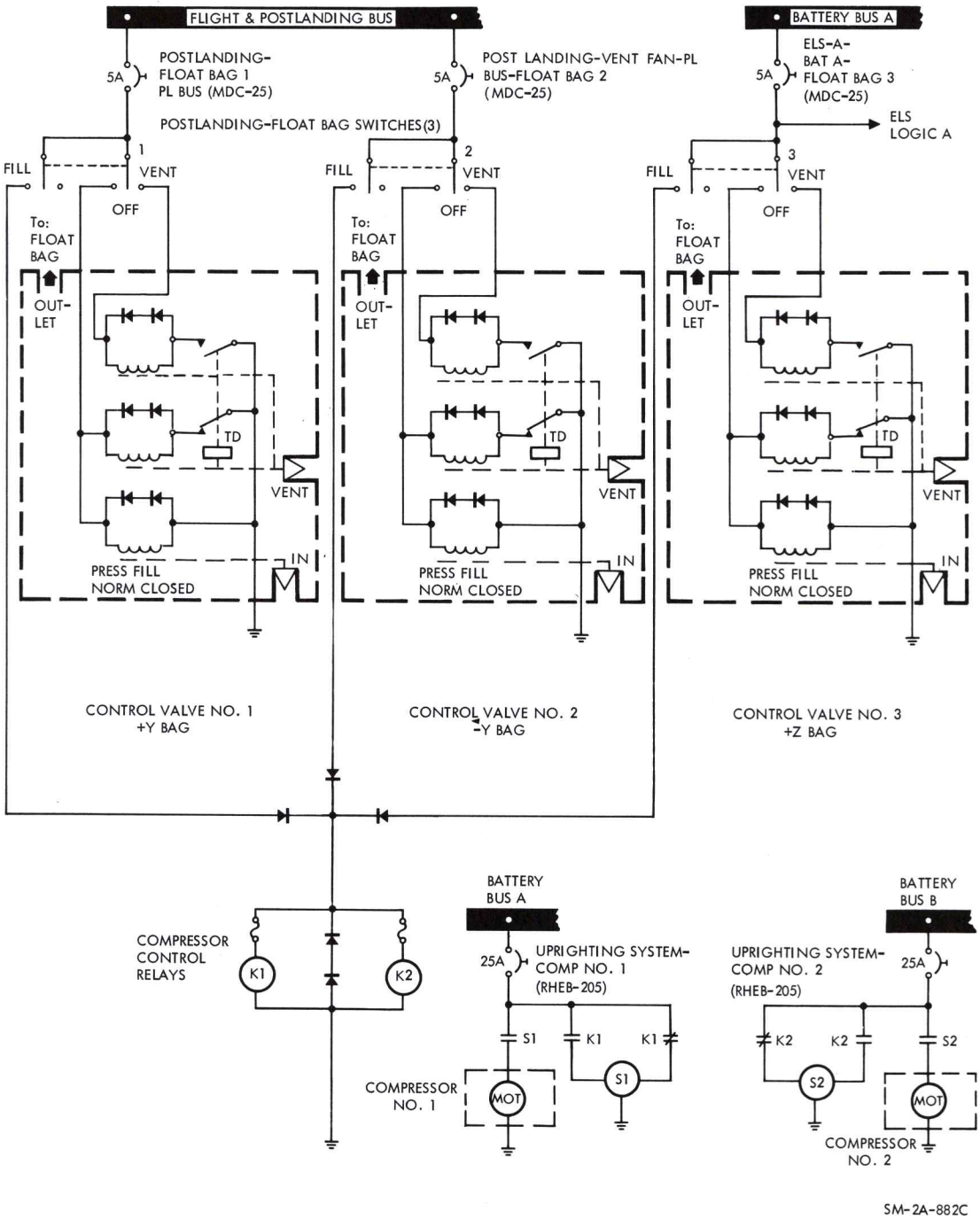

Figure 2.11-3. C/M Uprighting System Electrical Schematic

MISC

SECTION 2

SUBSECTION 2.12

CREW PERSONAL EQUIPMENT

2.12.1 INTRODUCTION.

This section contains a description of contractor-furnished crew personal equipment and spacecraft interface data on NASA-furnished crew personal equipment. All major items are identified as contractor furnished equipment (CFE), Government furnished equipment (GFE), or Government furnished property (GFP).

The following is a list of equipment or subsystems in the order in which they are presented:

a. Crew Compartment Configuration
b. Sighting Systems (CFE)
c. Space Suit Assembly (GFP)
    1. Constant Wear Garment (GFP)
        (a) Communication Soft Hat (GFP)
d. Crew Couches (CFE)
e. Restraint Methods (CFE)
f. Inflight Data Package (GFE)
g. Crewman Inflight Toolset and Work/Food Shelf (CFE)
h. Crew Water (CFE)
i. Food (GFP)
j. Personal Hygiene (GFP)
k. Medical Supplies and Monitoring (GFP)
l. Survival Kit (GFP)
m. Stowage (GFP and CFE)

2.12.2 CREW COMPARTMENT CONFIGURATION AND CREW ENVIRONMENT.

2.12.2.1 Description.

The crew compartment is the pressurized volume within the airtight inner structure. The total volume within the inner structure is 366 cubic feet. Approximately 121 cubic feet of this pressurized space is occupied by the equipment bays and control/display consoles surrounding the crew. The couches, astronauts, aft bulkhead equipment, and miscellaneous equipment occupy another 35 cubic feet making a total of 156 cubic feet. There is approximately 210 cubic feet of usable "air" space. The crew compartment is pressurized to 5±0.2 psi, with 100-percent-oxygen atmosphere.

2.12.2.2 Dimensions.

The distance between the right- and left-hand equipment bays (Y-Y) is approximately 7 feet. The distance between the lower equipment bay and upper sidewall (Z-Z) is approximately 6 feet. The distance fore and aft (X-X) is approximately 6 feet. This establishes a living space of 6 by 6 by 7 feet.

2.12.2.3 Interior Finish.

The CM interior (figure 2.12-1) is coated with a nonreflective paint. The cabin is pastel blue, while the control and display panels are grey.

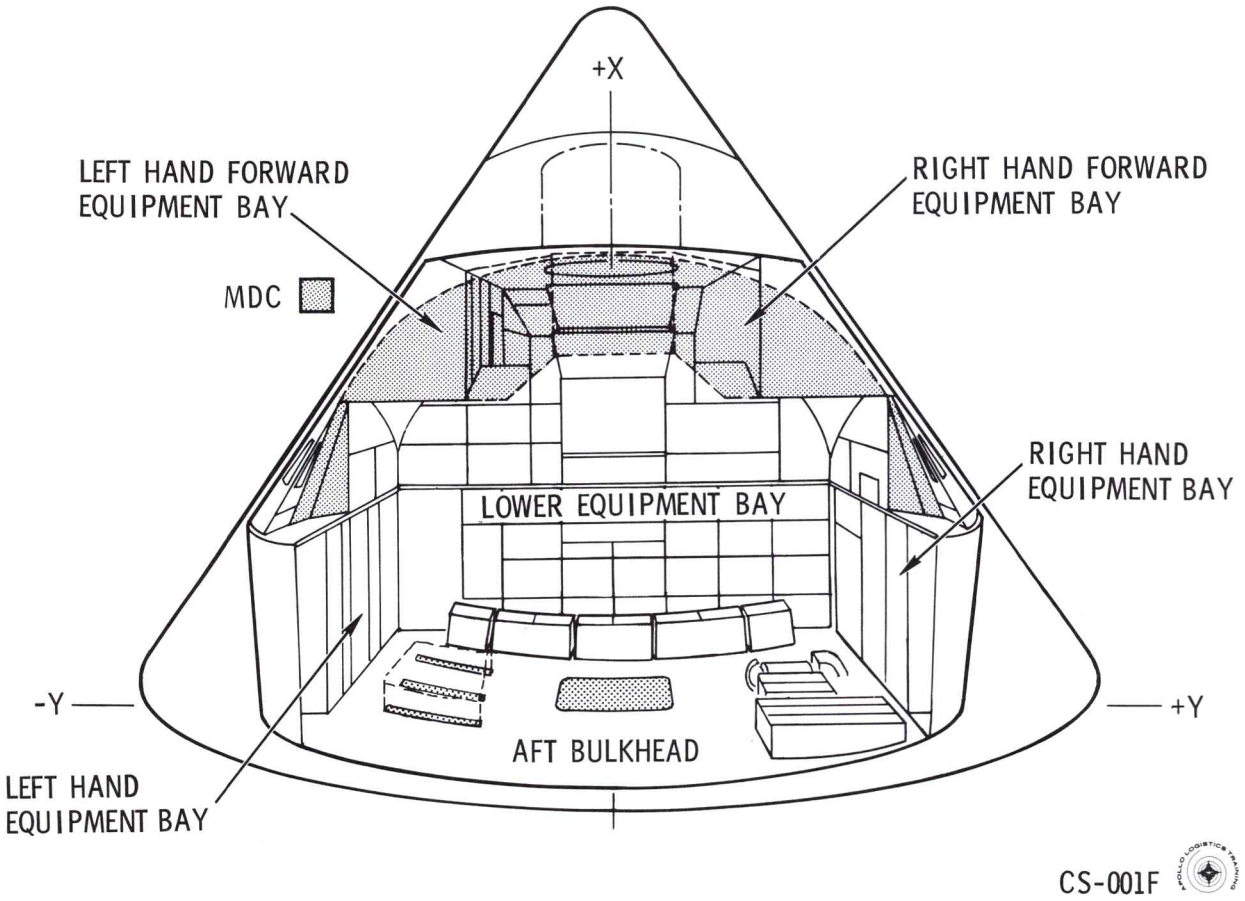

Figure 2.12-1. Apollo Crew Compartment, Int. View From -Z Axis

Portions of the aft bulkhead are covered with hook material (Velcro) which adheres to loop material (Velcro) on the astronauts for restraint purposes.

2.12.3 SIGHTING AIDS.

2.12.3.1 Window Shades (CFE). (Figure 2.12-2)

S/C 014 has four windows: two triangular-shaped forward and two square-shaped side windows. The scientific airlock replaces the hatch window in S/C 014. The airlock has an insertable window to be used at the discretion of the crew.

The shade material is Mylar, having a highly reflective metallic coat on the outside with a total thickness of approximately 0.004 inch. The surface (facing the inside of the cabin) is a nonreflective blue so as not to reflect the internal floodlights.

The shade has a 1-inch border of Velcro. The window frame has a surface of Velcro hook. At one end, the shade is held in position by two snaps. To "cover" the window, the shade is flattened against the Velcro, unrolling it. The Velcro surfaces will mate and retain the shade. To uncover the window, pull the tab opposite the snaps and the shade will roll up. The snaps and the last edge of Velcro will retain the shade for stowage on the window frame.

2.12.3.2 Mirrors. (Figure 2.12-3)

There are two mirror subsystems: internal viewing mirrors and external viewing mirrors.

2.12.3.2.1 Internal Viewing Mirrors (CFE).

When the astronaut is in the pressure suit, pressurized, and on the couch, his field of vision is very limited. He can see only to the lower edge of the Main Display Console (MDC), thus "BLANKING OUT" his stomach area where his restraint harness buckling and adjustment takes place. The function of the internal viewing mirrors is to aid the astronaut in buckling and adjustment of the restraint harness and locating couch controls.

There are three of these mirrors, one for each couch position. The mirrors for the left and right astronaut are mounted on the side of the lighting and audio control console above the side viewing window and fold. The center astronaut's mirror is mounted on the left X-X head attenuator strut.

The mirror assembly consists of a mounting base, a two-segmented arm, and a mirror. The mirror is rectangular (4 by 6 inch), flat,

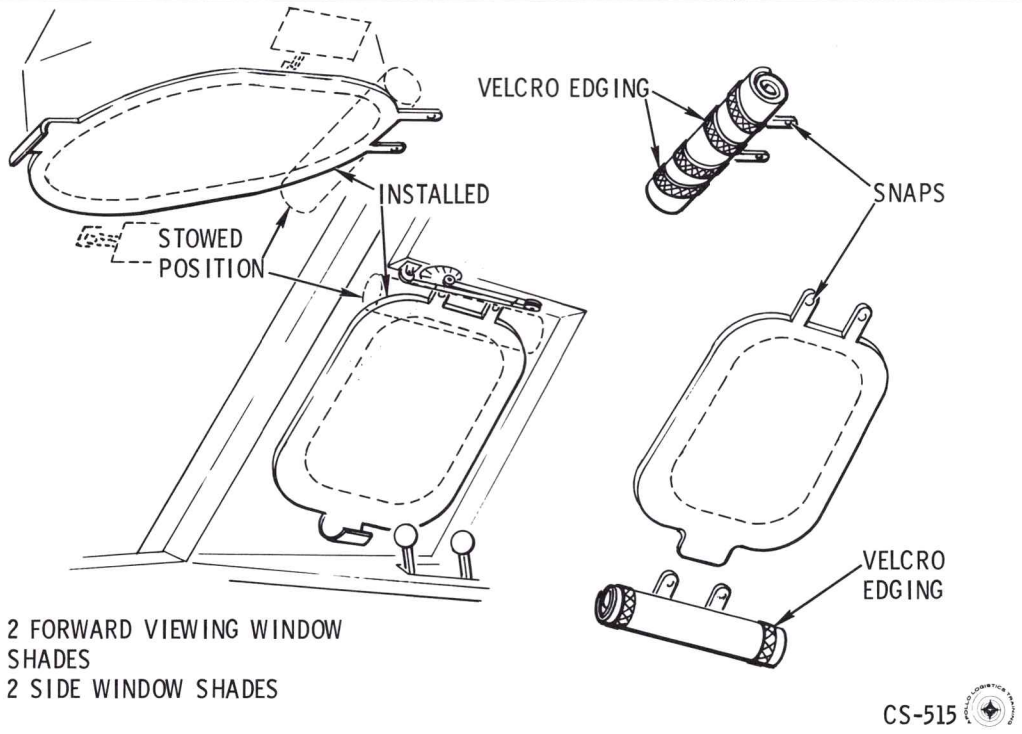

Figure 2.12-2. Window Shade Configuration, Block I

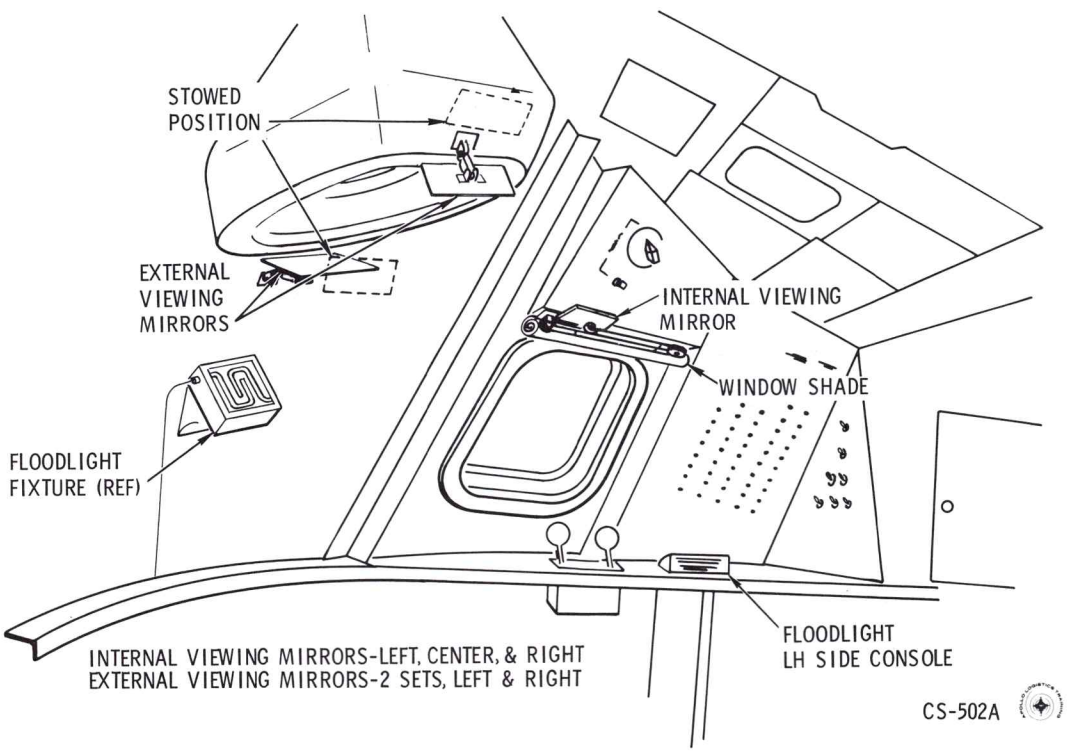

Figure 2.12-3. CM Mirrors, Block I and II

rear-surfaced, with a demagnification factor of 1:1. The two-segmented arm allows a reach of approximately 22 inches from the mount. The ends of the arm have swivel joints to position the mirrors in the desired angles. The mirrors are locked in position by a clamp during boost and entry.

2.12.3.2.2 External Viewing Mirrors (CFE). (Figure 2.12-3)

It is desirable to positively verify the jettisoning of the LES tower and boost cover during a normal mission, a low-altitude abort, a medium altitude abort, and the deployment of the parachutes during entry. With the couches in the 96-degree, or boost position, the left and right astronaut's view through the rendezvous window is restricted to +5 degrees to +42 degrees from the X axis. Therefore, two sets of external viewing mirrors are installed in the C/M to allow the commander to view the LES motor while in the crew couch 96-degree position.

A set of mirrors consist of an upper mirror assembly and a lower mirror assembly. The upper mirror assembly is mounted on the side wall near the upper rim on the rendezvous window frame. The lower mirror assembly is mounted on the rendezvous window housing near the lower rim of the window frame.

The mirror assembly consists of a mirror and a bracket. The bracket has a short arm with a swivel that allows positioning of the mirror. The short arm has a lock to immobilize the mirror during landing. The mirrors will have a 1:1 magnification factor and are rectangular in shape.

The fields of vision (view) through the left rendezvous window is indicated in figure 2.12-4 for couch boost position, and while using mirrors with and without the boost cover. It will be noticed that while viewing through the boost cover window, the field of view is the smallest. However, part of the LES skirt and most of the LES motor can be seen.

The parachute field of vision is shown in figure 2.12-5. It should be noted that the field of vision is for one setting only, as the mirrors have to be readjusted for complete coverage of the drift circle.

2.12.3.3 Crewman Optical Alignment Sight (COAS).

2.12.3.3.1 Function.

The function of the sight is to provide the crewman a fixed line-of-sight attitude reference image which, when viewed through the forward window, appears to be the same distance away as the target. This image is boresighted (by means of a sight mount) parallel to the centerline (X-axis) of the C/M and perpendicular to the Y-Z plane.

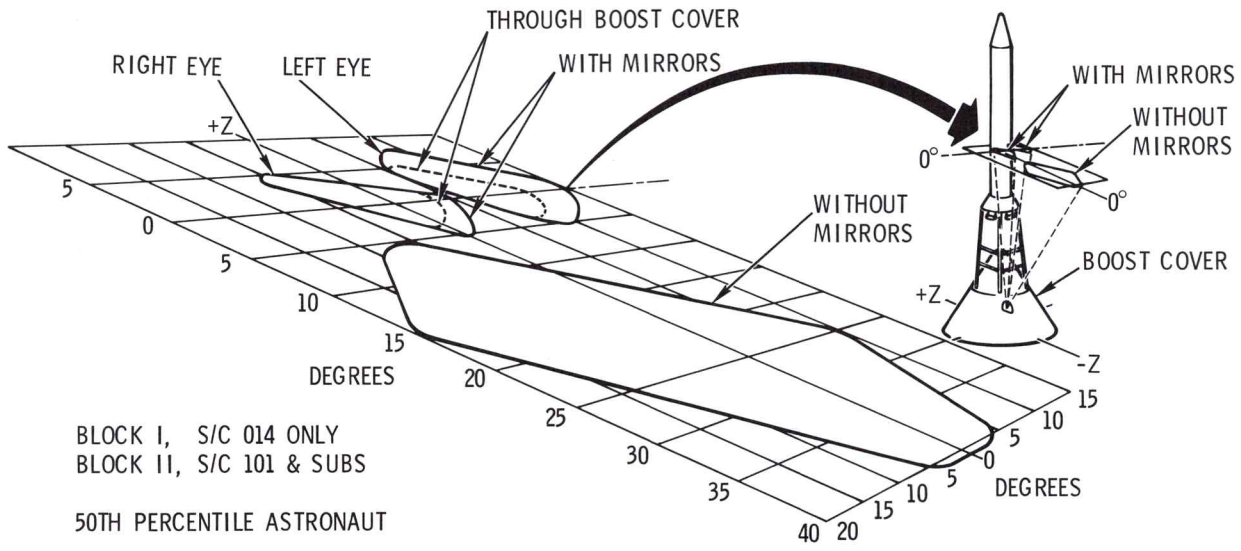

Figure 2.12-4. LES Field of Vision in Couch, 96-Degree Position With Ext. View Mirrors

2.12.3.3.2 Description. (Figure 2.12-6)

The crewman optical alignment sight (COAS) is a collimator device, similar to the aircraft gunsight. It weighs approximately 1-1/2 pounds, is 8 inches long, and requires a 28-vdc power source. The COAS consists of a lamp with an intensity control, a reticle, a barrle-shaped housing, a mount, and a combiner assembly attached to the housing by a rotatable collar. The reticle consists of a 10-degree circle (figure 2.12-7), vertical and horizontal cross hairs with 1-degree marks, and an elevation scale (on the right side) of -10 to 0 to +31.5 degrees. To elevate or depress the reticle center, the collar is unlocked and rotated. There are two "detents" on the body housing structure marked "LW" (left window) and "RW" (right window). (Match the "LW" indices for when mounting the COAS on the left rendezvous window frame.)

2.12.3.3.3 Operational Use.

To operate, remove the COAS and lamp from compartment "S", insert lamp, and insert COAS in the left rendezvous window mount. De-energize "SCIENTIFIC EQUIPMENT" switch, connect the receptacle, and energize switch. Turn the COAS reticle ON and control the brightness by rotating the "INTENSITY CONTROL" knob.

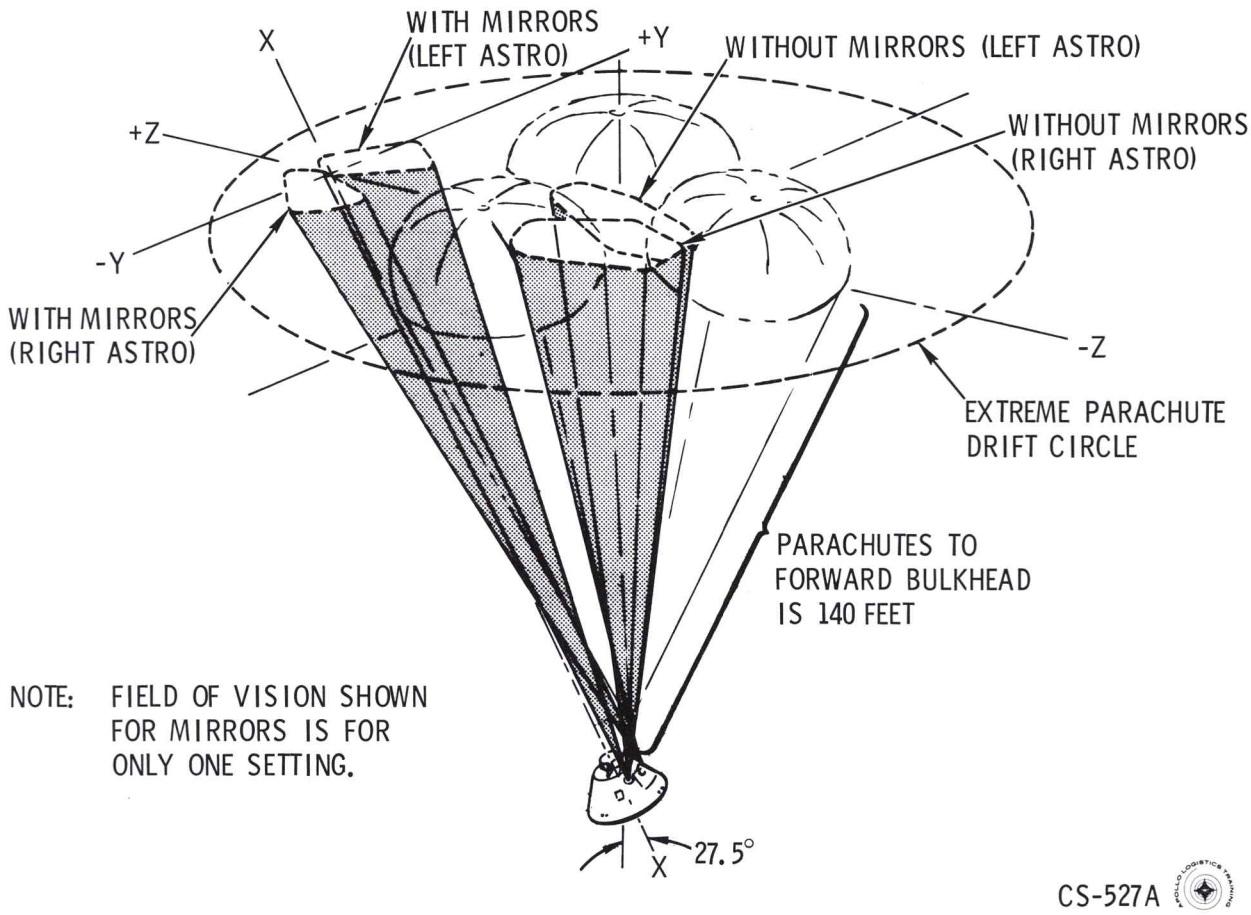

Figure 2.12-5. Parachute Field of Vision in Couch, 96-Degree Position

When photographing activities or scenes outside the spacecraft with the 16 mm sequence camera, the COAS is used to orient the spacecraft and aim the camera. The camera will be mounted on the left sidewall handhold at a 90-degree angle to the X-axis and will be shooting out the left rendezvous window, via a mirror assembly.

During rendezvous maneuvers with the S-IVB, the COAS can be used for alignment. On the spacecraft LM adapter (SLA) will be mounted an LM docking target.

When the TV camera is mounted on the girth shelf for shooting out the right rendezvous window parallel to the X-axis, the COAS will be used for aiming.

The COAS can also be used for backup for reentry alignment and manual thrust vector control.

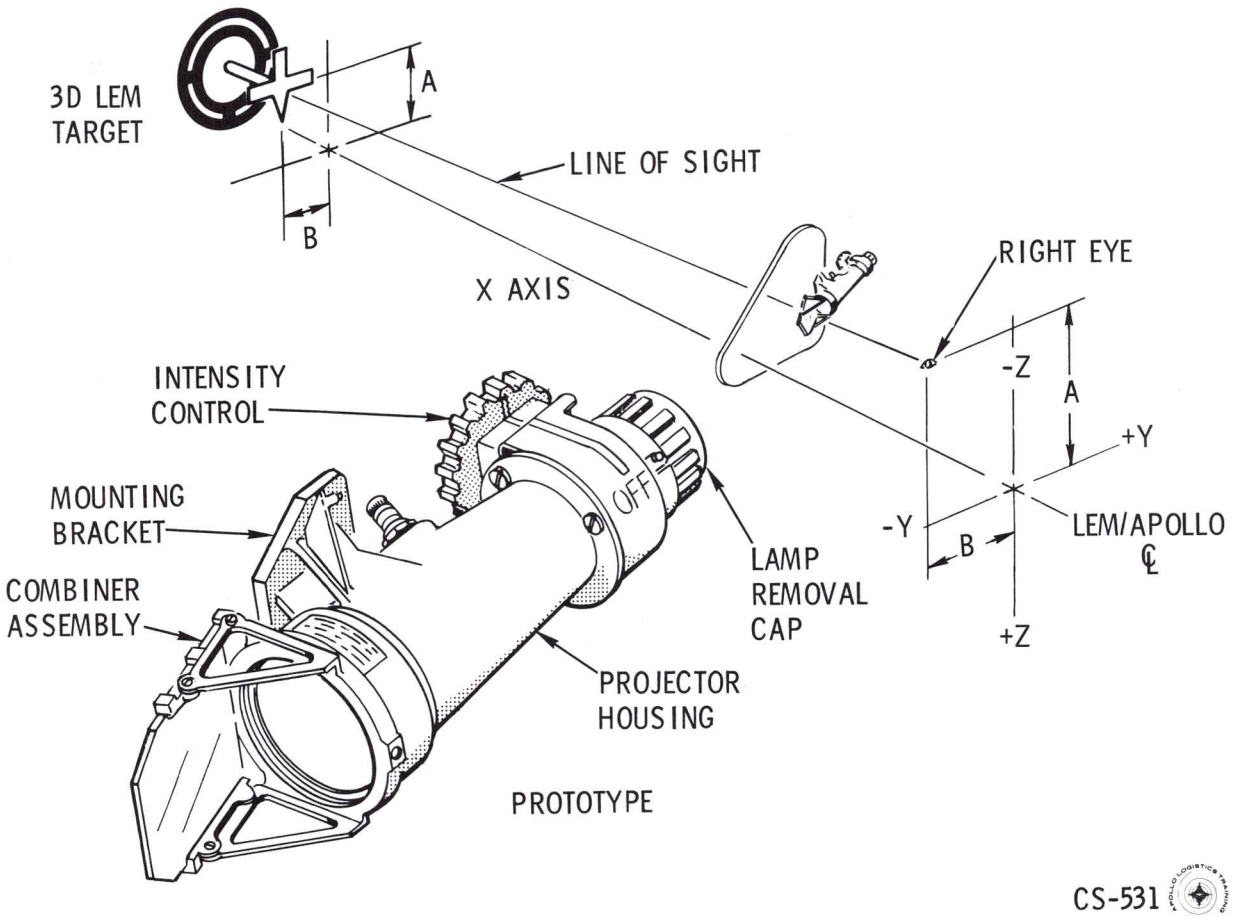

Figure 2.12-6. Crewman Optical Alignment - Sight System Configuration

2.12.4 SPACE SUIT ASSEMBLY (GFP).

The space suit assembly (SSA) provides crewmembers with protective clothing and atmosphere for spacecraft command module environment.

2.12.4.1 General.

The space suit assembly consists of a constant wear garment (CWG) and pressure garment assembly (PGA). For operational purposes, additional equipment is needed, such as communications and oxygen hoses. The equipment will be described in the two suit conditions - OFF and ON.

2.12.4.2 Shirtsleeve Environment or Space Suit Off.

During earth orbit, normal conditions (nondynamic) will allow the astronauts to remove the pressure garment assembly. The astronauts

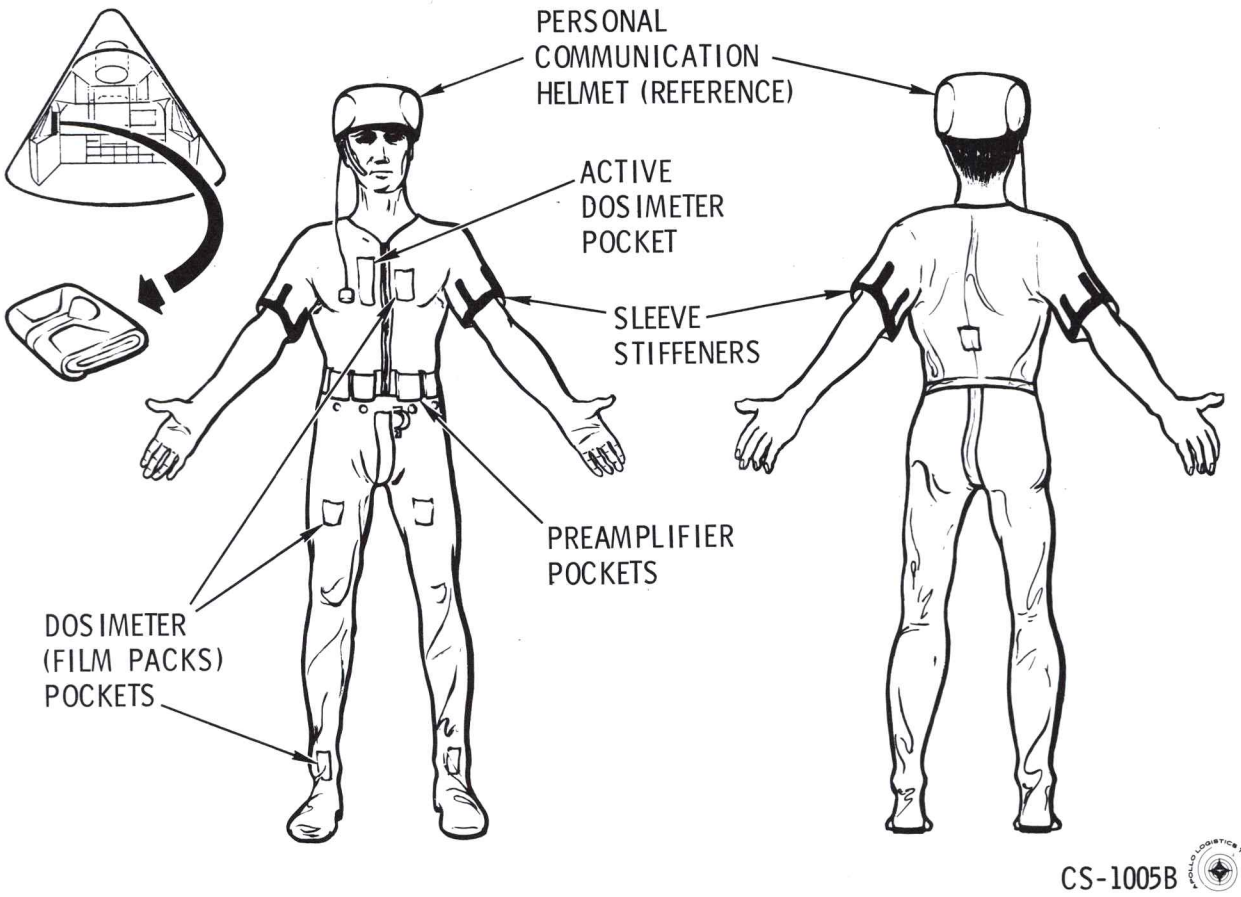

Figure 2.12-7. Constant Wear Garment (CWG)

will wear an undergarment called the CWG, a part of the space suit assembly. For communications, they will don a "Communications Helmet", connect it to a CWG adapter, and connect an electrical umbilical between the adapter and the audio center.

2.12.4.3 Constant Wear Garment (CWG) (GFP).

The CWG (refer to figure 2.12-7) is a one piece synthetic fabric garment, for oxygen compatability. There are pockets on the chest and legs to hold radiation dosimeters. Around the midsection are pockets for biomed preamplifiers. An opening at the crotch is for urination and the rear opening is for defecation. A zipper up the chest allows easy donning and doffing.

In the suited condition, each astronaut will wear a CWG under the pressure garment assembly. Three CWG's will be stowed in the left-hand equipment bay compartment marked "Constant Wear Garment & Sandal".

2.12.4.4 Flight Coveralls (GFP)

Three flight coveralls will be stowed in the LHEB compartment marked "Constant Wear Garment & Sandal" for use while in shirtsleeve environment. They will be worn over the CWG and will aid in keeping the CWG clean and the crewman warm.

2.12.4.5 Communications Soft Hat (GFP)

The primary function is to provide a mounting structure for communications equipment-redundant microphone/earphone sets and a connection to the audio center.

The communications helmet assembly consists of two microphone/earphone assemblies and mounts, a cloth helmet, and a cord assembly.

Three communication helmets will be stowed at launch, entry, and during maneuvers in each of the PGA helmet stowage bags on the aft bulkhead.

2.12.4.6 Constant Wear Garment Electrical Adapter (CFE).

The function of the CWG adapter is to transmit the communications helmet signals and the biomedical harness signals to the electrical umbilical or cobra cable.

The CWG adapter (figure 2.12-8) is a 37-pin connector that connects to the 21-socket connector from the communications helmet. The 9-pin connector mates with the 9-socket connector of the biomedical harness connector.

Three CWG adapters will be required if all astronauts go shirtsleeve simultaneously. The three adapters will be stowed in the RHEB in a compartment marked "Electrical Adapters". They will "time share" the compartment with three PGA adapters.

2.12.4.7 Spacesuit ON Environment.

2.12.4.7.1 PGA Unpressurized or Ventilated.

During launch, boost, entry, descent, and landing phases of the mission, the crew will be required to be suited. The crew will be fully suited but in the unpressurized or ventilated condition. That is, the cabin pressure will be 5 psi and the differential pressure of the suit will be a plus 2 inches of water or 0.072 psi. This is enough differential pressure to hold the suit comfortably away from the body. The oxygen will be flowing from

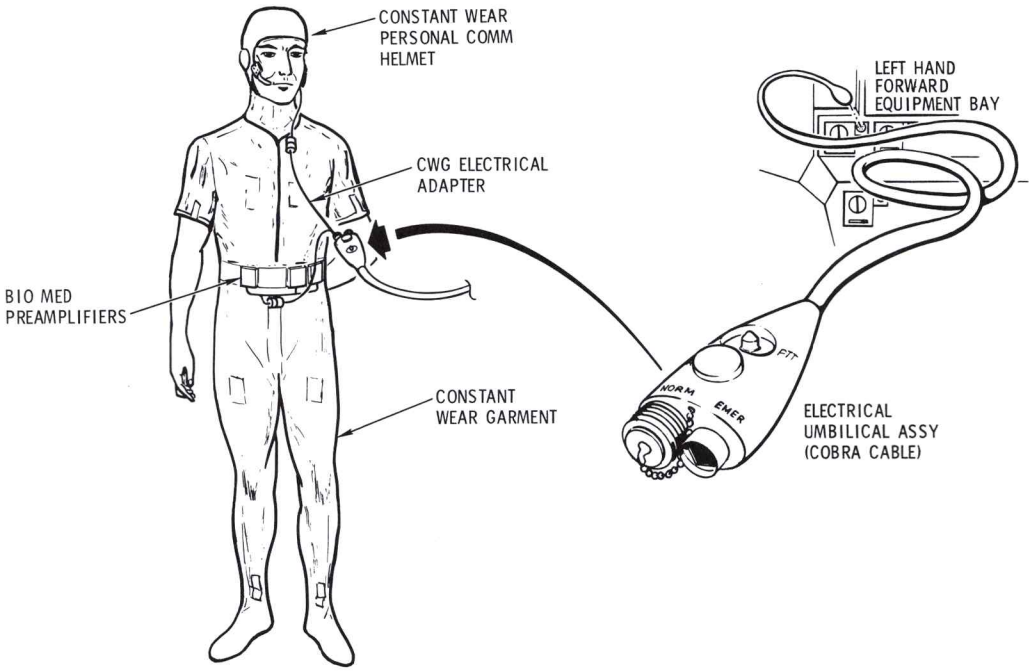

Figure 2.12-8. Personal Communications Equipment Connections Block I, CWG

the ECS suit loop, through the oxygen hose into the suit and returning through the return hose to the ECS suit loop. The cabin air is circulated about the cabin by the cabin air fan 1 & 2. An alternate mode of ventilated usage is with helmet and gloves off, using neck and wrist dams. The gas circulation is the same except the astronaut breathes cabin oxygen.

2.12.4.7.2 PGA Pressurized.

The PGA (spacesuit) will not be pressurized except during an emergency. This condition will exist during a cabin depressurization. If out of the suit, the ECS can maintain 3.5 psia in the cabin for 15 minutes, allowing the crew to don the suits. When the suit is pressurized, the differential pressure will be a plus 3.7 psia in the suit. This condition constrains the body mobility. For this reason, it is normally not desired to be pressurized

2.12.4.8 PGA Description. (Figure 2.12-9)

2.12.4.8.1 PGA Components.

The PGA is a three-piece suit - the torso, helmet, and gloves custom fitted to each astronaut.

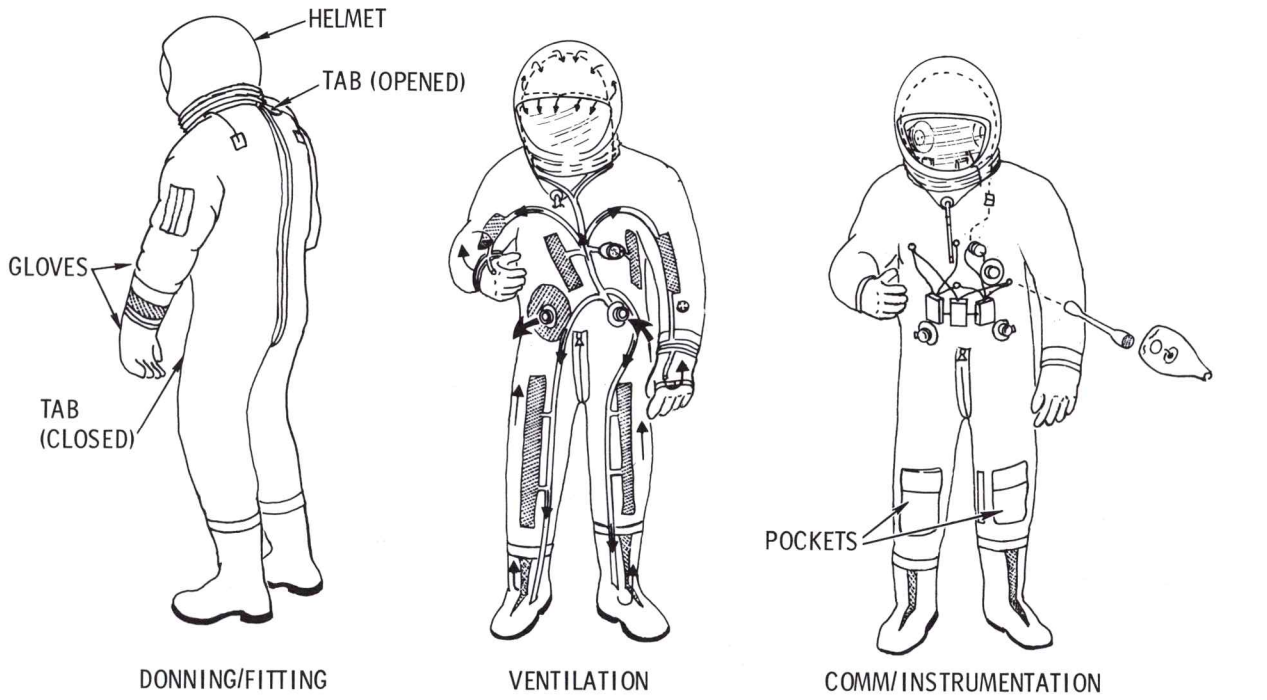

Figure 2.12-9. Apollo Block I Pressure Garment Assembly

Accessories of the suit are the neck and wrist dams, blood pressure cuffs, and urine collection bag. Operational use of the accessories is optional and will vary in accordance with the mission.

The Torso and Gloves. The PGA torso has four "layers". From the inside, the first layer is a combination liner and ventilation layer. The ventilation distribution tubes guide incoming oxygen to all extremities. The oxygen also passes through net openings to circulate around the astronaut. The actual cooling takes place as the gas flows from the extremities (higher pressure) to the "Return" (lower pressure) over the CWG. The second layer is a pressure-tight layer, to contain the oxygen or the 3.7-psi operating pressure. The third layer is a restraint layer of strong netting to restrict bulging and enlarging so movement will be unimpaired when pressurized. The outside layer is a protective cover of neoprene-impregnated nylon. There is a pressure line from the pressure layer (2nd layer) to a surface pressure gauge to allow the astronaut to monitor the pressure. At the waist is an intake connector valve on the left and return connector valve on the right. At the left side of the chest is the communications and biomedical cable adapter.

The outside protective layer has pockets on the arms and legs. The arm pockets contain such articles as neck and wrist dams, handkerchiefs, and pencils. The leg pockets contain scissors.

The neck ring is an aluminum ring and when mated with the helmet, has O-ring seals. Cables are attached to the neck ring to hold it down when pressurized.

The boots are attached to the legs by laces and are not air tight. A "sock", from the leg, fits into the boot and is air tight. The boots will not be removed during the mission.

The gloves are attached to the arms with a ball race lock and are sealed with O-rings.

A zipper runs from the naval, underneath the crotch, and up the spine to the neck ring. The tab is by the naval when sealed (closed) and by the neck ring when opened. To assist the one man donning, the tab has a 6- to 10-inch lanyard attached to it. The suit has the capability of one man donning in less than 5 minutes. It can be donned by having the helmet and gloves attached or attaching them after donning the torso.

The Helmet. The helmet is a plastic shell consisting of an inside liner, ear cushions with earphones, two microphones and a visor pivoted at the ears. A visor protective cover of thin plastic (Cycolac) covers the top of the helmet. A ring seal is at the neck. It will set in the torso neck ring and is held into place by a clamp.

To pressurize the suit, the visor (or faceplate) must be closed. It is rotated down across the face and presses against a seal and held into position by a clamp-latch.

A drinking water port is located on the helmet in front of the crewman's chin. It will receive the water pistol for drinking while in the pressurized condition.

Neck and Wrist Dams. The primary function of the dams is post landing sealing of the PGA during water activity.

The dams are wide rubber bands. The neck dam fits over the torso neck ring and around the neck. The helmet must be removed. When the gloves are removed, the wrist dams seal the wrists and the crewman will float in the torso.

An optional dam use during the mission would be to cool the body while in the suit with the gloves and helmet off. This is restricted to a short period of time as the crewman's respiration would produce an excessive CO_2 concentration. The communications helmet will be used for communications during this period.

Urine Collection Bag (GFP). During the standby, hold, launch, and boost phases, the crewman will be suited. A continuous suited period of 3 to 6 hours can be experienced so provisions must be made to urinate within the PGA.

The function of the urine collection bag is to collect and store 1000 cc's of urine. There is an external catheter (roll on) connected to the bag. The bag fits around the crotch and hips and is held into place by Velcro attached to Velcro on the CWG.

When mission operations permit, the suit is unzipped and the urine bag is removed. A valve on the bag will connect to the waste management system, and the urine will be dumped overboard.

2.12.4.9 PGA Stowage.

2.12.4.9.1 Torso and Glove Stowage.

The gloves will be left attached to the torso and stowed together. The PGA helmets will be stowed separately. The suit stowage bag is made of sage green nylon cloth, 36 inches long by 20 inches wide, and can be expanded from 3 to 12 inches high. It has an aluminum rod frame to maintain the form. A partition separates the bag into two compartments. On the top there are flaps held closed with Velcro. Three strips of Velcro loop are on the bottom to "anchor" the bag on three strips of Velcro hook on the aft bulkhead.

The two PGA stowage areas are beneath the commander's couch (left) on the aft bulkhead.

An additional stowage bag will be located beneath the head of the pilot on the aft bulkhead near the hatch between the LIOH cartridge stowage boxes and the sidewall. The suit stowage bag will be similar to the two suit bag.

2.12.4.9.2 Helmet Stowage.

The PGA helmets are stowed only during non-dynamic periods, or zero g. Three helmet mid-course stowage bags (GFP) are provided. The bags are located on the aft bulkhead under the center couch.

2.12.4.10 PGA Connecting Equipment.

2.12.4.10.1 Pressure Garment Assy (PGA) Electrical Adapter (CFP).

The PGA electrical adapter provides interface between the PGA and the cobra cable, since the connectors are not compatible.

The PGA adapter (figure 2.12-10) is 18 inches in length with a suit connector and the cobra cable connector. There are three adapters.

When the suits are removed and stowed, the PGA adapters will be disconnected from the suit and stowed. They will replace the CWG adapters in the electrical adapter stowage compartment in the RHEB.

2.12.4.10.2 Oxygen Hose (Umbilical) (CFP). (Figure 2.12-11)

The function of the oxygen hose is to interconnect the PGA and the CM ECS.

The oxygen hose is a dual hose, each side having an inside diameter of 1.25 inches, and made of silicon rubber with spiraling steel wire reinforcement.

The ECS end has a double "D" connector while the suit end splits the hoses about 15 inches from the end. Each hose has an elbow nozzle to connect to the suit.

Two hoses will be 72 inches and one 81 inches long. A nylon strap will be bonded approximately every 12 inches to restrain the cobra cable to the hose during suit operations.

The double "D" connector on the ECS end remains connected during the mission. The hose is routed behind the MDC and held in place by tie-down straps. When disconnected from the suits, the ends are routed from

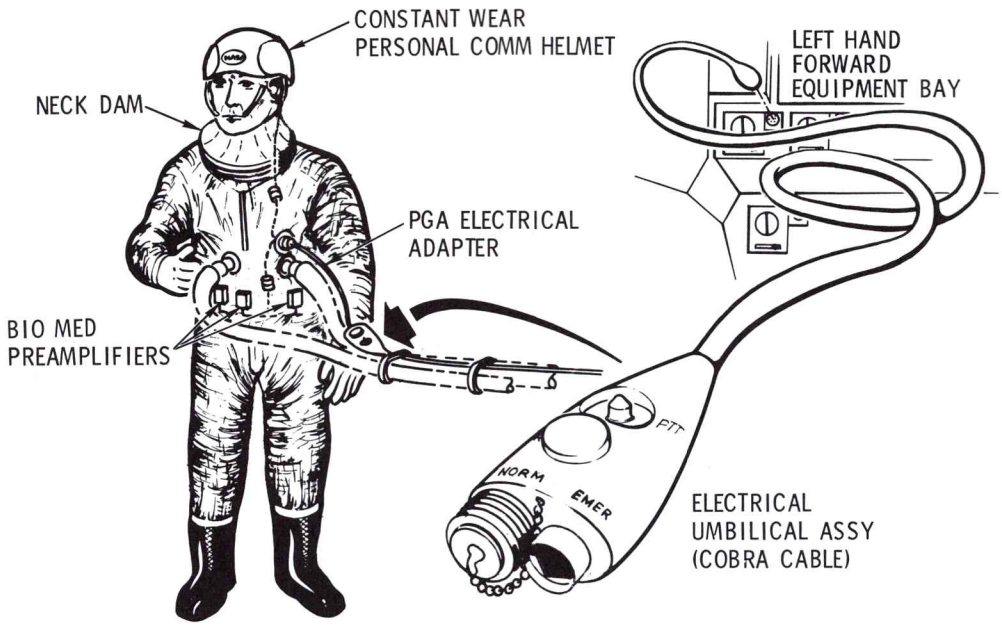

Figure 2.12-10. Personal Communications Equipment Connections Block I, PGA

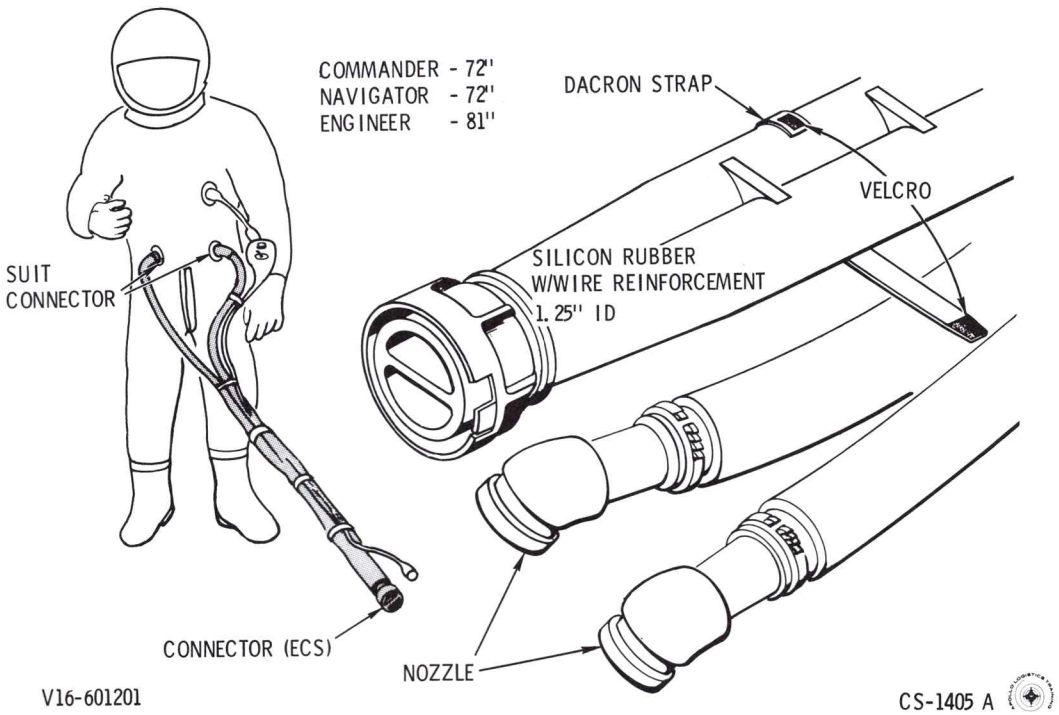

Figure 2.12-11. O_2 Umbilical Hose Assembly, Block I

the rear of the MDC to the forward bulkhead and "strapped". To prevent the incoming oxygen from being "sucked in" the return side and not going into the cabin, the return nozzle will be capped. The cap will be attached to the return nozzle by a lanyard.

2.12.5 CREW COUCHES.

The primary function of the crew couches is to support the crew bodies during acceleration and maneuvers up to 30 g's forward, 30 g's aft, 18 g's up and down, and 15 g's laterally.

Secondary functions of the crew couches are:

a. Position crew at duty stations.

b. Support translation and rotation hand controls, lights, and other equipment.

2.12.5.1 General.

The spacecraft contains utilized crew couches integrally bolted together in a unit structure.

The couches are designated one of three ways. Structurally, they are left, center, and right. By crew positions, they are 1, 2, or 3 or commander, senior pilot, and pilot (left to right).

2.12.5.2 CM Impact Attenuation System.

The impact system is divided into two subsystems; External Attenuation Subsystem of crushable structure with 27.5 degree negative pitch landing angle and an Internal Attenuation Subsystem consisting of eight crushable core struts.

During landing, the C/M deceleration force will vary from 12 to 40 g's, according to wave shape and horizontal velocity at impact. This is due to the attenuation acting through a distance of up to 15 feet.

The unique aspect of the impact system is that the major portion of energy (75-95 percent) is absorbed by the impact surface (water) and the deformation of the C/M structure.

2.12.5.2.1 External Attenuation.

The external attenuation subsystem consists of four crushable ribs, a 27.5-degree hang angle, and an external crushable aft bulkhead.

The crushable ribs absorb energy and are on the +Z side of the C/M.

The 27.5-degree hang angle will cause the C/M to knife in the water.

2.12.5.2.2 Internal Attenuation.

This subsystem consists of core-filled struts that absorb energy by acting through a distance. There are eight struts; 4 X-X, 2 Z-Z, and 2 Y-Y.

The two Y-Y struts attach to the couches in the area of the hips and rest against the LH and RH equipment bays. They absorb lateral Y loads. It requires a force of about 9,000 pounds through a distance of 4.5 inches is required for full stroke compression.

The two Z-Z struts attach from the structure to the back of the couch and are 39 inches long. They absorb loads parallel with the Z axis. Each requires a force of approximately 9,000 pounds through a distance of 18.5 inches full stroke (tension). Combined, this is a total of 18,000 pounds required for full actuation.

The four X-X struts attach from the forward bulkhead to the side beams of the couch near the head and feet. They absorb loads parallel to the X axis. Each head X strut is 37 inches long, and requires a force of 4,460 pounds through a distance of 16.5 inches full stroke (tension). The feet X struts are 32 inches long and requires a force of 5,540 pounds through 16 inches for full stroke (tension). Combined, 20,000 pounds of force are required to fully stroke all X struts.

The system is designed to decelerate the couch structure at a rate less than 20 g's.

The struts act in both directions due to the bouncing, rebound, and dampening to which the C/M is subjected. They also have an internal friction brake that continues to function as a mechanical dampener after the cores are crushed and no longer effective. The rebound, or bouncing, also necessitates a firm astronaut-to-couch restraint system.

2.12.5.3 Crew Couch System Description.

2.12.5.3.1 Crew Couch Structure.

The crew couch structure consists of three crew couches, the left, center, and right (figure 2.12-12). It is fabricated of aluminum and weighs approximately 230 pounds. The left and right couches are identical. The center couch connects the left and right couch into a single unified structure.

The couch structure, in a one-g environment, is supported by the impact attenuation struts; the four X-X struts from the forward bulkhead, the two Z-Z struts from the aft ring, and the two Y-Y struts in compression against the side panels. The X-X and Z-Z struts connect to the crew couch structure at the left and right couch main side beams.

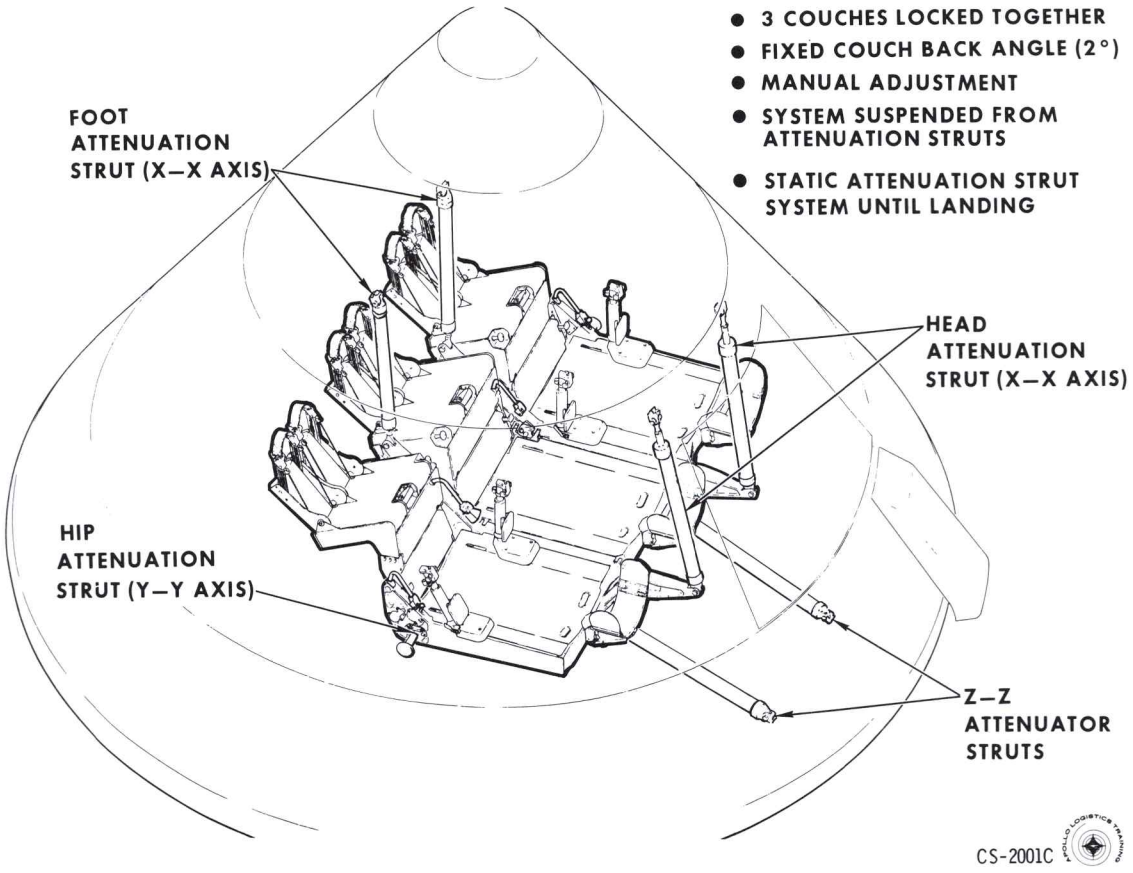

Figure 2.12-12. Crew Couch Installation

2.12.5.3.2 Crew Couch Attachments.

The couches support a number of items. The primary items being the rotation and translation controls. Both translation controls are located on the left arm rest of the left couch. A rotation control is located on the right arm rest of the left couch and the left arm rest of the right couch. The latter rotation control can also be attached to the LEB for maneuvering the CSM during G&N functions.

The restraint harness is also attached to the couches at four attach points and two shoulder strap connections.

A junction box, or boxes, is mounted on the side beam or beams for electrical and signal lines.

2.12.5.3.3 Crew Couch Positions. (Figure 2.12-13)

Occupied Positions. The most utilized position is the 96-degree position assumed for the launch, orbit, and entry phases. For a 50-percentile crewman, the hip angle is 108 degrees and very easy to assume. It gives maximum support to the body during high g loads.

The 170-degree, or flat-out position, is used primarily for egressing from the center couch. All egressing to the LEB will be from the center couch. For this reason, the lower armrests are removed and stowed, making easy egress from right and left couches into the center couch. Another use of the 170-degree position is G&N sighting. The 50-percentile crewman can position himself on the seat pan with his feet in the footrests and sight through the G&N eyepiece.

The left and right couches are capable of the 170-degree position but will not be placed in that position because of equipment interference beneath the couches.

The additional LEB access, or docking position will be used during orbit to gain room near the LEB. The seat pan angle remains 96 degrees while the couch structure (all couches) moves 6.5 inches toward the hatch.

Unoccupied Positions. The 66-degree seat pan angle position is used primarily for right and left equipment bay stowage access.

The 264-degree position necessitates rotating the seat pan under the backrest. This will clear the LEB area for maintenance activities. Due to restricted clearance beneath the left and right couches, this position is restricted to the center couch only. During use of the fecal canister, this is the desirable seat pan angle.

2.12.5.3.4 Crew Couch Component Description. (Figure 2.12-14)

The crew couches are basically the same and the modular components interchangeable. The backrest assemblies differ the most because of the docking position mechanism in the center couch.

Headrest. (Figure 2.12-14) The headrest is constructed of honeycomb aluminum and has folding tips. It is padded on both sides of tips and inside. During maneuvers requiring PGA helmet restraint, the tips are left extended. For orbit and zero g, the tips are folded, affording freedom of movement for nominal visibility.

The headrest has a 3-inch longitudinal movement for adjustment to crewman torso length. The headrest and support will fold under the couch for purposes of accessibility and ingress to the couches.

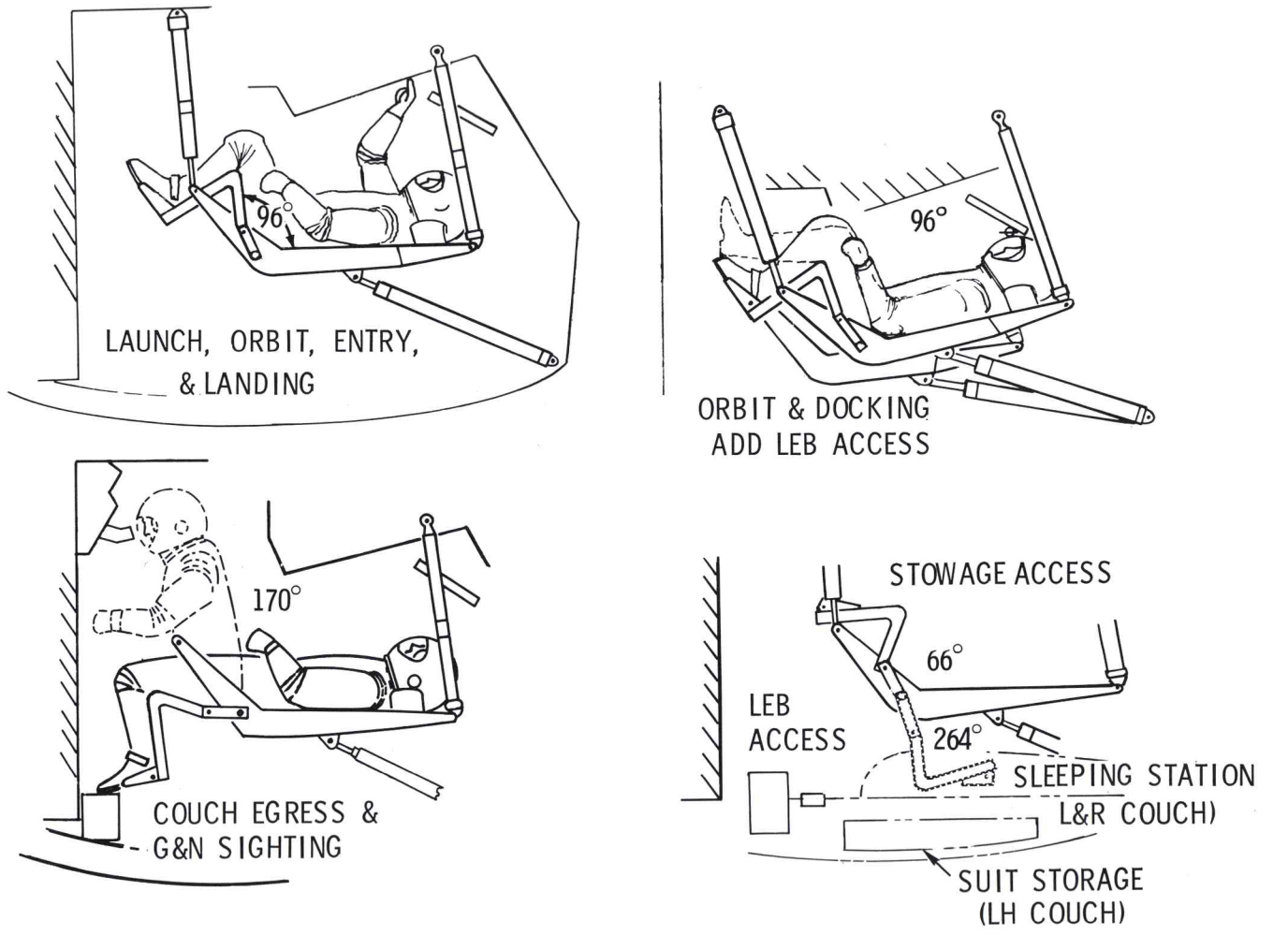

Figure 2.12-13. Crew Couch Mission Position and Seat Angles (Block I)

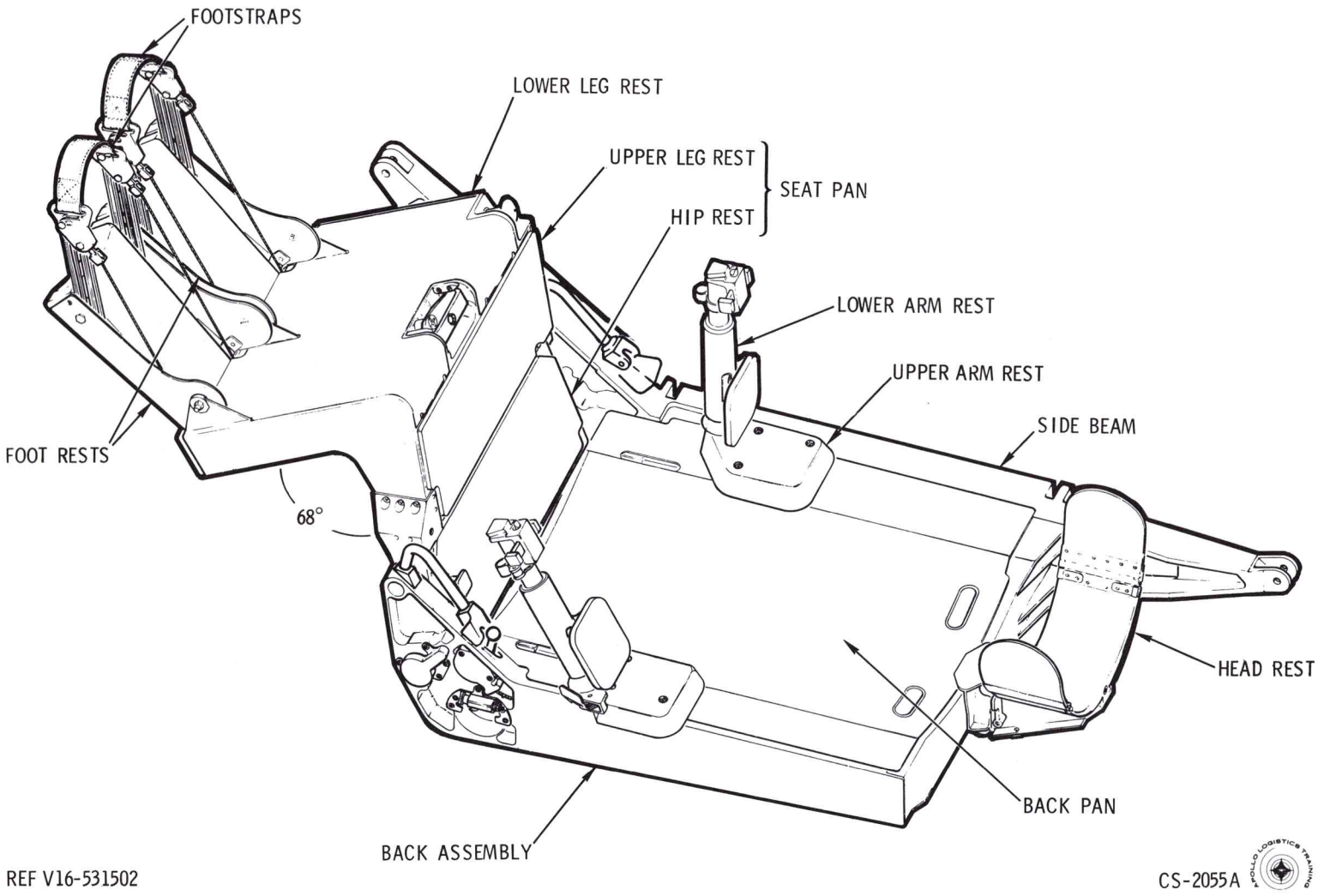

Figure 2.12-14. Left-Hand Couch Assembly (96-Degree Position)

Backrest. (Figure 2.12-14) The backrest is constructed of ribs and beams covered with aluminum sheet and is 32 inches long by 22 inches wide. The left and right couch back pans are attached to the integral side beams, the inboard beam of which is 56 inches long, and the primary structural member of the couch support.

The backrest assembly is contoured and contains the take up reel system for the shoulder straps. The backpan is padded in the areas of crewman contact.

Armrests. (Figure 2.12-14) The armrests attach to the forward surface of the backrest and are adjustable. They consist of an upper and lower armrest. The upper armrest can be adjusted for length of arm and torso.

The lower armrest inserts into, and is supported by the upper armrest at an angle of 90 degrees. It is secured by a leverized pin device for quick removal. A tubular shaft extends past the rest pad and contains the mounts for the controls. A major function of the arm rests is to mount the SCS controls. The left couch left armrest has an adapter mount for both translation controls T1 and T2, and mounts at an angle of 120 degrees. All other arm rests (3) mount at an angle of 90 degrees.

The left couch right armrest supports a rotation control (R1).

The center couch has no arm rests.

A fitting on the right couch left armrest accepts the rotation control (R2) for use by the center astronaut. By using an adapter, one translation control (T2) can be mounted for use by the right astronaut.

Normally, the right couch right armrest supports the second rotation control (R2). A third position for the rotation control (R2) is attached to the LEB G&N panel for use during navigational sightings.

Seat Pan and Footrest. (Figure 2.12-14) The seat pan and footrest has three components, the hiprest, legrest, and footrests.

The hiprest and upper legrest functions as a seat or seat pan. The lower legrest supports the lower legs, and the footrests support and restrain the feet. The hiprest makes an angle of about 170 degrees with the upper legrest, forming the seat pan. There are two pivot points, one at the aft of the hiprest, and the other where the hiprest and legrest intersect. Part of the mechanism for positioning the seat angles at 96, 170, and 264 degrees is housed in the hiprest.

The lower legrest houses the mechanism for positioning the seat in the 66-degree angle and tightening or loosening of the footstraps. The upper legrest to lower legrest angle is fixed at 68 degrees. The footrests

pivot so as to fold parallel to the lower legrest. Footstrap rotation bars are spring loaded to the release position and are pulled to the restraint position by cables. The cables run to a reel that can be locked or released by a control in the lower legrest.

Crew Couch Pads. The following portions of the couches have pads: headrest, backpan, armrests, and seat pan.

The padding material is triloc, 3/16 inch thick. It is structured of woven dacron wire like fibers in a low density pattern giving good ventilation.

The backpan and seat pan pads are composed of three layers of triloc covered with nylon netting, making approximately 1/2 inch of padding.

The armrest and headrest pads are 3/16 inch thick layers between nylon netting covers.

The pads are attached to the metal surfaces with Velcro strips and can be removed during the mission if the need arises.

2.12.5.3.5 Mechanical Adjustments. (Figure 2.12-15)

Headrest Adjustments. To adjust the headrest for crewman height, turn the adjustment with the toolset 4-inch CPC driver. It has a 7/32-inch hex drive.

The headrest is folded "down" by pulling the headrest lock headward. The headrest is spring loaded to the "stowed" (down) position so it should be restrained by the hand. To bring it "up", pull with the hand, pull headrest lock handle back to clear the hook, position headrest in the normal position, and push the lock handle footward.

Armrest Adjustments. The lower armrests are removed by pulling the armrest lock pin release outward to pull the pin, and then pulling the armrest upward to remove. The left couch right armrest and the right couch left armrest are stowed on the couch side beams by Velcro "seats" and straps.

To attach SCS controls, push the SCS control pin lock to the left, slide the control on the "dovetail", and push the lock to the right, locking a retention pin.

The lower armrest can be extended by rotating the extension lock toward the left, extending the armrest and locking into position by pushing the lock to the right.

2.12.5.3.6 Seat Adjustment Directions.

SPLH = Seat Pan Lock Handle

LRRK = Leg Rest Release Knob

LROB = Leg Rest Override Button

From (deg)	To (deg)	Procedure	Remarks
A. 96	170	1. Lift with SPLH and push with feet. 2. Release the SPLM, continue pushing with feet until seat stops at 170 deg.	1. Key locking the leg pan will disengage. 2. Key on pivot cylinder will engage side beam keyway.
170	96	1. Lift the SPLH and pull with feet. 2. Continue lifting SPLH, pulling with feet until seat stops at 96 deg. Release SPLH.	1. Key on pivot cylinder will disengage. 2. Key on pivot cylinder will engage side beam keyway.
B. 96	264	1. Lift SPLH and rotate downward. 2. Continue to lift SPLH passing through 170-deg position. 3. Release SPLH and continue rotating until seat stops at 264 deg.	1. Key locking leg pan will disengage. 2. Maintains the leg pan pivot key in disengaged position. 3. Key on pivot cylinder will engage in 264 deg position slot.
264	96	1. Lift SPLH and rotate seat toward 170/96-degree position. 2. Continue to lift SPLH, passing through 170-deg position. 3. Rotate to 96-deg position and release SPLH.	1. Leg pan pivot key disengages allowing rotation. 2. Leg pan pivot key maintained in disengaged position. 3. Leg pan point pivot key will engage 96-deg position slot.
C. 96	66	1. Pull up with feet until 66-deg latch engages the side beam.	1. Disengages seat to hip-rest detent. 66-deg latch will drop in slot on beams and catch.
66	96	1. Press the LRRK and with feet until 96-deg position is reached.	1. 66-deg catch disengages. On reaching 96-deg position detent will engage.

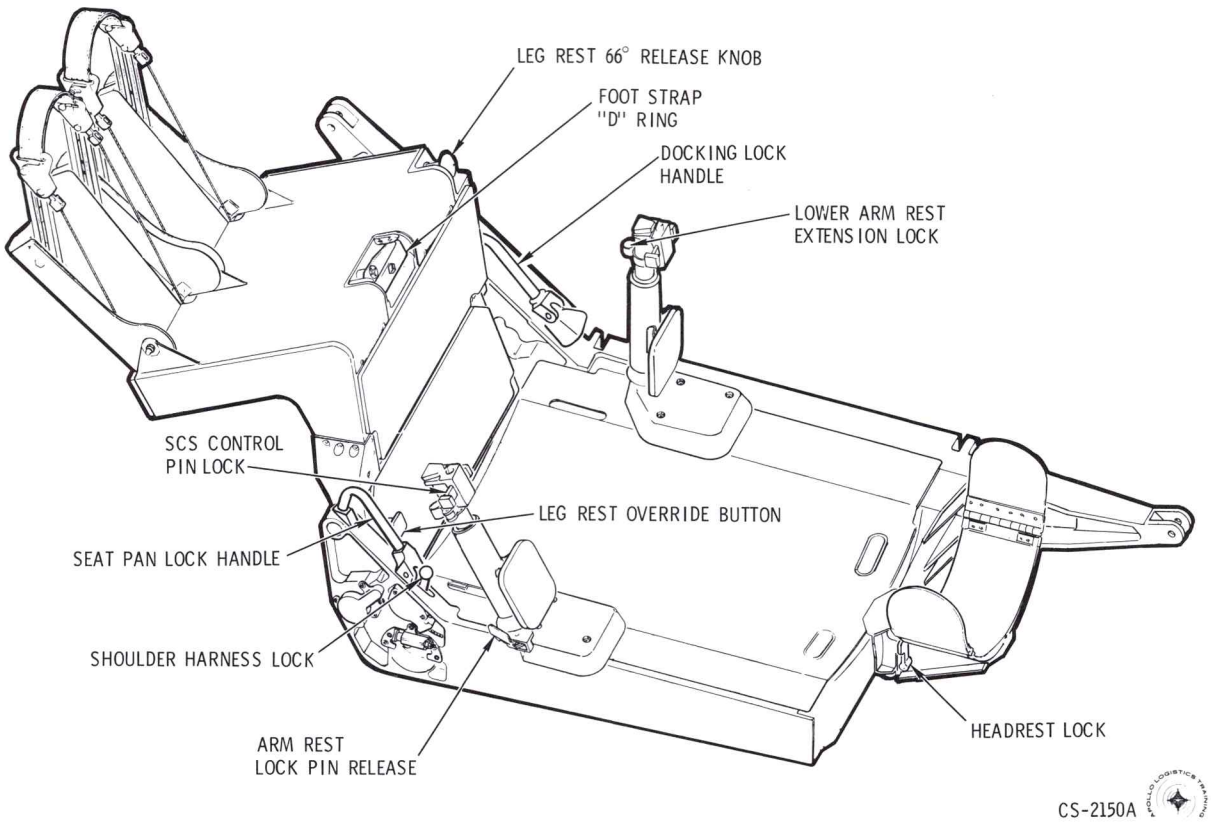

Figure 2.12-15. LH Crew Couch Operating Mechanisms (Block I)

Footrest and Footstrap Adjustments (Figure 2.12-14) The footstraps are controlled by a footstrap "D" ring (FSDR) between the astronaut's knees. The "D" ring is connected to a cable that runs through a tube to a drum-axle-drum mechanism. By pulling on the "D" ring and rotating the drum and axle, cables pull the footstraps to the restrained position. The drums have ratchets that lock the footstraps in position and retain the feet in the footrest.

To release the footstraps, the FSDR is pressed, forcing the connecting tube to disengage the ratchet and release the footstraps.

"D" Ring Handle Extension (Figure 2.12-23) The "D" ring handle can be reached easily while the PGA is unpressurized; however, when pressurized, the PGA slightly restricts the 90-percentile crewman from

reaching the "D" ring, thus making it difficult to "lock" or "free" the feet (push or pull). The "D" ring handle extension connects to the "D" ring handle. The extension has a 7/16-inch hex shaft to insert in the "D" ring handle and control it. It has a ball-lock feature to connect to the "D" ring. The "D" ring extension will be accessible on the right girth shelf.

Docking Position Adjustment (Figure 2.12-16) The mechanism that releases the lock to allow the couch-structure to slide to the docking position is located in the backrest of the center couch; however, the docking lock handle is on the right side beam of the left couch.

The forward end of the Z-Z struts attaches to the couch by a slide that runs in tracks in the side beams. A lever lock device (finger latch) locks the slide in two positions, normal and docking. The lever lock is spring loaded to the lock position. The docking lock handle (DLH) disengages the lever lock only while the DLH is lifted. The couch structure must be pulled to the docking position by the center astronaut pulling on hand holds located on the side latch.

When transversing to the docking position, the seats remain in the 96-degree position. The left crewman then lifts the DLH and the center crewman grabs a hand hold and pulls the couches toward the side hatch. After movement, the DLH can be released. When the couches have moved about 6.5 inches, the lever-locks will drop into slots, locking the couches in place.

To return to the couch normal position, lift the DLH and push the couches toward the LEB. Release the DLH and the lever-locks will drop into slots when in position.

Shoulder Strap Adjustment. The shoulder strap takeup reels are on the couch backrest. They allow 10 inches of play and are locked by the shoulder strap lock on the left sides of the couches. A headward pull will unlock the shoulder straps and a forward and down push will lock the shoulder straps.

2.12.6 CREWMAN RESTRAINTS.

2.12.6.1 High G Load Restraints.

2.12.6.1.1 Crewman Restraint Harness.

There are three restraint harnesses per spacecraft-one for each crewman.

The restraint harness consists of a lap belt and two shoulder straps interfacing the lap belt at the buckle. The lap belt interfaces straps are connected between the seat and back pans. This configuration provides adequate hip support. (See figure 2.12-17.)

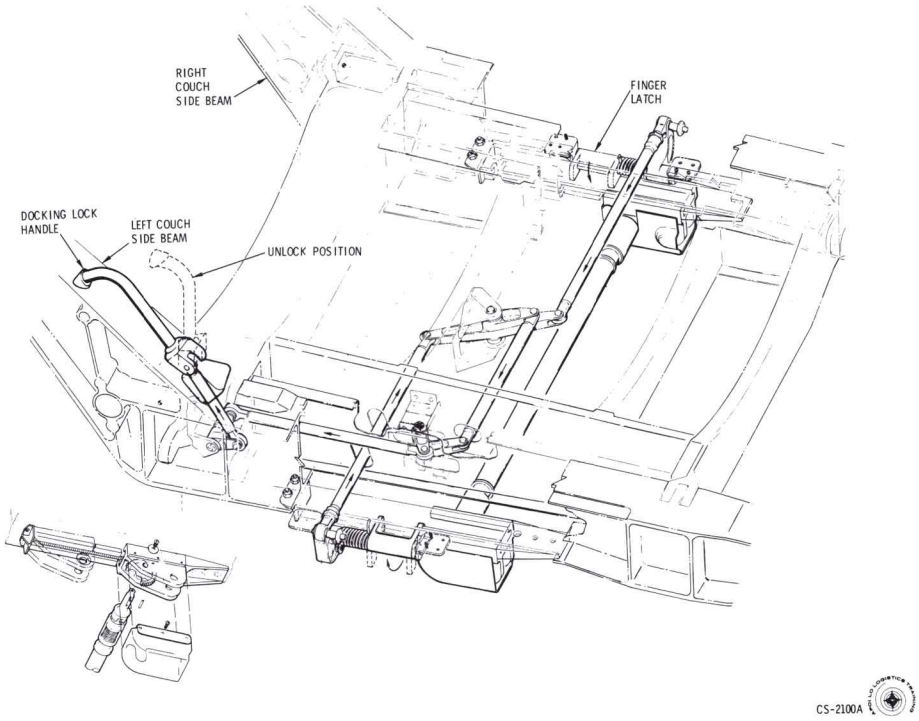

Figure 2.12-16. Crew Couch Docking Lock Mechanism

The shoulder straps pass through slots in the upper portion of the back pan and are connected to spring loaded take-up reels fastened on the underside of the back pan. The take-up reel allows 10 additional inches of strap travel at a maximum 10-pound pull. The crew member can lock or unlock these take-up reels simultaneously by actuating a lever on the side of the couch.

The lap belt buckle is a lever operated, three point release mechanism. By pulling a lever, the shoulder straps and right lap belt strap will be released. The strap ends and buckle are equipped with Velcro patches and may be fastened to mating patches on the couch when not in use. This also prevents the buckles and attachments from floating free during zero g (figure 2.12-18.)

The maximum force on the harness straps will be 3,115 pounds at the chests. The straps are dacron, 1-7/8 inches wide, and have a strength of 6,000 pounds.

2.12.6.1.2 Operations.

The harness will be on and locked during all maneuvers when g loads are expected such as launch, Delta V, docking, entry, and landing. Securing in the couch prior to impact will include locking of the foot straps in addition to fastening of the harness.

The harness can be tightened and loosened readily by the astronaut.

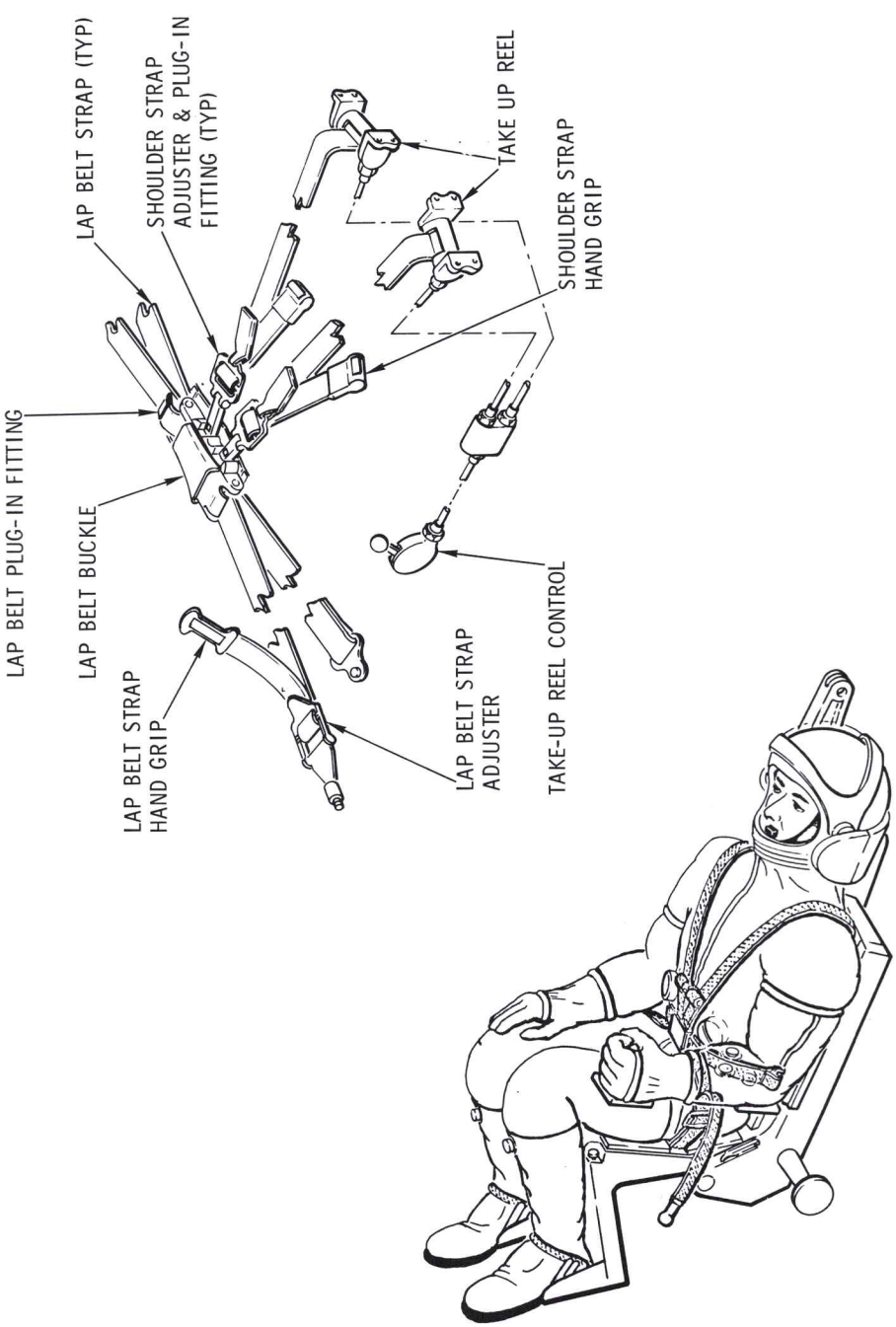

Figure 2.12-17. Crewman Restraint Harness Components

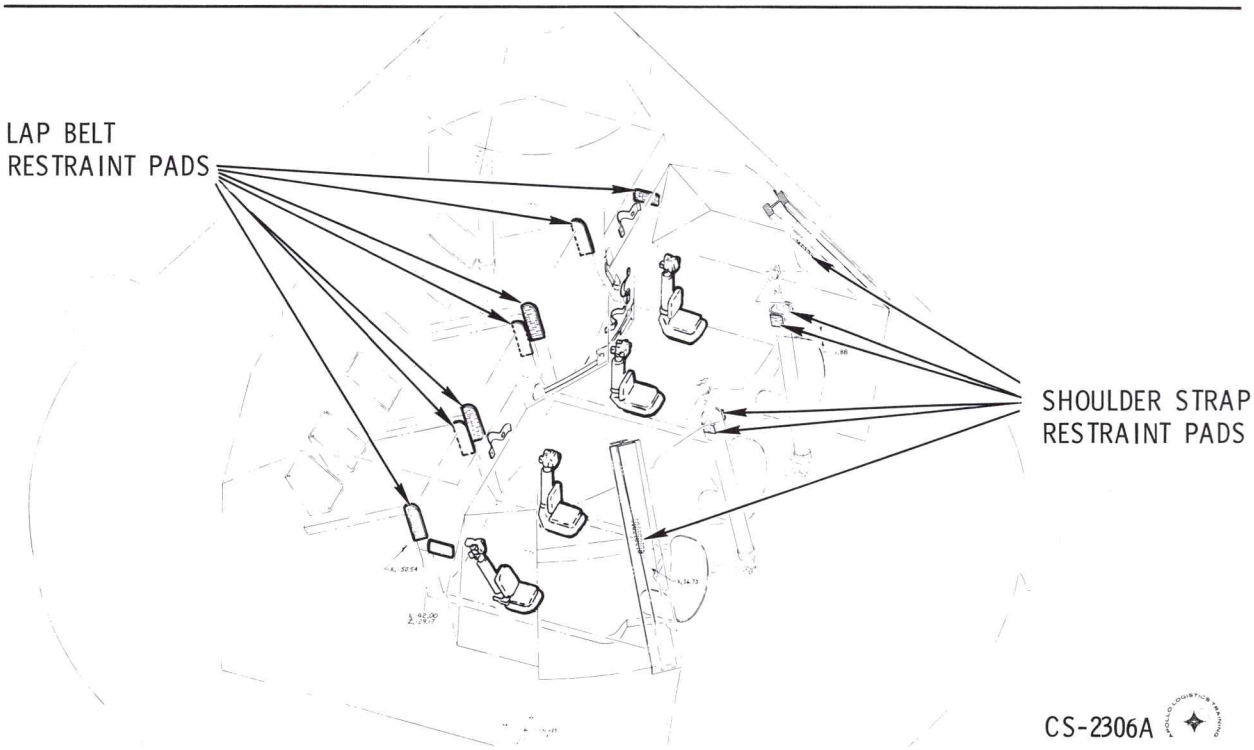

Figure 2.12-18. Restraint Harness Velcro Restraint Pads

2.12.6.1.3 Stowage.

The harness stays attached to the couch and is not removed.

2.12.6.2 Weightless Restraint.

To assist the crew in egressing from the couch, five hand straps are attached behind the MDC (figure 2.12-19).

When out of the couch, the astronaut will restrain himself with handholds and Velcro foot restraints. Part of the aft bulkhead will be surfaced with Velcro hook material. The astronaut will wear Velcro pile material on the soles and heels of his PGA boots.

2.12.6.2.1 Weightless Crewman Restraint Sandals. (Figure 2.12-20)

Restraint sandals will be worn with the CWG. The sandals are fabricated of flexible plastic royalite PR55. Velcro pile material is bonded on the ball and heel of the sole. The sandal is held closed and on the foot by Velcro patches.

There are three pairs of sandals and they are stowed in the LHEB with the CWGs and flight coveralls.

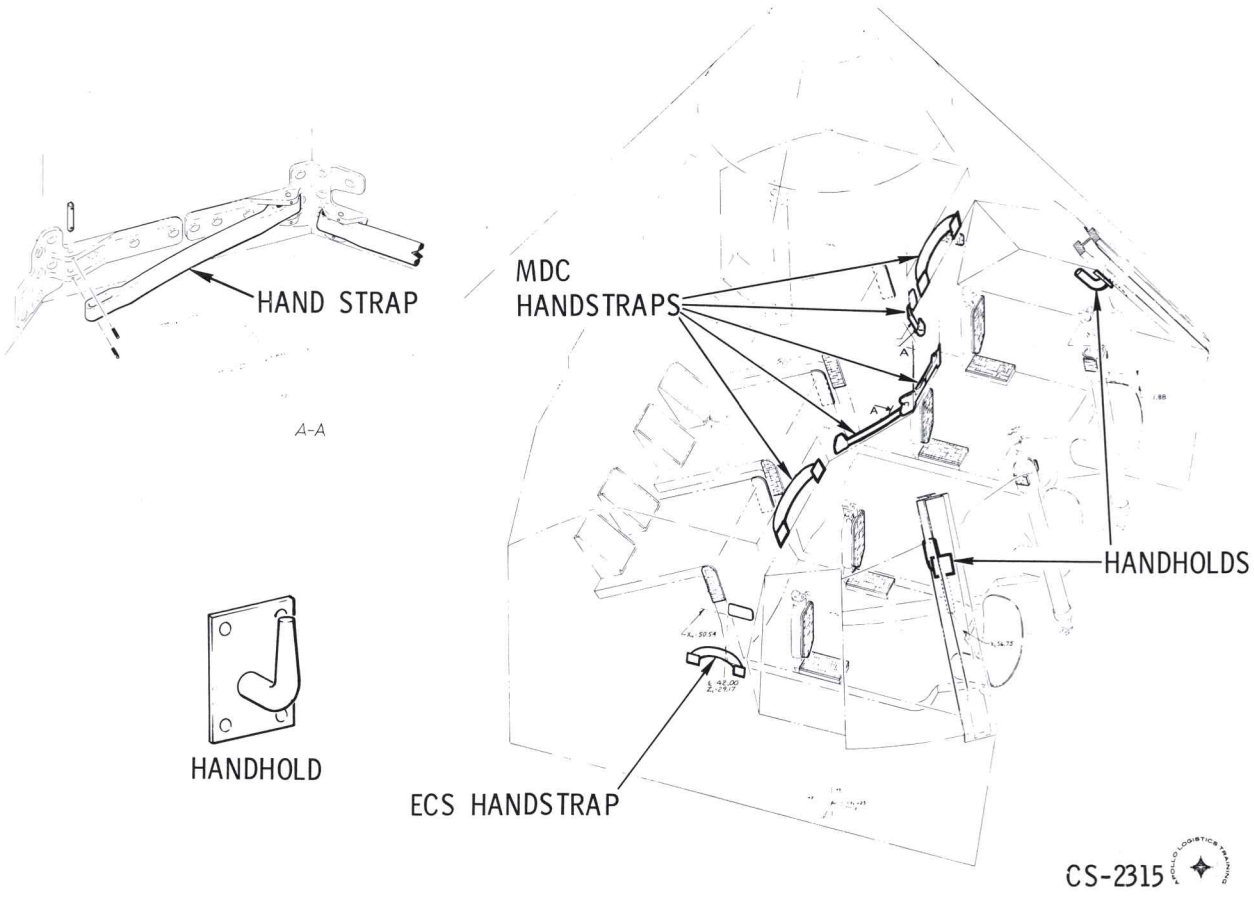

Figure 2.12-19. C/M Interior Hand Grips

2.12.6.2.2 Guidance and Navigation Station Restraint.

Two positions may be utilized at the G&N station - standing position or center couch G&N position. The astronaut will restrain himself in the standing position by fastening his restraint sandals to the aft bulkhead and using a handhold on the left side of the G&N console.

The astronaut will restrain himself in the center couch at the G&N station by positioning the couch to the 170-degree hip angle and restraining his feet with the couch foot straps.

2.12.6.2.3 Crewman Sleeping Restraint. (Figure 2.12-21)

The crewman sleeping position will be under the left and right couch with the head toward the hatch. He will be restrained in position by crewman sleeping restraint.

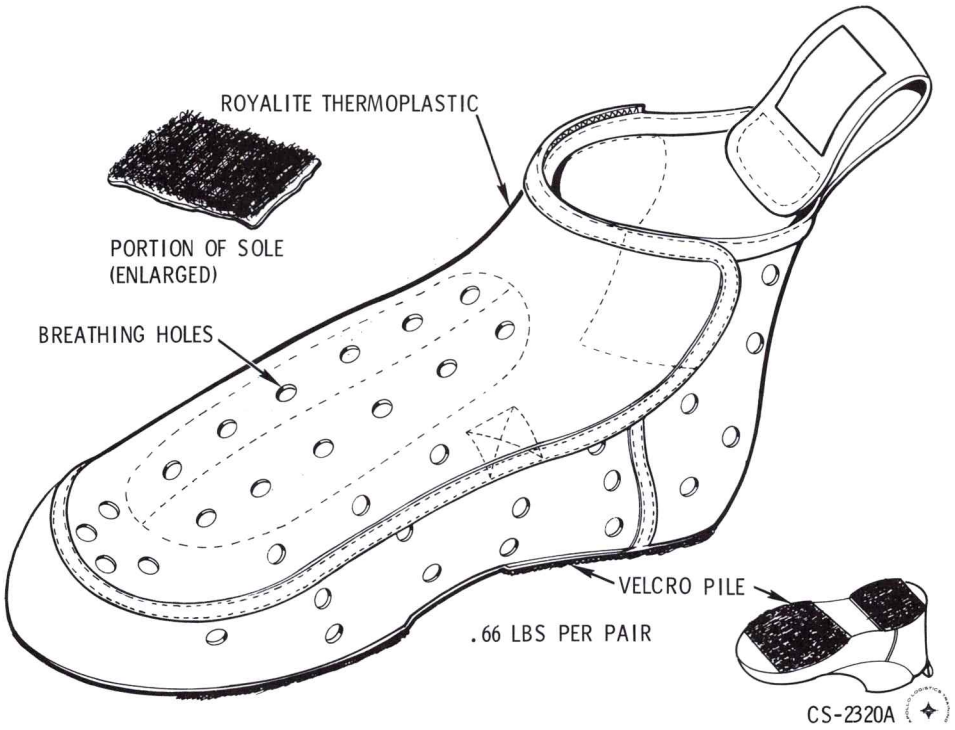

Figure 2.12-20. Weightless Crewman Restraint Sandal

The restraints (2) are dacron fabric lightweight sleeping bags 64 inches long, with zipper openings for the torso and 7-inch diameter neck openings. They are supported by two longitudinal straps that attach to the L1 OH canister storage boxes on one end (LEB) and to the C/M inner structure at the other end.

The two sleeping bags will be stowed in the two suit PGA stowage bag during boost and entry.

2.12.7 FLIGHT DATA FILE (GFP).

The flight data file (figure 2.12-22) is a mission reference data file that is readily available to the crewman within the command module.

The flight data file contains checklists, manuals, and charts. The commander's and pilot's data file is stowed in nylon bags and the senior pilot's is stowed in a drawer container.

2.12.7.1 Commander's Flight Data File.

The commander's flight data file contains a commander's checklist, flight plan, and stowage bag. The stowage bag is nylon cloth material with pouches that close and are retained closed by Velcro. A flap at the top is

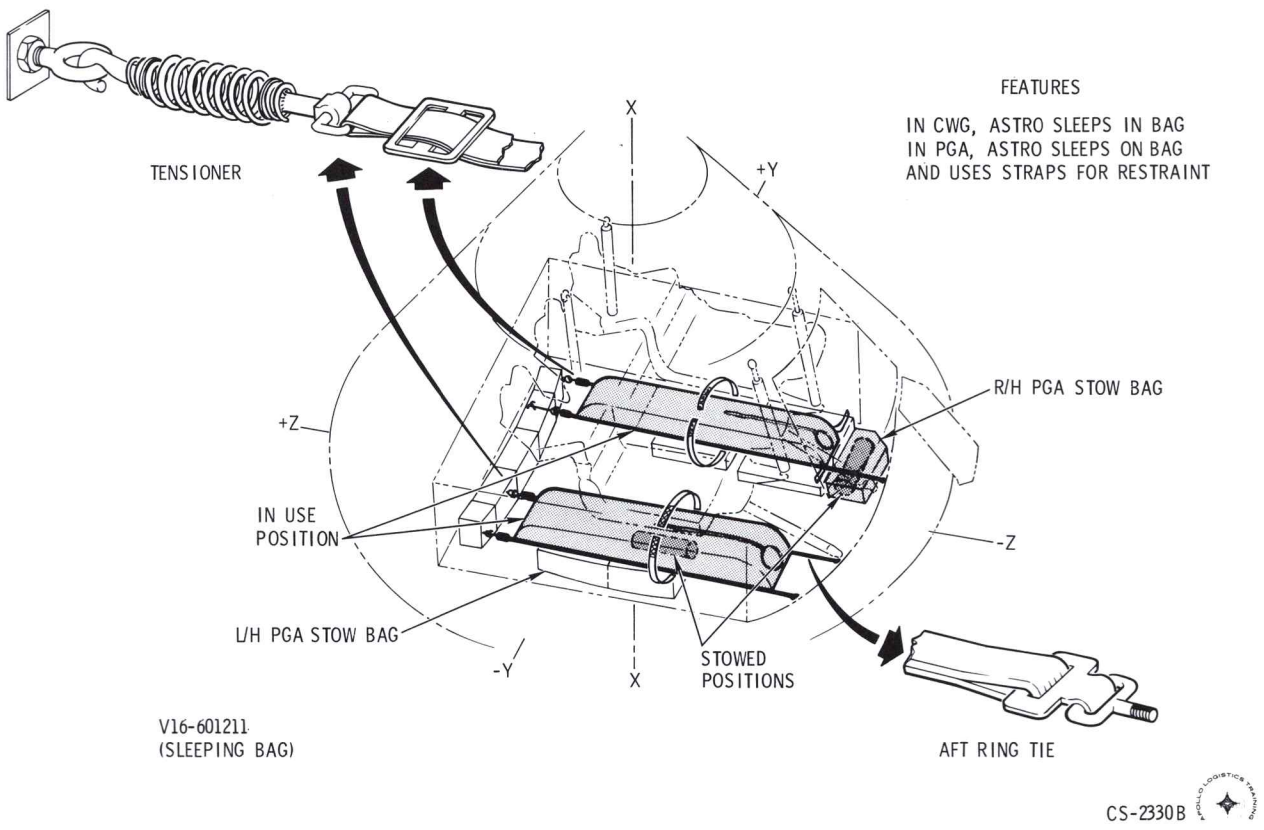

Figure 2.12-21. Sleeping Position Restraint Configuration

lined on the reverse side with Velcro attaching it to the stowage position. It is stowed on the left girth shelf near the commander's left shoulder.

2.12.7.2 Pilot's Flight Data File.

The pilot's data file contains a pilot's checklist, mission log and data, and a stowage bag. The stowage bag is the same as the commander's except for the nomenclature. It is stowed on the right girth shelf near the pilot's right shoulder.

2.12.7.3 Senior Pilot's Flight Data File.

The senior pilot's data file contains a senior pilot's checklist, landmark maps, star charts, S/C systems data, orbital map, and an experiments checklist. Stowage is in a fiberglass container 23 inches long by

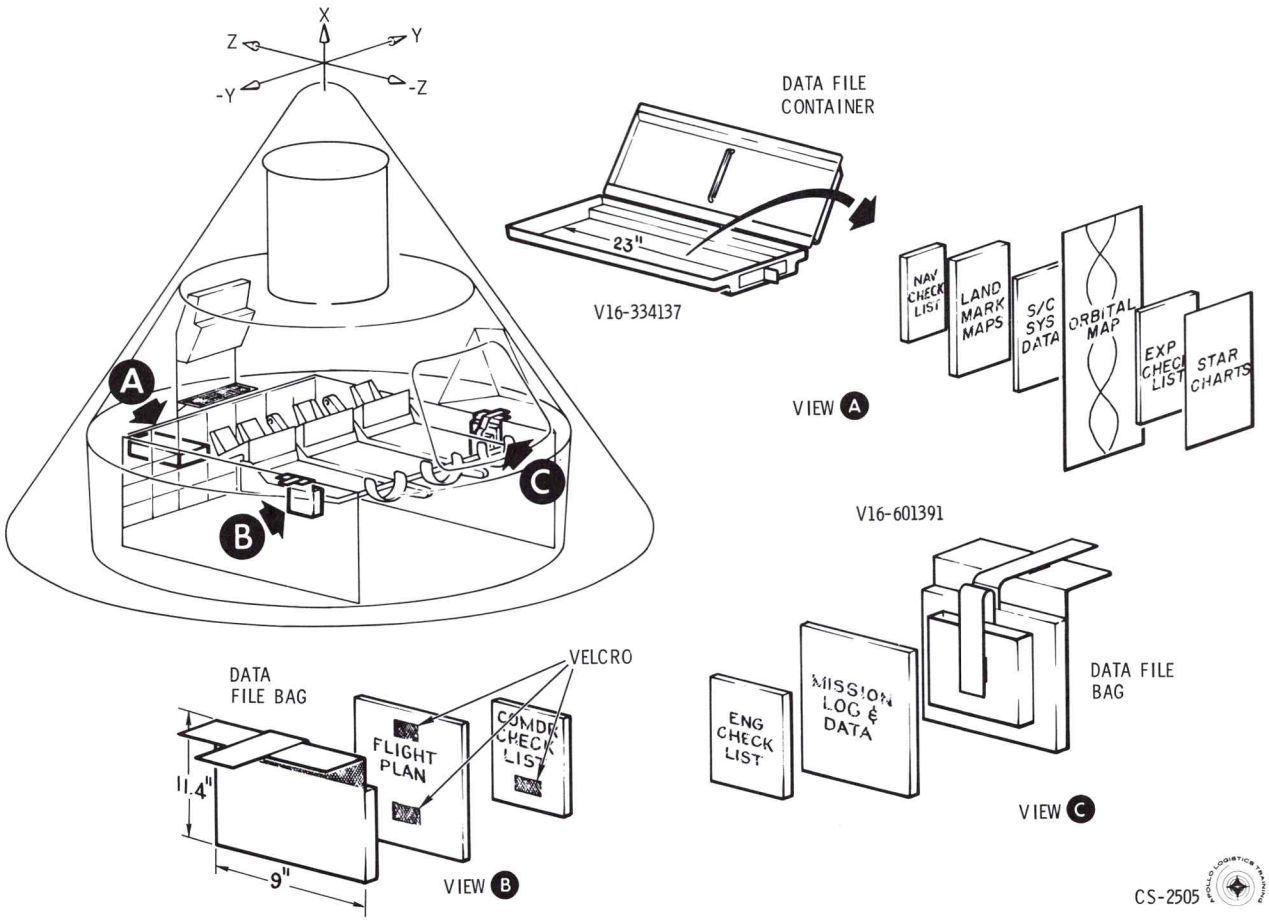

Figure 2.12-22. Flight Data File Configuration, Block I

9.46 inches wide by 1.75 inches deep. It has a hinged cover to contain the manuals when the container is removed from its stowage compartment in the LEB. The container has a nylon ribbon tab on each end to aid in pulling it out of the compartment. The compartment has a door, with a simple bar latch to restrain the container.

2.12.8 CREWMAN INFLIGHT TOOLSET AND WORKSHELF (GFP).

The crewman inflight toolset provides multipurpose tools and/or attachments for Apollo mission activities.

2.12.8.1 Description.

The crewman inflight toolset (figure 2.12-23) contains a torque wrench, adapter handle, 10-inch driver, 5/32-inch hex short driver, 7/32-inch hex driver, emergency wrench, two "T" handles, two end

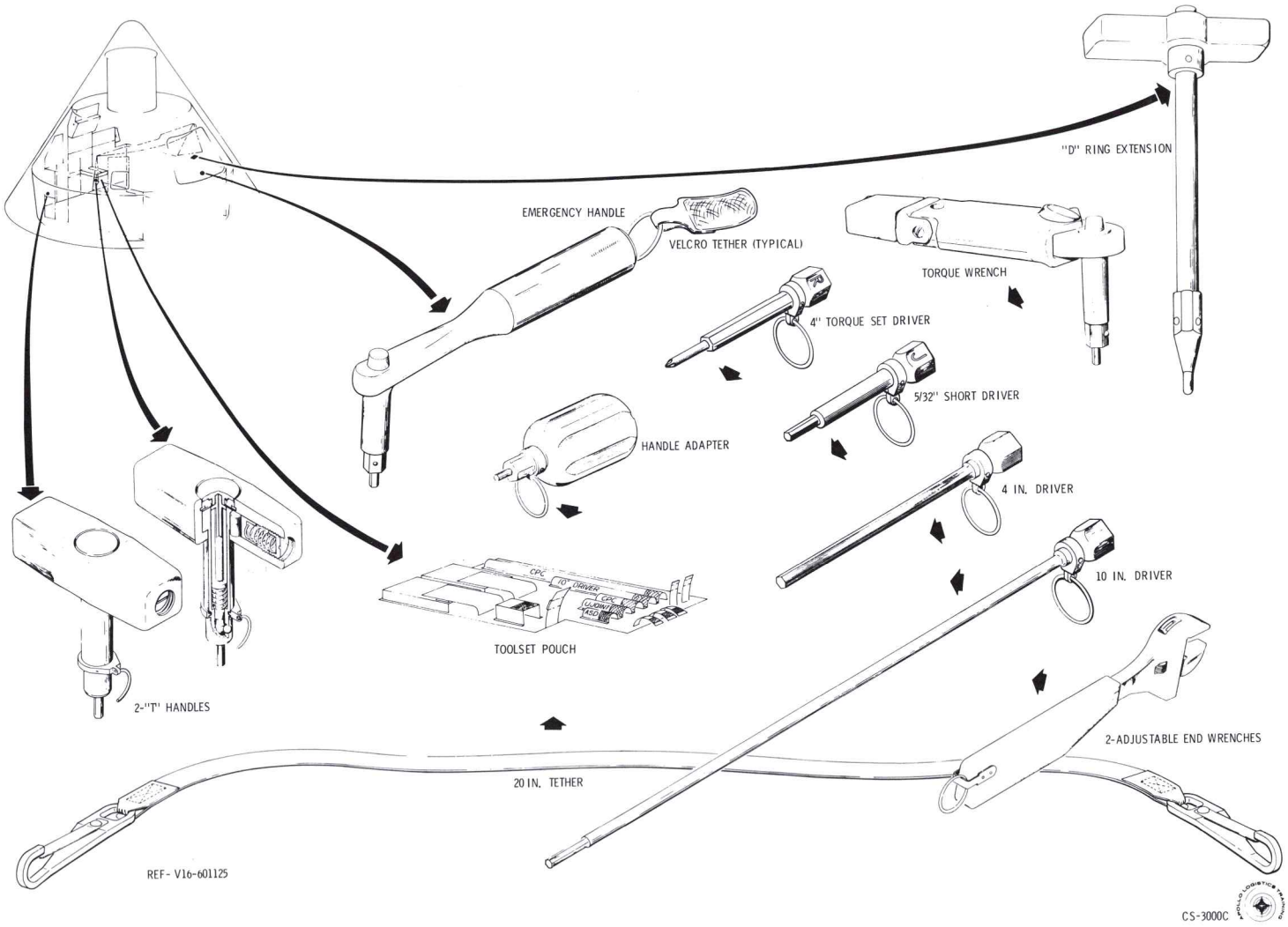

Figure 2. 12-23. Crewman Inflight Toolset Configuration, Block I

wrenches, 20-inch tether, and a "D" ring extension handle. Operationally, the tools are designated by a letter (A, B, C, D, etc).

2.12.8.1.1 Torque Wrench (Tool A).

The torque wrench has a torque limiting capacity of approximately 35 to 200 inch-pounds in the clockwise direction. It has a ratchet capability in the clockwise and counterclockwise direction. The pawl, which indicates operation, has three positions which are marked CW, LOCK, and CCW. The maximum torque capability in the LOCK position is approximately 400 inch-pounds.

The dual driving lug has a 7/16-inch hex male wrench with a ball-lock, and a 5/32-inch hex male wrench. The drive lug fits all drivers. The button on top of the shaft controls the ball-lock which locks the drivers. The lug reaches 2-1/4 inches beyond the face of the wrench.

Torque settings of 50, 100, 150, and 200 inch-pounds can be calibrated and marked. The setting can be set by rotating the knob at the end of the handle and observing the "bar in the slot" on the underside of the handle. The following symbols indicate the torque values:

● = 50 inch-pounds
✚ = 100 inch-pounds
▲ = 150 inch-pounds
■ = 200 inch-pounds

2.12.8.1.2 Adapter Handle (Tool E).

The adapter handle is approximately 3.5 inches long and 1.5 inches in diameter. It has a dual driving capability of 7/16-inch and 5/32-inch hexes, and fits all drivers. A ball detent will assist in maintaining contact with the drivers.

2.12.8.1.3 Ten-Inch Driver (Tool H).

All drivers have a 7/16-inch internal hex drive socket.

The 10-inch driver is 11.125 inches long with a 10-inch shaft. The shaft end has a 5/32-inch hex drive.

2.12.8.1.4 Four-Inch Driver (Tool L).

The 4-inch driver is 5.125 inches long with a 4-inch hex shaft of 7/32 inch.

2.12.8.1.5 Emergency Wrench (Tool B).

The emergency wrench is 6.25 inches long with a 2.5-inch drive shaft. The drive shaft has two hex drives of 7/16 and 5/32 inch. It is

capable of applying a torque of 1475 inch-pounds, and is a backup for the torque wrench. It has a ball lock device to lock it in a "drive". It is essentially a modified Allen Head "L" wrench.

2.12.8.1.6 "T" Handle (Tool C).

There are two "T" handles per toolset. The "T" handle is 2.75 inches long with an aluminum body. It has a 3/8-inch diameter ball-lock shaft with a 5/32-inch hex wrench. There is a torque break feature, calibrated by an adjustable screw at 35±5 inch-pound, and then sealed. The ball-lock device is released by the pushbutton on the top of the handle.

2.12.8.1.7 End Wrench (Tool F).

The adjustable end wrench is a modified crescent wrench. It is lightweight aluminum with an isotactic foam handle covering.

The jaws have an opening width of from 1/4 to 1 inch.

2.12.8.1.8 Inflight Toolset Tether.

The toolset tether is a 20-inch strap with snaps at each end.

Each tool has a tether ring or band so the tether snap can be attached.

2.12.8.1.9 "D" Ring Extension Handle (Tool N).

The "D" ring extension handle is a rod with a "T" handle approximately 7 inches long. The rod end has a guide point tapering to a 7/16-inch hex about one inch long. Every other hex surface has a ball lock. A button on the "T" controls the balls lock.

2.12.8.2 Operational Use.

The inflight toolset tools have multiple uses. Figure 2.12-24 is a matrix table for tool usage.

In the C/M, items operated or adjusted by tools, will have a small square placard nearby, designating the tool (A-N) and the torque setting of the torque wrench. If the torque wrench is not used, only the designating letter (0.19 inch high) will be indicated.

The toolset is designated to be used either in the shirtsleeve environment or the PGA pressurized status.

SYSTEMS DATA

Crewman Inflight Toolset Usage Chart

P = Primary Use
B = Backup
E = Emergency

Function (Designator)	Torque Wrench A	10" Driver H	7/32" Hex Driver L	5/32" Hex Sht Drvr J	Emergency Wrench B	Adapter Handle E	"T" Handle (2) C	Crank Handle D	Adj End Wrench (2) F	"D" Ring Ext. Handle N
A. Environmental Control System										
1. Open/close ECS valves on water and O_2 panel (LHEB)	B					B	P			
2. Close water-glycol accumulator isolation valve in ECU. (LHEB)	P	P				B				
3. Unlatch/latch fasteners of ECU panel over LIOH filter. (LHEB)	B	P				P				
4. Open/close water delivery device valve (LHFEB)	B						P			
5. Tighten fluid and gas line connections (LHEB)									P	
6. Unlatch/latch fasteners of cabin atmosphere recirc. screen. (LHFEB)	B	P				P				
7. Unlatch/latch fasteners (3) of access panel to coolant control panel (LHEB).	B					P	P			
B. Guidance, Navigation, and Control System										
1. Unlatch/latch fasteners of "LOOSE PARTS STOWAGE" cover for G&N handles. (LHFEB)	B	P				P				
2. R/R G&N handles (2) on G&N panel (LEB)	P					B				
3. R/R rotational control adapter on G&N panel (LEB)	B	P				P				
4. R/R optics panel cover (LEB)	P					B				

Figure 2.12-24. Crewman Inflight Toolset Usage Chart (Sheet 1 of 3)

Crewman Inflight Toolset Usage Chart

P = Primary Use
B = Backup
E = Emergency

Function (Designator)	Torque Wrench A	10" Driver H	7/32" Hex Driver L	5/32" Hex Sht Drvr J	Emergency Wrench B	Adapter Handle E	"T" Handle (2) C	Crank Handle D	Adj End Wrench (2) F	"D" Ring Ext. Handle N
B. Guidance, Navigation, and Control System (Cont)										
5. Adjust scanning telescope shaft and trunnion axis. (LEB)				P		P				
6. Wind/set GMT clock (LHFEB)				P		B				
7. R/R sextant short and long eye piece from eyepiece	B	P				P				
8. R/R scanning telescope short and long eyepiece from eyepiece assembly.	B	P				P				
C. Mechanical Systems										
1. Adjust crew couch headrest	B		P			P				
2. Adjust couch upper armrest	B		P			P				
3. Stow translational control adapter-center couch leg rest	B		P			P				
4. Open side crew pressure (inner) hatch from CM					E					
5. Open side crew heatshield/thermal hatch from CM (Emer.)					B					
6. R/R seawater access tube plug. (LHEB)	P	P				B				
7. Lock/unlock couch footstraps when PGA pressurized.										P

Figure 2.12-24. Crewman Inflight Toolset Usage Chart (Sheet 2 of 3)

Crewman Inflight Toolset Usage Chart

P = Primary Use
B = Backup
E = Emergency

Function (Designator)	Torque Wrench A	10" Driver H	7/32" Hex Driver L	5/32" Hex Sht Drvr J	Emergency Wrench B	Adapter Handle E	"T" Handle (2) C	Crank Handle D	Adj End Wrench (2) F	"D" Ring Ext. Handle N
D. Mission Experiments										
1. Backup-open/close air lock door	B									
2. Engage air lock thermal door rod	B			P		P				
3. Backup-open/close air lock thermal door lock mechanism		B								
4. Attach deployment rods to ext/ret experiment	B			P		P				
5. Attach handle to extended deployment rods to orient experiment	B	P				P				
6. Jettison deployed experiment equipment					P					
7. Lock/unlock screws (2) of "SCIENT EQUIP B" drawer	B	P				P				
8. Connect lo-press O_2 level flex tube for M-1A									P	
9. Latch/unlatch fasteners (4) on scientific equip area "W".	B	P				P				

Figure 2.12-24. Crewman Inflight Toolset Usage Chart (Sheet 3 of 3)

2.12.8.2.1 Tether.

The tether is used to secure a tool to the crewman while moving about the command module.

2.12.8.3 Stowage. (Figure 2.12-25)

2.12.8.3.1 Inflight Toolset Stowage Pouch and Toolset Drawer.

The toolset pouch is located in the toolset drawer on the LEB. The workshelf is stowed in the drawer on top of the toolset. The following tools are stowed in the pouch:

5/32-inch hex short driver
10-inch driver
4-inch driver
4-inch torque set driver
Adapter handle
2 end wrenches
Tether

The pouch is 21.52 inches long by 7.5 inches wide, and is made of green nylon cloth. It has a small pouch with a retention strap for each tool and is marked with the tool name and designation. The toolset pouch is held to the drawer bottom by Velcro strips on the underside. The tether will be attached to a driver tether ring and "laid" in the drawer.

The toolset drawer slides in and out on tracks and is held closed by a latch.

A polyurethane block with a cutout for the torque wrench is located in a corner of the drawer.

2.12.8.3.2 Miscellaneous Stowage.

The "T" handles are stowed in the ECS panels at all times when not in use.

The emergency wrench is placed in the inner hatch latch mechanism for the mission. If it is needed, it can be removed and used.

The "D" ring extension handle is stowed near the light fixture on the right girth shelf-accessible to the pilot.

2.12.8.4 Workshelf Assembly.

The workshelf assembly (figure 2.12-25) provides a table for food preparation and map/manual reading.

The workshelf is of aluminum sheet construction approximately 24 by 10.5 inches. At each end there is a hinged support frame with slide latches. The shelf has two pivots so that it can be folded lengthwise, making storage easier. When stored, it is 24.5 by 6 by 1 inches.

The working top of the shelf is surfaced with Velcro hook material. Items that will be used in conjunction with the shelf will be equipped with Velcro pile material, facilitating zero g restraint.

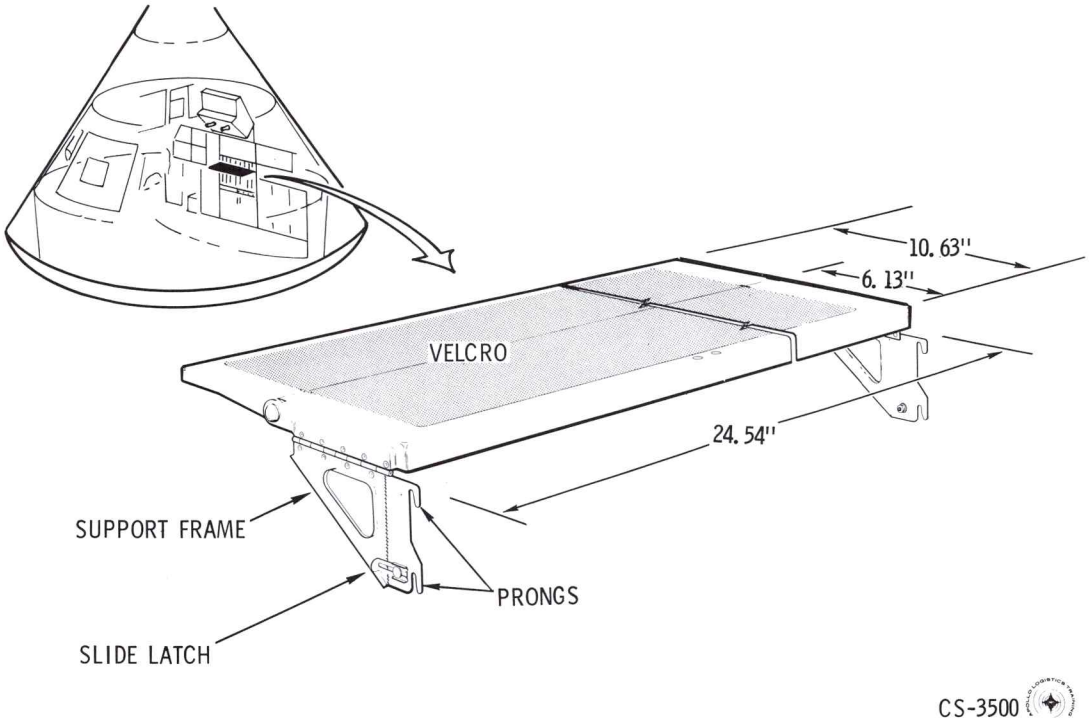

Figure 2.12-25. Workshelf (Block I)

2.12.8.4.1 Usage.

The workshelf is stored in the lower equipment bay in the toolset drawer next to the flight data file storage. To remove, slide drawer out, lift, and unfold the shelf. Flip the support frames to the extended position and install on the lower bulkhead girth shelf below the G&N equipment by slipping the prongs into the slots. The prongs rest on small pins. Lock the shelf in by actuating the slide latch on each support frame.

To remove, reverse the installation process and store.

The food packages and flight data manuals have patches of Velcro pile to interface with the workshelf surface.

2.12.9 CREW WATER.

2.12.9.1 Drinking Water Subsystem.

The source of cold water for drinking is the water chiller. It is the same line that is routed to the cold water tap of the potable water tank. The crewman drinking water line is T'd off, and routed through a shutoff valve to the water dispenser located beneath the main display panel structure.

The water dispenser assembly consists of an aluminum mounting bracket, a coiled hose, and a water delivery valve in the form of a button actuated pistol (figure 2. 12-26).

The pistol is GFE. It meters one-half ounce portions of water when the button is pressed. An accumulative counter is located on the side. It has a safety button to prevent discharge of water when passing the pistol from one crewman to the other.

The uncoiled hose will reach 72 inches. When the pistol is returned to the mount, the hose will re-coil into the housing.

The pistol is stored in the mounting bracket and is held in place by a retainer.

2. 12. 9. 2 Operational Use.

The shut-off valve is opened during the countdown to activate the system. This is accomplished with the "T" handle. The shut-off valve will be open for the entire mission unless the pistol or dispenser assembly develops a leak or malfunctions.

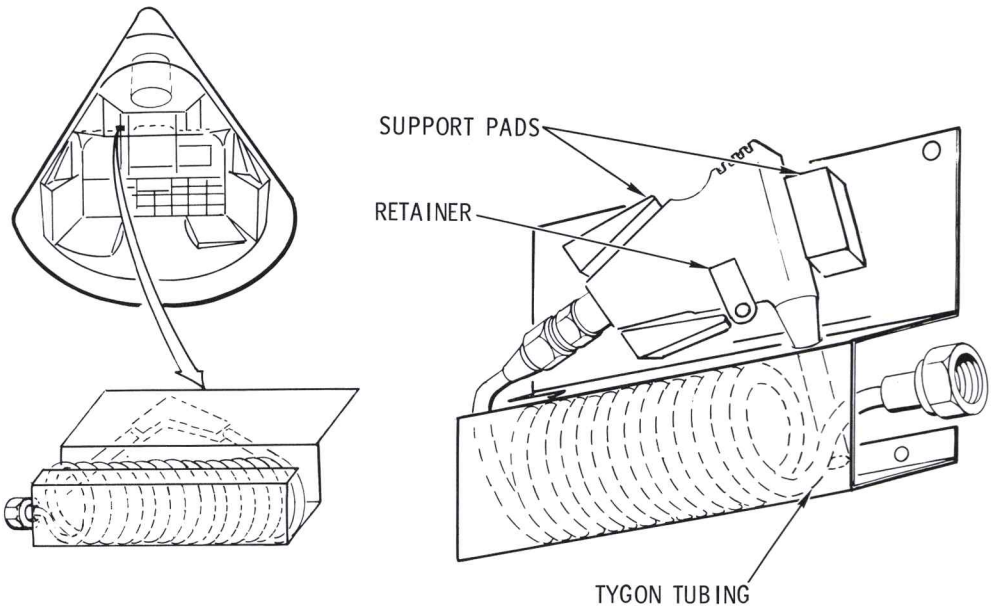

Figure 2. 12-26. Crewman Water Dispenser Assembly

The pistol barrel will be placed in the mouth and the button pressed. The meter must be read before and after to determine the amount of water drunk. The amount is then logged.

After landing, the potable water supply will be used for drinking until depleted. Then, the sea water can be "converted" to potable water by a device in the survival kit.

2.12.10 FOOD.

The food furnishes a balanced diet of approximately 2650 calories per day to each crew member.

The food is vacuum-packaged in plastic bags. The food bag has a one way poppet valve through which the potable water supply nozzle is inserted. The bag has another valve through which the food passes.

The food bags are packaged in aluminum foil backed plastic bags to make one meal for each astronaut. Breakfast, lunch, and snacks will be recycled every four days during the mission and the dinner every eight days. The bags have red, white, and blue dots to identify them for the individual crewman.

2.12.10.1 Use.

The freeze-dry food is reconstituted by adding hot or cold water through the one way valve on the food bag neck. It is then kneaded by hand for approximately 3 minutes. When reconstituted, the neck is cut off with scissors and placed in the mouth. A squeeze on the bag forces food into the mouth. When finished, a germicide tablet, attached to the bag, is slipped through the mouth piece, an ounce of water added, and the bag shook. The germicide will prevent fermentation and gas. The bag is then rolled as small as possible and returned to the food stowage drawer.

2.12.10.2 Stowage.

Food is stowed in three areas; the food stowage compartment in the lower equipment bay (LEB) on the left-hand side; the auxiliary food compartment in the right-hand equipment bay (RHEB); and the food stowage compartment in the left-hand equipment bay (LHEB). Combined, they offer approximately 6,006 cubic inches of food storage volume.

2.12.10.2.1 LEB Food Stowage Compartment. (Figure 2.12-27)

The food stowage compartment is structurally separate from the C/M support structure and contains five bins and five drawers. The combined drawer volume is approximately 3725 cubic inches. The compartment is 23 inches high by 20 inches wide by 23 inches deep, and is constructed as a unit.

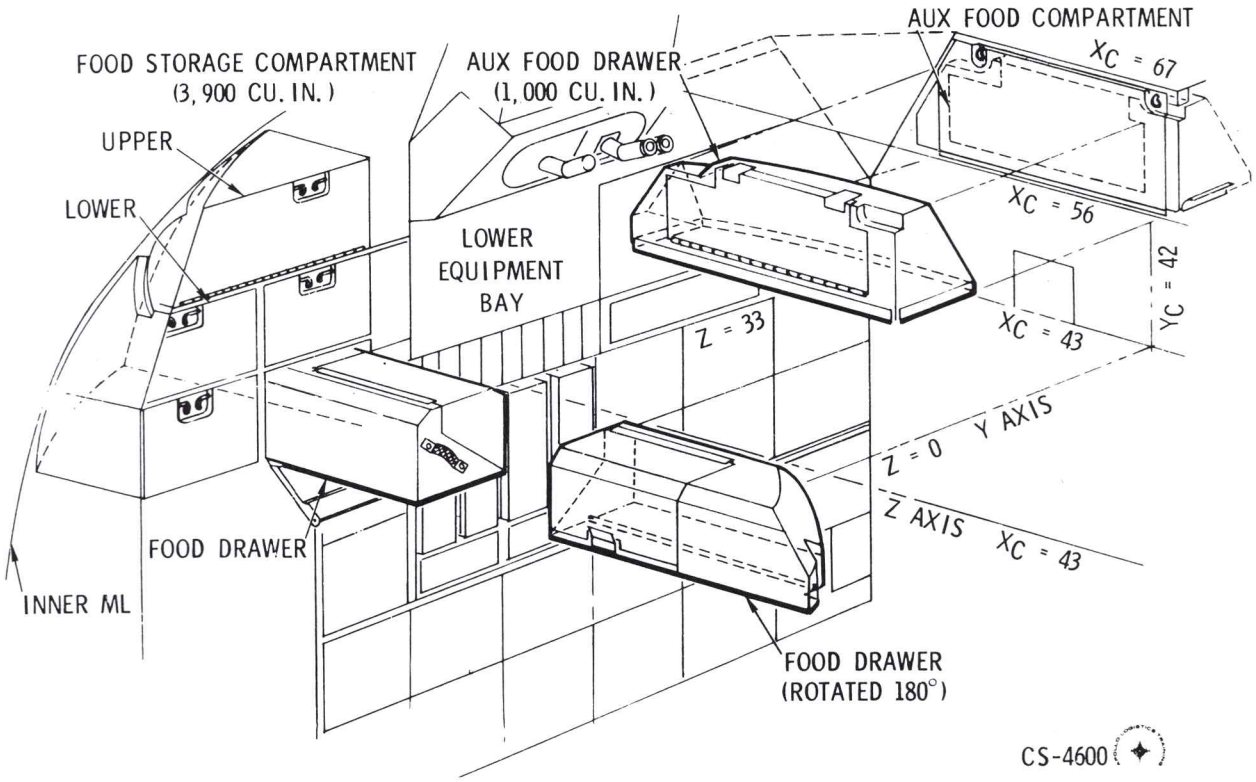

Figure 2.12-27. Apollo C/M Food Storage Compartment

The food stowage drawers are constructed of 0.020-inch-thick fiberglass, the largest weighs about 26 ounces. The end to be opened has a net closure held in place by Velcro providing easy access when the door is opened.

2.12.10.2.2 RHEB Auxiliary Food Compartment Drawer.

The auxiliary food compartment drawer is separate from the food stowage compartment, and is located on the right-hand equipment bay. The volume is approximately 1000 cubic inches and its dimensions are 29 inches long by 10 inches high by 10 inches deep.

The auxiliary food compartment drawer is a three-ply fiberglass box 0.030 inch thick. The front has a net closure hinged at the bottom and attached at the top by Velcro. It is supported structurally on an aluminum

shelf and two sheet aluminum stops in the Z-Z direction. Its rear side fits against the inner structure face sheet. An aluminum door holds the drawer in and gives structural support.

2.12.10.2.3 LHEB Food Stowage Compartment.

The LHEB food stowage compartment has a volume of 1281 cubic inches.

The food stowage drawer is a fiberglass drawer similar in construction to the other food drawers, with a net closure on the front.

The drawer rests in the structure and is held in place by a sliding door.

2.12.11 PERSONAL HYGIENE (GFP).

2.12.11.1 Description. (Figure 2.12-28)

Personal hygiene items consist of an oral hygiene assembly containing a toothbrush and ingestible gum, wet and dry cleaning cloths, and towels.

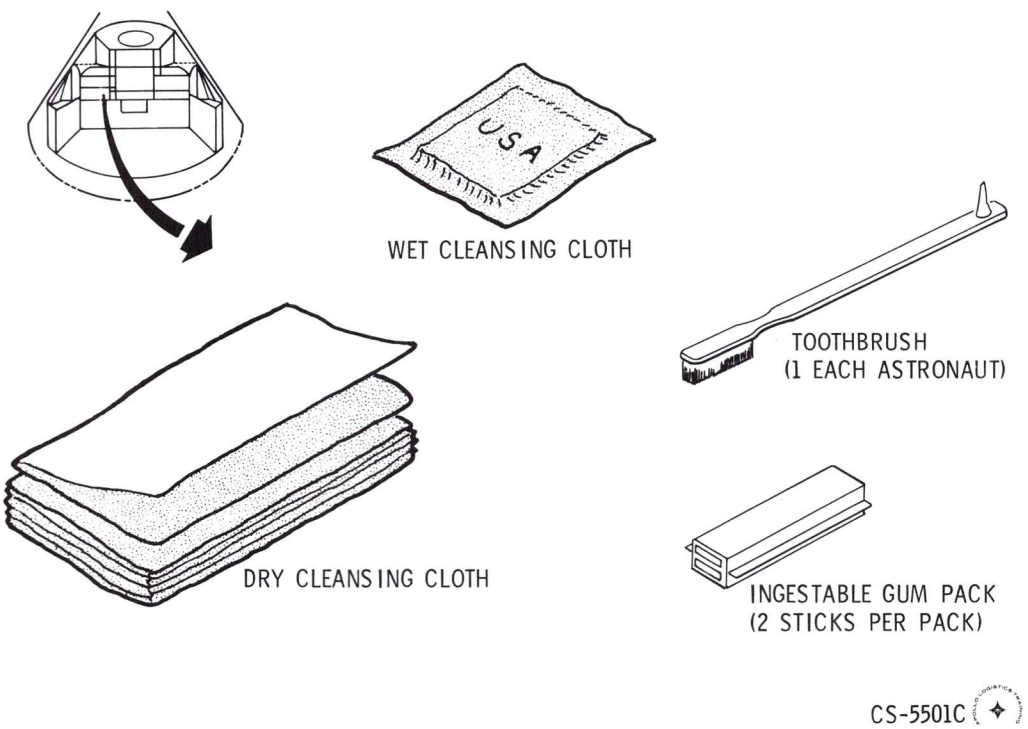

Figure 2.12-28. Personal Hygiene Items

2.12.11.1.2 Cleansing of Teeth - Oral Hygiene Assembly.

An effective method of cleansing teeth is "Trident" brand chewing gum. It is chewed and then swallowed. One stick is used after each of four meals per day. A stick is approximately 1 by 7/8 inch.

To maintain healthy gums, a toothbrush for massaging by brushing is used. The brush also has a rubber prong on the handle for dislodging food particles.

These items are packaged in a one man module, to be used for a 14 day period. The module contains one toothbrush and 28 packs of gum. In each pack, there are two sticks giving a total of 56 sticks per astronaut.

The module is stored in the first days food storage drawer to be used for the entire mission.

2.12.11.1.3 Wet Cleansing Cloth.

Wet cleansing cloths will be used for post-meal and post-defecation hygiene.

The cloths are 4 by 4 inches folded into a 2-inch square, and sealed in plastic. They are saturated with a germicide and water.

The cloths for post-meal cleansing are stored, along with the dry cleansing cloth, in the food containers for easy accessibility. The post-defecation cleansing cloths (62 or more) are located in a sanitation supply stowage box.

2.12.11.1.4 Dry Cleansing Cloth.

The dry cleansing cloths will be alternated with the wet cleansing cloths for post meal cleanup. They are the same size and texture, however they do not contain water and a germicide. They are also packaged with the food.

There are 168 wet and dry cleansing cloths to be placed in the food packages.

2.12.11.1.5 Towels.

The towels will be used for utility purposes. They are packaged seven each in three plastic bags, a total of 21, and are 12 by 12 inches in size.

2.12.11.1.6 Tissue Dispensers.

The cleansing tissues will also be used for defecation cleanup and utility use. There are nine tissue dispensers, seven are located on the back of the center couch, and two in other areas. They are mounted with Velcro.

2.12.12 MEDICAL SUPPLIES (GFP).

The medical equipment is used to monitor current physiological condition of the crewmen, and to furnish medical supplies for treatment of crewman inflight medical emergencies.

2.12.12.1 Description.

The medical equipment is subdivided into two functional types; monitoring equipment and emergency medical equipment.

The monitoring equipment includes the clinical physiological monitoring instrument set, personal biomedical sensors instrument assembly, biomedical preamplifier instrument assembly, and the personal radiation dosimeters. There is also a bioinstrumentation accessories kit for spares.

The emergency medical equipment is the emergency medical kit.

2.12.12.2 Monitoring Equipment.

2.12.12.2.1 Clinical Physiological Monitoring Instrument Set.

There is a requirement for periodic measurements of body temperature, blood pressure, heart beat rate, and respiratory rate to be logged by the crewman. This set of instruments will accomplish the measurements. The instruments include individual thermometers for body temperature measurements, an aneroid sphygomanometer for measuring blood pressure, and a stethescope for heart beat measurement.

The physiomonitoring set is stored in the forward medical compartment of the LEB.

2.12.12.2.2 Personal Biomedical Sensors Instrument Assembly.

Monitoring of the heartbeat and respiration is required. The sensors assembly automatically and continually senses these functions when the BIOMED switch on panel 20 of the main display console is positioned to the crewman to be monitored.

The personal biomedical sensors instrument assembly consists of electrodes (silver Silver Chloride), four or more, and accessories, such as paste and application tape.

The sensors will be used to gain two electrocardiograph's (ECG), and respiration rate (impedance pneumogram).

The sensor assemblies are attached to the body of the astronaut using paste and tape at areas of sparse muscles (to reduce artifact level) and remain throughout the mission.

2.12.12.2.3 Biomedical Preamplifier Instrument Assembly.

Because of their weak magnitude, the sensor signals have to be amplified before being telemetered. This function is performed by the preamplifiers (or signal conditioners).

The preamplifiers are about the size of a cigarette pack, and weigh about 100 grams. They operate on a source voltage of 16.8 volts, and, therefore, one dc-dc converter (28 vdc-16.8 vdc) is used.

There are three preamplifiers which are to be used for ECG #1, ECG #2/ or phonocardiograph, and respiration rate measurements.

The preamplifiers fit into pockets in the constant wear garment, circumferentially around the stomach diaphragm. Wire leads connect to the sensors, which act as electrodes. The sensors act as an electrode for one or more preamplifiers. The difference of resistance between two electrodes is measured. Muscle Activity (breathing) changes the skin resistance and this change is measured and sent to the telemetry equipment.

Each preamplifier will have a lead (to an umbilical) terminating with a connector. The connectors will plug into a larger common umbilical.

2.12.12.2.4 Bioinstrumentation Accessories Kit.

A kit of spares will be located in the right-hand equipment bay on the kick ring adjacent to the LEB. The kit will have 35 sensors, 50 micropore discs, eight wet wipe towels, one tube of electrolyte paste, and one preamplifier.

2.12.12.2.5 Personal Radiation Dosimeters.

The crew will wear five passive dosimeters in the form of film packs in the CWG. One crewman will also wear an ionization chamber of the active type in his CWG.

Personal dosimeter information will not be telemetered.

2.12.12.3 Medical Kit (GFP).

The medical supplies are contained in; oral drugs, injectable drugs, dressings, topical agents, and an inhaler. The content of the medical kit is as follows:

Oral Drugs

Drug	Usage	No. of Tabs
Bismuth Subcarbonate	Fever, pain reducer	24
Darvon compound 65	Fever, pain reducer	12

Oral Drugs

Drug	Usage	No. of Tabs
Globaline	Suppresses infection of gastro-intestinal system	50
Tigan, Bonodoxin, or Marezine	Anti-nauseant (6-man day treatment)	24
Dexedrine	Stimulant	12
Acromycin (250 mg)		24
Elective medication		9

Injectable Drugs

Drug	Usage	No. of Units
Morphine Sulphate Demerol	Pain killer	3
Tigan, Bonodoxin, or Marezine	Anti-nauseant	3

Drug is contained in an automatic medical injector.

Dressings

Item	No. Reqd
Elastic bandage or compress (3" x 60")	2
Bandaids (1" x 3")	12

Topical Agents and Inhaler

	Usage	No. Reqd
General purpose ointment, antibiotic	Skin irritations	2 (1/2 oz tubes)
Benzedrex Inhaler	Anti-nasal congestant	1

2.12.12.3.1 Packaging.

The medical kit is in a single package, accessible at all times during the mission. The package is approximately 4 by 5 1/2 by 4 inches, and weighs 2.1 pounds.

2.12.12.3.2 Stowage. (Figure 2.12-29)

The medical kit will be stowed on the back of the left couch lower leg support.

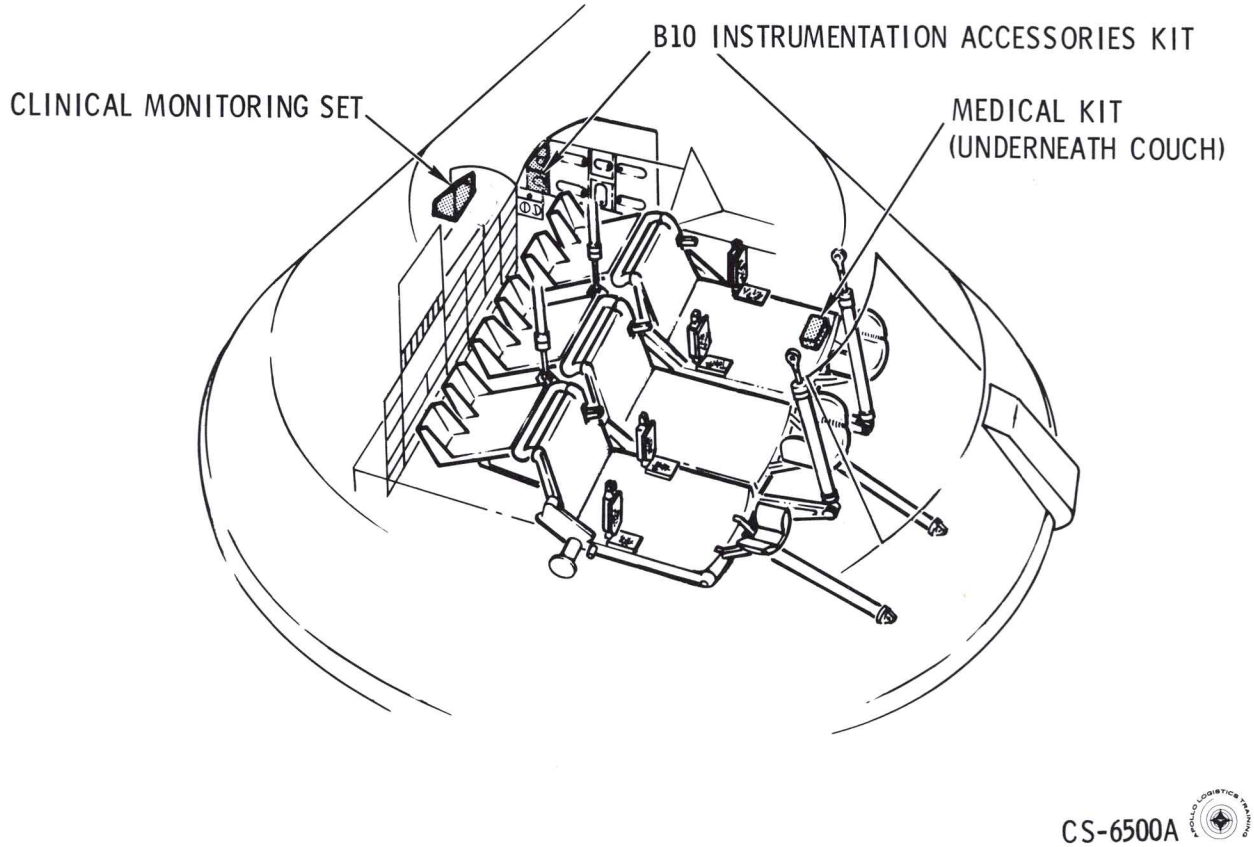

Figure 2.12-29. Medical Supplies and Equipment C/M Location

2.12.12.3.3 Medical Kit Additional Usage.

In the event the astronauts have to evacuate the command module during the recovery phase, the medical kit will be removed from the couch and carried.

2.12.13 SURVIVAL KIT (GFP).

There are two survival kits with three packages in each. One package contains three rafts; the other package contains water and miscellaneous survival equipment. They are readily accessible from the right-hand forward equipment bay by the right-hand seat occupant. The kits and containers weigh approximately 70 pounds.

2.12.13.1 Stowage. (Figure 2.12-30)

The kits are stowed in the right-hand forward equipment bay. They are inserted into the structural framework from the bottom and held in place by a quick release bar retainer.

The individual kits are contained in fiberglass boxes called a survival provisions container assembly (hereafter called a container). Thickness varies from 0.040 inch to 0.070 inch, and varies in ply from 4 to 7, a ply being 0.101 inch. One end is a cover and is attached by a breakaway hinge and locked closed by a hinge and pin assembly. The cover has Dacron webbing straps that act as a handle.

2 12.13.2 Survival Kit Container Operation.

After impact, and if the C/M is damaged or sinking, if it has been determined by the crew commander to evacuate, the pilot will release the survival containers by pulling a ring on the bar retainer. He will hand a container to each of the other astronauts. Two astronauts must retrieve the flight data mission logs. The side hatch is removed and the astronauts enter the water. In the water, the container top is removed by, (1) pulling hinge pin completely out and discarding (2) rotating top against breakaway hinge until it falls off. Reach inside, pull out contents, activate the one man raft and climb aboard.

2.12.13.3 Contents of the Survival Kits. (Figure 2.12-30)

Container No. 1 contains two cloth pouches. One pouch contains three aluminum containers, each with 5 pounds of water. The second pouch contains:

Survival radio with battery	3 survival glasses
Survival radio battery	2 survival knives
2 combination survival lights	2 desalting kits with 16 tablets

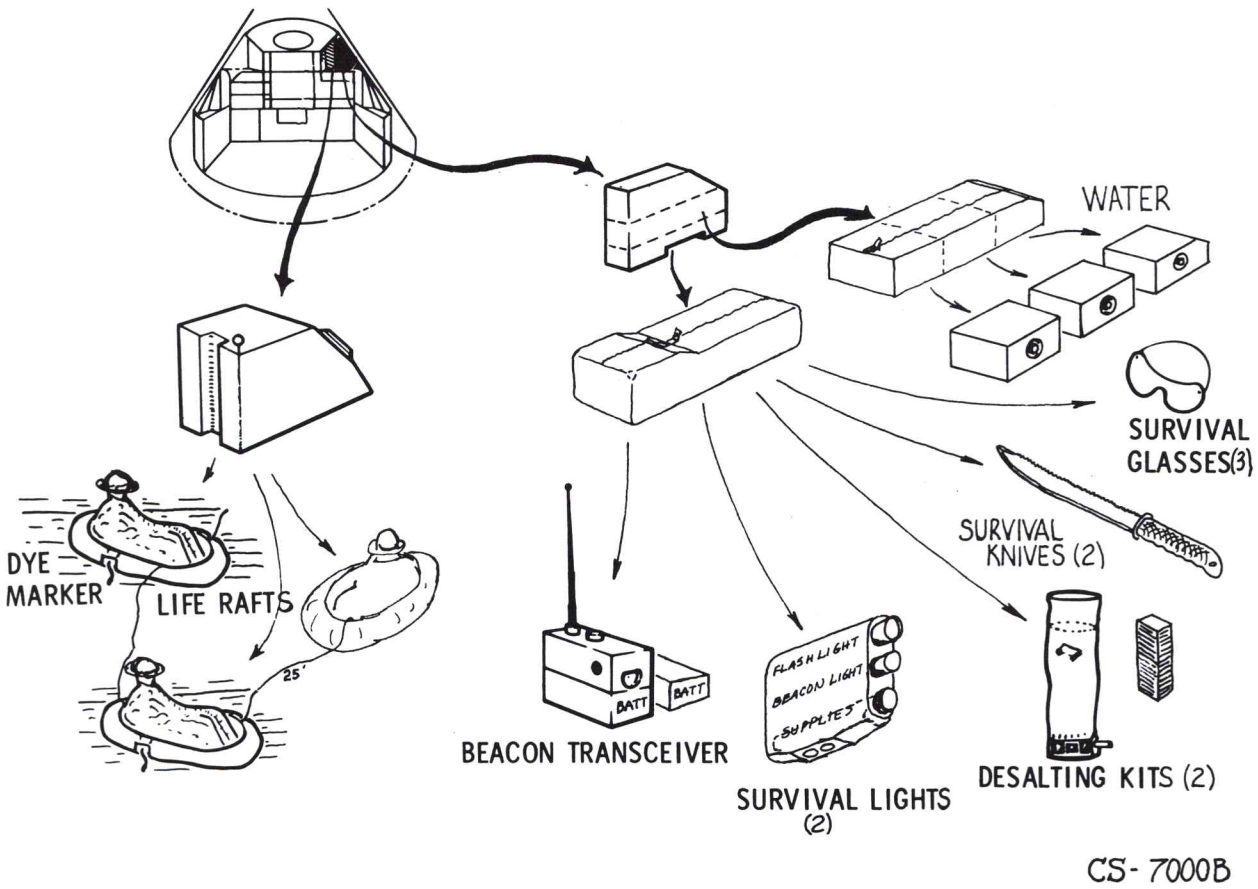

Figure 2.12-30. Apollo Survival Kit and Components Block I

Container No. 2 contains one pouch with three - one-man life rafts tethered together with 25-foot tethers.

The pouches open by use of zippers and have lacings on the bottom to adjust the fit.

2.12.13.3.1 Description and Use of Survival Kit Components.

Life Rafts. The life rafts are of lightweight nylon or mylar and inflated with CO_2. Each has a sea anchor, sponge pad, sun bonnet, tether, and sea dye marker.

Beacon Transceiver. The UHF beacon/transceiver is a hand-held, battery-powered radio, fixed-tuned to a VHF frequency of 243 mc and

manufactured by Sperry Phoenix Company. The radio consists of a receiver-transmitter assembly, a battery pack assembly, and a quarter-wave antenna. The receiver-transmitter assembly and battery pack assembly mate to form a water-tight unit measuring 8 by 4-1/2 by 3 inches. The antenna is an 11-1/2-inch-long tapered flexible steel tape, terminating in a coaxial RF connector, and is normally stored in a retaining spool and clip on top of the radio unit.

The radio is capable of line-of-sight operation in either of two modes (beacon or voice) through use of either its own antenna or a suitably connected remote antenna. The transmitter output is protected against damage while operating due to accidental shorting of the antenna or submergence of the unit in salt water. In the beacon mode, the transmitter operates unattended for periods up to 24 hours, to transmit an interrupted 1000 cps tone, amplitude modulated 25 percent on the 243 mc rf carrier. In the voice mode, the radio provides two-way AM voice communication through use of an integral speaker-microphone and PUSH-TO-TALK switch.

The following is a summation of the operating characteristics.

Characteristic	Voice Mode	Beacon Mode
Average power output	1.2 watts into a 50 ohm resistive load	2 watts into a 50 ohm resistive load
Frequency	243 mc carrier. 300 to 3000 cps voice signal	243 mc carrier, 1000 cps signal
Modulation	90 percent maximum	25 percent
Duty cycle	Continuous when PUSH-TO-TALK switch is pressed	2 seconds ON, 3 seconds OFF
Receiver sensitivity	10 db signal plus noise-to-noise ratio with 7.5 microvolts signal on antenna.	

An extra battery is included in the pouch.

Survival Lights (2). The survival light is a three-units-in-one device as it contains three compartments. The whole device is waterproof. The controls for the lights are on the bottom.

The first unit is a flashlight. The second unit is a strobe light for night signaling. The third unit is a waterproof compartment containing a fish hook and line, a sparky kit (striker and pith balls), needle and thread, and whistle. The top of the unit is a compass. On one side is a folding signal mirror.

Survival Glasses (3). For protection of the eyes against the sun and glare, three survival glasses are included. They are a polarized plastic sheet with Sierra Coat III, a gold coating that reflects heat and radio waves.

Survival Knives (2). The survival knives are protected with a cloth sheath. The knives are very thin with razor edges. The back edge is a saw.

Water Cans (3). One pouch contains three aluminum water cans, one for each crewman. The cans have a drinking valve and hold 5 pounds of water.

Desalting Kits (2) + Tablets (16). The desalting kits are plastic bags with a filter at the bottom. Approximately one pint of water is put in the bag and one tablet added. After one hour, drinking water may be taken through a valve on the bottom of the bag.

Emergency Medical Survival Kit. In the event the medical kit cannot be retrieved before egress, an emergency medical survival kit is in the survival kit. It contains 6 Bandaids bandages, 6 injectors, 30 tablets, and one tube of all purpose ointment.

2.12.14 STOWAGE.

The numerous activities of the crew make housekeeping very important. All loose equipment must be stowed during launch and boost. Prior to entry, loose equipment must be stowed for entry and landing.

Figure 2.12.31 defines S/C 014 stowage locations for equipment.

STOW AREA	LEB STOWAGE ITEMS
1	"G&N EYEPIECE" COMPARTMENT
A	SHORT TELE EYEPIECE
B	MEDIUM TELE EYEPIECE
C	LONG TELE EYEPIECE
D	OPTICS FILTER
2	G&N OPTICS PAN COVER
3	FOOD "A" CONTAINER
4	FOOD "B" CONTAINER
5	FOOD "C" CONTAINER
6	FOOD "D" CONTAINER
7	FOOD "E" CONTAINER
8	SCE/SCI7 CONT & DIS UNIT
BA	AIRLOCK PODS COMPARTMENT
	AIRLOCK EXTENSION ROD
	AIRLOCK HANDLE EXTENSION
	AIRLOCK AIRLAT DOOR ROD
9	SR PILOT FLT "DATA FILE" DWR
A	NAVIGATOR CHECK LIST
B	LANDMARK MAPS
C	S/C SYSTEM DATA
D	EXPERIMENT CHECKLIST
E	STAR CHART
F	ORBITAL MAP

STOW AREA	LEB STOWAGE ITEMS
10	"TOOL-TABLE" DRAWER
A	WORKSHELF
B	A – TORQUE WRENCH
C	E – ADAPTER HANDLE
D	G – 6" EXTENSIONS
E	H – 10" DRIVER
F	J – 4" X 5/32" SHORT DRIVER
G	L – 4" CPL (7/32") DRIVER
H	R – 4" TORQUE SET DRIVER
I	TETHER
J	TOOLSET POUCH
11	"SCIENT EXP B" DRAWER
A	16MM SEQUENCE CAMERA
E	4-16MM FILM PACKS
C	8-70MM FILM PACKS
12	"SCIENT EXP C" DWR
A	MED DATA ACQ SYS (MDAS)
13	"CLTN MON INSTR SET" COMP
A	CLTN MON INSTR SET
B	URINE RECEPT., &
	TRANSFER VALVE ASSY
C	3 – UCD CLAMPS
14	"TOWELS" COMPARTMENT
A	14 TOWELS (2 MCGS)

STOW AREA	AFT BULKHEAD STOWAGE ITEMS
A-H	16 LION CARTRIDGES
J,K, L,M,N P,R,U	4 LION CARTRIDGES 2 LION CARTRIDGES 3 LION CARTRIDGES
21	INFLIGHT EXERCIZER
22 A	TV OPTICS CONTAINER TV ZOOM LENS
23 A	FECAL CANISTER URINE FILTER ASSY W/POUCH
24 A B	L/H PGA STOW BAG 3 CREWMAN WASTE BAGS 810 ASSAY BAG "A" 30 ROLLONS IN 2 BAGS 2 USVWS MIXING BAGS 31 URINE SAMPLE BAGS 11 UR SAMPLE STOW BAGS
C D	R/H PGA STOW BAG 610 ASSAY BAG "B" 64 URINE SAMPLE BAGS 10 UR SAMPLE STOW BAGS USVWS MIXING BAG FECAL CAN PAD
E F	3 PGA HEL STOW BAGS 3 COMM SOFT HATS

STOW AREA	AFT BULKHEAD STOWAGE ITEMS
26 A	M-19 GAS METER STOW BOX M-19 GAS METER W/CABLE & SAMPLE BAG
27 A	S-15 STOW BOX S-15 HUMAN CELL CAN W/ POWER CABLE
28 A	R/H PGA STOW BAG R/H SLEEP RESTRAINT
29 A B C D E F	COMPARTMENT "S" 2 USVWS W/RECEIVERS 2 SPARE BOVIS SPARE URINE LINE FILTER CREW OP ALIGN SIGHT & PWR CORD 1 COAS BULK & SHADE 2 PPK'S
30 A	COMPARTMENT "T" S-18 MICROMETEOR COLLECTOR
31 A B	COMPARTMENT "F" PPK ERGOMETER LAP BELT
32 A	COMPARTMENT "Z" 9 PENLIGHTS

SIDEWALL & HATCH

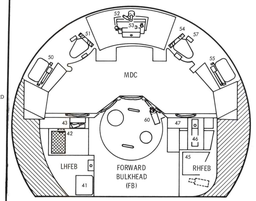

STOW AREA	LHFEB STOWAGE ITEMS
41 A B C D	"LOOSE PARTS" COMPARTMENT G&N SHORT HANDHOLD G&N LONG HANDHOLD LEB ROT CONTROL MOUNT LONG SEXTANT EYEPIECE
42	FAN CLOSURE
43	WATER DISPENSER (PISTOL)
STOW AREA	RHFEB STOWAGE ITEMS
45 A B C D E F G H I J K L	"SCIENT EXP F" COMP SCIENT EXP "F" CONTAINER 70MM HASS CAM W/RING SIGHT & FILM PACK 2-70MM FILM PACKS SPOTMETER, 16MM CAM CABLE & DOOR RELEASE 2-500 EXPOSURE 16MM CAMS EXPOSURE DIAL 16 MM CAMERA W/FILM PACK 3-16MM FILM PACKS 100MM LENS, (16MM CAM) 25MM LENS, (16MM CAM) 18MM LENS, (16MM CAM) 16 MM CAM MIRROR ASSY
46 A B	SURVIVAL KIT CONT "B" SURVIVAL KIT RUCKSACK (3) SEA HOSE & PUMP

47 A B	SURVIVAL KIT CONT "A" SURV KIT RUCKSACK (2) SURV KIT RUCKSACK (2)
STOW AREA	SIDEWALL & HATCH STOWAGE ITEMS
50	LEFT SIDE VIEW WIND SHADE
51	LEFT REND WIND SHADE
52	TOOL 8-EMER WRENCH
53	ABLATOR DOOR
54	RIGHT REND WIND SHADE
55	RT SIDE VIEW WIND SHADE
STOW AREA	TUNNEL STOWAGE ITEMS
60	TV CAMERA W/ WIDE ANGLE LENS

APOLLO EQUIPMENT STOWAGE (LAUNCH)
S/C 014
REV: 1 OCT 1966

"MARKED" COMPARTMENTS

A–R, U	-	AFT BKHD LION STORAGE CONTAINERS (BOXES)
SEC A-F	-	SCIENTIFIC EXPERIMENT COMPARTMENTS
S, T, Y, Z	-	MISC SCIENT EXP EQUIP & CREW EQUIP
FOOD A-E	-	LEB FOOD COMPARTMENTS

CHART NUMBERING SYSTEM

1 - 20	LEB	
21 - 40	AFT BULKHEAD	
41 - 60	LHFEB, RHFEB, SIDEWALL & HATCH, TUNNEL	
61 - 70	LHFEB	
71 - 80	RHFEB	
81 - 99	CREW COUCH & KICKSHELF	
100 -	CREW APPAREL	

STOW AREA	LHFEB STOWAGE ITEMS
61	COMDR DATA FILE BAG
62	T-HANDLE
63 A	"FOOD" COMPARTMENT FOOD STOW SUP CONTAINER
64 A B C	"CWG & SANDAL" COMP 3 CWG'S 3 FLT OVERALLS 3 PR SANDALS
65	T-HANDLE
66	REMOVABLE ECS ATTEN PAN

STOW AREA	LHFEB STOWAGE ITEMS
67 A B C D E F G H I	SCIENT EQUIP STOW BOX "D" M059 80 LTR PUL GAS BAGS M059 CONTROL SPECS M059 HOSE ASSY M059 BREATHING VALVE M059 INTERCON NOSE AIRLOCK HANDLE AIRLOCK COLLAR DEWPOINT CONT UNIT W/ELEC CABLE, SENSOR & CABLE AIRLOCK PROTRACTOR
68 A B C D	3-CREWMAN UMBIL ASSY O2 HOSE ASSY W/NOZZLES 3 COBRA CABLES 3 PGA ELEC ADAPTERS 3 ELECT., COBRA "T" ADAPTERS

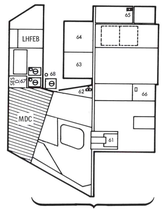

LEFT HAND EQUIPMENT BAY (LHEB)

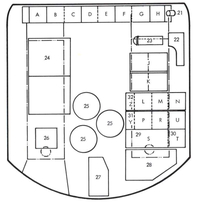

AFT BULKHEAD (AB)

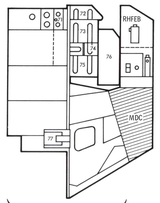

RIGHT HAND EQUIPMENT BAY (RHEB)

STOW AREA	FWEB STOWAGE ITEMS
71 A B	"VACUUM CLEANER" COMPARTMENT VACUUM CLEANER ASSY W/HOSE 5 VAC CLEAN REF BAG ASSY'S FE OUTER BAG DEBRIS BAG GERMICIDE POUCH TIE BAND
72 A	"MEDICAL ACCESSORIES KIT" COMP BIO-MED ACCESSORIES KIT 35 ELECTRODES 50 MICROPORE DISCS 1 ELECTRODE PASTE 8 WET-WIPE TOWELS
73 A B C D E	"SCIENT EXP E/TOWELS" COMP 5-16 NUCLEAR EMUL PKG 5-16 BACKGROUND STACK 10 GAN FILM PKGS 10 GAN FILM PKGS 5 VAC CLEAN REF BAG ASSY'S
74 A B	"ELECT ADAPTERS" COMPARTMENT 3 CWG ELECT ADAPTERS 2 SLEEP ELEC ADAPTERS
75 A	"SANITATION SUPPLIES" COMP SAN SUP BOXES A, B & C 12 SAN SUP ASSY'S
76 A	"FOOD" COMPARTMENT AUX FOOD CONTAINER
77 A B	PILOT FLT DATA FILE BAG ENGR CHECK-LIST MISSION LOG & DATA
STOW AREA	FWEB STOWAGE ITEMS

CREW COUCHES

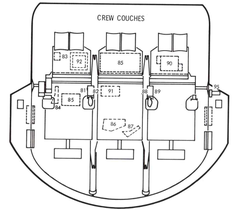

KICK SHELF

STOW AREA	CREW COUCH STOWAGE ITEMS
81	STA 1 LWR ARMREST, R/H
82	STA 1 ROTATION CONTROL
83	EMERGENCY MEDICAL KIT
84	TRANS CONTROL ADAPTER
85	7 TISSUE DISPENSERS
86	TV CAMERA MOUNT
87	16MM CAMERA MOUNT
88	STA 3 LOWER ARMREST L/H
89	STA 3 ROTATION CONTROL
90	M-12A ERGOMETER
91	EVAPORATOR TEMP SENSOR
92	AIRLOCK WINDOW
STOW AREA	KICK-SHELF STOWAGE ITEMS
95	"O" RING EXTEN HANDLE

ITEM	STOW AREA	CREW APPAREL (EACH CREWMAN)
100	24/28	PGA
101	CREW	PENLIGHT
102	CREW	SUN GLASSES W/CONT
103	24	LIFE VEST
104	CREW	CHRONOGRAPH W/WATCHBAND
105	CREW	2 MARKING PENS
106	CREW	2 MECHANICAL PENCILS
107	CREW	SURGICAL SCISSORS
108	64	CWG
109	CREW	3 PASSIVE DOSIMETERS
110	WASTE	URINE COLLECTION DEVICE
111	CREW	POCKET DOSIMETER (1 FOR 3)
112	CREW	BIO-INSTRUMENT HARNESS

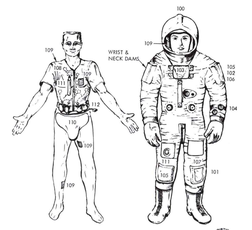

Figure 2.12-31. Apollo Equipment Stowage

SECTION 3.0

CONTROLS AND DISPLAYS

3.1 INTRODUCTION.

This section identifies each control and display in the command module and lists panel location, item nomenclature, positions and related functions, power source, telemetry measurement number, and associated explanatory data. Controls and displays are presented in a tabulated list in numerical order by panel number. Panel numbers are those appearing on the main display console drawing and the lower equipment bay drawing in figure 3-1. (The command module itself does not incorporate numbers on the panels.) The following is a detailed explanation of the columnar data presented in the tabulated list.

Location	Gives the location of a particular control or display by panel number or other descriptive information such as "LH couch armrest, etc."
Name and Position	Gives the exact nomenclature of a particular control or display and the control positions, as placarded on the panel. In the absence of a placard, a functional name is assigned and the positions are described physically ("up," "down," etc).
Function	Describes the function of each control in each position.
Circuit Breaker	Gives the name and location of the circuit breaker(s) controlling the electrical power to each control & display.
Power Source	Identifies and gives the rating of the immediate bus or source supplying power to a particular control or display.
Telemetry Code No. and Identity	Gives the measurement numbers for telemetry signals which are used to monitor the performance of components, systems, and subsystems; the status of consumable items; and the proper sequencing of critical

operations during all phases of the spacecraft mission. This information is monitored at MSFN stations for spacecraft management from the ground by use of voice or command links. Measurement numbers are entered only for displayed measurements. Those for undisplayed measurements are included in the telemetry measurements table for the appropriate system in section 2 of this handbook.

The number consists of seven characters; two letters followed by four numbers and one letter. An example is as follows:

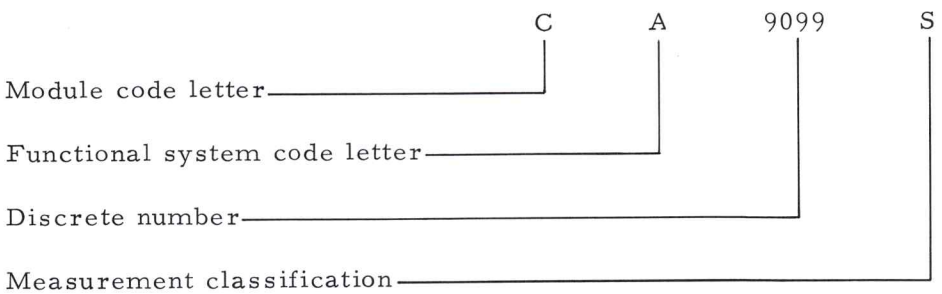

a. The first letter designates the module in which the measurement originates. Module code letters are as follows:

A Adapter
B Booster
C Command module
L Launch escape tower
S Service module

b. The second letter denotes the system in which the measurement originates. Functional system code letters are as follows:

A Structures
C Electrical power
D Launch escape
E Earth landing
F Environmental control
G Guidance and navigation
H Stabilization and control
J Life systems
K Flight technology
P Propulsion
R Reaction control
S Crew safety
T Telecommunications and instrumentation

c. Characters three through six are numerals comprising a number which is assigned to a particular measurement point. These numbers are listed sequentially or are grouped for clarity within each system.

d. The seventh letter denotes measurement classification. Classification code letters are as follows:

A Acceleration	N Camera
B Phase	P Pressure
C Current	Q Quantity
D Vibration	R Rate
E Power	S Strain
F Frequency	T Temperature
G Force	V Voltage
H Position	W Time
J Biomedical	X Discrete event
K Radiation	Y Acoustical
L Velcotiy	Z pH - acidity
M Mass	

Remarks Contains additional data and explanatory remarks.

3.2 CONTROLS/DISPLAYS LOCATOR INDEX.

To aid in finding data within this section, a locator index precedes the tabulated list. The index is sub-divided into spacecraft systems. Under each system is listed, in alphabetical order, all controls and displays associated with the particular system with cross reference to the panel on which the control or display is located. Where items, such as circuit breakers, are associated with more than one system, such items are repeated under each applicable system. Each panel number is preceded by an abbreviated descriptor to aid in quickly determining the general location of each item, as follows:

MDC	main display console (panels 1 thru 26)
LEB	lower equipment bay (panels 100, 101 thru 107, 120, 150)
LHEB	left hand equipment bay (panels 307 thru 317)
LHFEB	left hand forward equipment bay (panels 300 thru 306, 318)
RHEB	right hand equipment bay (panels 201 thru 206)
RHFEB	right hand forward equipment bay (panels 200, 207)

The controls/displays locator index is sub-divided as follows:

	Page
Guidance and Navigation	3-5
Stabilization and Control	3-7
Service Propulsion System	3-9
Reaction Control	3-11
Electrical Power	3-13
Sequential Systems (ELS, LES, EDS, SECS)	3-17
Telecommunications	3-18
Environmental Control	3-20

	Page
Caution and Warning	3-23
Miscellaneous Systems	3-24
Scientific Experiments	3-25

GUIDANCE AND NAVIGATION SYSTEM—CONTROLS/DISPLAYS LOCATOR INDEX

Control/Display Name	Type	Panel Locator
ACCEL FAIL	Lt	LEB-103
ACTIVITY COMP	Lt	MDC14, LEB-106
AGC MODE	Sw	LEB-107
AGC PWR FAIL	Lt	MDC-10, LEB-103
ATT CONT MODE	Lt	LEB-101
ATTITUDE IMPULSE	Control	LEB-105
ATTITUDE IMPULSE ENABLE	Sw	LEB-105
BRIGHTNESS	Control	MDC-14, LEB-106
CDU FAIL	Lt	MDC-10, LEB-103
CDU MAN MODE	Lt	LEB-101
CHECK CONDITION LAMPS	Sw	LEB-105
CHECK COOLANT	Sw	LEB-105
CHECK COOLANT	Windows (2)	LEB-105
CHECK FAIL	Lt	LEB-106
CHECK MODE LAMPS	Sw	LEB-105
CLEAR	Sw	MDC-14, LEB-106
COARS ALIGN MODE	Lt	LEB-101
COMP FAIL	Lt	MDC-14
COMPUTER	CB (2)	MDC-22
CONDITION LAMP	Sw	LEB-105
COUNTER FAIL	Lt	LEB-106
DOOR LATCH	Control	LEB-105
DSKY	Keys	MDC-14, LEB-106
ENTER	Sw	MDC-14, LEB-106
ENTRY MODE	Lt	LEB-101
ERROR RESET	Sw	MDC-14, LEB-106
FINE ALIGN MODE	Lt	LEB-101
GMBL LOCK	Lt	MDC-10, LEB-103
G&N ACCEL FAIL	Lt	MDC-10
G&N ERROR	Lt	MDC-10
G&N VIEWER	Sw	MDC-22
IMU-CDU DIFFERENCE	Ind	LEB-101
IMU	CB (2)	MDC-22
IMU DELAY	Lt	LEB-103
IMU FAIL	Lt	MDC-10, LEB-103
IMU HTR	CB (2)	MDC-22
IMU TEMP	Lt	MDC-10, LEB-103
IMU TEMP MODE GAIN IRIG	Sw	LEB-105
IMU TEMP MODE GAIN PIPA	Sw	LEB-105
IMU TEMP MODE	Mode sw	LEB-105
IMU TEMP MODE ZERO	Sw	LEB-105
INNER GIMBAL (PITCH)	Ind	LEB-102
KEY RLSE	Lt	MDC-14, LEB-106
KEY RLSE	Sw	MDC-14, LEB-106
MANUAL ALIGN	Lt	LEB-101
MARK	Sw	LEB-105
MASTER ALARM	Lt	MDC-3, LEB-103

GUIDANCE AND NAVIGATION SYSTEM—CONTROLS/DISPLAYS LOCATOR INDEX

Control/Display Name	Type	Panel Locator
MIDDLE GIMBAL (YAW)	Ind	LEB-102
-(minus sign switch)	Sw	MDC-14, LEB-106
NOUN	Sw	MDC-14, LEB-106
NOUN	End	MDC-14, LEB-106
OPTICS	CB (2)	MDC-22
OPTICS CONTROLLER MODE	Sw	LEB-105
OPTICS CONTROLLER SPEED	Sw	LEB-105
Optics hand controller (no placard)	Control	LEB-105
OPTICS HOLD	Sw	LEB-105
OPTICS	Mode sw	LEB-105
OPTICS SLAVE TELESCOPE	Sw	LEB-105
OUTER GIMBAL (ROLL)	Ind	LEB-102
PANEL BRIGHTNESS	Control	LEB-105
PARITY FAIL	Lt	LEB-106
PGNS	Lt	LEB-103
+ (plus sign switch)	Sw	MDC-14, LEB-106
PROG ALM	Lt	LEB-106
PROGRAM	Ind	MDC-14, LEB-106
REGISTER 1	Ind	MDC-14, LEB-106
REGISTER 2	Ind	MDC-14, LEB-106
REGISTER 3	Ind	MDC-14, LEB-106
RUPT LOCK	Lt	LEB-106
Sextant (not placarded)	SXT	LEB-104
SCALER FAIL	Lt	LEB-106
SHAFT ANGLE	Ind	LEB-102, LEB-104
SHAFT	Manual drive	LEB-104
Telescope (not placarded)	SCT	LEB-104
TC TRAP	Lt	LEB-106
TM FAIL	Lt	LEB-106
TRANSFER	Sw	LEB-101
TRUNNION ANGLE	Ind	LEB-104
TRUNNION	Manual drive	LEB-104
UPTEL ACCEPT BLOCK	Sw	MDC-14
VERB	Ind	MDC-14, LEB-106
VERB	Sw	MDC-14, LEB-106
VIEWER	CB (2)	MDC-22
ZERO ENCODE MODE	Lt	LEB-101
ZERO ENCODER	Lt	LEB-103
2X TRUNNION	Ind	LEB-102

STABILIZATION AND CONTROL SYSTEM—CONTROLS/DISPLAYS LOCATOR INDEX

Control/Display Name	Type	Panel Locator
AGAP TEMP	Warning light	MDC-10
ATT DEADBAND	Sw	MDC-8
ATT SET	Sw	MDC-6
ATTITUDE IMPULSE-ENABLE	Sw	LEB-105
ATTITUDE/MONITOR/ENTRY	Sw	MDC-8
ATTITUDE SET-ROLL, PITCH, YAW	Thumbwheel (3)	MDC-6
ATTITUDE SET-ROLL, PITCH, YAW	Ind (3)	MDC-6
BMAG POWER	Sw	MDC-24
C/W-NORMAL/BOOST/ACK	Sw	MDC-13
CAUT/WARN-MNA, MNB	Cb (2)	MDC-25
CAUTION/WARNING-MODE	Sw	MDC-11
DIRECT RCS	Sw	MDC-8
DIRECT ULLAGE	Sw	MDC-7
FCSM G&N and SCS RESET/OVERRIDE	Sw	MDC-2
FCSM ON/RESET	Sw	MDC-2
FDAI	Ind	MDC-4
FDAI ALIGN	Sw	MDC-6
FDAI BRIGHTNESS	Control	MDC-2
FDAI LTG	Sw	MDC-25
FDAI SELF TEST	Sw	MDC-2
.05G ENTRY	Sw	MDC-8
GIMBAL POSITION	Ind	MDC-6
G&N/SCS	Sw	MDC-8
G&N SYNC	Sw	MDC-25
LCL VERT	Sw	MDC-8
LIMIT CYCLE	Sw	MDC-8
MASTER EVENT SEQ CONT-A LOGIC B-BAT A, BAT B	Cb (2)	MDC-22
NORMAL/OFF/DIRECT ON	Sw	MDC-7
PARTIAL SCS POWER	Sw	MDC-24
RATE GYRO POWER	Sw	MDC-24
RATE GYRO-ROLL, PITCH, YAW	Sw (3)	MDC-8
REACTION CONTROL SYS-TRANS	Sw	MDC-16
Rotational controllers (not placarded)	Controls (2)	LH couch, RH armrest, RH couch, LH armrest
ROTATION CONTROL POWER	Sw	-24
SCS CHANNEL-A&C ROLL, B&D ROLL, PITCH, YAW	Sw (4)	MDC-8
STABILIZATION & CONTROL SYSTEM- A&C ROLL-MNA, MNB B&D ROLL-MNA, MNB DIRECT CONT-MNA, MNB GROUP 1-AC1, AC2 GROUP 1-MNA, MNB GROUP 2-AC1, AC2 GROUP 2-MNA, MNB	Cb (18)	MDC-25

STABILIZATION AND CONTROL SYSTEM—CONTROLS/DISPLAYS LOCATOR INDEX

Control/Display Name	Type	Panel Locator
THRUST ON	Sw	MDC-7
Translational Controllers (not placarded)	Control (2)	LH couch, LH armrest
TVC 1 POWER	Sw	MDC-24
TVC 2 POWER	Sw	MDC-24
ΔV	Sw	MDC-8
ΔV REMAINING	Ind	MDC-7
ΔV SET	Sw	MDC-7
YAW, PITCH	Thumbwheel (2)	MDC-6

SERVICE PROPULSION SYSTEM—CONTROLS/DISPLAYS LOCATOR INDEX

Control/Display Name	Type	Panel Locator
ABORT SYSTEM-TWR JETT SPS MODE—A (B) two	Sw	MDC-16
CAUT/WARN-MNA (MNB)	Cb (2)	MDC-25
ΔV	Sw	MDC-8
ΔV REMAINING	Sw	MDC-7
ΔV SET	Sw	MDC-7
DIRECT ULLAGE	Sw	MDC-7
FCSM-G&N	Sw	MDC-2
FCSM-SCS	Sw	MDC-2
G&N/SCS	Sw	MDC-8
GIMBAL POSITION-PITCH	Ind	MDC-6
GIMBAL POSITION-PITCH	Thumbwheel	MDC-6
GIMBAL POSITION-YAW	Ind	MDC-6
GIMBAL POSITION-YAW	Thumbwheel	MDC-6
H_e TANK-PRESS	Ind	MDC-20
INSTRUMENTS-ESS-MNA (MNB)	Cb (2)	MDC-22
L/V AOA/SPS P_c	Ind	MDC-3
L/V AOA/SPS P_c	Sw	MDC-3
MASTER EVENT SEQ CONT-A LOGIC B-BAT A (BAT B)	Cb (2)	MDC-22
NORMAL/OFF/DIRECT ON (Thrust)	Sw	MDC-7
OXID FLOW	Sw	MDC-20
OXID FLOW-DECREASE	Ind	MDC-20
OXID FLOW-INCREASE	Ind	MDC-20
PITCH GMBL DR FAIL	Status Lts	MDC-11
PRESSURE-ENG INLET-FUEL	Ind	MDC-20
PRESSURE-ENG INLET-OX	Ind	MDC-20
PRESSURE-FUEL	Ind	MDC-20
PRESSURE-OX	Ind	MDC-20
PROR. TEMP	Ind	MDC-20
QUANTITY-FUEL	Display	MDC-20
QUANTITY-OXID	Display	MDC-20
SENSOR	Sw	MDC-20
SERVICE PROPULSION SYSTEM-		
GAUGING-AC1 (AC2)	Cb (2)	MDC-25
GAUGING-MNA (MNB)	Cb (2)	MDC-25
GIMBAL MOTOR CONTROL -1 PITCH -BAT A (PITCH 2-BAT B)	Cb (2)	MDC-25
GIMBAL MOTOR CONTROL -1 YAW -BAT A (YAW 2-BAT B)	Cb (2)	MDC-25
H_e VALVE-MNA (MNB)	Cb (2)	MDC-25
SPS ENGINE INJECT VALVE -1 (2, 3, 4)	Ind (4)	MDC-20
SPS GAUGING	Sw	MDC-25
SPS HELIUM (left hand and right hand)	Ind (2)	MDC-20
SPS HELIUM (left hand and right hand)	Sw (2)	MDC-20
SPS-INJECT PRE-VALVES-A (B)	Sw (2)	MDC-3
SPS-GIMBAL MOTORS -1 PITCH (PITCH 2)	Sw (2)	MDC-3

SERVICE PROPULSION SYSTEM—CONTROLS/DISPLAYS LOCATOR INDEX

Control/Display Name	Type	Panel Locator
SPS-GIMBAL MOTORS -1 YAW (YAW 2)	Sw (2)	MDC-3
SPS HEATERS	Sw (1)	MDC-20
SPS LINE HTR	Sw	MDC-19
SPS PRESS	Status lts	MDC-11
SPS PU SNSR FAIL	Status lts	MDC-11
SPS ROUGH ECO	Status lts	MDC-10
SPS TANK PRESS	Sw	MDC-20
STABILIZATION & CONTROL SYSTEM		
-DIRECT CONT-MNA (MNB)	Cb (2)	MDC-25
-1 GROUP-AC 1 (GROUP 2-AC 2)	Cb (2)	MDC-25
-1 GROUP-MNA (GROUP 2-MNB)	Cb (2)	MDC-25
TELECOMMUNICATIONS—GROUP 5	Cb	MDC-22
TEST/AUTO/TEST (propellant quantity)	Sw	MDC-20
THRUST ON	Switch-light	MDC-7
TK PRESS-N_2	Ind	MDC-20
UNBALANCE	Ind	MDC-20
VALVE	Sw	MDC-20

REACTION CONTROL SYSTEM—CONTROLS/DISPLAYS LOCATOR INDEX

Control/Display Name	Type	Panel Locator
ABORT SYSTEM-OX DUMP	Sw	MDC-16
CM PROP JETT-DUMP	Sw	MDC-8
CM PROP JETT-LOGIC	Sw	MDC-8
CM PROP JETT-PURGE	Sw	MDC-8
C/M RCS	Sw	MDC-26
C/M RCS A	Status lts	MDC-10
C/M RCS B	Status lts	MDC-10
C/M RCS HTRS	Sw	RHFEB-200
C/M RCS PRESS F	Ind	MDC-12
C/M RCS TEMP H_e	Ind	MDC-12
C/M RCS PRESS OX	Ind	MDC-12
C/M RCS PRPLNT-A	Sw	MDC-15
C/M RCS PRPLNT-A	Event ind	MDC-15
C/M RCS PRPLNT-B	Sw	MDC-15
C/M RCS PRPLNT-B	Event ind	MDC-15
C/M RCS TEMP H_e	Ind	MDC-12
C/M-S/M-SEP-A (B)	Sw (2)	MDC-15
DIRECT RCS	Sw	MDC-8
INSTRUMENTS-ESS-MNA (MNB)	CB (2)	MDC-22
MASTER EVENT SEQ CONT		
-A ARM B-BAT A (BAT B)	CB (2)	MDC-22
-A LOGIC B-BAT A (BAT B)	CB (2)	MDC-22
PYRO A-RCS FUEL DUMP	CB	LEB-150
PYRO B-RCS FUEL DUMP	CB	LEB-150
RCS HEATERS-A MNB	CB	MDC-21
RCS HEATERS-B MNA	CB	MDC-21
RCS HEATERS-C MNB	CB	MDC-21
RCS HEATERS-D MNA	CB	MDC-21
RCS INDICATORS selector		
C/M section	Sw	MDC-12
S/M section	Sw	MDC-12
REACTION CONTROL SYS-CMD	Sw	MDC-16
REACTION CONTROL SYS-C/M PRESS	Sw	MDC-16
REACTION CONTROL SYS-TRANS	Sw	MDC-16
REACTION CONTROL SYSTEM		
-C/M-S/M TRANSFER-MNA (MNB)	CB (2)	MDC-25
-PROP ISOL-MNA (MNB)	CB (2)	MDC-25
S/M RCS-A (B, C, D)-HELIUM 1	Sw (4)	MDC-15
S/M RCS-A (B, C, D)-HELIUM 1	Event ind (4)	MDC-15
S/M RCS-A (B, C, D)-HELIUM 2	Sw (4)	MDC-15
S/M RCS-A (B, C, D)-HELIUM 2	Event ind (4)	MDC-15
S/M RCS H_e TEMP	Ind	MDC-12
S/M RCS PRESS H_e	Ind	MDC-12

REACTION CONTROL SYSTEM—CONTROLS/DISPLAYS LOCATOR INDEX

Control/Display Name	Type	Panel Locator
S/M RCS PRESS MANF	Ind	MDC-12
S/M RCS-A (B, C, D)-PROPELLANT	Event ind (4)	MDC-15
S/M RCS-A (B, C, D)-PROPELLANT	Sw (4)	MDC-15
S/M RCS TEMP PKG	Ind	MDC-12
S/M RCS A	Status lts	MDC-10
S/M RCS B	Status lts	MDC-10
S/M RCS C	Status lts	MDC-10
S/M RCS D	Status lts	MDC-10

ELECTRICAL POWER SYSTEM—CONTROLS/DISPLAYS LOCATOR INDEX

Control/Display Name	Type	Panel Locator
AC BUS 1 FAIL	Lt	MDC-11
AC BUS 2 FAIL	Lt	MDC-11
AC BUS 1 OVERLOAD	Lt	MDC-11
AC BUS 2 OVERLOAD	Lt	MDC-11
AC INDICATORS	Sw	MDC-18
AC INVERTER—AC BUS 1-RESET	Sw	MDC-18
AC INVERTER—AC BUS 2-RESET	Sw	MDC-18
AC INVERTER—1	Sw	MDC-18
AC INVERTER—1-AC BUS 1	Sw	MDC-18
AC INVERTER—1-AC BUS 2	Sw	MDC-18
AC INVERTER—2	Sw	MDC-18
AC INVERTER—2-AC BUS 1	Sw	MDC-18
AC INVERTER—2-AC BUS 2	Sw	MDC-18
AC INVERTER—3	Sw	MDC-18
AC INVERTER—3-AC BUS 1	Sw	MDC-18
AC INVERTER—3-AC BUS 2	Sw	MDC-18
AC SNSR SIG-AC1	CB	MDC-25
AC SNSR SIG-AC2	CB	MDC-25
AC VOLTS	Meter	MDC-18
BAT A PWR-ENTRY	CB	LEB-150
BAT B PWR-ENTRY	CB	LEB-150
BAT CHGR	Sw	MDC-22
BAT CHGR-BAT C	CB	LEB-150
BAT C PWR-POSTLANDING ENTRY	CB	LEB-150
BAT RLY BUS-BAT A	CB	MDC-22
BAT RLY BUS-BAT B	CB	MDC-22
BATTERY CHARGER	Sw	MDC-18
BATTERY CHARGER-AC PWR	CB	MDC-22
BATTERY CHARGER-BAT A CHGE	CB	MDC-22
BATTERY CHARGER-BAT B CHGE	CB	MDC-22
BATTERY CHARGER-MNA	CB	MDC-22
BATTERY CHARGER-MNB	CB	MDC-22
CRYOGENIC SYSTEM-QTY AMPL-AC 1-ØC	CB	MDC-22
CRYOGENIC SYSTEM-QTY AMPL-AC 2-ØC	CB	MDC-22
CRYOGENIC SYSTEM-TANK HEATERS-H_2	CB	MDC-22
CRYOGENIC SYSTEM-TANK HEATERS-O_2	CB	MDC-22
CRYOGENIC TANK FAN MOTORS-AC 1-ØA	CB	MDC-22
CRYOGENIC TANK FAN MOTORS-AC 1-ØB	CB	MDC-22
CRYOGENIC TANK FAN MOTORS-AC 1-ØC	CB	MDC-22
CRYOGENIC TANK FAN MOTORS-AC 2-ØA	CB	MDC-22
CRYOGENIC TANK FAN MOTORS-AC 2-ØB	CB	MDC-22
CRYOGENIC TANK FAN MOTORS-AC 2-ØC	CB	MDC-22
DC AMPS	Meter	MDC-18
DC INDICATORS	Sw	MDC-18
DC SNSR SIG-MNA	CB	MDC-22
DC SNSR SIG-MNB	CB	MDC-22
DC VOLTS	Meter	MDC-18

ELECTRICAL POWER SYSTEM—CONTROLS/DISPLAYS LOCATOR INDEX

Control/Display Name	Type	Panel Locator
DC VOLTS (auxiliary)	Meter	RHFEB-200
F/C-BUS DISCONNECT	Lt	MDC-11
F/C RAD TEMP LOW	Ind	MDC-18
F/C VALVES	Sw	MDC-19
F/C 1	Lt	MDC-11
F/C 2	Lt	MDC-11
F/C 3	Lt	MDC-11
FREQUENCY	Meter	MDC-18
FUEL CELL-FLOW-H_2	Ind	MDC-18
FUEL CELL-FLOW-O_2	Ind	MDC-18
FUEL CELL INDICATORS	Sw	MDC-18
FUEL CELL-MAIN BUS A-RESET	Sw	MDC-18
FUEL CELL-MAIN BUS B-RESET	Sw	MDC-18
FUEL CELL-MODULE TEMP-COND EXH	Ind	MDC-18
FUEL CELL-MODULE TEMP-SKIN	Ind	MDC-18
FUEL CELL 1-BUS CONT	CB	MDC-22
FUEL CELL 1-CIR & SEP MOTORS	CB	MDC-22
FUEL CELL 1-H_2&O_2 VALVE	CB	MDC-22
FUEL CELL 1-PURGE	CB	MDC-22
FUEL CELL-1-MAIN BUS A	Ind	MDC-18
FUEL CELL-1-MAIN BUS A	Sw	MDC-18
FUEL CELL-1-MAIN BUS B	Ind	MDC-18
FUEL CELL-1-MAIN BUS B	Sw	MDC-18
FUEL CELL-1 purge	Sw	MDC-18
FUEL CELL-1-REACTANTS	Ind	MDC-18
FUEL CELL-1-REACTANTS	Sw	MDC-18
FUEL CELL 2-BUS CONT	CB	MDC-22
FUEL CELL 2-CIR & SEP MOTORS	CB	MDC-22
FUEL CELL 2-H_2&O_2 VALVE	CB	MDC-22
FUEL CELL 2-PURGE	CB	MDC-22
FUEL CELL-2-MAIN BUS A	Ind	MDC-18
FUEL CELL-2-MAIN BUS A	Sw	MDC-18
FUEL CELL-2-MAIN BUS B	Ind	MDC-18
FUEL CELL-2-MAIN BUS B	Sw	MDC-18
FUEL CELL-2 purge	Sw	MDC-18
FUEL CELL-2-REACTANTS	Ind	MDC-18
FUEL CELL-2-REACTANTS	Sw	MDC-18
FUEL CELL 3-BUS CONT	CB	MDC-22
FUEL CELL 3-CIR & SEP MOTORS	CB	MDC-22
FUEL CELL 3-H_2&O_2 VALVE	CB	MDC-22
FUEL CELL 3-PURGE	CB	MDC-22
FUEL CELL-3-MAIN BUS A	Ind	MDC-18
FUEL CELL-3-MAIN BUS A	Sw	MDC-18
FUEL CELL-3-MAIN BUS B	Ind	MDC-18
FUEL CELL-3-MAIN BUS B	Sw	MDC-18
FUEL CELL-3 purge	Sw	MDC-18
FUEL CELL-3-REACTANTS	Ind	MDC-18
FUEL CELL-3-REACTANTS	Sw	MDC-18

ELECTRICAL POWER SYSTEM—CONTROLS/DISPLAYS LOCATOR INDEX

Control/Display Name	Type	Panel Locator
FUEL CELL PUMP-1	Sw	MDC-22
FUEL CELL PUMP-2	Sw	MDC-22
FUEL CELL PUMP-3	Sw	MDC-22
FUNCTION SELECT	Sw	RHFEB-200
H_2 FANS-1	Sw	MDC-13
H_2 FANS-2	Sw	MDC-13
H_2 HEATERS-1	Sw	MDC-13
H_2 HEATERS-2	Sw	MDC-13
H_2 PRESS	Lt	MDC-10
INVERTER CONTROL-1	CB	MDC-22
INVERTER CONTROL-2	CB	MDC-22
INVERTER CONTROL-3	CB	MDC-22
INVERTER PWR-NO. 1 MNA	CB	RHEB-203
INVERTER PWR-NO. 2 MNB	CB	RHEB-203
INVERTER PWR-NO. 3 MNA	CB	RHEB-203
INVERTER PWR-NO. 3 MNB	CB	RHEB-203
INV 1 TEMP HI	Lt	MDC-11
INV 2 TEMP HI	Lt	MDC-11
INV 3 TEMP HI	LT	MDC-11
MAIN A-BAT BUS A	CB	RHEB-203
MAIN A-BAT C	CB	RHEB-203
MAIN B-BAT BUS B	CB	RHEB-203
MAIN B-BAT C	CB	RHEB-203
MAIN BUS TIE-BAT A&C	Sw	MDC-22
MAIN BUS TIE-BAT B&C	Sw	MDC-22
MN BUS A UNDERVOLT	Lt	MDC-11
MN BUS B UNDERVOLT	Lt	MDC-11
NON ESS BUS	Sw	MDC-22
O_2 FANS-1	Sw	MDC-13
O_2 FANS-2	Sw	MDC-13
O_2 HEATERS-1	Sw	MDC-13
O_2 HEATERS-2	Sw	MDC-13
O_2 PRESS	Lt	MDC-10
pH HI	Ind	MDC-18
POST LDG-BAT BUS A	CB	RHEB-203
POST LDG-BAT BUS B	CB	RHEB-203
POST LDG-BAT C	CB	RHEB-203
POST LDG-MAIN A	CB	RHEB-203
POST LDG-MAIN B	CB	RHEB-203
REG OUT PRESS HI-H_2	Ind	MDC-18
REG OUT PRESS HI-N_2	Ind	MDC-18
REG OUT PRESS HI-O_2	Ind	MDC-18
SNSR UNIT-AC BUS-1	CB	MDC-21
SNSR UNIT-AC BUS-2	CB	MDC-21
SNSR UNIT-DC BUS-A	CB	MDC-21
SNSR UNIT-DC BUS-B	CB	MDC-21

ELECTRICAL POWER SYSTEM—CONTROLS/DISPLAYS LOCATOR INDEX

Control/Display Name	Type	Panel Locator
TANK PRESSURE-H_2-1	Ind	MDC-13
TANK PRESSURE-H_2-2	Ind	MDC-13
TANK PRESSURE-O_2-1	Ind	MDC-13
TANK PRESSURE-O_2-2	Ind	MDC-13
TANK QUANTITY-H_2-1	Ind	MDC-13
TANK QUANTITY-H_2-2	Ind	MDC-13
TANK QUANTITY-O_2-1	Ind	MDC-13
TANK QUANTITY-O_2-2	Ind	MDC-13
TEST SELECT	Sw	RHFEB-200

SEQUENTIAL SYSTEMS—CONTROLS/DISPLAYS LOCATOR INDEX

Control/Display Name	Type	Panel Locator
ABORT	Lt	MDC-3
ABORT SYSTEM-MODE	Sw (2)	MDC-16
ABORT SYSTEM-L/V RATES	Sw	MDC-16
ABORT SYSTEM-OX DUMP	Sw	MDC-16
ABORT SYSTEM-2 ENG OUT	Sw	MDC-16
ADAPT SEP	Sw	MDC-5
ALTIMETER	Indicator	MDC-1
APEX COVER JETT	Sw	MDC-5
CANARD DEPLOY	Sw	MDC-5
C/M-S/M SEP	Sw (2)	MDC-15
COUCH UNLOCK	Sw	MDC-8
Digital Event Timer Indicator (no placard)	Window	MDC-5
DIGITAL EVENT TIMER-MIN	Sw	MDC-8
DIGITAL EVENT TIMER-RESET	Sw	MDC-8
DIGITAL EVENT TIMER-SEC	Sw	MDC-8
DIGITAL EVENT TIMER-START	Sw	MDC-8
DROGUE DEPLOY	Sw	MDC-5
EDS	Sw	MDC-16
EDS	CB (3)	MDC-25
EDS POWER	Sw	MDC-24
ELS	CB (3)	MDC-25
ELS LOGIC	Sw	MDC-8
EVENT TIMER	CB (2)	MDC-25
LES MOTOR FIRE	Sw	MDC-5
LIFT-OFF	Lt	MDC-5
LOCK/UNLOCK	Control	MDC-5
L/V AOA/SPS P_C	Ind	MDC-3
L/V AOA/SPS P_C	Sw	MDC-3
L/V ENGINE	Lt (8)	MDC-5
L/V GUID	Lt	MDC-5
L/V RATE	Lt	MDC-5
MAIN CHUTE RELEASE	Sw	MDC-16
MAIN DEPLOY	Sw	MDC-5
MAIN DEPLOY-AUTO	Sw	MDC-16
MASTER EVENT SEQ CONT-ARM	CB (2)	MDC-22
MASTER EVENT SEQ CONT-LOGIC	CB (2)	MDC-22
MASTER EVENT SEQ CONT-PYRO ARM	Sw (2)	MDC-24
MESC-LOGIC ARM	Sw (2)	MDC-25
NO AUTO ABORT	Lt	MDC-5
POST LDG BEACON LIGHTS	Sw	MDC-26
PYRO A-RCS FUEL DUMP	CB	LEB-150
PYRO A-SEQ A	CB	LEB-150
PYRO B-RCS FUEL DUMP	CB	LEB-150
PYRO B-SEQ B	CB	LEB-150

TELECOMMUNICATIONS—CONTROLS/DISPLAYS LOCATOR INDEX

Control/Display Name	Type	Panel Locator
BIO-MED COMM-MNA	CB	MDC-25
BIO-MED COMM-MNB	CB	MDC-25
C-BAND	Sw	MDC-20
CENTRAL TIMING SYS-MNA	CB	MDC-22
CENTRAL TIMING SYS-MNB	CB	MDC-22
FLIGHT QUAL RCDR	Sw	MDC-19
HF	Sw	MDC-13, -23, -26
INST PWR CONT		RHEB-204
ESSENTIAL 1 THRU 4	CB (4)	
NON-ESSENTIAL 5 THRU 10	CB (6)	
INSTRUMENTS-ESS-MNA	CB	MDC-22
INSTRUMENTS-ESS-MNB	CB	MDC-22
INSTRUMENTS-NONESS	CB	MDC-22
INSTRUMENTS-NONESS BUS	CB	MDC-22
INSTRUMENTS-PAM XMTR NONESS	CB	MDC-22
INSTRUMENTS-SCIEN	CB	MDC-22
INTERCOM	Sw	MDC-13, -23, -26
INTERCOM BALANCE	Sw	MDC-13, -23, -26
NONESS BUS	Sw	MDC-22
POSTLANDING ANTENNA DEPLOY	Sw	MDC-25
POWER		MDC-13, -23, -26
POWER-PMP	Sw	MDC-20
POWER-SCE	Sw	MDC-20
RECOVERY-HF-ON/OFF	Sw	MDC-20
RECOVERY-HF-SSB/BCN/AM	Sw	MDC-20
RECOVERY-VHF BCN	Sw	MDC-20
S-BAND	Sw	MDC-13, -23, -26
S-BAND ANT	Sw	MDC-19
S-BAND ANTENNA	Sw	MDC-20
S-BAND-EMERG	Sw	MDC-20
S-BAND-OSC	Sw	MDC-20
S-BAND-PWR AMPL	Sw	MDC-20
S-BAND-VOICE-RNG/RNG ONLY	Sw	MDC-20
S-BAND-VOICE-TAPE/ANALOG	Sw	MDC-20
S-BAND-VOICE-TV/PLSS	Sw	MDC-20
S-BAND-XPONDER/XPONDER PWR AMPL	Sw	MDC-20
TAPE RECORDER-FWD/REV	Sw	MDC-20
TAPE RECORDER-PLAY	Sw	MDC-20
TAPE RECORDER-RECORD/PLAY	Sw	MDC-20
TAPE RECORDER-SPEED	Sw	MDC-20
TELECOM-ESS	Sw	MDC-22
TELECOM-NONESS	Sw	MDC-22
TELECOMMUNICATIONS-GROUP 1	CB	MDC-22
TELECOMMUNICATIONS-GROUP 2	CB	MDC-22
TELECOMMUNICATIONS-GROUP 3	CB	MDC-22
TELECOMMUNICATIONS-GROUP 4	CB	MDC-22
TELECOMMUNICATIONS-GROUP 5	CB	MDC-22

TELECOMMUNICATIONS—CONTROLS/DISPLAYS LOCATOR INDEX

Control/Display Name	Type	Panel Locator
TELECOMMUNICATIONS-PCM TLM	CB	MDC-22
TELECOMMUNICATIONS-SIG COND S-BAND PA	CB	MDC-22
TLM INPUTS-ANALOG	Sw	MDC-20
TLM INPUTS-BIOMED	Sw	MDC-20
TLM INPUTS-PCM	Sw	MDC-20
UP DATA	Sw	MDC-20
UP TLM CMD	Sw	MDC-19
VHF-AM	Sw	MDC-13, -23, -26
VHF-AM RCVR	Sw	MDC-20
VHF-AM SQUELCH	Control	MDC-20
VHF-AM-T/R/REC	Sw	MDC-20
VHF-ANTENNA	Sw	MDC-20
VHF-FM	Sw	MDC-20
VOICE RECORD	Indicator	MDC-19
VOLUME	Control	MDC-13, -23, -26
VOX SENS	Control	MDC-13, -23, -26

ENVIRONMENTAL CONTROL SYSTEM—CONTROLS/DISPLAYS LOCATOR INDEX

Control/Display Name	Type	Panel Locator
BATTERY VENT	Valve	RHEB-202
Cabin air control louver	Control	LHFEB-303
CABIN AIR/AUTO/SUIT AIR	Sw	LEB-120
CABIN AIR FAN-1 & 2	Sw (2)	MDC-21
CABIN PRESSURE RELIEF	Valve (2)	LHEB-307
CABIN REPRESS	Valve	LHEB-314
CABIN TEMP	Valve	LHFEB-303
CABIN TEMP-AUTO	Control	MDC-13
CABIN TEMP-AUTO/MAN	Sw	MDC-13
CO_2-odor absorber diverter	Valve	LHEB-313
CO_2 PP HI	Light	MDC-11
DIRECT O_2	Valve	MDC-24
DRINKING WATER SUPPLY	Valve	LHFEB-304
ΔP SUIT COMPR	Ind	MDC-13
ECS-CABIN AIR FAN-1 & 2	CB (6)	MDC-22
ECS-GLYCOL PUMPS-AC 1 & AC 2	CB (6)	MDC-22
ECS-GLYCOL-PUMP 1/PUMP 2	Sw (2)	MDC-21
ECS-H_2O ACCUM-MNA & MNB	CB (2)	MDC-22
ECS-POT H_2O HTR-MNA & MNB	CB (2)	MDC-22
ECS-RADIATOR	Sw (4)	MDC-21
ECS RAD-OUTLET TEMP	Ind	MDC-13
ECS RAD OUT TEMP-1 & 2	Ind (2)	MDC-19
ECS-RAD VALVE-AC 1 & AC 2	CB (4)	MDC-22
ECS STEAM DUCT HTR-MNA & MNB	CB (2)	RHEB-206
ECS-SUIT COMPRESSORS-AC 1 & AC 2	CB (6)	MDC-22
ECS-TRANSDUCER-PRESS GROUPS 1 & 2	CB (4)	MDC-22
ECS-TRANSDUCER-TEMP-MNA & MNB	CB (2)	MDC-22
ECS-TRANSDUCER-WASTE & POT H_2O-MNA & MNB	CB (2)	MDC-22
EMERGENCY CABIN PRESSURE	Valve	LHEB-314
EVAP H_2O	Valve	LHEB-311
FLOW O_2	Ind	MDC-13
FOOD PREPARATION WATER-COLD & HOT	Valve (2)	LHFEB-305
GAS ANAL	CB	MDC-22
GLY ACCUM-QUANTITY	Ind	MDC-13
GLY EVAP WATER CONTROL BYPASS	Valve	LHEB-317
GLYCOL ACCUMULATOR	Valve	LHEB-312
GLYCOL EVAP-H_2O FLOW	Sw	MDC-13
GLYCOL EVAP-STEAM PRESS-AUTO/MAN	Sw	MDC-13
GLYCOL EVAP-STEAM PRESS-INCR/DECR	Sw	MDC-13
GLYCOL EVAP-STEAM PRESS-TEMP IN	Sw	MDC-13
GLYCOL EVAP TEMP IN	Valve	LHEB-311
GLYCOL PRESS RELIEF BYPASS-1 & 2	Valve (2)	LHEB-309
GLYCOL RESERVE	Valve	LHEB-311
GLYCOL RESERVOIR-BYPASS	Valve	LHEB-307
GLYCOL RESERVOIR-INLET	Valve	LHEB-307
GLYCOL RESERVOIR-OUTLET	Valve	LHEB-307
GLYCOL TEMP LOW	Light	MDC-11

ENVIRONMENTAL CONTROL SYSTEM—CONTROLS/DISPLAYS LOCATOR INDEX

Control/Display Name	Type	Panel Locator
GLYCOL TO RAD	Valve	LHEB-307
GLY EVAP-OUTLET TEMP	Ind	MDC-13
GLY EVAP STEAM PRESS	Ind	MDC-13
H_2O ACCUM-AUTO/MAN	Sw	MDC-13
H_2O ACCUM FAIL	Light	MDC-11
H_2O ACCUM-ON 1/ON 2	Sw	MDC-13
H_2O ACCUMULATOR-1 & 2	Valve (2)	LHEB-311
H_2O IND	Sw	MDC-13
INST PWR CONT-ESSENTIAL 2	CB	RHEB-204
MAIN REGULATOR	Valve	LHEB-314
O_2 FLOW HI	Light	MDC-11
O_2 PRESS IND	Sw	MDC-13
OXYGEN-ENTRY	Valve	LHEB-307
OXYGEN-S/M SUPPLY	Valve	LHEB-307
OXYGEN-SURGE TANK	Valve	LHEB-307
PART PRESS CO_2	Ind	MDC-13
PGA pressure	Ind (3)	PGA sleeve
PLSS FILL	Valve	LHEB-314
PLVC	Sw	LHEB-316
POST LANDING-VENT FAN	Sw	MDC-25
POST LANDING-VENT FAN-PL BUS/FLOAT BAG 2	CB	MDC-25
POTABLE TANK INLET	Valve	LHEB-315
POT H_2O HEATER	Sw	MDC-21
PRESS-CABIN	Ind	MDC-13
PRESS GLY DISCH	Ind	MDC-13
PRESS-SUIT	Ind	MDC-13
PRESSURE RELIEF	Valve	LHEB-315
START/OFF/PREHEAT	Sw	LEB-120
Suit circuit return air	Valve	LHEB-319
SUIT COMPRESSOR-COMPR 1/COMPR 2	Sw	MDC-21
Suit demand pressure regulator selector	Valve	LHEB-310
SUIT EVAP	Sw	MDC-13
SUIT EVAP	Valve	LHEB-311
SUIT EVAP GLYCOL	Valve	LHEB-311
SUIT FLOW	Valve (3)	LHFEB-300, -301, -302
SUIT FLOW RELIEF	Valve	LHEB-311
SUIT HT EXCH	Sw	LHEB-310
SUIT TEST	Valve	LHEB-310
SURGE TANK PRESSURE RELIEF	Valve	LHEB-308
TANK PRESSURE-O_2-1	Ind	MDC-13
TEMP-CABIN	Ind	MDC-13
TEMP-SUIT	Ind	MDC-13
WASTE H_2O TK REFILL	Sw	MDC-13
WASTE MANAGEMENT-OVBD DRAIN	Valve	RHEB-201
WASTE MANAGEMENT-SELECTOR	Valve	RHEB-201

ENVIRONMENTAL CONTROL SYSTEM—CONTROLS/DISPLAYS LOCATOR INDEX

Control/Display Name	Type	Panel Locator
WASTE TANK INLET	Valve	LHEB-315
WASTE TANK SERVICING	Valve	LHEB-315
WATER & GLYCOL TANKS PRESSURE-REGULATOR-SELECTOR INLET	Valve	LHEB-314
WATER & GLYCOL TANKS PRESSURE-RELIEF-SELECTOR OUTLET	Valve	LHEB-314
WATER-QUANTITY	Ind	MDC-13

CAUTION AND WARNING SYSTEM—LOCATOR INDEX

Control/Display Name	Type	Panel Locator
AC BUS 1 FAIL	Lt	MDC-11
AC BUS 2 FAIL	Lt	MDC-11
AC BUS 1 OVERLOAD	Lt	MDC-11
AC BUS 2 OVERLOAD	Lt	MDC-11
AGAP TEMP	Lt	MDC-10
AGC PWR FAIL	Lt	MDC-10
CAUT/WARN-FAIL	Lt	MDC-11
CAUT/WARN-MNA & MNB	CB (2)	MDC-25
CAUT/WARN-MODE	Sw	MDC-11
CAUT/WARN-POWER	Sw	MDC-11
CDU FAIL	Lt	MDC-10
C/M RCS A	Lt	MDC-10
C/M RCS B	Lt	MDC-10
CO_2 PP HI	Lt	MDC-11
C/W	Sw	MDC-13
C/W LAMP TEST	Sw	MDC-23
F/C 1	Lt	MDC-11
F/C 2	Lt	MDC-11
F/C 3	Lt	MDC-11
F/C BUS DISCONNECT	Lt	MDC-11
GLYCOL TEMP LOW	Lt	MDC-11
GMBL LOCK	Lt	MDC-10
G&N ACCEL FAIL	Lt	MDC-10
G&N ERROR	Lt	MDC-10
H_2O ACCUM FAIL	Lt	MDC-11
H_2 PRESS	Lt	MDC-10
IMU FAIL	Lt	MDC-10
IMU TEMP	Lt	MDC-10
INV 1	Lt	MDC-11
INV 2	Lt	MDC-11
INV 3	Lt	MDC-11
MASTER ALARM	Lt	MDC-3
MASTER ALARM	Lt	MDC-18
MASTER ALARM	Lt	LEB-103
MN BUS A UNDERVOLT	Lt	MDC-11
MN BUS B UNDERVOLT	Lt	MDC-11
O_2 FLOW HI	Lt	MDC-11
O_2 PRESS	Lt	MDC-10
PITCH GMBL DR FAIL	Lt	MDC-11
S/M RCS A	Lt	MDC-10
S/M RCS B	Lt	MDC-10
S/M RCS C	Lt	MDC-10
S/M RCS D	Lt	MDC-10
SPS PRESS	Lt	MDC-11
SPS PU SNSR FAIL	Lt	MDC-11
SPS ROUGH ECO	Lt	MDC-10
SPS WALL TEMP HI	Lt	MDC-11
YAW GMBL DR FAIL	Lt	MDC-11

MISCELLANEOUS SYSTEMS—CONTROLS/DISPLAYS LOCATOR INDEX

Controls/Display Name	Type	Panel Locator
COUCH ATTEN-FLOODLIGHTS	CB (2)	MDC-25
ELS-FLOAT BAG 3	CB	MDC-25
FLOODLIGHTS-PRIMARY	Sw	MDC-23
FLOODLIGHTS-SECONDARY	Sw	MDC-23
FLOODLIGHTS-PRIMARY	Sw	MDC-26
FLOODLIGHTS-SECONDARY	Sw	MDC-26
LIGHTING-CLOCKS	Sw	LEB-100
LIGHTING-FLOODS-PRIMARY	Sw	LEB-100
LIGHTING-FLOODS-SEC	Sw	LEB-100
POST LANDING-FLOAT BAG	Sw (3)	MDC-25
POST LANDING-FLOAT BAG 1 PL BUS	CB	MDC-25
POST LANDING-VENT FAN-PL BUS-FLOAT BAG 2	CB	MDC-25
UPRIGHTING SYSTEM-COMPR NO. 1 AND NO. 2	CB	RHEB-205

SCIENTIFIC EXPERIMENTS—CONTROLS/DISPLAYS LOCATOR INDEX

Controls/Display Name	Type	Panel Locator
SCIEN EQUIP SEB 1	CB	MDC-22
SCIEN EQUIP SEB 2	CB	MDC-22
INSTRUMENTS—SCIEN (not used)	CB	MDC-22
SCIEN EQUIP HATCH	CB	MDC-22

Location	Name and Position	Function	Circuit Breaker	Power Source	Telemetry Code No. and Identity	Remarks
MDC-1	ALTIMETER	Indicates altitude of command module up to 60,000 feet.	None	None	None	The altimeter is monitored to verify deployment of the drogue and main parachutes at the proper altitude. An adjustable marker on the dial is set prior to launch. The marker is used as a reference for manual deployment of the main parachutes during an abort initiated prior to 61 seconds after lift-off.
MDC-2	FCSM controls		N/A	ΔV switch	None	Two-position toggle switch which allows the crew to select or override the FCSM function. To reset the FCSM circuitry in the event of FCSM thrust termination, the switch must be positioned momentarily to RESET/OVERRIDE, until the SPS ROUGH ECO status indicator extinguishes, and then returned to the G&N position.
	G&N switch					
	G&N	Enables flight combustion stability monitor circuitry. In the event of excessive SPS engine combustion instability, the FCSM provides automatic thrust termination and illuminates the SPS ROUGH ECO status indicator on MDC-10.				
	RESET/OVERRIDE	Disables FCSM automatic thrust termination capability as well as the capability to illuminate the SPS ROUGH ECO status indicator on MDC-10 in the event of excessive engine combustion instability.				
	SCS switch					Same explanation as G&N switch (MDC-2).
	SCS	Same as G&N switch in G&N position.				
	RESET/OVERRIDE	Same as G&N switch in RESET/OVERRIDE position.				
	LONG ACCEL indicator	Displays S/C positive and negative G loads along spacecraft X axis and records maximum G readings encountered. A RESET knob enables manual reset of recording pointers to normal IG position.	(TBD)	(TBD)	(TBD)	The indicator has three pointers: one for normal G indications and the other two for recording maximum +G and -G readings, respectively. Scale +16 to -6g, readable increments 0.2 g. Sensor is located behind instrument face.

Location	Name and Position	Function	Circuit Breaker	Power Source	Telemetry Code No. and Identity	Remarks
MDC-2 (Cont)	FDAI BRIGHTNESS control OFF INCR	Turns off FDAI panel lighting (white light) (MDC-4) and THRUST ON switch face lighting (MDC-7). Adjusts intensity of FDAI panel lighting and THRUST ON switch face lighting.	SCS—GROUP 2 AC 1 AC 2 (MDC-25)	A-C buses No. 1 and No. 2	None	
	FDAI SELF TEST switch SELF TEST (up) OFF	Normal SCS rate mode a. Removes rate gyro input from SCS rate electronics. b. Applies test signal to SCS rate electronics, causing negative deflection of all FDAI rate indicators to 4/5 full scale. Removes test signal from rate indicators and permits normal operation of FDAI.	SCS—GROUP 1 MN A MN B (MDC-25)	D-C main buses A and B		In backup SCS rate mode, the SCS rate electronics receive the sum of the SELF TEST and BMAG inputs. Therefore rate deflection will be 4/5 full scale (fixed) plus deflection caused by the analog of the rate signal, if any. SELF TEST is used each time the FDAI is activated.
MDC-3	L/V AOA/SPS P_c switch L/V AOA SPS P_c	Connects output of Q-ball to L/V AOA/SPS P_c indicator. Connects output of SPS engine combustion chamber pressure sensor to L/V AOA/SPS P_c indicator.	None	N/A	None	Two-position toggle switch which enables the crew to select applicable input to L/V AOA/SPS P_c indicator. The switch is placed in the L/V AOA position prior to lift-off, and in the SPS P_c position at approximately 1 minute and 40 seconds after lift-off.
	L/V AOA/SPS P_c indicator	Time-shared indicator with input determined by position of L/V AOA/SPS P_c switch. a. L/V AOA input: the indicator displays a percentage of ΔP measured by the Q-ball which is a function of pitch and yaw.		D-C voltage from S-IVB I. U.		Indicator range: 0 to 150%. Small changes in air pressures are sensed through four holes in the Q-ball. The indicator is monitored from 40 seconds to approximately one minute and 40 seconds after lift-off. It is red-lined at approximately 100 percent for the L/V AOA function. A decision for manual abort will be made when the indicator pointer reaches the red line and a movement is also noted on the FDAI.

Location	Name and Position	Function	Circuit Breaker	Power Source	Telemetry Code No. and Identity	Remarks
MDC-3 (Cont)		b. SPS P_c input: the indicator displays SPS engine combustion chamber pressure during SPS thrusting as percentage of reference pressure value.	INSTRUMENTS—ESS MN A MN B (MDC-22)	D-C voltage from signal conditioner	SP0661P (Combustion chamber pressure sensor)	Reference pressure value for SPS P_c input is 100 psia (nominal). Normal thrusting readout is 100 percent. Scale is graduated in % increments.
	MASTER ALARM switch-light	Red light illuminates to alert crewman in LH couch of a malfunction or out-of-tolerance condition. This is indicated by illumination of applicable system status lights on MDC-10 or -11.	CAUT/WARN MN A MN B (MDC-25)	D-C main buses A and B	CS0150X (Master caution-warning on)	MASTER ALARM lights on MDC-3, -18, and LEB-103 are simultaneously illuminated and an audio alarm tone is sent to each headset when any CW light illuminates. The C/W switch (MDC-13) is set to BOOST during the ascent phase only, preventing this MASTER ALARM switchlight from illuminating in order to avoid confusion with the adjacent red ABORT light. The switch-light loses its reset function during this time. The MASTER ALARM switch-light contains an integral pushbutton switch. Pressing the switch-light will reset the master alarm circuit, extinguishing the MASTER ALARM lights and shutting off the audio alarm if malfunction is corrected.
	ABORT light	Illuminates red to indicate that an abort has been requested by the range safety officer or ground control.	EDS-1, 3 BAT A BAT B (MDC-25)	Battery buses A and B when the EDS POWER switch is ON (MDC-24)	EX0080X (EDS abort request A)	The light serves to alert the crew of an emergency situation where an abort is required immediately. The light is a backup to voice communications from ground control. Redundant bulbs are controlled by redundant commands through the UDL real-time command system.
	SPS switches GIMBAL MOTORS group PITCH 1, PITCH 2, YAW 1, YAW 2 switches START	Four operationally identical switches. Energizes motor switch in applicable overcurrent relay which, in turn, applies +28 vdc to the applicable gimbal actuator drive motor.	SPS—GIMBAL MOTOR CONTROL 1 PITCH BAT A PITCH 2 BAT B 1 YAW BAT A YAW 2 BAT B (MDC-25)	Battery buses A and B	None	Three-position toggle switch with upper (START) position spring-loaded to return switch to center (ON) position when released. PITCH 1 and YAW 1 switches control gimbal actuator primary drive motors. PITCH 2 and YAW 2 switches control gimbal actuator secondary drive motors. START position provides gimbal motor starting capability.

Location	Name and Position	Function	Circuit Breaker	Power Source	Telemetry Code No. and Identity	Remarks
MDC-3 (Cont)	ON OFF	Applies +28 vdc to over-under-current sensing circuitry in applicable overcurrent relay, primary only. Energizes motor switch in applicable overcurrent relay which removes +28 vdc from the current sensing circuitry and gimbal actuator drive motor.	SPS—GIMBAL MOTOR CONTROL 1 PITCH BAT A PITCH 2 BAT B 1 YAW BAT A YAW 2 BAT B (MDC-25)	Battery buses A and B	None	ON position provides for over or undercurrent sensing (under 6 amps or over 40 amps nominal). During primary channel operation an over or undercurrent will automatically cause power to be removed from the primary drive motor, clutch commands switched to the secondary channel, and applicable GMBL DR FAIL status indicator to illuminate (MDC-11). During secondary operation, pitch 2 motor circuit is protected by CB 1 and yaw 2 motor circuit is protected by CB 2. CB 1 and CB 2 are 70 amp circuit breakers located in the S/M. No status indicators are provided for the secondary control circuits. During ascent, when GIMBAL MOTORS switches (4) are OFF, engine positioning is maintained by application of a quiescent current (60 +10, -5 ma) to the electromagnets of the extend and retract clutches when TVC 1 and 2 POWER switches (MDC 24) are on.
	INJECT PRE-VALVES group A (B) switch ON OFF	Two operationally identical switches. Each switch controls the pneumatic (GN_2) pressurization of the SPS engine valve-actuators within their respective half of a series/parallel propellant feed line configuration to the engine combustion chamber. Applies +28 vdc to SPS engine system A pilot pre-valve solenoid. Removes +28 vdc from SPS engine system A pilot pre-valve solenoid.	SPS—He VALVE MN A MN B (MDC-25)	D-C main buses A and B		Two-position toggle switch which must be in ON position (i.e., solenoid is actuated) before automatic or manual SPS engine valve-actuator control of the main propellant valves can be initiated.

Location	Name and Position	Function	Circuit Breaker	Power Source	Telemetry Code No. and Identity	Remarks
MDC-4	Flight director attitude indicator Total attitude indication	Displays S/C total attitude, attitude errors, and angular rates. S/C inertial attitude is displayed by orientation of the 3-axis attitude ball, with readouts as follows: a. Roll attitude is read from the ball-driven movable index (roll bug) referenced to the calibrated bezel ring around the ball, with respect to S/C navigation axes only. b. Pitch and yaw are read directly from the calibrated surface of the ball, with respect to either the S/C body axes index or the navigation axes index. Two 30° red circular areas on the ball surface denote attitude regions in which G&N IMU gimbal lock or excessive SCS AGCU error can occur.	SCS— GROUP 1 AC 1 GROUP 1 AC 2 (MDC-25)	A-C bus No. 1 or No. 2 (via SCS display/ AGAA ECA)	None	Total attitude indicator calibration Pitch | 0° - 360° (ball longitude) Yaw | 270° - 0° -90° (ball latitude) Roll | 0° - 360° (bezel ring) Total attitude indicator direction of positive (+) rotation Axis of rotation (other two axes fixed at 0°) — Direction of Ball Rotation pitch — up | from top to bottom yaw — right | from right to left roll — right | counterclockwise Total attitude indication follows attitude deviations only in the following situations: a. When G&N system supplies inputs b. When [CSS + translation control CW + .05g + (ATTITUDE IMPULSE-ENABLE) + [(SCS attitude Mode) (pitch disabled + yaw disabled + both roll disabled)] (BUR in any axis) (MTVC) (FDAI align).
	Attitude error indication	S/C attitude errors are displayed by three fly-to-type needles mounted on the bezel ring around the attitude ball, with the top, right, and bottom needles corresponding to roll, pitch, and yaw, respectively. The readouts denote one of the following: a. Difference between present S/C attitude and the S/C reference attitude stored in either the G&N ICDUs or the SCS AGCU. The readouts are always referenced to S/C body axes, except during G&N-controlled entry when				Attitude error indicator calibration (full-scale deflection) Modes | Roll | Pitch | Yaw Monitor (G&N) | ±25° | ±15° | ±15° G&N entry SCS entry | ±25° | ±5° | ±5° All other modes | ±5° | ±5° | ±5°

Location	Name and Position	Function	Circuit Breaker	Power Source	Telemetry Code No. and Identity	Remarks
MDC-4 (Cont)		the roll error needle is referenced to the S/C navigation axis. The pitch and yaw error needles will be zero after .05g switching in a G&N entry mode, and there will be no attitude error displayed after .05g in a SCS ENTRY mode. b. Difference between the present S/C reference attitude stored in the SCS AGCU and a desired attitude dialed into the attitude set/gimbal position display, with the ATTITUDE SET function engaged. Dialed in and stored attitudes are referenced to S/C navigation axes, with the difference angles inverted to body axes for display by the error needles.	SCS—GROUP 1 AC 1 GROUP 1 AC 2 (MDC-25)	A-C bus No. 1 or No. 2 (via SCS display/ AGAA ECA	None	Attitude error indicator deflection for positive (+) rotational input commands Axis of Rotation (positive command) / Indicator Deflection From Zero (center) roll — left pitch — upward yaw — left
	Angular rate indication	S/C angular velocities are displayed by three fly-to-type indicators mounted above, to the right of, and below the attitude ball, corresponding to roll, pitch, and yaw, respectively. The readouts are always referenced to S/C body axes except during atmospheric entry (after 0.05g) when the yaw rate indicator is referenced to the S/C stability axis. Inputs to the indicators are supplied by either the SCS rate gyros (normal) or the SCS BMAGs (backup).				Angular rate indicator calibration (full-scale deflection) Modes / Roll / Pitch / Yaw Monitor (G&N) G&N entry SCS entry — ±25°/sec — ±5°/sec — ±5°/sec G&N delta V SCS delta V — ±5°/sec — ±5°/sec — ±5°/sec G&N att cont SCS att cont SCS lcl vert — ±1°/sec — ±1°/sec — ±1°/sec Angular rate indicator deflection for positive (+) rotational input commands Axis of Rotation (positive command) / Indicator Deflection From Zero (center) roll — left pitch — upward yaw — left

Location	Name and Position	Function	Circuit Breaker	Power Source	Telemetry Code No. and Identity	Remarks
MDC-5	Digital event timer	The event timer provides the crew with a means of monitoring and timing events. Indications from 00 minutes and 00 seconds (00-00) to 59 minutes and 59 seconds (59-59) are obtainable in a countup or countdown mode. In a countup mode, when 59-59 is recorded, the counter will proceed to 00-00 and continue to count up. In a countdown mode, continuous counting is also available.	EVENT TIMER MN A MN B (MDC-25)	D-C main buses A and B	None	The event timer is a reference system only and is automatically reset to zero when an abort is automatically or manually initiated. The event timer starts automatically when lift-off occurs.
	L/V RATE light	Illuminates red to indicate that the permissible angular rates in any of pitch, roll, or yaw axes have been exceeded. Rates in excess of 20 degrees/seconds in roll and 5 degrees/second in pitch or yaw illuminate the rate light.	EDS-1, 3 BAT A BAT B (MDC-25)	Battery buses A and B when the EDS POWER switch (MDC-24) is ON.	BS0020X (Launch vehicle rate excessive A)	When used in conjunction with the angle-of-attack display and the attitude error reading of the FDAI, will indicate the necessity for manual abort initiation. The light also illuminates when an auto abort is initiated because of excessive rates.
	L/V GUID light	Illuminates red to indicate platform failure in the L/V guidance system (loss of attitude control).			BS0016X (Launch vehicle guidance fail A)	
	L/V ENGINES lights					All engine lights are yellow. The lights are used to indicate staging and the necessity for initiating a manual abort when two S-IB engines are operating below 90 percent of thrust. When enabled in the auto abort mode, an auto abort will be initiated with two engines below 90 percent of thrust.
	Light No. 1	Illuminates to indicate S-IB or S-IVB engine No. 1 operating below 90 percent of total thrust capability.			BS0030X (Engine No. 1 out A)	
	Light No. 2	Illuminates to indicate S-IB engine No. 2 operating below 90 percent of total thrust capability.			BS0032X (Engine No. 2 out A)	
	Light No. 3	Illuminates to indicate S-IB engine No. 3 operating below 90 percent of total thrust capability.			BS0034X (Engine No. 3 out A)	
	Light No. 4	Illuminates to indicate S-IB engine No. 4 operating below 90 percent of total thrust capability.			BS0036X (Engine No. 3 out A)	

Location	Name and Position	Function	Circuit Breaker	Power Source	Telemetry Code No. and Identity	Remarks
MDC-5 (Cont)	Light No. 5	Illuminates to indicate S-IB engine No. 5 operating below 90 percent of total thrust capability.	EDS-1, 3 BAT A BAT B (MDC-25)	Battery buses A and B when the EDS POWER switch (MDC-24) is ON.	BS0038X (Engine No. 5 out A)	
	Light No. 6	Illuminates to indicate S-IB engine No. 6 operating below 90 percent of total thrust capability.			BS0040X (Engine No. 6 out A)	
	Light No. 7	Illuminates to indicate S-IB engine No. 7 operating below 90 percent of total thrust capability.			BS0042X (Engine No. 7 out A)	
	Light No. 8	Illuminates to indicate S-IB engine No. 8 operating below 90 percent of total thrust capability.			BS0044X (Engine No. 8 out A)	
	LIFT-OFF and NO AUTO ABORT lights					
	LIFT-OFF light	White light illuminates at lift-off.			BS0060X BS0061X (Lift-off signal A & B)	The LIFT OFF/NO AUTO ABORT switch/light combination should be pressed if the LIFT OFF light does not illuminate at lift off. (Refer to malfunction procedures in section 7.) The relay controlling the white light is reset 5 seconds after lift-off by a timer in the L/V instrumentation unit.
	NO AUTO ABORT light	Switch-light will illuminate red at lift-off if either of the LV-EDS auto abort systems has not been automatically enabled.			None	The astronaut will press the switch-light which will electrically enable the LV-EDS automatic abort system. If the light still does not go out, it indicates that one or both of the dual redundant EDS systems is not enabled. In this event, the crew must be prepared to initiate a manual abort, if necessary.
	LES MOTOR FIRE switch	a. Backup switch to fire the launch escape motor. b. Backup switch to jettison the LES tower in the event the jettison motor failed to ignite	MASTER EVENTS SEQ CONT-A ARM B BAT A BAT B (MDC-22)	Battery buses A and B	CD1006X LE/P_c motor fire initiate A CD1007X LE motor fire initiate B	The LES motor is normally (automatically) fired approximately 0.1 second by the MESC following abort initiation. It may be used for a back-up for the jettison motor only after normal means of TWR jettison has failed. This is assuming that the TWR separation nuts are fractured.

Location	Name and Position	Function	Circuit Breaker	Power Source	Telemetry Code No. and Identity	Remarks
MDC-5 (Cont)	CANARD DEPLOY switch	Backup switch to deploy the canard when it does not deploy automatically during an abort.	MASTER EVENTS SEQ CONT-A ARM B BAT A BAT B (MDC-22)	Battery buses A and B	CD0120X CD0121X Canard deploy A and B	Push-type switch. The canard will normally (automatically) deploy 11 seconds after a LES abort initiation.
	ADAP SEP switch	a. Switch for normal CSM/S-IVB separation after the ascent phase of the mission. (Refer to adapter separation mechanism in section 2.) b. Backup switch for CSM/S-IVB separation if it does not separate automatically during an SPS abort. (Refer to SPS abort procedures.)			CD0125X Adapter/SM separate initiate A CD0126X Adapter/SM separate initiate B	Push-type switch to separate the adapter when an SPS abort cannot be initiated with the commanders translational control. SPS ullage and firing would be manual functions.
	APEX COVER JETT switch	Backup switch to jettison the C/M apex cover.	ELS A—BAT A-FLOAT BAG 3 ELS B—BAT B (MDC-25)		CD0230X Forward heat shield jettison A CD0231X Forward heat shield jettison B	Push-type switch to jettison the C/M apex cover if the automatic system fails during an abort or earth landing after a normal mission.
	DROGUE DEPLOY switch	Backup switch to deploy the drogue parachutes.			CE0001X Drogue deploy relay close A CE0002X Drogue deploy relay close B	Push-type switch. The drogue parachutes will normally (automatically) deploy 2 seconds after the 24,000-foot baroswitches close.
	MAIN DEPLOY switch	Backup switch to deploy the main parachutes.			CE0003X Main parachute deploy-drogue release relay A CE0004X Main parachute deploy-drogue release relay B	Push-type switch. The main parachutes will normally (automatically) deploy when the 10,000-foot baroswitches close during descent. The switch is also used to initiate manual deployment of the main parachutes during aborts initiated prior to 61 seconds after lift-off.

Location	Name and Position	Function	Circuit Breaker	Power Source	Telemetry Code No. and Identity	Remarks
MDC-5 (Cont)	Backup switches lock control		N/A	N/A	None	
	LOCK	Locks the backup switches to prevent inadvertent operation.				
	UNLOCK	Unlocks and enables the backup switches to be pushed manually.				
MDC-6	ATTITUDE SET group	Enables manual insertion of a desired attitude reference into the SCS, either for AGCU alignment or for a command S/C attitude maneuver reference during SCS flight modes.			None	
	ROLL, PITCH, YAW thumbwheels and indicators	Enable manual selection and display of desired roll, pitch, and yaw attitude settings referenced to S/C navigation axes.	SCS— GROUP 1 AC 1 GROUP 1 AC 2 (MDC-25)	A-C bus No. 1 or No. 2		Yaw thumbwheel is marked with a stripe, denoting yaw angles of 75° and 285°, as a caution against dialing in settings at which G&N IMU gimbal lock or excessive SCS AGCU error can occur. Indicators provide digital type displays.
	FDAI ALIGN switch	a. Couples manually selected (dialed in) attitude settings into the SCS for alignment of the present S/C reference attitude stored in the AGCU to the desired reference attitude. b. Decouples normal SCS BMAG inputs to the AGCU and attitude the BMAGs are free gyros until switch is released. c. Aligns the FDAI attitude ball to the dialed-in attitude referenced to S/C navigation axes, in SCS flight modes only.	SCS— GROUP 1 MN A MN B (MDC-25)	D-C main bus A or B		Momentary-contact pushbutton switch which must be held engaged until alignment is completed. SCS AGCU alignment slew rates roll — 20°/sec pitch — 5°/sec yaw — 5°/sec Perform the FDAI/AGCU align function.

Location	Name and Position	Function	Circuit Breaker	Power Source	Telemetry Code No. and Identity	Remarks
MDC-6 (Cont)	ATT SET switch On (up)	a. Couples the attitude difference angles to the FDAI attitude error indicators, referenced to S/C body axes. b. Decouples normal SCS BMAG inputs to the FDAI attitude error indicators. (BMAGs continue to operate normally otherwise.)	SCS— GROUP 1 MN A MN B (MDC-25)	D-C main bus A or B	None	The attitude set function which enables S/C maneuver to a desired (dialed in) attitude is applicable to SCS flight modes only. The desired attitude is achieved by flying out the attitude error needles, using the rotation control.
	OFF	Inhibits the attitude set function.				
	GIMBAL POSITION group	Provides display and manual control of gimbaled SPS engine thrust axis orientation with respect to S/C body axes.	SCS— GROUP 1 AC 1 AC 2 GROUP 2 AC 1 AC 2 (MDC-25)	A-C bus No. 1 or No. 2		
	YAW, PITCH indicators	Provide display of engine gimbal position readouts with respect to S/C yaw and pitch (body) axes, respectively.		(via yaw and pitch ECAs)		Yaw indicator and thumbwheel are calibrated in 0.5° increments from -3° to +13°. Center reading of +4° corresponds to yaw gimbal position null, due to offset S/C CG.
	YAW, PITCH thumbwheels	Provide manual yaw and pitch input commands to respective engine gimbal position servos for alignment of SPS engine thrust axis through S/C CG, prior to SPS thrusting. Thumbwheel displacement in a positive direction will provide a relative positive gimbal position indicator display indicating nozzle positioning for a positive axis displacement when thrust is initiated.		(via display/ AGAA ECA)		Pitch indicator and thumbwheel are calibrated in 0.5° increments from -9° to +9°. Center reading of 0° corresponds to pitch gimbal position null. Trimming of gimbal positions by use of the thumbwheels is possible when performing MTVC. Group 2 circuit breakers provide power to MTVC circuits.

Location	Name and Position	Function	Circuit Breaker	Power Source	Telemetry Code No. and Identity	Remarks
MDC-7	DIRECT ULLAGE switch	Provides backup capability for initiating ullage (+X translation) prior to SPS burns. a. Energizes injector valve direct coils of four +X SM RCS engines. b. Disengages automatic attitude hold capability in pitch and yaw axes.	SCS—DIRECT CONT MN A MN B (MDC-25)	D-C main bus A or B	None	Momentary-contact pushbutton switch which must be held engaged until ullage is completed. Translation control provides normal capability for initiating ullage.
	THRUST ON switch light	a. Switch actuation applies manual SPS engine thrust-on logic command to SCS electronics which energizes coils of SPS engine helium isolation valves (if SPS He switch on MDC-20 is in AUTO position) and pilot control valves. b. Switch face illumination indicates application of SPS engine thrust-on signal from G&N system or THRUST ON switch to SCS electronics. Light is extinguished when SPS engine thrust-off signal from G&N system, ΔV REMAINING counter, or flight combustion stability monitor is detected in SCS electronics.	SCS—GROUP 1 MN A MN B (MDC-25)		CH4320 (SPS solenoid control valve energized MNA direct CB) CH4321 (SPS solenoid control valve energized MNB direct CB)	Pushbutton momentary-contact-type switch. Provides normal SPS engine ignition control in SCS ΔV mode, backup control in G&N ΔV mode. FDAI BRIGHTNESS control must be on to provide switch face illumination. Switch face does not indicate application of thrust on/off commands via the NORMAL/OFF/DIRECT ON switch (MDC-7).
	NORMAL/OFF/DIRECT ON switch NORMAL OFF	Enables circuit capability for energizing of SPS fuel and oxidizer control solenoids by either AGC or THRUST ON switch stimuli, providing all other logic is complied with. Provides capability to remove power from the four SPS engine pilot control valve solenoids directly, thereby, terminating thrust.	SCS—DIRECT CONT MN A MN B (MDC-25)		None	Switch is a three-position lever-lock toggle switch. To set the switch in the NORMAL position or the DIRECT ON position, pull the lever out past the lever lock (shoulder stop) and move the lever up and down, respectively. The in-flight position of the switch is the OFF (center) position. DIRECT ON position provides capability of bypassing thrust on logic circuit and initiating SPS engine firing directly.

Location	Name and Position	Function	Circuit Breaker	Power Source	Telemetry Code No. and Identity	Remarks
MDC-7 (Cont)	DIRECT ON	Connects +28 vdc direct from circuit breaker to SPS pilot control valve solenoids. Energizes SPS driver relays K1 and K2, which provide power application to helium isolation valves and PUGS.	SCS—DIRECT CONT MN A MN B (MDC-25)	D-C main buses A or B	None	The DIRECT ON switch overrides FCSM.
	ΔV SET switch	Enables desired ΔV to be placed on ΔV REMAINING display.	SCS—GROUP 1 AC 1 GROUP 1 AC 2 (MDC-25)	±15 vdc from DISP/AGAA ECA		The ΔV set switch is a five-position switch with two + (ΔV increase) positions, two - (ΔV decrease) positions, and an OFF (center) position.
	Upper hardstop (uppermost position)	Enables increase of ΔV REMAINING display at rate of 64 digits per sec.				
	Upper softstop (upper middle position)	Enables increase of ΔV REMAINING display at rate of 2 digits per sec.				
	Center position	Provides inhibit to ΔV counter often TVC #1 POWER switch is set to ON until a +X-ullage is initiated, except when open.				
	Lower softstop (lower middle position)	Enables decrease of ΔV REMAINING display at rate of 2 digits/per sec.				
	Lower hardstop (bottommost position)	Enables decrease of ΔV REMAINING display at rate of 64 digits/per sec.				
	ΔV REMAINING indicator	Displays ΔV magnitude and/or ΔV REMAINING in feet per second.		DISP/AGAA ECA	CH3186V (ΔV remaining)	When the SPS engine is thrusting, the ΔV REMAINING indicator receives a signal from the SCS X-axis accelerometer, driving the indicator toward zero. The ΔV REMAINING display is activated when the TVC 1 POWER switch is set to either AC 1 or AC 2 position and the integrator circuit threshold of 5×10^{4} g has been attained while performing a +X (only) translation maneuver. Acceleration sensing will begin at ullage or +X RCS translation initiation. An indicating range from -1000 (99,000) to 12,999 feet/second (f/s) is provided at an accuracy of ±1.5 percent or 0.75 f/s, whichever is greater.

Location	Name and Position	Function	Circuit Breaker	Power Source	Telemetry Code No. and Identity	Remarks
MDC-7 (Cont)			SCS— GROUP 1 AC 1 GROUP 2 AC 2 (MDC-25)	DISP/AGAA ECA	CH3186V (ΔV remaining)	When thrusting in SCS ΔV mode, thrust-off signal is terminated when ΔV REMAINING display reaches 00000. The thrust-off signal is inhibited by the AGC when operating in G&N ΔV mode. No inhibit is provided by the ΔV REMAINING display circuits when in the G&N ΔV mode.
MDC-8	DIRECT RCS switch DIRECT RCS (up) OFF	Provides capability for direct manual control of S/M or C/M-RCS engines. Applies d-c power to rotation control, enabling direct manual control of S/M or C/M-RCS engines. Removes manual direct control capability of the S/M or C/M-RCS engines.	SCS— DIRECT CONT MN A MN B (MDC-25)	D-C main buses A or B	None	DIRECT RCS position provides the crew with direct control of the S/M or C/M RCS engines for rotational maneuver commands. Direct control is achieved by positioning the rotation control to engage the direct switches for the desired axis change. Direct switches are engaged at 1±0.5 degree from any hard stop. All SCS electronics are bypassed during this function.
	LIMIT CYCLE switch LIMIT CYCLE (up) OFF	Provides manual capability to retain or inhibit SCS pseudo rate (limit cycling) during RCS engine operation. Allows normal operation of SCS pseudo rate circuit, providing limit cycling of RCS engines during attitude control modes. Prevents operation of SCS pseudo rate circuit in pitch, yaw, and roll ECAs.	None	None		The primary purpose of the LIMIT CYCLE switch is to provide the crew with the capability of manually inhibiting the pseudo rate circuit operation during maneuvering and the entry phase of the mission. For fuel conservation, the switch should be set to LIMIT CYCLE position when holding attitude with S/M RCS. The LIMIT CYCLE position function is disabled when the breakout switches in the rotation control are actuated or a manual translation is commanded.
	ATT DEADBAND switch MAX	Enables selection of attitude deadband control sensitivity. Selects maximum attitude deadband of ±4.2°.	SCS— GROUP 1 MN A MN B (MDC-25)	D-C main buses A or B		This switch selects a deadband in SCS that prevents attitude correction signals from being applied to the RCS until the attitude error exceeds the selected deadband.

Location	Name and Position	Function	Circuit Breaker	Power Source	Telemetry Code No. and Identity	Remarks
MDC-8 (Cont)	MIN	Selects minimum deadband of ±0.2°.	SCS—GROUP 1 MN A MN B (MDC-25)	D-C main buses A or B	None	Minimum deadband is used only when tight attitude control is required; e.g., during navigational sightings prior to and during a ΔV maneuver. No power to this switch during SCS or G&N entry modes; therefore, minimum deadband cannot be selected during entry.
	RATE GYRO switches	Provide manual capability to place the roll, pitch, or yaw BMAG in the backup rate mode of operation.				These switches place any or all of the BMAGs in backup rate mode of operation so that they may be used in place of the rate gyros to provide spacecraft rate stabilization. In addition, with any one of the RATE GYRO switches in the BMAG position and any one of the following selected, the remaining two BMAGs will automatically assume the backup rate mode of operation: .05G ENTRY switch to .05G ENTRY position, monitor mode selected, G&N attitude control mode selected, minimum impulse attitude control mode engaged, G&N entry mode selected, either rotation control out of neutral position, SCS local vertical, or one SCS channel disabled while in SCS attitude control mode. When in an SCS mode, the attitude reference capability is lost when any one of the BMAGs is in backup rate mode. Attitude information is maintained if operating in a G&N mode.
	ROLL					
	NORMAL	Allows normal BMAG and rate gyro operation.				
	BMAG	Enables BMAG rate mode of operation removing rate gyro signal from rate indicators, etc.				
	PITCH					
	NORMAL	Allows normal BMAG and rate gyro operation.				
	BMAG	Enables BMAG rate mode of operation, removing rate gyro signal from rate indicators, etc.				
	YAW					
	NORMAL	Allows normal BMAG and rate gyro operation.				
	BMAG	Enables BMAG rate mode of operation, removing rate gyro signal from rate indicators, etc.				
	.05G ENTRY switch	Enables the SCS for atmospheric flight during entry and after 0.05gs				.05G ENTRY switch is effective only when a G&N or SCS entry mode is selected. After .05G ENTRY position is selected, placing any one of the BMAGs in backup rate mode will automatically place all BMAGs in backup rate mode configuration.
	.05G ENTRY	a. Removes attitude error signals from pitch and yaw channels in G&N mode and pitch, yaw, and roll channels in SCS modes.				

Location	Name and Position	Function	Circuit Breaker	Power Source	Telemetry Code No. and Identity	Remarks
MDC-8 (Cont)		b. Increases the rate deadband from 0.2° per sec to 2° per sec. c. Energizes a circuit which couples a component of the roll rate signal into the yaw channel.	SCS—GROUP 1 MN A MN B (MDC-25)	D-C main buses A or B	None	This results in loss of FDAI total attitude display, otherwise, total attitude display is provided. During entry the S/C is maneuvered about the stability roll axis rather than the body roll axis. Consequently the yaw rate gyro generates an undesirable rate signal. By coupling a component of the roll signal into the yaw channel, the undesirable signal is cancelled.
	OFF	Allows normal system operation.				
	LCL VERT switch	Enables SCS for local vertical mode operation.			CH1103X (SCS local vertical mode control)	The local vertical mode maintains the S/C attitude with respect to the earths local vertical. With local vertical mode engaged, an orbit rate signal equivalent to pitch rate of approximately 4.1° per minute is applied to the pitch BMAG torque motor. This figure is for a 100 NM earth orbit. FDAI total attitude is referenced to local vertical. Attitude error values represent deviation from selected local vertical attitude. If the S/C is maneuvered after local vertical mode is selected, the 4.1° per minute orbit rate signal previously applied only to the pitch gyro will be applied to all three gyros. This is accomplished by summing and resolving the new stepper motor position outputs with the orbital rate signal in the nav-to-body transformation circuits.
	LCL VERT (up)	Selects SCS local vertical mode when used in conjunction with G&N/SCS switch and ATTITUDE/MONITOR/ENTRY switch.				
	OFF	Disengages local vertical mode.				
	ΔV switch	Enables SCS for G&N or SCS ΔV mode operation or MTVC.			CH0100X (G&N ΔV Mode) CH1100X (SCS ΔV Mode) CH1104X (MTVC Mode)	This switch works in conjunction with the G&N/SCS switch and the ATTITUDE/MONITOR/ENTRY switch. MTVC is actuated only when the ΔV switch is in the ΔV position and when the translation control is rotated CW. MTVC is independent of G&N/SCS switch. In the ΔV position, DC power is applied to the FCSM-G&N and FCSM-SCS switches (MDC-2).
	ΔV (up)	Applies a signal to the SCS electronics enabling the system for ΔV modes of operation and also enables manual thrust vector control (MTVC) if the translation control CW switch is closed.				
	OFF	Inhibits ΔV and MTVC modes of operation and permits operation of the SCS in other modes.				

Location	Name and Position	Function	Circuit Breaker	Power Source	Telemetry Code No. and Identity	Remarks
MDC-8 (Cont)	G&N/SCS switch	Select either G&N or SCS control of the various flight control modes.	SCS— GROUP 1 MN A MN B (MDC-25)	D-C main buses A or B	CH0101X (G&N attitude control mode control) CH1101X SCS attitude control mode	The G&N/SCS switch works in conjunction with the other flight control mode switches. When the switch is positioned to G&N or SCS position, ΔV maneuvers and attitude control of the S/C is accomplished by the selected system.
	G&N (up)	Enables G&N control for the following modes: attitude control, entry, and ΔV maneuvers.				
	SCS	Enables SCS control for the following modes: attitude control, monitor, local vertical, entry, and ΔV maneuvers.				
	ATTITUDE/MONITOR/ENTRY switch	Selects one of the following basic flight control modes: attitude control, monitor, or entry.			CH0103X (Monitor mode control) CH0102X (G&N entry mode control) CH1102X (SCS entry mode)	The ATTITUDE/MONITOR/ENTRY switch works in conjunction with the G&N/SCS switch, the ΔV switch, and the LCL VERT switch to enable crew selection of the various flight control modes. For details of the switch positions required to select the flight control modes, refer to Normal/ Backup Procedures. In the attitude or monitor modes, the rate deadband for all axes is 0.2°/sec. The rate deadband for all axes in entry mode is 2.0°/sec. This applies to either entry mode: SCS or G&N. MONITOR position selects the G&N MONITOR mode independent of other mode switches.
	ATTITUDE	Enables G&N or SCS attitude control mode. (Refer to Remarks.)				
	MONITOR	Enables monitor mode. (Refer to Remarks.)				
	ENTRY	Enables G&N or SCS entry mode. (Refer to Remarks.)				
	SCS CHANNEL switches	Provides capability to manually deviate the RCS engines.	SCS— A&C ROLL MN A MN B and GROUP 1 MN A MN B (MDC-25)		None	These switches are used to disable the RCS engines in the event of a malfunction or whenever it may be operationally desirable; e.g., S/C three-axis free drift for purposes of propellant conservation. Direct control of the RCS is available, using the DIRECT MODE switch and the rotation control. Maneuver function - engine activation
	A&C ROLL					
	On (up)	Applies +28 vdc to the normal injector valve solenoids and solenoid driven electronics, allowing normal RCS engine operation.				
	OFF	Removes +28 vdc from the normal injector valve solenoids and the driver solenoid amplifier. Inhibits normal manual rotation control capability and SCS automatic control of RCS engine operation.				

Switch	Function	C/M RCS Engine
B&D ROLL	roll right	A9, B11
B&D ROLL	roll left	A12, B10

Location	Name and Position	Function	Circuit Breaker	Power Source	Telemetry Code No. and Identity	Remarks
MDC-8 (Cont)	B&D ROLL On (up)	Applies +28 vdc to the normal injector valve solenoids and solenoid driver electronics, allowing normal RCS engine operation.	SCS— B&D ROLL MN A MN B and GROUP 1 MN A MN B (MDC-25)	D-C main buses A or B	None	Switch / Function / C/M RCS Engine PITCH — pitch up — A1, B3 PITCH — pitch down — A2, B4 YAW — yaw right — A5, B7 YAW — yaw left — A8, B6 AC roll switch is applicable to S/M-RCS engines only and provides no function after CM/SM separation.
	OFF	Removes +28 vdc from the normal injector valve solenoids and the driver solenoid amplifier. Inhibits normal manual rotation control capability and SCS automatic control of RCS engine operation.				
	PITCH On (up)	Applies +28 vdc to the normal injector valve solenoids and solenoid driver electronics, allowing normal RCS engine operation.	SCS— PITCH MN A MN B and GROUP 1 MN A MN B (MDC-25)			These switches are used to disable the RCS engines in the event of a malfunction or whenever it may be operationally desirable; e.g., S/C free drift for purposes of propellant conservation. Direct control of the RCS is available, using the DIRECT RCS switch and the rotation control.
	OFF	Removes +28 vdc from the normal injector valve solenoids and the driver solenoid amplifier. Inhibits normal manual rotation control capability and SCS automatic control of RCS engine operation.				
	YAW On (up)	Applies +28 vdc to the normal injector valve solenoids and solenoid driver electronics, allowing normal RCS engine operation.	SCS—YAW MN A MN B and GROUP 1 MN A MN B (MDC-25)			
	OFF	Removes +28 vdc from the normal injector valve solenoids and the driver solenoid amplifier. Inhibits normal manual rotation control capability and SCS automatic control of RCS engine operation.				

Location	Name and Position	Function	Circuit Breaker	Power Source	Telemetry Code No. and Identity	Remarks
MDC-8 (Cont)	ELS LOGIC switch		ELS – A BAT A - FLOAT BAG 3 ELS – B BAT B (MDC-25)	Battery buses A and B	None	
	Up	Connects 28 vdc to the ELS logic arm circuitry. The circuitry is automatically armed during an LES abort if the MAIN DEPLOY-AUTO/MAN switch (MDC-16) is in the AUTO position.				The logic switch is positioned up during entry or after an SPS abort to arm the ELS logic circuitry. This circuitry is armed automatically on LES aborts. The ELS is controlled by baroswitch closure and time-delay relays after being armed.
	OFF	Disconnects 28 vdc from ELS logic circuitry.				The switch should never be positioned up under 42,000 feet except as backup during an LES abort. The LES tower, apex cover and parachutes might be jettisoned.
	DIGITAL EVENT TIMER switches		EVENT TIMER MN A MN B (MDC-25)	D-C main buses A and B		
	RESET/UP/DOWN switch					
	RESET	Reset the event timer (MDC-5) to zero.				The event timer is automatically reset to zero and starts counting up when an abort is automatically or manually initiated. The switch is momentary on towards the RESET position and maintain on in the other two positions.
	UP	Completes circuitry for the event timer to count up.				
	DOWN	Completes circuitry for the event timer to count down.				
	START/STOP switch					
	START	Starts the event timer.				The event timer starts automatically when lift-off occurs. The switch is momentary on towards the START position and maintain on in the other two positions.
	Center	No function.				
	STOP	Stops the event timer.				
	MIN switch					The control switches provide a means of running the event timer to any desired setting and are spring-loaded to the center position. The indicating drums can be run up or down, depending on the position of the RESET/UP/DOWN switch.
	TENS	Runs the MIN indicating drums in tens.				
	Center	No function.				
	UNITS	Runs the second MIN indicating drum in units.				

Location	Name and Position	Function	Circuit Breaker	Power Source	Telemetry Code No. and Identity	Remarks
MDC-8 (Cont)	SEC switch TENS Center UNITS	 Runs the SEC indicating drums of the event timer in tens. No function. Runs the second SEC indicating drun in units.	EVENT TIMER MN A MN B (MDC-25)	D-C main buses A and B	None	
	COUCH UNLOCK switch UNLOCK Down position	 Inoperative. Normal flight position.	COUCH ATTEN MN A MN B FLOOD-LIGHTS (MDC-25)			A 20-g deceleration in the X direction will mechanically unlock the attenuators.
	CM PROP JETT switches LOGIC switch On (up) OFF	 Applies power to DUMP switch on MDC-8. Applies power to the 0-61-second time delay (from lift-off) and the 18-second time delay after the abort is initiated. Applies power to relay contact points that are closed upon receipt of an abort signal (from 0 to tower jettison) which applies power automatically to RCS transfer motors. Applies power to the C/M RCS engine manual coils (excluding +P) manual coils when the DUMP switch is placed to the on position. Applies power to the C/M RCS HTRS switch (RHFEB-97). Removes power and resets RCS logic circuitry.	RCS—C/M-S/M TRANSFER MN A MN B (MDC-25)			 Two-position toggle switch. Switch must be in up position before power is available to the DUMP switch, PURGE switch, RCS HTRS switch, and circuitry controlling automatic transfer of engine firing commands from S/M RCS to C/M RCS.

Location	Name and Position	Function	Circuit Breaker	Power Source	Telemetry Code No. and Identity	Remarks
MDC-8 (Cont)		Removes power from C/M RCS HTRS switch (RHFEB-97).	RCS—C/M-S/M TRANSFER MN A MN B (MDC-25)	D-C main buses A and B	None	
	DUMP switch	Enabled by LOGIC switch.				
	On (up)	Energizes relays required to activate C/M-RCS propellant burn operation through 10 engine-injector valves.				Guarded two-position toggle switch (activates explosive-operated valves). During normal entry, switch is placed to DUMP (up) position when main parachute line stretch is felt. Remaining propellants are then burned off through 10 of the 12 RCS engines.
	OFF	De-energizes relays.				The two positive pitch engines do not permit propellant burn. DUMP switch will not be utilized during pad aborts or low altitude aborts if fuel is retained on-board and the CM will land with fuel tanks full, but depressurized.
	PURGE switch					Two-position toggle switch. Switch manually set to the up position after C/M propellant supply has been depleted (approximately 88 seconds after activation of FUEL DUMP/BURN switch, for 10-engine burn and 155 seconds for 5-engine burn). All four propellant tank lines are purged with helium to ensure that no hypergolic propellant remains in the propellant distribution or engine systems. (Purge operation approximately 10 seconds.) The LOGIC and DUMP switches must both be in the up position before the purge operation can be initiated. Switch will not be utilized during abort operations if fuel is retained on-board.
	On (up)	Energizes relays required to activate the following: a. C/M RCS propellant system purge operation b. ECS gas chromatograph helium dump operation.				
	OFF	De-energizes relays.				

Location	Name and Position	Function	Circuit Breaker	Power Source	Telemetry Code No. and Identity	Remarks
MDC-9	Coaxial bracket MDC		N/A	None	None	
	Normal installation	Connects VHF recovery antenna No. 1 to the VHF recovery beacon and VHF recovery antenna No. 2 to the VHF/AM transmitter-receiver.				Change is implemented by manually disconnecting RF coaxial connector from VHF recovery antenna No. 1 or No. 2 connector and reconnecting to coaxial connector on cable to GFAE survival transceiver.
	Survival transceiver installation	Connects either recovery antenna No. 1 or No. 2 to the GFAE survival transceiver.				
	Crossover installation	Connect GFAE survival transceiver to recovery antenna No. 1 (right connector).				Permits two-way AM voice communications or beacon transmission on GFAE survivals transceiver (243.0 mc) over antenna No. 1 and VHF-AM two-way voice communication (296.8) on antenna No. 2.
		Connect GFAE survival transceiver to recovery antenna No. 2 (left connector).				Permits two-way AM voice communications or beacon transmission on GFAE survival transceiver (243.0 mc) over antenna No. 2 and VHF recovery beacon transmission (243.0 mc) on antenna No. 2.
MDC-10	G&N system status lights		CAUT/ WARN MN A MN B (MDC-25)	D-C main buses A and B		Yellow lights indicate failure or out-of-tolerance condition when illuminated. MASTER ALARM lights also illuminate.
	CDU FAIL	Indicates a failure in one or more of the coupling display units.			CG5002X (CDU fail)	
	IMU FAIL	Indicates a failure in the inertial measurement unit.			CG5001X (IMU fail)	
	IMU TEMP	Indicates that the IMU temperature is out of tolerance, i.e., exceeds normal temperature by ±4°.			CG5006X (IMU temp light)	
	G&N ACCEL FAIL	Indicates a failure in one or more of the PIP accelerometers.			CG5000X (PIPA fail)	
	G&N ERROR	Indicates an IMU, CDU, accelerometer and/or AGC error.			CG5005X (Error detect)	
	GMBL LOCK	Indicates a potential gimbal lock condition in the IMU (middle gimbal angle is greater than ±60 degrees with respect to the outer gimbal).			CG5003X (Gimbal lock warning)	

Location	Name and Position	Function	Circuit Breaker	Power Source	Telemetry Code No. and Identity	Remarks
MDC-10 (Cont)	AGC PWR FAIL	Indicates a power failure in the Apollo guidance computer.	CAUT/ WARN MN A MN B (MDC-25)	D-C main buses A and B	CG5030X (Computer power fail light)	MASTER ALARM lights also illuminate.
	SCS status light AGAP TEMP	Illuminates when the temperature of any one of three BMAGs in the SCS attitude gyro accelerometer package varies from 170±2°F.			CH2030T (Combined attitude gyro temp)	When illuminated, the status light indicates an out-of-temperature condition in one or more of the three BMAGs. MASTER ALARM lights also illuminate. When light is out, BMAG outputs are usable.
	EPS status lights H_2 PRESS	Indicates hydrogen tank pressure is as follows: a. 220 psia or below b. 270 psia or above.			SF0039P (Press H_2 tank 1) SF0040P (Press H_2 tank 1)	Yellow lamp will illuminate if either or both H_2 tanks are above or below proper pressure limits. Pressure in H_2 tanks can be monitored by indicators on MDC-13. MASTER ALARM lights also illuminate.
	O_2 PRESS	Indicates oxygen tank pressure is as follows: a. 800 psia or below b. 950 psia or above.			SF0037P (Press O_2 tank 1) SF0039 (Press O_2 tank 2)	Yellow lamp will illuminate if either or both O_2 tanks are above or below proper pressure limits. Pressure in O_2 tanks can be monitored by indicators on MDC-13. MASTER ALARM lights also illuminate.
	RCS status lights	A and B lights are identical in operation within their respective systems. Indicates on underpressure condition in the fuel and oxidizer tanks of the respective system prior to system pressurization.			None	All lights are yellow. The RCS INDICATOR switch can be used in conjunction with the propellant indicating devices to isolate a malfunction to a specific temperature, pressure, or quantity sensing network within a particular RCS package. A temperature transducer is located on the inner surface of each S/M-RCS quad. A pressure transducer is installed in the helium line of each S/M-RCS quad and each C/M-RCS system. When the status lights are out, the applicable system is operable. MASTER ALARM lights also illuminate.
	C/M RCS A, B	Indicates an over or under pressure condition (below 265 psia or above 325 psia) in the fuel and oxidizer tanks of the respective propellant system.				
	S/M RCS A, B, C, D	Indicates one of the following: a. Package temperature below 63°F or above 175°F (nominal)				

Location	Name and Position	Function	Circuit Breaker	Power Source	Telemetry Code No. and Identity	Remarks
MDC-10 (Cont)		b. Regulated helium pressure below 155 psia or above 215 psia (nominal).	CAUT/ WARN MN A MN B (MDC-25)	D-C main buses A and B	None	
	SPS status light SPS ROUGH ECO	Indicates FCSM cut-off of SPS engine due to excessive engine vibration level.				Yellow light. Delay time for cutoff is nominally 70 milliseconds at a vibration level of 180 g's peak-to-peak. Delay time will be 30 to 70 milliseconds at a vibration level of 360 g's peak-to-peak. Light will extinguish when FCSM circuitry is reset. MASTER ALARM lights also illuminate.
MDC-11	ECS status lights H_2O ACCUM FAIL	Indicates when a minimum of three oxygen bubbles are detected in water expelled from H_2O accumulators.	CAUT/ WARN MN A MN B (MDC-25)	D-C main buses A and B	None	The yellow light illuminates in event of water accumulator diaphragm leakage. (Oxygen will then enter the waste water network.) A sensor is placed in the accumulator water outlet line. Oxygen bubbles in the water are sensed as a change in voltage. When three positive pulse signals (corresponding to three bubbles) are received, a voltage divider is unbalanced, resulting in light illumination. MASTER ALARM lights also illuminate.
	GLYCOL TEMP LOW	Indicates when water-glycol from space radiator outlet decreases to -30°F.			CF0020T (Temp space radiator outlet)	The yellow light illuminates to indicate water-glycol is approaching the temperature where flow is reduced. Continuous temperature is displayed by ECS RAD-OUTLET TEMP indicator (MDC-13). Transducer is placed in line downstream of space radiator outlet in LHEB, and furnishes signal for light and indicator. MASTER ALARM lights also illuminate.

Location	Name and Position	Function	Circuit Breaker	Power Source	Telemetry Code No. and Identity	Remarks
MDC-11 (Cont)	CO_2 PP HI	Indicates when CO_2 partial pressure reaches 7.6 mm Hg.	CAUT/ WARN MN A MN B (MDC-25)	D-C main buses A and B	CF0005P (Press CO_2 partial)	The yellow light illuminates at upper end of normal range. A CO_2-odor absorber filter change is required only if the illumination of the light is not the result of temporarily increased crew activities. Continuous partial pressure is displayed by PART PRESS - CO_2 indicator (MDC-13). MASTER ALARM lights also illuminate.
	O_2 FLOW HI	Indicates when total ECS oxygen flow reaches 1 lb per hr.			None	The red light illuminates at critical flow rate which, if continuous, indicates cabin leakage, oxygen subsystem leakage, or mismanagement of oxygen subsystem. Continuous O_2 flow is displayed by FLOW O_2 indicator (MDC-13). MASTER ALARM lights also illuminate.
	SPS status lights					
	PITCH GMBL DR FAIL	Indicates an over or undercurrent has occurred in the primary drive motor of the pitch gimbal actuator.				Yellow lights. Light indicator is a constant visual aid to assist in evaluating functional status of engine gimbal drive components. MASTER ALARM lights also illuminate.
	YAW GMBL DR FAIL	Indicates an over or undercurrent has occurred in the primary drive motor of the yaw gimbal actuator.				MASTER ALARM lights also illuminate.
	SPS PRESS	Indicates oxidizer and/or fuel tank pressures (regulated helium pressures) are not within proper operating range (160 to 200 psia).				Yellow light. Two pressure transducers, one located in each (Ox and Fuel) regulated helium supply line, provide input to indicator. Continuous pressures are displayed by PRESSURE indicators on MDC-20. MASTER ALARM lights also illuminate.
	SPS WALL TEMP HI	Indicates wall temperature of SPS engine combustion chamber exceeds high operating temperature limit of 380°F.				Yellow light. Indicator input is provided by temperature sensor mounted in engine combustion chamber wall assembly. MASTER ALARM lights also illuminate.
	SPS PU SNSR FAIL	Indicates one of the following: a. An unbalance in the remaining SPS propellants from the desired ratio (by weight) in excess of 300 lb or 90 percent of critical unbalance.				Yellow light is functional only during SPS engine firing or when TEST/ AUTO/TEST switch (MDC-20) is in the TEST up or down position. Critical unbalance is that point at which the propellant utilization valve will

Location	Name and Position	Function	Circuit Breaker	Power Source	Telemetry Code No. and Identity	Remarks
MDC-11 (Cont)		b. Discrepancy of 300 lbs percent between the primary and auxiliary sensing systems.	CAUT/ WARN MN A MN B (MDC-25)	D-C main buses A and B	None	no longer provide oxidizer adjustment great enough to permit simultaneous propellant depletion. MASTER ALARM lights also illuminate.
	C&WS status light CAUT/WARN FAIL	Indicates when power supply voltage (positive or negative) is outside of the 11.7 to 13.9 volt normal range.				Switching to redundant power supply will extinguish status light. Audio portion of master alarm circuit will not operate, as the 12-volt tone generator power will be interrupted by a power supply failure. MASTER ALARM light will illuminate.
	EPS status lights F/C-BUS DISCONNECT	Indicates a fuel cell has automatically disconnected from the d-c main bus A and/or B.			SC2120X Fuel cell 1 bus A disconnect SC2121X Fuel cell 2 bus A disconnect SC2122X Fuel cell 3 bus A disconnect SC2125X Fuel cell 1 bus B disconnect SC2126X Fuel cell 2 bus B disconnect SC2127X Fuel cell 3 bus B disconnect	Yellow lamp illuminates when any fuel cell is disconnected from the S/M d-c bus A and/or B. The overload and reverse current units on each fuel cell automatically disconnect the fuel cell output from the bus when a reverse current >4 amps or a forward current >75 amps is sensed. The lamp will not illuminate when the affected fuel cell main bus switch is in the off position. Event indicators below the FUEL CELL-1, -2, and -3 MAIN BUS A and B switches indicate with a striped display which fuel cell is disconnected from which bus. MASTER ALARM light also illuminates.

Location	Name and Position	Function	Circuit Breaker	Power Source	Telemetry Code No. and Identity	Remarks
MDC-11 (Cont)	F/C 1, F/C 2, and F/C 3	Indicates one of the following conditions exist in the respective fuel cell: a. H_2 flow rate below 0.018 lb/hr or above 0.153 lb/hr b. O_2 flow rate below 0.14 lb/hr or above 1.22 lb/hr c. pH factor of 9 or over	CAUT/WARN MN A MN B (MDC-25)	D-C main buses A and B	a. SC2139R Flow rate H_2 F/C 1 SC2140R Flow rate H_2 F/C 2 SC2141R Flow rate H_2 F/C 3 b. SC2142R Flow rate O_2 F/C 1 SC2143R Flow rate O_2 F/C 2 SC2144R Flow rate O_2 F/C 3 c. SC2160X pH factor water condition F/C 1 SC2161X pH factor water condition F/C 2 SC2162X pH factor water condition F/C 3	Yellow lights illuminate when any of the sensed parameters are out of tolerance. Switching the FUEL CELL INDICATORS switch (MDC-18) to the position indicated by the illuminated status lights and observing the fuel cell displays, enables the crew to determine which parameter is out of tolerance. Alarm trigger values are presented in the Function column.

Location	Name and Position	Function	Circuit Breaker	Power Source	Telemetry Code No. and Identity	Remarks
MDC-11 (Cont)		d. F/C skin temperature below 360°F or above 500°F	CAUT/ WARN MN A MN B (MDC-25)	D-C main buses A and B	d. SC2084T Temp F/C 1 skin SC2085T Temp F/C 2 skin SC2086T Temp F/C 3 skin	
		e. F/C condenser exhaust temperature below 155°F or above 175°F			e. SC2081T Temp F/C 1 cond exhaust SC2082T Temp F/C 2 cond exhaust SC2083T Temp F/C 3 cond exhaust	
		f. F/C outlet radiator temperature below -30°F			f. SC2087T Temp F/C 1 radiator outlet SC2088T Temp F/C 2 radiator outlet SC2089T Temp F/C 3 radiator outlet	

Location	Name and Position	Function	Circuit Breaker	Power Source	Telemetry Code No. and Identity	Remarks
MDC-11 (Cont)		g. H_2 regulator pressure above 75 psia	CAUT/ WARN MN A MN B (MDC-25)	D-C main buses A and B	g. SC2069P H_2 pressure F/C 1 regulated SC2070P H_2 pressure F/C 2 regulated SC2071P H_2 pressure F/C 3 regulated	
		h. O_2 regulator pressure above 75 psia			h. SC2066P O_2 pressure F/C 1 regulated SC2067P O_2 pressure F/C 2 regulated SC2068P O_2 pressure F/C 3 regulated	
		i. N_2 regulator pressure above 70 psia.			i. SC2060P N_2 pressure F/C 1 regulated SC2061P N_2 pressure F/C 2 regulated	

Location	Name and Position	Function	Circuit Breaker	Power Source	Telemetry Code No. and Identity	Remarks
MDC-11 (Cont)			CAUT/ WARN MN A MN B (MDC-25	D-C main buses A and B	i. (Cont) SC2062P N_2 pressure F/C 3 regulated	
	INV 1 TEMP HI, INV 2 TEMP HI, and INV 3 TEMP HI	Indicates an overtemperature (241°F) exists in the respective inverter.			CC0175T (Temp static inverter 1) CC0176T (Temp static inverter 2) CC0177T (Temp static inverter 3)	The yellow inverter overtemperature lights illuminate at +241°F and above.
	MN BUS A UNDERVOLT and MN BUS B UNDERVOLT	Indicates a d-c voltage drop below 26.25 ± 0.1 vdc on the respective d-c main bus.			None	The yellow main d-c bus undervoltage lights will not illuminate when the affected main bus reset switch is in the OFF position.
	AC BUS 1 FAIL and AC BUS 2 FAIL	Indicates the following conditions exist in any of the three phases of the respective a-c bus: a. Undervoltage (95±3 vac) b. Overvoltage (130±2 vac)				The yellow a-c bus fail lights will not illuminate when affected a-c bus reset switch is in the OFF position. The inverters will not disconnect from the buses on an undervoltage condition, but will disconnect from bus on overload. Light must be reset.
	AC BUS 1 OVERLOAD and AC BUS 2 OVERLOAD	Indicates an overload (3Ø, 9 amps/Ø for 15±5 seconds or 1Ø, 11 amps for 5±1 second) exists on the respective a-c bus.				The inverter supplying the bus will be automatically disconnected at the time either of these yellow lights illuminate. Time versus overload is 5±1 seconds for a short circuit of 300-percent-rated current per phase and 10(-0, +5) seconds for a short circuit of 250-percent-rated current. Lamps will not illuminate when affected a-c bus reset switch is in the OFF position.
	CAUT/WARN switches POWER switch					The output of both power supplies is +12 and -12 vdc, which is used in the caution and warning system electronics.

Location	Name and Position	Function	Circuit Breaker	Power Source	Telemetry Code No. and Identity	Remarks
MDC-11 (Cont)	1	Applies d-c power to caution and warning system power supply No. 1.	CAUT/ WARN MN A MN B (MDC-25)	D-C main buses A and B	None	Nominal switch position is 1.
	OFF	Removes d-c power from caution and warning system power supplies No. 1 and No. 2.				Power is still applied to the C&WS; however, the master alarm circuit and those status lights activated as the result of analog signals will be inoperative.
	2	Applies d-c power to caution and warning system power supply No. 2.				
	MODE switch					Power to C/M system status lights is not removed with switch in either position. Power is removed only by placing C/W switch (MDC-13) to ACK position.
	CSM	a. Applies d-c power to 15 S/M system status lights, permitting illumination of lights upon receipt of malfunction signals.				CSM mode is selected at all times prior to CSM separation. Power is applied to the following 15 S/M status lights: PITCH GMBL DR FAIL, YAW GMBL DR FAIL, SPS PU SNSR FAIL, F/C BUS DISCONNECT, O_2 PRESS, H_2 PRESS, SPS PRESS, S/M RCS A, S/M RCS B, S/M RCS C, S/M RCS D, SPS WALL TEMP HI, F/C 1, F/C 2, and F/C 3.
		b. Applies d-c power to 4 S/M event channels, permitting circuitry to simulate lamp load when C/W switch is in ACK position.				Power is applied to the following 4 S/M event channels: PITCH GMBL DR FAIL, YAW GMBL DR FAIL, SPS PU SNSR FAIL, and F/C BUS DISCONNECT.
		c. Opens d-c ground return path, inhibiting C/M RCS A and C/M RCS B lamp circuits prior to CSM separation.				
	C/M	a. Removes d-c power to 15 S/M system status lights. b. Removes d-c power to 4 S/M event channels. c. Completes d-c ground return path, enabling C/M RCS A and C/M RCS B lamp circuits after CSM separation.				C/M mode is selected subsequent to CSM separation.

Location	Name and Position	Function	Circuit Breaker	Power Source	Telemetry Code No. and Identity	Remarks
MDC-11 (Cont)	DIGITAL EVENT TIMER switches		EVENT TIMER MN A MN B (MDC-25)	D-C main buses A and B	None	
	RESET/UP/DOWN switch					
	RESET	Reset the event timer (MDC-5) to zero.				The event timer is automatically reset to zero and starts counting up when an abort is automatically or manually initiated. The switch is momentary on towards the RESET position, and maintain on in the other two positions.
	UP	Completes circuitry for the event timer to time up.				
	DOWN	Completes circuitry for the event timer to time down.				
	START/STOP switch					
	START	Starts the event timer.				The event timer starts automatically when lift-off occurs. The switch is momentary on towards the START position, and maintain on in the other two positions.
	Center	No function.				
	STOP	Stops the event timer.				
	MIN switch					The control switches provide a means of running the event timer to any desired setting and are spring-loaded to the center position. The indicating drums can be run up or down, depending on the position of the RESET/UP/DOWN switch.
	TENS	Runs the MIN indicating drums in tens.				
	Center	No function.				
	UNITS	Runs the second MIN indicating drum in units.				

Location	Name and Position	Function	Circuit Breaker	Power Source	Telemetry Code No. and Identity	Remarks
MDC-12 MAIN DISPLAY CONSOLE—PANEL 12	S/M RCS indicators TEMP PKG	Indicates temperature of S/M RCS package A, B, C, or D, as selected by the RCS INDICATORS switch, (Meter range: 0° to 300°F.)	INSTRU-MENTS—ESS MN A MN B (MDC-22)	D-C main buses A and	Package temp: A-SR5065T B-SR5066T C-SR5067T D-SR5068T	Four indicators are identical in operation. Each one consists of a d'Arsonval-type meter with a fixed dial and movable pointer. Pointer movement is vertical, as observed from crew couch. Each indicator is capable of accepting input signals from the C/M or S/M RCS. Displayed information is determined by the position of the RCS INDICATORS switch. When RCS INDICATORS switch is in the S/M section, the indicator corresponding to F in the C/M SYS PRESS group is provided with no input signal and will indicate zero.
	PRESS He	Indicates helium tank pressure of S/M RCS package A, B, C, or D, as selected by the RCS INDICATORS switch. (Meter range: 0 to 5000 psia.)			He tank pressure: A-SR5001 B-SR5002 C-SR5003 D-SR5004	
	MANF	Indicates regulated helium pressure of S/M-RCS package A, B, C, or D, as selected by the RCS INDICATORS switch. (Meter range: 0 to 400 psia.)			Regulated He press: A-SR5729 B-SR5776 C-SR5817 D-SR5830	
	TEMP He	Indicates helium supply temp. This plus helium tank pressure will be utilized on a monogram to determine % of propellant remaining.			Temp He A-SR5013T B-SR5014T C-SR5015T D-SR5016T	
	C/M RCS indicators TEMP He	Indicates helium tank temperature of C/M RCS system A or B, as selected by the RCS INDICATORS switch. (Meter range: 0° to 300°F.)			He tank temp: A-CR0003 B-CR0004	

Location	Name and Position	Function	Circuit Breaker	Power Source	Telemetry Code No. and Identity	Remarks
MDC-12 (Cont)	PRESS		INSTRU-MENTS—ESS MN A MN B (MDC-22)	D-C main buses A and B		
	He	Indicates helium tank pressure of C/M RCS system A or B, as selected by the RCS INDICATORS switch. (Meter range: 0 to 5000 psia.)			He tank press: A-CR0001 B-CR0002	
	F	Indicates regulated helium pressure to the fuel tank of C/M RCS system A or B, as selected by the RCS INDICATORS switch. (Meter range: 0 to 400 psia.)			Regulated He press (Fuel system) A-CR0005 B-CR0006	
	OX	Indicates regulated helium pressure to the oxidizer tank of C/M RCS system A or B, as selected by the RCS INDICATORS switch. (Meter range: 0 to 400 psia.)			Regulated He press (OX system) A-CR0011 B-CR0012	
	RCS INDICATORS switch	Selects inputs to the propellant temperature, pressure. C/M sections A and B functions are identical within their respective systems. S/M sections A, B, C, and D functions are identical within their respective systems.	N/A	N/A	None	Six-position rotary switch. C/M section of switch, positions A and B, permits monitoring command module propellant systems A and B. S/M section of switch, positions A, B, C, and D permits monitoring service module propellant systems of quads A, B, C, and D.
	C/M section A (B)	Connects C/M RCS system A (B) signal outputs from temperature and pressure transducers to the appropriate indicating devices.				
	S/M section A (B, C, D)	Connects S/M RCS quad A (B, C, and D) signal outputs from temperature and pressure transducers to the appropriate indicating devices.				
	400-hour clock	Displays mission elapsed time in 10-hour increments up to 400 hours.	None	None		The indicator has two set-knobs. One starts, stops, and resets the clock; the other sets the hour and minute hands, and winds the clock.

Location	Name and Position	Function	Circuit Breaker	Power Source	Telemetry Code No. and Identity	Remarks
MDC-13	C/W switch NORMAL	Applies d-c power to the following: a. Twenty-five C/M system status lights, permitting illumination of lights upon receipt of malfunction signals. b. One pole of CAUT/WARN-MODE switch, which in turn may apply power to 15 S/M system status lights. c. MASTER ALARM switch-light on MDC-3, permitting illumination of light upon receipt of malfunction signals.	CAUT/WARN MN A MN B (MDC-25)	D-C main buses A and B	None	Switch is set to NORMAL at all times other than during the ascent phase or when dark adaptation is required. With switch in this position and upon receipt of a malfunction signal, the appropriate system status light and the MASTER ALARM lights will illuminate, and an audio alarm tone is sent to each headset. Power is applied to the following 25 C/M system status lights: CDU FAIL, G&N ACCEL FAIL, AGC PWR FAIL, IMU FAIL, G&N ERROR, IMU TEMP, GMBL LOCK, AGAP TEMP, SPS ROUGH ECO, H_2O ACCUM FAIL, O_2 FLOW HI, AC BUS 1 FAIL, AC BUS 1 OVERLOAD, AC BUS 2 FAIL, AC BUS 2 OVERLOAD, MN BUS A UNDERVOLT, MN BUS B UNDERVOLT, INV 1 TEMP HI, INV 2 TEMP HI, INV 3 TEMP HI, C/M RCS A, C/M RCS B, GLYCOL TEMP LOW, CO_2 PP HI, and CAUT/WARN FAIL. For a list of the 15 S/M system status lights, refer to Remarks column of CAUT/WARN-MODE switch (MDC-11), CSM position.

Location	Name and Position	Function	Circuit Breaker	Power Source	Telemetry Code No. and Identity	Remarks
MDC-13 (Cont)	BOOST	a. Applies d-c power to 25 C/M system status lights, permitting illumination of lights upon receipt of malfunction signals. b. Applies d-c power to one pole of CAUT/WARN-MODE switch, which in turn may apply power to 15 S/M systems status lights. c. Removes d-c power from MASTER ALARM switch-light on MDC-3, preventing illumination of light upon receipt of malfunction signals during the ascent phase.	CAUT/ WARN MN A MN B (MDC-25)	D-C main buses A and B	None	Switch set to BOOST at prelaunch to preclude the possibility of confusion on MDC-3 between the red MASTER ALARM light and the adjacent red ABORT light during the critical ascent phase.
	ACK	a. Removes d-c power from 25 C/M system status lights, preventing illumination of lights upon receipt of malfunction signals. b. Removes d-c power from one pole of CAUT/WARN MODE switch, thereby removing power to 15 S/M system status lights. c. Place push-switch function of both MASTER ALARM switch-lights (MDC-3 & -18) into the d-c circuit of the system status lights. This prevents illumination of the system status lights upon receipt of malfunction signals until either push-switch is pressed to complete the circuit.				Switch is set to ACK to retain dark adaptation. With switch in this position and upon receipt of a malfunction signal, only the MASTER ALARM lights will illuminate and an alarm tone be sent to each headset. To determine the malfunction either MASTER ALARM switch-light may be pressed to illuminate the appropriate system status light. The light will remain illuminated only as long as the switch-light is pressed. Although upon release all system status lights are extinguished, they may be recalled as long as the malfunction exists by again pressing either switch-light.
	POWER switch	Controls power to senior pilots module in audio center equipment.	T/C GROUP 5 (MDC-22)	Flight and postlanding bus		The audio center will not be activated unless the POWER switch is in PTT or VOX position.
	PTT	Applies +18 and +28 d-c power to audio and control circuits.				Permits monitoring of audio input to audio center and PTT activation of mike headset amplifiers VHF/AM and HF XCVRS.
	OFF	Removes power from senior pilots audio center equipment module and controls.				

Location	Name and Position	Function	Circuit Breaker	Power Source	Telemetry Code No. and Identity	Remarks
MDC-13 (Cont)	VOX	a. Applies +18 and +28vd-c power to audio and control circuits. b. Enables VOX control of mike amplifier by supplying ground to VOX circuitry.	T/C GROUP 5 (MDC-22)	Flight and postlanding bus	None	VOX operation permits automatic voice transmission and transmitter keying of intercom, HF Recovery transceiver and voice recorder.
	S-BAND switch T/R OFF REC	 No effect. S-Band T/R function supplied by cobra cable PTT key. Prevents senior pilot from receiving voice over USBE. Enables senior pilot to receive voice from USBE.	N/A	Audio center equipment		The S-BAND, HF, VHF-AM, and INTERCOM switches all control ground return paths for appropriate diode switching and isolation circuitry in the senior pilots module of the audio center equipment to allow transmission and reception, or reception alone, of voice signals over selected equipment. The HF and VHF-AM switches also provide ground return paths for the HF and VHF-AM transmitter keying circuits when in the T/R position.
	HF switch RCVR OFF REC	 a. Enables senior pilot to transmit and receive voice over HF transceiver when operating in AM or SSB mode. b. Enables voice recorder actuation through VOX or PTT circuits. Prevents senior pilot from transmitting or receiving voice over HF transceiver. Enables senior pilot to receive voice from HF transceiver when operating in AM or SSB mode.				Provides power ground through audio center VOX or PTT circuits for HF transceiver transmit-receive relay and voice recorder power relay.
	VHF-AM switch T/R OFF	 Enables senior pilot to transmit and receive voice over VHF-AM transmitter-receiver when operating in T/R mode. Prevents senior pilot from transmitting or receiving voice over VHF-AM transmitter-receiver.				VHF-AM transmits, in addition to S-Band voice, when cobra cable PTT key is closed. Cobra cable PTT/CW switch must be at PTT, and audio center POWER switch must be at VOX, to prevent transmission over S-band.

Location	Name and Position	Function	Circuit Breaker	Power Source	Telemetry Code No. and Identity	Remarks
MDC-13 (Cont)	REC	Enables senior pilot to receive voice from VHF-AM transmitter-receiver.	N/A	Audio center equipment	None	
	INTERCOM switch					
	T/R	Enables senior pilot to transmit and receive voice over the intercom system.				Either VOX or PTT.
	OFF	Prevents senior pilot from transmitting or receiving voice over intercom system.				
	REC	Enables senior pilot to receive voice from intercom system.				
	VOX SENS control	Increases or decreases sensitivity of voice-operated relay circuitry in senior pilots audio center module.				These three controls are thumbwheel-type potentiometers which may be rotated upward or downward, as required.
	INTERCOM BALANCE control	Increases or decreases level of audio signal received by senior pilot from RF equipment relative to that received from intercom bus.				Position 9 most sensitive.
	VOLUME control	Increases or decreases level of audio signal from senior pilots earphone amplifier to earphone.				
	TANK PRESSURE indicators					Displays for H_2 and O_2 tanks No. 1 and 2 operate prior to CSM separation only.
	H_2 group					
	Indicators 1 and 2	Displays H_2 tank No. 1 and No. 2 pressure.	ESSENTIAL-3 (RHEB 153) and fuse in S/M	DC main buses A and B	SF0039P (Press H_2 tank No. 1) SF0040P (Press H_2 tank No. 2)	The indicator function is controlled by pressure transducers located in H_2 tank No. 1 and No. 2 outlet lines. These transducers are also connected to C&WS, operating the H_2 PRESS light on MDC-10. H_2 operating range is 225 to 260 psia. Alarm trigger values are 220 psia low, and 270 psia high.

Location	Name and Position	Function	Circuit Breaker	Power Source	Telemetry Code No. and Identity	Remarks
MDC-13 (Cont)	O_2 group		ESSEN-TIAL-3 (RHEB 153) and fuse in S/M	DC main buses A and B		
	Indicator 1	Displays pressure of O_2 tank No. 1 or ECS surge tank as selected by O_2 PRESS IND switch (MDC-13) and is used as follows:			SF0037P (Press O_2 tank No. 1 CF0006P (Press surge tank)	With O_2 PRESS IND switch at TANK 1, the indicator function is controlled by a pressure transducer located in O_2 tank No. 1 outlet line. Transducer also connected to C&WS, operating O_2 PRESS light on MDC-10. O_2 operating range is 865 to 935 psia. Alarm trigger values are 800 psia low and 950 psia high. With O_2 PRESS IND switch at SURGE TANK position, indicator displays signal from ECS surge tank pressure transducer.
	Indicator 2	Displays O_2 tank No. 2 pressure.			SF0038P (Press O_2 tank No. 2)	The indicator function is controlled by a pressure transducer located in O_2 tank No. 2 outlet line. Transducer also connected to C&WS, operating O_2 PRESS light on MDC-10. O_2 operating range is 865 to 935 psia. Alarm trigger values are 800 psia low, and 950 psia high.
	TANK QUANTITY indicator H_2 group					
	Indicator 1	Displays quantity of H_2 remaining in tank No. 1.	CRYO-GENIC SYSTEM-QTY AMPL 1 AC 1 - ØC (MDC-22)	A-C bus No. 1 ØC	SF0030Q (Quantity H_2 tank No. 1)	H_2 quantity display range is 0 to 28 lb.
	Indicator 2	Displays quantity of H_2 remaining in tank No. 2.	CRYO-GENIC SYSTEM-QTY AMPL 2 AC 2 - ØC (MDC-22)	A-C bus No. 2 ØC	SF0031Q (Quantity H_2 tank No. 2)	

Location	Name and Position	Function	Circuit Breaker	Power Source	Telemetry Code No. and Identity	Remarks
MDC-13 (Cont)	O_2 group					
	Indicator 1	Displays quantity of O_2 remaining in tank No. 1.	CRYO-GENIC SYSTEM - QTY AMPL 1 AC 1 - ØC (MDC-22)	A-C bus No. 1 ØC	SF0032Q (Quantity O_2 tank No. 1)	O_2 quantity display range is 0 to 320 lb.
	Indicator 2	Displays quantity of O_2 remaining in tank No. 2.	CRYO-GENIC SYSTEM - QTY AMPL 2 AC 2 - ØC (MDC-22)	A-C bus No. 2 ØC	SF0033Q (Quantity O_2 tank No. 2)	
	H_2 HEATERS switches				None	Redundant heater elements in each H_2 tank requires 10 watts of power for each element.
	Switches 1 and 2	Controls d-c power to H_2 tanks No. 1 and 2 heater elements, respectively.	CRYO-GENIC SYSTEM - TANK HEATERS - H_2 - 1 MN A (MDC-22)	D-C main bus A		
	AUTO	Enables automatic pressure switches to control d-c power to H_2 tanks No. 1 and 2 heater elements.	CRYO-GENIC SYSTEM - TANK HEATERS - H_2 - 2 MN B (MDC-22)	D-C main bus B		Switch at AUTO position will apply d-c voltage to H_2 tanks No. 1 and 2 redundant heater elements when pressure switches in both tanks are in a low-pressure position at 225 psia or lower, and remove d-c voltage when either pressure switch is in a high-pressure position at 260 psia or higher.
	OFF	Disconnects d-c power from H_2 tanks No. 1 and 2 heater elements.				
	ON	Controls d-c power directly to H_2 tanks No. 1 and 2 heater elements.				Switch at ON (manual) position bypasses the pressure switches applying d-c voltage directly to the same redundant heater elements employed for automatic operation.

Location	Name and Position	Function	Circuit Breaker	Power Source	Telemetry Code No. and Identity	Remarks
MDC-13 (Cont)	O_2 HEATERS switches				None	Redundant heater elements in each O_2 tank requires 77.5 watts of power for each element.
	Switches 1 and 2	Controls d-c power to O_2 tanks No. 1 and 2 heater elements, respectively.	CRYOGENIC SYSTEM - TANK HEATERS - O_2 - 1 MN A (MDC-22)	D-C main bus A		
	AUTO	Enables automatic pressure switches to control d-c power to O_2 tanks No. 1 and 2 heater elements.	CRYOGENIC SYSTEM - TANK HEATERS - O_2 - 2 MN B (MDC-22)	D-C main bus B		Switch at AUTO position will apply d-c voltage to O_2 tanks No. 1 and 2 redundant heater elements when pressure switches in both tanks are in a low-pressure position at 865 psia or lower and will remove d-c voltage when either pressure switch is in a high-pressure position at 935 psia or higher.
	OFF	Disconnects d-c power from O_2 tanks No. 1 and 2 heater elements.				
	ON	Controls d-c power directly to O_2 tanks No. 1 and 2 heater elements.				Switch at ON (manual) position bypasses the pressure switches, applying d-c voltage directly to the same redundant heater elements employed for automatic operation.
	O_2 PRESS IND switch					TANK PRESSURE-1-O_2 indicator is shared by two pressure signals.
	TANK 1	Connects output of O_2 tank No. 1 pressure transducer to O_2 tank No. 1 TANK PRESSURE indicator (MDC-13).	ESSENTIAL-3 (RHEB 153) and fuse in S/M	D-C main buses A and B	SF0037P (Press O_2 tank 1)	Normal position of switch prior to CSM separation except for periodic surge tank readouts.
	SURGE TANK	Connects output of ECS SURGE TANK pressure transducer to O_2 tank No. 1 TANK PRESSURE indicator.	INSTRUMENTS ESS - MN A and MN B (MDC-22), also ESSENTIAL-2 (RHEB-153)		CF0006P (Press surge tank)	Normal position of switch following CSM separation.

Location	Name and Position	Function	Circuit Breaker	Power Source	Telemetry Code No. and Identity	Remarks
MDC-13 (Cont)	H_2 FANS switches				None	Redundant fan motors in each H_2 tank requires 63VA total.
	Switches 1 and 2	Controls a-c power to H_2 tanks No. 1 and 2 fan motors, respectively.	CRYOGENIC TANK FAN MOTORS -1- AC 1 ØA ØB ØC (MDC-22)	A-C bus No. 1		
	AUTO	Applies a-c power to contacts on motor switch which controls 3Ø a-c power to circulating fan motors in H_2 tanks No. 1 and 2.				Switch at AUTO position will apply a-c voltage to H_2 tanks No. 1 and 2 redundant fan motors when pressure switches in both tanks are in a low-pressure position at 225 psia or lower and will remove a-c voltage when either pressure switch is in a high-pressure position at 260 psia or higher.
	OFF	Disconnects 3Ø a-c power from H_2 tanks No. 1 and 2 circulating fan motors.	CRYOGENIC TANK FAN MOTORS -2- AC 2 ØA ØB ØC (MDC-22)	A-C bus No. 2		
	ON	Controls 3Ø a-c power directly to circulating fan motors in H_2 tanks No. 1 and 2				Switch at ON (manual) position bypasses the pressure switches, applying a-c power directly to the same redundant H_2 tank fan motors employed for automatic operation.
	O_2 FANS switches					Redundant fan motors in each O_2 tank requires 148VA total.
	Switches 1 and 2		CRYOGENIC TANK FAN MOTORS -1- AC 1 ØA ØB ØC (MDC-22)	A-C bus No. 1		
	AUTO	Applies a-c power to contacts on motor switch which controls 3Ø a-c power to circulating fan motors in O_2 tanks No. 1 and 2.				Switch at AUTO position will apply a-c power to O_2 tank No. 1 and 2 redundant fan motors when pressure switches in both tanks are in a low pressure position at 865 psia or lower and will remove a-c voltage when either pressure switch is in a high pressure position at 935 psia or higher.
	OFF	Disconnects 3Ø a-c power from O_2 tanks No. 1 and 2 circulation fan motors.	CRYOGENIC TANK FAN MOTORS -2- AC 2 ØA ØB ØC (MDC-22)	A-C bus No. 2		
	ON	Controls 3Ø a-c power directly to circulating fan motors in O_2 tanks No. 1 and 2.				Switch at ON (manual) position bypasses the pressure switches, applying a-c power directly to the same redundant O_2 tank fan motors employed for automatic operation.
	GLY EVAP STEAM PRESS indicator	Provides pressure indication of steam discharged from water-glycol evaporator.	ECS - TRANS-DUCER PRESS GROUPS 2 MN A MN B (MDC-22)	D-C main buses A and B	CF0034P (Press glycol evap out steam)	Normal steam duct pressure operating range is 0.97 to 0.145 psia.

Location	Name and Position	Function	Circuit Breaker	Power Source	Telemetry Code No. and Identity	Remarks
MDC-13 (Cont)	PRESS GLY DISCH indicator	Provides static pressure indication of water-glycol pump discharge.	ECS-TRANS-DUCER-PRESS GROUPS 1 MN A MN B (MDC-22)	D-C main buses A and B	CF0016P (Press glycol pump outlet)	Normal water-glycol pump operating range indications are as follows: Prelaunch (GSE and onboard pumps): 14 to 18 psia Prelaunch (onboard pumps): 45 to 55 psia Normal flight: 37 to 45 psia Emergency flight: 37 to 45 psia
	FLOW O_2 indicator	Provides total rate-of-flow indication of oxygen supplied to the ECS downstream of the flow transducer.	ECS TRANS-DUCER - PRESS GROUPS 2 MN A MN B (MDC-22)		CF0035R (Flow rate ECS O_2)	Indicator will not show O_2 flow upstream of transducer, such as through PLSS FILL valve (LHEB-139), main regulator or surge tank relief valve action, or line leakage. O_2 FLOW HI system status light (red) is located on MDC-11 and illuminates at a flow rate of 1.0 lb/hr. Normal O_2 flow operating range indications are from 0.20 to 0.45 lb/hr and in flight.
	ΔP SUIT COMPR indicator	Provides pressure differential indication between suit compressor inlet and outlet manifolds to determine degree of compressor efficiency.	ECS TRANS-DUCER - PRESS GROUPS 1 MN A MN B (MDC-22)		CF0015P (Press suit compressor diff)	Suit compressor ΔP operating range indications are as follows: 0.7 to 0.9 psi during prelaunch 0.3 to 0.4 psi during normal space flight 0.2 to 0.3 psi during emergency space flight.
	GLY ACCUM-QUANTITY indicator	Provides quantity indication of water-glycol in accumulator.			CF0019Q (Quantity glycol accum)	Capacity of accumulator is 1.36 lb. Normal accumulator operating range indications are as follows: Prelaunch (GSE) and onboard pump): 0% Normal flight: 40 to 60% Emergency flight: 40 to 60%
	WATER-QUANTITY indicator	Provides quantity indication of waste water tank or potable water tank as selected by H_2O IND switch (MDC-13).	ECS TRANS-DUCER WASTE & POT H_2O MN A MN B (MDC-22)		CF0009Q (Quantity waste water tank) CF0010Q (Quantity potable H_2O tank)	Capacities of the water tanks are 36 lb of potable water and 56 lb of waste water. Water quantity indications are dependent upon a selected mission profile and specific times during the mission.

Location	Name and Position	Function	Circuit Breaker	Power Source	Telemetry Code No. and Identity	Remarks
MDC-13 (Cont)	ECS RAD-OUTLET TEMP indicator	Provides temperature indication of water-glycol returned to C/M from S/M space radiators (or from GSE during prelaunch).	ECS TRANS-DUCER TEMP MN A MN B (MDC-22)	D-C main buses A and B	CF0020T (Temp space radiator outlet)	GLYCOL TEMP LOW system status light (yellow) is located on MDC-11, and illuminates at -30°F. Normal ECS radiator outlet temperature operating range is 30° to 97°F.
	GLY EVAP-OUTLET TEMP indicator	Provides temperature indication of water-glycol at outlet of water-glycol evaporator.			CF0018T (Temp glycol evap outlet liquid)	Normal water-glycol operating range indications are 40° to 50°F during prelaunch and 40° to 50.5°F in flight.
	TEMP indicators SUIT	Provides temperature indication of suit circuit atmosphere.			CF0008T (Temp suit supply mani)	Temperature sensor located in suit heat exchanger outlet duct. Normal suit circuit operating range indications are 45° to 55°F during prelaunch and in flight.
	CABIN	Provides average temperature indication of cabin atmosphere.			CF0002T (Temp cabin)	Sensor located near inlet to cabin air fans. Normal cabin operating range indications are 50° to 70°F during prelaunch and 70° to 80°F in flight.
	PRESS indicators SUIT	Provides pressure indication of suit circuit atmosphere.	ECS-TRANS-DUCER PRESS GROUPS 1 MN A MN B (MDC-22)		CF0012P (Press suit demand reg sense)	Pressure transducer located at demand regulator sensing port. Normal suit circuit operating range indications are as follows: 14.7 psia during prelaunch, 4.7 to 5.3 psia during normal flight mode, and 3.75±0.25 psia during emergency flight mode.

Location	Name and Position	Function	Circuit Breaker	Power Source	Telemetry Code No. and Identity	Remarks
MDC-13 (Cont)	CABIN	Provides pressure indication of cabin atmosphere.	ECS - TRANS-DUCER - PRESS GROUPS 2 MN A MN B (MDC-22)	D-C main buses A and B	CF0001P (Pressure cabin)	Pressure transducer located inside LHFEB. Normal cabin operating range indications are as follows: 14.7 psia during prelaunch, 4.8 to 5.2 psia during normal space flight, and 0.0 psia during emergency space flight.
	PART PRESS CO_2 indicator	Provides partial pressure indication of CO_2 in suit circuit atmosphere.	ECS - TRANS-DUCER - PRESS GROUPS 2 MN A (MDC-22)	D-C main bus A	CF0005P (Press CO_2 partial)	CO_2 sensor is located between inlet and outlet manifolds of suit circuit in LHEB. The CO_2 partial pressure normal metabolic operating range is 0.0 to 7.6 mm Hg, and the emergency metabolic operating range is 7.6 to 15.0 mm Hg. Both ranges are for an unlimited length of time. CO_2 PP HI system status light (MDC-11) illuminates at 7.6 mm Hg. This indicates CO_2 level has risen to the upper end of the normal operating range.
	H_2O ACCUM switches AUTO 1/MAN/ AUTO 2 switch				None	In automatic mode, 10-second pulse signal for accumulator operation is received from CTE.
	AUTO 1	a. Removes d-c power from H_2O ACCUM-ON 1/ON 2 switch (MDC-13). b. Applies d-c power to No. 1 cyclic accumulator control unit to automatically time and actuate No. 1 cyclic accumulator valve for 10 seconds every 10 minutes.	ECS-H_2O ACCUM-MN A (MDC-22)	D-C main bus A		
	MAN	a. Removes d-c power from No. 1 and No. 2 cyclic accumulator control units. b. Applies d-c power to H_2O ACCUM-ON 1/ON 2 switch, permitting manual control of No. 1 or No. 2 cyclic accumulator valves.	ECS-H_2O ACCUM-MN A MN B (MDC-22)	D-C main buses A and B		Switch position selects manual backup mode, permitting manual cyclic accumulator valve actuation in event both cyclic accumulator automatic control units should fail.

Location	Name and Position	Function	Circuit Breaker	Power Source	Telemetry Code No. and Identity	Remarks
MDC-13 (Cont)	AUTO 2	a. Removes d-c power from H_2O ACCUM-ON 1/ON 2 switch. b. Applies d-c power to No. 2 cyclic accumulator control unit to automatically time and actuate No. 2 cyclic accumulator valve for 10 seconds every 10 minutes.	ECS - H_2O ACCUM-MN B (MDC-22)	D-C main bus B	None	
	ON 1/ON 2 switch					
	ON 1	Back up switch position to apply d-c power to solenoid valve of No. 1 cyclic accumulator, manually controlling oxygen flow to accumulator.	ECS - H_2O ACCUM-MN A (MDC-22)	D-C main bus A		Switch position is momentary to preclude possibility of expending oxygen needlessly. Switch may be operated when convenient or when suit circuit humidity level becomes uncomfortable.
	Off (center)	Removes power from both solenoid valves, shutting off oxygen flow to either accumulator.				
	ON 2	Back up switch position to apply d-c power to solenoid valve of No. 2 cyclic accumulator, manually controlling oxygen flow to accumulator.	ECS - H_2O ACCUM-MN B (MDC-22)	D-C main bus B		This switch position is momentary to preclude possibility of expending oxygen needlessly. Switch may be operated when convenient or when suit circuit humidity level becomes uncomfortable.
	WASTE H_2O TK REFILL switch		POT H_2O HTR MN B (MDC-22)			Switch positions are not momentary; therefore, water quantity indicators must be monitored to prevent overfilling.
	1	Applies d-c power to solenoid valve of S/M water tank No. 1, permitting water flow to refill C/M water tanks.				Potable tank will fill first, unless POTABLE TANK INLET valve is closed. Flow is at the rate of 2.92 lb per minute.
	OFF	Removes power from both solenoid valves.				
	2	Applies d-c power to solenoid valve of S/M water tank No. 2, permitting water flow to refill C/M water tanks.				

Location	Name and Position	Function	Circuit Breaker	Power Source	Telemetry Code No. and Identity	Remarks
MDC-13 (Cont)	SUIT EVAP switch AUTO	Applies a-c power to the following to automatically regulate suit circuit temperature by the water-glycol or water evaporation cooling modes: a. Suit evaporator wetness control unit b. Steam pressure control unit c. Diverter valve control unit.	ECS-GLYCOL PUMPS - AC 1 ØB (MDC-22)	A-C bus No. 1	None	The AUTO position must be selected in conjunction with the use of the SUIT HT EXCH switch (LHEB-310). The control unit temperature sensor is located in the suit evaporator outlet. The suit temperature indicator sensor, however, is located at the suit heat exchanger outlet duct.
	MAN	Removes a-c power from the following to permit manual override operation of SUIT EVAP GLYCOL valve (LHEB-139): a. Suit evaporator wetness control unit b. Steam pressure control unit c. Diverter valve control unit.				The MAN position is selected in event of failure of any automatic control unit.
	H_2O IND switch POT	Selects potable water tank quantity signal for display on WATER-QUANTITY indicator (MDC-13).	ECS-TRANSDUCER - WASTE & POT H_2O - MN A MN B (MDC-22)	D-C main buses A and B		WATER-QUANTITY indicator is shared by two quantity signals.
	WASTE	Selects waste water tank quantity signal for display on WATER-QUANTITY indicator.				
	GLYCOL EVAP switches H_2O FLOW switch AUTO	a. Applies a-c power to wetness control unit. b. Closes circuit from control unit to water control valve for automatically regulating water inflow to water-glycol evaporator.	ECS - GLYCOL PUMPS - AC 2 ØA (MDC-22)	A-C bus No. 2		
	Off (center)	Removes a-c power from wetness control unit and d-c power from water control valve.				Water control valve is solenoid-operated.

Location	Name and Position	Function	Circuit Breaker	Power Source	Telemetry Code No. and Identity	Remarks
MDC-13 (Cont)	ON	Manual backup mode to apply d-c power to solenoid-operated water control valve, which opens valve and permits water to enter water-glycol evaporator.	ECS - POT H_2O HTR MN A MN B (MDC-22)	D-C main buses A and B	None	This switch position is not momentary. Close coordination between switch actuation and the GLY EVAP-OUTLET TEMP indicator (MDC-13) is necessary to obtain correct water-glycol temperature and/or to prevent flooding the evaporator.
	STEAM PRESS group AUTO/MAN switch					Steam pressure control valve full-travel requires 58 seconds (max).
	AUTO	a. Removes a-c power from GLYCOL EVAP - STEAM PRESS - INCR/DECR switch (MDC-13). b. Applies a-c power to steam pressure control unit. c. Closes circuit from control unit to steam pressure control valve to automatically regulate pressure in steam duct.	ECS-GLYCOL PUMPS-AC 1 ØC (MDC-22)	A-C bus No. 1		
	MAN	a. Removes a-c power from steam pressure control unit. b. Opens circuit from control unit to steam pressure control valve. c. Applies a-c power to GLYCOL EVAP-STEAM PRESS-INCR/DECR switch.				This switch position selects manual backup mode, permitting manual operation of steam pressure control valve actuator in event of steam pressure control unit malfunction.
	INCR/DECR switch					
	INCR	Applies a-c power to actuator of steam-pressure control valve, which moves valve in the closed direction and increases the steam duct pressure.				This switch position is momentary. Until motor-driven steam pressure control valve reaches its maximum limit, short periods of switch activation result in proportional increases in steam duct pressure. Valve full-travel requires 58 seconds (max).
	Off (center)	Removes a-c power from valve actuator.				

Location	Name and Position	Function	Circuit Breaker	Power Source	Telemetry Code No. and Identity	Remarks
MDC-13 (Cont)	DECR	Applies a-c power to actuator of steam pressure control valve, which moves valve in the open direction and decreases the steam duct pressure.	ECS-GLYCOL PUMPS-AC 1 ØC (MDC-22)	A-C bus No. 1	None	This switch position is momentary. Until motor-driven steam pressure control valve reaches it maximum limit, short periods of switch activation result in proportional decreases in steam duct pressure. Valve full-travel requires 58 seconds (max).
	TEMP IN switch		ECS-GLYCOL PUMPS-AC 1 ØA (MDC-22)			Temperature control unit sensor is located at inlet to water-glycol evaporator.
	AUTO	Applies a-c power to water-glycol temperature control unit, which automatically regulates temperature of coolant entering evaporator by mixing hot and cold water-glycol.				Water-glycol evaporator temperature control valve full travel requires 37.5 seconds (max).
	MAN	Removes a-c power from water-glycol temperature control unit, permitting manual override operation of GLYCOL EVAP TEMP IN valve (LHEB-136) by universal T-handle tool.				Manual control of water-glycol evaporator temperature control valve is required in event of failure of automatic control unit. Close coordination between valve adjustments and GLY EVAP-OUTLET TEMP and ECS RAD-OUTLET TEMP indicators (MDC-13) is necessary to obtain correct water-glycol temperature.
	CABIN TEMP controls					Temperature control unit sensor is located at inlet to cabin air fans; also, an anticipator (sensor) is located at outlet of cabin air fans.
	AUTO/MAN switch					
	AUTO	Applies a-c power to cabin temperature control unit to automatically regulate temperature of water-glycol flow through cabin heat exchanger.	ECS-CABIN AIR FAN 2 ØC (MDC-22)	A-C bus No. 2		Cabin temperature control valve full travel requires 25 seconds (max).
	MAN	Removes a-c power from cabin temperature control unit, permitting manual override operation of the CABIN TEMP control valve (LHFEB-128) by properly positioning control knob.				Manual control of cabin temperature control valve is required in event of failure of automatic control unit. There is a definite time lag in cabin temperature response following a manual adjustment; therefore, close coordination between manual adjustments and the TEMP-CABIN indicator (MDC-13) is not necessary.

Location	Name and Position	Function	Circuit Breaker	Power Source	Telemetry Code No. and Identity	Remarks
MDC-13 (Cont)	AUTO control INCR (upward)	Thumbwheel permits manual adjustment of cabin temperature automatic control unit. The higher the number selected, the greater proportional increase in cabin temperature.	None	None	None	Cabin temperature can be selected between 70° and 80°F. Numbers on thumbwheel do not correspond to any temperature.
MDC-14 AGC DSKY panel	COMP FAIL light	Indicates AGC malfunction.	G&N - COMPUTER MN A MN B (MDC-22)	D-C main buses A and B	None	
	KEY RLSE light	Internal AGC program needs DSKY circuits to cintinue program.				Request for operator to press KEY RLSE pushbutton.
	UPTEL switch ACCEPT BLOCK	Controls acceptance of telemetered data from MSFN. Allows AGC to accept data from MSFN. Inhibits AGC reception of MSFN data.				
	ACTIVITY lights UPTL COMP	Indicates activity the computer is presently engaged in. AGC is receiving data link information by telemetry. AGC is engaged in computation.			CG5021X (AGC alarm 2)	
	PROGRAM indicator	A two-digit display indicating the number of the program (major mode) presently in progress.			None	On-board data provides definition of PROGRAM, NOUN, and VERB digits.
	VERB indicator	A two-digit display indicating verb code selected.				
	NOUN indicator	A two-digit display indicating noun code selected.				
	REGISTER 1 indicator	Displays contents of selected register or memory location. First component of extended-length data word, if applicable.				Displays may be selected manually or by AGC program.

Location	Name and Position	Function	Circuit Breaker	Power Source	Telemetry Code No. and Identity	Remarks
MDC-14 (Cont)	REGISTER 2 indicator	Displays contents of selected register or memory location. Second component of extended-length data word, if applicable.	G&N - COMPUTER MN A MN B (MDC-22)	D-C main buses A and B	None	
	REGISTER 3 indicator	Displays contents of selected register or memory location. Third component of extended-length data word, if applicable.				Displays may be selected manually or by AGC program.
	BRIGHTNESS control	Varies brightness of electro-luminescent data displays: REGISTER 1, REGISTER 2, and REGISTER 3.				
	KEY RLSE pushbutton	Enables program control of DSKYs. Releases operator control of DSKY circuits.				
	ERROR RESET pushbutton	Resets alarm light relays. AGC recycles to start of current operation.				Verifies alarms. Alarms triggered by transients should not repeat.
	Keyboard switches	Provide for entering data into or commanding operation of the AGC.				Pushbutton-type switches (selectors). Each key generates a specific 5-bit key code denoting the instruction or number being selected.
	CLEAR	Place all zeros (logic 0s) in register being loaded.				
	VERB	Sets computer to accept next two digits as verb code.				
	NOUN	Sets computer to accept next two digits as noun code.				
	ENTER	Transfers contents of input register to central processor and initiates execution of instructions.				
	+	Denotes data to follow has positive decimal value.				
	-	Denotes data to follow has negative decimal value.				
	0 to 9	Enters the binary equivalent of the key pressed.				

Location	Name and Position	Function	Circuit Breaker	Power Source	Telemetry Code No. and Identity	Remarks
MDC-15	H_2 PURGE LINE HTR sw		FUEL CELL 1-PURGE and FUEL CELL 2-PURGE (MDC-22)	D-C main buses A and B	None	Two-position double-pole toggle switch provides heater power during H_2 purge of fuel cells. Positioned ON 30 min before H_2 purge.
	ON	Applies +28 vdc power to two 2-watt heaters in fuel cell H_2 vent line.				
	OFF	Removes +28 vdc power from heaters.				Positioned OFF after completing H_2 purge.
	HELIUM 1 switches	Four functionally identical switches. Each switch controls one helium isolation valve in the HELIUM 1 half of a parallel helium pressurization system. Each of the four RCS packages contains identical systems.	RCS-PROP ISOL MN A MN B (MDC-25)			Each switch is a three-position toggle switch, spring-loaded, causing it to return to the center position after setting it to the ON or OFF position. Each valve contains a position microswitch which completes the circuit for operating the valve position event indicator mechanism. Each valve also contains an open and close mechanical latching feature.
	A (B, C, D)					
	ON	Energizes helium isolation valve solenoid that drives the valve to the open position.				
	Center	Removes solenoid excitation; valve remains in last commanded position.				
	OFF	Energizes helium isolation valve solenoid that drives the valve to the closed position.				

MAIN DISPLAY CONSOLE—PANEL 15

Location	Name and Position	Function	Circuit Breaker	Power Source	Telemetry Code No. and Identity	Remarks
MDC-15 (Cont)	HELIUM 1 event indicators A (B, C, D)	Striped-line display indicates closed condition of valve controlled by switch located directly above event indicator. Gray display indicates open condition.	RCS-PROP ISOL MN A MN B (MDC-25)	D-C main buses A and B	None	Each indicator is a two-position device with striped-line display controlled by solenoid action and gray display by permanent magnet action.
	HELIUM 2 switches A (B, C, D)	Four functionally identical switches. Each switch controls one helium isolation valve in the HELIUM 2 half of a parallel helium pressurization system. Each of the four RCS packages contain identical systems.				Each switch is a three-position toggle switch, spring loaded, causing it to return to the center position after placing it to the ON or OFF positions. Each valve contains a position microswitch which completes the circuit for operating the valve position event indicator mechanism. Each valve is mechanically latched open and spring-loaded closed.
	ON	Energizes helium isolation valve solenoid that drives the valve to the open position.				
	Center	Removes solenoid excitation; valve remains in last commanded position.				
	OFF	Energizes helium isolation valve solenoid that drives the valve to the closed position.				
	HELIUM 2 event indicators A (B, C, D)	Striped-line display indicates closed condition of valve controlled by switch located directly above event indicator. Gray display indicates open condition.				Each indicator is a two-position device with striped-line display controlled by solenoid action and gray display by permanent magnet action.
	PROPELLANT switches	Four functionally identical switches. Each switch controls two isolation valves (one fuel, one oxidizer) within each of the four S/M RCS packages.				Each switch is a three-position toggle switch, spring-loaded, causing it to return to the center position after placing it to the ON or OFF positions. Each valve contains a position microswitch which completes the circuit for operating the valve position event indicator. Each valve is magnetically latched open and spring-loaded closed.

Location	Name and Position	Function	Circuit Breaker	Power Source	Telemetry Code No. and Identity	Remarks
MDC-15 (Cont)	A (B, C, D) ON	Energizes propellant isolation valve solenoids that drive two valves to the open position.	RCS—PROP ISOL MN A MN B (MDC-25)	D-C main buses A and B	None	
	Center	Removes solenoid excitation; valves remain in last commanded position.				
	OFF	Energizes propellant isolation valve solenoids that drive two valves to the closed position.				
	PROPELLANT event indicators A (B, C, D)	Striped-line display indicates closed condition of valves controlled by switch located directly above event indicator. Gray display indicates open condition.				Each indicator is a two-position device with striped-line display controlled by solenoid action and gray display by permanent magnet action. Both valves controlled by switch must operate before indicator will function.
	C/M-S/M SEP switches Switch A and B		MASTER EVENT SEQ CONT A ARM B BAT A and BAT B (MDC-22)	Battery buses A and B	CD0023X CM-SM separate relay close A CD0024X CM-SM separate relay close B	The switches are springloaded to the down position.
	Up	Activates systems A and B to perform the following functions: a. C/M-S/M deadface b. C/M-RCS pressurize c. C/M-S/M separation d. Transfer entry batteries to d-c main buses A and B e. C/M-S/M separation pyro control shut-off f. RCS control transfer g. C/M-S/M separation signal to SMJC.				The two switches are guarded redundant switches.
	Down	Off position.				
	C/M RCS PRPLNT group	Two functionally identical switches. Each switch controls two isolation valves (one fuel, one oxidizer) within its respective propellant system.	RCS-PROP ISOL MN A MN B (MDC-25)	D-C main buses A and B		Each switch is a three-position switch. Switch is spring-loaded from the OFF position to center position only. Each valve contains a position microswitch which completes the circuit for operating the valve position event indicator machanism. Each valve also contains an open and close latching feature.

Location	Name and Position	Function	Circuit Breaker	Power Source	Telemetry Code No. and Identity	Remarks
MDC-15 (Cont)	A (B) switch		RCS-PROP ISOL MN A MN B (MDC-25)	D-C main buses A and B	None	Placed to ON prior to lift-off; then to CENTER prior to lift-off, at T+ 61 sec placed to ON, turned to CENTER at orbit insertion. Placed to ON prior to C/M RCS pressurization and left ON through entry.
	ON	Energizes propellant isolation valve solenoids that drive two valves to the open position.				
	Center	Removes solenoid excitation; valves remain in last commanded position.				
	OFF	Energizes propellant isolation valve solenoids that drive two valves to the closed position.				
	A (B) event indicators	Striped-line display indicates closed condition of valves controlled by switch located directly above event indicator. Gray display indicates open condition.				Each indicator is a two-position device with striped-line display controlled by solenoid action and gray display by permanent magnet action. Both valves, controlled by one switch, must operate before indicator will function.
MDC-16	MAIN DEPLOY AUTO switch			MESC logic bus through Z12 ELS activate relays	None	
	AUTO	a. Prepares ELS for automatic enabling during LES abort. b. Allows the ELS to function automatically during descent of C/M.				Normal position of switch.
	MAN	Disconnects logic arming circuitry from ELS controller.				Switch is set to the MAN position after drogue parachute deployment during an abort initiated prior to 61 seconds after lift-off. The main parachutes must be deployed manually with the MAIN DEPLOY pushbutton (MDC-5) after the switch is set to the MAN position. If the main parachutes are deployed manually, the MAIN DEPLOY-AUTO switch must be set back to AUTO to allow 14-second timer to enable parachute release after touchdown.

Location	Name and Position	Function	Circuit Breaker	Power Source	Telemetry Code No. and Identity	Remarks
MDC-16 (Cont)	ABORT SYSTEM switches					
	OX DUMP switch					
	AUTO	Enables circuitry through a 61-second timer to automatically dump the C/M RCS oxidizer during a pad or low-altitude abort prior to 61 seconds after lift-off.	MASTER EVENT SEQ CONT-A LOGIC B-BAT A BAT B (MDC-22)	Logic bus in the master event sequence controller	None	The 61-second timer, enabled by CM PROP JETT-LOGIC switch (MDC-8), starts at lift-off. The auto dump capability is disabled after the 61-seconds. Dump time is approximately 11 seconds.
	RCS CMD AUTO	Disables the auto oxidizer dump and allows the RCS/SCS system to be automatically enabled upon C/M-S/M separation to control the command module RCS during descent.				During normal ascent, the OX DUMP switch is moved to the RCS CMD AUTO position 61 seconds after lift-off.
	2 ENG OUT switch		None	L/V-IU batteries	L/V telemetry via IU	
	AUTO	Activates the EDS for a two-engine out automatic abort capability by de-energizing the two-engine out auto abort deactivate relays.				
	OFF	Deactivates the EDS for a two-engine out automatic abort capability by energizing the two-engine out auto abort deactivate relays.				The two-engine out auto abort capability is also shutoff automatically by the IU.
	L/V RATES switch					
	AUTO	Activates the EDS for an excessive rates automatic abort capability by de-energizing the excessive rates auto abort deactivate relays.				
	OFF	Deactivates the EDS for an excessive rates automatic abort capability by energizing the excessive rates auto abort deactivate relays.				The excessive rates auto abort capability is also shut off automatically by the IU.

Location	Name and Position	Function	Circuit Breaker	Power Source	Telemetry Code No. and Identity	Remarks
MDC-16 (Cont)	MODE switches, A and B					The two switches are guarded.
	LES MODE	Enables systems A and B to use the launch escape system in case of an abort.	MASTER EVENT SEQ CONT - A LOGIC B - BAT A (MDC-22)	a. Battery buses A and B when the MESC LOGIC/OFF switch is in the LOGIC position b. EDS change over bus	None	
	TWR JETT SPS MODE	Initiates jettison of the LES tower and arms system A and B of the SPS abort circuitry.			CD0105X Tower jettison A CD0106X Tower jettison B	After LET jettison, all aborts must be manually initiated and made in the SPS mode.
	REACTION CONTROL SYS group					
	CMD switch		MASTER EVENT SEQ CONT - A ARM B BAT A BAT B (MDC-22)	Battery buses A and B	CD0170X RCS activate signal A CD0171X RCS activate signal B	Three-position toggle switch, spring-loaded to the center position. Switch allows manual inhibit-enable of SCS inputs to the automatic coils of the C/M or S/M RCS engines. Inhibit-enable functions provide backup capability to MESC control of the RCS latching relay.
	ON	Energizes latching relay, connecting SCS jet selection logic to RCS engines.				
	Center	Enables MESC automatic control of latching relay.			None	Switch is momentarily set to ON after adapter separation. This function is accomplished automatically by the MESC 0.8 seconds after initiation of adapter separation. If LES abort occurs after T + 61 seconds, the MESC automatically closes the relay 1 second after abort initiation. If an SPS abort occurs, the MESC automatically closes the relay 2.5 seconds after abort initiation. The ELSC baroswitch input automatically causes the relay to open at approximately 24,000 feet during C/M descent.
	OFF	De-energizes latching relay, disconnecting SCS jet selection logic from RCS engines.				

Location	Name and Position	Function	Circuit Breaker	Power Source	Telemetry Code No. and Identity	Remarks
MDC-16 (Cont)	C/M PRESS switch Up Down	Activates helium isolation squib valves in both systems A and B. No function.	MASTER EVENT SEQ CONT-A ARM B BAT A BAT B (MDC-22)	Battery buses A and B	CD0173X CM RCS press signal A CD0174X CM RCS press signal B	
	TRANS switch C/M Center S/M	Energizes motor switch causing the following: a. Connects CM RCS engines to SCS jet selection logic control circuits. b. Disables translation controls. Enables MESC automatic control of motor switch. Energizes motor switch, causing contacts to close which connect S/M RCS engines to SCS jet selection logic control circuits.	RCS-C/M - S/M TRANSFER MN A MN B (MDC-25)	D-C main buses A and B		Three-position switch, spring-loaded to the center position. Switch provides manual backup for automatic transfer function. There are now four RCS transfer motors, manual backup is only for 2 of the four RCS transfer motors.
	EDS switch AUTO OFF	Prepares the L/V EDS auto abort circuitry for automatic enabling at lift-off. All auto abort capabilities are disabled.	MASTER EVENT SEQ CONT-A LOGIC B-BAT A BAT B (MDC-22)	Battery buses A and B		Two-position toggle switch.
	MAIN CHUTE RELEASE switch Up Down	Releases the main parachutes from the command module. Disables the parachutes release circuitry.	MASTER EVENT SEQ CONT - A LOGIC B-BAT A BAT B (MDC-22)	MESC logic buses A and B	CE0321X CE0322X (Main chute disconnect relays A and B)	The switch is electrically enabled when the 10,000-foot baroswitches close during descent and will release the parachutes when actuated. The switch should never be moved to the up (release) position until after landing impact. The switch is spring-loaded to the down position and guarded.

Location	Name and Position	Function	Circuit Breaker	Power Source	Telemetry Code No. and Identity	Remarks
MDC-18	MASTER ALARM switch-light	Red light illuminates to alert crewman in RH couch of a malfunction or out-of-tolerance condition. This is indicated by illumination of applicable system status lights on MDC-10 or -11.	CAUT/ WARN- MN A MN B (MDC-25)	D-C main buses A and B	CS0150X (Master caution-warning on)	MASTER ALARM lights on MDC-3, -18, and LEB-103 are simultaneously illuminated, and an audio alarm tone is sent to each headset. The MASTER ALARM switch-light contains an integral push-switch. Pressing the switch-light will reset the master alarm circuit, extinguishing the MASTER ALARM lights and shutting off the audio alarm.
	pH HI event indicator					
	Striped-line display	Indicates pH factor of water from selected fuel cell is over 9, indicating a leakage of KOH electrolyte into the potable water supply.			SC2160Z (pH factor water condition F/C No. 1)	A pH factor of 7 designates pure water. (Water is potable with a pH factor below 9.) Fuel cell to be monitored is selected by FUEL CELL INDICATORS switch (MDC-18). The pH HI event indicator is part of the C&WS.
	Gray display	Indicates pH factor of water from selected fuel cell is below 9.			SC2161Z (pH factor water condition F/C No. 2) SC2162Z (pH factor water condition F/C No. 3)	

Location	Name and Position	Function	Circuit Breaker	Power Source	Telemetry Code No. and Identity	Remarks
MDC-18 (Cont)	F/C RAD TEMP LOW event indicator Striped-line display Gray display	 Indicates selected fuel cell glycol temperature at radiator outlet has dropped to -30°F or less. Indicates selected fuel cell glycol temperature at radiator outlet is above -30°F.	CAUT/ WARN- MN A MN B (MDC-25)	D-C main buses A and B	 SC2087T (Temp F/C No. 1 radiator outlet) SC2088T (Temp F/C No. 2 radiator outlet) SC2089T (Temp F/C No. 3 radiator outlet)	 Glycol operating range is -50° to +300°F. Fuel cell to be monitored is selected by FUEL CELL INDICATORS switch (MDC-18). The F/C RAD TEMP LOW event indicator is part of the C&WS.
	FUEL CELL indicators FLOW group H_2 indicator	 Indicates flow rate of H_2 into selected fuel cell.			 SC2139R (Flow rate H_2 F/C No. 1) SC2140R (Flow rate H_2 F/C No. 2) SC2141R (Flow rate H_2 F/C No. 3)	 Normal operating range (indicator green band) is 0.036 lb/hr to 0.163 lb/hr. Alarm limits to caution and warning system are 0.018 lb/hr lower, 0.153 lb/hr upper. Sensors for the indicator are located in the F/C H_2 inlet lines. Fuel cell to be monitored is selected by FUEL CELL INDICATORS switch (MDC-18).

Location	Name and Position	Function	Circuit Breaker	Power Source	Telemetry Code No. and Identity	Remarks
MDC-18 (Cont)	O_2 indicator	Indicates flow rate of O_2 into selected fuel cell.	CAUT/ WARN- MN A MN B (MDC-25)	D-C main buses A and B	SC2142R (Flow rate O_2 F/C No. 1) SC2143R (Flow rate O_2 F/C No. 2) SC2144R (Flow rate O_2 F/C No. 3)	Normal operating range (indicator green band) is 0.288 lb/hr to 1.304 lb/hr. Alarm limits to caution and warning system are 0.14 lb/hr lower, 1.22 lb/hr upper. Sensors for the indicator are located in the FUEL CELL O_2 inlet lines. Fuel cell to be monitored is selected by FUEL CELL INDICATORS switch (MDC-18).
	MODULE TEMP group SKIN indicator	Indicates skin temperature of selected fuel cell.			SC2084T (Temp F/C No. 1 skin) SC2085T (Temp F/C No. 2 skin) SC2086T (Temp F/C No. 3 skin)	Normal indication is 385° to 500°F. Alarm limits to caution and warning system are 360°F lower, 500°F upper. Sensors for the indicator are located in the pressurized portion of the fuel cells. Fuel cell to be monitored is selected by FUEL CELL INDICATORS switch (MDC-18).
	COND EXH indicator	Indicates temperature of selected fuel cell condenser exhaust.			SC2081T (Temp F/C No. 1 cond exhaust) SC2082T (Temp F/C No. 2 cond exhaust) SC2083T (Temp F/C No. 3 cond exhaust)	Condenser exhaust operating range is 155°F to 175°F. Alarm limits to caution and warning system are 155°F to 175°F. Sensors for the indicator are located in the exhaust manifolds of the fuel cell condensers. Fuel cell to be monitored is selected by FUEL CELL INDICATORS switch (MDC-18).

Location	Name and Position	Function	Circuit Breaker	Power Source	Telemetry Code No. and Identity	Remarks
MDC-18 (Cont)	REG OUT PRESS HI event indicators		CAUT/ WARN- MN A MN B (MDC-25)	D-C main buses A and B		Fuel cell to be monitored is selected by FUEL CELL INDICATORS switch (MDC-18). The REG OUT PRESS HI event indicators are part of the C&WS.
	H_2 event indicators				SC2069P (H_2 pressure F/C No. 1 regulated)	Sensors for the indicator are located in the hydrogen pressure regulators.
	Striped-line display	Indicates when output pressure of H_2 regulator rises to 75 psia or greater on selected fuel cell.				
	Gray display	Indicates pressure is less than 75 psia.			SC2070P (H_2 pressure F/C No. 2 regulated)	Normal regulator output pressure is 61.5 psia.
					SC2071P (H_2 pressure F/C No. 3 regulated)	
	O_2 event indicator				SC2066P O_2 pressure F/C No. 1 regulated)	Sensors for the indicator are located in the F/C oxygen pressure regulators.
	Striped-line display	Indicates when output pressure of O_2 regulator rises to 75 psia or greater on selected fuel cell.				
	Gray display	Indicates pressure is less than 75 psia.			SC2067P O_2 pressure F/C No. 2 regulated)	Normal regulator output pressure is 63.5 psia.
					SC2068P O_2 pressure F/C No. 3 regulated)	

Location	Name and Position	Function	Circuit Breaker	Power Source	Telemetry Code No. and Identity	Remarks
MDC-18 (Cont)	N_2 event indicator		CAUT/ WARN- MN A MN B (MDC-25)	D-C main buses A and B	SC2060P (N_2 pressure F/C No. 1 regulated)	Sensors for the indicator are located in the nitrogen pressure regulators.
	Striped-line display	Indicates when output pressure of N_2 regulator rises to 70 psia or greater on selected fuel cell.				
	Gray display	Indicates pressure is less than 70 psia.			SC2061P (N_2 pressure F/C No. 2 regulated)	Normal regulator output pressure is 53 psia.
					SC2062P (N_2 pressure F/C No. 3 regulated)	
	FUEL CELL switches				None	
	Purge group	Accomplish purging of selected fuel cell.				When purging the selected fuel cell, the C&WS will alarm if the reactants flow rate increases beyond the maximum normal flow rate. Purging (when operating at a 1420 w/fuel cell power level) is accomplished every 7 hours, alternating every 3-1/2 hours between O_2 and H_2. O_2 purge time (switch ON) is 2 minutes and H_2 purge time (switch ON) is 80 seconds. O_2 and H_2 maximum flow rates during purge is 0.6 and 0.75 lb/hr above normal flow rates, respectively. Effect of purge can be monitored by FUEL CELL INDICATORS switch and DC INDICATORS switch and their associated displays.
	Switches 1, 2 and 3		FUEL CELL 1 - PURGE (MDC-22)			
	H_2 PURGE	Opens purge valve on H_2 side of selected fuel cell to purge impurities from H_2 electrodes.				
	Center (off)	Disconnects power from selected F/C O_2 or H_2 purge valve, closing valve (normal switch position).	FUEL CELL 2- PURGE (MDC-22)			
	O_2 PURGE	Opens purge valve on O_2 side of selected fuel cell to purge impurities from O_2 electrodes.	FUEL CELL 3- PURGE (MDC-22)			
	REACTANTS group	Provides ON - OFF control of reactant flow (H_2 and O_2) for selected fuel cells.				These switches control solenoid valves, which accomplish control of reactant flow.

Location	Name and Position	Function	Circuit Breaker	Power Source	Telemetry Code No. and Identity	Remarks
MDC-18 (Cont)	Switches 1, 2 and 3 ON (Center) OFF	Momentary switch position connects d-c power to selected fuel cell O_2 and H_2 shutoff valve actuators, driving valves to open position. Valves remain in last selected position (normal switch position). Momentary switch position connects d-c power to selected fuel cell O_2 and H_2 shutoff valve actuators, driving valves to closed position.	FUEL CELL 1 - H_2 & O_2 VALVE (MDC-22) FUEL CELL 2 - H_2 & O_2 VALVE (MDC-22) FUEL CELL 3 - H_2 & O_2 VALVE (MDC-22)	Battery relay bus	SC2323X (Fuel cell No. 1 shut-off monitor) SC2324X (Fuel cell No. 2 shutoff monitor) SC2325X (Fuel cell No. 3 shut-off monitor)	Event indicators, located directly below their respective switches, display striped lines when both H_2 and O_2 shutoff valves are in closed (abnormal) position. **Warning** Do not inadvertently position REACTANT switches OFF. Loss of fuel cell will result.
	Event Indicators 1, 2 and 3 Striped-line display Gray display	Indicates when H_2 and O_2 shutoff valves are closed on selected fuel cell. Indicates normal (open) position of valves.	FUEL CELL 1 - BUS CONT (MDC-22) FUEL CELL 2 - BUS CONT (MDC-22) FUEL CELL 3 - BUS CONT (MDC-22)		SC2323X (Fuel cell No. 1 shut-off monitor) SC2324X (Fuel cell No. 2 shut-off monitor) SC2325X (Fuel cell No. 3 shut-off monitor)	Event indicators function in conjunction with their respective shutoff valves. Both (H_2 & O_2) valves have to be closed to provide a striped indication. Indicator will show normal (gray) condition if only one valve (H_2 or O_2) is closed.
	MAIN BUS A group Switches 1, 2 and 3 ON (Center)	Controls fuel cells No. 1, 2 and 3 electrical output to d-c main bus A. Momentary switch position connects electrical output of selected fuel cell to d-c main bus A. Connects C&W alarm and F/C - BUS DISCONNECT indicator light (MDC-11) to selected fuel cell motor switch (normal position of switch).	FUEL CELL 1 - BUS CONT (MDC-22) FUEL CELL 2 - BUS CONT (MDC-22) FUEL CELL 3 - BUS CONT (MDC-22)		SC2120X (Fuel cell No. 1 bus A disconnect SC2121X (Fuel cell No. 2 bus A disconnect) SC2122X (Fuel cell No. 3 bus A disconnect)	When fuel cell main bus switches are placed to ON position, power is applied to a motor-driven switch located in an overload and reverse current sensing unit in the S/M. This accomplishes actual switching function required to apply output of selected fuel cell to d-c main bus A. Only one F/C BUS DISCONNECT status light (MDC-11) for all three F/C's.

Location	Name and Position	Function	Circuit Breaker	Power Source	Telemetry Code No. and Identity	Remarks
MDC-18 (Cont)	OFF	Disconnects electrical output of selected fuel cell from d-c main bus A, and F/C BUS DISCONNECT indicator light from that respective circuit.	FUEL CELL 1 - BUS CONT (MDC-22) FUEL CELL 2 - BUS CONT (MDC-22) FUEL CELL 3 - BUS CONT (MDC-22)	Battery relay bus	SC2120X (Fuel cell No. 1 bus A disconnect) SC2121X (Fuel cell No. 2 bus A disconnect) SC2122X (Fuel cell No. 3 bus A disconnect)	
	Reset switch RESET (Center) OFF	Provides capability of resetting d-c main bus A undervoltage protection circuit. Momentary switch position resets d-c main bus A undervoltage sensing unit. Enables main d-c bus A undervoltage sensing circuit. Disables main d-c bus A undervoltage sensing circuit.	SNSR UNIT - DC BUS - A (MDC-21)		None	D-C main bus A undervoltage sensing circuit energizes MN BUS A UNDERVOLT warning light (MDC-11) when d-c voltage drops below 26.25 vdc.
	Event Indicators 1, 2 and 3 Striped-line display Gray display	Indicates when selected F/C is removed from d-c main bus A. Indicates selected F/C is connected to bus.	FUEL CELL 1 - BUS CONT (MDC-22) FUEL CELL 2 - BUS CONT (MDC-22) FUEL CELL 3 - BUS CONT (MDC-22)		SC2120X (Fuel cell No. 1 bus A disconnect) SC2121X (Fuel cell No. 2 bus A disconnect) SC2122X (Fuel cell No. 3 bus A disconnect)	Event indicators function in conjunction with their respective switches located directly above.

Location	Name and Position	Function	Circuit Breaker	Power Source	Telemetry Code No. and Identity	Remarks
MDC-18 (Cont)	MAIN BUS B group					
	Switches 1, 2 and 3	Controls fuel cells No. 1, 2 and 3 electrical output to d-c main bus B.	FUEL CELL 1 - BUS CONT (MDC-22)	Battery relay bus	SC2125X (Fuel cell No. 1 bus B disconnect)	When fuel cell main bus switches are places to ON position, power is applied to a motor-driven switch located in an overload and reverse current sensing unit in the S/M. This accomplishes actual switching function required to apply output of selected fuel cell to d-c main bus B. Only on F/C BUS DISCONNECT status light (MDC-11) for all three fuel cells.
	ON	Momentary switch position connects electrical output of selected fuel cell to d-c main bus B.	FUEL CELL 2 - BUS CONT (MDC-22)		SC2126X (Fuel cell No. 2 bus B disconnect)	
	(Center)	Connects C&W alarm and F/C BUS DISCONNECT indicator light (MDC-11) to selected fuel cell motor switch (normal position of switch).	FUEL CELL 3 - BUS CONT (MDC-22)		SC2127X (Fuel cell No. 3 bus B disconnect)	
	OFF	Disconnects electrical output of selected fuel cell from d-c main bus B and F/C BUS DISCONNECT indicator light from that respective circuit.				
	Reset Switch	Provides capability of resetting d-c main bus B undervoltage protection circuit.	SNSR UNIT-DC BUS - B (MDC-21)		None	D-C main bus B undervoltage sensing circuit energizes MN BUS B UNDER-VOLT warning light (MDC-11) when d-c voltage drops below 26.25 vdc.
	RESET	Momentary switch position resets d-c main bus B undervoltage sensing circuit.				
	(Center)	Enables main d-c bus B under-voltage sensing circuit.				
	OFF	Disables main d-c bus B under-voltage sensing circuit.				
	Event Indicators 1, 2 and 3)		FUEL CELL 1 - BUS CONT (MDC-22)		SC2125X (Fuel cell No. 1 bus B disconnect)	Event indicators function in conjunction with their respective switches located directly above.
	Striped-line display	Indicates when selected fuel cell is removed from d-c main bus B.	FUEL CELL 2 - BUS CONT (MDC-22)		SC2126X (Fuel cell No. 2 bus B disconnect)	
	Gray display	Indicates selected fuel cell is connected to bus.	FUEL CELL 3 - BUS CONT (MDC-22)		SC2127X (Fuel cell No. 3 bus B disconnect)	

Location	Name and Position	Function	Circuit Breaker	Power Source	Telemetry Code No. and Identity	Remarks
MDC-18 (Cont)	FUEL CELL INDICATORS switch	Selects desired fuel cell to be monitored by the fuel cell display indicators.		Dependent on position (insignificant)	None	Indicators associated with switch are as follows: a. FLOW indicators H_2 and O_2 b. MODULE TEMP indicators SKIN and COND EXH c. REG OUT PRESS HI - O_2 d. REG OUT PRESS HI - H_2 e. REG OUT PRESS HI - N_2 f. pH HI g. F/C RAD TEMP LOW. **NOTE** Items a and b are analog signals. Items c through g are ON-OFF signals (event indicators).
	1	Applies selected outputs of fuel cell No. 1 to fuel cell display indicators.				
	2	Applies selected outputs of fuel cell No. 2 to fuel cell display indicators.				
	3	Applies selected outputs of fuel cell No. 3 to fuel cell display indicators.				
	BATTERY CHARGER switch	Controls a-c and d-c power to battery charger, and selects battery to be charged.	BATTERY CHARGER-MN A MN B AC PWR (MDC-22)	D-C main bus A and B and a-c bus No. 1 or No. 2	CC0214V (D-C voltage bat charger out)	Switch actuates battery charger input-power control relay, routing a-c and d-c voltages through relay contacts to battery charger. Current flow is negligible when a battery is fully charged. MAIN BUS TIE switches (MDC-22) for selected battery must be off before a battery can be charged. A-C power for the battery charger is selected from a-c bus No. 1 or a-c bus No. 2 by the BAT CHGR switch (MDC-22).
	OFF	Disconnects electrical power from battery charger.				
	A	Controls a-c and d-c power to battery charger and routes output of battery charger to entry battery A.			CC0215C (D-C current bat charger out)	
	B	Controls a-c and d-c power to battery charger and routes output of battery charger to entry battery B.				
	C	Controls a-c and d-c power to battery charger and routes output of battery charger to battery C.				
	SUIT PACK	No function.				

Location	Name and Position	Function	Circuit Breaker	Power Source	Telemetry Code No. and Identity	Remarks
MDC-18 (Cont)	DC VOLTS meter	Indicates d-c voltage of selected source, unit, or bus.		As selected by DC INDICATORS switch.	Refer to DC INDICATORS switch.	Meter functions in conjunction with DC INDICATORS switch. DC VOLTS meter range is 20 to 45 vdc.
	DC AMPS meter	Indicates d-c current of selected source, unit, or bus.				Meter functions in conjunction with DC INDICATORS switch. DC AMPS meter range is 0 to 100 amperes, 0 to 5 amperes expanded scale applies only to battery charger output.
	DC INDICATORS switch	Selects power source, bus, or unit to be monitored by DC VOLT and DC AMPS meters.				In some cases, only current or voltage is indicated by DC VOLTS and DC AMPS meters. In other cases, both voltage and current are indicated. These are listed in the function column associated with each position. The DC VOLTS meter will read slightly below 20 vdc when not in use. The DC AMPS meter will read zero amperes when not connected to a load.
	FUEL CELL -1	Applies output of fuel cell No. 1 shunt to DC AMPS meter.		Fuel cell No. 1	SC2113C (D-C current F/C No. 1 output)	
	FUEL CELL -2	Applies output of fuel cell No. 2 shunt to DC AMPS meter.		Fuel cell No. 2	SC2114C (D-C current F/C No. 2 output)	
	FUEL CELL -3	Applies output of fuel cell No. 3 shunt to DC AMPS meter.		Fuel cell No. 3	SC2115C (D-C current F/C No. 3 output)	
	MAIN BUS - A	Applies voltage of d-c main bus A to DC VOLTS meter.	SNSR UNIT - DC BUS - A (MDC-21)	D-C main bus A	CC0206V (D-C voltage main bus A)	
	MAIN BUS - B	Applies voltage of d-c main bus B to DC VOLTS meter.	SNSR UNIT - DC BUS - B (MDC-21)	D-C main bus B	CC0207V (D-C voltage main bus B)	
	BAT BUS - A	Applies both voltage and current of battery bus A to DC VOLTS and DC AMPS meters.		Battery bus A	CC0210V (D-C voltage battery bus A) CC0222C (D-C current battery A)	MASTER EVENT SEQ CONT-LOGIC-BAT A c/b (MDC-22) controls d-c voltage indication (voltage only) and measurement for telemetry.

Location	Name and Position	Function	Circuit Breaker	Power Source	Telemetry Code No. and Identity	Remarks
MDC-18 (Cont)	BAT BUS - B	Applies both voltage and current of battery bus B to DC VOLTS and DC AMPS meters.		Battery bus B	CC0211V (D-C voltage battery bus B) CC0223C (D-C current battery B)	MASTER EVENT SEQ CONT-LOGIC-BAT B c/b (MDC-22) controls d-c voltage indication (voltage only) and measurement for telemetry.
	BAT CHARGER	Applies both voltage and current output of battery charger to DC VOLT and DC AMPS meter (inner scale 0 to 5 amps).		Battery charger	CC0214V (D-C voltage battery charger out) CC0215C (D-C current battery charger out)	Charger current output will be according to charge required by battery (up to 2.5 amps).
	BAT C	Applies both voltage and current outputs of battery C to DC VOLTS and DC AMPS meters.	BAT CHGR BAT C (LEB-150)	Battery C	CC0212V (D-C voltage post-landing battery) CC0224C (D-C current post-landing battery)	Listed C/B will control d-c voltage indication and measurement for telemetry.
	PYRO BAT - A	Applies output voltage of pyro battery A to DC VOLTS meter.	PYRO A—RCS FUEL DUMP (LEB-150)	Pyro battery A		Since pyro batteries are not normally connected to a load, open circuit nominal voltage of 37.2 will be used for voltage measurement.
	PYRO BAT - B	Applies output voltages of pyro battery B to DC VOLTS meter.	PYRO B—RCS FUEL DUMP (LEB-150)	Pyro battery B		
	AC INVERTER switches				Refer to AC INDICATORS switch	Interlocking circuitry between AC INVERTER-AC BUS 1 and AC BUS 2 switches (MDC-18) prevents more than one inverter from being connected to any one bus at the same time.

Location	Name and Position	Function	Circuit Breaker	Power Source	Telemetry Code No. and Identity	Remarks
MDC-18 (Cont)	Switch 1	Controls d-c power to a-c inverter No. 1 by actuating a motor-driven switch which accomplishes actual switching function.	INVERTER CONTROL - 1 (MDC-22)	Battery relay bus	Refer to AC INDICATORS switch	Circuit breakers associated with delivering power to AC INVERTER No. 1 from d-c main bus A is INVERTER PWR - No. 1 - MN A on main circuit breaker panel (RHEB-4).
	MN A	Applies d-c power to a-c inverter No. 1.				
	OFF	Disconnects d-c power from a-c inverter No. 1.				
	Switch 2	Controls d-c power to a-c inverter No. 2 by actuating a motor-driven switch which accomplishes actual switching function.	INVERTER CONTROL - 2 (MDC-22)			Circuit breaker associated with delivering power to AC INVERTER No. 2 from d-c main bus B is INVERTER PWR - No. 2 - MN B on main circuit breaker panel (RHEB-4).
	MN B	Applies d-c power to a-c inverter No. 2.				
	OFF	Disconnects d-c power from a-c inverter No. 2.				
	Switch 3	Controls d-c power to a-c inverter No. 3 by actuating one of two motor-driven switches depending on bus selected.	INVERTER CONTROL - 3 (MDC-22)			Inverter No. 3 can receive power from either d-c main bus A or d-c main bus B. Associated circuit breakers are INVERTER PWR - No. 3 - MN A and - MN B (RHEB-4).
	MN A	Applies d-c power from main bus A to a-c inverter No. 3.				
	OFF	Disconnects d-c power from a-c inverter No. 3.				
	MN B	Applies d-c power from main bus B to a-c inverter No. 3.				
	AC BUS 1 group					Actuates a motor-driven switch which accomplishes actual switching function.
	Switch 1	Controls a-c output of inverter No. 1 to a-c bus No. 1	INVERTER CONTROL - 1 (MDC-22)			
	ON	Applies a-c output of inverter No. 1 to a-c bus No. 1				
	OFF	Disconnects a-c output of inverter No. 1 from a-c bus No. 1.				

Location	Name and Position	Function	Circuit Breaker	Power Source	Telemetry Code No. and Identity	Remarks
MDC-18 (Cont)	Switch 2	Controls a-c output of inverter No. 2 to a-c bus No. 1.	INVERTER CONTROL - 2 (MDC-22)	Battery relay bus	Refer to AC INDICA-TORS switch	
	ON	Applies a-c output of inverter No. 2 to a-c bus No. 1.				
	OFF	Disconnects a-c output of inverter No. 2 from a-c bus No. 1.				
	Switch 3	Controls a-c output of inverter No. 3 to a-c bus No. 1.	INVERTER CONTROL - 3 (MDC-22)			
	ON	Applies a-c output of inverter No. 3 to a-c bus No. 1.				
	OFF	Disconnects a-c output of inverter No. 3 to a-c bus No. 1.				
	RESET/OFF switch	Provides capability of resetting a-c bus No. 1 over/undervoltage and overload sensing circuits. Also releases relay which reconnects the operating inverter to a-c bus No. 1, if it had been tripped off due to overvoltage or overload.	SNSR UNIT - AC BUS - 1 (MDC-21)		None	Resetting a-c bus 1 over-undervoltage and overload sensing circuits also turns AC BUS 1 FAIL and AC BUS 1 OVERLOAD caution and warning lights off. Circuit breaker associated with the a-c sensing lines on a-c bus No. 1 is AC SNSR SIG - AC1 (MDC-25).
	RESET	Momentary position resets a-c bus No. 1 over-undervoltage and overload sensing circuits.				
	(Center)	Energizes a-c bus No. 1 over-undervoltage and overload sensing circuits.				
	OFF	Disconnects a-c bus No. 1 over-undervoltage and overload sensing circuits from system.				
	AC BUS 2 group				Refer to AC INDICA-TORS switch	Actuates a motor-driven switch which accomplishes actual switching function.
	Switch 1	Controls output of inverter No. 1 to a-c bus No. 2.	INVERTER CONTROL - 2 (MDC-22)			
	ON	Applies output of inverter No. 1 to a-c bus No. 2.				
	OFF	Disconnects output of inverter No. 1 from a-c bus No. 2.				

Location	Name and Position	Function	Circuit Breaker	Power Source	Telemetry Code No. and Identity	Remarks
MDC-18 (Cont)	Switch 2	Controls output of inverter No. 2 to a-c bus No. 2.	INVERTER CONTROL - 3 (MDC-22)	Battery relay bus	Refer to AC INDICATORS switch	
	ON	Applies output of inverter No. 2 to a-c bus No. 2.				
	OFF	Disconnects output of inverter No. 2 from a-c bus No. 2.				
	Switch 3	Control output of inverter No. 3 to a-c bus No. 2.	INVERTER CONTROL - 1 (MDC-22)			
	ON	Applies output of inverter No. 3 to a-c bus No. 2.				
	OFF	Disconnects output of inverter No. 3 from a-c bus No. 2.				
	RESET/OFF switch	Provides capability of resetting a-c bus No. 2 over-undervoltage and overload sensing circuits. Also releases relay which reconnects the operating inverter to a-c bus No. 2 if it has been tripped off due to over-undervoltage or overload.	SNSR UNIT - AC BUS -2 (MDC-21)		None	Resetting a-c bus No. 2 over-undervoltage and overload sensing circuits also turns AC BUS 2 FAIL and AC BUS 2 OVERLOAD caution and warning lights (MDC-11) off. Circuit breaker associated with sensing lines on a-c bus No. 2 is AC SNSR SIG - AC2 (MDC-25).
	RESET	Resets a-c bus No. 2 over-undervoltage and overload sensing circuits.				
	(Center)	Energizes a-c bus No. 2 over-undervoltage and overload sensing circuits.				
	OFF	Disconnects a-c bus No. 2 over-undervoltage and overload sensing circuits from the system.				
	AC VOLTS meter	Indicates a-c voltage of selected source and phase.	AC SNSR SIG - AC 1 AC 2 (MDC-25)	As selected by AC INDICATORS switch	Refer to AC INDICATORS switch	Meter functions in conjunction with AC INDICATORS switch. AC VOLTS meter range is 90 to 130 vac.
	FREQ CPS meter	Indicates frequency of selected source and phase.				FREQ CPS meter range is 380 to 420 cps.
	AC INDICATORS switch	Provide means of monitoring voltage and frequency output of a-c inverters.				Operating range for phase A, B, and C (a-c bus No. 1 or a-c bus No. 2) is 115±2 vac 400 cps, during emergency mode 393 to 407 cps. Only phase A frequency measurement of a-c buses 1 and 2 is telemetered to MSFN.

Location	Name and Position	Function	Circuit Breaker	Power Source	Telemetry Code No. and Identity	Remarks
MDC-18 (Cont)	BUS 1 group		AC SNSR SIG - AC1 (MDC-25)	A-C bus No. 1		
	ØA	Applies a-c phase A voltage from a-c bus No. 1 to AC VOLTS and FREQUENCY meters.			CC0200V (A-C voltage main bus 1 phase A) CC0213F (Frequency a-c bus 1 phase A)	
	ØB	Applies a-c phase B voltage from a-c bus No. 1 to AC VOLTS and FREQUENCY meters.			CC0201V (A-C voltage main bus 1 phase B)	
	ØC	Applies a-c phase C voltage from a-c bus No. 1 to AC VOLTS and FREQUENCY meters.			CC0202V (A-C voltage main bus 1 phase C)	
	BUS 2 group		AC SNSR SIG - AC2 (MDC-25)	A-C bus No. 2		
	ØA	Applies a-c phase A voltage from a-c bus No. 2 to AC VOLTS and FREQUENCY meters.			CC0203V (A-C voltage main bus 2 phase A) CC0217F (Frequency a-c bus 2 - phase A)	
	ØB	Applies a-c phase B voltage from a-c bus No. 2 to AC VOLTS and FREQUENCY meters.			CC0204V (A-C voltage main bus 2 - phase B)	
	ØC	Applies a-c phase C voltage from a-c bus No. 2 to AC VOLTS and FREQUENCY meters.			CC0205V (A-C voltage main bus No. 2 phase C)	

Location	Name and Position	Function	Circuit Breaker	Power Source	Telemetry Code No. and Identity	Remarks
MDC-19	ECS RAD OUT TEMP-1 indicator	Provides temperature indication of water-glycol at outlet of 6-tube circuit of radiator 1 (S/M sector V)	INSTRU-MENT-NONESSEN-TIAL (MDC-22) also NONESSEN-TIAL -9 (RHEB-153)	NONESSEN-TIAL BUS No. 1 (D-C main buses A or B)	SF0671T (Tank ECS radiator outlet 1)	Sensors located in outlet lines of radiators 1A and 2A on S/M forward bulkhead. Normal radiator outlet temperatures should not decrease below 30°F.
	ECS RAD OUT TEMP—2 indicator	Provides temperature indication of water-glycol at outlet of 6-tube circuit of radiator 2 (S/M sector II).			SF0672T (Tank ECS radiator outlet 2)	
	S-BAND ANT indicator	Indicates relative strength of signal being received by USBE.	N/A	USBE	CT0147V (S-Band RCVR AGC voltage)	Signal strength meter that operates off of voltage obtained from AGC circuitry in USBE. No calibration, tune for maximum signal by switching S-band antennas or rotating S/C for optimum reception.
	UP TLM CMD switch RESET OFF	 Applies 28 vdc to the reset windings of all real-time command relays in the UDL RTC relay box. This cancels any real-time commands previously received via the UDL and returns control to the S/C. None	T/C-GROUP 5	Flight and postlanding bus	None	DPDT switch, spring-loaded in the OFF position.
	FLIGHT QUAL RCDR switch RECORD	 Activates FQR electronic circuits and tape transport mechanism to record flight qualification data. Tape moves in forward direction at 15 IPS.	N/A	FQR (Refer to Remarks.)	CT0013X (Tape motion monitor R&D)	Power to the switch is provided by the FQR control logic. The non-essential bus supplies 28-vdc power to the FQR through the PAM XMTR NON ESS circuit breaker (MDC-22). Three-phase a-c power from the TELCOM-NON ESS switch is supplied to the FQR through the T/C - GROUP 1 circuit breaker (MDC-22).

Location	Name and Position	Function	Circuit Breaker	Power Source	Telemetry Code No. and Identity	Remarks
MDC-19 (Cont)	STOP	Remove power from FQR electronic circuits and tape transport mechanism. Tape is locked in place.				**NOTE** The total record time for the FQR is 30 minutes. Since there are no dumping capabilities, the FQR must be used conservatively.
	REWIND	Activates FQR tape transport mechanism to rewind tape. Tape moves in reverse direction at 120 IPS.				The rewind function is provided to allow the crewman to back the tape up to the beginning in case a launch hold occurs after the tape has begun to run or inadvertently left in RECORD. MSFN will direct time of rewind.
	VOICE RECORD event indicator		PAM XMTR NON ESS (MDC-22)	DC NON ESS BUS No. 1		
	Gray area	Voice recorder inactive				Visible when not recording or when tape supply is exhausted.
	Striped area	Voice recorder tape is in motion.				Recording in progress.
	F/C VALVES switch		FUEL CELL 1-H_2&O_2 VALVE FUEL CELL 2-H_2&O_2 VALVE	Battery Relay Bus	None	
	RESET	Momentary switch position actuates motor switch to remove holding voltage from open side of all F/C reactant valves.				Motor switch activated by GSE, provides open side of all F/C reactant valves with holding voltage to prevent inadvertent closing of reactant valves during launch, ascent, and orbital insertion.
	(Down)	Normal switch position disconnects power to motor switch.				**NOTE** To shut down a fuel cell when holding voltage is still applied to F/C reactant valves, F/C VALVES switch must be reset prior to closing F/C reactant valves. Once the F/C reactant valves holding voltage is removed, F/C VALVES switch is inoperative.
	SPS HEATERS		SPS GAUGING MN A dc and MN B dc	MAIN DC A and B bus		
	A	Applies 28 vdc to 26 electrical A strip heaters.				Either system A or B will be utilized to provide temperature control of engine propellant between +40° and +120°F.
	OFF	Removes 28 vdc from 26 electrical heaters.				
	B	Applies 28 vdc to 26 electrical B strip heaters.				

Location	Name and Position	Function	Circuit Breaker	Power Source	Telemetry Code No. and Identity	Remarks
MDC-20	S-BAND switches		T/C - GROUP 5 (MDC-22)	Flight and postlanding bus	None	
	XPONDER/OFF/ XPONDER PWR AMPL switch	Activates USBE, with or without S-band PA, and PMP circuitry which is required for S-band operations.				
	XPONDER	a. De-energizes holding relay K2 in circuit utilization box which: 1. Applies 3-phase a-c power from the T/C - GROUP 2 circuit breaker to the USBE power supply 2. Applies 28-vdc power from the T/C - GROUP 5 circuit breaker to the 20 VDC voltage regulator in the PMP. (Refer to Remarks.) b. Applies 28-vdc power to the S-BAND ANTENNA switch.				This position can be selected to conserve power if S-band communications are good enough to permit operations without the S-band PA equipment. The 20 vdc regulator in the PMP supplies power to those circuits in the PMP which are required for S-band emergency voice, emergency key, and UDL operations.
	OFF	a. Energizes holding relay K2 in circuit utilization box which removes power from circuits described in Function a, XPONDER position. b. Removes 28-vdc power from the S-BAND ANTENNA switch.				
	XPONDER PWR AMPL	a. (Same as for XPONDER position, Function a.) b. (Same as for XPONDER position, Function b.) c. Energizes relay K1 in circuit utilization box which applies 3-phase a-c power from the T/C - SIG COND S-BAND PA circuit breaker (MDC-22) to the S-BAND PA.				This position will normally be selected for S-band communications to ensure adequate strength of transmitted signal. After selecting this position, a 90-second delay occurs to allow for warmup before application of B+ and switching of RF signal to the PA.

Location	Name and Position	Function	Circuit Breaker	Power Source	Telemetry Code No. and Identity	Remarks
MDC-20 (Cont)	PWR AMPL switch		N/A	S-band PA internal circuitry	None	Supplies ground for S-band PA control relays. Effective only when S-BAND-XPONDER/OFF/XPONDER PWR AMPL switch is in XPONDER PWR AMPL position.
	HIGH	Selects high-power (20-watt) output mode of S-BAND PA.				
	LOW	Selects low-power (5-watt) output mode of S-BAND PA.				
	OSC switch			USBE		Supplies ground for USBE control circuitry.
	PRIM	Selects primary oscillator frequency for USBE transmitter. It is obtained from USBE receiver VCO that is controlled by frequency of received S-band carrier to ensure doppler accuracy.				The primary oscillator is selected for all S-band operations unless USBE receiver has a malfunction.
	SEC	Selects secondary oscillator frequency for USBE transmitter. It is obtained from a crystal-controlled auxiliary oscillator.				The S-BAND-VOICE-RNG/RNG ONLY switch must also be in the off (center) position to enable selection of the secondary oscillator. (The secondary oscillator will be selected automatically when ever the S-BAND-EMER switch is set to VOICE.)
	VOICE group	Used to determine USBE/PMP mode and select data to be transmitted via S-band carrier. Only one of the three switches may be moved from the OFF (center) position at any one time. With all three switches at the OFF (center) position the USBE will transmit real-time voice and PCM data in a PM mode.				Three DP3T switches; one pole of each is used to control PMP circuits; the other pole is used to control USBE circuits. Voice transmission controlled by cobra cable PTT pushbutton when audio centers (MDC-13, -23, -26) POWER switch is at VOX. Cobra cable PTT/CW switches must be at PTT.
	RNG/RNG ONLY switch			USBE and PMP internal circuitry (Refer to Remarks.)		Supplies ground returns for USBE and PMP control circuits.
	RNG	Enables PM transmission of received PRN ranging code in addition to real-time voice and PCM data.				Closes a diode switch in the USBE transmitter which allows the PRN ranging signal from the USBE receiver to be modulated in the PM circuit.
	Off (center)	(Refer to VOICE group Function.)				

Location	Name and Position	Function	Circuit Breaker	Power Source	Telemetry Code No. and Identity	Remarks
MDC-20 (Cont)	RNG ONLY	Enables PM transmission of received PRN ranging code and real-time voice. PCM data is eliminated to reduce bandwidth and increase range.	N/A	USBE and PMP internal circuitry (Refer to Remarks.)	None	Removes power from PCM processing circuits in PMP.
	TAPE/ANALOG switch					One pole of this switch supplies ground for USBE control circuits. The other pole supplies 28-vdc control power obtained from the PMP power supply to PMP control circuits.
	TAPE	Enables FM transmission of real-time voice and stored PCM and/or analog data, as follows: a. Supplies 28-vdc control power to TAPE RECORDER—PLAY switch (MDC-20). b. Selects FM output mode of PMP. c. Selects FM transmission mode of USBE.				Refer to TAPE RECORDER—PLAY switch (MDC-20) Function and Remarks for further discussion of recorded data transmission capabilities.
	Off (center)	(Refer to VOICE group Function.)				
	ANALOG	None				This position will be used on future missions to transmit real-time analog data along with voice and PCM.

Location	Name and Position	Function	Circuit Breaker	Power Source	Telemetry Code No. and Identity	Remarks
MDC-20 (Cont)	TV/PLSS switch		N/A	USBE and PMP internal circuitry (Refer to Remarks.)	None	One pole of this switch supplies ground for USBE control circuits. The other pole supplies 28-vdc control power obtained from the PMP power supply to PMP control circuits.
	TV	Enables FM transmission of real-time video data from the TV camera along with real-time voice and PCM data, as follows: a. Closes diode switch in PMP to pass video signal to FM mixer. b. Selects FM output mode of PMP. c. Selects FM transmission mode of USBE				ON/OFF slide switch on TV camera handle must also be set to ON.
	Off (center)	(Refer to VOICE group Function.)				
	PLSS	None				This position will be used on future missions to transmit EVA biomedical data (received via the VHF-AM transmitter-receiver) along with real-time voice and PCM data.
	EMERG switch	Enables transmission of voice or CW code over the S-band carrier with nonessential PMP circuitry disabled.	T/C - GROUP 5 (MDC-22)	Flight and postlanding bus and USBE internal circuitry		Switch applies 28-vdc control power to PMP circuits; supplies ground for USBE circuits.
	VOICE	Enables FM transmission of real-time voice only, as follows: a. Activates a-c power control relay in PMP, turning off 28-vdc power supply that supplies power to non-essential PMP circuits. b. Deactivates voice control relay in PMP, allowing voice signal from audio center equipment to bypass PMP voice processing circuits and go directly to USBE. c. Selects auxiliary oscillator and PM transmission mode in USBE. (Voice signal is applied directly to the auxiliary oscillator.)				Voice transmission possible when audio center (MDC-13, -23, or -26) POWER switch is at VOX and cobra cable PTT pushbutton pressed, cobra cable PTT/CW switch must be at PTT.

Location	Name and Position	Function	Circuit Breaker	Power Source	Telemetry Code No. and Identity	Remarks
MDC-20 (Cont)	Off (center)	Allows normal USBE and PMP operation.	T/C - GROUP 5 (MDC-22)	Flight and postlanding bus and USBE internal circuitry	None	
	KEY	Enables PM transmission of CW code, as follows: a. Activates a-c power control relay in PMP, turning off 28-vdc power supply that supplies power to non-essential PMP circuits. b. Applies 28-vdc power to emergency key circuitry in PMP. c. Selects PM transmission mode in USBE. Either the primary or secondary (auxiliary) oscillator frequency may be used.				Keying of transmitted CW code is accomplished by pressing the PTT pushbutton on cobra cables. (The cobra cable PTT/CW toggle switch must be set to CW.)
	Up-DATA switch			Flight and postlanding bus		
	S-BAND	Activates UDL equipment in S-band mode by applying 28-vdc power to UDL power supply only (UHF/FM receiver portion of UDL equipment is disabled).				Reception of up-data from the MSFN in the S-band mode is via the USBE receiver and PMP up-data discriminator.
	Off (center)	Removes power from UDL equipment.				
	UHF	Activates UDL equipment in UHF mode by applying 28-vdc power to UDL power supply, UHF/FM receiver, and mode switch, all contained in UDL equipment.				

Location	Name and Position	Function	Circuit Breaker	Power Source	Telemetry Code No. and Identity	Remarks
MDC-20 (Cont)	S-BAND ANTENNA switch	Applies 28-vdc control power to 2-KMC antenna switch, either directly or via the USBE threshold selector (when in AUTO position).	N/A	S-BAND - XPONDER/ OFF/ XPONDER PWR AMPL switch (MDC-20)	None	The 28-vdc power is supplied to the S-BAND ANTENNA switch when the S-BAND–XPONDER/OFF/XPONDER PWR AMPL switch (MDC-20) is in the XPONDER or XPONDER PWR AMPL position. This power comes from the flight and postlanding bus via the T/C—GROUP 5 circuit breaker (MDC-22).
	AUTO	Permits automatic selection of SCIN antenna for S-band transmission and reception.				When in automatic mode, selection is made by a threshold selector in the USBE. Selection is based on strength of received signal.
	UPPER	Selects the upper (-Z) SCIN antenna for S-band transmission and reception.				Upper or lower antenna selected manually. S-BAND ANTENNA meter (MDC-19) indicates received signal strength at selected antenna.
	LOWER	Selects the lower (+Z) SCIN antenna for S-band transmission and reception.				
	VHF—AM controls			VHF/AM transmitter-receiver internal circuitry		
	SQUELCH control					
	Rotated upward or downward as required	Increases or decreases sensitivity of squelch gate. Position 9 most sensitive.				Squelch gate sensitivity determines strength of received signal that is required to permit detected audio to pass to audio center equipment.
	T/R/OFF/REC switch		T/C - GROUP 4 (MDC-22)	Flight and postlanding bus		
	T/R	Applies power to transmitter and receiver circuitry in VHF/AM transmitter-receiver.				In the T/R mode the transmitter operates in standby with filaments lit; B+ is not applied until keying occurs by closing PTT pushbutton on cobra cable.
	OFF	Removes power from VHF/AM transmitter-receiver.				
	REC	Applies power to receiver circuitry only in VHF/AM transmitter receiver.				

Location	Name and Position	Function	Circuit Breaker	Power Source	Telemetry Code No. and Identity	Remarks
MDC-20 (Cont)	RCVR switch		N/A	VHF/AM transmitter-receiver internal circuitry	None	
	1	Selects VHF/AM receive frequency No. 1 (296.8 mc).				Receive 1 frequency is used for simplex communications.
	2	Selects VHF/AM receive frequency No. 2 (259.7 mc).				Receive 2 frequency is used for duplex communications.
	C-BAND switch		T/C - GROUP 5	Flight and postlanding bus		
	1 PULSE	Activates C-band transponder in 1-pulse mode, as follows: a. Activates holding relay K3 in circuit utilization box which applies 3-phase a-c power from T/C - GROUP 1 circuit breaker (MDC-22) to C-band transponder power supply. b. Applies control to decoder circuit to select 1-pulse mode.				The 1 PULSE mode is selected only when C-band tracking is required by a MSFN station having no capability for 2-pulse operations. One-pulse mode will be responsive to a 1- or 2-pulse MSFN station. One-pulse operation may be changed by UDL to 2-pulse mode.
	Off (center)	Deactivates C-band transponder equipment.				UDL may turn on C-band in 2-pulse mode.
	2 PULSE	Activates C-band transponder in 2-pulse mode, as follows: a. Activates holding relay K3 in circuit utilization box which applies 3-phase a-c power from T/C - GROUP 1 circuit breaker (MDC-22) to C-band transponder power supply. b. Applies control to decoder circuit to select 2 -pulse mode.				The 2-pulse mode is selected for launch and when C-band tracking is required by MSFN stations having capability for 2-pulse operation. Activation of the C-band transponder in the 2-pulse mode can also be commanded by MSFN by a UDL real-time command.
	VHF-FM switch					The VHF/FM transmitter is the primary means for transmitting PCM TLM, real time or stored. Activation of the VHF/FM transmitter can also be commanded by the MSFN by a UDL real-time command. This command occurs simultaneously with a command to the PCM TLM equipment for high bit-rate PCM.
	ON	Activates VHF/FM transmitter by energizing a relay that applies 3-phase a-c power from the T/C - GROUP 1 circuit breaker (MDC-22) to its power supply.				
	OFF	Deactivates VHF/FM transmitter.				

Location	Name and Position	Function	Circuit Breaker	Power Source	Telemetry Code No. and Identity	Remarks
MDC-20 (Cont)	RECOVERY switches		T/C - GROUP 3 (MDC-22)	Flight and postlanding bus	None	
	VHF-BCN switch					A CW signal is transmitted at 3-second intervals for a period of 2 seconds (2 seconds on, 3 seconds off).
	ON	Applies 28-vdc power to activate VHF recovery beacon.				
	OFF	Removes 28-vdc power from VHF recovery beacon.				
	HF group		T/C - GROUP 4			
	ON/OFF switch					
	ON	Activates HF transceiver, as follows: a. Applies 28-vdc power to receiver and oscillator circuits b. Applies 28-vdc control power to transmitter and antenna switching relays. (Refer to Remarks.)				The transmitter keying relay controls application of 28-vdc power to transmitter circuits. The antenna switching relay disconnects antenna from receiver input and connects it to transmitter output. This provides for simplex HF operation. These relays will not energize until a ground return path is provided by keying the transmitter via VOX circuitry or selecting the beacon mode of operation.
	OFF	Deactivates HF transceiver.				
	SSB/BCN/AM switch		N/A			Supplies ground for mode control circuits.
	SSB	Selects SSB mode of HF transceiver.				
	BCN	a. Selects BCN mode of HF transceiver. b. Provides ground to voice recorder power control relay				In the BCN mode, the HF transceiver emits a continuous unmodulated carrier. This mode will also energize the voice recorder power control relay, circumventing the normal VOX control.
	AM	Selects AM mode of HF transceiver.				

Location	Name and Position	Function	Circuit Breaker	Power Source	Telemetry Code No. and Identity	Remarks
MDC-20 (Cont)	TAPE RECORDER switches			S-BAND—VOICE—TAPE/ANALOG switch, TAPE position (MDC-20)	None	The PMP power supply, when activated, supplies 28 vdc to the S-BAND—VOICE—TAPE/ANALOG switch (MDC). When the TAPE position is selected, this 28 vdc is supplied to the TAPE RECORDER—PLAY switch.
	PLAY switch	Applies 28-vdc control power to appropriate PMP circuits and relays to select DSE outputs for transmission via USBE.	N/A			
	PCM	Selects stored PCM data only.				PCM and NORM perform same function as analog data is not available through DSE on S/C 012 and S/C 014.
	NORM	Selects stored PCM and analog data. No real-time PCM data can be transmitted in this mode.				
	ANALOG	Selects stored analog data. Real-time PCM will be transmitted simultenaously.				Stored analog data is not available through DSE on S/C 012 and S/C 014.
	SPEED switch	Applies 28-vdc control power from TAPE RECORDER—FWD/REV switch (FWD or REV position) to DSE control logic.		TAPE RECORDER-FWD/REV switch, FWD or REV position	CT0012X	DSE control logic reverts to 15 ips (NORM) tape speed if power to FWD/REV switch is lost.
	HIGH	Selects high tape speed (120 IPS).				Used during DSE tape rewind and for playback of recorded LBR used for recording and playback of HBR.
	Norm (center)	Selects normal tape speed (15 IPS).				Used while recording LBR only. DSE cannot dump in LOW.
	LOW	Selects low tape speed (3.75 IPS).				
	RECORD/PLAY switch	Applies 28-vdc control power to DSE control logic.	T/C - GROUP 5 (MDC-22)	Flight and postlanding bus		On future missions, this switch may also be used in conjunction with PMP circuitry to control analog inputs to the DSE.
	RECORD	Activates DSE record electronics.				
	Off (center)	None				DSE control logic requires the switch to be placed at other than OFF and FWD or REV selected prior to tape motion.
	PLAY	Activates DSE playback electronics.				

Location	Name and Position	Function	Circuit Breaker	Power Source	Telemetry Code No. and Identity	Remarks
MDC-20 (Cont)	FWD/REV switch		T/C - GROUP 5 (MDC-22)	Flight and postlanding bus	None	DSE control logic requires this switch to be placed at other than OFF and RECORD or PLAY selected prior to tape motion.
	FWD	Applies 28-vdc control power to: a. DSE control logic to activate tape transport in forward direction. b. TAPE RECORDER—SPEED switch.				
	Off (center)	Removes 28 vdc from control logic and SPEED switches.				
	REV	Applies 28-vdc control power to: a. DSE control logic to activate tape transport in reverse direction b. TAPE RECORDER—SPEED switch.				This position used for rewind and also during reverse data dump.
	PWR switches					
	SCE switch					This switch set to ON prior to launch and should remain on throughout entire mission.
	ON	Activates "latch" coil of relay in SCE, applying 3-phase a-c power from SIG COND S-BAND PA circuit breaker (MDC-22) to SCE power supply.				
	OFF	Activates "unlatch" coil of relay in SCE, removing 3-phase a-c power.				
	PMP switch					
	ON	Allows 3-phase a-c power from T/C - GROUP 2 circuit breaker to be applied to PMP 28 vdc power supply.				
	OFF	Activates relay in PMP to remove 3-phase a-c power from PMP 28 vdc power supply.				OFF position causes loss of normal voice, TV, ranging and S-band PCM TLM.

Location	Name and Position	Function	Circuit Breaker	Power Source	Telemetry Code No. and Identity	Remarks
MDC-20 (Cont)	TLM INPUTS switches		N/A	PCM/TLM Equipment and TAPE RECORDER-RECORD/PLAY switch	None	Supplies 28-vdc control power from TAPE RECORDER—RECORD/PLAY switch (RECORD position) to the DSE control logic and ground for programmer control circuitry in the PCM/TLM equipment.
	PCM switch					
	HIGH	a. Selects wide-band PCM TLM data mode (51.2 KBPS bit-rate) in PCM/TLM equipment. b. Selects normal-speed assurance mode of DSE.				The low (1.6 KBS) PCM bit-rate cannot also be commanded by the MSFN by an UDL real-time command in this position.
	LOW	a. Selects narrow-band PCM TLM data mode (1.6 KBPS bit-rate) in PCM/TLM equipment. b. Selects low-speed assurance mode in DSE.				UDL command from MSFN may change bit rate to high (51.2 kbs). Switch will, however, remain in LOW.
	ANALOG switch	None		N/A		This switch will be used on future missions to select one of two groups of analog measurements for transmission to MSFN or storage in the DSE.
	1					
	2					
	BIOMED switch		BIOMED COMM—MN B (MDC-25) & T/C - GROUP 5 (MDC-22)	D-C main bus B & flight & postlanding bus (Refer to Remarks.)		Supplies 28-vdc power from BIOMED COMM—MN B circuit breaker to physiological amplifier of selected astronaut, and supplied 28 vdc from T/C - GROUP 5 circuit breaker to control transmission of proper PCM signal to indicate position of switch to MSFN.
	1	Selects operational biomedical data from command pilot for transmission or storage in DSE.				
	2	Selects operational biomedical data from senior pilot for transmission or storage in DSE.				
	3	Selects operational biomedical data from pilot for transmission or storage in DSE.				
	VHF ANTENNA switch	Applies 28-vdc control power to VHF antenna switch latching relay circuits.	T/C - GROUP 5 (MDC-22)	Flight and postlanding bus		
	RECOVERY	Connects VHF recovery antenna No. 2 to VHF multiplexer.				This position not used until after parachute deployment and disreefing.
	UPPER	Connects VHF portion of SCIN antenna on the -Z axis to VHF multiplexer.				Upper and lower antennas manually selected to permit most advantageous reception and transmission of VHF-AM communications and VHF-FM telemetry.

Location	Name and Position	Function	Circuit Breaker	Power Source	Telemetry Code No. and Identity	Remarks
MDC-20 (Cont)	LOWER	Connects VHF portion of SCIN antenna on the +Z axis to VHF multiplexer.	T/C - GROUP 5 (MDC-22)	Flight and postlanding bus	None	
	He TANK indicators		INSTRU-MENTS— ESS MN A MN B (MDC-22)	D-C main buses A and B		
	PRESS	Indicates SPS helium storage tank pressure when SPS TANK PRESS switch (MDC-20) is in the He position.			SP0001P (He tank pressure)	Identical in operation but differ in calibration, each indicator consists of d'Arsonval-type meter with fixed dial and movable pointer. Pointer movement is vertical as observed from crew couch.
					SP0600P (N_2 A tank pressure)	
	N_2 TK PRESS	Indicates SPS gaseous nitrogen storage tank pressure of engine pneumatic valve control system A and B when SPS TANK PRESS switch (MDC-20) is in the N_2 A or N_2 B position, respectively.			SP0601P (N_2 B tank pressure)	Pressure indicator display is in psia, and range is 0 to 5000 psia.
	PROP TEMP	Provide constant monitoring of SPS propellant temperature.			SP0048T	Temperature indicator display is in degrees Fahrenheit and range is -100° to +200°F.
	PRESSURE indicators					Four indicators are identical in operation. Each consists of d'Arsonval-type meter with fixed dial and movable pointer. Pointer movement is vertical as observed from crew couch. Each indicator is calibrated in psia with range of 0 to 300 psia.
	FUEL	Provides constant monitoring of SPS fuel tank regulated helium pressure.			SP0006P (fuel tank pressure)	
	OX	Provide constant monitoring of SPS oxidizer tank regulated helium pressure.			SP0003P (oxidizer tank pressure)	
	ENG INLET group					
	FUEL	Provides constant monitoring of SPS fuel pressure at the engine main propellant valves.			SP0010P (fuel line engine inlet)	
	OX	Provides constant monitoring of SPS oxidizer pressure at the engine main propellant valves.			SP0009P (oxidizer line engine inlet)	

Location	Name and Position	Function	Circuit Breaker	Power Source	Telemetry Code No. and Identity	Remarks
MDC-20 (Cont)	SPS ENGINE INJECT VALVE indicators 1 (2, 3, 4)	Provides visual indication of SPS engine main propellant valves open or closed condition (one oxidizer and one fuel valve per pair and one indicator for each pair of valves).	T/C - GROUP 5 (MDC-22)	Flight and postlanding bus	Valve position: A-1 SP0022H A-2 SP0023H B-3 SP0024H B-4 SP0025H **NOTE** Separate pickoffs for display and T/M signals.	Four identical indicators. Each is needle-movement-type meter with inputs supplied by position potentiometer located on valve actuator arm. Left needle deflection indicates CLOSE; right deflection indicates OPEN.
	SPS TANK PRESS switch He N_2A N_2B	Connects SPS helium storage tank pressure output to He TANK PRESS indicator (MDC-20). Connects SPS gaseous nitrogen storage tank pressure output of engine control valve system A to TK PRESS indicator (MDC-20). Connects SPS gaseous nitrogen storage tank pressure output of engine control valve system B to TK PRESS indicator (MDC-20).	N/A	N/A	None	Three-position toggle switch used to select SPS helium or nitrogen tank pressure input to He TANK PRESS or N_2 TK PRESS indicator on MDC-20.
	SPS HELIUM switches (two, left hand and right hand) AUTO OFF	Two operationally identical switches. Provides for automatic application and removal of power from helium isolation valve solenoid. Removes power from helium isolation valve solenoid.	SPS-He VALVE MN A MN B (MDC-25)	D-C main buses A and B		Each switch is a three-way toggle switch. With this switch in the AUTO position, valve opening and closing is controlled automatically by G&N system and/or SCS. Complete manual control of valve position can be maintained by utilizing ON - OFF switch positions. D-C main buses A and B provide power to helium pressurizing systems A and B, respectively.

Location	Name and Position	Function	Circuit Breaker	Power Source	Telemetry Code No. and Identity	Remarks
MDC-20 (Cont)	ON	Applies power to helium isolation valve solenoid.	SPS-He VALVE MN A MN B (MDC-25)	D-C main buses A and B	None	Each switch controls helium flow to one of two redundant pressure regulator assemblies.
	SPS HELIUM event indicators (two)	Striped-line display indicates open conditions of valve controlled by switch located directly below indicator. Gray display indicates closed condition.				Two identical indicators. Each is two-condition device with striped-line display controlled by solenoid action and gray display controlled by permanent magnet action.
	QUANTITY display windows OXID FUEL	Digital counter display window indicating total oxidizer tank quantity remaining (in pounds times 20). Digital counter display window indicating total fuel tank quantity remaining (in pounds times 10).	SPS—GAUGING MN A MN B AC 1 AC 2 (MDC-25)	400-cps a-c input from quantity gauging system control unit		Digital display in oxidizer quantity (OXID) window and fuel quantity (FUEL) window represent remaining tank quantities and are marked X20 and X10, respectively. These markings facilitate determination of correct remaining propellant quantities. Since desired oxidizer/fuel ratio is 2:1, digital display in both windows should be identical when propellant ratio is correct.
	UNBALANCE indicator	Indicates unbalance of remaining SPS propellants.				Indicator is graduated into six major divisions, each representing 100 pounds of propellant unbalalnce. Upper half indicates increased oxidizer flow required; lower half, decreased flow. Indicator needle at 0 (horizontal position) indicates desired propellant ratio.
	TEST/AUTO/TEST switch TEST (up) AUTO TEST (down)	Applies simulated input to propellant quantity gauging and utiliziation system control unit, causing digital display counters and UNBALANCE indicator to function for test check. Normal operating position. Applies simulated input for same purposes as TEST (up) position, except in reverse polarity.		D-C and a-c test inputs from quantity gauging system control unit		Three-position toggle switch, spring-loaded to AUTO position. TEST position allows for visual check of proper electrical and mechanical operation of propellant indicating devices. In addition to indicator checks, TEST position may be used to aid in isolating a malfunction in either primary or auxiliary propellant quantity sensing system. Test rate for OXID digits is approximately 3 digits/second; FUEL 1.5 digits/second.

Location	Name and Position	Function	Circuit Breaker	Power Source	Telemetry Code No. and Identity	Remarks
MDC-20 (Cont)	OXID FLOW switch		SPS—GAUGING MN A MN B AC 1 AC 2 (MDC-25)	D-C and a-c test inputs from quantity gauging system control unit	None	Three-position toggle switch used as required to regulate oxidizer flow rate to maintain proper propellant utiliziation. Remaining propellant SPS unbalance may be determined by monitoring UNBALANCE meter or by calculations, utilizing information displayed in OXID and FUEL quantity digital display windows. Maximum PU valve response time from increase to decrease position in 3.5 seconds.
	INCREASE	Supplied increased signal to propellant utilization valve PRI or SEC motor selected by VALVE switch. INCREASE position —46.65 lb/sec.				
	NORM	Supplies normal signal to propellant utilization valve PRI or SEC motor selected by VALVE switch. NORM position — 45.27 lb/sec at 70°F and 168±4 PSIG.				
	DECREASE	Supplies decreased signal to propellant utilization valve PRI or SEC motor selected by VALVE switch. DECREASE position — 43.87 lb/sec.				
	OXID FLOW event indicators					Two identical indicators. Each is a two-condition device controlled by servo action. When propellant utilization valve is in normal oxidizer flow rate position, gray display will appear in both indicator windows.
	Upper indicator	Striped-line display indicates propellant utilization valve is in increased oxidizer flow rate position; gray display indicates it is not.				
	Lower indicator	Striped-line display indicates propellant utilization valve is in decreased oxidizer flow rate position; gray display indicates it is not.				
	VALVE switch			D-C input from quantity gauging system		Two-position toggle switch which provides manual selection of primary or secondary gates in propellant utilization valve. The PU valve secondary gate is capable of adjusting for increased, decreased, or normal oxidizer flow area regardless of a primary gate failure in any position.
	PRI	Applies power to propellant utilization valve primary servo amplifier.				
	SEC	Applies power to propellant utilization valve secondary servo amplifier.				

Location	Name and Position	Function	Circuit Breaker	Power Source	Telemetry Code No. and Identity	Remarks
MDC-20 (Cont)	SENSOR switch		SPS—GAUGING MN A MN B AC 1 AC 2 (MDC-25)	400-cps a-c input from quantity gauging system control unit	None	Three-position toggle switch, with switch in NORM position during normal operation. This switch, when used in conjunction with TEST switch (MDC-20), can be useful in isolating a malfunction in propellant quantity sensing system.
	PRI	Applies output from primary propellant quantity sensing system to propellant quantity indicating and warning devices.				
	NORM	Applies outputs from both primary and auxiliary sensing systems to propellant quantity warning devices and output from primary propellant sensing system to propellant quantity indicating devices.				
	AUX	Applies output from auxiliary propellant sensing system to propellant quantity indicating and warning devices.				
MDC-21	SUIT COMPRESSOR selector switch				None	Only one suit compressor can be operated at a time, with second compressor for standby redundancy.
	COMPR 1					
	AC 2	Applies a-c power to motor of suit compressor No. 1 from bus No. 2.	ECS-SUIT COMPRESSORS AC 2 ØA ØB ØC (MDC-22)	A-C bus No. 2		Output of each compressor is as follows: a. Prelaunch mode - 32.7 cfm and ΔP of 0.7 to 0.9 psi. b. Normal mode - 35 cfm and ΔP of 0.3 to 0.4 psi. c. Emergency mode - 33.6 cfm and ΔP of 0.2 to 0.3 psi.
	AC 1	Applies a-c power to motor of suit compressor No. 1 from bus No. 1.	ECS-SUIT COMPRESSORS AC 1 ØA ØB ØC (MDC-22)	A-C bus No. 1		
	OFF	Removes a-c power from motors of suit compressors.				
	COMPR 2					
	AC 1	Applies a-c power to motor of suit compressor No. 2 from bus No. 1.				

Location	Name and Position	Function	Circuit Breaker	Power Source	Telemetry Code No. and Identity	Remarks
MDC-21 (Cont)	1/2	Applies a-c power to compressor No. 2 from bus to the following motors: a. NO. 1 suit compressor from bus NO. 1. b. NO. 2 suit compressor from bus NO. 2.	ECS-SUIT COM-PRESSORS AC 1 Ø A Ø B Ø C and AC 2 Ø A Ø B Ø C (MDC-22)	A-C bus No. 2	None	Switch position permits simultaneous operation of both suit compressors during periods of high suit heat loads.
	ECS GLYCOL pump selector switch PUMP 1					Only one water-glycol pump can be operated at a time, with second pump for standby redundancy.
	AC 2	Applies a-c power to motor of No. 1 water-glycol pump from bus No. 2	ECS-GLYCOL PUMPS-AC 2 Ø A Ø B Ø C (MDC-22)	A-C bus No. 2		Pump design specification figures are 200 lb/hr flow at a pressure rise of 29.5 psi, with a pump inlet of 7.5±1.5 psig at 100°F (max). Actual flow varies inversely with system pressure drop.
	AC 1	Applies a-c power to motor of No. 1 water-glycol pump from bus No. 1	ECS-GLYCOL PUMPS-AC 1 Ø A Ø B Ø C (MDC-22)	A-C bus No. 1		
	OFF	Removes a-c power from motors of water-glycol pumps.				
	PUMP 2					
	AC 1	Applies a-c power to motor of No. 2 water-glycol pump from bus No. 1				

Location	Name and Position	Function	Circuit Breaker	Power Source	Telemetry Code No. and Identity	Remarks
MDC-21 (Cont)	AC 2	Applies a-c power to motor of No. 2 water-glycol pump from bus No. 2.	ECS-GLYCOL PUMPS-AC 2 Ø A Ø B Ø C (MDC-22)	A-C bus No. 2	None	
	CABIN AIR FAN switches 1 switch ON	Applies a-c power to motor of No. 1 cabin air fan, directing airflow through cabin heat exchanger.	ECS-CABIN AIR FAN 1 Ø A Ø B Ø C (MDC-22)	A-C bus No. 1		Cabin air fans No. 1 and No. 2 are operated simultaneously to obtain adequate cooling. Output of fan is as follows: a. Prelaunch mode - 171.45 cfm. b. Normal mode - 170.67 cfm. c. Emergency mode - 0 cfm (fan off).
	OFF	Removes a-c power from motor of No. 1 cabin air fan.				In event of malfunction, fan No. 1 is turned off and fan closure cover manually installed over inlet to prevent backflow.
	2 switch ON	Applies a-c power to motor of No. 2 cabin air fan, directing airflow through cabin heat exchanger.	ECS-CABIN AIR FAN 2 Ø A Ø B Ø C (MDC-22)	A-C bus No. 2		Cabin air fans No. 1 and No. 2 are operated simultaneously to obtain adequate cooling. Output of fan is as follows: a. Prelaunch mode - 171.45 cfm. b. Normal mode - 170.67 cfm. c. Emergency mode - 0 cfm (fan off).
	OFF	Removes a-c power from motor of No. 2 cabin air fan.				In event of malfunction, fan No. 2 is shut down and fan closure cover is manually installed over inlet to prevent backflow.

Location	Name and Position	Function	Circuit Breaker	Power Source	Telemetry Code No. and Identity	Remarks
MDC-21 (Cont)	POT H_2O HEATER switch				None	Two heating elements totaling 45 watts (20 and 25 watts each) are mounted at separate locations inside the food preparation water unit. Operating simultaneously, they heat the water from an inlet temperature of 60°F to 154±4°F. The maximum time to heat 1.9 lb of water (reservoir capacity) is approximately 2 hours.
	MN A	Applies d-c power to potable water heater from main bus A.	ECS-POT H_2O HTR MN A (MDC-22)	D-C main bus A		
	OFF	Removes d-c power from potable water heater.				
	MN B	Applies d-c power to potable water heater from main bus B.	ECS-POT H_2O HTR MN B (MDC-22)	D-C main bus B		
	ECS RADIATOR switches					Under most normal conditions all space radiator valves are placed in the open position. Exceptions to this are during ground checkout are ascent. The only other time a valve is closed is when a radiator circuit is isolated in event of leakage. Space radiator valves, which must be in the full open or full closed position, require 17 seconds (max) for full travel.
	Group 1					
	A (on)	Applies a-c power to actuator of space radiator isolation valve 1A to place valve in open position, permitting water-glycol flow to the six-tube circuit of the radiator located in S/M sector V (-Y axis).	ECS-RAD VALVE AC 1 1A (MDC-22)	A-C bus No. 1 ØA		
	OFF	Applies a-c power to actuator of space radiator isolation valve 1A to place valve in closed position, cutting off water-glycol flow to the radiator tube circuit.				
	B (on)	Applies a-c power to actuator of space radiator isolation valve 1B to place valve in open position, permitting water-glycol flow to the four-tube circuit of the radiator located in S/M sector V (-Y axis).	ECS-RAD VALVE AC 2 1B (MDC-22)	A-C bus No. 2 ØA		
	OFF	Applies a-c power to actuator of space radiator isolation valve 1B to place valve in closed position, cutting off water-glycol flow to the radiator tube circuit.				

Location	Name and Position	Function	Circuit Breaker	Power Source	Telemetry Code No. and Identity	Remarks
MDC-21 (Cont)	Group 2				None	
	A (on)	Applies a-c power to actuator of space radiator isolation valve 2A to place valve in open position, permitting water-glycol flow to the six-tube circuit of the radiator located in S/M sector II (+Y axis).	ECS-RAD VALVE AC 2 2A (MDC-22)	A-C bus No. 2 ØC		
	OFF	Applies a-c power to actuator of space radiator isolation valve 2A to place valve in closed position, cutting off water-glycol flow to the radiator tube circuit.				
	B (on)	Applies a-c power to actuator of space radiator isolation valve 2B to place valve in open position, permitting water-glycol flow to the four-tube circuit of the radiator located in S/M sector II (+Y axis).	ECS-RAD VALVE AC 1 2B (MDC-22)	A-C bus No. 1 ØB		
	OFF	Applies a-c power to actuator of space radiator isolation valve 2B to place valve in closed position, cutting off water-glycol flow to the radiator tube circuit.				
	RCS HEATERS circuit breakers		N/A	+28 vdc		Thermal, push-pull manual reset-type circuit breakers with the amperage rating of each denoted by a white placard.
	A MN B (20 amp)	Applies power from d-c main bus B to the following: a. SM RCS quad A package heater b. Normally open contacts of relay activated by CM RCS HTRS switch (RHFEB-1) for CM RCS system B engine injector valve direct coils utilized for engine preheating.				

Location	Name and Position	Function	Circuit Breaker	Power Source	Telemetry Code No. and Identity	Remarks
MDC-21 (Cont)	B MN A (20 amp)	Applies power from d-c main bus A to the following: a. SM RCS quad B package heater b. Normally open contacts of relay activated by CM RCS HTRS switch (RHFEB-1) for CM RCS system A engine injector valve direct coils utilized for engine preheating.	N/A	+28 vdc	None	
	C MN B (5 amp)	Applies power from d-c main bus B to package heater in S/M RCS quad C.				
	D MN A (5 amp)	Applies power from d-c main bus A to package heater in S/M RCS quad D.				
	SNSR UNIT circuit breakers					
	DC BUS group					
	A (5 amp)	Applies d-c power from battery relay bus through MAIN BUS A-RESET switch to d-c main bus A undervoltage sensing unit.				Sensing unit is inoperative when MAIN BUS A-RESET switch is in the OFF position.
	B (5 amp)	Applies d-c power from battery relay bus through MAIN BUS B-RESET switch to d-c main bus B undervoltage sensing unit.				Sensing unit is inoperative when MAIN BUS B-RESET switch is in the OFF position.
	AC BUS group					
	1 (5 amp)	Applies d-c power from battery relay bus through AC BUS 1-RESET switch to a-c bus No. 1 over-undervoltage and overload sensing circuits.				Sensing unit is inoperative when AC BUS 1-RESET switch is in the OFF position.
	2 (5 amp)	Applies d-c power from battery relay bus through AC BUS 2-RESET switch to a-c bus No. 2 over-undervoltage and overload sensing circuits.				Sensing unit is inoperative when AC BUS 2-RESET switch is in the OFF position.

Location	Name and Position	Function	Circuit Breaker	Power Source	Telemetry Code No. and Identity	Remarks
MDC-22	FUEL CELL PUMP switches				None	Two parallel pump motors are associated with each fuel cell. One motor drives the H_2 circulating pump and the water separation centrifuge. The other motor drives the glycol circulating pump. ØA power is supplied to the pH sensor. Switches are located between bus and c/b's.
	Switch 1	Is capable of selecting a-c bus No. 1, a-c bus No. 2, or off for fuel cell No. 1 pump motors and the pH sensor.	FUEL CELL 1 - CIR & SEP MOTORS (MDC-22)			
	AC 1	Controls 3Ø a-c power from a-c bus No. 1 to fuel cell No. 1 pump motors and ØA to the pH sensor.		A-C bus No. 1		
	OFF	Disconnects 3Ø a-c power from pump motors and ØA from the pH sensor.				
	AC 2	Controls 3Ø a-c power from a-c bus No. 2 to fuel cell No. 1 pump motors and ØA to the pH sensor.		A-C bus No. 2		
	Switch 2	Is capable of selecting a-c bus No. 1, a-c bus No. 2, or off for fuel cell No. 2 pump motors and pH sensor.	FUEL CELL 2 - CIR & SEP MOTORS (MDC-22)			
	AC 1	Controls 3Ø a-c power from a-c bus No. 1 to fuel cell No. 2 pump motors and ØA to the pH sensor.		A-C bus No. 1		
	OFF	Disconnect 3Ø a-c power from pump motors and ØA from the pH sensor.				
	AC 2	Controls 3Ø a-c power from a-c bus No. 2 to fuel cell No. 2 pump motors and ØA to the pH sensor.		A-C bus No. 2		
	Switch 3	Is capable of selecting a-c bus No. 1, a-c bus No. 2, or off for fuel cell No. 3 pump motors and the pH sensor.	FUEL CELL 3 - CIR & SEP MOTORS (MDC-22)			
	AC 1	Controls 3Ø a-c power from a-c bus No. 1 to fuel cell No. 3 pump motors and ØA to the pH sensor.		A-C bus No. 1		
	OFF	Disconnects 3Ø a-c power from pump motors and ØA from the pH sensor.				
	AC 2	Controls 3Ø a-c power from a-c bus No. 2 to fuel cell No. 3 pump motors and ØA to the pH sensor.		A-C bus No. 2		

MAIN DISPLAY CONSOLE—PANEL 22

Location	Name and Position	Function	Circuit Breaker	Power Source	Telemetry Code No. and Identity	Remarks
MDC-22 (Cont)	MAIN BUS TIE switches					
	BAT A & C/AUTO/ OFF switch		BATTERY CHARGER-BAT A CHGE (MDC-22)	Battery bus A		
	BAT A & C	Allows manual control of bus tie motor switch to: a. Connect battery bus A to d-c main bus A and battery C to d-c main bus B. b. Disconnect BATTERY CHARGER selector switch (MDC-18) from battery bus A and battery C.				Actuates motor-driven switch which accomplishes actual switching function.
	AUTO	In the event of an LES abort or normal CSM separation, this position allows the C/M RCS control box to control bus tie motor switch connecting battery bus A to d-c main bus A and battery C to d-c main bus B and disconnects BATTERY CHARGER selector switch (MDC-18).				
	OFF	Allows manual control of motor switch to: a. Disconnect battery bus A from d-c main bus A and battery C from d-c main bus B. b. Connects BATTERY CHARGER selector switch (MDC-18) to battery bus A and battery C.				
	BAT B & C/AUTO/ OFF switch		BATTERY CHARGER-BAT B CHGE (MDC-22)	Battery bus B		
	BAT B & C	Allows manual control of bus tie motor switch to: a. Connect battery bus B to d-c main bus B and Battery C to d-c main bus A. b. Disconnect BATTERY CHARGER selector switch (MDC-18) from battery bus B and battery C.				Actuates motor-driven switch which accomplishes actual switching function.

Location	Name and Position	Function	Circuit Breaker	Power Source	Telemetry Code No. and Identity	Remarks
MDC-22 (Cont)	AUTO	In the event of an LES abort or normal CSM separation, this position allows the C/M RCS control box to control bus tie motor switch connecting battery bus B to d-c main bus B and battery C to d-c main bus A, and disconnects BATTERY CHARGER selector switch (MDC-18).	BATTERY CHARGER-BAT B CHGE (MDC-22)	Battery bus B	None	
	OFF	Allows manual control of motor switch to: a. Disconnect battery bus B from d-c main bus B and battery C from d-c main bus A. b. Connect BATTERY CHARGER selector switch (MDC-18) to battery bus B and battery C.				
	BAT CHGR switch	Provides means of selecting a-c bus No. 1 or a-c bus No. 2 for battery charger a-c power source.	BATTERY CHARGER-AC PWR (MDC-22)			Switch works with BATTERY CHARGER selector switch (MDC-18) to enable battery charger operation.
	AC 1	Controls 3Ø a-c power from a-c bus No. 1 to battery charger during battery charging operation.		A-C bus No. 1		
	AC 2	Controls 3Ø a-c power from a-c bus No. 2 to battery charger during battery charging operation.		A-C bus No. 2		
	NON ESS BUS switch					Equipment associated with this switch is: a. Special equipment bay No. 1 — NON ESS BUS NO. 2 b. Special equipment bay No. 2 — NON ESS BUS NO. 2 c. Special equipment hatch — NON ESS BUS NO. 2 d. Flight qualification recorder — NON ESS BUS NO. 1 e. Nonessential instrumentation — NON ESS BUS NO. 1 f. Voice recorder — NON ESS BUS NO. 1
	MN A	Connects nonessential bus No. 1 and No. 2 to d-c main bus A.		D-C main bus A		
	OFF	Disconnects nonessential buses from d-c main buses				
	MN B	Connects nonessential bus No. 1 and No. 2 to d-c main bus B.		D-C main bus B		

Location	Name and Position	Function	Circuit Breaker	Power Source	Telemetry Code No. and Identity	Remarks
MDC-22 (Cont)	G&N VIEWER switch	Provides means of selecting a-c bus No. 1 or a-c bus No. 2 for LEB panel brightness control, SCT and SXT reticle lights and signal conditioner.	VIEWER AC 1 and AC 2 (MDC-22)		None	
	AC 1	Selects 3Ø a-c power from a-c bus No. 1		A-C bus No. 1		
	AC 2	Selects 3Ø a-c power from a-c bus No. 2		A-C bus No. 2		
	TELCOM switches					Equipment associated with this switch is: a. Unified S-band equipment b. Premodulation processor c. Signal conditioning equipment d. S-band power amplifier.
	ESS switch	Provides control of 3Ø a-c power to the TELECOMMUNICATIONS-GROUP - 2 and SIG CONDS-BAND PA (MDC-22) telecommunications (T/C) equipment which is essential to safety of flight.				
	AC 1	Controls 3Ø a-c power from a-c bus No. 1 to essential T/C equipment controlled by TELECOMMUNICATIONS - GROUP - 2 and SIG COND S-BAND PA (MDC-22).	None	A-C bus No. 1		
	OFF	Disconnects 3Ø a-c power from essential T/C equipment.		A-C bus No. 2		
	AC 2	Controls 3Ø a-c power from a-c bus No. 2 to essential T/C equipment.				
	NONESS switch	Provides control of 3Ø a-c power to TELECOMMUNICATIONS-GROUP - 1 and PCM TLM (MDC-22) telecommunications (T/C) equipment which is not essential to safety of flight.				Equipment associated with this switch is: a. PCM telemetry b. VHF/FM transmitter c. C-band transponder d. Data storage equipment e. Flight qualification recorder f. Voice recorder
	AC 1	Controls 3Ø a-c power from a-c bus No. 1 to nonessential T/C equipment.				
	OFF	Disconnects 3Ø a-c power from nonessential T/C equipment.				
	AC 2	Controls 3Ø a-c power from a-c bus No. 2 to nonessential T/C equipment.		A-C bus No. 2		

Location	Name and Position	Function	Circuit Breaker	Power Source	Telemetry Code No. and Identity	Remarks
MDC-22 (Cont)	FUEL CELL 1 circuit breaker		N/A		None	
	CIR & SEP MOTORS (3 amp)	a. Applies 3Ø power from a-c bus No. 1 or 2 through FUEL CELL PUMP - 1 switch to C/B, and to circulator and separator pump motors in fuel cell 1. b. Provides ØA power to pH sensor probe.		115 vac 400 cps 3Ø		
	H_2 & O_2 VALVE (10 amp)	Applies d-c power from battery relay bus to FUEL CELL 1 - REACTANTS switch (MDC-18).		+28 vdc		
	BUS CONT (10 amp)	a. Applies d-c power from battery relay bus to F/C 1 bus disconnect control through FUEL CELL 1 - MAIN BUS A and MAIN BUS B switches and event indicators (MDC-18). b. Provides power to reactants event indicator.				
	PURGE (5 amp)	Applies power from d-c main buses A and B to F/C 1 purge valve control through FUEL CELL 1 - O_2 PURGE - H_2 PURGE switch (MDC-18).				
	FUEL CELL 2 circuit breakers					
	CIR & SEP MOTORS (3 amp)	a. Applies 3Ø power from a-c bus No. 1 or 2 through FUEL CELL PUMP - 2 switch to C/B, and to circulator and separator pump motors in fuel cell 2. b. Provides ØA power to pH sensor probe.		115 vac 400 cps 3Ø		

Location	Name and Position	Function	Circuit Breaker	Power Source	Telemetry Code No. and Identity	Remarks
MDC-22 (Cont)	H_2 & O_2 VALVE (10 amp)	Applies d-c power from battery relay bus to FUEL CELL 2 - REACTANTS switch (MDC-18).	N/A	+28 vdc	None	
	BUS CONT (10 amp)	a. Applies d-c power from battery relay bus to F/C 2 bus disconnect control through FUEL CELL 2 - MAIN BUS A and MAIN BUS B switches and event indicators (MDC-18). b. Provides power to reactants event indicator.				
	PURGE (5 amp)	Applies power from d-c main buses A and B to F/C 2 purge valve control through FUEL CELL 2 - O_2 PURGE - H_2 PURGE switch (MDC-18).				
	FUEL CELL 3 circuit breakers					
	CIR & SEP MOTORS (3 amp)	a. Applies 3Ø power from a-c bus No. 1 or 2 through FUEL CELL PUMP - 3 switch to C/B, and to circulator and separator pump motors in fuel cell 3. b. Provides ØA power to pH sensor probe.		115 vac 400 cps 3Ø		
	H_2 & O_2 VALVE (10 amp)	Applies d-c power from battery relay bus to FUEL CELL 3 - REACTANTS switch (MDC-18).		+28 vdc		

Location	Name and Position	Function	Circuit Breaker	Power Source	Telemetry Code No. and Identity	Remarks
MDC-22 (Cont)	BUS CONT (10 amp)	a. Applies d-c power from battery relay bus to F/C 3 bus disconnect control through FUEL CELL 3 - MAIN BUS A and MAIN BUS B switches and event indicators (MDC-18) b. Provides power to reactants event indicator.	N/A	+28 vdc	None	
	PURGE (5 amp)	Applies power from d-c main buses A and B to F/C purge valve control through FUEL CELL 3 - O_2 PURGE - H_2 PURGE switch (MDC-18).				
	INVERTER CONTROL circuit breakers					
	1 (10 amp)	Applies d-c power from battery relay bus to AC INVERTER 1 and AC INVERTER 3 switches (MDC-18).				
	2 (10 amp)	Applies d-c power from battery relay bus to AC INVERTER 2 and AC INVERTER 1 switches (MDC-18).				
	3 (10 amp)	Applies d-c power from battery relay bus to AC INVERTER 2 and AC INVERTER 3 switches (MDC-18).				
	MASTER EVENT SEQ CONT circuit breakers					
	ARM group					
	BAT A (5 amp)	Applies d-c power from battery bus A to the following switches: a. MESC-LOGIC ARM switches A and B (MDC-25) b. MASTER EVENT SEQ CONT-PYRO ARM switches A and B (MDC-24) c. LES MOTOR FIRE switch (MDC-5) d. CANARD DEPLOY switch (MDC-5)				

Location	Name and Position	Function	Circuit Breaker	Power Source	Telemetry Code No. and Identity	Remarks
MDC-22 (Cont)		e. ADAPT SEP switch (MDC-5) f. REACTION CONTROL SYSTEM - C/M PRESS switch (MDC-16) g. REACTION CONTROL SYSTEM - CMD/ON/OFF switch (MDC-16) h. C/M - S/M SEP switches A and B (MDC-15).	N/A	+28 vdc	None	
	BAT B (5 amp)	Applies d-c power from battery bus B to the following switches: a. MESC-LOGIC ARM switches A and B (MDC-25) b. MASTER EVENT SEQ CONT - PYRO ARM switches A and B (MDC-24) c. LES MOTOR FIRE switch (MDC-5) d. CANARD DEPLOY switch (MDC-5) e. ADAPT SEP switch (MDC-5) f. REACTION CONTROL SYSTEM - C/M PRESS switch (MDC-16) g. REACTION CONTROL SYSTEM - CMD/ON/OFF switch (MDC-16) h. C/M - S/M SEP switches A and B (MDC-15).				
	LOGIC group BAT A (15 amp)	a. Applies d-c power from battery bus A to the logic A bus in the master event sequence controller when the MESC - LOGIC ARM switches A and B (MDC-25) are in the LOGIC ARM position. The logic bus in turn provides power to the ABORT SYSTEM—MODE switches A and B and, during LES aborts, to the ABORT SYSTEM—OX DUMP switch.				

Location	Name and Position	Function	Circuit Breaker	Power Source	Telemetry Code No. and Identity	Remarks
MDC-22 (Cont)		b. Arms the abort switch in commanders translation control c. Provides part of the power to the LES and SPS abort circuitry.	N/A	+28 vdc	None	
	BAT B (15 amp)	a. Applies d-c power from battery bus B to the logic B bus in the master event sequence controller when the MESC - LOGIC ARM switches A and B (MDC-25) are in the LOGIC ARM position. The logic bus in turn provides power to the ABORT SYSTEM—MODE switches A and B and, during LES aborts provides power to the ABORT SYSTEM—OX DUMP switch. b. Arms the abort switch in commanders translation control. c. Provides part of the power for the LES and SPS abort circuitry.				
	DC SNSR SIG circuit breakers					Unit receives power from battery relay bus through circuit breakers on MDC-21.
	MN A (5 amp)	Applies sensing signal from d-c main bus A to d-c undervoltage sensing unit and DC INDICATORS switch.				
	MN B (5 amp)	Applies sensing signal from d-c main bus B to d-c undervoltage sensing unit and DC INDICATORS switch.				
	CENTRAL TIMING SYS circuit breakers		None			The CTE contains two power supplies for redundancy, No. 1 and No. 2. If either one fails, the other will provide sufficient power for the CTE.
	MN A (5 amp)	Applies 28-vdc power to CTE power supply No. 1		D-C main bus A		
	MN B (5 amp)	Applies 28-vdc power to CTE power supply No. 2		D-C main bus B		
	SCIEN EQUIP circuit breakers					
	SEB-1 (20 amp)	Applies power from non-essential bus to scientific equipment outlet in compartment A.		NON ESS BUS NO. 2 +28 vdc		Compartment A scientific equipment outlet is located in the LEB. (See figure 4-13.)

Location	Name and Position	Function	Circuit Breaker	Power Source	Telemetry Code No. and Identity	Remarks
MDC-22 (Cont)	SEB-2 (20 amp)	Applies power from non-essential bus to S14/17 monitor and control unit for power to open S/M X-ray sensor door.	N/A	NON ESS BUS NO. 2 +28 vdc	None	(See figure 4-13.)
	BAT RLY BUS circuit breakers					
	BAT A (20 amp)	Applies d-c power from battery bus A through an isolation diode to battery relay bus.		Entry Battery A		Circuit breaker must be opened when battery A is being charged.
	BAT B (20 amp)	Applies d-c power from battery bus B through an isolation diode to battery relay bus.		Entry Battery B		Circuit breaker must be opened when battery B is being charged.
	BATTERY CHARGER circuit breakers			+28 vdc		
	BAT A CHGE (10 amp)	Applies d-c power from battery bus A to MAIN BUS TIE - BAT A & C switch (MDC-22) and through contacts of bus tie motor switch to position A of BATTERY CHARGER selector switch (MDC-18).				
	BAT B CHGE (10 amp)	Applies d-c power from battery bus B to MAIN BUS TIE - BAT B & C switch (MDC-22) and through contacts of bus tie motor switch to position B of BATTERY CHARGER selector switch (MDC-18).				
	MN A (5 amp)	Applies power from d-c main bus A, through an isolation diode, to BATTERY CHARGER selector switch (MDC-18) and d-c contacts of battery charger input-power control relay.				
	MN B (5 amp)	Applies power from d-c main bus B, through an isolation diode, to BATTERY CHARGER selector switch (MDC-18) and d-c contacts of battery charger input-power control relay.				

Location	Name and Position	Function	Circuit Breaker	Power Source	Telemetry Code No. and Identity	Remarks
MDC-22 (Cont)	AC PWR (2 amp)	Applies power from a-c bus No. 1 or a-c bus No. 2 to contacts of battery charger input-power control relay.	None	115 vac 400 cps 3 phase	None	
	TELECOMMUNICATIONS circuit breakers GROUP number					
	1 (2 amp)	Applies 115-vac 3-phase power to: a. VHF-FM transmitter via internal power control relay controlled by VHF/FM switch (MDC-20) b. C-band transponder via power control relay K3 in circuit utilization box; relay is controlled by C-BAND switch (MDC-20) c. DSE; controlled by TAPE RECORDER switches (MDC-20) and logic circuitry in DSE d. FQR; controlled by FLIGHT QUAL RCDR switch (MDC-19) and logic circuitry in FQR. e. Voice recorder power converter, controlled by HF-T/R and POWER-VOX switches MDC-13, -23, -26.		A-C bus No. 1 or 2		A-C bus supplying power to this equipment is determined by position of TELCOM—NON ESS switch (MDC-22).
	2 (2 amp)	Applies 115-vac 3-phase power to: a. USBE power supply via power control relay K2 in circuit utilization box, relay is controlled by S-BAND-XPONDER/OFF/XPONDER PWR AMPL switch (MDC-20) b. PMP power supply via internal power control relay, controlled by PWR-PMP switch and S-BAND-EMERG switch (MDC-20).				A-C bus supplying power to this equipment is determined by position of TELCOM—ESS switch (MDC-22).

Location	Name and Position	Function	Circuit Breaker	Power Source	Telemetry Code No. and Identity	Remarks
MDC-22 (Cont)	3 (5 amp)	Applies 28-vdc power to: a. Engineer's audio center POWER switch (MDC-23) b. RECOVERY—VHF-BCN switch (MDC-20) c. Commander's left microphone amplifier d. Engineer's right microphone amplifier.	None	Flight and Postlanding Bus	None	
	4 (10 amp)	Applies 28-vdc power to: a. Commander's audio center POWER switch (MDC-26) b. VHF/AM transmitter-receiver and HF transceiver keying relay coils c. RECOVERY—HF—ON/OFF switch (MDC-20) d. VHF-AM—T/R/OFF/REC switch (MDC-20) e. Navigator's left microphone amplifier f. Commander's right microphone amplifier.				
	5 (7.5 amp)	Applies 28-vdc power to: a. Navigator's audio center POWER switch (MDC-13) b. TAPE RECORDER—FWD/REV switch (MDC-20) c. TAPE RECORDER—RECORD/PLAY switch (MDC-20) d. POWER—SCE switch (MDC-20) e. POWER—PMP switch (MDC-20) f. S-BAND—EMERG switch (MDC-20) g. VHF-FM—ON/OFF switch (MDC-20)				

Location	Name and Position	Function	Circuit Breaker	Power Source	Telemetry Code No. and Identity	Remarks
MDC-22 (Cont)		h. S-BAND—PWR AMPL switch (MDC-20) i. C-BAND—1 PULSE/2 PULSE switch (MDC-20) j. S-BAND PA equipment k. TV equipment l. DSE m. USBE power control relays n. UP-DATA switch (MDC-20) and up-data link equipment o. VHF ANTENNA switch (MDC-20) p. S-BAND ANTENNA switch through S-BAND-XPONDER/OFF/XPONDER PWR AMPL switch (MDC-20) q. Engineer's left microphone amplifier r. Navigator's right microphone amplifier s. BIO-MED PCM/TLM	None	Flight and Postlanding Bus	None	
	PCM TLM (2 amp)	Applies 115 vac 3-phase power to PCM/telemetry equipment.		AC NON ESS BUS 1 or 2		A-C bus supplying power to this equipment is determined by position of TELCOM—NON ESS switch (MDC-22).
	SIG COND S-BAND PA (2 amp)	Applies 115 vac 3-phase power to: a. SCE power supply via internal latching relay controlled by PWR-SCE switch (MDC-20) b. S-band PA power supplies via power control relay K1 in circuit utilization box; relay is controlled by S-BAND-XPONDER/OFF/XPONDER PWR AMPL switch (MDC-20).				A-C bus supplying power to this equipment is determined by position of TELCOM—ESS switch (MDC-22).
	SCIEN EQUIP HATCH circuit breaker (20 amp)	Applies power from nonessential bus to No. 2 to scientific equipment receptacle below RH and LH observation windows.		DC NON ESS BUS NO. 2 +28 vdc		(See figures 5-3 and 5-4.)

Location	Name and Position	Function	Circuit Breaker	Power Source	Telemetry Code No. and Identity	Remarks
MDC-22 (Cont)	ECS circuit breakers H_2O ACCUM group		None	+28 vdc	None	
	MN A (5 amp)	Applies power from d-c main bus A to the following: a. H_2O ACCUM-AUTO 1/MAN/AUTO 2 switch (MDC-13) b. H_2O accumulator pump failure detection unit.				
	MN B (5 amp)	Applies power from d-c main bus B to the following: a. H_2O ACCUM-AUTO 1/MAN/AUTO 2 switch (MDC-13) b. H_2O accumulator pump failure detection unit.				
	GAS ANAL circuit breaker AC 1 (2 amp)	Applies ØA a-c power to gas chromatograph package (GFE) located in scientific equipment compartment of LEB.		115 vac 400 cps 3Ø		
	INSTRUMENTS circuit breakers ESS group					
	MN A (15 amp)	Applies 28-vdc power to ESSENTIAL - 1, -2, -3, & -4 circuit breakers on INST PWR CONT panel (RHEB-153).		D-C main bus A		
	MN B (15 amp)	Applies 28-vdc power to ESSENTIAL - 1, -2, -3, & -4 circuit breakers on INST PWR CONT panel (RHEB-153).		D-C main bus B		
	NON ESS BUS (5 amp)	None				
	NON ESS (15 amp)	Applies 28-vdc power to NON ESSENTIAL-5 through -10 circuit breakers on INST PWR CONT panel (RHEB-153).		D-C main bus A or B		

Location	Name and Position	Function	Circuit Breaker	Power Source	Telemetry Code No. and Identity	Remarks
MDC-22 (Cont)	PAM XMTR NON ESS (5.0 amp)	Applies 28-vdc power to FQR. Applies 28-vdc power to VOICE RECORD event indicator (MDC-19)	None	D-C main bus A or B	None	The nonessential buses No. 1 and No. 2 obtain 28 vdc power from D-C main bus A or B, depending on position of NON ESS BUS switch (MDC-22).
	SCIEN (7.5 amp)	Applies power from nonessential bus No. 1 for scientific instruments. (Not used.)				
	GUIDANCE & NAVIGATION circuit breakers			+28 vdc		
	IMU HTR group					
	MN A (7.5 amp)	Applies power from d-c main bus A to IMU heaters.				
	MN B (7.5 amp)	Applies power from d-c main bus B to IMU heaters.				
	IMU group					
	MN A (25 amp)	Applies power from d-c main bus A to IMU.	N/A			
	MN B (25 amp)	Applies power from d-c main bus B to IMU.				
	COMPUTER group					
	MN A (10 amp)	Applies power from d-c main bus A to AGC.				
	MN B (10 amp)	Applies power from d-c main bus B to AGC.				
	OPTICS group					
	MN A (10 amp)	Applies power from d-c main bus A to optics.				
	MN B (10 amp)	Applies power from d-c main bus B to optics.				
	VIEWER group					
	AC 1 (1 amp)	Applies power from a-c bus No. 1 to G&N VIEWER switch.		115 vac 400 cps ØB		
	AC 2 (1 amp)	Applies power from a-c bus No. 2 G&N VIEWER switch.				

Location	Name and Position	Function	Circuit Breaker	Power Source	Telemetry Code No. and Identity	Remarks
MDC-22 (Cont)	ENVIRONMENTAL CONTROL SYSTEM circuit breakers		N/A		None	
	CABIN AIR FAN - 1 group					
	AC 1	Applies 3Ø power from a-c bus No. 1 to the following:		115 vac 400 cps 3Ø		
	ØA (2 amp) ØB (2 amp) ØC (2 amp)	a. CABIN AIR FAN - 1 switch MDC-21) b. Waste management blower switch (RHEB-122).				
	CABIN AIR FAN -2 group					
	AC 2	Applies power from a-c bus No. 2 to the following:				
	ØA (2 amp) ØB (2 amp) ØC (2 amp)	a. 3Ø to CABIN AIR FAN-2 switch (MDC-21) b. ØC to CABIN TEMP - AUTO/MAN switch (MDC-13).				
	GLYCOL PUMPS group					
	AC 1	Applies power from a-c bus No. 1 to the following:				
	ØA (2 amp) ØB (2 amp) ØC (2 amp)	a. 3Ø to ECS GLYCOL pump switch (MDC-21) b. ØA to GLYCOL EVAP - TEMP IN switch (MDC-13) c. ØB to SUIT EVAP switch (MDC-13) d. ØC to GLYCOL EVAP - STEAM PRESS - AUTO/MAN switch (MDC-13).				
	AC 2	Applies power from a-c bus No. 2 to the following:				
	ØA (2 amp) ØB (2 amp) ØC (2 amp)	a. 3Ø to ECS GLYCOL pump switch (MDC-21) b. ØA to GLYCOL EVAP - H_2O FLOW switch (MDC-13).				

Location	Name and Position	Function	Circuit Breaker	Power Source	Telemetry Code No. and Identity	Remarks
MDC-22 (Cont)	TRANSDUCER group		N/A		None	
	WASTE & POT H_2O			+28 vdc		
	MN A (5 amp)	Applies power from d-c main bus A to the following pressure transducers: a. Waste water tank b. Potable water tank.				
	MN B (5 amp)	Applies power from d-c main bus B to the following pressure transducer: a. Waste water tank b. Potable water tank.				
	PRESS GROUPS-1					
	MN A (5 amp)	Applies power from d-c main bus A to the following pressure transducers: a. Suit b. Compressor ΔP c. Water-glycol pump discharge d. Water-glycol accumulator (quantity) e. Water-gly evap steam.				
	MN B (5 amp)	Applies power from d-c main bus B to the following pressure transducers: a. Suit b. Compressor ΔP c. Water-glycol pump discharge d. Water-glycol accumulator (quantity) e. Water-gly evap steam.				
	PRESS GROUPS-2					
	MN A (5 amp)	Applies power from d-c main bus A to the following pressure transducers: a. O_2 flow rate b. O_2 supply regulator outlet (telemetered only)				

Location	Name and Position	Function	Circuit Breaker	Power Source	Telemetry Code No. and Identity	Remarks
MDC-22 (Cont)		c. Cabin d. CO_2 partial pressure.	N/A	+28 vdc	None	
	MN B (5 amp)	Applies power from d-c main bus B to the following pressure transducers: a. O_2 flow rate b. O_2 supply regulator outlet (telemetered only) c. Cabin d. CO_2 partial pressure.				
	TEMP group					
	MN A (5 amp)	Applies power from d-c main bus A to the temperature transducer power supply, and in turn to the following transducer amplifiers: a. Water-gly evap liquid outlet b. Cabin c. Suit d. Steam duct (telemetered only) e. Space radiator outlet.				
	MN B (5 amp)	Applies power from d-c main bus B to the temperature transducer power supply, and in turn to the following transducer amplifiers: a. Water-gly evap liquid outlet b. Cabin c. Suit d. Steam duct (telemetered only) e. Space radiator outlet.				
	SUIT COMPRESSORS group					
	AC 1 ØA (2 amp) ØB (2 amp) ØC (2 amp)	Applies power from a-c bus No. 1 to SUIT COMPRESSOR switch (MDC-21).		115 vac 400 cps 3Ø		

Location	Name and Position	Function	Circuit Breaker	Power Source	Telemetry Code No. and Identity	Remarks
MDC-22 (Cont)	AC 2 ØA (2 amp) ØB (2 amp) ØC (2 amp)	Applies power from a-c bus No. 2 to SUIT COMPRESSOR switch (MDC-21).	N/A	115 vac 400 cps 3Ø	None	
	RAD VALVE group AC 1 1A (2 amp)	Applies ØA power from a-c bus No. 1 to ECS - RADIATOR-1-A switch (MDC-21).				
	2B (2 amp)	Applies ØB power from a-c bus No. 1 to ECS - RADIATOR-2-B switch (MDC-21).				
	AC 2 1B (2 amp)	Applies ØA power from a-c bus No. 2 to ECS - RADIATOR-1-B switch (MDC-21).				
	2A (2 amp)	Applies ØC power from a-c bus No. 2 to ECS - RADIATOR-2-A switch (MDC-21).				
	POT H_2O HTR group MN A (5 amp)	Applies power from d-c main bus A to the following: a. POT H_2O HEATER switch (MDC-21) b. GLYCOL EVAP - H_2O FLOW switch (MDC-13).		+28 vdc		
	MN B (5 amp)	Applies power from d-c main bus B to the following: a. POT H_2O HEATER switch (MDC-21) b. GLYCOL EVAP - H_2O FLOW switch (MDC-13) c. WASTE H_2O TK REFILL switch (MDC-13).				

Location	Name and Position	Function	Circuit Breaker	Power Source	Telemetry Code No. and Identity	Remarks
MDC-22 (Cont)	CRYOGENIC TANK FAN MOTORS circuit breakers		N/A		None	
	AC 1 group					
	ØA (2 amp)	Applies a-c ØA power from a-c bus No. 1 ØA to: a. H_2 FANS - 1 switch (MDC-13) b. O_2 FANS - 1 switch (MDC-13).		115 vac ØA		
	ØB (2 amp)	Applies a-c ØB power from a-c bus No. 1 ØB to: a. H_2 FANS - 1 switch (MDC-13) b. O_2 FANS - 1 switch (MDC-13).		115 vac ØB		
	ØC (2 amp)	Applies a-c ØC power from a-c bus No. 1 ØC to: a. H_2 FANS - 1 switch (MDC-13) b. O_2 FANS - 1 switch (MDC-13).		115 vac ØC		
	AC 2 group					
	ØA (2 amp)	Applies a-c ØA power from a-c bus No. 2 ØA to: a. H_2 FANS - 2 switch (MDC-13) b. O_2 FANS - 2 switch (MDC-13).		115 vac ØA		
	ØB (2 amp)	Applies a-c ØB power from a-c bus No. 2 ØB to: a. H_2 FANS - 2 switch (MDC-13) b. O_2 FANS - 2 switch (MDC-13).		115 vac ØB		
	ØC (2 amp)	Applies a-c ØC power from a-c bus No. 2 ØC to: a. H_2 FANS - 2 switch (MDC-13) b. O_2 FANS - 2 switch (MDC-13).		115 vac ØC		

Location	Name and Position	Function	Circuit Breaker	Power Source	Telemetry Code No. and Identity	Remarks
MDC-22 (Cont)	CRYOGENIC SYSTEM circuit breakers		N/A	+28 vdc	None	
	TANK HEATERS group					
	H_2 circuit breakers					
	MN A (5 amp)	Applies power from d-c main bus A to H_2 HEATERS-1 switch (MDC-13).				
	MN B (5 amp)	Applies power from d-c main bus B to H_2 HEATERS- 2 switch (MDC-13).				
	O_2 circuit breakers					
	MN A (15 amp)	Applies power from d-c main bus A to O_2 HEATERS-1 switch (MDC-13).				
	MN B (15 amp)	Applies power from d-c main bus B to O_2 HEATERS-2 switch (MDC-13).				
	QTY AMPL group			115 vac 400 cps ØC		
	AC1-ØC (2 amp)	Applies power from a-c bus No. 1 (ØC) to H_2 and O_2 No. 1 tanks signal conditioning boxes.				
	AC2-ØC (2 amp)	Applies power from a-c bus No. 2 (ØC) to H_2 and O_2 No. 2 tanks signal conditioning boxes.				
MDC-23	FLOODLIGHTS control		COUCH ATTEN MN A MN B FLOOD-LIGHTS (MDC-25)	D-C main buses A and B	None	FLOODLIGHTS controls on MDC-23, -26, and LEB-100 are functionally identical and each controls the floodlights in its respective area.
	PRIMARY rheostat					
	OFF	Removes power from C/M primary floodlights.				
	BRIGHT	Indicates maximum floodlight brightness has been reached.				The rheostat control may be adjusted for desired brightness of primary
	SECONDARY switch					
	ON	Illuminates secondary floodlights.				
	OFF	Removes power from secondary floodlights.				

Location	Name and Position	Function	Circuit Breaker	Power Source	Telemetry Code No. and Identity	Remarks
MDC-23 (Cont)	C/W LAMP TEST switch		CAUT/ WARN- MN A MN B (MDC-25)	D-C main buses A and B	None	Lamp check of G&N condition lights and the MASTER ALARM light on LEB-103 is accomplished by pressing CHECK CONDITION LAMPS switch (LEB-105).
	1	Completes d-c ground return path for test illumination of system status lights on MDC-10 and the MASTER ALARM switch-lights on MDC-3 and -18.				Master alarm tone is not activated by test illumination of lights.
	OFF	Opens d-c ground return path of lamp test circuit, extinguishing system status lights on MDC-10 and -11.				
	2	Completes d-c ground return path for test illumination of system status lights on MDC-11.				
	POWER switch	Controls power to pilots module in audio center equipment.	T/C— GROUP 3 (MDC-22)	Flight and postlanding bus		The audio center will not be activated unless the POWER switch is in PTT or VOX position.
	PTT	Applies d-c power to audio and control circuits.				Permits monitoring of audio inputs to audio center and PTT activation of other audio center functions.
	OFF	Removes power from pilots audio center equipment module and controls.				
	VOX	a. Applies d-c power to audio and control circuits b. Enables VOX control of mike amplifier by supplying ground to VOX circuitry.				VOX operation permits automatic voice transmission and transmitter keying of intercom, HF recovery transceiver and voice recorder.
	S-BAND switch		N/A	Audio center equipment		The S-BAND, HF, VHF-AM, and INTERCOM switches all control ground return paths for appropriate diode switching and isolation circuitry in the pilots module of the audio center equipment to allow transmission and reception, or reception alone, of voice signals over selected equipment. The HF and VHF-AM switches also provide ground return paths for the HF and VHF-AM transmitter keying circuits when in the T/R position.
	T/R	No effect. S-band T/R function supplied by cobra cable PTT key.				
	OFF	Prevents pilot from receiving voice over USBE.				
	RCV	Enables pilot to receive voice from USBE.				

Location	Name and Position	Function	Circuit Breaker	Power Source	Telemetry Code No. and Identity	Remarks
MDC-23 (Cont)	HF switch		N/A	Audio center equipment	None	Provides power ground through audio center VOX or PTT circuits for HF transceiver transmit-receive relay and voice recorder power relay.
	T/R	a. Enables pilot to transmit and receive voice over HF transceiver when operating in AM or SSB mode. b. Enables voice recorder through VOX or PTT circuits.				
	OFF	Prevents pilot from transmitting or receiving voice over HF transceiver.				
	RCV	Enables pilot to receive voice from HF transceiver when operating in AM or SSB mode.				
	VHF AM switch					VHF-AM transmits, in addition to S-band voice, when cobra cable PTT key is closed. Cobra cable PTT/CW switches must be at PTT, and audio center POWER switch must at VOX.
	T/R	Enables pilot to transmit and receive voice over VHF/AM transmitter-receiver when operating in T/R mode.				
	OFF	Prevents pilot from transmitting or receiving voice over VHF-AM transmitter-receiver.				
	RCV	Enables pilot to receive voice from VHF-AM transmitter-receiver.				
	INTERCOM switch					
	T/R	Enables pilot to transmit and receive voice over the intercom system.				
	OFF	Prevents pilot from transmitting or receiving voice over intercom system.				
	RCV	Enables pilot to receive voice from intercom system.				

Location	Name and Position	Function	Circuit Breaker	Power Source	Telemetry Code No. and Identity	Remarks
MDC-23 (Cont)	VOX SENS control	Increases or decreases sensitivity of voice-operated relay circuitry in pilots audio center module.	N/A	Audio center equipment	None	These three controls are thumbwheel-type potentiometers which may be rotated upward or downward, as required.
	INTERCOM BALANCE control	Increases or decreases level of audio signal received by pilot from RF equipment relative to that received from intercom bus.				Position 9 most sensitive
	VOLUME control	Increases or decreases level of audio signal from pilot's ear-phone amplifier to earphone.				
MDC-24	EDS POWER switch ON	Supplies entry battery A, B, and C power to the EDS buses 1, 2, and 3.	EDS-1, 2, 3 BAT A BAT C and BAT B (MDC-25)	Battery buses A, B, and entry battery C	None	Closing of the EDS POWER switch provides power to the EDS display circuitry and also supplies power for the EDS auto abort initiating circuitry.
	OFF	Removes power from EDS buses 1, 2, and 3.				
	MASTER EVENT SEQ CONT—PYRO ARM switches Switches A and B PYRO ARM	Energizes relays in the MESC which perform the following: a. Connects pyro battery A to the MESC pyro bus A b. Connects pyro battery B to the MESC pyro bus B c. Connects pyro battery A to the C/M RCSC pyro bus A d. Connects pyro battery B to the C/M RCSC pyro bus B. e. Connects pyro battery A to the ELSC pyro bus A. f. Connects pyro battery B to the ELSC pyro bus B.	MASTER EVENT SEQ CONT- A ARM B BAT A and BAT B (MDC-22)	Battery buses A and B	CD0005V DC voltage pyro bus A CD0006V DC voltage pyro bus B	Lever lock-type switches are locked in the SAFE position and must be unlocked before they can be set to PYRO ARM position. The lock and guard assembly must be unlocked with a key prior to hatch closeout. The pad safety officer will have possession of the key.
	SAFE	Removes pyro battery power from the MESC pyro buses A and B, and RCS controllers.				
	SCS GROUP 2 controls TVC 2 POWER switch AC 1	Applies a-c power to the gimbal positioning portion of the following: a. Yaw ECA b. Pitch ECA c. Redundant gimbal trimpot	SCS—GROUP 2 AC 1 (MDC-25)	A-C bus No. 1		TVC 2 POWER switch supplies power to the redundant TVC electronics. Switch must be set to AC 1 or AC 2 position during any ΔV maneuver. It will provide the backup TVC capability required for automatic switchover from TVC 1 in the event of a malfunction. MTVC can only be accomplished using TVC 2 electronics. It also provided power to the MTVC electronics.

Location	Name and Position	Function	Circuit Breaker	Power Source	Telemetry Code No. and Identity	Remarks
MDC-24 (Cont)	OFF	Removes a-c power from units supplied by AC 1 and AC 2 positions.	SCS—GROUP 2 AC 1 (MDC-25)	A-C bus No. 1	None	
	AC 2	Applies a-c power to the following: a. Yaw ECA b. Pitch ECA c. Redundant gimbal trim pot	SCS—GROUP 2 AC 2 (MDC-25)	A-C bus No. 2		
	ROTATION CONTROL POWER switch					Switch is a three-position toggle and must be in either the 1 or 2 position for normal rotation control operation.
	AC 1	Applies a-c power to the following: a. Command pilot's rotation control b. Senior pilot's rotation control c. Pitch ECA d. Yaw ECA e. Roll ECA	SCS—GROUP 2 AC 1 (MDC-25)	A-C bus No. 1 ØA		This switch has no affect on the rotation control direct mode function. Power for the two rotation controls is provided through the yaw, pitch, and roll ECAs. The power applied to yaw, pitch, and roll ECAs is demodulator reference voltage for rotation control output signals.
	OFF	Removes a-c power from units supplied by positions 1 and 2.				
	AC 2	Applies a-c power to the following: a. Command pilot's rotation control b. Senior pilot's rotation control c. Pitch ECA d. Yaw ECA e. Roll ECA	SCS—GROUP 2 AC 2 (MDC-25)	A-C bus No. 2 ØA		
	BMAG POWER switch					The power applied to DISPLAY/AGAA ECS is used to operate the BMAGs, torquing amplifiers, and preamplifiers in the AGAA. The power applied to pitch, yaw, and roll ECAs is demodulator reference voltage for BMAG error signal.
	AC 1	Applies a-c and d-c power to the following: a. DISPLAY/AGAA ECA b. Pitch ECA c. Yaw ECA d. Roll ECA e. Attitude gyros spin motor power through DISPLAY/AGAA ECA	SCS—GROUP 2 AC 1 MN A (MDC-25)	A-C bus No. 1 D-C main bus A		

Location	Name and Position	Function	Circuit Breaker	Power Source	Telemetry Code No. and Identity	Remarks
MDC-24 (Cont)	OFF	Removes a-c and d-c power from units supplied by position AC 1 and AC 2.	SCS—GROUP 2 AC 1 MN A (MDC-25)	A-C bus No. 1 D-C main bus A	None	Provides power for backup rate function.
	AC 2	Applies a-c and d-c power to the following: a. DISPLAY/AGAA ECS b. Pitch ECA c. Yaw ECA d. Roll ECA e. Attitude gyros spin motor power through DISPLAY/AGAA ECA.	SCS—GROUP 2 AC 2 MN B (MDC-25)	A-C bus No. 2 D-C main bus B		
	SCS GROUP 1 controls PARTIAL SCS POWER switch		SCS—GROUP 1 AC 1 MN A (MDC-25)	A-C bus No. 1 D-C main bus A		Switches are three-position rotary type. Refer to section 6, Normal/Backup Procedures, for the various switch positions required for the flight control modes. D-C voltage is provided to AS/GPI and the FDAI ALIGN switch. Three-phase a-c voltage is provided for the following: a. Aux ECA demodulator reference voltages and AGCU power supplies. b. FDAI total attitude display motor and associated electronics. Phase A a-c voltage is provided for the following: a. FDAI error needles for backup rate b. FDAI ball drive servo amplifier c. FDAI rate needles for backup rate d. FDAI self-test circuit e. AS/GPI gimbal position excitation voltage f. Square wave generator reference voltage g. AGCU amplifier demodulator reference voltage.
	AC 1	Applies a-c and d-c power to the following: a. DISPLAY/AGAA ECA b. Pitch ECA c. Roll ECA d. Auxiliary ECA e. Yaw ECA f. Velocity change indicator g. Attitude set/gimbal position indicator.				
	OFF	Removes a-c and d-c power from units supplied by AC 1 and AC 2 positions.				
	AC 2	Applies a-c and d-c power to the following: a. DISPLAY/AGAA ECA b. Pitch ECA c. Roll ECA d. Auxiliary ECA e. Yaw ECA f. Velocity change indicator g. Attitude set/gimbal position indicator.	SCS—GROUP 1 AC 2 MN B (MDC-25)	A-C bus No. 2 D-C main bus B		

Location	Name and Position	Function	Circuit Breaker	Power Source	Telemetry Code No. and Identity	Remarks
MDC-24 (Cont)	RATE GYRO POWER switch		SCS—GROUP 1 AC 1 (MDC-25)	A-C bus No. 1	None	The RATE GYRO POWER switch applies three-phase, 115-vac power to the rate gyro assembly. Phase A, 115-vac power is provided for the following: a. Roll, pitch, yaw ECA rate demodulator reference voltage b. Pitch, yaw, and roll rate demodulator reference in DISPLAY/AGAA ECA
	AC 1	Applies a-c power to the following: a. Rate gyro assembly b. Yaw ECA c. Pitch ECA d. Roll ECA e. DISPLAY/AGAA ECA.				
	OFF	Removes a-c power from units supplies by AC 1 and AC 2 positions.				
	AC 2	Applies a-c power to the following: a. Rate gyro assembly b. Yaw ECA c. Pitch ECA d. Roll ECA e. DISPLAY/AGAA ECA.	SCS—GROUP 1 AC 2 (MDC-25)	A-C bus No. 2		
	TVC 1 POWER switch					The TVC 1 POWER switch applies 115 vac and 28 vdc to the pitch and yaw TVC power supplies in the TVC electronics. Switch also provides necessary power for operating the ΔV REMAINING electronics. After completion of a burn, the switch must be placed to OFF then on to reactivate the ΔV inhibit circuit. Switch also provides power to the X-axis accelerometer on associated electronics through circuits in the DISPLAY/AGAA ECA.
	AC 1	a. Applies a-c power to the pitch and yaw ECAs b. Applies d-c power to the DISPLAY/AGAA ECA c. X-axis accelerometer	SCS—GROUP 1 AC 1 MN A (MDC-25)	A-C bus No. 1 D-C main bus A		
	OFF	Removes a-c and d-c power from units supplied by AC 1 and AC 2 positions.				
	AC 2	a. Applies a-c power to the pitch and yaw ECAs. b. Applies d-c power to the DISPLAY/AGAA ECA c. X-axis accelerometer	SCS—GROUP 1 AC 2 MN B (MDC-25)	A-C bus No. 2 D-C main bus B		

Location	Name and Position	Function	Circuit Breaker	Power Source	Telemetry Code No. and Identity	Remarks
MDC-24 (Cont)	DIRECT O_2 metering valve		N/A	N/A	None	Valve has a shaft rotation of 1-3/4 turns from OPEN to close, and is manually controlled by a T-handle tool. This tool is stowed in DIRECT O_2 valve socket for use in positioning other valves accessible to crewman in LH couch. A second T-handle tool is stowed in LHEB-139 for operating valves in that area.
	OPEN (ccw)	Permits controlled flow of oxygen directly into suit circuit.				Valve is opened in event of contamination or inability of demand pressure regulator to maintain minimum pressure. It may also be opened for cooling during descent, if necessary. In full open position flow rate is 0.66 pound/minute for approximately 5 minutes.
	Close (cw)	Shuts off flow of oxygen directly into suit circuit.				Normal position of valve is closed.
MDC-25	POSTLANDING controls		N/A		None	
	FLOAT BAG 1 PL BUS circuit breaker (5 amp)	Applies d-c power from the flight and postlanding bus to the POSTLANDING-FLOAT BAG switch No. 1 (MDC-25).		+28 vdc		
	VENT FAN group					
	PL BUS-FLOAT BAG 2 circuit breaker (5 amp)	Applies d-c power from flight and postlanding bus to the following: a. FLOAT BAG switch 2 (MDC-25) b. VENT FAN-HIGH/LOW/OFF switch (MDC-25).				
	HIGH/LOW/OFF switch		POSTLANDING—VENT FAN PL BUS—FLOAT BAG 2 (MDC-25)	Flight and postlanding bus		Prior to switch actuation, lockpins installed in both vent valves must be pulled.
	HIGH	Applies d-c power to the following: a. Inlet and outlet vent valve motors, placing valves in open position. b. Vent fan motor for high flow output.				Output of cabin vent fan in HIGH is 150 cfm. Cabin vent valve full travel requires 1.5 seconds (max).

Location	Name and Position	Function	Circuit Breaker	Power Source	Telemetry Code No. and Identity	Remarks
MDC-25 (Cont)	LOW	Applies d-c power to the following: a. Inlet and outlet vent valve motors, placing valve in open position. b. Vent fan motor for low flow output.	POST-LANDING—VENT FAN PL BUS—FLOAT BAG 2 (MDC-25)	Flight and postlanding bus	None	Output of cabin vent fan in LOW is 100 cfm. Cabin vent fan full travel requires 1.5 seconds (max).
	OFF	Removes d-c power from motor of cabin vent fan, and applies power to motors of inlet and outlet cabin vent valves, placing valves in closed position.				Both vent valves will be immediately closed by activation of the PLV attitude switch when the C/M becomes inverted or rolls beyond a specified limit. Switch must be set to OFF position before reactivating the PLV.
	FLOAT BAG group		POST-LANDING—FLOAT BAG 1 PL BUS (MDC-25)			
	Switch 1					Lever lock-type switch.
	FILL	Starts two compressors which inflate flotation bag No. 1				Flotation bag No. 1 is located on the −Y axis in the forward compartment of the C/M.
	Center	Neutral (off) position.				Solenoid valve in "seal" mode.
	VENT	Disconnects 28 vdc from the two compressors and opens vent line to flotation bag No. 1				The switch must remain in the VENT position during launch and throughout flight.
	Switch 2		POST-LANDING—VENT FAN-PL BUS-FLOAT BAG 2 (MDC-25)			Lever lock-type switch.
	FILL	Starts two compressors which inflate flotation bag No. 2.				Flotation bag No. 2 is located on the +Y axis in the forward compartment of the C/M.
	Center	Neutral (off) position.				Solenoid valve in "seal" mode.
	VENT	Disconnects 28 vdc from the two compressors and opens vent line to flotation bag No. 2.				The switch must remain in the VENT position during launch and throughout flight.
	Switch 3		ELS-A BAT A—FLOAT BAG 3 (MDC-25)	Battery bus A		Lever lock-type switch
	FILL	Starts two compressors which inflate flotation bag No. 3.				Flotation bag No. 3 is located on the +Z axis in the forward compartment of the C/M.
	Center	Neutral (off) position				Solenoid valve in "seal" mode.
	VENT	Disconnects 28 vdc from the two compressors and opens vent line to flotation bag No. 3				The switch must remain in the VENT position during launch and throughout flight.

Location	Name and Position	Function	Circuit Breaker	Power Source	Telemetry Code No. and Identity	Remarks
MDC-25 (Cont)	ANTENNA DEPLOY switches		PYRO A GROUP—SEQ A and PYRO B group - SEQ B (LEB-9)	Pyro bus A and pyro bus B in the MESC when the MASTER EVENT SEQ CONT—PYRO switches A and B are in the ARM position	None	
	DEPLOY switch A					Two-position toggle switch that is set to A after landing when C/M is in upright position.
	A	Connects 28 vdc to the postlanding antenna deploy circuitry.				
	OFF	Normal position, no function.				
	DEPLOY switch B					Two-position toggle switch that is set to B after landing when C/M is in upright position.
	B	Connects 28 vdc to the postlanding antenna deploy circuitry. Backup switch for DEPLOY switch A.				
	OFF	Normal position, no function.				
	MESC—LOGIC ARM switches		MASTER EVENT SEQ CONT-A ARM B BAT A and BAT B (MDC-22)	Battery buses A and B	CD0200V D-C voltage logic bus A CD0201V D-C voltage logic bus B	Lever lock-type switches.
	Switches A and B					
	LOGIC ARM	Energizes relays in both MESC which perform the following: a. Connects battery bus A to the MESC A logic bus A b. Connects battery bus B to the MESC B logic bus B.				
	OFF	Removes 28 vdc from MESC logic buses A and B.				
	EVENT TIMER circuit breakers		N/A	+28 vdc	None	
	MN A (5 amp)	Applies d-c power from d-c main bus A to event timer switches (MDC-8).				
	MN B (5 amp)	Applies d-c power from d-c main bus B to event timer switches (MDC-8).				
	COUCH ATTEN - FLOOD-LIGHTS circuit breakers					
	MN A (15 amp)	Applies d-c power from d-c main bus A to the following controls: a. FLOODLIGHTS-PRIMARY rheostat (MDC-26).				

Location	Name and Position	Function	Circuit Breaker	Power Source	Telemetry Code No. and Identity	Remarks
MDC-25 (Cont)		b. LIGHTING-FLOODS-PRIMARY rheostat (LEB-98) c. FLOODLIGHTS-SECONDARY switch (MDC-23) d. LIGHTING-FLOODS-CLOCKS switch (LEB-100)	N/A	+28 vdc	None	
	MN B (15 amp)	Applies d-c power from d-c main bus B to the following controls: a. FLOODLIGHTS-PRIMARY rheostat (MDC-23) b. LIGHTING-FLOODS-SEC switch (LEB-100) c. FLOODLIGHTS-SECONDARY switch (MDC-26)				
	STABILIZATION & CONTROL SYSTEM circuit breakers (top row) DIRECT CONT group MN A (30 amp)	Applies power from d-c main bus A to the following: a. DIRECT RCS switch on MDC-8 b. DIRECT ULLAGE switch on MDC-7 c. NORMAL/OFF/DIRECT ON switch on MDC-7 d. Arms command pilot's rotation control for direct commands through direct RCS switch.				
	MN B (30 amp)	Applies power from d-c main bus B to the following: a. DIRECT RCS switch on MDC-8 b. DIRECT ULLAGE switch on MDC-7				

Location	Name and Position	Function	Circuit Breaker	Power Source	Telemetry Code No. and Identity	Remarks
MDC-25 (Cont)		c. NORMAL/OFF/DIRECT ON switch on MDC-7 d. Arms senior pilot's rotation control for direct commands through direct RCS switch.	N/A	+28 vdc	None	
	A & C ROLL group					Maneuver function - engine activation
	MN A (20 amp)	Applies power from d-c main bus A to A & C ROLL channel switch on MDC-8.				
	MN B (20 amp)	Applies power from d-c main bus B to A & C ROLL channel switch on MDC-8.				
	B & D ROLL group					
	MN A (20 amp)	Applies power from d-c main bus A to B & D ROLL channel switch on MDC-8.				
	MN B (20 amp)	Applies power from d-c main bus B to B & D ROLL channel switch on MDC-8.				
	PITCH group					
	MN A (20 amp)	Applies power from d-c main bus A to PITCH channel switch on MDC-8.				
	MN B (20 amp)	Applies power from d-c main bus B to PITCH channel switch on MDC-8.				
	YAW group					
	MN A (20 amp)	Applies power from d-c main bus A to YAW channel switch on MDC-8.				
	MN B (20 amp)	Applies power from d-c main bus B to YAW channel switch on MDC-8.				

SCS CB	Function	S/M RCS Engine
A&C ROLL MN A	roll right	A13
A&C ROLL MN B	roll right	C15
A&C ROLL MN A	roll left	A16
A&C ROLL MN B	roll left	C14
B&D ROLL MN A	roll right	B9
B&D ROLL MN B	roll right	D11
B&D ROLL MN A	roll left	B12
B&D ROLL MN B	roll left	D10
PITCH MN B	pitch up	A3
PITCH MN A	pitch up	C1
PITCH MN A	pitch down	A2
PITCH MN B	pitch down	C4
YAW MN A	yaw right	B7
YAW MN B	yaw right	D5
YAW MN B	yaw left	B6
YAW MN A	yaw left	D8

SCS CB	Function	C/M RCS Engine
B&D ROLL MN A	roll right	A9
B&D ROLL MN B	roll right	B11
B&D ROLL MN A	roll left	A12
B&D ROLL MN B	roll left	B10
PITCH MN A	pitch up	A1
PITCH MN B	pitch up	B3
PITCH MN A	pitch down	A2
PITCH MN B	pitch down	B4
YAW MN A	yaw right	A5
YAW MN B	yaw right	B7
YAW MN A	yaw left	A8
YAW MN B	yaw left	B6

Location	Name and Position	Function	Circuit Breaker	Power Source	Telemetry Code No. and Identity	Remarks
MDC-25 (Cont)	STABILIZATION & CONTROL SYSTEM controls (bottom row)				None	
	FDAI LTG switch	Controls application of a-c power to the FDAI brightness control on MDC-2 for FDAI lighting and for illumination of the lamp in the THRUST ON switch on MDC-7.	SCS—GROUP 2 AC 1 or AC 2	A-C bus 1 or a-c bus 2		
	AC 1	Applies a-c bus 1 phase B power to FDAI brightness control.				
	OFF	Removes all a-c power from FDAI brightness control.				
	AC 2	Applies a-c bus 2 phase B power to FDAI brightness control.				
	GROUP 1 circuit breakers		N/A	115 vac 400 cps 3 phase		
	AC 1 (2 amp)	Applies power from a-c bus No. 1 to the following switches on MDC-24: a. SCS POWER b. RATE GYRO POWER c. TVC 1 POWER.				
	AC 2 (2 amp)	Applies power from a-c bus No. 2 to the following switches on MDC-24: a. SCS POWER b. RATE GYRO POWER c. TVC 1 POWER.				
	GROUP 2 circuit breakers					
	AC 1 (2 amp)	Applies power from a-c bus No. 1 to the following switches on MDC-24: a. BMAG POWER b. ROTATION CONTROL POWER c. TVC 2 POWER				

Location	Name and Position	Function	Circuit Breaker	Power Source	Telemetry Code No. and Identity	Remarks
MDC-25 (Cont)	AC 2 (2 amp)	Applies power from a-c bus No. 2 to the following switches on MDC-24: a. BMAG POWER b. ROTATION CONTROL POWER c. TVC 2 POWER.	N/A	115 vac 400 cps 3 phase	None	
	GROUP 1 circuit breakers			+28 vdc		
	MN A (15 amp)	Applies power from d-c main bus A to the following: a. SCS POWER switch on MDC-24 b. TVC 1 POWER switch on MDC-24 c. SCS switches on MDC-8 d. Translation control prior to CM-SM separation. e. FCSM				
	MN B (15 amp)	Applies power from d-c main bus B to the following: a. SCS POWER switch on MDC-24 b. TVC 1 POWER switch on MDC-24 c. SCS switches on MDC-8 d. Translation control prior to CM-SM separation e. FCSM				
	GROUP 2 circuit breakers					
	MN A (15 amp)	Applies power from d-c main bus A to the following: a. BMAG POWER switch on MDC-24 b. Command pilot's rotation control c. Command pilot's translation control.				

Location	Name and Position	Function	Circuit Breaker	Power Source	Telemetry Code No. and Identity	Remarks
MDC-25 (Cont)	MN B (15 amp)	Applies power from d-c main bus B to the following: a. TVC 2 POWER switch on MDC-24 b. Senior pilot's rotation control c. Senior pilot's translation control.	N/A	+28 vdc	None	
	BIO MED COMM circuit breakers MN A (5 amp)	Used on unmanned mission only.				
	MN B (5 amp)	Applies power from d-c main bus B to TLM INPUTS—BIO MED switch (MDC-20).		D-C main bus B		
	SERVICE PROPULSION SYSTEM circuit breakers GAUGING group MN A (5 amp)	Applies power from d-c main bus A to the following propellant utilization and gauging subsystem control unit circuits: a. Self-test b. Primary power supply only when SPS engine ignition driver relay is energized. c. SPS heaters A.				
	MN B (5 amp)	Applies power from d-c main bus B to propellant utilization and gauging subsystem control unit auxiliary power supply only when SPS engine ignition driver relay is energized. SPS heaters B.		+28 vdc		
	AC 1 (2 amp)	Applies power from a-c bus No. 1 to AC 1 contacts of SPS GAUGING switch on MDC-25.		115 vac 400 cps ØC		
	AC 2 (2 amp)	Applies power from a-c bus No. 2 to AC 2 contacts of SPS GAUGING switch on MDC-25.				

Location	Name and Position	Function	Circuit Breaker	Power Source	Telemetry Code No. and Identity	Remarks
MDC-25 (Cont)	He VALVE group					
	MN A (7.5 amp)	Applies power from d-c main bus A to the following: a. Left-hand SPS HELIUM switch (MDC-20) b. INJECT PRE-VALVES A switch (MDC-3)	N/A	+28 vdc	None	
	MN B (7.5 amp)	Applies power from d-c main bus B to the following: a. Right-hand SPS HELIUM switch (MDC-20) b. INJECT PRE-VALVES B switch (MDC-3)				
	GIMBAL MOTOR CONTROL group					
	1 - PITCH - 2					
	BAT A (15 amp)	Applies power from battery bus A to SPS GIMBAL MOTORS PITCH 1 switch on MDC-3.				
	BAT B (15 amp)	Applies power from battery bus B to SPS GIMBAL MOTORS PITCH 2 switch on MDC-3.				
	1 - YAW - 2					
	BAT A (15 amp)	Applies power from battery bus A to SPS GIMBAL MOTORS YAW 1 switch on MDC-3.				
	BAT B (15 amp)	Applies power from battery bus B to SPS GIMBAL MOTORS YAW 2 switch on MDC-3.				

Location	Name and Position	Function	Circuit Breaker	Power Source	Telemetry Code No. and Identity	Remarks
MDC-25 (Cont)	G&N SYNC switch	Provides manual maneuver capability in G&N attitude control mode.	SCS GROUP 2 MN A	D-C main bus A	None	When the G&N SYNC switch is returned to OFF and the rotation control is returned to detent, the G&N system will maintain S/C attitude within the selected deadband limits. This switch will not be used per procedural constraint.
	On (up)	Permits detent switch in rotational control to place CDUs in a follow mode.				
	OFF	Does not affect G&N attitude control mode.				
	SPS GAUGING switch		SPS—GAUGING AC 1 AC 2 (MDC-25)	A-C bus No. 1		Three-position toggle switch which controls application of a-c power to propellant quantity utilization and gauging system control unit. Power for control unit self-test circuitry is applied directly by switch. Power for propellant quantity measuring circuitry is applied only when engine ignition driver relay is energized by engine firing signal.
	AC 1	Applies a-c power to the following: a. Quantity gauging system control unit self-test circuitry. b. Normally open contacts of SPS engine ignition driver relay.				
	OFF	Removes all a-c power.				
	AC 2	Applies a-c power to the following: a. Quantity gauging system control unit self-test circuitry. b. Normally open contacts of SPS engine ignition driver relay.		A-C bus No. 2		
	AC SNSR SIG circuit breakers		N/A	115 vac 400 cps 3 phase		
	AC 1 (2 amp)	Applies sensing signal from a-c bus No. 1 to a-c over-under-voltage and overload sensing unit to AC INDICATORS switch (MDC-18).				
	AC 2 (2 amp)	Applies sensing signal from a-c bus No. 2 to a-c over-under-voltage and overload sensing unit and to AC INDICATORS switch (MDC-18).				

Location	Name and Position	Function	Circuit Breaker	Power Source	Telemetry Code No. and Identity	Remarks
MDC-25 (Cont)	REACTION CONTROL SYSTEM circuit breakers PROP ISOL group		N/A		None	
	MN A (10 amp)	Applies power from d-c main bus A to the following: a. SM RCS quads B and D HELIUM 1, HELIUM 2, and PROPELLANT switches. b. CM RCS system A PROPELLANT switch. c. Microswitch in each isolation valve controlled by switches listed in steps a and b. Microswitch controls event indicator operation. d. RCS control box relay contacts which cause automatic closure of system A fuel and oxidizer isolation valves in the event of an abort initiation prior to T + 61 seconds.				
	MN B (10 amp)	Applies power from d-c main bus B to the following: a. SM RCS quads A and C HELIUM 1, HELIUM 2, and PROPELLANT switches. b. CM RCS system B PROPELLANT switch. c. Microswitch in each isolation valve controlled by switches listed in steps a and b. Microswitch controls event indicator operation.				

Location	Name and Position	Function	Circuit Breaker	Power Source	Telemetry Code No. and Identity	Remarks
MDC-25 (Cont)		d. RCS control box relay contacts which cause automatic closure of system B fuel and oxidizer isolation valves in the event of an abort initiated prior to T + 61 seconds.	N/A	+28 vdc	None	
	C/M - S/M TRANSFER group					
	MN A (15 amp)	Applies power from d-c main bus A to the following: a. RCS TRANSFER switch (MDC-16) b. C/M PROPELLANT JETT group LOGIC switch (MDC-8) c. C/M RCS HTRS switch (97) d. C/M RCS He DUMP switch (MDC-26).				
	MN B (15 amp)	Applies power from d-c main bus B to the following: a. RCS TRANSFER switch (MDC-16) b. C/M PROPELLANT JETT group LOGIC switch (MDC-8) c. C/M RCS HTRS switch (97) d. C/M RCS He DUMP switch (MDC-26).				
	CAUT/WARN circuit breakers					
	MN A (10 amp)	Applies power from d-c main bus A to caution and warning system.				
	MN B (10 amp)	Applies power from d-c main bus B to caution and warning system.				
	EDS-1, 2, 3 circuit breakers					
	BAT A (5 amp)	Applies d-c power from battery bus A to the EDS POWER switch (MDC-24).				

Location	Name and Position	Function	Circuit Breaker	Power Source	Telemetry Code No. and Identity	Remarks
MDC-25 (Cont)	BAT C (5 amp)	Applies d-c power from entry battery C to the EDS POWER switch (MDC-24).	N/A	+28 vdc	None	
	BAT B (5 amp)	Applies d-c power from battery bus B to the EDS POWER switch (MDC-24).				
	ELS-A, B circuit breakers BAT A - FLOAT BAG 3 (10 amp)	Applies d-c power from battery bus A to the following: a. ELS LOGIC switch (MDC-8) b. APEX COVER JETT switch (MDC-5) c. DROGUE DEPLOY switch (MDC-5) d. MAIN DEPLOY switch (MDC-5) e. POST LANDING-FLOAT BAG - switch 3 (MDC-25).				
	BAT B (10 amp)	Applies d-c power from battery bus B to the following: a. ELS LOGIC switch (MDC-8) b. APEX COVER JETT switch (MDC-5) c. DROGUE DEPLOY switch (MDC-5) d. MAIN DEPLOY switch (MDC-5)				
MDC-26	FLOODLIGHTS controls PRIMARY rheostat Off	Removes power from C/M primary floodlights.	COUCH ATTEN MN A MN B FLOOD-LIGHTS (MDC-25)	D-C main buses A and B	None	FLOODLIGHTS controls on MDC-23, -26, and LEB-100 are functionally identical and each controls the floodlights in its respective area. The rheostat control may be adjusted for desired brightness of primary floodlights.
	Bright	Indicates maximum floodlight brightness has been reached.				
	SECONDARY switch ON	Illuminates secondary floodlights.				
	OFF	Removes power from secondary floodlights.				

Location	Name and Position	Function	Circuit Breaker	Power Source	Telemetry Code No. and Identity	Remarks
MDC-26 (Cont)	POST LDG BEACON switch		N/A	Beacon light battery	None	
	LIGHT	Applies power to the beacon lights.				
	OFF	Removes power from the beacon lights.				
	POWER switch	Controls power to command pilot's module in audio center equipment	T/C — GROUP 4 (MDC-22)	Flight and postlanding bus		The audio center will not be activated unless the POWER switch is in PTT or VOX position.
	PTT	Applies d-c power to audio and control circuits.				Permits monitoring of audio inputs to audio center and PTT activation of other audio center functions.
	OFF	Removes power from command pilot's audio center equipment module and controls.				
	VOX	a. Applies d-c power to audio and control circuits. b. Enables VOX control of mike amplifier by supplying ground to VOX circuitry.				VOX operation permits automatic voice transmission and transmitter keying of intercom, HF recovery transceivers and voice recorder.
	S-BAND switch		N/A	Audio center equipment		The S-BAND, HF, VHF-AM, and INTERCOM switches all control ground return paths for appropriate diode switching and isolation circuitry, in the command pilot's module of the audio center equipment, to allow transmission and reception, or reception alone, of voice signals over selected equipment. The HF and VHF-AM switches also provide ground return paths for the HF and VHF-AM transmitter keying circuits when in the T/R position.
	T/R	No effect. S-band T/R function supplied by cobra cable PTT key.				
	OFF	Prevents command pilot from receiving voice over USBE.				
	RCV	Enables command pilot to receive voice from USBE.				
	HF switch					Provides power ground through audio center VOX or PTT circuits for HF transceiver transmit-receiver relay and voice recorder power relay.
	T/R	a. Enables command pilot to transmit and receive voice over H-F transceiver when operating in AM or SSB mode. b. Enables voice recorder through VOX or PTT circuits.				
	OFF	Prevents command pilot from transmitting or receiving voice over H-F transceiver.				

Location	Name and Position	Function	Circuit Breaker	Power Source	Telemetry Code No. and Identity	Remarks
MDC-26 (Cont)	RCV	Enables command pilot to receive voice from H-F transceiver when operating in AM or SSB mode.	N/A	Audio center equipment	None	
	VHF AM switch					VHF-AM transmits, in addition to S-band voice, when cobra cable PTT key is closed. Cobra cable PTT/CW switch must be at PTT and audio center POWER switch must be at VOX.
	T/R	Enables command pilot to transmit and receive voice over VHF-AM transmitter-receiver when operating in T/R mode.				
	OFF	Prevents command pilot from transmitting or receiving voice over VHF-AM transmitter-receiver.				
	RCV	Enables command pilot to receive voice from VHF-AM transmitter-receiver.				
	INTERCOM switch					
	T/R	Enables command pilot to transmit and receive voice over the intercom system.				
	OFF	Prevents command pilot from transmitting or receiving voice over intercom system.				
	RCV	Enables command pilot to receive voice from intercom system.				
	VOX SENS control	Increases or decreases sensitivity of voice-operated relay circuitry in command pilot audio center module.				These three control are thumb-wheel-type potentiometers which may be rotated upward or downward, as required.
	INTERCOM BALANCE control	Increases or decreases level of audio signal received by command pilot from R-F equipment relative to that received from intercom bus.				Position 9 most sensitive.
	VOLUME control	Increases or decreases level of audio signal from command pilot earphone amplifier to earphone.				

Location	Name and Position	Function	Circuit Breaker	Power Source	Telemetry Code No. and Identity	Remarks
MDC-26 (Cont)	C/M RCS switch		RCS — C/M-S/M TRANSFER MN A MN B (MDC-25)	D-C main buses A and B	None	Two-position guarded toggle switch which provides backup capability for initiating helium purge operation in the event of C/M PROP JETT PURGE switch failure (MDC-8). The switch receives power directly from the circuit breakers.
	He DUMP (up)	Energizes relays required to activate C/M RCS helium purge operation.				
	OFF (down)	De-energize relays.				

Location	Name and Position	Function	Circuit Breaker	Power Source	Telemetry Code No. and Identity	Remarks
LEB-100	LIGHTING controls		COUCH ATTEN MNA MNB FLOOD-LIGHTS (MDC-25)	D-C main buses A and B	None	FLOODLIGHTS controls on MDC-23, -26, and LEB-100 are functionally identical and each controls the floodlights in its respective area.
	FLOODS group					
	PRIMARY rheostat					
	OFF	Removes power from C/M primary floodlights.				
	BRIGHT	Indicates maximum floodlight brightness has been reached.				The rheostat control may be adjusted for desired brightness of primary floodlights.
	SEC switch					
	ON	Illuminates secondary floodlights.				
	OFF	Removes power from secondary floodlights.				
	CLOCKS switch					
	BRT	Brightly illuminates the integral lighting for the mechanical clocks on LHFEB-99.				
	OFF	Disconnects power from the lighting circuit to the clocks.				
	DIM	Dimly illuminates the integral lighting for the mechanical clocks on LHFEB-99.				

Location	Name and Position	Function	Circuit Breaker	Power Source	Telemetry Code No. and Identity	Remarks
LEB-101	IMU-CDU DIFFERENCE indicator	Displays the difference between the IMU gimbal angles and the CDU shaft angles in degrees.	G&N—IMU MN A MN B (MDC-22)	D-C main buses A and B	None	A three-dial panel meter. The signals applied to the meter are the demodulated outputs of the CDU single-speed resolvers. Depending upon the IMU mode, the differences shown can represent the following: a. Misalignment of the IMU b. Error in the orientation of the spacecraft c. Error in the CDU display of actual gimbal angles.
	TRANSFER switch MANUAL COMPUTER	Controls selection of ISS operating modes. Enables manual selection of ISS operating modes through the use of MODE switches. Enables AGC selection of ISS operating modes by setting mode relays directly.				SPST toggle switch
	MANUAL ALIGN switch	Causes the IMU gimbals to align CDU angles.				SPST momentary contact pushbutton. Used in conjunction with CDU MAN mode pushbutton to coarse align the IMU gimbals.
	MODE switches	Allow selection and display of ISS operating modes.				SPST illuminates pushbutton switches. Computer controlled when TRANSFER switch is in COMPUTER position. Manually controlled when TRANSFER switch is in MANUAL position.

Location	Name and Position	Function	Circuit Breaker	Power Source	Telemetry Code No. and Identity	Remarks
LEB-101 (Cont)	ZERO ENC	Selects zero encoder mode of ISS operation. This mode sets the shafts and encoders of the CDUs and CDU registers in the computer to zero.	G&N—IMU MN A MN B (MDC-22)	D-C main buses A and B	None	CDUs must be zeroed whenever the G&N system is turned on.
	COARS ALIGN	Selects coarse align mode of IMU operation. This mode positions the stable member of the IMU. Selects coarse align mode of ISS operation. This mode positions the stable member to within 1.5° of desired inertial reference attitude.				In this mode, the CDUs are driven to angles commanded by the AGC. These angles define an inertial reference.
	FINE ALIGN	Selects fine align mode of ISS operation. This mode completes stable member alignment to desired inertial reference attitude.				Upon completion of the fine align mode, the stable member is fine aligned to an inertial reference and the CDU readouts indicate gimbal angles relative to that reference.
	CDU MAN	Selects manual CDU mode of ISS operation. This mode provides for backup-manual alignment of the stable member. Stable member drives to CDU angles when MANUAL ALIGN switch is depressed.				Actuation of CDU MAN switch energizes a relay which removes the excitation to the CDU motors to lock the CDUs in position.
	ATT CONT	Selects attitude control mode of IMU operation. Selects attitude control mode of ISS operation. This mode provides attitude and velocity change sensing with respect to the space stabilized stable member.				The attitude error signals generated in this mode represent the difference between IMU gimbal angles and CDU angles.
	ENTRY	Selects entry mode of IMU operation. This mode is similar to attitude control mode; however, the gain of the roll control loop is increased by a factor of 16 to increase roll rate and decrease response time.				This mode is used during spacecraft entry into the earth atmosphere.
LEB-102	CDU angle display readouts 2X TRUNNION, SHAFT ANGLE, OUTER GIMBAL (ROLL), INNER GIMBAL (PITCH), MIDDLE GIMBAL (YAW)	Provide visual representation of ICDU and OCDU angles.			None	Drum-type readout. Reads down to 0.001 degree. Five such readouts are on this panel: two for optics and three for inertial CDUs.

Location	Name and Position	Function	Circuit Breaker	Power Source	Telemetry Code No. and Identity	Remarks
LEB-103	G&N condition lights	Warning lights denote detected malfunction.	G&N—COMPUTER MN A MN B (MDC-22)	D-C main buses A and B		Yellow caution lights.
	PGNS	Indicates an IMU, CDU accelerometer and/or AGC failure.			CG5005X (Error detect)	
	AGC PWR FAIL	Indicates a failure in the Apollo guidance computer power supply.			CG5030X (Computer power fail light)	
	IMU FAIL	Indicates a failure in the inertial measurement unit.			CG5001X (IMU fail)	
	CDU FAIL	Indicates a failure in one or more of the coupling display units.			CG5002X (CDU fail)	
	ACCEL FAIL	Indicates a failure in one or more of the PIPAs.			CG5000X (PIPA fail)	
	GIMBAL LOCK	Indicates a potential gimbal lock condition in the IMU (middle gimbal angle is greater than ±60° with respect to outer gimbal).			CG5003X (Gimbal lock warning)	
	IMU TEMP	Indicates that the IMU temperature is out of tolerance, i.e., exceeds normal temperature by ±4°F (if IMU TEMP MODE switch is in AUTO OVERRIDE or PROPORTIONAL positions).			CG5006X (IMU temp light)	
	ZERO ENCODER	Indicates that the CDU encoders are being zeroed; lamp is extinguished after all encoders have been zeroed. (Remains illuminated for approximately 30 seconds. If AGC commanded zero encode mode, indicator may be illuminated for approximately 60 seconds.)			CG5007X (Zero encoder light)	White light.
	IMU DELAY	IMU coarse alignment to CDU angles taking place. Stable member is caged. Remains illuminated for approximately 100 seconds.	G&N BMU MN A MN B (MDC-22)		CG5008X (IMU delay light)	White light. Illuminates only at initial IMU turn-on or immediately after switching from standby operation.

Location	Name and Position	Function	Circuit Breaker	Power Source	Telemetry Code No. and Identity	Remarks
LEB-103 (Cont)	MASTER ALARM light	Red light illuminates to alert crewmembers at lower equipment bay of malfunction or out-of-tolerance condition. This is indicated by illumination of applicable system status lights on MDC-10 or -11.	CAUT/ WARN MN A MN B (MDC-25)	D-C main buses A and B	CS0150X (Master caution-warning on)	Upon illumination of MASTER ALARM light, the MASTER ALARM switch-lights on MDC-3 and -18 are simultaneously illuminated and an audio tone is sent to each headset. This MASTER ALARM light does not contain an integral switch. Light may be extinguished only by pressing the MASTER ALARM switch-light on MDC-3 or -18.
LEB-104	Sextant	Optical instrument for measuring the angle between two objects.	None	None	None	The SXT is a dual line-of-sight instrument used to determine the following: a. The angle between a landmark and a star. b. The angle between a star line of sight and the navigation base. c. Tracking an unknown landmark. This information is used by the AGC for the following: a. Determine spacecraft position. b. Calculate required ΔV corrections. c. To fine align the IMU. The SXT has a 1.8° field of view with a magnification of 28.
	Scanning telescope	Optical instrument used for the following: a. Tracking a landmark in earth orbit. b. Identifying and centering a star within the sextant field of view.				The scanning telescope has a 60° field of view and a 1X magnification (long relief eyepiece = 0.6X).
	TRUNNION control	Enables manual positioning of the trunnion angles.				These controls are manually operated by means of a universal tool. They are used in the event of optics electronic failure.
	SHAFT control	Enables manual positioning of the shaft angles.				
	TRUNNION ANGLE display	Provides a mechanical readout of the SCT trunnion angle that is commanded manually or by the computer.				Drum-type readouts in degrees, mechanically connected to the scanning telescope (SCT) trunnion and shaft drives, respectively. (SXT angles are identical.)
	SHAFT ANGLE display	Provides a mechanical readout of the SCT shaft angle that is commanded manually or by the computer.				

Location	Name and Position	Function	Circuit Breaker	Power Source	Telemetry Code No. and Identity	Remarks
LEB-105	Optics hand controller	Provides electrical commands to the optics shaft and trunnion drive motors.	G&N-OPTICS MN A MN B (MDC-22)	D-C main buses A and B	None	SP4T, five-position switch spring-loaded to center OFF position. direction of target movement with respect to controller movement depends upon mode selected by CONTROLLER MODE switch. Rate of image movement is proportional to amount of hand controller movement.
	CHECK COOLANT switch	When pressed, applies power to floodlamps behind the display and control panel. Enables the crew to view the IMU quick-disconnect couplings through CHECK COOLANT windows.				Pushbutton switch, momentary contact.
	CHECK COOLANT windows (two)	Permit observation of IMU coolant supply system quick-disconnect couplings for detecting leaks.	None	None		
	AGC code numbers display (not shown)	Provides the crew with a quick reference for computer code numbers.				Panel inscribed, nonreplaceable.
	MARK switch	Supplies an interrupt signal to the AGC which commands it to read the optics CDU angles, the time, and the IMU gimbal angles (if the IMU is operating).	G&N-OPTICS MN A MN B (MDC-22)	D-C main buses A and B		Pushbutton, SPST, momentary-contact switch. If MARK is satisfactory, computer proceeds normally. If MARK is unsatisfactory, flight crew inhibits computer processing of data by making DSKY entry of V52E.
	PANEL BRIGHTNESS control	Provides adjustment of the illumination level of all integrally lighted G&N system controls and displays. In addition, the control provides power to the lamp in the THRUST ON switch.				Thumbwheel potentiometer.
	CHECK MODE LAMPS switch	Applies power to all MODE indicators on the IMU control panel (LEB-101).				Pushbutton, SPST, momentary-contact switch. Used to check operation of the MODE lamps.
	CHECK CONDITION LAMPS switch	Applies power to all condition (caution and warning) lamps on panel LEB-103.	G&N COMPUTER MN A MN B (MDC-22)			Pushbutton, SPST, momentary-contact switch. Used to check the operation condition of the condition lamps.

Location	Name and Position	Function	Circuit Breaker	Power Source	Telemetry Code No. and Identity	Remarks
LEB-105 (Cont)	CONDITION LAMPS switch		G&N-IMU MN A MN B (MDC-22)	D-C main buses A and B	None	
	ON	Applies d-c power to G&N condition lamps.				SPST toggle switch.
	OFF	Removes d-c power from lamps.				
	ATTITUDE IMPULSE group		SCS — GROUP 1 AC 1 AC 2 (MDC-25)	Essential bus		
	Attitude impulse control	A control stick used to apply small rotational thrust impulses to the spacecraft by means of the service module reaction jets.				SP6T, seven-position switch, spring-loaded to center off. The control is used to apply one or any combination of pitch, roll, or yaw minimum thrust impulses to the S/C providing rate damping impulses of 2.4 arc-minutes/second/pulse or less. One pulse is produced each time the control is moved from the center position.
	ENABLE switch	Enables the attitude impulse control.				Toggle-type, solenoid-held-to-on microswitch. The SCS must be in the G&N or SCS attitude control modes to enable solenoid holding. Attitude impulse is not enabled in the SCS local vertical mode. To enable the attitude impulse control circuit, the LIMIT CYCLE switch must also be ON.
	ON	Supplies a signal to the G&N and SCS systems which disables the active S/C attitude control mode, allowing the S/C to drift freely, and enables the attitude impulse control.				
	OFF	Disables the attitude impulse control.				
	IMU TEMP MODE group		G&N IMU HTR MN A MN B (MDC-22)	D-C main buses A and B		
	Mode switch	Enables the crew to select any one of the four modes of IMU temperature controls.				Rotary, four-position, three-wafer switch.
	PROPORTIONAL	Temperature control is furnished by same control circuit used in AUTO/OVERRIDE mode.				PROPORTIONAL mode is used if a malfunction occurs in the temperature indicating circuit, causing cycling to the EMERGENCY mode.
	BACKUP	Temperature control is furnished by temperature sensing circuits.				BACKUP mode is used if a malfunction occurs in the normal control circuit. In this mode, the IMU TEMP light will illuminate when the heaters are off and will extinguish when the heaters are on. MSFN must monitor

Location	Name and Position	Function	Circuit Breaker	Power Source	Telemetry Code No. and Identity	Remarks
LEB-105 (Cont)	AUTO OVERRRIDE	Normal mode of temperature control. If IMU temperature exceeds normal tolerances by ±4°F, system automatically switches to emergency mode and IMU TEMP light illuminates.	G&N IMU HTR MN A MN B (MDC-22)	D-c main buses A and B	None	the IMU temperature. Manual switching to emergency mode is necessary if the temperature becomes excessive. When a malfunction occurs, the temperature alarm relays turn off the control heaters. Emergency heaters continue to operate under the control of an emergency mercury thermostat. When the temperature returns to within 1°F of normal, the IMU TEMP light extinguishes and the system switches back to the normal control mode.
	EMERGENCY	IMU temperature is controlled to approximately 130°F by means of mercury thermostat and emergency heaters.				A thermostat provides overheat protection for the IMU by opening the emergency heater circuit when the temperature exceeds 130°F. When this temperature drops below 128°F, the thermostat closes the circuit to reactivate the heaters.
	ZERO switch	Used to check calibration of IRIG and PIPA temperature monitoring devices.				Pushbutton, DPST, momentary-contact switch.
	GAIN switches	Used to check temperature alarm circuit.				Pushbutton, momentary-contact switch. When it is pressed, the IMU TEMP indicator (LEB-3) should be illuminated. If not, a malfunction exists in the system.
	IRIG	Simulates low temperature error (-5°F) to check IRIG temperature sensors and also tests alarm circuit				
	PIPA	Simulates high temperature error (+5°F) to check PIPA temperature sensors and also test alarm circuits.				
	MAP AND DATA VIEWER group	None	None	None		Function deleted as a result of map and data viewer deactivation.
	OPTICS group SLAVE TELESCOPE switch		G&N OPTICS MN A MN B (MDC-22)	D-C main buses A and B		Single pole, three-position toggle switch
	STAR LOS	Slaves SCT trunnion axis to SXT trunnion.				

Location	Name and Position	Function	Circuit Breaker	Power Source	Telemetry Code No. and Identity	Remarks
LEB-105 (Cont)	LANDMARK LOS 0°	Drives SCT trunnion to zero independently of CDU trunnion.	G&N OPTICS MN A MN B (MDC-22)	D-C main buses A and B	None	Zero position is parallel to SXT shaft axis.
	OFFSET 25°	Drives telescope trunnion to 25° offset from shaft axis.				This will bring the star and landmark within the 60° field-of-view of the SCT, while rotating about the shaft axis.
	TRACKER POWER	No function on S/C-014				SPST, toggle switch.
	Mode switch	Selects optics mode of operation.				Rotary, three-position switch.
	ZERO OPTICS	Optics and CDU resolvers are driven to zero. AGC register is set to all zeros.				Completed in approximately 60 seconds.
	MANUAL	Normal operating position enabling crew to position optics by means of optics hand controller.				In this position, the crew may select either the DIRECT or RESOLVED controller mode of operation.
	COMPUTER	Optics are automatically positioned by the AGC. Panel-mounted controls are disabled.				
	CONTROLLER SPEED switch	Provides attenuation of shaft and trunnion slew commands from optics hand controller. Direct Mode Maximum Drive Rates Trunnion / Shaft HI: 8.8°/sec / 17.3°/sec MED: 1.05°/sec / 2.06°/sec LOW: 0.105°/sec / 0.206°/sec Resolved Mode Maximum Drive Rates Trunnion / Shaft HI: 8.8°/sec / 8.8°/sec MED: 1.05°/sec / 1.05°/sec LOW: 0.105°/sec / 0.105°/sec				Single-pole, three-position toggle switch. Attenuated output is applied to the MODE switch.
	CONTROLLER MODE switch	Controls control stick output configuration.				SPDT, two-position, toggle switch.

Location	Name and Position	Function	Circuit Breaker	Power Source	Telemetry Code No. and Identity	Remarks
LEB-105 (Cont)	DIRECT	Applies control movements directly to CDUs. Right/left movement commands shaft rotation. Up/down movement commands trunnion angle increase/decrease.	G&N—OPTICS MN A MN B (MDC-22)	D-C main buses A and B	None	Target moves about arcs with speed of target movement varying with magnitude of angle.
	RESOLVED	Applies control stick movements to angular resolving circuits before applying commands to the CDUs.				Target moves horizontally and vertically at a linear rate.
LEB-106	Alarm condition indicators	Indicate abnormal conditions of computer operation.	G&N COMPUTER MN A MN B (MDC-22)	D-C main buses A and B		
	PROG ALM	AGC program error detected.			CG5020X (AGC alarm 1)	Observe REGISTER displays for numerical flag denoting malfunction.
	COUNTER FAIL	Counter increment instruction not executed or not completed within 10 msec of initiation.			CG5026X (AGC alarm 7)	If malfunction is counter-increment not completed within 10 msec, the TC TRAP indicator will illuminate.
	RUPT LOCK	No interrupt within 80 msec or interrupt not completed within 10 msec.			CG5028X (AGC alarm 9)	
	TC TRAP	Transfer control not executed within 10 msec or not completed within 10 msec.			CG5029X (AGC alarm 10)	
	SCALER FAIL	100-pps signal from scaler A of computer timing section failed.			CG5024X (AGC alarm 5)	
	PARITY FAIL	Parity error exists in data word from memory.			CG5025X (AGC alarm 6)	
	TM FAIL	Telemetry data rate incorrect or transmission incorrect.			CG5022X (AGC alarm 3)	
	CHECK FAIL	Incorrect DSKY operation attempted.			CG5023X (AGC alarm 4)	
	KEY RLSE	Computer program cannot proceed until operator releases DSKY control.			CG5027X (AGC alarm 8)	Not a failure. Operator will press KEY RELEASE pushbutton. Computer will resume computation.

Location	Name and Position	Function	Circuit Breaker	Power Source	Telemetry Code No. and Identity	Remarks
LEB-106 (Cont)	ACTIVITY lights	Indicates activity the computer is presently engaged in.	G&N COMPUTER MN A MN B (MDC-22)	D-C main buses A and B		
	UPTL	Computer is receiving information from telemetry up-data link.			CG5021X (AGC alarm 2)	
	COMP	Computer is engaged in computation.				
	PROGRAM indicator	A two-digit display, indicating the number of the program (major mode) presently in progress.			None	On-board data provides definition of PROGRAM, NOUN, and VERB digits.
	VERB indicator	A two-digit display, indicating verb code selected.				
	NOUN indicator	A two-digit display, indicating noun code selected.				
	REGISTER 1 indicator	Displays contents of selected register or memory location. First component of extended data word, if applicable.				Displays may be commanded manually or by AGC.
	REGISTER 2 indicator	Displays contents of selected register or memory location. Second componet of extended data word, if applicable.				
	REGISTER 3 indicator	Displays contents of selected register or memory location. Third component of extended data word, if applicable.				
	BRIGHTNESS control	Varies brightness of electro-luminescent data displays: REGISTER 1, REGISTER 2, and REGISTER 3.				
	KEY RELEASE pushbutton	Enables program control of DSKY. Releases operator control of DSKY circuits.				
	TEST ALARM pushbutton	Illuminates the alarm displays for bulb test.				

Location	Name and Position	Function	Circuit Breaker	Power Source	Telemetry Code No. and Identity	Remarks
LEB-106 (Cont)	ERROR RESET pushbutton	Resets alarm light relays. AGC recycles to start of current operation.	G&N COMPUTER MN A MN B (MDC-22)	D-C main buses A and B	None	Verifies alarms. Alarms triggered by transients should not repeat.
	Keyboard switches	Provide for entering data into or commanding operations of the AGC.				Pushbutton-type switches (selectors). Each key generates a specific 5-bit keycode denoting the instruction or number being selected.
	CLEAR	Places all zeros (logic 0s) in register being loaded.				
	VERB	Prepares computer to accept next two digits as verb code.				
	NOUN	Prepares computer to accept next two digits as noun code.				
	ENTER	Transfers contents of input register to central processor and initiates execution of instructions.				
	+	Denotes data to follow has positive decimal value.				
	−	Denotes data to follow has negative decimal value.				
	0 to 9	Enters binary equivalent of key pressed.				
LEB-107	AGC MODE switch		G&N COMPUTER MN A MN B (MDC-22)	D-C main buses A and B	None	SPDT, toggle switch
	ON	Applies normal power to AGC.				
	STANDBY	Applies power timing section of AGC.				In STANDBY, AGC maintains timing signals and other circuits necessary to restart. STANDBY operation is used to conserve electrical power.
LEB-120	Gas chromotograph controls		GAS ANAL— AC 1 (MDC-22)	A-C bus No. 1 (ØA)		The gas chromotograph (GFE) is serviced and installed by ground support personnel prior to flight crew ingress. The unit operates on 80-minute cycles, during which it identifies 28 gas components.

Location	Name and Position	Function	Circuit Breaker	Power Source	Telemetry Code No. and Identity	Remarks
LEB-120 (Cont)	CABIN AIR/AUTO/ SUIT AIR switch		G&N ANAL— AC 1 (MDC-22)	A-C bus No. 1 (ØA)	CT0108K (Gas analysis suit and cabin)	
	CABIN AIR	Selects C/M cabin atmosphere for gas component sampling.				Switch set to CABIN AIR position on command from MSFN.
	AUTO	Permits suit circuit and C/M cabin atmospheres to be alternately sampled for gas components.				Normal position of switch.
	SUIT AIR	Selects suit circuit atmospheres for gas component sampling.				Switch set to SUIT AIR position on command from MSFN.
	START/OFF/ PREHEAT switch				None	
	START	Applies a-c power to operational portion of gas chromatograph.				Normal position of switch after completion of preheat operation.
	OFF	Removes a-c power from warmup oven and operational portion of gas chromatograph.				
	OVEN OFF	Applies a-c power to oven for required preheating prior to unit being placed in operation.				A minimum of 30 minutes warmup is required before switch is set to START position.
	AMPL-CAL switch	Push-type switch for use during bench calibration only.				

Location	Name and Position	Function	Circuit Breaker	Power Source	Telemetry Code No. and Identity	Remarks
LEB-150	Pyro battery circuit breakers		N/A	+23 vdc	None	
	PYRO A group SEQ A (20 amp)	Applies d-c power to the MESC pyro bus when the MASTER EVENT SEQ CONT—switch A (MDC-24) is in the PYRO ARM position. Applies d-c power to the open contacts of the C/M RCSC pyro arm relay in the MESC. The relay is energized when the MASTER EVENT SEQ CONT—switch A (MDC-24) is in the PYRO ARM position to arm the pyro bus in the C/M RCSC.				
	BAT A TO PYRO BUS TIE (20 amp)	Provides same function as above (Refer to Remarks.)				BAT A TO PYRO BUS TIE cb is normally open. It is closed after loss of pyro battery A and opening of the SEQ A cb to connect entry battery A to the sequencer A and RCS fuel dump A circuits.
	PYRO B group SEQ B (20 amps)	Applies d-c power to the MESC pyro bus when the MASTER EVENT SEQ CONT—switch B (MDC-24) is in the PYRO ARM position. Applies d-c power to the open contacts of the C/M RCSC pyro arm relay in the MESC. The relay is energized when the MASTER EVENT SEQ CONT—switch B (MDC-24) is in the PYRO ARM position to arm the pyro bus in the C/M RCSC.				
	BAT B TO PYRO BUS TIE (20 amp)	Provides same function as above (note remarks).				BAT B TO PYRO BUS TIE cb is normally open. It is closed after loss of pyro battery B and opening of the SEQ B cb to connect entry battery B to the sequencer B and RCS fuel dump B circuits.

Location	Name and Position	Function	Circuit Breaker	Power Source	Telemetry Code No. and Identity	Remarks
LEB-150 (Cont)	BAT CHGR-BAT C circuit breaker (5 amp)	Applies d-c power from battery C to D-C INDICATORS selector switch. Supplies connection from battery charges output to bat C.		+28 vdc	CC0212V (D-C voltage postlanding battery)	
	BAT C PWR - POSTLANDING ENTRY circuit breaker (100 amp)	a. Applies d-c power from battery C through 25-amp POST LDG - BAT C circuit breaker to flight and post-landing bus. b. Applies d-c power to 80-amp MAIN A - BAT C and MAIN B - BAT C circuit breakers.			CC0224C (D-C current post-landing battery)	
	BAT B PWR-ENTRY circuit breaker (100 amp)	Applies d-c power from entry battery B to battery bus B.			CC0223C (D-C current battery B)	
	BAT A PWR-ENTRY circuit breaker (100 amp)	Applies d-c power from entry battery A to battery bus A.			CC0223C (D-C current battery A)	

Location	Name and Position	Function	Circuit Breaker	Power Source	Telemetry Code No. and Identity	Remarks
RHFEB-200	C/M RCS HTRS switch		RCS—HEATERS A MN B B MN A (MDC-21)	+28 vdc	None	Two-position toggle switch, used to pre-heat all C/M RCS engine valves in order to preclude propellant freezing when system is pressurized prior to entry.
	On (up)	Activates relays which apply +28 vdc to the direct coils of all C/M RCS engine solenoid valves.				Switch is enabled by CM PROP JETT-LOGIC switch (MDC-8) in the ON (up) position.
	OFF	Deactivates relays which remove +28 vdc from the direct coils of all C/M RCS engine solenoid valves.				
	DC VOLTS meter (auxiliary)	Indicates d-c voltage of selected measurement points.	N/A	Instrumentation signal conditioners	Refer to TEST SELECT switch (RHFEB-97)	Meter functions in conjunction with FUNCTION SELECT and TEST SELECT switches located directly below meter. Meter range is 0 to 5 vdc.
	FUNCTION SELECT switch	Selects A or B wafer of TEST SELECT switch.				FUNCTION SELECT switch in conjunction with the TEST SELECT switch makes possible 24 measurement points for the Aux DC VOLTS meter.
	A	Connects Aux DC VOLTS meter to wafer A of TEST SELECT switch.				
	OFF	Disconnects Aux DC VOLTS meter from circuit.				
	B	Connects Aux DC VOLTS meter to wafer B of TEST SELECT switch.				
	TEST SELECT switch	Selects two groups of 12 measurements, depending on position of FUNCTION SELECT switch, A or B.				TEST SELECT switch has two independent wafers, each containing 12 contacts.
	1 (A)	Applies a d-c measurement voltage to Aux DC VOLTS meter which indicates output pressure of fuel cell No. 1 nitrogen regulator.			SC2060P (N_2 pressure F/C 1 regulated)	N_2 pressure range is 0 to 75 psia.
	1 (B)	Applies a d-c measurement voltage to Aux DC VOLTS meter which indicates temperature of C/M oxidizer valve, -P engine (No. 2) system A.			CR2205T (Temp ox. valve -P engine system A	Temperature range is -50° to +250°F.

Location	Name and Position	Function	Circuit Breaker	Power Source	Telemetry Code No. and Identity	Remarks
RHFEB-200 (Cont)	2 (A)	Applies a d-c measurement voltage to Aux DC VOLTS meter which indicates output pressure of fuel cell No. 2 nitrogen regulator.	N/A	Instrumentation signal conditioners	SC2061P (N_2 pressure F/C 2 regulated)	N_2 pressure range is 0 to 75 psia.
	2 (B)	Applies a d-c measurement voltage to Aux DC VOLTS meter which indicates temperature of C/M oxidizer valve, +Y engine (No. 7) system B.			CR2203T (Temp ox. valve +Y engine system B.	Temperature range is -50° to +250°F.
	3 (A)	Applies a d-c measurement to Aux DC VOLTS meter which indicates output pressure of fuel cell No. 3 nitrogen regulator.			SC2062P (N_2 pressure F/C 3 regulated)	N_2 pressure range is 0 to 75 psia.
	3 (B)	Applies a d-c measurement voltage to Aux DC VOLTS meter which indicates temperature of C/M oxidizer valve, -P engine (No. 4) system B.			CR2204T (Temp ox. valve -P engine system B	Temperature range is -50° to +250°F.
	4 (A)	Applies a d-c measurement voltage to Aux DC VOLTS meter which indicates output pressure of fuel cell No. 1 oxygen regulator.			SC2066P (O_2 pressure F/C 1 regulated)	O_2 pressure range is 0 to 75 psia.
	4 (B)	Applies a d-c measurement voltage to DC VOLTS meter which indicates temperature of C/M oxidizer valve cw engine (No. 11) system B.			CR2206T (Temp ox. valve cw engine system B)	Temperature range is -50° to +250°F.
	5 (A)	Applies a d-c measurement voltage to Aux DC VOLTS meter which indicates output pressure of fuel cell No. 2 oxygen regulator.			SC2067P (O_2 pressure F/C 2 regulated)	O_2 pressure range is 0 to 75 psia.
	5 (B)	Applies a d-c measurement voltage to Aux DC VOLTS meter which indicates PIPA temperature.			CG2300T (PIPA temperature)	Temperature range TBD.
	6 (A)	Applies a d-c measurement voltage to Aux DC VOLTS meter which indicates output pressure of fuel cell No. 3 oxygen regulator.			SC2068P (O_2 pressure F/C 3 regulated)	O_2 pressure range is 0 to 75 psia.

Location	Name and Position	Function	Circuit Breaker	Power Source	Telemetry Code No. and Identity	Remarks
RHFEB-200 (Cont)	6 (B)	Applies a d-c measurement voltage to Aux DC VOLTS meter which indicates IRIG temperature.	N/A	Instrumentation signal conditioners	CG2301T (IRIG temperature)	Temperature range TBD.
	7 (A)	Applies a d-c measurement voltage to Aux DC VOLTS meter which indicates output pressure of fuel cell No. 1 hydrogen regulator.			SC2069P (H_2 pressure F/C 1 regulated)	H_2 pressure range is 0 to 75 psia.
	7 (B)	Applies a d-c measurement voltage to Aux DC VOLTS meter which indicates IMU heater current.			CG2302C (IMU heater current)	IMU heater current range is from 0 to 5 amperes.
	8 (A)	Applies a d-c measurement voltage to Aux DC VOLTS meter which indicates output pressure of fuel cell No. 2 hydrogen regulator.			SC2070P (H_2 pressure F/C 2 regulated)	H_2 pressure range is 0 to 75 psia.
	8 (B)	Applies a d-c measurement to Aux DC VOLTS meter which indicates IMU blower current.			CG2303C (IMU blower current)	IMU blower current range is from 0 to 5 amperes.
	9 (A)	Applies a d-c measurement voltage to Aux DC VOLTS meter which indicates output pressure of fuel cell No. 3 hydrogen regulator.			SC2071P (H_2 pressure F/C 3 regulated)	H_2 pressure range is 0 to 75 psia.
	9 (B)	Applies a d-c measurement voltage to Aux DC VOLTS meter which indicates pressure of battery compartment manifold.			CC0188P (Press. bat. compartment manifold)	Battery compartment manifold pressure range is 0 to 18 psia.
	10 (A)	Applies a d-c measurement voltage to Aux DC VOLTS meter which indicates temperature of F/C No. 1 radiator outlet.			SC2087T (Temp F/C 1 radiator outlet)	F/C 1 radiator outlet temperature range is -50° to +300°F.
	10 (B)	Applies a d-c measurement voltage to Aux DC VOLTS meter which indicates temperature of ECS radiator inlet.			SF0665T (ECS radiator inlet temp)	ECS radiator inlet temperature sensor range is +60° to +150°F. Minimum inlet temperature is 75°F.
	11 (A)	Applies a d-c measurement voltage to Aux DC VOLTS meter which indicates temperature of F/C No. 2 radiator outlet.			SC2088T (Temp F/C 2 radiator outlet)	F/C 2 radiator outlet temperature range is -50° to +300°F.

Location	Name and Position	Function	Circuit Breaker	Power Source	Telemetry Code No. and Identity	Remarks
RHFEB-200 (Cont)	11 (B)	Applies a d-c measurement voltage to Aux DC VOLTS meter which indicates temperature of C/M oxidizer valve, ccw engine (No. 12) system A.	N/A	Instrumentation signal conditioner	CR2201T (Temp ox. valve ccw engine system A)	Temperature range is -50 to +250°F.
	12 (A)	Applies a d-c measurement voltage to Aux DC VOLTS meter which indicates temperature of F/C No. 3 radiator outlet.			SC2089T (Temp F/C 3 radiator outlet)	F/C 3 radiator outlet temperature range is -50 to +300°F
	12 (B)	Applies a d-c measurement voltage to Aux DC VOLTS meter which indicates temperature of C/M oxidizer valve, -Y engine (No. 8) system A.			CR2202T (Temp ox. valve -Y engine system A)	Temperature range is -50° to +250°F.
RHEB-201	WASTE MANAGEMENT panel		N/A	N/A	None	This shutoff valve is manually controlled by bar knob.
	OVBD DRAIN valve					
	DUMP	Connects WMS overboard dump line from selector valve to outside atmosphere, permitting dumping urine and fecal odors overboard.				The valve is operated in conjunction with the SELECTOR valve. Valve is set to DUMP position after setting SELECTOR valve to URINE FECES position. Upon completion of dumping or venting operation, OVBD DRAIN valve is set to OFF position before SELECTOR valve is set to OFF position.
	OFF	Closes WMS overboard dump line to outside atmosphere.				
	SELECTOR valve					This valve is manually controlled by bar knob.

Location	Name and Position	Function	Circuit Breaker	Power Source	Telemetry Code No. and Identity	Remarks
RHEB-201 (Cont)	URINE FECES	a. Connects waste management dump line to overboard dump line. b. Closes switch that applies a-c power to WMS blower.	ECS-CABIN AIR FAN-1-AC 1 ØA ØB ØC (MDC-22)	A-C bus No. 1	None	Blower operation in this valve position is not functional due to WMS modifications. Valve is placed to URINE FECES position for dumping urine collected in the Urine Sample Volume Measurement System (USVMS), or for venting odors originating during fecal canister usage. This valve position is selected in conjunction with the OVBD DRAIN valve. Valve is set to URINE FECES position before setting OVBD DRAIN valve to DUMP position. Upon completion of dumping or venting operation, SELECTOR valve is set to OFF position after OVBD DRAIN valve is set to OFF position.
	VACUUM	a. Connects vacuum cleaner line to WMS blower. b. Closes switch that applies a-c power to WMS blower.				With valve to VACUUM position, WMS blower is activated and blower exhaust is directed into C/M cabin.
	OFF	a. Closes all valve ports, deactivating waste management system. b. Removes a-c power from WMS blower.	None	None		
RHEB-202	WASTE MANAGEMENT ACCESS panel		N/A	N/A	None	
	BATTERY VENT valve					This valve is manually controlled by a bar knob.
	VENT	Permits gases generated by C/M batteries to be vented into the urine/water dump line.				Normal position of valve is VENT to dump overboard gases generated by C/M batteries.
	CLOSE	Shuts off the venting of C/M batteries into the urine/water dump line.				Valve is closed in event of battery vent system leakage, which would permit C/M atmosphere leakage to space.

Location	Name and Position	Function	Circuit Breaker	Power Source	Telemetry Code No. and Identity	Remarks
RHEB-203	MAIN A circuit breakers		N/A	+28 vdc	None	
	BAT BUS A (80 amp)	Applies d-c power from battery bus A to d-c main bus A through contacts of main bus tie bat A motor switch and isolation diode.				
	BAT C (80 amp)	Applies d-c power from battery C to d-c main bus A through contacts of main bus tie bat B motor switch and isolation diode.				
	MAIN B circuit breakers					
	BAT C (80 amp)	Applies d-c power from battery C to d-c main bus B through contacts of main bus tie bat A motor switch and isolation diode.				
	BAT BUS B (80 amp)	Applies d-c power from battery bus B to d-c main bus B through contacts of main bus tie bat B motor switch and isolation diode.				
	POST LDG circuit breakers					
	BAT BUS A (25 amp)	Applies d-c power from battery bus A to flight and postlanding bus through two isolation diodes.				These circuit breakers remain disengaged during flight and are engaged (pushed in) after landing.
	BAT BUS B (25 amp)	Applies d-c power from battery bus B to flight and postlanding bus through two isolation diodes.				
	BAT C (25 amp)	Applies d-c power from 100-amp BAT C PWR circuit breaker to flight and postlanding bus through two isolation diodes.				
	MAIN A (10 amp)	Applies power from d-c main bus A to flight and postlanding bus through isolation diode.				
	MAIN B (10 amp)	Applies power from d-c main bus B to flight and postlanding bus through isolation diode.				

Location	Name and Position	Function	Circuit Breaker	Power Source	Telemetry Code No. and Identity	Remarks
RHEB-203 (Cont)	INVERTER PWR circuit breakers		N/A	+28 vdc	None	
	NO. 1 MN A (70 amp)	Applies power from d-c main bus A to inverter No. 1.				
	No. 2 MN B (70 amp)	Applies power from d-c main bus B to inverter No. 2.				
	NO. 3 group					
	MN A (70 amp)	Applies power from d-c main bus A to inverter No. 3.				
	MN B (70 amp)	Applies power from d-c main bus B to inverter No. 3.				
RHEB-204	INST PWR CONT circuit breaker		INSTRU-MENTS— ESS - MN A and/or MN B (MDC-22)	D-C main bus A or d-c main bus B	None	
	ESSENTIAL group					
	1 (7.5 amp)	Applies +28-vdc power to RCS and structural operational instrumentation.				
	2 (7.5 amp)	Applies +28-vdc power to ELS, EPS, and ECS surge tank operational instrumentation.				
	3 (7.5 amp)	Applies +28-vdc power to operational instrumentation in S/M.				
	4 (5 amp)	(Spare)				
	NON ESSENTIAL group		INSTRU-MENTS— NONESS (MDC-22)	Non-essential bus No. 1		
	5 (5 amp)	(Spare)				
	6 (5 amp)	(Spare)				
	7 (5 amp)	(Spare)				
	8 (10 amp)	Applies 28-vdc power to flight qualification instrumentation.				

Location	Name and Position	Function	Circuit Breaker	Power Source	Telemetry Code No. and Identity	Remarks
RHEB-204 (Cont)	9 (10 amp)	Applies 28-vdc power to flight qualification instrumentation and to ECS radiator outlet temperature sensors.	INSTRUMENTS—NONESS (MDC-22)	Non-essential bus No. 1	None	
	10 (10 amp)	(Spare)				
RHEB-205	UPRIGHTING SYSTEM circuit breakers		N/A	+28 vdc	None	
	COMPR NO. 1 (25 amp)	Applies d-c power from battery bus A to the control motor switch of compressor No. 1.				The compressors are turned on and off by manual actuations of the POSTLANDING—FLOAT BAG switches on MDC-25.
	COMPR NO. 2 (25 amp)	Applies d-c power from battery bus B to the control motor switch of compressor No. 2.				These circuit breakers remain disengaged during flight and are engaged only after landing.
RHEB-206	ECS STEAM DUCT HTR circuit breakers		N/A	+28 vdc	None	
	MN A (5 amp)	Applies power from d-c main bus A to the following: a. Steam duct heater No. 1 b. Urine/water dump nozzle heater. Applies power from d-c main bus B to the following: a. Steam duct heater No. 2 b. Urine/water dump nozzle heater.				There are no switches to control the operation of the heaters. When the circuit breakers are activated, power is applied directly to corresponding 3-watt heating elements of the steam duct heaters, and to the 5.7-watt urine/water dump nozzle heater. Normally, both the steam duct and urine/water dump nozzle heaters are in operation for the total length of the mission.
RHFEB-207	SCIENTIFIC EQUIPMENT receptacle switch (RH)		SCIEN EQUIP. HATCH (MDC-22)	+28 vdc	None	
	ON	Applies d-c power from non-essential bus No. 2 to SCIENTIFIC EQUIPMENT receptacle (RH)				
	OFF	Removes d-c power from SCIENTIFIC EQUIPMENT (RH) receptacle.				

Location	Name and Position	Function	Circuit Breaker	Power Source	Telemetry Code No. and Identity	Remarks
RHEB-208	INV PHASE LOCK	Central timing signal to inverters supplied through inverter phase synchronizer to provide in-phase a-c power to a-c bus 1 and 2 when a separate inverter is powering each a-c bus.	None	a-c ØB of inverter 1, 2, or 3.	None	Normal position during flight.
	OFF	Provides central timing signal directly to inverters.				Position of phase synchronizer unit fails.
LHFEB-300, 301 302	Suit flow control valve		N/A	N/A	None	There are three suit connector assemblies in the cabin. Although they vary slightly in appearance, their function is identical, thus suit flow control valve data is covered once. The three suit connector assemblies are located at LHFEB-300, 301, and 302, and are controlled by sliding levers.
	OFF	Closes valve, shutting off flow of oxygen to suit connector.				Suit hose may be connected or disconnected only with the valve in the OFF position. The number of suit flow control valves placed to either the CABIN FLOW or the SUIT FULL FLOW positions should always equal the number of crewmen in the C/M.
	CABIN FLOW	Partially opens valve, permitting oxygen flow into cabin (or suit) at a rate compatible to the requirements of one crewman.				This valve position may be used for reduced flow to the PGA (suit connected), or for normal flow to the cabin for shirtsleeve mode (suit not connected). Suit hose is not disconnected from suit connector panel when going to shirtsleeve mode.
	SUIT FULL FLOW	Fully opens valve, permitting oxygen flow to suit at a rate compatible to the requirements of one crewman.				With the valve in SUIT FULL FLOW position (suit connected), the flow is at the rate of 17 lb/hr minimum. However, the flow rate will vary along the suit flow adjustment range from SUIT FULL FLOW to CABIN FLOW positions.

Location	Name and Position	Function	Circuit Breaker	Power Source	Telemetry Code No. and Identity	Remarks
LHFEB-300, 301, 302 (Cont)	CONTROL LEVER RELEASE	Permits free movement of valve control lever by releasing lever locking mechanism.	N/A	N/A	None	When release pushbutton is pressed, locking detent is removed from notch. The release pushbutton must be pressed to permit movement of the control lever in and out of the OFF position. This prevents inadvertent valve movement out of the closed position when suit hose is disconnected, and into the closed position when the suit hose is connected.
LHFEB-303	CABIN TEMP valve		N/A	N/A	None	
	H (heat)	Manual backup mode position of cabin temperature control valve to increase cabin temperature.				Motor-operated valve is manually controlled by integral knob. Rotational movement from H to C is approximately 1/2 turn. Backup mode control knob is used in event of malfunction of cabin temperature control components. This is a dual valve on a single shaft permitting water-glycol flow to heat exchanger to be regulated. Rotation toward the H (heat) position results in proportional increase in cabin temperature by directing warm water-glycol to cabin heat exchanger. There is a definite time lag in cabin temperature response following a manual adjustment: therefore, close coordination between manual adjustments and the TEMP-CABIN indicator (MDC-13) is not necessary.
	C (cool)	Manual backup mode position of cabin temperature control valve to decrease cabin temperature.				Rotation towards the C (cool) position results in proportional decrease in cabin temperature by directing cool water-glycol to cabin heat exchanger. There is a definite time lag in cabin temperature response following a manual adjustment; therefore, close coordination between manual adjustments and the TEMP-CABIN indicator (MDC-13) is not necessary.
	Cabin air control louver	Manually operated louver for adjusting direction of airflow from cabin air fans.				

Location	Name and Position	Function	Circuit Breaker	Power Source	Telemetry Code No. and Identity	Remarks
LHFEB-304	DRINKING WATER SUPPLY shutoff valve		N/A	N/A	None	Shutoff valve manually controlled by T-handle tool.
	ON	Permits flow of potable water to water delivery unit.				Normal position of valve is on.
	OFF	Turns off flow of potable water to water delivery unit.				Valve is closed in event of leak in water delivery unit.
LHFEB-305	FOOD PREPARATION WATER supply unit		N/A	N/A	None	Cold or hot water is metered at a rate of 1.00±0.05 ounce per valve actuation. Upon release, valves return to closed position.
	COLD valve	Upon actuation, permits metered amount of cold water (50°F) to food reconstitution nozzle.				
	HOT valve	Upon activation, permits metered amount of hot water (154±4°F) to food reconstitution nozzle.				
LHFEB-306	GMT clock	Mission elapsed time indicator.	N/A	N/A	None	This clock has a 24-hour dial face with standard second, minutes, and hour hands. A time-set screw, at the bottom left of the dial face, is used to synchronize the clock with Greenwich mean time.
	TO EVENT and FROM EVENT timers	Provides crew with a means of monitoring and timing events.				Each timer has a 10-hour dial face with second, minute, hour and 10-hour hands. A knob at the bottom left of each timer is used to set the timer hands. Each timer can be reset, started, or stopped by a push-control at the top right of the timer.

Location	Name and Position	Function	Circuit Breaker	Power Source	Telemetry Code No. and Identity	Remarks
LHEB-307	CABIN PRESSURE RELIEF valves		N/A	N/A	None	There are two cabin pressure-relief valves that normally operate automatically to provide positive and negative cabin pressure relief. The upper manual control (three valve positions) and the lower manual control (four valve positions) can override their corresponding relief valves to the CLOSE and NORMAL positions, while only the lower manual control can override its corresponding relief valve to the DUMP position. Horizontal pressure must be applied to move controls out of detent.
	CLOSE	Manual override position to close either cabin pressure-relief valve.				Both relief valves are closed for pre-launch checkout and during C/M RCS propellant dump, while either one or both relief valves are closed in flight in event of valve malfunction.
	NORMAL	Manual override position to partially restrict travel of either cabin pressure-relief valve in the automatic mode.				Normal position of controls for flight period between ascent and entry. Valves are limited to the partially open position to prevent rapid cabin decompression in event valves fail open.

Location	Name and Position	Function	Circuit Breaker	Power Source	Telemetry Code No. and Identity	Remarks
LHEB-307 (Cont)	BOOST ENTRY	Neutral position of override mechanism to permit both cabin pressure-relief valves full travel in the automatic mode.	N/A	N/A	None	Except for time required to dump RCS propellants during descent, both controls are normally set to the BOOST ENTRY position for the ascent and entry phases.
	DUMP	Manual override position of lower control to open corresponding cabin pressure-relief valve.				Valve is opened to intentionally vent cabin to outside atmosphere in event of contamination or fire.
	GLYCOL TO RAD valve					Shutoff valve is manually controlled by T-handle tool.
	OPEN	Permits flow of water-glycol from C/M to space radiators in S/M.				Normal position of valve is OPEN.
	CLOSE	Shuts off flow of water-glycol from C/M to space radiators in S/M				Valve is closed prior to CSM separation to shut off water-glycol flow to S/M.
	GLYCOL RESERVOIR controls					
	INLET valve					Shutoff valve is manually controlled by T-handle tool.
	OPEN	Permits flow of water-glycol from system into reservoir.				Valve is opened to direct water-glycol flow through reservoir during prelaunch and ascent phases and is operated in conjunction with GLYCOL RESERVOIR OUTLET and GLYCOL RESERVOIR BYPASS valves.
	CLOSE	Shuts off flow of water-glycol from system into reservoir.				Valve is closed upon completion of ascent phase to isolate reservoir from system.
	BYPASS valve					Shutoff valve is manually controlled by T-handle tool.
	OPEN	Opens bypass line permitting flow around water-glycol reservoir.				Valve is opened upon completion of ascent phase to bypass and isolate reservoir from system, and is operated in conjunction with GLYCOL RESERVOIR OUTLET and GLYCOL RESERVOIR INLET valves.
	CLOSE	Closes bypass line that permits flow around water-glycol reservoir.				Valve is closed to direct water-glycol flow through reservoir during prelaunch and ascent phases.

Location	Name and Position	Function	Circuit Breaker	Power Source	Telemetry Code No. and Identity	Remarks
LHEB-307 (Cont)	OUTLET valve		N/A	N/A	None	Shutoff valve is manually controlled by T-handle tool.
	OPEN	Permits flow of water-glycol from outlet of reservoir into system.				Valve is opened to direct water-glycol flow through reservoir during prelaunch and ascent phases, and is operated in conjunction with GLYCOL RESERVOIR INLET and GLYCOL RESERVOIR BYPASS valves.
	CLOSE	Shuts off flow of water-glycol from outlet of reservoir into system.				Valve is closed upon completion of ascent phase to isolate reservoir from system.
	OXYGEN controls					
	ENTRY valve					Shutoff valve is manually controlled by T-handle tool.
	ON	Permits flow from 1-lb entry oxygen tank into C/M oxygen supply subsystem.				Valve furnishes 1 lb of oxygen as a redundant supply to the normal surge tank quantity of 3.7 lb.
	OFF	Shuts off flow between 1-lb entry tank and C/M oxygen supply subsystem.				
	FILL	Permits flow from C/M oxygen supply subsystem to bypass the check valve and thus fill the 1-lb entry tank.				Tank filled to approximately 900 psig at a rate of 0.66 pounds/minute.
	S/M SUPPLY valve					Shutoff valve is manually controlled by T-handle tool.
	ON	Permits flow of oxygen to C/M from supply in S/M.				Normal position of valve is ON.
	OFF	Shuts off flow of oxygen to C/M from supply in S/M.				Valve is closed prior to CSM separation to prevent C/M entry oxygen supply from flowing overboard in event of check valve failure.
	SURGE TANK valve					Shutoff valve is manually controlled by T-handle tool.
	ON	Permits flow of oxygen to and from surge tank.				Normal position of valve is ON, permitting surge tank to carry out function of supplying additional oxygen

Location	Name and Position	Function	Circuit Breaker	Power Source	Telemetry Code No. and Identity	Remarks
LHEB-307 (Cont)			N/A	N/A	None	beyond the normal maximum flow capability from the S/M, and for entry. Set O_2 PRESS IND switch (MDC-13) to SURGE TANK to obtain indication.
	OFF	Shuts off flow of oxygen to and from surge tank.				Valve is closed to preserve surge tank supply in event cryogenic oxygen tank pressure drops to 900 psig or below.
LHEB-308	SURGE TANK PRESSURE RELIEF shutoff valve		N/A	N/A	None	Shutoff valve is manually controlled by T-handle tool. Rotational movement from OPEN to close is 1/4 turn.
	OEPN (cs)	Opens line from surge tank to relief valve permitting relief function.				OPEN position enables relief valve to function when surge tank pressure increases to 1045±25 psig.
	CLOSE (ccw)	Closes line from surge tank to relief valve eliminating relief function.				Valve is closed only if surge tank relief valve fails open.
LHEB-309	GLYCOL PRESS RELIEF BYPASS valves		N/A	N/A	None	Except for ascent and entry, one pressure-relief valve is selected for use at a time, with the second valve for standby redundancy.
	Valve 1					Shutoff valve is manually controlled by T-handle tool.
	ON	Permits flow of water-glycol to No. 1 water-glycol pressure-relief valve.				Normal position of valve No. 1 when valve No. 2 is OFF.
	OFF	Shuts off flow of water-glycol to No. 1 water-glycol pressure-relief valve.				Normal position of valve No. 1 when valve No. 2 is ON, or in event of malfunction of No. 1 pressure-relief valve.
	Valve 2					Shutoff valve is manually controlled by T-handle tool.
	ON	Permits flow of water-glycol to No. 2 water-glycol pressure-relief valve.				Normal position of valve No. 2 when valve No. 1 is OFF.
	OFF	Shuts off flow of water-glycol to No. 2 water-glycol pressure-relief valve.				Normal positon of valve No. 2 when valve No. 1 is ON, or in event of malfunction of No. 2 pressure relief valve.

Location	Name and Position	Function	Circuit Breaker	Power Source	Telemetry Code No. and Identity	Remarks
LHEB-310	Suit demand pressure regulator selector valve		N/A	N/A	None	Valve is manually controlled by T-handle tool.
	1	Directs regulated oxygen (100±10 psig) to No. 1 suit demand pressure regulator.				Valve set to position 1 in event of malfunction of No. 2 demand pressure regulator.
	1 & 2	Directs regulated oxygen (100±10 psig) to No. 1 and No. 2 suit demand pressure regulators.				Both demand pressure regulators are selected for simultaneous use under normal conditions for redundancy in event of one regulator malfunctioning.
	2	Directs regulated oxygen (100±10 psig) to No. 2 suit demand pressure regulator.				Valve set to position 2 in event of malfunction of No. 1 demand pressure regulator.
	OFF	Shuts off regulated oxygen (100±10 psig) to No. 1 and No. 2 suit demand pressure regulators.				Valve set to OFF position only if both suit demand pressure regulators malfunction.
	SUIT TEST valve					Valve is operated by an integral lever.
	PRESS	Routes regulated oxygen flow (100±10 psig) directly into suit circuit through a pressurization orifice at a maximum buildup rate of 4 psig per minute for PGA/suit circuit tests.				With valve in PRESS position, suit circuit will increase 4.25 psia above the nominal pressure of 5.0±0.3 psia. Approximately 75 seconds must be allowed for suit circuit pressure to reach maximum. This test may be performed at ground checkout or during flight.
	DEPRESS	Shuts off O_2 flow to suit circuit upon completion of test, permitting reduction of pressure buildup at an average bleedoff rate of 4 psig per minute.				Approximately 75 seconds must be allowed for the increased suit circuit pressure to bleed back to the nominal 5.0±0.3 psia.
	OFF	Permits normal O_2 flow to suit circuit through suit demand pressure regulator.				Normal position of valve when not conducting a PGA/suit circuit test. Valve must not be set to off position before suit circuit has returned to nominal pressure.
	SUIT HT EXCH switch					Regardless of switch position, the SUIT EVAP switch (MDC-13) must be in AUTO position for automatic control of suit circuit temperature.

Location	Name and Position	Function	Circuit Breaker	Power Source	Telemetry Code No. and Identity	Remarks
LHEB-310 (Cont)	GLY/EVAP	Places suit circuit temperature control complex in full automatic mode, whereby, cooling is accomplished either by water-glycol or water evaporation.	N/A	N/A	None	In the GLY/EVAP position, the switch is open. This prevents shorting across the circuit of the suit heat exchanger air outlet temperature sensor, and permits the sensor to automatically activate the water evaporation mode if the temperature reaches 60°F or more.
	EVAP	Overrides full automatic mode of suit heat exhcanger temperature control complex by positioning the water-glycol diverter valve in the bypass position, thereby, initiating the automatically controlled water evaporation cooling mode.				In the EVAP position, the switch is closed. This shorts across the circuit of the suit exchanger air outlet temperature sensor, and creates the same effect as an overtemp condition (above 60°F) on this sensor. This switch position is selected for cabin cold-soak operation, or if suit temperature control complex malfunctions.
LHEB-311	SUIT EVAP GLYCOL valve		N/A	N/A	None	Motor-operated valve is manually controlled by T-handle tool.
	ON	Manual override position of water-glycol diverter valve, routing coolant flow to the suit heat exchanger for suit circuit cooling.				Normal position of valve is ON to permit the automatic suit temperature control complex to select the water-glycol or water evaporation cooling mode.
	OFF	Manual override position of water-glycol diverter valve, bypassing coolant flow around suit heat exchanger and activating water evaporation cooling mode.				Valve is set to OFF position for backup cabin cold-soak operation or in event of suit temperature control malfunction. Movement of diverter valve mechanically operates switch that activates water evaporation cooling mode.

Location	Name and Position	Function	Circuit Breaker	Power Source	Telemetry Code No. and Identity	Remarks
LHEB-311 (Cont)	SUIT FLOW RELIEF valve		N/A	N/A	None	Valve is manually controlled by T-handle tool.
	AUTO	Removes override lever from poppet valve, permitting automatic pressure-relief action to take place at a ΔP of 5 (+0.6, -0.2) inches H_2O.				Normal position of valve is AUTO to maintain constant suit flow in event of suit circuit flow resistance fluctuations.
	OFF	Applies override lever to poppet valve holding valve in closed position.				Valve is manually closed in event of its failure to close when in the automatic mode.
	GLYCOL EVAP TEMP IN valve					Motor-operated valve is manually controlled by T-handle tool. Rotational movement from HEAT to cool is just over 1/4 turn.
	HEAT (ccw)	Manual backup mode position of water-glycol temperature control valve to increase temperature of water-glycol entering evaporator.				Backup mode is used in event of malfunction of water-glycol temperature control components. Rotation toward the HEAT position results in a proportional temperature increase by changing the mixture ratio of hot-to-cold water-glycol. Close coordination between valve adjustments and GLY EVAP — OUTLET TEMP indicator (MDC-13) is necessary to obtain correct water-glycol temperature.
	Cool (ccw)	Manual backup mode position of water-glycol temperature control valve to decrease temperature of water-glycol entering evaporator.				Rotation toward the cool position results in a proportional temperature decrease by changing the mixture ratio of cold-to-hot water-glycol. Close coordination between valve adjustments and GLY EVAP — OUTLET TEMP indicator is necessary to obtain correct water-glycol temperature.
	H_2O ACCUMULATOR selector valves					Valves manually controlled by T-handle tool.
	Valve 1					
	MAN	Routes regulated oxygen (100±10 psig) to No. 1 cyclic accumulated, bypassing solenoid shutoff valve.				Valve position is selected only when No. 2 accumulated has failed and No. 1 solenoid shutoff valve cannot be operated automatically or by

Location	Name and Position	Function	Circuit Breaker	Power Source	Telemetry Code No. and Identity	Remarks
LHEB-311 (Cont)			N/A	N/A	None	manually selected electrical impulse. Valve will then be positioned to MAN for approximately 10 seconds every 30 minutes.
	OFF	Shuts off regulated oxygen (100±10 psig) to solenoid shutoff valve and bypass line to No. 1 cyclic accumulator.				
	RMTE	Routes regulated oxygen (100±10 psig) to solenoid shutoff valve of No. 1 cyclic accumulator.				Normal position of valve is RMTE, permitting automatic (CTE) or manually selected electrical impulse to operate solenoid shutoff valve. Manually selected electrical operation is used in event of automatic control unit malfunction.
	Valve 2					Valve manually controlled by T-handle tool.
	MAN	Routes regulated oxygen (100±10 psig) to No. 2 cyclic accumulator, bypassing solenoid shutoff valve.				Valve position is selected only when No. 1 accumulator has failed and No. 2 solenoid shutoff valve cannot be operated automatically or by manually selected electrical impulse. Valve will be positioned to MAN for approximately 10 seconds every 30 minutes.
	OFF	Shuts off regulated oxygen (100±10 psig) to solenoid shutoff valve and bypass line to No. 2 cyclic accumulator.				
	RMTE	Routes regulated oxygen (100±10 psig) to solenoid shutoff valve of No. 2 cyclic accumulator.				Normal position of valve is RMTE permitting automatic or manually selected electrical impulse to operate solenoid shutoff valve. Manually selected electrical operation is used in event of automatic control unit malfunction.
	GLYCOL RESERVE valve					Shutoff valve is manually controlled by T-handle tool.
	ON	Permits flow of water-glycol from reservoir into system.				Valve is opened to refill water-glycol system following the discovery and isolation of a leak.

Location	Name and Position	Function	Circuit Breaker	Power Source	Telemetry Code No. and Identity	Remarks
LHEB-311 (Cont)	OFF	Shuts off flow of water-glycol from reservoir into system.	N/A	N/A	None	Normal position of valve is OFF to isolate water-glycol reservoir from system.
	EVAP H_2O valve					Valve is manually controlled by T-handle tool.
	AUTO	Permits water flow to water-glycol evaporator solenoid-operated water inflow control valve.				Normal position of valve.
	OFF	Shuts off water flow to water-glycol evaporator water inflow control valve.				Valve is manually closed to prevent flooding water-glycol evaporator in event solenoid valve facts open.
	SUIT EVAP selector valve					Valve is manually controlled by T-handle tool.
	AUTO	Routes flow of water to solenoid-operated water inflow control valve for suit circuit evaporative cooling.				Valve set to AUTO position during all automatic suit temperature control operations.
	OFF	Shuts off flow of water to water inflow control valve and bypass line to suit evaporator.				Valve set to OFF position in event water inflow control valve fails open.
	MAN	Bypasses flow of water around water inflow control valve, routing it directly into the suit evaporator.				Valve set to MAN position for manual backup mode of evaporative cooling. This method is effective only if the steam-pressure control valve is in any position other than close. A malfunction in the temperature control components could leave the steam pressure control valve in any position.
LHEB-312	GLYCOL ACCUMULATOR shutoff valve		N/A	N/A	None	Shutoff valve is manually controlled by torque wrench and 10-inch driver.
	On (ccw)	Permits flow of water-glycol from system to and from water-glycol accumulator.				Normal position of valve is on, permitting accumulator to carry out function of damping surges and oscillations, and maintaining pump inlet pressure.
	OFF (cw)	Shuts off flow of water-glycol from system to water-glycol accumulator.				Valve is closed to isolate a leaking accumulator from water-glycol system.

Location	Name and Position	Function	Circuit Breaker	Power Source	Telemetry Code No. and Identity	Remarks
LHEB-313	CO_2-odor absorber diverter valve		N/A	N/A	None	The diverter valve linkage includes a mechanical interlock that assures cover removal of only the canister that has been isolated from the suit flow.
	UP	Shuts off suit circuit flow to canister B and diverts the full flow to canister A.				
	Center	Neutral position of valve permitting equal suit circuit flow to each canister.				
	Down	Shuts off suit circuit flow to canister A and diverts the full flow to canister B.				
LHEB-314	MAIN REGULATOR selector valve		N/A	N/A	None	Selector valve is manually controlled by integral knob.
	NORMAL	Directs supply of oxygen from S/M to No. 1 and No. 2 main pressure regulator and relief valves.				Regulators No. 1 and No. 2 are selected for simultaneous use under normal conditions.
	1	Directs supply of oxygen from S/M to No. 1 main pressure regulator and relief valve.				Valve set to position 1 in event of malfunction of No. 2 main pressure regulator and relief valve.
	OFF	Shuts off supply of oxygen from S/M to No. 1 and No. 2 main pressure regulator and relief valves.				
	2	Directs supply of oxygen from S/M to No. 2 main regulator and relief valve.				Valve set to position 2 in event of malfunction of No. 1 main pressure regulator and relief valve.
	WATER & GLYCOL TANKS PRESSURE controls					Selector valve is manually controlled by T-handle tool.
	REGULATOR-SELECTOR INLET valve					
	NORMAL	Directs regulated oxygen (100±10 psig) to No. 1 and No. 2 tank pressure regulators for reduction to 20±-psig tank pressure.				Both tank pressure regulators are selected for simultaneous use under normal conditions for redundancy in event of one regulator malfunctioning.
						Caution If the SELECTOR INLET valve is placed to position 1 or 2, the SELECTOR OUTLET valve must be placed to the corresponding position (or NORMAL) to prevent shutting off supply of oxygen for pressurizing the water tanks and water-glycol reservoir.

Location	Name and Position	Function	Circuit Breaker	Power Source	Telemetry Code No. and Identity	Remarks
LHEB-314 (Cont)	1	Directs regulated oxygen (100±10 psig) to No. 1 tank pressure regulator for reduction to 20±2-psig tank pressure.	N/A	N/A	None	Valve is set to position 1 in event of malfunction of No. 2 tank pressure regulator.
	OFF	Shuts off regulated oxygen (100±10 psig) to No. 1 and No. 2 tank pressure regulators.				With valve in OFF position, tank pressurization system is isolated from regulated oxygen supply.
	2	Directs regulated oxygen (100±10 psig) to No. 2 tank pressure regulator for reduction to 20±2-psig tank pressure.				Valve is set to position 2 in event of malfunction of No. 1 tank pressure regulator.
	RELIEF-SELECTOR OUTLET valve					Selector valve is manually controlled by T-handle tool.
	NORMAL	Directs oxygen pressure from potable and waste water tanks to No. 1 and No. 2 tank pressure regulator relief valves.				Both tank pressure-relief valves are selected for simultaneous use under normal conditions for redundancy in event of one relief valve malfunctioning.
						There is no meter to indicate pressurization of potable and waste water tanks and glycol reservoir.
						Caution If the SELECTOR OUTLET valve is placed to position 1 or 2, the SELECTOR INLET valve must be placed to the corresponding position (or NORMAL) to prevent shutting off supply of oxygen for pressurizing the water tanks and water-glycol reservoir.
	1	Directs oxygen pressure from potable and waste water tanks to No. 1 tank pressure regulator relief valve.				Valves set to position 1 in event of malfunction of No. 2 tank pressure regulator relief valve.
	OFF	Shuts off oxygen pressure from potable and waste water tanks to No. 1 and No. 2 tank pressure regulator relief valves.				With valve in OFF position, any increase in oxygen pressure is trapped and cannot be relieved.
	2	Directs oxygen pressure from potable and waste water tanks to No. 2 tank pressure regulator relief valve.				Valve set to position 2 in event of malfunction of No. 1 tank pressure regulator relief valve.
	PLSS FILL valve	Manual shutoff valve controlling filling of PLSS tank with oxygen from supply in surge tank.				Valve is manually controlled by integral T-handle. Rotational movement from open to CLOSE is approximately 2 turns.

Location	Name and Position	Function	Circuit Breaker	Power Source	Telemetry Code No. and Identity	Remarks
LHEB-314 (Cont)			N/A	N/A	None	Normal position of valve is closed. Valve is opened when used in conjunction with adjacent PLSS FILL connector.
	EMERGENCY CABIN PRESSURE selector valve					Selector valve is manually controlled by T-handle tool.
	NORMAL	Directs regulated oxygen (100±10 psig) to No. 1 and No. 2 emergency cabin pressure regulators.				Both emergency regulators are selected for simultaneous use under normal conditions, for redundancy in event of emergency decompression as a result of cabin wall puncture.
	1	Directs regulated oxygen (100±10 psig) to No. 1 emergency cabin pressure regulator.				Valve set to position 1 in event of malfunction of No. 2 emergency regulator.
	OFF	Shuts off regulated oxygen (100±10 psig) to No. 1 and No. 2 emergency cabin pressure regulators				Valve is set to OFF position whenever all crewmen are suited. With valve in OFF position, both emergency regulators are isolated from regulated oxygen supply.
	2	Directs regulated oxygen (100±10 psig) to No. 2 emergency cabin pressure regulator.				Valve set to position 2 in event of malfunction of No. 1 emergency regulator.
	PRESS TO TEST pushbutton	Permits No. 1 and No. 2 emergency cabin pressure regulators to be simultaneously tested for operational verification.				With pushbutton pressed, vents to reference pressure chambers of both regulators are closed off. This allows an artificial reference pressure to build up which results in regulator operation. This test may be accomplished at ground checkout or during flight.
	CABIN REPRESS manual valve					Shutoff valve is manually controlled by integral knob. Rotational movement from OPEN to close is approximately 3/4 turn.
	OPEN (cw)	Directs oxygen into cabin up to the maximum flow rate of 7.2 lb per hr. Poppet-type valve is an independent unit of the cabin pressure regulator assembly.				Both normal cabin pressure regulators are in use simultaneously and cannot be selected or turned off. In the event both regulators fail in the closed or fail-safe position, the manual shutoff valve is used to maintain cabin pressure. Valve is also used to repressurize cabin after decompression.
	Close (ccw)	Shuts off oxygen flow into cabin.				

Location	Name and Position	Function	Circuit Breaker	Power Source	Telemetry Code No. and Identity	Remarks
LHEB-314 (Cont)	TOOL STORAGE receptacle	Flush-mounted receptacle for storing universal T-handle tool used in positioning numerous manually operated valves.	N/A	N/A	None	A second universal T-handle tool is stowed in socket of suit circuit DIRECT O_2 metering valve (MDC-24) for use in positioning those valves accessible to crewman in LH couch.
LHEB-315	WASTE TANK SERVICING valve		N/A	N/A	None	Shutoff valve is manually controlled by T-handle tool.
	OPEN	Permits flow of water into waste water tank from ground servicing connection.				Valve is opened when used in conjunction with adjacent WASTE TANK SERVICING connector.
	CLOSE	Shuts off flow of water into waste water tank from ground servicing condition.				
	PRESSURE RELIEF selector valve					Selector valve is manually controlled by integral lever.
	BOTH	Directs flow of excess potable or waste water to No. 1 and No. 2 pressure relief valves.				Both pressure relief valves are selected for simultaneous use under normal conditions, for redundancy in event of one relief valve malfunctioning.
	1	Directs flow of excess potable or waste water to No. 1 pressure relief valve.				Valve set to position 1 in event No. 2 pressure relief valve malfunctions.
	OFF	Shutoff flow of excess potable and waste water to No. 1 and No. 2 pressure relief valves.				With valve in OFF position, excess water cannot be dumped overboard. Unless both relief valves fail to open, this valve position is used for ground checkout only.
	2	Directs flow of excess potable and waste water to No. 2 pressure relief valve.				Valve set to position 2 in event No. 1 pressure relief valve malfunctions.
	POTABLE TANK INLET valve					Shutoff valve is manually controlled by T-handle tool.
	OPEN	Permits flow of water from fuel cells into potable water tank.				Normal position of valve is OPEN.
	CLOSE	Shuts off flow of water from fuel cells into potable water tank.				Valve set to CLOSE position to isolate potable water tank in event water from fuel cells becomes contaminated.

Location	Name and Position	Function	Circuit Breaker	Power Source	Telemetry Code No. and Identity	Remarks
LHEB-315 (Cont)	WASTE TANK INLET valve		N/A	N/A	None	Shutoff function of this relief-shutoff valve is manually controlled by T-handle tool.
	AUTO	Permits flow of water from fuel cells into waste water tank when relief valve differential pressure reaches 6.0±0.5 psi.				Normal position of valve is AUTO. If potable water tank is full or waste tank is empty, water from fuel cells will flow into waste water tank when relief valve reaches 6.0±0.5 psid.
	CLOSE	Shuts off flow of water from fuel cells to differential pressure-relief valve and waste water tank.				Valve set to CLOSE position in event relief valve fails open, prematurely permitting potable water flow into waste water tank.
LHEB-316	PLVC switch		POSTLANDING VENT FAN - PL BUS/FLOAT BAG 2 (MDC-25)	Flight and Postlanding Bus	None	
	NORMAL	Applies d-c power to pendulum-type attitude sensing switch of PLV system during normal postlanding operations.				Switch set to NORMAL position to permit normal operation of attitude sensing switch (to close PLV valves) when C/M becomes inverted or tilts beyond a specified limit.
	OPEN	Applies d-c power directly to PLV valves, placing valves in open position in event of abnormal postlanding operations.				Switch set to OPEN position in event of attitude sensing switch failure, or to aid crew to escape from inverted C/M.
LHEB-317	GLY EVAP WATER CONTROL BYPASS valve		N/A	N/A	None	LHEB-317 consists of two components. A manually operated water control valve installed in the LHEB, and a plug-in unit to measure glycol evaporator wick temperature stowed in the C/M cabin. Data on plug-in unit TBD.
	ON	Permits flow of water directly into water-glycol evaporator by bypassing solenoid-operated water inflow control valve.				Valve set to ON position in event of water-glycol evaporator temperature control failure.
	OFF	Shuts off flow of water bypassing water-glycol evaporator inflow control valve.				Normal position of valve is OFF.
	Portable Indicating Unit	Permits monitoring of W/G evaporator, when operated in manual mode.				Unit consists of one dual indicator, a four-position selector switch, and a self-contained battery power supply.

Location	Name and Position	Function	Circuit Breaker	Power Source	Telemetry Code No. and Identity	Remarks
LHEB-317	Selector switch		N/A	N/A	None	
	OFF	Removes power to unit. Self-contained ball.				Cables connect to J39 on panel 317.
	Wick Temperature	Reads temp of W/G Evaporator Wetness Sensor.				
	Evaporator Inlet Temperature	Reads temp. of W/G evaporator INLET sensor.				
	NULL	Reads ON or OFF red line mid-section of time shared Wick Temp Ind pertains to H_2O inlet solenoid valve to evaporator.				
LHFEB-318	SCIENTIFIC EQUIPMENT receptacle switch (LH)		SCIEN EQUIP. HATCH (MDC-22)	+28 vdc	None	
	ON	Applies d-c power from non-essential bus No. 2 to SCIENTIFIC EQUIPMENT (LH) receptacle for experiments.				
	OFF	Removes d-c power from SCIENTIFIC EQUIPMENT (LH) receptacle.				
Crew Couches	Rotation controls	Provides manual control of C/M - S/M attitude in all axes.	SCS—GROUP 2 AC 1 AC 2 (MDC-25)	A-C bus No. 1 or A-C bus No. 2	None	Two identical rotation controls are installed in the S/C. The function of both controls is identical. The electrical cabling plugs for the two rotation controls are connected at the RH couch junction box.
	Forward/back (movement)	a. Commands S/C rotation in the pitch axis. b. Provides manual control of SPS engine pitch gimbal after MTVC is engaged.	SCS—DIRECT CONT MN A MN B (MDC-25)	D-C main bus A or B		When using a control, S/C rotation can be commanded two ways, either by proportional rate commands or by direct on commands. Proportional rate command is obtained by utilization of the SCS electronics, and is considered the normal method. Direct on commands are available when the DIRECT RCS switch is used in conjunction with the rotation control.
	Left/right (movement)	Commands S/C rotation in the roll axis.	SCS—GROUP 2 MN A MN B (MDC-25)			
	CW/CCW (rotation)	a. Commands S/C rotation in the yaw axis. b. Provides manual control of SPS engine yaw gimbal after MTVC is engaged.				

Location	Name and Position	Function	Circuit Breaker	Power Source	Telemetry Code No. and Identity	Remarks
Left Armrest, LH Couch	Translation controls		SCS— GROUP 1 MN A MN B (MDC-25)	D-C main bus A or B	None	Two nearly identical translation controls are installed in the S/C. The functions are identical with one exception: the CCW switch function is not available from the No. 2 control. S/C translations are accomplished by use of S/M RCS only. Physically, the No. 1 control is identified by the presence of yellow diagonal striping on the top and right hand side. A push-to-talk mike switch is located on the control handle. When pressed, the switch enables audio transmission capability in certain modes of communication system operation. The electrical cabling plugs for the two translation controls, are connected at the LHEB.
	Neutral position	Actuates all switches located within the control to the open position.				
	In/out	Applies +X or -X translation command signal to SCS electronics.				
	Left/right	Applies +Y or -Y translation command signal to SCS electronics.				
	Up/down	Applies +Z or -Z translation command signal to SCS electronics.				
	CCW (rotation)	a. Initiates manual abort command signal to the MESC. b. Provides a backup for CSM/booster separation after all stages are expended.	MASTER EVENT SEQ CONT— A LOGIC B BAT A BAT B (MDC-22)	Battery buses A and B	None	The translation control must be in the neutral position prior to engaging MESC logic A and B circuit breakers. Failure to confirm neutral positioning could result in an inadvertent abort or separation. Due to a positive detent the translation control must be manually returned to neutral from the CCW or CW position. This function is used when normal booster separation fails to occur.
	CW (rotation)	a. Engages manual thrust vector control mode during G&N or SCS ΔV, ΔV switch must be in the ΔV position prior to selecting MTVC. b. Disengages automatic attitude control during G&N or SCS attitude hold.	SCS— GROUP 2 MN A MN B (MDC-25)	D-C main bus A and B		This position may be used to place the S/C in free drift, and at the same time provide S/C attitude information on the FDAI depending on mode selected.

CONTROLS AND DISPLAYS

Location	Name and Position	Function	Circuit Breaker	Power Source	Telemetry Code No. and Identity	Remarks
Pressure Garment Assembly	PGA pressure indicator	Indicates oxygen pressure (PSIA) inside pressure garment assembly.	None	None	None	The indicator is located on the left sleeve between wrist and elbow, on top of arm. The indicator range is from 2 to 10 psia.

PRESSURE GARMENT ASSEMBLY

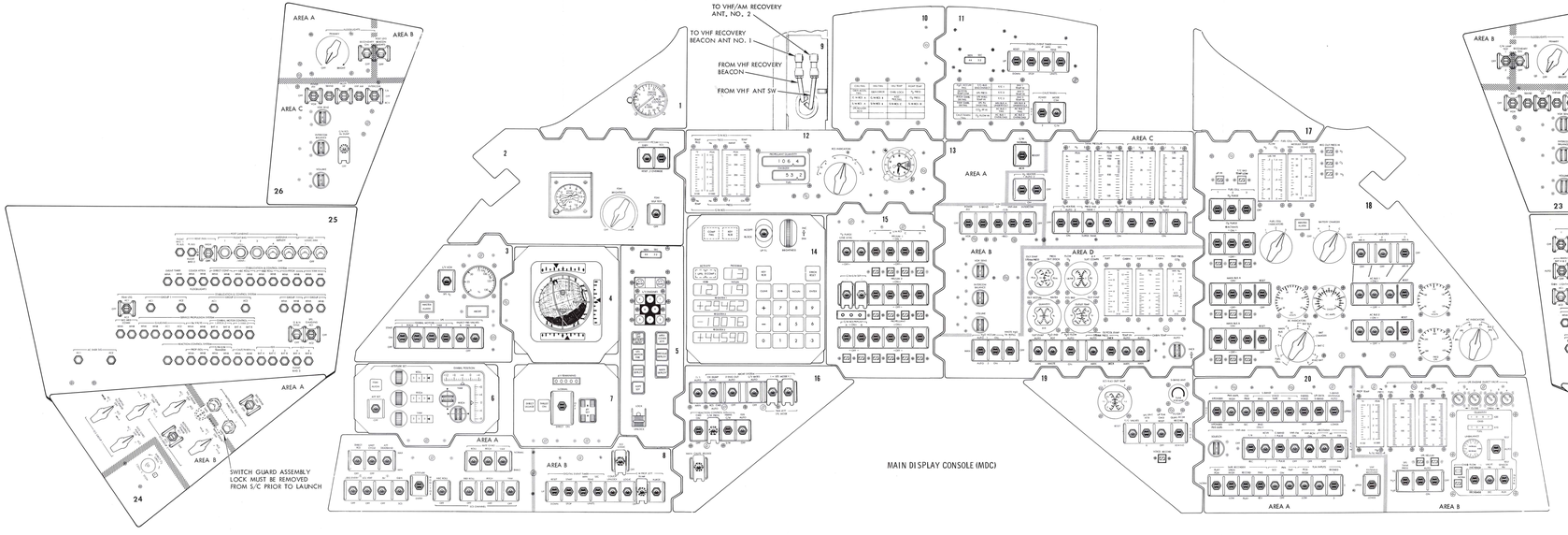

INDEX		
MDC PANEL NO.	CONTROL OR DISPLAY	SYSTEM
1	ALTIMETER	SEQ
2	FDAI	SCS
2	LONG ACCEL	MISC
2	FCSM group	SPS
3	L/V AGA/SPS P_c ind	SPS, SEQ
3	L/V AGA/SPS P_c indicator meter	SPS, SEQ
3	ABORT light	SEQ
3	MASTER ALARM light	C&W
4	SPS group	SPS
4	FDAI	SCS
5	All controls & displays	SEQ
6	All controls & displays	SCS
8	All controls & displays	SCS

INDEX		
MDC PANEL NO.	CONTROL OR DISPLAY	SYSTEM
8	Area A	SCS
8	Area B - ELS LOGIC, COUCH	SEQ
	ELS LOGIC and DIGITAL EVENT TIMER	
8	Area B - CM PROP JETT group	RCS, SEQ
9	Coaxial bracket	T/C
10	G&N G&N G&N SCS G&N RCS G&N EPS RCS RCS G&N EPS SCS RCS RCS RCS SPS	
11	ECS EPS EPS EPS ECS SPS EPS EPS SPS SPS EPS EPS SPS EPS EPS EPS ECS ECS EPS EPS C&W ECS EPS EPS	
11	CAUT/WARN group	C&W
12	DIGITAL EVENT TIMER	SEQ
12	All controls & displays except MISSION ELAPSED TIME	ECS
12	MISSION ELAPSED TIME	MISC
13	Area A	C&W
13	Area B	T/C
14	Area C	ECS
14	Area D	ECS
14	All controls & displays	G&N
15	All controls & displays except C/M-S/M SEP group & Rty PURGE LINE HTRS	RCS
16	C/M-S/M SEP group	SEQ
16	ABORT MODE LOGIC	EPS
16	ABORT SYSTEM group & ELS AUTO	SEQ
16	MAIN CHUTE RELEASE	SEQ
16	REACTION CONTROL SYS group	RCS
17	All controls & displays except MASTER ALARM LIGHT	EPS
18	MASTER ALARM LIGHT	C&W
19	S/C VALVES	EPS
19	ENTRY, RETRO, UP TLM CMD, FLIGHT SEAL RCDR and VOICE RECORD	T/C
19	ECS, RAD OUT TEMP	ECS
20	SPS LINE HTR	SPS
20	AREA 2	T/C
20	AREA 3	T/C
20	RCS HEATERS group	SM-RCS
21	SNSR UNIT group	EPS
21	ECS RADIATOR group	ECS
21	CABIN AIR FAN group	ECS
21	ECS GLY HEATER	ECS
21	PCO2 CONTROLLER	ECS
21	SUIT COMPRESSOR	ECS
21	All controls on top row	EPS
22	ECS group	ECS
22	SCIENTIFIC EQUIP HATCH	EXP
22	MAIN BUS TIE group	EPS
22	DC MAIN BUS PHOTOMETER BUS	EPS
22	DC SNSR SELECT	T/C
22	CENTRAL TIMING SYS group	EPS
22	SCIEN EQUIP group	EXP
22	BAT RLY BUS group	EPS
22	BATTERY CHARGER group	EPS

INDEX		
MDC PANEL NO.	CONTROL OR DISPLAY	SYSTEM
22	G&N LIGHTING	G&N
22	RCS group	T/C
22	TELECOMMUNICATIONS group	SEQ
22	MASTER EVENT SEQ CONT group	SEQ
22	GUIDANCE & NAVIGATION group	G&N
22	1 - CRYOGENIC SYS TANK FAN MOTORS - 2	EPS
22	CRYOGENIC SYSTEM group	EPS
22	ENVIRONMENTAL CONTROL SYSTEM group	ECS
22	INSTRUMENTS-ESS group	ECS
22	INSTRUMENTS-NONESS BUS	EPS
22	INSTRUMENTS-NONESS	T/C
22	INSTRUMENTS-PMK XMTR NONESS	T/C
22	INSTRUMENTS-SCIEN	EXP
22	AREA A-AUX	RCS
23	AREA A	MISC
23	AREA B	C&W
23	AREA C	T/C
24	AREA A	SEQ
24	AREA B	SCS
24	DIRECT O_2	ECS
25	POSTLANDING FLOAT BAG 1 PL BUS & POSTLANDING FLOAT BAG 1, 2 & 3	MISC
25	POSTLANDING VENT FAN PL BUS	ECS, MISC
25	FLOAT BAG 2	
25	POSTLANDING VENT FAN HIGH LOW OFF	ECS
25	POST LANDING-VENT FAN group	ECS
25	POST LANDING - ANTENNA DEPLOY group	T/C
25	MISC LOGIC ANN A&B	SEQ
25	EVENT TIMER group	SEQ
25	COUCH ATTEN & PUSHLIGHTS	MISC
25	STABILIZATION & CONTROL SYSTEM group	SCS
25	BIO MED COMM group	T/C
25	BIO MED TELEMETRY group	T/C
25	G&N SYNC	G&N
25	SPS GAUGING	SPS
25	AC DVDR SEQ group	ECS
25	REACTION CONTROL SYS group	ECS
25	CAUT/WARN	C&W
25	ECS group	ECS
25	SPS group	SEQ
25	AREA A	MISC
26	AREA B	SEQ
26	AREA C except CM RCS He DUMP	T/C
26	CM RCS He DUMP	ECS

Figure 3-1. Main Display Console

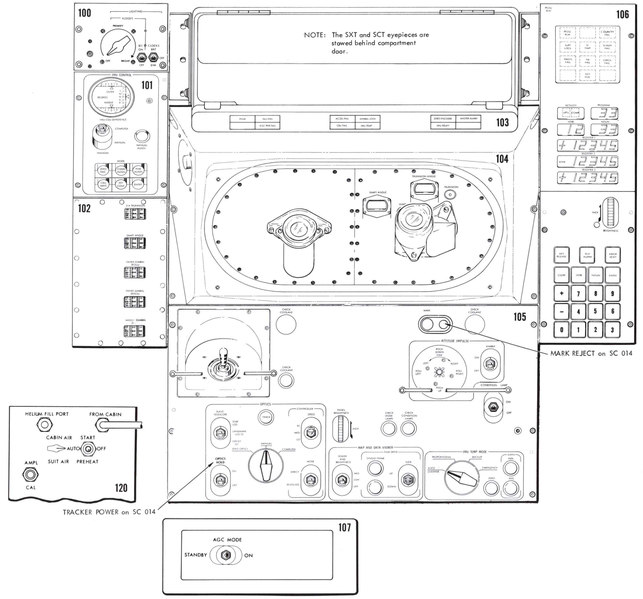

LOWER EQUIPMENT BAY (LEB)

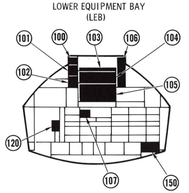

LEB INDEX		
PANEL NO.	CONTROL OR DISPLAY	SYSTEM
101 THRU 107	All controls & displays	G&N
100	LIGHTING	MISC
150	Top row	SEQ
150	Bottom row	EPS
120	All controls	ECS

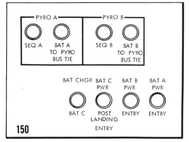

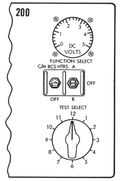



RH UTILITY PLUG

RHFEB INDEX		
PANEL NO.	CONTROL OR DISPLAY	SYSTEM
200	DC VOLTS, FUNCTION SELECT, and TEST SELECT	EPS
200	C/M RCS HTRS	RCS
207	SCIENTIFIC EQUIPMENT RECEPTACLE SWITCH	

RH FWD EQUIPMENT BAY (RHFEB)

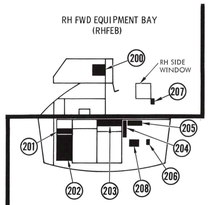

RH EQUIPMENT BAY (RHEB)

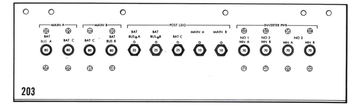

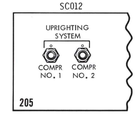

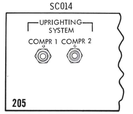

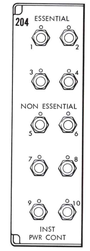

RHEB INDEX		
PANEL NO.	CONTROL OR DISPLAY	SYSTEM
201 THRU 206	All controls	ECS
203	All controls	EPS
204	ESSENTIAL 2	ECS & T/C
204	ESSENTIAL 1, 3, 4 and NON ESSENTIAL 5, 6, 7, 8, 10	T/C
204	NON ESSENTIAL 9	ECS & T/C
205	All controls	SEQ
208		EPS





SM-2A-749H

Figure 3-2. Controls and Displays (Sheet 1 of 2)

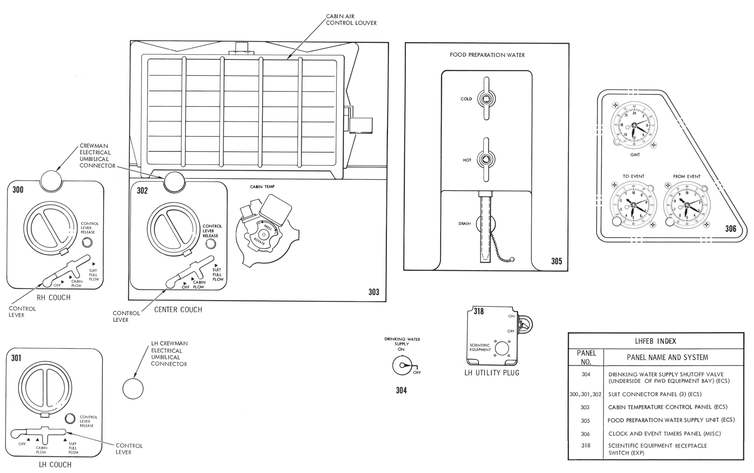

LHFEB INDEX

PANEL NO.	PANEL NAME AND SYSTEM
304	DRINKING WATER SUPPLY SHUTOFF VALVE (UNDERSIDE OF FWD EQUIPMENT BAY) (ECS)
300,301,302	SUIT CONNECTOR PANEL (2) (ECS)
303	CABIN TEMPERATURE CONTROL PANEL (ECS)
305	FOOD PREPARATION WATER SUPPLY UNIT (ECS)
306	CLOCK AND EVENT TIMERS PANEL (MISC)
318	SCIENTIFIC EQUIPMENT RECEPTACLE SWITCH (EXP)

LHEB INDEX

PANEL NO.	PANEL NAME AND SYSTEM
309	GLYCOL PRESSURE RELIEF BYPASS CONTROL PANEL (ECS)
308	SURGE TANK PRESSURE RELIEF SHUTOFF VALVE (ECS)
307	GIRTH FRAME SHELF CONTROLS (ECS)
319	SUIT CIRCUIT RETURN SHUT-OFF VALVE (ECS)
310	O2 DEMAND REGULATOR AND SUIT HEAT EXCHANGER SWITCH (ECS)
312	GLYCOL ACCUM SHUTOFF VALVE (BACK OF ATTENUATOR PANEL) (ECS)
313	CO2 - ODOR ABSORBER DIVERTER VALVE (ECS)
314	OXYGEN CONTROL PANEL (ECS)
315	WATER CONTROL PANEL (ECS)
311	COOLANT CONTROL PANEL (ECS)
316	PLVC CONTROL PANEL (ECS)
317	GLY EVAP WATER CONTROL BYPASS PANEL (ECS)

Figure 3-2. Controls and Displays (Sheet 2 of 2)

SECTION 4

EXPERIMENTS AND SCIENTIFIC EQUIPMENT

INTRODUCTION.

This section presents the objectives of S/C 014 experiments and contains a description of experiment equipment and stowage areas (figures 4-1 through 4-3), crew requirements for data collection, and related scientific support equipment data. The in-flight tests for the mission, categorized as medical (M), scientific (S), and technical (T) experiments, are as follows:

- In-Flight Phonocardiogram (M004)
- Bioassays Body Fluids (M005)
- Bone Demineralization (M006)
- Calcium Balance Study (M007)
- Cytogenic Blood Studies (M011)
- Exercise Ergometer (M012)
- Metabolic Rate Measurement (M019)
- Pulmonary Function (M020)
- Lower Body Negative Pressure (M023)
- Orbital Frog Otolith Function (S014/T004)
- Zero-G Single Human Cell (S015)
- Trapped Particles Asymmetry (S016)
- X-Ray Astronomy (S017)
- Micrometeorite Collection (S018)

NOTE The Planning and Management Office of the EPO (Experiments Program Office) is the coordinating facility for all of the experiments described in this section.

4.1 SCIENTIFIC EQUIPMENT.

Scientific equipment (for supporting S/C 014 experiments), such as the medical data acquisition system, electrical cables and adapters, and the experiments airlock assembly is described in the subsequent paragraphs.

4.1.1 MEDICAL DATA ACQUISITION SYSTEM (MDAS).

The medical data acquisition system (figure 4-4) uses 28-volt d-c power from compartment A to acquire, and permanently record on magnetic tape, all required medical (operational and experimental) data. This equipment is installed in compartment C of the LEB, weighs 15.2 pounds, and consists of a biomedical tape recorder, junction box, front panel and mounting plate, base plate and interconnecting wiring, a time code generator, signal conditioner, and two voltage-controlled oscillators. Medical data covering physiological parameters (electrocardiograph, impedance pneumograph, and phonocardiograph readouts) will be routed from sensors and

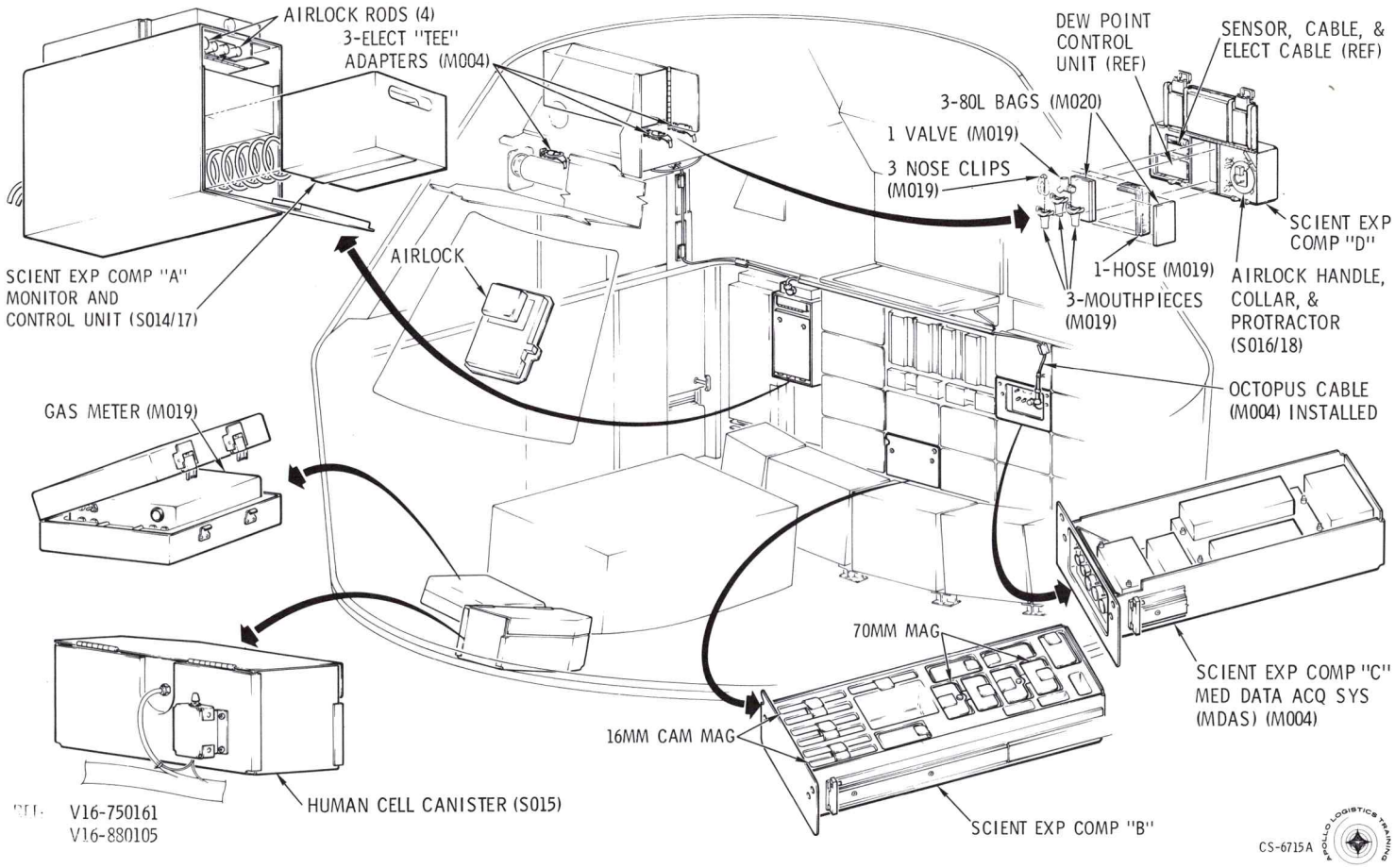

Figure 4-1. S/C 014 Mission Experiments Location LEB/LHEB/AB

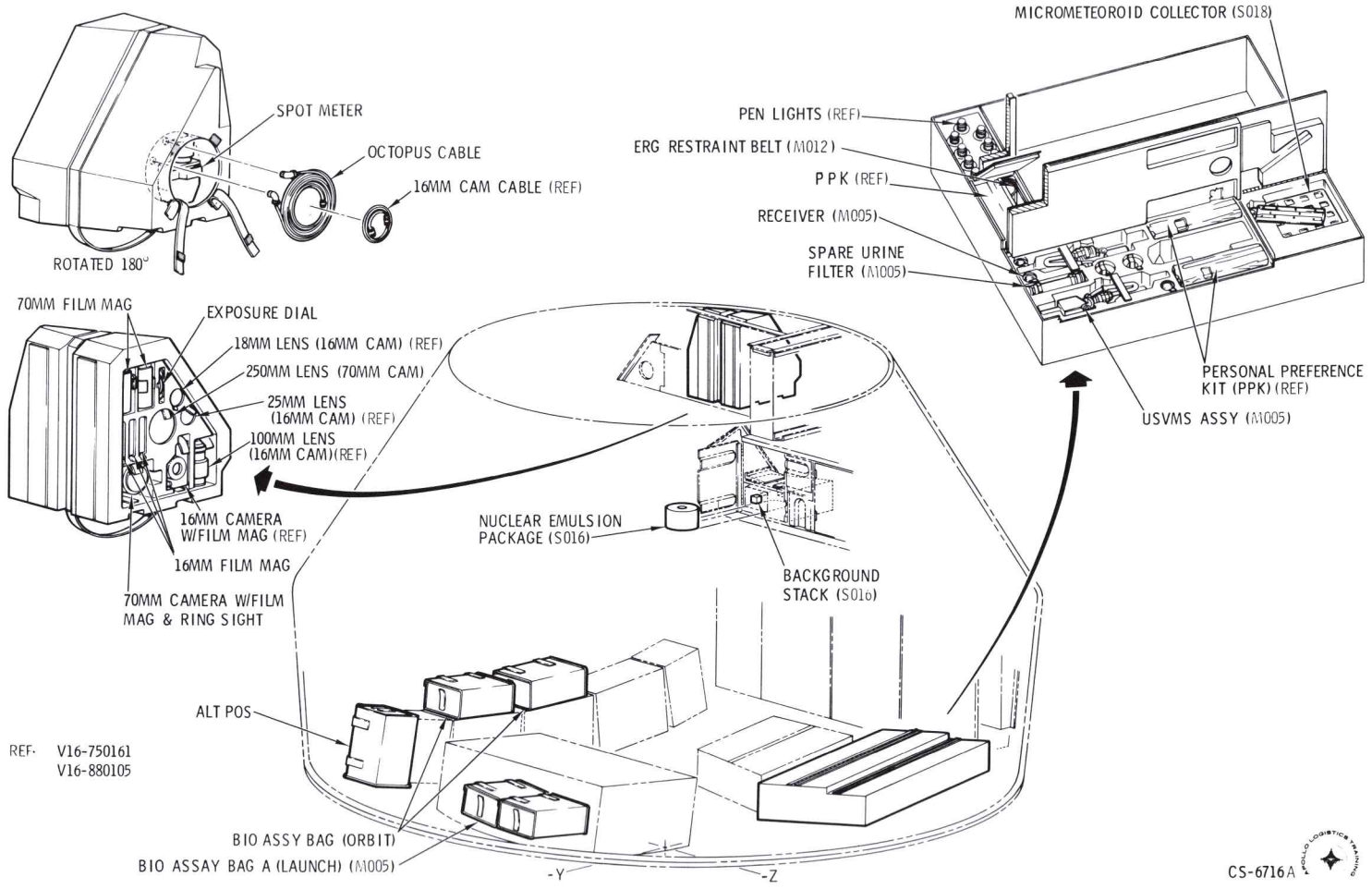

Figure 4-2. S/C 014 Mission Experiments Location RHEB/RHFEB/AB

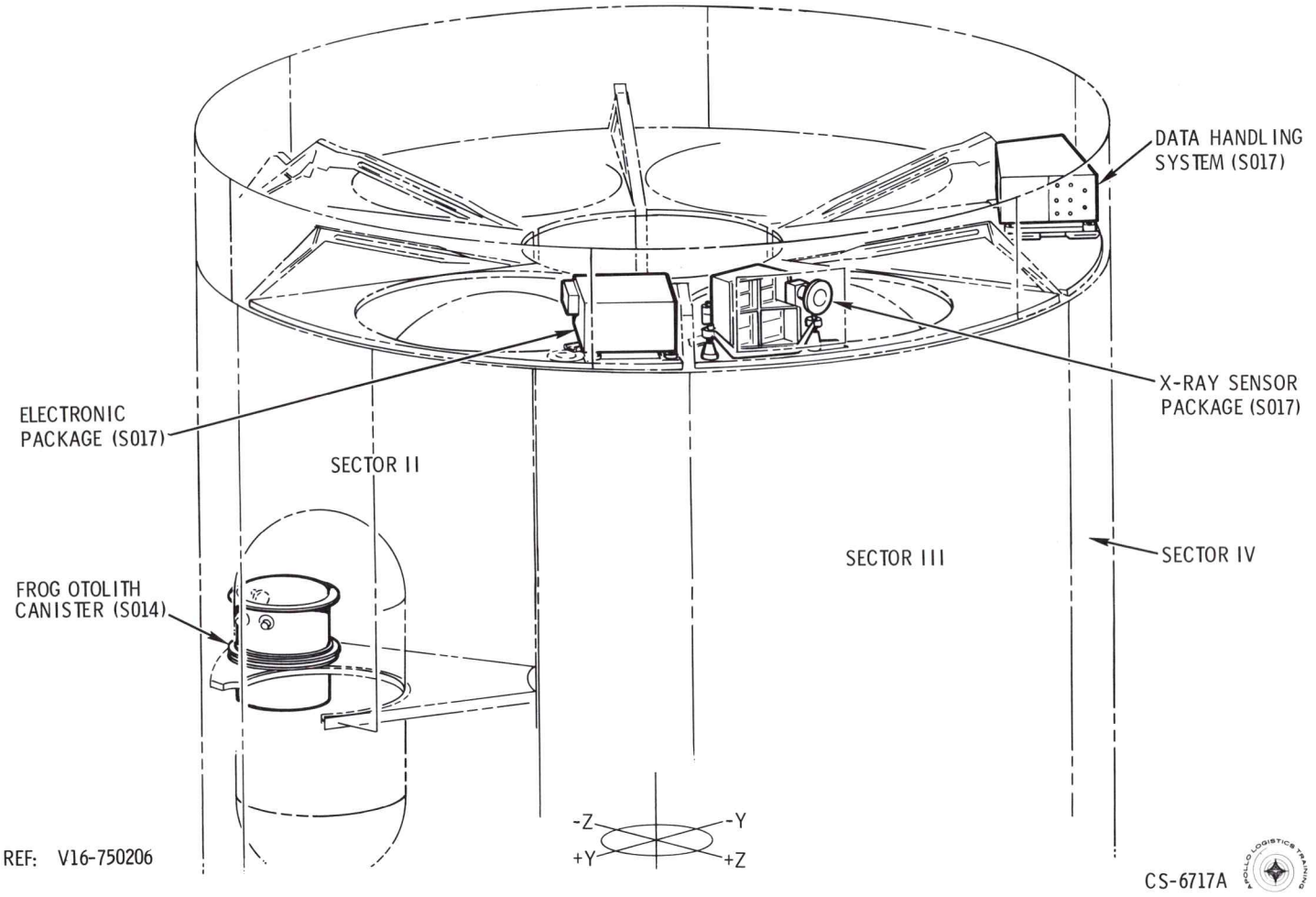

Figure 4-3. S/C 014 Mission Experiments Location Service Module

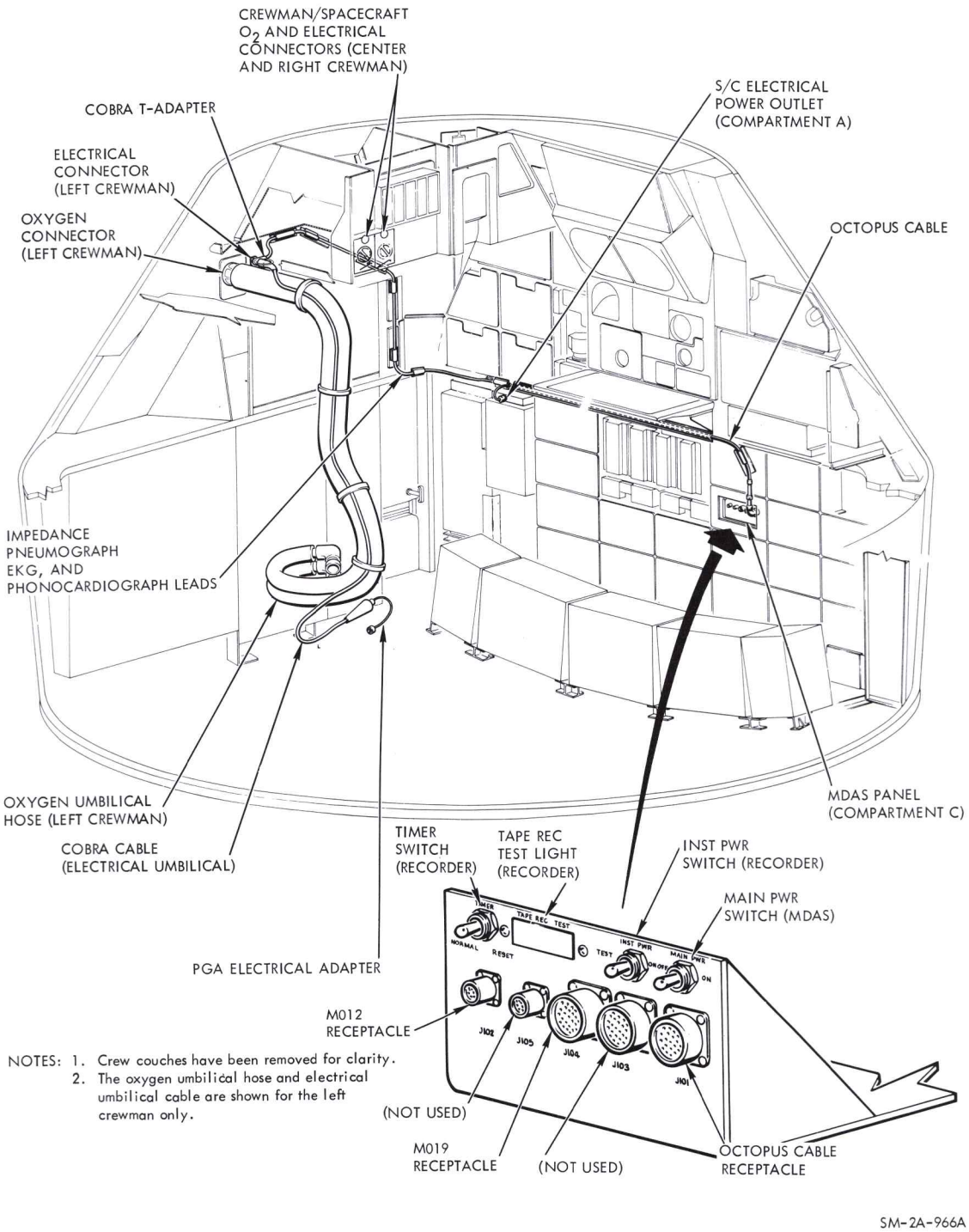

Figure 4-4. MDAS Recording and Electrical Connections

signal conditioners attached to a crewman through the PGA or CWG adapter cable, cobra cable, T-adapter, and octopus cable to specified channels on the MDAS tape recorder. The MDAS front panel provides the receptacles for collecting data from the M012 ergometer and the power source for experiment M019 (via electrical cabling connected directly to the equipment and the MDAS in compartment C). About 100 watts are supplied to the MDAS, but only about 19 watts of electrical power are required to operate the biomedical tape recorder.

All three crewmembers have the capability of being recorded for their physiological data when electrically connected to the tape recorder; however, only one crewman at a time will have his readouts recorded during flight. (See figure 4-5). Total recording time for the tape recorder is 100 hours maximum with 880 feet of usable tape. There are seven channels available for collecting data.

The MDAS tape recorder is removed from the spacecraft immediately after flight, placed in a GFE metal container for protection against strong magnetic fields, and transported to the NASA-MSC (where the magnetic tape is removed from the recorder).

4.1.2 ELECTRICAL CABLES AND ADAPTERS.

4.1.2.1 Octopus Cable.

The octopus cable (figure 4-4) plugs into the MDAS tape recorder, is protected from electrical arcing by an on-off power switch on the recorder panel, and contains signal and power lines for the following:

- Provides for 28-volt d-c (100 watts) S/C power from compartment A to the MDAS in compartment C.
- Provides for biomedical signals from a crewman (attired in the PGA or CWG) to the tape recorder. These signals consist of EKG, phonocardiograph, and impedance pneumograph outputs. This cable weighs 1.5 pounds and is stowed in compartment F of the RHFEB during launch entry. The cable remains connected to the MDAS and a crewmember's T-adapter during orbital flight.

4.1.2.2 Cobra Cable T-Adapter.

The T-adapter (figure 4-4) remains attached to the cobra cable at all times. This 1/2-pound three-way electrical connector mates with the crewman's cobra cable to the appropriate crewman/spacecraft electrical connector and the octopus cable. A relay incorporated in the T-adapter is controlled by the TLM INPUTS - BIOMED switch (MDC-20) or the MDAS power switch in compartment C (providing the octopus cable lead from the MDAS is connected to the T-adapter). This relay permits electrical signals, from a crewman's torso, to be transmitted by telemetry as operational data and recorded during flight as experimental data. Operational data from one

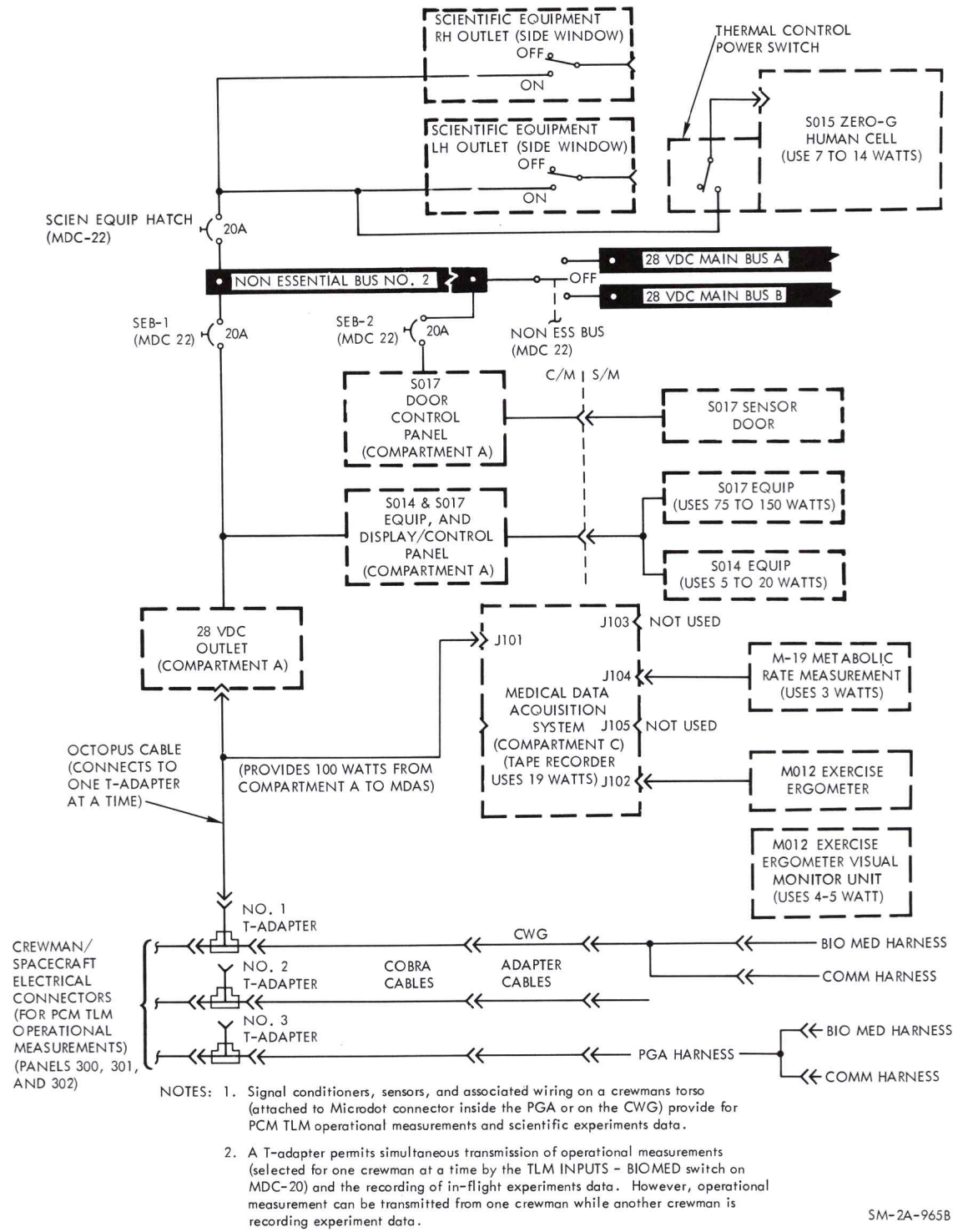

Figure 4-5. Scientific Equipment Power Distribution

crewman may also be transmitted while experimental data from another crewman is being taped on the MDAS. However, only one operational transmission and one experimental recording can be taken at the same time. (See figure 4-5.)

4.1.2.3 PGA and CWG Electrical Adapter Cables.

The PGA and CWG electrical adapter cables (crew personal equipment) are provided to connect the cobra cable to signal conditioner and communication harnesses on a crewman's body. (See figures 4-5 and 4-8.) (Refer to Crew Personal Equipment in section 2.)

4.1.2.4 Hardware Power and Signal Cables.

Hardware power and signal cables are provided for connecting various experiments electrically to the MDAS or to other power outlets in the crew compartment. (See figure 4-5.) Protection from electrical arcing is provided by equipment, compartment, or area on-off-switches for the following cables:

- M012 ergometer power and signal cable (figure 4-10) connects to the J102 receptacle on the MDAS. A power on-off switch is located on the MDAS panel.
- M019 power cable (figure 4-11) connects to the J104 receptacle on the MDAS. A power on-off switch is located on the MDAS panel.
- S014 (T004) and S017 power and signal cables (figures 4-12 and 4-13) are connected to the power source in compartment A and cannot be disconnected by the crew. The power switches for operating these experiments are located on the display/control panel attached to compartment A. In addition, power provided through the SEB-2 circuit breaker is connected to a control switch on the display/control panel for opening the S017 and sensor unit door in the C/M.

4.1.3 SCIENTIFIC EXPERIMENTS AIRLOCK.

The scientific experiments airlock (figure 4-6) is provided for deploying the S016 package or the S018 canister into a space environment without jeopardy to crew safety during orbit. This assembly is permanently installed over an opening on the crew access inner hatch cover and is provided with a detachable airlock canister, a canister latch handle, an integral door and door control knob, a vent valve and pressure gage, a retrieval rod for removing and installing the door-like plug on the outer hatch cover, and other accessory tools for handling the experiment package. Pressure within the airlock (between the mounted canister and locked integral door) is controlled by the airlock vent valve and indicated on the adjacent pressure gage. Either the canister or the integral door can provide a pressure seal for the command module.

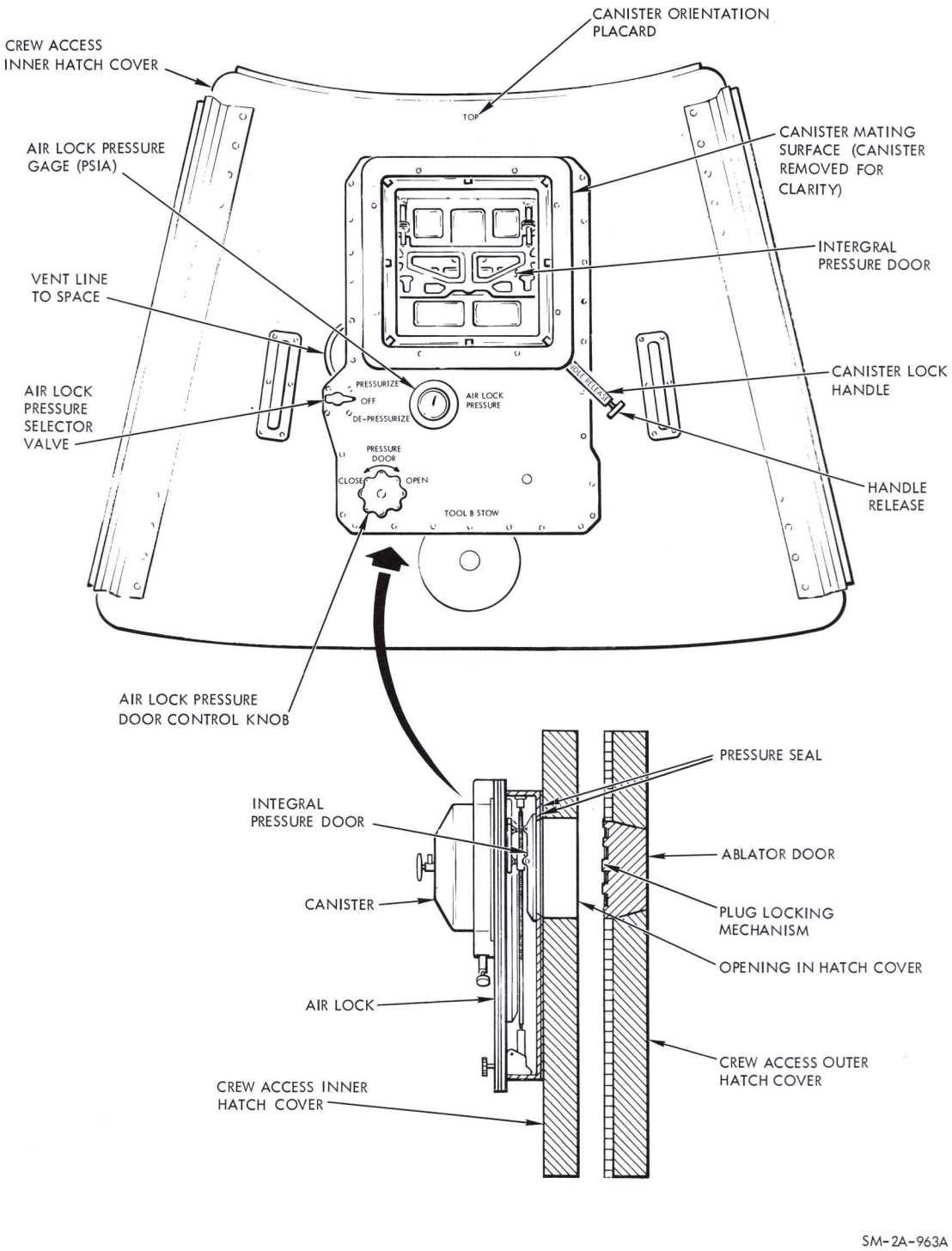

Figure 4-6. Scientific Equipment Airlock

The base of the airlock canister (figure 4-7) is provided with an opening, sealed by a removable door, for the accommodation of special tools (such as the ablator door rod, standpipe and collar, and the extension rods) which also seal the opening. The integral door has to be locked, sealed, and pressure-checked before the canister is removed for the attachment of special tools. After the canister is repositioned on the airlock and the integral doors are opened, the accessory tools can be operated to retrieve the outer hatch plug or extend an experiment package into the space environment (if the plug has been removed). (For operation of the experiments airlock, refer to detailed S016 and S018 procedures in section 8.)

4.2 MEDICAL EXPERIMENTS.

4.2.1 IN-FLIGHT PHONOCARDIOGRAM (M004)

The purpose of experiment M004 is to obtain information on the functional cardiac status of two crewmen during prolonged space flight. An in-flight recording of the phonocardiographic heart sounds, compared with the highest EKG signal, will be made to determine the delta time interval between electrical activation of the heart muscle (mycardium) and the onset of ventricular systole (heart contraction).

4.2.1.1 Equipment Description.

The equipment worn by the commander and senior pilot in experiment M004 consists of two phonocardiogram transducers (microphone biosensors), a phonocardiograph signal conditioner package (amplifier) with variable gain, and associated electrical wiring. The biosensors are attached to the crewman's torso (skin) and connected by electrical leads to the signal conditioner (on the CWG) and the Microdot connector on the PGA or CWG. Signal outputs from the crewman's body to the biomedical tape-recorder (compartment C) are routed via the PGA or CWG adapter cable, cobra cable, T-adapter, and the GFE octopus cable. (See figure 4-8 for bioinstrumentation harness and refer to paragraph 4.1 for data on scientific equipment.)

The total S/C electrical power for recording the experiment (including power for the in-suit electronic equipment) is approximately 1.4 watts. The octopus cable, for connecting the tape recorder to the pressure suit, is stowed in compartment F of the RHFEB. (See figure 4-2.)

4.2.1.2 Experiment Procedures.

Installation of phonocardiogram transducers on the chest of each crewman, positioning of the signal conditioner, and hookup of electrical leads on the CWG and PGA are performed during the preflight suiting procedure. After hookup during flight, recordings are taken on the medical data acquisition system (MDAS) tape recorder (one channel for the phonocardiograph and one channel each for operational EKG and impedance pneumograph data). (Detailed in-flight procedures, as available, are provided in section 8.)

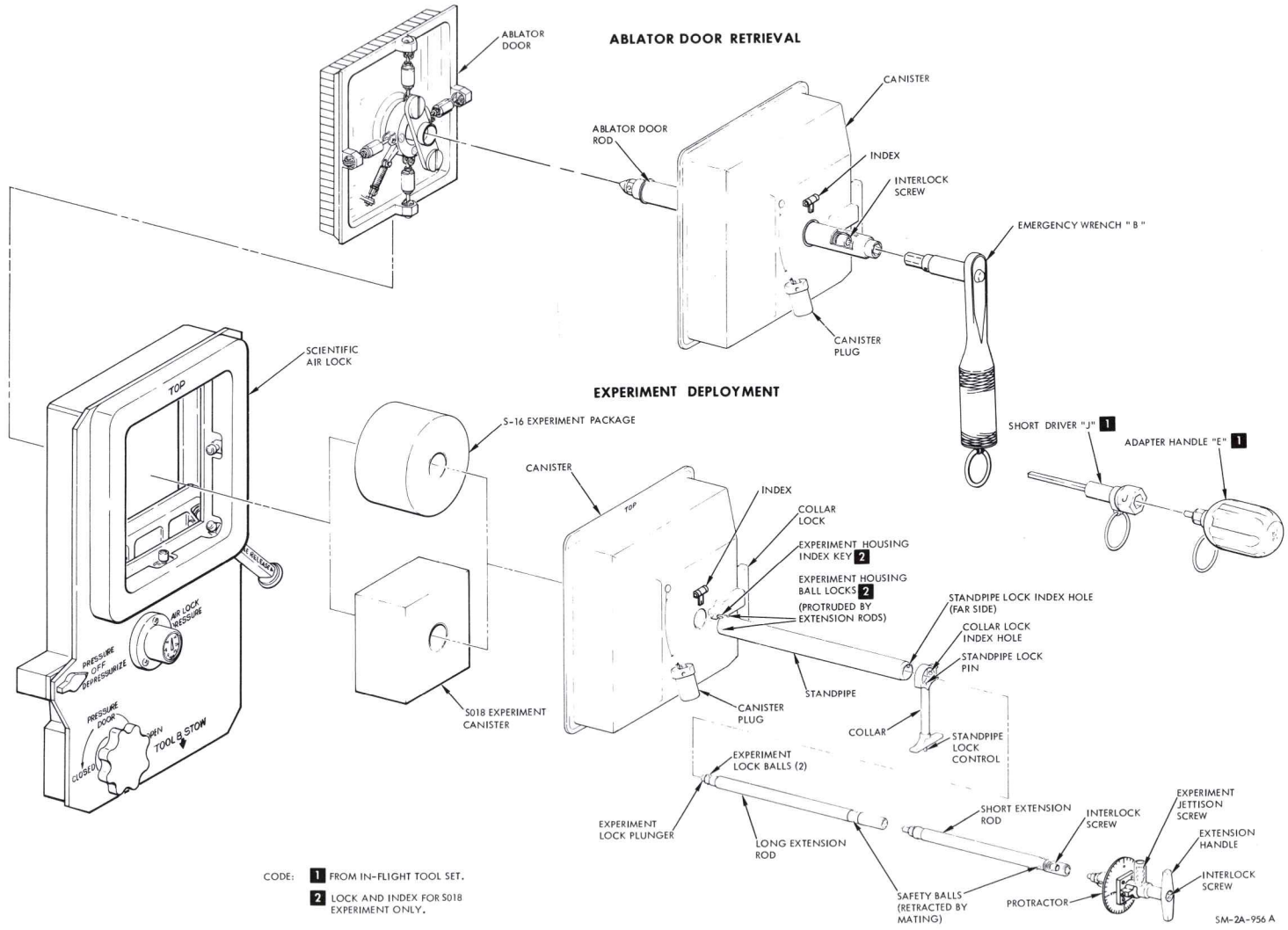

Figure 4-7. Scientific Airlock Utilization

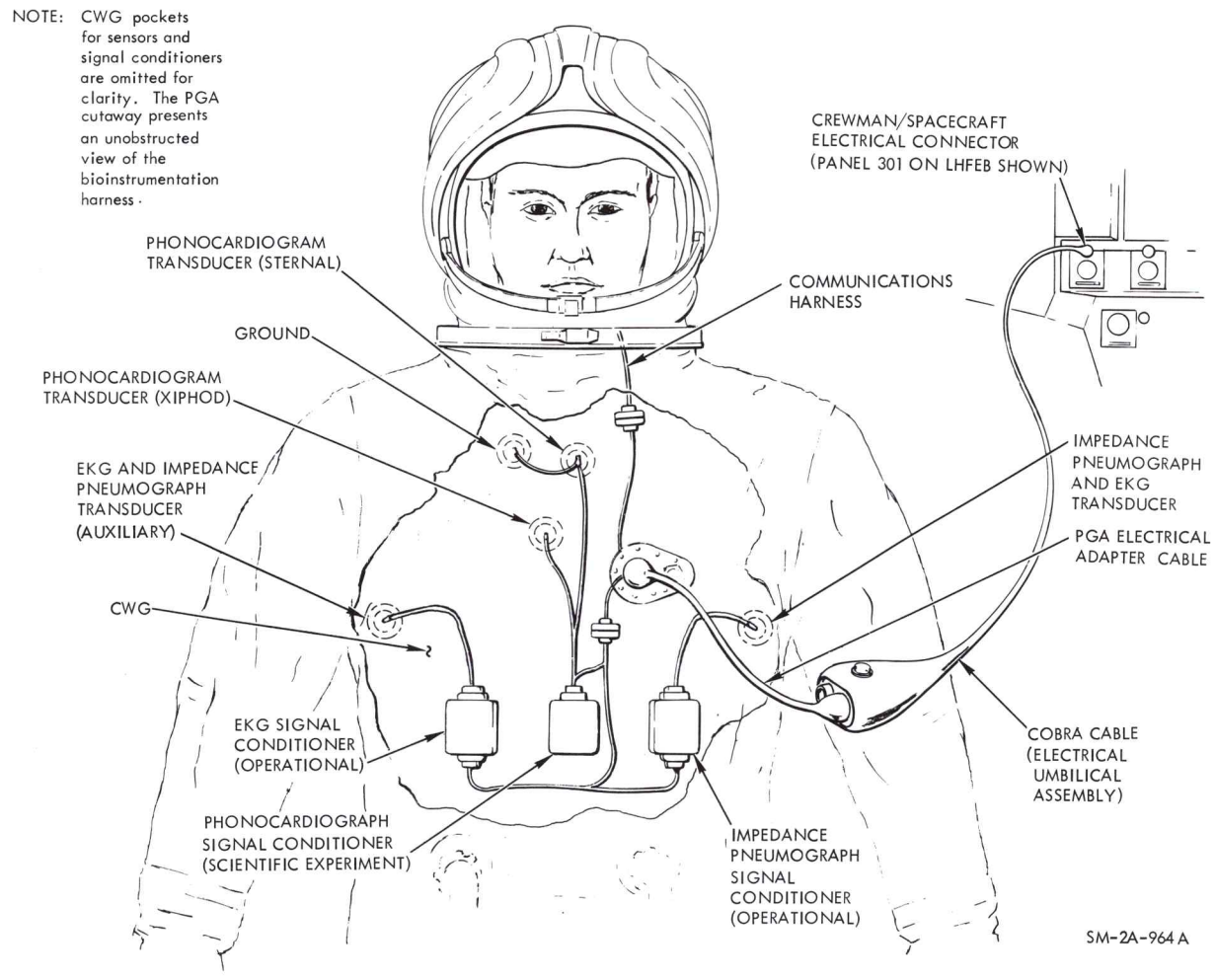

Figure 4-8. Bioinstrumentation Harness

4.2.1.3 Crewman Participation.

Requirements for crewman participation in the phonocardiogram experiment are as follows:

a. Preflight - Sensor application should not exceed one hour. Approximately 5 minutes of recording will be required for collecting baseline data from each crewman.

b. In-flight - No effort will be required by the crewmen other than hook-up to the MDAS. The one special exception could be time spent in determining optimum placement or repositioning of a microphone biosensor.

c. Postflight - Approximately 5 minutes will be required for post-recovery recording for data comparison.

4.2.1.4 Recovery Requirements.

There are no special recovery requirements for the experiment other than removal of the magnetic recording tape from the MDAS. Data will be processed by conventional methods.

4.2.2 BIOASSAYS BODY FLUID (M005).

The purpose of experiment M005 is to identify body changes that occur within the crewmen during weightlessness. This is accomplished by a careful postflight analysis of body fluids collected during flight. (Urinalysis will yield medical information such as body steroids, catecholamines, enzymes, and salts.)

4.2.2.1 Equipment Description.

Each of the two urine sampling and volume measurement system (USVMS) units provided for experiment M005 incorporates an individual roll-on receiver, a liquid flow selector valve, a urine collection bag, a sample valve attachment port, a tritium injector cylinder, and a liquid flow or vent line which connects to the waste management system. (See figure 4-9.) Roll-on receivers (one for each unit and two spares) are used to direct urine flow into the USVMS. The USVMS selector valve permits urine to flow through the roll-on receiver into the urine collection (1200 cc) bag, and from the collection bag into a 75 cc sample container or into the waste management system. A spring-loaded plunger, on the tritium injector cylinder, permits radio-active tracer fluid to be injected into the urine collection/mixing bag and indicates the level of tritium remaining. The tritium cylinder is adequately constructed and it is improbable that tritium will be released. The two units (1.9 pounds each) and associated attachments weigh about 8 pounds.

During flight, either of the two USVMS units can be attached to the urine line filter (on the fecal canister) by a quick-disconnect fitting (in place of the urine receptacle). These units are provided with Velcro for attachment to any convenient mating area in the crew compartment. Two units, including spare roll-on receivers and a urine filter, are stowed in compartment S on the aft bulkhead. Additional equipment such as the collection bags, spare roll-on cuffs (rubber attachments for receivers), secondary stowage bags, and sample bags are stored in bioassay bags A and B within the spacesuit stowage bag (also on the aft bulkhead). When filled, ten sample bags are placed in the secondary stowage bags and stowed in the original storage containers or in empty food locker spaces. (See figures 4-1 through 4-3 and 4-9 for equipment location.)

4.2.2.2 Experiment Procedures.

The assembled USVMS unit is utilized during flight to collect a 75 cc sample from each urine voiding by the crewmen. After the injection of radioactive tracer fluid, the tracer should be mixed thoroughly with the urine and each urine sample will be stored for postflight analysis. The remaining

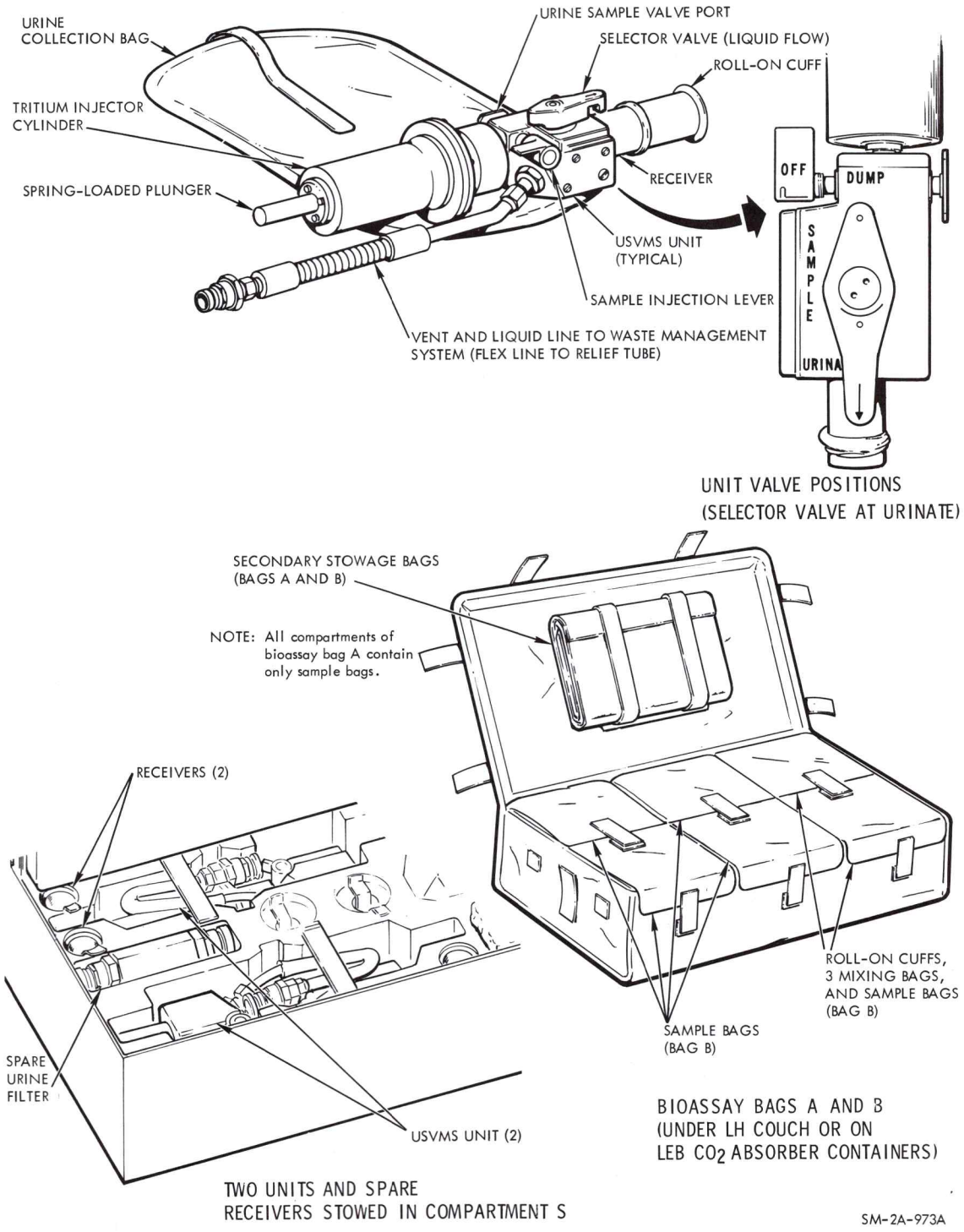

Figure 4-9. M005 Urine Sampling and Volume Measurement System (USVMS)

urine is then dumped overboard. (Detailed in-flight procedures, for collecting urine samples and utilizing the waste management system, are provided in section 8.)

4.2.2.3 Crewman Participation.

Requirements for crewman participation in the experiment are as follows:

a. Preflight - Urine specimens will be collected from the crewmen at any convenient time prior to flight (24-hour quiet period).

b. In-flight - Urination will average four voidings (approximately 5 minutes per urination) every 24 hours. A sample from each voiding will be collected, tagged, and stowed for analysis.

c. Postflight - Urine specimens will be collected as required for at least 3 days after recovery.

4.2.2.4 Recovery Requirements.

Facilities in the primary recovery area will be used to complete the postflight examinations and urine collections. The NASA on-site coordinators will be responsible for delivery of all M005 units and data to the NASA-MSC.

4.2.3 BONE DEMINERALIZATION (M006).

The purpose of experiment M006 is to determine the effect of weightlessness and immobilization during space flight on the demineralization of certain bones within the body of each astronaut.

4.2.3.1 Equipment Description.

This experiment does not require any in-flight equipment, S/C power or fuel, or recording equipment because the data required is collected before and after the mission. (There are no interface problems between experiment M006 and the S/C.)

4.2.3.2 Experiment Procedures.

In-flight procedures are not required for this experiment. Prior to flight, crewmen will have X-rays taken of their heel bones and the last joint of the little finger on the right hand. Three exposures of these areas will be taken before and after flight at the Kennedy Space Center X-ray facilities. The hematopoietic (i.e., blood forming marrow) areas will not be exposed to the radiation source since the exposure field will be carefully limited.

4.2.3.3 Crewman Participation.

Requirements for crewman participation in the bone demineralization experiment are as listed on the following page.

a. Preflight - Approximately 45 minutes total time is required per crewman for obtaining X-ray films (three 15-minute sessions at T minus 10 days, T minus 2 days, and T minus 220 minutes).

b. In-flight - None

c. Postflight - Approximately 15 minutes per crewman are required for obtaining X-ray films after spacecraft recovery. (A follow-on checkup may be required, depending on bone demineralization.)

4.2.3.4 Recovery Requirements.

NASA on-site coordinators will develop X-ray films, make bone densitometry measurements, and be responsible for delivery of all data to the NASA-MSC.

4.2.4 CALCIUM BALANCE STUDY (M007).

The purpose of experiment M007 is to determine rates of muscle and bone catabolism (nitrogen and calcium balance studies) on crewmen during prolonged space flights. The main objective will be to collect urine and have it analyzed for phosphorous, nitrogen, other minerals, and hydroxproline (amino acid check for protienurial).

4.2.4.1 Equipment Description.

The equipment used with this experiment consists of urine specimen bags and equipment from the M005 experiment and fecal collection bags from the S/C waste management system. (See figures 4-1 through 4-3 and 4-9.) This experiment does not require any special equipment, S/C power, fuel, or recording equipment.

4.2.4.2 Experiment Procedures.

The crewmen will follow a preplanned calcium diet and carefully record their food and liquid intake during flight. About 100 cc aliquots of timed urine specimens and the total fecal collection will be stowed in the C/M for postflight analysis. (Urine specimens are stowed in empty food compartments while fecal matter is kept in the waste compartment. (In-flight procedures other than normal defecation are not required for this experiment.)

4.2.4.3 Crewman Participation.

Requirements for crewman participation in the experiment are as follows:

a. Preflight - The crewmen will be maintained on an 0.8 to 1.0 gram calcium diet for two weeks prior to the test. Two blood samples (5 cc each) will be taken from each crewman about one week apart. Urine samples will also be taken.

b. In-flight - The crewmen will continue their diet (same as preflight) and carefully record their water and food intake during flight. Timed urine samples and fecal collections will be recorded and stored in appropriate areas within the C/M.

c. Postflight - The crewmen will continue their diet (same as preflight) for two weeks after recovery. Two 5 cc blood samples (from each crewman) are required with approximately a week between each sample. Postflight urine and fecal specimens will also be required for analysis.

4.2.4.4 Recovery Requirements.

The NASA will be responsible for collecting and analyzing all M007 data as part of experiment M005. Urine samples and the total fecal specimens will be removed from storage in the S/C and frozen aboard the recovery ship.

4.2.5 CYTOGENETIC BLOOD STUDIES (M011).

The purpose of experiment M011 is to conduct preflight and postflight analyses to determine if space environment produces cellular changes in the blood of crewmen. These changes, which are important to the medical and scientific point of view, may not be apparent from routine monitoring procedures.

4.2.5.1 Equipment Description.

This experiment does not require any in-flight equipment, S/C power or fuel, or S/C recording equipment. (There is no interface between experiment M011 and the S/C.)

4.2.5.2 Experiment Procedures.

On two occasions (preflight), approximately one month apart, blood specimens will be obtained from the crewmen for the experiment. The second occasion for drawing blood samples will be scheduled as close to lift-off-time as conveniently possible. Blood samples for part A of the experiment (cytogenic studies of human hemic cells) and part B of the experiment (immunological system) will be drawn at a predetermined hospital site for analyses. Postflight requirements will be essentially the same, except that three such samples will be required over a period of one year. The first postflight blood sample will be drawn shortly after the termination of flight. (In-flight procedures are not required for this experiment.)

4.2.5.3 Crewman Participation.

Requirements for crewman participation in the M011 experiment are as follows:

a. Preflight - On two occasions prior to flight (T minus 30 days and T minus one day), blood samples (10 cc for part A and 15 to 20 cc for part B of this experiment) will be drawn from each crewman.

b. In-flight - None

c. Postflight - On three occasions after S/C recovery, blood samples (10 cc for part A and 15 to 20 cc for part B of the experiment) will be drawn from the crewman. It is not essential that blood samples for part A and B are drawn at the same time.

4.2.5.4 Recovery Requirements.

There is no S/C equipment or flight data to be recovered for experiment M011. The NASA will be responsible for obtaining and analyzing all preflight and postflight data. After mission completion, blood samples must be drawn from the crewmen at a conveniently located, but predetermined, hospital for analyses. Blood determinations made should include immunoelectrophoresis, electrophoresis, electrophoresis on starch gel, measurement of gamma$_2$, gamma a, and gamma M globulin levels, measurement of whole hemolytic complement, titration of blood group antibodies, and measurement of preexistent antibacterial antibodies.

4.2.6 EXERCISE ERGOMETER (M012).

The purpose of experiment M012 is to collect crew data for determining benefits of exercise during space flight. Recumbency (bed rest) studies have shown that exercise or work tolerance for an individual is greatly reduced under conditions of relative immobility and horizontal positioning (for a few days). Zero gravity during space flight may further increase the length of an astronaut's reconditioning period.

4.2.6.1 Equipment Description.

The ergometer equipment (figure 4-10) consists of two foot pedals, an illuminated visual monitor unit for selecting and indicating a crewman's work rate, an integral signal and power cable which connects to the MDAS for data collection, and two brackets for mounting the ergometer to the backrest on the right crew couch. A lap belt restraint harness (stowed in compartment Y) is also provided for securing a crewmember while he operates the ergometer from a seated position on the CO_2 absorber container (opposite the right couch). Couch pads, for seating comfort, may be used as required. The equipment weighs about 11.5 pounds.

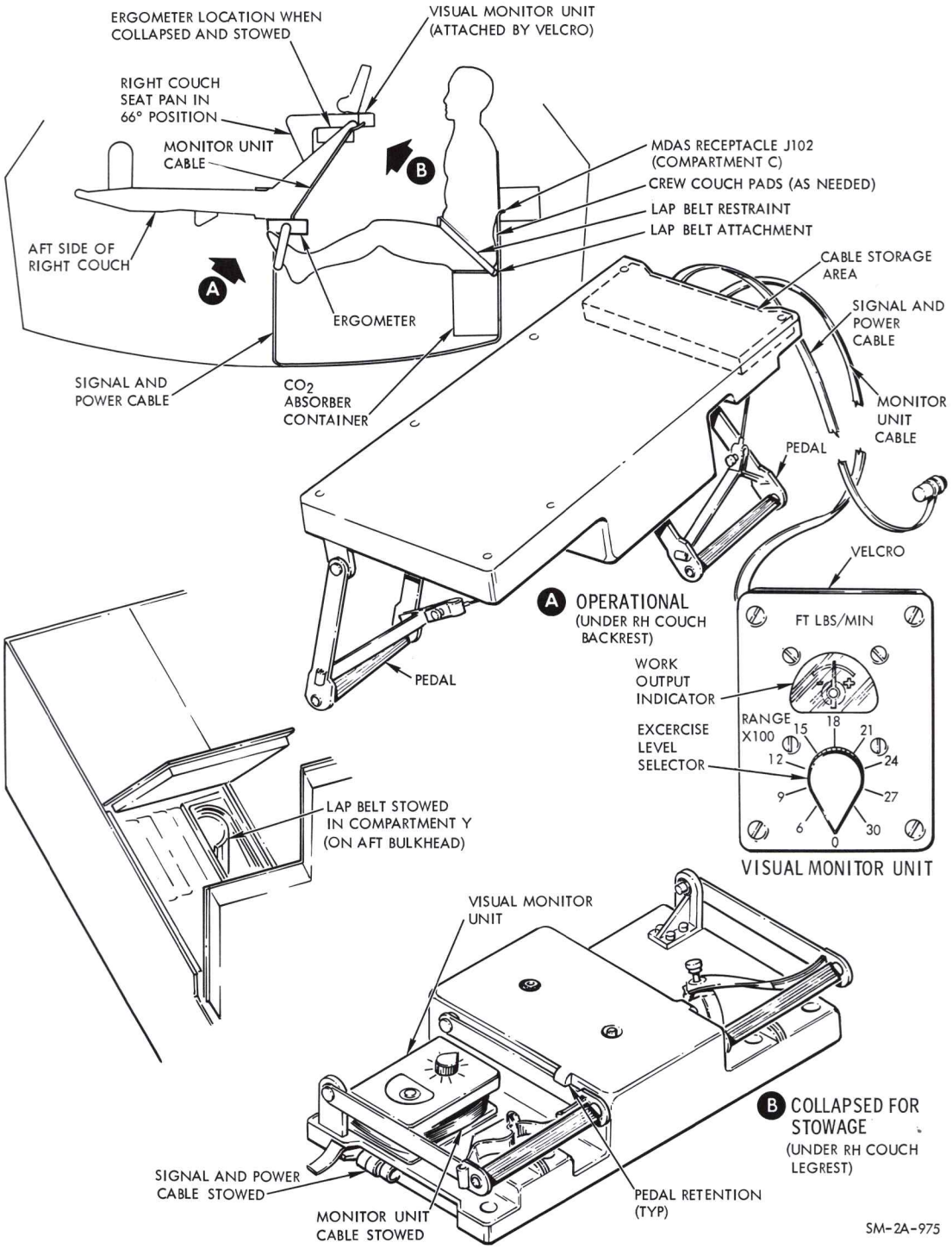

Figure 4-10. M012 Exercise Ergometer

A mechanical interface with the S/C exists where the ergometer is attached (by operational or stowage mounts), under the right couch and where Velcro is provided to secure the signal cable and visual monitor unit on the seatpan-footrest. Approximately 4.5 watts of S/C electrical power will be required to illuminate the indicator. EKG, impedance pneumograph, and phonocardiogram data will be recorded on the MDAS tape recorder while the experiment is performed.

4.2.6.2 Experiment Procedures.

Each crewman will exercise in flight for 15 minutes on the 4th, 8th, and 12th days. The baseline preflight data will serve as a control for the study. An EKG is recorded before, during, and after an exercise period. Crewmembers will alternate each day. (Detailed in-flight procedures as available, are provided in section 8.)

4.2.6.3 Crewman Participation.

Requirements for crewman participation in the ergometry experiment are as follows:

a. Preflight - Each crewman will be tested for exercise tolerance on three separate occasions at 8, 6, and 4 weeks prior to flight. These periods will consist of 5 to 10 minutes of activity to determine the desired fitness level for each crewman to maintain.

b. In-flight - Each crewman subject will be required to set up the equipment and exercise (15 minutes each period) to maintain a desired fitness level. Medical parameters and ergometer output will be recorded.

c. Postflight - Each crewman will undergo reevaluation exercises approximately 24 hours after touchdown.

4.2.6.4 Recovery Requirements.

There are no special recovery requirements for experiment equipment as the in-flight ergometer will remain stowed in the S/C during recovery. An ergometer of equivalent design will be available at the site where postflight evaluations are performed and the experiment is completed. The on-site coordinators will be responsible for removal of the magnetic recording tape from the MDAS and delivery of all data to the NASA-MSC.

4.2.7 METABOLIC RATE MEASUREMENT (M019).

The purpose of experiment M019 is to collect data during space flight for measuring crewmen metabolic rates. This measurement, concerning the activity level of crewmen in a gravity-free environment, is essential in the establishment of physiological parameters for man in space (relative to respiration, nutrition, and thermal balance).

4.2.7.1 Equipment Description.

The experiment equipment (figure 4-11) consists of a gas meter/analyzer, gas collection bag, power cable, and equipment accessories such as a nose clip, mouthpiece, breathing valve, and connecting tubing. This equipment weighs about 10 pounds. The meter/analyzer unit is stowed on the aft bulkhead under the left couch headrest during launch and entry (figure 4-1) and is positioned on the LEB worktable (secured by Velcro) for in-flight operation. Equipment accessories are stowed in compartment D of the LHFEB. A receptacle on the MDAS, in compartment C of the LEB, provides the required 28-volt d-c power (3 watts) for operating the meter/analyzer.

4.2.7.2 Experiment Procedures.

Crewmembers will be required to remove the equipment from stowage, set up the gas meter/analyzer and accessories, position themselves in the LEB, and conduct the experiment during rest periods. (Detailed in-flight procedures are provided in section 8.)

4.2.7.3 Crewman Participation.

Requirements for crewman participation in the experiment are as follows:

a. Preflight - A briefing will be required to acquaint each crewman with equipment purpose, assembly, and stowage areas.

b. In-flight - After equipment assembly in the LEB, each crewman breathes into the gas meter during periods of rest and at varying activity levels. Experiment duration will be 10 to 20 minutes and will be done in conjunction with M012.

c. Postflight - The crewmen will undergo reevaluation exercises with the experiment equipment approximately 24 hours after touchdown.

4.2.7.4 Recovery Requirements.

There is no requirement for immediate recovery of the gas meter/analyzer or associated equipment from stowage in the C/M. The on-site coordinators will be responsible for recovery of M019 in-flight records and delivery of all data to the NASA-MSC.

4.2.8 PULMONARY FUNCTION (M020).

The purpose of experiment M020 is to obtain pulmonary (respiratory) data on the vital capacity of crewmen and their residual volume and maximum breathing capacity in a space environment.

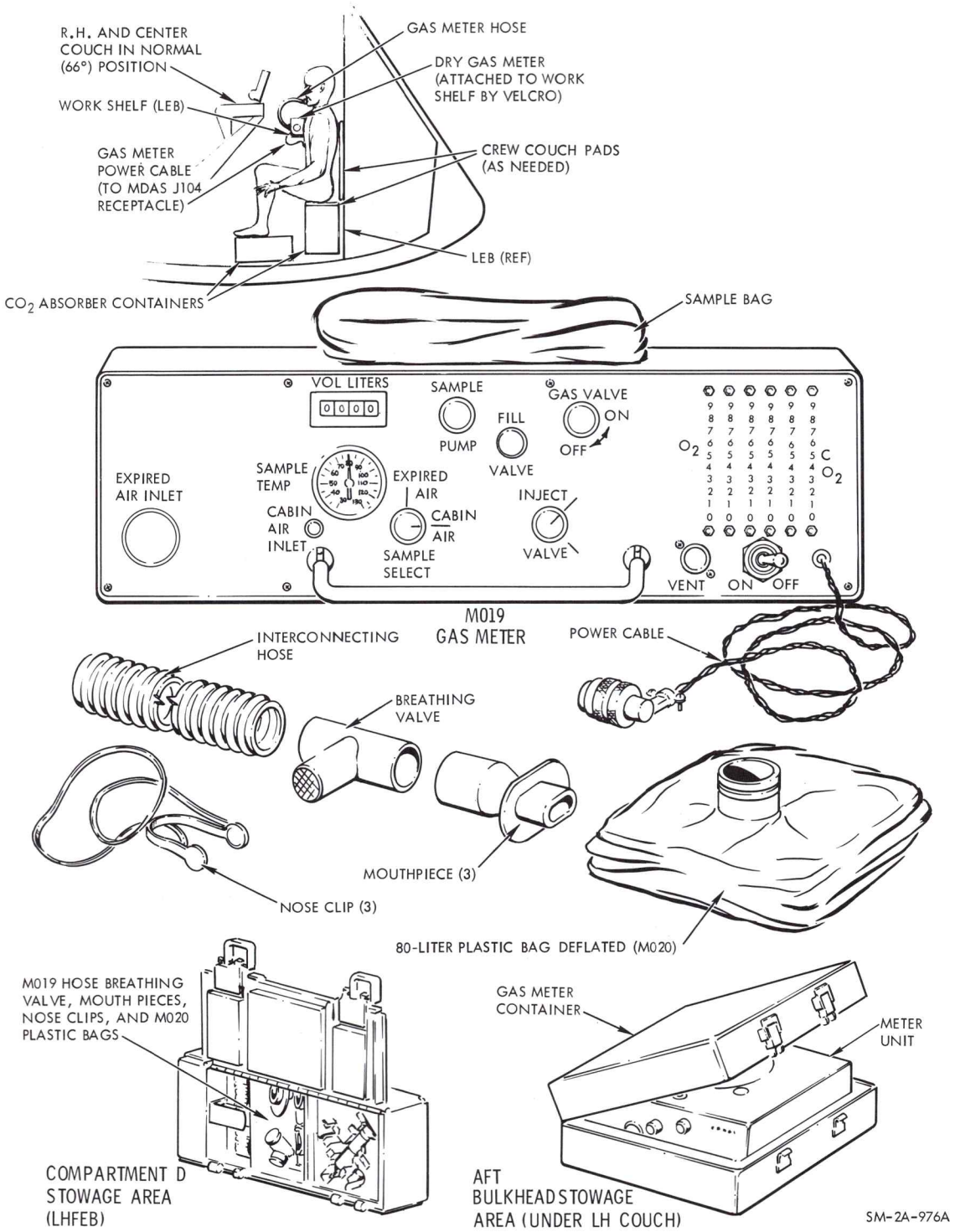

Figure 4-11. M019 Metabolic Rate and M020 Pulmonary Equipment

4.2.8.1 Equipment Description.

The equipment used with this experiment consists of the M019 gas meter/analyzer unit associated breathing equipment, and an 80-liter plastic bag (stowed in compartment D of the LHEB) for collecting a crewman's exhaled volume of air. (See figures 4-1 through 4-3 and 4-11.) Respiratory rates for the experiment will be obtained from impedance pneumograph read-outs provided by the operational safety monitoring equipment. (Refer to scientific equipment in paragraph 4.1.)

4.2.8.2 Experiment Procedures.

The procedures for M020 consist of equipment removal from stowage, equipment setup in the LEB (M019 breathing tube connected to M020 plastic bag), getting into position, and collecting and measuring expired air after an exercise period. (Detailed in-flight procedures are provided in section 8.)

4.2.8.3 Crewman Participation.

Requirements for crewman participation in the experiment are as follows:

a. Preflight - The crewmen will be required to become familiar with the equipment used for the experiment and its assembly and stowage areas.

b. In-flight - After equipment assembly, a crewman collects expired air in the 80-liter bag, while exercising, then connects the bag to the gas meter for volume measurements. Expired volumes of air will be collected during a 20-minute exercise period.

c. Postflight - The crewmen will undergo reevaluation exercises with the experiment equipment approximately 24 hours after touchdown.

4.2.8.4 Recovery Requirements.

There is no requirement for immediate recovery of the gas meter/analyzer or other equipment from stowage in the C/M. The on-site coordinators will be responsible for recovery of the M020 in-flight records and delivery of all data to the NASA-MSC.

4.2.9 LOWER BODY NEGATIVE PRESSURE (M023).

The purpose of experiment M023 is to assess any progressive decrement in the integrity of the cardiovascular system following prolonged space flight.

4.2.9.1 Equipment Description.

There will be no equipment onboard the spacecraft.

The ground equipment required for experiment M023 is a rigidized collapsible bellows encompassing the lower half of the body, a device for creating a reduced pressure of (760 to 40) 720 mm Hg, associated gauges, and instrumentation for recording EKG and blood pressure.

4.2.9.2 Experimental Procedures.

Preflight baseline data will be recorded while a crewman is being subjected to the reduced pressure of 720 mm on his lower body.

After the mission is completed, the crewmembers will be monitored and measured to determine the period of time required to return to their normal baseline.

4.2.9.3 Crewman Participation.

a. Preflight - One month before the flight, the crew will spend 10 to 11 hours in the lower body chamber and 15 minutes before or after each preflight tilt-table test.

b. Postflight - 15 minutes before or after each postflight tilt-table test.

4.3 SCIENTIFIC EXPERIMENTS.

4.3.1 ORBITAL FROG OTOLITH FUNCTION S014 (T004).

The purpose of experiment S014 (T004) is to record directly any changes in the otolith system (inner ear) activity of two frogs during orbital flight. Data obtained from the animals will include bioelectrical action potentials of the vestibular nerve (ear canal), accelerometer measurements in three directions of space, and ECG readouts. This information is an important step in the investigation of biodynamic factors and their effects on living systems.

4.3.1.1 Equipment Description.

The equipment provided for experiment S014 (T004) consists of an 86-pound specimen capsule and pressure housing assembly, located on the hydrogen shelf in sector 1 of the S/M; a data handling system, located on the S/M bulkhead within the C/M-S/M adapter; a display/control unit, located in compartment A of the LEB; and associated wiring. (See figures 4-3, 4-12, and 4-13.) Two water-filled containers, within the housing assembly, provide a life support system (with an oxygen supply system and a CO_2 absorber) for two frogs used in the experiment. The pressure-tight housing around the package assembly provides the means for temperature and

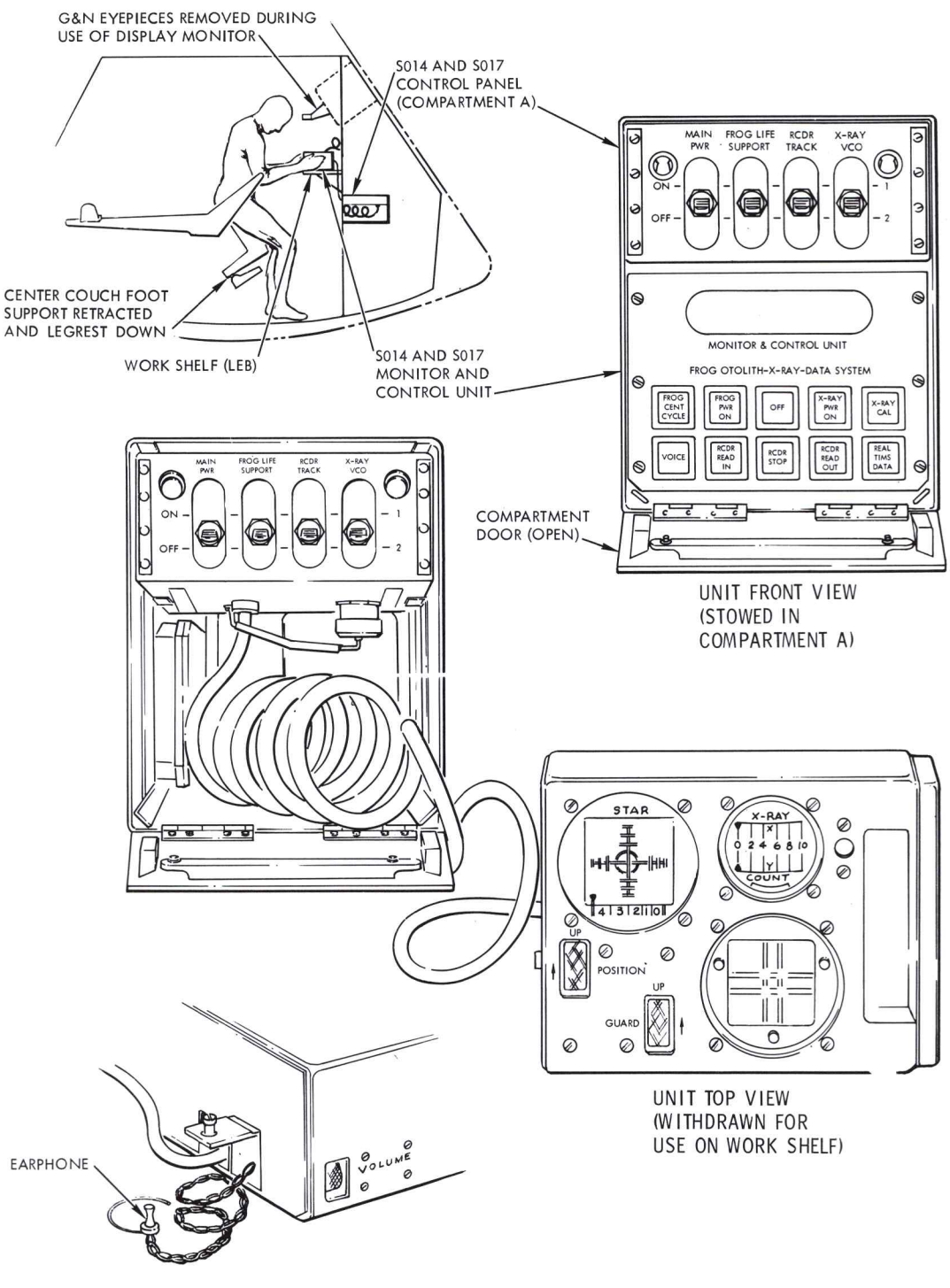

Figure 4-12. S014 (T004) Orbital Otolith and S017 X-Ray Equipment

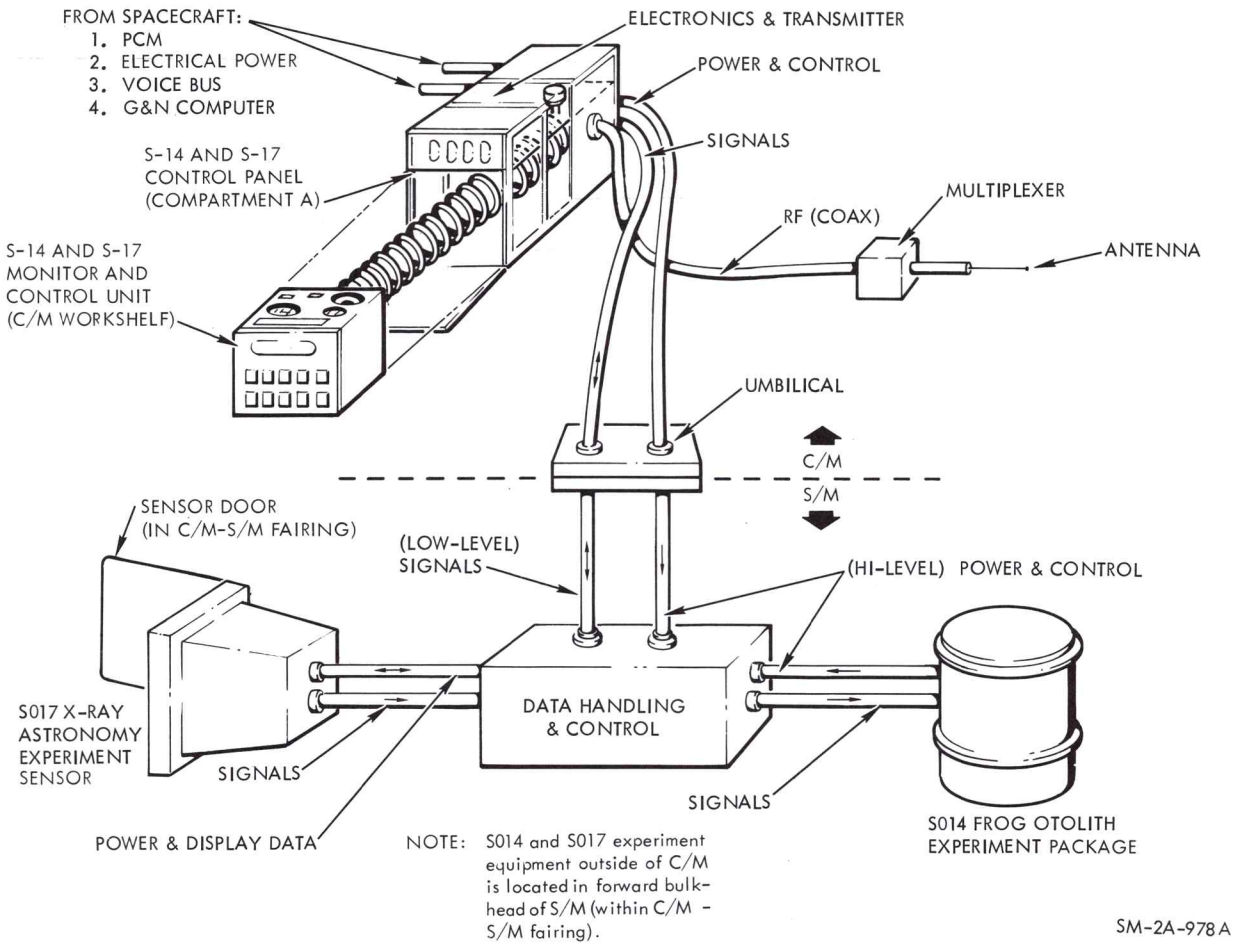

Figure 4-13. S014 and S017 Interconnecting Block Diagram

pressure control, attachments for the water container rotating mechanism, and encloses the electronics required for experiment signal amplification and processing.

The electrical connection between the S/M package assembly/data handling system and the C/M display and control unit will be through the S/C umbilical connection. Electrical power requirements will be 5 watts continuous and 20 watts intermittent.

4.3.1.2 Experiment Procedures.

Two bull frogs, with implanted micro-electrodes connected to their vestibular nerves, are immersed in water-filled containers (within the specimen capsule) to protect them against acceleration and vibration during lift-off. Their impulse rates will be recorded at fixed intervals during zero

gravity and acceleration maneuvers. The records of the experiment must be controlled and stored in the C/M for transmittal to the ground. Both frogs in the specimen capsule can live several days without food on a small oxygen supply. (Detailed in-flight procedures are provided in section 8.)

4.3.1.3 Crewman Participation.

Requirements for crewman participation in the experiment are as follows:

a. Preflight - Not applicable.

b. In-flight - A crewmember will be required to apply an artificial gravity cycle to the specimens while transmitting telemetry data to the ground.

c. Postflight - A review of the experiment will be conducted during the mission debriefing session.

4.3.1.4 Recovery Requirements.

There is no recovery requirement for the experiment equipment. All data from the S/C will be provided to the NASA-MSC by telemetry.

4.3.2 ZERO-G SINGLE HUMAN CELL (S015).

The purpose of experiment S015 is to study the influence of zero gravity on living human cells in tissue cultures. This experiment will determine whether or not the absence of gravity has a significant effect on isolated human cells.

4.3.2.1 Equipment Description.

The equipment provided for the experiment weighs about 18 pounds and consists of a sealed canister with an electrical power cable. The canister (pressurized at 14.7 psia) contains two microscope-cameras, four bio-packs, and a temperature control unit (See figure 4-14.) Stowage for the canister is provided on the aft bulkhead under the center couch headrest.

The microscope-cameras which produce quality photographs of living cells during the mission, have magnification optics (20 X and 40 X), are capable of being focused by an astronaut, and can produce 5 pictures per minute during the photography cycle (each can provide a minimum of 12,000 pictures).

Each bio-pack contains human tissue and consists of two epoxy discs flush-mounted with one another to form a media disc well (contains media, fixative, and other liquids) and specimen disc well (contains slides).

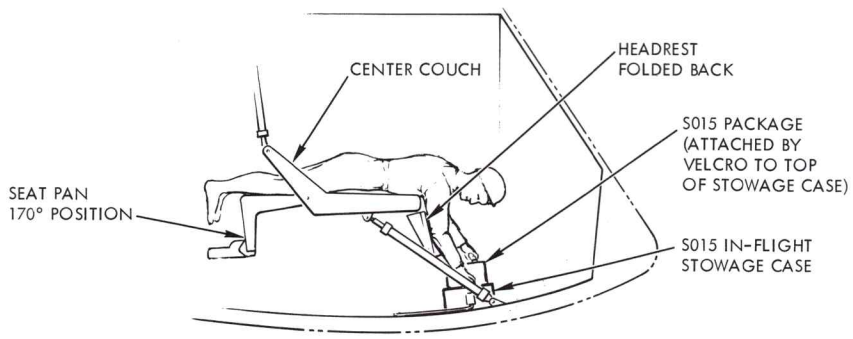

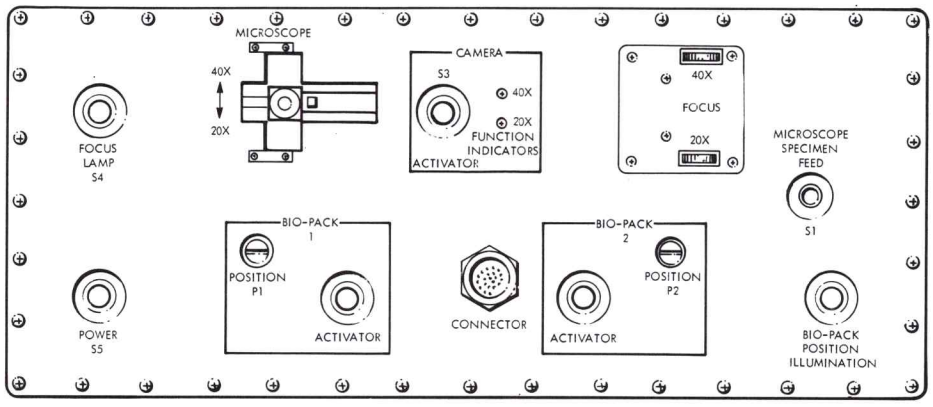

S015 CONTROL PANEL

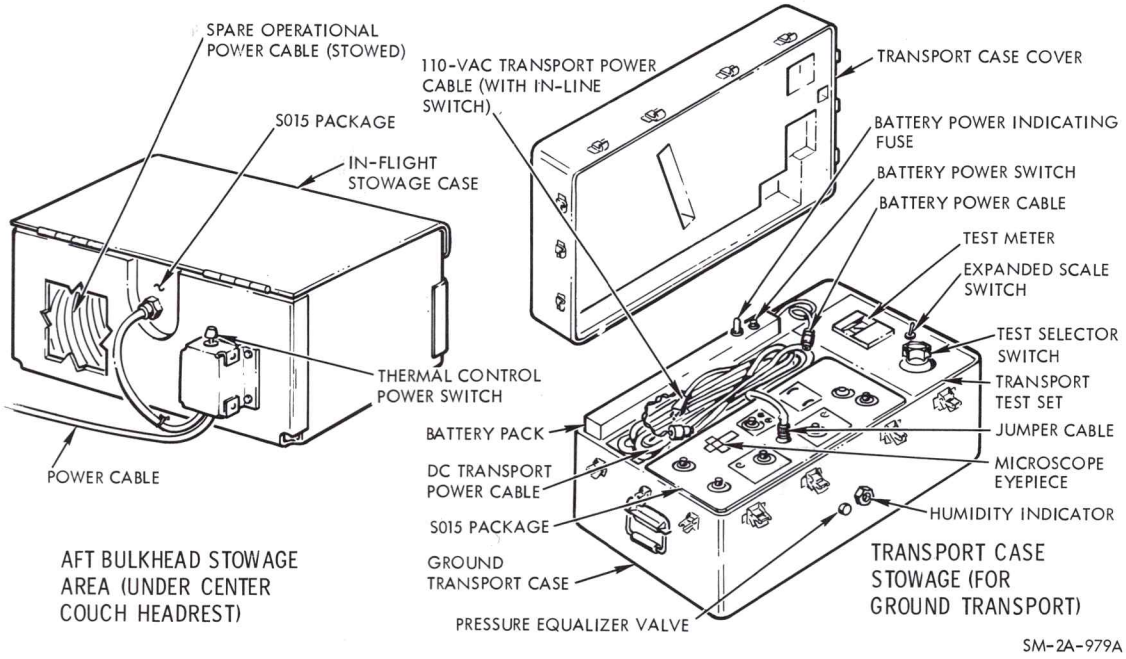

Figure 4-14. S015 Tissue Culture Package

Temperature control equipment operates automatically when electrical power is applied to the equipment package. Electrical resistance heaters and a thermoelectric cooling device transfers heat to and from the specimen slides to maintain a simulated human body temperature environment 98.6 (-4, +1)°F.

Electrical power must be supplied to the equipment package at all times during flight. The average S/C power required is about 7 watts, but a peak power load of 14 watts will be needed during reentry. The equipment, stowed on the aft bulkhead under the center couch, receives electrical power from the scientific equipment receptacle near the left-side window. During in-flight operations, the equipment will be mounted on its container by means of Velcro.

4.3.2.2 Experiment Procedures.

The functional and characteristic aspects of single living human cells will be recorded during flight by the experiment cameras. These phase-contrast time-lapse pictures will provide a complete coverage of the development and motion of the cells. Separate cultures will be used for the purpose of fixation for ground studies of the cells (ultrastructure and for histochemical and biochemical determinations). (Detailed in-flight procedures are provided in section 8.)

4.3.2.3 Crewman Participation.

Requirements for crewman participation in the experiment are as follows:

a. Preflight - A crewman will be trained sufficiently in base biology to interpret cell changes and become familiar with the proper care in handling the equipment package.

b. In-flight - A crewman will set up or stow and check that electrical power is always applied to the equipment in addition to injecting cultures, focusing the microscope, and operating the cameras. (This will require about one hour out of every 24 hours.)

c. Postflight - A crewman will check that electrical power is supplied to the S015 package during transportation to insure recovery of the living cells. A review of the experiment will be conducted during the mission debriefing session.

4.3.2.4 Recovery Requirements.

Experiment equipment must be transferred to the recovery ship with a minimum of power supply loss. The transport case contains a battery pack, cable, and switching. Power to the package must also be available aboard the recovery ship and during transportation (by means of a transport case)

from the ship to the NASA-MSC laboratory. The transport case contains a d-c and a-c cable and receptacle. The NASA on-site coordinator will be responsible for delivery of the S015 package to the NASA-MSC.

4.3.3 TRAPPED PARTICLES ASYMMETRY (S016).

The purpose of experiment S016 is to study properties of the proton component of geomagnetically trapped radiation around the earth and to perform scientific objectives as follows:

a. Measure the Van Allen proton energy spectrum to as low as 2 to 5 Mev.

b. Measure the directional differential energy spectra for trapped protons to maximum energies.

c. Measure the proton pitch-angle distribution.

d. Search for trapped particles heavier than protons (such as deutrons, tritons, and alpha particles) which have not been observed.

e. Estimate, if possible, the energy deposited by electrons in the outer layers of the S016 nuclear emulsion package.

4.3.3.1 Equipment Description.

The equipment package provided for experiment S016 consists of a nuclear emulsion stack that weighs about 8 pounds and is 5 x 5 x 3 inches in volume. This package is secured to the C/M airlock assembly, on the inner access hatch cover, and deployed (by means of an extension rod) beyond the S/C outer structure for exposure to space. (See figure 4-15.)

Orientation of the experiment package with the magnetic field of the earth will require about 43 pounds of S/C fuel. The S016 package is stowed in compartment E of the RHEB when not installed in the airlock assembly. Accessory items for the air lock are stowed in compartments A and D. (See figure 4-7, and refer to paragraph 4.1.3.)

4.3.3.2 Experiment Procedures.

A crewman will deploy the nuclear emulsion package for exposure to outer space after it has been determined that the package is secured to the extension probe within the air lock. Exposure time is planned for the last day of the mission just prior to reentry. (Detailed in-flight procedures are provided in section 8.)

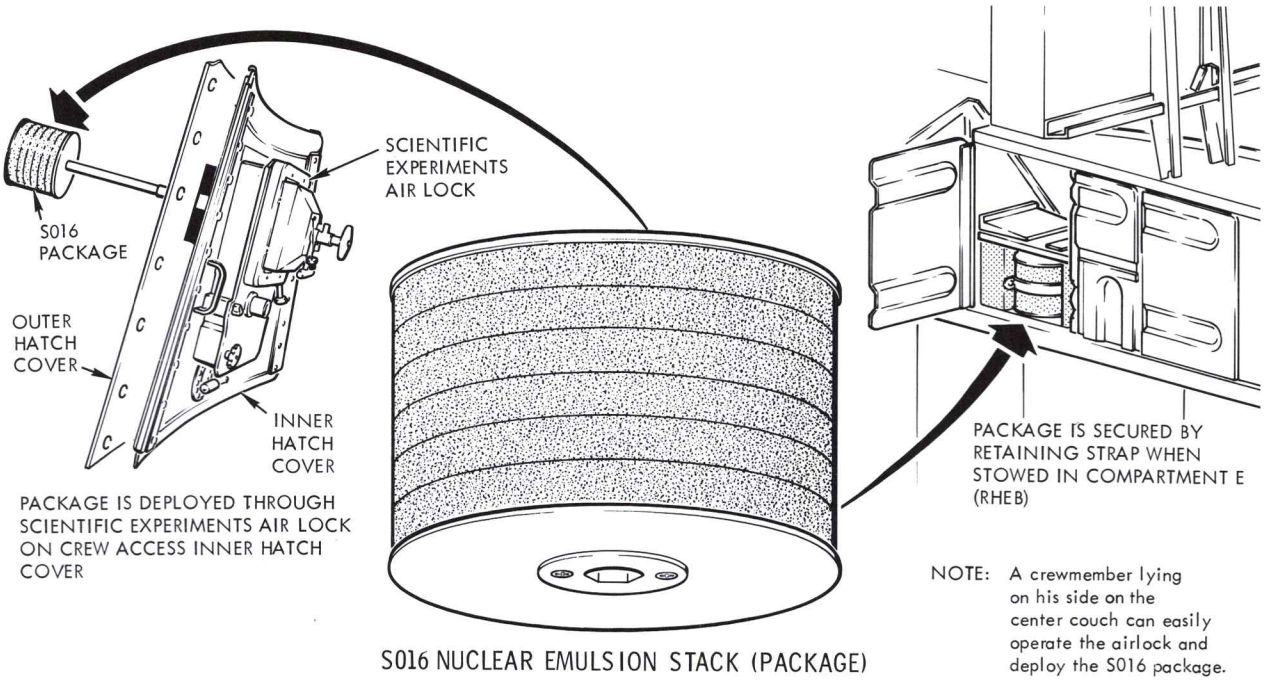

Figure 4-15. S016 Trapped Particle Asymmetry

4.3.3.3 Crewman Participation.

Requirements for crewman participation in the experiment are as follows:

a. Preflight - The crew will be briefed on handling the emulsion package, its transfer to stowage after being exposed on the extension probe, and techniques for S/C orientation.

b. In-flight - A crewman will extend the secured emulsion package outside the S/C, align the emulsion into the proper magnetic orientation, and retrieve and stow the package within the S/C.

c. Postflight - A review of the experiment will be conducted during the mission debriefing session.

4.3.3.4 Recovery Requirements.

The emulsion package must be removed and placed in refrigerated storage (33° to 50°F) as soon as the S/C is aboard the recovery ship (to limit latent image fading). A project scientist from the coordinating facility will be responsible for recovering, storing, and transporting the nuclear emulsion to the experiment laboratory.

4.3.4 X-RAY ASTRONOMY (S017).

The purpose of experiment S017 is to study X-ray sources outside the solar system. These sources cannot be studied from the Earth due to absorption of X-rays in the atmosphere. The scientific objectives of S017 are as follows:

a. Determine positions of known X-ray sources to a few arc-minutes.

b. Measure the X-ray spectrum from the stronger sources.

c. Observe certain objects of astronomical interest for evidence of X-ray emission (such as strong radio emission centers, the galactic center, and supernova remnants).

d. Scan the galactic equator for X-ray sources.

e. Measure the relative and absolute strengths of the X-ray emission from the sources.

4.3.4.1 Equipment Description.

The equipment for experiment S017 (figures 4-12 and 4-13) consists of a 342-pound sensor and electronics package in the S/M and a 40-pound display/control unit in the C/M. All components of the sensor and electronics package such as mechanical collimators, proportional counters, radiation shielding, electronics, a compact sensor unit, and the data handling system are mounted on top of the S/M forward bulkhead. The visual display/control unit is mounted in compartment A of the C/M LEB and is connected to the S/M electronics by the S/C umbilical harness. Approximately 90 pounds of fuel will be used for S/C orientation in observing X-ray sources, and from 75 to 150 watts of electrical power per hour will be required for the experiment.

4.3.4.2 Experiment Procedures.

An astronaut, positioned in the LEB, will use the G&N astrosextant, the S017 display/control unit (attached by Velcro to the worktable), and manually control the S/C to observe for X-ray sources in space. X-ray sources, emanating from interstellar space, will be detected by experiment sensing equipment mounted in the S/M (and aligned by the C/M astrosextant after a door is opened in the S/M to expose the sensor unit to space). The S017 equipment will convert this into signals suitable for tape recordings and present a display for the crew. (Detailed in-flight procedures are provided in section 8.)

4.3.4.3 Crewman Participation.

Requirements for crewman participation in the S017 experiment are as follows:

a. Preflight - A crewman and backup crewmember may require 2 weeks of training to become familiar with the mode of operation and use of S017 equipment for determining X-ray sources in space.

b. In-flight - Approximately 20 observations (15 to 30 minutes each) will be required during the night portion of the mission. A crewmember will operate the S017 equipment and control the desired S/C heading (by observing visual displays) while recording data for the experiment.

c. Postflight - A review of the experiment will be conducted during the mission debriefing session.

4.3.4.4 Recovery Requirements.

There are no recovery requirements for the experiment equipment. All data from the S/C will be provided to the NASA-MSC by telemetry.

4.3.5 MICROMETEORITE COLLECTION (S018).

The primary purpose of experiment S018 is to collect small micrometeorites and to measure fluxes of larger micrometeorite particles at orbital altitudes. The secondary purpose is to carry out biological exposure and collection experiments.

4.3.5.1 Equipment Description.

The equipment provided for experiment S018 consists of a telescopic square container that weighs about 8 pounds and is 5 x 5 x 3 inches in volume. This container is secured to the C/M airlock assembly, on the inner access hatch cover, and deployed (by means of an extension rod) beyond the S/C outer structure for exposure to space. (See figure 4-16.)

Experiment S018 does not require any S/C power, fuel, or recording equipment. The experiment canister is stowed in compartment T under the RH couch during launch and most of the flight, but is eventually exchanged with the S016 package for experimental setup in the airlock assembly. Accessory items for the airlock are stowed in compartment A of the LEB. (See figure 4-2, and refer to paragraph 4.1.3.)

4.3.5.2 Experiment Procedures.

A crewman will remove the S018 canister from storage, exchange it with the S016 package in the airlock, and deploy the canister for micrometeorite collections. A total exposure time of 8 hours duration is required. The exposures may be continuous or conducted during portions of several orbits. (Detailed in-flight procedures are provided in section 8.)

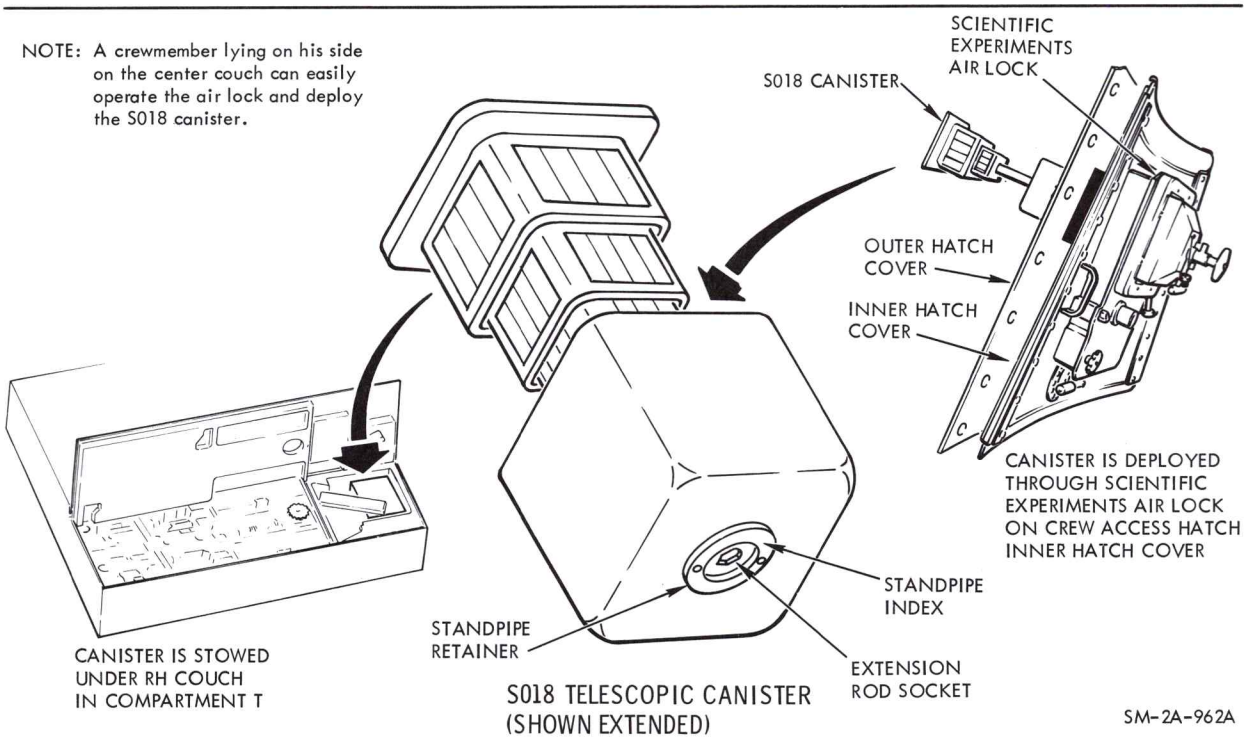

Figure 4-16. S018 Micrometeorite Collection

APPENDIX A

APPENDIX A

SYMBOLS AND DEFINITIONS

A/C	Audio center
ACCEL	Accelerometer
ACCUM	Accumulator
ACE	Acceptance checkout equipment
ACK	Acknowledge
ADA	Angular differentiating accelerometer
ADAP	Adapter
ADJ	Adjust
AESB	Aft equipment storage bay
AF	Audio frequency
AF	Atmospheric flight
AGAA	Attitude gyro accelerometer assembly
AGC	Apollo guidance computer
AGC	Automatic gain control
AGCU	Attitude gyro coupling unit
AMPL	Amplifier
AMS	Apollo mission simulator
ANAL	Analyzer
ANLG	Analog
ANT	Antenna
ASD	Apollo standard detonator
ASI	Apollo standard initiator
AS/GPI	Attitude set/gimbal position indicator
ATT	Attenuator
ATT	Attitude
AUTO	Automatic
AUX	Auxiliary
AVC	Automatic volume control
BAT	Battery
BCD	Binary coded decimal
BCN	Beacon
BECO	Booster engine cutoff
BIOMED	Biomedical
BLWR	Blower
BMAG	Body-Mounted attitude gyro
BPC	Boost protective cover
bps	Bits per second
Btu	British thermal unit
BUR	Backup Rate
BURR	Backup Rate roll
BURP	Backup rate pitch
BURY	Backup rate yaw
$CA(OH)_2$	Calcium bydroxide
CAUT/WARN	Caution and warning
cb	Circuit breaker
cc	Cubic centimeter
CCW	Counterclockwise
CDU	Coupling display unit
CF	Coasting flight
CFE	Contractor-furnished equipment
cfm	Cubic feet per minute
CG	Center of gravity
CHGR	Charger
CIR & SEP	H_2 circulation, water separation centrifuge, and glycol circulation
CM	Command module
CMD	Command
C/M RCS	Command module reaction control system
COMP	Compressor
COMP	Computing
COMPR	Compressor
COND	Condenser
COND	Conditioner
CONT	Control
CO_2	Carbon dioxide
CPC	Coldplate clamp
cps	Cycles per second
CRYO	Cryogenic

APPENDIX A

CSM	Command and service module
CSS	Computer subsystem
CTE	Central timing equipment
C/W	Caution and warning
CW	Clockwise
CW	Continuous wave
C&WS	Caution and warning system
db	Decibel
DISP/AGAA/ECA	Display and attitude gyro accelerometer assembly and electronic control assembly
DDP	Data distribution panel
DECR	Decrease
DEMOD	Demodulate
DET	Detector
DISCH	Discharge
DPST	Double-pole single-throw
DSE	Data storage equipment
DSIF	Deep space instrumentation facility
DSKY	Display and keyboard
ECA	Electronic control assembly
ECO	Engine cutoff
ECS	Environmental control system
ECU	Environmental control unit
EDS	Emergency detection system
EEG	Electroencephalogram
E_{ig}	Voltage-inner gimbal
EKG	Electrocardiogram
ELS	Earth landing system
ELSC	Earth landing system controller
EMERG	Emergency
E_{mg}	Voltage-middle gimbal
EMS	Entry monitor subsystem
ENC	Encode
ENG	Engine
E_{og}	Voltage-outer gimbal
EPS	Electrical power subsystem
ESS	Essential
EVA	Extra vehicular activity
EVAP	Evaporator
EVL	Egocentric visual localization
EXH	Exhaust
F	Fuel
F/C	Fuel cell
FCSD	Flight Crew Support Division (MSC)
FCSM	Flight combustion stability monitor
FDAI	Flight director attitude indicator
FLSC	Flexible linear-shaped charge
FM	Frequency modulation
FOV	Field of view
FQR	Flight qualification recorder
FWD	Forward
g	Gravity
GFAE	Government-furnished airborne equipment
GFE	Government-furnished equipment
GFP	Government-furnished parts
GLY	Water-glycol
GMBL	Gimbal
GMT	Greenwich mean time
G&N	Guidance and navigation
GN_2	Gaseous nitrogen
GSE	Ground support equipment
g/v	Gravity vs velocity
HBR	High-bit rate
He	Helium
HEX	Hexagonal
HF	High frequency
HI	High
HT EXCH	Heat exchanger
H_2	Hydrogen
H_2O	Water

APPENDIX A

HTRS	Heaters
ICDU	Inertial coupling display unit
ICS	Intercommunication system
IGN	Ignition
IMU	Inertial measurement unit
INCR	Increase
IND	Indicator
INSTR	Instrumentation
INT	Interphone
INV	Inverter
ips	Inches per second
IRIG	Inertial reference integrating gyro
ISOL	Isolation
ISS	Inertial subsystem
I/U	Instrument unit
JETT	Jettison
kbps	Kilobits per second
kc	Kilocycle
kmc	Kilomegacycle
KOH	Potassium hydroxide
lb/hr	Pounds per hour
lb min	Pounds per minute
LBR	Low-bit rate
LCC	Launch control center
LEB	Lower equipment bay
LM	Lunar module
LES	Launch escape system
LET	Launch escape tower
LH	Left-hand
LHEB	LH equipment bay
LHFEB	LH forward equipment bay
LIQ	Liquid
LLOS	Landmark line of sight
LO	Low
LOR	Lunar orbit rendezvous
LOS	Line of sight
LTG	Lighting
LV	Launch vehicle
MA	Master
MAN	Manual
MANF	Manifold
MAX	Maximum
mc	Megacycles
mcs	Megacycles per second
MCT	Memory cycle-time
MDC	Main display console
MED	Medium
MESC	Master events sequence controller
MGMT	Management
MIN	Minimum
MMH	Monomethylhydrazine (fuel)
mmHg	Millimeters of mercury
MN A	Main bus A
MN B	Main bus B
MSC	Manned Spacecraft Center (NASA) (Clear Lake, Texas)
MSD	Monitor selection decoder
MDF	Mild detonating fuse
MSFN	Manned space flight network
MSL	Mean seal level
MSM	Monitor selector matrix
MTRS	Motors
MTVC	Manual thrust vector control
MULTI	Multiplexer
N/A	Not applicable
NB	Navigational base
NCS	Navigator communication station
NON ESS	Nonessential
NRZ	Nonreturn to zero
N_2	Nitrogen
N_2H_4	Hydrazine (fuel)
N_2O_4	Nitrogen tetroxide (oxidizer)
OCDU	Optics coupling display unit
OL	Overload
OMNI	Omnidirectional

OSC	Oscillator
OSS	Optics subsystem
OX	Oxidizer
OXID	Oxidizer
O_2	Oxygen
PA	Power amplifier
PAM	Pulse amplitude modulation
PART	Partial
PCM	Pulse-code modulation
PCVB	Pyro continuity verification box
PECA	Pitch electronic central assembly
PF	Powered flight
PGA	Pressure garment assembly
PGNS	Primary guidance and navigation system
pH	Alkalinity to acidity content (hydrogen ion concentration)
PIP	Pulsed integrating pendulous (accelerometer)
PIPA	Pulsed integrating pendulous accelerometer
PKG	Package
PL	Postlanding
PLSS	Portable life support system
PLV	Postlanding ventilation
PM	Phase modulation
PMP	Premodulation processor
POT	Potable
PP	Partial pressure
pps	Pulses per second
PRESS	Pressure
PRF	Pulse repetition frequency
PRI, PRIM	Primary
PRN	Pseudo-random noise
PROG	Program
PROP	Propellant
PRR	Pulse repetition rate
PSA	Power servo assembly
psi	Pounds per square inch
psia	Pounds per square inch absolute
psid	Pounds per square inch differential
psig	Pounds per square inch gauge
PTT	Push-to-talk
PU	Propellant utilization
PUGS	Propellant utilization and gauging subsystem
PWR	Power
PYRO	Pyrotechnic
QTY	Quantity
RAD	Radiator
RBC	Red blood cell
RCS	Reaction control system
RCSC	Reaction control system controller
RCVR	Receiver
REC	Receive
RECA	Roll electronic control assembly
RECT	Rectifier
RECY	Recovery
REG	Regulator
RESVR	Reservoir
REV	Reverse
RF	Radio frequency
RGA	Rate gyro assembly
RH	Right-hand
RHEB	RH equipment bay
RHFEB	RH forward equipment bay
RLSE	Release
RLY	Relay
RMT, RMTE	Remote
RNG	Range
RTC	Real-time commands
RUPT	Interrupt
RZ	Return to zero
S-	Saturn stage (prefix)
S/C	Spacecraft
SCE	Signal conditioner equipment
SCIN	Scimitar-notch

APPENDIX A

SCS	Stabilization and control system
SCT	Scanning telescope
SEC	Secondary
SECS	Sequential events control system
SENSE	Sensing
SEP	Separation
SEP	Space electronic package
SEQ	Sequencer
SHA	Sidereal hour angle
SIG	Signal
SIG COND	Signal conditioner
SLA	Spacecraft lunar-module adapter
SLOS	Star line of sight
SM	Service module
SMJC	Service module jettison controller
S/M RCS	Service module reaction control system
SNSR	Sensor
SOV	Shutoff valve
SPDT	Single-pole double-throw
SPL	Sound pressure level
SPS	Service propulsion system
SPST	Single-pole single-throw
SQG	Sequencer generator
SSB	Single sideband
Sw	Switch
SXT	Sextant
SYNC	Synchronize
SYS	System
TBD	To be determined
T/C	Telecommunications
TC	Transfer control
TEC	Transearth coast
TEMP	Temperature
TFL	Time from launch
TK	Tank
TLC	Translunar coast
RLM, T/M	Telemetry
T/R	Transmit/receive
TTE	Time-to-event
TV	Television
TVC	Thrust vector control
TWR	Tower
UDL	Up-data link
UDMH	Unsymmetrical dimethyl hydrazine (fuel)
UHF	Ultra high frequency
UPTL	Up-link telemetry
USBE	Unified S-band equipment
USBS	Unified S-band system
USM	Service module umbilical
UV	Undervoltage
UVMS	Urine volume measurement system
VAC	Volts ac
VCO	Voltage controlled oscillator
VDC	Volts dc
VHF	Very high frequency
VOX	Voice-operated relay
V/V	Valve
WMS	Waste management system
XDUCER	Transducer
XFMR	Transformer
XMTR	Transmitter
XCVR	Transceiver
XPONDER	Transponder
YECA	Yaw electronic control assembly
Zn	Zinc
ΔP	Differential pressure
ΔV	Differential velocity
$\emptyset$	Phase

ALPHABETICAL INDEX

The following index consists of all subparagraphs not included in the table of contents. They are arranged in alphabetical order and location paragraph numbers are given. This index includes material from sections 1 through 4 only.

Title	Para. No.
A	
Ablative Combustion Chamber	2.4.2.5
Abort Loads	1.4.1.3
AC and DC Data	2.6.4.1
Accelerometer	2.3.4.2.2
Adapter Handle (Tool E)	2.12.8.1.2
Aft Compartment	1.1.2.9
Antenna Equipment Group	2.8.3.4
Antennas	2.8.5.1
Apollo Reference Axes	2.3.2.2
Ascent (SCS)	2.3.3.1
Attitude Control Subsystem	2.3.2.3.2
Attitude Gyro Accelerometer Assembly	2.3.4.2
Attitude Reference Susbystem	2.3.2.3.1
Attitude Set/Gimbal Position Indicator	2.3.4.9
Audio Center (A/C) Equipment	2.8.3.2.1
Automatic Attitude Control	2.3.2.1.2
Auxiliary Electronic Control Assembly	2.3.4.4
B	
Batteries	2.6.3.2
Battery Charger	2.6.3.5
Bioinstrumentation Accessories Kit	2.12.12.2.4
Biomedical Preamplifier Instrument Assembly	2.12.12.2.3
Bi-Propellant Valves	2.4.2.3.7
Bi-Propellant Valve Assembly	2.4.2.3
Body Axes	2.3.2.2.1
Body-Mounted Attitude Gyros	2.3.4.2.1
Boost	1.4.1.2
C	
C&WS General Data	2.10.5.1
C&WS Power Consumption Data	2.10.4.1
Cabin Pressure Controls	1.1.2.4.6
Cabin Pressure Rates	2.7.5.4
Cabin Pressure and Temperature Control Subsystem	2.7.4.4
Cabin Pressure and Temperature Control Subsystem	2.7.3.3
Cabin Repressurization Rates	2.7.5.5
C-Band Beacon Antenna Equipment	2.8.3.4.4
C-Band Transponder Equipment	2.8.3.3.6
Canard Subsystem	2.9.3.3.2
Central Timing Equipment (CTE)	2.8.3.2.9
Check Valve Assemblies	2.5.2.1.4
Check Valve Assemblies	2.4.2.1.4
Cleansing of Teeth Oral Hygiene Assembly	2.12.11.1.2
CM Impact Attenuation System	2.12.5.2
C/M Mechanical Controls	1.1.2.4
C/M Reaction Control System Controllers	2.9.3.1.3
C/M-S/M Separation Mechanism	2.9.3.1.5
Coasting Flight (Earth Orbital)	2.3.3.2
Cobra Cable T Adapter	4.1.2.2
CO_2 Sensor	2.7.3.2.1
Combustion Chamber	2.5.2.3.3
Commander's Flight Data File	2.12.7.1
Communications Helmet	2.12.4.5
Computer Subsystem	2.2.1.2.3
Constant Wear Garment (CWG)	2.12.4.3
Constant Wear Garment Electrical Adapter	2.12.4.6
Contents Survival Kits	2.12.13.3
Control Capabilities (SCS)	2.3.2.1
Couch Attenuation Struts	1.1.2.4.2
Crew Access Hatch Covers	1.1.2.4.3

Title	Para. No.
Crew Compartment	1.1.2.2
Crew Couch Attachments	2.12.5.3.2
Crew Couch Component Description	2.12.5.3.4
Crew Couch Controls	1.1.2.4.1
Crew Equipment and Equipment Bays	1.1.2.5
Crew Couch Positions	2.12.5.3.3
Crew Couch Structure	2.12.5.3.1
Crew Couch System Description	2.12.5.3
Crew Couches General	2.12.5.1
Crewman Participation (Bioassays)	4.2.2.3
Crewman Participation (Calcium Balance)	4.2.4.3
Crewman Participation (Cytogentic Blood Study)	4.2.5.3
Crewman Participation (Bone Demineralization)	4.2.3.3
Crewman Participation (Ergometer)	4.2.6.3
Crewman Participation (Metabolic)	4.2.7.3
Crewman Participation (Negative Pressure)	4.2.9.3
Crewman Participation (Orbital Frog)	4.3.1.3
Crewman Participation (Photocardiogram)	4.2.1.3
Crewman Participation (Pulmonary)	4.2.8.3
Crewman Participation (Trapped Particle)	4.3.3.3
Crewman Participation (X-Ray Astronomy)	4.3.4.3
Crewman Participation (Zero G - Single Human Cell)	4.3.2.3
Crewman Restraint Harness	2.12.6.1.1
Crewman Sleeping Restraint	2.12.6.2.3
Crewman Optical Alignment Sight (COAS)	2.12.3.3
Cryogenic Storage	2.6.3.1
Cryogenic Storage Subsystem	2.6.5.2

D

"D" Ring Extension Handle (Tool N)	2.12.8.1.9
Data Operations (T/C)	2.8.2.2
Data Storage Equipment (DSE)	2.8.3.2.6
Data Storage Equipment	2.8.5.2
Description and Use Survival Kit Components	2.12.13.3.1
Description - Crew Compartment	2.12.2.1
Description (Crewman Optical Alignment)	2.12.3.3.3
Description Inflight Tool Set and Workshelf	2.12.8.1
Description Medical Supplies	2.12.12.1
Description Personal Hygiene	2.12.11.1
Description Spacesuit Assembly	2.12.4.1
Design Data (RCS)	2.5.3.1
Design Data (RCS)	2.5.8.1
Design Data (SPS)	2.4.3.1
Diaphragm Burst Isolation Valve	2.5.7.2.2
Dimensions - Crew Compartment	2.12.2.2
Display and Attitude Gyro Accelerometer Assembly Electronic Control Assembly	2.3.4.5
Distribution Plumbing	2.5.2.1.6
Distribution Plumbing	2.5.2.2.4
Distribution Plumbing (RCS)	2.5.7.1.6
Distribution Plumbing	2.5.7.2.4
Drinking Water Subsystem	2.12.9.1
Dry Cleansing Cloth	2.12.11.1.4

E

Earth Impact	1.4.1.6
Earth Landing Subsystem	2.9.3.4
Earth Landing System	2.9.2.4
Earth Landing System Controllers	2.9.3.1.2
ECS Caution Notes	2.7.5.2
ECS Caution Placards	2.7.5.1
ECS General Data	2.7.5.3
ECS Power Consumption Data	2.7.4.8
ECS-Waste Management System Interface	2.7.3.6
Electrical Power Distribution	2.8.3.5
Electrical Power Distribution	2.7.3.7
Electrical Power Distribution (C&W)	2.10.3.1

Title	Para No.
Electrical Power Distribution (SCS)	2.3.4.11
Emergency Detection System	2.9.2.2
Emergency Detection System	2.9.3.2
Emergency Wrench (Tool B)	2.12.8.1.5
End Wrench (Tool F)	2.12.8.1.7
Energy Storage	2.6.2.1
Engine Assemblies	2.5.2.3
Engine Assembly	2.5.7.3
Engine Injector	2.4.2.4
Engine Solenoid Injector Valve Temperature Control System	2.5.7.3.5
Engine Propellant Lines	2.4.2.3.8
Engine Thrusting Logic	2.5.2.5
Engine Thrust ON-OFF Control	2.4.2.10.4
Engine Thrust ON-OFF Logic	2.5.7.3.6
Entry	2.3.3.4
Entry	1.4.1.5
Equipment Description (Bioassays)	4.2.2.1
Equipment Description (Bone Demineralization)	4.2.3.1
Equipment Description (Calcium Balance)	4.2.4.1
Equipment Description (Cytogentic Blood Study)	4.2.5.1
Equipment Description (Ergometer)	4.2.6.1
Equipment Description (Phonocardiogram)	4.2.1.1
Equipment Description (Metabolic)	4.2.7.1
Equipment Description (Micrometeorite)	4.3.5.1
Equipment Description (Negative Pressure)	4.2.9.1
Equipment Description (Orbital Frog)	4.3.1.1
Equipment Description (Pulmonary)	4.2.8.1
Equipment Description (Trapped Particles)	4.3.3.1
Equipment Description (X-Ray Astronomy)	4.3.4.1
Equipment Description (Zero G - Single Human Cell)	4.3.2.1
Error Codes	2.2.1.2.3.1
Experiment Procedures (Bioassays)	4.2.2.2
Experiment Procedures (Bone Demineralization)	4.2.3.2
Experiment Procedures (Calcium Balance)	4.2.4.2
Experiment Procedures (Cytogentic Blood Study)	4.2.5.2
Experiment Procedures (Ergometer)	4.2.6.2
Experiment Procedures (Metabolic)	4.2.7.2
Experiment Procedures (Micrometeorite)	4.3.5.2
Experiment Procedures (Negative Pressure)	4.2.9.2
Experiment Procedures (Orbital Frog)	4.3.1.2
Experiment Procedures (Trapped Particles)	4.3.3.2
Experiment Procedures Phonocardiogram)	4.2.1.2
Experiment Procedures (Pulmonary)	4.2.8.2
Experiment Procedures (X-Ray Astronomy)	4.3.4.2
Experiment Procedures (Zero G - Single Human Cell)	4.3.2.2
External Attenuation	2.12.5.2.1
External Viewing Mirrors (CFE)	2.12.3.2.2

F

First Stage	1.2.1.1
Flight Combustion Stability Monitor (FCSM)	2.4.2.7
Flight Coveralls (GFP)	2.12.4.4
Flight Director Attitude Indicator	2.3.4.8
Flight Qualification Instrumentation	2.8.3.1.2

Title	Para. No.
Flight Qualification Record (FQR)	2.8.3.2.7
Food and Water	1.1.2.6
Food Use	2.12.10.1
Forward Access Hatch Cover	1.1.2.4.4
Forward Compartment	1.1.2.1
Four Inch Driver (Tool L)	2.12.8.1.4
Fuel Cell Power Plants	2.6.3.3
Fuel Cell Power Plants	2.6.5.1
Fuel Tank	2.5.2.2.2
Functional Description Guidance & Navigation	2.2.1.1
Functional Description (Interior Lighting)	2.11.4.1
Functional Description (Uprighting System)	2.11.5.1
G	
Gas Chromatograph	2.7.3.2.2
Gaseous Nitrogen (GH_2) Pressure Vessels	2.4.2.3.1
General (TLM)	2.8.5.4
Gimbal Actuator	2.4.2.9.1
GN_2 Ball Valve Actuators	2.4.2.3.6
GN_2 Pressure Regulators	2.4.2.3.3
GN_2 Relief Valves	2.4.2.3.4
GN_2 Solenoid Control Valves	2.4.2.3.5
G&N Attitude Control	2.3.3.2.1
G&N Delta V	2.3.3.3.1
G&N Entry	2.3.3.4.1
G&N Local Vertical	2.3.3.2.2
Guidance and Navigation Station Restraint	2.12.6.2.2
H	
Hardware Power and Signal Cables	4.1.2.4
Heat Exchangers	2.4.2.1.6
Helium Check Valve Assembly	2.5.7.1.4
Helium Isolation (Squib Operated) Valve	2.5.7.1.2
Helium Isolation Valve	2.5.2.1.2
Helium Pressure Regulator Assembly	2.5.7.1.3
Helium Pressure Relief Valve	2.4.2.1.5
Helium Pressurizing Valves	2.4.2.1.2
Helium Relief Valve	2.5.7.1.5
Helium Supply Tank (RCS)	2.5.7.1.1
Helium Tanks	2.4.2.1.1
Helium Tank Supply (RCS)	2.5.2.1.1
Helmet Storage	2.12.4.9.2
HF Recovery Antenna Equipment	2.8.3.4.2
HF Transceiver Equipment	2.8.3.3.2
High "G" Load Restraints	2.12.6.1
I	
Inflight Toolset Storage Pouch and Toolset Drawer	2.12.8.3.1
Inflight Toolset Tether	2.12.8.1.8
In-Flight Tracking and Ranging	2.8.2.3.1
In-Flight Voice Communications	2.8.2.1.3
Injector	2.5.2.3.2
Injector	2.5.7.3.2
Injector Pre-Valves	2.4.2.3.2
Instrumentation Equipment Group	2.8.3.1
Interior Finish Crew Compartment	2.12.2.3
Internal Attenuation	2.12.5.2.2
IMU Operation (G&N)	2.2.1.4.2
Inertial Subsystem	2.2.1.2.1
Internal Viewing Mirrors (CFE)	2.12.3.2.1
Inverters	2.6.3.4
L	
Launch	1.4.1.1
Launch Escape System	2.9.2.3
LEB Food Stowage Compartment	2.12.10.2.1

Title	Para. No.
LES Motors	2.9.3.3.1
LHEB Food Storage Compartment	2.12.10.2.3
M	
Major Components Subsystem Description G&N	2.2.1.2
Manual Attitude Control	2.3.2.1.1
Manual Delta V (MTVC)	2.3.3.3.3
Master Events Sequencer Controllers	2.9.3.1.1
Mechanical Adjustments Crew Couch	2.12.5.3.5
Medical Kit Additional Usage	2.12.12.3.3
Metabolic Data	2.7.4.1
Mirrors	2.12.3.2
Miscellaneous Storage Toolset	2.12.8.3.2
Monitor Mode	2.3.3.1.1
Monitoring Equipment (Medical Supplies)	2.12.12.2.1
N	
Navigations Axes	2.3.2.2.2
Nozzle Extension	2.5.7.3.4
Nozzle Extension	2.4.2.6
O	
Octopus Cable	4.1.2.1
Operational Instrumentation	2.8.3.1.1
Operational Limitations and Restrictions (G&N)	2.2.1.4
Operational Modes (G&N System)	2.2.1.1.1
Operations (Restraint Harness)	2.12.6.1.2
Operational Use Crewman Optical Alignment	2.12.3.3.3
Operational Usage Commander's and Pilot's Data File	2.12.7.4.1
Operational Use (Drinking Water)	2.12.9.2
Operational Use Inflight Toolset	2.12.8.2
Operational Use Senior Pilot's Data File	2.12.7.4.2
Optical Subsystem	2.2.1.2.2
Optics Base Axes	2.3.2.2.3
Optics Operation (G&N)	2.2.1.4.3
Oxidizer Tank	2.5.2.2.1
Oxidizer Tank (RCS)	2.5.7.2.1
Oxygen Hose Umbilical	2.12.4.10.2
Oxygen Supply Subsystem	2.7.3.1
Oxygen Supply Subsystem	2.7.4.2
P	
Packaging Medical Kit	2.12.12.3.1
Performance Data (RCS)	2.5.8.2
Performance Data (RCS)	2.5.3.2
Personal Biomedical Sensors Instrument Assembly	2.12.12.2.2
Performance and Design Data (G&N)	2.2.1.3
Personal Radiation Dosimeters	2.12.12.2.5
PGA and CWG Electrical Adapter Cables	4.1.2.3
PGA Components	2.12.4.8.1
PGA Connecting Equipment	2.12.4.10
PGA Description	2.12.4.8
PGA Electrical Adapter	2.12.4.10.1
PGA Pressurized	2.12.4.7.2
PGA Storage	2.12.4.9
PGA Unpressurized (Ventilated)	2.12.4.7.1
Pilot's Flight Data File	2.12.7.2
Pitch, Roll and Yaw Electronic Control Assemblies	2.3.4.3
Power Conversion	2.6.2.3
Power Consumption Data	2.5.8.3
Power Consumption Data	2.5.3.3
Power Distribution	2.6.3.6
Power Distribution	2.6.2.4
Power Generation	2.6.2.2
Power Requirements	2.6.4.2
Powered Flight (Earth Orbital)	2.3.3.3

Title	Para. No.
Premodulation Processor (PMP) Equipment	2.8.3.2.5
Pressure Regulator Assembly	2.4.2.1.3
Pressure Regulator Assembly	2.5.2.1.3
Pressure Relief Valves	2.5.2.1.5
Pressure Suit Circuit Subsystem	2.7.3.2
Pressure Suit Circuit Subsytem	2.7.4.3
Pressure Versus Temperature Measuring System	2.5.2.4
Pressurization Subsystem (RCS)	2.5.2.1
Pressurization Subsystem (RCS)	2.5.7.1
Pressurization Subsystem (SPS)	2.4.2.1
Propellant, In-Line Filters	2.5.2.2.5
Propellant Isolation Shutoff Valve	2.5.2.2.3
Propellant Isolation Shutoff Valves	2.5.7.2.3
Propellant Jettison	2.5.7.4
Propellant Solenoid Injection Control Valves (Fuel and Oxidizer)	2.5.7.3.1
Propellant Solenoid Injector Control Valves (Fuel and Oxidizer)	2.5.2.3.1
Propellant Subsystem	2.4.2.2
Propellant Subsystem	2.5.7.2
Propellant Subsystem	2.5.2.2
Propellant Tanks	2.4.2.2.1
Propellant Utilization and Gauging Subsystem (PUGS)	2.4.2.10
Propellant Utilization Valve	2.4.2.10.3
Pulse-Code Modulation Telemetry Equipment (PCM-TLM)	2.8.3.2.3
Q	
Quantity Computing and Indicating System Test	2.4.2.10.2
Quantity Sensing, Computing and Indicating System	2.4.2.10.1
R	
Rate Gyro Assembly	2.3.4.1
RCS Electrical Heaters	2.5.2.3.4
Recovery Requirements (Bioassays)	4.2.2.4
Recovery Requirements (Calcium Balance)	4.2.4.4
Recovery Requirements (Cytogentic Blood Study)	4.2.5.4
Recovery Requirements (Bone Demineralization)	4.2.3.4
Recovery Requirements (Ergometer)	4.2.6.4
Recovery Requirements (Metabolic)	4.2.7.4
Recovery Requirements (Orbital Frog)	4.3.1.4
Recovery Requirements (Phonocardiogram)	4.2.1.4
Recovery Requirements (Pulmonary)	4.2.8.4
Recovery Requirements (Trapped Particle)	4.3.3.4
Recovery Requirements (X-Ray Astronomy)	4.3.4.4
Recovery Requirements (Zero G - Single Human Cell)	4.3.2.4
Recovery Tracking	2.8.2.3.2
Recovery Voice Communications	2.8.2.1.4
RF Electronics Equipment Group	2.8.3.3
RHEB Auxiliary Food Compartment Drawer	2.12.10.2.2
Rotational Controls	2.3.4.6
S	
S-Band Power Amplifier Equipment	2.8.3.3.5
S/C Attitude (G&N)	2.2.1.4.1
S/C Attitude Change	2.3.6.1
SCS Attitude Control	2.3.3.2.3
S/C Controls and Displays	1.1.2.3
SCS Delta V	2.3.3.3.2
SCS Entry	2.3.3.4.2
S/C Intercommunications	2.8.2.1.2

Title	Para. No.
SCS Local Vertical	2.3.3.2.4
Seat Adjustment Directions	2.12.5.3.6
Second Stage	1.2.1.2
Senior Pilot's Flight Data File	2.12.7.3
Sequential Events Control System	2.9.2.1
Sequential Events Control System Major Components	2.9.3.1
Shirtsleeve Environment	2.12.4.2
Signal Conditioning Equipment (SCE)	2.8.3.2.2
S/M Jettison Controllers	2.9.3.1.4
Spacecraft LEM Adapter Separation Mechanism	2.9.3.1.6
Spacesuit "ON" Environment	2.12.4.7
SPS Electrical Heaters	2.4.2.8
Stowage Food	2.12.10.2
Stowage Medical Kit	2.12.12.3.2
Storage (Restraint Harness)	2.12.6.1.3
Stowage Survival Kit	2.12.13.1
Storage (Tool Set)	2.12.8.3
Subsystems (SCS)	2.3.2.3
Survival Equipment	1.1.2.8
Survival Kit Container Operation	2.12.13.2

T

"T" Handle (Tool C)	2.12.8.1.6
Tank Propellant Feed Lines	2.4.2.2.2
Telemetry Measurements	2.2.1.5
Television (TV) Equipment	2.8.3.2.4
Ten Inch Driver (Tool H)	2.12.8.1.3
Tether (Toolset)	2.12.8.2.1
Thrust Chamber Assembly	2.5.7.3.3
Thrust Mount Assemblies	2.4.2.9
Thrust Vector Control	2.3.2.1.3
Thrust Vector Control Subsystem	2.3.2.3.3
Tissue Dispensers	2.12.11.1.6
TLM Transmission and Storage	2.8.2.2.2
Torque Wrench (Tool A)	2.12.8.1.1
Torso and Glove Storage	2.12.4.9.1
Towels	2.12.11.1.5
Tracking and Ranging	2.8.2.3
Translation Controls	2.3.4.7

U

Unified S-Band Equipment (USBE)	2.8.3.3.4
Unified S-Band Operations	2.8.2.4
Unified S-Band System	2.8.5.3
Up-Data Link (UDL) Equipment	2.8.3.2.8
Up-Data Reception	2.8.2.2.3
Usage (Workshelf)	2.12.8.4.1

V

Velocity Change Indicator	2.3.4.10
VHF/AM Transmitter-Receiver Equipment	2.8.3.3.1
VHF/FM Transmitter Equipment	2.8.3.3.3
VHF/2-KMC Omni-Antenna Equipment	2.8.3.4.1
VHF Recovery Antenna Equipment	2.8.3.4.3
VHF Recovery Beacon Equipment	2.8.3.3.7
Voice Communications	2.8.2.1
Voice and Data Equipment Group	2.8.3.2
Voice Recorders	2.8.3.2.10

W

Water-Glycol Coolant Subsystem	2.7.3.4
Water-Glycol Coolant Subsystem	2.7.4.5
Water Impact	1.4.1.7
Water Supply Subsystem	2.7.4.6
Water Supply Subsystem	2.7.3.5
Waste Management	1.1.2.7
Waste Management System	2.7.4.7
Weightless Crewman Restraint Sandals	2.12.6.2.1

Title	Para. No.
Weightless Restraint	2.12.6.2
Wet Cleansing Cloth	2.12.11.1.3
Windows and Shades	1.1.2.4.5
Window Shades (CFE)	2.12.3.1
Workshelf Assembly	2.12.8.4