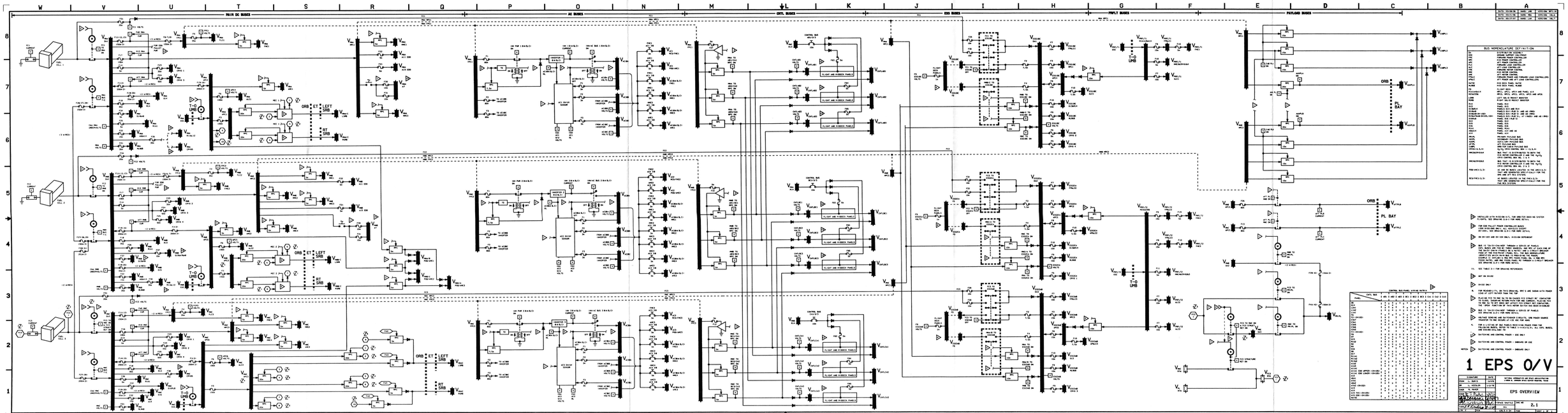

MAIN DC BUSES
AC BUSES
CNTL BUSES
EBS BUSES
PMPLT BUSES
PAYLOAD BUSES
BUS NOMENCLATURE DEFINITION
1 EPS O/V
EPS OVERVIEW
2.1
BASIC REV F

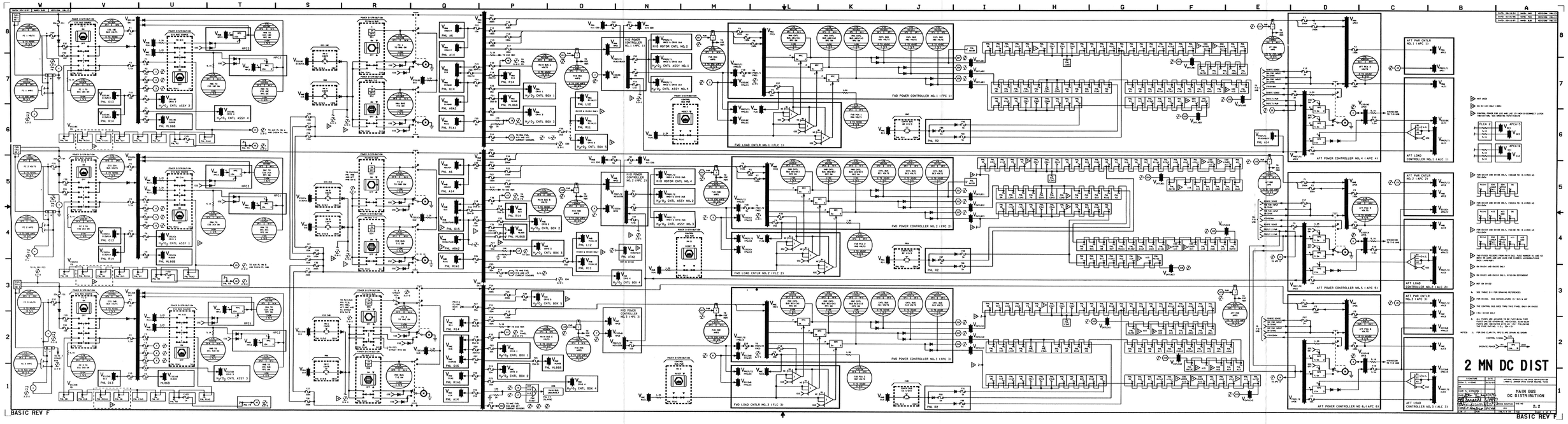
2 MN DC DIST
MAIN BUS
DC DISTRIBUTION
BASIC REV F
FWD POWER CONTROLLER NO.1 (FPC 1)
FWD POWER CONTROLLER NO.2 (FPC 2)
FWD POWER CONTROLLER NO.3 (FPC 3)
FWD LOAD CNTLR NO.1 (FLC 1)
FWD LOAD CNTLR NO.2 (FLC 2)
FWD LOAD CNTLR NO.3 (FLC 3)
AFT POWER CONTROLLER NO.4 (APC 4)
AFT POWER CONTROLLER NO.5 (APC 5)
AFT POWER CONTROLLER NO.6 (APC 6)
AFT PWR CNTLR NO.1 (APC 1)
AFT PWR CNTLR NO.2 (APC 2)
AFT PWR CNTLR NO.3 (APC 3)
AFT LOAD CONTROLLER NO.1 (ALC 1)
AFT LOAD CONTROLLER NO.2 (ALC 2)
AFT LOAD CONTROLLER NO.3 (ALC 3)
HYD POWER CONTROLLER NO.1 (HPC 1)
HYD POWER CONTROLLER NO.2 (HPC 2)
HYD POWER CONTROLLER NO.3 (HPC 3)
HYD MOTOR CNTL NO.1
HYD MOTOR CNTL NO.2
HYD MOTOR CNTL NO.3
HYD MOTOR CNTL NO.4
HYD/O2 CNTL ASSY NO.1
HYD/O2 CNTL ASSY NO.2
HYD/O2 CNTL ASSY NO.3
HYD/O2 CNTL ASSY NO.4
HYD/O2 CNTL BOX 1
HYD/O2 CNTL BOX 2
HYD/O2 CNTL BOX 3
HYD/O2 CNTL BOX 4
HYD/O2 CNTL BOX 5
HYD/O2 CNTL ASSY 1
HYD/O2 CNTL ASSY 2
HYD/O2 CNTL ASSY 3
HYD/O2 CNTL ASSY 4
MAIN BUS NO.1
MAIN BUS NO.2
MAIN BUS NO.3
MAIN BUS NO.4
MAIN BUS NO.5
MAIN BUS NO.6
MAIN BUS NO.7
MAIN BUS NO.8
MAIN BUS NO.9
MAIN BUS NO.10
MAIN BUS NO.11
MAIN BUS NO.12
MAIN BUS NO.13
MAIN BUS NO.14
MAIN BUS NO.15
MAIN BUS NO.16
MAIN BUS NO.17
MAIN BUS NO.18
MAIN BUS NO.19
MAIN BUS NO.20
MAIN BUS NO.21
MAIN BUS NO.22
MAIN BUS NO.23
MAIN BUS NO.24
MAIN BUS NO.25
MAIN BUS NO.26
MAIN BUS NO.27
MAIN BUS NO.28
MAIN BUS NO.29
MAIN BUS NO.30
MAIN BUS NO.31
MAIN BUS NO.32
MAIN BUS NO.33
MAIN BUS NO.34
MAIN BUS NO.35
MAIN BUS NO.36
MAIN BUS NO.37
MAIN BUS NO.38
MAIN BUS NO.39
MAIN BUS NO.40
MAIN BUS NO.41
MAIN BUS NO.42
MAIN BUS NO.43
MAIN BUS NO.44
MAIN BUS NO.45
MAIN BUS NO.46
MAIN BUS NO.47
MAIN BUS NO.48
MAIN BUS NO.49
MAIN BUS NO.50
MAIN BUS NO.51
MAIN BUS NO.52
MAIN BUS NO.53
MAIN BUS NO.54
MAIN BUS NO.55
MAIN BUS NO.56
MAIN BUS NO.57
MAIN BUS NO.58
MAIN BUS NO.59
MAIN BUS NO.60
MAIN BUS NO.61
MAIN BUS NO.62
MAIN BUS NO.63
MAIN BUS NO.64
MAIN BUS NO.65
MAIN BUS NO.66
MAIN BUS NO.67
MAIN BUS NO.68
MAIN BUS NO.69
MAIN BUS NO.70
MAIN BUS NO.71
MAIN BUS NO.72
MAIN BUS NO.73
MAIN BUS NO.74
MAIN BUS NO.75
MAIN BUS NO.76
MAIN BUS NO.77
MAIN BUS NO.78
MAIN BUS NO.79
MAIN BUS NO.80
MAIN BUS NO.81
MAIN BUS NO.82
MAIN BUS NO.83
MAIN BUS NO.84
MAIN BUS NO.85
MAIN BUS NO.86
MAIN BUS NO.87
MAIN BUS NO.88
MAIN BUS NO.89
MAIN BUS NO.90
MAIN BUS NO.91
MAIN BUS NO.92
MAIN BUS NO.93
MAIN BUS NO.94
MAIN BUS NO.95
MAIN BUS NO.96
MAIN BUS NO.97
MAIN BUS NO.98
MAIN BUS NO.99
MAIN BUS NO.100
MAIN BUS NO.101
MAIN BUS NO.102
MAIN BUS NO.103
MAIN BUS NO.104
MAIN BUS NO.105
MAIN BUS NO.106
MAIN BUS NO.107
MAIN BUS NO.108
MAIN BUS NO.109
MAIN BUS NO.110
MAIN BUS NO.111
MAIN BUS NO.112
MAIN BUS NO.113
MAIN BUS NO.114
MAIN BUS NO.115
MAIN BUS NO.116
MAIN BUS NO.117
MAIN BUS NO.118
MAIN BUS NO.119
MAIN BUS NO.120
MAIN BUS NO.121
MAIN BUS NO.122
MAIN BUS NO.123
MAIN BUS NO.124
MAIN BUS NO.125
MAIN BUS NO.126
MAIN BUS NO.127
MAIN BUS NO.128
MAIN BUS NO.129
MAIN BUS NO.130
MAIN BUS NO.131
MAIN BUS NO.132
MAIN BUS NO.133
MAIN BUS NO.134
MAIN BUS NO.135
MAIN BUS NO.136
MAIN BUS NO.137
MAIN BUS NO.138
MAIN BUS NO.139
MAIN BUS NO.140
MAIN BUS NO.141
MAIN BUS NO.142
MAIN BUS NO.143
MAIN BUS NO.144
MAIN BUS NO.145
MAIN BUS NO.146
MAIN BUS NO.147
MAIN BUS NO.148
MAIN BUS NO.149
MAIN BUS NO.150
MAIN BUS NO.151
MAIN BUS NO.152
MAIN BUS NO.153
MAIN BUS NO.154
MAIN BUS NO.155
MAIN BUS NO.156
MAIN BUS NO.157
MAIN BUS NO.158
MAIN BUS NO.159
MAIN BUS NO.160
MAIN BUS NO.161
MAIN BUS NO.162
MAIN BUS NO.163
MAIN BUS NO.164
MAIN BUS NO.165
MAIN BUS NO.166
MAIN BUS NO.167
MAIN BUS NO.168
MAIN BUS NO.169
MAIN BUS NO.170
MAIN BUS NO.171
MAIN BUS NO.172
MAIN BUS NO.173
MAIN BUS NO.174
MAIN BUS NO.175
MAIN BUS NO.176
MAIN BUS NO.177
MAIN BUS NO.178
MAIN BUS NO.179
MAIN BUS NO.180
MAIN BUS NO.181
MAIN BUS NO.182
MAIN BUS NO.183
MAIN BUS NO.184
MAIN BUS NO.185
MAIN BUS NO.186
MAIN BUS NO.187
MAIN BUS NO.188
MAIN BUS NO.189
MAIN BUS NO.190
MAIN BUS NO.191
MAIN BUS NO.192
MAIN BUS NO.193
MAIN BUS NO.194
MAIN BUS NO.195
MAIN BUS NO.196
MAIN BUS NO.197
MAIN BUS NO.198
MAIN BUS NO.199
MAIN BUS NO.200
MAIN BUS NO.201
MAIN BUS NO.202
MAIN BUS NO.203
MAIN BUS NO.204
MAIN BUS NO.205
MAIN BUS NO.206
MAIN BUS NO.207
MAIN BUS NO.208
MAIN BUS NO.209
MAIN BUS NO.210
MAIN BUS NO.211
MAIN BUS NO.212
MAIN BUS NO.213
MAIN BUS NO.214
MAIN BUS NO.215
MAIN BUS NO.216
MAIN BUS NO.217
MAIN BUS NO.218
MAIN BUS NO.219
MAIN BUS NO.220
MAIN BUS NO.221
MAIN BUS NO.222
MAIN BUS NO.223
MAIN BUS NO.224
MAIN BUS NO.225
MAIN BUS NO.226
MAIN BUS NO.227
MAIN BUS NO.228
MAIN BUS NO.229
MAIN BUS NO.230
MAIN BUS NO.231
MAIN BUS NO.232
MAIN BUS NO.233
MAIN BUS NO.234
MAIN BUS NO.235
MAIN BUS NO.236
MAIN BUS NO.237
MAIN BUS NO.238
MAIN BUS NO.239
MAIN BUS NO.240
MAIN BUS NO.241
MAIN BUS NO.242
MAIN BUS NO.243
MAIN BUS NO.244
MAIN BUS NO.245
MAIN BUS NO.246
MAIN BUS NO.247
MAIN BUS NO.248
MAIN BUS NO.249
MAIN BUS NO.250
MAIN BUS NO.251
MAIN BUS NO.252
MAIN BUS NO.253
MAIN BUS NO.254
MAIN BUS NO.255
MAIN BUS NO.256
MAIN BUS NO.257
MAIN BUS NO.258
MAIN BUS NO.259
MAIN BUS NO.260
MAIN BUS NO.261
MAIN BUS NO.262
MAIN BUS NO.263
MAIN BUS NO.264
MAIN BUS NO.265
MAIN BUS NO.266
MAIN BUS NO.267
MAIN BUS NO.268
MAIN BUS NO.269
MAIN BUS NO.270
MAIN BUS NO.271
MAIN BUS NO.272
MAIN BUS NO.273
MAIN BUS NO.274
MAIN BUS NO.275
MAIN BUS NO.276
MAIN BUS NO.277
MAIN BUS NO.278
MAIN BUS NO.279
MAIN BUS NO.280
MAIN BUS NO.281
MAIN BUS NO.282
MAIN BUS NO.283
MAIN BUS NO.284
MAIN BUS NO.285
MAIN BUS NO.286
MAIN BUS NO.287
MAIN BUS NO.288
MAIN BUS NO.289
MAIN BUS NO.290
MAIN BUS NO.291
MAIN BUS NO.292
MAIN BUS NO.293
MAIN BUS NO.294
MAIN BUS NO.295
MAIN BUS NO.296
MAIN BUS NO.297
MAIN BUS NO.298
MAIN BUS NO.299
MAIN BUS NO.300
MAIN BUS NO.301
MAIN BUS NO.302
MAIN BUS NO.303
MAIN BUS NO.304
MAIN BUS NO.305
MAIN BUS NO.306
MAIN BUS NO.307
MAIN BUS NO.308
MAIN BUS NO.309
MAIN BUS NO.310
MAIN BUS NO.311
MAIN BUS NO.312
MAIN BUS NO.313
MAIN BUS NO.314
MAIN BUS NO.315
MAIN BUS NO.316
MAIN BUS NO.317
MAIN BUS NO.318
MAIN BUS NO.319
MAIN BUS NO.320
MAIN BUS NO.321
MAIN BUS NO.322
MAIN BUS NO.323
MAIN BUS NO.324
MAIN BUS NO.325
MAIN BUS NO.326
MAIN BUS NO.327
MAIN BUS NO.328
MAIN BUS NO.329
MAIN BUS NO.330
MAIN BUS NO.331
MAIN BUS NO.332
MAIN BUS NO.333
MAIN BUS NO.334
MAIN BUS NO.335
MAIN BUS NO.336
MAIN BUS NO.337
MAIN BUS NO.338
MAIN BUS NO.339
MAIN BUS NO.340
MAIN BUS NO.341
MAIN BUS NO.342
MAIN BUS NO.343
MAIN BUS NO.344
MAIN BUS NO.345
MAIN BUS NO.346
MAIN BUS NO.347
MAIN BUS NO.348
MAIN BUS NO.349
MAIN BUS NO.350
MAIN BUS NO.351
MAIN BUS NO.352
MAIN BUS NO.353
MAIN BUS NO.354
MAIN BUS NO.355
MAIN BUS NO.356
MAIN BUS NO.357
MAIN BUS NO.358
MAIN BUS NO.359
MAIN BUS NO.360
MAIN BUS NO.361
MAIN BUS NO.362
MAIN BUS NO.363
MAIN BUS NO.364
MAIN BUS NO.365
MAIN BUS NO.366
MAIN BUS NO.367
MAIN BUS NO.368
MAIN BUS NO.369
MAIN BUS NO.370
MAIN BUS NO.371
MAIN BUS NO.372
MAIN BUS NO.373
MAIN BUS NO.374
MAIN BUS NO.375
MAIN BUS NO.376
MAIN BUS NO.377
MAIN BUS NO.378
MAIN BUS NO.379
MAIN BUS NO.380
MAIN BUS NO.381
MAIN BUS NO.382
MAIN BUS NO.383
MAIN BUS NO.384
MAIN BUS NO.385
MAIN BUS NO.386
MAIN BUS NO.387
MAIN BUS NO.388
MAIN BUS NO.389
MAIN BUS NO.390
MAIN BUS NO.391
MAIN BUS NO.392
MAIN BUS NO.393
MAIN BUS NO.394
MAIN BUS NO.395
MAIN BUS NO.396
MAIN BUS NO.397
MAIN BUS NO.398
MAIN BUS NO.399
MAIN BUS NO.400
MAIN BUS NO.401
MAIN BUS NO.402
MAIN BUS NO.403
MAIN BUS NO.404
MAIN BUS NO.405
MAIN BUS NO.406
MAIN BUS NO.407
MAIN BUS NO.408
MAIN BUS NO.409
MAIN BUS NO.410
MAIN BUS NO.411
MAIN BUS NO.412
MAIN BUS NO.413
MAIN BUS NO.414
MAIN BUS NO.415
MAIN BUS NO.416
MAIN BUS NO.417
MAIN BUS NO.418
MAIN BUS NO.419
MAIN BUS NO.420
MAIN BUS NO.421
MAIN BUS NO.422
MAIN BUS NO.423
MAIN BUS NO.424
MAIN BUS NO.425
MAIN BUS NO.426
MAIN BUS NO.427
MAIN BUS NO.428
MAIN BUS NO.429
MAIN BUS NO.430
MAIN BUS NO.431
MAIN BUS NO.432
MAIN BUS NO.433
MAIN BUS NO.434
MAIN BUS NO.435
MAIN BUS NO.436
MAIN BUS NO.437
MAIN BUS NO.438
MAIN BUS NO.439
MAIN BUS NO.440
MAIN BUS NO.441
MAIN BUS NO.442
MAIN BUS NO.443
MAIN BUS NO.444
MAIN BUS NO.445
MAIN BUS NO.446
MAIN BUS NO.447
MAIN BUS NO.448
MAIN BUS NO.449
MAIN BUS NO.450
MAIN BUS NO.451
MAIN BUS NO.452
MAIN BUS NO.453
MAIN BUS NO.454
MAIN BUS NO.455
MAIN BUS NO.456
MAIN BUS NO.457
MAIN BUS NO.458
MAIN BUS NO.459
MAIN BUS NO.460
MAIN BUS NO.461
MAIN BUS NO.462
MAIN BUS NO.463
MAIN BUS NO.464
MAIN BUS NO.465
MAIN BUS NO.466
MAIN BUS NO.467
MAIN BUS NO.468
MAIN BUS NO.469
MAIN BUS NO.470
MAIN BUS NO.471
MAIN BUS NO.472
MAIN BUS NO.473
MAIN BUS NO.474
MAIN BUS NO.475
MAIN BUS NO.476
MAIN BUS NO.477
MAIN BUS NO.478
MAIN BUS NO.479
MAIN BUS NO.480
MAIN BUS NO.481
MAIN BUS NO.482
MAIN BUS NO.483
MAIN BUS NO.484
MAIN BUS NO.485
MAIN BUS NO.486
MAIN BUS NO.487
MAIN BUS NO.488
MAIN BUS NO.489
MAIN BUS NO.490
MAIN BUS NO.491
MAIN BUS NO.492
MAIN BUS NO.493
MAIN BUS NO.494
MAIN BUS NO.495
MAIN BUS NO.496
MAIN BUS NO.497
MAIN BUS NO.498
MAIN BUS NO.499
MAIN BUS NO.500
MAIN BUS NO.501
MAIN BUS NO.502
MAIN BUS NO.503
MAIN BUS NO.504
MAIN BUS NO.505
MAIN BUS NO.506
MAIN BUS NO.507
MAIN BUS NO.508
MAIN BUS NO.509
MAIN BUS NO.510
MAIN BUS NO.511
MAIN BUS NO.512
MAIN BUS NO.513
MAIN BUS NO.514
MAIN BUS NO.515
MAIN BUS NO.516
MAIN BUS NO.517
MAIN BUS NO.518
MAIN BUS NO.519
MAIN BUS NO.520
MAIN BUS NO.521
MAIN BUS NO.522
MAIN BUS NO.523
MAIN BUS NO.524
MAIN BUS NO.525
MAIN BUS NO.526
MAIN BUS NO.527
MAIN BUS NO.528
MAIN BUS NO.529
MAIN BUS NO.530
MAIN BUS NO.531
MAIN BUS NO.532
MAIN BUS NO.533
MAIN BUS NO.534
MAIN BUS NO.535
MAIN BUS NO.536
MAIN BUS NO.537
MAIN BUS NO.538
MAIN BUS NO.539
MAIN BUS NO.540
MAIN BUS NO.541
MAIN BUS NO.542
MAIN BUS NO.543
MAIN BUS NO.544
MAIN BUS NO.545
MAIN BUS NO.546
MAIN BUS NO.547
MAIN BUS NO.548
MAIN BUS NO.549
MAIN BUS NO.550
MAIN BUS NO.551
MAIN BUS NO.552
MAIN BUS NO.553
MAIN BUS NO.554
MAIN BUS NO.555
MAIN BUS NO.556
MAIN BUS NO.557
MAIN BUS NO.558
MAIN BUS NO.559
MAIN BUS NO.560
MAIN BUS NO.561
MAIN BUS NO.562
MAIN BUS NO.563
MAIN BUS NO.564
MAIN BUS NO.565
MAIN BUS NO.566
MAIN BUS NO.567
MAIN BUS NO.568
MAIN BUS NO.569
MAIN BUS NO.570
MAIN BUS NO.571
MAIN BUS NO.572
MAIN BUS NO.573
MAIN BUS NO.574
MAIN BUS NO.575
MAIN BUS NO.576
MAIN BUS NO.577
MAIN BUS NO.578
MAIN BUS NO.579
MAIN BUS NO.580
MAIN BUS NO.581
MAIN BUS NO.582
MAIN BUS NO.583
MAIN BUS NO.584
MAIN BUS NO.585
MAIN BUS NO.586
MAIN BUS NO.587
MAIN BUS NO.588
MAIN BUS NO.589
MAIN BUS NO.590
MAIN BUS NO.591
MAIN BUS NO.592
MAIN BUS NO.593
MAIN BUS NO.594
MAIN BUS NO.595
MAIN BUS NO.596
MAIN BUS NO.597
MAIN BUS NO.598
MAIN BUS NO.599
MAIN BUS NO.600
MAIN BUS NO.601
MAIN BUS NO.602
MAIN BUS NO.603
MAIN BUS NO.604
MAIN BUS NO.605
MAIN BUS NO.606
MAIN BUS NO.607
MAIN BUS NO.608
MAIN BUS NO.609
MAIN BUS NO.610
MAIN BUS NO.611
MAIN BUS NO.612
MAIN BUS NO.613
MAIN BUS NO.614
MAIN BUS NO.615
MAIN BUS NO.616
MAIN BUS NO.617
MAIN BUS NO.618
MAIN BUS NO.619
MAIN BUS NO.620
MAIN BUS NO.621
MAIN BUS NO.622
MAIN BUS NO.623
MAIN BUS NO.624
MAIN BUS NO.625
MAIN BUS NO.626
MAIN BUS NO.627
MAIN BUS NO.628
MAIN BUS NO.629
MAIN BUS NO.630
MAIN BUS NO.631
MAIN BUS NO.632
MAIN BUS NO.633
MAIN BUS NO.634
MAIN BUS NO.635
MAIN BUS NO.636
MAIN BUS NO.637
MAIN BUS NO.638
MAIN BUS NO.639
MAIN BUS NO.640
MAIN BUS NO.641
MAIN BUS NO.642
MAIN BUS NO.643
MAIN BUS NO.644
MAIN BUS NO.645
MAIN BUS NO.646
MAIN BUS NO.647
MAIN BUS NO.648
MAIN BUS NO.649
MAIN BUS NO.650
MAIN BUS NO.651
MAIN BUS NO.652
MAIN BUS NO.653
MAIN BUS NO.654
MAIN BUS NO.655
MAIN BUS NO.656
MAIN BUS NO.657
MAIN BUS NO.658
MAIN BUS NO.659
MAIN BUS NO.660
MAIN BUS NO.661
MAIN BUS NO.662
MAIN BUS NO.663
MAIN BUS NO.664
MAIN BUS NO.665
MAIN BUS NO.666
MAIN BUS NO.667
MAIN BUS NO.668
MAIN BUS NO.669
MAIN BUS NO.670
MAIN BUS NO.671
MAIN BUS NO.672
MAIN BUS NO.673
MAIN BUS NO.674
MAIN BUS NO.675
MAIN BUS NO.676
MAIN BUS NO.677
MAIN BUS NO.678
MAIN BUS NO.679
MAIN BUS NO.680
MAIN BUS NO.681
MAIN BUS NO.682
MAIN BUS NO.683
MAIN BUS NO.684
MAIN BUS NO.685
MAIN BUS NO.686
MAIN BUS NO.687
MAIN BUS NO.688
MAIN BUS NO.689
MAIN BUS NO.690
MAIN BUS NO.691
MAIN BUS NO.692
MAIN BUS NO.693
MAIN BUS NO.694
MAIN BUS NO.695
MAIN BUS NO.696
MAIN BUS NO.697
MAIN BUS NO.698
MAIN BUS NO.699
MAIN BUS NO.700
MAIN BUS NO.701
MAIN BUS NO.702
MAIN BUS NO.703
MAIN BUS NO.704
MAIN BUS NO.705
MAIN BUS NO.706
MAIN BUS NO.707
MAIN BUS NO.708
MAIN BUS NO.709
MAIN BUS NO.710
MAIN BUS NO.711
MAIN BUS NO.712
MAIN BUS NO.713
MAIN BUS NO.714
MAIN BUS NO.715
MAIN BUS NO.716
MAIN BUS NO.717
MAIN BUS NO.718
MAIN BUS NO.719
MAIN BUS NO.720
MAIN BUS NO.721
MAIN BUS NO.722
MAIN BUS NO.723
MAIN BUS NO.724
MAIN BUS NO.725
MAIN BUS NO.726
MAIN BUS NO.727
MAIN BUS NO.728
MAIN BUS NO.729
MAIN BUS NO.730
MAIN BUS NO.731
MAIN BUS NO.732
MAIN BUS NO.733
MAIN BUS NO.734
MAIN BUS NO.735
MAIN BUS NO.736
MAIN BUS NO.737
MAIN BUS NO.738
MAIN BUS NO.739
MAIN BUS NO.740
MAIN BUS NO.741
MAIN BUS NO.742
MAIN BUS NO.743
MAIN BUS NO.744
MAIN BUS NO.745
MAIN BUS NO.746
MAIN BUS NO.747
MAIN BUS NO.748
MAIN BUS NO.749
MAIN BUS NO.750
MAIN BUS NO.751
MAIN BUS NO.752
MAIN BUS NO.753
MAIN BUS NO.754
MAIN BUS NO.755
MAIN BUS NO.756
MAIN BUS NO.757
MAIN BUS NO.758
MAIN BUS NO.759
MAIN BUS NO.760
MAIN BUS NO.761
MAIN BUS NO.762
MAIN BUS NO.763
MAIN BUS NO.764
MAIN BUS NO.765
MAIN BUS NO.766
MAIN BUS NO.767
MAIN BUS NO.768
MAIN BUS NO.769
MAIN BUS NO.770
MAIN BUS NO.771
MAIN BUS NO.772
MAIN BUS NO.773
MAIN BUS NO.774
MAIN BUS NO.775
MAIN BUS NO.776
MAIN BUS NO.777
MAIN BUS NO.778
MAIN BUS NO.779
MAIN BUS NO.780
MAIN BUS NO.781
MAIN BUS NO.782
MAIN BUS NO.783
MAIN BUS NO.784
MAIN BUS NO.785
MAIN BUS NO.786
MAIN BUS NO.787
MAIN BUS NO.788
MAIN BUS NO.789
MAIN BUS NO.790
MAIN BUS NO.791
MAIN BUS NO.792
MAIN BUS NO.793
MAIN BUS NO.794
MAIN BUS NO.795
MAIN BUS NO.796
MAIN BUS NO.797
MAIN BUS NO.798
MAIN BUS NO.799
MAIN BUS NO.800
MAIN BUS NO.801
MAIN BUS NO.802
MAIN BUS NO.803
MAIN BUS NO.804
MAIN BUS NO.805
MAIN BUS NO.806
MAIN BUS NO.807
MAIN BUS NO.808
MAIN BUS NO.809
MAIN BUS NO.810
MAIN BUS NO.811
MAIN BUS NO.812
MAIN BUS NO.813
MAIN BUS NO.814
MAIN BUS NO.815
MAIN BUS NO.816
MAIN BUS NO.817
MAIN BUS NO.818
MAIN BUS NO.819
MAIN BUS NO.820
MAIN BUS NO.821
MAIN BUS NO.822
MAIN BUS NO.823
MAIN BUS NO.824
MAIN BUS NO.825
MAIN BUS NO.826
MAIN BUS NO.827
MAIN BUS NO.828
MAIN BUS NO.829
MAIN BUS NO.830
MAIN BUS NO.831
MAIN BUS NO.832
MAIN BUS NO.833
MAIN BUS NO.834
MAIN BUS NO.835
MAIN BUS NO.836
MAIN BUS NO.837
MAIN BUS NO.838
MAIN BUS NO.839
MAIN BUS NO.840
MAIN BUS NO.841
MAIN BUS NO.842
MAIN BUS NO.843
MAIN BUS NO.844
MAIN BUS NO.845
MAIN BUS NO.846
MAIN BUS NO.847
MAIN BUS NO.848
MAIN BUS NO.849
MAIN BUS NO.850
MAIN BUS NO.851
MAIN BUS NO.852
MAIN BUS NO.853
MAIN BUS NO.854
MAIN BUS NO.855
MAIN BUS NO.856
MAIN BUS NO.857
MAIN BUS NO.858
MAIN BUS NO.859
MAIN BUS NO.860
MAIN BUS NO.861
MAIN BUS NO.862
MAIN BUS NO.863
MAIN BUS NO.864
MAIN BUS NO.865
MAIN BUS NO.866
MAIN BUS NO.867
MAIN BUS NO.868
MAIN BUS NO.869
MAIN BUS NO.870
MAIN BUS NO.871
MAIN BUS NO.872
MAIN BUS NO.873
MAIN BUS NO.874
MAIN BUS NO.875
MAIN BUS NO.876
MAIN BUS NO.877
MAIN BUS NO.878
MAIN BUS NO.879
MAIN BUS NO.880
MAIN BUS NO.881
MAIN BUS NO.882
MAIN BUS NO.883
MAIN BUS NO.884
MAIN BUS NO.885
MAIN BUS NO.886
MAIN BUS NO.887
MAIN BUS NO.888
MAIN BUS NO.889
MAIN BUS NO.890
MAIN BUS NO.891
MAIN BUS NO.892
MAIN BUS NO.893
MAIN BUS NO.894
MAIN BUS NO.895
MAIN BUS NO.896
MAIN BUS NO.897
MAIN BUS NO.898
MAIN BUS NO.899
MAIN BUS NO.900
MAIN BUS NO.901
MAIN BUS NO.902
MAIN BUS NO.903
MAIN BUS NO.904
MAIN BUS NO.905
MAIN BUS NO.906
MAIN BUS NO.907
MAIN BUS NO.908
MAIN BUS NO.909
MAIN BUS NO.910
MAIN BUS NO.911
MAIN BUS NO.912
MAIN BUS NO.913
MAIN BUS NO.914
MAIN BUS NO.915
MAIN BUS NO.916
MAIN BUS NO.917
MAIN BUS NO.918
MAIN BUS NO.919
MAIN BUS NO.920
MAIN BUS NO.921
MAIN BUS NO.922
MAIN BUS NO.923
MAIN BUS NO.924
MAIN BUS NO.925
MAIN BUS NO.926
MAIN BUS NO.927
MAIN BUS NO.928
MAIN BUS NO.929
MAIN BUS NO.930
MAIN BUS NO.931
MAIN BUS NO.932
MAIN BUS NO.933
MAIN BUS NO.934
MAIN BUS NO.935
MAIN BUS NO.936
MAIN BUS NO.937
MAIN BUS NO.938
MAIN BUS NO.939
MAIN BUS NO.940
MAIN BUS NO.941
MAIN BUS NO.942
MAIN BUS NO.943
MAIN BUS NO.944
MAIN BUS NO.945
MAIN BUS NO.946
MAIN BUS NO.947
MAIN BUS NO.948
MAIN BUS NO.949
MAIN BUS NO.950
MAIN BUS NO.951
MAIN BUS NO.952
MAIN BUS NO.953
MAIN BUS NO.954
MAIN BUS NO.955
MAIN BUS NO.956
MAIN BUS NO.957
MAIN BUS NO.958
MAIN BUS NO.959
MAIN BUS NO.960
MAIN BUS NO.961
MAIN BUS NO.962
MAIN BUS NO.963
MAIN BUS NO.964
MAIN BUS NO.965
MAIN BUS NO.966
MAIN BUS NO.967
MAIN BUS NO.968
MAIN BUS NO.969
MAIN BUS NO.970
MAIN BUS NO.971
MAIN BUS NO.972
MAIN BUS NO.973
MAIN BUS NO.974
MAIN BUS NO.975
MAIN BUS NO.976
MAIN BUS NO.977
MAIN BUS NO.978
MAIN BUS NO.979
MAIN BUS NO.980
MAIN BUS NO.981
MAIN BUS NO.982
MAIN BUS NO.983
MAIN BUS NO.984
MAIN BUS NO.985
MAIN BUS NO.986
MAIN BUS NO.987
MAIN BUS NO.988
MAIN BUS NO.989
MAIN BUS NO.990
MAIN BUS NO.991
MAIN BUS NO.992
MAIN BUS NO.993
MAIN BUS NO.994
MAIN BUS NO.995
MAIN BUS NO.996
MAIN BUS NO.997
MAIN BUS NO.998
MAIN BUS NO.999
MAIN BUS NO.1000

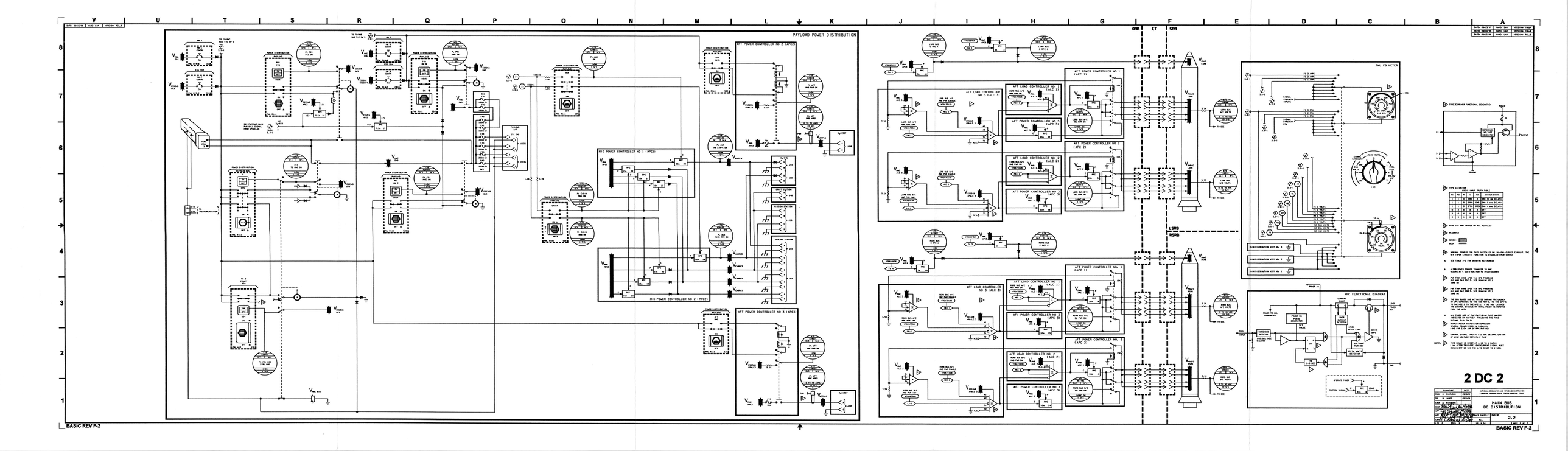
PAYLOAD POWER DISTRIBUTION
2 DC 2
MAIN BUS DC DISTRIBUTION
2.2
BASIC REV F-2

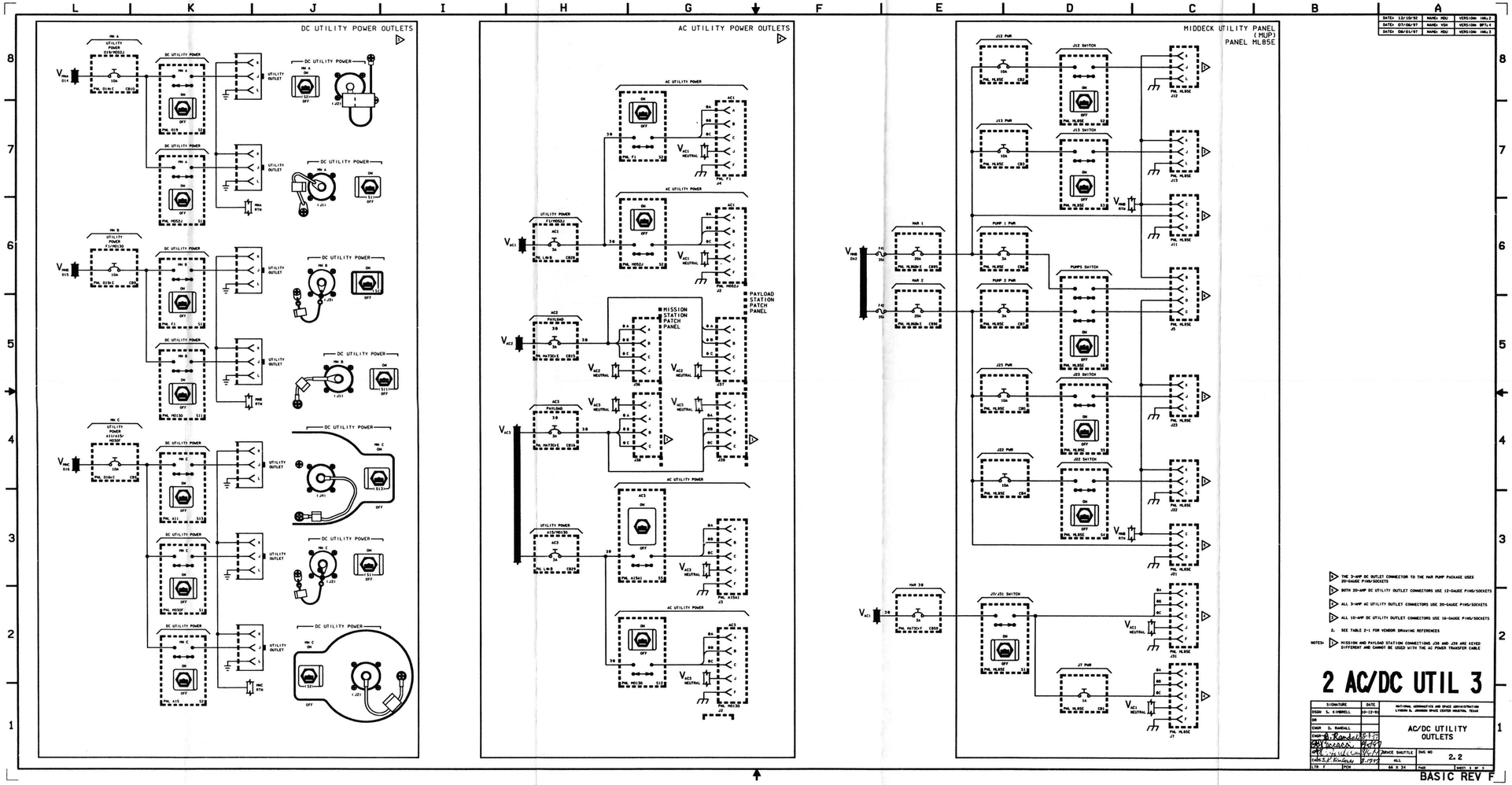
DC UTILITY POWER OUTLETS
AC UTILITY POWER OUTLETS
MIDDECK UTILITY PANEL (MUP) PANEL ML85E
MISSION STATION PATCH PANEL
PAYLOAD STATION PATCH PANEL
DATE: 12/10/92 NAME: MDU VERSION: INV.2
DATE: 07/06/97 NAME: VSH VERSION: BPT.4
DATE: 06/01/97 NAME: MDU VERSION: INV.3
THE 3-AMP DC OUTLET CONNECTOR TO THE MAR PUMP PACKAGE USES 20-GAUGE PINS/SOCKETS
BOTH 20-AMP DC UTILITY OUTLET CONNECTORS USE 12-GAUGE PINS/SOCKETS
ALL 3-AMP AC UTILITY OUTLET CONNECTORS USE 20-GAUGE PINS/SOCKETS
ALL 10-AMP DC UTILITY OUTLET CONNECTORS USE 16-GAUGE PINS/SOCKETS
2. SEE TABLE 2-1 FOR VENDOR DRAWING REFERENCES
NOTES: MISSION AND PAYLOAD STATION CONNECTIONS J38 AND J39 ARE KEYED DIFFERENT AND CANNOT BE USED WITH THE AC POWER TRANSFER CABLE
2 AC/DC UTIL 3
SIGNATURE DATE
DSGN S. KIMBRELL 10-12-92
NATIONAL AERONAUTICS AND SPACE ADMINISTRATION
LYNDON B. JOHNSON SPACE CENTER HOUSTON, TEXAS
AC/DC UTILITY OUTLETS
SPACE SHUTTLE
ALL
DWG NO 2.2
66 X 34
SHEET 1 OF 3
BASIC REV F

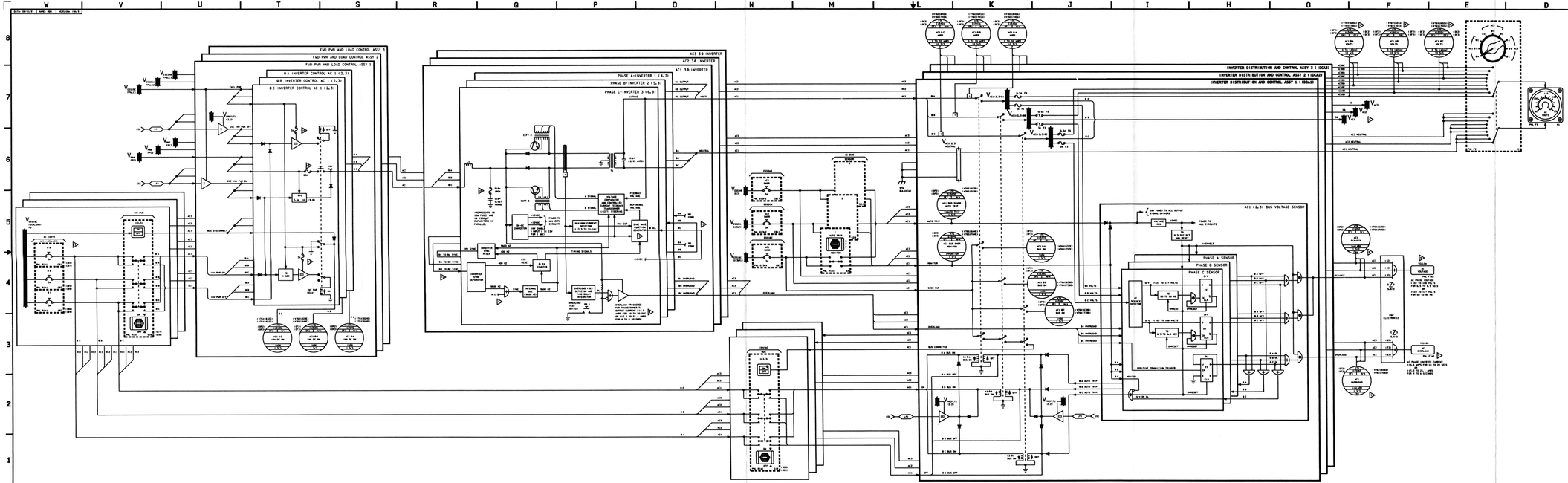
F4D PWR AND LOAD CONTROL ASSY 3
F4D PWR AND LOAD CONTROL ASSY 2
F4D PWR AND LOAD CONTROL ASSY 1
8 A INVERTER CONTROL AC 1 (2,3)
8 B INVERTER CONTROL AC 1 (2,3)
8 C INVERTER CONTROL AC 1 (2,3)
AC3 3Ø INVERTER
AC2 3Ø INVERTER
AC1 3Ø INVERTER
PHASE A-INVERTER 1 (4,7)
PHASE B-INVERTER 2 (5,8)
PHASE C-INVERTER 3 (6,9)
INVERTER DISTRIBUTION AND CONTROL ASSY 3 (12CA3)
INVERTER DISTRIBUTION AND CONTROL ASSY 2 (12CA2)
INVERTER DISTRIBUTION AND CONTROL ASSY 1 (12CA1)
AC1 2,3Ø BUS VOLTAGE SENSOR
PHASE A SENSOR
PHASE B SENSOR
PHASE C SENSOR
BUS CONNECTED
BUS DISCONNECTED
AC BUS OFF
AC BUS ON
AC BUS AUTO TRIP
AC BUS MANUAL TRIP
AC BUS MANUAL RESET
AC BUS AUTO RESET
AC BUS VOLTS
AC BUS AMPS
AC BUS FREQ
AC BUS PF
AC BUS KW
AC BUS KVAR
AC BUS KVA
AC BUS KWH
AC BUS KVARH
AC BUS KVAH
AC BUS WATTS
AC BUS VARS
AC BUS VA
AC BUS PF
AC BUS FREQ
AC BUS VOLTS
AC BUS AMPS

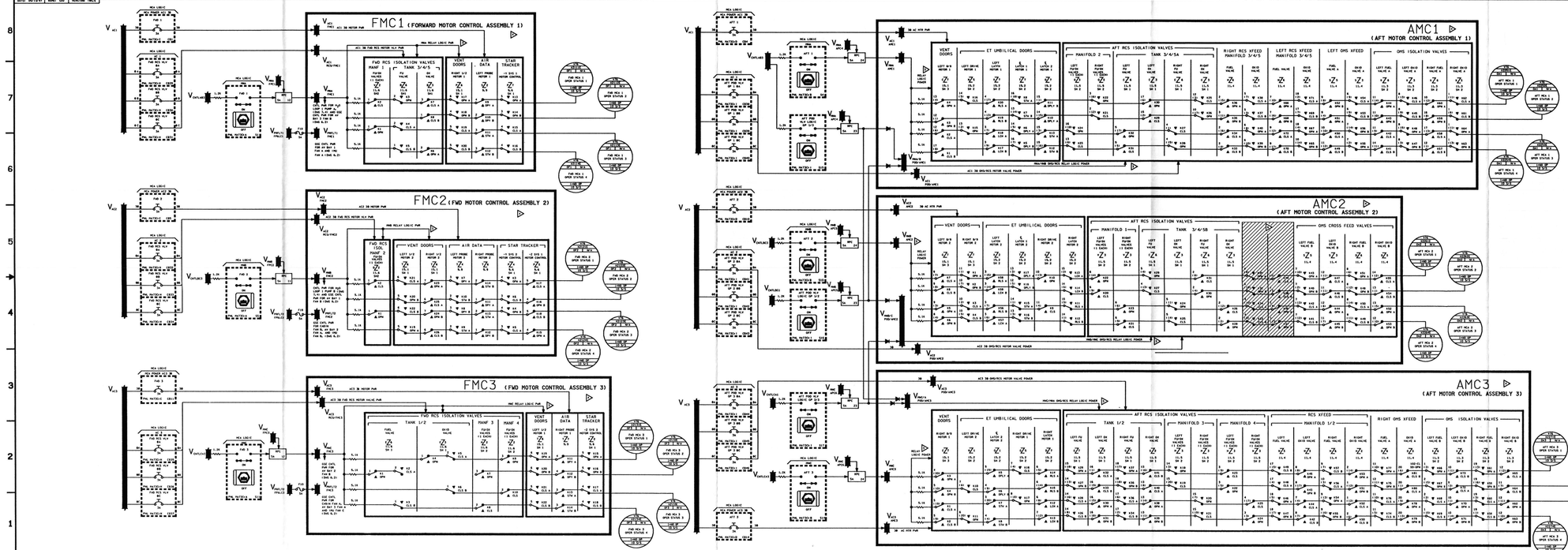
FMC1 (FORWARD MOTOR CONTROL ASSEMBLY 1)
FMC2 (FWD MOTOR CONTROL ASSEMBLY 2)
FMC3 (FWD MOTOR CONTROL ASSEMBLY 3)
AMC1 (AFT MOTOR CONTROL ASSEMBLY 1)
AMC2 (AFT MOTOR CONTROL ASSEMBLY 2)
AMC3 (AFT MOTOR CONTROL ASSEMBLY 3)
FWD RCS ISOLATION VALVES
VENT DOORS
AIR DATA
STAR TRACKER
ET UMBILICAL DOORS
AFT RCS ISOLATION VALVES
RCS XFEED
OMS ISOLATION VALVES
OMS CROSS FEED VALVES
RIGHT OMS XFEED
MCA LOGIC
MDM FA1
MDM FA2
MDM FA3
MDM FA4
MDM FA5
MDM FA6
MDM FA7
MDM FA8
MDM FA9
MDM FA10
MDM FA11
MDM FA12
MDM FA13
MDM FA14
MDM FA15
MDM FA16
MDM FA17
MDM FA18
MDM FA19
MDM FA20
MDM

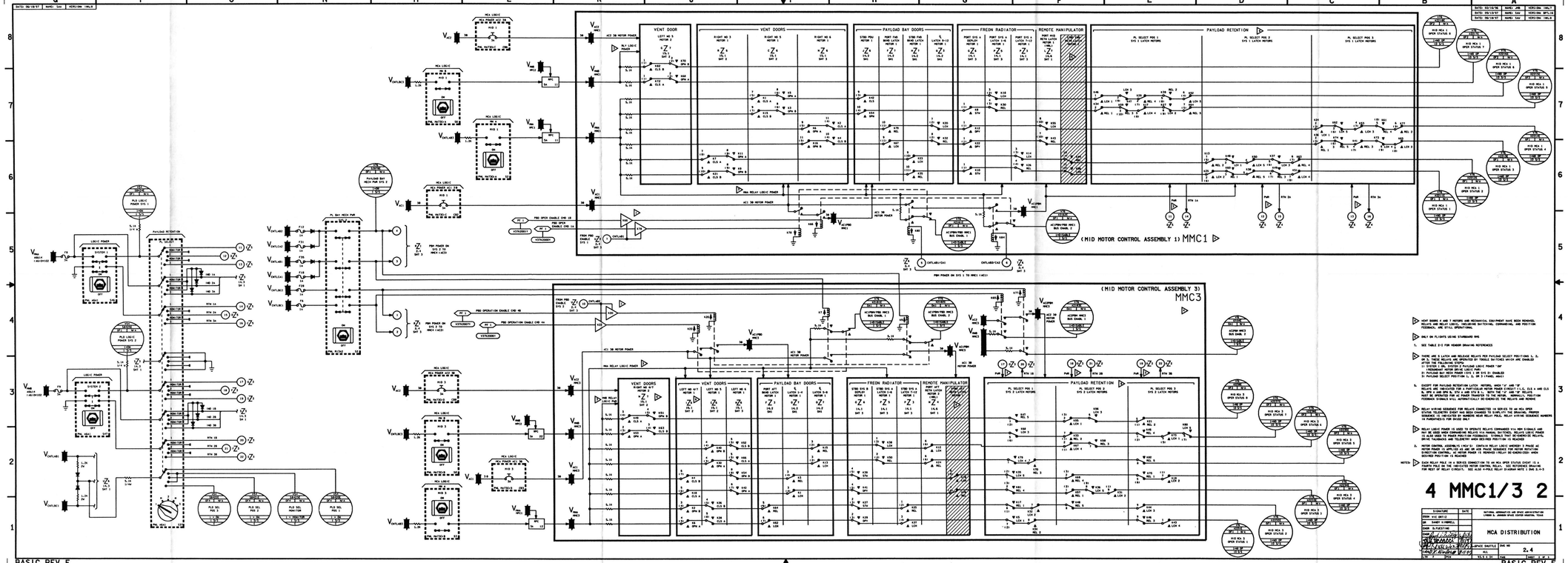

VENT DOORS 4 AND 5 MOTORS AND MECHANICAL EQUIPMENT HAVE BEEN REMOVED. RELAYS AND RELAY LOGIC, INCLUDING SWITCHING, COMMANDING, AND POSITION FEEDBACK, ARE STILL OPERATIONAL.

ONLY ON FLIGHTS USING STARBOARD RMS

SEE TABLE D-2 FOR VENDOR DRAWING REFERENCES

THERE ARE 3 LATCH AND RELEASE RELAYS PER PAYLOAD SELECT POSITIONS 1, 2, OR 3. THESE RELAYS ARE OPERATED BY TOGGLE SWITCHES WHICH ARE ENABLED BY THE FOLLOWING CONDITIONS:
1) SYSTEM 1 OR SYSTEM 2 PAYLOAD LOGIC POWER "ON"
2) PAYLOAD MOTOR DRIVE LOGIC POWER "ON"
3) PAYLOAD BAY DOOR MOTOR DRIVE SYS 1 ENABLED
4) PAYLOAD SELECT POSITION 1, 2, OR 3 (PAYL SELECT)

EXCEPT FOR PAYLOAD RETENTION LATCH MOTORS, WHEN "1" AND "2" RELAYS ARE ENERGIZED FOR A PARTICULAR MOTOR PHASE (CIRCUIT 1, CLS 4 AND CLS 5, SPDT 4 AND SPDT 5), STW 1 AND STW 2 (S.1, BOTH THE "1" AND "2" RELAYS ARE ENERGIZED THEN AN POWER TRANSFER TO THE MOTOR, NORMALLY, POSITION FEEDBACK STOPS AND AUTOMATICALLY DE-ENERGIZES THE RELAYS AND REMOVES POWER.

RELAY WIRING SEQUENCE FOR RELAYS CONNECTED TO SPACE TO AN MCA MOTOR STATUS TELEMETRY EVENT HAS BEEN CHANGED TO COMPLYWITH THE DRAWING. PROPER SEQUENCE FOR THE RELAYS WHEN RELAY FAILS. RELAY WIRING SEQUENCE NUMBERS ARE INDICATED ON THE DRAWING.

RELAY LOGIC POWER IS USED TO OPERATE RELAYS COMMANDED VIA NON-SIGNALED AND NOT BE USED WHEN COMMANDED VIA PULSE SWITCHES. RELAYS LOGIC POWER IS ON WHEN THE PAYLOAD BAY DOOR MOTOR DRIVE LOGIC POWER IS ON. RELAYS ARE DE-ENERGIZED WHEN DESIRED POSITION IS REACHED.

MOTOR CONTROL ASSEMBLY (MCA) CONTROLS RELAY LOGIC WHEREBY 3 PHASE AC MOTOR POWER IS APPLIED AS AND DE-AS PHASE SEQUENCE FOR MOTOR ROTATION DIRECTION CONTROL. AC MOTOR POWER IS REMOVED (RELAY DE-ENERGIZED) WHEN DESIRED POSITION IS REACHED.

NOTED: EACH RELAY COIL IN A SERIES CONNECTION TO AN MCA OPEN STATUS EVENT IS A SPDT RELAY. THE RELAY COIL IN A SERIES CONNECTION TO AN MCA CLOSED STATUS EVENT IS A SPDT RELAY. SEE ALSO 4-MMC RELAY DIAGRAM NOTE 1 AND 2.

4 MMC1/3 2

SIGNATURE	DATE	
DESIGN: KIM GRIFFIS		NATIONAL AERONAUTICS AND SPACE ADMINISTRATION LYNDON B. JOHNSON SPACE CENTER HOUSTON, TEXAS
CHK: DAVID KIMBERLIN		
DR: BARRY KIMBERLIN		MCA DISTRIBUTION
CHK: ALFRED FORD		
APPR:		SIZE: A
APPR:		CODE: 20902
APPR:		DWG NO: 2.4
TITLE:		SCALE: NONE
SHEET: 2 OF 2		

BASIC REV F

BASIC REV F

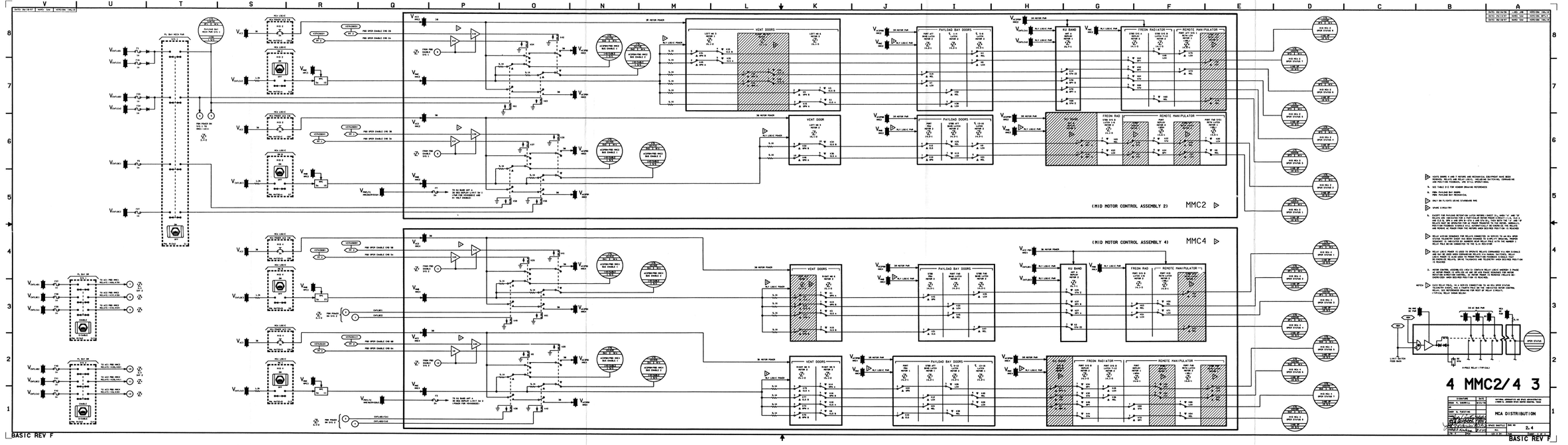
(MID MOTOR CONTROL ASSEMBLY 2) MMC2
(MID MOTOR CONTROL ASSEMBLY 4) MMC4
4 MMC2/4 3
MCA DISTRIBUTION
2.4
BASIC REV F

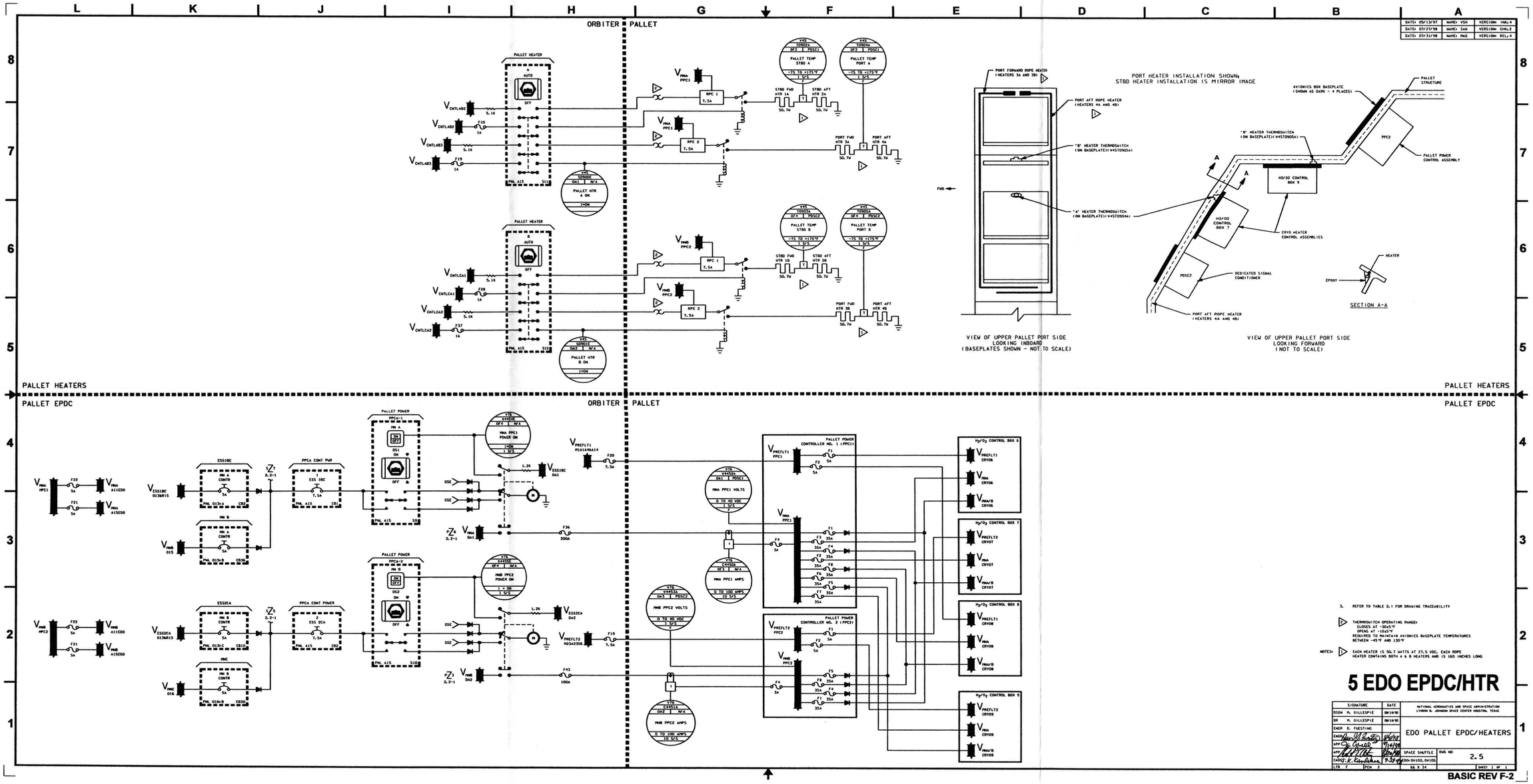

DATE: 05/13/97	NAME: VSH	VERSION: INK.4
DATE: 07/27/98	NAME: SAW	VERSION: CHK.2
DATE: 07/31/98	NAME: MAG	VERSION: REL.4

3. REFER TO TABLE 2.1 FOR DRAWING TRACEABILITY

1. THERMOSWITCH OPERATING RANGE:
CLOSES AT -30±5°F
OPENS AT -10±5°F
REQUIRED TO MAINTAIN AVIONICS BASEPLATE TEMPERATURES BETWEEN -45°F AND 130°F

NOTES: 1. EACH HEATER IS 50.7 WATTS AT 27.5 VDC. EACH ROPE HEATER CONTAINS BOTH A & B HEATERS AND IS 160 INCHES LONG

5 EDO EPDC/HTR

SIGNATURE	DATE	NATIONAL AERONAUTICS AND SPACE ADMINISTRATION LYNDON B. JOHNSON SPACE CENTER HOUSTON, TEXAS
DSGN M. GILLESPIE	08/14/90	
DR M. GILLESPIE	08/14/90	
ENGR D. FUESTING		EDO PALLET EPDC/HEATERS
ENGR [signature]	8/4/98	
APP [signature]	9/14/98	
APP [signature]	8/20/98	
CHKS: K. Kirchner	9-29-98	SPACE SHUTTLE EDO: DV102, DV105 — DWG NO 2.5
LTR F — PCN 2		66 X 34 — SHEET 1 OF 1

BASIC REV F-2

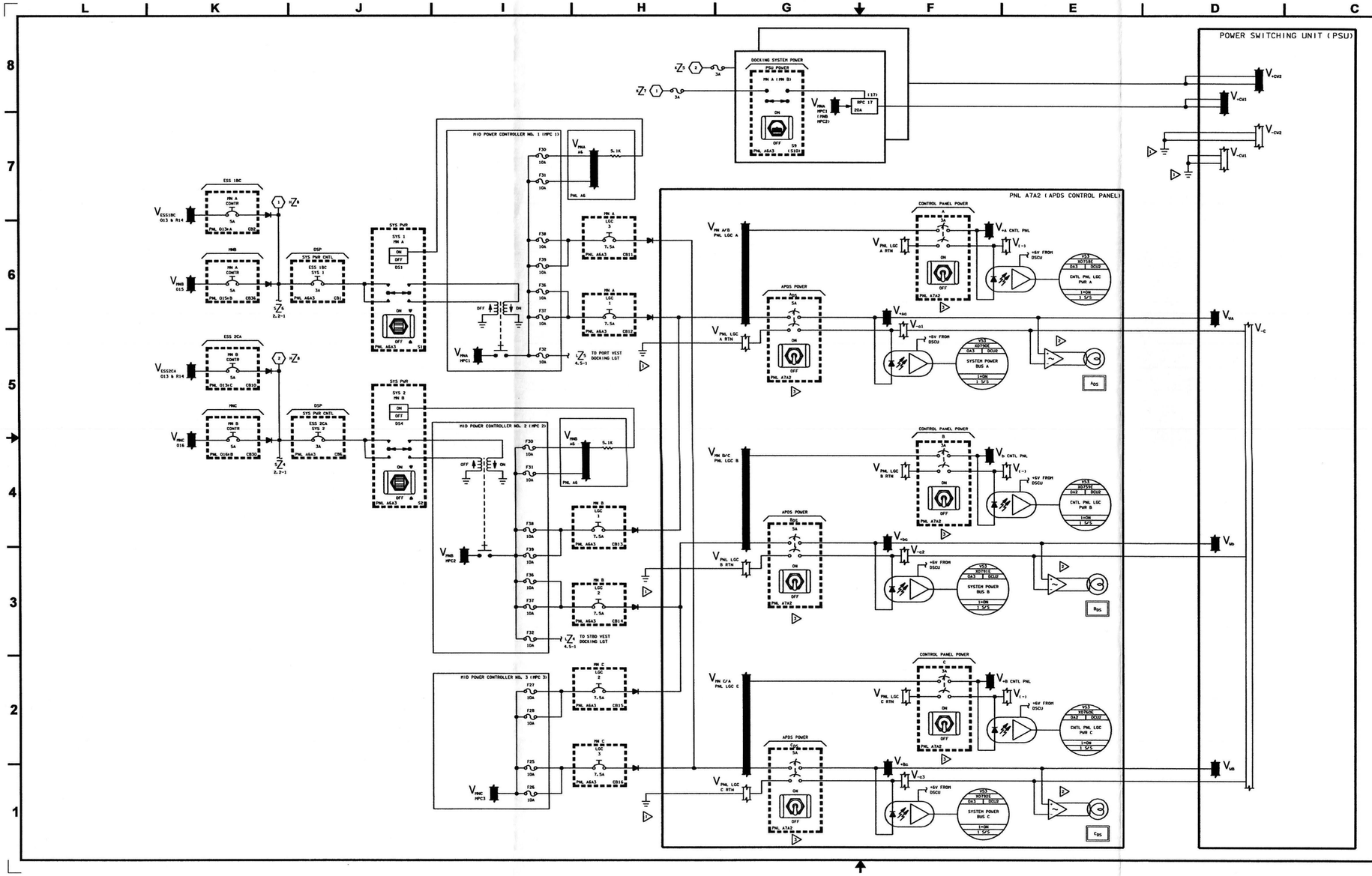

DATE: 10/19/98	NAME: VSH	VERSION: CHK: 6	
DATE: 10/26/98	NAME: VSH	VERSION: REL: 4	
DATE: 04/08/99	NAME: LAM	VERSION: REL: 5	

TYPE OF CIRCUIT BREAKER	NOMINAL CURRENT	TRIPPING CURRENT	TRIPPING TIME AT RATED OVERLOAD	TRIPPING TIME AT 600% OVERLOAD
A2-1	1.0A	2.5A	10 MIN	0.1 SEC
A2-2	2.0A	4.2A	10 MIN	0.1 SEC
A2-3	3.0A	5.1A	5 MIN	0.1 SEC
A2-5	5.0A	8.5A	5 MIN	0.1 SEC

2 AC LAMP DRIVER

NOTES: 1 ALL GROUNDS LOCATED IN PLB

6 ODS PWR

SIGNATURE	DATE
DSGN S. DAWSON	09/09/94
DR M.G., M.U.	09/29/94
ENGR K. MILLER	
ENGR [signature]	4/9/99
APP [signature]	4/14/99
APP [signature]	5/6/99
CADD K. Kimberly	4/23/99
LTR F	PCN 3

NATIONAL AERONAUTICS AND SPACE ADMINISTRATION
LYNDON B. JOHNSON SPACE CENTER HOUSTON, TEXAS

ORBITER DOCKING SYSTEM/POWER

SPACE SHUTTLE ALL

DWG NO 2.6

66 X 34

SHEET 1 OF 1

BASIC REV F-3

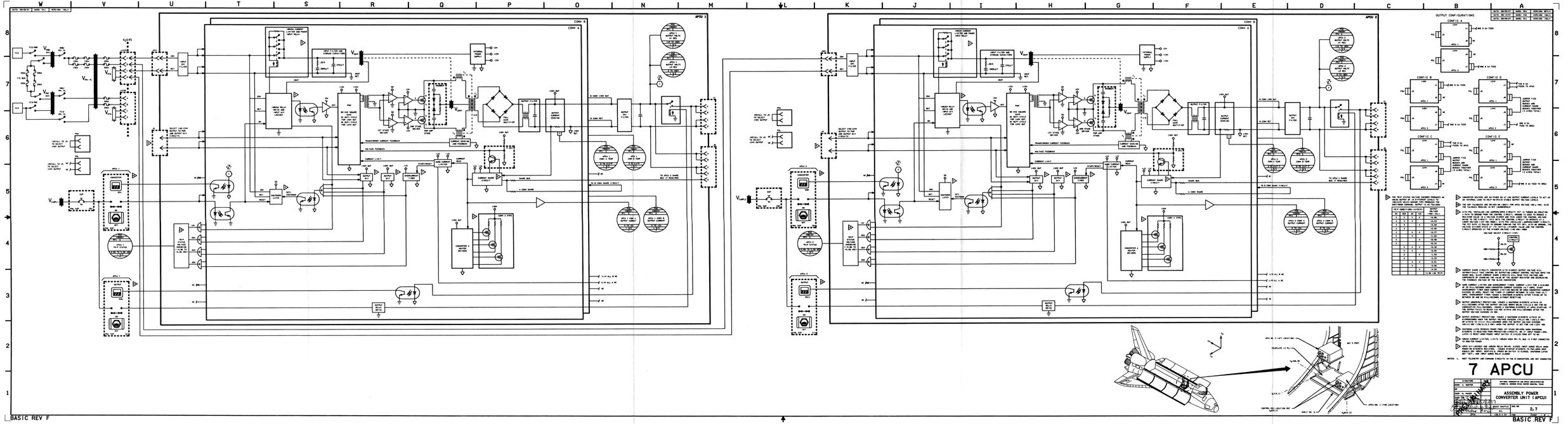
APCU 1
APCU 2
CONV A
CONV B
OUTPUT CONFIGURATIONS
CONFIG A
CONFIG B
CONFIG C
CONFIG D
CONFIG E
7 APCU
ASSEMBLY POWER CONVERTER UNIT (APCU)
BASIC REV F

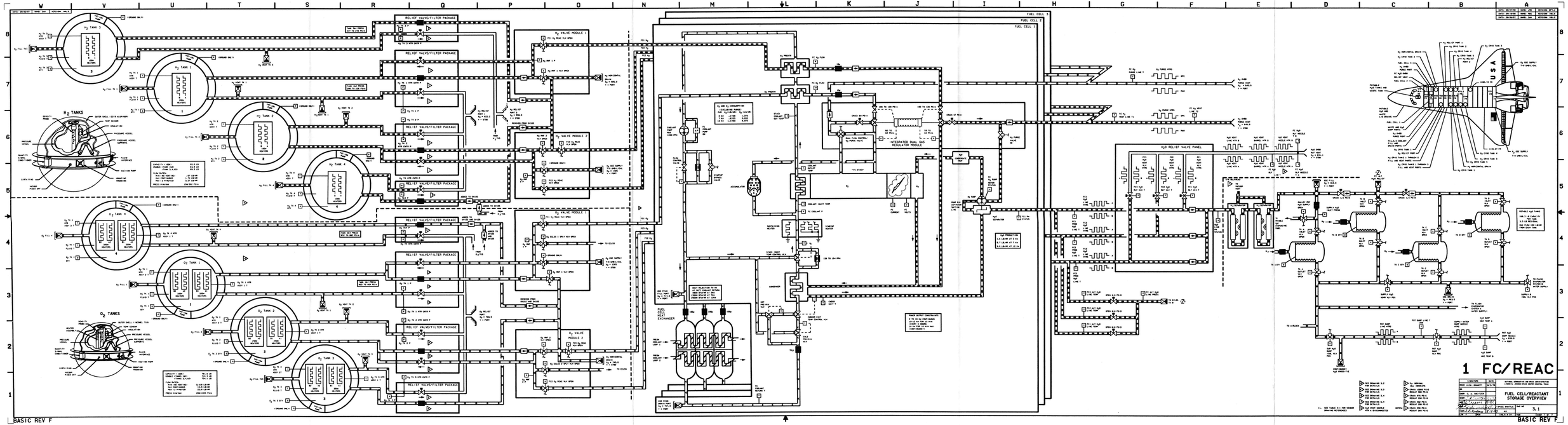
H_2 TANKS
O_2 TANKS
H_2 TANK 3
H_2 TANK 1
H_2 TANK 2
H_2 TANK 4
O_2 TANK 4
O_2 TANK 1
O_2 TANK 2
O_2 TANK 3
RELIEF VALVE/FILTER PACKAGE
H_2 VALVE MODULE 1
H_2 VALVE MODULE 2
O_2 VALVE MODULE 1
O_2 VALVE MODULE 2
FUEL CELL 3
FUEL CELL 2
FUEL CELL 1
INTEGRATED DUAL GAS REGULATOR MODULE
H_2O RELIEF VALVE PANEL
FUEL CELL REACTANT SUPPLY
1 FC/REAC
FUEL CELL/REACTANT STORAGE OVERVIEW
3.1
BASIC REV F

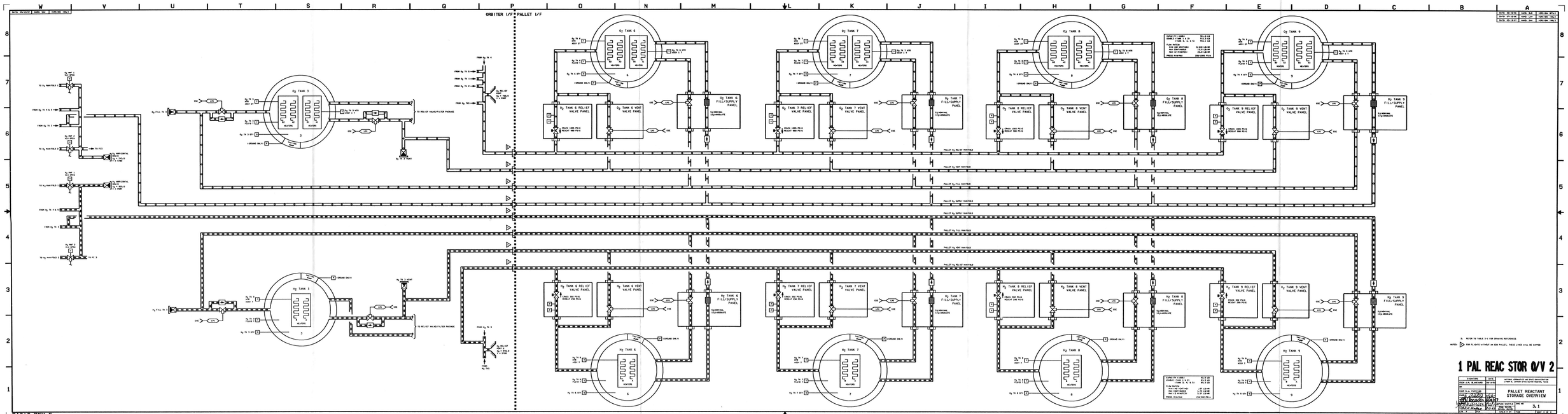

NOTES: 1. REFER TO TABLE 5-1 FOR DRAWING REFERENCES.
2. FOR FLIGHTS WITHOUT AN EOS PALLET, THESE LINES WILL BE CAPPED.

1 PAL REAC STOR O/V 2

SIGNATURE	DATE
PREPARED BY: R.N. BLANKENSHIP	08/15/96
APPROVED BY:	
R.N. Blankenship	
CHECKED BY:	
[illegible]	
APPROVED BY:	
[illegible]	

NATIONAL AERONAUTICS AND SPACE ADMINISTRATION
LYNDON B. JOHNSON SPACE CENTER, HOUSTON, TEXAS

PALLET REACTANT STORAGE OVERVIEW

SPACE SHUTTLE PROGRAM	SIZE	DWG. NO.
	B	5-1
	SCALE: NONE	SHEET 1 OF 1

BASIC REV F

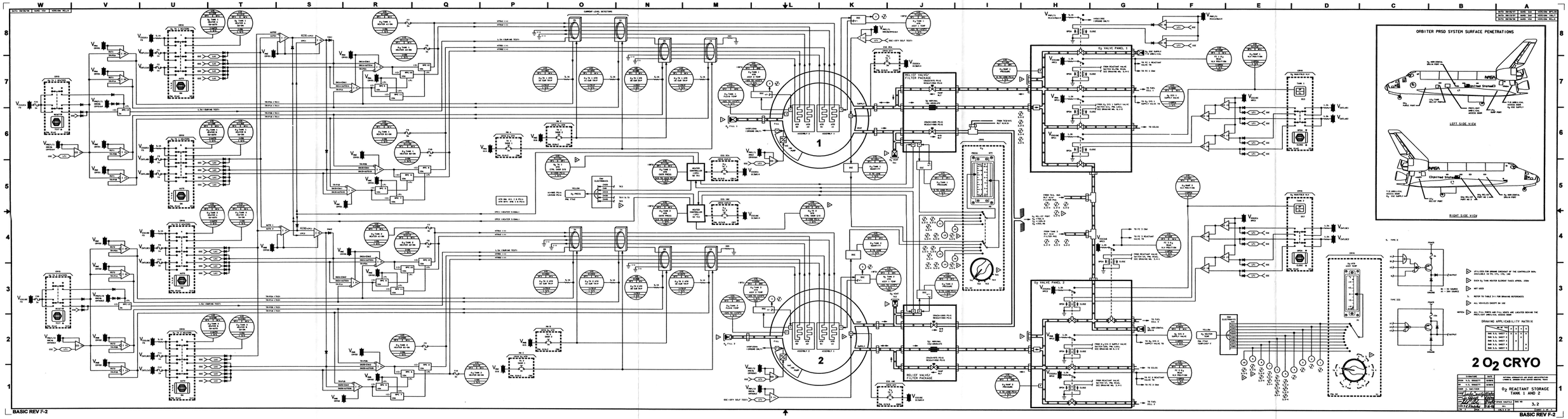
ORBITER PRSD SYSTEM SURFACE PENETRATIONS
LEFT SIDE VIEW
RIGHT SIDE VIEW
DRAWING APPLICABILITY MATRIX
2 O2 CRYO
O2 REACTANT STORAGE TANK 1 AND 2
3.2
BASIC REV F-2

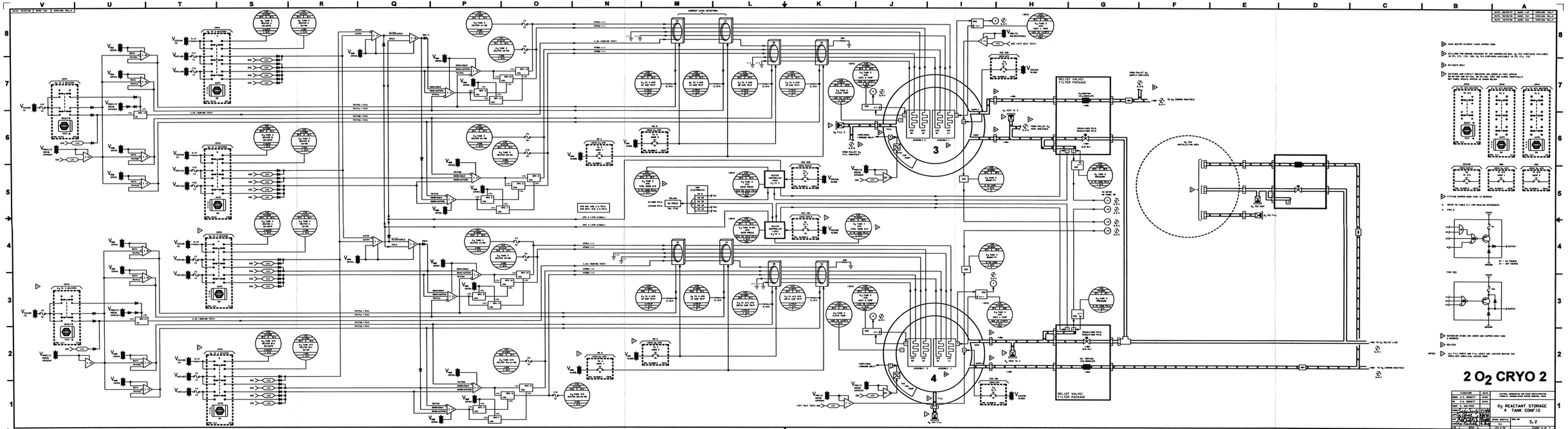
2 O2 CRYO 2
O2 REACTANT STORAGE 4 TANK CONFIG
3.2
RELIEF VALVE/ FILTER PACKAGE
RELIEF VALVE/ FILTER PACKAGE
3
4
BASIC REV F-2
BASIC REV F-2

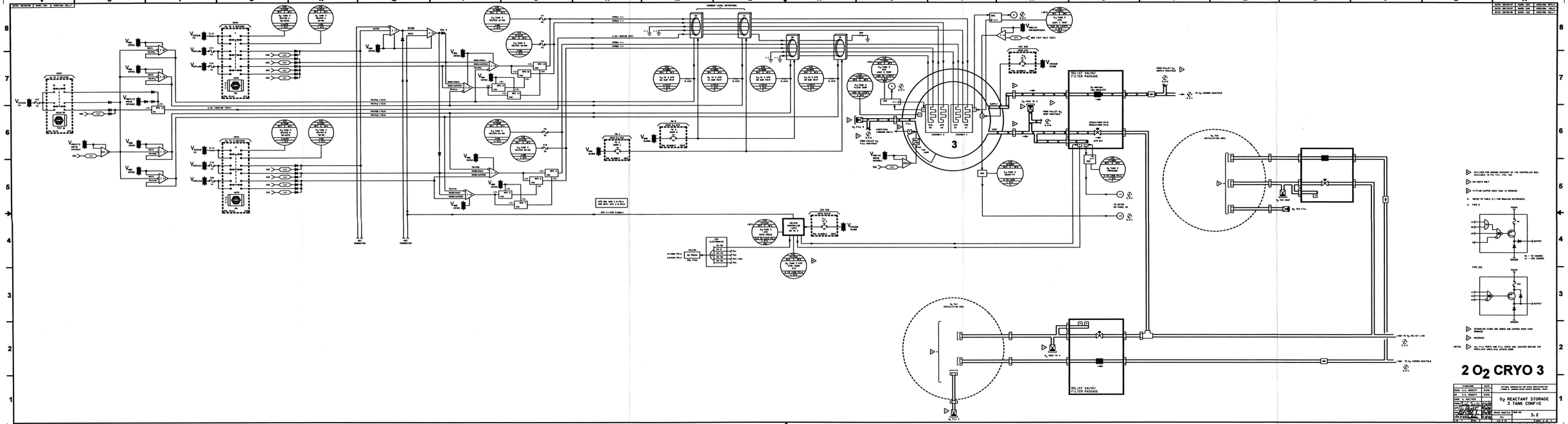
CURRENT LEVEL DETECTORS
RELIEF VALVE/ FILTER PACKAGE
RELIEF VALVE/ FILTER PACKAGE
3
2 O2 CRYO 3
O2 REACTANT STORAGE 3 TANK CONFIG
3.2
BASIC REV F-2
BASIC REV F-2

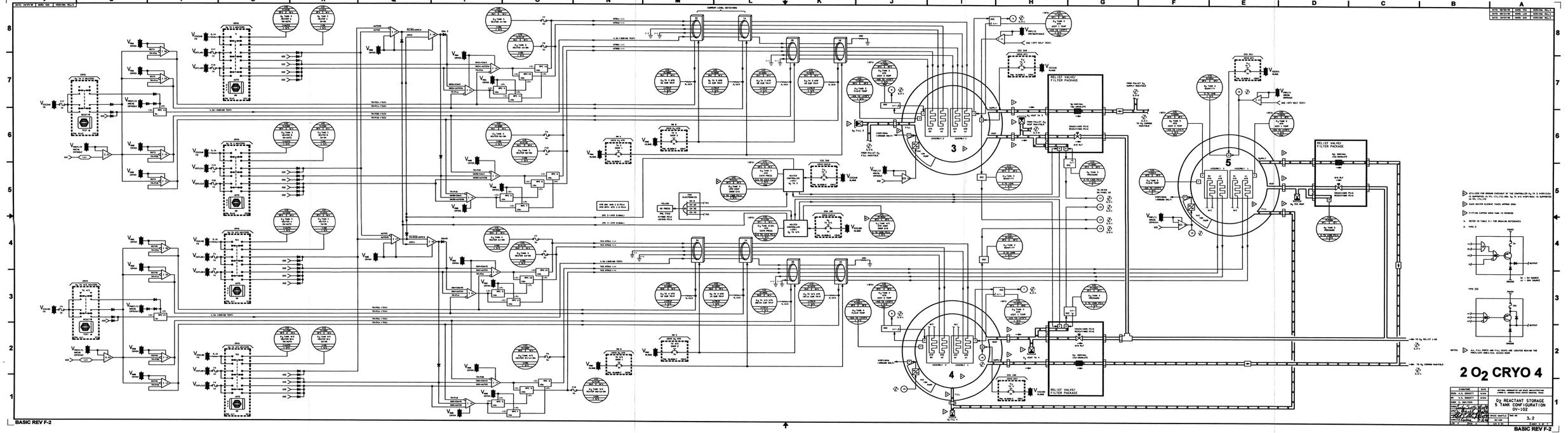
CURRENT LEVEL DETECTORS
RELIEF VALVE/ FILTER PACKAGE
3
4
5
2 O2 CRYO 4
O2 REACTANT STORAGE 5 TANK CONFIGURATION
OV-102
BASIC REV F-2

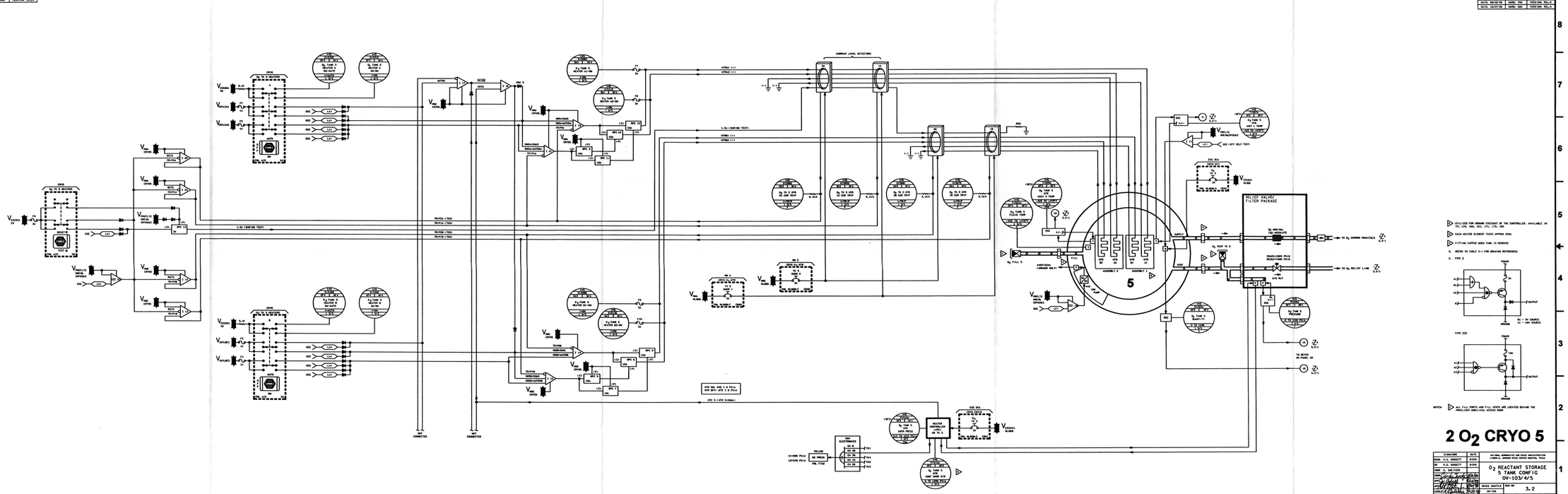
2 O2 CRYO 5
O2 REACTANT STORAGE
5 TANK CONFIG
OV-103/4/5
SPACE SHUTTLE
3.2
BASIC REV F-2
5
ASSEMBLY 2
ASSEMBLY 3
RELIEF VALVE/
FILTER PACKAGE
TO O2 COMMON MANIFOLD
TO O2 RELIEF LINE
TO MEIER OX PANEL 09
FILL
VENT
PRESS
HEATER
PURGE
SURGE
VAPOR TO O2
O2 VENT TO O
O2 FILL
O2 VENT
O2 PRESS
O2 HEATER
O2 PURGE
O2 SURGE
O2 VAPOR TO O2

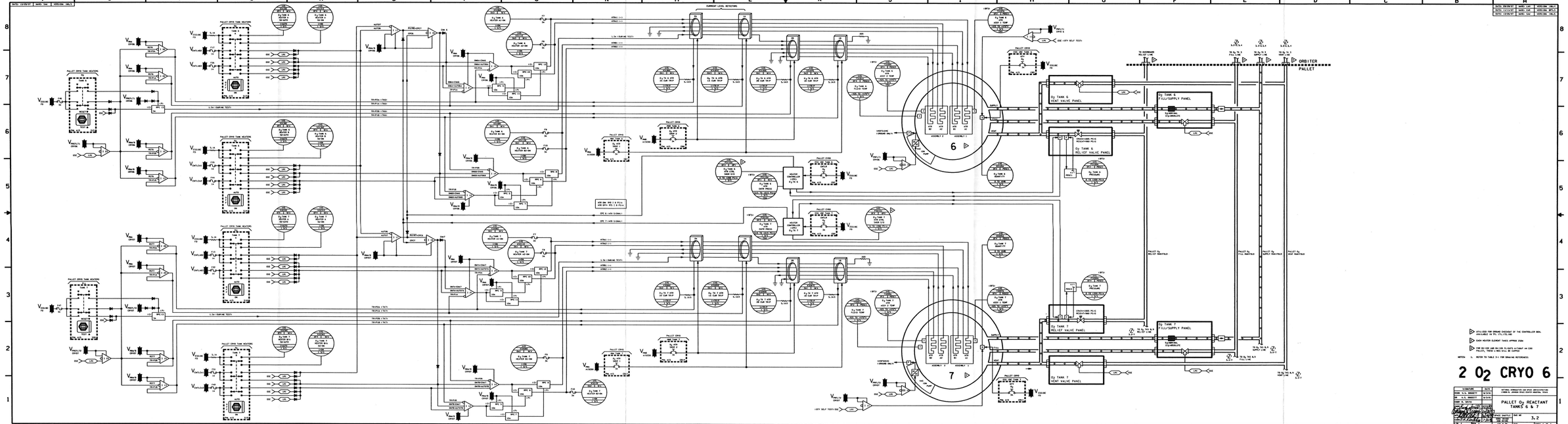

BASIC REV F-1

BASIC REV F-1

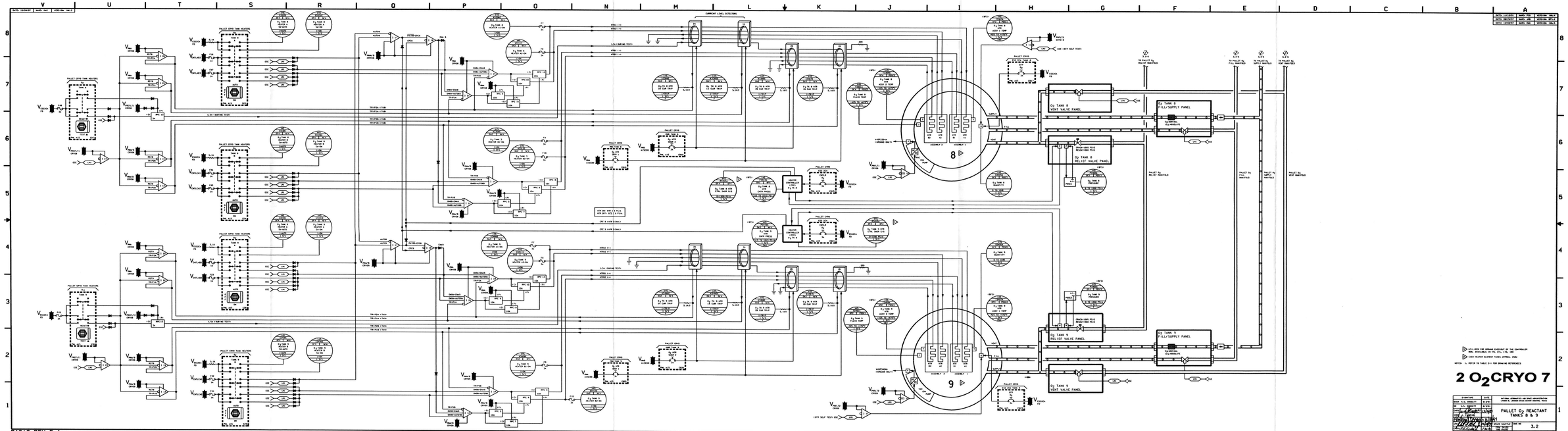
2 O2CRYO 7
PALLET O2 REACTANT TANKS 8 & 9
3.2
O2 TANK 8 VENT VALVE PANEL
O2 TANK 8 FILL/SUPPLY PANEL
O2 TANK 8 RELIEF VALVE PANEL
O2 TANK 9 VENT VALVE PANEL
O2 TANK 9 FILL/SUPPLY PANEL
O2 TANK 9 RELIEF VALVE PANEL
PALLET O2 FILL MANIFOLD
PALLET O2 SUPPLY MANIFOLD
PALLET O2 RELIEF MANIFOLD
PALLET O2 VENT MANIFOLD
PALLET CRYO TANK HEATERS
PALLET CRYO
HEATER CONTROLLER PALLET O2 TK 8
HEATER CONTROLLER PALLET O2 TK 9
PALLET O2 TANK 8 HEATER NO 1A
PALLET O2 TANK 8 HEATER NO 1B
PALLET O2 TANK 8 HEATER NO 2A
PALLET O2 TANK 8 HEATER NO 2B
PALLET O2 TANK 9 HEATER NO 1A
PALLET O2 TANK 9 HEATER NO 1B
PALLET O2 TANK 9 HEATER NO 2A
PALLET O2 TANK 9 HEATER NO 2B
PALLET O2 TANK 8 HEATER NO 3
PALLET O2 TANK 9 HEATER NO 3
PALLET O2 TANK 8 HEATER NO 4
PALLET O2 TANK 9 HEATER NO 4
PALLET O2 TANK 8 HEATER NO 5
PALLET O2 TANK 9 HEATER NO 5
PALLET O2 TANK 8 HEATER NO

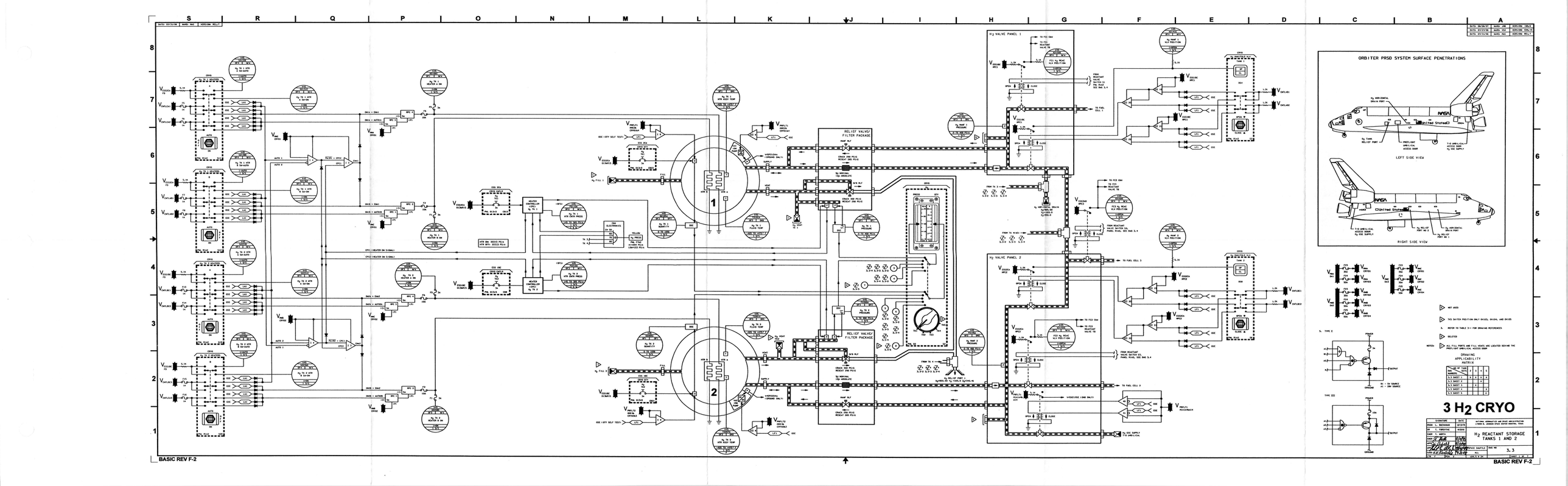
ORBITER PRSD SYSTEM SURFACE PENETRATIONS
LEFT SIDE VIEW
RIGHT SIDE VIEW
H2 VALVE PANEL 1
H2 VALVE PANEL 2
RELIEF VALVE/ FILTER PACKAGE
RELIEF VALVE/ FILTER PACKAGE
DRAWING APPLICABILITY MATRIX
3 H2 CRYO
H2 REACTANT STORAGE TANKS 1 AND 2
BASIC REV F-2
BASIC REV F-2

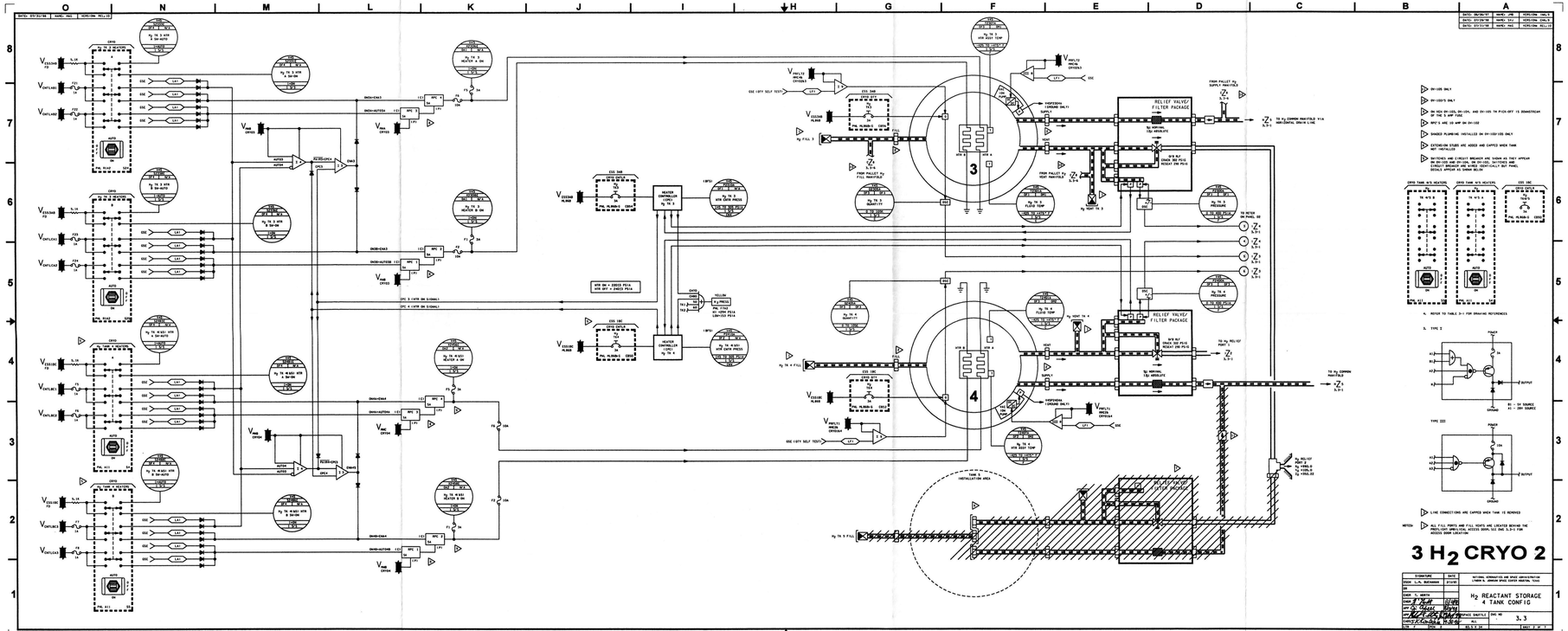
3 H2 CRYO 2
H2 REACTANT STORAGE 4 TANK CONFIG
BASIC REV F-2
RELIEF VALVE/ FILTER PACKAGE
TANK 3 INSTALLATION AREA
TANK 4 INSTALLATION AREA
3.3

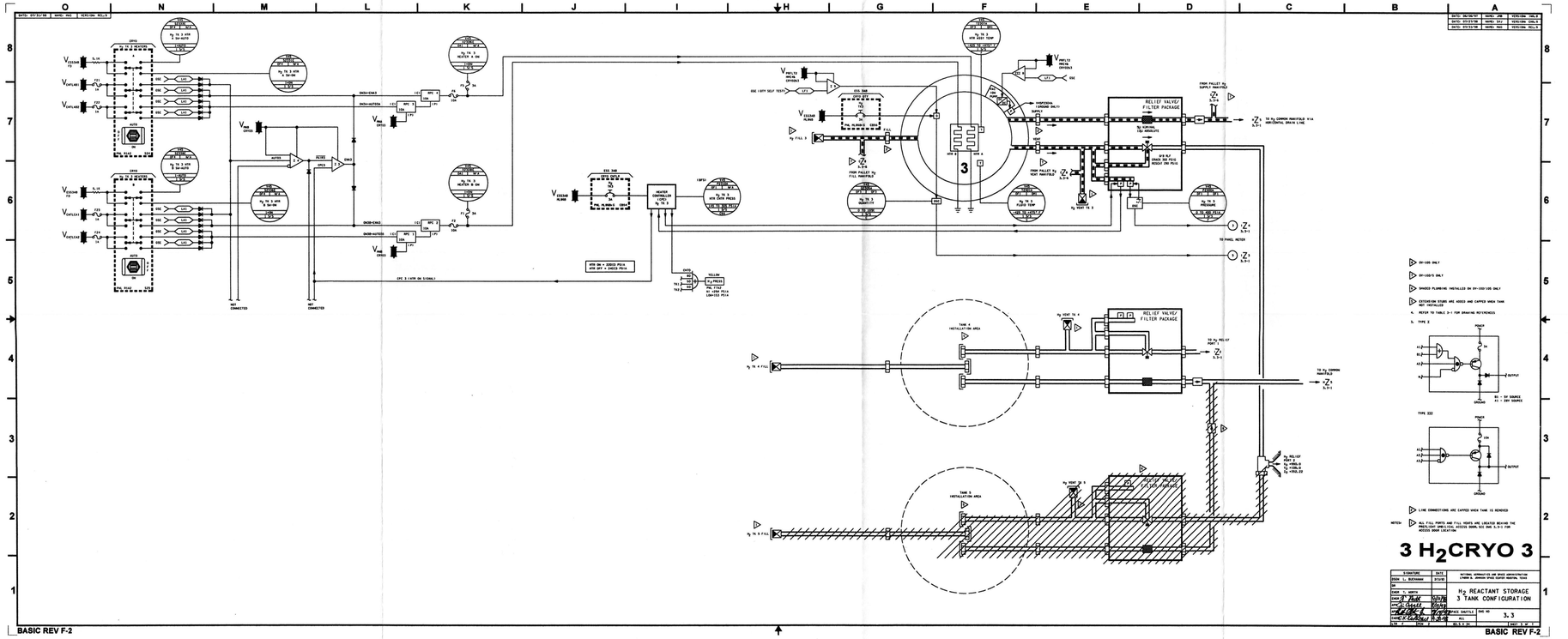
3 H2CRYO 3
3 H2 REACTANT STORAGE 3 TANK CONFIGURATION
RELIEF VALVE/ FILTER PACKAGE
TANK 4 INSTALLATION AREA
TANK 5 INSTALLATION AREA
TO H2 COMMON MANIFOLD V16 HORIZONTAL DRAIN LINE
TO PANEL M27B
TO H2 RELIEF PORT 1
TO H2 RELIEF PORT 2
TO H2 COMMON MANIFOLD
FROM PALLET H2 SUPPLY MANIFOLD
FROM PALLET H2 FILL MANIFOLD
FROM PALLET H2 VENT MANIFOLD
H2 FILL 3
H2 VENT TO 3
H2 VENT TO 4
H2 VENT TO 5
H2 TK 4 FILL
H2 TK 5 FILL
H2 RELIEF PRESS 2 TO +900.22
H2 RELIEF PRESS 1 TO +900.22
SHIPSIDE/GROUND ONLY
SUPPLY
VENT
FILL
ESC 3AM
ESC 3AN
ESC 3AP
ESC 3AQ
ESC 3AR
ESC 3AS
ESC 3AT
ESC 3AU
ESC 3AV
ESC 3AW
ESC 3AX
ESC 3AY
ESC 3AZ
ESC 3BA
ESC 3BB
ESC 3BC
ESC 3BD
ESC 3BE
ESC 3BF
ESC 3BG
ESC 3BH
ESC 3BJ
ESC 3BK
ESC 3BL
ESC 3BM
ESC 3BN
ESC 3BP
ESC 3BQ
ESC 3BR
ESC 3BS
ESC 3BT
ESC 3BU
ESC 3BV
ESC 3BW
ESC 3BX
ESC 3BY
ESC 3BZ
ESC 3CA
ESC 3CB
ESC 3CC
ESC 3CD
ESC 3CE
ESC 3CF
ESC 3CG
ESC 3CH
ESC 3CJ
ESC 3CK
ESC 3CL
ESC 3CM
ESC 3CN
ESC 3CP
ESC 3CQ
ESC 3CR
ESC 3CS
ESC 3CT
ESC 3CU
ESC 3CV
ESC 3CW
ESC 3CX
ESC 3CY
ESC 3CZ
ESC 3DA
ESC 3DB
ESC 3DC
ESC 3DD
ESC 3DE
ESC 3DF
ESC 3DG
ESC 3DH
ESC 3DJ
ESC 3DK
ESC 3DL
ESC 3DM
ESC 3DN
ESC 3DP
ESC 3DQ
ESC 3DR
ESC 3DS
ESC 3DT
ESC 3DU
ESC 3DV
ESC 3DW
ESC 3DX
ESC 3DY
ESC 3DZ
ESC 3EA
ESC 3EB
ESC 3EC
ESC 3ED
ESC 3EE
ESC 3EF
ESC 3EG
ESC 3EH
ESC 3EJ
ESC 3EK
ESC 3EL
ESC 3EM
ESC 3EN
ESC 3EP
ESC 3EQ
ESC 3ER
ESC 3ES
ESC 3ET
ESC 3EU
ESC 3EV
ESC 3EW
ESC 3EX
ESC 3EY
ESC 3EZ
ESC 3FA
ESC 3FB
ESC 3FC
ESC 3FD
ESC 3FE
ESC 3FF
ESC 3FG
ESC 3FH
ESC 3FJ
ESC 3FK
ESC 3FL
ESC 3FM
ESC 3FN
ESC 3FP
ESC 3FQ
ESC 3FR
ESC 3FS
ESC 3FT
ESC 3FU
ESC 3FV
ESC 3FW
ESC 3FX
ESC 3FY
ESC 3FZ
ESC 3GA
ESC 3GB
ESC 3GC
ESC 3GD
ESC 3GE
ESC 3GF
ESC 3GG
ESC 3GH
ESC 3GJ
ESC 3GK
ESC 3GL
ESC 3GM
ESC 3GN
ESC 3GP
ESC 3GQ
ESC 3GR
ESC 3GS
ESC 3GT
ESC 3GU
ESC 3GV
ESC 3GW
ESC 3GX
ESC 3GY
ESC 3GZ
ESC 3HA
ESC 3HB
ESC 3HC
ESC 3HD
ESC 3HE
ESC 3HF
ESC 3HG
ESC 3HH
ESC 3HJ
ESC 3HK
ESC 3HL
ESC 3HM
ESC 3HN
ESC 3HP
ESC 3HQ
ESC 3HR
ESC 3HS
ESC 3HT
ESC 3HU
ESC 3HV
ESC 3HW
ESC 3HX
ESC 3HY
ESC 3HZ
ESC 3JA
ESC 3JB
ESC 3JC
ESC 3JD
ESC 3JE
ESC 3JF
ESC 3JG
ESC 3JH
ESC 3JJ
ESC 3JK
ESC 3JL
ESC 3JM
ESC 3JN
ESC 3JP
ESC 3JQ
ESC 3JR
ESC 3JS
ESC 3JT
ESC 3JU
ESC 3JV
ESC 3JW
ESC 3JX
ESC 3JY
ESC 3JZ
ESC 3KA
ESC 3KB
ESC 3KC
ESC 3KD
ESC 3KE
ESC 3KF
ESC 3KG
ESC 3KH
ESC 3KJ
ESC 3KK
ESC 3KL
ESC 3KM
ESC 3KN
ESC 3KP
ESC 3KQ
ESC 3KR
ESC 3KS
ESC 3KT
ESC 3KU
ESC 3KV
ESC 3KW
ESC 3KX
ESC 3KY
ESC 3KZ
ESC 3LA
ESC 3LB
ESC 3LC
ESC 3LD
ESC 3LE
ESC 3LF
ESC 3LG
ESC 3LH
ESC 3LJ
ESC 3LK
ESC 3LL
ESC 3LM
ESC 3LN
ESC 3LP
ESC 3LQ
ESC 3LR
ESC 3LS
ESC 3LT
ESC 3LU
ESC 3LV
ESC 3LW
ESC 3LX
ESC 3LY
ESC 3LZ
ESC 3MA
ESC 3MB
ESC 3MC
ESC 3MD
ESC 3ME
ESC 3MF
ESC 3MG
ESC 3MH
ESC 3MJ
ESC 3MK
ESC 3ML
ESC 3MM
ESC 3MN
ESC 3MP
ESC 3MQ
ESC 3MR
ESC 3MS
ESC 3MT
ESC 3MU
ESC 3MV
ESC 3MW
ESC 3MX
ESC 3MY
ESC 3MZ
ESC 3NA
ESC 3NB
ESC 3NC
ESC 3ND
ESC 3NE
ESC 3NF
ESC 3NG
ESC 3NH
ESC 3NJ
ESC 3NK
ESC 3NL
ESC 3NM
ESC 3NN
ESC 3NP
ESC 3NQ
ESC 3NR
ESC 3NS
ESC 3NT
ESC 3NU
ESC 3NV
ESC 3NW
ESC 3NX
ESC 3NY
ESC 3NZ
ESC 3PA
ESC 3PB
ESC 3PC
ESC 3PD
ESC 3PE
ESC 3PF
ESC 3PG
ESC 3PH
ESC 3PJ
ESC 3PK
ESC 3PL
ESC 3PM
ESC 3PN
ESC 3PP
ESC 3PQ
ESC 3PR
ESC 3PS
ESC 3PT
ESC 3PU
ESC 3PV
ESC 3PW
ESC 3PX
ESC 3PY
ESC 3PZ
ESC 3QA
ESC 3QB
ESC 3QC
ESC 3QD
ESC 3QE
ESC 3QF
ESC 3QG
ESC 3QH
ESC 3QJ
ESC 3QK
ESC 3QL
ESC 3QM
ESC 3QN
ESC 3QP
ESC 3QQ
ESC 3QR
ESC 3QS
ESC 3QT
ESC 3QU
ESC 3QV
ESC 3QW
ESC 3QX
ESC 3QY
ESC 3QZ
ESC 3RA
ESC 3RB
ESC 3RC
ESC 3RD
ESC 3RE
ESC 3RF
ESC 3RG
ESC 3RH
ESC 3RJ
ESC 3RK
ESC 3RL
ESC 3RM
ESC 3RN
ESC 3RP
ESC 3RQ
ESC 3RR
ESC 3RS
ESC 3RT
ESC 3RU
ESC 3RV
ESC 3RW
ESC 3RX
ESC 3RY
ESC 3RZ
ESC 3SA
ESC 3SB
ESC 3SC
ESC 3SD
ESC 3SE
ESC 3SF
ESC 3SG
ESC 3SH
ESC 3SJ
ESC 3SK
ESC 3SL
ESC 3SM
ESC 3SN
ESC 3SP
ESC 3SQ
ESC 3SR
ESC 3SS
ESC 3ST
ESC 3SU
ESC 3SV
ESC 3SW
ESC 3SX
ESC 3SY
ESC 3SZ
ESC 3TA
ESC 3TB
ESC 3TC
ESC 3TD
ESC 3TE
ESC 3TF
ESC 3TG
ESC 3TH
ESC 3TJ
ESC 3TK
ESC 3TL
ESC 3TM
ESC 3TN
ESC 3TP
ESC 3TQ
ESC 3TR
ESC 3TS
ESC 3TT
ESC 3TU
ESC 3TV
ESC 3TW
ESC 3TX
ESC 3TY
ESC 3TZ
ESC 3UA
ESC 3UB
ESC 3UC
ESC 3UD
ESC 3UE
ESC 3UF
ESC 3UG
ESC 3UH
ESC 3UJ
ESC 3UK
ESC 3UL
ESC 3UM
ESC 3UN
ESC 3UP
ESC 3UQ
ESC 3UR
ESC 3US
ESC 3UT
ESC 3UU
ESC 3UV
ESC 3UW
ESC 3UX
ESC 3UY
ESC 3UZ
ESC 3VA
ESC 3VB
ESC 3VC
ESC 3VD
ESC 3VE
ESC 3VF
ESC 3VG
ESC 3VH
ESC 3VJ
ESC 3VK
ESC 3VL
ESC 3VM
ESC 3VN
ESC 3VP
ESC 3VQ
ESC 3VR
ESC 3VS
ESC 3VT
ESC 3VU
ESC 3VV
ESC 3VW
ESC 3VX
ESC 3VY
ESC 3VZ
ESC 3WA
ESC 3WB
ESC 3WC
ESC 3WD
ESC 3WE
ESC 3WF
ESC 3WG
ESC 3WH
ESC 3WJ
ESC 3WK
ESC 3WL
ESC 3WM
ESC 3WN
ESC 3WP
ESC 3WQ
ESC 3WR
ESC 3WS
ESC 3WT
ESC 3WU
ESC 3WV
ESC 3WW
ESC 3WX
ESC 3WY
ESC 3WZ
ESC 3XA
ESC 3XB
ESC 3XC
ESC 3XD
ESC 3XE
ESC 3XF
ESC 3XG
ESC 3XH
ESC 3XJ
ESC 3XK
ESC 3XL
ESC 3XM
ESC 3XN
ESC 3XP
ESC 3XQ
ESC 3XR
ESC 3XS
ESC 3XT
ESC 3XU
ESC 3XV
ESC 3XW
ESC 3XX
ESC 3XY
ESC 3XZ
ESC 3YA
ESC 3YB
ESC 3YC
ESC 3YD
ESC 3YE
ESC 3YF
ESC 3YG
ESC 3YH
ESC 3YJ
ESC 3YK
ESC 3YL
ESC 3YM
ESC 3YN
ESC 3YP
ESC 3YQ
ESC 3YR
ESC 3YS
ESC 3YT
ESC 3YU
ESC 3YV
ESC 3YW
ESC 3YX
ESC 3YY
ESC 3YZ
ESC 3ZA
ESC 3ZB
ESC 3ZC
ESC 3ZD
ESC 3ZE
ESC 3ZF
ESC 3ZG
ESC 3ZH
ESC 3ZJ
ESC 3ZK
ESC 3ZL
ESC 3ZM
ESC 3ZN
ESC 3ZP
ESC 3ZQ
ESC 3ZR
ESC 3ZS
ESC 3ZT
ESC 3ZU
ESC 3ZV
ESC 3ZW
ESC 3ZX
ESC 3ZY
ESC 3ZZ
ESC 4AA
ESC 4AB
ESC 4AC
ESC 4AD
ESC 4AE
ESC 4AF
ESC 4AG
ESC 4AH
ESC 4AJ
ESC 4AK
ESC 4AL
ESC 4AM
ESC 4AN
ESC 4AP
ESC 4AQ
ESC 4AR
ESC 4AS
ESC 4AT
ESC 4AU
ESC 4AV
ESC 4AW
ESC 4AX
ESC 4AY
ESC 4AZ
ESC 4BA
ESC 4BB
ESC 4BC
ESC 4BD
ESC 4BE
ESC 4BF
ESC 4BG
ESC 4BH
ESC 4BJ
ESC 4BK
ESC 4BL
ESC 4BM
ESC 4BN
ESC 4BP
ESC 4BQ
ESC 4BR
ESC 4BS
ESC 4BT
ESC 4BU
ESC 4BV
ESC 4BW
ESC 4BX
ESC 4BY
ESC 4BZ
ESC 4CA
ESC 4CB
ESC 4CC
ESC 4CD
ESC 4CE
ESC 4CF
ESC 4CG
ESC 4CH
ESC 4CJ
ESC 4CK
ESC 4CL
ESC 4CM
ESC 4CN
ESC 4CP
ESC 4CQ
ESC 4CR
ESC 4CS
ESC 4CT
ESC 4CU
ESC 4CV
ESC 4CW
ESC 4CX
ESC 4CY
ESC 4CZ
ESC 4DA
ESC 4DB
ESC 4DC
ESC 4DD
ESC 4DE
ESC 4DF
ESC 4DG
ESC 4DH
ESC 4DJ
ESC 4DK
ESC 4DL
ESC 4DM
ESC 4DN
ESC 4DP
ESC 4DQ
ESC 4DR
ESC 4DS
ESC 4DT
ESC 4DU
ESC 4DV
ESC 4DW
ESC 4DX
ESC 4DY
ESC 4DZ
ESC 4EA
ESC 4EB
ESC 4EC
ESC 4ED
ESC 4EE
ESC 4EF
ESC 4EG
ESC 4EH
ESC 4EJ
ESC 4EK
ESC 4EL
ESC 4EM
ESC 4EN
ESC 4EP
ESC 4EQ
ESC 4ER
ESC 4ES
ESC 4ET
ESC 4EU
ESC 4EV
ESC 4EW
ESC 4EX
ESC 4EY
ESC 4EZ
ESC 4FA
ESC 4FB
ESC 4FC
ESC 4FD
ESC 4FE
ESC 4FF
ESC 4FG
ESC 4FH
ESC 4FJ
ESC 4FK
ESC 4FL
ESC 4FM
ESC 4FN
ESC 4FP
ESC 4FQ
ESC 4FR
ESC 4FS
ESC 4FT
ESC 4FU
ESC 4FV
ESC 4FW
ESC 4FX
ESC 4FY
ESC 4FZ
ESC 4GA
ESC 4GB
ESC 4GC
ESC 4GD
ESC 4GE
ESC 4GF
ESC 4GG
ESC 4GH
ESC 4GJ
ESC 4GK
ESC 4GL
ESC 4GM
ESC 4GN
ESC 4GP
ESC 4GQ
ESC 4GR
ESC 4GS
ESC 4GT
ESC 4GU
ESC 4GV
ESC 4GW
ESC 4GX
ESC 4GY
ESC 4GZ
ESC 4HA
ESC 4HB
ESC 4HC
ESC 4HD
ESC 4HE
ESC 4HF
ESC 4HG
ESC 4HH
ESC 4HJ
ESC 4HK
ESC 4HL
ESC 4HM
ESC 4HN
ESC 4HP
ESC 4HQ
ESC 4HR
ESC 4HS
ESC 4HT
ESC 4HU
ESC 4HV
ESC 4HW
ESC 4HX
ESC 4HY
ESC 4HZ
ESC 4JA
ESC 4JB
ESC 4JC
ESC 4JD
ESC 4JE
ESC 4JF
ESC 4JG
ESC 4JH
ESC 4JJ
ESC 4JK
ESC 4JL
ESC 4JM
ESC 4JN
ESC 4JP
ESC 4JQ
ESC 4JR
ESC 4JS
ESC 4JT
ESC 4JU
ESC 4JV
ESC 4JW
ESC 4JX
ESC 4JY
ESC 4JZ
ESC 4KA
ESC 4KB
ESC 4KC
ESC 4KD
ESC 4KE
ESC 4KF
ESC 4KG
ESC 4KH
ESC 4KJ
ESC 4KK
ESC 4KL
ESC 4KM
ESC 4KN
ESC 4KP
ESC 4KQ
ESC 4KR
ESC 4KS
ESC 4KT
ESC 4KU
ESC 4KV
ESC 4KW
ESC 4KX
ESC 4KY
ESC 4KZ
ESC 4LA
ESC 4LB
ESC 4LC
ESC 4LD
ESC 4LE
ESC 4LF
ESC 4LG
ESC 4LH
ESC 4LJ
ESC 4LK
ESC 4LL
ESC 4LM
ESC 4LN
ESC 4LP
ESC 4LQ
ESC 4LR
ESC 4LS
ESC 4LT
ESC 4LU
ESC 4LV
ESC 4LW
ESC 4LX
ESC 4LY
ESC 4LZ
ESC 4MA
ESC 4MB
ESC 4MC
ESC 4MD
ESC 4ME
ESC 4MF
ESC 4MG
ESC 4MH
ESC 4MJ
ESC 4MK
ESC 4ML
ESC 4MM
ESC 4MN
ESC 4MP
ESC 4MQ
ESC 4MR
ESC 4MS
ESC 4MT
ESC 4MU
ESC 4MV
ESC 4MW
ESC 4MX
ESC 4MY
ESC 4MZ
ESC 4NA
ESC 4NB
ESC 4NC
ESC 4ND
ESC 4NE
ESC 4NF
ESC 4NG
ESC 4NH
ESC 4NJ
ESC 4NK
ESC 4NL
ESC 4NM
ESC 4NN
ESC 4NP
ESC 4NQ
ESC 4NR
ESC 4NS
ESC 4NT
ESC 4NU
ESC 4NV
ESC 4NW
ESC 4NX
ESC 4NY
ESC 4NZ
ESC 4PA
ESC 4PB
ESC 4PC
ESC 4PD
ESC 4PE
ESC 4PF
ESC 4PG
ESC 4PH
ESC 4PJ
ESC 4PK
ESC 4PL
ESC 4PM
ESC 4PN
ESC 4PP
ESC 4PQ
ESC 4PR
ESC 4PS
ESC 4PT
ESC 4PU
ESC 4PV
ESC 4PW
ESC 4PX
ESC 4PY
ESC 4PZ
ESC 4QA
ESC 4QB
ESC 4QC
ESC 4QD
ESC 4QE
ESC 4QF
ESC 4QG
ESC 4QH
ESC 4QJ
ESC 4QK
ESC 4QL
ESC 4QM
ESC 4QN
ESC 4QP
ESC 4QQ
ESC 4QR
ESC 4QS
ESC 4QT
ESC 4QU
ESC 4QV
ESC 4QW
ESC 4QX
ESC 4QY
ESC 4QZ
ESC 4RA
ESC 4RB
ESC 4RC
ESC 4RD
ESC 4RE
ESC 4RF
ESC 4RG
ESC 4RH
ESC 4RJ
ESC 4RK
ESC 4RL
ESC 4RM
ESC 4RN
ESC 4RP
ESC 4RQ
ESC 4RR
ESC 4RS
ESC 4RT
ESC 4RU
ESC 4RV
ESC 4RW
ESC 4RX
ESC 4RY
ESC 4RZ
ESC 4SA
ESC 4SB
ESC 4SC
ESC 4SD
ESC 4SE
ESC 4SF
ESC 4SG
ESC 4SH
ESC 4SJ
ESC 4SK
ESC 4SL
ESC 4SM
ESC 4SN
ESC 4SP
ESC 4SQ
ESC 4SR
ESC 4SS
ESC 4ST
ESC 4SU
ESC 4SV
ESC 4SW
ESC 4SX
ESC 4SY
ESC 4SZ
ESC 4TA
ESC 4TB
ESC 4TC
ESC 4TD
ESC 4TE
ESC 4TF
ESC 4TG
ESC 4TH
ESC 4TJ
ESC 4TK
ESC 4TL
ESC 4TM
ESC 4TN
ESC 4TP
ESC 4TQ
ESC 4TR
ESC 4TS
ESC 4TT
ESC 4TU
ESC 4TV
ESC 4TW
ESC 4TX
ESC 4TY
ESC 4TZ
ESC 4UA
ESC 4UB
ESC 4UC
ESC 4UD
ESC 4UE
ESC 4UF
ESC 4UG
ESC 4UH
ESC 4UJ
ESC 4UK
ESC 4UL
ESC 4UM
ESC 4UN
ESC 4UP
ESC 4UQ
ESC 4UR
ESC 4US
ESC 4UT
ESC 4UU
ESC 4UV
ESC 4UW
ESC 4UX
ESC 4UY
ESC 4UZ
ESC 4VA
ESC 4VB
ESC 4VC
ESC 4VD
ESC 4VE
ESC 4VF
ESC 4VG
ESC 4VH
ESC 4VJ
ESC 4VK
ESC 4VL
ESC 4VM
ESC 4VN
ESC 4VP
ESC 4VQ
ESC 4VR
ESC 4VS
ESC 4VT
ESC 4VU
ESC 4VV
ESC 4VW
ESC 4VX
ESC 4VY
ESC 4VZ
ESC 4WA
ESC 4WB
ESC 4WC
ESC 4WD
ESC 4WE
ESC 4WF
ESC 4WG
ESC 4WH
ESC 4WJ
ESC 4WK
ESC 4WL
ESC 4WM
ESC 4WN
ESC 4WP
ESC 4WQ
ESC 4WR
ESC 4WS
ESC 4WT
ESC 4WU
ESC 4WV
ESC 4WW
ESC 4WX
ESC 4WY
ESC 4WZ
ESC 4XA
ESC 4XB
ESC 4XC
ESC 4XD
ESC 4XE
ESC 4XF
ESC 4XG
ESC 4XH
ESC 4XJ
ESC 4XK
ESC 4XL
ESC 4XM
ESC 4XN
ESC 4XP
ESC 4XQ
ESC 4XR
ESC 4XS
ESC 4XT
ESC 4XU
ESC 4XV
ESC 4XW
ESC 4XX
ESC 4XY
ESC 4XZ
ESC 4YA
ESC 4YB
ESC 4YC
ESC 4YD
ESC 4YE
ESC 4YF
ESC 4YG
ESC 4YH
ESC 4YJ
ESC 4YK
ESC 4YL
ESC 4YM
ESC 4YN
ESC 4YP
ESC 4YQ
ESC 4YR
ESC 4YS
ESC 4YT
ESC 4YU
ESC 4YV
ESC 4YW
ESC 4YX
ESC 4YY
ESC 4YZ
ESC 4ZA
ESC 4ZB
ESC 4ZC
ESC 4ZD
ESC 4ZE
ESC 4ZF
ESC 4ZG
ESC 4ZH
ESC 4ZJ
ESC 4ZK
ESC 4ZL
ESC 4ZM
ESC 4ZN
ESC 4ZP
ESC 4ZQ
ESC 4ZR
ESC 4ZS
ESC 4ZT
ESC 4ZU
ESC 4ZV
ESC 4ZW
ESC 4ZX
ESC 4ZY
ESC 4ZZ
ESC 5AA
ESC 5AB
ESC 5AC
ESC 5AD
ESC 5AE
ESC 5AF
ESC 5AG
ESC 5AH
ESC 5AJ
ESC 5AK
ESC 5AL
ESC 5AM
ESC 5AN
ESC 5AP
ESC 5AQ
ESC 5AR
ESC 5AS
ESC 5AT
ESC 5AU
ESC 5AV
ESC 5AW
ESC 5AX
ESC 5AY
ESC 5AZ
ESC 5BA
ESC 5BB
ESC 5BC
ESC 5BD
ESC 5BE
ESC 5BF
ESC 5BG
ESC 5BH
ESC 5BJ
ESC 5BK
ESC 5BL
ESC 5BM
ESC 5BN
ESC 5BP
ESC 5BQ
ESC 5BR
ESC 5BS
ESC 5BT
ESC 5BU
ESC 5BV
ESC 5BW
ESC 5BX
ESC 5BY
ESC 5BZ
ESC 5CA
ESC 5CB
ESC 5CC
ESC 5CD
ESC 5CE
ESC 5CF
ESC 5CG
ESC 5CH
ESC 5CJ
ESC 5CK
ESC 5CL
ESC 5CM
ESC 5CN
ESC 5CP
ESC 5CQ
ESC 5CR
ESC 5CS
ESC 5CT
ESC 5CU
ESC 5CV
ESC 5CW
ESC 5CX
ESC 5CY
ESC 5CZ
ESC 5DA
ESC 5DB
ESC 5DC
ESC 5DD
ESC 5DE
ESC 5DF
ESC 5DG
ESC 5DH
ESC 5DJ
ESC 5DK
ESC 5DL
ESC 5DM
ESC 5DN
ESC 5DP
ESC 5DQ
ESC 5DR
ESC 5DS
ESC 5DT
ESC 5DU
ESC 5DV
ESC 5DW
ESC 5DX
ESC 5DY
ESC 5DZ
ESC 5EA
ESC 5EB
ESC 5EC
ESC 5ED
ESC 5EE
ESC 5EF
ESC 5EG
ESC 5EH
ESC 5EJ
ESC 5EK
ESC 5EL
ESC 5EM
ESC 5EN
ESC 5EP
ESC 5EQ
ESC 5ER
ESC 5ES
ESC 5ET
ESC 5EU
ESC 5EV
ESC 5EW
ESC 5EX
ESC 5EY
ESC 5EZ
ESC 5FA
ESC 5FB
ESC 5FC
ESC 5FD
ESC 5FE
ESC 5FF
ESC 5FG
ESC 5FH
ESC 5FJ
ESC 5FK
ESC 5FL
ESC 5FM
ESC 5FN
ESC 5FP
ESC 5FQ
ESC 5FR
ESC 5FS
ESC 5FT
ESC 5FU
ESC 5FV
ESC 5FW
ESC 5FX
ESC 5FY
ESC 5FZ
ESC 5GA
ESC 5GB
ESC 5GC
ESC 5GD
ESC 5GE
ESC 5GF
ESC 5GG
ESC 5GH
ESC 5GJ
ESC 5GK
ESC 5GL
ESC 5GM
ESC 5GN
ESC 5GP
ESC 5GQ
ESC 5GR
ESC 5GS
ESC 5GT
ESC 5GU
ESC 5GV
ESC 5GW
ESC 5GX
ESC 5GY
ESC 5GZ
ESC 5HA
ESC 5HB
ESC 5HC
ESC 5HD
ESC 5HE
ESC 5HF
ESC 5HG
ESC 5HH
ESC 5HJ
ESC 5HK
ESC 5HL
ESC 5HM
ESC 5HN
ESC 5HP
ESC 5HQ
ESC 5HR
ESC 5HS
ESC 5HT
ESC 5HU
ESC 5HV
ESC 5HW
ESC 5HX
ESC 5HY
ESC 5HZ
ESC 5JA
ESC 5JB
ESC 5JC
ESC 5JD
ESC 5JE
ESC 5JF
ESC 5JG
ESC 5JH
ESC 5JJ
ESC 5JK
ESC 5JL
ESC 5JM
ESC 5JN
ESC 5JP
ESC 5JQ
ESC 5JR
ESC 5JS
ESC 5JT
ESC 5JU
ESC 5JV
ESC 5JW
ESC 5JX
ESC 5JY
ESC 5JZ
ESC 5KA
ESC 5KB
ESC 5KC
ESC 5KD
ESC 5KE
ESC 5KF
ESC 5KG
ESC 5KH
ESC 5KJ
ESC 5KK
ESC 5KL
ESC 5KM
ESC 5KN
ESC 5KP
ESC 5KQ
ESC 5KR
ESC 5KS
ESC 5KT
ESC 5KU
ESC 5KV
ESC 5KW
ESC 5KX
ESC 5KY
ESC 5KZ
ESC 5LA
ESC 5LB
ESC 5LC
ESC 5LD
ESC 5LE
ESC 5LF
ESC 5LG
ESC 5LH
ESC 5LJ
ESC 5LK
ESC 5LL
ESC 5LM
ESC 5LN
ESC 5LP
ESC 5LQ
ESC 5LR
ESC 5LS
ESC 5LT
ESC 5LU
ESC 5LV
ESC 5LW
ESC 5LX
ESC 5LY
ESC 5LZ
ESC 5MA
ESC 5MB
ESC 5MC
ESC 5MD
ESC 5ME
ESC 5MF
ESC 5MG
ESC 5MH
ESC 5MJ
ESC 5MK
ESC 5ML
ESC 5MM
ESC 5MN
ESC 5MP
ESC 5MQ
ESC 5MR
ESC 5MS
ESC 5MT
ESC 5MU
ESC 5MV
ESC 5MW
ESC 5MX
ESC 5MY
ESC 5MZ
ESC 5NA
ESC 5NB
ESC 5NC
ESC 5ND
ESC 5NE
ESC 5NF
ESC 5NG
ESC 5NH
ESC 5NJ
ESC 5NK
ESC 5NL
ESC 5NM
ESC 5NN
ESC 5NP
ESC 5NQ
ESC 5NR
ESC 5NS
ESC 5NT
ESC 5NU
ESC 5NV
ESC 5NW
ESC 5NX
ESC 5NY
ESC 5NZ
ESC 5PA
ESC 5PB
ESC 5PC
ESC 5PD
ESC 5PE
ESC 5PF
ESC 5PG
ESC 5PH
ESC 5PJ
ESC 5PK
ESC 5PL
ESC 5PM
ESC 5PN
ESC 5PP
ESC 5PQ
ESC 5PR
ESC 5PS
ESC 5PT
ESC 5PU
ESC 5PV
ESC 5PW
ESC 5PX
ESC 5PY
ESC 5PZ
ESC 5QA
ESC 5QB
ESC 5QC
ESC 5QD
ESC 5QE
ESC 5QF
ESC 5QG
ESC 5QH
ESC 5QJ
ESC 5QK
ESC 5QL
ESC 5QM
ESC 5QN
ESC 5QP
ESC 5QQ
ESC 5QR
ESC 5QS
ESC 5QT
ESC 5QU
ESC 5QV
ESC 5QW
ESC 5QX
ESC 5QY
ESC 5QZ
ESC 5RA
ESC 5RB
ESC 5RC
ESC 5RD
ESC 5RE
ESC 5RF
ESC 5RG
ESC 5RH
ESC 5RJ
ESC 5RK
ESC 5RL
ESC 5RM
ESC 5RN
ESC 5RP
ESC 5RQ
ESC 5RR
ESC 5RS
ESC 5RT
ESC 5RU
ESC 5RV
ESC 5RW
ESC 5RX
ESC 5RY
ESC 5RZ
ESC 5SA
ESC 5SB
ESC 5SC
ESC 5SD
ESC 5SE
ESC 5SF
ESC 5SG
ESC 5SH
ESC 5SJ
ESC 5SK
ESC 5SL
ESC 5SM
ESC 5SN
ESC 5SP
ESC 5SQ
ESC 5SR
ESC 5SS
ESC 5ST
ESC 5SU
ESC 5SV
ESC 5SW
ESC 5SX
ESC 5SY
ESC 5SZ
ESC 5TA
ESC 5TB
ESC 5TC
ESC 5TD
ESC 5TE
ESC 5TF
ESC 5TG
ESC 5TH
ESC 5TJ
ESC 5TK
ESC 5TL
ESC 5TM
ESC 5TN
ESC 5TP
ESC 5TQ
ESC 5TR
ESC 5TS
ESC 5TT
ESC 5TU
ESC 5TV
ESC 5TW
ESC 5TX
ESC 5TY
ESC 5TZ
ESC 5UA
ESC 5UB
ESC 5UC
ESC 5UD
ESC 5UE
ESC 5UF
ESC 5UG
ESC 5UH
ESC 5UJ
ESC 5UK
ESC 5UL
ESC 5UM
ESC 5UN
ESC 5UP
ESC 5UQ
ESC 5UR
ESC 5US
ESC 5UT
ESC 5UU
ESC 5UV
ESC 5UW
ESC 5UX
ESC 5UY
ESC 5UZ
ESC 5VA
ESC 5VB
ESC 5VC
ESC 5VD
ESC 5VE
ESC 5VF
ESC 5VG
ESC 5VH
ESC 5VJ
ESC 5VK
ESC 5VL
ESC 5VM
ESC 5VN
ESC 5VP
ESC 5VQ
ESC 5VR
ESC 5VS
ESC 5VT
ESC 5VU
ESC 5VV
ESC 5VW
ESC 5VX
ESC 5VY
ESC 5VZ
ESC 5WA
ESC 5WB
ESC 5WC
ESC 5WD
ESC 5WE
ESC 5WF
ESC 5WG
ESC 5WH
ESC 5WJ
ESC 5WK
ESC 5WL
ESC 5WM
ESC 5WN
ESC 5WP
ESC 5WQ
ESC 5WR
ESC 5WS
ESC 5WT
ESC 5WU
ESC 5WV
ESC 5WW
ESC 5WX
ESC 5WY
ESC 5WZ
ESC 5XA
ESC 5XB
ESC 5XC
ESC 5XD
ESC 5XE
ESC 5XF
ESC 5XG
ESC 5XH
ESC 5XJ
ESC 5XK
ESC 5XL
ESC 5XM
ESC 5XN
ESC 5XP
ESC 5XQ
ESC 5XR
ESC 5XS
ESC 5XT
ESC 5XU
ESC 5XV
ESC 5XW
ESC 5XX
ESC 5XY
ESC 5XZ
ESC 5YA
ESC 5YB
ESC 5YC
ESC 5YD
ESC 5YE
ESC 5YF
ESC 5YG
ESC 5YH
ESC 5YJ
ESC 5YK
ESC 5YL
ESC 5YM
ESC 5YN
ESC 5YP
ESC 5YQ
ESC 5YR
ESC 5YS
ESC 5YT
ESC 5YU
ESC 5YV
ESC 5YW
ESC 5YX
ESC 5YY
ESC 5YZ
ESC 5ZA
ESC 5ZB
ESC 5ZC
ESC 5ZD
ESC 5ZE
ESC 5ZF
ESC 5ZG
ESC 5ZH
ESC 5ZJ
ESC 5ZK
ESC 5ZL
ESC 5ZM
ESC 5ZN
ESC 5ZP
ESC 5ZQ
ESC 5ZR
ESC 5ZS
ESC 5ZT
ESC 5ZU
ESC 5ZV
ESC 5ZW
ESC 5ZX
ESC 5ZY
ESC 5ZZ
ESC 6AA
ESC 6AB
ESC 6AC
ESC 6AD
ESC 6AE
ESC 6AF
ESC 6AG
ESC 6AH
ESC 6AJ
ESC 6AK
ESC 6AL
ESC 6AM
ESC 6AN
ESC 6AP
ESC 6AQ
ESC 6AR
ESC 6AS
ESC 6AT
ESC 6AU
ESC 6AV
ESC 6AW
ESC 6AX
ESC 6AY
ESC 6AZ
ESC 6BA
ESC 6BB
ESC 6BC
ESC 6BD
ESC 6BE
ESC 6BF
ESC 6BG
ESC 6BH
ESC 6BJ
ESC 6BK
ESC 6BL
ESC 6BM
ESC 6BN
ESC 6BP
ESC 6BQ
ESC 6BR
ESC 6BS
ESC 6BT
ESC 6BU
ESC 6BV
ESC 6BW
ESC 6BX
ESC 6BY
ESC 6BZ
ESC 6CA
ESC 6CB
ESC 6CC
ESC 6CD
ESC 6CE
ESC 6CF
ESC 6CG
ESC 6CH
ESC 6CJ
ESC 6CK
ESC 6CL
ESC 6CM
ESC 6CN
ESC 6CP
ESC 6CQ
ESC 6CR
ESC 6CS
ESC 6CT
ESC 6CU
ESC 6CV
ESC 6CW
ESC 6CX
ESC 6CY
ESC 6CZ
ESC 6DA
ESC 6DB
ESC 6DC
ESC 6DD
ESC 6DE
ESC 6DF
ESC 6DG
ESC 6DH
ESC 6DJ
ESC 6DK
ESC 6DL
ESC 6DM
ESC 6DN
ESC 6DP
ESC 6DQ
ESC 6DR
ESC 6DS
ESC 6DT
ESC 6DU
ESC 6DV
ESC 6DW
ESC 6DX
ESC 6DY
ESC 6DZ
ESC 6EA
ESC 6EB
ESC 6EC
ESC 6ED
ESC 6EE
ESC 6EF
ESC 6EG
ESC 6EH
ESC 6EJ
ESC 6EK
ESC 6EL
ESC 6EM
ESC 6EN
ESC 6EP
ESC 6EQ
ESC 6ER
ESC 6ES
ESC 6ET
ESC 6EU
ESC 6EV
ESC 6EW
ESC 6EX
ESC 6EY
ESC 6EZ
ESC 6FA
ESC 6FB
ESC 6FC
ESC 6FD
ESC 6FE
ESC 6FF
ESC 6FG
ESC 6FH
ESC 6FJ
ESC 6FK
ESC 6FL
ESC 6FM
ESC 6FN
ESC 6FP
ESC 6FQ
ESC 6FR
ESC 6FS
ESC 6FT
ESC 6FU
ESC 6FV
ESC 6FW
ESC 6FX
ESC 6FY
ESC 6FZ
ESC 6GA
ESC 6GB
ESC 6GC
ESC 6GD
ESC 6GE
ESC 6GF
ESC 6GG
ESC 6GH
ESC 6GJ
ESC 6GK
ESC 6GL
ESC 6GM
ESC 6GN
ESC 6GP
ESC 6GQ
ESC 6GR
ESC 6GS
ESC 6GT
ESC 6GU
ESC 6GV
ESC 6GW
ESC 6GX
ESC 6GY
ESC 6GZ
ESC 6HA
ESC 6HB
ESC 6HC
ESC 6HD
ESC 6HE
ESC 6HF
ESC 6HG
ESC 6HH
ESC 6HJ
ESC 6HK
ESC 6HL
ESC 6HM
ESC 6HN
ESC 6HP
ESC 6HQ
ESC 6HR
ESC 6HS
ESC 6HT
ESC 6HU
ESC 6

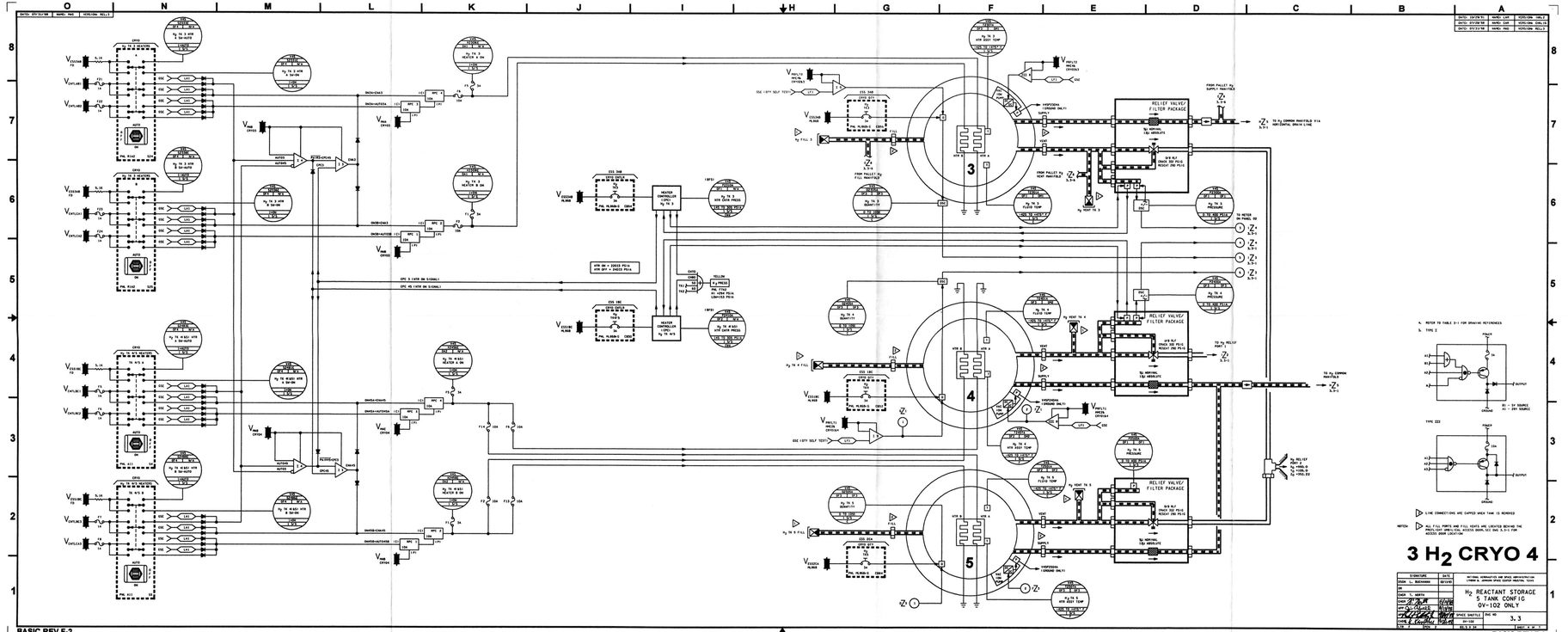
3 H2 CRYO 4
H2 REACTANT STORAGE
5 TANK CONFIG
OV-102 ONLY
3.3
BASIC REV F-2
RELIEF VALVE/ FILTER PACKAGE
TO H2 COMMON MANIFOLD
TO H2 RELIEF PORT 1
TO H2 COMMON MANIFOLD #1A HORIZONTAL BRAIN LINE
FROM PALLET H2 SUPPLY MANIFOLD
FROM PALLET H2 VENT MANIFOLD
FROM PALLET H2 FILL MANIFOLD
TO H2 VENT TO 4
TO H2 VENT TO 5
TO H2 FILL TO 5
TO H2 FILL TO 4
TO H2 FILL TO 3
TO H2 VENT TO 3
TO H2 PRESSURE
TO HEATER H2 MANIFOLD
TO H2 RELIEF PORT 2
H2 RELIEF TO HOSE 1A
H2 RELIEF TO HOSE 2A
H2 RELIEF TO HOSE 3A
H2 VENT TO 3
H2 VENT TO 4
H2 VENT TO 5
H2 FILL TO 3
H2 FILL TO 4
H2 FILL TO 5
H2 PRESSURE
H2 TEMP TO 3
H2 TEMP TO 4
H2 TEMP TO 5
H2 HEATER TEMP
H2 HEATER PRESS
H2 HEATER CONTROLLER TO H2 TK 3
H2 HEATER CONTROLLER TO H2 TK 4
H2 HEATER CONTROLLER TO H2 TK 5
H2 HEATER TEMP
H2 HEATER PRESS
H2 HEATER CONTROLLER TO H2 TK 3
H2 HEATER CONTROLLER TO H2 TK 4
H2 HEATER CONTROLLER TO H2 TK 5
H2 HEATER TEMP
H2 HEATER PRESS
H2 HEATER CONTROLLER TO H2 TK 3
H2 HEATER CONTROLLER TO H2 TK 4
H2 HEATER CONTROLLER TO H2 TK 5
H2 TK 3 VENT TEMP
H2 TK 3 VENT TEMP
H2 TK 3 FILL TEMP
H2 TK 3 VENT TEMP
H2 TK 3 VENT TEMP
H2 TK 3 FILL TEMP
H2 TK 4 VENT TEMP
H2 TK 4 VENT TEMP
H2 TK 4 FILL TEMP
H2 TK 4 VENT TEMP
H2 TK 4 VENT TEMP
H2 TK 4 FILL TEMP
H2 TK 5 VENT TEMP
H2 TK 5 VENT TEMP
H2 TK 5 FILL TEMP
H2 TK 5 VENT TEMP
H2 TK 5 VENT TEMP
H2 TK 5 FILL TEMP
H2 TK 3 PRESSURE
H2 TK 4 PRESSURE
H2 TK 5 PRESSURE

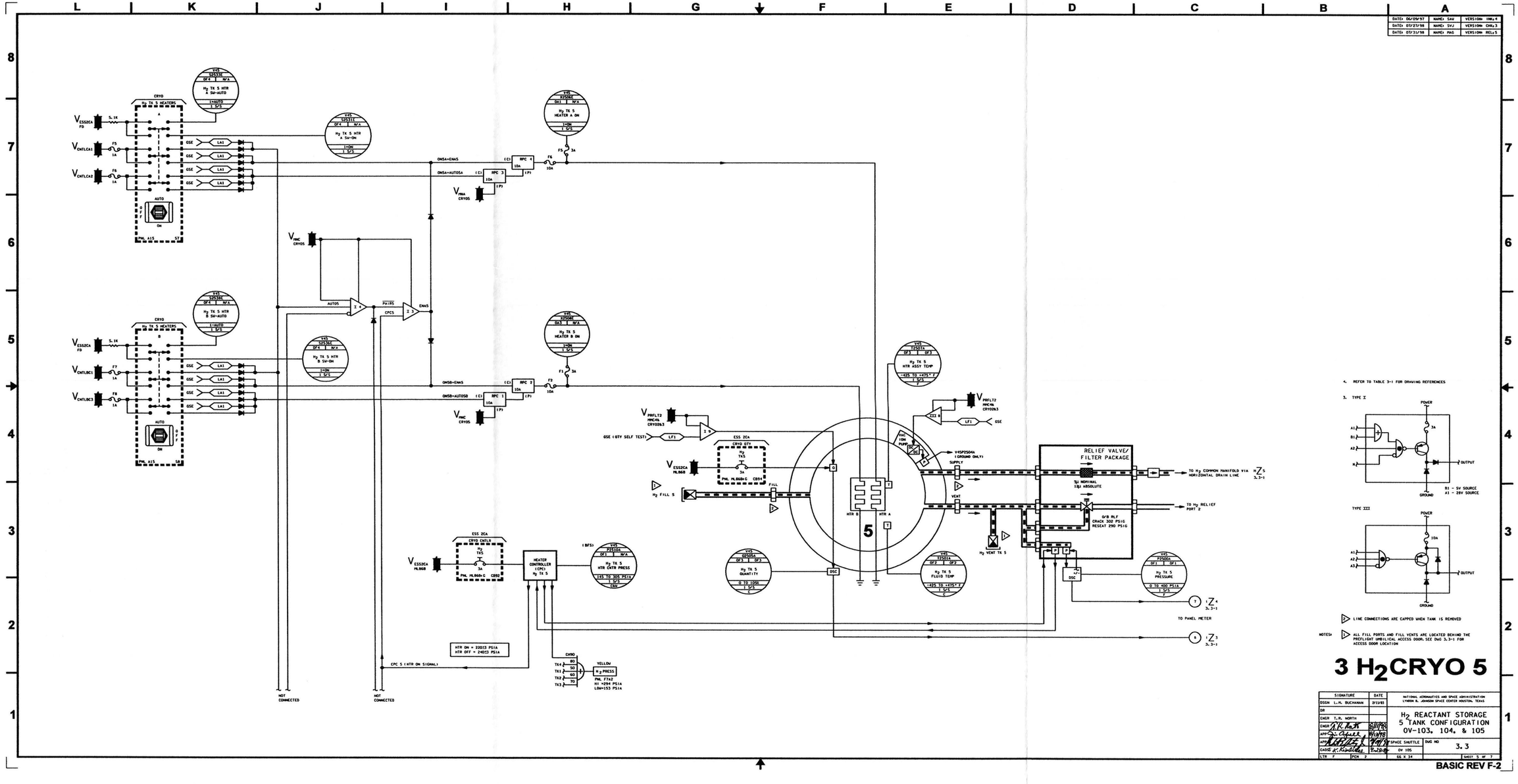

RELIEF VALVE/ FILTER PACKAGE
TO H2 COMMON MANIFOLD VIA HORIZONTAL DRAIN LINE
TO H2 RELIEF PORT 2
TO PANEL METER
HEATER CONTROLLER (CPC) H2 TK 5
HTR ON = 22013 PSIA
HTR OFF = 24013 PSIA
CPC 5 (HTR ON SIGNAL)
NOT CONNECTED
4. REFER TO TABLE 3-1 FOR DRAWING REFERENCES
3. TYPE I
TYPE III
B1 - 5V SOURCE
A1 - 28V SOURCE
LINE CONNECTIONS ARE CAPPED WHEN TANK IS REMOVED
ALL FILL PORTS AND FILL VENTS ARE LOCATED BEHIND THE PREFLIGHT UMBILICAL ACCESS DOOR. SEE DWG 3.3-1 FOR ACCESS DOOR LOCATION
3 H2CRYO 5
H2 REACTANT STORAGE
5 TANK CONFIGURATION
OV-103, 104, & 105
SPACE SHUTTLE
OV 105
3.3
BASIC REV F-2

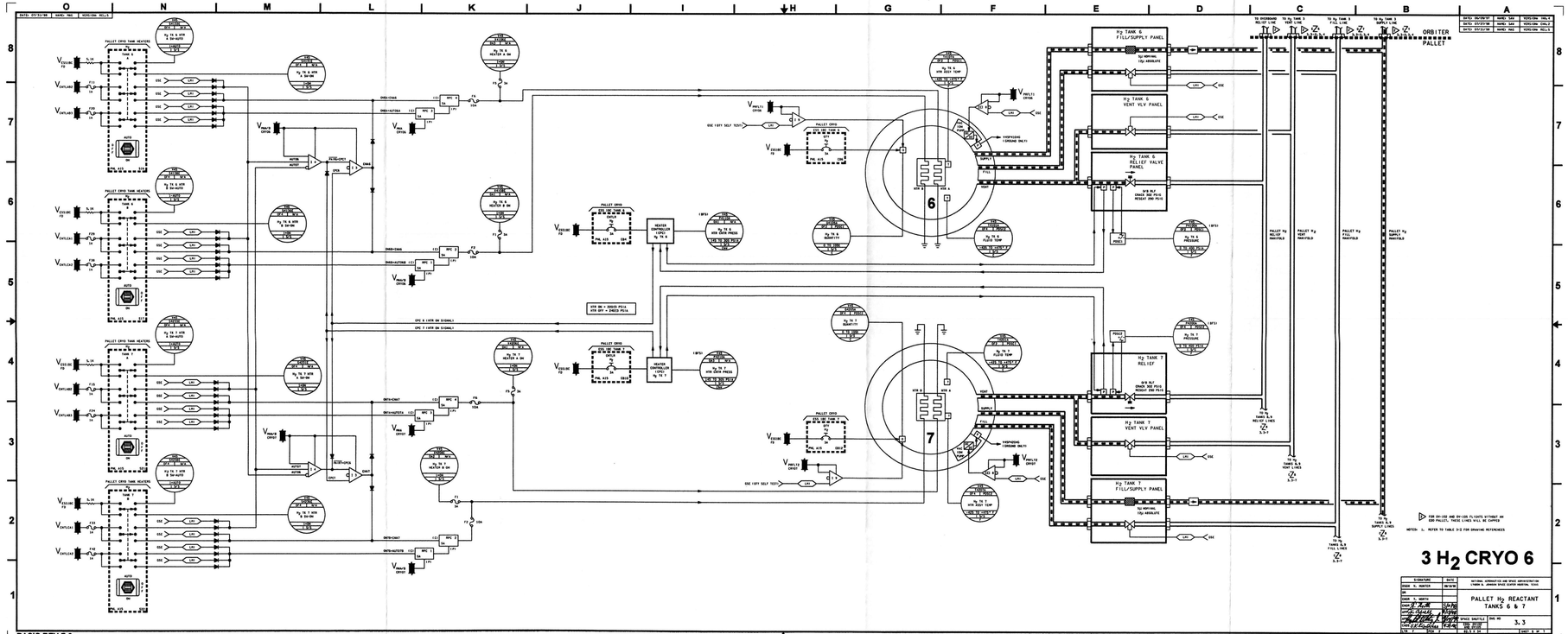
3 H2 CRYO 6
PALLET H2 REACTANT TANKS 6 & 7
H2 TANK 6 FILL/SUPPLY PANEL
H2 TANK 6 VENT VLV PANEL
H2 TANK 6 RELIEF VALVE PANEL
H2 TANK 7 RELIEF
H2 TANK 7 VENT VLV PANEL
H2 TANK 7 FILL/SUPPLY PANEL
ORBITER PALLET
PALLET H2 RELIEF MANIFOLD
PALLET H2 VENT MANIFOLD
PALLET H2 FILL MANIFOLD
PALLET H2 SUPPLY MANIFOLD
BASIC REV F-2
BASIC REV F-2

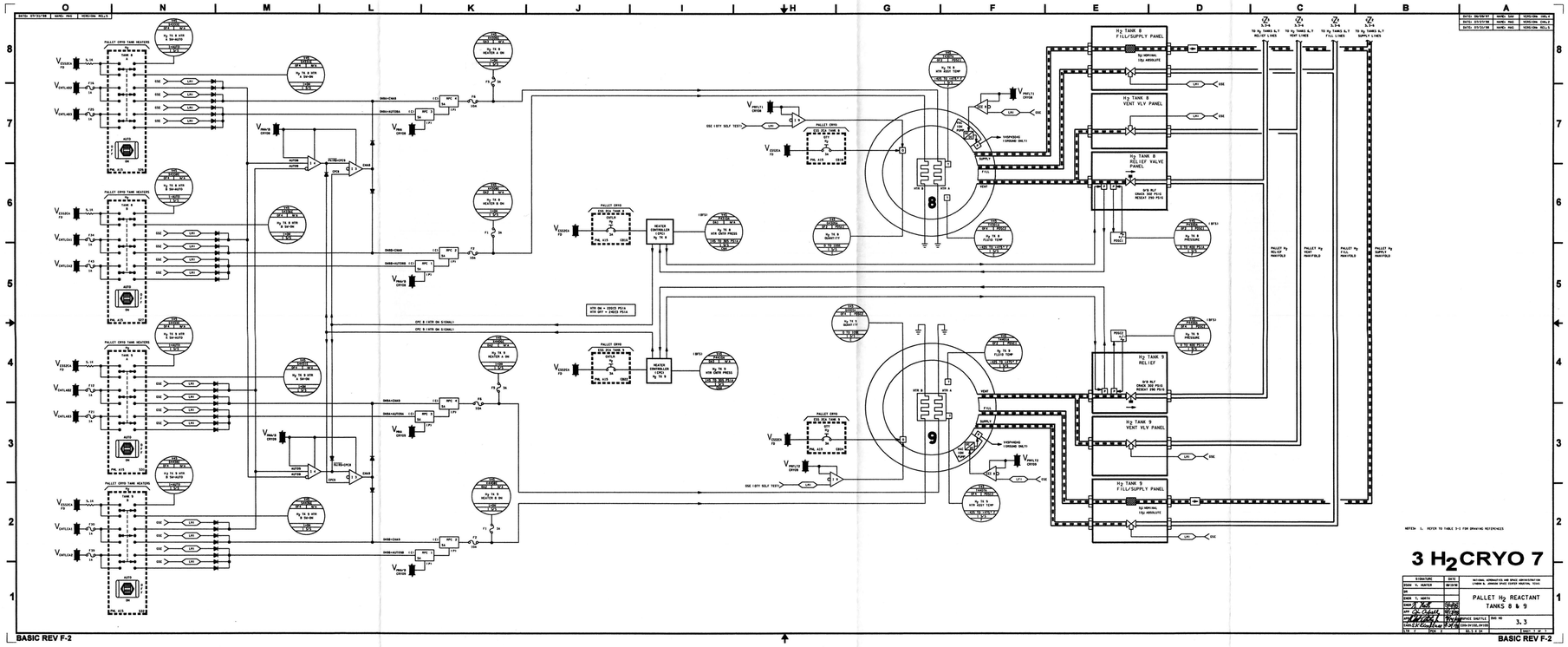
PALLET CRYO TANK HEATERS
TANK 8
TANK 9
AUTO
MAN
H_2 TK 8 HTR 1 SECOND
H_2 TK 8 HTR 2 SECOND
H_2 TK 8 HEATER 1 ON
H_2 TK 8 HEATER 2 ON
H_2 TK 8 HTR 1 ON-AUTO
H_2 TK 8 HTR 2 ON-AUTO
H_2 TK 8 HTR 1 ON-MAN
H_2 TK 8 HTR 2 ON-MAN
H_2 TK 9 HTR 1 SECOND
H_2 TK 9 HTR 2 SECOND
H_2 TK 9 HEATER 1 ON
H_2 TK 9 HEATER 2 ON
H_2 TK 9 HTR 1 ON-AUTO
H_2 TK 9 HTR 2 ON-AUTO
H_2 TK 9 HTR 1 ON-MAN
H_2 TK 9 HTR 2 ON-MAN
H_2 TANK 8 FILL/SUPPLY PANEL
H_2 TANK 8 VENT VLV PANEL
H_2 TANK 8 RELIEF VALVE PANEL
H_2 TANK 9 RELIEF
H_2 TANK 9 VENT VLV PANEL
H_2 TANK 9 FILL/SUPPLY PANEL
H_2 TK 8 PRESSURE
H_2 TK 9 PRESSURE
H_2 TK 8 QUANTITY
H_2 TK 9 QUANTITY
H_2 TK 8 FILL TEMP
H_2 TK 9 FILL TEMP
H_2 TK 8 HTR TEMP
H_2 TK 9 HTR TEMP
H_2 TK 8 HTR SELF TEST
H_2 TK 9 HTR SELF TEST
HEATER CONTROLLER H_2 TK 8
HEATER CONTROLLER H_2 TK 9
V_{PAN8} CRYO8
V_{PAN9} CRYO9
V_{FILL8} CRYO8
V_{FILL9} CRYO9
V_{VENT8} CRYO8
V_{VENT9} CRYO9
V_{RELF1} CRYO8
V_{RELF2} CRYO8
V_{RELF1} CRYO9
V_{RELF2} CRYO9
V_{GSE8A} FO
V_{GSE9A} FO
V_{GSE8B} FO
V_{GSE9B} FO
V_{HTR1} FO
V_{HTR2} FO
V_{HTR3} FO
V_{HTR4} FO
V_{HTR5} FO
V_{HTR6} FO
V_{HTR7} FO
V_{HTR8} FO
V_{HTR9} FO
V_{HTR10} FO
V_{HTR11} FO
V_{HTR12} FO
V_{HTR13} FO
V_{HTR14} FO
V_{HTR15} FO
V_{HTR16} FO
V_{HTR17} FO
V_{HTR18} FO
V_{HTR19} FO
V_{HTR20} FO

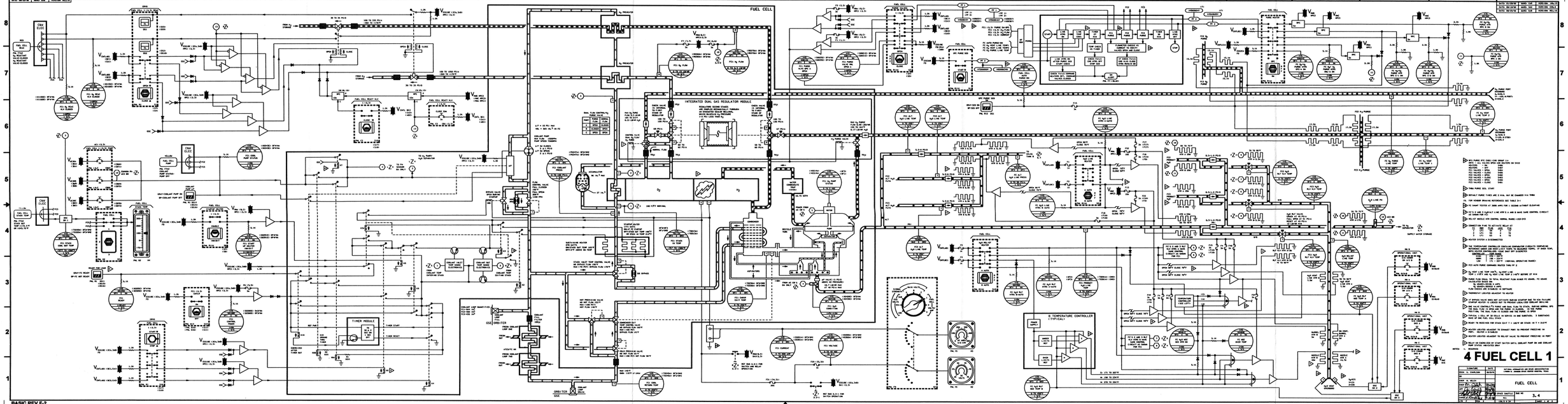
FUEL CELL
INTEGRATED DUAL GAS REGULATOR MODULE
TIMER MODULE
T.C. TEMPERATURE CONTROLLER (TYPICAL)
4 FUEL CELL 1
FUEL CELL
BASIC REV F-2

DATE: 06/18/97 | NAME: SAV | VERSION: HW.5

DATE:	NAME:	VERSION:
DATE: 11/04/91	NAME: BJT	VERSION: HW.4
DATE: 05/16/97	NAME: SAV	VERSION: SW.5
DATE: 06/18/97	NAME: SAV	VERSION: HW.5

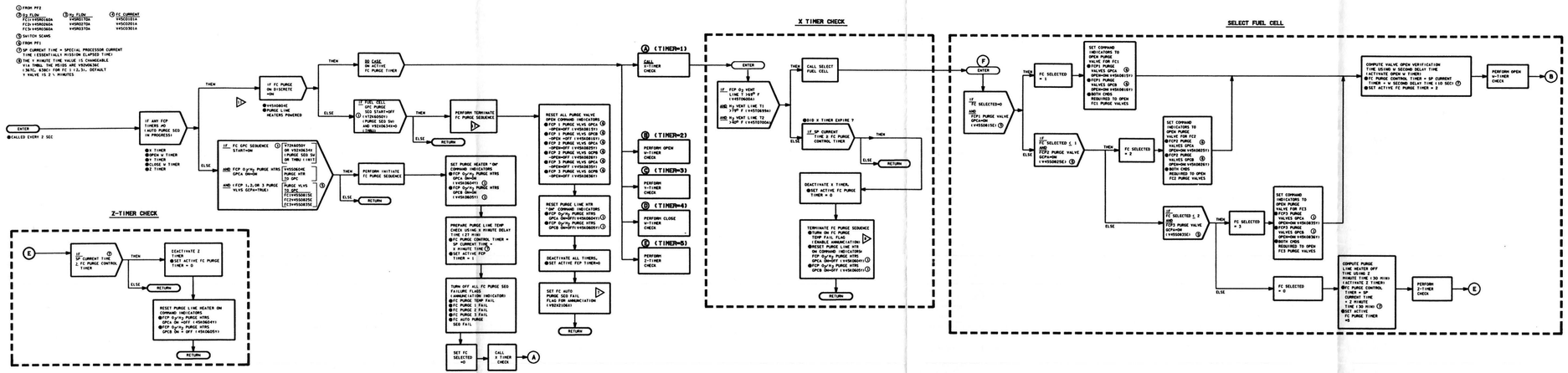

14. BFS PURGE COMMANDS

FUNCTION	BTC
ALL VLVS OPEN AND HEATERS ON	5410
ALL VLVS OPEN HEATERS OFF	5406
FC1 VLVS OPEN	5407
FC1 VLVS CLOSED	5405
FC2 VLVS OPEN	5402
FC2 VLVS CLOSED	5403
FC3 VLVS OPEN	5400
FC3 VLVS CLOSED	5401

POWER FROM HNA-B,C1 HPC1X-2,3V

10. ANY OPS TRANSITION WILL TERMINATE FC PURGE SEQUENCE

V45X0804E FC AUTO PURGE ON DISCRETE, IS UPDATED IN THE PCMMU ONCE EACH SECOND (AND IS SYNCHRONOUSLY SAMPLED BY THE GPC ONCE EVERY TWO SECONDS). THE V45X0804E BIT MAY NOT BE SET IN THE GPC UNLESS THE GPC PURGE SEQUENCE START FLAG IS SET FOR THREE SECONDS AFTER THE TALKBACK INDICATES ONLY HEATERS ARE BEING COMMANDED ON(-). THIS WOULD CAUSE THE FC PURGE SEQ 5H ALERT

10. SEE TABLE 3-I FOR VENDOR DRAWING REFERENCES

CAUSES FC PURGE 1 / 2,3 SH ALERT

CAUSES FC PURGE SEQ TEMP SH ALERT

CAUSES FC PURGE SEQ 5H ALERT

A1 AND A2 ARE SET VERY LARGE IN ORDER TO EFFECTIVELY DISABLE THE O2 AND H2 FLOW CHECKS DURING PURGE. A3 AND A4 ARE SET VERY SMALL FOR THE SAME REASON

DEMONSTRATED IF DURING SELF TEST, ANY ANALYTE MEASUREMENT IS NOT BETWEEN 375 AND 425 MV AT OUTPUT OF X 10 AMPLIFIER, (375)FLASHED TO GROUND AND CREW AS 50 TO 45 MV(-), RESET AT BEGINNING OF EACH SELF TEST PERIOD. IF ANY OF THE SUBSTACK DELTA VOLTS ARE NOT WITHIN 175 TO 500 MV(-), THE FAIL SIGNAL IS RESET AT THE BEGINNING OF EACH SELF TEST PERIOD

SELF TEST SIGNAL OF 50 MV APPLIED TO CIRCUIT INPUTS FOR 2.325.5 SECONDS. SUBSTACK DELTA VOLTS MEASUREMENT INTERRUPTED DURING THIS PERIOD

SELF TEST OCCURS EVERY 7.01 MINUTES TO EACH CPM, REGARDLESS OF WHETHER OR NOT IT HAS PREVIOUSLY FAILED SELF TEST.

DIFFERENTIAL AMPLIFIERS, OUTPUT ABSOLUTE VALUE OF VOLT DIFFERENCE BETWEEN SUBSTACK SECTIONS, CREW/GROUND ALERTS OCCUR IN SM, BFS AT ≥0.150MV

NOTES: EACH SUBSTACK CONSISTS OF 52 SERIES CONNECTED CELLS, THE SUBSTACK VOLTAGE IS MEASURED ACROSS THE ENTIRE STACK OR ACROSS ONE HALF OF A SUBSTACK (26 CELLS) TO THE OTHER HALF OF THE SAME SUBSTACK

4 FU CELL PRG 2

SIGNATURE	DATE
DSOR KENNETH PODUE	5/11/88
SR KENNETH PODUE	5/11/88
CHIEF, R. FUESTING	
MANAGER, [illegible]	
[illegible]	

NATIONAL AERONAUTICS AND SPACE ADMINISTRATION, LYNDON B. JOHNSON SPACE CENTER HOUSTON, TEXAS

FUEL CELL AUTO PURGE AND CELL PERFORMANCE MONITOR

DWG NO: 3.4

SPACE SHUTTLE

NULL

SIZE: A | CODE: | SCALE: 82.5 X 34 | PAGE: 5-42 | SHEET 4 OF 4

BASIC REV F

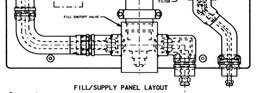

FILL/SUPPLY PANEL LAYOUT

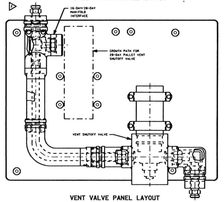

VENT VALVE PANEL LAYOUT

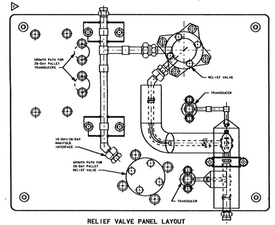

RELIEF VALVE PANEL LAYOUT

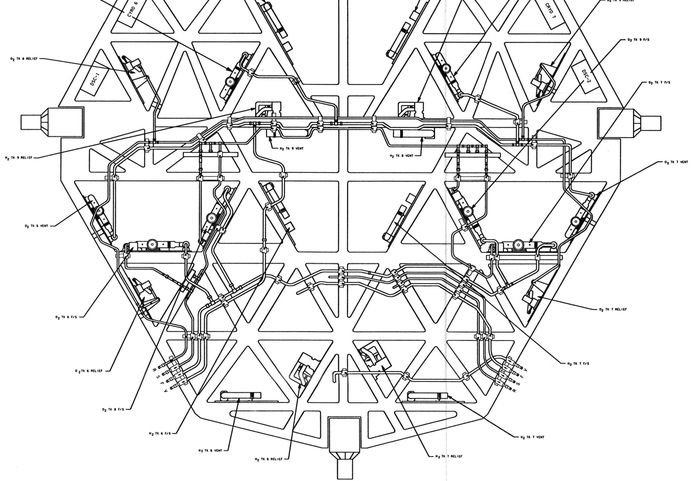

EDO PALLET WITH VALVE PANELS AND AVIONICS BOXES

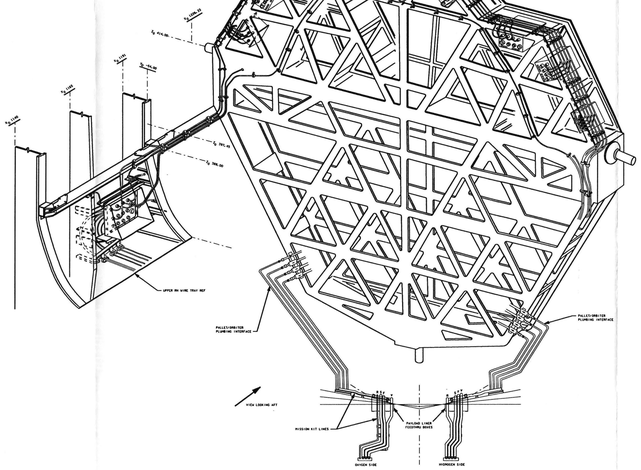

PALLET/ORBITER INTERFACE LAYOUT
CRYO AND AVIONICS



EDO PALLET/CRYO TANKS

EACH PANEL TYPE IS TYPICAL FOR TANKS 6,7,8,9

NOTES: 1. REFER TO TABLE 2.1 FOR HOSE BRAID REFERENCE

5 EDO PALLET

ORIGINATOR	DATE	NATIONAL AERONAUTICS AND SPACE ADMINISTRATION
JOHN VOSS/ S. HUNTER	08/15/85	LYNDON B. JOHNSON SPACE FLIGHT CENTER, TEXAS
JA		
CHIEF, S. PARSONS		EDO PALLET
APPROVED BY		
APPROVED BY		
APPROVED BY		
CHIEF, ENGINEERING		

SPACE SHUTTLE | DWG NO. 3.5

SCALE | SHEET

BASIC REV F

BASIC REV F

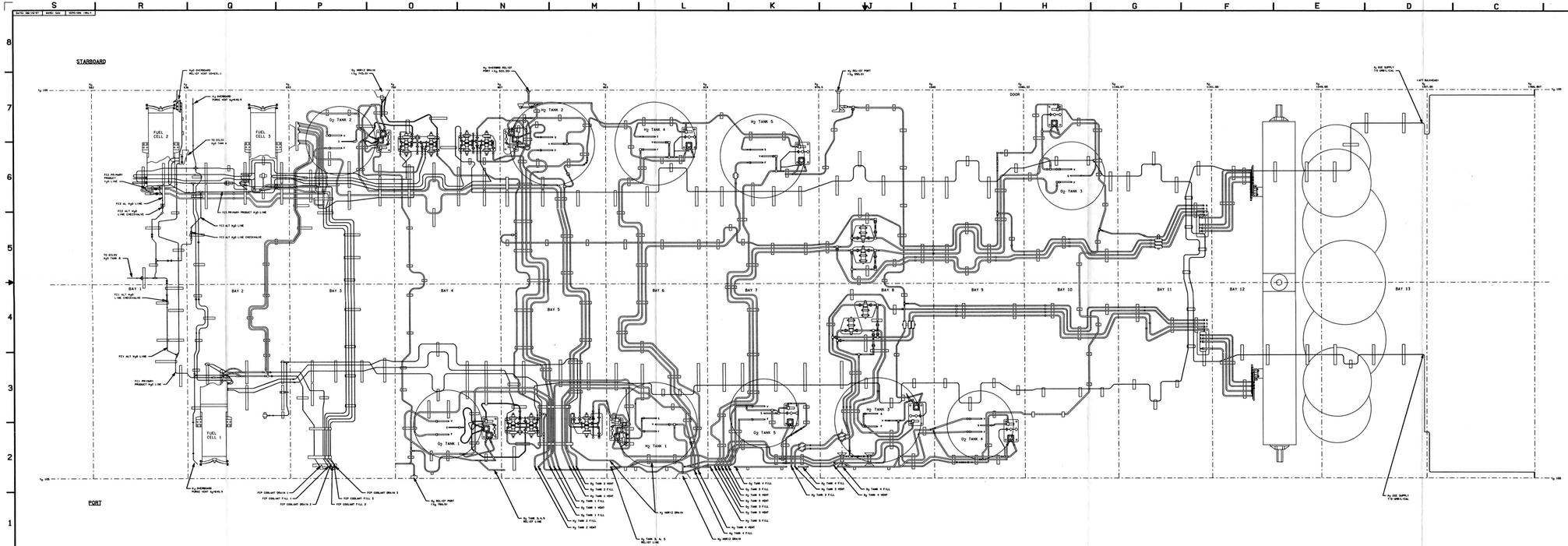

GB EDO CRYO PALLET PLUMBING

SIGNATURE	DATE	NATIONAL AERONAUTICS AND SPACE ADMINISTRATION
DRAWN: A. BLANCHARD	11/13/90	LYNDON B. JOHNSON SPACE CENTER HOUSTON, TEXAS
CHK: BY: BY: //		
CHAR: D. FARSTAD		EDO CRYO PALLET PLUMBING
APPROVED:		
APPROVED:		
APPROVED:		
APPROVED:		
CHIEF DESIGN ENGR		SHEET NUMBER / REV LTR: 3.6B
CM / PDE	DATE	SCALE: 0" = 1'-0" SHEET 1 OF 1

BASIC REV F

BASIC REV F

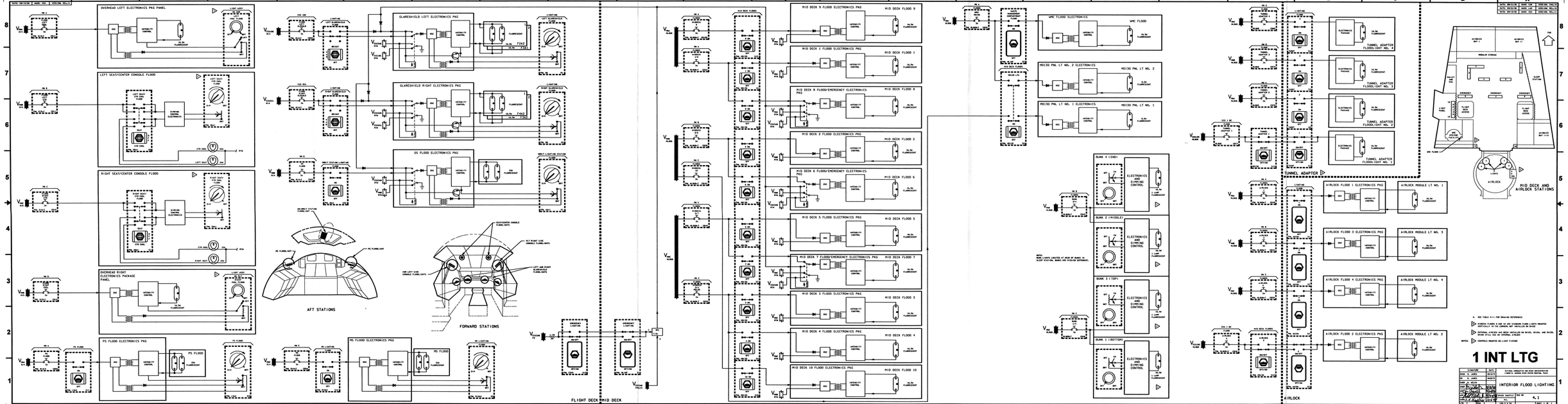
OVERHEAD LEFT ELECTRONICS PKG PANEL
LEFT SEAT/CENTER CONSOLE FLOOD
RIGHT SEAT/CENTER CONSOLE FLOOD
OVERHEAD RIGHT ELECTRONICS PACKAGE PANEL
PS FLOOD ELECTRONICS PKG
GLARESHIELD LEFT ELECTRONICS PKG
GLARESHIELD RIGHT ELECTRONICS PKG
OS FLOOD ELECTRONICS PKG
MS FLOOD ELECTRONICS PKG
AFT STATIONS
FORWARD STATIONS
MID DECK FLOOD 9 ELECTRONICS PKG
MID DECK 1 FLOOD ELECTRONICS PKG
MID DECK 8 FLOOD/EMERGENCY ELECTRONICS PKG
MID DECK 2 FLOOD ELECTRONICS PKG
MID DECK 6 FLOOD/EMERGENCY ELECTRONICS PKG
MID DECK 5 FLOOD ELECTRONICS PKG
MID DECK 7 FLOOD/EMERGENCY ELECTRONICS PKG
MID DECK 3 FLOOD ELECTRONICS PKG
MID DECK 4 FLOOD ELECTRONICS PKG
MID DECK 10 FLOOD ELECTRONICS PKG
VPC FLOOD ELECTRONICS
M0130 PNL LT NO. 2 ELECTRONICS
M0130 PNL LT NO. 1 ELECTRONICS
BUNK 4 (END)
BUNK 2 (MIDDLE)
BUNK 3 (TOP)
BUNK 1 (BOTTOM)
TUNNEL ADAPTER FLOOD/LIGHT NO. 1
TUNNEL ADAPTER FLOOD/LIGHT NO. 2
TUNNEL ADAPTER FLOOD/LIGHT NO. 3
TUNNEL ADAPTER FLOOD/LIGHT NO. 4
AIRLOCK FLOOD 1 ELECTRONICS PKG
AIRLOCK FLOOD 3 ELECTRONICS PKG
AIRLOCK FLOOD 4 ELECTRONICS PKG
AIRLOCK FLOOD 2 ELECTRONICS PKG
AIRLOCK MODULE LT NO. 1
AIRLOCK MODULE LT NO. 3
AIRLOCK MODULE LT NO. 4
AIRLOCK MODULE LT NO. 2
MID DECK AND AIRLOCK STATIONS
1 INT LTG
INTERIOR FLOOD LIGHTING
FLIGHT DECK
MID DECK
AIRLOCK
BASIC REV F-2

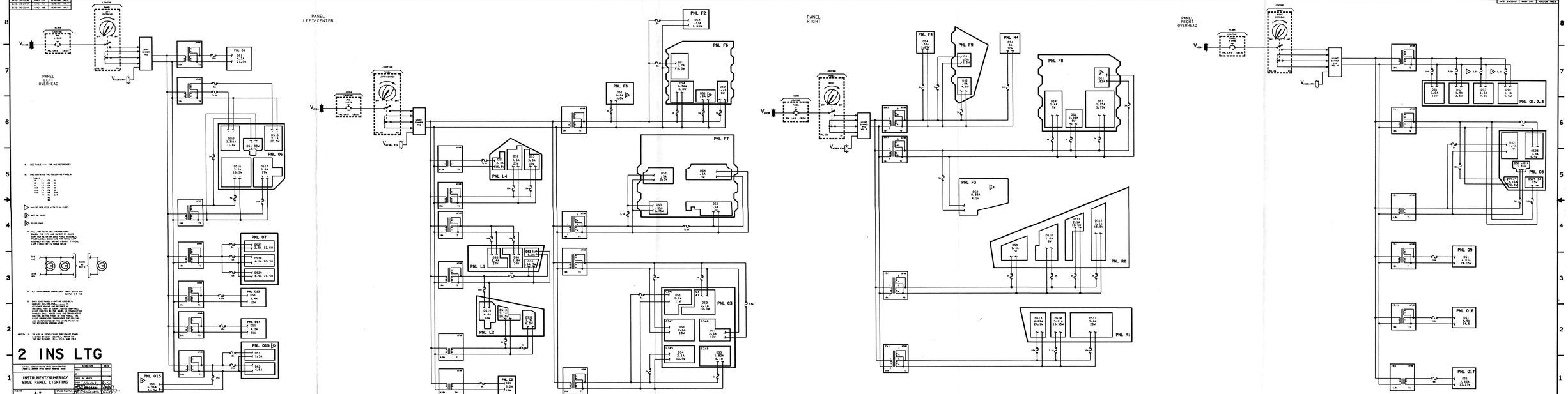
PANEL LEFT OVERHEAD
PANEL LEFT/CENTER
PANEL RIGHT
PANEL RIGHT OVERHEAD
PNL 05
PNL 06
PNL 07
PNL 013
PNL 014
PNL 015
PNL 016
PNL 017
PNL 01,2,3
PNL 08
PNL 09
PNL F2
PNL F3
PNL F4
PNL F6
PNL F7
PNL F8
PNL F9
PNL R1
PNL R2
PNL R4
PNL L1
PNL L2
PNL L4
PNL C2
PNL C3
2 INS LTG
INSTRUMENT/NUMERIC/ EDGE PANEL LIGHTING
4.2
BASIC REV F

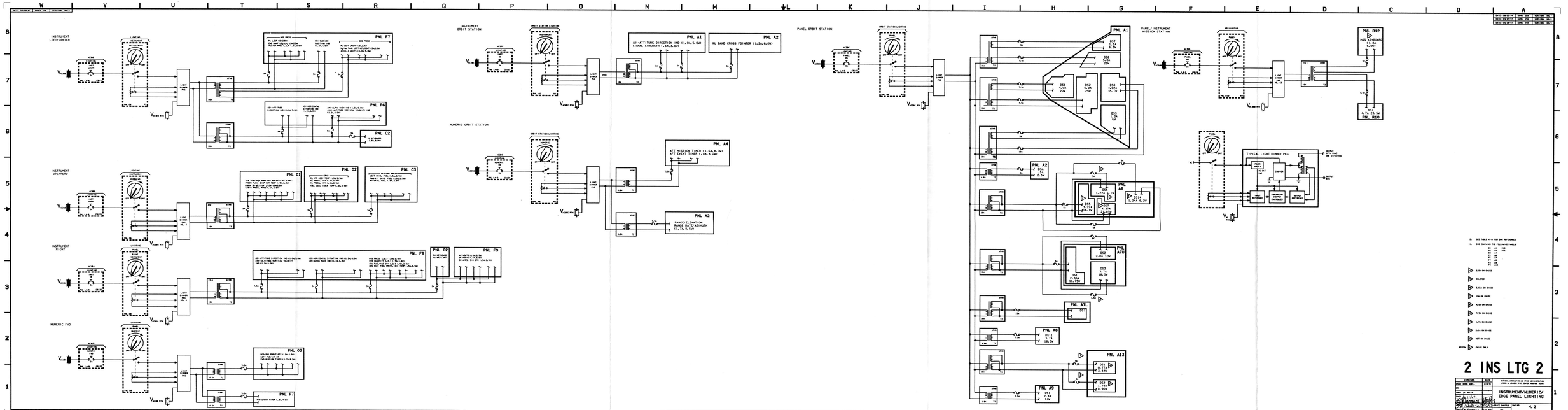
INSTRUMENT LEFT/CENTER
INSTRUMENT OVERHEAD
INSTRUMENT RIGHT
NUMERIC FWD
INSTRUMENT ORBIT STATION
NUMERIC ORBIT STATION
PANEL ORBIT STATION
PANEL/ INSTRUMENT MISSION STATION
PNL F7
PNL F6
PNL C2
PNL G1
PNL G2
PNL G3
PNL F8
PNL C2
PNL F9
PNL G3
PNL F7
PNL A1
PNL A2
PNL A4
PNL A2
PNL A1
PNL ATU
PNL ATL
PNL A8
PNL A13
PNL A9
PNL R12
PNL R10
TYPICAL LIGHT DIMMER PKG
2 INS LTG 2
INSTRUMENT/NUMERIC/ EDGE PANEL LIGHTING
4.2
BASIC REV F

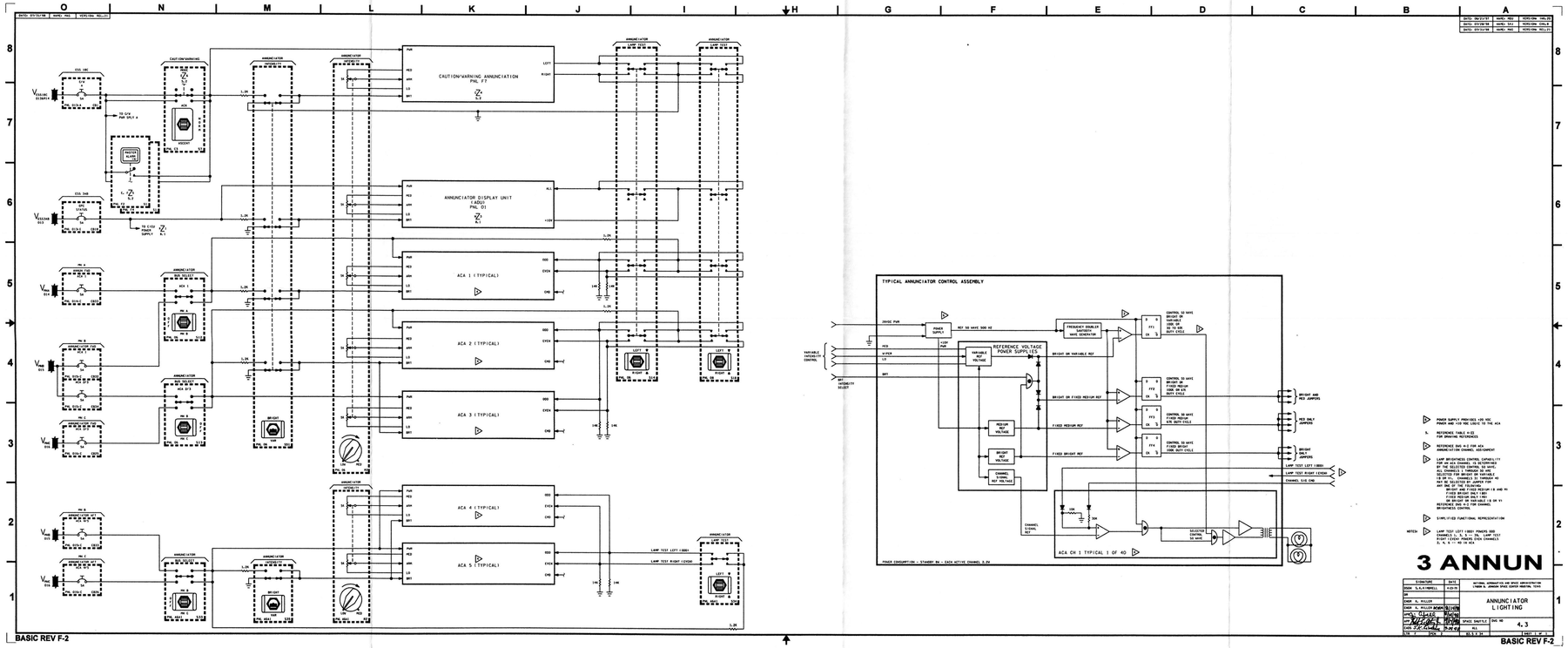

CAUTION/WARNING ANNUNCIATION PNL F7
ANNUNCIATOR DISPLAY UNIT PNL D1
ACA 1 (TYPICAL)
ACA 2 (TYPICAL)
ACA 3 (TYPICAL)
ACA 4 (TYPICAL)
ACA 5 (TYPICAL)
TYPICAL ANNUNCIATOR CONTROL ASSEMBLY
REFERENCE VOLTAGE POWER SUPPLIES
ACA CH 1 TYPICAL 1 OF 40
3 ANNUN
ANNUNCIATOR LIGHTING
4.3
BASIC REV F-2

DATE: 05/29/97 NAME: VSH HSR/DBM 196L12

DATE: 03/03/98 NAME: TFJ HSR/DBM 196L12
DATE: 09/26/96 NAME: VSH HSR/DBM 196L12
DATE: 05/29/97 NAME: VSH HSR/DBM 196L12

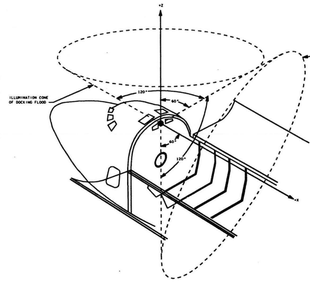

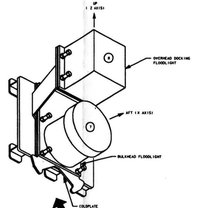

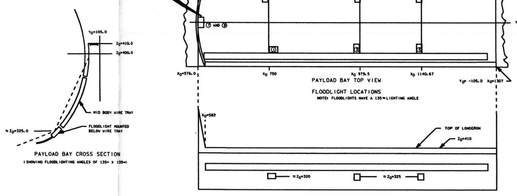

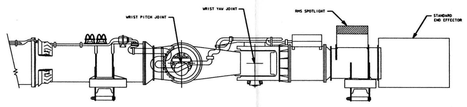

NOTE: RMS MISSION DEPENDENT

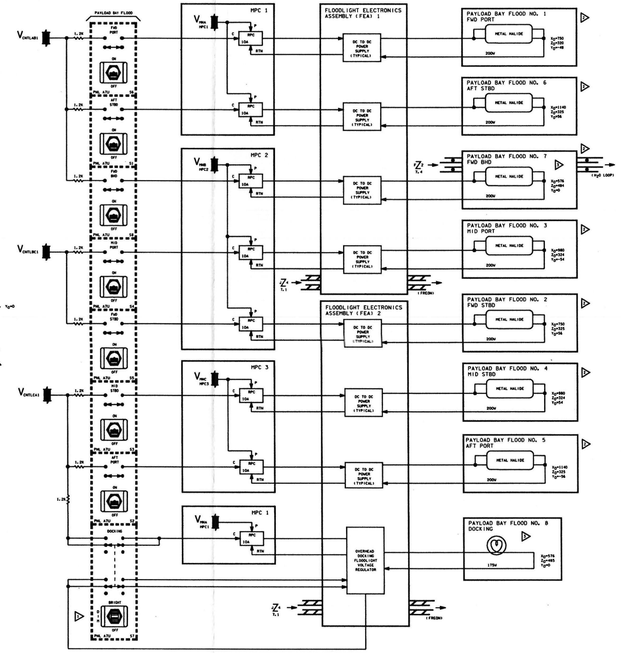

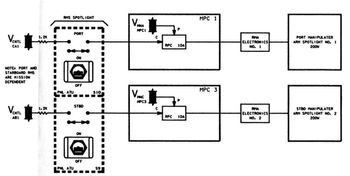

NOTE: PORT ARM STOWAGE AND ARM POSITION DEPENDENT

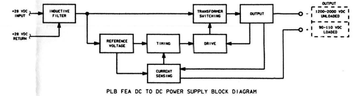

PLB FEA DC TO DC POWER SUPPLY BLOCK DIAGRAM

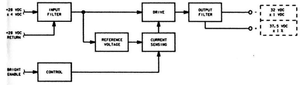

PLB FEA OVERHEAD DOCKING FLOODLIGHT VOLTAGE REGULATOR BLOCK DIAGRAM

5. SEE SHS 4.5 FOR HDS LIGHTING
4. SEE TABLE 4-22 FOR Drawing REFERENCES
△ THE DOCKING AND FWD BHD FLOODLIGHT ARE MOUNTED ON THE SAME CB/PLATE
△ REQUIRES 2 TO 3 MINUTES TO REACH FULL BRIGHT
NOTES: △ DIM POSITION IS 60 PERCENT OF FULL BRIGHT

4 EX LTG

SIGNATURE	DATE
DSGN L. A. BUCKHAM	1/30/80
DR L. A. BUCKHAM	1/30/80
CHKR N. HINES	
CHK Paul Stahle	2/6/80
APPD Wayne Hale	2/6/80
CHIEF Douglas Kirby	2/6/80

NATIONAL AERONAUTICS AND SPACE ADMINISTRATION
LYNDON B. JOHNSON SPACE CENTER HOUSTON, TEXAS

EXTERIOR LIGHTING

SPACE SHUTTLE | DWG NO 4.4
ALL
SCALE NONE | SHEET 1 OF 1
FORM 21-0

BASIC REV F

DATE	SIGNATURE	NOMO	VERSION
09/04/98		NONE	VOO
10/01/98		NONE	VOO/OM REL 4
12/08/98		NONE	VOO/OM REL 5

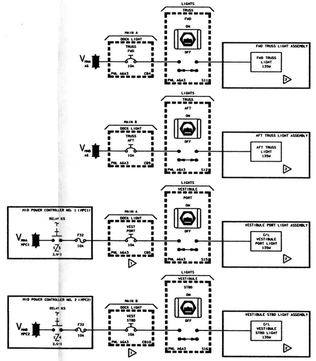

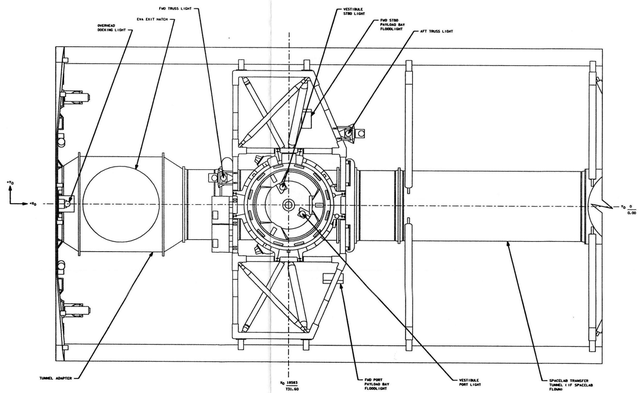

ODS LIGHTS	CENTERLINE LOCATION					
	X_b		Y_b		Z_b	
	IN	MM	IN	MM	IN	MM
CENTERLINE CAMERA LIGHTS	706.34	18000	11.40	290	440.71	11210
	745.94	18820	+5.30	+135	440.71	11219
TRACK CAMERA LIGHTS	683.98	17414	15.62	-433	426.33	10848
	770.47	19570	05.43	1205	426.33	10838

ORBITER DOCKING SYSTEM (ODS) CAMERA LIGHT LOCATIONS

LOCATION OF LIGHTS	ATTACHMENT LOCATION		SIDE	FIXTURE CENTERLINE			
	X_b			Y_b		Z_b	
	IN	MM		IN	MM	IN	MM
FWD TRUSS/AFT	726.98	19038	AFT	0.00	0	464.00	12000
FWD STBD	726.98	19038	FORWARD	+06.00	+1295	504.00	8128
FWD PORT	726.98	19038	AFT	+06.00	+1295	504.00	8128
AFT STBD	773.98	19974	FORWARD	-06.00	-1295	504.00	8127
AFT PORT	773.98	19974	FORWARD	-06.00	-1295	504.00	8127
AFT TRUSS	1145.67	29093	FORWARD	06.00	-1422	534.00	8052
AFT TRUSS	1145.67	29093	AFT	06.00	-1422	534.00	8052

SHUTTLE CARGO BAY LIGHT COORDINATES

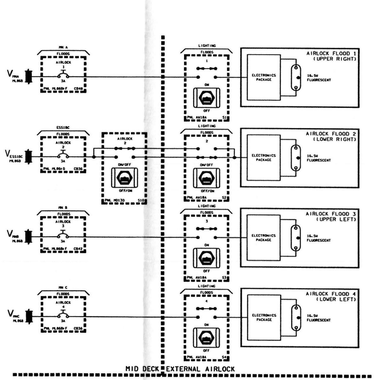

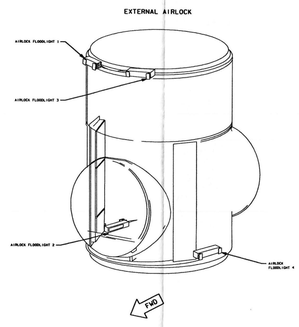

▷ TRUSS AND SIX VESTIBULE LIGHT ASSEMBLIES ARE SAME DESIGN AS THE MID SPOTLIGHT ASSEMBLY WITHOUT THE ELECTRONICS PACKAGE

NOTE: ▷ SIX CIRCUIT BREAKERS ARE MAINLY USED TO PROVIDE REDUNDANCY AND NOT A FAILED-ON LIGHT FAILURE SCENARIO

5 ODS AL LGTS

SIGNATURE	DATE	
DEAN S. TEDDER	09/04	NATIONAL AERONAUTICS AND SPACE ADMINISTRATION LYNDON B. JOHNSON SPACE CENTER HOUSTON, TEXAS
DR		
CHIEF R. MILLER		ORBITER DOCKING SYSTEM EXTERNAL AIRLOCK LIGHTS
CHIEF		
CHIEF		
CHIEF	

ALL VEHICLES
REV F

TABLE 4-I.- ANNUNCIATOR CONTROL ASSEMBLY CHANNEL ASSIGNMENTS

ACA NO. 1

LAMP TEST LEFT - ODD

Panel Number	Light title	Light No.	Color	Channel	No. bulbs	Redundant Bulb Pwr	Brightness Control
L1A1	SMOKE DETECTION A -- CABIN	(XDS1)	R	1	2		B&V
	L FLT DECK	(XDS1)	R	3	2		B&V
	AV BAY 1	(XDS1)	R	5	2		B&V
	AV BAY 2	(XDS1)	R	7	2		B&V
	AV BAY 3	(XDS1)	R	9	2		B&V
F2	PITCH -- AUTO	(S2)	W	13	2		B&V
	CSS	(S3)	W	15	2		B&V
	ROLL/YAW -- AUTO	(S5)	W	19	2		B&V
	CSS	(S6)	W	21	2		B&V
	SPD BK/THROT -- AUTO	(S8)	W	25	2		B&V
	MAN	(S8)	W	27	2		B&V
	BODY FLAP -- AUTO	(S9)	W	29	2		B&V
	MAN	(S9)	W	11	2		B&V
	BFC	(XDS3)	Y	37	2		B&V
	MASTER ALARM	(S1)	R	33	2	ACA2	B&M
F6A8	ABORT	(S2)	R	31	2	ACA2	B&M
	RANGE SAFE ARM	(XDS3)	R	35	1	ACA2,3	BO
	RANGE SAFE ARM	(XDS3)	R	39	1	ACA2,3	BO

LAMP TEST RIGHT - EVEN

Panel Number	Light title	Light No.	Color	Channel	No. bulbs	Redundant Bulb Pwr	Brightness Control
C3A6	ORBITAL DAP -- CONTROL -- INRTL	(S4)	W	2	2		B&V
	-- RCS JETS -- LVLH	(S5)	W	4	2		B&V
	-- FREE	(S6)	W	6	2		B&V
	ROTATION ORBITAL DAP -- ROLL PRI	(S7)	W	10	2		B&V
	PITCH ALT	(S8)	W	12	2		B&V
	YAW VERN	(S9)	W	14	2		B&V
	ROLL DISC RATE	(S10)	W	18	2		B&V
	PITCH DISC RATE	(S11)	W	20	2		B&V
	YAW DISC RATE	(S12)	W	22	2		B&V
	ROLL PULSE	(S13)	W	26	2		B&V
	PITCH PULSE	(S14)	W	28	2		B&V
	YAW PULSE	(S15)	W	30	2		B&V
F4	MASTER ALARM	(S1)	R	32	2	ACA3	B&M
F7A7	MAIN ENGINE 2 STATUS LEFT	(XDS2)	R	8	2		B&V
	LEFT	(XDS2)	Y	16	2		B&V
M052J	MASTER ALARM	(S3)	R	36	2	ACA3	MO
--	SPARE	-	-	24	-		B&V
--	SPARE	-	-	34	-		B&V
--	SPARE	-	-	38	-		B&V
--	SPARE	-	-	40	-		B&V

ACA NO. 2

LAMP TEST LEFT - ODD

Panel Number	Light title	Light No.	Color	Channel	No. bulbs	Redundant Bulb Pwr	Brightness Control
L1A1	SMOKE DETECTION B -- PAYLOAD	(XDS1)	R	1	2		B&V
	R FLT DECK	(XDS1)	R	3	2		B&V
	AV BAY 1	(XDS1)	R	5	2		B&V
	AV BAY 2	(XDS1)	R	7	2		B&V
	AV BAY 3	(XDS1)	R	9	2		B&V
--	SPARE	-	-	11	-		B&V
--	SPARE	-	-	13	-		B&V
--	SPARE	-	-	15	-		B&V
F2	MASTER ALARM	(S1)	R	33	2	ACA1	B&M
F6A8	ABORT	(S2)	R	31	2	ACA1	B&M
	RANGE SAFE ARM	(XDS3)	R	39	1	ACA1,3	BO
	RCS COMMAND -- ROLL L	(XDS1)	W	17	1	ACA3	B&V
	ROLL R	(XDS1)	W	19	1	ACA3	B&V
	PITCH U	(XDS1)	W	21	1	ACA3	B&V
	PITCH D	(XDS1)	W	23	1	ACA3	B&V
	YAW L	(XDS1)	W	25	1	ACA3	B&V
	YAW R	(XDS1)	W	27	1	ACA3	B&V
F7A5	SM ALERT	(XDS1)	B	29	2	ACA3	B&V
M029J	MIC	--	W	35	2		MO
	KEY	--	W	37	2		MO

LAMP TEST RIGHT - EVEN

Panel Number	Light title	Light No.	Color	Channel	No. bulbs	Redundant Bulb Pwr	Brightness Control
--	SPARE	-	-	2	-		B&V
--	SPARE	-	-	4	-		B&V
--	SPARE	-	-	6	-		B&V
--	SPARE	-	-	8	-		B&V
--	SPARE	-	-	10	-		B&V
F3	ANTISKID FAIL	(XDS2)	Y	12	2		B&V
F4	PITCH -- AUTO	(S2)	W	14	2		B&V
	CSS	(S3)	W	16	2		B&V
	ROLL/YAW -- AUTO	(S5)	W	20	2		B&V
	CSS	(S6)	W	22	2		B&V
	SPD BK/THROT -- AUTO	(S8)	W	26	2		B&V
	MAN	(S8)	W	28	2		B&V
	BODY FLAP -- AUTO	(S9)	W	30	2		B&V
	MAN	(S9)	W	34	2		B&V
F7A7	MAIN ENGINE 3 STATUS -- RIGHT	(XDS3)	R	32	2		B&V
	RIGHT	(XDS3)	Y	38	2		B&V
F8A5	LANDING GEAR -- ARM	(S1)	Y	36	2		B&V
	DOWN	(S2)	G	40	2		B&V

ACA NO. 3

LAMP TEST LEFT - ODD

Panel Number	Light title	Light No.	Color	Channel	No. bulbs	Redundant Bulb Pwr	Brightness Control
--	SPARE	-	-	1	-		B&V
--	SPARE	-	-	3	-		B&V
--	SPARE	-	-	5	-		B&V
--	SPARE	-	-	7	-		B&V
--	SPARE	-	-	9	-		B&V
F3	NWS FAIL	(XDS2)	Y	35	2		B&V
L1A1	FIRE SUPPRESSION AV BAY 1 AGENT DISCH	(S4)	Y	11	2		B&V
	2 AGENT DISCH	(S5)	Y	13	2		B&V
	3 AGENT DISCH	(S6)	Y	15	2		B&V
--	SPARE	-	-	37	-		B&V
F6A5	LANDING GEAR -- ARM	(S1)	Y	31	2		B&V
	DOWN	(S2)	G	33	2		B&V
F6A8	RCS COMMAND -- ROLL L	(XDS1)	W	17	1	ACA2	B&V
	ROLL R	(XDS1)	W	19	1	ACA2	B&V
	PITCH U	(XDS1)	W	21	1	ACA2	B&V
	PITCH D	(XDS1)	W	23	1	ACA2	B&V
	YAW L	(XDS1)	W	25	1	ACA2	B&V
	YAW R	(XDS1)	W	27	1	ACA2	B&V
	RANGE SAFE ARM	(XDS3)	R	39	1	ACA1,2	BO
F7A5	SM ALERT	(XDS1)	B	29	2	ACA2	B&V

LAMP TEST RIGHT - EVEN

Panel Number	Light title	Light No.	Color	Channel	No. bulbs	Redundant Bulb Pwr	Brightness Control
F4	BFC	(S8)	Y	24	2		B&V
	MASTER ALARM	(S1)	R	32	2	ACA1	B&M
F7A7	MAIN ENGINE 1 STATUS -- CTR	(XDS1)	R	8	2		B&V
	CTR	(XDS1)	Y	16	2		B&V
--	SPARE	-	-	34	-		B&V
--	SPARE	-	-	38	-		B&V
--	SPARE	-	-	40	-		B&V
C3A6	ORBITAL DAP SELECT A	(S1)	W	2	2		B&V
	SELECT B	(S2)	W	4	2		B&V
	CONTROL AUTO	(S3)	W	6	2		B&V
	TRANSLATION ORBITER DAP -- X BLANK	(S16)	W	10	2		B&V
	Y LOW Z	(S17)	W	12	2		B&V
	Z HIGH Z	(S18)	W	14	2		B&V
	X NORM	(S19)	W	18	2		B&V
	Y NORM	(S20)	W	20	2		B&V
	Z NORM	(S21)	W	22	2		B&V
	X PULSE	(S22)	W	26	2		B&V
	Y PULSE	(S23)	W	28	2		B&V
	Z PULSE	(S24)	W	30	2		B&V
M052J	MASTER ALARM	(S3)	R	36	2	ACA1	MO

ACA NO. 4

LAMP TEST LEFT - ODD

Panel Number	Light title	Light No.	Color	Channel	No. bulbs	Redundant Bulb Pwr	Brightness Control
A6A1	ORBITAL DAP -- SELECT -- A	(S8)	W	1	2		B&V
	-- SELECT -- B	(S9)	W	3	2		B&V
	-- CONTROL -- AUTO	(S10)	W	5	2		B&V
	TRANSLATION ORBITER DAP -- X HIGH	(S14)	W	9	2		B&V
	Y HIGH	(S15)	W	11	2		B&V
	Z HIGH	(S16)	W	13	2		B&V
	X NORM	(S20)	W	17	2		B&V
	Y NORM	(S21)	W	19	2		B&V
	Z NORM	(S22)	W	21	2		B&V
	X PULSE	(S26)	W	25	2		B&V
	Y PULSE	(S27)	W	27	2		B&V
	Z PULSE	(S28)	W	29	2		B&V
--	SPARE	-	-	7	-		B&V
--	SPARE	-	-	15	-		B&V
--	SPARE	-	-	23	-		B&V
--	SPARE	-	-	31	-		B&V
--	SPARE	-	-	33	-		B&V
--	SPARE	-	-	35	-		B&V
--	SPARE	-	-	37	-		B&V
--	SPARE	-	-	39	-		B&V

LAMP TEST RIGHT - EVEN

Panel Number	Light title	Light No.	Color	Channel	No. bulbs	Redundant Bulb Pwr	Brightness Control
A7A1	VIDEO INPUT -- FWD BAY	(S27)	W	14	2		B&V
	KEEL/EVA	(S28)	W	16	2		B&V
	AFT BAY	(S29)	W	18	2		B&V
	PL 1	(S33)	W	20	2		B&V
	PL 2	(S34)	W	22	2		B&V
	PL 3	(S35)	W	24	2		B&V
	MID DECK	(S55)	W	34	2		B&V
	VIDEO OUTPUT -- MON 1	(S19)	W	2	2		B&V
	MON 2	(S23)	W	8	2		B&V
	MUX 1L	(S20)	W	4	2		B&V
	MUX 1R	(S21)	W	6	2		B&V
	MUX 2L	(S24)	W	10	2		B&V
	MUX 2R	(S25)	W	12	2		B&V
	GAMMA -- WHITE STRCH	(S48)	W	26	2		B&V
	NORM	(S49)	W	28	2		B&V
	BLACK STRCH	(S50)	W	30	2		B&V
	MASTER ALARM	(S51)	R	32	2	ACA5	B&M
--	SPARE	-	-	36	-		B&V
--	SPARE	-	-	38	-		B&V
--	SPARE	-	-	40	-		B&V

ACA NO. 5

LAMP TEST RIGHT - ODD

Panel Number	Light title	Light No.	Color	Channel	No. bulbs	Redundant Bulb Pwr	Brightness Control
A2	MIC	--	W	35	2		B&V
	KEY	--	W	37	2		B&V
A6A1	ORBITAL DAP -- CONTROL -- INRTL	(S11)	W	1	2		B&V
	-- RCS JETS -- LVLH	(S12)	W	3	2		B&V
	-- FREE	(S13)	W	5	2		B&V
	ROTATION ORBITAL DAP ROLL PRI	(S17)	W	9	2		B&V
	PITCH ALT	(S18)	W	11	2		B&V
	YAW VERN	(S19)	W	13	2		B&V
	ROLL DISC RATE	(S23)	W	17	2		B&V
	PITCH DISC RATE	(S24)	W	19	2		B&V
	YAW DISC RATE	(S25)	W	21	2		B&V
	ROLL PULSE	(S29)	W	25	2		B&V
	PITCH PULSE	(S30)	W	27	2		B&V
	YAW PULSE	(S31)	W	29	2		B&V
--	SPARE	-	-	7	-		B&V
--	SPARE	-	-	15	-		B&V
--	SPARE	-	-	23	-		B&V
--	SPARE	-	-	31	-		B&V
--	SPARE	-	-	33	-		B&V
--	SPARE	-	-	39	-		B&V

LAMP TEST RIGHT - EVEN

Panel Number	Light title	Light No.	Color	Channel	No. bulbs	Redundant Bulb Pwr	Brightness Control
A7A1	VIDEO INPUT -- RMS STBD	(S30)	W	14	2		B&V
	RMS PORT	(S31)	W	16	2		B&V
	FLT/DECK	(S32)	W	18	2		B&V
	MUX 1	(S36)	W	20	2		B&V
	MUX 2	(S37)	W	22	2		B&V
	TEST	(S38)	W	24	2		B&V
	VIDEO OUTPUT --DOWNLINK	(S22)	W	6	2		B&V
	PAYLOAD	(S26)	W	12	2		B&V
ALC -- PEAK		(S45)	W	26	2		B&V
NORM		(S46)	W	28	2		B&V
AVG		(S47)	W	30	2		B&V
MASTER ALARM		(S51)	R	32	2	ACA4	B&M
--	SPARE	-	-	2	-		B&V
--	SPARE	-	-	4	-		B&V
--	SPARE	-	-	8	-		B&V
--	SPARE	-	-	10	-		B&V
--	SPARE	-	-	34	-		B&V
--	SPARE	-	-	36	-		B&V
--	SPARE	-	-	38	-		B&V
--	SPARE	-	-	40	-		B&V

NOTES: 1. REFER TO TABLE 4-II FOR DRAWING REFERENCES

SIGNATURE		DATE
ENGR	KOURI MILLER	
ENGR	Kouri Miller	8/18/97
ASM	[illegible]	8/22/97
ASM	[illegible]	9/22/97

2568, ART. 10

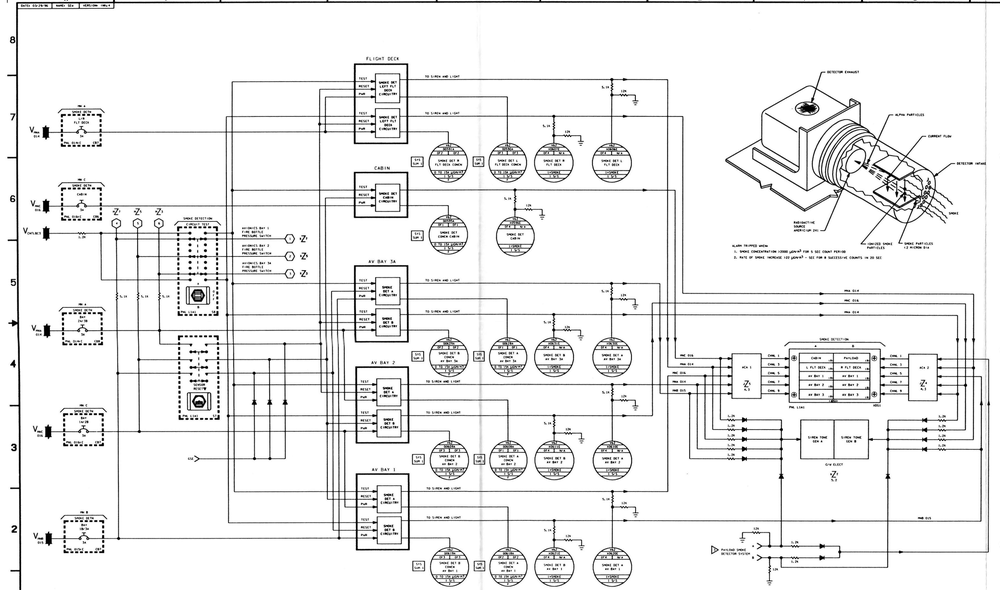
FLIGHT DECK
CABIN
AV BAY 3A
AV BAY 2
AV BAY 1
SMOKE DETECTION
SMOKE DET A
SMOKE DET B
SMOKE DET C
SMOKE DET D
SMOKE DET E
SMOKE DET F
SMOKE DET G
SMOKE DET H
SMOKE DET I
SMOKE DET J
SMOKE DET K
SMOKE DET L
SMOKE DET M
SMOKE DET N
SMOKE DET O
SMOKE DET P
SMOKE DET Q
SMOKE DET R
SMOKE DET S
SMOKE DET T
SMOKE DET U
SMOKE DET V
SMOKE DET W
SMOKE DET X
SMOKE DET Y
SMOKE DET Z
SMOKE DET 1
SMOKE DET 2
SMOKE DET 3
SMOKE DET 4
SMOKE DET 5
SMOKE DET 6
SMOKE DET 7
SMOKE DET 8
SMOKE DET 9
SMOKE DET 10
SMOKE DET 11
SMOKE DET 12
SMOKE DET 13
SMOKE DET

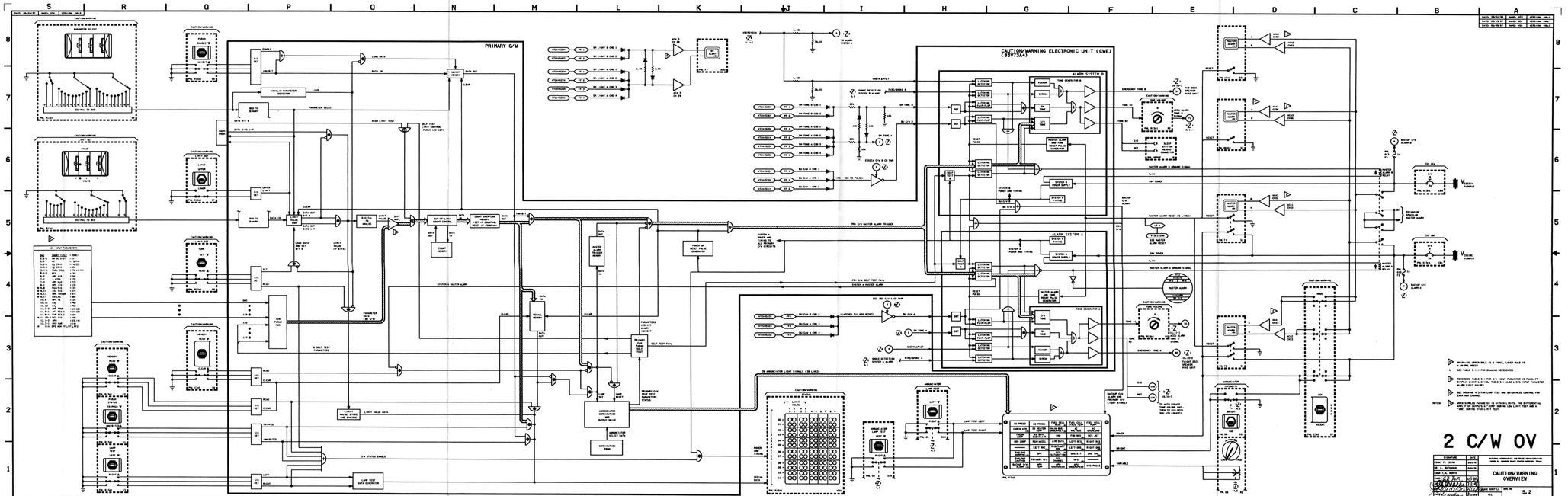
PRIMARY C/W
CAUTION/WARNING ELECTRONIC UNIT (CWE) (83V73A4)
ALARM SYSTEM B
ALARM SYSTEM A
TIME GENERATOR B
TIME GENERATOR A
2 C/W OV
CAUTION/WARNING OVERVIEW
BASIC REV F

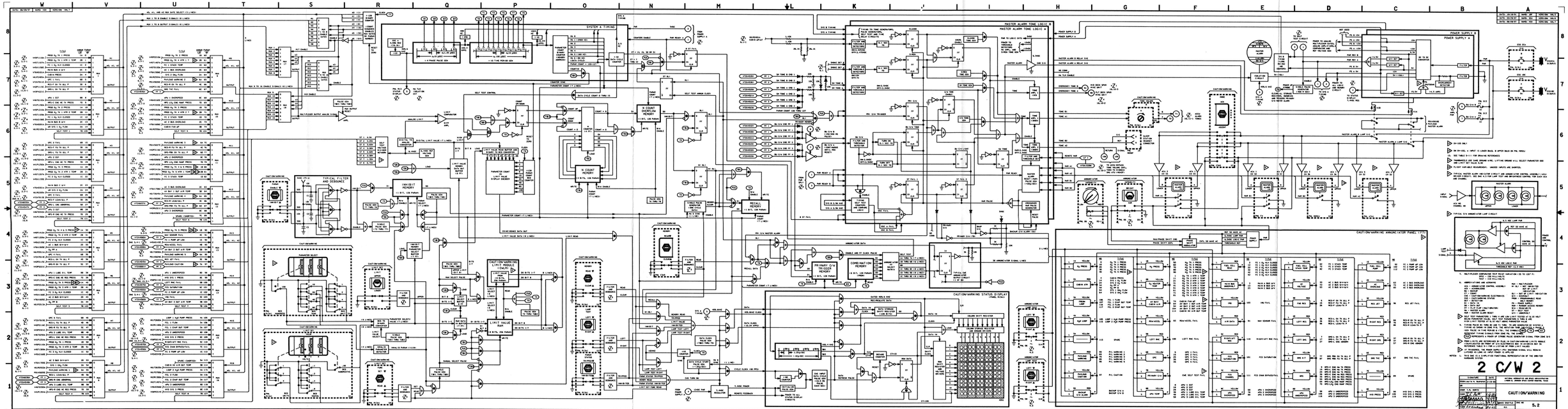
2 C/W 2
CAUTION/WARNING
BASIC REV F

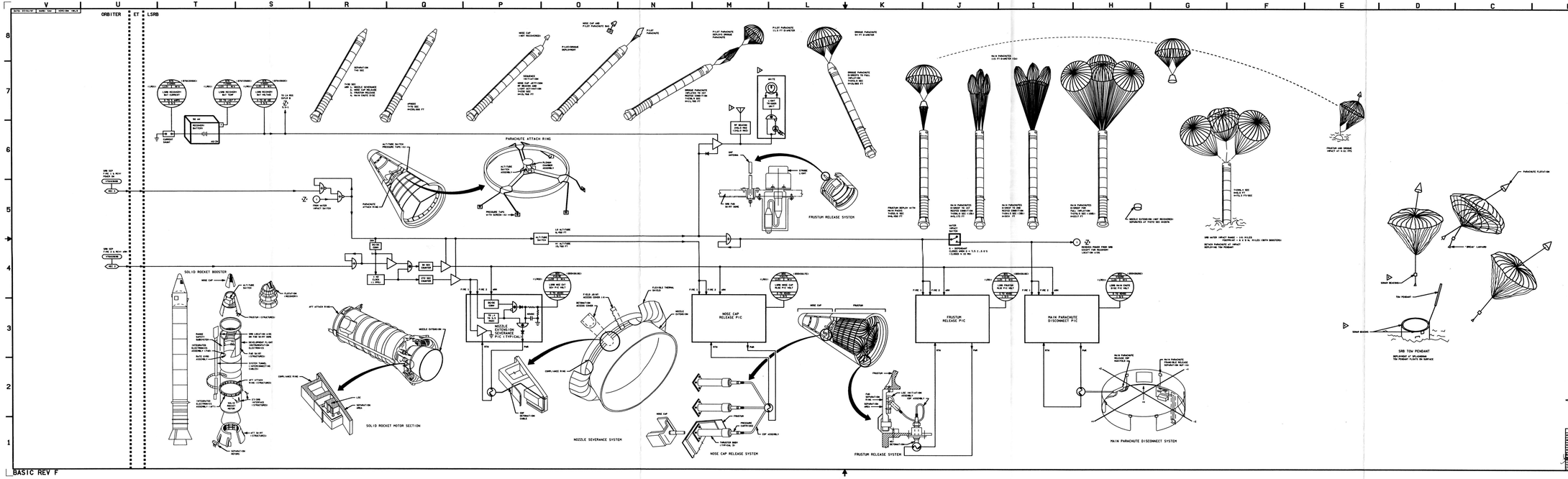

4 SRB REC

SOLID ROCKET BOOSTER RECOVERY

5.4

BASIC REV F

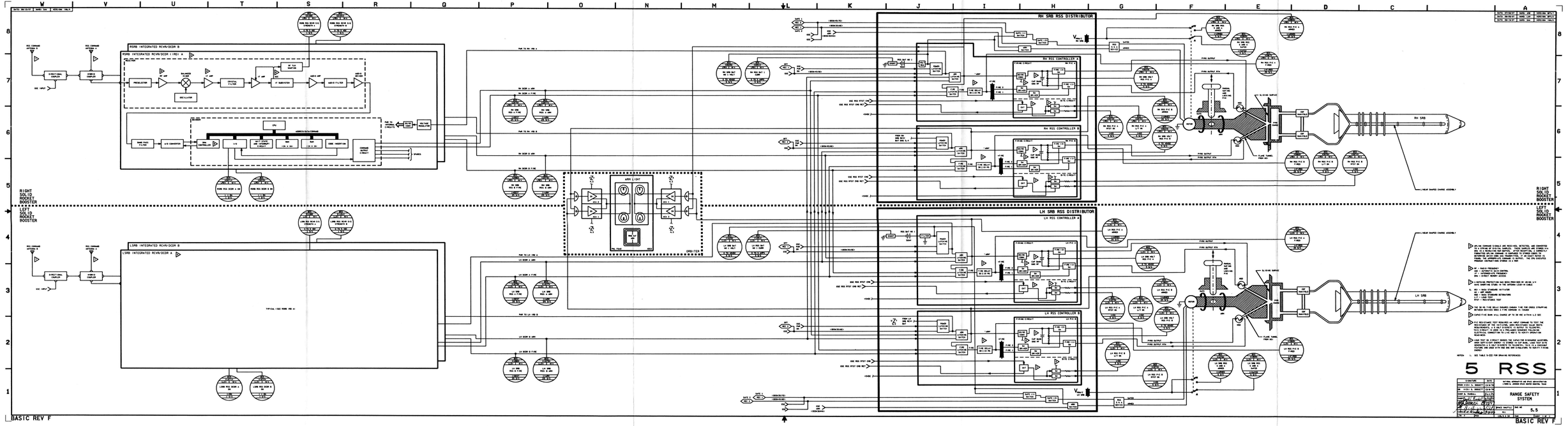
RH SRB RSS DISTRIBUTOR
RH RSS CONTROLLER A
RH RSS CONTROLLER B
LH SRB RSS DISTRIBUTOR
LH RSS CONTROLLER A
LH RSS CONTROLLER B
RSRB INTEGRATED RCVR/DCDR B
LSRB INTEGRATED RCVR/DCDR B
RIGHT SOLID ROCKET BOOSTER
LEFT SOLID ROCKET BOOSTER
ARM LIGHT
ORBITER
RH SRB
LH SRB
5 RSS
RANGE SAFETY SYSTEM
5.5
BASIC REV F

DATE DRAWING	SHEET SIZE	CODE/DWG. ANALYST
DATE: 03/29/1995	SHEET: 52A	CODE/DWG. CONSULTS
DATE: 03/29/1995	SHEET: 48A	CODE/DWG. MEA/13

TOTAL USE RATES AND BIT COUNT CHANGE RATES OF DETAILED IT DATA FOR SAFEHOUSE CREW CLASS

DETAILED IT DATA	4 MAN			6 MAN			8 MAN			10 MAN		
	MIN	AVG	MAX	MIN	AVG	MAX	MIN	AVG	MAX	MIN	AVG	MAX
GE USE, LB/HR	0.70	0.74	0.74	0.70	0.74	0.74	0.70	0.74	0.74	0.70	0.74	0.74
MISC EQUIP., PPL/HR	0.355	0.388	0.422	0.33	0.354	0.377	0.355	0.355	0.396	0.355	0.355	0.355
S/W BIT WORD, K/H	30	31	31	30	31	31	30	31	31	30	31	31
EQ PROC, LB/HR	0.74	0.74	0.74	0.74	0.77	0.77	1.885	0.74	0.74	0.74	0.74	0.74
EQ BIT WORD, K/H	0.74	0.74	0.74	0.74	0.74	0.74	0.74	0.74	0.74	0.74	0.74	0.74
I/O BIT WORD, K/H	4.5	4.5	4.5	4.5	4.5	4.5	4.5	4.5	4.5	4.5	4.5	4.5

B - ATTEMPT CO_2 REMOVAL

POSSIBLE CHETAHPT B/T CONFIGURATIONS:
1 & 2 / 1, 2 & 3 / 1, 2, 3 & 4
WATER LOCATION: 1 TANK 3 AND 4 AND STATION 2 TANKS 1 AND 2
(OF THE SIX TANKS, TWO "A" REPRESENTS POTABLE/H2 B/T TANKS, TWO "B" TANKS ARE FOR FUEL CELL/POTABLE AND / OF TANK INSTALLED

CHART DATA COMPROMISED WITH FLIGHT DATA
OF = 02 RAMP "A" USE ONLY

PPRSS-ONA (*SELECTED), PPOSS-ONA (*SELECTED) AND PPRSS-ONB (*SELECTED), PPOSS-ONB (*SELECTED) ARE INDIRECT PPRSS, PPOSS, AND PPSEC FROM THE GROUND OF TUNNELS A (RAMP CHAMBER) THRU BAY 1
PPRSS-ONA (*SELECTED), PPOSS-ONA (*SELECTED) AND PPRSS-ONB (*SELECTED), PPOSS-ONB (*SELECTED) ARE INDIRECT PPRSS, PPOSS, AND PPSEC FROM THE GROUND OF TUNNELS A (RAMP CHAMBER) THRU BAY 1

PPRSS-ONA VALUE	PPOSS-ONA VALUE	STATUS
1	0	STATION BAY 1
0	1	STATION BAY 2
1	1	STATION BAY 3
0	0	STATION BAY 4

PPRSS-ONB VALUE	PPOSS-ONB VALUE	STATUS
1	0	STATION BAY 5
0	1	STATION BAY 6
1	1	STATION BAY 7
0	0	STATION BAY 8

15. PPSS ENABLE = 0 OR ELSE P = 0, THEN * HAS I NOT ENJOY MESSAGE IS DISPLAYED FOR EL CONSUMPTION / VELOCITY

15. ITEM NO.'S REFER TO MARSHALL HARDWARE NO.'S

CABIN PRESSURE BLEED VALVES (ITEM 2,A/C)
THESE VALVES ARE OPENED BY THE CABIN PRESSURE CONTROL AND ARE USED TO VENT THE CABIN PRESSURE DOWN FOLLOWING THE PRESSURE CHECK LOW CHECK AT 14.7 PSIA, CLOSING AT 14.7 PSIA WITH 15.7 PSIA MAXIMUM PRESSURE

POSITIVE PRESSURE RELIEF VALVES (ITEM 3,A)
THESE PRESSURE COMPENSATED PURPOSE VALVES ARE SPRING LOADED TO PREVENT CABIN PRESSURE FROM EXCEEDING 15.7 PSIA WITH NUMBERS. REDUNDED BATTERIES VALVES AS REMOTE CONTROLLED TO CLOSE THE LINE IF THE RELIEF VALVE FAILS OPEN

FOR 30-120 ONLY, PPRSS WAS SPECIFICALLY IN A METERED CIRCUIT AND REDUCED 3 SIGNAL CONDITIONED TO APPLY THE SIGNAL. THE SYSTEM PROVIDES MORE RELIABLE WITHOUT A METERED PRESS SIGNAL. THE SYSTEM PROVIDES MORE RELIABLE WITHOUT A METERED PRESS SIGNAL. THE SYSTEM PROVIDES MORE RELIABLE WITHOUT A METERED PRESS SIGNAL.

IF A FIRE OCCURS AT ANY CREW STATION OCCUPIED, THE CAMP WILL BE ISOLATED FROM THE CABIN

PRELIMINARY CABIN PRESSURE ACTUAL PSIA
PREV. HEADER: CABIN PRESSURE ACTUAL PSIA

Xp BLEED ORIFICE: INSTALLED AT 100 Xp B OR PPOS-ESP TO BE PROVIDED FOR
THE ORIFICE SIZE IS DETERMINED FROM THE MAXIMUM LEAK RATE OF EACH MODULE FOR 7 DAY MAX DEPT.

REFER TO TABLE 6-1 FOR ORIGINAL REFERENCES

WITH APPL'S, PPL = PPO, Xp
Xp IS THE CABIN PRESS AT TIME ZERO WHILE Xp IS THE CABIN PRESS AT TIME ZERO WHILE Xp IS THE CABIN PRESS AT TIME ZERO WHILE

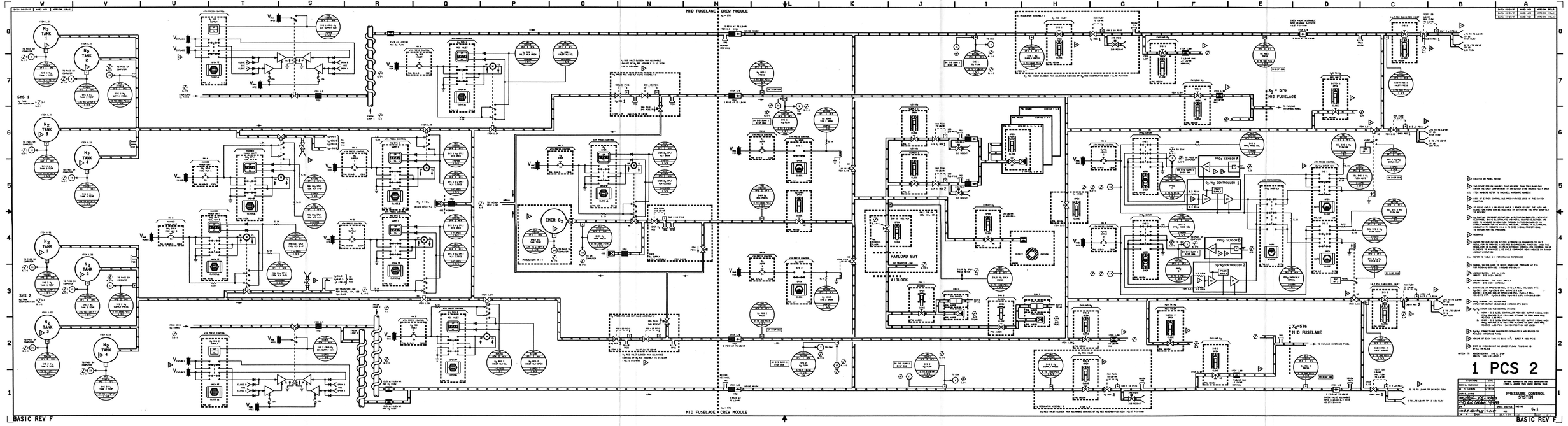
MID FUSELAGE
CREW MODULE
SYS 1
SYS 2
N2 TANK 1
N2 TANK 2
N2 TANK 3
N2 TANK 4
AIRLOCK
PAYLOAD BAY
MISSION KIT
ENER O2
PPO2 SENSOR A
PPO2 SENSOR B
O2/N2 CONTROLLER 1
O2/N2 CONTROLLER 2
X0 = 576
MID FUSELAGE
1 PCS 2
PRESSURE CONTROL SYSTEM
BASIC REV F

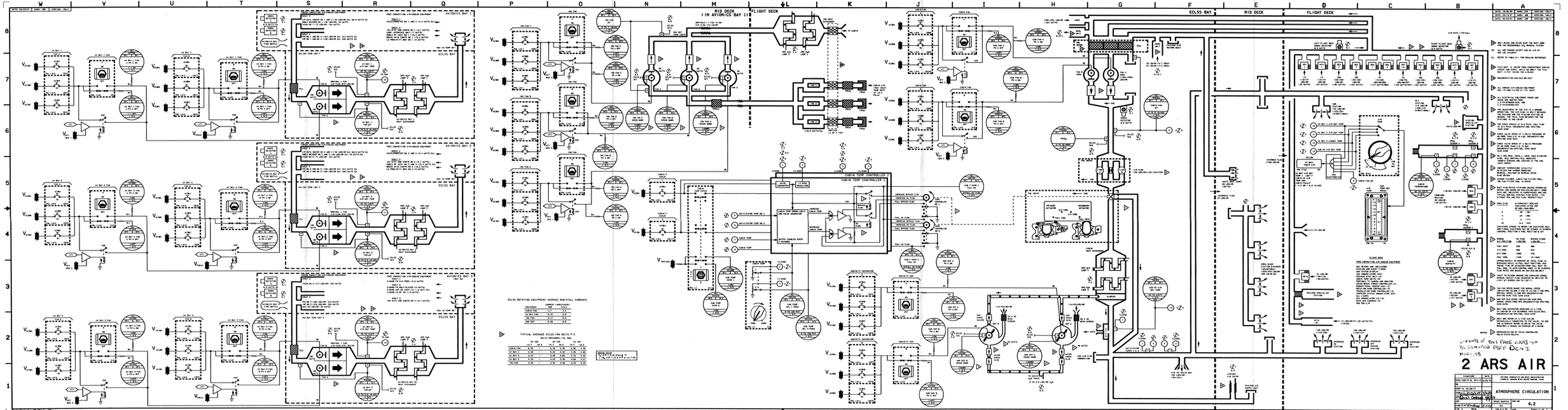
FLIGHT DECK
MID DECK
(IN AVIONICS BAY 1)
ECLSS BAY
MID DECK
FLIGHT DECK
AVIONICS BAY 3
AVIONICS BAY 2
AVIONICS BAY 1
CABIN TEMP CONTROLLER 1
CABIN TEMP CONTROLLER 2
ECLSS ROTATING EQUIPMENT AVERAGE RUN/STALL CURRENTS
TYPICAL AVERAGE ECLSS FAN DELTA P'S
2 ARS AIR
ATMOSPHERE CIRCULATION
6.2
BASIC REV F

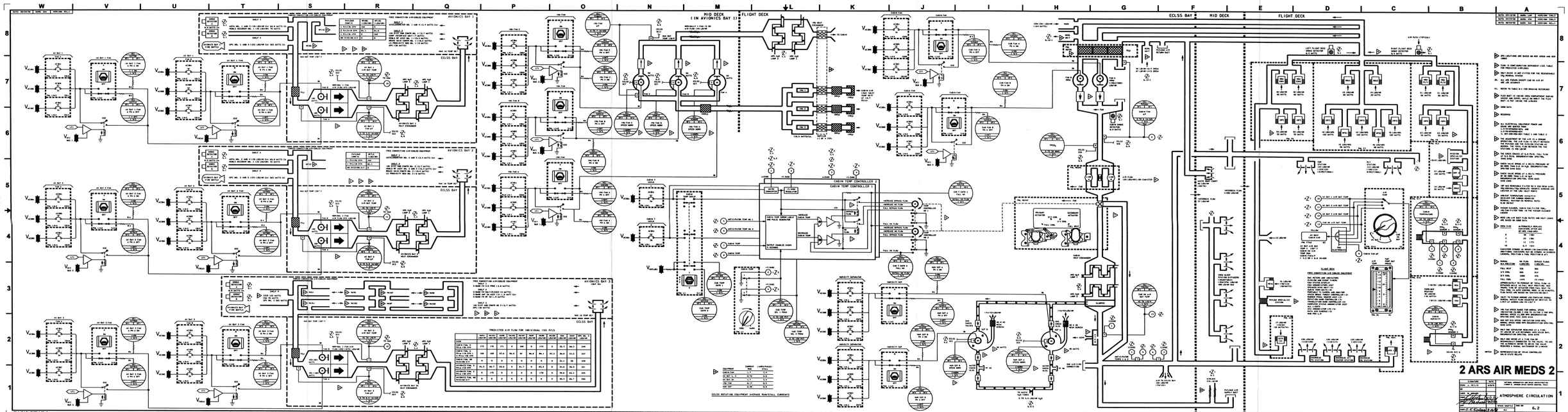

BASIC REV F-2

BASIC REV F-2

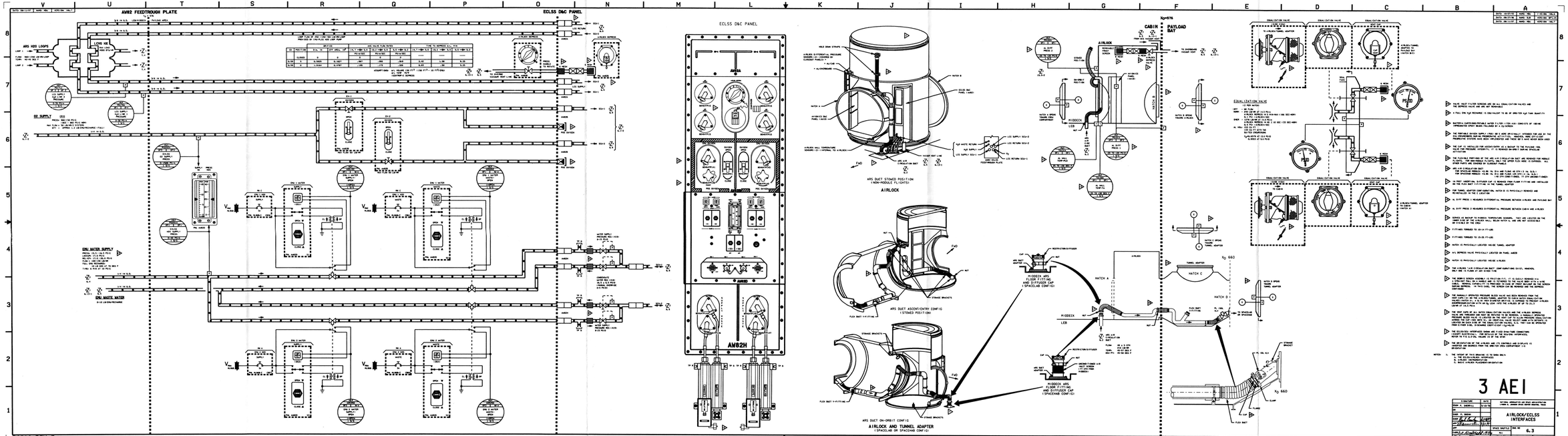
AM82 FEEDTHROUGH PLATE
ECLSS D&C PANEL
ARS H2O LOOPS
O2 SUPPLY
ENV. WATER SUPPLY
ENV. WASTE WATER
AM82H
AIRLOCK
CABIN
PAYLOAD BAY
AIRLOCK AND TUNNEL ADAPTER
(SPACELAB OR SPACEHAB CONFIG)
EQUALIZATION VALVE
3 AEI
AIRLOCK/ECLSS INTERFACES
6.3
BASIC REV F

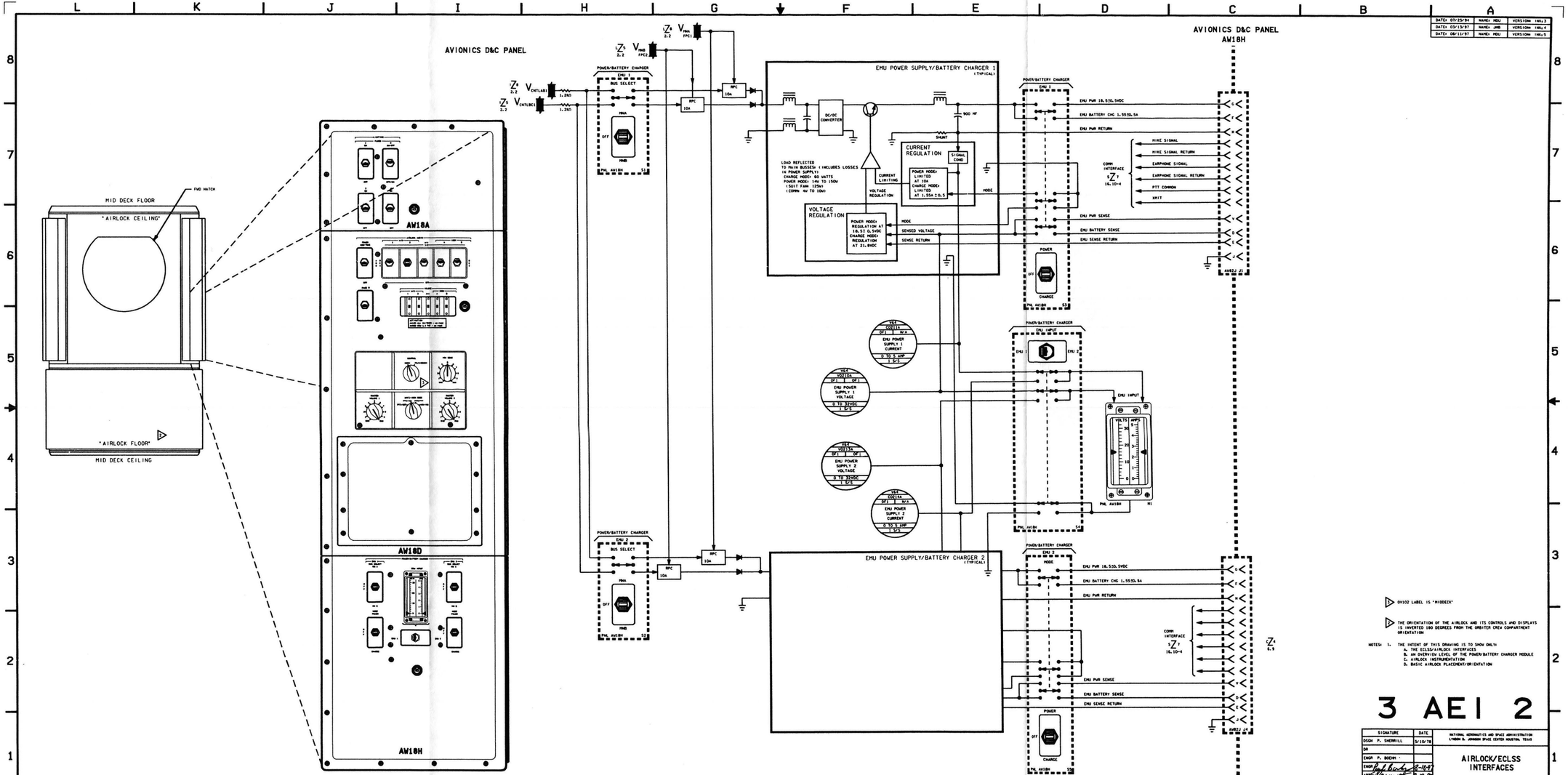
AVIONICS D&C PANEL
AVIONICS D&C PANEL
AW18H
MID DECK FLOOR
FWD HATCH
"AIRLOCK CEILING"
"AIRLOCK FLOOR"
MID DECK CEILING
AW18A
AW18D
AW18H
POWER/BATTERY CHARGER
EMU 1 BUS SELECT
EMU 2 BUS SELECT
EMU POWER SUPPLY/BATTERY CHARGER 1 (TYPICAL)
EMU POWER SUPPLY/BATTERY CHARGER 2 (TYPICAL)
DC/DC CONVERTER
CURRENT REGULATION
VOLTAGE REGULATION
CURRENT LIMITING
SIGNAL COND
EMU PWR 18.5±0.5VDC
EMU BATTERY CHG 1.55±0.5A
EMU PWR RETURN
MIKE SIGNAL
MIKE SIGNAL RETURN
EARPHONE SIGNAL
EARPHONE SIGNAL RETURN
PTT COMMON
XMIT
COMM INTERFACE
EMU PWR SENSE
EMU BATTERY SENSE
EMU SENSE RETURN
EMU INPUT
EMU POWER SUPPLY 1 CURRENT
EMU POWER SUPPLY 1 VOLTAGE
EMU POWER SUPPLY 2 VOLTAGE
EMU POWER SUPPLY 2 CURRENT
0 TO 5 AMP
0 TO 30VDC
POWER
CHARGE
OFF
MNA
MNB
RPC
10A
SHUNT
900 MF
MODE
SENSED VOLTAGE
SENSE RETURN
LOAD REFLECTED TO MAIN BUS55B: (INCLUDES LOSSES IN POWER SUPPLY) CHARGE MODE: 80 WATTS POWER MODE: 14W TO 150W (SUIT FAN: 125W) (COMM: 4W TO 10W)
1.24Ω
1.24Ω
$V_{CNTLBC1}$
$V_{CNTLBC2}$
V_{MNA} (PC1)
V_{MNB} (PC2)
Z 2.2
Z 2.1
Z 16.10-4
Z 6.9
NOTES: 1. THE INTENT OF THIS DRAWING IS TO SHOW ONLY:
a. THE ECLSS/AIRLOCK INTERFACES
b. AN OVERVIEW LEVEL OF THE POWER/BATTERY CHARGER MODULE
c. AIRLOCK INSTRUMENTATION
d. BASIC AIRLOCK PLACEMENT/ORIENTATION
DV102 LABEL IS "MIDDECK"
THE ORIENTATION OF THE AIRLOCK AND ITS CONTROLS AND DISPLAYS IS INVERTED 180 DEGREES FROM THE ORBITER CREW COMPARTMENT ORIENTATION
3 AEI 2
AIRLOCK/ECLSS INTERFACES
6.3
SPACE SHUTTLE
ALL
SHEET 3 OF 3
BASIC REV F

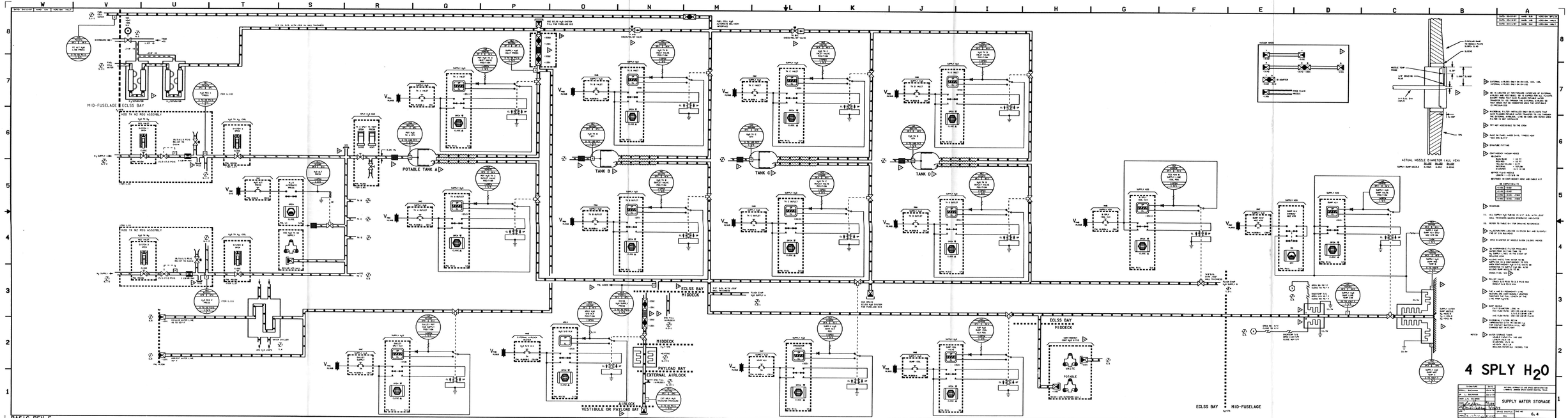

MID-FUSELAGE
ECLSS BAY
POTABLE TANK A
TANK B
TANK C
TANK D
ECLSS BAY
MIDDECK
MIDDECK
PAYLOAD BAY
EXTERNAL AIRLOCK
AIRLOCK
VESTIBULE OR PAYLOAD BAY
ECLSS BAY
MIDDECK
WASTE
POTABLE
ECLSS BAY
MID-FUSELAGE
ACTUAL NOZZLE DIAMETER (ALL VEHI)
4 SPLY H_2O
SUPPLY WATER STORAGE
6.4
BASIC REV F
BASIC REV F

DATE: 09/24/98	NAME: SAH	VERSION: CHG 7
DATE: 10/01/98	NAME: BJB	VERSION: REL 8
DATE: 10/05/98	NAME: SAH	VERSION: REL 9

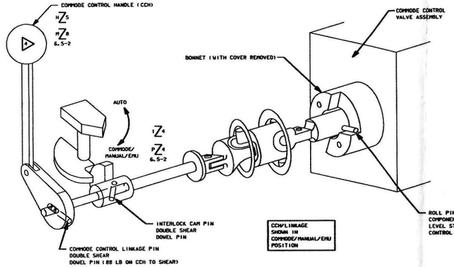

CCH/LINKAGE SHOWN IN COMMODE/MANUAL/EMU POSITION

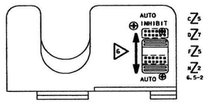

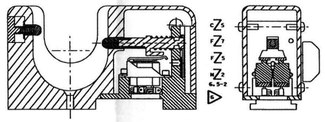

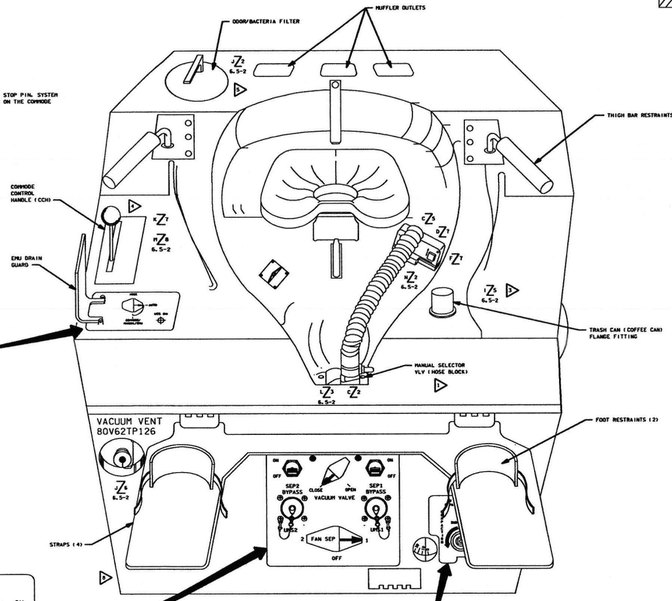

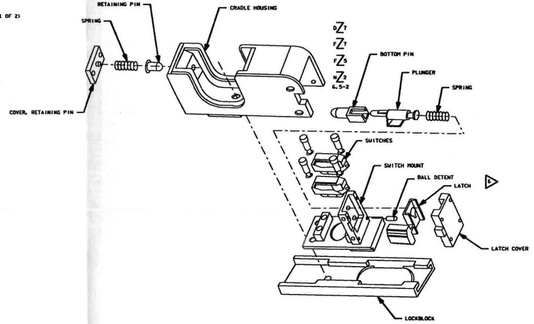

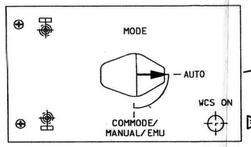

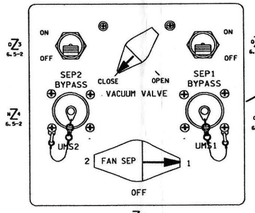

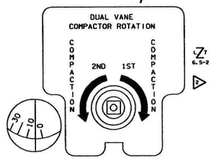

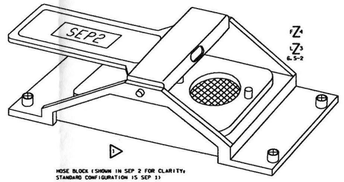

HOSE BLOCK SHOWN IN SEP 2 FOR CLARITY, STANDARD CONFIGURATION IS SEP 1

△ THE WCS FIRE PORT IS LOCATED IN THE LOWER LEFT REGION OF THE KICKPLATE BELOW THE VACUUM VENT OD. IN THIS VIEW, THE FIRE PORT IS OBSCURED BY THE EXTENDED FOOT RESTRAINT

△ (WCS ON) LIGHT ILLUMINATES WHEN POWER IS RELAYED TO THE FAN SEPS. THIS LIGHT WILL TURN OFF WHEN THE WCS IS PLACED IN A GOOD CONFIGURATION FOR FAN SEP POWER-DOWN VIA THE TIME DELAY CIRCUITRY

△ MECHANICAL LINKAGE THAT INHIBITS AUTOSTART RELAY IN CRADLE BY LOCKING THE PLUNGER IN THE HOSE STOWED POSITION. WHEN IN THE AUTO INHIBIT POSITION, THE AUTO MODE IS DISABLED

△ ● FILTER IS REMOVABLE IN FLIGHT
● 3.5 LBS OF CHARCOAL IN FILTER

△ COMMODE CONTROL HANDLE (CCH) "POP OFF" BALL FEATURE-CCH BALL WILL DISENGAGE FROM CCH WHEN 40 LBF OR GREATER IS APPLIED. FEATURE PREVENTS EXCESSIVE FORCE FROM BEING APPLIED TO COMMODE CONTROL LINKAGE ASSEMBLY ZT R,S 6.5-2

IF BALL COMES OFF, PUSHING IT BACK INTO THE HANDLE SHOULD REATTACH IT

△ TRASH CAN AND HOSES INSTALLED DURING POST INSERTION AND STOWED DURING DEORBIT PREP

△ DUAL VANE COMPACTOR - MAXIMIZES NUMBER OF COMMODE USES ESPECIALLY FOR EDO MISSIONS BY ENABLING 2 SWEEPS OF THE COMMODE BOWL. A 1/4 INCH TORQUE WRENCH (SET TO 50 IN-LBS) IS INSERTED INTO COMPACTOR CRANK INTERFACE VIA AN ADAPTER AND EXTENSION, AND CRANKED CLOCKWISE UNTIL THE TORQUE LIMIT IS REACHED (FIRST COMPACTION) ZT

THE SECOND COMPACTION IS ACCOMPLISHED BY ROTATING THE VANE CCW UNTIL THE TORQUE LIMIT (50 IN-LBS) IS REACHED. A TRAVEL INDICATOR SHOWS THE ANGLE OF THE VANE IN THE BOWL. WHEN THE VANE TRAVELS BELOW THE TRANSPORT TUBE, THE INDICATOR BACKGROUND BECOMES YELLOW. FULL RANGE OF THE COMPACTOR IS APPROXIMATELY 330 DEGREES. FREQUENCY OF COMPACTIONS IS DEPENDANT UPON FLIGHT DURATION AND CREW SIZE

OPERATION - THE FIRST COMPACTION USES A ROTATING VANE TO PUSH A LATCHING VANE TO A FINAL, LOCKED POSITION. DEBRIS HAS NOW BEEN CAPTURED AND HELD AGAINST ONE SIDE OF THE TANK BY THE LATCHING VANE. THE ROTATING VANE IS THEN ROTATED BACK IN THE OTHER DIRECTION FOR THE SECOND COMPACTION WHEN REQUIRED

NOTES: △ TO USE THE OTHER SEPERATOR, LIFT LEVER ARM UP, ROTATE THE MANUAL SELECTOR VALVE 180 AND LOCK IN PLACE

5 WMS 1

NATIONAL AERONAUTICS AND SPACE ADMINISTRATION LYNDON B. JOHNSON SPACE CENTER HOUSTON, TEXAS		SIGNATURE	DATE
		DSGN V. HUNTER	09/23/98
		DR	
WASTE MANAGEMENT SYSTEM		CHGR R. ESTEP	
		CHG	10/6/98
		APP	10/6/98
DWG NO 6.5	SPACE SHUTTLE	APP	
	ALL	CARD	10-6-98
SHEET 1 OF 3	66 X 34	LTR F	PCN 2

BASIC REV F-2

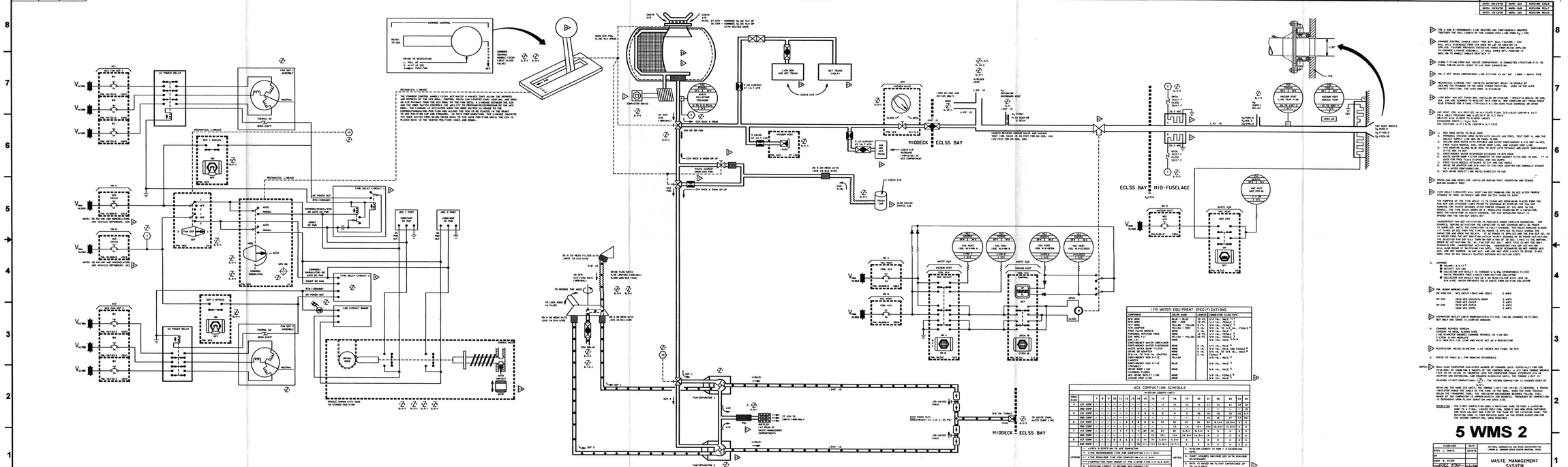
COMMODE CONTROL
READY TO USE
PRIOR TO DEFECATION: 1. PULL UP 2. TWIST 45 DEG 3. — PUSH FLAP
COMMODE HANDLE LOCK TWIST 90 DEG TO UNLOCK
OFF
MECHANICAL LINKAGE
THE COMMODE CONTROL HANDLE LOCK/ ACTIVATES A RAILED TWIST ALLOW THE REPRESS AND DEPRESS OF THE WET MODE, CONTROL TRACK CAN FLOPPED ZERO STARTING, AND OPEN AND CLOSE THE WATER VALVE. THE LOCK/ HANDLE ALSO ACTIVATES THE AIR/ WATER SWITCH AND THE URINE SELECTOR CONTROLS THE ABILITY TO PRESSURIZE/DEPRESSURIZE THE H2O SEPARATOR. THE LOCK/ HANDLE HAS THREE POSITIONS: LOCK/ (HANDLE IN DOWN POSITION) COMMODE/MANUAL/FAN (POSITION AND ALLOWS THE H2O TO BE PLACED TO THE WANT TO USE POSITION CAP AND FORWARD). IN THIS CONFIGURATION, THE LINKAGE INHIBITS THE ACTIVATION OF THE WET MODE AND AIR/ WATER SWITCH. IN THIS POSITION (AFT), THE H2O IS PLACED BACK IN THE HEATED POSITION (HOLD AND DRAIN).
MECHANICAL LINKAGE
AC POWER RELAY
FAN DUCT ASSEMBLY
NEUTRAL
THERMAL SW
OPEN OVER T
MECHANICAL LINKAGE
MECHANICAL LINKAGE
AC POWER OUT FROM CONTACTOR
TIME DELAY CIRCUIT
CONNECT TO PWR
COMMODE/MANUAL/FAN OR AUTO DC PWR
CONNECT DC PWR
FROM CONTACTOR
LED CIRCUIT BOARD
MANUAL
AUTO
MANUAL
AUTO
COMMODE/MANUAL/FAN
AUTO DC PWR
MCC 1A
MCC 2A
MCC 3A
MCC 1B
MCC 2B
MCC 3B
MCC 4B
MCC 5B
MCC 6B
MCC 7B
MCC 8B
MCC 9B
MCC 10B
MCC 11B
MCC 12B
MCC 13B
MCC 14B
MCC 15B
MCC 16B
MCC 17B
MCC 18B
MCC 19B
MCC 20B
MCC

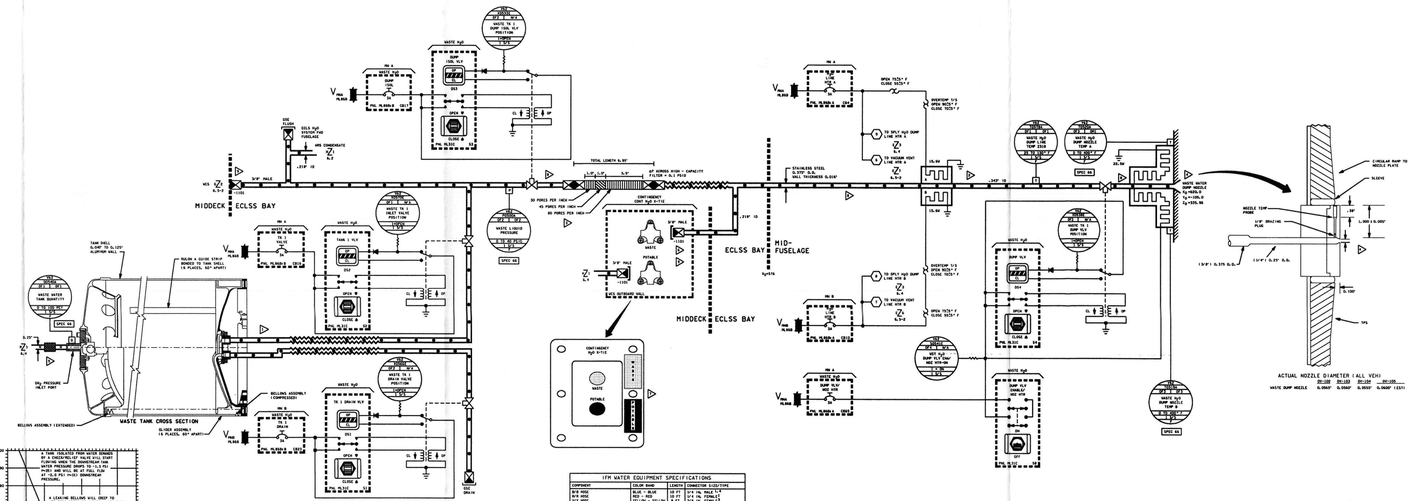

1. WCS HOSE MATES TO BLUE HOSE
2. PERSONAL HYGIENE HOSE MATES WITH CALLEY ASH PORT, TEST PORT A, OR WASTE WATER DUMP LINE AT THE FORWARD BULKHEAD
3. YELLOW HOSE MATES WITH POTABLE AND WASTE CONTINGENCY H/D (SEE 14 FOR FIELD NOZZLE, CAP, URINE DUMP LINE, AND CONTINGENCY H/D)
4. T/H ADAPTER ALLOWS BLUE HOSE TO MATE WITH POTABLE AND WASTE CONTINGENCY H/D (SEE 14 FOR FIELD NOZZLE, CAP, URINE DUMP LINE, AND CONTINGENCY H/D)
5. WASTE WATER DUMP FILTER CONNECTS TO CONTINGENCY H/D (SEE 14 FOR FIELD NOZZLE, CAP, URINE DUMP LINE, AND CONTINGENCY H/D)
6. WASTE WATER DUMP FILTER CONNECTS TO CONTINGENCY H/D (SEE 14 FOR FIELD NOZZLE, CAP, URINE DUMP LINE, AND CONTINGENCY H/D)
7. DRINK GUN ADAPTER AND 3/8-16 TO 7/8-14 ADAPTER ARE NORMALLY STORED IN THE WASTE WATER DUMP LINE
8. WCS URINE OUTLET LINE MATES DIRECTLY TO CVC

WASTE DUMP LINE CHARACTERISTICS	
LINE SECTION	LENGTH
DUMP LINE, WASTE TANK TO 90-DEG FILTER	9 IN
URINE 180-DEG FILTER TO MID-FUSELAGE	92 IN
FWD-FUSELAGE	221 IN
MID-FUSELAGE	180 IN
DUMP VLV TO NOZZLE INTERFACE	22 IN

9. YELLOW CIRCULAR LABEL ON THE WASTE HAND
10. YELLOW LABEL BELOW THE WASTE HAND WITH BLACK LETTERING "WASTE TANK QUANTITY"
11. BLUE YELLOW ON THE POTABLE HAND
12. BLUE LABEL BELOW THE POTABLE HAND WITH WHITE LETTERING "POTABLE TANK QUANTITY"
13. CLOSE WASTE TANK QUANTITY TO BE SUPPLIED TO YOU IN A CONTINGENCY SITUATION BY CONNECTING THE WASTE H/D QD TO THE SUPPLY H/D QD. THE WASTE TANK QUANTITY WILL BE INACCURATE WHEN THE CONTINGENCY WATER CONTAINER (CWC) TO BE USED IN THE EVENT OF A WASTE TANK FAILURE
14. AN APPROPRIATE FILTER PRECLUDES WATER FROM EXITING TANK TO SUPPLY LINES IN THE EVENT OF A BELLOWS LEAK. WATER WILL BREAK THROUGH THE HYDROPHOBIC FILTER IF THE PRESSURE ACROSS IT IS AT LEAST 5 PSID
15. THE DUMP NOZZLE IS LOCATED ON THE PORT SIDE OF THE VEHICLE
    - MAX FLOW RATE THROUGH NOZZLE: 1.75 GLB AT 20 PSIG
    - 1.75 GLB AT 20 PSIG
16. THE URINE 180-DEG FILTER IS 3-STAGE POLYURETHANE FOAM AND 1% WET POLYCARBONATE SUPERHOLYCARB. A SPARE URINE 180-DEG FILTER IS CARRIED EACH FLIGHT, BUT IT IS NOT A REPLACEMENT FOR THE INSTALLED DUMP FILTER. IT IS ONLY TO BE USED IN THE EVENT OF A FILTER FAILURE IN CONJUNCTION WITH THE 1"H-1"H HOSE THROUGH THE CONTINGENCY H/D
17. THE 4 AMP B-PEDIGREE/ORU LINE HEATERS ARE CONFORMABLY WRAPPED TOGETHER THE FULL LENGTH OF THE LINE FROM SJ-676

NOTES:

WASTE WATER STORAGE TANK
- CAPACITY, USABLE: 180 LBS
- LENGTH: 26.5 IN
- DIAMETER: 19.50 IN
- DRY WEIGHT: 26.5 LBS

WASTE TANK BELLOWS DATA
NEGATIVE PRESSURE ON TANK DUE TO:
MAX GPC ASCENT LOAD TO 1.08G'S:
-STRUCTURAL: 22 PSID
-LIFE CYCLES: 17 PSID
MAX GPC ASCENT TO 1.08G'S TO 0651
-STRUCTURAL: 22 PSID
-LIFE CYCLES: 20 PSID

1FM WATER EQUIPMENT SPECIFICATIONS			
COMPONENT	COLOR BAND	LENGTH	CONNECTOR SIZE/TYPE
M/F HOSE	BLUE - BLUE	10 FT	3/4 IN. MALE [1]
M/F HOSE	RED - RED	10 FT	3/4 IN. FEMALE [1]
M/F HOSE	YELLOW - YELLOW	5 FT	3/4 IN. FEMALE [1]
1"H-1"H ADAPTER	RED - RED	3 IN	1" H. FEMALE - 1" H. FEMALE [1]
FREE FLUID NOZZLE	NONE	6 IN	3/4 IN. MALE [1]
CONTINGENCY WATER HOSE	NONE	10 FT	3/4 IN. FEMALE [1]
CWC HOSE(S)	YELLOW - YELLOW	20 FT	3/4 IN. FEMALE [1]
CWC	NONE		3/4 IN. MALE [1] & [2]
CONTINGENCY WATER CONTAINER	NONE		
CONTINGENCY WATER DISPENSER	NONE	6 IN	3/4 IN. MALE [1]
WASTE WATER DUMP FILTER	NONE	9 IN	3/4 IN. MALE AND FEMALE [1]
DRINK GUN ADAPTER	NONE	6 IN	3/8-16 IN. M & 7/8-14 IN. M. [1]
3/8-16 TO 7/8-14 ADAPTER	NONE	3 IN	FEMALE [1]
WASTE WATER DUMP H/D	YELLOW		3/4 IN. MALE [1]
CONNECT			
1"H/FEMALE	BLUE		3/4 IN. MALE [1]
1"H/FEMALE			
1"H/MALE	NONE		3/4 IN. MALE [1]
WCS URINE OUTLET LINE	NONE		3/4 IN. FEMALE [1]
SOLAR ISOL LINE	NONE		3/4 IN. MALE [1]

5 WMS 3

NATIONAL AERONAUTICS AND SPACE ADMINISTRATION LYNDON B. JOHNSON SPACE CENTER HOUSTON, TEXAS		SIGNATURE	DATE
	DRAW	N. MAHL	09/98
	CH		
WASTE MANAGEMENT SYSTEM	APP	MARY A. SYPEF	
	APP		
SIZE: HD 6.5	SPACE SHUTTLE		
	PCL		
SHEET 1 OF 1	6.1.1.2r	CODE: 7	

BASIC REV F-2

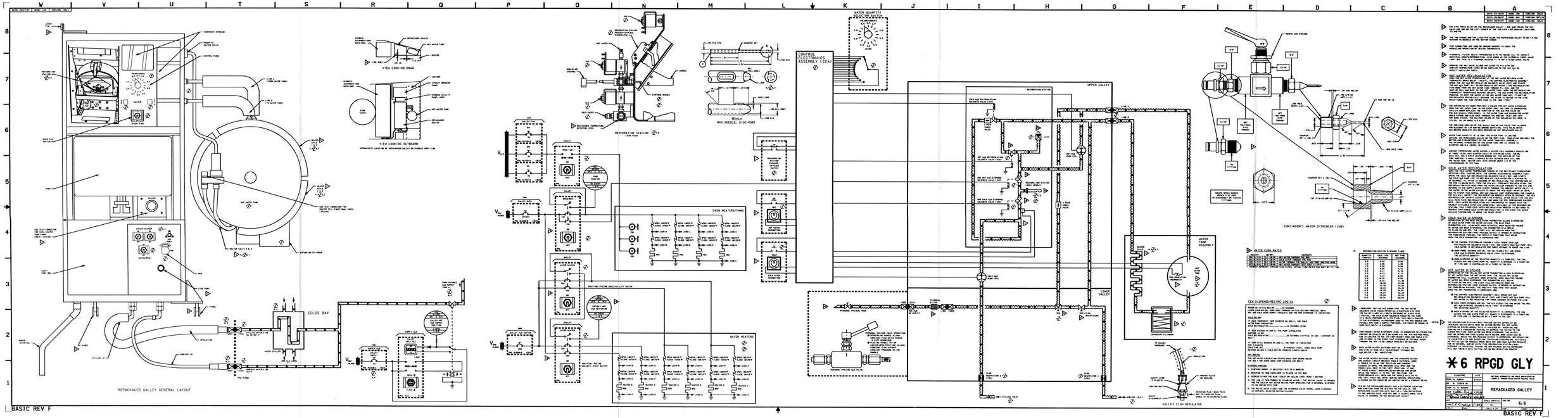
REPACKAGED GALLEY GENERAL LAYOUT
VIEW LOOKING DOWN
VIEW LOOKING OUTBOARD
REHORATION STATION
RHS NEEDLE, SIDE-PORT
CONTROL ELECTRONICS ASSEMBLY (CEA)
WATER QUANTITY SELECTION SWITCH
OVEN HEATERS/FANS
WATER HEATERS
UPPER GALLEY
LOWER GALLEY
WATER TANK ASSEMBLY
GALLEY FLOW REGULATOR
CONTINGENCY WATER DISPENSER (CWD)
ECLSS BAY
WATER FLOW RATES
CEA DISPENSE/RECIRC LOGICS
REHORATION STATION DISPENSE TIMES
*6 RPGD GLY
REPACKAGED GALLEY
6.6
BASIC REV F

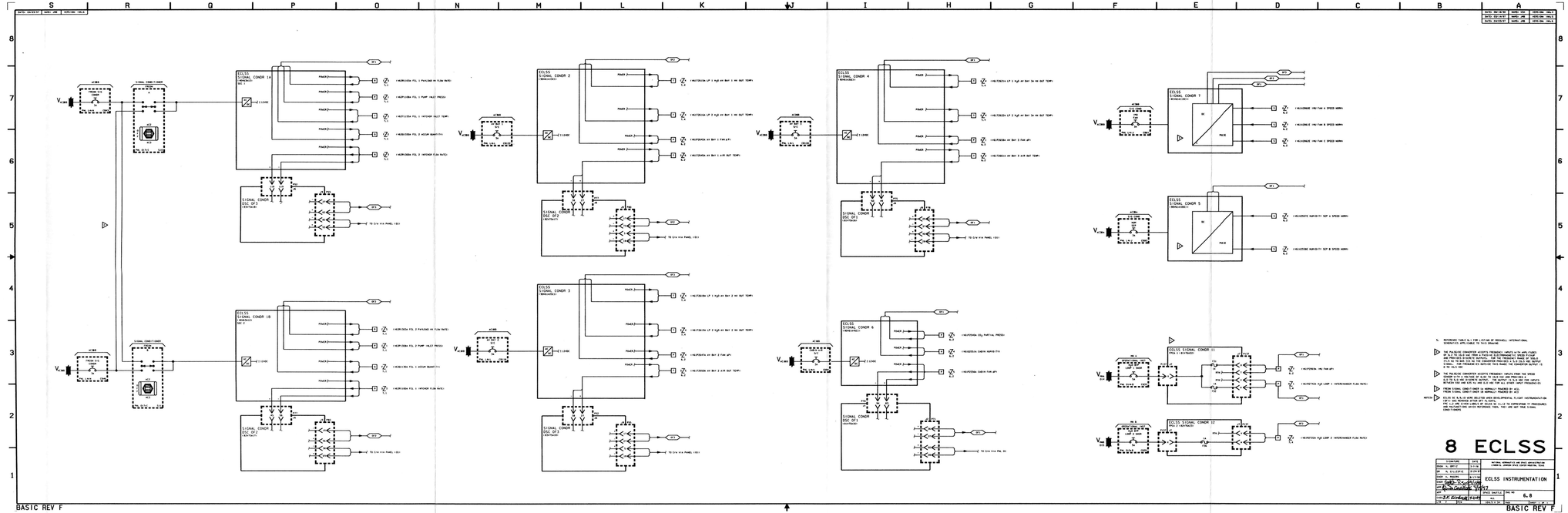

1. REFERENCE TABLE XL-1 FOR LISTING OF MECHANEL INTERNATIONAL CONNECTOR APPLICABLE TO THIS DRAWING.

THE PM/D/DC CONVERTER ACCEPTS FREQUENCY INPUTS WITH DUTY CYCLES OF XL-2 TO XL-3 AND FROM A PASSIVE ELECTROMAGNETIC SPEED PICKUP AND PROVIDES DIGITAL OUTPUTS. FOR THE FREQUENCY RANGE OF XL0-2 TO XL0-3 HZ AND DIGITAL OUTPUT. THE OUTPUT IS XL-5 VDC FOR LOGIC "1" AND XL-6 VDC FOR LOGIC "0". FOR FREQUENCIES BETWEEN THESE TWO RANGES THE CONVERTER OUTPUT IS XL-7 VDC.

THE PM/D/DC CONVERTER ACCEPTS FREQUENCY INPUTS FROM THE SPEED SENSOR WITH A VOLTAGE OF XL-8Z TO XL-9 VAC AND PROVIDES A XL-10 TO XL-11 VDC DIGITAL OUTPUT. THE OUTPUT IS XL-12 VDC FOR INPUTS. FREQUENCIES BELOW XL-13 HZ AND XL-14 VDC FOR INPUT FREQUENCIES.

FROM SIGNAL CONDITIONER IS NORMALLY POWERED BY WIRE FROM SIGNAL CONDITIONER IS NORMALLY POWERED BY WIRE

ECLSS XL-15 WITH SELECTED WIRE/SPECIFICATION, FLIGHT INSTRUMENTATION (SFI) AND REMOVED AFTER SFT FLIGHTS.
ECLSS XL-16 WITH SELECTED WIRE/SPECIFICATION, XL-17 TO COMPROMISE ITS PROCESSING AND FUNCTIONS WITH REFERENCE TABLE, THEY ARE NOT FREE SIGNAL CONDITIONERS

8 ECLSS

SIGNATURE	DATE	
DESIGN W. BRITZ	8-1-96	NATIONAL AERONAUTICS AND SPACE ADMINISTRATION LYNDON B. JOHNSON SPACE CENTER HOUSTON, TEXAS
QR W. ELLSWORTH	8-29-96	
CHIEF W. MOORE	8/29/96	ECLSS INSTRUMENTATION
CHIEF [illegible]	8/29/96	
MGR [illegible]	8/29/96	
MGR [illegible]	8/29/96	
MGR J.F. Gerber	8/29/96	
CM	SPACE SHUTTLE	DWG NO. 6.8
SCALE NONE	SIZE D	REV
SHEET 1 OF 1		

BASIC REV F

BASIC REV F

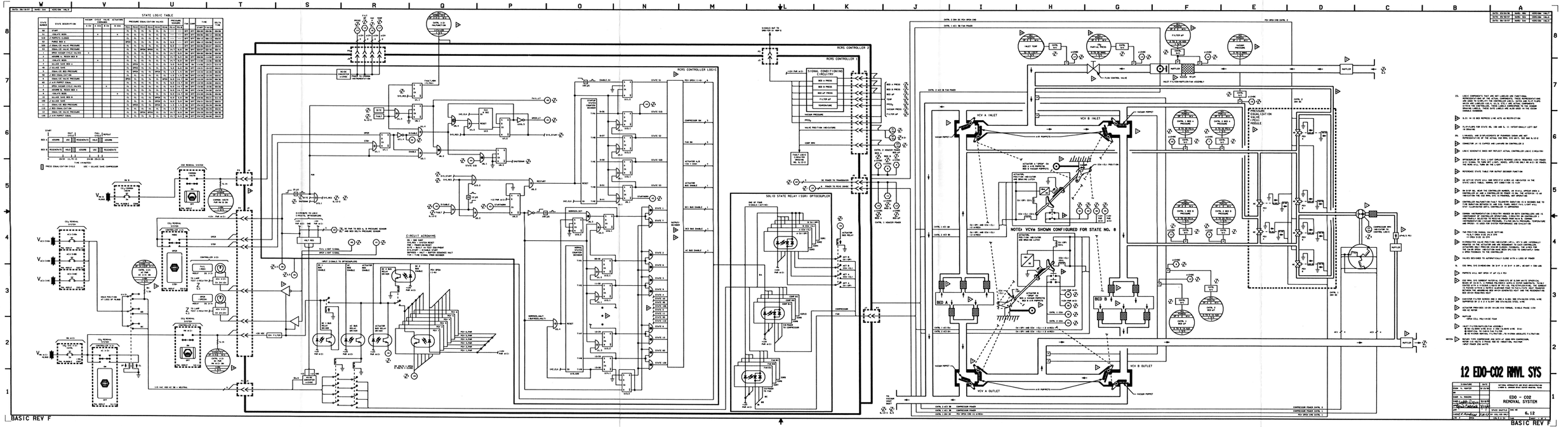
STATE LOGIC TABLE
RCRS CONTROLLER LOGIC
RCRS CONTROLLER 2
RCRS CONTROLLER 1
SOLID STATE RELAY (SSR) OPTOCOUPLER
CIRCUIT ACRONYMS
NOTE: VCVs SHOWN CONFIGURED FOR STATE NO. 8
12 EDO-C02 RMVL SYS
EDO – C02 REMOVAL SYSTEM
BASIC REV F

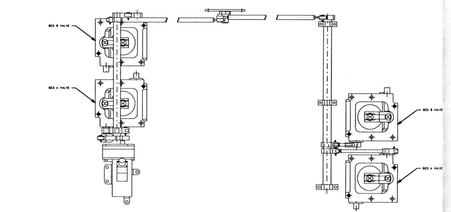

TOP VIEW
ACTUATOR A, DRIVES:
BED B VACUUM POPPETS
BED A AIR POPPETS

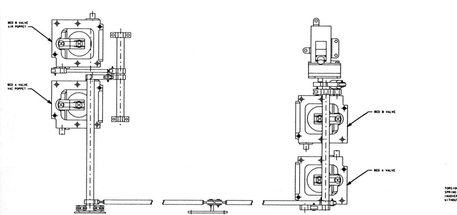

TOP VIEW
ACTUATOR B, DRIVES:
BED A VACUUM POPPETS
BED B AIR POPPETS

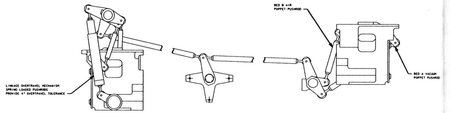

FRONT VIEW

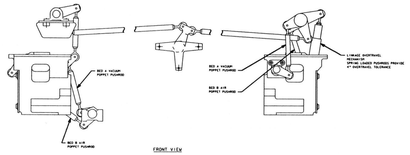

FRONT VIEW

MECHANICAL LINKAGE

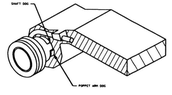

VIEW A

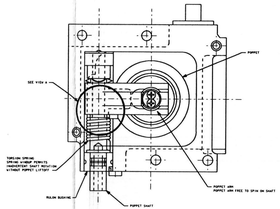

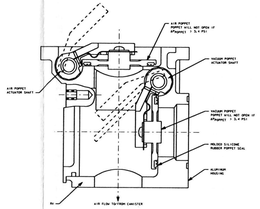

VACUUM CYCLE VALVE (VCV)

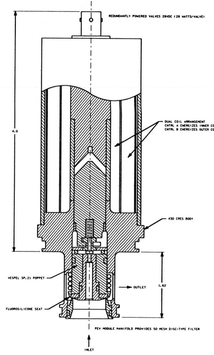

PRESSURE EQUALIZATION VALVE (PEV)

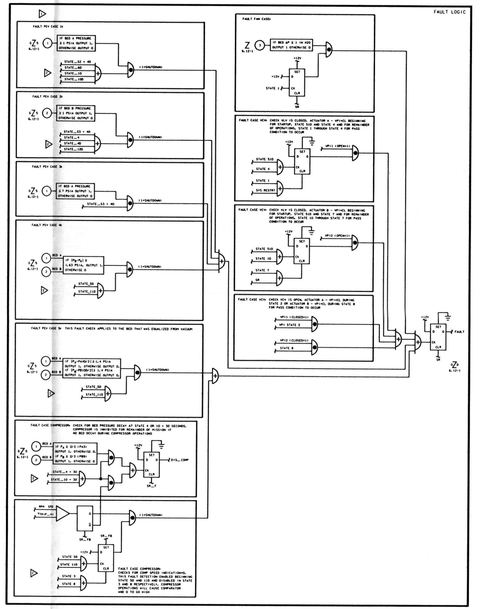

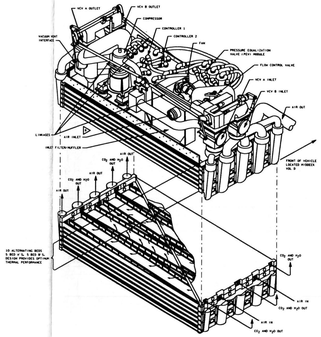

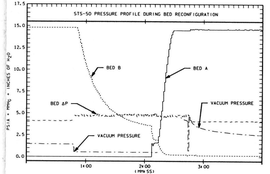

SEE BED PRESSURE LEVEL (1) AT THE SAME STATE NUMBER BEING CHECKED BY THIS FAULT LOGIC

NOTES: FOR DETAILED COMPONENT LOGIC REFER TO UNITED TECHNOLOGY INSTALLTION STANDARD DRAWING 5575-1-7016-0001

12 RCRS MECH/FAULT LOGIC 2

ENGINEERING	DATE	NATIONAL AERONAUTICS AND SPACE ADMINISTRATION
DSN: N. TERRY JR.	10/29/92	LYNDON B. JOHNSON SPACE CENTER, HOUSTON, TEXAS
QA: N. EDWARDS	10/29/92	
CHIEF: N. RAMOS	10/29/92	RCRS
PROJECT MANAGER:		MECHANICAL/FAULT LOGIC
CHIEF ENGINEER:		
MANAGER:		
CHIEF, ECLSS BRANCH:		
CHIEF, ECLSS DIVISION:		

SPACE SHUTTLE	DWG NO	6.12	
PROGRAM			
CAGE 51 NO	SIZE A	SCALE NONE	SHEET 1 OF 1

BASIC REV F

BASIC REV F

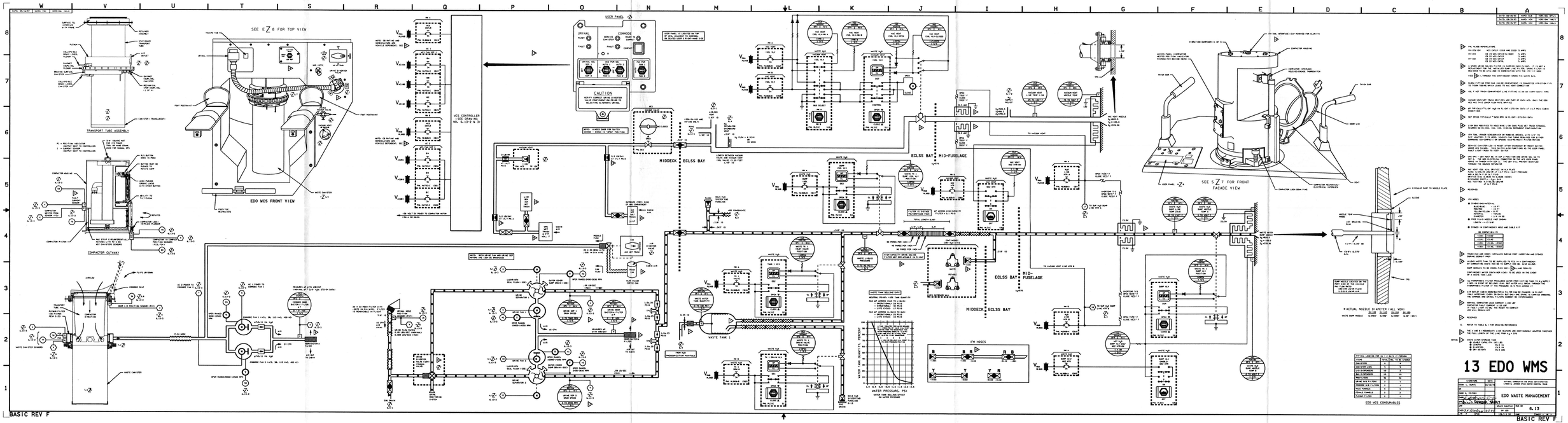

SEE E Z 8 FOR TOP VIEW
EDO WCS FRONT VIEW
TRANSPORT TUBE ASSEMBLY
COMPACTOR CUTAWAY
WCS CONTROLLER (SEE DRAWING NO. 6.13-2 & 3)
USER PANEL
CAUTION
MIDDECK ECLSS BAY
ECLSS BAY MID-FUSELAGE
SEE S Z 7 FOR FRONT FACADE VIEW
WASTE TANK 1
WATER TANK QUANTITY, PERCENT
WATER PRESSURE, PSI
IFM HOSES
* ACTUAL NOZZLE DIAMETER (ALL VEH)
EDO WCS CONSUMABLES
13 EDO WMS
EDO WASTE MANAGEMENT
6.13
BASIC REV F

EDO COMMODE FAN LOGIC SEQUENCE

1. ON NORMAL AUTO OPS, WHEN THE COMMODE LID IS LIFTED, A POSITION INDICATOR, CONSISTING OF A REED SWITCH AND MAGNET, SENSES THE LID'S POSITION. THE OPENING OF THE LID CLOSES THE REED SWITCH, WHICH ALLOWS THE OUTPUT OF THE LID SENSOR LOGIC TO GO HIGH.
2. WHEN THIS IS HIGH (+12V) 1) CLOSES, (1), THE OUTPUT A GATE FORWARDS AN AC GATE SIGNAL TO THE FAN 1 RELAY TURNING THE FAN ON, AND 2) CLOSES (2), THE OUTPUT B GATE FORWARDS AN AC GATE SIGNAL TO THE FAN 2 RELAY, WHICH ALSO TURNS THE FAN ON.
3. THE FAN 1 ON SIGNAL (+12V) ENERGIZES AN 8 SECOND TIME DELAY WHICH ALLOWS FAN 1 TO RUN FOR 8 SECONDS AFTER THE LID IS CLOSED AND THE FAN IS TURNED OFF.
4. SIMILARLY THIS FAN 1 ON SIGNAL FEEDS BACK TO A FAN 1 FAULT DETECTION CIRCUIT. IF THE FAN 1 FAULT SENSES ON THE OUTPUT OF THE FAN, THIS OUTPUT IS A LOGIC HIGH (+12V) WHICH TURNS ON THE FAN 1 FAULT LIGHT.
5. WHEN ONE 8 SECOND TIME DELAY (1) EXPIRES (+12V), THE FAN 2 ON SIGNAL WILL BE SENT THROUGH AN AND GATE (+12V) TO A FLIP-FLOP (+12V). IF THE FAN 2 FAULT SENSES NO FAULT, THE FLIP-FLOP WILL BE SET HIGH (+12V). (2) ENERGIZES A 2 SEC DELAY RELAY WHICH TURNS ON THE FAN 2 RELAY THAT POWERS FAN 2.
6. THE FAULT FAN 2 SIGNAL WILL BE SENT ON TWO DIRECTIONS:
   (1) WHICH ILLUMINATES THE COMMODE FAULT 1 OR 2 LIGHT.
   (2) WHICH TURNS ON THE FAULT LIGHT.

ILLUMINATE COMMODE FAN 2 IF

1. THE FAULT FAN 2 SIGNAL (+12V) PREVALENTLY THROUGH TWO OR GATES (1)(2) TO AN AND GATE. THIS AND GATE SIGNAL WILL PREVAILED (+12V) IF THE 2 SEC FAN 2 RELAY DELAY (+12V) HAS EXPIRED AND THE FAN 2 FAULT SENSES A FAULT (+12V), BOTH BECOMING HIGH.
2. THE FAULT FAN 2 SIGNAL (+12V) PREVALENTLY THROUGH AN AND GATE (+12V) TO AN INVERTER (+12V) WHICH ALLOWS THE (+12V) (1)(2) TO DISCHARGE THE (+12V).

TURN ON COMMODE FAN 2

1. THE FAULT FAN 2 SIGNAL ALSO TURNS OFF FAN 1 AND STARTS FAN 2.
2. THE FAULT FAN 2 SIGNAL (+12V) PREVALENTLY THROUGH A 4-INPUT OR GATE (+12V) TO THE SWITCH FAULT FLIP-FLOP (+12V) THAT TURNED ON FAN 1. REJECTING THIS SIGNAL, THE FAULT FAN 2 SIGNAL (+12V) PREVALENTLY THROUGH THE OR GATE TO THE FAULT FAN 2 RELAY DETECTION.
3. THE FAULT FAN 2 SIGNAL (+12V) PREVALENTLY THROUGH A 2 SEC DELAY RELAY TO A FLIP-FLOP (+12V) THAT TURNED ON THE RELAY THAT POWERS FAN 2.
4. THE FAULT FAN 2 SIGNAL (+12V) PREVALENTLY THROUGH AN OR GATE TO FAN 2 ON.
5. IF FAULT FAN 2 IS DETECTED, IT PREPARATES TO A HARD GATE (+12V) THAT OBTAINTS THE FAULT FAN 2 SIGNAL (+12V) FROM THE FAULT FAN 2 RELAY DETECTION (+12V).
6. THE OUTPUT OF THIS GATE GOES THROUGH AN OR GATE TO THE SAME INVERTER (+12V) THAT ILLUMINATED THE LIGHT ORIGINALLY. AT THIS TIME, HOWEVER, THE LIGHT ONLY ILLUMINATES WHEN THE GATE'S OUTPUT IS (1). THIS GIVES THE BLINKING EFFECT.

COMPACTOR LOGIC
COMPACTOR LOGIC II AND URINAL FAULT/READY LIGHTS
COMMODE FAN LOGIC
COMPACTOR MOTOR
2 SEC HARDEN RELAY/TIME DELAY
2 SEC URINAL RELEASE RELAY
COMMODE FAULT 1 LT.
COMMODE FAULT 2 LT.
URINAL READY LT.
URINAL FAULT LT.
LID LOCK
LID UNLOCK
LID LOCK PB
LID UNLOCK PB
COMPACTOR LT.
COMPACTOR RESET
FAULT FAN 1
FAULT FAN 2
FAN 1 RELAY TURNS FAN ON
FAN 2 RELAY TURNS FAN ON
SWITCH FLT.
FAULT LIGHT JAM
FAULT LIGHT
FAULT LIGHT JAM
FAULT LIGHT
RESET
RESET TIME
RESET TIME
RESET TIME

DATE: 09/27/93	NAME: YCH	VERSION: WMS.1
DATE: 09/27/93	NAME: MDU	VERSION: WMS.2
DATE: 05/16/97	NAME: YSH	VERSION: WMS.3

DATE: 05/15/97 NAME: YSH VERSION: WMS.3

2. EDO WCS CONTROLLER URINAL LOGIC

A. THE URINAL SEL SWITCH IS EITHER SELECTED TO SEP 1 OR SEP 2. THE LOGIC FOR BOTH SEPARATORS IS IDENTICAL

B. WHEN THE URINAL HOSE IS UNSTOWED IT GENERATES THE SIGNAL, UNSTOWED PIT (-Z2B)

C. THIS SIGNAL IN CONJUNCTION WITH THE SEP 1 (-Z2N) SIGNAL FROM THE SWITCH GOES THROUGH AN AND GATE (-Z2K) TO TWO LOCATIONS

D. ONE OUTPUT OF THE AND GATE GOES TO THE CLOCK INPUT OF A FLIP-FLOP (-Z2L). THE +Q OUTPUT, SEP 1 RELAY OFF/ON, PROPAGATES THROUGH AN INVERTER (-Z2L) TO AN OPTOCOUPLER (-Z2J) THAT CLOSES THE RELAY THAT POWERS THE SEP MOTOR

E. THE SEP 1 RELAY OFF/ON SIGNAL ALSO FEEDS BACK (-Z2T) TO THE FAULT DETECTION LOGIC. THIS SIGNAL PROPAGATES THROUGH AN INVERTER (-Z2T) THROUGH AN OR GATE (-Z2T) WHERE IT IS A REINSTATE INPUT TO A TIME DELAY CIRCUIT (-Z2T). THE OTHER INPUT IS THE SECOND PART OF THE OUTPUT OF THE SEP 1, UNSTOWED PIT AND GATE (-Z2K)

F. THE Q OUPUT OF THE FLIP-FLOP (-Z2R), SEP 1 ON, ALSO GOES TWO PLACES. THE FIRST GOES THROUGH AN AND GATE (-Z2Q) (-Z2T) TO PROPAGATE THROUGH AN OR GATE TO AN AND GATE (-Z2T) WHERE IT WAITS FOR THE TIME DELAY CIRCUIT TO COMPLETE

G. IF EVERYTHING IS NORMAL THE FAULT SEP 1 SIGNAL (-Z2T) SHOULD DROP TO ZERO VOLTS BEFORE THE TIME DELAY CIRCUIT RUNS OUT

H. THE SECOND PLACE THE SEP 1 ON SIGNAL (-Z2T) GOES IS TO AN AND GATE (-Z2S) WHERE IT WAITS FOR THE SIGNAL FROM THE TACHOMETER THAT THE SEPARATOR HAS REACHED THE ACCEPTABLE SPEED

I. WHEN THE TACHOMETER DETECTS THAT THE SPEED IS WITHIN LIMITS IT DROPS THE FAULT SEP 1 SIGNAL TO ZERO AND SETS THE TURN ON FAN 1 SIGNAL (-Z2S) TO 1

J. THE TURN ON FAN 1 SIGNAL IN CONJUNCTION WITH THE SEP 1 ON SIGNAL (-Z2S) PROPAGATE THROUGH TWO AND GATES (-Z2S) TO THE CLOCK INPUT OF A FLIP-FLOP (-Z2L). THE +Q OUTPUT OF THIS FLIP-FLOP GOES THROUGH AN OPTOCOUPLER (-Z2J) THAT CLOSES THE RELAY THAT TURNS THE FAN ON

K. THE FAN 1 ON SIGNAL FROM THE Q OUTPUT OF THE FLIP-FLOP (-Z2L) FEEDS BACK TO THE FAULT DETECTION LOGIC. THIS SIGNAL PROPAGATES THROUGH AN INVERTER (-Z2T) THROUGH AN OR GATE TO AN AND GATE (-Z2T) WHERE IT WAITS FOR THE TIME DELAY CIRCUIT TO RUN OUT. THE FAN SHOULD COME UP TO SPEED WELL BEFORE THE TIME DELAY EXPIRES

URINAL READY LIGHT

L. WHEN THE URINAL FAN IS UP TO SPEED AND THE TACHOMETER ISSUES THE U FAN 1 OK SIGNAL (-Z2Z+, 1?, AFTER PASSING THROUGH AN OR GATE (-Z2Z), & (-Z1-2), IN CONJUNCTION WITH THE FAN 1 ENA SIGNAL (-Z2L), WHICH ALSO PASSES THROUGH AN OR GATE (-Z2Q, & 6.13-2), CLOCKS A FLIP-FLOP (-Z2L, & 13-2)

M. THE Q OUTPUT OF THIS FLIP-FLOP PROPAGATES THROUGH AN OR GATE TO AN INVERTER WHICH (-Z2S) THE CURRENT FLOW FROM THE VOLTAGE SOURCE THROUGH THE READY LIGHT (-Z2S, & 13-2), THEREBY ILLUMINATING IT

N. THE READY LIGHT IS EXTINGUISHED WHEN THE FAN 1 SWTCH ON THE SEP 1 RELAY OFF/ON SIGNALS (-Z2Z, & 13-2) IN CONJUNCTION WITH THE SEP 1 SIGNAL (-Z2Z, & 13-2) RESET THE FLIP-FLOP (-Z2Z, & 13-2) THAT FIRST CAUSED THE LIGHT TO ILLUMINATE

URINAL FAULT LIGHT

O. IF A FAULT DOES OCCUR, THE FAULT FS 1 SIGNAL (-Z2Y) WILL BE ISSUED

P. THIS SIGNAL WILL GO THROUGH AN OR GATE (-Z2Z, & 13-2) TO AN AND GATE (-Z2Z, & 13-2). THE OTHER INPUT TO THAT AND GATE IS THE OUTPUT OF A NAND GATE (-Z2Z, & 13-2) THAT WILL OUTPUT A 1 UNLESS BOTH FAN SEP FAULTS HAVE OCCURRED

Q. THE OUTPUT OF THE AND GATE (-Z2Z, & 13-2) GOES THROUGH AN INVERTER WHICH ALLOWS THE CURRENT FROM THE VOLTAGE SOURCE THROUGH THE LIGHT, THEREBY ILLUMINATING IT

R. WHEN A SECOND FAULT OCCURS THE OUTPUT OF THE NAND GATE (-Z2Z, & 13-2) WILL DROP TO ZERO MOMENTARILY EXTINGUISHING THE LIGHT

S. WHEN THE OUTPUT OF THE NAND GATE (-Z2Z, & 13-2) DROPS, A CLOCK IS ALLOWED TO RUN WHICH SENDS PULSES THROUGH AN OR GATE (-Z2Z, & 13-2) THROUGH AN INVERTER, THEREBY PRODUCING THE BLINKING EFFECT

NOTES: 1. SR FLIP-FLOP WITH DATA TRUTH TABLE

S	R	C	D	+Q
0	0	↑	0	0
0	0	↑	1	1
0	0	0	X	UNSTABLE
0	1	0	1	
0	0	1	0	
0	0	0	X	LAST VALUE
1	1	X	X	NOT ALLOWED

13 EDO WMS 3

NATIONAL AERONAUTICS AND SPACE ADMINISTRATION LYNDON B. JOHNSON SPACE CENTER HOUSTON, TEXAS	SIGNATURE	DATE
	DSGN C. RILEY	05/26/93
EDO WASTE MANAGEMENT	DR L. EGAN-MYER	1/04/93
	CHKR S. TSUYUDA	
	CHKR	
DWG NO 6.13 SPACE SHUTTLE APP	APP	
0V 105	CAGE D.K. Kimbler 6.13-2	
SHEET 3 OF 3 Rev	SZ D 34 LTR F	PCN

BASIC REV F

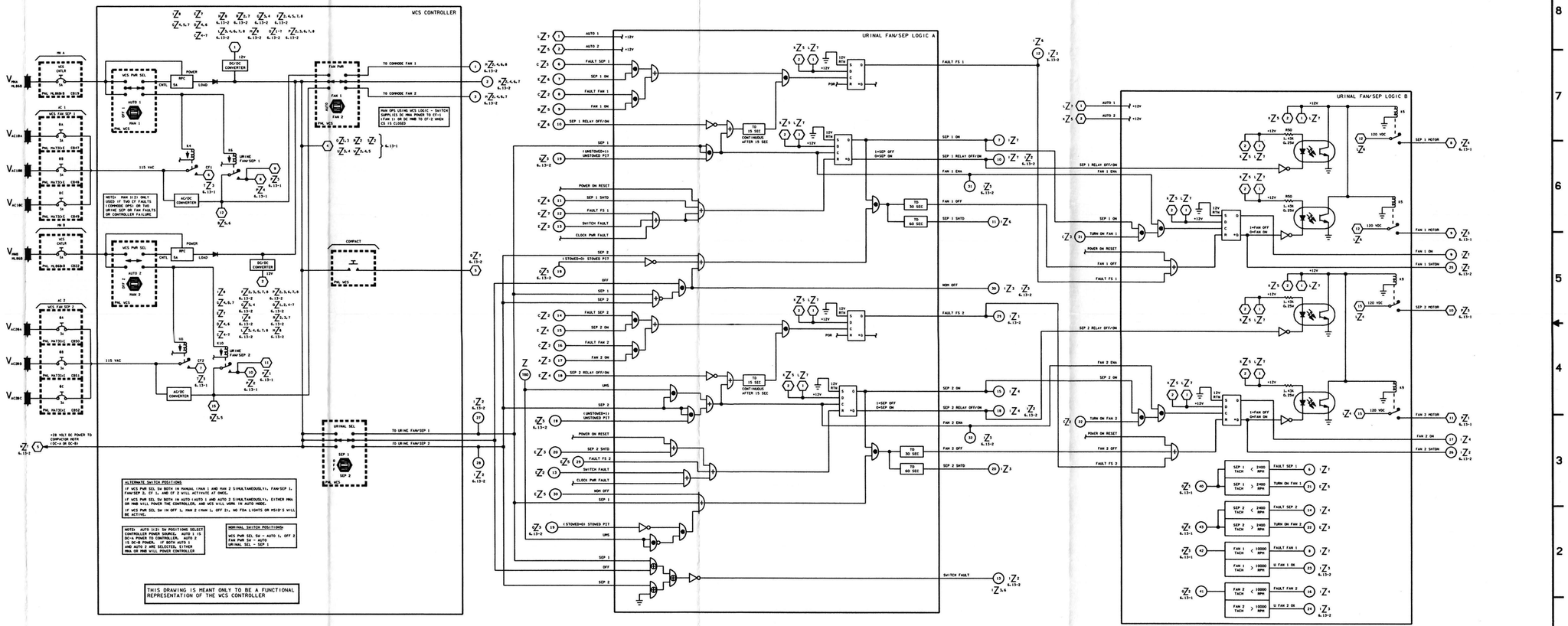

BASIC REV F

14 EXT A/L ECLSS

EXTERNAL AIRLOCK ECLSS-THERMAL CONTROL, WATER, AND O2/N2 SUPPLY

BASIC REV F-3

BASIC REV F-3

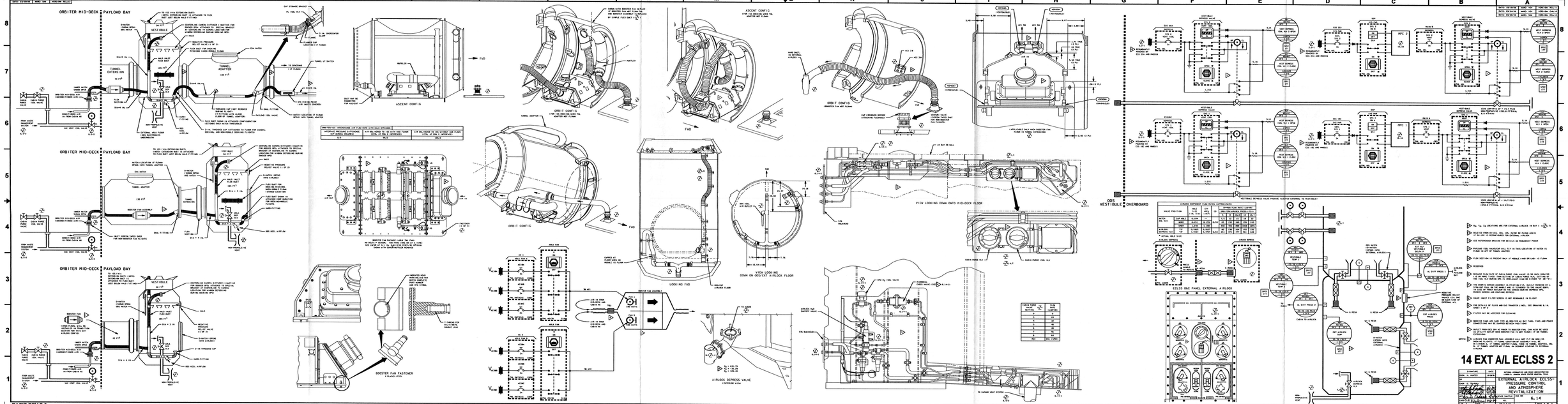
ORBITER MID-DECK PAYLOAD BAY
ASCENT CONFIG
ORBIT CONFIG
LOOKING FWD
VIEW LOOKING DOWN ON ODS/EXT AIRLOCK FLOOR
VIEW LOOKING DOWN ONTO MID-DECK FLOOR
BOOSTER FAN FASTENER
AIRLOCK DEPRESS VALVE
OOS VESTIBULE OVERBOARD
ECLSS DBC PANEL EXTERNAL AIRLOCK
14 EXT A/L ECLSS 2
EXTERNAL AIRLOCK ECLSS-PRESSURE CONTROL AND ATMOSPHERE REVITALIZATION
6.14
BASIC REV F-3

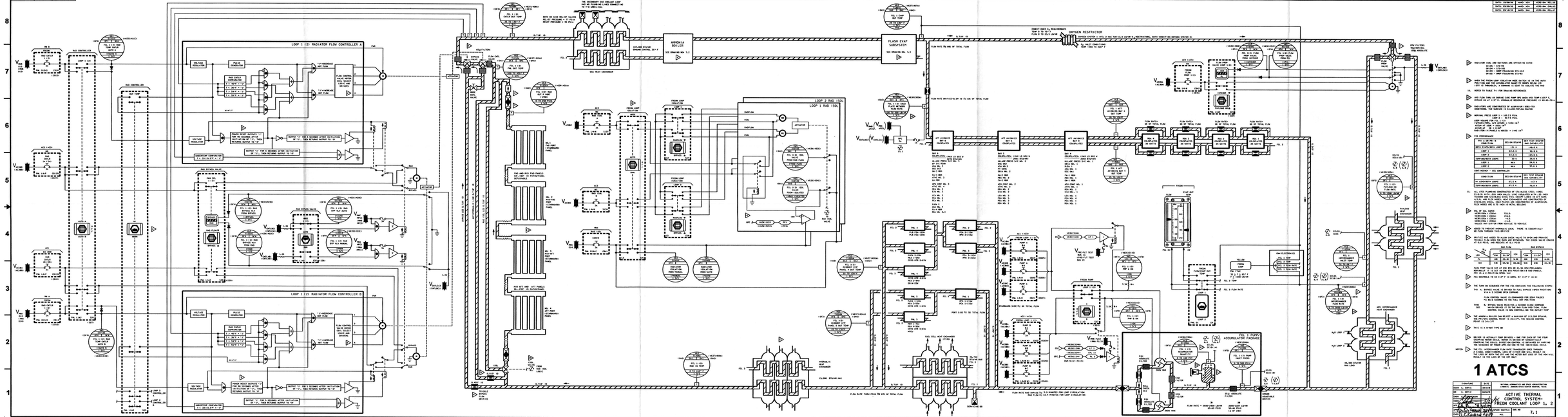
LOOP 1 (2) RADIATOR FLOW CONTROLLER A
LOOP 1 (2) RADIATOR FLOW CONTROLLER B
LOOP 2 RAD ISOL
LOOP 1 RAD ISOL
AMMONIA BOILER
FLASH EVAP SUBSYSTEM
OXYGEN RESTRICTOR
FCL 1 PUMP ACCUMULATOR PACKAGE
1 ATCS
ACTIVE THERMAL CONTROL SYSTEM- FREON COOLANT LOOP 1, 2
7.1
BASIC REV F-3

DATE: 09/17/91	NAME: MAG	VERSION: INK, 4
DATE: 04/03/97	NAME: BJB	VERSION: INK, 5
DATE: 05/29/97	NAME: VSH	VERSION: INK, 6

PLUMBING LENGTHS	LOOP 1	LOOP 2
PUMP PACKAGE TO TEE OFF MID C/P BAY 2/3/4	0', 1"	0', 1"
TEE OFF MID C/P BAY 2/3/4 TO TEE OFF MID C/P BAY 1/5	4', 11"	6', 0"
TEE OFF MID C/P BAY 1/5 TO FC HX	22', 6"	22', 2"
FC HX TO TEE IN MID C/P BAY 2/3/4	27', 2"	18', 2"
TEE IN MID C/P BAY 2/3/4 TO TEE IN C/P BAY 1/5	0', 6"	2', 8"
TEE OFF MID C/P BAY 2/3/4 TO TEE OFF MID C/P BAY 2/3	8', 5"	9', 6"
TEE OFF MID C/P BAY 2/3 TO MID C/P 2	4', 11"	4', 10"
TEE OFF MID C/P BAY 2/3 TO MID C/P 3	2', 3"	2', 8"
MID C/P 2 TO TEE IN MID C/P BAY 2/3	5', 5"	5', 5"
MID C/P 3 TO TEE IN MID C/P BAY 2/3	1', 1"	1', 0"
TEE IN MID C/P BAY 2/3 TO MID C/P BAY 4	15', 0"	16', 2"
MID C/P BAY 4 TO TEE IN MID C/P BAY 2/3/4	14', 3"	4', 4"
TEE OFF MID C/P BAY 1/5 TO MID C/P BAY 1	2', 4"	1', 11"
MID C/P BAY 1 TO MID C/P BAY 5	17', 4"	18', 1"
MID C/P BAY 5 TO TEE IN MID C/P BAY 1/5	4', 3"	15', 6"
TEE IN MID C/P BAY 1/5 TO HYDR HX	74', 11"	91', 0"
HYDR HX TO TEE OFF RADS	40', 9"	49', 6"
TEE OFF RADS TO RAD CNTLR (BYPASS/HOT LEG)	1', 2"	0', 7"
TEE OFF RADS TO AFT PNL CONNECTION	11', 8"	12', 10"
FRWD PNL CONNECTION TO RAD CNTLR (COLD LEG)	53', 11"	51', 3"
RAD CNTLR TO GSE	34', 10"	50', 9"
GSE HX TO ABS	19', 10"	18', 1"
ABS TO FES	34', 7"	33', 9"
FES TO TEE OFF AFT C/P	3', 4"	5', 8"
TEE OFF AFT C/P TO FPV	74', 6"	90', 3"
FPV TO INTCHGR	14', 0"	12', 2"
INTCHGR TO TEE IN INTCHGR/PL	5', 9"	4', 2"
FPV TO PL HX	3', 6"	4', 0"
PL HX TO TEE IN INTCHGR/PL	8', 1"	7', 2"
TEE IN INTCHGR/PL TO TEE IN CP/INTCHGR/PL	1', 8"	1', 11"
TEE OFF AFT C/P TO AFT C/P BAY 6	7', 8"	6', 2"
AFT C/P BAY 6 TO AFT C/P BAY 5	15', 5"	15', 8"
AFT C/P BAY 5 TO AFT C/P BAY 4	8', 2"	8', 3"
AFT C/P BAY 4 TO TEE IN CP/INTCHGR/PL	88', 10"	105', 5"
TEE IN CP/INTCHGR/PL TO PUMP PACKAGE	0', 4"	0', 3"

1 ATCS 2

SIGNATURE		DATE	NATIONAL AERONAUTICS AND SPACE ADMINISTRATION LYNDON B. JOHNSON SPACE CENTER HOUSTON, TEXAS	
DSGN VIC ORTIZ		5/11/87		
DR			ACTIVE THERMAL CONTROL SYSTEM- FREON COOLANT LOOP 1, 2 (PLUMBING LENGTHS)	
ENGR K. MESSERSMITH				
ENGR K. Messersmith		6/3/97		
APP David Cardrock		6/3/97		
APP			SPACE SHUTTLE	DWG NO 7.1
CADS S.K. Kinkaid		6.17.97	ALL	
LTR	PCN		22 x 17	PAGE SHEET 2 OF 2

BASIC REV F

DATE: 11/26/91	NAME: PSD	VERSION: IMM.2
DATE: 05/19/97	NAME: BJB	VERSION: IMM.3
DATE: 04/03/97	NAME: JMB	VERSION: IMM.4

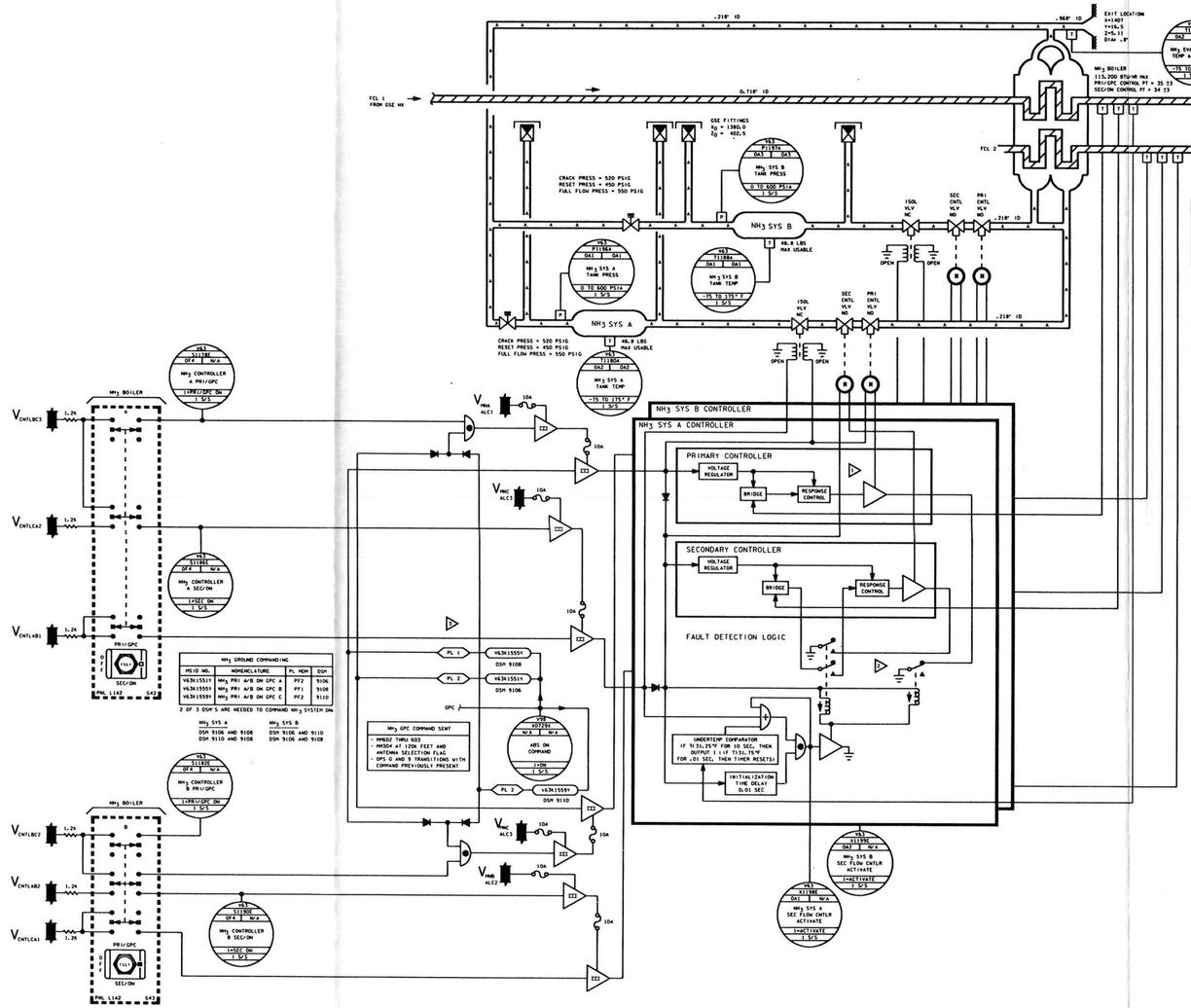

NH3 GROUND COMMANDING

MS ID NO.	NOMENCLATURE	PL MDM	DSN
V63K1555T	NH3 PRI A/B ON GPC A	PF2	9106
V63K1555Y	NH3 PRI A/B ON GPC B	PF1	9108
V63K1559Y	NH3 PRI A/B ON GPC C	PF2	9110

2 OF 3 DSM'S ARE NEEDED TO COMMAND NH3 SYSTEM ON

NH3 SYS A: DSH 9106 AND 9108; DSH 9110 AND 9108

NH3 SYS B: DSH 9106 AND 9110; DSH 9106 AND 9108

NH3 GPC COMMAND SENT
- MM02 THRU 603
- MM304 AT 120K FEET AND ANTENNA SELECTION FLAG
- OPS 0 AND 9 TRANSITIONS WITH COMMAND PREVIOUSLY PRESENT

NH3 LEAKAGE FLOW RATES[A]

VEHICLE	NH3 PRESSURE DIFFERENTIAL, PSI	300	250	200
102	SYSTEM A FLOW, LB/HR	19.2	17.5	15.7
	SYSTEM B FLOW, LB/HR	10.5	9.6	8.6
103	SYSTEM A FLOW, LB/HR	28.1	25.7	22.9
	SYSTEM B FLOW, LB/HR	16.9	15.4	13.8
104	SYSTEM A FLOW, LB/HR	16.2	14.8	13.2
	SYSTEM B FLOW, LB/HR	31.2	28.5	25.5

NOTE: [A] LEAKAGE FLOW RATES THROUGH AMMONIA BOILER SYSTEM PRIMARY FLOW CONTROL VALVES AT 300 MILLIAMPERES VALVE CURRENT (CLOSED POSITION) AND NH3 TANK TEMPERATURE OF 55°F

PAYLOAD MDM LOSS	
MDM LOST	NH3 SYSTEM LOST
PL1	NH3 SYSTEM A PRI/GPC
PL2	NH3 SYSTEM A PRI/GPC, NH3 SYSTEM B PRI/GPC

NOTES:
1. IF THE AMMONIA BOILER OUT TEMP DROPS BELOW 31.25° F, A 10 SECOND TIMER IS BEGUN. AT THE END OF 10 SECONDS EITHER THE TIMER WILL BE RESET OR SWITCHOVER FROM PRIMARY TO SECONDARY CONTROLLER WILL OCCUR DEPENDING ON THE FOLLOWING:
   - IF THE TEMP REMAINS BELOW 31.25° F CONTINUOUSLY FOR 10 SEC, SWITCHOVER WILL OCCUR AND THE SECONDARY CONTROLLER AND VALVE WILL BE SELECTED WITH THE PRIMARY VALVE THEN GOING FULL OPEN
   - IF DURING THE 10 SEC THE TEMP RISES ABOVE 31.75° F FOR AS LONG AS 10 MILLISECONDS, THE TIMER IS RESET AND OPERATION CONTINUES ON THE PRIMARY CONTROLLER AND VALVE
   - IF DURING THE 10 SEC THE TEMP RISES ABOVE 31.25° F BUT NOT ABOVE 31.75° F, THEN EITHER RESET OR SWITCHOVER MAY OCCUR AT THE OPTION OF THE CONTROLLER
   - AUTO SWITCHOVER CAN ONLY OCCUR FROM PRIMARY TO SECONDARY
   - TO SWITCH FROM SECONDARY TO PRIMARY (TO RESET THE MALFUNCTION LOGIC) POWER MUST BE REMOVED FROM UNIT AND REAPPLIED
2. UPON INITIAL APPLICATION OF POWER, CONTROLLER DRIVES PRIMARY CONTROL VALVE TO MOST CLOSED POSITION (VALVE IS OPEN WHEN UNPOWERED). CONTROLLER THEN ADJUSTS VALVE TO ESTABLISH AND MAINTAIN THE AMMONIA BOILER FROM OUTLET TEMPERATURE AT 35± 3½° F. AS BOILER OUT TEMP INCREASES, CURRENT TO VALVE DECREASES ALLOWING VALVE TO OPEN MORE. AT ZERO CURRENT VALVE IS FULL OPEN. AT 300 TO 315 MILLIAMPS VALVE IS AT MAX CLOSED POSITION FOR DV102 5-10 PERCENT OF TOTAL FLOW AREA IS STILL OPEN FOR FLOW AT MAX CLOSED POSITION). SPEC MAX FLOW IN CLOSE POSITION IS 45 LBS/HR

2 ABS

SIGNATURE		DATE
DSGN	L. DUPIS	9/30/78
DR	V. ORTIZ	10/10/78
ENGR	E. HEDDLES	
APP		
APP		
CHIEF		

NATIONAL AERONAUTICS AND SPACE ADMINISTRATION
LYNDON B. JOHNSON SPACE CENTER HOUSTON, TEXAS

AMMONIA BOILER SYSTEM

SPACE SHUTTLE | DWG NO 7.2

CAGE | ALL | SIZE D | 66 x 34 | PAGE | SHEET 1 OF 1

LTR F | PCN

BASIC REV F

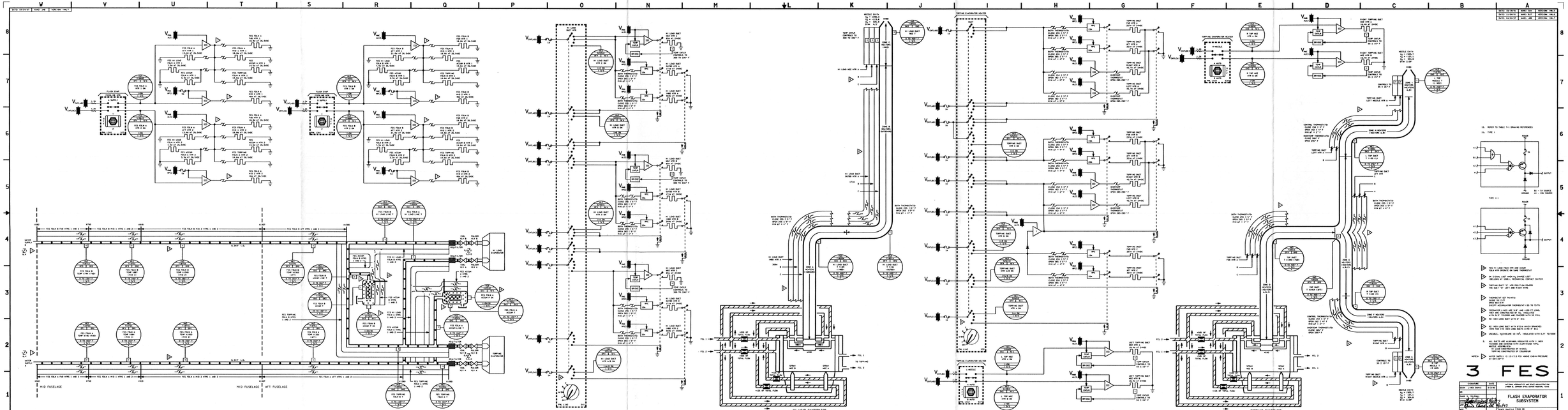
MID FUSELAGE
MID FUSELAGE
AFT FUSELAGE
HI LOAD EVAPORATOR
TOPPING EVAPORATOR
3 FES
FLASH EVAPORATOR SUBSYSTEM
7.3
BASIC REV F
BASIC REV F

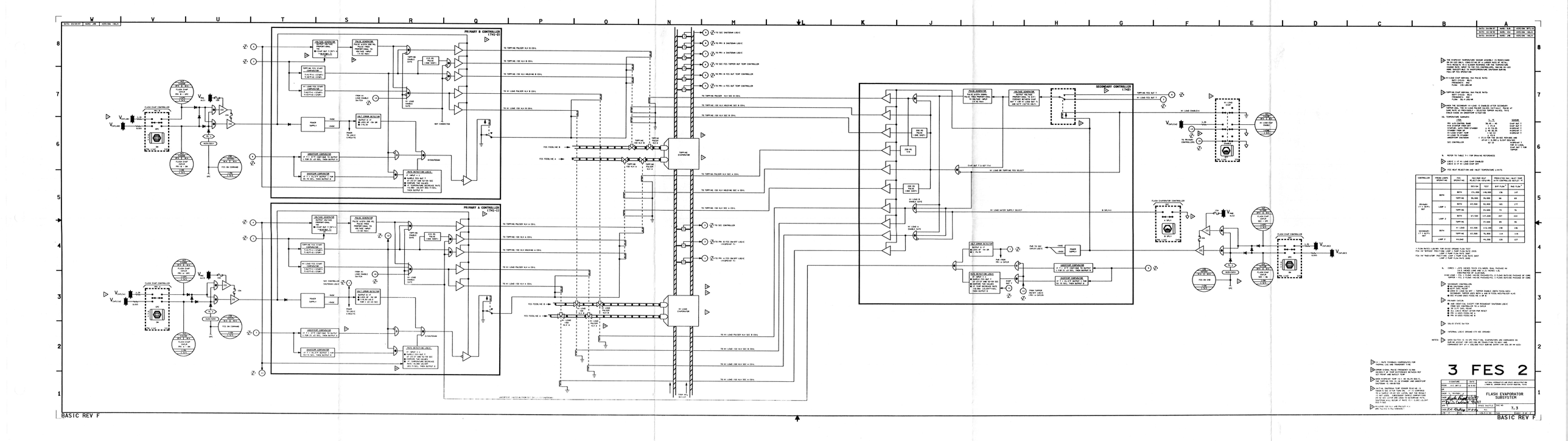
PRIMARY B CONTROLLER (FAC-2)
PRIMARY A CONTROLLER (FAC-1)
SECONDARY CONTROLLER (FAC)
FLASH EVAPORATOR CONTROLLER
FLASH EVAP CONTROLLER
TOPPING EVAPORATOR
M-1 LOAD EVAPORATOR
VOLTAGE GENERATOR SUPPLY VOLTAGE
PULSE GENERATOR
TOPPING FES OUT T
M-1 LOAD FES OUT T
M-1 LOAD ENABLE
FLASH EVAP CONTROLLER
TOPPING FES HLA
M-1 LOAD FES HLA
TOPPING FES HLA SEC
M-1 LOAD FES HLA SEC
TOPPING FES HLA HOLDING
M-1 LOAD FES HLA HOLDING
TOPPING FES HLA HOLDING SEC
M-1 LOAD FES HLA HOLDING SEC
TOPPING FES HLA SEC
M-1 LOAD FES HLA SEC
TOPPING FES HLA
M-1 LOAD FES HLA
FES FEEDLINE B
FES FEEDLINE A
TOPPING FES HLA
M-1 LOAD FES HLA
TOPPING FES HLA SEC
M-1 LOAD FES HLA SEC
TOPPING FES HLA HOLDING
M-1 LOAD FES HLA HOLDING
TOPPING FES HLA HOLDING SEC
M-1 LOAD FES HLA HOLDING SEC
TOPPING FES HLA SEC
M-1 LOAD FES HLA SEC
TOPPING FES HLA
M-1 LOAD FES HLA
FES FEEDLINE B
FES FEEDLINE A
TOPPING FES HLA
M-1 LOAD FES HLA
TOPPING FES HLA SEC
M-1 LOAD FES HLA SEC
TOPPING FES HLA HOLDING
M-1 LOAD FES HLA HOLDING
TOPPING FES HLA HOLDING SEC
M-1 LOAD FES HLA HOLDING SEC
TOPPING FES HLA SEC
M-1 LOAD FES HLA SEC
TOPPING EVAPORATOR
M-1 LOAD EVAPORATOR
TO SEC SHUTDOWN LOGIC
TO PRI B SHUTDOWN LOGIC
TO PRI A SHUTDOWN LOGIC
TO SEC FES TOPPER OUT TEMP CONTROLLER
TO PRI B FES OUT TEMP CONTROLLER
TO PRI A FES OUT TEMP CONTROLLER
TO SEC CONTROLLER
TO PRI B FES INVERT LOGIC (+SUPPLY T)
TO PRI A FES INVERT LOGIC (+SUPPLY T)
TO M-1 LOAD FES HLA SEC B CELL
TO M-1 LOAD FES HLA SEC A CELL
TO M-1 LOAD FES HLA HOLDING SEC B CELL
TO M-1 LOAD FES HLA HOLDING SEC A CELL
TO M-1 LOAD FES HLA SEC B CELL
TO M-1 LOAD FES HLA SEC A CELL
TOPPING FES OUT T
M-1 LOAD FES OUT T
M-1 LOAD ENABLE
M-1 LOAD ENABLE
TO PRIMARY CONTROLLER
FLASH EVAP CONTROLLER
FLASH EVAPORATOR CONTROLLER
M-1 LOAD WATER SUPPLY SELECT
M-1 LOAD BR TOPPING FES SELECT
CHAR OUT T & SET FLC
PUMP TO SEC SHUTDOWN LOGIC
HIGH TOPPER TEMP SHUTDOWN
TO PRI A CONTROLLER
TO PRI B CONTROLLER
TO SEC CONTROLLER

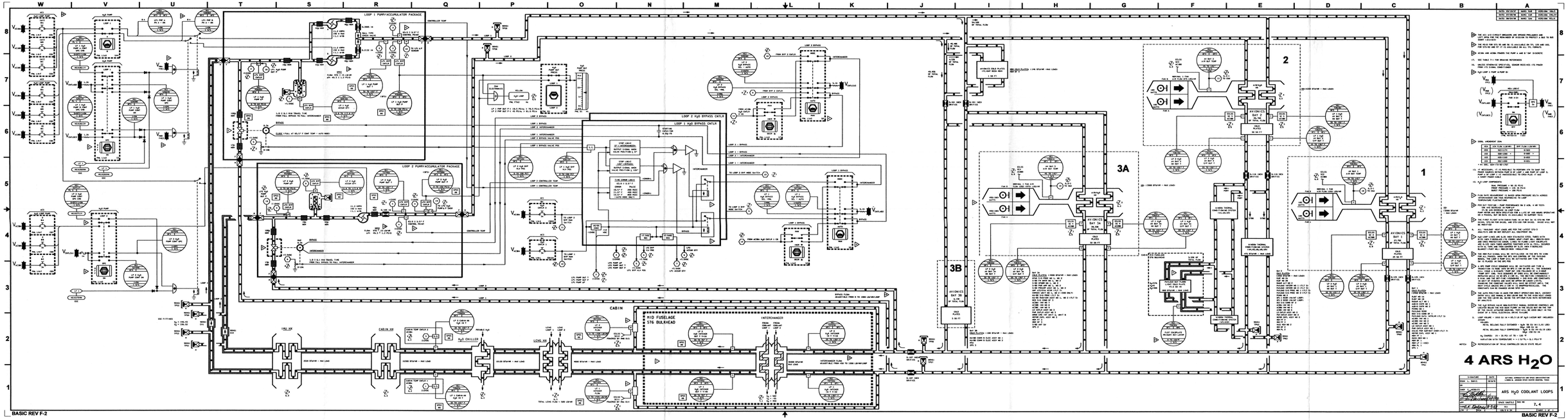
LOOP 1 PUMP/ACCUMULATOR PACKAGE
LOOP 2 PUMP/ACCUMULATOR PACKAGE
LOOP 2 H2O BYPASS CNTLR
CABIN
MID FUSELAGE
576 BULKHEAD
INTERCHANGER
3A
3B
1
2
AVIONICS BAY 3A
AVIONICS BAY 3B
AVIONICS BAY 1
AVIONICS BAY 2
4 ARS H2O
ARS H2O COOLANT LOOPS
BASIC REV F-2

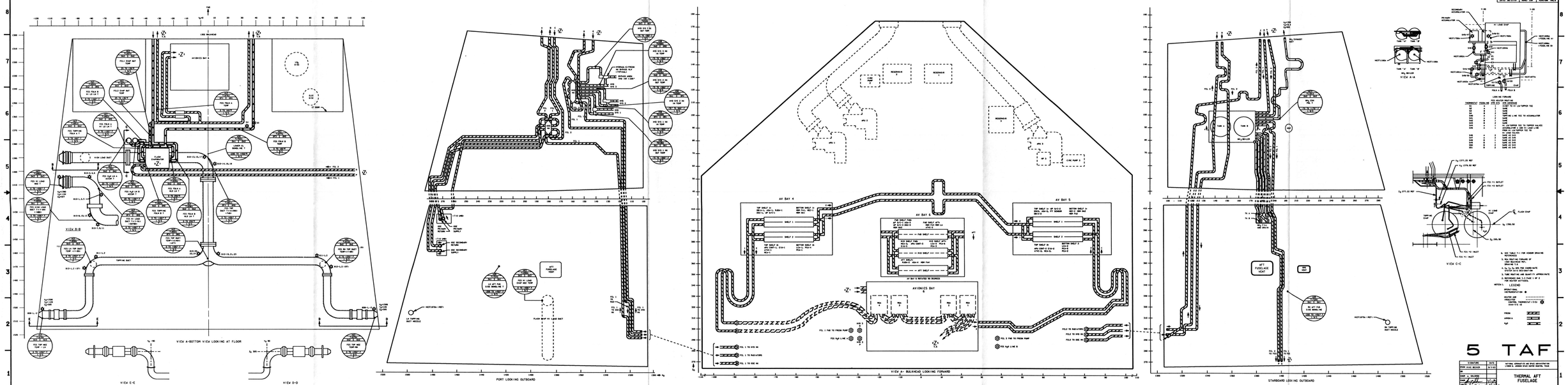

VIEW A-BOTTOM VIEW LOOKING AT FLOOR
VIEW B-B
VIEW E-E
VIEW D-D
PORT LOOKING OUTBOARD
VIEW A- BULKHEAD LOOKING FORWARD
STARBOARD LOOKING OUTBOARD
VIEW A-A
VIEW C-C
AVIONICS BAY
AFT FUSELAGE VENT
LEGEND
5 TAF
THERMAL AFT FUSELAGE
7.5
BASIC REV F

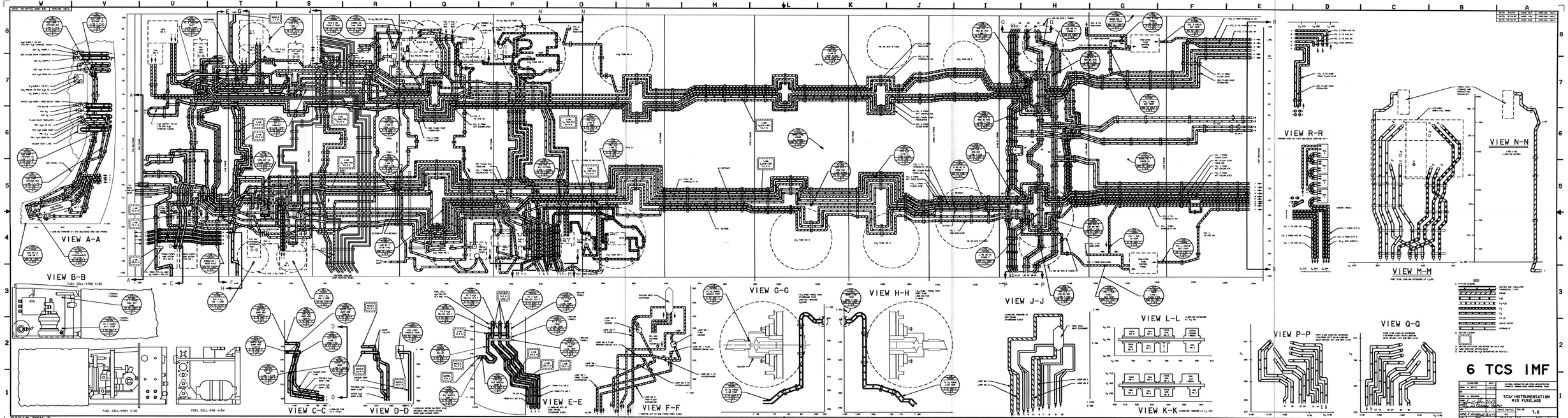

6 TCS IMF

TCS/INSTRUMENTATION MID FUSELAGE

BASIC REV F

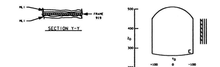

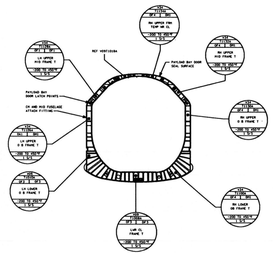

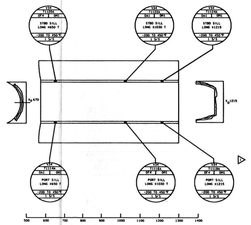

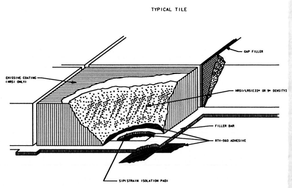

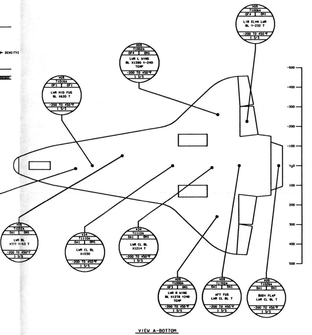

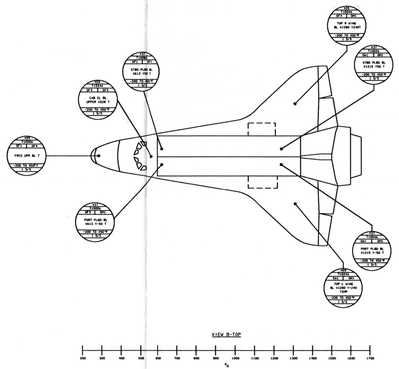

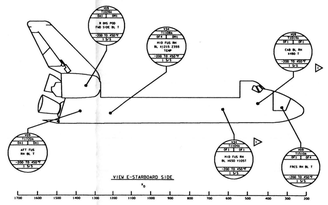

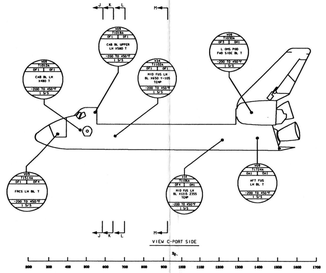

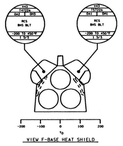

NOTES:
1. FOR HOOVER DRAWING REFERENCES SEE TABLE T-1
HATCH ▷ NOT ACTIVE ON BASE

7 TPS INST

SIGNATURE	DATE	NASA/ROCKWELL INTERNATIONAL
DRAWN JAMES BLANCHARD	10-15-81	SPACE TRANSPORTATION SYSTEMS GROUP, DOWNEY, CALIFORNIA
CHK		
CHIEF — TECHNOLOGY		TPS/STRUCTURE INSTRUMENTATION
APPD		
APPD		
APPD		
APPD P.P. Chilton 10-29-81		SPACE SHUTTLE SHEET NO. 7, 7
ENG		ORBITER

BASIC REV F

BASIC REV F

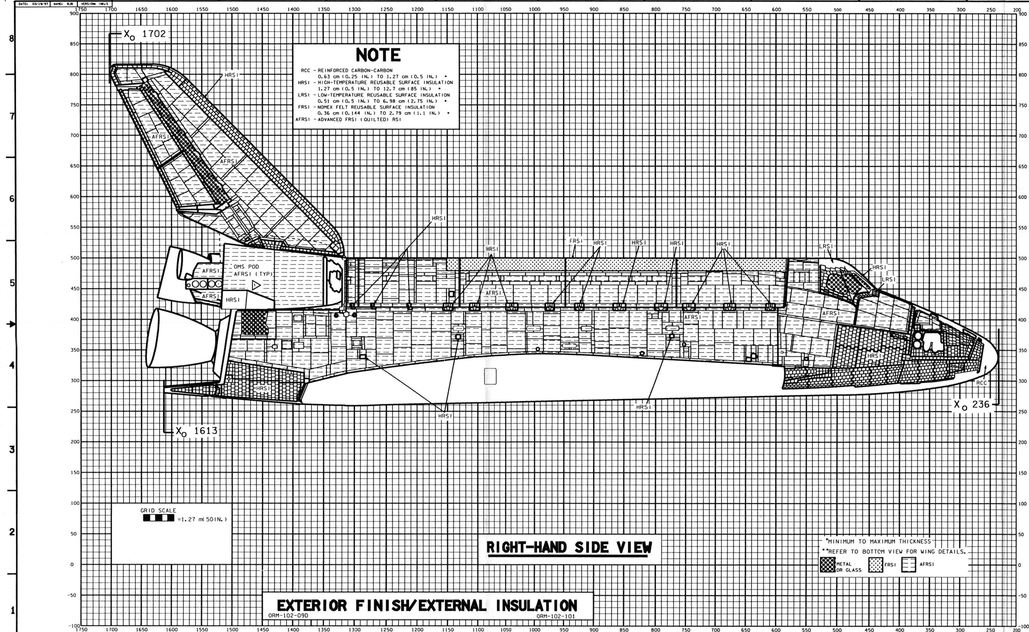

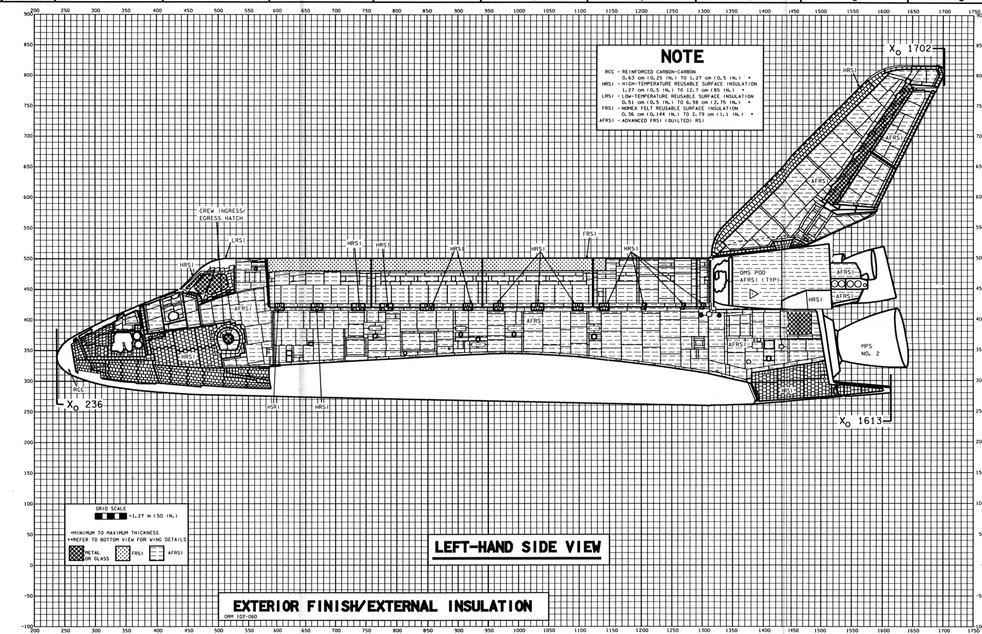

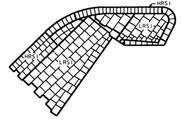

1. OV-102/104 TPS CONFIGURATION. OV-102 WILL BE MODIFIED TO THIS CONFIGURATION EXCEPT FOR INSTRUMENTATION FILES
2. REFER TO TABLE 7-1 FOR DRAWING REFERENCES

NOTES: 1. SEE 7.8 SHEET 2 FOR OMS POD TPS DETAILS

8 EXT SIDES

DESIGNATION	DATE	NATIONAL AERONAUTICS AND SPACE ADMINISTRATION LYNDON B. JOHNSON SPACE CENTER HOUSTON, TEXAS
DESIGN AL ANDERSON	10-14-92	
DRAWN AL ANDERSON	10-14-92	EXTERNAL SIDE VIEWS
CHECK	10-14-92	
APPROVED	10-14-92	SPACE SHUTTLE
APPROVED	10-14-92	DWG NO. 7.8
DATE		SHEET 1 OF 2

BASIC REV F

BASIC REV F

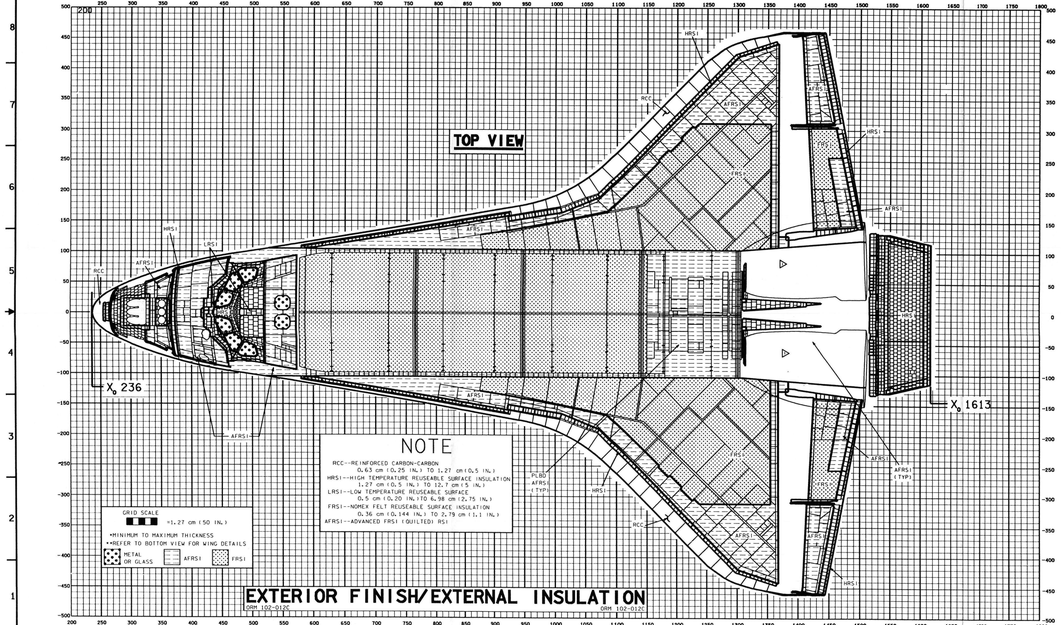

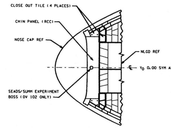

CHIN PANEL INSTALLATION (OV102-104 ONLY)

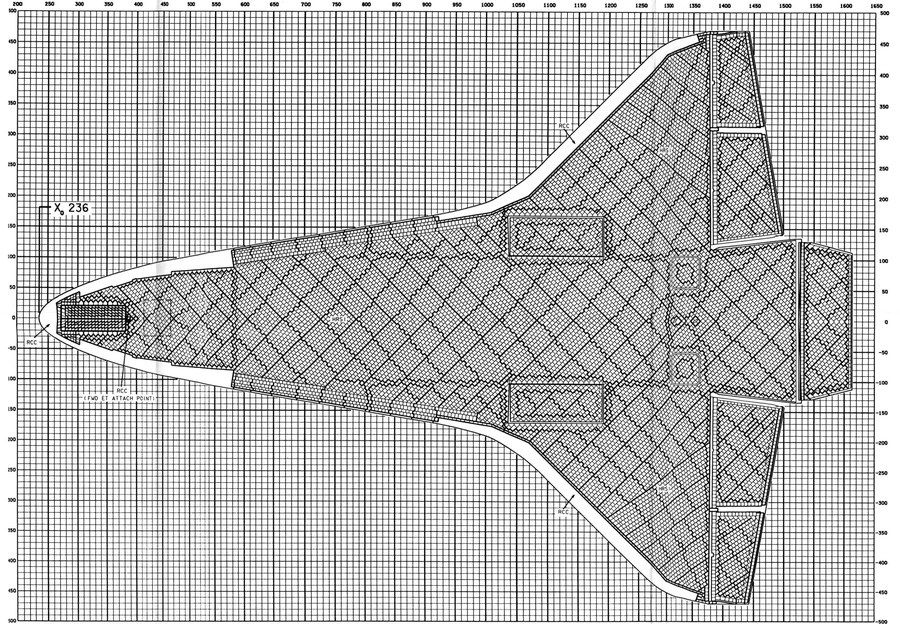

3. OV-103/104 TPS CONFIGURATION, OV-102 WILL BE MODIFIED TO THIS, EXCEPT FOR INSTRUMENTATION TILES
2. REFER TO TABLE 7.1-1 FOR DRAWING REFERENCES
NOTES: 1. SEE DWG 7.8 SHEET 3 FOR OMS POD TPS

8 TOP/BOTTOM 2

SIGNATURE	DATE	NOTICE: PROPRIETARY OR SPACE INFORMATION CONTAINED HEREIN SUBJECT TO COVER SHEET RESTRICTIONS
DES'D: LOCKE	09-15-88	
DR: L. ACUNA		
CHK'D: THOMAS	09/15/88	EXTERNAL VIEWS TOP/BOTTOM
APP'D: Robert Hanks	09/15/88	
APP'D: Michael Coats	09/15/88	
APP'D: Richard Truly	09/15/88	DRAWING NUMBER: 7.8
SCALE: NONE	WT:	SHEET 1 OF 3

BASIC REV F

DATE 09/29/78	NAME R.H.	HOUSTON ONLY
DATE 09/29/78	NAME R.H.	HOUSTON ONLY
DATE 09/29/78	NAME R.H.	HOUSTON ONLY

DATE 09/29/78 NAME R.H. HOUSTON ONLY

S R Q P O N M L K J I H G F E D C B A

8 EX P/TILE 3

NATIONAL AERONAUTICS AND SPACE ADMINISTRATION LYNDON B. JOHNSON SPACE CENTER, HOUSTON, TEXAS	CONCURRED	DATE
	Jesse Wade Manager	10/29/78
EXTERNAL PENETRATIONS/TILE (AFT)	MR. T. K. MATTINGLY	10/29/78
	CHIEF, ENGINEERING	
DWG NO. 7.8	Robert F. Thompson	10/29/78
SPACE SHUTTLE	CHIEF, STRUCTURES & MECHANICS DIVISION	
SCALE NONE	Robert F. Gilruth	10/29/78
SHEET NO. 1 OF 1 SHEETS	DIRECTOR	

BASIC REV F

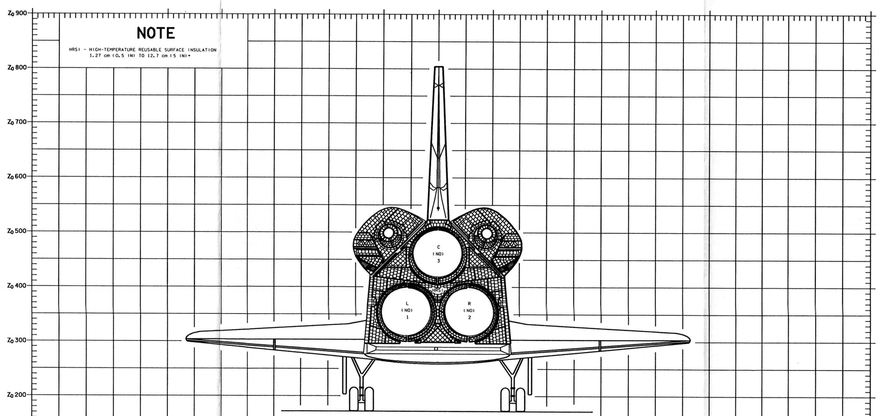

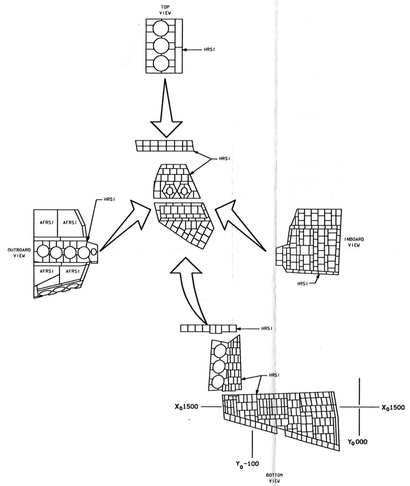

LH POD AFT RCS HOUSING

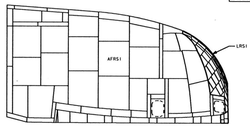

LH OMS POD "INBOARD"

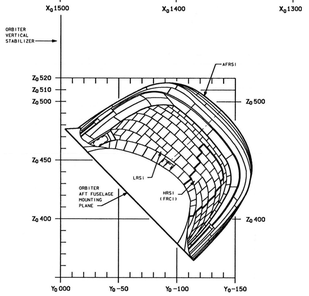

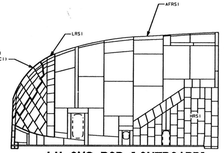

LH OMS POD "OUTBOARD"

BASIC REV F

RCC - REINFORCED CARBON-CARBON (BLACK)

HRSI/FRCI - HIGH-TEMPERATURE REUSABLE SURFACE INSULATION (BLACK)

LRSI - LOW-TEMPERATURE REUSABLE SURFACE INSULATION (WHITE)

FRSI - FRSI-NOMEX FELT REUSABLE SURFACE INSULATION (WHITE)

METAL OR GLASS

AFRSI - ADVANCED-FRSI (QUILTED) FELT REUSABLE SURFACE INSULATION (WHITE)

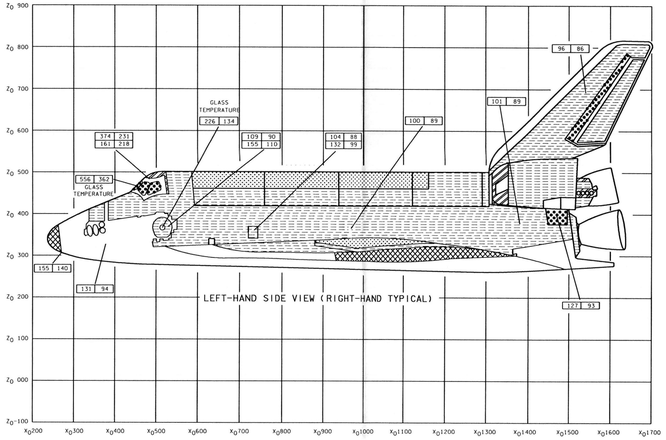

LEFT-HAND SIDE VIEW (RIGHT-HAND TYPICAL)

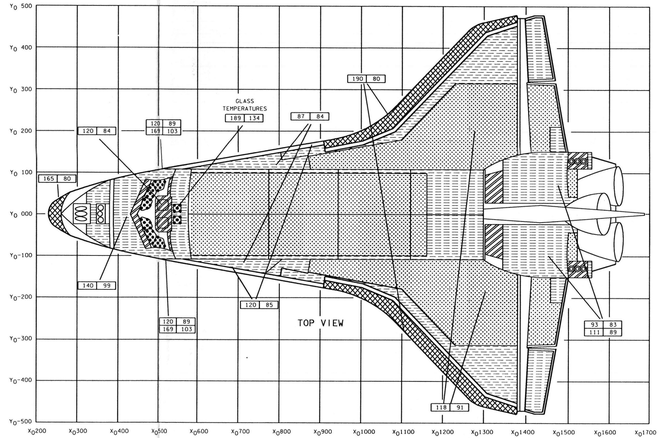

TOP VIEW

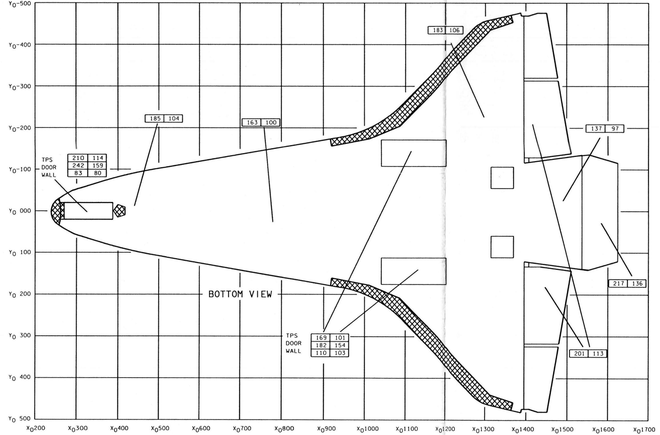

BOTTOM VIEW

4. RCC CHIN PANEL ON XV105-OX SKJL. DUCO NO. MRCI FILE
5. SEE VEH-DB-TPS CONFIGURATION. DO NOT USE NO. MRCI FILE TO TPS CONFIGURATION EXCEPT FOR INSTRUMENTATION FILES
6. REFER TO TABLE 7.1-1VM (Internal) INSTRUMENTS
7. REFER TO SECTION 4.1 FOR GENERAL DETAILS AND SPECIFIC THICKNESS DATA RELATIVE TO PENETRATION AND CUT-IN AREAS
8. POST-TRAJECTORY TEMPERATURES OF THE UPPER SURFACE ARE INDICATED BY THE FOLLOWING NUMBER

CONFIGURATION	TRAJECTORY
ORIGINAL RELEASE	STS-1 thru 5, 7, 8, 41-B

THERMAL PROTECTION SYSTEM (TPS) STRUCTURE

NOTES: 1. SHADED LEVEL BOXES INDICATE TPS TEMPERATURE ONLY

CAUTION: IF ESCAPE PANEL REMOVE IS REQUIRED, THERMAL BLANKETS SHOULD BE USED TO PREVENT HEARS TO RESCUE PERSONNEL

8 EX PST TEMP 4

SIGNATURE	DATE	NATIONAL AERONAUTICS AND SPACE ADMINISTRATION
JOHN O. AYERS	02-28-84	LYNDON B. JOHNSON SPACE CENTER HOUSTON, TEXAS
JSC		
CHIEF, SS SYSTEMS	02/29/84	EXTERNAL
Jerry M. Jones	02/29/84	POST TEMPERATURES
Chief, Structures & Mechanics Division	02/29/84	SPACE SHUTTLE DWG NO.
APP		7.8
CHIEF, Structures & Mechanics Division	2-29-84	SCALE
DR	DATE	SHEET 1 OF 1

BASIC REV F

BASIC REV F

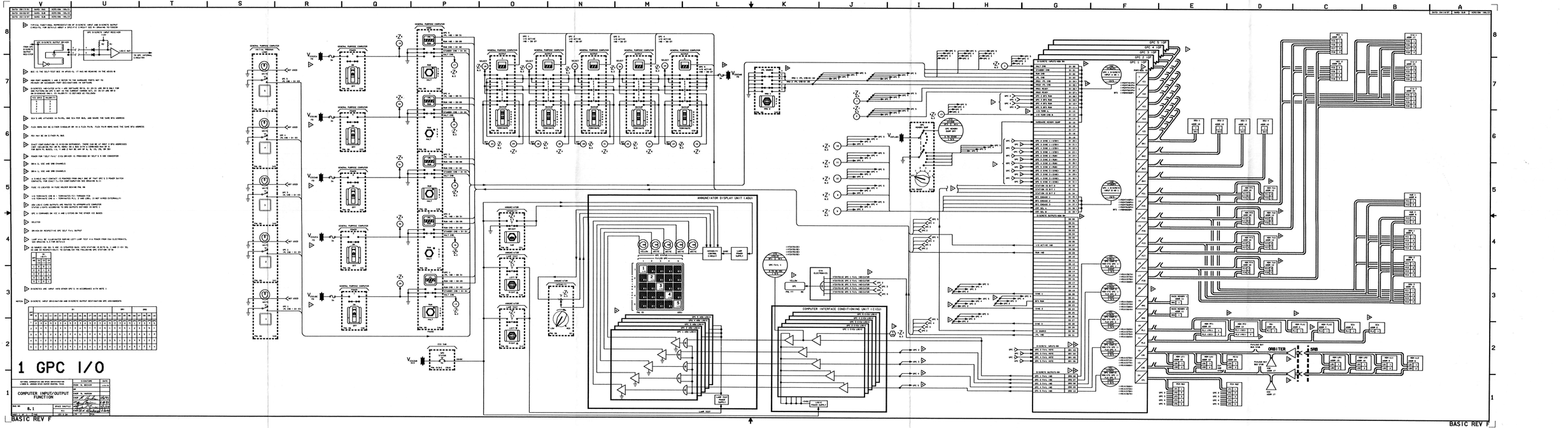
1 GPC I/O
COMPUTER INPUT/OUTPUT FUNCTION
8.1
BASIC REV F
ANNUNCIATOR DISPLAY UNIT (ADU)
COMPUTER INTERFACE CONDITIONING UNIT (CICU)
ORBITER
SRB
BASIC REV F

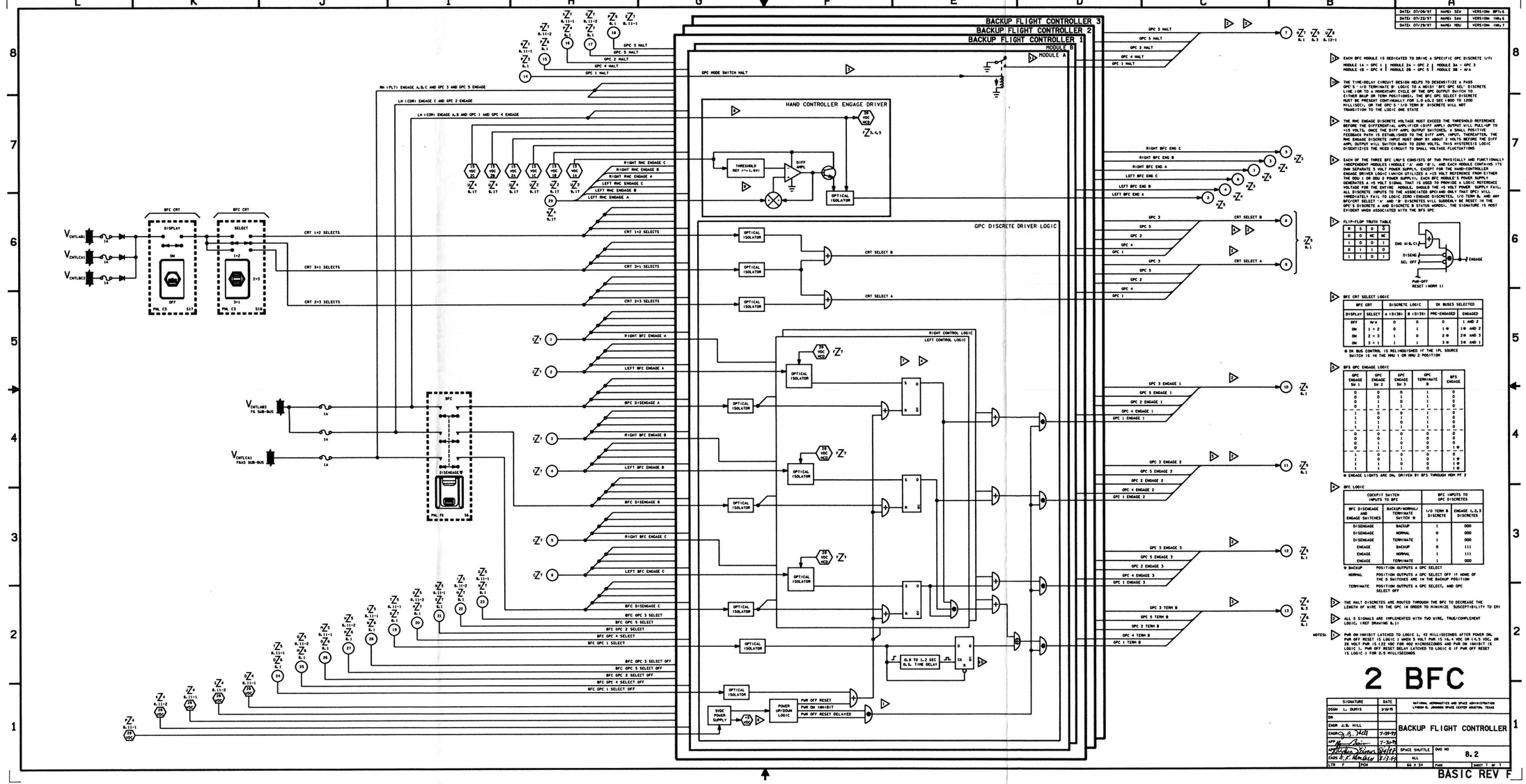

DATE= 07/08/97	NAME= SEW	VERSION= BFS1.6
DATE= 07/23/97	NAME= SAW	VERSION= IML1.6
DATE= 07/29/97	NAME= MDU	VERSION= IML7

EACH BFC MODULE IS DEDICATED TO DRIVE A SPECIFIC GPC DISCRETE I/F:
MODULE 1A – GPC 1 | MODULE 2A – GPC 2 | MODULE 3A – GPC 3
MODULE 1B – GPC 4 | MODULE 2B – GPC 5 | MODULE 3B – N/A

THE TIME-DELAY CIRCUIT DESIGN HELPS TO DESENSITIZE A PASS GPC'S 'I/O TERMINATE B' LOGIC TO A NOISY 'BFC GPC SEL' DISCRETE LINE (OR TO A MOMENTARY CYCLE OF THE GPC OUTPUT SWITCH TO EITHER BKUP OR TERM POSITIONS). THE BFC GPC SELECT DISCRETE MUST BE PRESENT CONTINUALLY FOR 1.0 ±0.2 SEC (800 TO 1200 MILLISEC), OR THE GPC'S 'I/O TERM B' DISCRETE WILL NOT TRANSITION TO THE LOGIC ONE STATE

THE RHC ENGAGE DISCRETE VOLTAGE MUST EXCEED THE THRESHOLD REFERENCE BEFORE THE DIFFERENTIAL AMPLIFIER (DIFF AMPL) OUTPUT WILL PULL-UP TO +15 VOLTS. ONCE THE DIFF AMPL OUTPUT SWITCHES, A SMALL POSITIVE FEEDBACK PATH IS ESTABLISHED TO THE DIFF AMPL INPUT. THEREAFTER, THE RHC ENGAGE DISCRETE INPUT MUST DROP BY ABOUT 3 VOLTS BEFORE THE DIFF AMPL OUTPUT WILL SWITCH BACK TO ZERO VOLTS. THIS HYSTERESIS LOGIC DESENSITIZES THE RCED CIRCUIT TO SMALL VOLTAGE FLUCTUATIONS

EACH OF THE THREE BFC LRU'S CONSISTS OF TWO PHYSICALLY AND FUNCTIONALLY INDEPENDENT MODULES (MODULE 'A' AND 'B'), AND EACH MODULE CONTAINS ITS OWN SEPARATE 5 VOLT POWER SUPPLY, EXCEPT FOR THE HAND-CONTROLLER ENGAGE DRIVER LOGIC (WHICH UTILIZES A +15 VOLT REFERENCE FROM EITHER THE DDU 1 OR DDU 2 POWER SUPPLY). EACH BFC MODULE'S POWER SUPPLY IS ALSO USED TO POWER THE OPTICAL ISOLATORS IN THE GPC INTERFACE CIRCUITRY FOR THE DISCRETES ENGAGED TO THAT MODULE'S POWER SUPPLY. FAIL ALL DISCRETE INPUTS TO THE ASSOCIATED GPC(S) AND ONLY THAT GPC(S) WILL IMMEDIATELY FAIL TO LOGIC ZERO (ENGAGE DISCRETES, I/O TERM B, AND ANY BFC/CRT SELECT 'A' AND 'B' DISCRETES WILL SUBSEQUENTLY BE RESET IN THE GPC'S DISCRETE A AND DISCRETE B STATUS WORDS). THE SIGNATURE IS MOST EVIDENT WHEN ASSOCIATED WITH THE BFS GPC

FLIP-FLOP TRUTH TABLE

R	S	Q	Q̄
0	0	NC	NC
1	0	1	0
0	1	1	0
1	1	0	1

BFC CRT SELECT LOGIC

BFC CRT		DISCRETE LOGIC		DK BUSES SELECTED	
DISPLAY	SELECT	A (01:30)	B (01:31)	PRE-ENGAGED	ENGAGED
OFF	N/A	0	0	0	1 AND 2
ON	1 + 2	0	1	1@	1@ AND 2
ON	2 + 3	1	0	2@	2@ AND 3
ON	3 + 1	1	1	3@	3@ AND 1

@ DK BUS CONTROL IS RELINQUISHED IF THE IPL SOURCE SWITCH IS IN THE MMU 1 OR MMU 2 POSITION

BFS GPC ENGAGE LOGIC

GPC ENGAGE SW 1	GPC ENGAGE SW 2	GPC ENGAGE SW 3	GPC TERMINATE B	BFS ENGAGE
0	0	0	1	0
0	0	1	1	0
0	1	0	1	0
0	1	1	1	0
1	0	0	1	0
1	0	1	1	0
1	1	0	1	0
1	1	1	1	0
0	0	0	0	0
0	0	1	0	0
0	1	0	0	0
0	1	1	0	0
1	0	0	0	0
1	0	1	0	1@
1	1	0	0	1@
1	1	1	0	1@

@ ENGAGE LIGHTS ARE ON, DRIVEN BY BFS THROUGH MDM FF 2

BFC LOGIC

COCKPIT SWITCH INPUTS TO BFC		BFC INPUTS TO GPC DISCRETES	
BFC DISENGAGE AND ENGAGE SWITCHES	BACKUP/NORMAL/ TERMINATE SWITCH @	I/O TERM B DISCRETE	ENGAGE 1,2,3 DISCRETES
DISENGAGE	BACKUP	1	000
DISENGAGE	NORMAL	0	000
DISENGAGE	TERMINATE	1	000
ENGAGE	BACKUP	0	111
ENGAGE	NORMAL	1	111
ENGAGE	TERMINATE	1	000

@ BACKUP — POSITION OUTPUTS A GPC SELECT
NORMAL — POSITION OUTPUTS A GPC SELECT OFF IF NONE OF THE 5 SWITCHES ARE IN THE BACKUP POSITION
TERMINATE — POSITION OUTPUTS A GPC SELECT, AND GPC SELECT OFF

THE HALT DISCRETES ARE ROUTED THROUGH THE BFC TO DECREASE THE LENGTH OF WIRE TO THE GPC I/F IN ORDER TO MINIMIZE SUSCEPTIBILITY TO EMI

ALL 5 SIGNALS ARE IMPLEMENTED WITH TWO WIRE, TRUE/COMPLEMENT LOGIC. (REF DRAWING 8.1)

NOTES: PWR ON INHIBIT LATCHED TO LOGIC 1; 42 MILLISECONDS AFTER POWER ON, PWR OFF RESET IS LOGIC 1 WHEN 5 VOLT PWR IS 36.4 VDC OR 4.5 VDC, OR 28 VOLT PWR IS ≤22 VDC FOR 400 MICROSECONDS AND PWR ON INHIBIT IS LOGIC 1; PWR OFF RESET DELAY LATCHED TO LOGIC 0 IF PWR OFF RESET IS LOGIC 1 FOR 0.5 MILLISECONDS

2 BFC

SIGNATURE	DATE
DSGN L. DUNIS	9/16/91
QR	
ENGR J.B. HILL	
ENGR G.A. Hall	7-29-97
UPP J. Lee	7-30-97
Matthew Dixon 8/1/97	
CADS S.F. Mangan 8/13/97	

NATIONAL AERONAUTICS AND SPACE ADMINISTRATION
LYNDON B. JOHNSON SPACE CENTER HOUSTON, TEXAS

BACKUP FLIGHT CONTROLLER

SPACE SHUTTLE | DWG NO 8.2 | ALL | 66 x 34 | PAGE | SHEET OF 1

LTR F | PCN

BASIC REV F

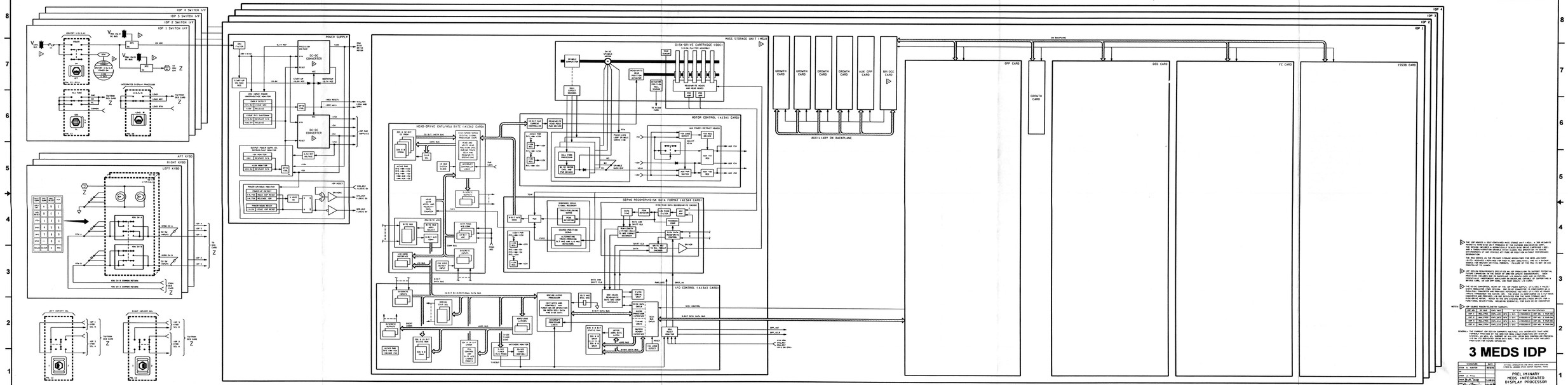

THE IDP HOUSES A SELF-CONTAINED MASS STORAGE UNIT (MSU). A 300 MEGABYTE MAGNETIC DISK DRIVE UNIT IS PROVIDED AS THE NORMAL CONFIGURATION. THE MSU CONTAINS A DISK-DRIVE CARTRIDGE (DDC) WHICH HOUSES THE DISK MEDIA AND A THERMO-SYPHON FOR ENABLE HEATS ALONG WITH MSU OPERATION IN SEVERE ENVIRONMENTS. THE DDC IS SEALED AT THE VENDOR FACILITY FOR MAXIMUM RELIABILITY AND CONTAMINATION PROTECTION.

THE MSU SERVES AS THE PRIMARY STORAGE RESERVOIRS FOR MEDS MDS SUPPLY DATA AND PROGRAMS. THE MSU IS ALSO USED TO STORE AND LOAD THE IDP'S OPERATING SYSTEM AND RELEVANT SOFTWARE FORMATS. FOLLOWING IS THE MSU AS SET UP AS THE NORMAL CONFIGURATION.

IDP DESIGN REQUIREMENTS SPECIFY AN IDP PRODUCTION TO SUPPORT POSSIBLE FUTURE EXPANSION IN THE AREAS OF MEMORY SPACE (MAGNETIC). SUCH PROVISIONS INCLUDED ARE AN ADDITIONAL I/O GROWTH CARD AND AN EXPANSION BACKPLANE. THE BACKPLANE IS CAPABLE OF SUPPORTING A BRIDGE CARD, AN AUX GPP CARD, AND FOUR GROWTH I/O CARDS.

THE DC-DC CONVERTER, HEART OF THE IDP POWER SUPPLY, UTILIZES A PULSE-WIDTH MODULATED CONVERTER TO PROVIDE REGULATED +5 VOLTS DC FROM THE RAW +28 VOLTS DC INPUT. THE +5 VOLTS DC OUTPUT IS CAPABLE OF 100 AMPS. LIMITS THROUGHOUT THE DESIGN ARE: THE DESIGN IS CONFIGURED AS A FAIL-SAFE SYSTEM WHICH WILL SHUT DOWN IF ANY OF THE FOLLOWING OCCUR: A HIGH-VOLTAGE RECORD, RESET TO THE 5TH CONSECUTIVE WATCHDOG TIMEOUT OR A LOW-VOLTAGE RECORD. RESET TO THE 5TH CONSECUTIVE WATCHDOG TIMEOUT OR A LOW-VOLTAGE RECORD. RESET TO THE 5TH CONSECUTIVE WATCHDOG TIMEOUT OR A LOW-VOLTAGE RECORD.

NOTES:

1. IDP SLOT PRIORITY SELECTION SUMMARY

IDP SLOT 4	PRIORITY 1	DPU-1	BUS A	
IDP SLOT 3	PRIORITY 2	DPU-1	BUS B	ALTERNATE
IDP SLOT 2	PRIORITY 3	DPU-2	BUS A	ALTERNATE
IDP SLOT 1	PRIORITY 4	DPU-2	BUS B	ALTERNATE

GENERALLY, THE CURRENT IDP DESIGN SUPPORTS MULTIPLE I/O INTERFACES THAT ARE CURRENTLY PROVIDED TO THE MMS-CV BUS. THESE INCLUDE THE DDI DISPLAY INTERFACE, THE MDS INTERFACE, THE MSU INTERFACE, AND THE 1553B INTERFACE. THE 1553B INTERFACE TERMINATES BOTH BUS, THE IDP DESIGN ALSO INCLUDES PROVISIONS FOR FUTURE EXPANSION.

3 MEDS IDP

TITLE/CODE	DATE	NATIONAL AERONAUTICS AND SPACE ADMINISTRATION
3 MEDS IDP	10/8/86	LYNDON B. JOHNSON SPACE CENTER, HOUSTON, TEXAS
DES. ENGR. (PRINT)		
PRELIMINARY MEDS INTEGRATED DISPLAY PROCESSOR		
DRAWING NUMBER		SHEET NUMBER
9.3		

BASIC REV F-2

BASIC REV F-2

DATE/DATUM	MADE VID	VIDEO/BW ONLY
DATE/DATUM	MADE VID	VIDEO/BW ONLY
DATE/DATUM	MADE VID	VIDEO/BW ONLY
DATE/DATUM	MADE VID	VIDEO/BW ONLY

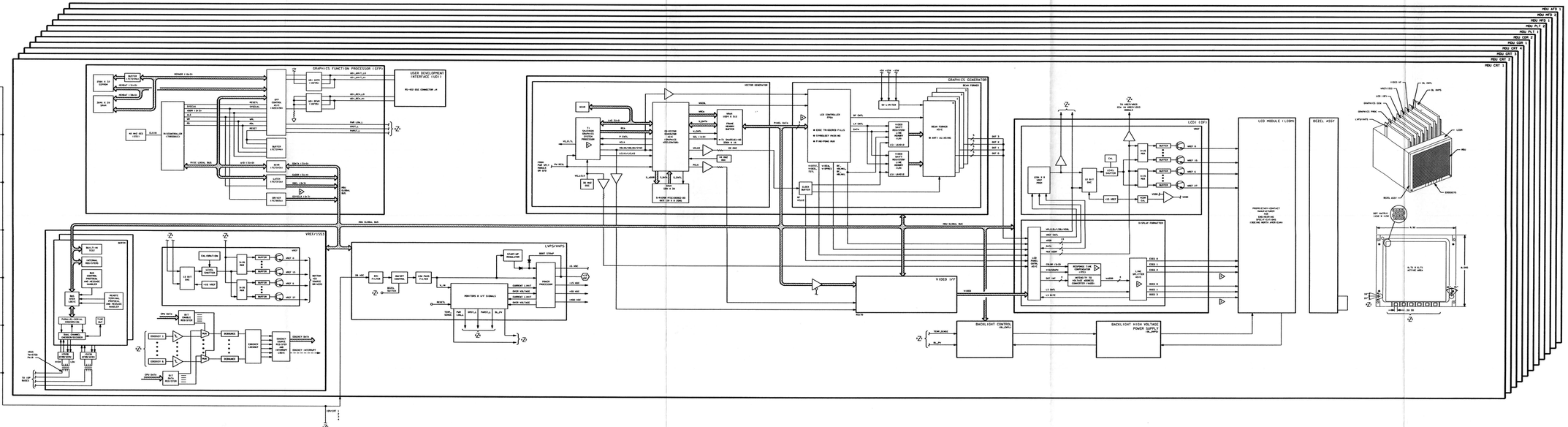

- P1 MDU GLOBAL BUS(S) REFERENCE CLOCK: DIFFERENTIAL 2MHZ BY BUFFS, EIA DIFFERENTIAL 2MHZ BY EIA DIFFERENTIAL 2MHZ BY EIA EIA
- 28 BIT X MIRR AT 20 MHZ
- 32 BITS AT 20 MHZ PIXEL/PIXEL IMAGE DATA
- THE LCS PIXEL/PIXEL MEMORY STORES LINES OF VIDEO/PIXEL DATA. AT 20 MHZ, THE BUFFERS 5 SECONDS OR PARALLEL TO THE SOURCE DATA RATE
- THE LCS WILL BUFFERS AND REFERENCES EITHER OF OR VIDEO DATA (SEE LCS WORLD FORMAT FOR DUAL CLOCKS) LINES, VIDEO TIMING ENABLE ELEMENT CLOCK)
- NOTES: P2 USE MORE VIDEO USE IN GRAPHICS, MORE ONLY MORE USED

3 MEDS MDU 2

SIGNATURE	DATE	NOTICE: PROPRIETARY OR EXPORT RESTRICTION UNDER U. GOVERNMENT OR OTHER APPLICABLE LAWS
DRAWN: R. HARTICH	8/19/98	
APPROVED		MEDS MULTIFUNCTION DISPLAY UNIT
APPROVED		
APPROVED		
APPROVED	

DATE: 09/09/98	NAME: YOU	VERSION: ROLL!

DATE: 09/09/98	NAME: LEE	VERSION: SMILE
DATE: 09/09/98	NAME: JILL	VERSION: SMILE
DATE: 10/08/98	NAME: YOU	VERSION: ROLL!

ADC 2B
ADC 2A
ADC 1B
ADC 1A

ANALOG CARD

32 ANALOG INPUTS

BUFFER (CH00-31)
BUFFER (CH24-27)
BUFFER (CH28-31)
BUFFER (CH16-19)
BUFFER (CH12-15)
BUFFER (CH08-11)
BUFFER (CH04-07)
BUFFER (CH00-03)

BITE DRIVE

ANALOG RCVR (CH0)
ANALOG RCVR (CH1)
ANALOG RCVR (CH2)
ANALOG RCVR (CH3)

CH28-31
CH24-27
CH20-23
CH16-19
CH12-15
CH8-11
CH4-7
CH0-3

ANALOG MUX B1 CH24-31
ANALOG MUX B1 CH16-23
ANALOG MUX B1 CH8-15
ANALOG MUX B1 CH0-7

CH16-31
CH0-15

ANALOG MUX B1

-5.0V
-2.5V
0V
+2.5V
+5.0V
ANALOG GROUND
+5V

CH

SELECT
ENABLE
ENABLE

+15V
-15V
ANALOG GROUND

ANALOG INPUT BUFFER
+15V
-15V

REFERENCE VOLTAGE
A/D CONVERTER
DIGITAL GROUND
+5V

I/F DATA
CONTROL

ADC GATE ARRAY

ANALOG CONTROL
WATCHDOG TIMER
INTERRUPT CONTROL
80C51 CPU
ADDRESS BUS
DATA BUS
CPU DATA
1K X 8 PROM
DATA MUX
CPU ADDR
SCRUB ADDR
SCRUB DATA
BCH DATA
ADDRESS MUX
ARBITER
SCRUB CONTROLLER
SCRUB STORAGE
DATA MUX
BCH ADDR
BCH DATA
BCH I/F
SCRUB DATA
2K X 32 SRAM
2K X 32 SRAM

CLOCK AND RESET
ADC_RST
RESET
ADJUSTABLE SCRUB RATE
ADJUSTABLE SCRUB RATE

CONTROL BUS

BCRTM

HIGH PRIORITY INTERRUPT (HPI)
STANDARD PRIORITY INTERRUPT (SPI)
STANDARD PRIORITY PULSE

INTERRUPT HANDLER

BUILT-IN TEST
BUS CYCLE END PROTOCOL AND MESSAGE HANDLER
BUS TRANSFER LOGIC
REMOTE TERM (RT) PROTOCOL AND MESSAGE HANDLER
INTERNAL REGISTERS
DMA CNTRL/ CONTROL
ADDRESS GENERATOR
DMA ARBITRATION
DUAL PORT MEMORY CONTROL
REGISTER CONTROL

PARALLEL TO SERIAL CONVERSION
SERIAL TO PARALLEL CONVERSION
TWO CHANNEL TRANSMITTER/ RECEIVER MODULE
TIME OUT

DATA BUS
CONTROL BUS
ADDRESS BUS

PARITY
BIT ADDR 0
BIT ADDR 1
BIT ADDR 2
BIT ADDR 3
BIT ADDR 4

LOGIC LEVEL DATA
LOGIC LEVEL DATA

+15V
-15V
1553 FILTER PAIR

TO /FROM BUSES
TO /FROM BUSES

POWER SUPPLY CARD

+28V
EMI FILTER
+15VDC FROM SHUTSTRAP WIRE/HINE
PWR TRANSFER
PWR SHUTDOWN
PWR
PWR OUTPUT
RAMP INPUT
TURNOUT SENSE
FEEDBACK VOLTAGE
RECTIFIER & PI FILTER
REGULATOR +15V
REGULATOR -15V
+5V
ISOLATED VOLTAGE GENERATOR
FEEDBACK CONDITIONING
SPDU ISOLATION
OUTPUT VOLTAGE MONITOR
+15V
+15V
VOLTAGE REGULATOR
RESET CONDITIONER
ADC_RST*
A/D CONVERTER W/ BUFFER BIT VOLTAGE GENERATOR
BITE CMD
BITE CTRL
+5.5V
+5.5V
+5V
+5V
DIGITAL GROUND
ANALOG GROUND

+5
RESET*

THESE LINES ARE PART OF THE J2 CONNECTOR
INPUTS ARE DIFFERENTIAL INPUTS
FOR ESC USE ONLY
THE STANDARD PRIORITY PULSE IS NOT USED BY THE ADC
THE A/D CONVERTERS HAS A RESOLUTION OF 5.5 MV PER LSB

NOTES:
THE BIAS VOLTAGE IS ASSIGNED TO THE CHANNELS AS FOLLOWS:
+5V - 0, 3, 5, 6, 9, 10, 12, 15, 17, 20, 23, 24, 26, 29
-5V - 1, 2, 4, 7, 8, 11, 13, 14, 18, 19, 21, 22, 25, 27, 28, 31

3 MEDS ADC 3

SIGNATURE		DATE	NATIONAL AERONAUTICS AND SPACE ADMINISTRATION LYNDON B. JOHNSON SPACE CENTER HOUSTON, TEXAS
TECH L. MARTINDALE		09/09/98	
QA			
CHIEF R. HUDSON			ANALOG TO MEDS DIGITAL CONVERTER
MANG K. TOMS			
PROJ		09/09/98	SPACE SHUTTLE DWG NO 8.3
PROJ		09/09/98	REV
CHIEF		09/09/98	SHEET 1 OF 1
ENG			

BASIC REV F-2

BASIC REV F-2

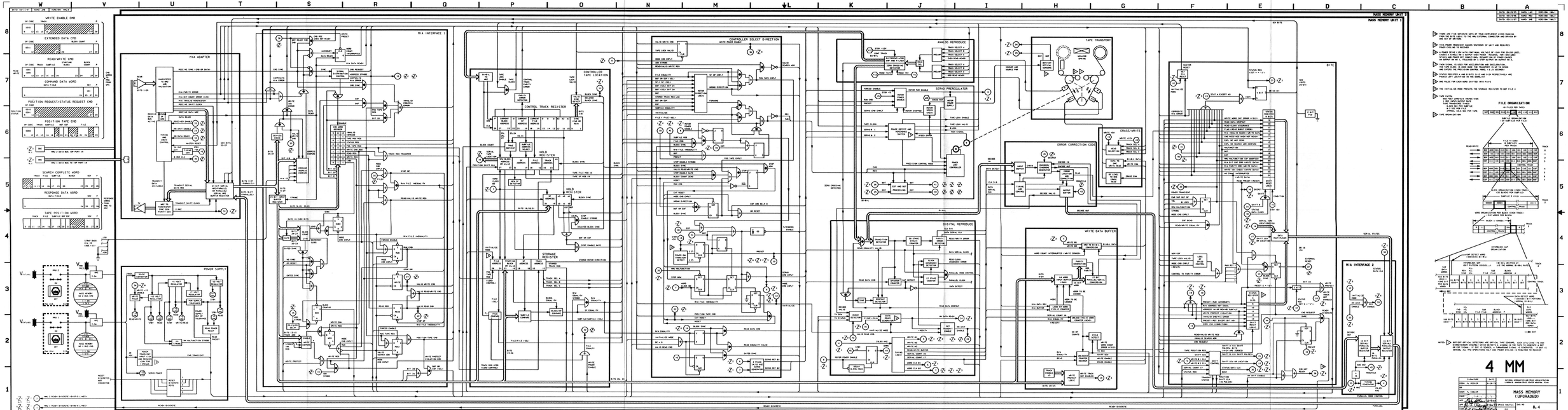
MASS MEMORY UNIT 2
MASS MEMORY UNIT 1
MIA INTERFACE 1
MIA ADAPTER
CONTROLLER TAPE LOCATION
CONTROL TRACK REGISTER
HOLD REGISTER
STORAGE REGISTER
CONTROLLER SELECT DIRECTION
ANALOG REPRODUCE
SERVO PREQUALIFIER
TAPE TRANSPORT
DIGITAL REPRODUCE
ERROR CORRECTION CODES
ERASE/WRITE
WRITE DATA BUFFER
BITE
MIA INTERFACE 2
POWER SUPPLY
WRITE ENABLE CMD
EXTENDED DATA CMD
READ/WRITE CMD
COMMAND DATA WORD
POSITION REQUEST/STATUS REQUEST CMD
POSITION TAPE CMD
SEARCH COMPLETE WORD
RESPONSE DATA WORD
TAPE POSITION WORD
4 MM
MASS MEMORY
(UPGRADED)

BASIC REV F

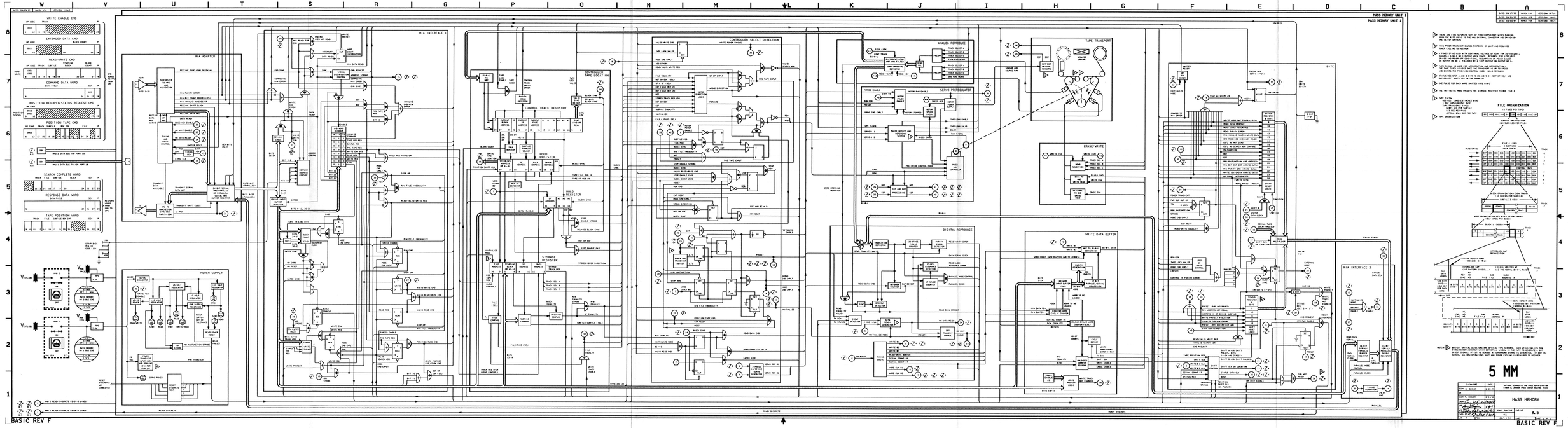
MASS MEMORY UNIT 2
MASS MEMORY UNIT 1
WRITE ENABLE CMD
EXTENDED DATA CMD
READ/WRITE CMD
COMMAND DATA WORD
POSITION REQUEST/STATUS REQUEST CMD
POSITION TAPE CMD
SEARCH COMPLETE WORD
RESPONSE DATA WORD
TAPE POSITION WORD
MIA INTERFACE 1
MIA ADAPTER
POWER SUPPLY
CONTROLLER SELECT DIRECTION
CONTROLLER TRACK LOCATION
CONTROL TRACK REGISTER
HOLD REGISTER
STORAGE REGISTER
ANALOG REPRODUCE
SERVO PREREGULATOR
TAPE TRANSPORT
DIGITAL REPRODUCE
WRITE DATA BUFFER
ERASE/WRITE
BITE
MIA INTERFACE 2
FILE ORGANIZATION
5 MM
MASS MEMORY
BASIC REV F

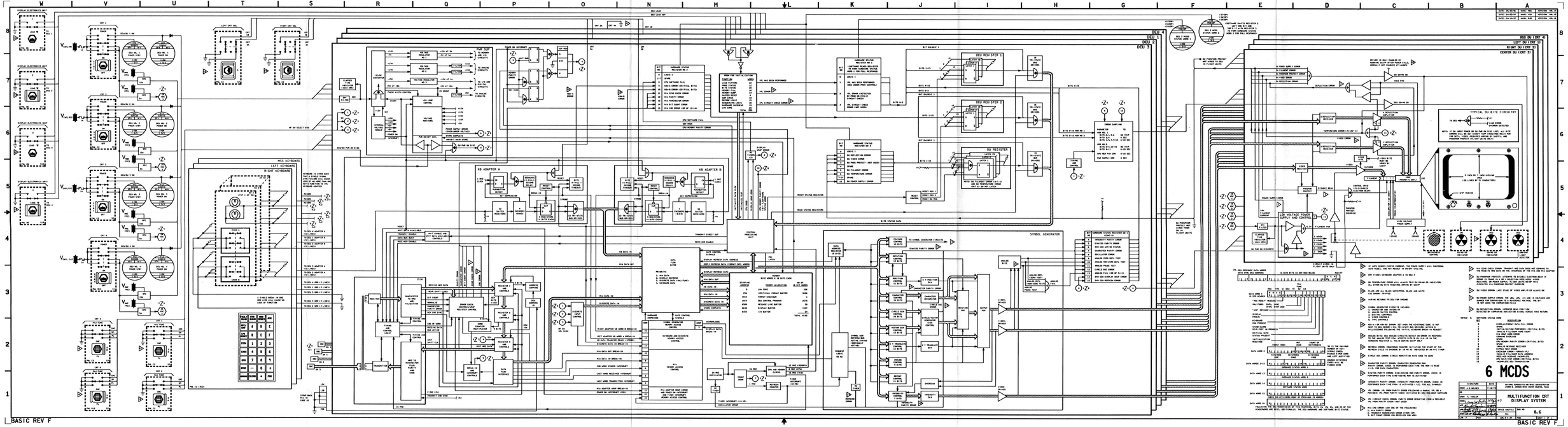
6 MCDS
MULTIFUNCTION CRT DISPLAY SYSTEM
BASIC REV F
BASIC REV F

DATE: 09/19/18	NAME: VOA	VERSION: CWL19
DATE: 03/22/18	NAME: LAR	VERSION: CWL19
DATE: 09/19/18	NAME: CAP	VERSION: REL12

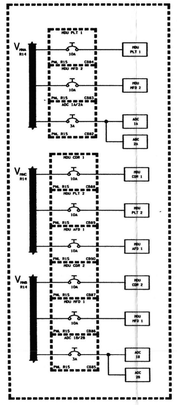

▷ FOR MDS-1 UNITS, SUBSTITUTE NOMENCLATURE AS LISTED ON THE TABLE BELOW:

MDS1:	MDS2:
MDC 1A1A1	NOT APPLICABLE
MDC 1A1B1	NOT APPLICABLE
MEA CRT 1(2,3,4)	SU 1(2,3,4)
MEA CDR 1(2,3)	NOT APPLICABLE
MEA INTF 1(2,3)	NOT APPLICABLE
MEA PLT 1(2,3)	NOT APPLICABLE
CRT 1(2,3,4)	SSME 1(2,3,4)

▷ THE AFT-DPS-5 SPC'S USE THE OLD 10P POWER FEED, THE OLD CPU SPC'S ONLY SUPPLY POWER TO THE SPC

▷ POWER TO THIS BUS IS PROVIDED BY V_{MNA} OR V_{MNB} (MDC 1) (MDC 2) SELECTED VIA A SWITCH (SEN) ON PANEL R1

▷ THE SUBDECS ARE PHYSICALLY LOCATED IN THE FPC AS LISTED BELOW:

SPC 1	FPC 1
SPC 2	FPC 1
SPC 3	FPC 2
SPC 4	FPC 2
SPC 5	FPC 3

SEE DRAWING 6.11 FOR PANEL DETAILS

▷ MDM FA 1 DOES NOT CURRENTLY EXIST

1. CAUTION
POWER LOSS (Blue/red) SHOULD NOT BE USED FOR SUBSYSTEM TROUBLESHOOTING OR RECONFIGURATION. FOR DETAILS SEE SWITCH NOMINAL REFERENCE APPROPRIATE SUBSYSTEM DRAWING.

2. THIS IS A BUS LOSS (Blue/red), THEREFORE A POSE OF DPS EQUIPMENT WILL NOT CAUSE A BUS LOSS (Blue/red) UNLESS THE POSE CAUSES AFFECTED I/C THE AFFADED FOR A SWITCH CONTROLLING MORE THAN ONE ESSENTIAL BUS WILL APPEAR WITH EACH CONTACT

NOTES: 1. TELEMETRY DURING THE AFT I/C SHOWN WITH ASSOCIATED ESSENTIAL BUS; TELEMETRY AFTER THE AFT I/C SHOWN WITH ASSOCIATED MAIN BUS. A 5.12 RESISTOR IS BETWEEN THE TELEMETRY PICK OFF AND THE OPERATIONAL AMP.

7 DPS PWR

NATIONAL AERONAUTICS AND SPACE ADMINISTRATION LYNDON B. JOHNSON SPACE CENTER HOUSTON, TEXAS	SIGNATURE	DATE
	DESIGN L. DAVIS	9/2018
	QA	
DPS ELECTRICAL POWER LOSS	CHIEF G. HANLEY	
	CHIEF	09/19/18
	APP	09/19/18
DWG NO 8.7	SPACE SHUTTLE APP ATK Conbust 10/16/18	
SHEET 8 OF 8	ALL	
	SCALE NONE	SIZE D

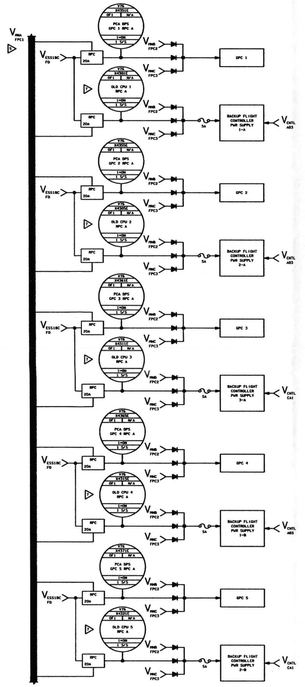

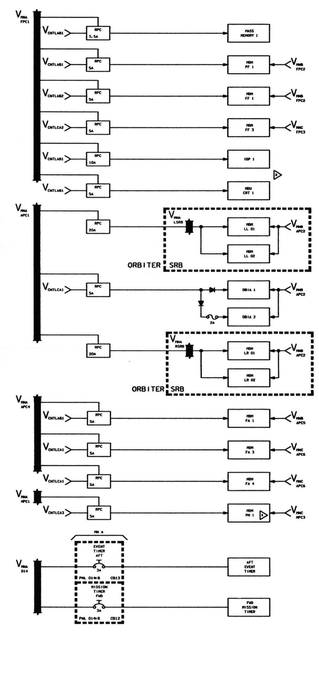

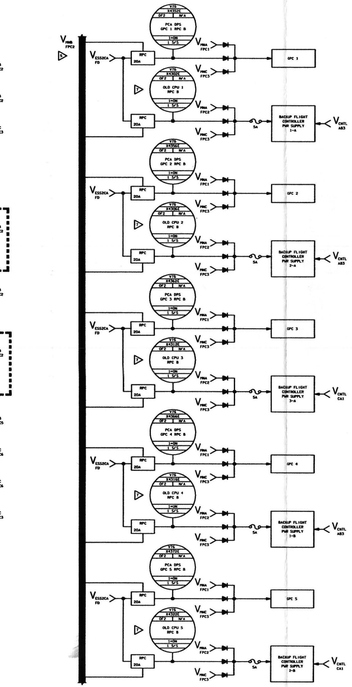

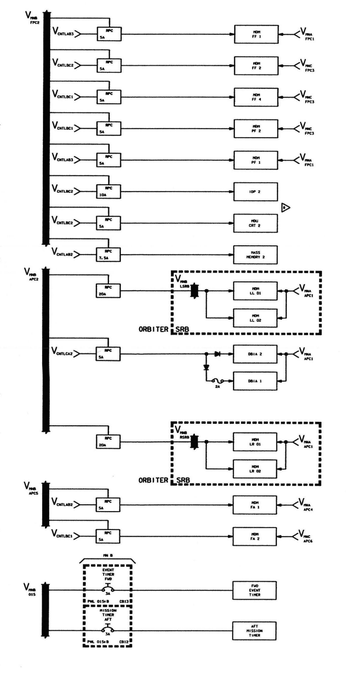

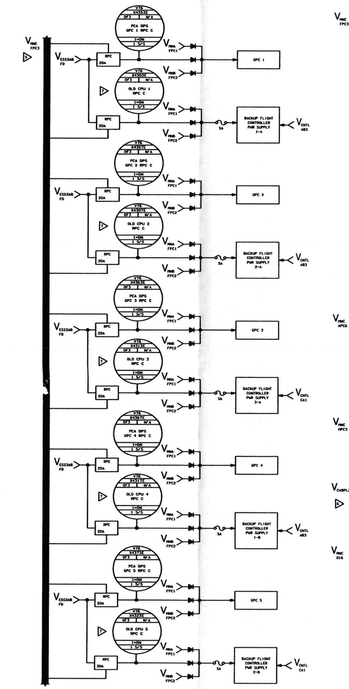

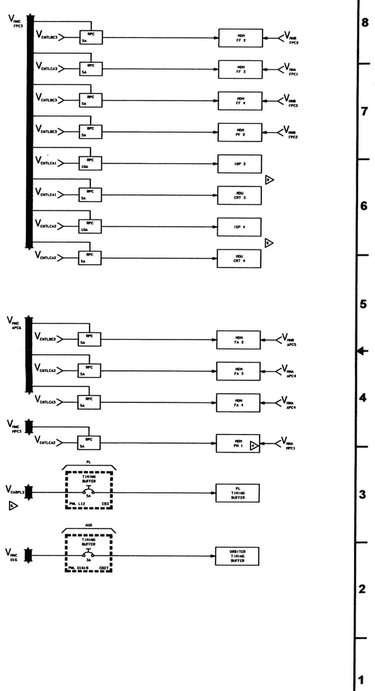

BASIC REV F-2

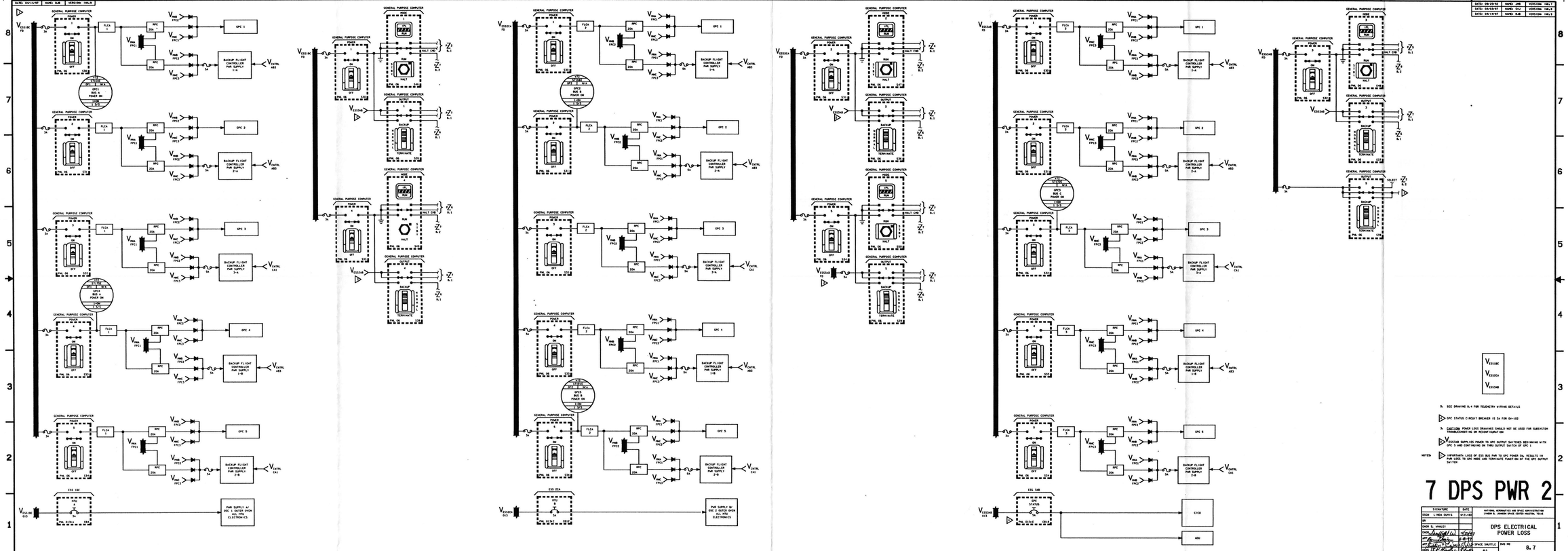

DATE: 04/14/97	NAME: BJB	VERSION: IWLY
DATE: 04/25/97	NAME: JMB	VERSION: IWLY
DATE: 04/30/97	NAME: DJ	VERSION: IWLY
DATE: 04/14/97	NAME: BJB	VERSION: IWLY

V_{ESS1BC}
V_{ESS2CA}
V_{ESS3AB}

5. SEE DRAWING 8.4 FOR TELEMETRY WIRING DETAILS

△ GPC STATUS CIRCUIT BREAKER IS 3A FOR OI-102

6. CAUTION: POWER LOSS DRAWINGS SHOULD NOT BE USED FOR SUBSYSTEM TROUBLESHOOTING OR RECONFIGURATION

△ V_{ESS3AB} SUPPLIES POWER TO GPC OUTPUT SWITCHES BEGINNING WITH GPC 5 AND CONTINUING ON TOWARD OUTPUT SWITCH OF GPC 1

NOTES: △ IMPORTANT: LOSS OF ESS BUS PWR TO GPC POWER SW. RESULTS IN PWR LOSS TO GPC MODE AND TERMINATE FUNCTION OF THE GPC OUTPUT SWITCH

7 DPS PWR 2

SIGNATURE	DATE	NATIONAL AERONAUTICS AND SPACE ADMINISTRATION
DSGN: LINDA DAVIS	4/21/95	LYNDON B. JOHNSON SPACE CENTER HOUSTON, TEXAS
DR		
CHCK: R. HALEY		DPS ELECTRICAL POWER LOSS
APP: [illegible]	4/24/97	
APP: [illegible]	4-24-97	
APP: [illegible]	4-24-97	
APP: [illegible]	4/24/97	
APP: [illegible]	4/24/97	
APP: [illegible]	4/24/

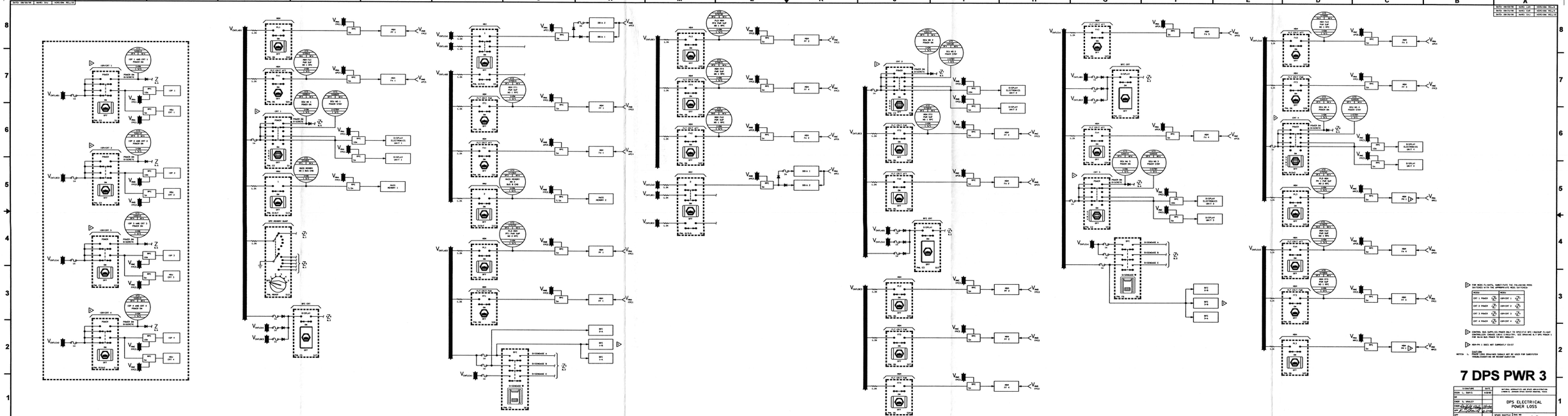
7 DPS PWR 3
DPS ELECTRICAL POWER LOSS
8.7
BASIC REV F-2

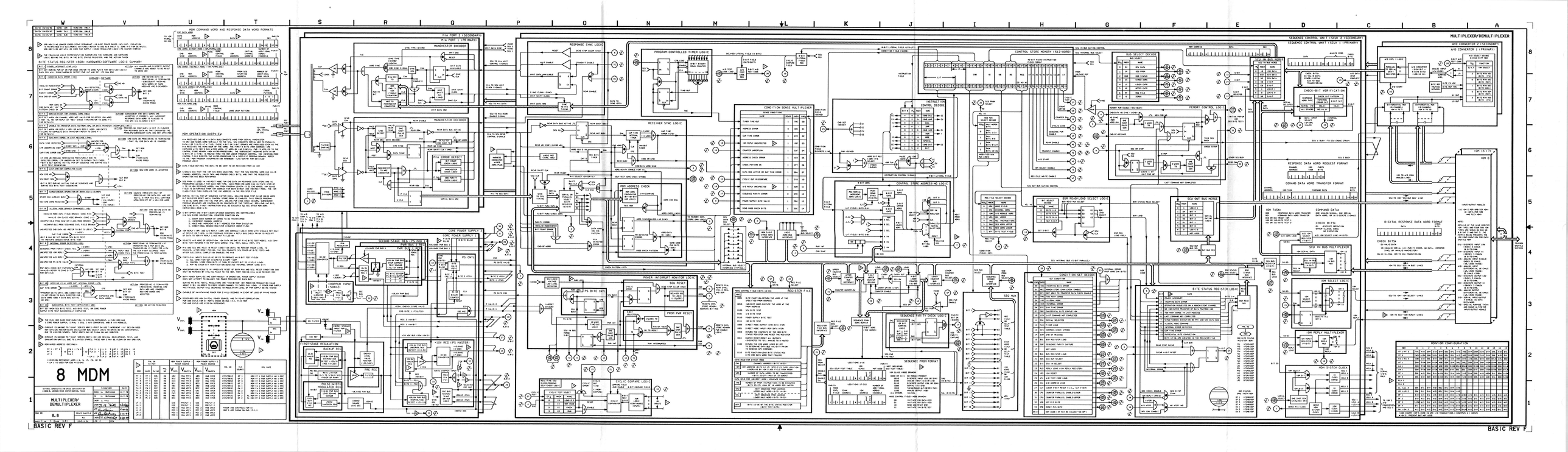
8 MDM
MULTIPLEXER/ DEMULTIPLEXER
MULTIPLEXER/DEMULTIPLEXER
BASIC REV F
BASIC REV F

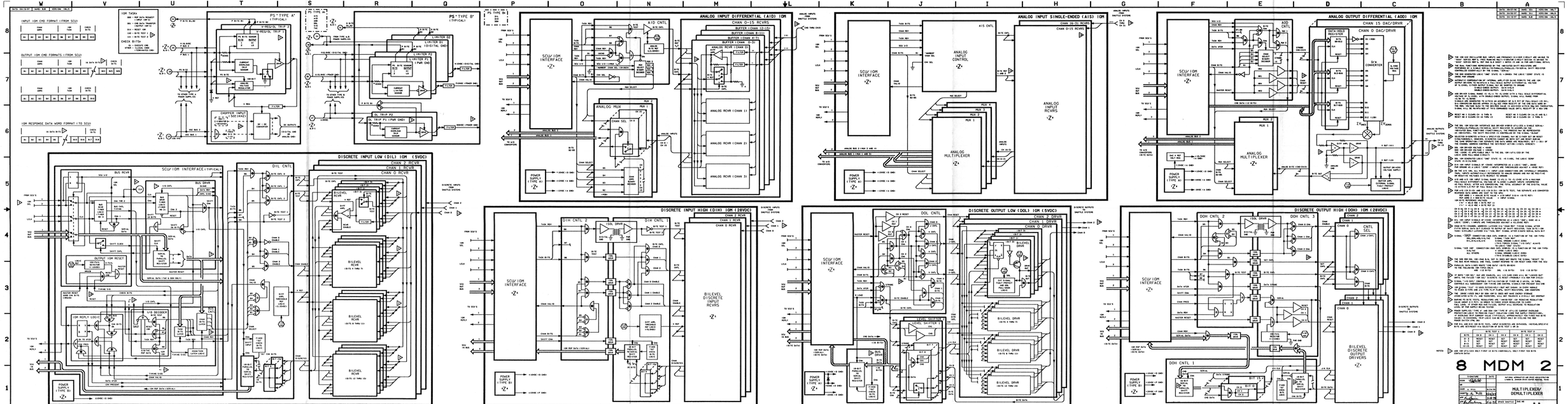
PS "TYPE A" (TYPICAL)
PS "TYPE B" (TYPICAL)
SCU/IOM INTERFACE (TYPICAL)
DISCRETE INPUT LOW (DIL) IOM (5VDC)
DISCRETE INPUT HIGH (DIH) IOM (28VDC)
DISCRETE OUTPUT LOW (DOL) IOM (5VDC)
DISCRETE OUTPUT HIGH (DOH) IOM (28VDC)
ANALOG INPUT DIFFERENTIAL (AID) IOM
ANALOG INPUT SINGLE-ENDED (AIS) IOM
ANALOG OUTPUT DIFFERENTIAL (AOD) IOM
8 MDM 2
MULTIPLEXER/ DEMULTIPLEXER
BASIC REV F

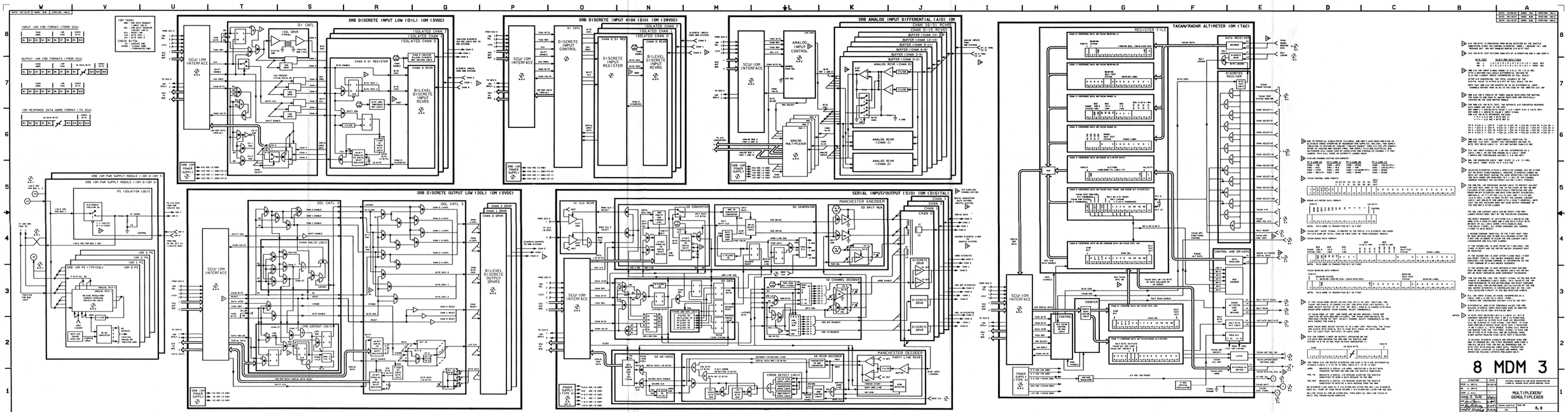
SRB DISCRETE INPUT LOW (DIL) IOM (SVDC)
SRB DISCRETE INPUT HIGH (DIH) IOM (28VDC)
SRB ANALOG INPUT DIFFERENTIAL (AID) IOM
SRB DISCRETE OUTPUT LOW (DOL) IOM (5VDC)
SERIAL INPUT/OUTPUT (SIO) IOM (DIGITAL)
TACAN/RADAR ALTIMETER IOM (TAC)
SRB IOM PWR SUPPLY MODULE 1 (OM #=IOM 1)
SRB IOM PWR SUPPLY MODULE 2 (OM #=IOM 2)
SCU/IOM INTERFACE
8 MDM 3
MULTIPLEXER/DEMULTIPLEXER
BASIC REV F

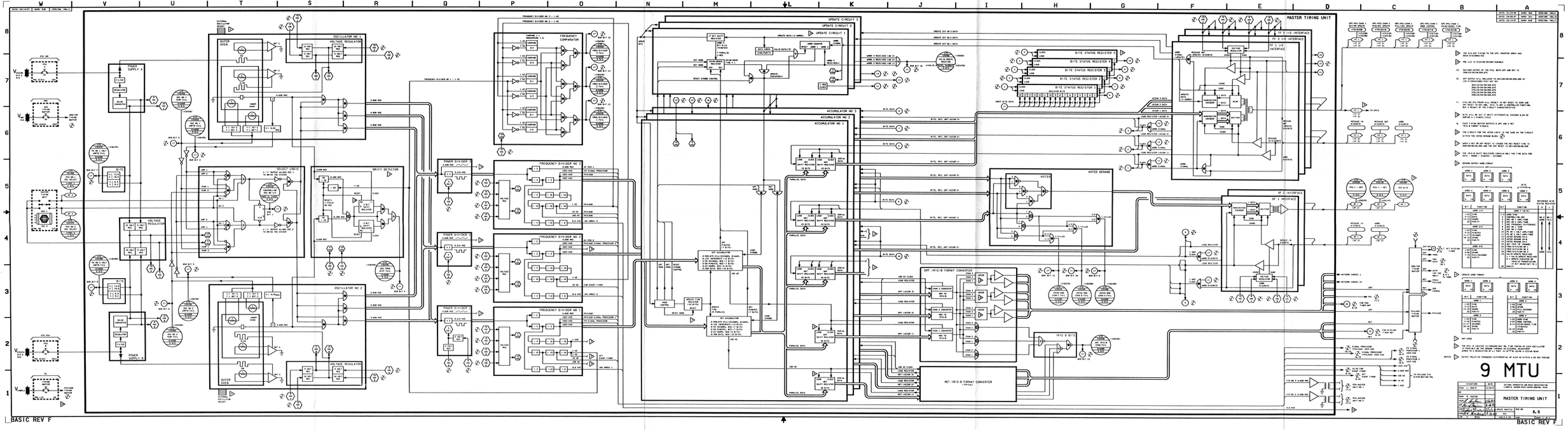
MASTER TIMING UNIT
OSCILLATOR NO 1
OSCILLATOR NO 2
OUTER OVEN
POWER SUPPLY A
POWER SUPPLY B
VOLTAGE REGULATOR
SELECT LOGIC
DRIFT DETECTOR
POWER DIVIDER NO 1
POWER DIVIDER NO 2
POWER DIVIDER NO 3
FREQUENCY DIVIDER NO 1
FREQUENCY DIVIDER NO 2
FREQUENCY DIVIDER NO 3
FREQUENCY COMPARATOR
UPDATE CIRCUIT 1
UPDATE CIRCUIT 2
UPDATE CIRCUIT 3
ACCUMULATOR NO 1
ACCUMULATOR NO 2
ACCUMULATOR NO 3
VOTER
VOTED DEMAND
BITE STATUS REGISTER 1
BITE STATUS REGISTER 2
BITE STATUS REGISTER 3
BITE STATUS REGISTER 4
IRIG-B BITE
IRIG-B FORMAT CONVERTER
MET IRIG-B FORMAT CONVERTER
FF 3 I/O INTERFACE
FF 2 I/O INTERFACE
FF 1 I/O INTERFACE
9 MTU
MASTER TIMING UNIT
BASIC REV F

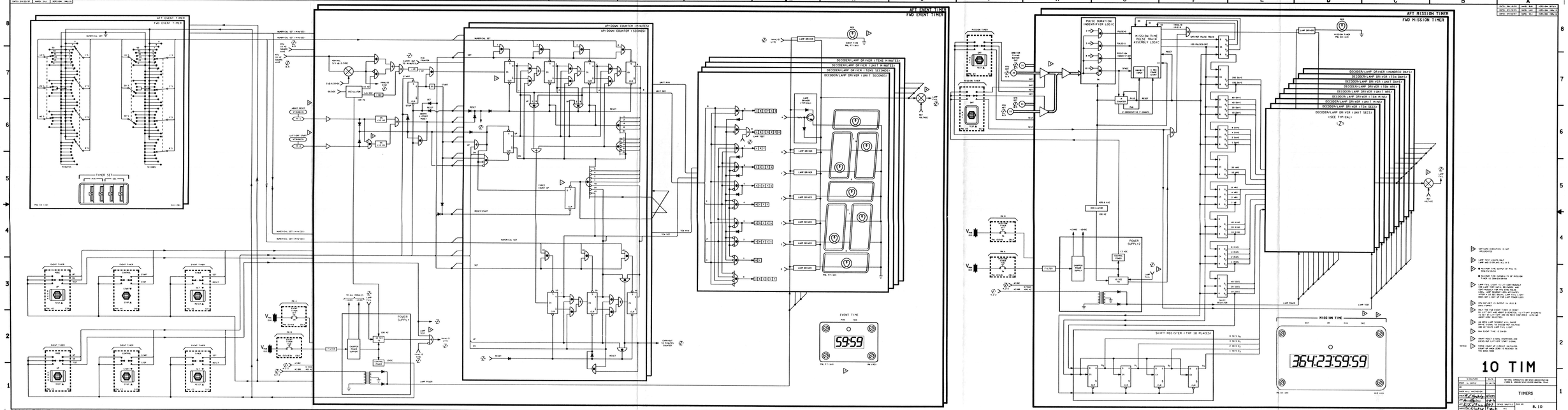
AFT EVENT TIMER
FWD EVENT TIMER
AFT MISSION TIMER
FWD MISSION TIMER
10 TIM
TIMERS
BASIC REV F

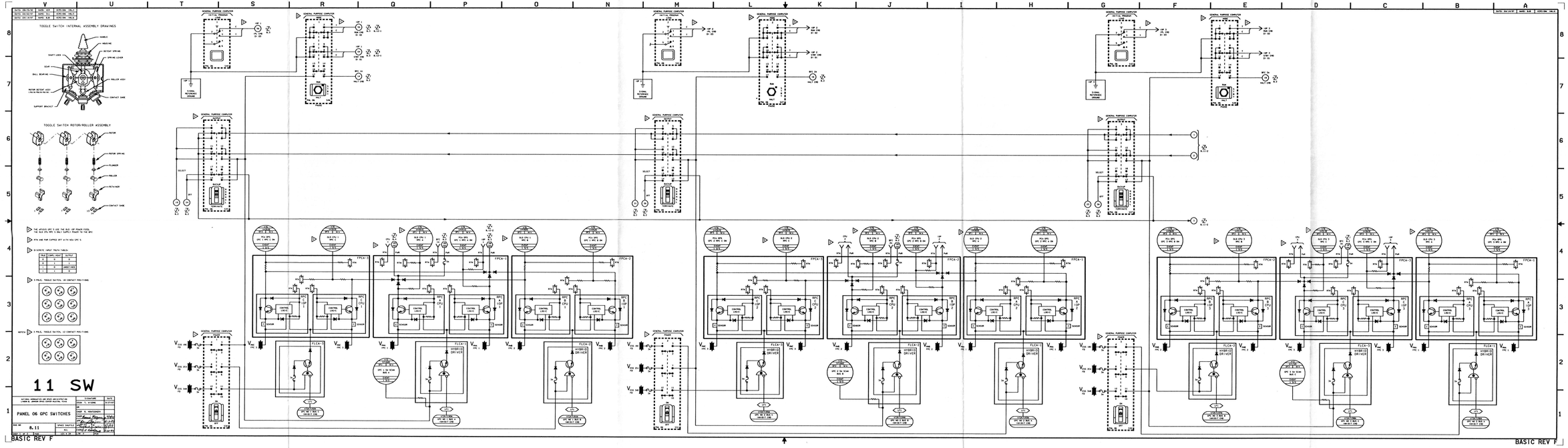
TOGGLE SWITCH INTERNAL ASSEMBLY DRAWINGS
TOGGLE SWITCH ROTOR/ROLLER ASSEMBLY
11 SW
PANEL O6 GPC SWITCHES
8.11
BASIC REV F
BASIC REV F

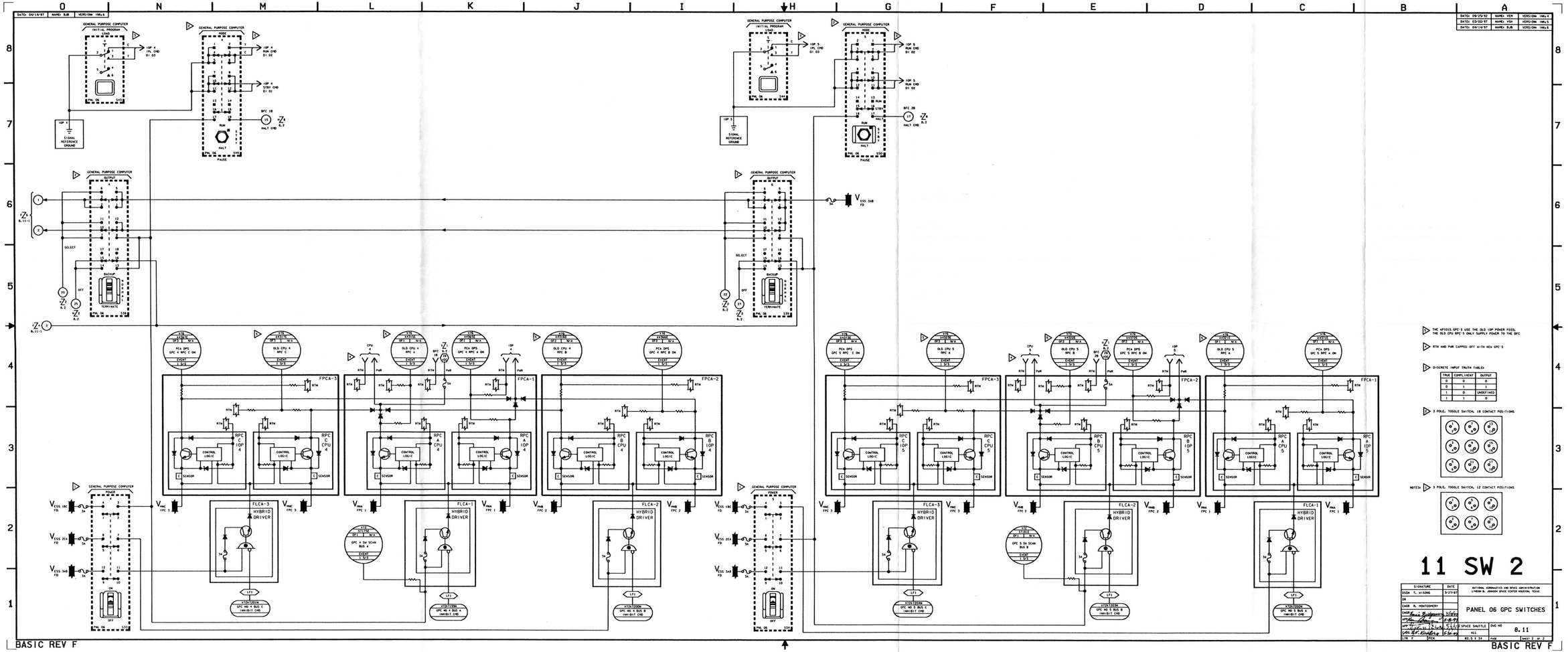

DATE: 05/23/92	NAME: VEH	VERSION: 1NB.4
DATE: 03/20/97	NAME: VSH	VERSION: 1NB.5
DATE: 04/14/97	NAME: BJB	VERSION: 1NB.6

THE APIDIS GPC'S USE THE OLD IOP POWER FEED. THE OLD CPU RPC'S ONLY SUPPLY POWER TO THE BFC

RTN AND PWR CAPPED OFF WITH NEW GPC'S

DISCRETE INPUT TRUTH TABLE:

TRUE	COMPLIMENT	OUTPUT
0	0	0
0	1	1
1	0	UNDEFINED
1	1	0

3 POLE, TOGGLE SWITCH, 18 CONTACT POSITIONS

NOTES: 3 POLE, TOGGLE SWITCH, 12 CONTACT POSITIONS

11 SW 2

SIGNATURE	DATE
DSGN T. VISONG	3/27/87
DR	
ENGR R. MONTGOMERY	
ENGR	4/4/97
APP	5/8/97
APP	5/8/97
	5/8/97
	5/8/97

NATIONAL AERONAUTICS AND SPACE ADMINISTRATION
LYNDON B. JOHNSON SPACE CENTER HOUSTON, TEXAS

PANEL 06 GPC SWITCHES

SPACE SHUTTLE | DWG NO 8.11

ALL | PAGE | SHEET 2 OF 2

LTR F | PCN | 82.5 X 34

BASIC REV F

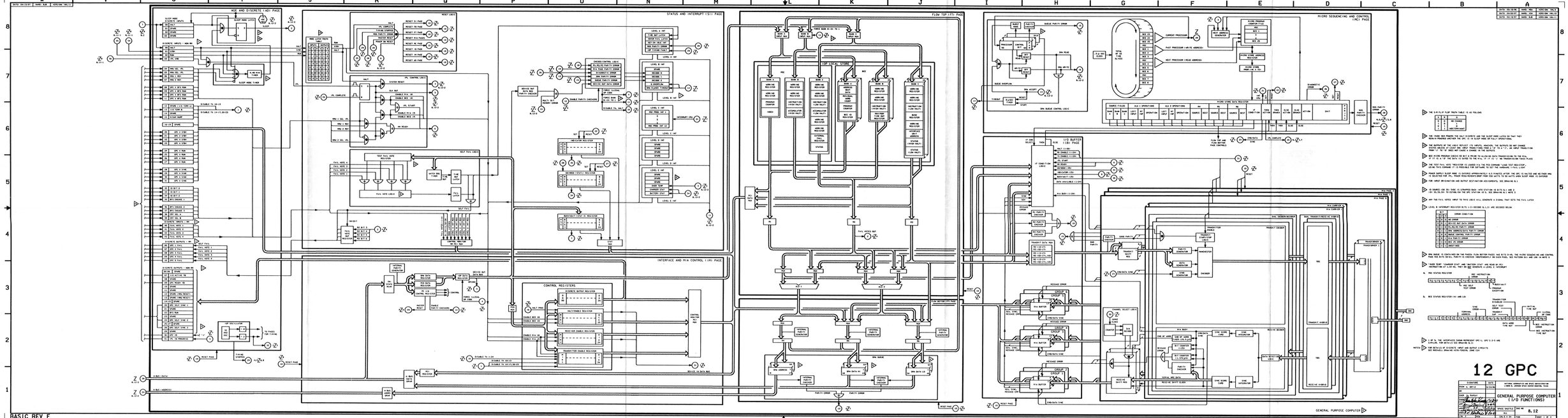

AGE AND DISCRETE I/O1 PAGE
STATUS AND INTERRUPT I/S1 PAGE
FLOW TOP I/T1 PAGE
MICRO SEQUENCING AND CONTROL I/MC1 PAGE
INTERFACE AND MIA CONTROL I/MI PAGE
CONTROL REGISTERS
I/O BUFFER I/B1 PAGE
GENERAL PURPOSE COMPUTER
12 GPC
GENERAL PURPOSE COMPUTER (I/O FUNCTIONS)
8.12
BASIC REV F

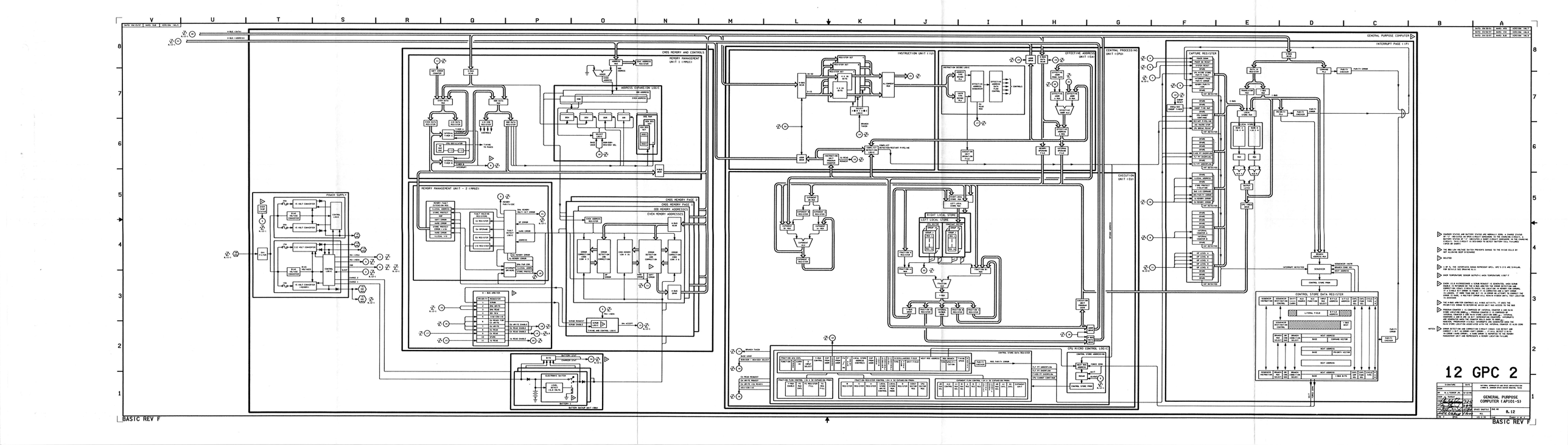
POWER SUPPLY
MEMORY MANAGEMENT UNIT (1 MMU2)
CMOS MEMORY AND CONTROLS
ADDRESS EXPANSION LOGIC
MEMORY MANAGEMENT UNIT - 2 (MMU2)
CMOS MEMORY PAGE 1
CMOS MEMORY PAGE 2
000 MEMORY ADDRESSES
EVEN MEMORY ADDRESSES
M - BUS ARBITER
BATTERY BACKUP UNIT (BBU)
INSTRUCTION UNIT (IU)
EFFECTIVE ADDRESS UNIT (EA)
EXECUTION UNIT (EU)
CENTRAL PROCESSING UNIT (CPU)
EIGHT LOCAL STORE
LEFT LOCAL STORE
CPU MICRO CONTROL LOGIC
CONTROL STORE DATA REGISTER
GENERAL PURPOSE COMPUTER
INTERRUPT PAGE (IP)
CAPTURE REGISTER
CONTROL STORE DATA REGISTER
GENERAL PURPOSE COMPUTER (AP101-S)
12 GPC 2
SPACE SHUTTLE
B.12
BASIC REV F

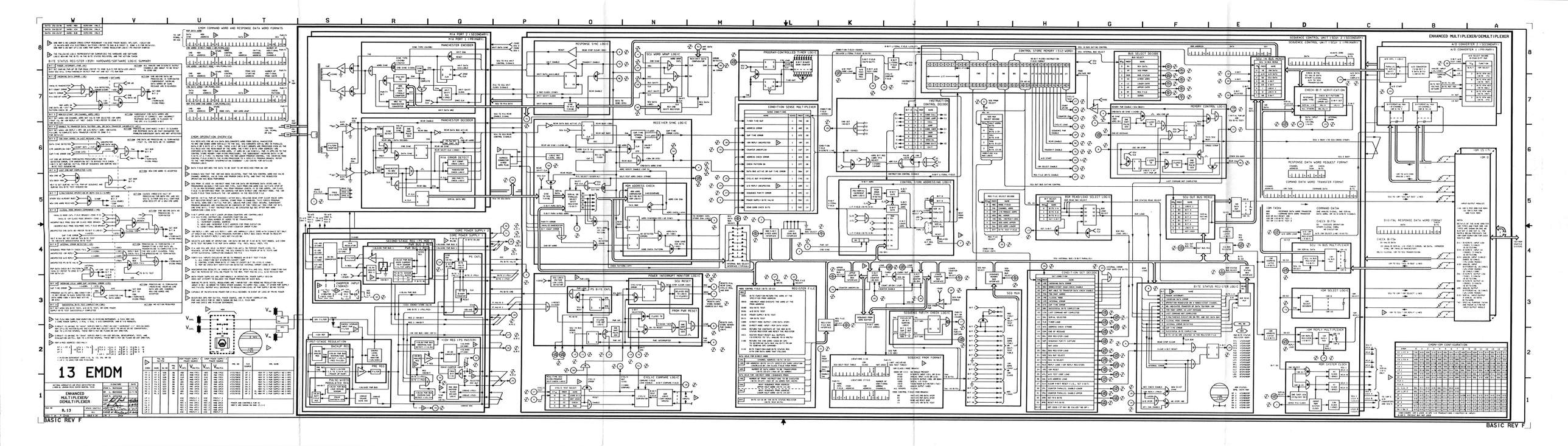
ENHANCED MULTIPLEXER/DEMULTIPLEXER
13 EMDM
ENHANCED MULTIPLEXER/ DEMULTIPLEXER
8, 13
BASIC REV F
BASIC REV F
EMDM COMMAND WORD AND RESPONSE DATA WORD FORMATS
EMDM OPERATION OVERVIEW
BITE STATUS REGISTER (BSR): HARDWARE/SOFTWARE LOGIC SUMMARY
THE FOLLOWING LOGIC REPRESENTATION SUMMARIZES THE HARDWARE AND SOFTWARE LOGIC BEHIND THE BITS IN THE BITE STATUS REGISTER, AND THE ACTION TAKEN
ONE WAY 1 MS LOWER CROSS-STRAP REQUIRED +15 VDC POWER BUSES (+P1,S1) - (-15 VOLTAGE WAS FOR ELECTRONIC SWITCHES, PRIOR TO 1MUX & 8 SHEET 13, 2MB (+5.2 VDC DETAILS). 1MB SHIFT TO 2MB SHIFT (1MB CORE PWR SUPPLY CHANGE REQUIRED) (+15 VOLTAGE UNUSED)
MIA PORT 2 (SECONDARY)
MIA PORT 1 (PRIMARY)
MANCHESTER ENCODER
MANCHESTER DECODER
RECEIVER SYNC LOGIC
RESPONSE SYNC LOGIC
SCU WORD WRAP LOGIC
PROGRAM-CONTROLLED TIMER LOGIC
CONDITION SENSE MULTIPLEXER
CONDITION SENSE CONDITIONS
INSTRUCTION CONTROL DECODE
CONTROL STORE MEMORY (512 WORDS)
CONTROL STORE ADDRESSING LOGIC
BUS SELECT DECODE
MEMORY CONTROL LOGIC
BSR READ/LOAD SELECT LOGIC
SCU OUT BUS MERGE
SEQUENCE CONTROL UNIT 1 SCU 2 (SECONDARY)
SEQUENCE CONTROL UNIT 1 SCU 1 (PRIMARY)
A/D CONVERTER 2 (SECONDARY)
A/D CONVERTER 1 (PRIMARY)
ENHANCED MULTIPLEXER/DEMULTIPLEXER
RESPONSE DATA WORD REQUEST FORMAT
COMMAND DATA WORD TRANSFER FORMAT
DIGITAL RESPONSE DATA WORD FORMAT
COMMAND DATA WORD
CHECK BIT/BA
CHECK-BIT VERIFICATION
IOM TASK
IOM SELECT LOGIC
IOM REPLY MULTIPLEXER
IOM SYSTEM CLOCK
IOM TO BUS MULTIPLEXER
IOM TO IOM BUS MULTIPLEXER
BITE STATUS REGISTER LOGIC
SEQUENCE PROM FORMAT
SEQUENCE PROM FORMATS
CONDITION SET DECODE
SCU INTERNAL BUS (+15 BIT PARALLEL)
SCU INTERNAL BUS SELECT
SCU OUT BUS DATA CONTROL
SCU OUT BUS (+15 BIT PARALLEL)
SCU IN BUS SELECT
SCU IN BUS DATA CONTROL
SCU IN BUS (+15 BIT PARALLEL)
IOM TO IOM BUS MULTIPLEXER
IOM SERIAL DATA
IOM TO BUS MULTIPLEXER
IOM SERIAL DATA
IOM TO IOM BUS MULTIPLEXER
IOM SERIAL DATA
CORE POWER SUPPLY
SECOND-STAGE REG (FS BUS)
FIRST-STAGE REGULATION
BACKUP REG
+15V REG (FS MASTER)
POWER INTERRUPT MONITOR LOGIC
SCU RESET
FROM PWR RESET
CYCLIC REDUNDANCY CHECK LOGIC
REGISTER FILE
SEQUENCE PARITY CHECK LOGIC
SEQUENCE PROM
SCU SELF-TEST TABLE
LOCATIONS 17-512
SCU PWR SELECT
SCU PWR SELECT
SCU PWR SELECT

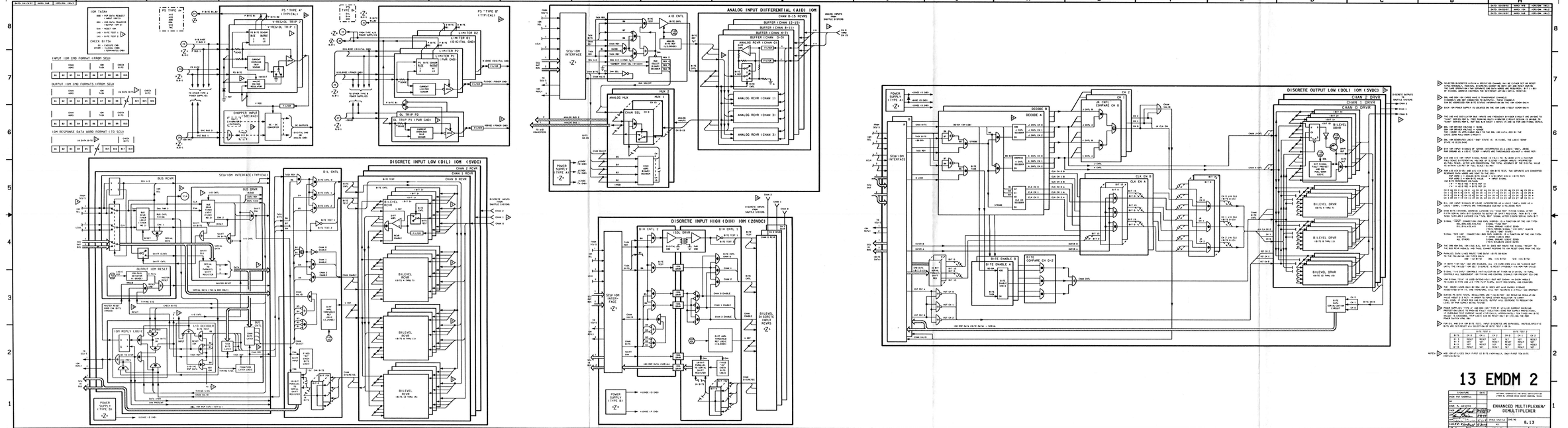
ANALOG INPUT DIFFERENTIAL (AID) IOM
DISCRETE INPUT LOW (DIL) IOM (5VDC)
DISCRETE INPUT HIGH (DIH) IOM (28VDC)
DISCRETE OUTPUT LOW (DOL) IOM (5VDC)
13 EMDM 2
ENHANCED MULTIPLEXER/
DEMULTIPLEXER
8.13
BASIC REV F

DATE: 2-08-93	NAME: SRK	VERSION: 1Rev1
DATE: 04/03/97	NAME: VSH	VERSION: 1Rev2
DATE: 04/15/97	NAME: BJB	VERSION: 1Rev3

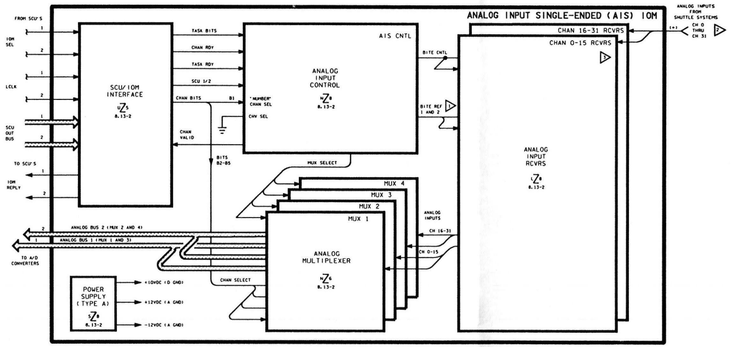

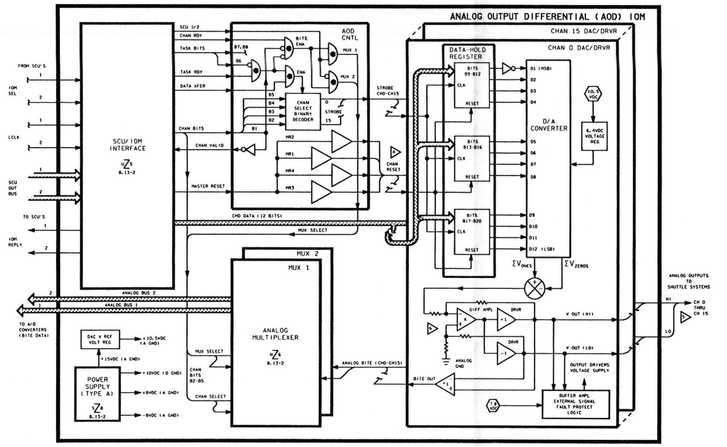

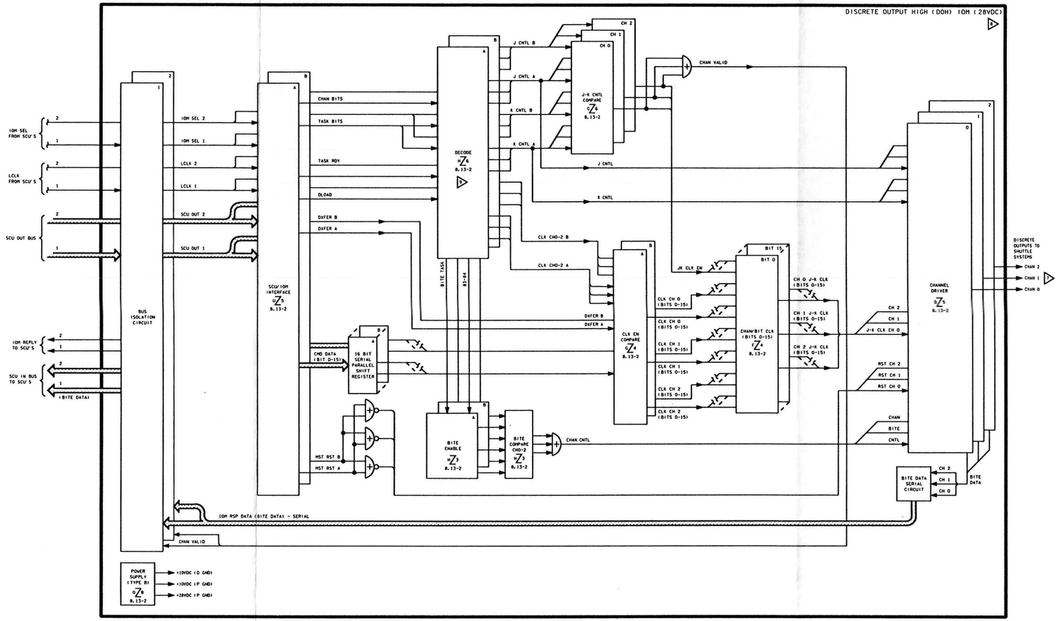

SELECTED DISCRETES WITHIN A SPECIFIED CHANNEL MAY BE EITHER SET OR RESET SIMULTANEOUSLY. HOWEVER, DISCRETES CANNOT BE BOTH SET AND RESET DURING THE SAME OPERATION. A TWO SEPARATE CMD DATA WORDS ARE NECESSARY. BIT (-31) OF THE CHANNEL ADDRESS CONTROLS THE SET/RESET ACTION. (SET=1, RESET=0)

DOL AND DOH IOM CARDS HAVE 8 TRANSPARENT CHANNELS (CHANNELS ARE NOT CONNECTED TO OUTPUTS). THESE CHANNELS CAN BE ADDRESSED FOR BITE STATUS INFORMATION ON THE IOM (-CHDH ONLY)

THE DOH GENERATED LOGIC "ONE" STATE IS ~28VDC+ THE LOGIC "ZERO" STATE IS 28VDC PWR GROUND

AUTOMATIC COMPENSATION OF INTERNAL AMPLIFIER GAINS PERMITS THE AOD IOM OUTPUT DRIVERS TO MAINTAIN A FULL-SCALE OUTPUT DIFFERENTIAL VOLTAGE OF 5.12VDC, EITHER OUTPUT SIGNAL MAY BE SHORTED TO GROUND
SINGLE-ENDED OUTPUTS GAIN X=0.5
DOUBLE-ENDED-OUTPUTS GAIN X=0.4

AOD DRIVER SIGNAL RANGE IS +5.12 TO -5.12VDC WITH A FULL SCALE DIFFERENTIAL VOLTAGE OF 5.12VDC. WITH DOUBLE-ENDED OUTPUT, SIGNAL WILL RANGE FROM +2.56 TO -2.56VDC.
D/A CONVERTER IS SETTLED TO WITHIN AN ACCURACY OF 0.5 PCT OF FULL-SCALE (5.12V). THE CONVERSION-BEGINS APPROX 25.5µ SEC FROM RECEIPT OF THE CMD DATA WORD BY THE IOM. VOLTAGE SLEW TO THE DESIRED VALUE IS ACHIEVED WITHIN 30µ SEC THEREAFTER. SIGNAL WILL BE MAINTAINED AT THIS COMMANDED VALUE UNTIL RECEIPT OF A NEW CMD

RESET NO 1 CLEARS CH 6 THRU 9
RESET NO 2 CLEARS CH 10 THRU 13
RESET NO 3 CLEARS CH 14,15 AND OL 3
RESET NO 4 CLEARS CH 2 THRU 5

ON THE AIS IOM, ALL MINUS (-) INPUT LEAD CONNECTIONS ARE INTERNALLY GROUNDED. THUS, INPUTS AUTOMATICALLY REFERENCED TO ANALOG GROUND AND MAY BE POSITIVE OR NEGATIVE VOLTAGES WITH RESPECT TO GROUND

AOD AND AIS IOM INPUT SIGNAL RANGE IS +5.12 TO -5.12VDC WITH A MAXIMUM FULL-SCALE DIFFERENTIAL VOLTAGE OF 5.12VDC LARGER INPUTS INTERPRETED AS FULL SCALE. AFTER A/D CONVERSION, THE TOTAL ACCURACY OF THE DIGITAL VALUE IS WITHIN 1.0 PCT OF FULL SCALE (51 MV)

NOTES: FOR A/D (CH 0-15) AND AIS (CH 0-31) IOM BITE TEST, TWO SEPARATE A/D CONVERTED RESPONSE DATA WORDS ARE SENT TO THE GPCI
RSP WORD 1 = ANALOG BITE VALUE = 1/2 (+ INPUT SIG(+ + BITE REF)
RSP WORD 2 = NON-BITE VALUE = INPUT SIGNAL
IOM BITE REFERENCE VOLTAGES
(+) = +5.0 VDC + BITE REF 11
(-) = +0.0 VDC + BITE REF 21

CH 0	(+) 6	(-) 8	CH 8	(+) 10	(-) 12	CH 16	(+) 14	(-) 16	CH 24	(+) 18	(-) 20
CH 1	(+) 5	(-) 7	CH 9	(+) 9	(-) 11	CH 17	(+) 13	(-) 15	CH 25	(+) 17	(-) 19
CH 2	(+) 4	(-) 6	CH 10	(+) 8	(-) 10	CH 18	(+) 12	(-) 14	CH 26	(+) 16	(-) 18
CH 3	(+) 3	(-) 5	CH 11	(+) 7	(-) 9	CH 19	(+) 11	(-) 13	CH 27	(+) 15	(-) 17
CH 4	(+) 2	(-) 4	CH 12	(+) 6	(-) 8	CH 20	(+) 10	(-) 12	CH 28	(+)	(-)
CH 5	(+) 1	(-) 3	CH 13	(+) 5	(-) 7	CH 21	(+) 9	(-) 11	CH 29	(+)	(-)
CH 6	(+)	(-) 2	CH 14	(+) 4	(-) 6	CH 22	(+) 8	(-) 10	CH 30	(+)	(-)
CH 7	(+)	(-) 1	CH 15	(+) 3	(-) 5	CH 23	(+) 7	(-) 9	CH 31	(+)	(-)

13 EMDM 3

SIGNATURE	DATE	
DSGN PAT SHERRILL		NATIONAL AERONAUTICS AND SPACE ADMINISTRATION LYNDON B. JOHNSON SPACE CENTER HOUSTON, TEXAS
QA		
ENGR R. JACKSON		ENHANCED MULTIPLEXER/ DEMULTIPLEXER
ENGR		
MFG		
MFG		
CHIEF ENGINEER		

LTR	PCN	SPACE SHUTTLE	DWG NO 8.13
		MSL	
		82.5 x 24	SHEET 1 OF 4

BASIC REV F

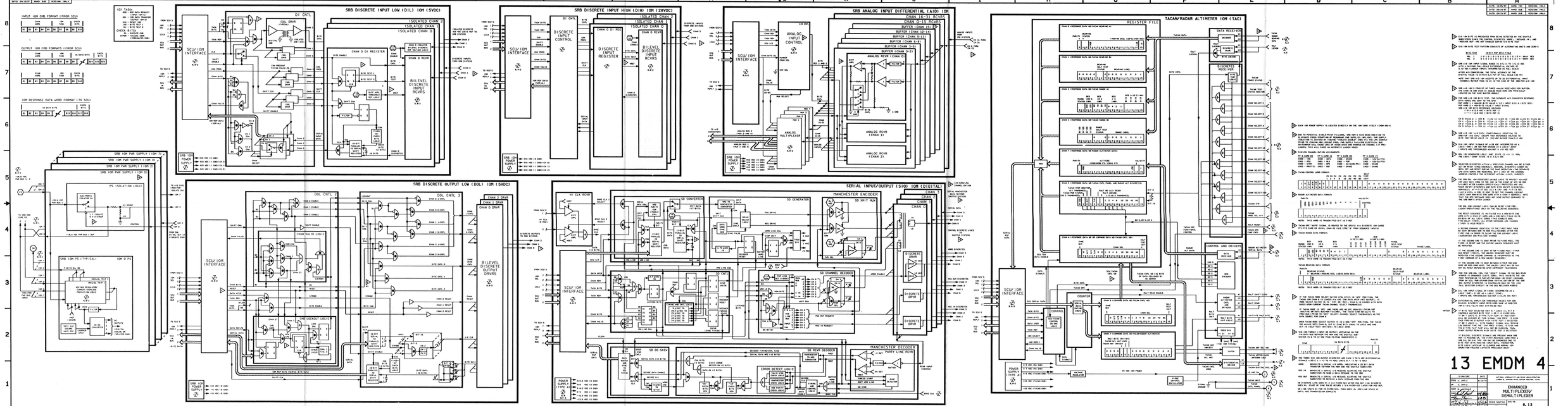
SRB DISCRETE INPUT LOW (DIL) IOM (SVDC)
SRB DISCRETE INPUT HIGH (DIH) IOM (28VDC)
SRB ANALOG INPUT DIFFERENTIAL (AID) IOM
TACAN/RADAR ALTIMETER IOM (TAC)
SRB DISCRETE OUTPUT LOW (DOL) IOM (SVDC)
SERIAL INPUT/OUTPUT (SIO) IOM (DIGITAL)
SCU/IOM INTERFACE
BILEVEL DISCRETE INPUT RCVRS
BILEVEL DISCRETE OUTPUT DRVRS
MANCHESTER ENCODER
MANCHESTER DECODER
REGISTER FILE
DATA RECEIVER
DISCRETES RECEIVER
CONTROL AND DRIVERS
13 EMDM 4
ENHANCED MULTIPLEXER/ DEMULTIPLEXER
8.13
BASIC REV F