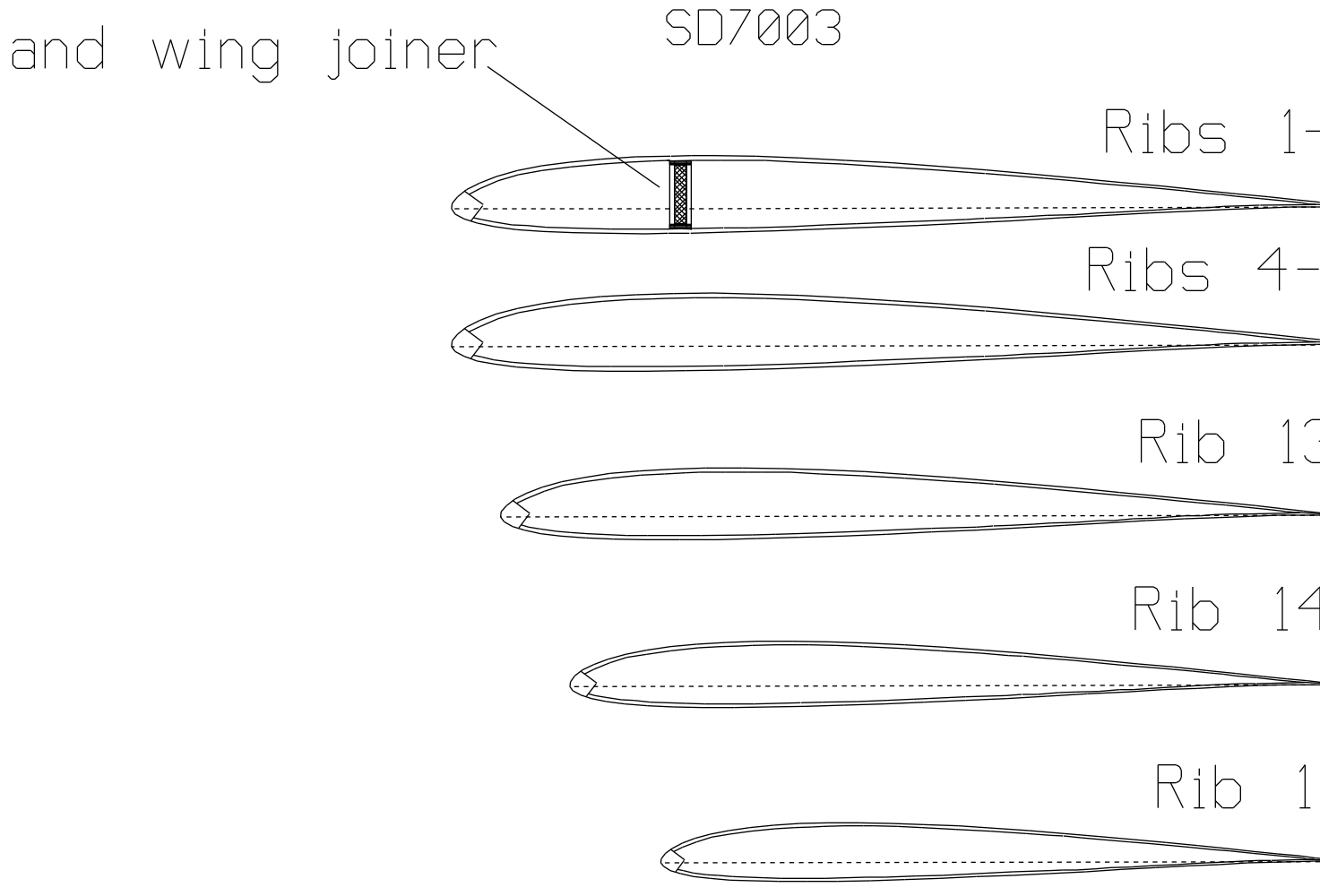
and wing joiner
SD7003
Ribs 1-
Ribs 4-
Rib 13
Rib 14
Rib 1