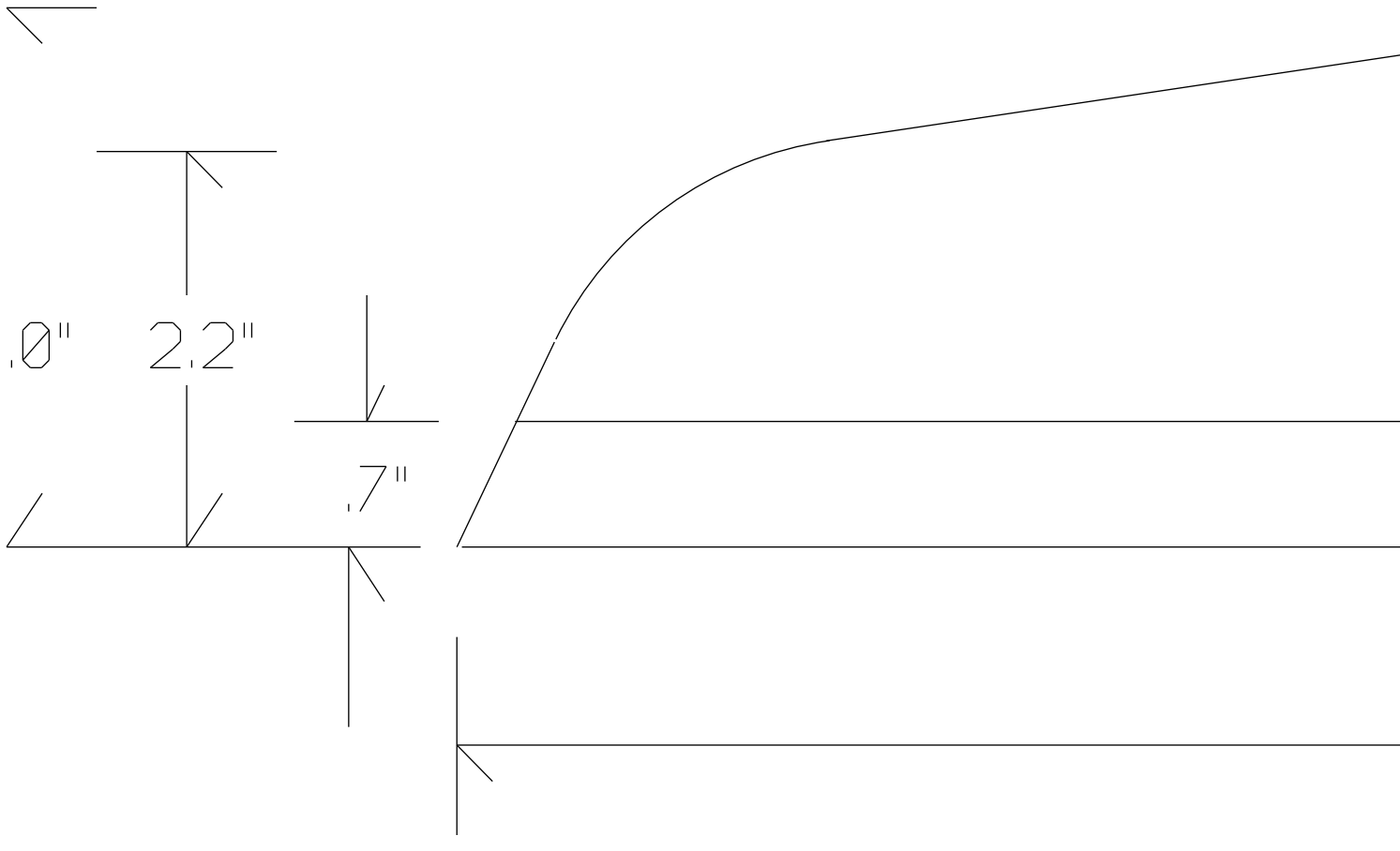

1/32" balsa joiner box front and back