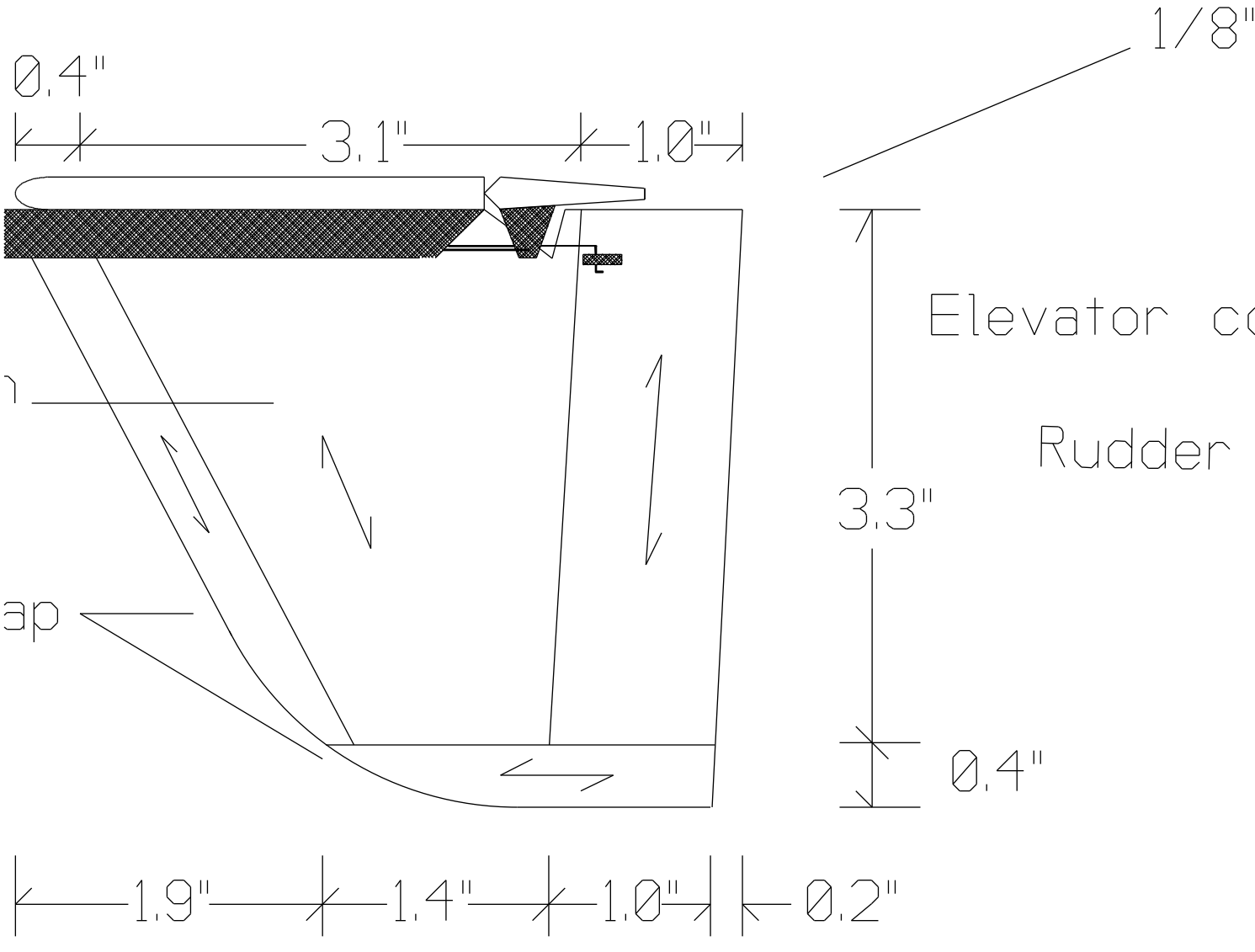
1/8"
0.4"
3.1"
1.0"
Elevator co
Rudder
3.3"
0.4"
1.9"
1.4"
1.0"
0.2"