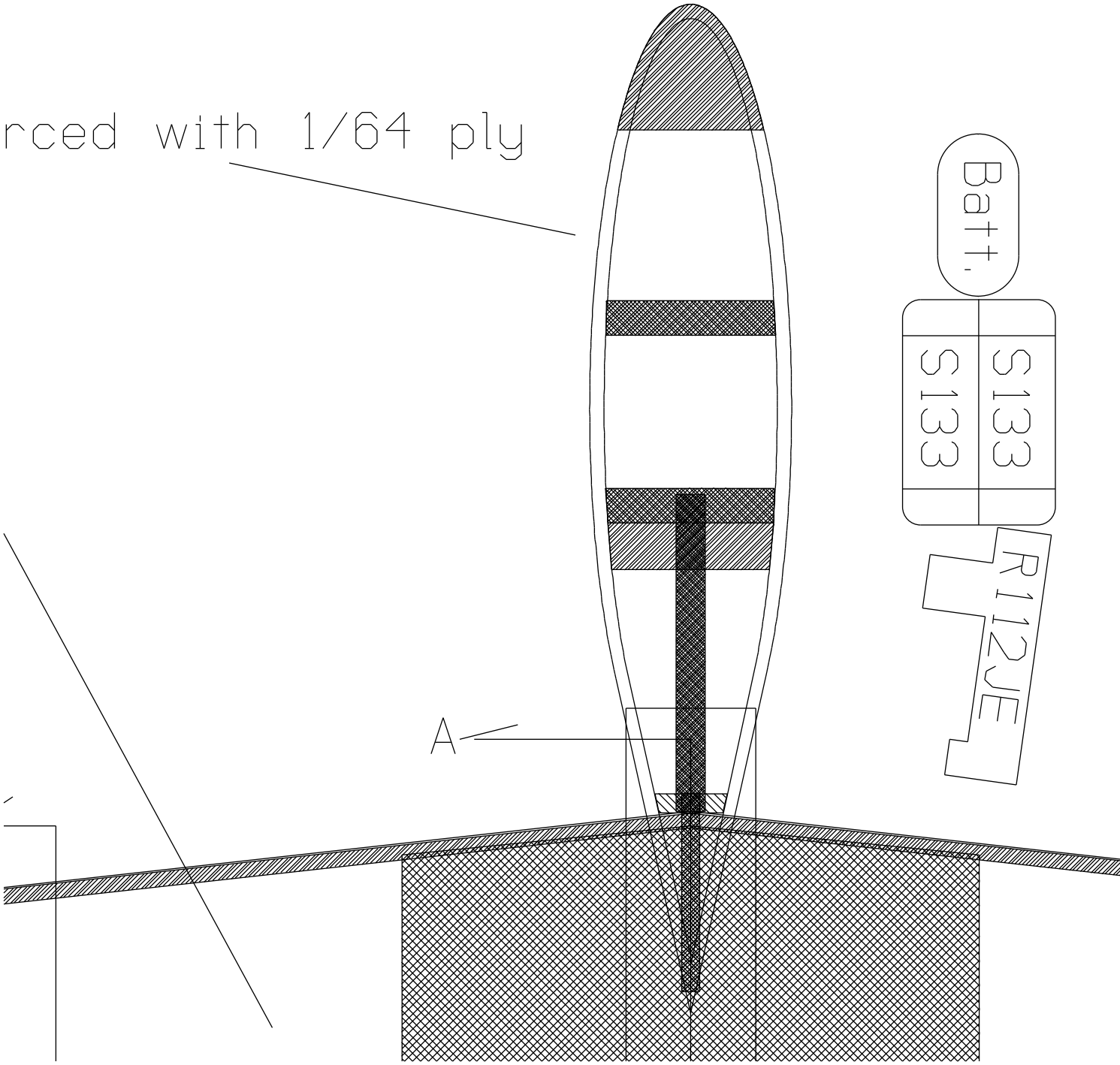
rced with 1/64 ply
A
Batt.
S133
S133
R112JE