NTAS♦

CASE FILE COPY" MSC-04728

Microfilm T2T-13813

NATIONAL AERONAUTICS AND SPACE ADMINISTRATION

1228 pages

SKYLAB

OPERATIONS HANDBOOK

APOLLO TELESCOPE MOUNT

VOLUME I

SYSTEMS AND EXPERIMENTS DESCRIPTION

TECHNICAL LIBRARY
BUILDING 45

MAY 11 1972

Manned Spacecraft Center
Houston, Texas 77058

PREPARED UNDER DIRECTION
OF

CREW PROCEDURES DIVISION
SYSTEMS PROCEDURES BRANCH

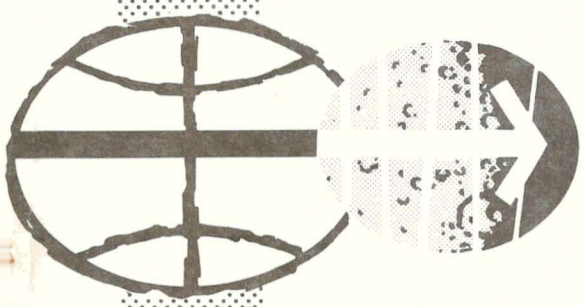

MANNED SPACECRAFT CENTER
HOUSTON, TEXAS

27 MARCH 1972

SKYLAB OPERATIONS HANDBOOK

APOLLO TELESCOPE MOUNT

(SLOH/ATM)

VOLUME I

SYSTEMS & EXPERIMENTS

DESCRIPTION

APPROVED: James T Nelson Jr

J. F. Nelson, ATM Project Engineer
Martin Marietta Corporation/Houston

NAS8-2400, MSFC-205

Prepared under direction

of

NATIONAL AERONAUTICS and SPACE ADMINISTRATION

MANNED SPACECRAFT CENTER

CREW PROCEDURES DIVISION

SYSTEMS PROCEDURES BRANCH

APPROVED: Dennis L. Dahms

D. L. Dahms, Technical Coordinator

APPROVED: Dock J. Hudson

D. J. Hudson, Acting Chief
Systems Procedures Branch

27 March 1972

FOREWORD

Volume I of the SKYLAB OPERATIONS HANDBOOK - APOLLO TELESCOPE MOUNT (SLOH-ATM) contains a description of the ATM systems and experiments for all missions using the ATM. Changes to this document when published will be in the SLOH-ATM Vol. I format.

Volume II of the SKYLAB OPERATIONS HANDBOOK is bound separately. It describes the flight crew operational procedures for all manned missions that use the ATM.

ACKNOWLEDGEMENT

The technical inputs to this document in the following ATM systems: Structures, Electrical, Thermal, Instrumentation and Communications, Controls and Displays, and Experiment S056 are provided by Martin Marietta Corporation in response to Job Output List, PL2082, Volume I Rev D, Work Breakdown Structure (WBS) No. 1550-1, Line Item No. 4 of Para 4. The C&D section was generated under the aforementioned WBS 1550-1, by Mr. Cosimo De Mitri (Bendix)

The coordination and standardization of the technical inputs that relate to the remaining ATM systems/experiments were accomplished under the supervision of the Martin Marietta Corporation, as directed under WBS 1550-1, Para 3(a.2) and 3(a.3).

For technical inputs and assistance in the ATM systems and experiments areas not specifically identified in para 1 above, acknowledgement is expressed to the following: Mr. Don Bietendorf (IBM), Mr. Lee Huss (IBM), and Mr. Stan Tonnessen (Bendix), Attitude Pointing and Control System (APCS); Mr. Verald Easterly (BBRC), S052; Mr. John Boczenowski (AS&E), S054; Messrs. John McCoy (HCO) and Vern Kotrc (BBRC), S055A; Mr. Dennis Schneible (BBRC), S082A & S082B; Mr. Henry Chesters (PE), Hα1 & Hα2; and Mr.Ed Purcell (Bendix) APCS.

LIST OF EFFECTIVE PAGES

INSERT LATEST CHANGED PAGES. DESTROY SUPERSEDED PAGES.

This section will contain an identification of the total number of pages and a listing of pages with the effective date of issue. Individual pages which reflect technical changes to existing data will be identified by incorporating a 1/16 inch wide bar in the outer margin, opposite the change.

TOTAL NUMBER OF PAGES IN THIS PUBLICATION _____ CONSISTING OF THE FOLLOWING:

PAGE NO.	ISSUE

CHANGE INFORMATION

This handbook is subject to continuous updating that will reflect current Apollo Telescope Mount hardware modifications, mission changes, or to improve content or arrangement. The content and the changes are accounted for in the List of Effective Pages and to the following detail:

Record of Publication: The publication date of each basic issue and change issue is listed as a record of all editions.

Page Change Date: Each page has space for entering a change date. The latest publication date will be entered in this space each time a page is changed.

COMMENTS

NASA Comments: Direct comments or suggested changes to this handbook to D. J. HUDSON, SYSTEMS PROCEDURES BRANCH, CG2, BUILDING No. 4, MSC, HOUSTON, TEXAS 77058.

MMC Comments: Direct comments or suggested changes to this handbook to R. H. McELLIGOTT, ATM SUPPORT TEAM, HOUSTON, TEXAS 77058.

RECORD OF PUBLICATION

This issue of Volume I of the SKYLAB OPERATIONS HANDBOOK - ATM, is the basic issue. The information contained in this document represents the latest available ATM data. Subsequent changes will be issued to maintain information current with the flight configuration of the Apollo Telescope Mount. This record will reflect the publication date of all changes.

TABLE OF CONTENTS

SECTION	TITLE	PAGE
	FOREWORD	i
	LIST OF EFFECTIVE PAGES	ii
	CHANGE INFORMATION	iii
1.0	INTRODUCTION	
1.1	Skylab Mission	1.0-1
1.1.1	Mission Objectives	1.0-1
1.1.2	Mission Description	1.0-1
1.2	Apollo Telescope Mount	1.0-2
1.2.1	General Description	1.0-2
1.2.2	Launch Configuration	1.0-5
1.2.3	Orbit Operations	1.0-5
1.2.4	Storage Configuration	1.0-5
1.2.5	Re-Activation Configuration	1.0-5
1.3	ATM Experiments	1.0-11
1.3.1	Scientific Background and Objectives	1.0-11
1.3.2	Experiment General Description	1.0-11
2.0	SUBSYSTEMS DATA	
2.1	Structures and Mechanical Subsystem	2.1-1
2.1.1	Introduction	2.1-1
2.1.2	Subsystems Interfaces	2.1-1
2.1.3	Functional Description	2.1-1
2.1.4	Major Component/Functional Description.	2.1-1
2.1.5	Performance and Design Data	2.1-50
2.1.6	Operational Limitations and Restrictions.	2.1-53
2.2	Electrical Power Subsystem	2.2-1
2.2.1	Introduction	2.2-1
2.2.2	Subsystem Interfaces	2.2-1
2.2.3	Functional Description	2.2-7
2.2.4	Major Component/Functional Description	2.2-7
2.2.5	Performance and Design Data	2.2-55
2.2.6	Operational Limitations and Restrictions.	2.2-60
2.3	Thermal Control Subsystem	2.3-1
2.3.1	Introduction	2.3-1
2.3.2	Subsystem Interfaces	2.3-4
2.3.3	Functional Description	2.3-5

TABLE OF CONTENTS

SECTION	TITLE	PAGE
2.3	Thermal Control Subsystem (cont)	
2.3.4	Major Component/Functional Description . .	2.3-43
2.3.5	Performance and Design Data	2.3-61
2.3.6	Operational Limitations and Restrictions .	2.3-62
2.4	Instrumentation and Communications Subsystem	2.4-1
2.4.1	Introduction	2.4-1
2.4.2	Subsystem Interfaces	2.4-1
2.4.3	Functional Description	2.4-3
2.4.4	Major Component/Functional Description . .	2.4-11
2.4.5	Performance and Design Data	2.4-44
2.4.6	Operational Limitations and Restrictions .	2.4-50
2.5	Attitude and Pointing Control Subsystem	2.5-1
2.5.1	Introduction	2-5-1
2.5.2	APCS Interfaces	2.5-6
2.5.3	Functional Description	2.5-8
2.5.4	Major Component/Functional Description . .	2.5-74
2.5.5	Performance and Design Data	2.5-162
2.5.6	Operational Limitations and Restrictions .	2.5-181
2.6	Caution and Warning Subsystem	2.6-1
2.6.1	Introduction	2.6-1
2.6.2	Subsystem Interfaces	2.6-1
2.6.3	Functional Description	2.6-6
2.6.4	Major Component/Functional Description . .	2.6-27
2.6.5	Performance and Design Data	2.6-102
2.6.6	Operational Limitations and Restrictions .	2.6-108
2.7	Explosive Devices Subsystem	2.7-1
2.7.1	Introduction	2.7-1
2.7.2	Subsystem Interfaces	2.7-1
2.7.3	Functional Description	2.7-2
2.7.4	Major Component/Functional Description . .	2.7-2
2.7.5	Performance and Design Data	2.7-18
2.7.6	Operational Limitations and Restrictions .	2.7-18
2.8	Crew Systems	2.8-1
2.8.1	Introduction	2.8-1
2.8.2	Subsystem Interfaces	2.8-1
2.8.3	Functional Description	2.8-1
2.8.4	Major Component/Functional Description . .	2.8-21
2.8.5	Performance and Design Data	2.8-54
2.8.6	Operational Limitations and Restrictions .	2.8-87

TABLE OF CONTENTS

SECTION	TITLE	PAGE
	Experiments	
2.9.1	White Light Coronagraph (S052)	2.9.1-1
2.9.1.1	Introduction	2.9.1-1
2.9.1.2	Subsystem Interfaces	2.9.1-3
2.9.1.3	Functional Description	2.9.1-9
2.9.1.4	Major Component/Functional Description . .	2.9.1-14
2.9.1.5	Performance and Design Data	2.9.1-32
2.9.1.6	Operational Limitations and Restrictions .	2.9.1-35
2.9.2	X-Ray Spectrographic Telescope (S054) . .	2.9.2-1
2.9.2.1	Introduction	2.9.2-1
2.9.2.2	Subsystem Interfaces	2.9.2-3
2.9.2.3	Functional Description	2.9.2-5
2.9.2.4	Major Component/Functional Description . .	2.9.2-33
2.9.2.5	Performance and Design Data	2.9.2-55
2.9.2.6	Operational Limitations and Restrictions .	2.9.2-58
2.9.3	UV Scanning Polychromator Spectrohelio-meter (S055A)	2.9.3-1
2.9.3.1	Introduction	2.9.3-1
2.9.3.2	Subsystem Interfaces	2.9.3-1
2.9.3.3	Functional Description	2.9.3-2
2.9.3.4	Major Component/Functional Description . .	2.9.3-5
2.9.3.5	Performance and Design Data	2.9.3-16
2.9.3.6	Operational Limitations and Restrictions .	2.9.3-25
2.9.4	X-Ray Telescope (S056)	2.9.4-1
2.9.4.1	Introduction	2.9.4-1
2.9.4.2	Subsystem Interfaces	2.9.4-1
2.9.4.3	Functional Description	2.9.4-8
2.9.4.4	Major Component/Functional Description . .	2.9.4-14
2.9.4.5	Performance and Design Data	2.9.4-52
2.9.4.6	Operational Limitations and Restrictions .	2.9.4-57
2.9.5	XUV Spectroheliograph (S082A)	2.9.5-1
2.9.5.1	Introduction	2.9.5-1
2.9.5.2	Subsystem Interfaces	2.9.5-1
2.9.5.3	Functional Description	2.9.5-5
2.9.5.4	Major Component/Functional Description . .	2.9.5-11
2.9.5.5	Performance and Design Data	2.9.5-43
2.9.5.6	Operational Limitations and Restrictions .	2.9.5-43

TABLE OF CONTENTS

SECTION		TITLE	PAGE
	2.9.6	Spectrograph and XUV Monitor (S082B) . . .	2.9.6-1
	2.9.6.1	Introduction	2.9.6-1
	2.9.6.2	Subsystem Interfaces	2.9.6-1
	2.9.6.3	Functional Description	2.9.6-5
	2.9.6.4	Major Component/Functional Description . .	2.9.6-17
	2.9.6.5	Performance and Design Data	2.9.6-66
	2.9.6.6	Operational Limitations and Restrictions .	2.9.6-66
	2.9.7	Hydrogen Alpha Telescope (Hα1)	2.9.7-1
	2.9.7.1	Introduction	2.9.7-1
	2.9.7.2	Subsystem Interfaces	2.9.7-5
	2.9.7.3	Functional Description	2.9.7-8
	2.9.7.4	Major Component/Functional Description . .	2.9.7-13
	2.9.7.5	Performance and Design Data	2.9.7-28
	2.9.7.6	Operational Limitations and Restrictions .	2.9.7-30
	2.9.8	Hydrogen Alpha Telescope (Hα2)	2.9.8-1
	2.9.8.1	Introduction	2.9.8-1
	2.9.8.2	Subsystem Interfaces	2.9.8-1
	2.9.8.3	Functional Description	2.9.8-5
	2.9.8.4	Major Component/Functional Description . .	2.9.8-10
	2.9.8.5	Performance and Design Data	2.9.8-17
	2.9.8.6	Operational Limitations and Restrictions .	2.9.8-21
3.0	CONTROLS AND DISPLAYS		
	3.1	Introduction	3-1
	3.1.1	Controls and Displays Locator Index . . .	3-2
Appendix			
A	ABBREVIATIONS		A-1
B	SYMBOLS		B-1
C	ALPHABETICAL INDEX		C-1
D	BIBLIOGRAPHY		D-1

LIST OF ILLUSTRATIONS

FIGURE NO.		PAGE NO.
1.0-1	Skylab A Mission	1.0-6
1.0-2	Skylab I Launch Configuration.	1.0-7
1.0-3	Skylab A Orbital Configuration	1.0-8
1.0-4	ATM Less Solar Array Wings	1.0-9
1.0-5	ATM C&D Console Location in MDA.	1.0-10
2.1-1	General Arrangement.	2.1-3
2.1-2	Rack Structure	2.1-4
2.1-3	Rack Equipment Arrangement	2.1-5/6
2.1-4	Solar Array Configuration.	2.1-11
2.1-5	Wing Arrangement	2.1-12
2.1-6	Wing Structure	2.1-13
2.1-7	Decinching Mechanism	2.1-14
2.1-8	Decinching Mechanism Control Circuit	2.1-15
2.1-9	Deployment Mechanism	2.1-16
2.1-10	Deployment Mechanism Control Circuit	2.1-17/18
2.1-11	Deployment Electric Actuator	2.1-19
2.1-12	Wing 1 Antenna Panel Deployment Mechanism.	2.1-20
2.1-13	Wing 3 & 4 Antenna Deployment Mechanism.	2.1-21
2.1-14	Canister and Spar Structure.	2.1-23/24
2.1-15	Canister Equipment and Experiment Arrangement.	2.1-25/26
2.1-16	Spar Equipment and Experiment Arrangement.	2.1-27/28
2.1-17	Experiment Pointing Control - Roll Positioning Mechanism Arrangement.	2.1-31
2.1-18	Roll Ring Support Rollers.	2.1-32
2.1-19	Launch Locks	2.1-33
2.1-20	Launch Lock Release Circuit.	2.1-34
2.1-21	Experiment Pointing Control Actuator	2.1-35
2.1-22	Roll Drive and Brake Assembly.	2.1-36
2.1-23	Roll Position Indicator Assembly	2.1-37
2.1-24	Roll Stop Assembly	2.1-38
2.1-25	Orbit Lock Assembly.	2.1-39
2.1-26	Canister Side Film Door Mechanism.	2.1-43
2.1-27	Canister Sun Shield Film Door Mechanism.	2.1-44
2.1-28	Sun Shield Aperture Door Mechanism	2.1-45
2.1-29	Typical Sun Shield Aperture Door Control Circuit	2.1-46
2.1-30	GSE GN_2 Purge Fitting Retract Mechanism.	2.1-48
2.2-1	Cluster Power Sources and Locations.	2.2-2
2.2-2	Paralleled Power Simplified Schematic.	2.2-3
2.2-3	ATM Canister Rack Locations.	2.2-4
2.2-4	ATM Electrical Power System.	2.2-5
2.2-5	ATM Caution and Warning Panel.	2.2-8
2.2-6	ATM Bus Low C&W Circuitry.	2.2-9
2.2-7	Solar Array Configuration and Power Output vs. Orbital Time	2.2-11

FIGURE NO.		PAGE NO.
2.2-8	ATM Solar Cell Type B.	2.2-12
2.2-9	Solar Panel and CBRM Locations	2.2-13
2.2-10	Relationship Between Beta Angle and Dark Time Per Orbit.	2.2-16
2.2-11	ATM Solar Array Output for Pointing Sequences.	2.2-17
2.2-12	ATM Solar Module Temperature Profile	2.2-18
2.2-13	ATM Solar Array I-V Characteristics.	2.2-19
2.2-14	ATM Wings with Node Designations	2.2-21
2.2-15	CBRM Schematic	2.2-24
2.2-16	CBRM Functional Diagram.	2.2-25
2.2-17	ATM Battery Charging Conditions.	2.2-26
2.2-18	ATM Battery Charge Trip Voltage as a Function of Temperature	2.2-27
2.2-19	ATM Load Regulator Output Characteristics.	2.2-31
2.2-20	Simplified Schematic of ATM Load Regulator	2.2-32
2.2-21	ATM Load Regulator Output Voltage Slope.	2.2-32
2.2-22	ATM EPS Bus V-I Characteristics.	2.2-35
2.2-23	Simplified Block Diagram of ATM Power Distribution	2.2-39
2.2-24	EPC Controls and Displays,	2.2-42
2.2-25	Power System Panel	2.2-43
2.2-26	Console Power Distribution - Circuit Breakers.	2.2-44
2.2-27	ATM Power Off Circuitry - Cluster Power.	2.2-45
2.2-28	ATM Power Off Circuitry - CBRM Power	2.2-46
2.2-29	Electrical Power System Overview	2.2-50
2.2-30	Power System Load Arrangement.	2.2-53
2.3-1	Exploded View of ATM	2.3-2
2.3-2	ATM Canister Thermal Design Concept.	2.3-3
2.3-3	Thermal Control Subsystem Interfaces	2.3-4
2.3-4	TCS Functional Schematic	2.3-7
2.3-5	TCS Controls and Monitor	2.3-8
2.3-6	Top and Exploded Side Views of Rack Showing Equipment Mounting Zone Designations	2.3-10
2.3-7	Schematic of the ATM Externally Mounted Rack Components and Thermal Zones	2.3-11
2.3-8	Schematic of the ATM Rack Zones 11/19 Internally Mounted Components	2.3-12
2.3-9	Schematic of the ATM Rack Zones 12/20 Internally Mounted Components	2.3-13
2.3-10	Schematic of the ATM Rack Zones 14/22 Internally Mounted Components	2.3-14
2.3-11	Schematic of the ATM Rack Zones 16/24 Internally Mounted Components	2.3-15
2.3-12	Schematic of Typical CMG and CBRM Configuration in Rack Zones 9/17, 13/21 and 15/23.	2.3-16

FIGURE NO.		PAGE NO.
2.3-13	Schematic of ATM Rack MDA End Mounted Components	2.3-17
2.3-14	Experiment Heater Concepts	2.3-35
2.3-15	ATM Canister Spar.	2.3-42
2.3-16	Canister Equipment Arrangement	2.3-44
2.3-17	Cold Plate Fluid Passage Routing	2.3-45
2.3-18	Radiator, ATM.	2.3-47
2.3-19	Accumulator Assembly	2.3-49
2.3-20	Performance of Pump	2.3-51
2.3-21	Flow Path Selector Valve	2.3-53
2.3-22	Modulating Flow Control Valve.	2.3-55
2.3-23	Cross Section of Temperature Control Sensor.	2.3-57
2.3-24	Heater Assembly.	2.3-59
2.4-1	I&C Subsystem Electrical Interfaces.	2.4-2
2.4-2	Telemetry System Block Diagram	2.4-5/6
2.4-3	Digital Command System Block Diagram and Interfaces	2.4-8
2.4-4	Digital Address System Block Diagram and Interfaces	2.4-9
2.4-5	TV System Block Diagram and Interfaces	2.4-10
2.4-6	Telemetry Analog Data and Sync Flow Diagram.	2.4-13
2.4-7	ASAP Block Diagram and Interfaces.	2.4-21
2.4-8	Command Message Format	2.4-27
2.4-9	Vehicle/Decoder Address Data Format.	2.4-28
2.4-10	Information Data Format.	2.4-29
2.4-11	PSK Sub-bit Waveform Generation.	2.4-31
2.4-12	Data Bit 11001 Composite Waveform.	2.4-32
2.4-13	Command Receiver Block Diagram	2.4-33
2.4-14	Command Decoder Block Diagram.	2.4-36
2.5-1	APCS and Interfaces.	2.5-2
2.5-2	Attitude and Pointing Control System Coordinates	2.5-3
2.5-3	Skylab APCS Simplified Functional Block Diagram.	2.5-9/10
2.5-4	ATM Canister Sun End	2.5-11
2.5-5	Orbital, Ecliptic, and Equatorial Coordinate Systems.	2.5-13
2.5-6	ATM Coordinate System Roll Reference	2.5-15
2.5-7	Field of View for ATM Startracker.	2.5-19
2.5-8	ATMDC/WCIU Redundancy and System Configuration	2.5-22
2.5-9	Simplified Solar Inertial Day Attitude Control Scheme	2.5-27
2.5-10	Primary Navigation Scheme Timing	2.5-31
2.5-11	Simplified TACS Functional Diagram	2.5-62
2.5-12	TACS Modules	2.5-63
2.5-13	TACS Thruster Location	2.5-64
2.5-14	Orbit Desaturation Maneuver Geometry	2.5-67

FIGURE NO.		PAGE NO.
2.5-15	Optical Mechanical Assembly (OMA)	2.5-72
2.5-16	Light Transmission Through the Prism.	2.5-73
2.5-17	Manual Pointing Control Functional Diagram.	2.5-75
2.5-18	Rate Gyro Power Control	2.5-78
2.5-19	Rate Gyro Functional Diagram.	2.5-80
2.5-20	UP/DN Rate Gyro Power Control	2.5-81
2.5-21	UP/DN Rate Gyro Functional Diagram.	2.5-83
2.5-22	Acq. SS Detector Block and Output Characteristics	2.5-84
2.5-23	Acq. SS Functional Diagram.	2.5-85/86
2.5-24	Star Tracker OMA.	2.5-88
2.5-25	Simplified Star Tracker Diagram	2.5-89
2.5-26	Star Tracker Power Control.	2.5-91
2.5-27	Star Tracker Functional Diagram	2.5-92
2.5-28	Two Axis Gimbal Search Pattern.	2.5-93
2.5-29	ATMDC/WCIU Input/Output Simplified Block Diagram.	2.5-95/96
2.5-30	ATMDC Central Processor Section Block Diagram	2.5-99
2.5-31	ATMDC I/O Control Block Diagram	2.5-101
2.5-32	ATMDC Power Supply Turn ON/OFF.	2.5-105
2.5-33	Functional Diagram of Memory Load Unit and Interfaces.	2.5-109
2.5-34	WCIU TACS Driver Functional Diagram	2.5-115
2.5-35	Functional Switchover Control Diagram	2.5-116
2.5-36	TACS Functional Diagram	2.5-118
2.5-37	ATM-CMG Cutaway	2.5-119
2.5-38	Simplified CMG System Diagram	2.5-120
2.5-39	CMG Power Control	2.5-122
2.5-40	Bear Temp Conditioned Output.	2.5-130
2.5-41	Wheel Speed Conditioned Output.	2.5-131
2.5-42	Inner Gimbal Conditioned Output	2.5-132
2.5-43	Outer Gimbal Condition Output	2.5-133
2.5-44	Wheel Current Conditioned Output.	2.5-135
2.5-45	FSS Optical Mechanical Assembly	2.5-136
2.5-46	FSS Power Control	2.5-139
2.5-47	FSS Block Diagram and Interface	2.5-140
2.5-48	EPEA Functional Diagram	2.5-143
2.5-49	EPEA Power Control.	2.5-145
2.5-50	EPC Activation.	2.5-146
2.5-51	EPEA UP/DN Control Loops.	2.5-147
2.5-52	Canister UP/DN Caging Control	2.5-149
2.5-53	Manual Pointing Controller Loop	2.5-150
2.5-54	Roll Channel Control.	2.5-153
2.5-55	Roll Channel Control (CONT)	2.5-154
2.5-56	Roll Channel Control (CONT)	2.5-156
2.5-57	EPC Roll Resolver Control	2.5-157

FIGURE NO.		PAGE NO.
2.5-58	EPC 800 HZ Power Control	2.5-158
2.5-59	Manual Pointing Controller	2.5-159
2.5-60	Manual Pointing Controller Interface	2.5-161
2.6-1	Caution and Warning System Diagram	2.6-2
2.6-2	C&W System	2.6-3
2.6-3	Cluster C&W System	2.6-4
2.6-4	Caution and Warning System Block Diagram	2.6-5
2.6-5	Cluster Caution and Warning Subsystem Block Diagram.	2.6-7
2.6-6	Caution and Warning Subsystem Features	2.6-8
2.6-7	Power Sources for C&W Subsystem.	2.6-10
2.6-8	Cluster C&W Subsystem Power Distribution	2.6-11
2.6-9	Cluster C&W Subsystem Power Distribution	2.6-12
2.6-10	Caution and Warning Sensor Closures.	2.6-14
2.6-11	Signal Conditioning Package Operation.	2.6-16
2.6-12	C&W Subunit-Input and Memory Logic	2.6-17
2.6-13	Caution and Warning Subunit & Electronics.	2.6-18
2.6-14	C&W Subunit-Output Logic	2.6-19
2.6-15	SIA-C/W Audio Signal Functional Interfaces	2.6-21
2.6-16	Speaker Intercom Assembly C&W Tone Operation	2.6-22
2.6-17	Audible Alarm Signal Distribution.	2.6-24
2.6-18	Lighting, Caution and Warning Control Panel 207.	2.6-25/26
2.6-19	Cluster Emergency Subsystem.	2.6-28
2.6-20	Caution and Malfunction Logic.	2.6-32
2.6-21	Caution Logic Test	2.6-33
2.6-22	Warning Malfunction Logic.	2.6-34
2.6-23	Warning Logic Test	2.6-35
2.6-24	Typical Test and Inhibit Logic	2.6-36
2.6-25	C&W Subsystem Self Monitoring Set-up	2.6-37
2.6-26	C&W Equipment Locations.	2.6-44
2.6-27	Cluster Attitude Functional Diagram.	2.6-46
2.6-28	ACS Overrate	2.6-47
2.6-29	ATM Thruster Stuck	2.6-48
2.6-30	ATM ACS Malfunction Functional Diagram	2.6-54
2.6-31	ATM CMG Saturated.	2.6-55
2.6-32	ATM Auto TACS Only	2.6-56
2.6-33	2nd/3rd Rate Gyro Fails.	2.6-57
2.6-34	ATM Computer Malfunction Functional Diagram.	2.6-61
2.6-35	ATM A&PCS Computer Crossover	2.6-62
2.6-36	ATM Computer Self Test Failure	2.6-63
2.6-37	ATM Canister Thermal Functional Diagram.	2.6-65
2.6-38	ATM Coolant Loop	2.6-66
2.6-39	Coolant Fluid Temperature Monitor Diagram.	2.6-68
2.6-40	Coolant Heater Temperature Monitor Diagram	2.6-69
2.6-41	ATM Coolant Fluid Temperature C&W System A	2.6-70
2.6-42	ATM Coolant Heater Temperature C&W System A.	2.6-71

FIGURE NO.		PAGE NO.
2.6-43	ΔP Pressure Sensor Diagram	2.6-72
2.6-44	ATM Coolant Pump ΔP	2.6-73
2.6-45	ATM Power Distribution Diagram	2.6-76
2.6-46	ATM Bus 1 Monitor	2.6-78
2.6-47	ATM Bus 1 Low Functional Diagram	2.6-79
2.6-48	ATM Bus No. 1 Low	2.6-80
2.6-49	ATM Bus 2 Monitor	2.6-82
2.6-50	ATM Bus 2 Low Functional Diagram	2.6-83
2.6-51	ATM Bus No. 2 Low	2.6-84
2.6-52	ATM C&D Console Alert Lights	2.6-91
2.6-53	ATM Alert Overview	2.6-92
2.6-54	X-REA HV Alert	2.6-93
2.6-55	Be and Al Count High Alert	2.6-94
2.6-56	Scanning Spectrometer Alert	2.6-95
2.6-57	Door Open Alert	2.6-96
2.6-58	Power System and Battery Charge Alert Indication	2.6-97
2.6-59	Auto ACS Alert	2.6-98
2.6-60	CMG Malfunction Alert	2.6-99
2.6-61	CMG Bearing Temperature Alert	2.6-100
2.6-62	Computer Reject Alert	2.6-101
2.7-1	Ordnance Systems Skylab A	2.7-3/4
2.7-2	ATM Solar Panel Decinching Mechanism	2.7-5/6
2.7-3	ATM Solar Panel Cinching Release Schematic	2.7-7
2.7-4	Ordnance System for ATM Solar Panel Cinching Release	2.7-8
2.7-5	ATM Solar Panel Decinching Mechanism	2.7-9
2.7-6	Thruster Assembly	2.7-10
2.7-7	ATM Launch Lock Release Ordnance Routing	2.7-12
2.7-8	ATM Launch Lock Release Schematic	2.7-13
2.7-9	ATM Launch Lock Mechanism	2.7-14
2.7-10	ATM Launch Lock Release Mechanism	2.7-15/16
2.7-11	ATM Launch Lock Pin Puller	2.7-17
2.7-12	EBW Firing Unit	2.7-19
2.7-13	EBW Decorator (Sectional View)	2.7-22
2.7-14	EBW Detonator	2.7-23
2.7-15	Confined Detonating Fuse Assembly (Sectional View)	2.7-29
2.7-16	Confined Detonating Fuse (Sectional View)	2.7-30
2.7-17	Confined Detonating Fuse Manifold (Sectional View)	2.7-37
2.7-18	CDF Manifold and Attached Components (Sectional View)	2.7-38
2.7-19	CDF Tee and CDF Assembly (Sectional View)	2.7-41
2.7-20	CDF Pressure Cartridge	2.7-48
2.8-1	ATM EVA Route	2.8-4
2.8-2	ATM EVA Route Details	2.8-5/6

FIGURE NO.		PAGE NO.
2.8-3	ATM EVA - Center Work Station	2.8-16
2.8-4	ATM EVA - Transfer Work Station	2.8-17
2.8-5	ATM EVA - Sun End Work Station.	2.8-18
2.8-6	Film Transfer Boom (WIF Unit)	2.8-22
2.8-7	Envelope Drawing ATM Film Transfer Boom	2.8-23
2.8-8	Mechanical Schematic Shotgun Configuration of the FTB	2.8-24
2.8-9	FTB Wiring Schematic (Element Fully Retracted).	2.8-25
2.8-10	Type of Clothesline Attach Point.	2.8-27
2.8-11	Foot Restraints	2.8-28
2.8-12	FTB Hooks	2.8-29
2.8-13	Clothesline Transfer System	2.8-30
2.8-14	Clothesline Transfer System	2.8-31
2.8-15	Clothesline Use in WIF.	2.8-32
2.8-16	Clothesline Use at VC	2.8-33
2.8-17	MOA Internal Arrangement.	2.8-35
2.8-18	Skylab CM Stowage Chart	2.8-36
2.8-19	Center Work Station (VC).	2.8-38
2.8-20	S052 Double Film Door in Canister at VC	2.8-39
2.8-21	Typical Single Film Door Canister at VC (Hαl Door)	2.8-40
2.8-22	Sun End Camera Replacement.	2.8-42
2.8-23	Sun End Film Doors.	2.8-43
2.8-24	Simplified Canister Rotation Control Schematic.	2.8-45/46
2.8-25	Rotation Control (Panel 160).	2.8-47
2.8-26	Schematic Rotation Control (Panel 160).	2.8-48
2.8-27	EVA Areas of Interest C&D Console	2.8-50
2.8-28	EVA Lighting Diagram.	2.8-52
2.8-29	AM and DA EVA Lights.	2.8-53
2.8-30	EVA Lights.	2.8-55
2.8-31	ATM EVA Lighting Schematic.	2.8-56
2.8-32	SWS Panel 202	2.8-57
2.8-33	Lock Compartment Control Panel 316.	2.8-58
2.8-34	ATM EVA Light Assembly.	2.8-59
2.8-35	EVA Lights ATM EVA Route.	2.8-60
2.8-36	EVA Lights Center Workstation (VC).	2.8-61
2.8-37	EVA Lights Sun End Workstation (VS)	2.8-62
2.8-38	Sun End Workstation with EVA Lights (VS).	2.8-63
2.8-39	Fixed Airlock Shroud Workstation (VF)	2.8-64
2.8-40	FAS Workstation (VF).	2.8-65
2.8-41	FAS Workstation (VF).	2.8-66
2.8-42	FAS Workstation (VF) - MDA Mockup	2.8-67
2.8-43	FAS Workstation Equipment	2.8-68
2.8-44	Center Workstation (VC)	2.8-69
2.8-45	Sun End Workstation (VS).	2.8-70
2.8-46	Transfer Workstation (VT)	2.8-71

FIGURE NO.		PAGE NO.
2.8-47	Translation to Sun End Area	2.8-72
2.8-48	S082 Dummy Cameras and Pallet/Tree	2.8-73
2.8-49	Center Workstation Experiment Camera and Film Pallet/Tree	2.8-74
2.9.1-1	White Light Coronagraph (S052)	2.9.1-2
2.9.1-2	ATM Canister Spar Location - Sun End	2.9.1-5
2.9.1-3	WLC Control and Display Console Controls and Indicators	2.9.1-10
2.9.1-4	Frame and Diode Matrix Orientation	2.9.1-12
2.9.1-5	WLC TV Format	2.9.1-13
2.9.1-6	Optics Layout	2.9.1-15
2.9.1-7	External Occulting Discs	2.9.1-16
2.9.1-8	Internal Occulting Disc Mechanism (D_4)	2.9.1-17
2.9.1-9	Polarization Wheel Mechanism	2.9.1-18
2.9.1-10	Optics Housing Details	2.9.1-20
2.9.1-11	WLC Functional Block Diagram	2.9.1-21
2.9.1-12	Pointing Reference System Elements	2.9.1-26
2.9.1-13	WLC Film Camera	2.9.1-28
2.9.1-14	TV Monitor Mirror Mechanism	2.9.1-30
2.9.1-15	Thermal Heater Panels, Control and Temp. Sensors	2.9.1-33
2.9.2-1	S054 Telescope Assembly	2.9.2-2
2.9.2-2	ATM C&D Console S054	2.9.2-4
2.9.2-3	S054 Power Interface Block Diagram	2.9.2-6
2.9.2-4	Functional Diagram of S054 X-Ray Spectrographic Telescope	2.9.2-7
2.9.2-5	S054 Photomultiplier Subsystem	2.9.2-8
2.9.2-6	S054 Pointing System	2.9.2-13
2.9.2-7	Electrostatic Image Dissector, Schematic Diagram	2.9.2-14
2.9.2-8	Resolution Element Timing	2.9.2-17
2.9.2-9	CRT and Image Dissector Deflection Voltages	2.9.2-19
2.9.2-10	Camera Timing Diagram	2.9.2-22
2.9.2-11	S054 Camera Programming and Exposures	2.9.2-23
2.9.2-12	S054 Camera Control Function	2.9.2-24
2.9.2-13	Grating System	2.9.2-27
2.9.2-14	Filter Wheel System	2.9.2-29
2.9.2-15	S054 Temperature Control Subsystem	2.9.2-31
2.9.2-16	Telescope Heater Location	2.9.2-32
2.9.2-17	S054 Simplified Block Diagram	2.9.2-35
2.9.2-18	Telescope Assembly	2.9.2-36
2.9.2-19	Portion of Grating	2.9.2-38
2.9.2-20	Mirror Subassembly	2.9.2-40
2.9.2-21	Visible Light Lens Assembly	2.9.2-41
2.9.2-22	Camera Assembly	2.9.2-44
2.9.2-23	Film Format	2.9.2-45
2.9.2-24	Intensity Modulation Assembly	2.9.2-48
2.9.2-25	Examples of Intensity Modulation Signals	2.9.2-49

FIGURE NO.		PAGE NO.
2.9.2-26	Intensity Modulation Transfer Characteristics. .	2.9.2-51
2.9.2-27	X-Ray Image Monitor Assembly	2.9.2-52
2.9.2-28	Exposure/Intensity Counter Assembly Block Diagram.	2.9.2-54
2.9.3-1	ATM Experiment S055A UV Scanning Polychrometor/ Spectroheliometer.	2.9.3-3
2.9.3-2	S055A Raster Pattern	2.9.3-6
2.9.3-3	S055A Controls and Displays.	2.9.3-8
2.9.3-4	S055A Mirror Drive System.	2.9.3-10
2.9.3-5	S055A Primary Mirror Launch Lock System.	2.9.3-11
2.9.3-6	S055A Grating Drive System	2.9.3-14
2.9.3-7	S055A UV Detector System	2.9.3-15
2.9.3-8	S055A Thermal Control System	2.9.3-17
2.9.3-9	S055A Main Power System.	2.9.3-18
2.9.3-10	S055A Temperature Monitor System	2.9.3-19
2.9.3-11	S055A Spectrometer Pressure Gage	2.9.3-20
2.9.3-12	S055A Optical Schematic.	2.9.3-21
2.9.4-1	S056 Control and Display Panel Locations	2.9.4-3
2.9.4-2	S056 Power Requirements/Time	2.9.4-5
2.9.4-3	S056 Electrical Interface Diagram.	2.9.4-6
2.9.4-4	S056 Block Diagram	2.9.4-11
2.9.4-5	S056 Grazing-Incidence X-Ray Telescope	2.9.4-12
2.9.4-6	Location of the X-RT and X-REA on the ATM Spar .	2.9.4-13
2.9.4-7	Optical Configuration of the X-RT.	2.9.4-15
2.9.4-8	Physical Constants of Telescope Mirrors for Flight Unit A.	2.9.4-18
2.9.4-9	Physical Constants of Telescope Mirror for Flight Unit B.	2.9.4-19
2.9.4-10	Solar Shield	2.9.4-22
2.9.4-11	Thermal Control Components	2.9.4-23
2.9.4-12	Telescope Assembly Thermal Environmental Control System Block Diagram	2.9.4-25
2.9.4-13	S056 Film Magazine Assembly.	2.9.4-28
2.9.4-14	Camera Electronics Block Diagram	2.9.4-31/32
2.9.4-15	X-REA Block Diagram.	2.9.4-38
2.9.4-16	Charge Sensitive Pulse Amplifier Block Diagram .	2.9.4-41
2.9.4-17	Six Channel Calibrator Block Diagram	2.9.4-42
2.9.4-18	Six Channel Calibrator Time Sequence	2.9.4-43
2.9.4-19	Control Monitor Flux Rate Calibration Curve. . .	2.9.4-44
2.9.4-20	High Voltage Power Supply Block Diagram.	2.9.4-49
2.9.4-21	Low Voltage Power Supply Block Diagram	2.9.4-50
2.9.5-1	S082A Mounted in ATM Canister.	2.9.5-2
2.9.5-2	S082A Experiment	2.9.5-3
2.9.5-3	C&D Panel.	2.9.5-4
2.9.5-4	Optical Schematic.	2.9.5-7
2.9.5-5	Aperture Door.	2.9.5-13

FIGURE NO.		PAGE NO.
2.9.5-6	Camera Guide Rail.	2.9.5-15
2.9.5-7	Images on Film Strip	2.9.5-18
2.9.5-8	Typical S082A Data	2.9.5-19
2.9.5-9	S082A Film Strip Camera.	2.9.5-21
2.9.5-10	Shutter Assembly	2.9.5-23
2.9.5-11	Film Changing Sequence	2.9.5-25
2.9.5-12	Power Up/Down Circuitry.	2.9.5-27
2.9.5-13	Mode Functional.	2.9.5-30
2.9.5-14	Flare Mode Functional.	2.9.5-33
2.9.5-15	S082A Diode Array.	2.9.5-35
2.9.5-16	Analog Telemetry (Typical)	2.9.5-36
2.9.5-17	S082A Thermal Control.	2.9.5-39
2.9.5-18	S082A Heater Panel Location.	2.9.5-42
2.9.6-1	Spectrograph and XUV Monitor	2.9.6-2
2.9.6-2	S082B Mounted in ATM Canister.	2.9.6-3
2.9.6-3	S082B Controls and Displays.	2.9.6-4/5
2.9.6-4	S082B Power Distribution	2.9.6-7
2.9.6-5	S082B Spectrograph Data Format	2.9.6-9
2.9.6-6	S082B Zones and Auto Step Pointing	2.9.6-14
2.9.6-7	S082B Slit, Fiducial Marks and White Light Display.	2.9.6-16
2.9.6-8	S082B Spectrograph Optical Schematic	2.9.6-19
2.9.6-9	S082B Spectrograph Electronics Functional. . . .	2.9.6-29
2.9.6-10	S082B Spectrograph Camera.	2.9.6-34
2.9.6-11	S082B Film Changing Sequence	2.9.6-36
2.9.6-12	S082B PRS Optical Schematic.	2.9.6-39
2.9.6-13	S082B PRS Electronics Functional	2.9.6-41
2.9.6-14	S082B XUV Monitor Optical Schematic.	2.9.6-44
2.9.6-15	S082B XUV Monitor Conversion Layer and Faceplate Assembly	2.9.6-46
2.9.6-16	S082B XUV Monitor Electronics Functional	2.9.6-48
2.9.6-17	S082B Typical ANalog Telemetry Channel	2.9.6-52
2.9.6-18	S082B Thermal Control Subsystem.	2.9.6-59
2.9.6-19	S082B TCS and Temperature TM Points.	2.9.6-60
2.9.6-20	S082B Camera Latch and Guide Rail Assembly . . .	2.9.6-66
2.9.7-1	Solar Spectrum	2.9.7-2
2.9.7-2	The Sun In H-Alpha	2.9.7-3
2.9.7-3	ATM Hydrogen-Alpha 1 Telescope	2.9.7-4
2.9.7-4	Power Bus Derivation Chart for Hα Telescopes .	2.9.7-9
2.9.7-5	ATM Hydrogen-Alpha 1 Telescope - Sectioned . .	2.9.7-13
2.9.7-6	ATM Hydrogen-Alpha 1 Telescope - Optical Schematic.	2.9.7-14
2.9.7-7	Reticles Against Solar Disc at Vidicon Focal Plane, with Zoom Full-In (5x).	2.9.7-17
2.9.7-8	Mechanical Reticle Controls.	2.9.7-18
2.9.7-9	ATM Hα 1 Telescope TV Fields of View	2.9.7-19
2.9.7-10	ATM Hα 1 Telescope Film Camera Field of View .	2.9.7-20
2.9.7-11	Optical Filter Characteristics	2.9.7-21

FIGURE NO.		PAGE NO.
2.9.7-12	ATM Hα 1 Telescope Filter Heater Controls and Instrumentation.	2.9.7-23
2.9.7-13	ATM Hα 1 Telescopes Zoom Control	2.9.7-24
2.9.7-14	Hα 1 Film Camera and Magazine.	2.9.7-25
2.9.7-15	Hα 1 Film Camera and Magazine.	2.9.7-26
2.9.7-16	ATM Hα 1 Telescope Camera Controls	2.9.7-28
2.9.7-17	Hα 1 Telescopes TV Power Control	2.9.7-29
2.9.8-1	ATM Hydrogen-Alpha 2 Telescope	2.9.8-2
2.9.8-2	ATM Hydrogen-Alpha 2 Telescope - Sectioned . . .	2.9.8-8
2.9.8-3	ATM Hydrogen-Alpha Telescope - Optical Schematic	2.9.8-9
2.9.8-4	Reticles Against Solar Disc at Vidicon Focal Plane, With Zoom Full-In (5x).	2.9.8-11
2.9.8-5	ATM Hα Telescopes Mechanical Reticle Controls. .	2.9.8-12
2.9.8-6	ATM Hα2 Telescope TV Fields of View.	2.9.8-14
2.9.8-7	Optical Filter Characteristics	2.9.8-15
2.9.8-8	ATM Hα2 Telescope Filter Heater Controls and Instrumentation	2.9.8-16
2.9.8-9	ATM Hα Telescopes Zoom Control	2.9.8-18
2.9.8-10	Hα Telescopes TV Power Control	2.9.8-19
3.0-1	Inverter - Lighting Control Assy Block Diagram and ATM C&D Console Interface.	3-4
3.0-2	Inverter - Lighting Control Assy Block Diagram and Interface with ATM C&D Console and . . . . AM System	3-5
3.0-3	ATM C&D Console Configuration (Panel 130). . . .	3-19/20
3.0-4	ATM DAS Backup Panel (Panel 121)	3-21
3.0-5	ATM Rotation Control (Panel 160)	3-22
3.0-6	ATM Radio Noise Burst Monitor (Panel 128/129). .	3-23/24

LIST OF TABLES

TABLE NO.		PAGE NO.
1.0-I	ATM Experiment Summary	1.0-17
2.1-I	Aperture Door Command Inhibit	2.1-41
2.1-II	ATM Sun Shield Aperture Door Command Sources & Status Indication Summary	2.1-47
2.2-I	Interface Voltage Requirements	2.2-6
2.2-II	Solar Cell Characteristics	2.2-10
2.2-III	Solar Panel Power Outputs	2.2-22
2.2-IV	ATM EPC Control, Monitoring and Protection	2.2-33
2.2-V	Power Distributors and Designaotrs	2.2-37
2.2-VI	Power Buses and Designators	2.2-38
2.2-VIII	Typical CBRM DAS Commands	2.2-41
2.3-I	Rack Sink Temperature (°F) (Orbital Average)	2.3-19
2.3-II	Environmental Parameters	2.3-20
2.3-III	Component Heat Dissipation (Watts)	2.3-21
2.3-IV	Rate Gyro Heat Dissipation (Watts)	2.3-23
2.3-V	CBRM and CMG Heat Dissipation	2.3-24
2.3-VI	Auxiliary Heaters.	2.3-24
2.3-VII	Component Temperature (Orbital Average Extreme Environment)	2.3-25
2.3-VIII	CBRM Temperature (Orbital Average Extreme Environments)	2.3-27
2.3-IX	CBRM Battery Cell Temperature (Orbital Average).	2.3-28
2.3-X	CMG Temperature (Orbital Average Extreme Environments)	2.3-29
2.3-XI	Orbital Average Heater Power Requirements for Extreme Cold Conditions	2.3-30
2.3-XII	MDA End of Canister Component Temperature	2.3-31
2.3-XII	Insulation Requirements for Experiment Package	2.3-32
2.3-XIV	ATM Experiment Thermal Control Requirements.	2.3-33
2.3-XV	Experiment Interface Surface Properties.	2.3-38
2.3-XVI	Average Temperature of Experiment Package Surfaces	2.3-39
2.3-XVII	Cold Plate Functional Requirements	2.3-43
2.3-XVIII	Radiator Functional Requirements	2.3-46
2.3-IX	Accumulator Functional Requirements	2.3-48
2.3-XX	Pump Functional Requirements	2.3-50
2.3-XXI	Flow Path Selector Valve Functional Requirements	2.3-52
2.3-XXII	Modulating Flow Control Valve Functional Requirements	2.3-54

TABLE NO.		PAGE NO.
2.3-XXIII	Electronic Control Assembly and Sensor Performance Requirements	2.3-56
2.3-XXIV	Heater Functional Requirements.	2.3-58
2.3-XXV	Flow Restricting Valve Functional Requirements	2.3-60
2.4-I	Telemetry Sync Signal Distribution Matrix	2.4-19
2.4-II	Telemetry Characteristics	2.4-44
2.4-III	Real-Time Telemetry Format	2.4-45
2.4-IV	Delayed-Time Telemetry Format	2.4-47
2.4-V	Command Characteristics	2.4-49
2.5-I	APCS Hardware Complement Summary	2.5-4
2.5-II	APCS Maneuvers	2.5-35
2.5-III	ATMDC Function	2.5-41
2.5-IV	Counter 1 Display Parameters	2.5-44
2.5-V	Counter 2 Display Parameters	2.5-45
2.5-VI	Counter 3 Display Parameters	2.5-46
2.5-VII	ATMDC Data Available for Display (Functional Command - 52003)	2.5-48
2.5-VIII	Caution and Warning Condition Display and Indicators	2.5-51
2.5-IX	Alert Condition Display	2.5-51
2.5-X	Caution and Warning Alert Single Memory and Status Word Displays	2.5-54
2.5-XI	MLU Associated Switch Selector Commands	2.5-110
2.5-XII	MLU Operating Modes	2.5-111
2.5-XIII	Rate Gyroscope Performance and Design Data	2.5-162
2.5-XV	Acquisition Sun Sensor Performance and Design Data	2.5-163
2.5-XV	Star Tracker Performance and Design Data	2.5-164
2.5-XVI	ATM Digital Computer Performance and Design Data	2.5-165
2.5-XVII	Workshop Computer Interface Unit Performance and Design Data	2.5-168
2.5-XVIII	Control Moment Gyro Performance and Design Data	2.5-170
2.5-XIX	CMG Inverter Assembly Performance and Design Data	2.5-172
2.5-XX	Fine Sun Sensor Performance and Design Data	2.5-173
2.5-XXI	FSS Signal Conditioner Performance and Design Data	2.5-174
2.5-XXII	Roll positioning Mechanixm Performance and Design Data	2.5-175
2.5-XXIII	Experiment Pointing Electronics Assembly Performance and Design Data	2.5-179
2.5-XXIV	Manual Pointing Control Performance and Design Data	2.5-180
2.6-I	C&W Subsystem Hardware Locations	2.6-13
2.6-II	Caution and Warning System Test Flow Diagram	2.6-30

TABLE NO.		PAGE NO.
2.6-III	Caution and Warning System Test Summary	2.6-31
2.6-IV	ATM C&W Measured Parameter List	2.6-41
2.6-V	ATM C&W Parameter Information (1 of 2)	2.6-42
2.6-VI	ATM Alert Parameter List	2.6-87
2.6-VII	ATM Alert Parameter Information (1 of 3)	2.6-88
2.6-VIII	Caution, Warning and Emergency Subsystem Requirements	2.6-109
2.6-IX	Real-Time Telemetry Support Requirements for ATM Subsequent to a Caution and Warning Alarm.	2.6-113
2.6-X	Real Time Telemetry Support Requirements for ATM Subsequent to a C&D Console Alert Light (1 of 2)	2.6-114
2.7-I	ATM Ordnance Systems (location)	2.7-1
2.7-II	EBW Firing Unit Installation Summary	2.7-21
2.7-III	EBW Detonator (7865742) Installation Summary	2.7-27
2.7-IV	CDF Assembly Installation Summary	2.7-32
2.7-V	CDF Manifold Installation Summary	2.7-39
2.7-VI	CDF Tee Installation Summary	2.7-42
2.7-VII	CDF Pressure Cartridge Installation Summary	2.7-49
2.8-I	Crew Systems Interfaces	2.8-2
2.8-II	ATM EVA Mission Definition	2.8-3
2.8-III	Summary of EVA C&D Prerequisite	2.8-51
2.8-IV	Structural Design Requirements for Mobility Aids, Tethers, and Stability/Transfer/Handling Equipment (1 of 3)	2.8-75
2.8-V	Performance and Design Data Film Transfer Boom (FTB) (1 of 4)	2.8-78
2.8-VI	Performance and Design Data Canister Rotation Control (Panel 160) (1 Of 3)	2.8-82
2.8-VII	ATM Backup Transfer System Performance and Design Data	2.8-85
2.8-VIII	ATM EVA Lamp Specification	2.8-86
2.8-IX	Summary of Eva Restraints	2.8-89
2.8-X	Summary of Possible Contingency EVA Operations	2.8-90
2.9.1-I	S052 Telemetry Measurements	2.9.1-6
2.9.1-II	S052/ATM Correlation Measurements	2.9.1-7
2.9.1-III	WLC DSC/DAS Controls	2.9.1-8
2.9.1-IV	Power Characteristics	2.9.1-24
2.9.1-V	Scientific Parameters/Engineering Specifications.	2.9.1-34
2.9.2-I	S054 Scientific Parameters	2.9.2-55
2.9.3-I	Spectral Position of S055A Primary Detector Units (PDU) with Grating in Optical Reference Position	2.9.3-14
2.9.3-II	Telescope Optical Characteristics	2.9.3-22
2.9.3-III	Spectrometer Optical Characteristics	2.9.3-23
2.9.3-IV	Scanning Mechanism Characteristics	2.9.3-24
2.9.3-V	S055A Operational Limitations	2.9.3-25

TABLE NO.		PAGE NO.
2.9.4-I	S056 Telemetry	2.9.4-7
2.9.4-II	X-Ray Telescope Discrete Command List.	2.9.4-7
2.9.4-III	S056 Filter Assignment	2.9.4-29
2.9.4-IV	Data Block Content	2.9.4-30
2.9.4-V	Heat Dissipation/Operational Profile	2.9.4-54
2.9.4-VI	Characteristics of Fused Silica Mirrors.	2.9.4-57
2.9.5-I	Auto 2 Mode Exposures.	2.9.5-8
2.9.5-II	Auto 1 Mode Exposures.	2.9.5-9
2.9.5-III	Flare Mode Exposures	2.9.5-10
2.9.5-IV	S082A Analog Telemetry	2.9.5-37
2.9.5-V	Scientific Parameters.	2.9.5-44
2.9.5-VI	Engineering Specifications	2.9.5-44
2.9.6-I	Auto Mode Exposure Times	2.9.6-10
2.9.6-II	Auto Step Mode Exposures	2.9.6-11
2.9.6-III	Flare Mode Exposure.	2.9.6-12
2.9.6-IV	Spectrograph Analog TM	2.9.6-50
2.9.6-V	TCS Analog TM.	2.9.6-54
2.9.6-VI	Digital TM	2.9.6-55
2.9.6-VII	Thermistor Locations	2.9.6-57
2.9.6-VIII	Scientific Parameters.	2.9.6-68
2.9.6-IX	Engineering Specifications	2.9.6-69/70
2.9.7-I	Index of Interface Control Documents and Drawings	2.9.7-6
2.9.7-II	Category B - Experiment Status Monitoring - Hα1 (RTCC)	2.9.7-7
2.9.7-III	Hα1 Telescope - Summary of Controls, Power Lines and Instrumentation.	2.9.7-9
2.9.7-IV	Performance and Design Data.	2.9.7-28
2.9.8-I	Index of Interface Control Documents and Drawings	2.9.8-3
2.9.8-II	Category B - Experiment Status Monitoring - Hα2 (RTCC)	2.9.8-4
2.9.8-III	Hα2 Telescope - Summary of Controls, Power Lines and Instrumentation.	2.9.8-6
2.9.8-IV	Performance and Design Data.	2.9.8-17
3.0-I	ATM Controls and Displays Subsystem Index.	3-6

1.1 SKYLAB MISSION

1.1.1 Mission Objectives

The objectives of the Skylab Mission are to extend the duration of manned space flight and carry out a broad spectrum of experimental investigations. Of particular importance is a series of medical experiments that are associated with the extension of manned space flight and a series of high resolution solar astronomy experiments to study the short wavelength radiation not readily observable from the surface of the earth. Earth resources and technical experiments will also be conducted to take advantage of the extended stay of man in the space environment.

1.1.2 Mission Description

The Skylab A Mission consists of one unmanned and three manned launches (figure 1.0-1). The Skylab I (SL-1) launch will use a two stage Saturn V launch vehicle to place an unmanned Saturn V workshop (SWS) and Payload Shroud (PS) into a 50° inclination, 235 NM circular orbit. The SWS will consist of a modified S-IVB Orbital Workshop (OWS), Airlock Module (AM), Multiple Docking Adapter (MDA), Apollo Telescope Mount (ATM), ATM Deployment Assembly (ATM-DA), Instrument Unit (IU), and Fixed Airlock Shroud (FAS). Figure 1.0-2 shows the SL-1 launch configuration. Figure 1.0-3 the on-orbit configuration.

After orbital insertion, the S-II stage will be separated by retro-rockets, the SWS rotated to retrograde attitude by the Thruster Attitude Control System (TACS) and the PS jettisoned at 90° to the orbital plane. The ATM will then be deployed and the SWS maneuvered to solar inertial attitude ($+Z_{OA}$ axis toward sun), with the long-itudinal ($+X_{OA}$) axis in the orbital plane (X-IOP-Z). This attitude will be maintained while the ATM solar array and OWS solar array are deployed and the Control Moment Gyro (CMG) activation is begun. The SWS will be partially activated and checked out by MSFN prior to the SL-2 launch.

The SL-2 launch will use a Saturn IB launch vehicle to place a Command and Service Module (CSM) and three astronauts into an 81 by 120 NM orbit from which the CSM can rendezvous and dock with the SWS at the axial port 5 of the MDA to form the Orbital Assembly (OA). The crew will then transfer to the SWS to complete activation for the initial 28 day visit. The CSM will remain docked to the SWS, but powered down, during the entire visit. After the completion of the 28 day visit the crew will re-enter the CSM for return to earth, leaving the SWS in orbital storage.

59 days after the return to earth of the first crew, a second crew will be launched in the same manner, and remain in orbit 56 days before returning to earth in their CM. The third crew will be launched approximately 37 days after the return of the second crew for a duration of 56 days and returned in the same way. This completes the Skylab A Mission, as presently planned.

1.2 APOLLO TELESCOPE MOUNT (ATM)

1.2.1 General Description

The ATM is the portion of the SWS that is designed to accommodate solar astronomy experiments, provide SWS or OA attitude control and a portion of SWS or OA electrical power. It consists of a rack, an experiment canister, a solar array, a Control and Display (C&D) Console, and supporting subsystems.

The ATM rack is an octagonal structure approximately 11 feet across and 12 feet high with a 14-foot diameter sun shield at one end, and four truss-type structural members extending from four of its sides. The rack is open in the center to accomodate the experiment canister and has attachment points for the solar array and most of the ATM subsystem equipment on its external sides and one end. It is mounted to the ATM-DA.

The experiment canister is a cylinder approximately 7 feet in diameter, 10 feet long and is closed at both ends except for experiment viewing doors. It has a cruciform spar inside to provide mounting for the experiments. The canister is attached to the rack by means of a gimbal ring and roll ring. The roll ring is supported by rollers mounted on the rack to permit the canister to be rotated. The equipment for the active fluid heat transfer system is mounted on the outside of the canister. Some subsystem equipment is also mounted on the MDA end of the canister.

The ATM solar array is the electrical power generation source for the ATM. The array consists of four wings covered with solar cells, and the mechanism to deploy them in orbit. The wings are attached to the sun end of the rack, perpendicular to the long axis of the SWS, and span approximately 100 feet.

The C&D Console is located within the MDA (Figure 1.0-4) and provides the crew interface with the ATM subsystem and experiments.

Supporting subsystems are the Structures and Mechanical subsystem (SMS), Electrical Power Subsystem (EPS), Thermal Control Subsystem (TCS), Instrumentation and Communications (I&C) Subsystem, Caution and Warning (C&W) Subsystem, Attitude and Pointing Control Subsystem (APCS), Explosive Devices (ED), and Crew Systems (CS).

1.2.2 Structures And Mechanical Subsystem (SMS)

Includes the rack structure, experiment canister structure, solar array deployment mechanism, experiment canister launch locks, experiment canister pointing mechanism, sun shield experiment aperture door mechanisms and experiment film camera retrieval door mechanisms.

1.2.3 Electrical Power Subsystem (EPS)

Consists of solar array, batteries, chargers, regulators and other equipment for control and distribution of electrical power. Supplies all the electrical power required by the ATM subsystems and experiments. Normally is paralleled with the SWS electrical power system to provide OA electrical power.

1.2.4 Thermal Control Subsystem (TCS)

Provides active, semi-passive and passive thermal control for ATM subsystems and experiments, except the C&D Console. The C&D console thermal control is supplied by the AM TCS. The active portion is a fluid heat transfer system that provides a baseline thermal environment for the experiment canister. The semi-passive portion consists of arrangement of electrical heaters that supply additional heat required by equipment outside the influence of the active portion or the more demanding requirements of experiments and equipment within its influence. The passive portion consists of paints, coatings, materials and insulation that are used to regulate heat transfer to or from equipment and experiments.

1.2.5 Instrumentation And Communications Subsystem (I&CS)

Provides the equipment to monitor, record, telemeter, on board command and ground command ATM subsystems and experiments. It consists of sensors, TV system, redundant data tape recorders, redundant telemetry system and a redundant command subsystem. The telemetry and command subsystem antennas are located on the ATM solar array wing tips.

1.2.6 Caution And Warning Subsystem (C&W)

Provides data inputs to the SWS C&W system and ATM C&D alert lights for selected ATM parameters.

1.2.7 Attitude Pointing And Control Subsystem (APCS)

Provides three axes attitude stabilization and maneuvering capability for the entire SWS or OA. It also provides the capability to fine point the ATM experiment canister at desired locations on the solar disc or its limb. The APCS consists of three control subsystems: The Control Moment Gyro (CMG) subsystem, the Thruster Attitude Control (TACS), and the Experiment Pointing Control (EPC) subsystem. All three control subsystems are managed by the same digital computer (ATMDC), with an inactive, redundant ATMDC onboard if required.

The CMG subsystem uses three orthogonally mounted double gimbal CMGs as momentum exchange devices for SWS or OA attitude stabilization. Acquisition Sun Sensors (ACQ SS) provide attitude information about two axes during daylight and in solar inertial attitude only. Rate gyros provide rate information about all three axes and an attitude reference when the ACQ SSs cannot be used.

The TACS uses six cold gas thrusters, which are supplied from 22 unregulated gaseous nitrogen sources, to provide momentum exchange or torque for SWS or OA attitude stabilization and maneuvering beyond the capability of the CMGs alone. This is controlled automatically by the ATMDC. The TACS is an OWS subsystem (refer to Skylab Operations Handbook, MDA/AM/OWS).

The EPC subsystem fine points the ATM experiment canister by means of torque motors in its gimbal pivots and automatically holds its position by reference to Fine Sun Sensors (FSS). The canister can be manually positioned in roll by an electric motor.

1.2.8 Explosive Devices Subsystem (EDS)

Provides the pyrotechnic devices and controls to operate the ATM Solar Array decinching and deployment mechanisms and canister launch lock release mechanism. The subsystem uses an Exploding Bridge Wire (EBW), Confined Detonating Fuse (CDF) and CDF pressure cartridges to operate these mechanisms.

1.2.9 Crew Systems (CS)

Covers EVA lighting, EVA mobility aids, film camera or magazine retrieval door operation, camera container temporary holders, rotation control panel, and the like that are part of the ATM.

1.2.2 Launch Configuration

For launch the ATM-DA with the ATM attached is locked in position above the MDA. The four solar wings of the array are folded against the side of the ATM rack and held in that position with cinches. The experiment canister is locked to the ATM rack to prevent lateral or roll motion during launch. The PS covers the ATM and most of the SWS. All ATM subsystems are powered down. One experiment film camera or magazine is loaded in the experiment prior to launch and three are stored in the AM.

1.2.3 Orbit Operations

After the SWS achieves orbit the IU will automatically deploy the ATM and the ATM solar array. The IU will also begin CMG spin up. Most of the ATM subsystems activation and checkout will be performed by MSFN prior to committing SL-2 for launch. The remaining subsystems activation and all the experiments activation and checkout will be accomplished by the crew after their arrival.

1.2.4 Storage Configuration

Before returning to earth in the CSM the crew will retrieve film cameras and magazines from the ATM experiments and store them in the CM. All experiments not required for unmanned operation will be deactivated. The ATM TCS, EPS, APCS and I&CS will be configured for automatic unmanned operation. The APCS will be placed in Solar Inertial mode with control gains set for the undocked configuration. All lights will be turned off.

1.2.5 Reactivation Configuration

The ATM subsystems will be checked out and configured for CSM rendezvous and docking by MSFN prior to SL-3 and SL-4 launch. The remaining subsystems reconfiguration and checkout will be accomplished by the crew after their arrival. The ATM experiments will be activated and checked out by the crew as required.

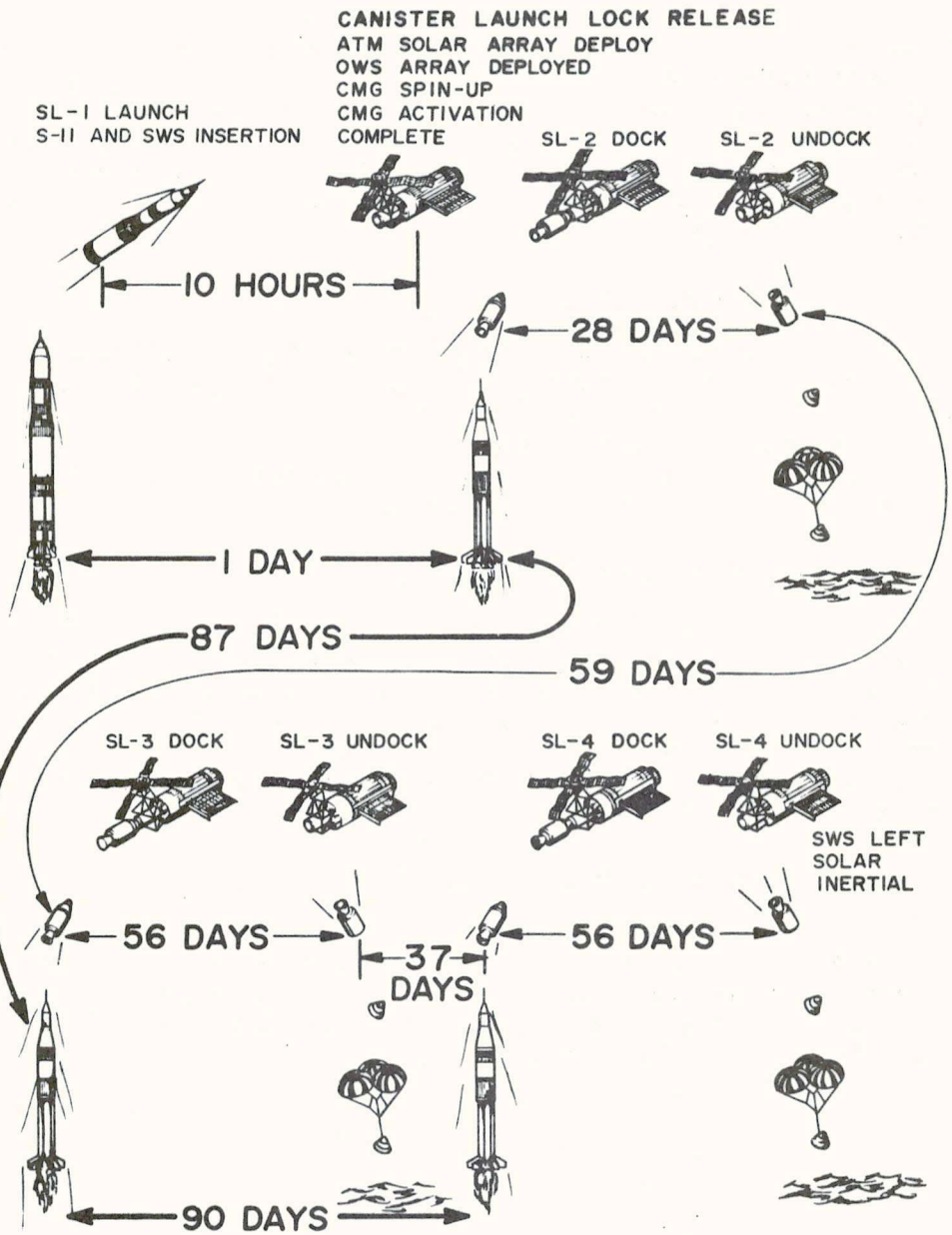

Figure 1.0-1 SKYLAB A MISSION

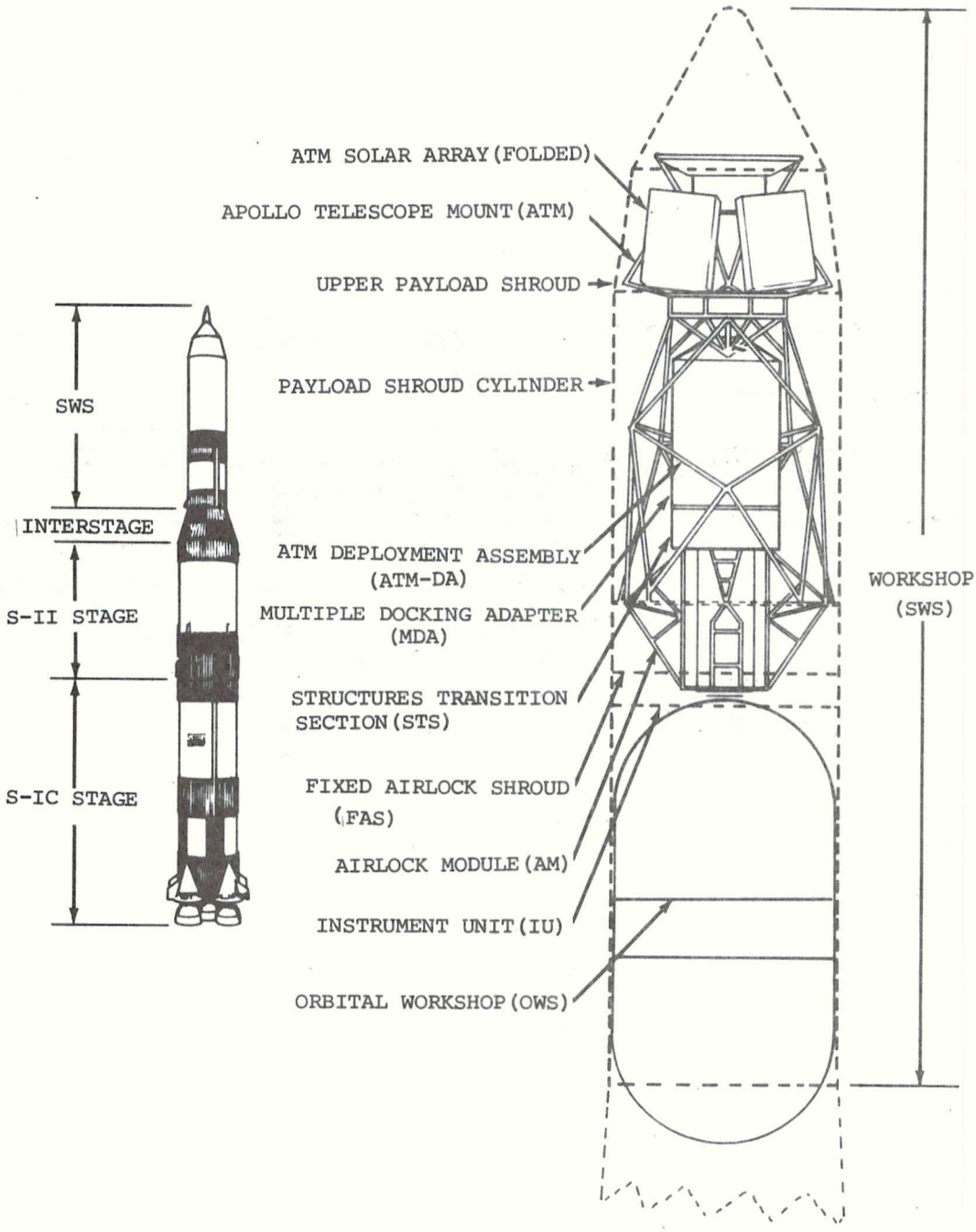

Figure 1.0-2 Skylab 1 Launch Configuration

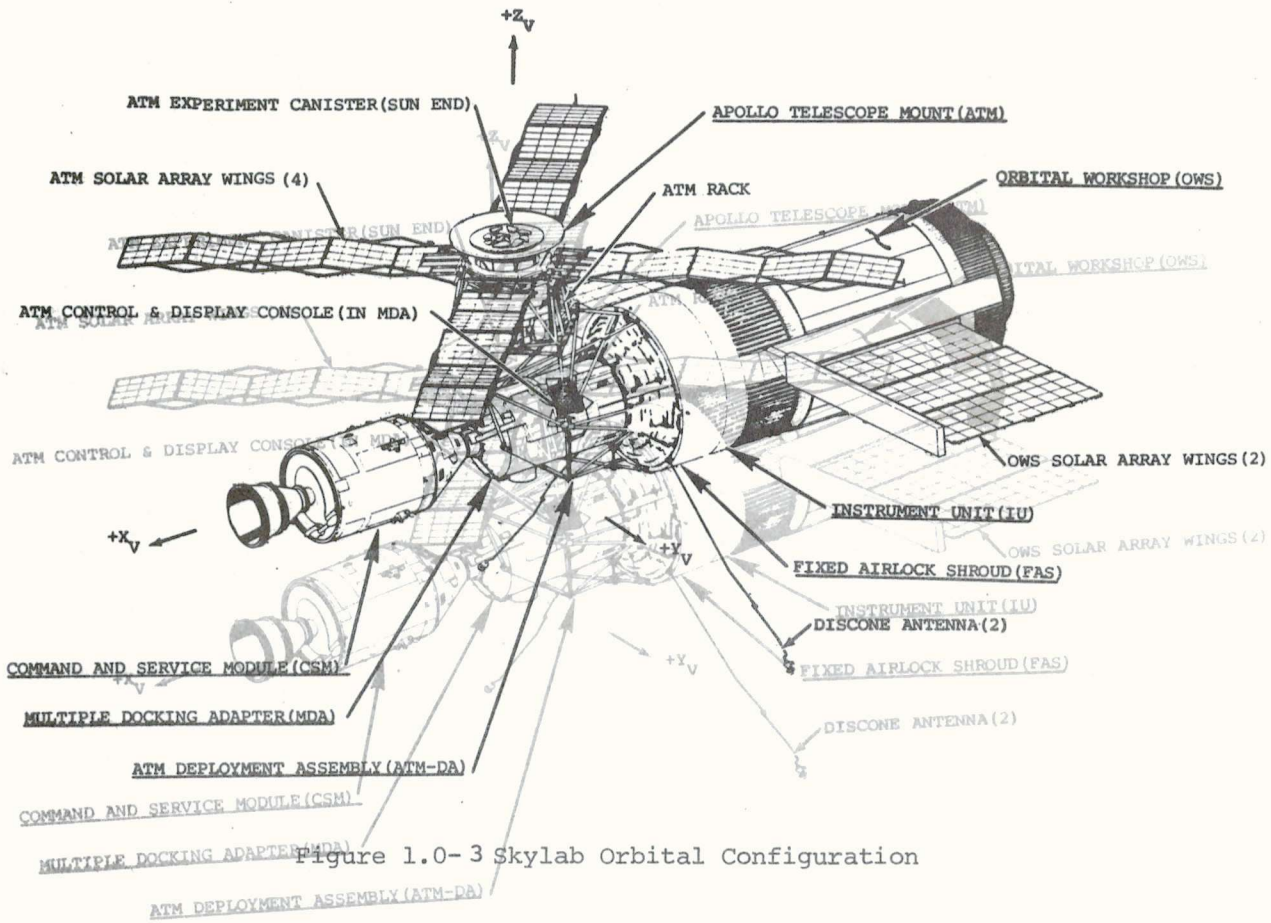

Figure 1.0-3 Skylab Orbital Configuration

Figure 1.0-3 Skylab Orbital Configuration

INTRODUCTION
BASIC DATE 27 Mar 1972 CHANGE DATE _____ PAGE 1.0-8

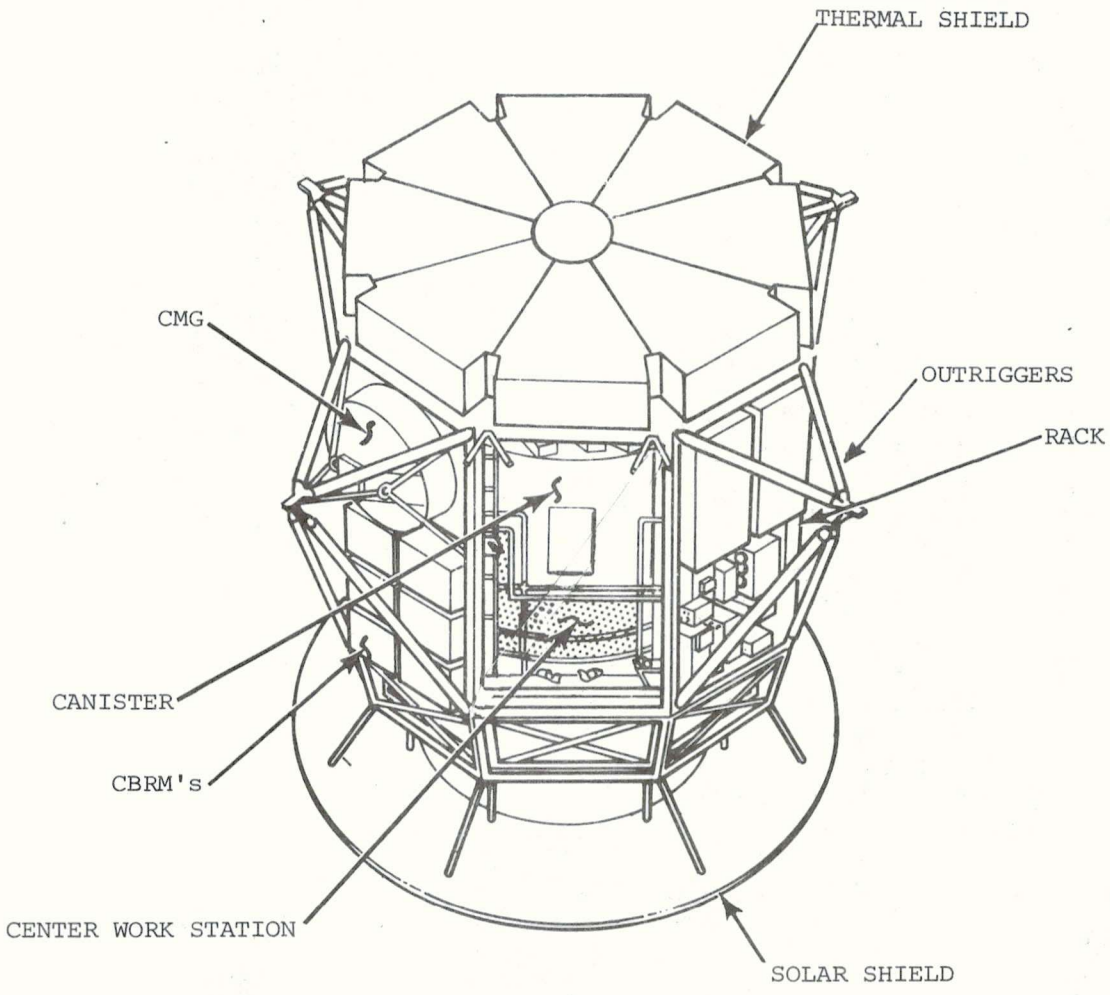

Figure 1.0-4 ATM, Less Solar Array Wings

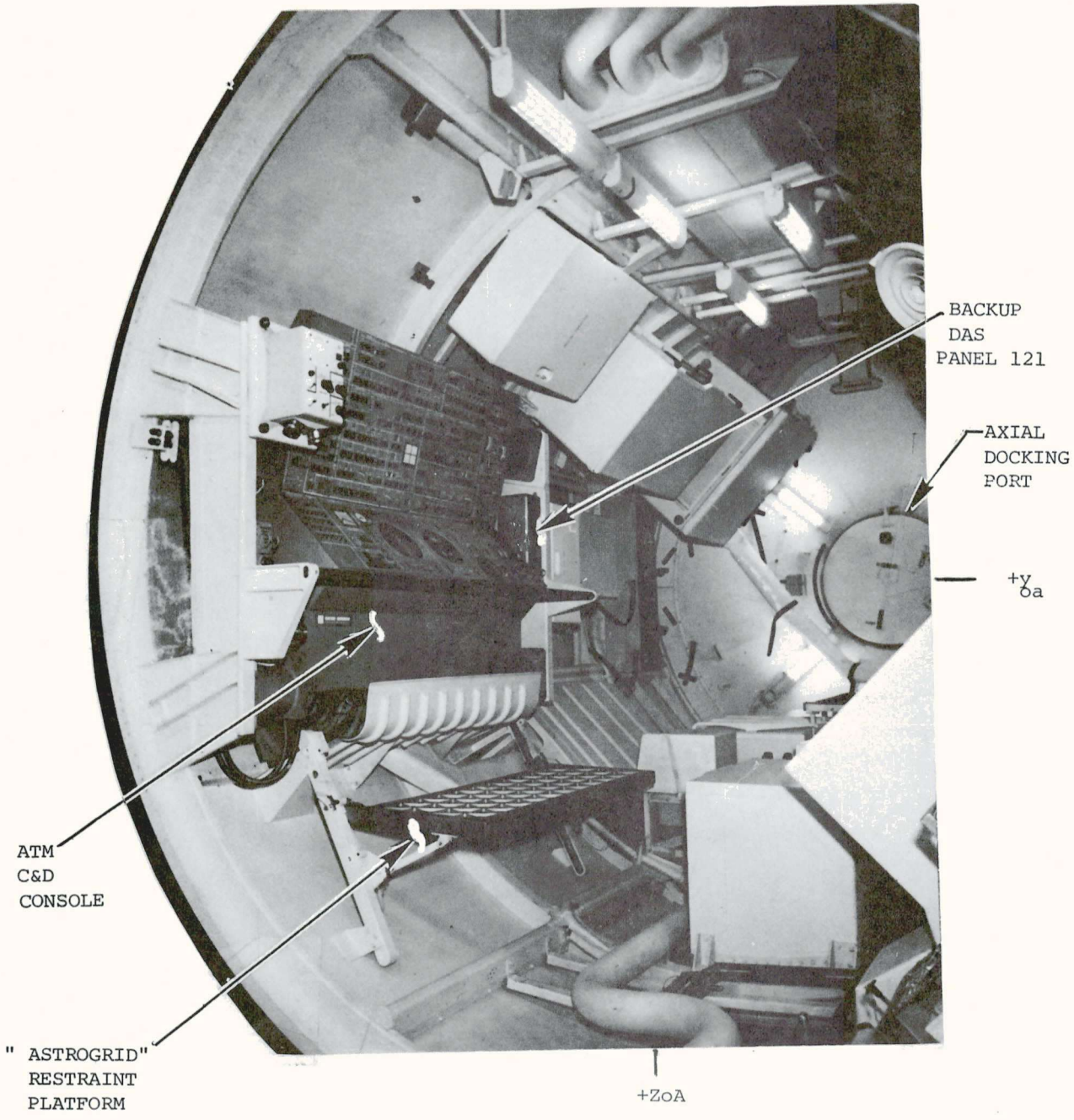

Figure 1.0-5 ATM C&D Console (Panel 130) and Backup DAS (Panel 121) LOCATION MDA

1.3 ATM EXPERIMENTS

1.3.1 Scientific Background And Objectives

The study of our sun is important to human progress not only because it is the only astronomical body upon which life on earth is wholly dependent, but because it can provide insight into processes not readily duplicated here on earth. The understanding of these processes is necessary for the safety of future flights in SSTs or spacecraft, reduction of communications interference, and improvements in weather forecasting.

Study of solar phenomena such as the high temperature outer layer, the solar flares, particle emission and the corona can enhance our knowledge of the solar energy transport mechanism, nuclear reactions, high temperature plasma physics, and the solar atmosphere that surrounds us. Our knowledge of these areas has been limited because emissions in the ultra-violet and shorter X-ray regions are absorbed by the upper layers of the earth's atmosphere. Rocket flights have provided only brief glimpses of these regions. Unmanned orbiting solar observatories have increased the viewing time of these regions, but provide relatively low spectral and spatial resolution. Unmanned flybys or landings are not feasible because of the extreme temperatures of the sun. Thus, a manned, earth orbiting, solar observatory holds the most promise for the advancement of solar studies.

One of the primary objectives of the Skylab A Mission is to provide a long duration study of the sun from earth orbit. The ATM, in conjunction with its C&D console in the MDA and the experiments contained in its canister, constitute the solar observatory. The ATM and its experiments will provide high resolution data, in the spectral range from 2 to 7,000 angstroms, of the entire solar disc or features of interest. It will store this data on film for return to earth by the crew, telemeter it real time or store it on tape for delayed transmission to MSFN. The ATM's usefullness is enhanced because it can be pointed by the crew with great accuracy at any point on the solar disc or the space surrounding it to collect data on unforeseen solar phenomena.

1.3.2 Experiment General Description

1.3.2.1 S052 White Light Coronagraph - Experiment is designed to collect data on the brightness, form, and polarization of the solar corona in white light centered about the 5400 angstrom region of the electromagnetic spectrum. These data are collected by a system of occulting discs, lenses and alignment error sensors that automatically block the solar disc to produce an image of the solar corona from 1.5 solar radii out to 6.0 solar radii. The image is transmitted through mirrors, lenses, and a polarization wheel to a film camera or directly to a low light level TV camera that is

integral with the experiment.

One loaded film camera is placed in the experiment prior to launch and three are stored in the MDA for later replacement by the crew during EVA. The cameras with exposed film are returned to earth in the CM. Each film camera contains film for approximately 8,025 data frames. The film camera can be operated automatically in five modes to vary the time between data frames, exposure, and polarization wheel position. The TV image is transmitted to either of two TV monitors on the ATM C&D console in the MDA and/or via the I&C subsystem to MSFN.

The principal investigating organization for this experiment is the High Altitude Observatory in Boulder, Colorado.

1.3.2.2 S054 X-Ray Spectrographic Telescope - Experiment is designed to collect data on the radiation from the solar corona in a portion of the soft X-ray (3.5-60 angstroms) region of the electromagnetic spectrum. These data are collected by an X-ray telescope system consisting of a fixed aperture plate, grazing incidence mirrors, movable grating and filter wheel that transmits an image of the entire solar disc, in all or a portion of the 3.5-60 angstrom region, to a photographic film camera. A lens system also transmits an image in white light to the same film camera. Both images are simultaneously recorded on the same film data frame.

The film camera can be operated automatically in any of four modes, which are selected by the crew, to vary the interval between exposures. The X-ray shutter can be operated in five sequences, selected by the crew, that provide from four to eight exposures in each sequence at progressively increasing fixed exposure times. The white light shutter speed is a fixed constant. Camera operation can be automatically started and stopped when a level of X-ray intensity preset by the crew is exceeded. The movable grating or filter wheel position can also be varied by the crew to select the portion of the 3.5 angstrom region of the spectrum to be recorded.

One loaded film magazine is placed in the experiment prior to launch and three are stored in the MDA for later replacement by the crew during EVA. Each magazine contains film for 7,200 data frames. Film cassettes from the magazines are returned to earth in the CM.

A small aperture plate and X-ray mirror also transmit an image of the entire solar disc in the 3.5-60 angstrom region to a sintillator crystal in the image dissector. The converted image is electronically scanned and transmitted to an X-RAY IMAGE mon on the ATM C&D console and to an intensity counter. The image is used by the crew to boresight the experiment. The digital output of the intensity counter is transmitted to a digital display on the ATM C&D console and via TM to MSFN.

A Photomultiplier System monitors the intensity of the X-ray flux and provides this information to a counter on the ATM C&D console. It also activates a flare alarm and controls the automatic operation of the camera. A pulse height analyzer within the Photomultiplier System measures solar energy in the 10 to 100 KEV range and transmits this data via TM to MSFN.

The principal investigating organization for this experiment is the American Science and Engineering Corp. of Cambridge, Massachusetts.

1.3.2.3 S055A UV Scanning Polychromator Spectroheliometer - Experiment is designed to measure the intensity and distribution of solar radiation in a portion of the Ultraviolet (UV) (296 to 1350 angstrom) region of the electromagnetic spectrum. These data are collected by a system consisting of a movable primary mirror, an entrance slit, a movable grating and seven photomultiplier detectors. The primary mirror is pivoted about two axes and the grating is pivoted about one axis. The experiment can be operated in either of two primary modes selected by the crew with six sub modes available.

In the mirror scan mode the mirror is automatically driven about both axes to make a 5 arc minute square, 60 line, slow raster scan of the sun. The seven photomultiplier detectors convert the solar radiation reflected by the mirror and diffracted by the fixed grating to digital data representing the intensity of the radiation at seven points in the UV spectrum. The digital data are transmitted via TM to MSFN. These data can then be used on the ground to reconstruct seven spectroheliograms (photographs) that portray the solar radiation intensity at seven points in the UV region of the spectrum. Alternately, the raster pattern may be made 5 arc minute by 5 arc second for co-observation with S-082B.

In the grating scan mode the grating is automatically driven about one axis while the mirror is locked. This varies the portion of the spectrum diffraction to each photomultiplier detector. The resulting digital data are transmitted via TM to MSFN where they are reconstructed to form a graph of solar radiation intensity vs wavelength over all, or a selected portion of, the 296 to 1350 angstrom region of the spectrum.

The crew can only monitor the output of detector 1 or 3 on a digital display on the ATM C&D Console in the MDA. The area of interest on the sun to be observed by the S055A experiment is sighted by using the ATM C&D Console TV monitor and the TV picture from the Hydrogen Alpha 1 (Hα-1), Hydrogen Alpha 2 (Hα-2) experiment TV camera or the S082B XUV monitor.

The principal investigating organization for this experiment is the Harvard College Observatory of Cambridge, Massachusetts.

1.3.2.4 S056 X-Ray Telescope - Experiment is designed to provide both X-ray filtergrams (solar images of narrow wavelength intervals) in five bandwidths from 5 to 33 angstroms and spectral data (intensity vs wavelength) in two adjacent channels of 10 wavelength bands from 2 to 20 angstroms. This experiment uses two separate and independent instruments to obtain this complementary data.

One instrument is an X-ray Telescope that employs glancing-incidence optics and six different filters to provide an image of the sun to a photographic film camera. One loaded film magazine is placed in the camera prior to launch and three are stored in the MDA for later replacement by the crew during EVA. Each magazine contains film for 6,000 data frames. The magazines are returned to earth in the CM.

The other instrument is the X-Ray Event Analyzer (X-REA) that consists of two gas filled proportional counters with thin metallic windows, pulse-height analyzers and associated electronics. The two gas filled proportional counters produce linear outputs proportional to the intensity of the energy detected. The pulse-height analyzer sorts the output of the proportional counters, with respect to amplitude, into six energy levels in one channel and four energy levels in the other. These data are transmitted via TM to MSFN or either one of the channels can be displayed on counters or the history plot on the ATM C&D Console in the MDA.

The principal investigating organization for this experiment is the NASA Goddard Space Flight Center at Greenbelt, Maryland.

1.3.2.5 S082A XUV Spectroheliograph - Experiment is designed to collect photographic data on solar radiation intensity and distribution in a portion of the extreme Ultraviolet (XUV) (150-625 angstroms) region of the electromagnetic spectrum. These data are collected by a system of heat and white light rejection mirrors, a two position grating, and an aluminum filter that transmits a portion of the solar energy to a photographic film camera.

The grating defracts the solar energy onto a film strip in the camera where it is recorded as a row of overlapping full solar images. The brightness of each image represents the intensity of the solar radiation, from a different wavelength of the spectrum, at that time. One film strip is used for each exposure. In one position the grating produces images in the 150 to 335 angstrom region and in the other position in the 321 to 625 angstrom region.

The experiment can be operated in three automatic and one manual modes selectable by the crew to vary exposure time, grating position and picture sequence. One loaded film camera is placed in the experiment prior to launch and two are stored in the MDA for later replacement by the crew during EVA. Each camera contains 200 film strips. The cameras are returned to earth in the CM.

The principal investigating organization for this experiment is the Naval Research Laboratory at Washington, D.C.

1.3.2.6 S082B XUV Spectrograph - Experiment is designed to collect photographic data on the intensity distribution of solar radiation across the 970 to 3940 angstrom portion of the extreme ultraviolet region of the spectrum. These data are collected by a system of mirrors, a slit plate, and diffraction gratings that transmit a portion of the solar energy to a photographic film camera. The gratings defract the solar energy from a 2 arc second by 1 arc minute area of the solar disc onto a film strip in the camera where it is recorded as a row of lines representing different wavelengths in the spectrum. Each film strip will contain eight rows of lines with one row for each exposure.

A pointing reference system (PRS) generates a white light TV picture of a 3 x 3 arc minute portion of the solar image, as it appears on the slit plate, for display on one of two TV monitors on the ATM C&D console. It also generates data on the location of the slit in relation to the solar limb for display on one of the digital counters on the ATM C&D Console and via TM to MSFN. The PRS automatically controls camera exposure times based on slit to limb distance.

One loaded film camera is placed in the experiment prior to launch and two are stored in the MDA for later replacement by the crew during EVA. Each camera contains 200 film strips that will hold 1600 data frames. The cameras are returned to earth in the CM.

An XUV monitor incorporated in this experiment uses a low light level TV camera to provide an image of the solar disc in the 170 to 550 angstrom region to the ATM C&D Console and via the I&C subsystem to MSFN for a pointing and target selection aid.

1.3.2.7 Hydrogen Alpha 1 (Hα1) Telescope - Experiment is to provide a TV picture for crew solar surveillance and a film record of the ATM solar pointing for correlation with other ATM experiments in the hydrogen-alpha (6562.8 angstrom) line of the spectrum. The Hα1 experiment consists of a telescope, correction optics, interference filter, beam splitter, photographic film camera and vidicon TV system.

One loaded film magazine is placed in the camera prior to launch and three are stored in the MDA for later replacement by the crew during EVA. Each magazine contains film for 16,000 data frames. The magazines are returned to earth in the CM. The TV picture is transmitted to either of two monitors on the ATM C&D Console and via the I&C subsystem to MSFN. The Hα1 film will be the primary pointing record for ATM.

The principal investigating organization for this experiment is the Harvard College Observatory, Cambridge, Massachusetts.

1.3.2.8 Hydrogen Alpha 2 (Hα2) Telescope - Provides a TV picture for crew solar surveillance. It serves as a partial backup for Hα1 and is a better source for flare location because of a wider field of view. The Hα2 consists of a telescope, correction optics, interference filter, and vidicon TV system. The TV picture is transmitted to one of two TV monitors on the ATM C&D Console and via the I&C subsystem to MSFN. The Hα2 Telescope is the sighting reference for S055A, 82A and 82B experiments.

The principal investigating organization for this experiment is the NASA Marshall Space Flight Center at Huntsville, Alabama.

ATM EXPERIMENTS SUMMARY

NUMBER	NAME	PRINCIPAL INVESTIGATOR	VENDOR	WAVELENGTH (ANGSTROMS)	SCIENTIFIC DATA DESCRIPTION	SCIENTIFIC DATA DISPLAY ON ATM C & D CONSOLE	SCIENTIFIC DATA RECORDING (ONBOARD)		SCIENTIFIC DATA RETURNED TO EARTH	REMARKS
							DEVICE	CAPACITY		
S-052	WHITE LIGHT CORONAGRAPH (WLC)(1)	HIGH ALTITUDE OBSERVATORY BOULDER, COLO.	BALL BROS. RESEARCH CORPORATION BOULDER, COLO.	4900-5900 Å	*IMAGE OF SOLAR CORONA OUT TO 6.0 SOLAR RADII WITH SOLAR DISC OCCULTED OUT TO 1.5 SOLAR RADII		4 FILM CAMERAS(2) (MIRROR IN CAMERA POSITION)	8,025 DATA FRAMES PER CAMERA	CAMERAS & FILM VIA CSM (3)	
						1 OF 2 TV MONITORS (MIRROR IN TV POSITION)	LOW LIGHT LEVEL TV CAMERA (MIRROR IN TV POSITION)		TV IMAGE VIA I & C TO MSFN	
S-054	X-RAY SPECTROGRAPHIC TELESCOPE (X-RAY SPECT)(1)	AMERICAN SCIENCE & ENGINEERING CORP. CAMBRIDGE, MASS.	AMERICAN SCIENCE & ENGINEERING CORP. CAMBRIDGE, MASS.	2-8 Å (GRATING IN) 10-60 Å (GRATING OUT)	*2 IMAGES OF ENTIRE SOLAR DISC ON ONE DATA FRAME SIMULTANEOUSLY *ONE IMAGE IN X-RAY		FILM CAMERA WITH 4 MAGAZINES(2)	6,000 DATA FRAMES PER MAGAZINE	MAGAZINES & FILM VIA CSM(3)	
				WHITE LIGHT	*ONE IMAGE WHITE LIGHT					
				2-60 Å	X-RAY IMAGE OF ENTIRE SOLAR DISC	"X-RAY IMAGE" CATHODE RAY TUBE (BORESIGHT REF)				
					DIGITAL INTENSITY COUNT	"IMAGE INTENSITY COUNT" DIGITAL DISPLAY	1 OF 2 TAPE RECORDERS	(TBD)	DIGITAL DATA VIA TM TO MSFN	
S-055A	UV SCANNING POLYCHROMATOR SPECTROHELIOMETER (SCAN SPECT)(1)	HARVARD COLLEGE OBSERVATORY CAMBRIDGE, MASS.	BALL BROS. RESEARCH CORP. BOULDER, COLO.	296-1342 Å	MIRROR SCAN MODE DIGITAL INTENSITY COUNT AT 7 SPECTRAL POINTS FROM 60 LINE SLOW RASTOR SCAN OF 5 ARC MIN. SQUARE OF SOLAR DISC (ALTERNATELY: 5 ARC MIN. X 5 ARC SEC LINE)	"INTENSITY DATA" DIGITAL DISPLAY (DETECTORS 1 OR 3 ONLY)			DIGITAL DATA TM TO MSFN	DATA RECONSTRUCTED ON GROUND 7 PHOTOS OF SOLAR DISC, ONE FOR EACH SPECTRAL POINT, BRIGHTNESS PROPORTIONAL TO INTENSITY (MIRROR SCAN MODE) (ALTERNATELY: 5 ARC MIN. X 5 ARC SEC LINE) OR GRAPH OF INTENSITY VS WAVELENGTH (GRATING SCAN MODE)
					OR GRATING SCAN MODE DIGITAL INTENSITY VS WAVELENGTH FOR ALL OR PORTION OF WAVELENGTH BAND FROM A 5 ARC SEC SQUARE OF SOLAR DISC.	NOTE: 1 OF 2 TV MONITORS WITH H∝ 1 OR 2 DATA USED FOR SIGHTING EXPERIMENT	NOTE: H∝ 1 OR 2 VIDICON TV CAMERA CAN BE USED TO SUPPLY DATA FOR SIGHTING		NOTE: H∝ 1 OR 2 TV IMAGE VIA I & C TO MSFN	
S-056	X-RAY TELESCOPE (X-RAY TELE)(1)	MARSHALL SPACE FLIGHT CENTER HUNTSVILLE, ALA.	MARSHALL SPACE FLIGHT CENTER HUNTSVILLE, ALA.	3-60 Å	X-RAY IMAGE OF ENTIRE SOLAR DISC	"MONITOR COUNTER" DIGITAL DISPLAY "HISTORY PLOT" CHART RECORDER (EITHER OF 2 CHANNELS)	FILM CAMERA WITH 4 MAGAZINES(2)	6,000 DATA FRAMES PER MAGAZINE	MAGAZINES & FILM VIA CSM(3)	
	X-RAY EVENT ANALYZER (X-REA)(1)				DIGITAL INTENSITY COUNT AT 10 ENERGY LEVELS (2 CHANNELS) OF ENTIRE SOLAR DISC		1 OF 2 TAPE RECORDERS		DIGITAL DATA VIA TM TO MSFN	
S-082A	XUV SPECTROHELIOGRAPH (XUV SPECT)(1)	NAVAL RESEARCH LABORATORY WASHINGTON, D.C.	BALL BROS. RESEARCH CORP. BOULDER, COLO.	150-335 Å (GRATING-SHORT) 321-625 Å (GRATING-LONG) (ONLY ONE GRATING MOVES TO 2 POSITIONS)	*OVERLAPPING FULL SOLAR IMAGES *EACH IMAGE OF DIFFERENT WAVELENGTH. *BRIGHTNESS PROPORTIONAL TO INTENSITY *ONE DATA FRAME PER FILM STRIP		4 FILM STRIP CAMERAS(4)	200 FILM STRIPS PER CAMERA (1 DATA FRAME PER FILM STRIP)	CAMERAS & FILM VIA CSM(3)	
S-082B	XUV SPECTROGRAPH (XUV SLIT)(1)	NAVAL RESEARCH LABORATORY WASHINGTON, D.C.	BALL BROS. RESEARCH CORP. BOULDER, COLO.	970-1940 Å (SHORT GRATING) 1940-3940 Å (LONG GRATING) (2 DIFFERENT GRATINGS)	*IMAGE OF ROW OF VERTICAL LINES REPRESENTING INTENSITY AT DIFFERENT WAVELENGTHS FROM 2 ARC SEC X 1 ARC MIN. AREA OF SOLAR DISC *8 HORIZ. DATA LINES PER FILM STRIP		4 FILM STRIP CAMERAS(4)	200 FILM STRIPS PER CAMERA (8 DATA LINES PER FILM STRIP)	CAMERAS & FILM VIA CSM(3)	
	POINTING REFERENCE SYSTEM (PRS)			WHITE LIGHT	3 X 3 ARC MIN. PORTION OF SOLAR IMAGE AS IT APPEARS ON SLIT PLATE	1 OF 2 TV MONITORS	VIDICON TV CAMERA		TV IMAGE VIA I & C TO MSFN	
					DIGITAL LOCATION OF SLIT WITH RESPECT TO SOLAR LIMB	"MONITOR COUNTER" DIGITAL DISPLAY			DIGITAL DATA VIA TM TO MSFN	
	XUV MONITOR			170-550 Å	*IMAGE OF ENTIRE SOLAR DISC *FOR TARGET SELECTION	1 OF 2 TV MONITORS	LOW LIGHT LEVEL TV CAMERA		TV IMAGE VIA I & C TO (BORESIGHT STATE ONLY)	
H∝ 1	HYDROGEN ALPHA 1	HARVARD COLLEGE OBSERVATORY CAMBRIDGE, MASS.	PERKIN-ELMER NORWALK, CONN.	6563 Å (H∝ LINE)	H∝ IMAGE OF ENTIRE SOLAR DISC		FILM CAMERA WITH 4 MAGAZINES(2)	16,000 DATA FRAMES PER MAGAZINE	MAGAZINES & FILM VIA CSM(3)	PRIMARY POINTING RECORD FOR ATM
					22 ARC MIN. DIA. IMAGE	1 OF 2 TV MONITORS	VIDICON TV CAMERA		TV IMAGE VIA I & C TO MSFN	
H∝ 2	HYDROGEN ALPHA 2	MARSHALL SPACE FLIGHT CENTER HUNTSVILLE, ALA.	PERKIN-ELMER NORWALK, CONN.	6563 Å (H∝ LINE)	H∝ IMAGE OF ENTIRE SOLAR DISC	1 OF 2 TV MONITORS	VIDICON TV CAMERA		TV IMAGE VIA I & C TO MSFN	USED FOR CREW SOLAR SURVEILLANCE, BACKUP FOR H∝1, SIGHTING REFERENCE FOR S055A, 82A & 82B

NOTES: (1) ATM CONTROL & DISPLAY CONSOLE NOMENCLATURE
(2) ONE FILM CAMERA OR MAGAZINE IS LAUNCHED IN EXPERIMENT & THREE ARE STORED IN MDA FOR LATER REPLACEMENT BY CREW DURING EVA.
(3) CREW MUST RECOVER LAST CAMERA OR MAGAZINE IN ATM BY EVA PRIOR TO UNDOCKING CSM FOR RETURN TO EARTH
(4) ONE FILM CAMERA IS LAUNCHED IN EXPERIMENT, 2 ARE STORED IN MDA & ONE BROUGHT UP IN SL-4 CM FOR REPLACEMENT BY CREW DURING EVA

2.1 STRUCTURE AND MECHANICAL SUBSYSTEM

2.1.1 Introduction

This section covers the ATM general arrangement (Figure 2.1-1); structure; equipment and experiment installation; astronaut mechanical EVA aids; solar array structure and deployment mechanism; Experiment Pointing Control-Roll Positioning Mechanism (EPC-RPM); film retrieval door mechanism and canister sun shield aperture door mechanisms. Experiment structure, aperture door, film camera or magazine, and launch lock mechanisms will be discussed in the individual experiment sections.

2.1.2 Subsystem Interfaces

The ATM Structure and Mechanical subsystem has a mechanical interface with all ATM subsystem equipment, experiments and the ATM Deployment Assembly, (refer to Skylab Operations Handbook MDA/AM/OWS, for ATM-DA interface details). During launch the ATM structure also has a mechanical interface with the Payload Shroud, (see ICD drawing 13M20726).

The solar array deployment mechanism, EPC-RPM, and canister heat shield aperture door mechanisms all have interfaces with the EPS, ED, I&C and APCS, which will be described in detail in paragraph 2.1.4.

2.1.3 Functional Description

The ATM Structure and Mechanical Subsystem provides the mounting for all ATM equipment and experiments. It provides the means of attaching the ATM to the ATM-DA which deploys the ATM in orbit. It also provides the mechanisms to deploy the ATM solar array, unlock and fine point the canister, operate the canister sun shield aperture doors, and unlock the film retrieval doors. Finally it provides mechanical aids for astronaut EVA.

2.1.4 Major Component/Functional Description

2.1.4.1 Rack

2.1.4.1.1 Structure - The ATM rack structure is composed of an octagonally-shaped frame to which are attached a thermal shield assembly, a solar shield assembly and four outrigger assemblies, (Figure 2.1-2). The frame is made up of two large octagonally-shaped aluminum rings open in the center and separated by eight aluminum vertical beams attached to the corners of the rings. Panels for equipment are mounted in seven of the bays between these beams. One bay is open for access to the canister film retrieval doors from the center workstation. Three bays are braced by a tubular diagonal strut. Four bays are braced by sheer panels attached to the vertical beams. One bay is left open for the center workstation. A smaller third ring, also octagonal and open in the center, is attached

to the sun end of the frame by open truss work. This ring provides the mounting for the solar shield assembly. A small trapazoid-shaped structure extends down from one side of the small ring to provide a mount for the acquisition sun sensors.

The thermal shield assembly is an octagonal structure 20 inches deep and 11 feet 2 inches across the flats. It is made up of eight triangular truss structures attached to a ring in the center and connected by channels at the flats. This structure is covered by thermal panels on its sides and top. The thermal shield assembly is attached to the MDA end of the rack structure.

The solar shield assembly is a cone shaped ring 14 feet 4 inches in outside diameter, 8 feet 2 inches in inside diameter, 15 inches deep, covered with thermal panels, and mounted on a 25-inch high open truss structure. It is attached to the small octagonal ring at the sun end of the rack structure to protect the ATM rack equipment from direct solar radiation.

The four outriggers are open truss tubular assemblies that provide support points for the ATM in the Payload Shroud during launch. Each outrigger is composed of four aluminum tube assemblies attached at one end to the corners of the two large octagonal rings and at the other end to the Payload Shroud support fitting.

2.1.4.1.2 Equipment Arrangement - Figure 2.1-3 shows the layout of the major components installed on the ATM rack.

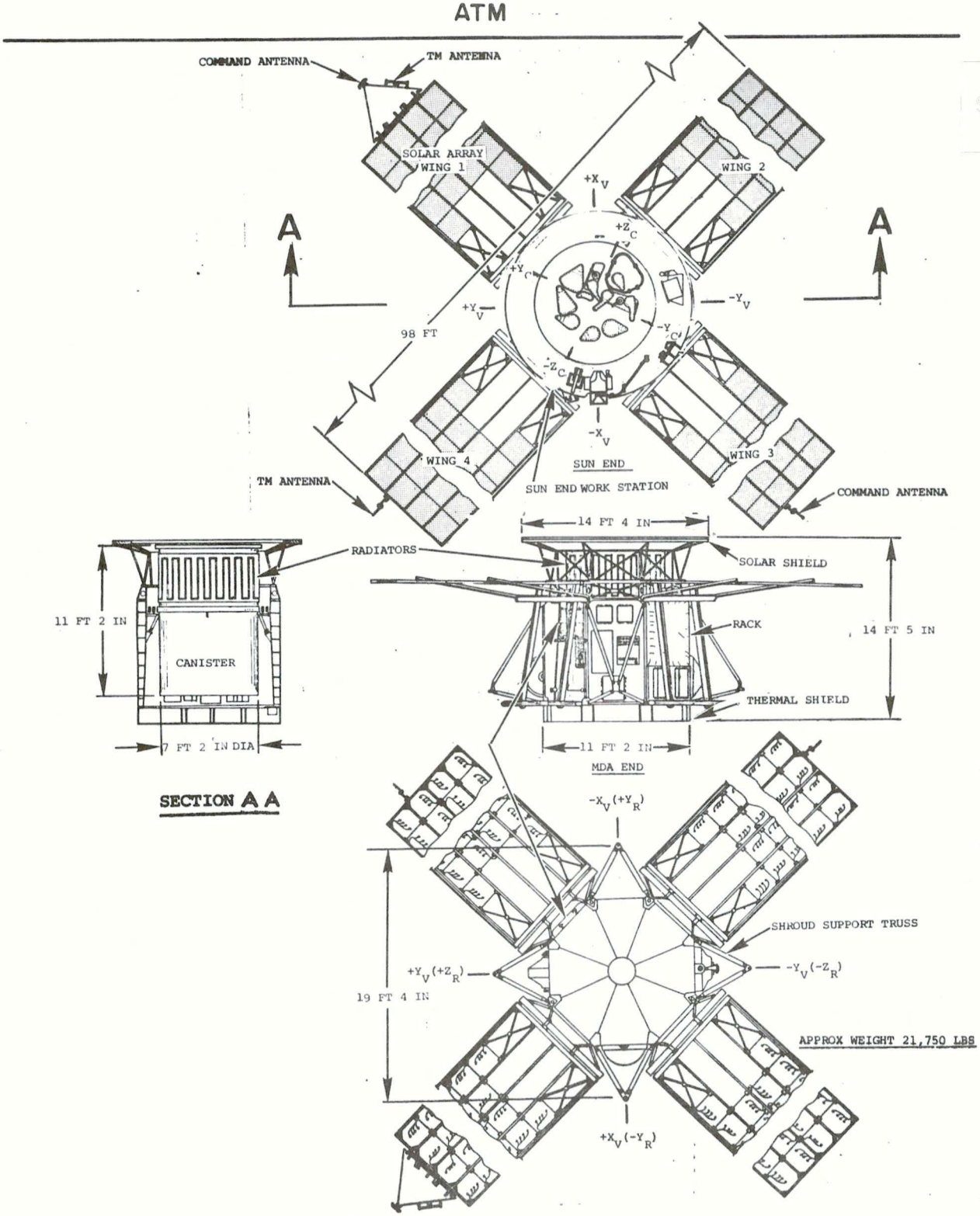

Figure 2.1-1 ATM General Arrangement

SMS

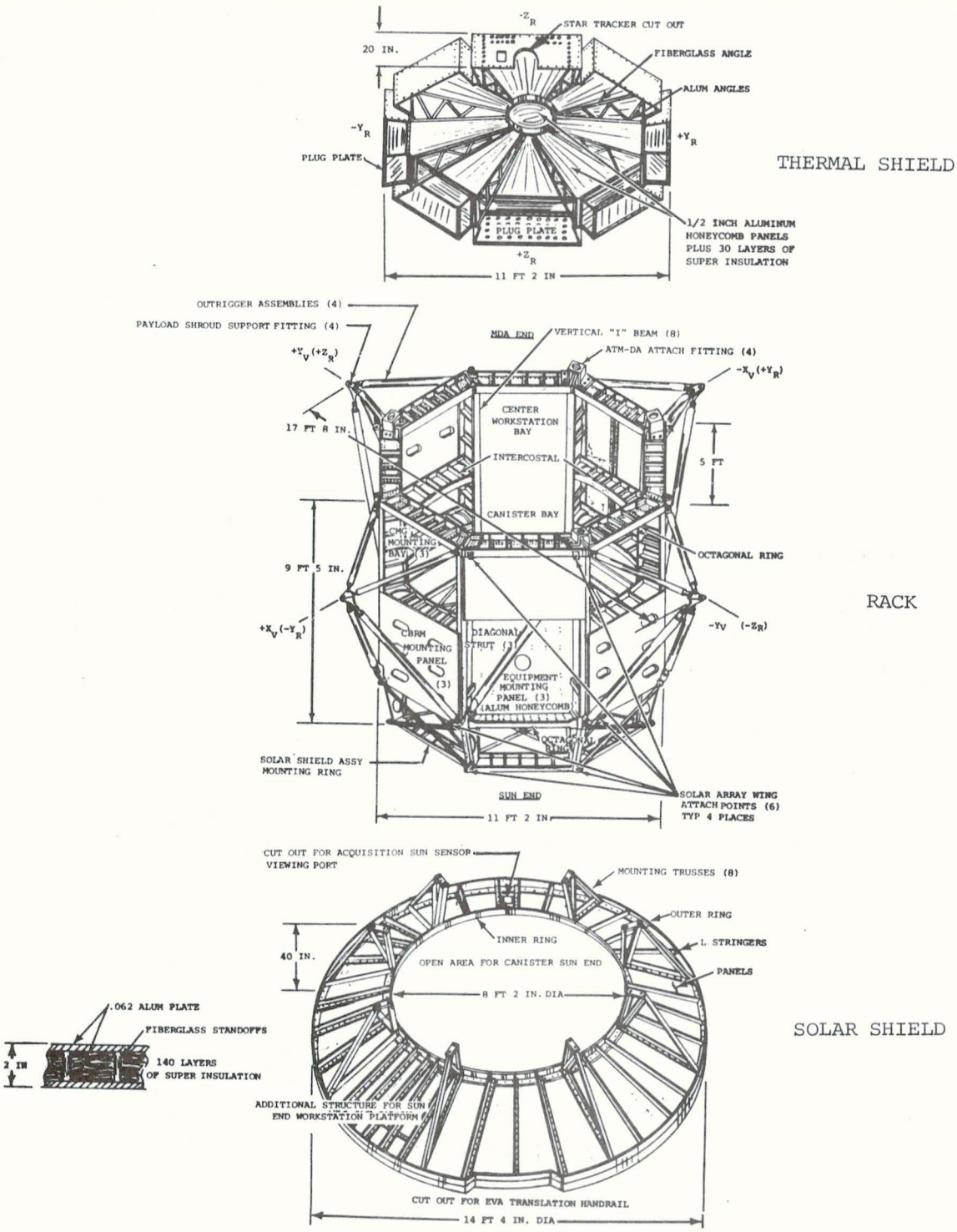

Figure 2.1-2 Rack Structure

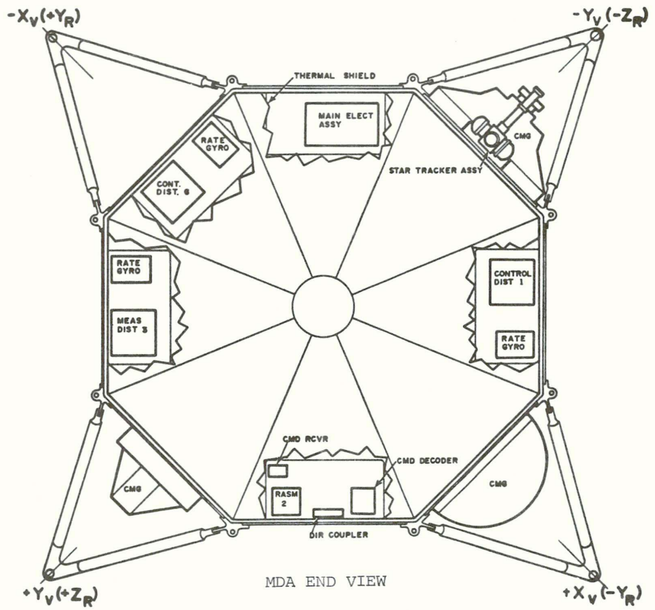

MDA END VIEW

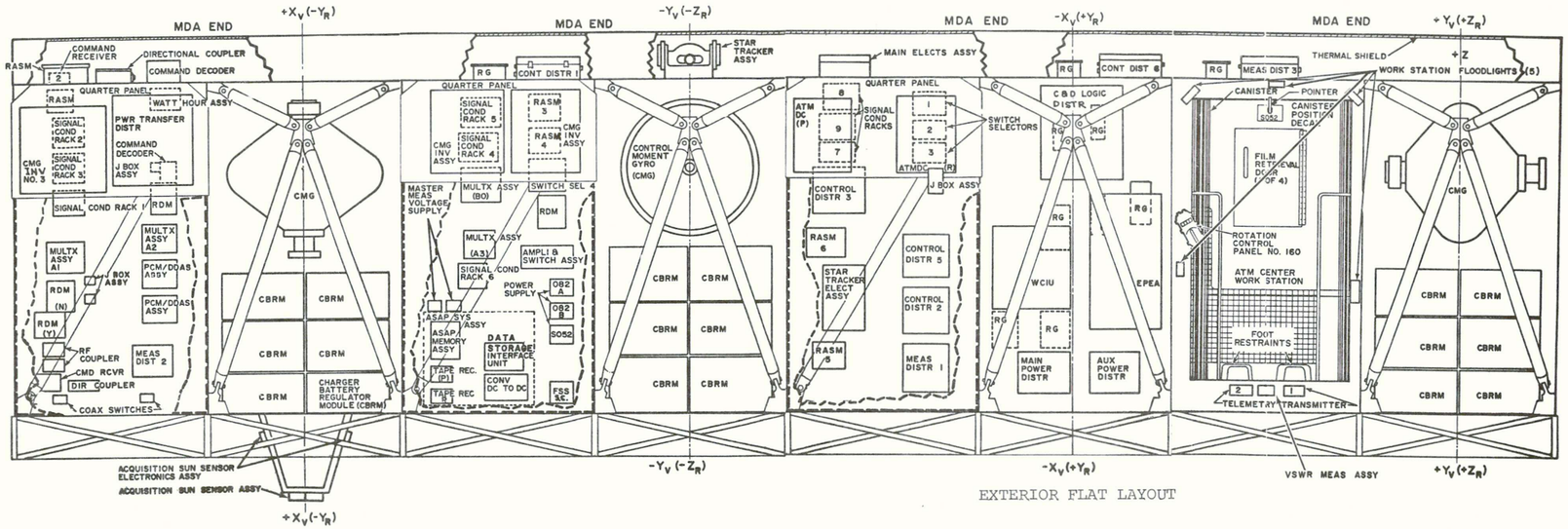

EXTERIOR FLAT LAYOUT

CONT DISTR=CONTROL DISTRIBUTOR
ATMDC=ATM DIGITAL COMPUTER
RG=RATE GYRO
ELECT=ELECTRONICS
RASM=REMOTE ANALOG SUBMULTIPLEXER
MEAS DISTR= MEASURING DISTRIBUTOR
WCIU=WORKSHOP COMPUTER INTERFACE UNIT
EPEA=EXPERIMENT POINTING ELECTRONICS ASSEMBLY
C&D LOGIC DISTR=CONTROL & DISPLAY LOGIC DISTRIBUTOR
CBRM= CHARGER/BATTERY/REGULATOR MODULE

PCM/DDAS=PULSE CODE MODULATION/DIGITAL DATA ACQUISITION SYSTEM
CMG=CONTROL MOMENT GYRO
CMG INV ASSY=CMG INVERTER ASSEMBLY
RDM=REMOTE DIGITAL MULTIPLEXER
MULTX ASSY=MULTIPLEXER ASSEMBLY
RCVR=RECEIVER
DIR=DIRECTIONAL
SEL=SELECTOR
ASAP=AUXILIARY STORAGE & PLAYBACK ASSEMBLY
FSS SC=FINE SUN SENSOR SIGNAL CONDITIONER

X_V, Y_V, Z_V=CLUSTER DYNAMIC BODY AXIS

X_R, Y_R, Z_R=ATM RACK AXIS

Figure 2.1-3 Rack Equipment Arrangement

2.1.4.2 Solar Array - The ATM Solar Array is an arrangement of four wings in a cruciform pattern at 45° to the X axis of the SWS (Figure 2.1-4). Each wing is composed of five solar cell panels, support structure, decinching mechanism, deployment mechanism and electrical cabling (Figure 2.1-5). Three wings also mount telemetry and/or command antennas at their tips. The wings are attached to the wing support structure near the sun end, are folded against it for launch and retained by decinching mechanisms. The support structure is attached to the ATM rack between the outriggers. The decinching mechanisms are operated by redundant explosive devices. The deployment mechanisms are operated by an electric actuator. The wings are locked in the deployed position by mechanical latches. The array cannot be maneuvered independent of the SWS to track the sun.

Decinching and deployment are normally commanded automatically by the IU approximately 25 minutes after launch, but may also be commanded by the AM DCS. All four wings are decinched simultaneously and opposite wings are deployed together to reduce reaction forces. Deployment or retraction can be commanded by switches on the ATM C&D Console provided the wings have been decinched and are not locked in the deployed position. Retraction is intended to be used only in an attempt to free the wings if they bind up before deployment is complete. Two analog measurements indicate decinching mechanism EBW firing unit charge and eight discrete measurements indicate wing deployment status to MSFN via the AM TM system.

2.1.4.2.1 Solar Cell Panels - The solar cell panels are made up of a framework of rectangular aluminum tubing mounting solar cell modules, (Figure 2.1-6). The four outboard panels of each wing mount 20 modules. The inboard panel mounts 10 modules on the outboard portion of the panel. The inboard portion of the panel is open for thermal control reasons. The modules are secured by four screws to clips attached to the framework. They are recessed below the framework to protect the solar cells from damage by adjacent panels when the wings are folded. Five pivot points, with spherical bearings, connect the panels together and attach the inboard panel to the lower channel beam of the support structure. Two pivot points, with cylindrical bearings, connect the panels to the deployment mechanism scissors arms.

2.1.4.2.2 Solar Cell Modules - Each module consists of an aluminum honeycomb sandwich covered by a fiberglass insulation and mounting silicone solar cells with quartz cover slides, (Figure 2.1-6). Each module mounts 684 2X2 centimeter or 228 2X6 centimeter cells. The cover slides protect the solar cells from micrometeroid and radiation damage. Solar cell electrical characteristics are described in section 2.2.4-4.

2.1.4.2.3 Support Structure - The support structure (Figure 2.1-6) provides attachment points for the inboard solar cell panel, the decinching mechanisms and the deployment mechanism. It consists of two vertical box beams, upper box beam, lower channel beam, braces and

attachment fittings. The outboard face of the vertical box beams has a track for the deployment mechanism slider. The support structure is attached to the ATM rack at six points. This design permits the entire folded wing, including deployment and decinching mechanisms, to be removed as a unit or raised for access to equipment behind it before launch.

2.1.4.2.4 Decinching Mechanism - The decinching mechanism retains the folded solar wings against the support structure for launch and releases them for deployment in orbit. It consists of a pyrotechnic thruster assembly, actuator adapter, torque tube and arm assemblies (Figure 2.1-7). One decinching mechanism is mounted on the upper beam and one on the lower beam of the support structure. The decinching mechanism on the upper beam has four arm assemblies and the one on the lower beam has seven arm assemblies. The arm assemblies are attached at one end to the outer wing panel or antenna panel. Balls on the other end are inserted in keyhole slots in the torque tube. The torque tube is rotated to retain the arm assemblies and the tube is pinned with shear pins. A turnbuckle in the middle of the arm tightens the cinch.

The IU and AM DCS "ARM" commands energize separate relays which apply power to charge a storage capacitor in the EBW firing unit, (Figure 2.1-8). The "FIRE" commands energize separate relays to trigger the electronic switch and discharge the capacitor into the detonator. The detonator initiates the confined detonating fuse (CDF) which sets off a pressure cartridge on each thruster assembly. The pressure cartridge rapidly generates gas pressure on the thruster assembly piston shearing the pin and rotating the torque tube. The ball end of the arm assembly is pulled out of the keyhole slot in the torque tube releasing the wing. Torsion springs in the arm assemblies fold them against the outer wing panel. The pyrotechnic system and components are described in detail in section 2.7.

2.1.4.2.5 Wing Deployment Mechanism - The wing deployment mechanism consists of an electric actuator, redundant drive cables, "lazy tongs" scissors, sliders, crossbeam, idler sheaves, redundant mechanical latches, and limit switches, (Figure 2.1-9). Redundant torque motors in the electric actuator drive a dual sheave through nutating gears and a slip clutch, (see paragraph 2.1.4.2.6). The drive cables are stranded steel cables with balls swaged to part of their length. Each cable is a continuous loop. They are attached at one end to the bottom of a slider, pass around the dual drive sheave on the actuator and are attached at the other end to the top of the same slider. The idler sheaves change the direction of the cable. The sliders ride on tracks on the support structure vertical beams. The cross beam is attached to the sliders. The scissors attach to the cross beam and to the center of each wing panel. A spring loaded mechanical latch and two limit switches are located on the lower part of each support structure vertical beam. The latches are operated by the sliders. The upper limit switches are operated by the latches and the lower limit switches by a trigger tab on the sliders.

The IU or AM DCS "DEPLOY" commands energize redundant latching relays in the ATM power transfer distributor, (Figure 2.1-10). The latching relays energize redundant power relays via the lower limit switches. The ATM C&D Console switches energize the power relays directly via the lower limit switches. Power is supplied to one motor in each actuator of two opposite wings. At the same time, the "Solar Wing Deployed B" discrete signal is sent to the AM TM system. The torque motors rotate the drive sheave. Pockets in the drive sheave pick up the balls on the cable converting rotary motion to linear motion without slippage. The drive cables pull the sliders and cross beam down along the tracks forcing the scissors and wing panels apart. Springs in the scissors pivot points overcome the initial dead zone of the folded scissors. One motor and cable are capable of completely deploying the wing.

When the sliders have traveled approximately 85 inches they depress the latches. The latches operate the upper limit switches. The upper limit switches provide a redundant path to keep the power relays energized until the wings latch in the deployed position. When the sliders have traveled approximately 88 inches the trigger tabs on the sliders operate the lower limit switches. The latches are released, locking the wing in the fully deployed position and releasing the upper limit switches. The motors are turned off and the "Solar Wing Deployed A" discrete signal is sent to the AM TM system. Both "Solar Wing Deployed A&B" discrete signals are removed when the latching relays are reset by IU or AM DCS command or when the ATM C&D Console switches are returned to the center position.

When the ATM C&D Console switches are placed in the retract position power is applied directly to another set of power relays. These relays supply power, in the reverse direction, to the actuator motors. The motors rotate the drive sheave in the opposite direction causing the drive cables to pull the slider up along the track. There are no limit switches in the retract circuit to turn off the motors and no TM signals are provided. The wing can be retracted only if it has not been fully deployed and locked.

2.1.4.2.6 Electric Actuator - The electric actuator consists of two hermetically sealed torque motors, nutating drive gears, metal bellows and a dual output sheave with a slip clutch (Figure 2.1-11). The torque motors are 28 VDC, permanent magnet motors mounted in tandem on a hollow shaft. An intermediate bearing support is linked to the motor shaft with a pin. The intermediate bearing support has an offset bore into which the shaft of the input gear extends. The input gear is prevented from rotating by a metal bellows attached to its outer diameter and the actuator case. The bellows also permits the motors to be hermetically sealed. The output gear is linked to the dual drive sheave through a slip clutch.

This nutating gear design produces a compact, high torque device that can be hermetically sealed with ease. The slip clutch protects the actuator from damage caused from the excessive loads generated by the panel pivot springs when the wings are decinched.

2.1.4.2.7 Wing 1, 3 & 4 Telemetry and Command Antenna Deployment Mechanism - The antenna panel on wing 1 is deployed automatically as the wing deploys. As the wing unfolds it increases tension on a cable attached to a spring loaded pin retaining the antenna panel. The pin is withdrawn from the antenna panel retaining bracket and springs in the hinge between the antenna panel and wing unfold the panel, (Figure 2.1-12).

The antenna on wings 3 & 4 are also released automatically as the wing deploys. As the wings unfold tension is increased on a cable attached to a spring loaded pin retaining a cinching strap. The pin is withdrawn from a loop on the cinching strap allowing the spring in the base of the antenna mast to erect the antenna and latch it in the deployed position, (Figure 2.1-13). The wing 1 panel does not have a mechanical latch, but is held in the deployed position by spring force.

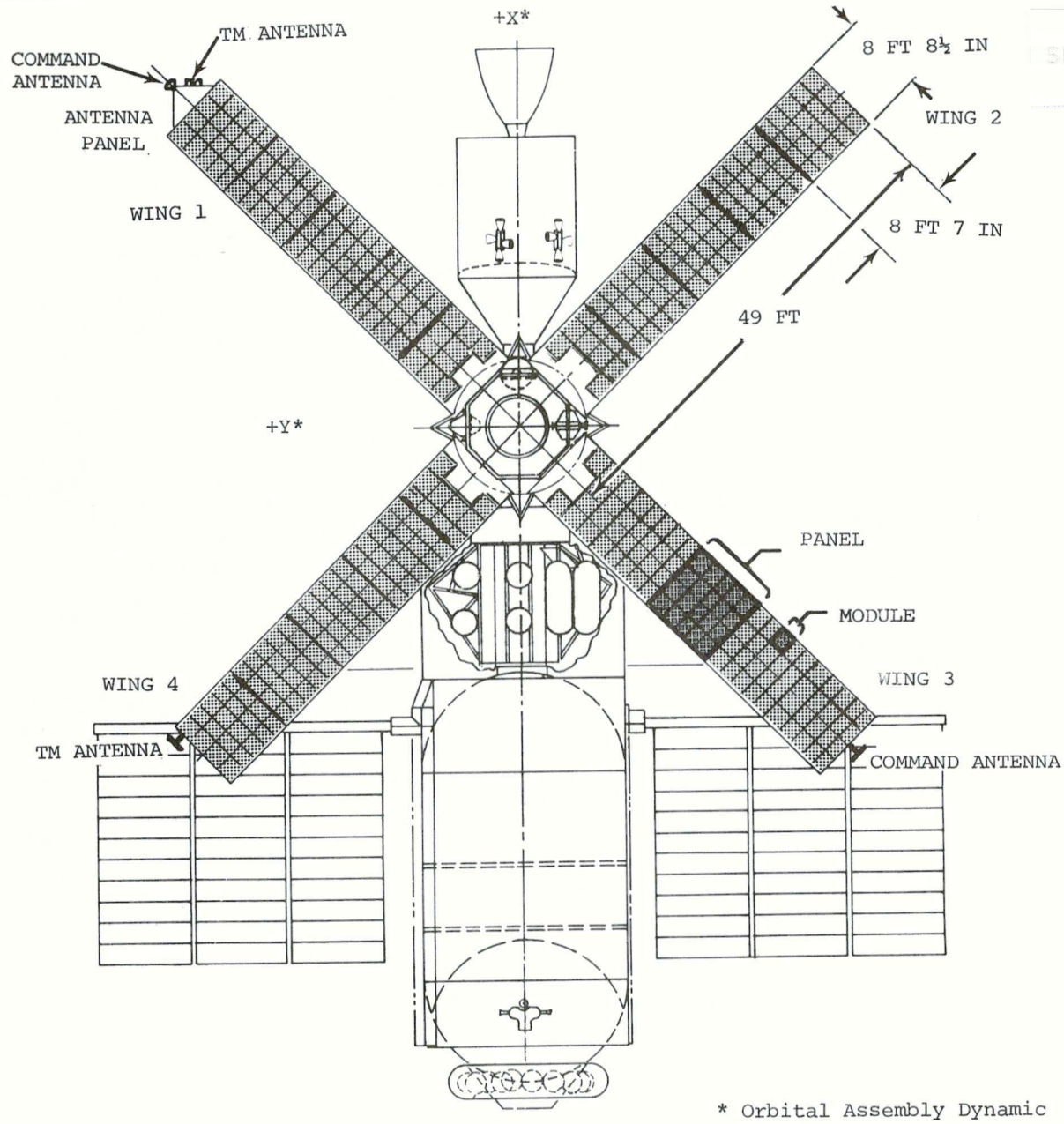

Figure 2.1-4 Solar Array Configuration

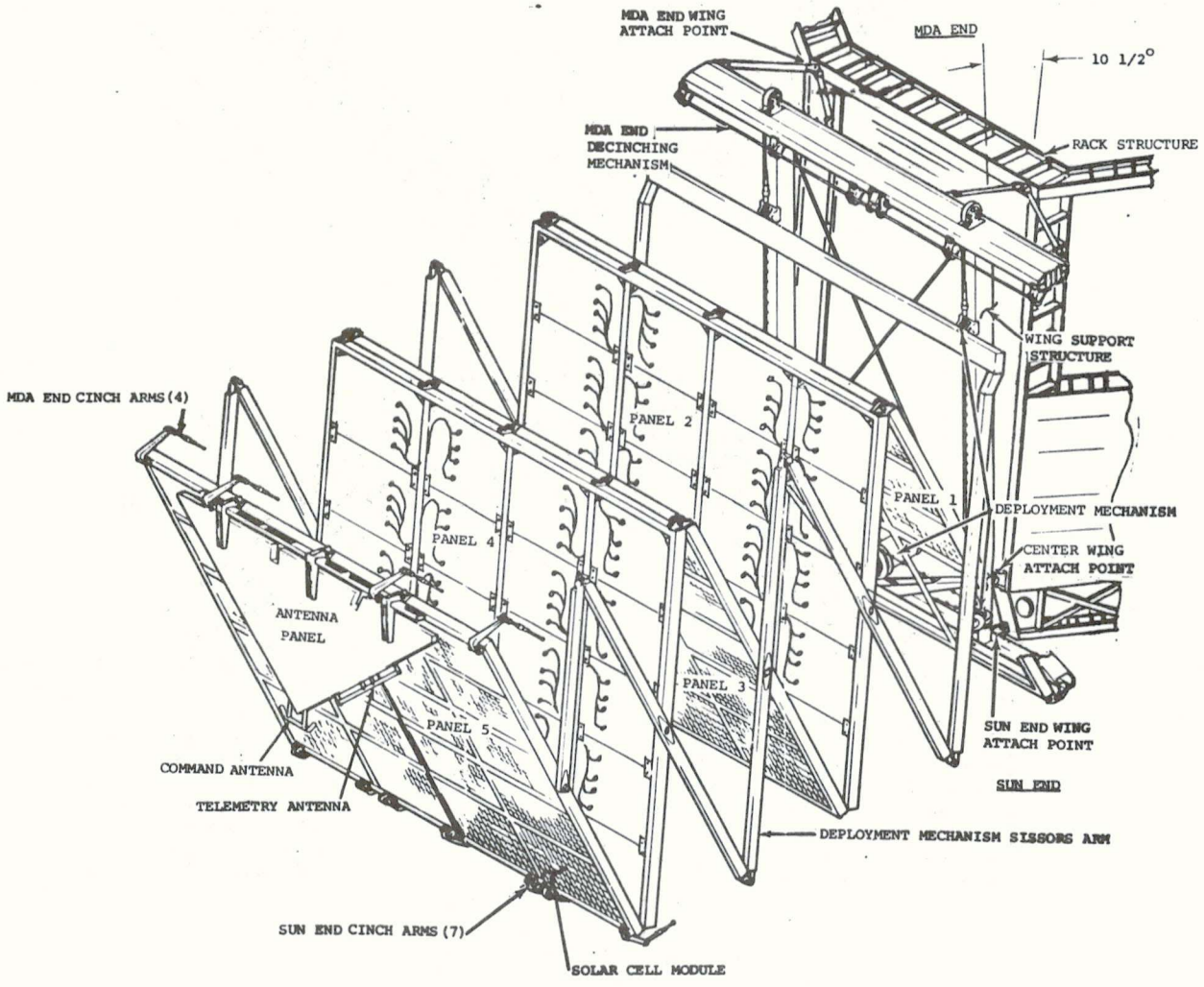

Figure 2.1-5 Wing Arrangement

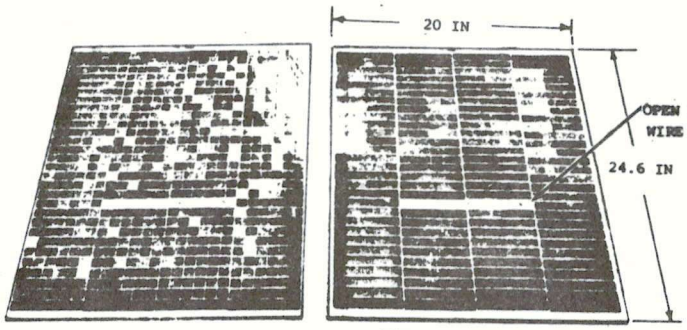

SOLAR CELL MODULE ARRANGEMENT

SOLAR CELL MODULE CROSS SECTION

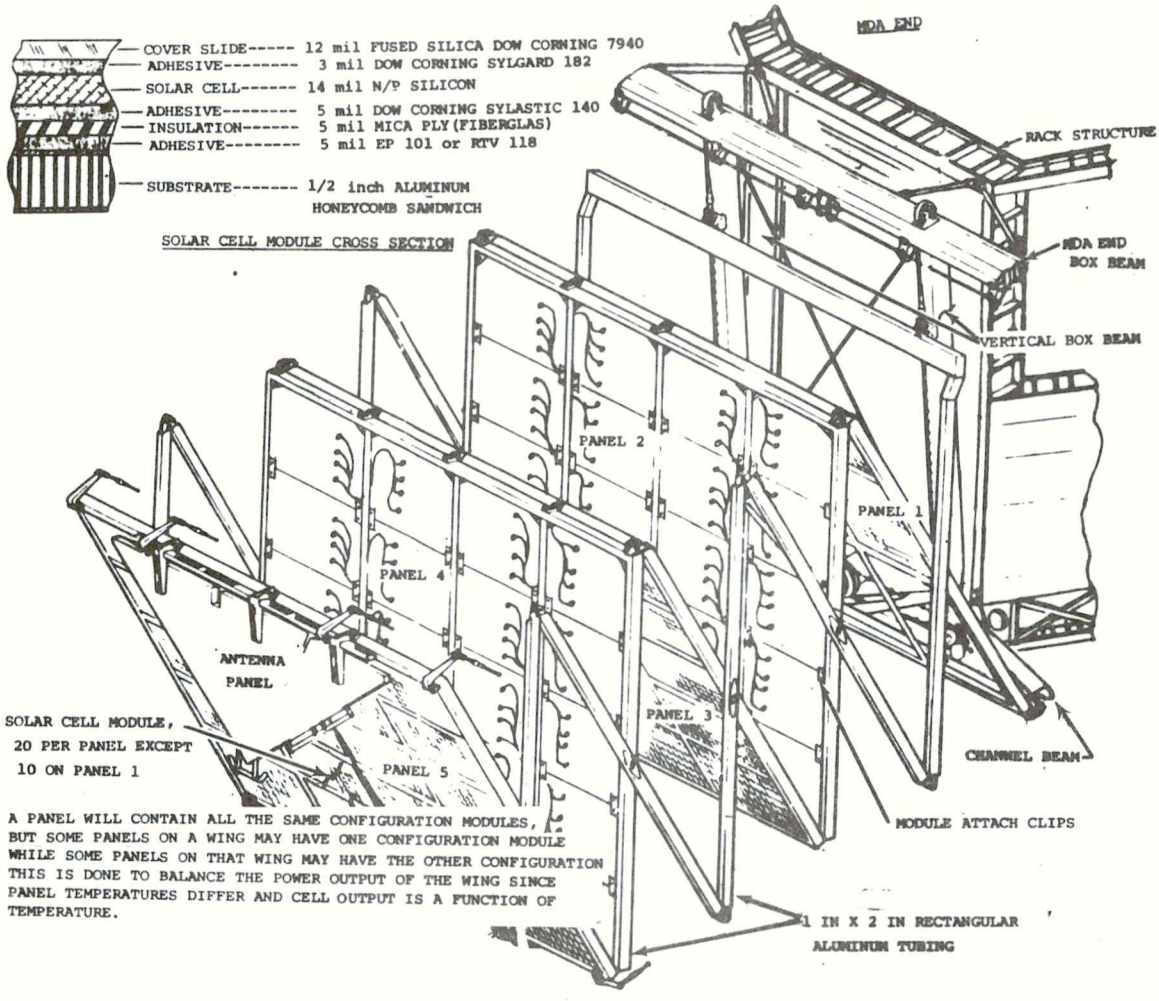

A PANEL WILL CONTAIN ALL THE SAME CONFIGURATION MODULES, BUT SOME PANELS ON A WING MAY HAVE ONE CONFIGURATION MODULE WHILE SOME PANELS ON THAT WING MAY HAVE THE OTHER CONFIGURATION THIS IS DONE TO BALANCE THE POWER OUTPUT OF THE WING SINCE PANEL TEMPERATURES DIFFER AND CELL OUTPUT IS A FUNCTION OF TEMPERATURE.

Figure 2.1-6 Wing Structure

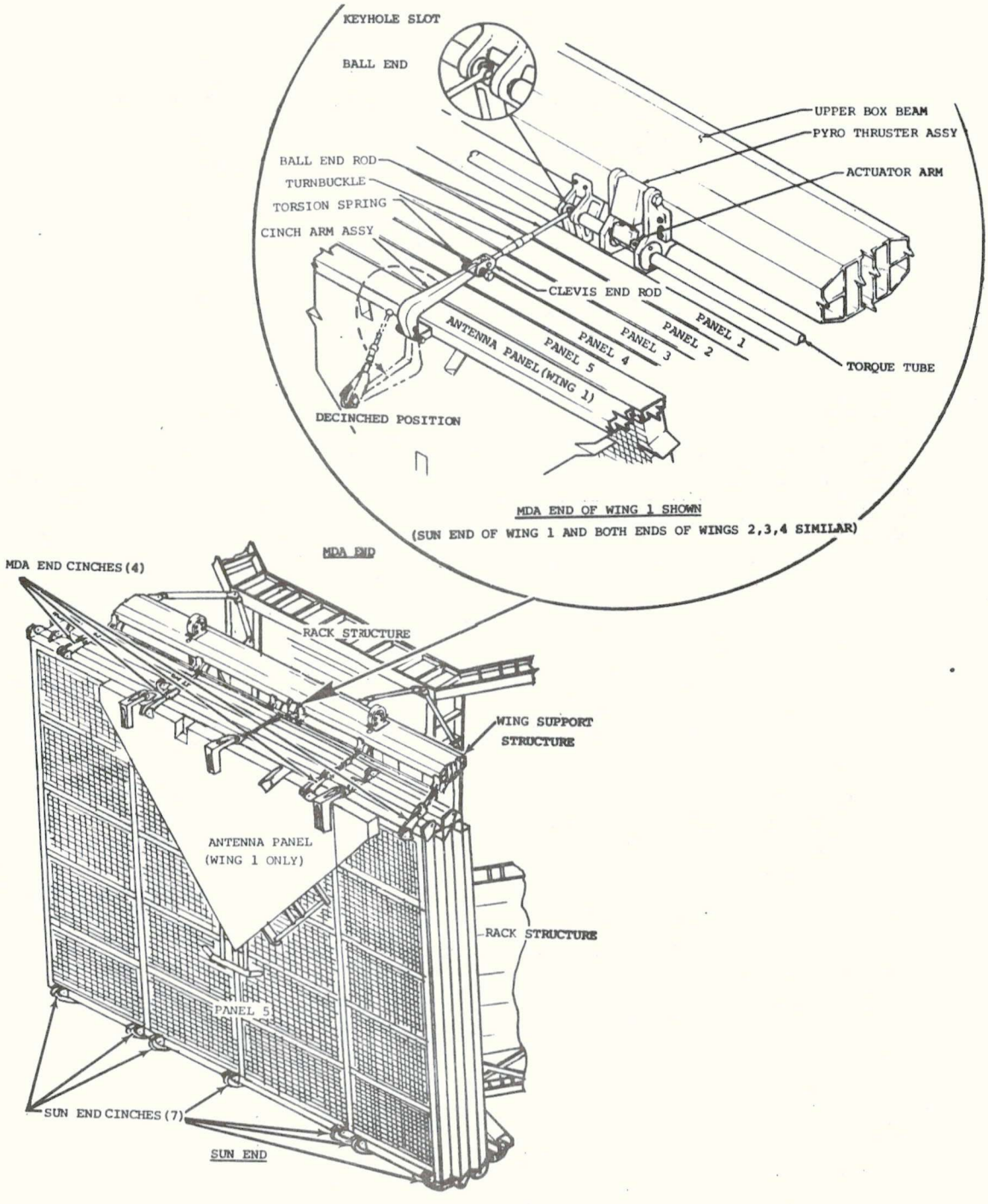

Figure 2.1-7 Decinching Mechanism

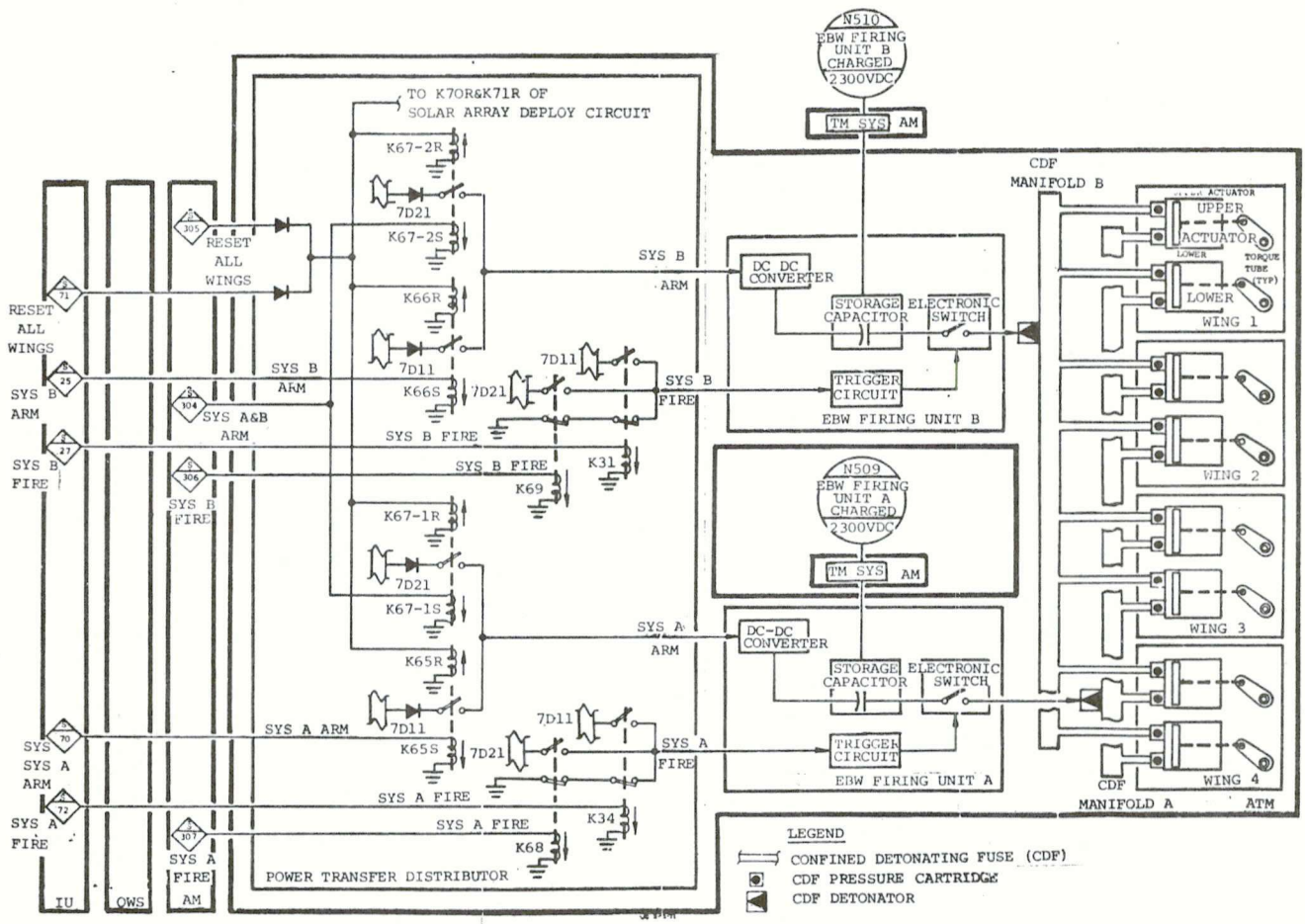

Figure 2.1-8 Decinching Mechanism Control Circuit

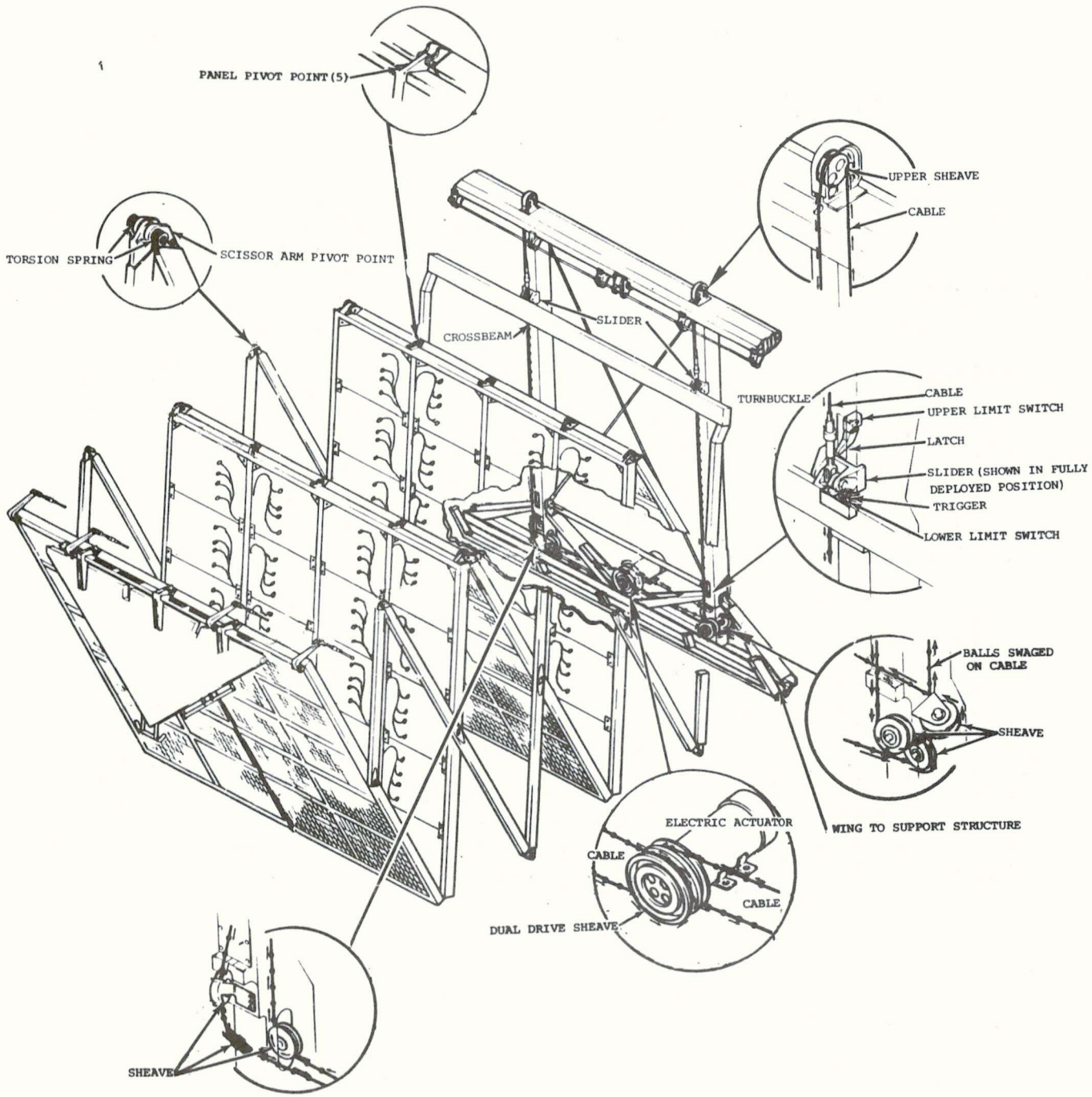

Figure 2.1-9 Deployment Mechanism

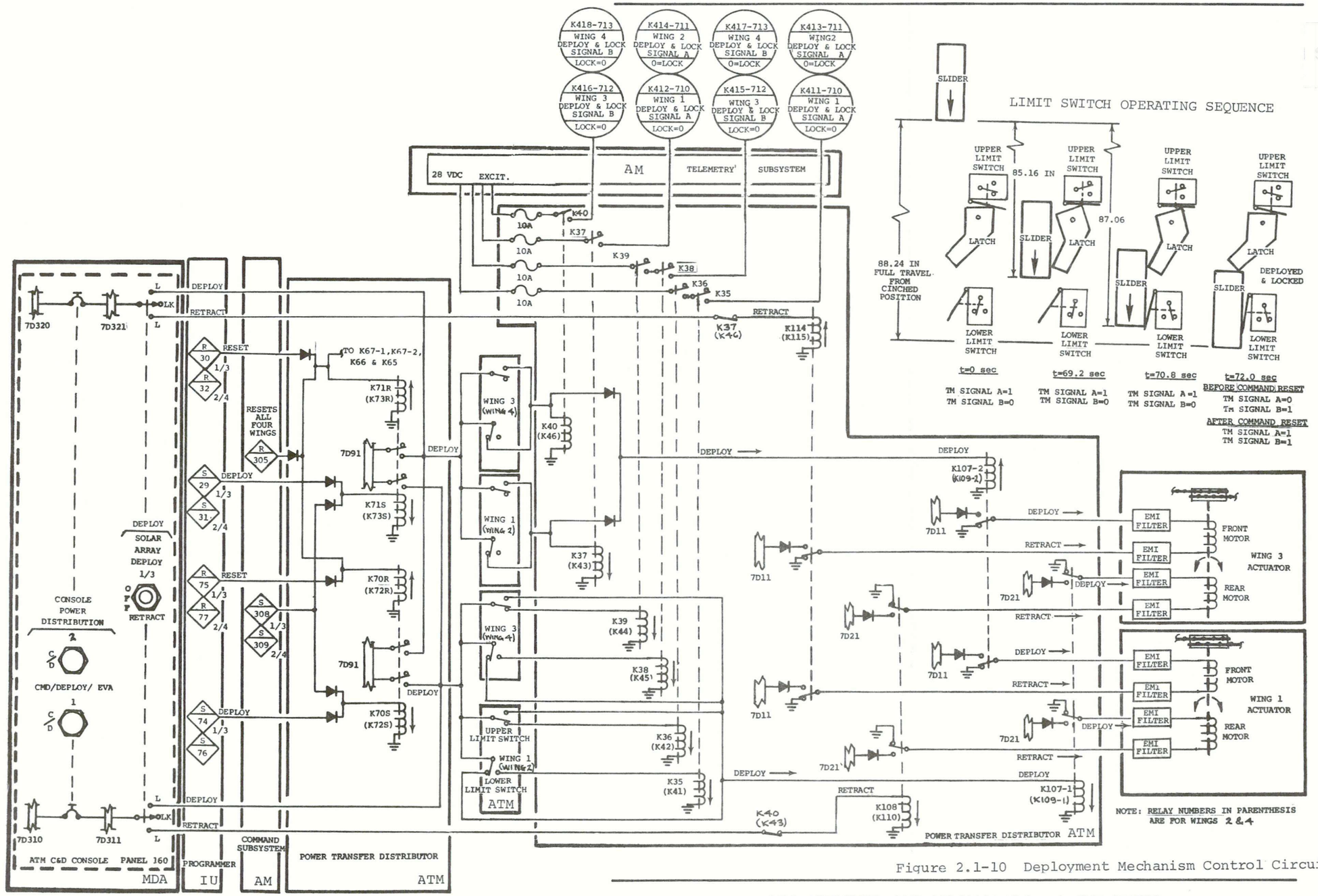

Figure 2.1-10 Deployment Mechanism Control Circuit

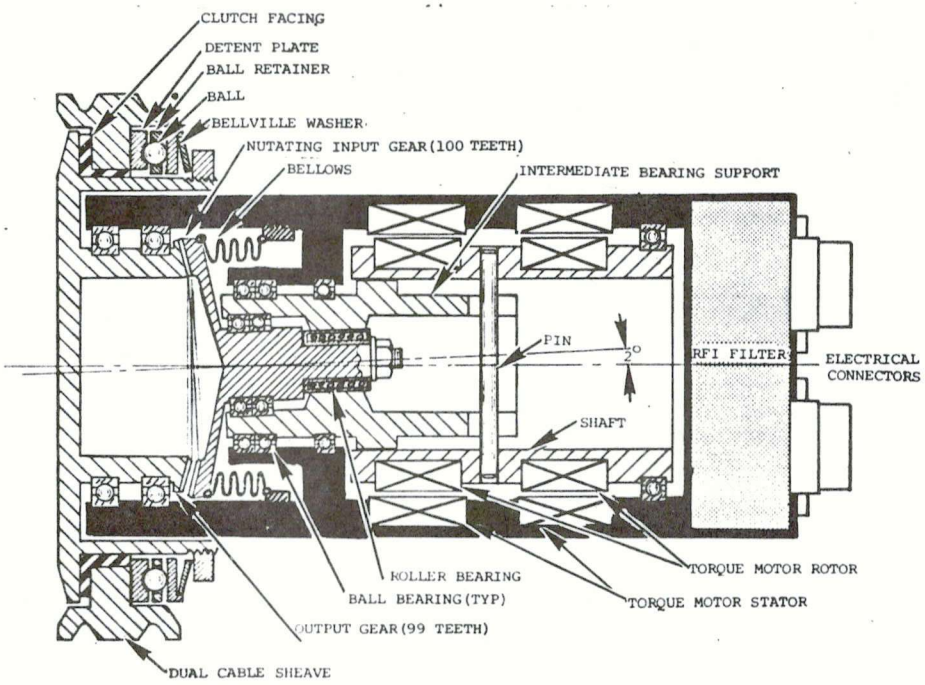

CROSS SECTION

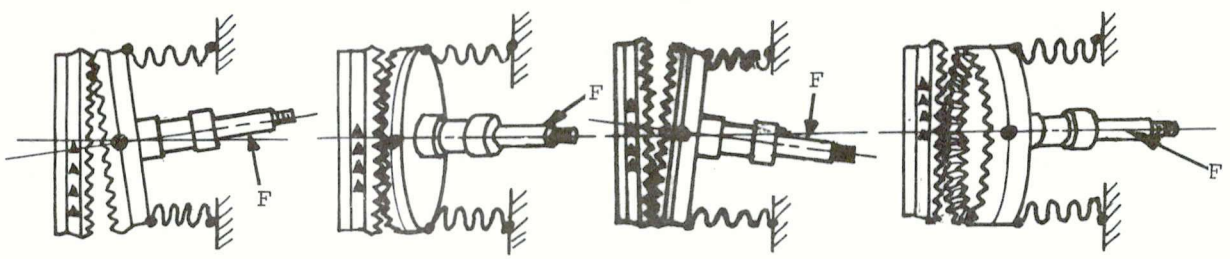

NUTATING GEAR MOTION DIAGRAM

Figure 2.1-11 Deployment Electric Actuator

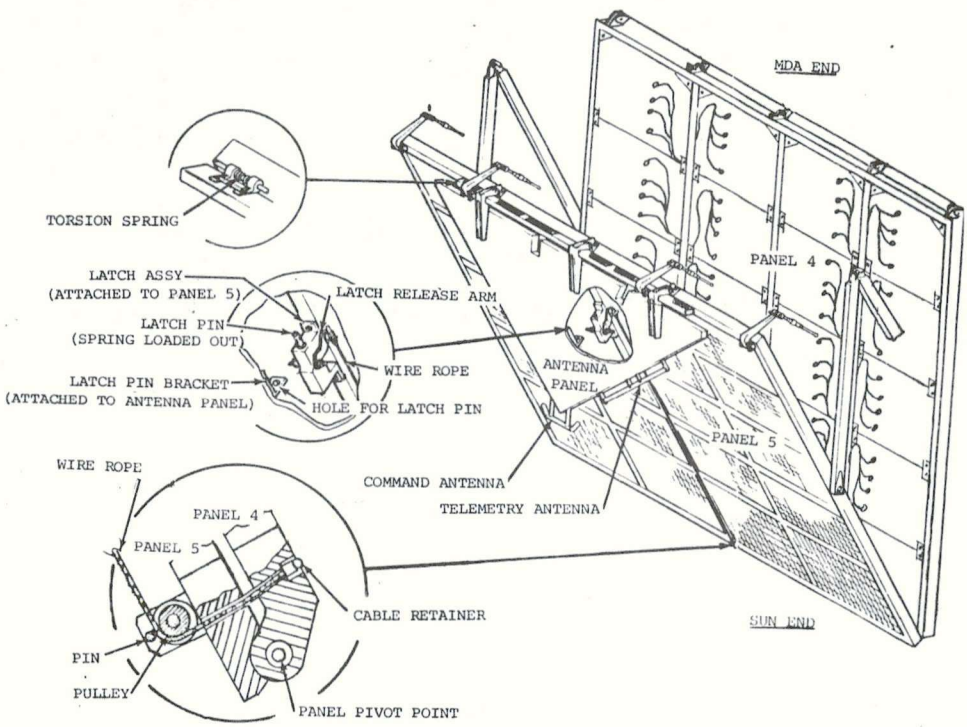

Figure 2.1-12 Wing 1 Antenna Panel Deployment Mechanism

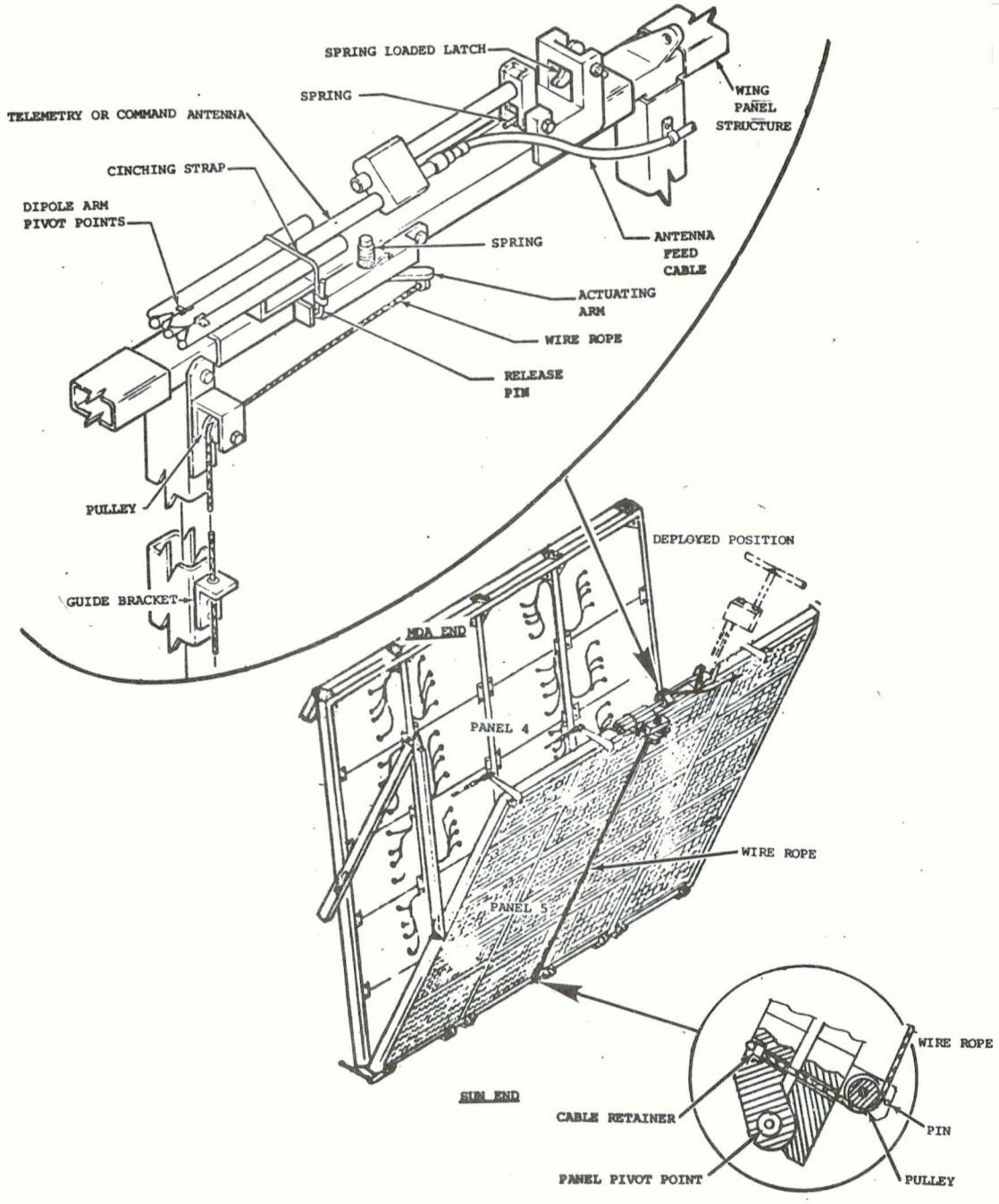

Figure 2.1-13 Wing 3 & 4 Antenna Deployment Mechanism

2.1.4.3 Canister

2.1.4.3.1 Structure - The canister structure is composed of a spar, upper canister half and lower canister half.

The spar is a cruciform structure made up of three one-inch thick aluminum plates, (Figure 2.1-14). Two-inch diameter ligntning holes are drilled throughout the plates for approximately 40 percent weight reduction. Stiffener rings are attached to the top and bottom of the spar. A girth ring is attached to the center of the spar. The girth ring is the attach point for the MDA end canister half, sun end canister half and the gimbal ring actuators. The spar is wrapped with insulation and the experiments are mounted on non-thermal conducting mounts. The spar is also isolated from the canister by non-thermal conducting mounts. (See section 2.3 for Thermal Control System details).

The MDA end canister half consists of an aluminum ring of L-shaped cross section and a machined aluminum bulkhead supported by stringers of T-shaped cross section (Figure 2.1-14). Short spacers separate the stringers. Eight cold plates for the active thermal control system are attached to this framework. The active thermal control system components are mounted on standoffs on some of these cold plates and others have openings for experiment film camera retrieval doors. Some subsystem equipment is mounted on the outside of the machined aluminum bulkhead. The MDA end canister half is slipped over the spar, after the experiments are mounted on it, and attached to the girth ring. The outside is covered with insulation.

The sun end canister half is constructed in the same manner as the MDA end canister half. There are no openings in the cold plates of this half. The cold plates are covered with insulation. Four radiators are mounted on "I" beams outside the cold plates. A machined aluminum bulkhead covers the sun end of this canister half. The bulkhead openings for experiment aperture and fine sun sensor doors. It also has mounting provisions for the door operating mechanisms. This half of the canister is also slipped over the spar and attached to the girth ring.

2.1.4.3.2 Equipment and Experiments Arrangement - Figure 2.1-15 shows the layout of equipment installed on the outside of the ATM canister and the film retrieval doors for all ATM experiments.

Figure 2.1-16 shows the arrangement of the ATM experiments on the spar within the ATM canister.

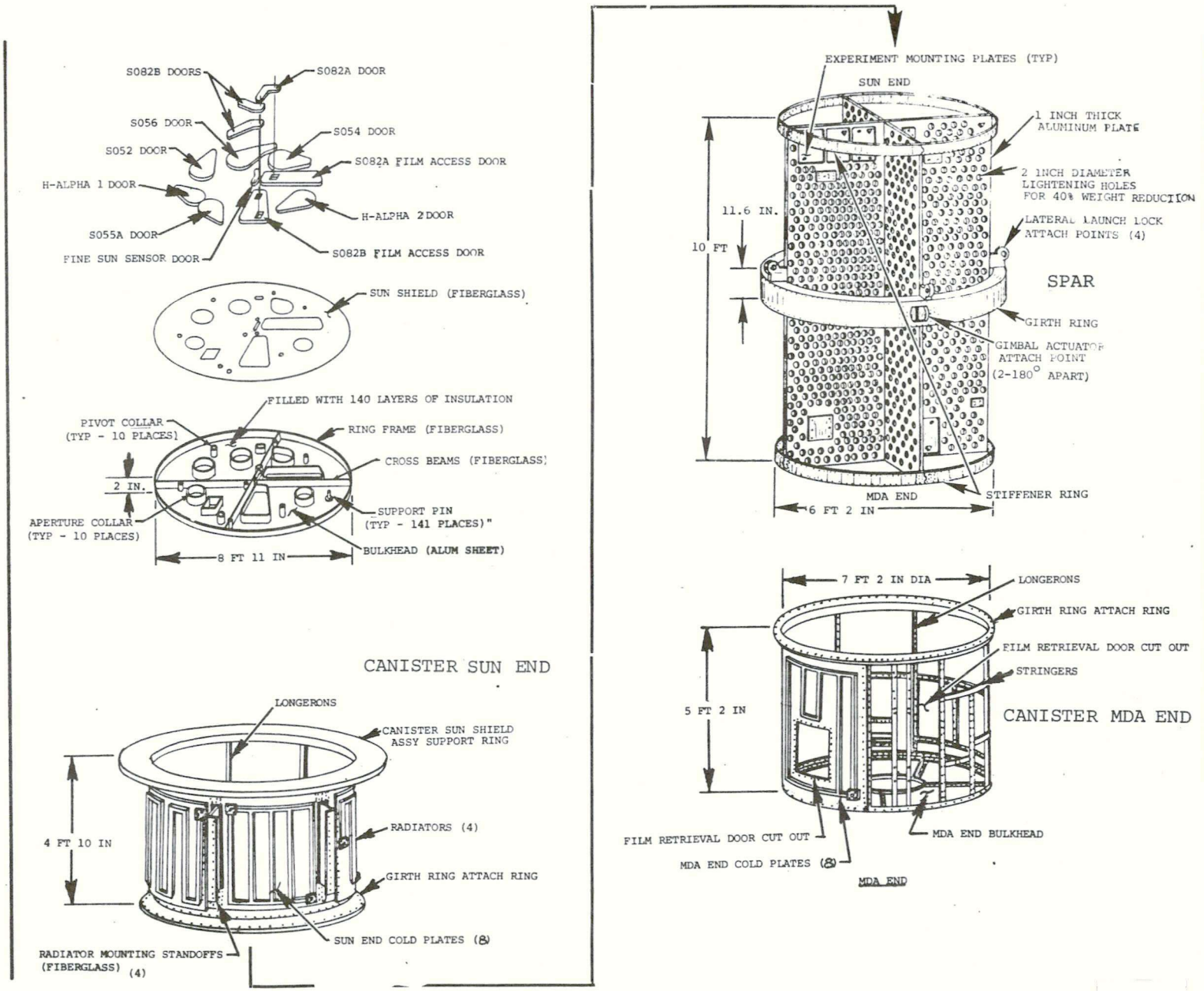

Figure 2.1-14 Canister and Spar Structure

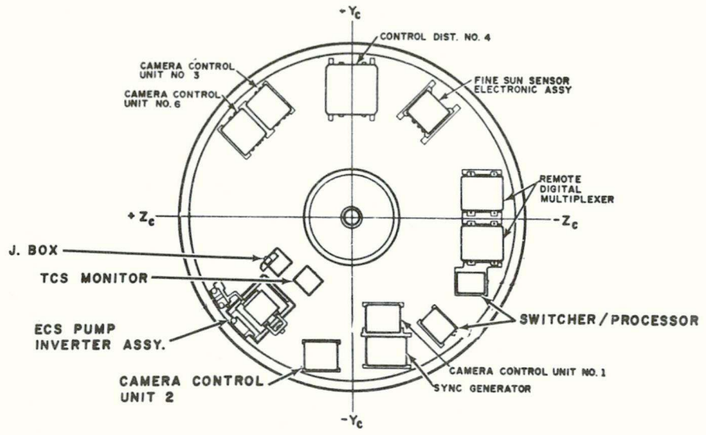

MDA END

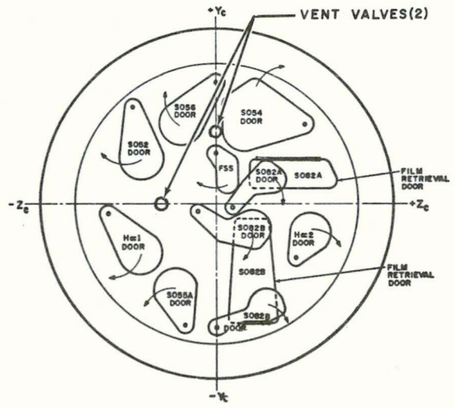

SUN END

MDA END

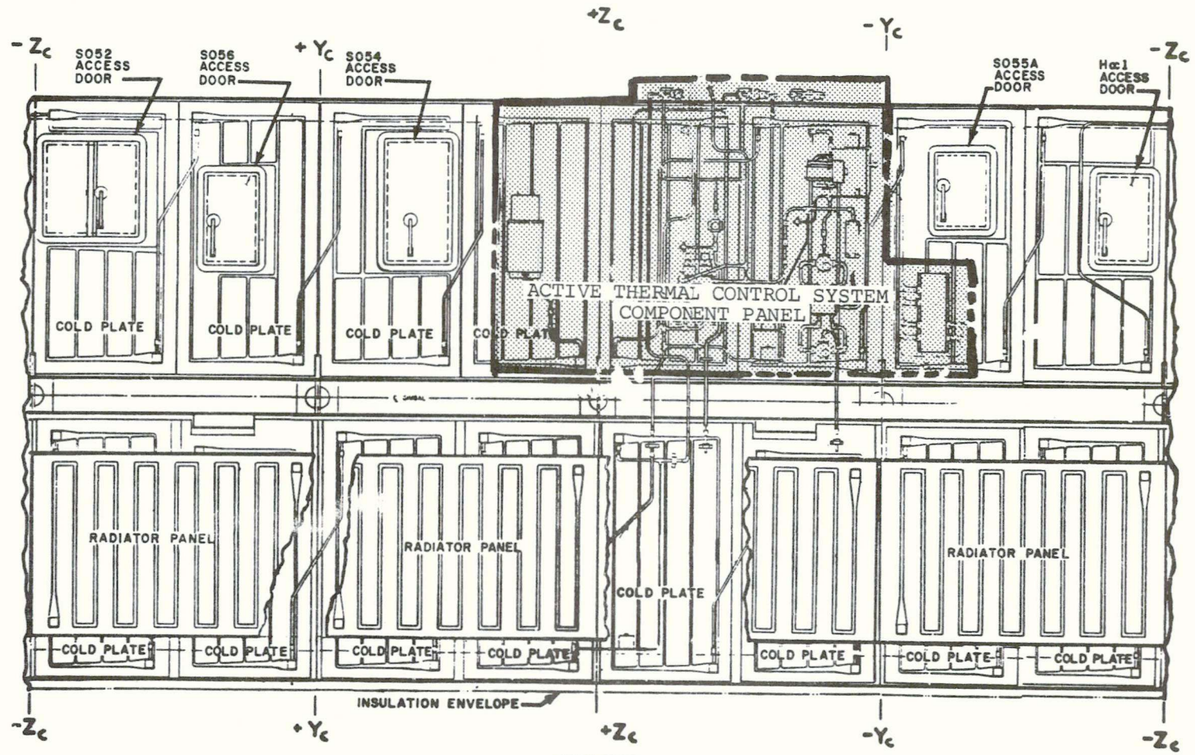

SUN END

EXTERIOR FLAT LAYOUT

Figure 2.1-15 Canister Equipment Arrangement

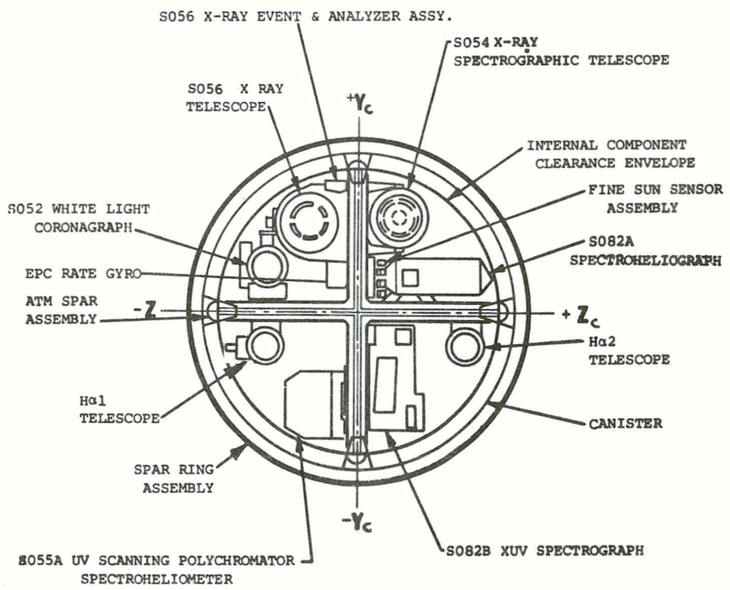

CROSS SECTION LOOKING TOWARD MDA

MDA END

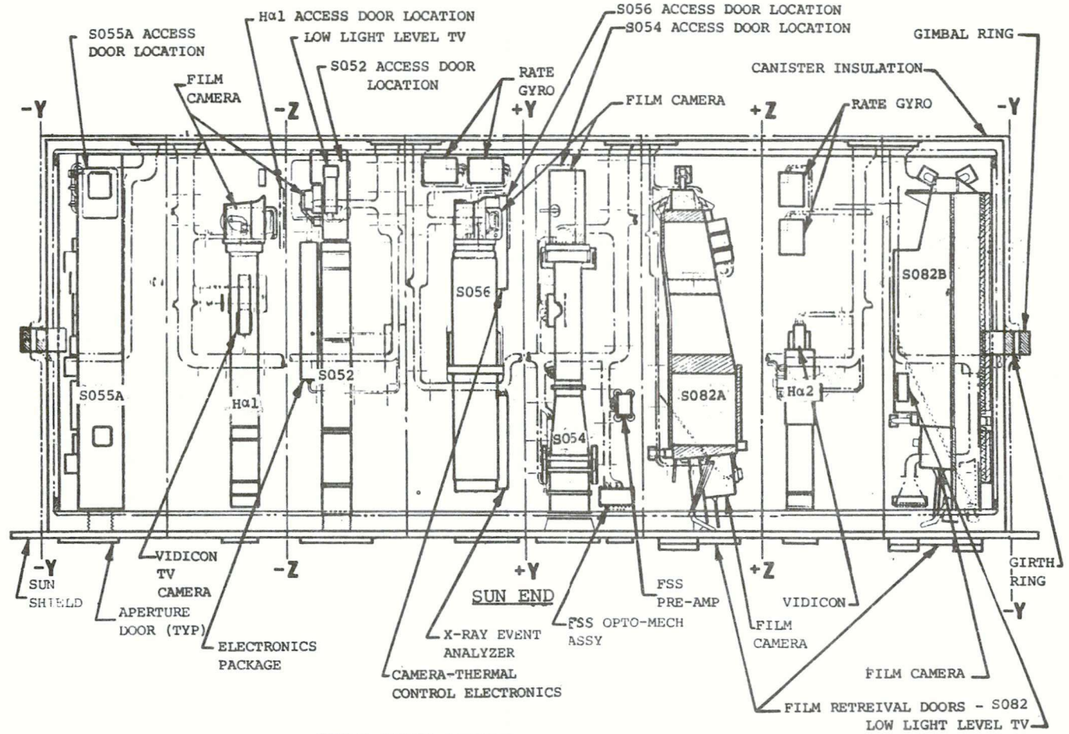

SPAR FLAT LAYOUT

Figure 2.1-16 Spar Equipment and Experiment Arrangement

2.1.4.3.3 Experiment Pointing Control - Roll Positioning Mechanism (EPC-RPM) - The EPC-RPM provides a three degree of freedom mount for the ATM experiment canister within the ATM rack. Pitch and yaw motion are controlled by the ATMDC. Roll motion is controlled by the crew from the ATM C&D Console or the Rotation Control Panel 160 at the center work station. Control of the EPC-RPM will be discussed in detail in sections 2.5 and 2.8.

The EPC-RPM consists of two concentric welded aluminum rings; four actuator assemblies; a roll drive and brake assembly; a roll position indicator assembly; two orbital lock assemblies; a roll stop assembly; four lateral launch lock assemblies; a torsional launch lock assembly; and four support roller assemblies (Figures 2.1-17). The four support roller assemblies are attached to the rack structure (Figure 2.1-18). They support the outer or roll ring by means of three rollers in each assembly. The roll ring is attached to the inner or gimbal ring by means of two actuators for right/left motion. The gimbal ring is attached to the canister girth ring for up/down motion. A ring gear on the roll ring is driven by the roll drive and brake assembly for roll motion. The roll ring gear drives the roll position indicator. One orbital lock locks the roll to the gimbal rings and the other locks the gimbal ring to the canister girth ring. Four lateral launch locks are each attached to the rack at two points and the girth ring at one point to prevent the canister from moving axially during launch (Figure 2.1-19). A torsional launch lock pins the roll ring to prevent roll motion during launch. The lateral and torsional launch locks are released by pin pullers operated by the explosive devices subsystem automatically by the IU or by AMDCS command (Figure 2.1-20). The lateral launch lockes are retracted against the side of the canister by torsion springs. The torsional launch lock pin retracts into the pin puller housing.

2.1.4.3.3.1 EPC Actuator Assembly - The EPC Actuator Assembly consists of one mechanical flexure bearing assembly, one DC brushless torque motor and one multispeed electrical resolver (Figures 2.1-21). The mechanical flexure bearing provides a support system with a limited mechanical rotation similar to ball bearings, but which does not require lubrication since there are no rotating parts. The torque motor drives the flexure bearing to provide the required ± 2 degree (maximum) motion. The resolver provides position feedback.

2.1.4.3.3.2 Roll Drive and Brake Assembly (RDBA) - The Roll Drive and Brake Assembly consists of two brush-type D.C. motors, two tachometers and a two-coil solenoid operated brake (Figure 2.1-22). The motors, tachometers and solenoid coils are arranged for electrical redundancy and the unit is rated for one unit each operational at a time. The motors drive the ring gear on the roll ring to rotate the canister $\pm 120^{\circ}$. The brake assembly provides the braking force to maintain the desired position. The tachometer measures the rotational speed of the motor shaft.

2.1.4.3.3 Roll Position Indicator Assembly (RPIA) - The Roll Position Indicator Assembly is attached to the rack by a spring loaded bracket and engages the roll ring gear by means of a small pinion gear. The RPIA provides an electrical indication of roll axis position. It consists of a tandem installation of two fine and four coarse resolution resolvers (Figure 2.1-23). The fine resolvers are driven directly by the input shaft and rotate at 16 times the roll axis speed. The coarse resolvers, comprising two coarse resolution units and two coordinate transformation units, are driven by a reduction gear train and resolve at roll axis speed. The coordinate transform resolvers are not used. The pairs provide electrical redundancy.

2.1.4.3.4 Roll Stop Assembly - The Roll Stop Assembly (Figure 2.1-24) limits the canister rotation to 240° and dampens the impact forces when the canister is stopped at its limits. The pawl on the Roll Stop Assembly is engaged by one of two stop blocks on the roll ring, compressing the spring and preventing further canister rotation in that direction.

2.1.4.3.5 Orbital Lock Assembly - One Orbital Lock Assembly cages the canister girth ring to the gimbal ring and the other cages the gimbal ring to the roll ring. It consists of a roller mechanism driven by one or the other of two redundant brush-type D.C. motors and a set of rails (Figure 2.1-25). The roller mechanism and motors are attached to the gimbal ring. The rails are attached to the canister girth ring (right/left) and roll ring (up/down axis). To cage the canister the torque motor rotates the roller mechanism until the rollers contact the stops on the rails. In the caged position the rollers are slightly over "top dead center" with respect to the rails and they are firmly compressed or preloaded between the rails. The yaw orbital lock center line makes a 23 degree angle with the yaw axis and the pitch lock a 20 degree angle with the pitch axis resulting in an equal moment arm for both axis.

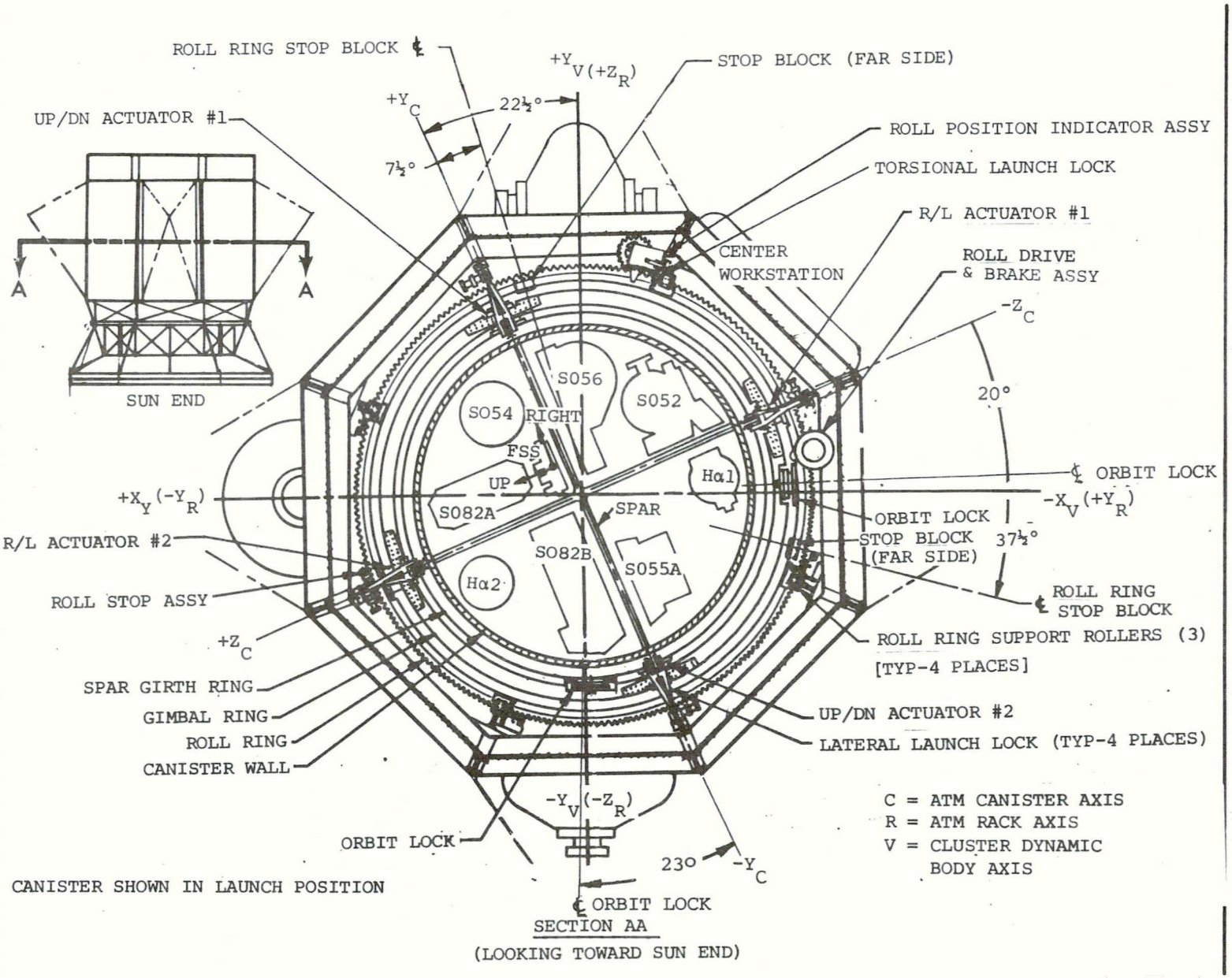

Figure 2.1-17 Experiment Pointing Control - Roll Positioning Mechanisms Arrangement

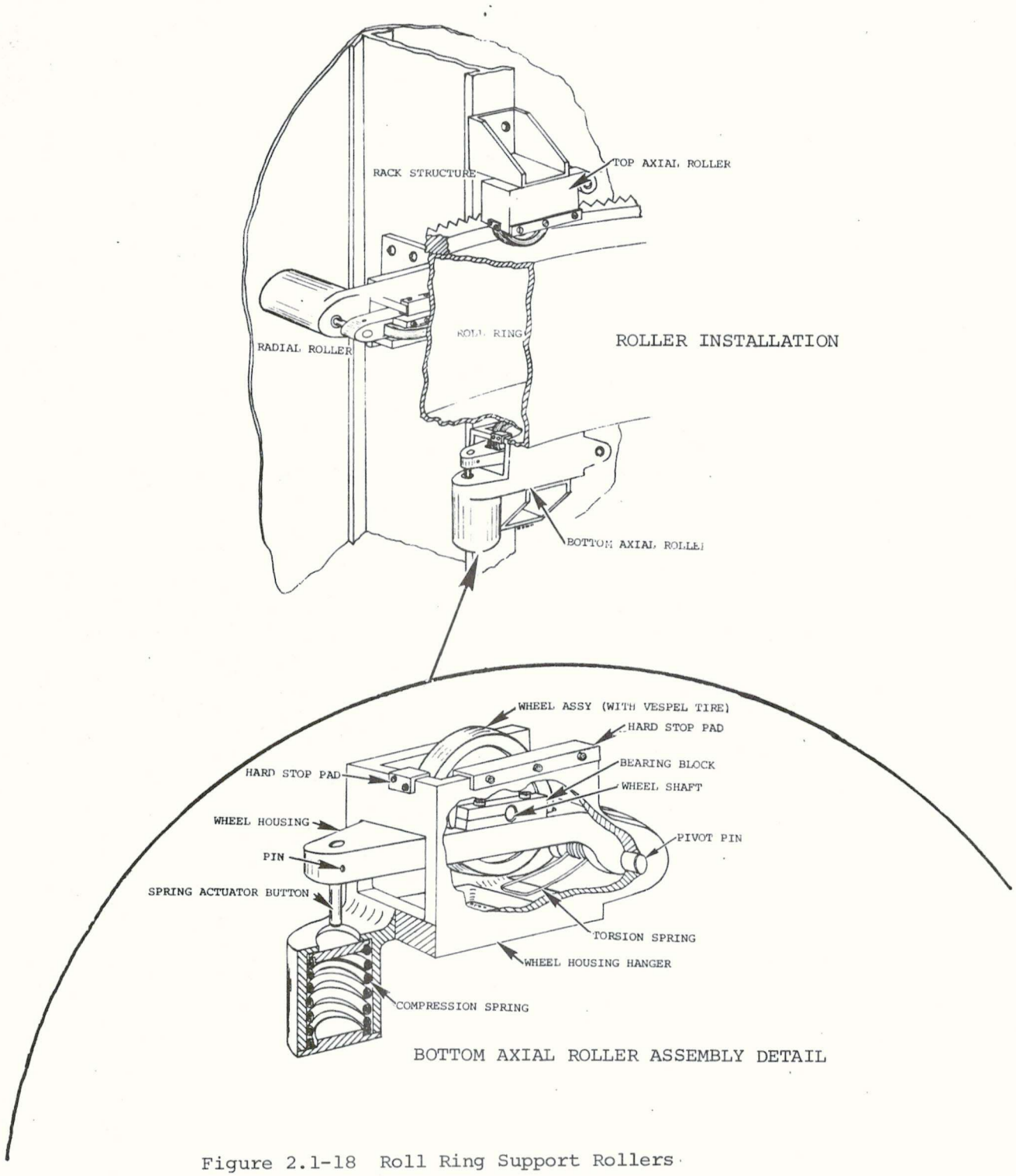

Figure 2.1-18 Roll Ring Support Rollers

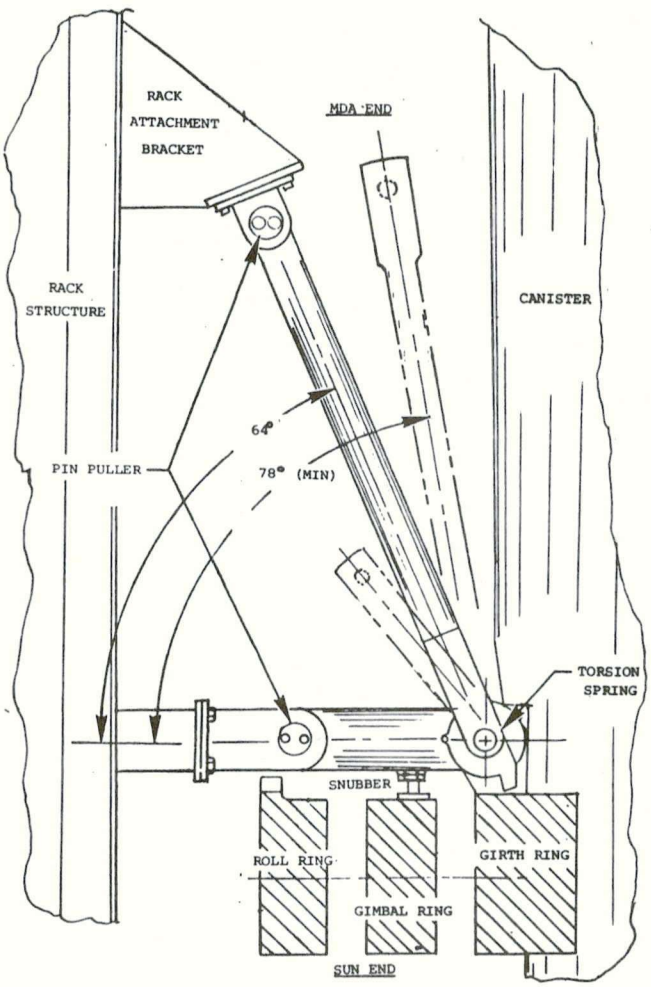

LATERAL LOCKS

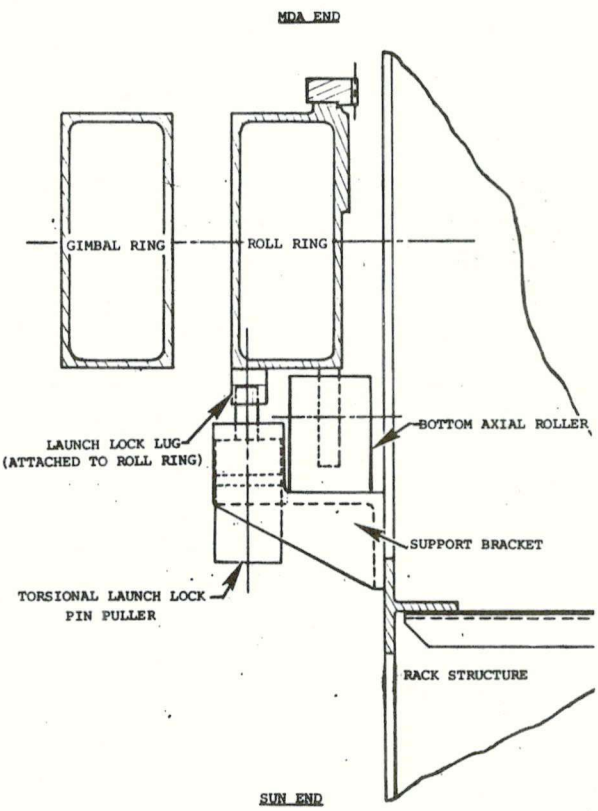

TORSIONAL LOCK

Figure 2.1-19 Launch Locks

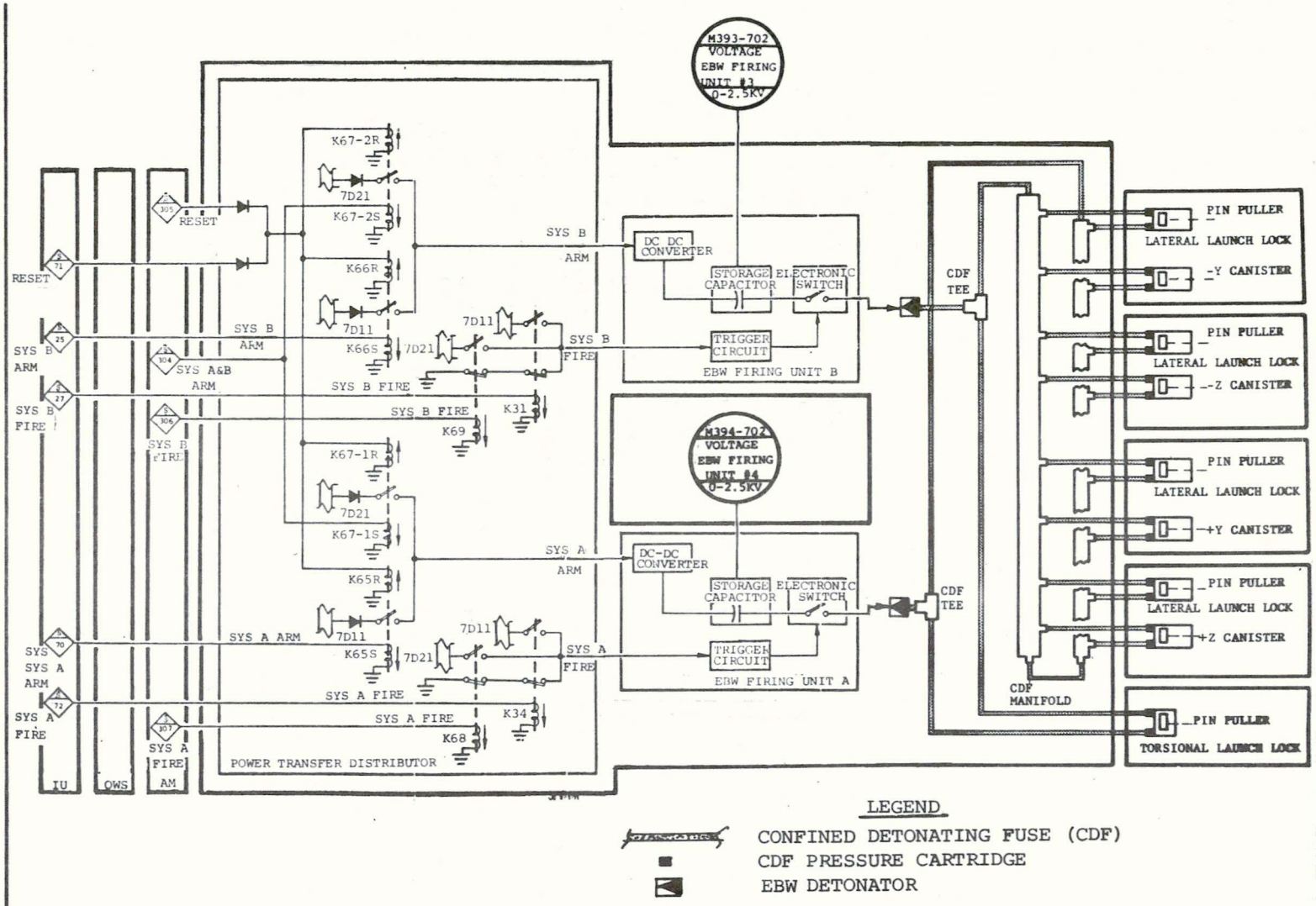

Figure 2.1-20 Launch Lock Release Circuit

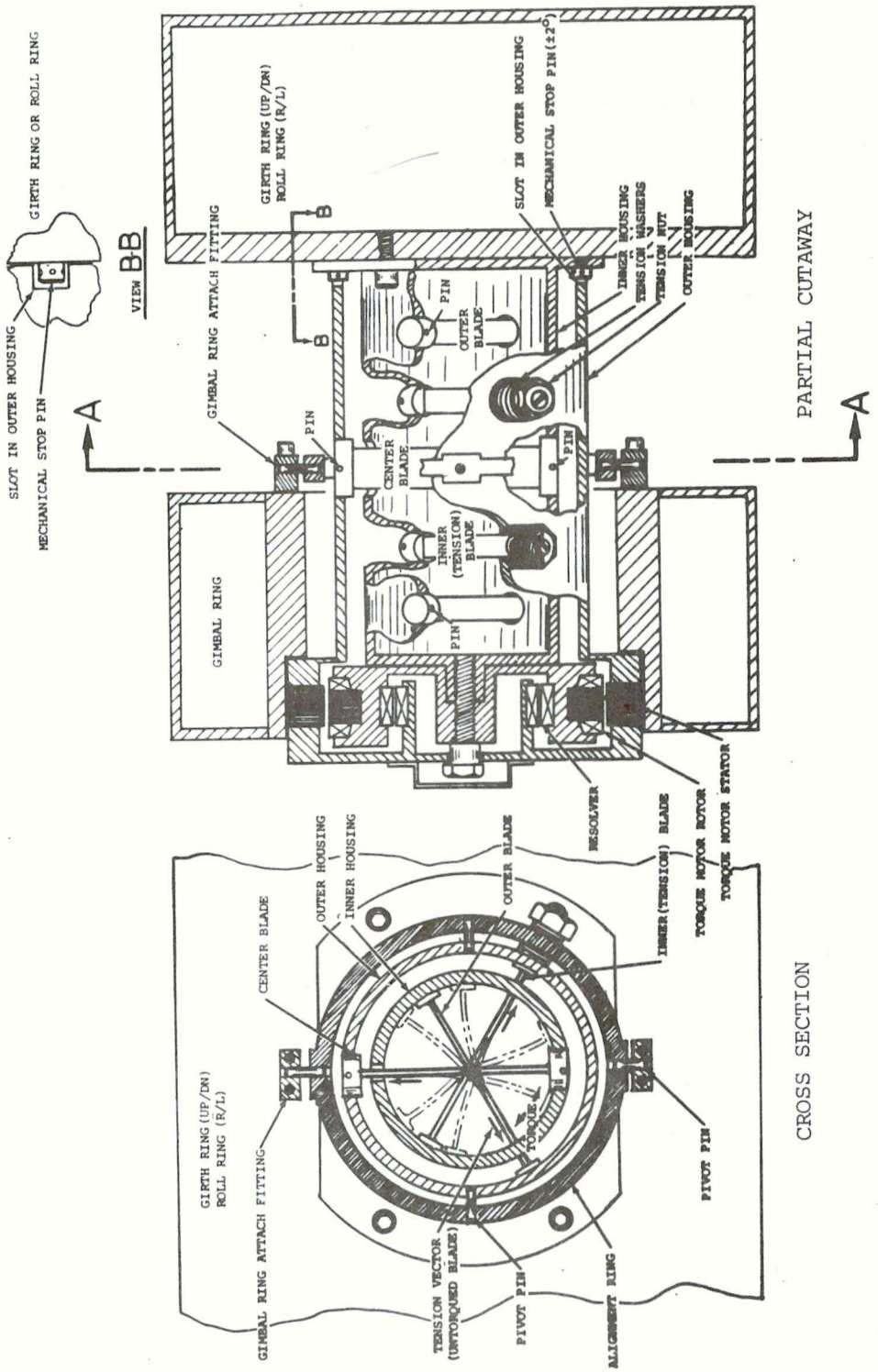

Figure 2.1-21 Experiment Pointing Control Actuator

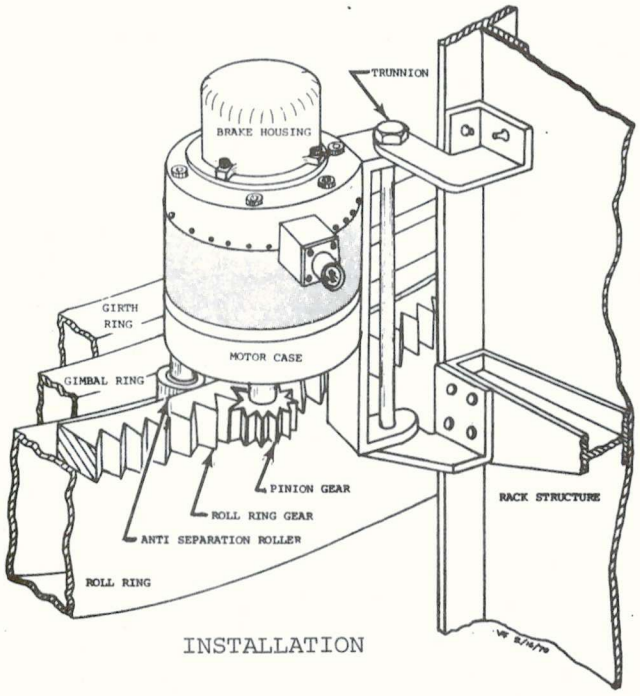

INSTALLATION

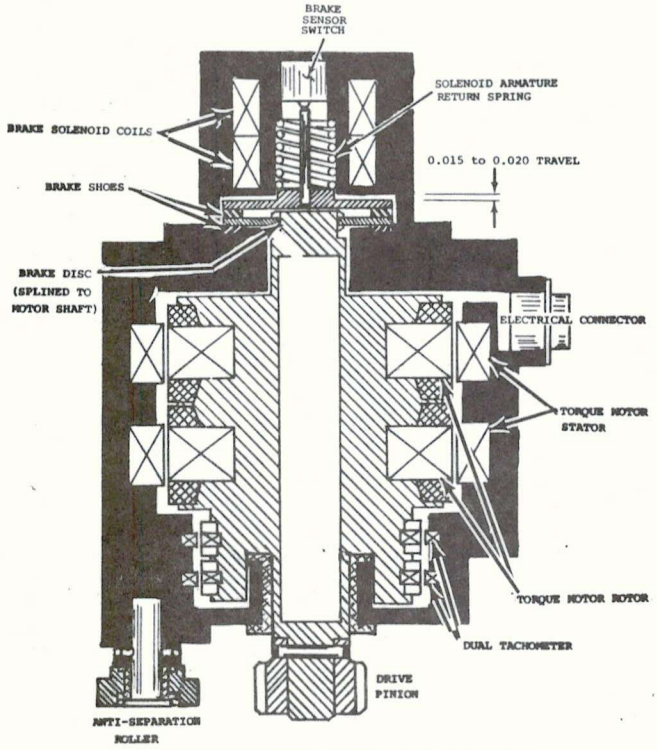

SIMPLIFIED CROSS SECTION

Figure 2.1-22 Roll Drive and Brake Assembly

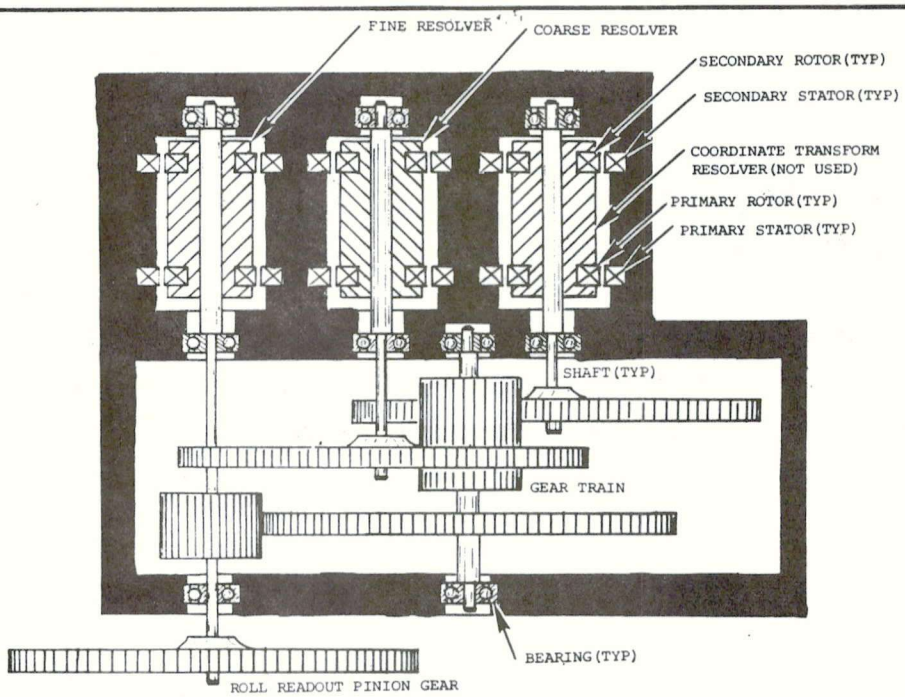

SIMPLIFIED CROSS SECTION

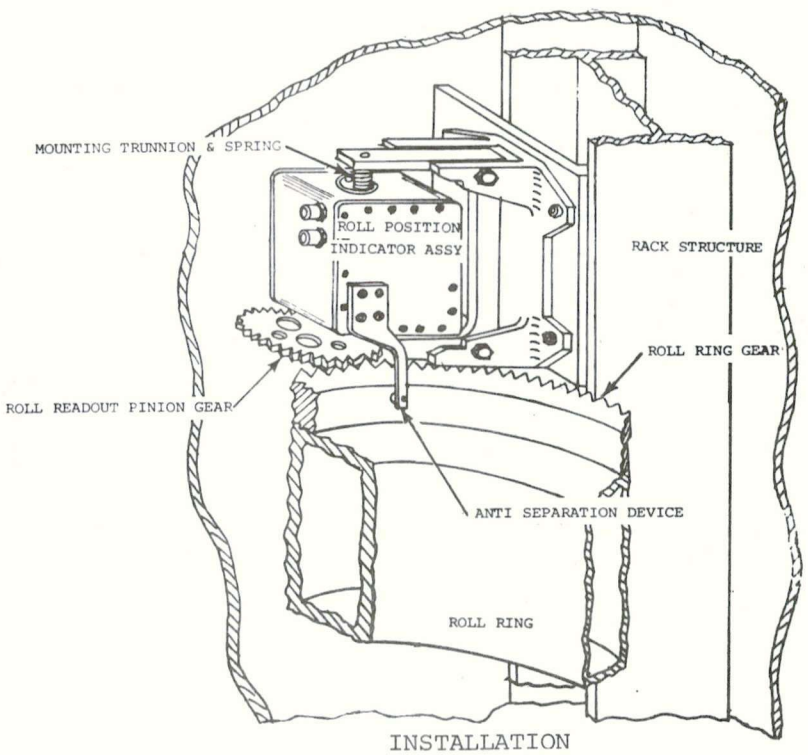

INSTALLATION

Figure 2.1-23 Roll Position Indicator Assembly

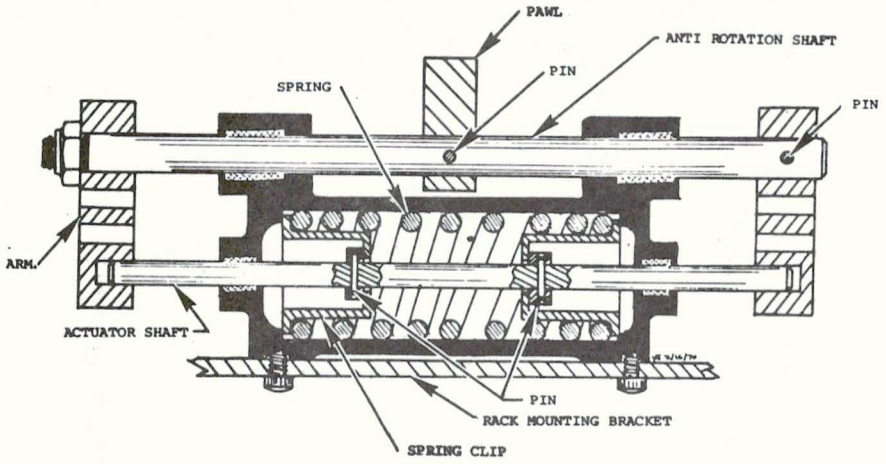

SIMPLIFIED CROSS SECTION

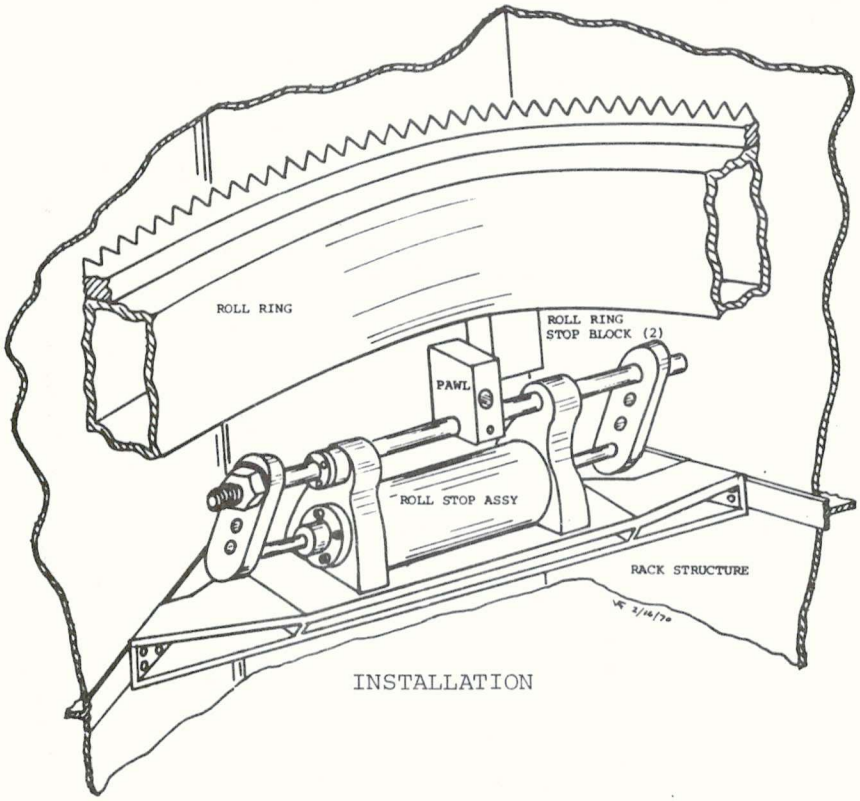

INSTALLATION

Figure 2.1-24 Roll Stop Assembly

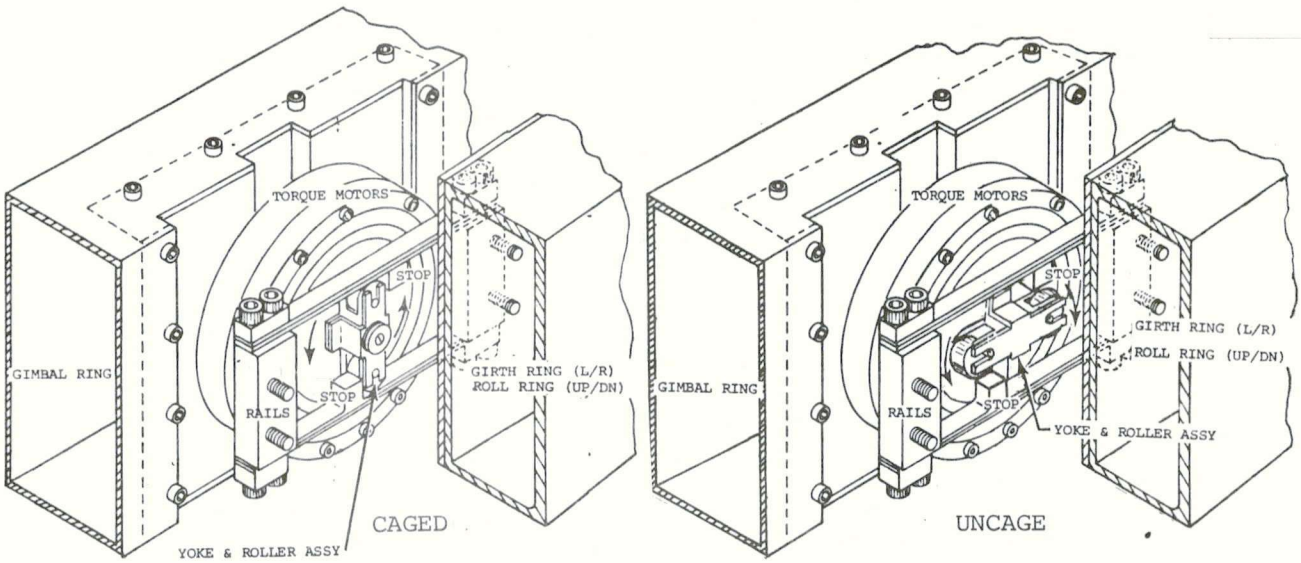

INSTALLATION

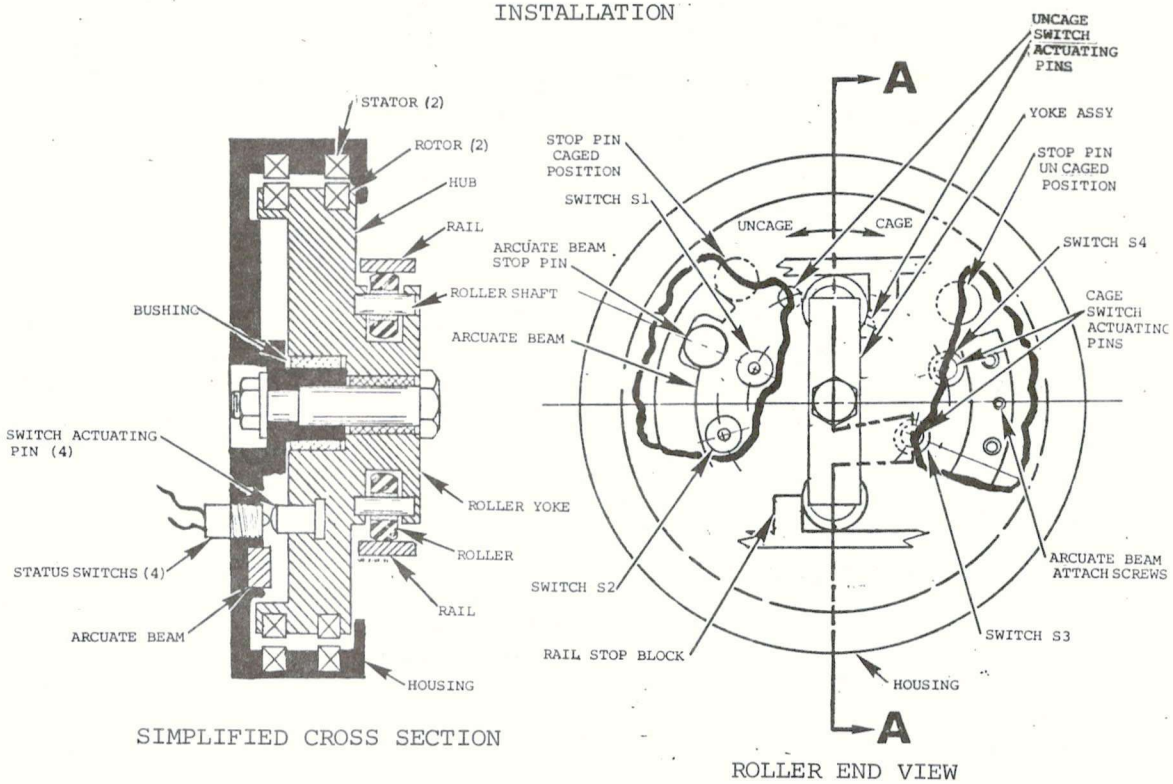

Figure 2.1-25 Orbit Lock Assembly

2.1.4.3.4 Film Retrieval Door Mechanisms

2.1.4.3.4.1 Canister Side Doors - There are five doors in the side of the canister (Figure 2.1-15). Four doors are for film retrieval by the crew during EVA from the center work station. The fifth door is for ground access to the S055A experiment only. The canister must be rotated into position using the Rotation Control Panel 160. The doors are all manually operated and have no remote position indication. The S052 door is a double door with a latching mechanism on one side and a fixed handle on the other. All doors incorporate a launch lock mechanism, latch mechanism, door position indicator (flag), magnetic latches and rim seal. The latch mechanism has spring loaded lock pins to hold the latch pins in the retracted position. The launch lock mechanism is lock wired in the locked position. To open the door the crewman must first release the launch lock by pulling out on the "D" handle far enough to break the lock wire and allow the split handle to be rotated and snapped into the stowage clip. The launch lock is not used again. The door is opened by pushing the handle into the dust boot, which rotates the cam and retracts the latch pins. The latch pin locks drop into the detent section of the latch pin shaft to keep them in retracted position. The door must be pulled open to overcome the magnetic latches at the top and bottom of the door. A friction device keeps the door open using the friction of a spring against a curved rod. The door hinge pin is dry film lubricated to prevent cold welding in space. When the door is opened a spring loaded pin in the door open indicator is released allowing the white flag to drop into the housing.

When the door is closed it is held by the magnetic latches until the handle is pulled out. Pulling out the handle rotates the cam in the opposite direction forcing the latch pins outward into holes in the door sill. The door sill pushes the pin on the door open indicator in, raising the white flag up out of the housing and into view.

2.1.4.3.4.2 Sun Shield Doors - There are two film retrieval doors on the sun shield for the S082A and B experiments (Figure 2.1-15). The three aperture doors that cover the film retrieval doors must be opened from the center work station before these doors can be opened. The canister must also be rotated into the proper position from the center work station so the doors will be accessible from the sun end work station. The two film retrieval doors are manually operated and have no position indicators.

The doors are composed of a fiberglass shell filled with aluminized mylar insulation, latch mechanism, lock mechanism, friction device and seals (Figure 2.1-27). The latch mechanism is unlocked by depressing the lock release button on the top of the handle. This pushes the spring loaded inner shaft down far enough to allow the locking pins to clear the retaining slot. The lock release leaf spring then rotates the cam and shaft far enough to prevent the lock release button spring from

pushing the locking pins back into the retaining slot. The handle is then rotated, causing the cam to rotate and retract the latch pins from holes in the door sill. A friction device keeps the door open using the friction of a spring against a curved rod. The door hinge pins are coated with a dry film lubricant to prevent cold welding in space. If the handle is rotated in the wrong direction when trying to unlatch the door, the lock pins will be forced back into the retaining slot again. The door cannot be unlatched until the lock release button on the top of the handle is depressed again. The door is latched by rotating the handle in the opposite direction causing the cam to rotate and force the latch pins into the holes in the door sill. The latch release button spring then forces the locking pins into the retaining slot to lock the door latches.

2.1.4.3.5 Sun Shield Aperture Door Mechanism - The ATM experiments and the Fine Sun Sensor view the sun through openings in the sun shield. These openings are covered by doors to protect the experiment or FSS optics from contamination when they are not in use (figure 2.1-15). The S082A and B experiments also have internal aperture doors that will be described in sections 2.9.5 and 2.9.6. The operating mechanism for all doors is similar and is shown in Figure 2.1-28. The door control circuits are basically the same, but there are differences in command sources and status indications. Figure 2.1-29 shows a basic door electric control circuit and Table 2.1-II summarizes the differences in command sources and status indications. The operation of all doors by ground command, ATMDC command can be inhibited by the EVA: AUTO DOOR switch on the ATM C&D Console. Table 2.1-I shows what commands are inhibited for each switch position.

TABLE 2.1-I

APERTURE DOOR COMMAND INHIBIT

EVA AUTO DOOR SWITCH POSITION	GROUND COMMAND	ATMDC COMMAND	ATM C&D SWITCH COMMAND
ENABLE	INHIBITED	ENABLED	ENABLED
INHIBIT	INHIBITED	INHIBITED	ENABLED
STORAGE	ENABLED	ENA OR INH*	ENABLED

*As selected by MSFN

The aperture doors consist of a fiberglass shell filled with aluminized mylar with a shaft attached to one corner and a tapered latch opposite the shaft. The tapered latch fits into a "U" shaped latch ramp attached to the sun shield. Each door has a latch ramp which provides support during the launch boost. A four degree sloping ramp on the sun shield aids in sealing the doors. The door operating mechanism consists of redundant 28 VDC torque motors driving a common jack screw shaft, a carriage, a lever, a mounting bracket and four limit switches. The mechanism is attached to the inside of the sun shield. The lever is attached to the door shaft. A pin and clutch on the door shaft allow the door to be opened by an EVA crewman in the event of a failure.

Figure 2.1-29 shows a typical sun shield aperture door control circuit. The ATM C&D console switch and the ATMDC door open command momentarily energize K4 and K7 direct. The ground door open command momentarily energizes K1 which then energizes K4 and K7. Contacts of K4 and K7 supply power to the front and rear torque motors respectively. These same contacts also supply power across limit switches LS-1 and LS-2 to hold in K4 and K7 as well as to energize K5-S and K8-S. Relays K4 and K7 return to ground across the normally closed contacts of K3 and K6. The torque motors return to ground across contacts of K4 and K7. The door closed talkback and TM indications are lost when K5-S and K8-S are energized.

The torque motor rotates the jack screw moving the carriage and lever. The lever rotates the door shaft to open the door. When the carriage reaches full travel it lifts the actuating rollers of limit switches LS-1 and LS-2 removing power from relays K4, K7, K5-S and K8-S. The door open talkback indicator circuit is completed across the normally closed contact of K4 and the contact of K5-S. The door open TM indicator circuit is completed across the normally closed contact of K7 and the contact of K8-s.

The door closed circuit operates in a similar manner using relays K3, K6, K5-R and K8-R.

2.1.4.3.6 GSE N_2 Purge Fitting Retract Mechanism - The ATM experiment canister is purged on the pad with gasous nitrogen (GN_2). A retractable fitting carries this GN_2 from the ATM rack to the canister. The GSE line is disconnected at the rack prior to launch, but the retractable fitting between the rack and canister is not. The rack to canister fitting is released when the crew rotates the canister the first time in orbit. To disconnect the male half of the fitting from the female half the canister must rotate in the clockwise direction at the slowest speed (Figure 2.1-30). A guide rail and roller prevents the spring loaded arm from retracting against the rack until the male fitting is completely out of the female. Rotating the canister in the counterclockwise direction first could prevent the arm from retracting and thus prevent further rotation of the experiment canister. Rotation at higher speeds could

cause the retracting arm to strike the film door handles on the side of the canister before it is fully retracted.

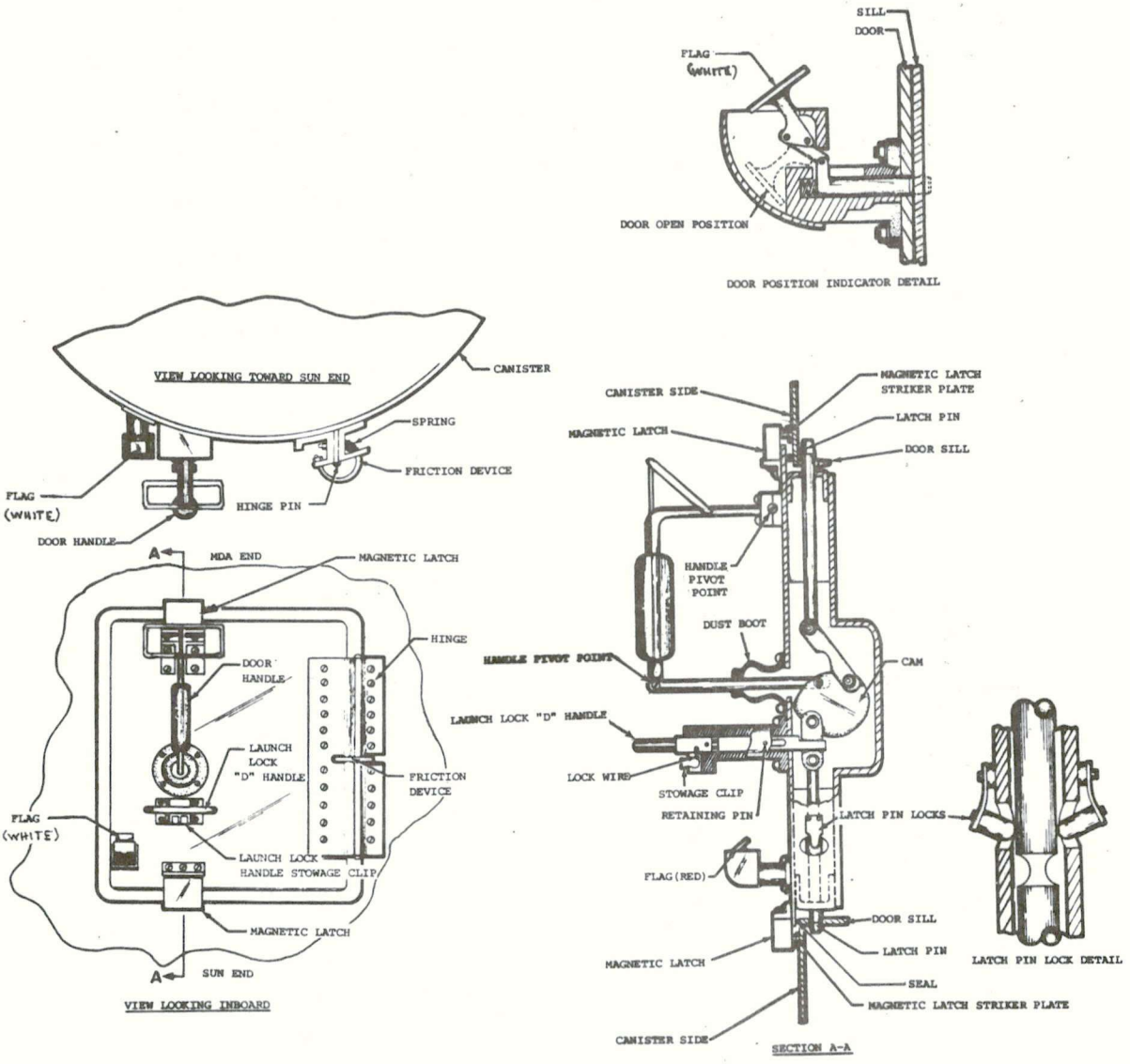

Figure 2.1-26 Canister Side Film Door Mechanism

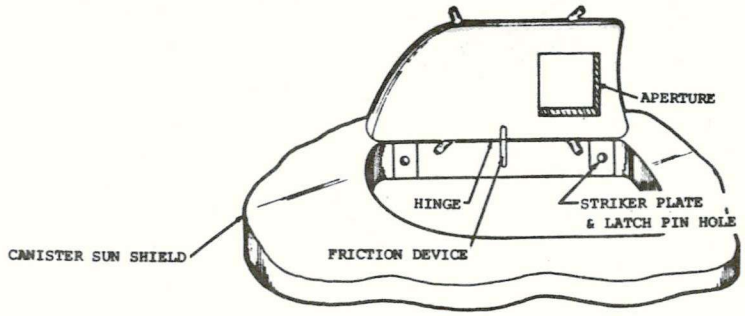

S082A CAMERA RETRIEVAL DOOR

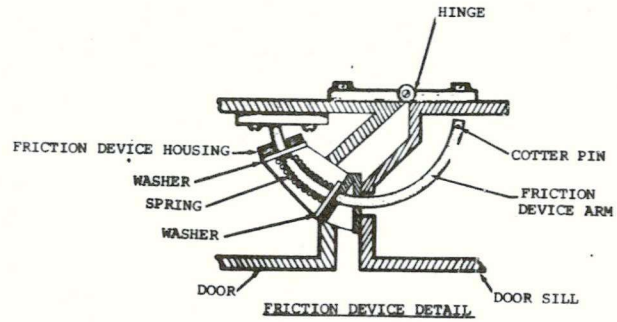

FRICTION DEVICE DETAIL

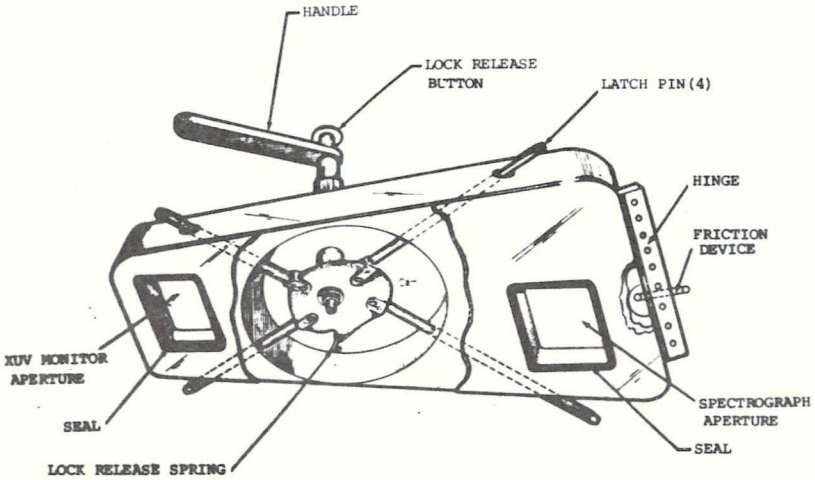

S082B CAMERA RETRIEVAL DOOR
(UNDER SIDE)

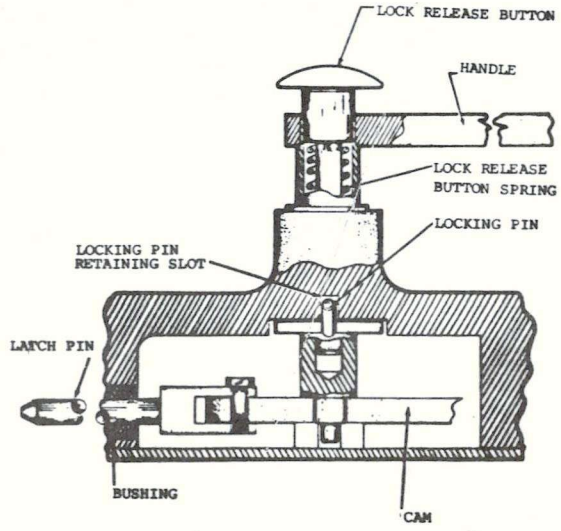

LATCH LOCK PIN DETAIL

NOTE: S082A & S082B CAMERA RETRIEVAL DOOR OPERATING MECHANISMS ARE IDENTICAL. HINGE AND FRICTION DEVICE LOCATIONS DIFFER.

Figure 2.1-27 Canister Sun Shield Film Door Mechanism

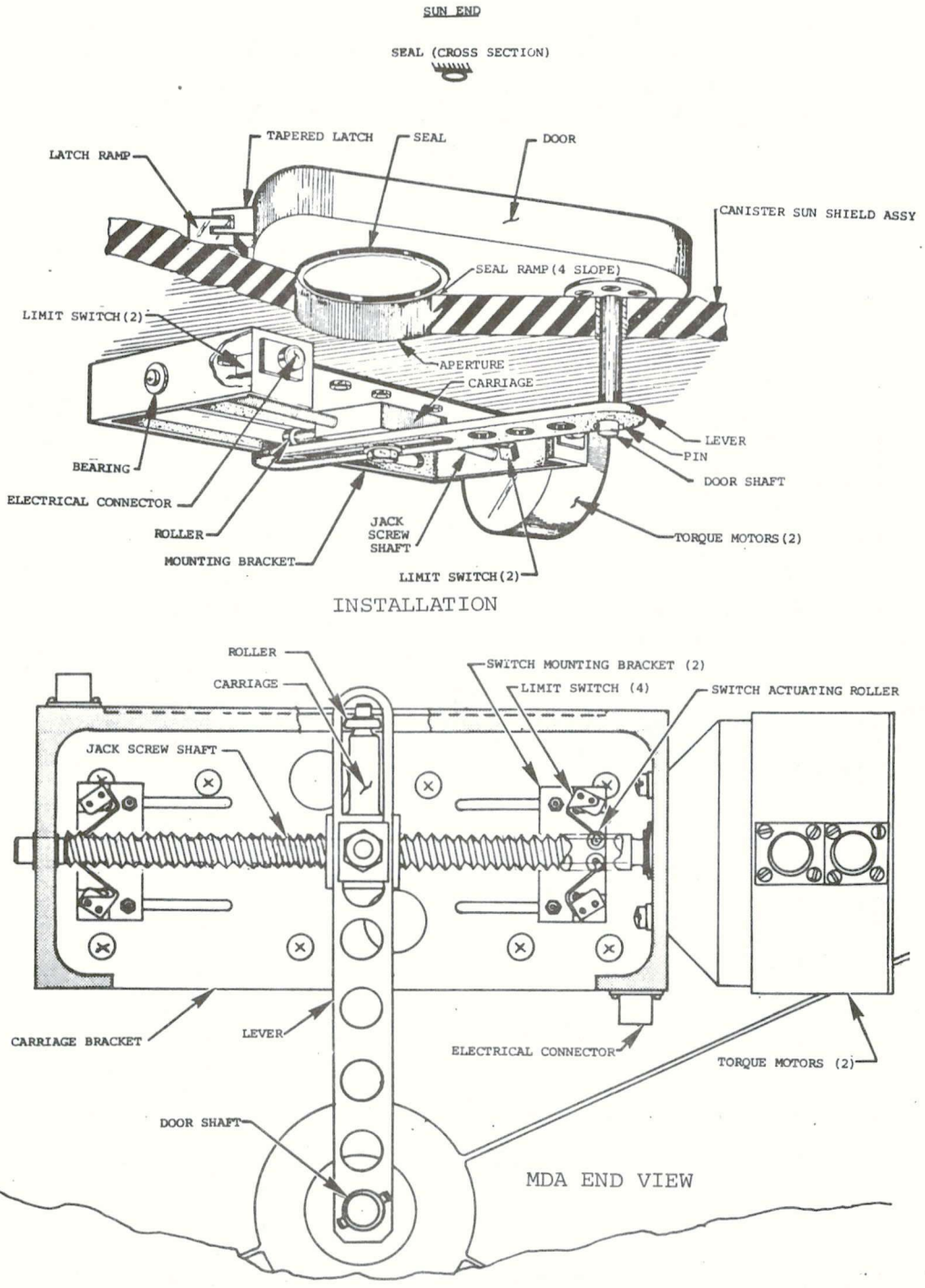

Figure 2.1-28 Typical Sun Shield Aperture Door Mechanism

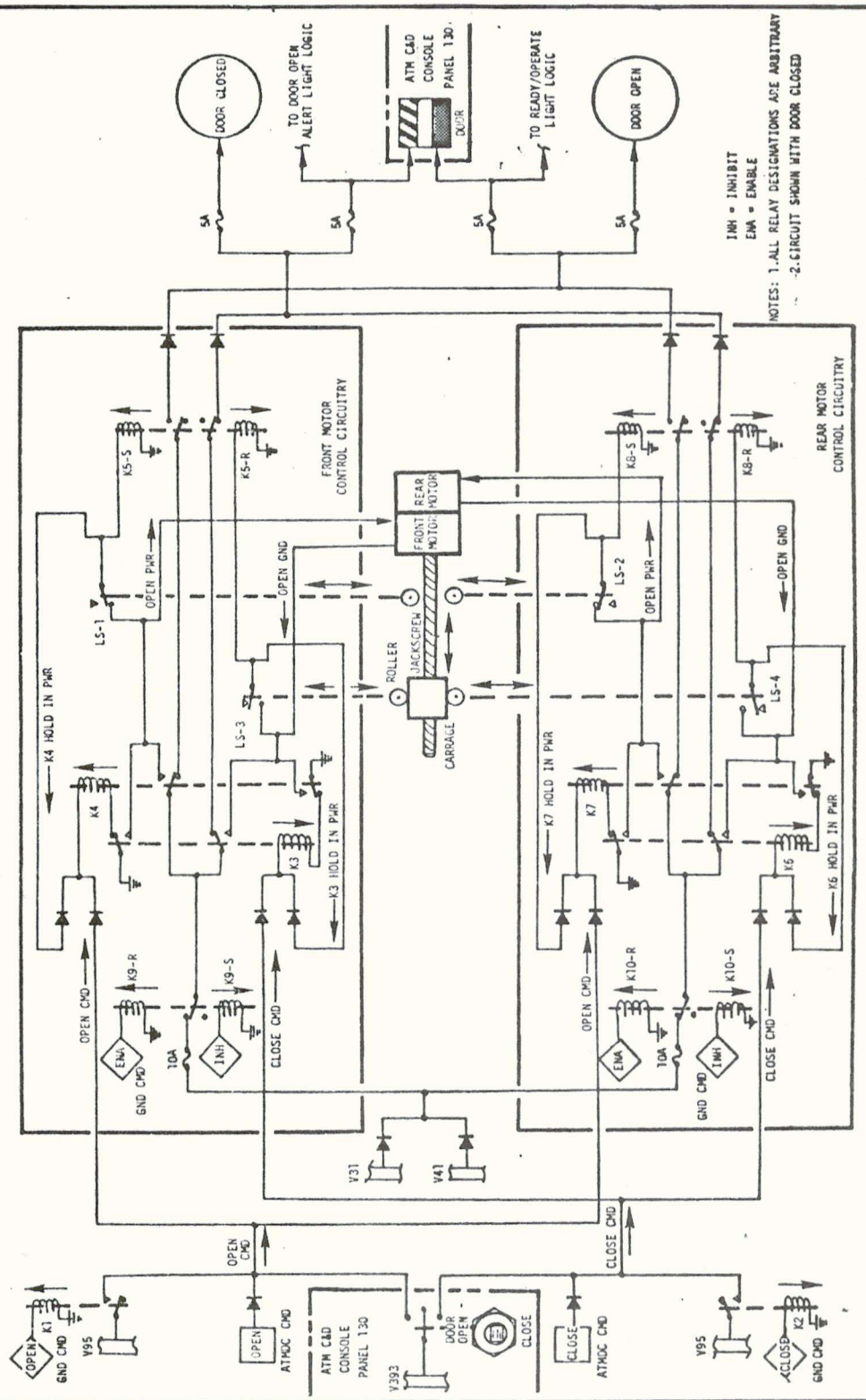

Figure 2.1-29 Typical Sun Shield Aperture Door Control Circuit

Table 2.1-II ATM SUN SHIELD APERTURE DOOR COMMAND SOURCES & STATUS INDICATION SUMMARY

EXPERIMENT	ATM, C&D CONSOLE				GROUND COMMANDS	TELEMETRY STATUS	FILM EXPOSURE INTERLOCK(1)	ATMDC AUTO CMD			CENTER WORK STATION	
	SWITCH	TALKBACK	"DOOR OPEN" ALERT LIGHT	REQ FOR "READY" LIGHT				"AUTO DOOR" SWITCH POSITION			SWITCH	TALKBACK
								ENABLE(2)	INHIBIT	STORAGE		
S052	YES	YES	YES	YES	YES	O & C	NO	CLOSE(4) ONLY	-	CLOSE(4)	NO	NO
S054	YES	YES	YES	YES	YES	OPEN & CLOSED	NO	O - C	-	CLOSE	NO	NO
S055A	YES	YES	YES	YES	YES	O & C	N/A	O - C	-	O - C	NO	NO
S056	YES	YES	YES	YES	NO	O & C	NO	O - C	-	-	NO	NO
S082A	YES	YES(8)	YES	YES	YES	O & C	YES	CLOSE ONLY	-	CLOSE	YES(5)	YES
S082B (XUV SPECT) (XUV MON)	YES YES	YES(8) YES	YES YES	YES NO	YES YES	O & C O & C	YES YES	CLOSE CLOSE	- -	CLOSE -	YES(5) YES(5)	YES(6) YES(6)
Hα1	YES	YES	YES	YES	NO	O & C	NO	O - C	-	-	NO	NO
Hα2	YES	YES	YES	NO "READY" LIGHT	NO	O & C	N/A	O - C	-	-	NO	NO
FSS	YES	YES	YES	NO "READY" LIGHT	YES	O & C	N/A	O - C	-	O - C	NO	NO

NOTES:
1. INTERLOCK TO PREVENT FILM EXPOSURE WITH DOOR CLOSED
2. OPEN AT SUNRISE, CLOSE AT SUNSET
3. [redacted]
4. TRUE IF Hα1 SWITCH NIGHT INTLK OR WLC AUTO DOOR SWITCHES ARE IN NORMAL POSITION
5. ONE SWITCH OPERATES ALL THREE AT THE SAME TIME
6. ONE TALKBACK FOR BOTH
7. WHEN GND CMD ENABLE SIGNAL (40105) IS APPLIED
8. INTERLOCK WITH INSTRUMENT INTERNAL DOOR

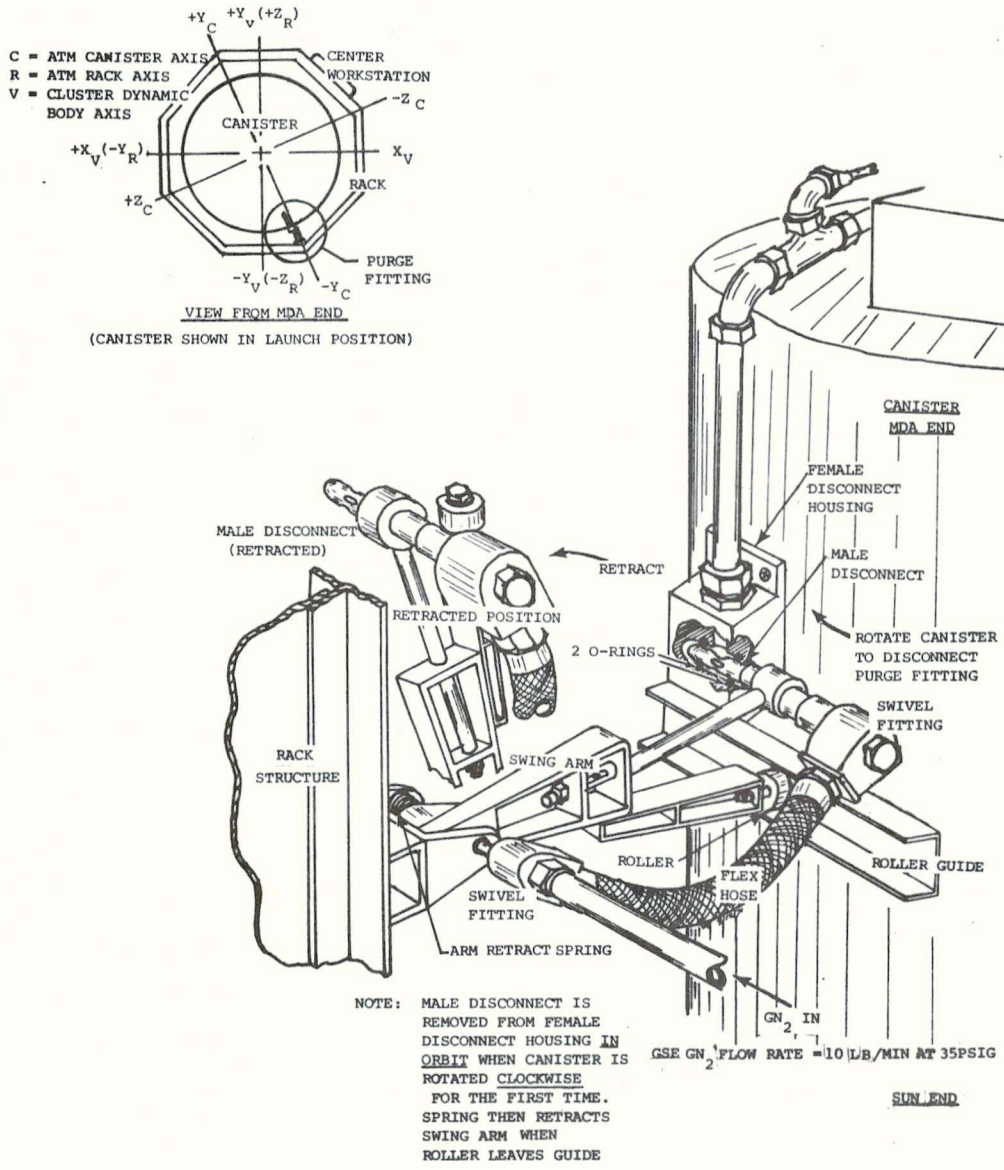

Figure 2.1-30 GSE GN_2 Purge Fitting Retract Mechanism

2.1.4.3.6 Astronaut EVA Aids

See Section 2.8

2.1.5 Performance and Design Data

2.1.5.1 Rack (N/A)

2.1.5.2 Solar Array

2.1.5.2.1 Electric Actuator, Deployment

OUTPUT PARAMETER	AMBIENT TEMPERATURE	
	25°C (77°F)	74°C (165°F)
Nominal Operating Voltage	27.5 VDC	27.5 VDC
Stall Torque	520 in.-lb. Min.	396 in.-lb. Min.
Maximum Overload Capacity for short intermittent periods to be verified before setting clutch)	500 in.-lb.	
Nominal Operating Torque	150 in.-lb	150 in.-lb.
RPM at 150 in.-lb.	3.5 ± 0.5 RPM	1.46 RPM Min.
No Load RPM	4.2 Approx.	2.36 RPM Min.
Preset Clutch Torque	450 ± 35 in-lbs	
Weight	15 lbs.	
Diameter of Cable Sheave	6 in.	
Overall Length of Actuator	9.5 In. (Max.)	

2.1.5.3 Canister

2.1.5.3.1 Experiment Pointing Control - Roll Positioning Mechanism (EPC-RPM)

2.1.5.3.1.1 EPC Actuator Assembly

Mechanical

1. Angular Rotation - 0° to 2° ± 5% in either direction
2. Torsional Spring Rate - Not greater than 53.0 lb-in/radian per actuator
3. Breakaway Torque - Not greater than 0.10 lb-ft per actuator

Electrical

Motor

1. Maximum Torque Output - 7.0 ± 10% lb-ft at 3.75 amps
2. Nominal Voltage - 36.7 vdc
3. Current - Not to exceed 3.75 amps
4. Torque Breakaway

Resolver

5. Nominal Input Voltage - 10 vac
6. Nominal Frequency - 800 H_Z

7. Output - 1 Speed, Sin θ and Cos θ
16 Speed, 16 Sin θ and 16 Cos θ

8. Error - 1 Speed, less than 30.0 arc-minutes
16 Speed, less than 1.0 arc-minute

2.1.5.3.1.2 Roll Drive and Brake Assembly

Mechanical

1. Maximum Torque at Output Shaft - 6.2 ± 10% lb-ft
2. Maximum Shaft Speed - 65 ± 10% RPM either direction
3. Rating - Continuous operation, either direction
4. Brake Capacity - De-energized torque, 8 lb-ft minimum, 15 lb-ft max.
Energized torque, 0.1 lb-ft maximum
5. Angular Rotation ± 120°
6. Breakout Torque (max) - 80 ft-lbs

Electrical

5. Motor Input Nominal Voltage - 36.7 vdc
6. Motor Input Current - Not to exceed 3.75 amps maximum
7. Tachometer Sensitivity - 2.7 volts/radian-second
8. Brake Solenoid Nominal Input Voltage - 28 vdc
9. Brake Solenoid Input Current - Not to exceed 1.50 amps

2.1.5.3.1.3 Roll Position Indicator Assembly

Accuracy

1. Fine Resolution - ±1 arc-minute
2. Coarse Resolution - ±30 arc-minutes
3. Co-ordinate Transformation - ±30 arc-minutes

Mechanical

1. Input Shaft Speed - 56 RPM maximum
2. Limit of Rotation - ±5.6 Revolutions

Electrical

Resolvers	Coarse	Fine
1. Nominal Excitation Frequency	800 H_z	800 H_z
2. Nominal Excitation Voltage	10 vac	10 vac
3. Primary Phases	2 (one shorted)	2 (one shorted)
4. Secondary Phases	2	2
5. Maximum Input Current	0.03 amps	0.06 amps
6. Output Impedance	75 ohms	75 ohms
7. Transformation Ratio	1.0 $\pm$3%	1.0 $\pm$3%
8. Nominal Output Voltage	10 vac	10 vac
9. Output Phase Angle	5° max	5° max
10. Accuracy	$\pm$6 arc-min	$\pm$6 arc-min
11. Harmonic Distortion	0.2%	0.2%
12. Primary	0	0

Co-ordinate Transformation Resolvers

1. Poles - 2
2. Primary - Rotor
3. Excitation Frequency - 4800 H_z
4. Nominal Excitation Voltage - 10 vac
5. Primary Phases - 2
6. Secondary Phases - 2
7. Input Power - 0.03 watts
8. Input Impedance - 8000 ohms
9. Output Impedance - 1500 ohms
10. Transformation Ratio - 1.0 $\pm$4%
11. Nominal Output Voltage - 10 vac
12. Output Phase Shift - 1.0 Degrees $\pm$5
13. Accuracy - $\pm$30 arc-min
14. Total Nulls Fund - 50 Mv.

2.1.5.3.1.4 Orbital Lock Assembly

Mechanical

1. Range - Functional at any point from 0° to 2° gimbal deflection
2. Power Requirements - Power required only during locking and unlocking. Maximum operating time is five (5) seconds.
3. Capacity - Capable of operating with maximum torque output from one pitch or yaw actuator with a reserve factor of two.

Electrical

4. Torque Output (each motor) - 1.10 $\pm$10% lb-ft
5. Input Voltage, Nominal - 24.2 vdc
6. Current - Not to exceed 4.64 amps

2.1.6 Operational Limitations and Restrictions

(TBS)

2.2 ELECTRICAL POWER SUBSYSTEM

2.2.1 Introduction

2.2.1.1 General Orbital Assembly (OA) Configuration - The OA electrical power system is a combination of (1) ATM Solar Array System (SAS) which furnishes power to the 18 Charger/Battery/Regulator Modules (CBRMs), the ATM power transfer distributor, and the Transfer Buses, and (2) OWS SAS which furnishes power to the eight AM Power Conditioning Groups (PCGs), the EPS control buses, and the regulator buses that power the Transfer buses, AM buses and OWS buses. When operating as a cluster the CSM is furnished electrical power from the Transfer Buses. Figure 2.2-1 shows the OA power sources and locations. Figure 2.2-2 is a simplified schematic of the Cluster Power buses and their interconnections.

2.2.1.2 Solar Array Deployment - The ATM Solar Array deployment is accomplished automatically by the IU after the ATM deployment. The IU control signals are sent via the OWS switch selector. If the automatic deployment is not verified by TM, backup commands may be sent via the AM DCS. Both the command capability and the data for deployment verification are provided via the Airlock Module I&C system. Figure 2.2-3 shows the ATM rack with the solar array partially deployed.

2.2.1.3 ATM Electrical Power System - The ATM Electrical Power System (EPS) generates, conditions, stores, controls and distributes 26.5 to 30.5 vdc power to the ATM system and experiment loads and to the Transfer Buses during normal orbital operations. The solar array deployed from the ATM rack provides unregulated DC power during the sunlight portion of each orbit to power-conditioning and energy-storage devices on the ATM rack. Continuous regulated DC power is controlled in the ATM and distributed to the electrical loads in the ATM, the ATM Control and Display console in the MDA, and the CSM loads through the OWS/AM EPS. The system is paralleled with the AM power system, having a sharing capability of 2500 watts in either direction. Figure 2.2-4 is a diagram of the ATM electrical power system with its internal power sharing. This internal power sharing regulates the individual CBRMs output voltages to the ATM collector buses and should not be confused with the cluster paralleling capability in the ATM.

2.2.2 Subsystem Interfaces

2.2.2.1 Vehicle Interfaces - The ATM EPS interfaces with the AM EPS at the Transfer Buses, the ATM experiment loads, and the C&D in the MDA. Table 2.2-1 shows the OA cluster EPS with the ATM EPS interface voltage requirements. The AM interfaces are included with the ATM interfaces since the ATM could be required to supply the full cluster electrical power independently.

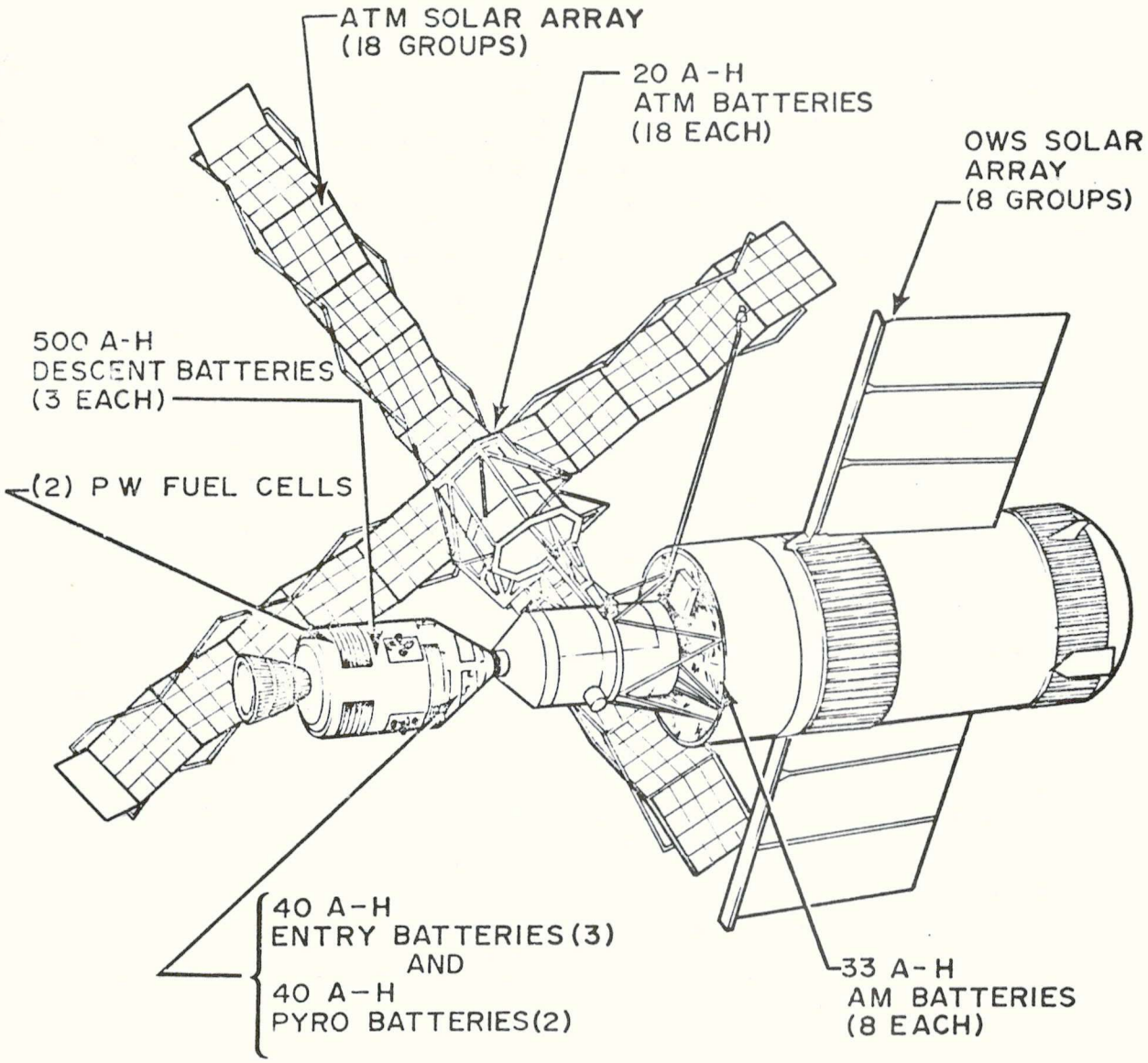

Figure 2.2-1 Cluster Power Sources and Locations

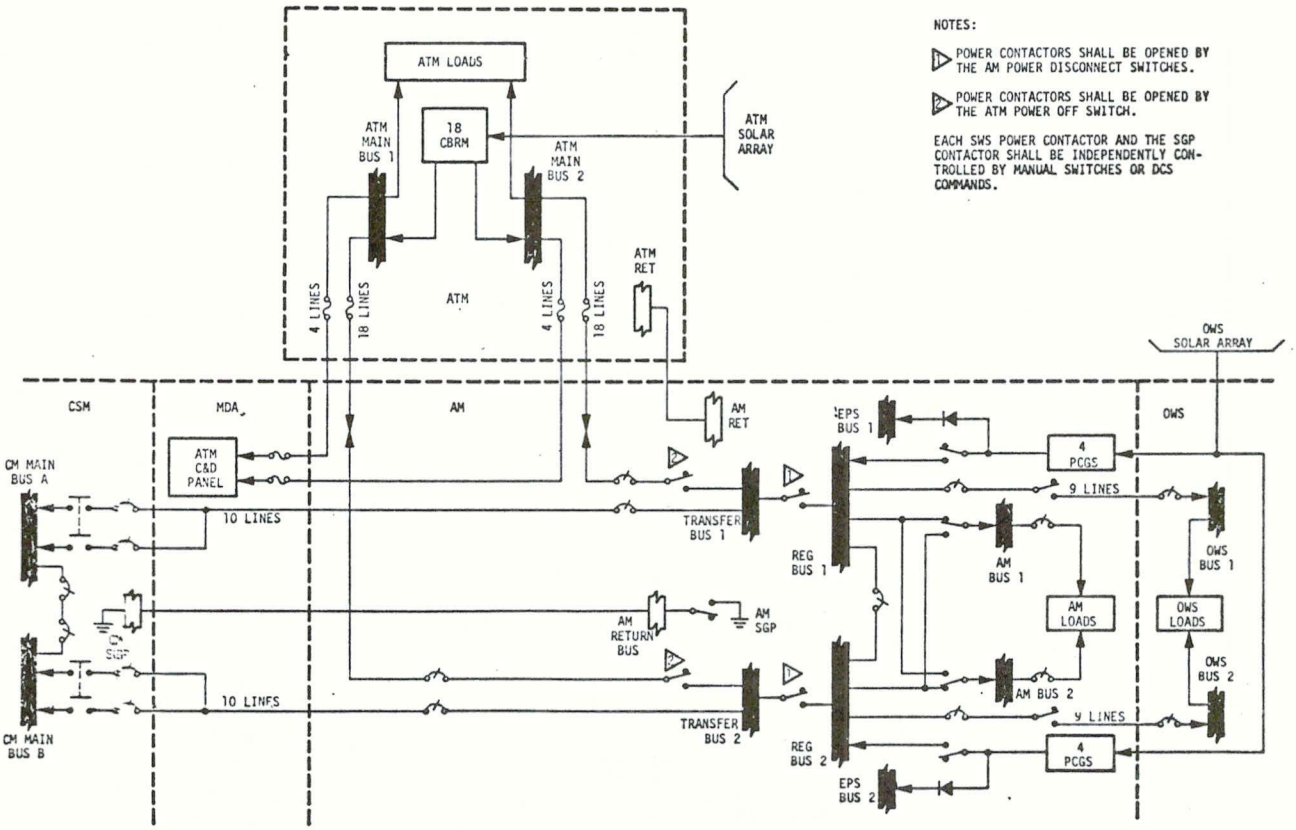

Figure 2.2-2 Paralleled Power Simplified Schematic

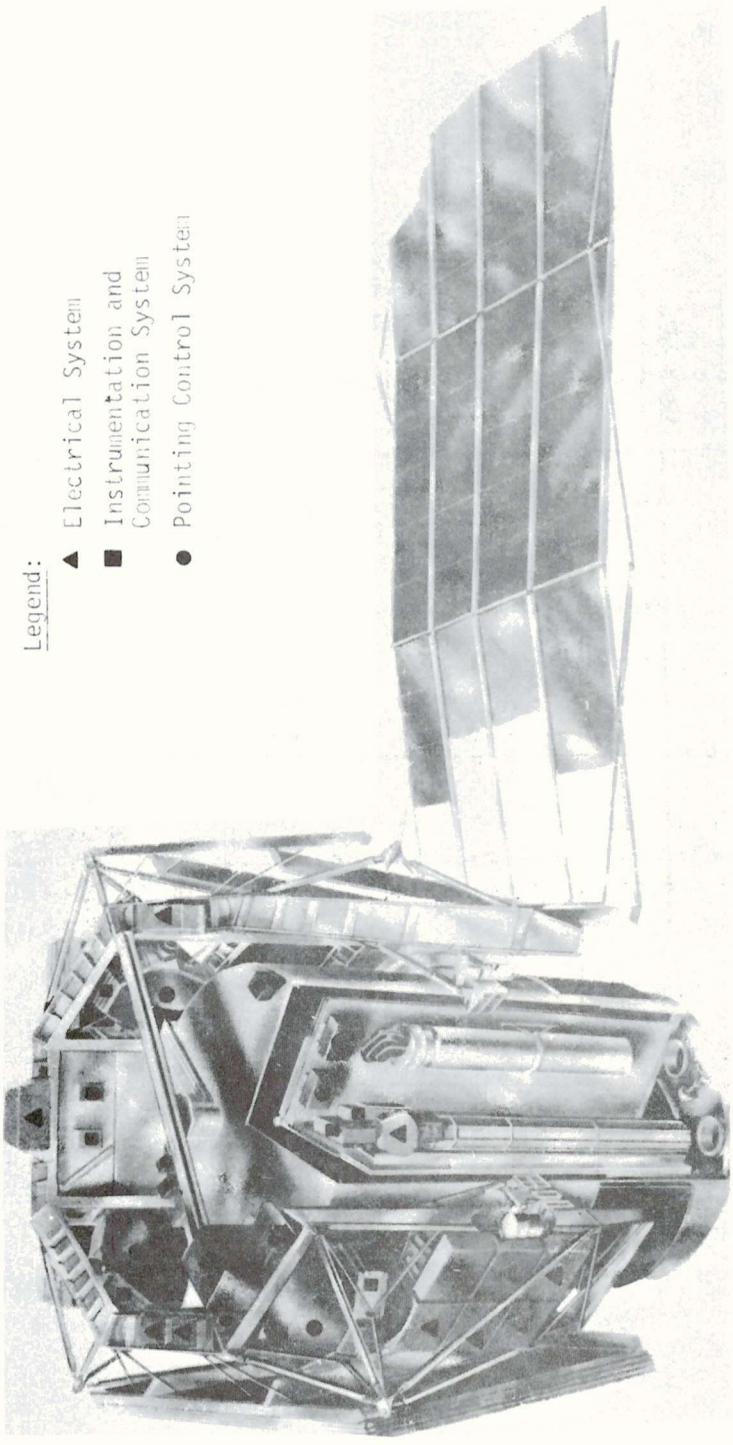

Figure 2.2-3 ATM Canister and Rack Locations

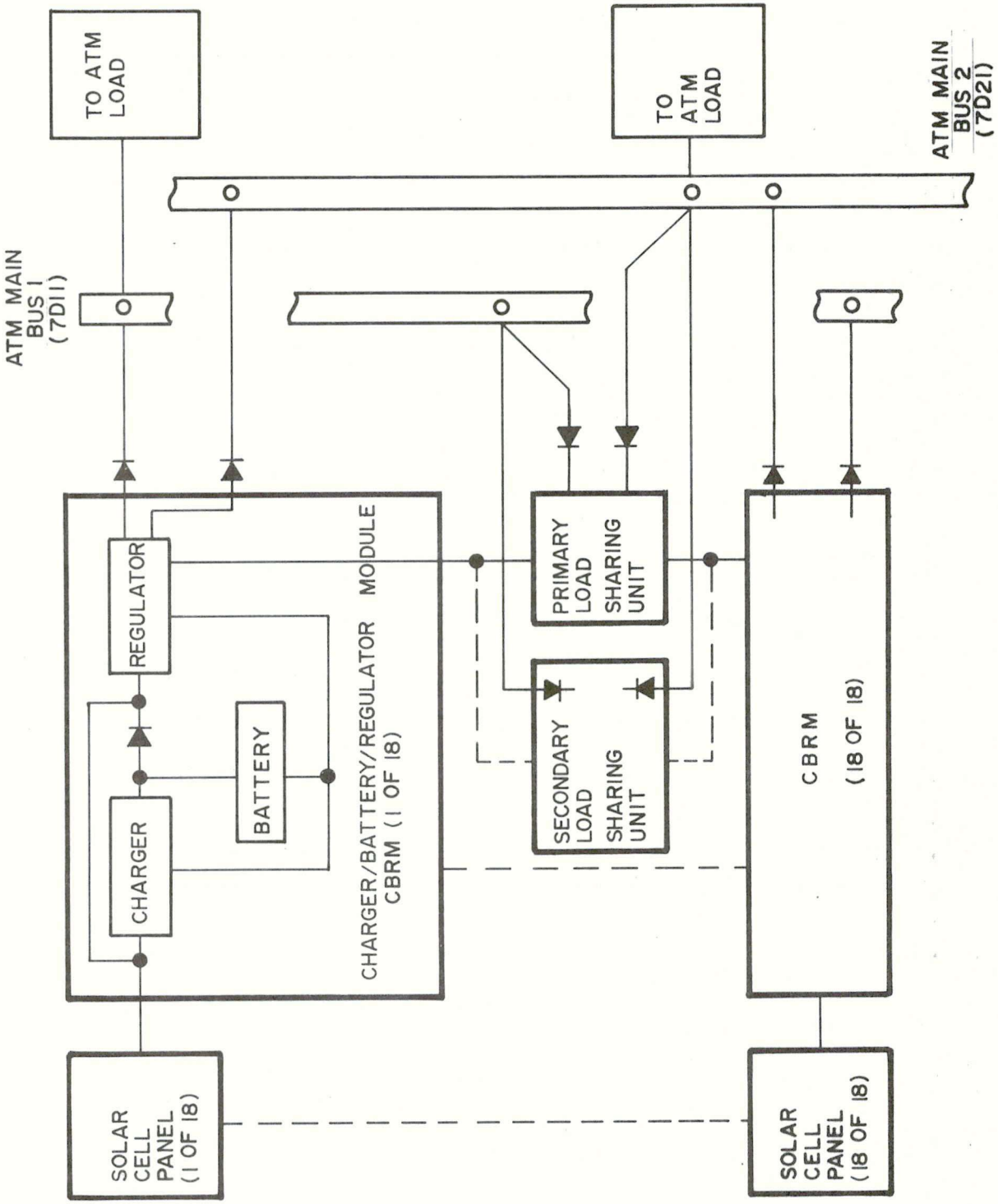

Figure 2.2-4 ATM Electrical Power Station

Table 2.2-I Interface Voltage Requirements

INTERFACE FROM	INTERFACE TO	FUNCTION	DC VOLTAGE AT INTERFACE (a)
AM	MDA	MDA Loads	25 to 30 (a)
AM	MDA	Power from SWS to CSM via MDA	27.9 to 30 (b)
AM	OWS	OWS Loads	25.5 to 30 (b)
MDA	CSM	Power from SWS to CSM via MDA	27.4 to 30 (b)
OWS	AM	Power from S/A to Am Power Conditioning Group	51 to 125
ATM	EXP	Power supplied from SWS to ATM Experiment (Diode inside of experiment)	26 to 30.5
ATM	EXP	Power supplied from SWS to ATM Experiment (Diode outside of experiment)	25 to 30.5
AM	MDA	ATM C&D Power	27.3 to 30.5
ATM	AM	ATM C&D Power (via MDA)	27.8 to 30.5
ATM	AM	Power transfer between ATM and AM	28.3 to 30.5
MDA/AM/OWS	EXP	Power supplied from SWS to Experiment	24 to 30

(a) Maximum ac component of bus noise = 1.0 v peak-to-peak for all frequencies from 20 Hz to 20 kHz.
Maximum transient voltage = $\pm$ 50 volts with a pulse width greater than 10 microseconds.

(b) Overvoltage and Undervoltage tolerance - $\pm$3.0 v, referenced to the upper and lower voltage limits, respectively, shown in the dc Voltage at Interface column. The voltage shall return to the steady-state value within 1 sec.

Details of the ATM electrical interfaces can be found in:

a. 50M02417, Performance and Design Requirements
b. 50M72900, ATM Equipment List
c. 40M33662, ATM Electrical Schematics
d. 50M35659, ATM/AM Electrical Interface
e. 40M35601, MDA/ATM C&D Electrical Interface

EPS

2.2.2.2 Caution and Warning Interfaces - The ATM EPS interfaces with the OA Caution and Warning subsystem in the AM. It is connected to two warnings signals and has no emergency or caution signals. The two warning signals are: ATM BUS 1 LOW and ATM BUS 2 LOW. Figure 2.2-5 shows the Caution and Warning Panel in the AM with the indicators "ATM BUS 1 LOW" and "ATM BUS 2 LOW" shaded in. The signals are activated when the respective bus voltages falls to 25.0 $\pm$ 0.5 VDC. Specifically, a positive signal will be given at 24.5 volts or below; no signal will be given at 25.5 volts or above; and a signal may be given between 24.5 and 25.5 volts. There are no indications for high voltage as the regulators are automatically disconnected if they reach 31.8 ± 0.2 volts. The warning signal of 25.0 ± 0.5 volts at the bus indicates a high load and possible loss of the CBRMs supplying it. Figure 2.2-6 shows the ATM EPS Caution and Warning circuitry. The C&W Bus in the ATM is supplied voltage from the AM. The voltage is then supplied to normally open contacts of redundant relays back through inhibit switches on STS Panel 207 and then through the C&W panels in the AM. The functions of the ATM C&W subsystem are covered in Section 2.6 of this handbook. Each ATM main bus feeds a DC/DC converter and redundant detectors. The detectors compare the ATM bus voltage with that of the DC/DC converter and, if the voltage is low, activate the relays which close the normally open contacts.

2.2.3 Functional Description

The ATM Electrical Power System (EPS) consists of a solar-cell array that is deployed in orbit and 18 charger-battery-regulator modules (CBRMs) for power conditioning, storage, and control. Each CBRM contains a rechargeable battery, a battery charger, and a load regulator. The output of each solar cell panel that comprises the array is connected to a single CBRM to form a separate power generation unit. The output of each CBRM is connected in parallel through isolation diodes to the ATM main buses via the collector buses in the power transfer distributor of the distribution system. (See Figure 2.2-4). Each bus is capable of supplying the ATM electrical requirements independently.

2.2.4 Major Component/Functional Description

2.2.4.1 Solar Array - The solar array consists of 18 power sources (solar panels) that are mounted in a four wing array. Each wing contains 4.5 solar panels; the half-panels on wings 1 and 4 are wired to form a single panel as are the half-panels on wings 2 and 3. Each panel is

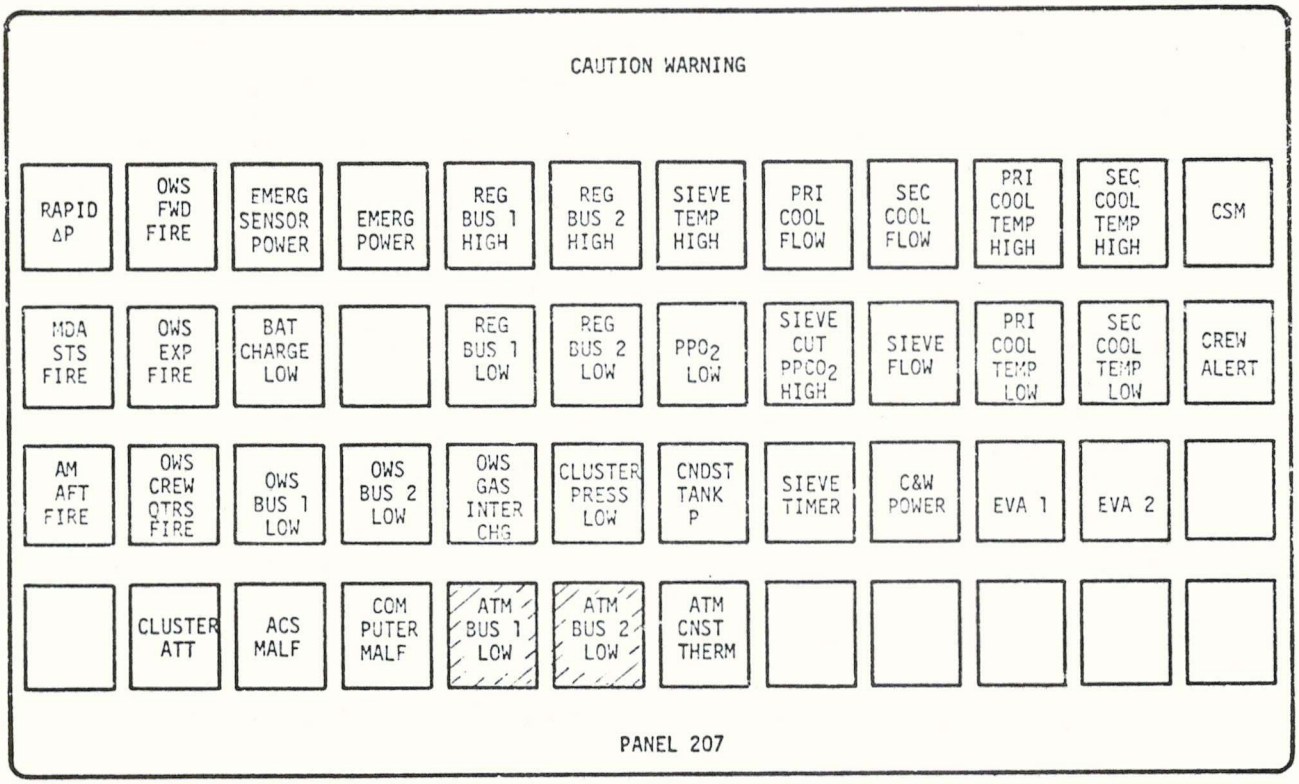

Figure 2.2-5 AM Caution and Warning Panel

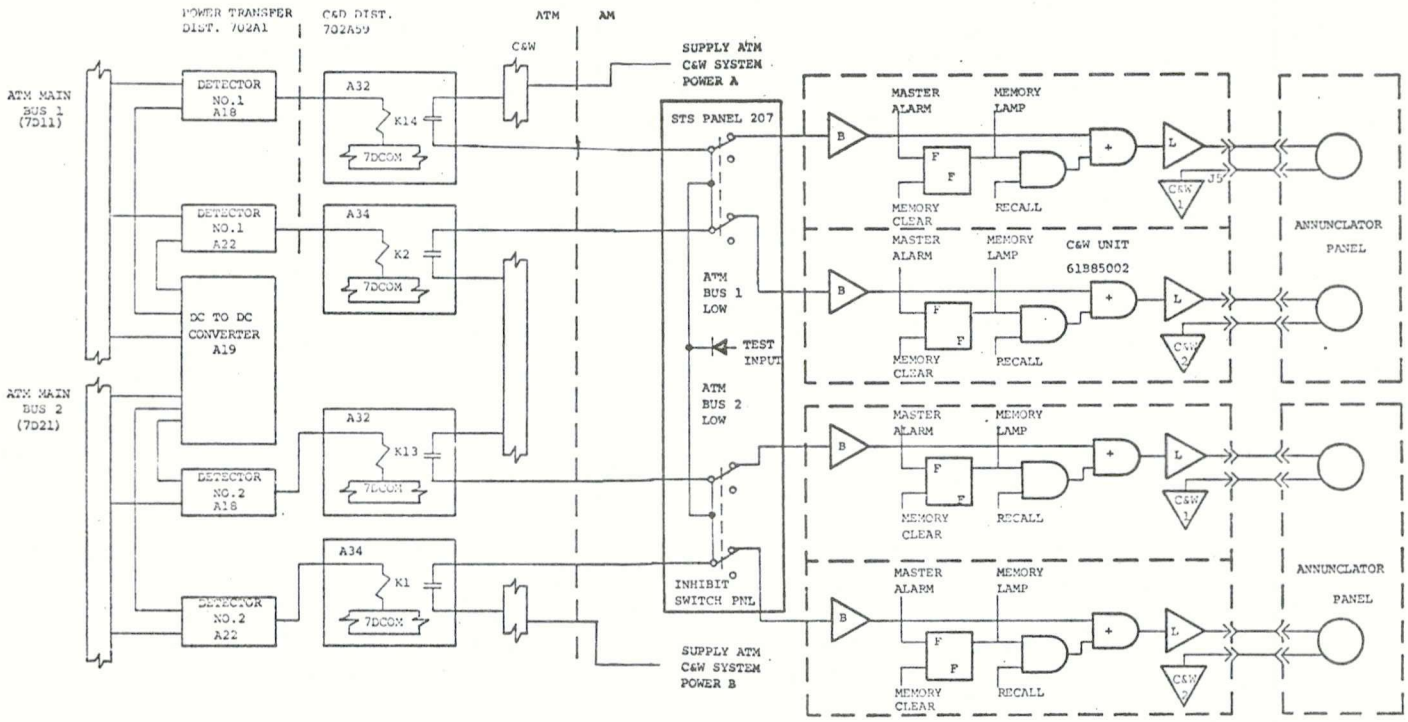

Figure 2.2-6 ATM Bus Low C&W Circuitry

electrically independent of the others and is composed of 20 solar cell modules connected in parallel and providing an input to one CRBM. Figure 2.2-7 depicts the general characteristics of the solar array, and Figure 2.2-8 shows the characteristics of an individual module. Initially, the solar array is stowed in a folded position and mechanically cinched to a supporting structure on the ATM. (See Section 2.1 of this handbook). Deployment is accomplished automatically at 24 minutes after lift-off by signals from the IU programmer. Backup deployment capability is provided via ground command. The time required for array deployment is approximately 3 minutes. The cluster is normally oriented by the attitude and pointing control system in the solar inertial mode so the array is held normal to the sunline during the orbital day. In the Z local vertical mode the attitude of the solar array relative to the sunline will vary. Figure 2.2-9 shows the solar array panels located on the wings connected to their corresponding CBRMs which are located on the ATM rack. The CBRMs and panels are referenced by their reference designators.

2.2.4.2 Solar Panel - Each solar panel is an independent power source and consists of 20 solar cell modules electrically connected in parallel. Each panel is capable of providing 580 watts at 55 degrees centigrade (°C).

The basic building block of the solar panel is the solar cell module. Two configurations of the module are used; one configuration consists of 684 2x2 cm solar cells with six cells in parallel and 114 cells in series; the other configuration consists of 228 2x6 cm solar cells with two cells connected in parallel and 114 connected in series. Figure 2.2-8 illustrates the configuration using 2x2 cm cells. Section 2.1 of this handbook shows the cross section of the module and a list of components and materials used. The characteristics of the solar cells used in both module configurations are listed in Table 2.2-II.

Table 2.2-II Solar Cell Characteristics

TYPE	N/P Silicon
THICKNESS:	Nominal 0.014 Inches
CONVERSION EFFICIENCY:	Nominal 10 percent at AMO
BASE RESISTIVITY:	7 to 14 Ohm-om
CONTACTS:	Sintered Silver-Titanium, Solder-Dipped

The coverslides for the solar cells are 0.012-inch thick fused silica and are used to provide protection to the solar cell from radiation and micrometeroroid damage. The coverslides are coated with an anti-reflective coating on the side exposed directly to the sun to allow maximum transmission of energy in the region of the solar cell peak spectral response. The side of the coverslide attached to the solar cell is coated with a reflective coating

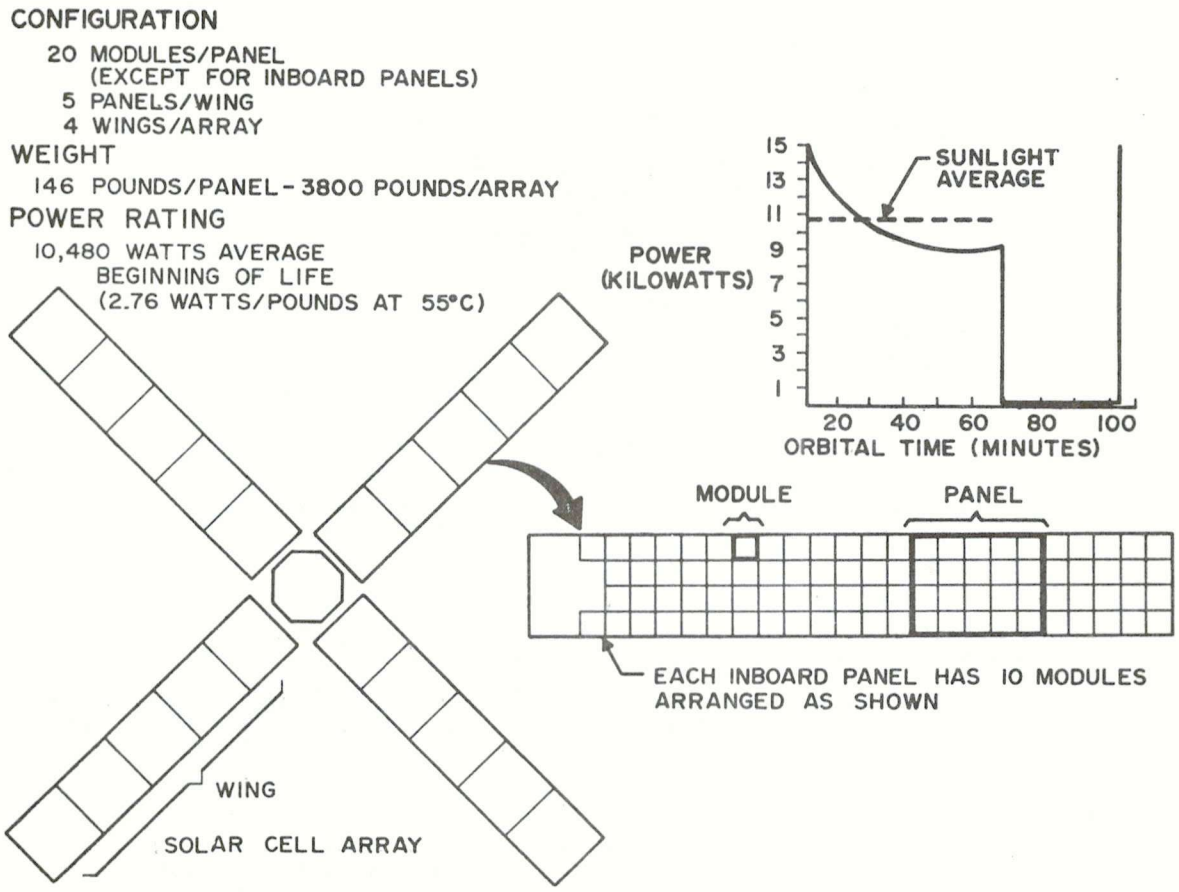

Figure 2.2-7 Solar Array Configuration and Power Output Vs. Ortibal Time

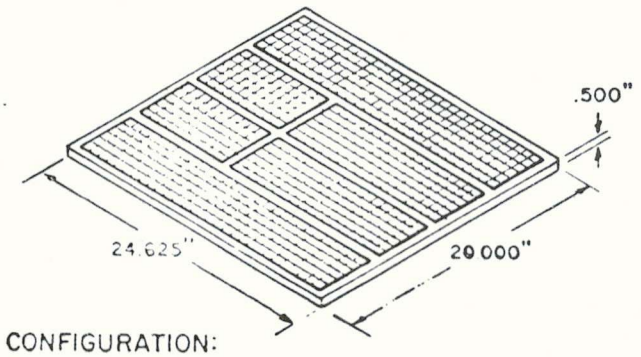

CONFIGURATION:
SOLAR CELLS
6 PARALLEL x 114 SERIES
2cm. X 2cm.
N/P, 10 OHM.cm., 10% EFFICIENCY
0.012" QUARTZ COVERSLIDES

RATING AT 55°C.:
P_M = 29.5 WATTS
V_M = 42 VOLTS
V_{OC} = 55 VOLTS

P_M = 29.5 WATTS
V_M = 42 VOLTS
I_M = 703 MA.

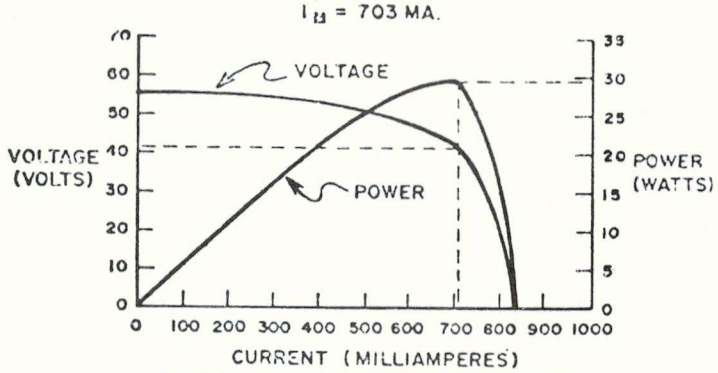

CHARACTERISTIC PERFORMANCE
(55°C)

Figure 2.2-8 ATM Solar Cell Module Type B

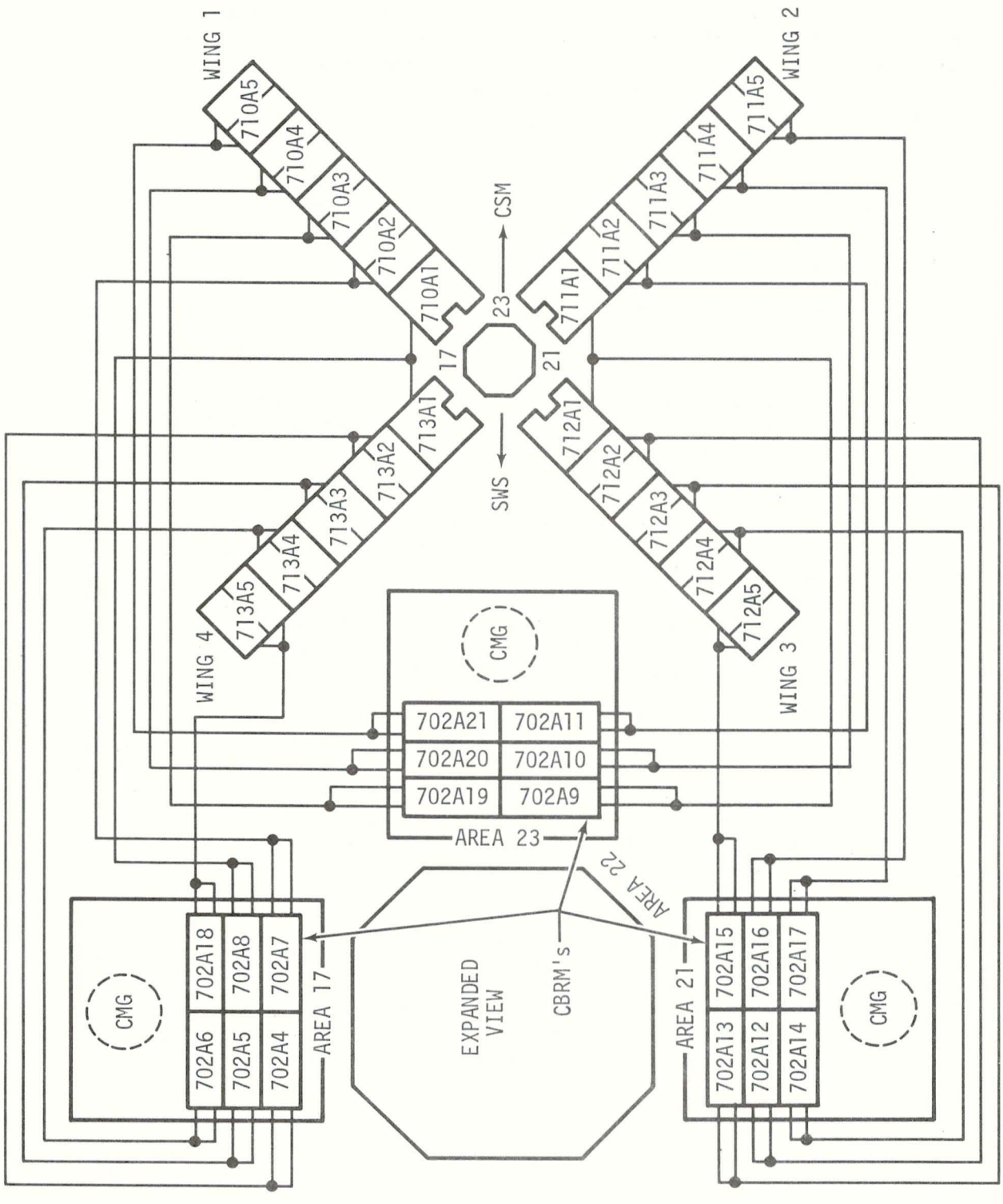

Figure 2.2-9 Solar Panel and CBRM Locations

to reject ultraviolet (UV) energy, providing protection from UV damage to the adhesive used in bonding the coverslide to the cell. The cut-on wavelength (wavelength where 50 percent of the light is transmitted) of the UV reflective coating is specified as 0.400 ± 0.015 microns.

The total weight of a solar cell module, including solar cells, coverslides, intercell connectors, adhesives, and substrate, is approximately 4.93 pounds. The minimum power rating of a module under one solar constant (140 Mw/cm^2) is 700 ma at 49.0 volts at 30°C. The power available from each solar module is inversely proportional to the operating temperature. Figure 2.2-8 shows the power curve for the solar cell module.

2.2.4.3 Solar Array Deployment System - The solar array is deployed from a folded position using a spring-loaded scissors and motor drive. Section 2.1 shows the solar panels in the stowed position and illustrates the deployment scheme. The deployment is performed upon a programmed command from the IU.

a. Cinching Subsystem - Each wing assembly is cinched to a backup structure by a number of restrainers that are released by firing the pyrotechnic initiators. Refer to Section 2.1. The pyrotechnic initiators used are the sealed type which permit rapid transmission of a burning charge. Two initiators are used in parallel for redundancy. For ground handling and test purposes the wing assembly can be released by mechanical means.

b. Deployment Actuator - This is an electromechanical actuator capable of moving the scissor arms and linkages into the deployed position within two minutes after the release of the cinch. The actuator drive motor(s) will operate on 24 to 32 vdc. The wings will be deployed two at a time (opposite quadrants). Manual switches on the C&D Console in the MDA provide backup control to the actuator motors for deployment or retraction of solar array wing pairs 1 & 3 and 2 & 4.

c. Linkage System - The solar panels are hinged together in an accordion-like manner. A multiple hinge design is used which requires alignment of corresponding hinge axes. The linkage and hinge system is designed to operate under zero-G conditions and to withstand docking loads (CSM to MDA) while in the deployed position. On the ground the array wings cannot be deployed without a special deployment fixture to counteract the weight of the panels.

d. For more details, refer to paragraph 2.1.4 of this handbook.

2.2.4.4 Solar Array Output - The major factors affecting the solar array output are the amount of sunlight striking the solar cells and the temperature of the panels. Both of these factors are affected by the orbital position and attitude of the cluster.

2.2.4.4.1 Orbital Factors - The amount of light striking the solar cells is dependent upon the angle of incidence between the sun rays and the solar cells. In the Solar Inertial (SI) mode of operation the angle of incidence is 90°. The angle of incidence will decrease from that of the SI mode when the cluster alters its attitude or operates in the Z-LV mode. The power output is maximum at a 90° incidence angle and will decrease following the cosine function of the incidence angle.

Another orbital factor which affects the solar array power output is the angle between the sun line and the orbit plane. This angle is called the Beta (β) angle and determines the length of time the cluster is in daylight. For the Skylab cluster with its 235 NM orbit it has been determined that a Beta angle of 69.5° would submit the cluster to continuous daylight. Studies evaluating the EPS requirements and the thermal resultants have indicated that the Beta angle to be used for the Skylab optimizes from 50 to 60 degrees. Figure 2.2-10 shows the relationship between the Beta angle and dark time per orbit. The daylight time per orbit is obtained by subtracting the dark time per orbit from the orbit time of 93.3 minutes. Figure 2.2-11 shows the relative position of the cluster as it maneuvers to the Z-LV mode for the Earth Resources Pointing Sequence and illustrates how the solar vector would strike the solar cells during the maneuvers are 1-2 in SI (dark periods); 2-3 maneuver to Z-LV; 3-4 hold in X-LV; 5-1 maneuver to SI. The corresponding power outputs for these maneuvering positions are shown for B angles of 30° and 60°.

2.2.4.4.2 Temperature Factors - Solar cell operating characteristics are such that voltage as well as power are adversely affected by elevated temperatures. Factors which affect the solar panel temperature are:

a. Sun angle
b. Sunlight and shadow periods
c. Absorption and emissivity of solar panel
d. Electrical load (to some extent)

Data illustrates that the solar panel power capability is highly dependent upon temperature. Figure 2.2-12 depicts the solar panel voltage output vs temperature. It is also noted that temperature has very small effect on the solar panel current. Consequently, the power output change with temperature is essentially dependent upon the voltage change. Figure 2.2-13 shows that the maximum power output spread of 80 type A Modules tested at 30°C was from 34.3 watts to 39.8 watts.

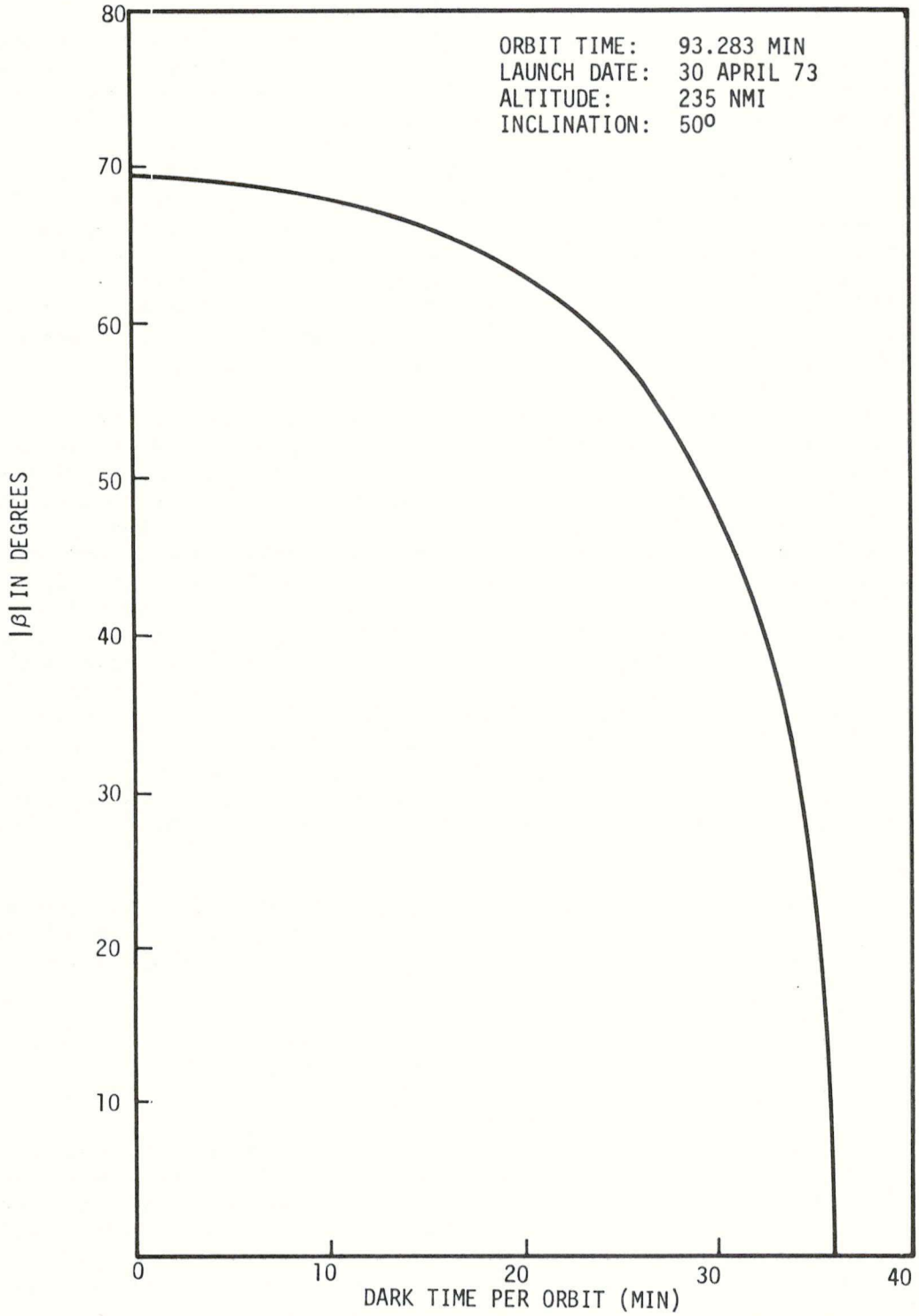

Figure 2.2-10 Relationship Between Beta Angle and Dark Time Per Orbit

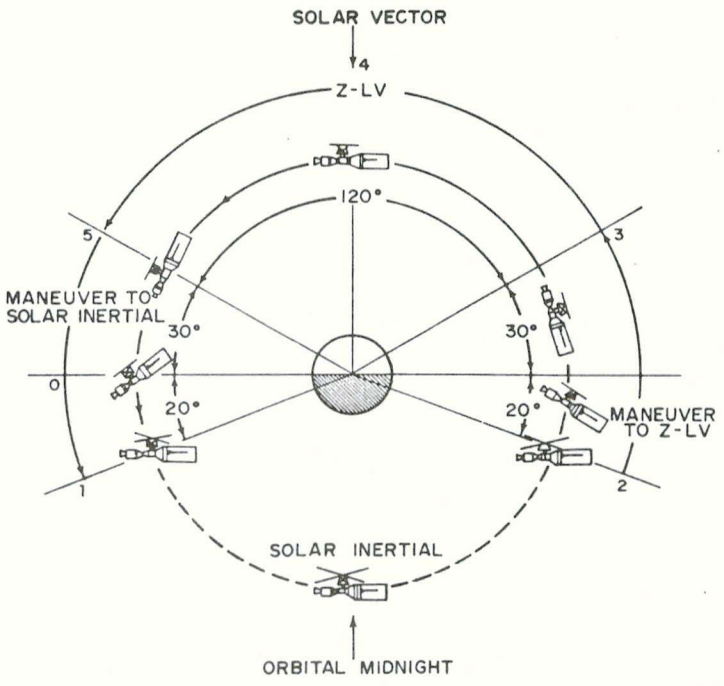

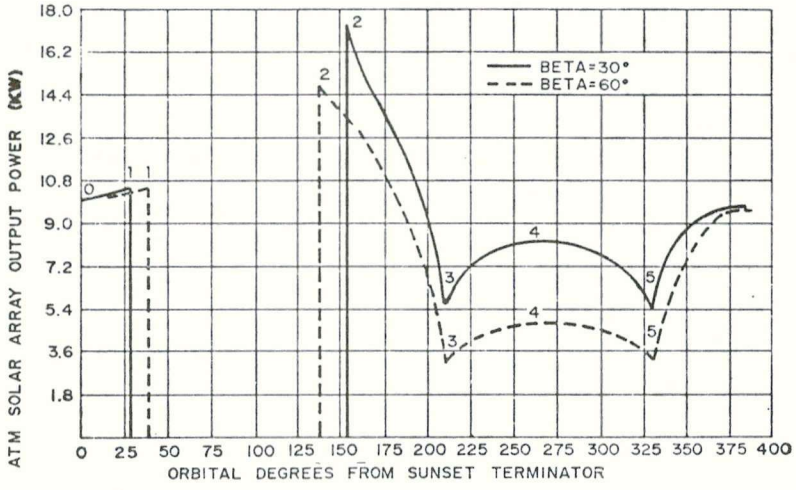

Figure 2.2-11 ATM Solar Array Output For Pointing Sequence

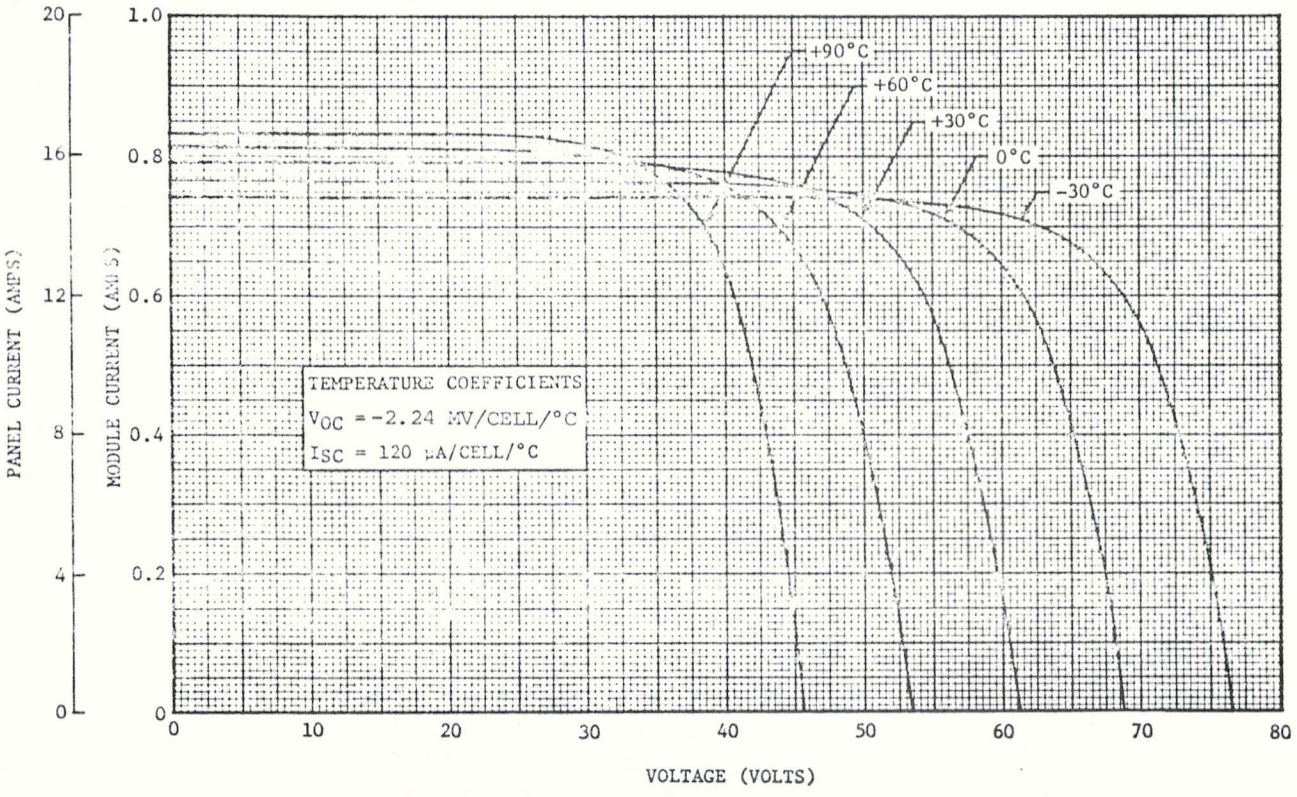

Figure 2.2-12 ATM Solar Module Temperature Profile

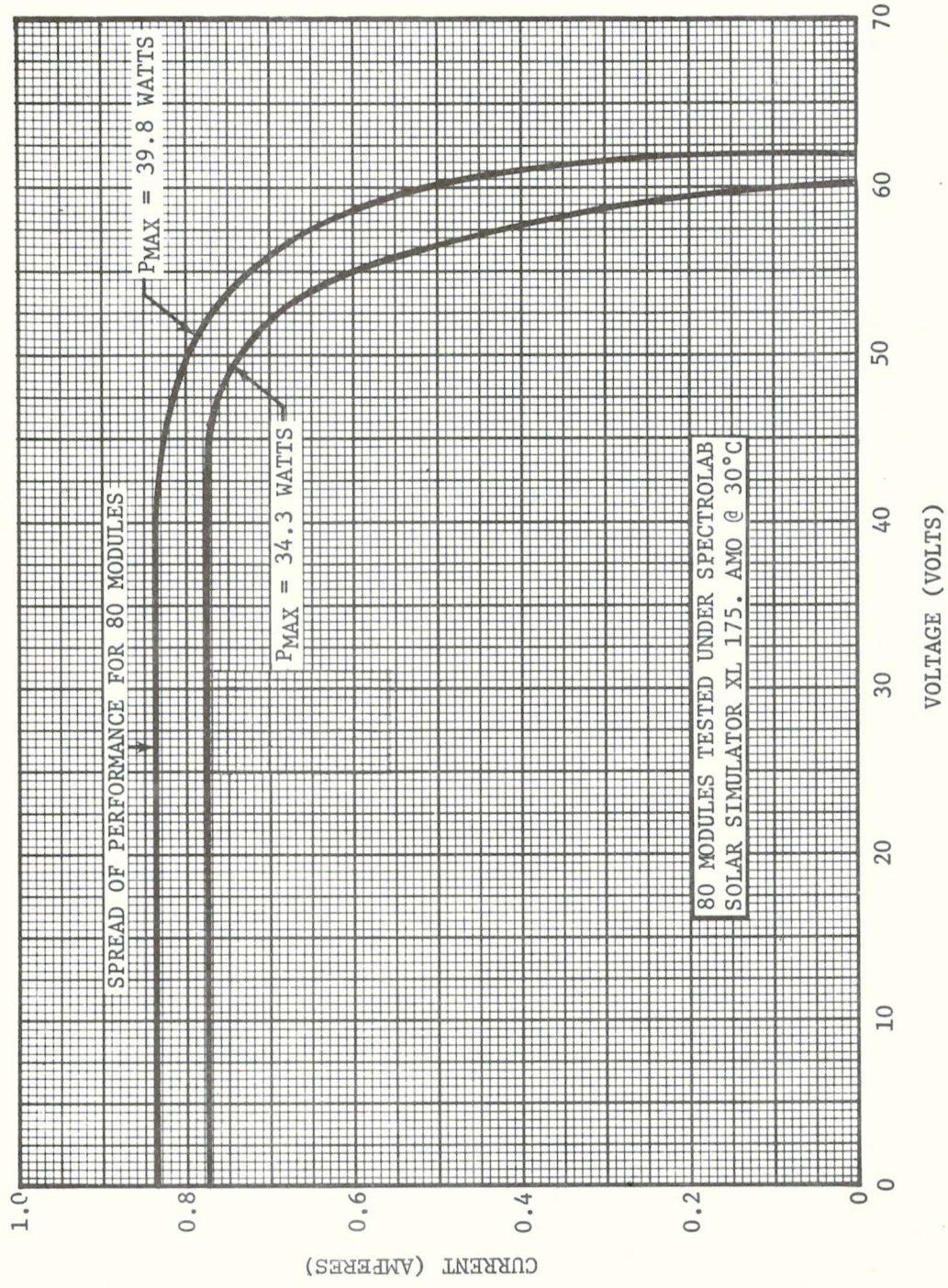

Figure 2.2-13 ATM Solar Array Module I-V Characteristics

Two of the solar modules have been painted black to minimize reflections to the star tracker which is a part of the Pointing Control System (PCS). This causes higher temperature differentials between the modules than would normally be expected. The array was divided into six nodes and tests were run to determine the temperatures at these nodes. The temperature variations with time were determined for an orbit. Figure 2.2-14 shows the nodes and the temperature to be expected for a 55 minute sunlight orbit and a 65 minute sunlight orbit. There was a 19.9°C differential between the highest and lowest temperatures which would give approximately a 10 percent difference in power output from the solar cell panels in the hottest and coldest regions.

The panels contain modules utilizing 2 cm X 6 cm solar cells in a 2 parallel X 114 series combination (Type A) or 2 cm X 2 cm solar cells in a 6 parallel X 114 series combination (Type B). The panels have a power output at 30°C of 772 watts for Type A and 712 watts for Type B. Combinations of Type A and Type B panels have been recommended to minimize the power output variations and meet the requirements for each CBRM to supply equal power to the load bus. (See Table 2.2-III).

2.2.4.4.3 Degradation Factors - Solar array degradation attributable to manufacturing and assembly processes can be significant. These initial output reduction factors, which can be controlled but not eliminated, are:

a. Cover slide transmission loss
b. Assembly losses (packing and mismatching)
c. Ultra-violet degradation (considered as an initial loss because it occurs early in the exposure period)
d. Wiring losses (wire, connectors, terminals, etc.)

Long-term degradation factors are influenced by mission parameters of altitude and orbital plane, and the magnitude of degradation is cumulative with life time. The long-term degradation factors are:

a. Penetrating radiation degradation due to trapped and solar flare cosmic radiation (electron and proton flux).
b. Thermal cycling affects
c. Degradation by micrometeorite erosion

The ATM vehicle orbital parameters and mission length will preclude any serious radiation degradation of the solar power.

2.2.4.5 Charger/Battery/Regulator Module (CBRM) - The CBRM is a complete package containing charger, battery, voltage regulator, and associated auxiliary circuits and control devices. The modules were developed with the following design requirements:

a. Capable of operating independently
b. No single-point failure (i.e., one module failure shall not result in the failure of the entire power system).

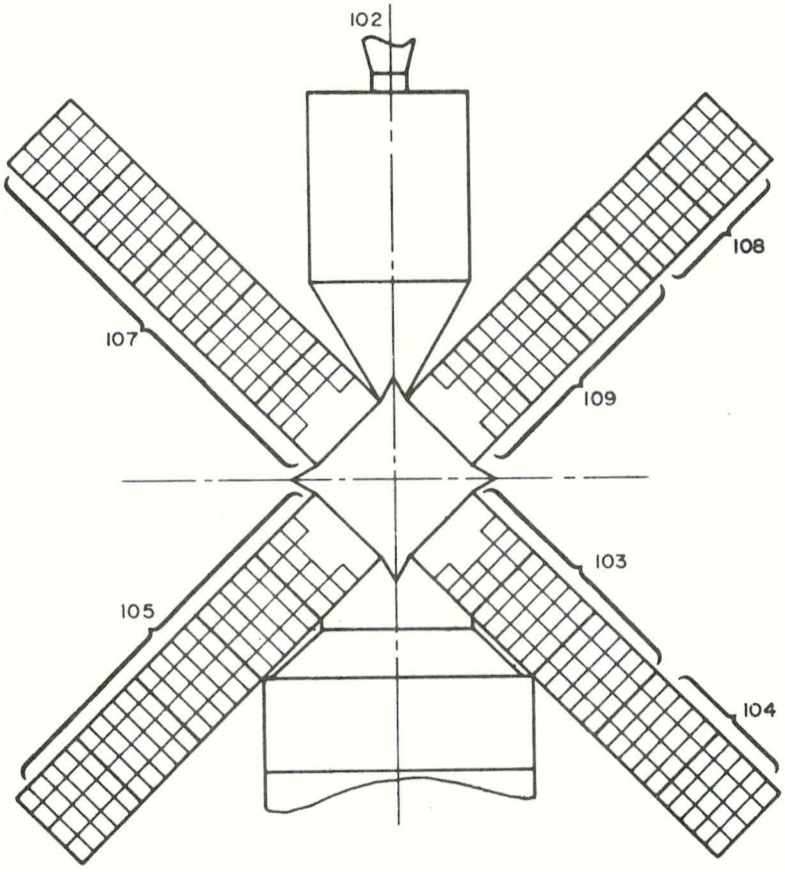

NODE	SUNLIGHT TIME/ORBIT 55 MIN	65 MIN
103	49.1°C	52.0°C
104	60.5°C	62.9°C
105	48.0°C	51.3°C
107	40.6°C	44.0°C
108	52.1°C	53.4°C
109	43.5°C	46.4°C

Figure 2.2-14 ATM Wings with Node Designations

NODE	NUMBER OF PANELS	TEMPERATURE (°C)		POWER OUTPUT PER PANEL (WATTS)				TYPE OF MODULE RECOMMENDED	POWER OUTPUT	
		55-MIN DAYLIGHT	65-MIN DAYLIGHT	TYPE A		TYPE B				
				55-MIN	65-MIN	55-MIN	65-MIN		55-MIN	65-MIN
103	2*	49.1	52.0	660	648	618	607	B	618	607
104	2	60.5	62.9	617	607	578	569	A	617	607
105	4**	48.0	51.3	665	651	622	610	A	665	651
107	4**	40.6	44.0	694	681	648	636	B	648	636
108	2	52.1	53.4	649	644	608	604	A	649	644
109	2*	43.5	46.4	682	670	638	627	B	638	627
* NODE 103 + 109 One Panel				671	659	628	617	A	671	659
** NODE 105 + 107 One Panel				680	666	635	623	B	635	623

NOTES: 1. Power output for type A solar cell panel at 30°C 772 watts.
2. Power output for type B solar cell panel at 30°C 722 watts.
3. Mismatch loss of five percent assumed.

Table 2.2 - III. Solar Panel Power Output

c. No single-point failure shall result in a high voltage on the CBRM output buses
d. Overload protection
e. Equal load sharing by all modules
f. Automatic fault detection with recovery capability

EPS

A block diagram of the CBRM and power source subsystem is shown in Figure 2.2-15. The output of the bus regulator is fed through isolation diodes to redundant power buses. The electronic parts mounted in the housing of the CBRM will withstand a maximum housing temperature of 50°C (122°F). Those mounted on the CBRM cover will withstand a maximum cover temperature of 100°C (212°F). The battery is designed to be operated in a 0°C to 30°C (32°F to 86°F) ambient temperature range. Figure 2.2-16 shows the CBRM functional arrangement.

2.2.4.5.1 Charger Section - The charger section uses solar panel power as its input for charging the CBRM battery. The charger senses the voltage and current input of the solar array and the voltage, temperature, charger current and third electrode voltage of the battery to accomplish charging. The charger converts the wide range of input voltages from the solar panel to the level required for charging the battery.

The charger is turned on automatically when the solar panel input voltage exceeds 42 volts and a charger ON command has been initiated. The modes of operation involved are: 1.) a constant current charge mode; 2.) a solar panel limited charge mode, and 3.) a constant voltage charge mode. Initial charging begins in a constant current mode until: a) solar panel voltage drops to 38 volts, or b) total solar panel current tends to exceed 13.5 ± 0.5 amps, or c) battery voltage exceeds the maximum value specified for the battery temperature while charging. (See Figure 2.2-17). Conditions (a) or (b) will automatically switch the charger to the solar panel limited mode where it remains until the load on the solar panel allows the charger to switch back to a constant current mode or until the battery voltage as a function of temperature relationship reaches the desired value. At this point, the constant voltage mode is automatically initiated and is maintained until the battery 3rd electrode signals a fully charged condition turning off the charger. When condition (c) above occurs the charger will automatically switch to a constant voltage mode and continue in this mode until charge is complete or solar panel voltage drops below 38 volts. The charger discontinues charging at any time the CBRM input voltage becomes less than 38 vdc and turns off at 36 vdc. The output of the charger is protected from short circuit by current limiting; current limit is 15 amps. The charger can be commanded ON and OFF by switches on the ATM C&D Console, by the Digital Address System (DAS) keyboard, and by ground command. Figure 2.2-18 illustrates the dependency of the charger tripback voltage upon temperature. The alert and disconnect voltage curves are similarly dependent upon temperature.

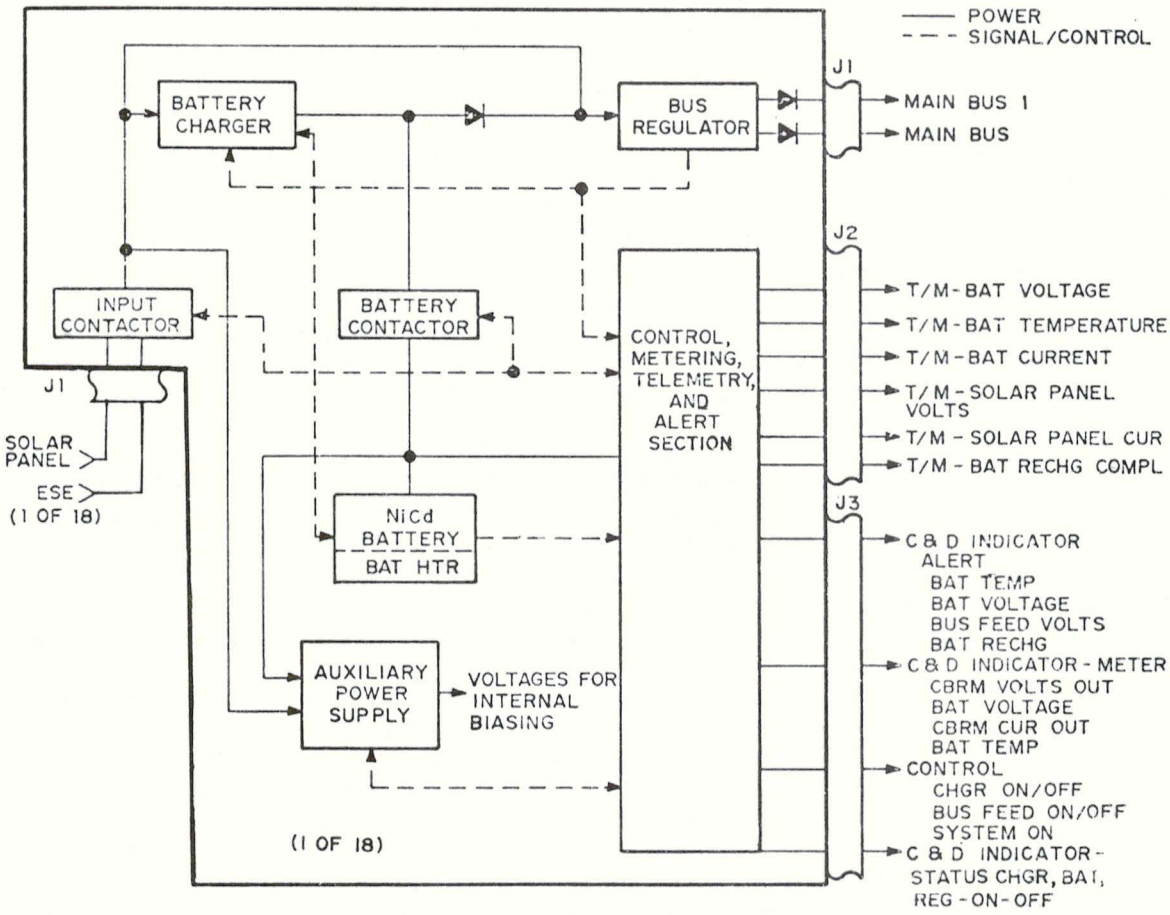

Figure 2.2-15 CBRM Schematic

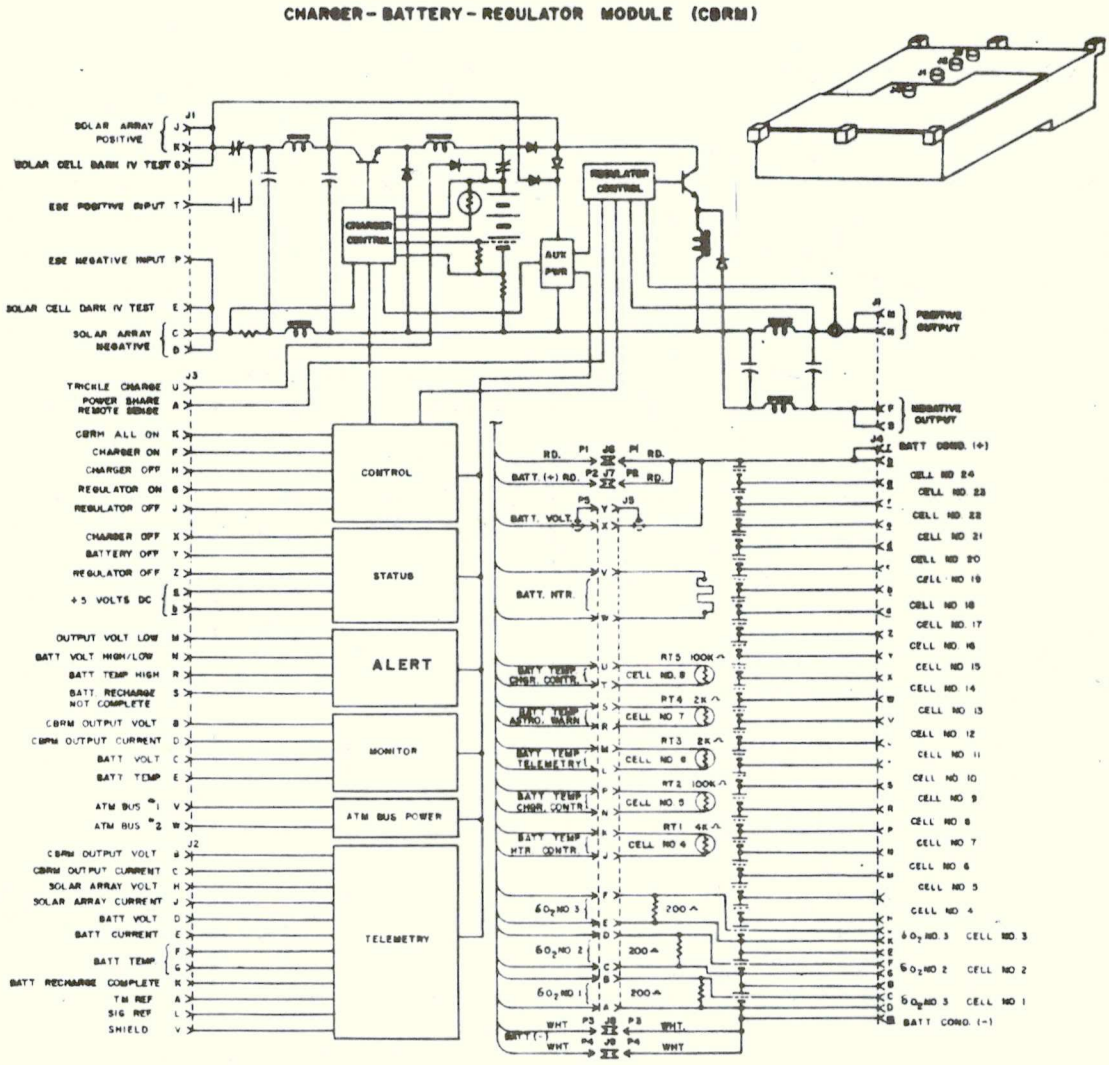

Figure 2.2-16 CBRM Functional Diagram

EPS

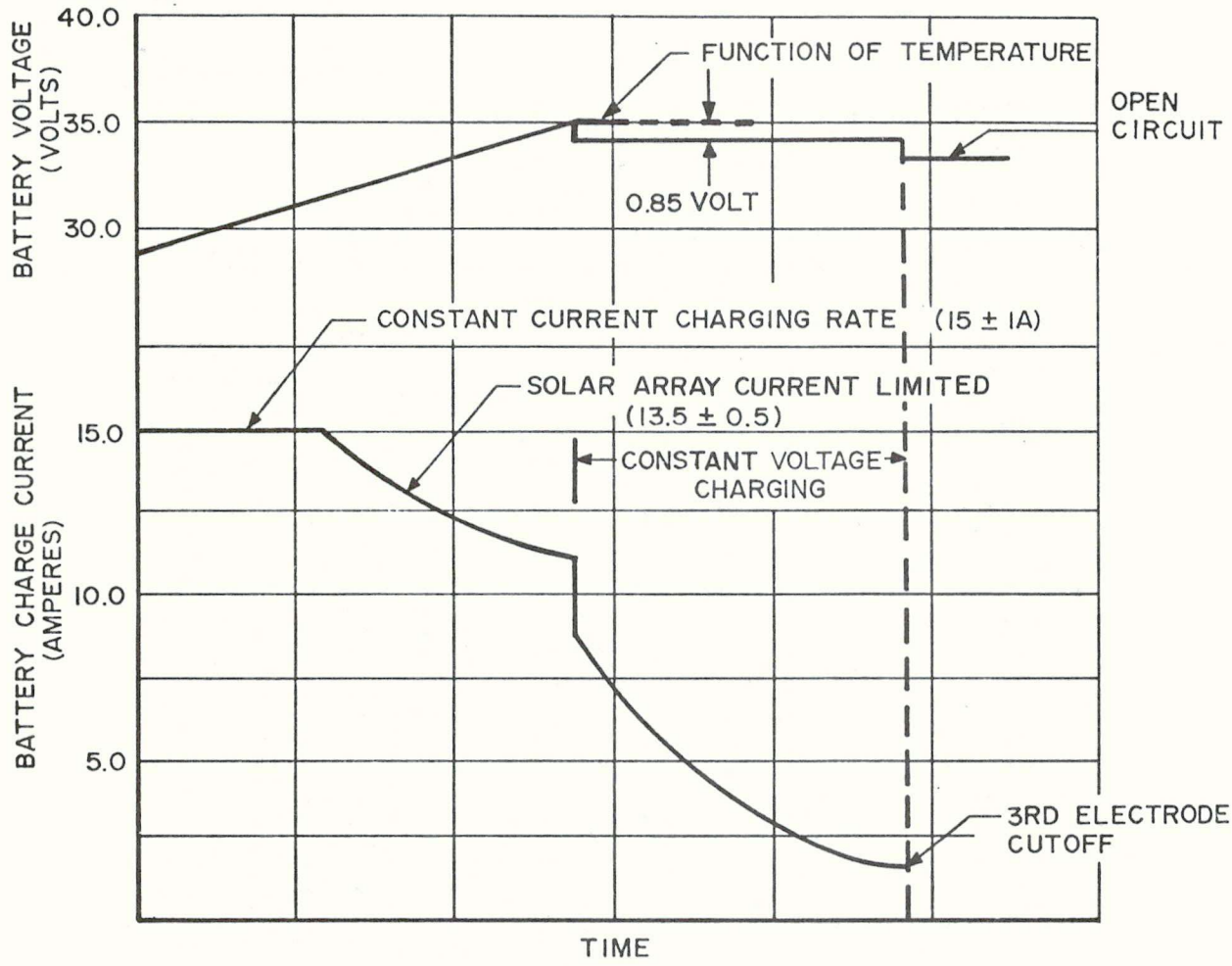

Figure 2.2-17 ATM Battery Charging Conditions

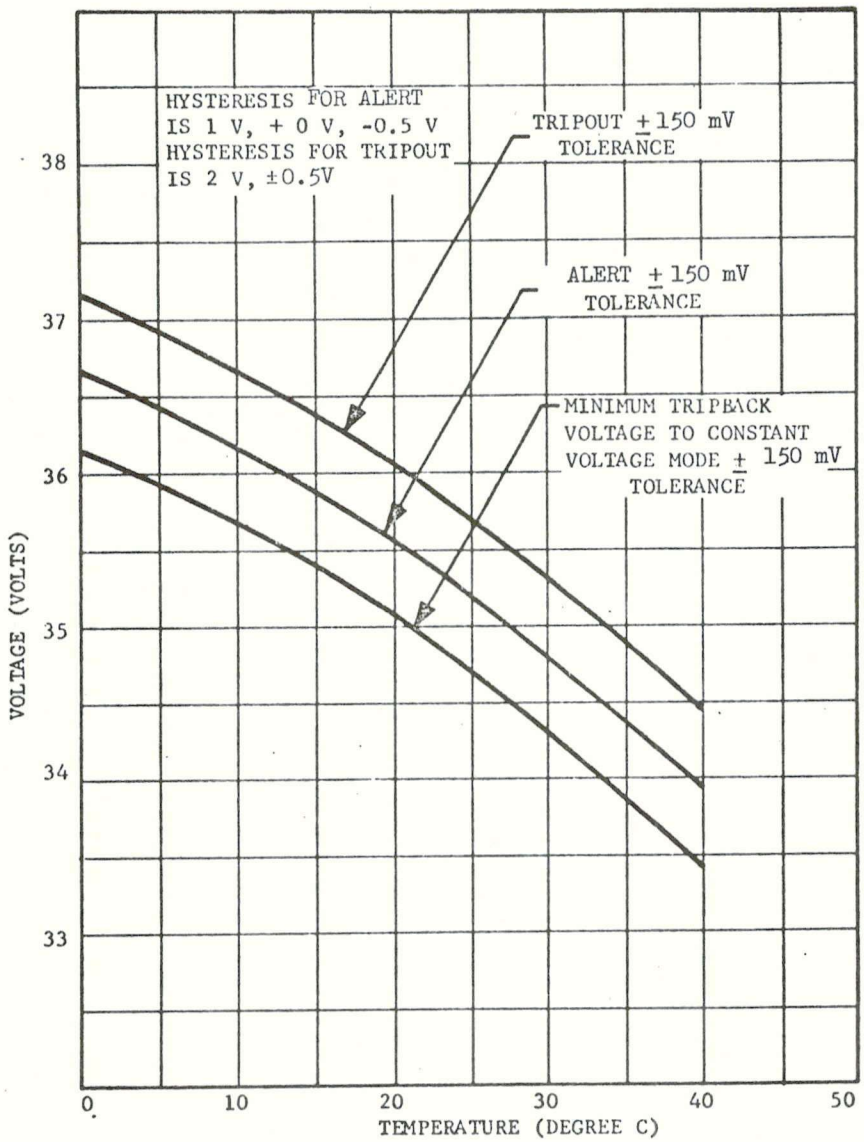

Figure 2.2-18 ATM Battery Charge Trip Voltage as a Function of Temperature

The charger ON command activates the charger and closes the solar array input contactor and battery contactor if they are not already closed. The charger OFF command deactivates the charger and opens the battery and input contactors if the regulator is off.

2.2.4.5.2 Battery Section - The ATM electrical power is supplied by 18 nickel-cadmium storage batteries during the dark portion of the orbit. The batteries are rechargeable and the energy depleted during dark orbit discharge is replenished during the daylight portion of the orbit. The energy is supplied by the solar arrays to the CBRM electronics where it is conditioned and utilized for charging. The ATM batteries are composed of 24 sealed nickel-cadmium cells connected in series and auxiliary components for control functions assembled in the battery compartment of the CBRM case. Five internal connectors (P1, P2, P3, P4 and J5) carry power and control signals to the electronics and an external connector (J4) provides for battery conditioning and monitoring, see Figure 2.2-16. When the batteries are mounted on the ATM, the connectors of J4 are available at the ESE carry-on interface through extension cables. A properly charged battery has a manufacturers rating of 20 ampere hours when discharged at a 10 ampere rate and a battery temperature of 25°C (77°F). The voltage output is 24 to 32.5 volts when discharged in the load range of 0 to 10 amperes. Each battery weighs 48 pounds and has a life requirement of 4000 cycles at an average maximum depth of discharge of 30%. Power from the battery is provided to the input of the regulator whenever the solar panel voltage drops below the open circuit voltage of the battery. The battery is protected from temperatures below 0°C by an automatic electrical heater and control feature in the CBRM. Additional sensing is provided to activate crew alert flags on the ATM C&D Console if any battery approaches an excessive temperature condition, a high or low voltage condition or if it fails to reach full charge during orbital day.

The flight batteries are composed of General Electric four electrode cells. Prior to assembly, the cells are tested and matched to provide close uniformity of performance between the cells when operated as a battery. The third electrode in the cell produces a voltage between it and the negative plate proportional to the oxygen released during battery charging. The characteristics of the third electrode for each cell of the battery are obtained and three cells with suitable characteristics are selected as control cells. The signals generated at the 3rd electrodes are fed to the electronics to indicate a fully charged battery and to terminate charging.

The fourth electrode in the cell is a passive electrode which provides oxygen recombination, reduces cell pressure build-up during charging, and assures complete third electrode signal decay during battery discharge.

The battery has five thermistors installed in it to monitor or control critical temperature functions (See Figure 2.2-16). RT_1 monitors the low temperature limit and controls the electronics which activates a battery heater. RT_3 monitors the actual battery temperature and supplies an output signal to telemetry for ground control readout. RT_4 monitors the battery for high temperature control and supplies an alert signal to the POWER SYSTEMS alert light and the BAT TEMP talkback flag. Thermistors RT_2 and RT_5 supply redundant battery temperature signals to the electronics to determine the voltage level point at which constant current charging is to cease and constant voltage charging is to start.

Malfunction protection will automatically deactivate the charger and the battery when:

a. Battery voltage exceeds the maximum desired level for the specific battery temperature during charging.
b. Battery voltage drops below 26.4 V; +0.5, -0V
c. Battery temperature exceeds 50°C; + 0°C, -2°C (122°F; +0°F, -4°F)
d. Battery discharge current exceeds 25A $\pm$ 1A

If an out-of-tolerance condition returns to within limits, operation can be restored by a charger OFF command followed by a charger ON command. Automatic recovery is not provided. Figure 2.2-18 shows ATM Battery Charge trips point as a function or temperature.

2.2.4.5.3 Regulator Section - The load regulator section of the CBRM converts a wide range of input voltages (25.5 to 80 vdc) into a closely regulated output voltage. The input voltage is supplied by the solar array or the batteries, whichever is higher. Output voltage is maintained between 27.1 vdc at full load and 30.4 vdc no load with output current limited to 20.0 amps maximum under output short circuit conditons. Sensing is provided to activate a crew alert indicator if regulator output increases to 31.8 $\pm$ 0.2 vdc or drops below 20 $\pm$ 1 vdc.

Circuit protection logic will automatically remove the regulator from the line if the output voltage exceeds 31.8 $\pm$ 0.2 vdc. The regulator can be commanded back on the line if the output voltage returns to within limits by a regulator OFF command followed by a regulator ON command. Automatic recovery is not provided.

ON/OFF control can be accomplished by switches on the C&D Console, by the DAS keyboard, and by ground command (REG ON/OFF). The REG ON command activates the regulator on and closes the solar array input contactor if it is not already closed. The REG OFF command deactivates the regulator and opens the battery contactor and input contactor if the charger is off. Figure 2.2-20 is a Load Regulator Functional Schematic. Figures 2.2-19 and 2.2-21 show the regulator's output voltage slope and power characteristics respectively.

2.2.4.5.4 Auxiliary Power Supply Section - This section develops the required biasing voltage for operation of the CBRM circuitry. The input power is supplied by either the solar panel or the CBRM battery. Input voltage sensing is provided which will automatically turn off the power supply if input voltage decreases below 26 vdc; normal operation is automatically restored if input voltage is increased above the minimum level. The bias power supply is essential to the operation of the CBRM. If the 15 vdc reference voltage that is generated exceeds 15.2 vdc or drops below 14.8 vdc the CBRM will be automatically deactivated.

2.2.4.5.5 Control, Metering, Telemetry and Alert Section - This section of the CBRM provides control, protection, and monitoring of the charger, battery, and regulator for proper CBRM operation. The section responds principally to the commands originating from the C&D Console or ground command, and to the CBRM malfunction detection circuitry to activate and deactivate relays that control the operation of the CBRM. Control is also provided for application of electronic support equipment power during prelaunch checkout. Table 2.2-IV is a summary of the ATM Electrical Power Subsystem CBRM control/monitoring/protection.

2.2.4.5.6 Power Sharing - Each CBRM regulator has a locally programmed terminal impedance and maintains an output voltage of 30.4 vdc to 27.1 vdc from no load to full load. Slight variations in this terminal impedance or in the distribution impedance cause a significant unbalance in the load supplied by each regulator. Additional circuitry is required to adjust the impedance of each regulator to compensate for the variations in the distribution impedance on individual regulators. The "power sharing" circuits make the CBRMs to supply equal currents to the load buses so the batteries will maintain similar charge-discharge cycling rates.

"Primary Power Share" and "Secondary Power Share" are command signals which activate relays whose contacts are between identical sensing units and the CBRM. Each of the sensing units will sense the voltage on both of the load buses. The bus voltage vs. current slope (See Figure 2.2-22) will determine the current required from each CBRM. A signal is fedback through the closed relay contact and through a 2000 ohm resistor and an isolation diode to each CBRM.

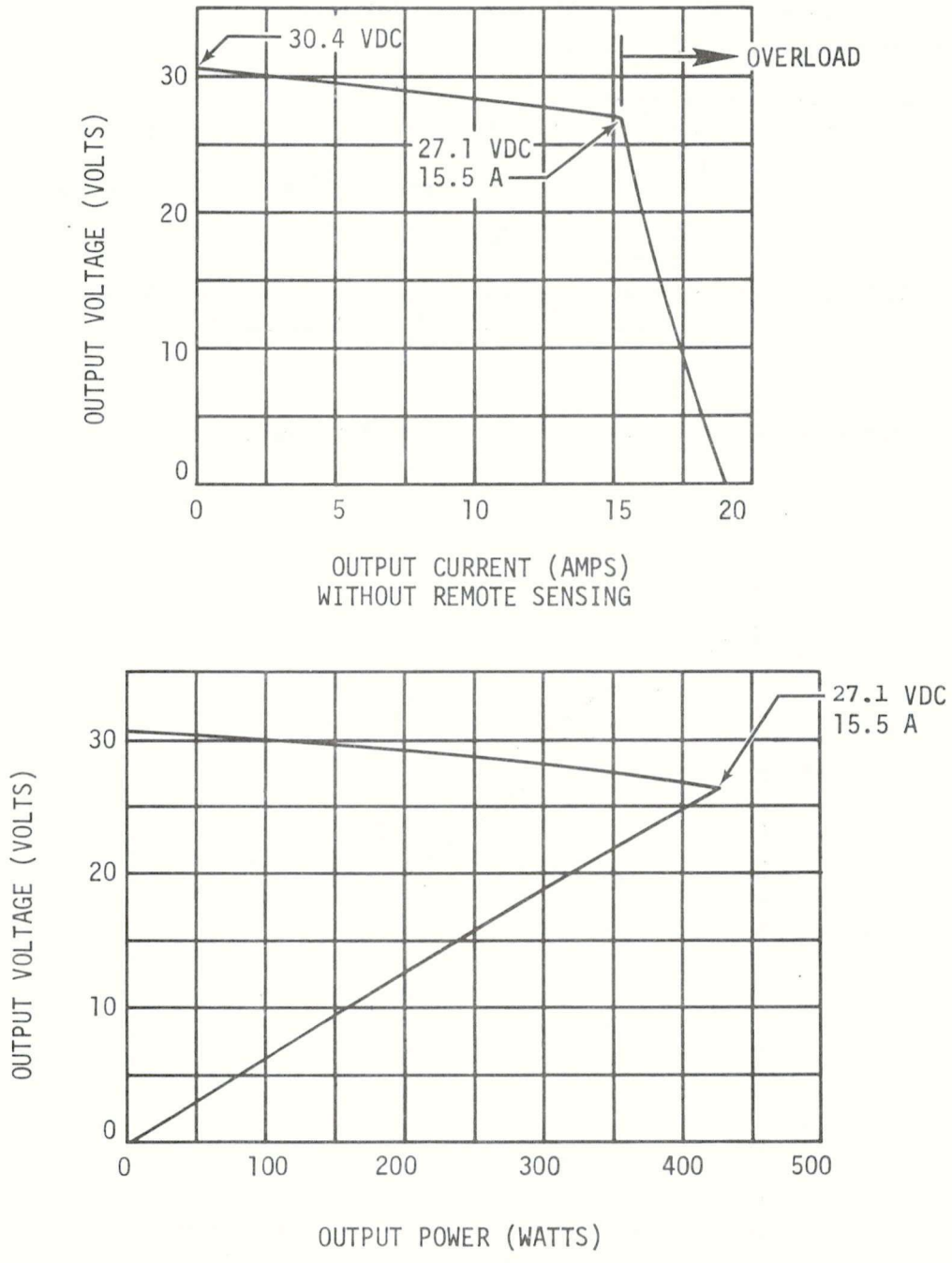

Figure 2.2-19 ATM Load Regulator Output Characteristics

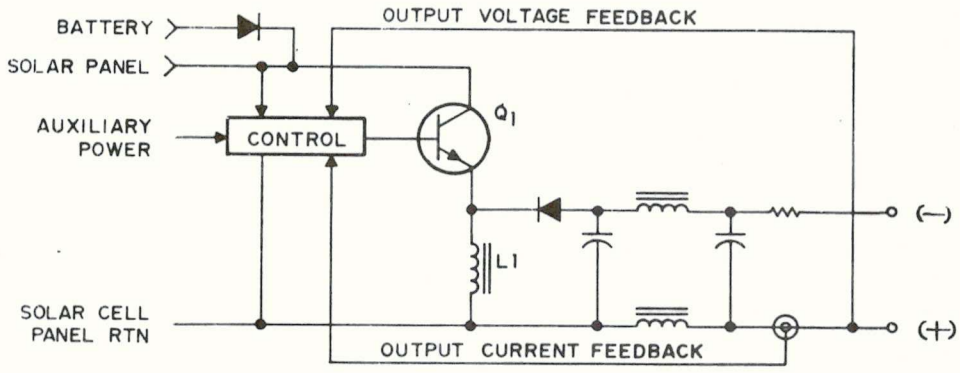

Figure 2.2-20 Simplified Schematic of ATM Load Regulator

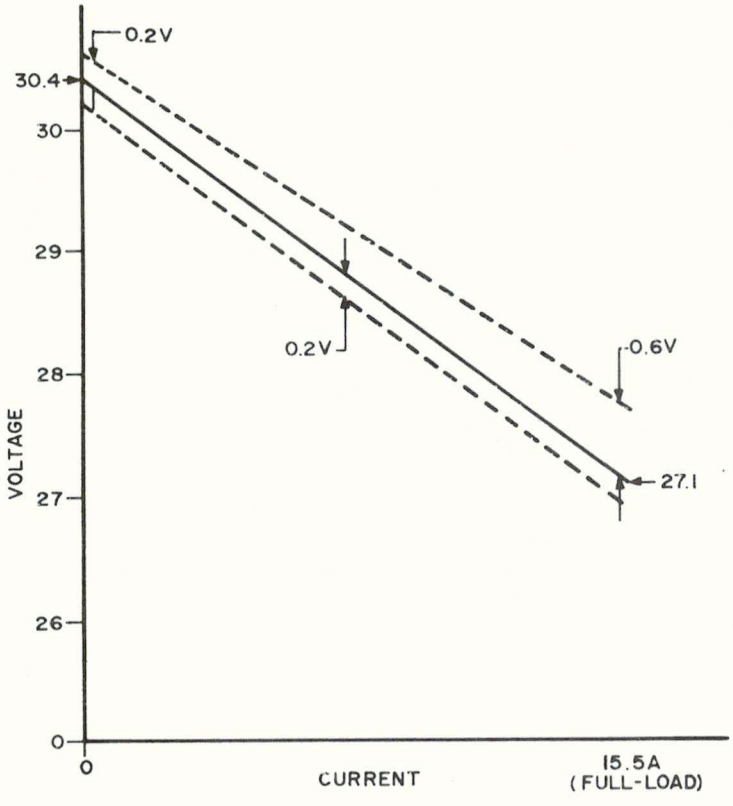

Figure 2.2-21 ATM Load Regulator Output Voltage Slope

Table 2.2-IV ATM EPS Control, Monitoring, and Protection

- CONTROL

  CBRM ALL ON..CHARGER ON..REGULATOR ON..CHARGER OFF..REGULATOR OFF

- MONITORING

PARAMETER	TELEMETRY	ASTRONAUT METER	ASTRONAUT ALERT
SOLAR ARRAY CURRENT	YES	NO	NO
SOLAR ARRAY VOLTAGE	YES	NO	NO
REGULATOR OUTPUT CURRENT	YES	YES	NO
REGULATOR OUTPUT VOLTAGE	NO	YES	LOW/HIGH
BATTERY CURRENT	YES	YES	NO
BATTERY VOLTAGE	YES	YES	LOW/HIGH
BATTERY TEMPERATURE	YES	YES	HIGH
BATTERY RECHARGE COMPLETE	YES	NO	NO
BATTERY RECHARGE INCOMPLETE	NO	NO	YES

- AUTOMATIC PROTECTION
  - OVERLOAD PROTECTION FROM FULL LOAD TO SHORT CIRCUIT
  - CHARGER/BATTERY OFF

    HIGH OR LOW BATTERY VOLTAGE..HIGH BATTERY TEMPERATURE
    HIGH BATTERY DISCHARGE CURRENT

  - REGULATOR OFF

    HIGH REGULATOR OUTPUT VOLTAGE

- CBRM OFF

  AUXILIARY POWER SUPPLY OUT OF TOLERANCE

The received signal indicates the current demanded from each CBRM at a rate of 1.0 amps per 1.0 volts. The CBRM compares the demanded output current with its actual output and determines the error. The output voltage is increased at a rate of 1.0±0.1 VDC for each 0.35 amps of error. No increase in the voltage output will occur if the actual current output exceeds the demanded current output. Also, the feedback signal cannot demand the adjusted output voltage to exceed 31.0 VDC. Figure 2.2-22 depicts the higher voltage outputs varying number of operating CBRMs would have vs bus current loads.

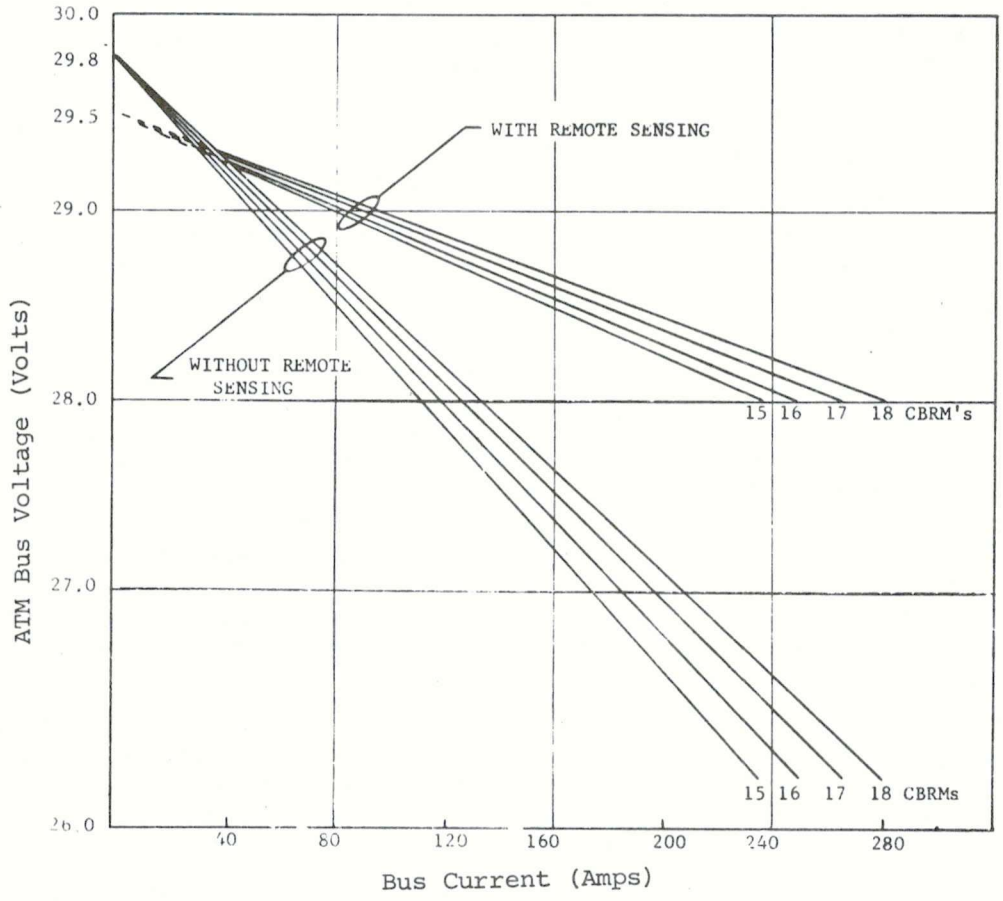

Figure 2.2-22 ATM EPS Bus V-I Characteristics

2.2.4.6 Distribution - Distribution of the electrical power throughout the ATM is accomplished by power distributors and cable networks. The distributors are large junction boxes which allow several interconnecting devices to be powered from a mutual distribution bus. The power distributors are the power transfer distributor, main power distributor, auxiliary power distributor, six control distributors, three measuring distributors, and a control and display distributor. The power distributors are all located on the ATM rack (See Section 2.1). In the figures showing the power distribution the various buses are referred to by their reference designators. Table 2.2-V lists the power distributors and their respective reference designators. Table 2.2-VI lists the various buses and their respective reference designators. Figure 2.2-29 shows an overview of the ATM EPS. Figure 2.2-30 shows the connected loads to the various distributors. Figure 2.2-23 is a simplified block diagram of the ATM power distribution.

A two bus system is developed to provide redundant power distribution to each load. Load lines are protected by short circuit protective devices and are controlled through relay contacts. Short circuit protective devices prevent a catastrophic failure if a short develops at the load or in the cable networks distribution system.

2.2.4.6.1 Power Transfer Distributor - The power transfer distributor (Figure 2.2-23) is the central distributor of the ATM EPS. It provides the capability to transfer power from the Solar Array/CBRM or the ESE to the redundant ATM main buses; to transfer power to the AM from the ATM; and to transfer power from the ATM to the AM. It contains the control relays, power relays, and buses redundant required to establish the six sets of subsystem redundant buses: APCS, C&D Logic, Thermal, TM, TV, and Experiment Buses. It distributes power either directly or via other distributors to the C&D Console, the six subsystems, the Solar Deploy circuitry and the EBW circuitry. Control of the buses in the power transfer distributor is accomplished by DAS, DCS or switches on the C&D Console.

Each redundant bus is capable of providing the total power required by its subsystem. The ESE provides solar array simulator and trickle charge power through a swing arm umbilical plug and carry on umbilical cables. The ESE power is supplied through the power transfer distributor to the ATM main buses for system checkout and charging current to the CBRM's until launch

Each CBRM has dual output lines that are fed to the power transfer distributor so that all 18 CBRMs will feed two buses. Each bus is capable of handling the entire system load independently. Diode isolation is provided on the input lines so that the load buses are isolated from each other.

2.2.4.6.2 Main Power Distribution - The main power distribution receives power from the power transfer distributor and distributes the power to those ATM loads that have heavy requirements. The internal wiring and bus arrangement provides redundant power buses, short circuit protection, and diode isolation.

2.2.4.6.3 Auxiliary Power Distribution - The auxiliary power distributor provides additional power distribution capability and is used for light load requirements. The redundant power bus, short circuit protection, and relay control is identical to the concepts used in the main power distributor.

2.2.4.6.4 Measuring Distributor - The measuring distributors provide flexibility in assignment of proper routing of the various measurements to the telemetry equipment. This distributor provides three types of signal routings:

Hardware patching

Pre-flight Relay Switching

Inter-stage Relay Switching

2.2.4.6.5 Control Distributor - The control distributor provides flexibility in assignment of proper routing of the various measurements and commands to all of the experiments and to the command system.

Control and Display Logic Distributor - The Control and Display Logic Distributor provides an interface for the various power distributors on the ATM rack with the Control and Display Console in the MDA. Most of the relay logic for the console is located in the distributor. The C&D logic distributor also supplies power for switch selector #4.

Table 2.2-V Power Distributors and Designators

Distributor	Designator
Power Transfer	702A1
Main Power	702A2
Auxiliary Power	702A3
Control No. 1	702A22
Control No. 2	702A23
Control No. 3	702A24
Control No. 4	704A45
Control No. 5	702A43
Control No. 6	702A42
Measuring No. 1	702A25
Measuring No. 2	702A26
Measuring No. 3	702A49
Control and Display Logic	702A59

TABLE 2.2-VI POWER BUSES AND SYMBOLOGY

POWER BUSES AND SYMBOLOGY

DESCRIPTION	NOMENCLATURE	DESIGNATOR
COLLECTOR BUS 1	———	7D10
COLLECTOR BUS 2	———	7D20
ATM MAIN BUS 1	VATM 1	7D11
ATM MAIN BUS 2	VTAM 2	7D21
APCS RACK BUS 1	VAPCS 1	7D12
APCS RACK BUS 2	VACPS 2	7D22
C&D LOGIC BUS 1	VC/D LOG 1	7D13
C&D LOGIC BUS 2	VC/D LOG 2	7D23
C&D LOGIC BUS 3	VC/D LOG 3	7D95
THERMAL BUS 1	VTHERM 1	7D14
THERMAL BUS 2	VTHERM 2	7D24
TELEMETRY BUS 1	VTM 1	7D15
TELEMETRY BUS 2	VTM 2	7D25
TV BUS 1	VTV 1	7D16
TV BUS 2	VTV 2	7D26
RACK EXPERIMENTS BUS 1	VKEXP 1	7D31
RACK EXPERIMENTS BUS 2	VKEXP 2	7D41
POWER LOGIC BUS	VLOG	7D91
APCS LOGIC BUS 1	VAPCS LOG 1	7D92
APCS LOGIC BUS 2	VAPCS LOG 2	7D92
APCS LOGIC BUS 3	VAPCS LOG 3	7D93
APCS LOGIC BUS 4	VAPCS LOG 4	7D93
TELEMETRY LOGIC BUS 1	VTMLOG 1	7D98
TELEMETRY LOGIC BUS 2	VTMLOG 2	7D98
CMG 1 BUS	VCMG 1	CMG 1
CMG 2 BUS	VCMG 2	CMG 2
CMG 3 BUS	VCMG 3	CMG 3
ISOLATION AMPLIFIER BUS 1	VAMP 1	AMP 1
ISOLATION AMPLIFIER BUS 2	VAMP 2	AMP 2

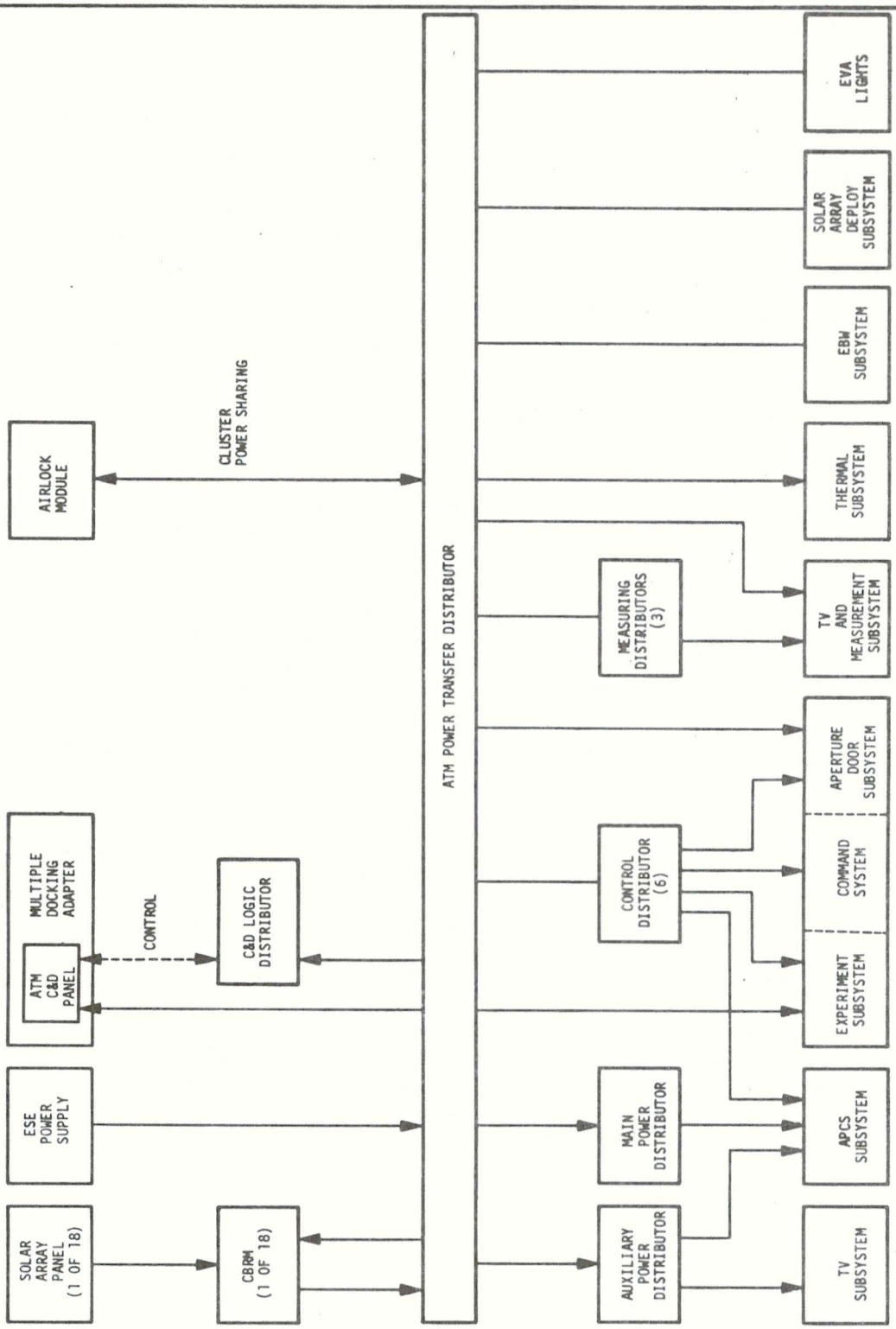

Figure 2.2-23 Simplified Block Diagram of ATM Power Distribution

2.2.4.7 Monitoring and Control - The ATM Power system is designed to operate automatically during normal conditions. When required, the ATM power system may be controlled and monitored by the crewmen through the ATM C&D Console located in the MDA. Two methods of onboard control are (1) DAS, and (2) toggle switches on the power panel. Ground control capability is provided through RF transmission. Commands from both the ground and from the DAS are wired into the switch selectors in parallel. Refer to Table 2.2-VII for typical EPS DAS commands.

Ground transmissions are received, decoded, and issued to the switch selector assemblies through the DAS. A ground control inhibit-enable switch located on the ATM C&D Console permits the crew to prevent or allow commands from the ground. Ground control decision are assisted by use of Telemetry monitoring.

2.2.4.7.1 Onboard Control - Onboard Control of the ATM EPS can be effected by manual switches and DAS control. Meters, indicator lamps, and indicator flags located on the C&D Console provide for system monitoring.

The controls and the monitor and display devices for the ATM EPS are part of the C&D Console located in the MDA. A drawing of the entire C&D Console is shown in Figure 3.0-3. Figure 2.2-24 shows, in the same relative position, those sections of the C&D Console that apply to the EPS Control. Figures 2.2-25 and 2.2-26 show enlarged views of the power system panel and the Console Power Distribution Panel, respectively, on the C&D console.

The Charger ON/OFF and REG ON/OFF switches are used in conjunction with the power system monitor and the CBRM Select rotary switches to turn ON or OFF individually the 18 respective chargers and load regulators. When the charger is commanded ON, the selected CBRM input relay switch is also pulsed ON according to the associated logic control circuits.

The CBRM ALL ON pulses all 18 CBRMs ON simultaneously. It should be noted that all the CBRMs cannot be turned off with this control switch; this can be accomplished only by actuation of the ATM POWER OFF switch. This switch must be held in the OFF position for a minimum of 0.5 seconds to assure the resetting of the 12 Subsystem Bus Power Relays and the actuation of the ATM/XFER PWR Bus 1 and Bus 2 motor switches to the open positions. The ATM POWER OFF signal also energizes a 300 milisecond timing oscillator in the ATM Power Transfer Distributor. The CBRMs are removed from the load buses after the 300 milisecond time delay. See Figure 2.2-27 and Figure 2.2-28.

Table 2.2-VII Typical CBRM DAS Commands

COMMAND NUMBER	FUNCTION	CODE	COMPLEMENT CODE
2	CBRM NO. 1 CHARGER ON	10137	10240
3	CBRM NO. 1 CHARGER OFF	10142	10235
4	CBRM NO. 1 REGULATOR ON	10141	10236
6	CBRM NO. 1 REGULATOR OFF	10055	10322
98	PRIMARY POWER SHARING ON	10104	10273
99	SECONDARY POWER SHARING ON	10126	10251
100	POWER SHARING OFF	10132	10245

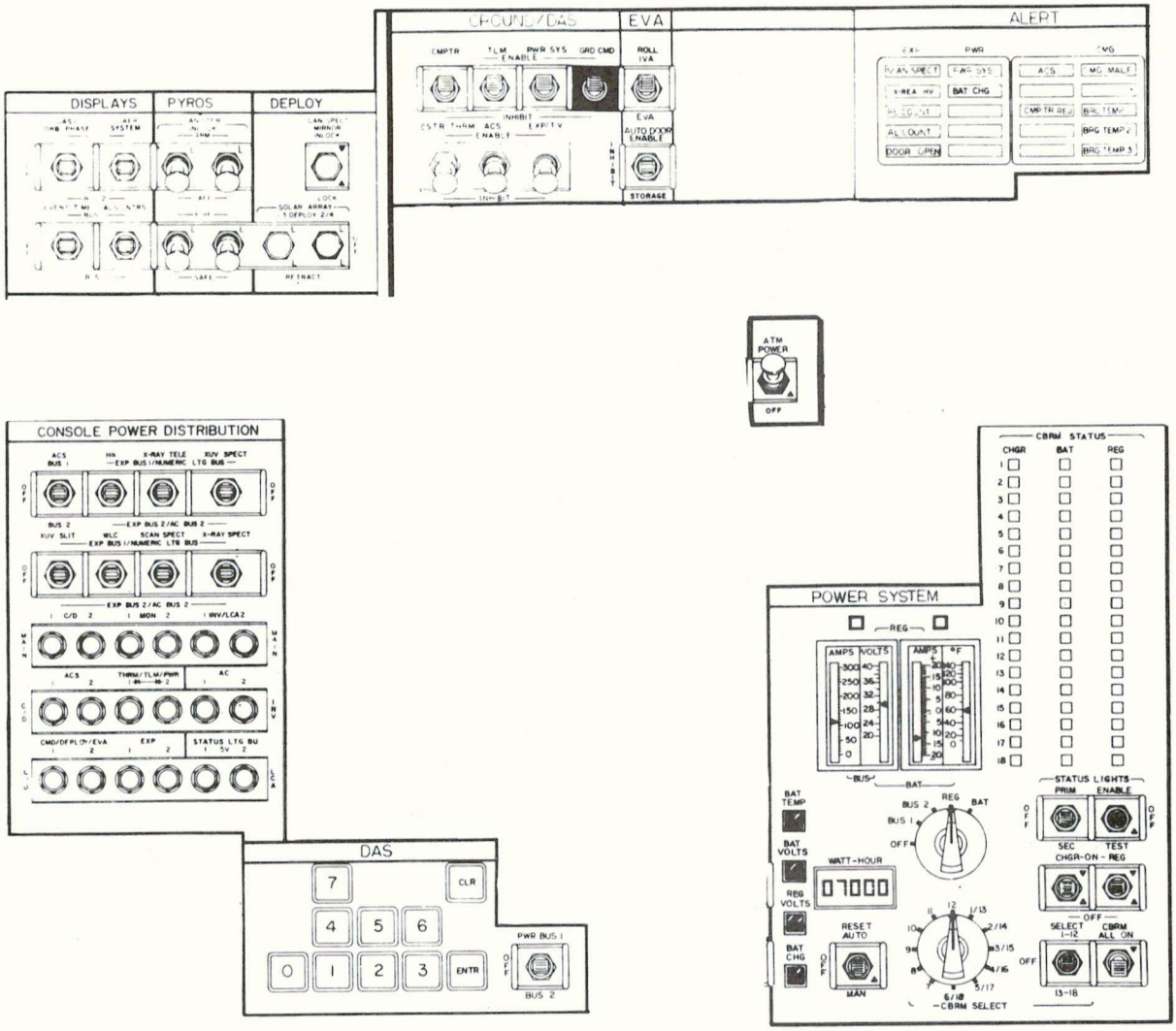

Figure 2.2-24 EPS Controls And Displays

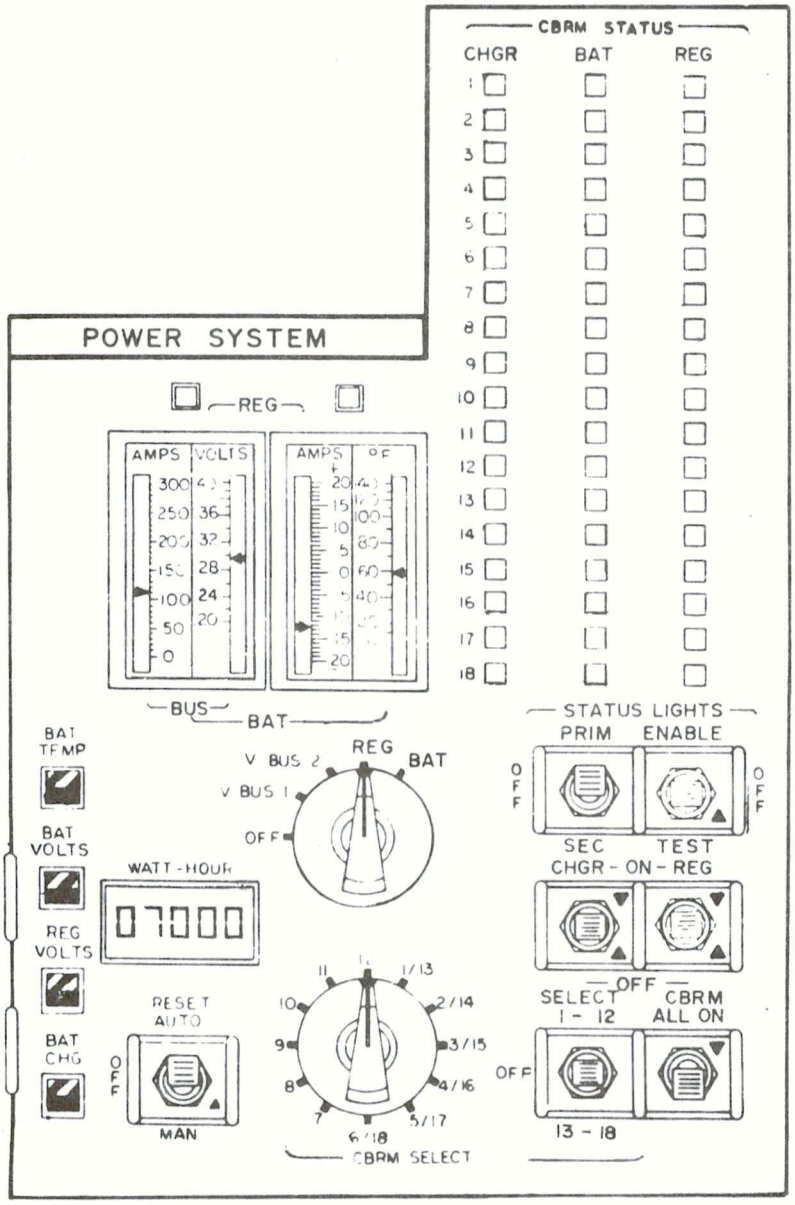

Figure 2.2- 25 Power System Panel

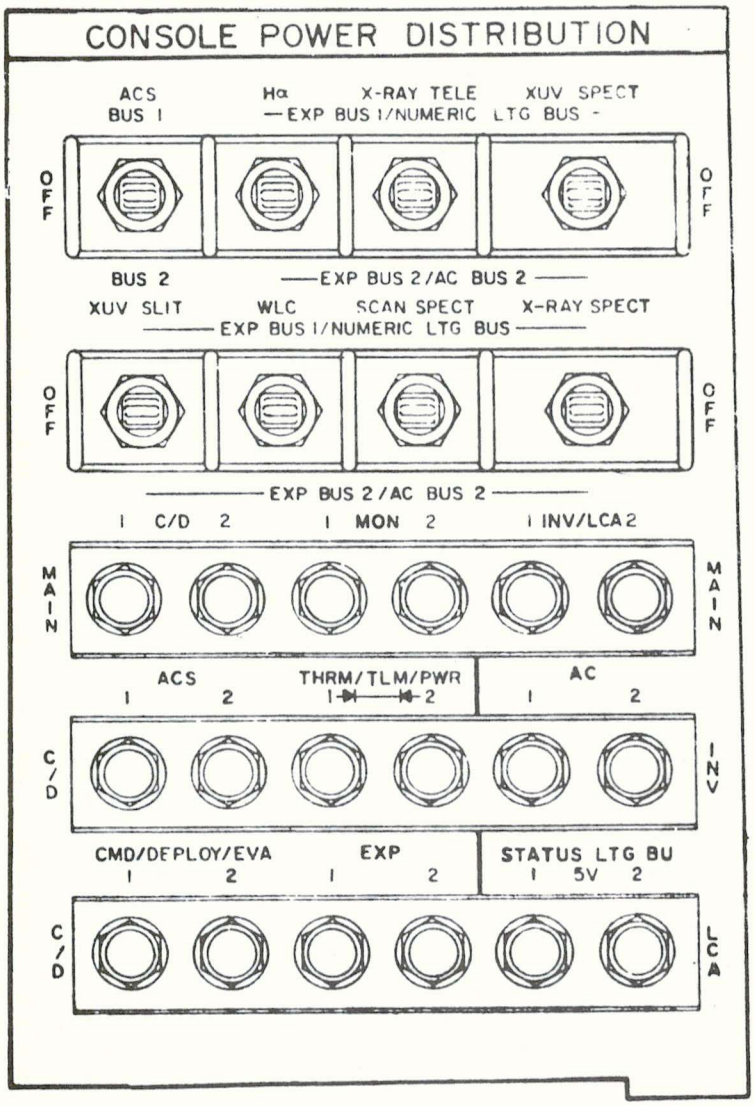

Figure 2.2-26 Console Power Distribution - Circuit Breakers

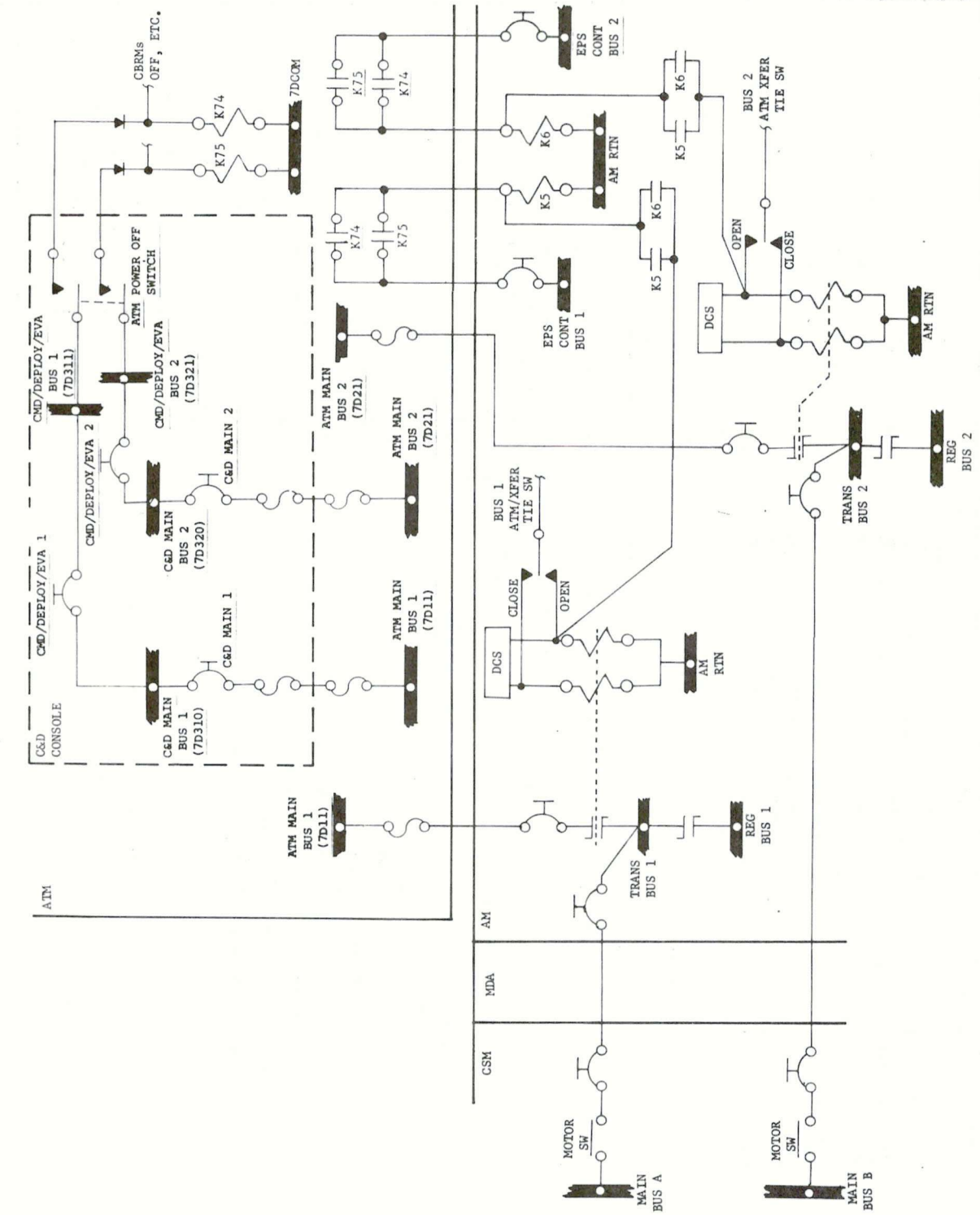

Figure 2.2-27 ATM Power Off Circuitry - Cluster Power

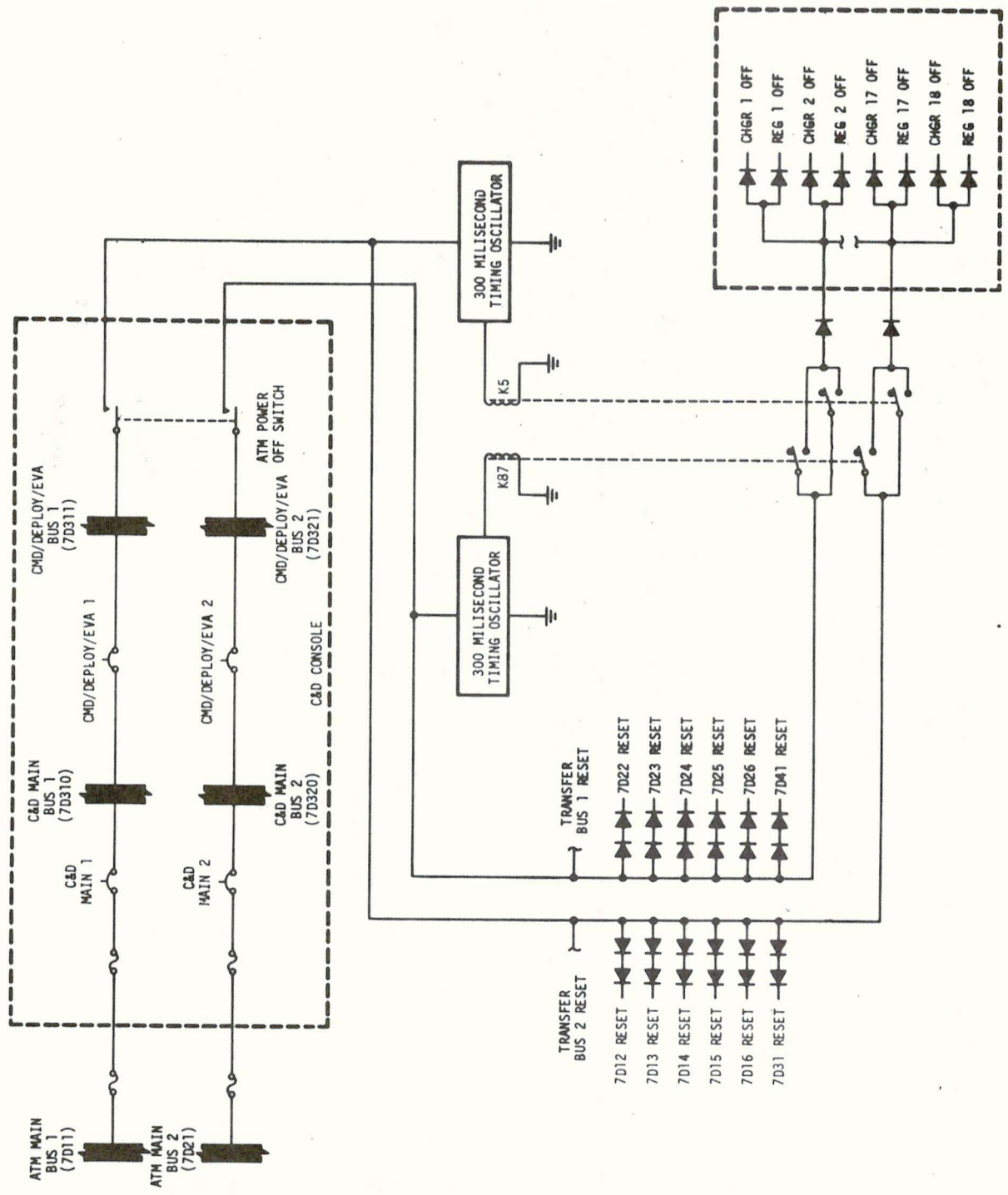

Figure 2.2-28 ATM Power Off Circuitry - CBRM Power

2.2.4.7.2 Ground Control - The ground has the capability of sending real time commands (RTCs) to the ATM EPS via the ATM-DCS. The commands available for each CBRM are: CHARGER ON, CHARGER OFF, REGULATOR ON, and REGULATOR OFF. Three additional commands are available for the CBRM Load Sharing. These are: Primary Power Sharing ON, Secondary Power Sharing ON, and Power Sharing OFF. There is no individual ground command for the ATM corresponding to the ATM POWER OFF command on the C&D Console. The ATM POWER OFF command removes the ATM LOAD BUSES from the Transfer Buses in the AM and then removes the CBRMs from the bus after a 300 milisecond time delay. There are commands in the AM DCS which will connect or disconnect the ATM buses from the Transfer buses. Other ground commands are available which control power on and off to the Rack Experiment Buses, APCS Buses, TV System Buses, TM Buses, and the C&D Logic Buses.

Since the ground commands may remove individual CBRMs from the ATM Load Buses and the number of CBRMs connected to the load buses affect the bus V-I curves (See Figure 2.2-22), the ATM-AM power sharing characteristics may be altered. A smaller number of CBRMs on the ATM bus places a smaller current on that bus and a larger percentage of cluster load will have to be supplied by the AM EPS.

Table 2.2-VII indicates typical CBRM commands and the power sharing commands of the DAS with the corresponding DAS codes and complement codes. The ground has command capability corresponding to the DAS commands. Figure 2.2-24 shows the overall locations of the ATM EPS controls and monitoring portions of the C&D Console in the MDA. Figures 2.2-25 and 2.2-26 are enlargements of the power systems and console power distribution portions of the console.

2.2.4.8 ATM EPS Operations - During activation electrical power is supplied to SL-1 by ESE, at T-30 minutes power is transferred to the on-board batteries. The batteries supply power until the solar arrays are activated after their deployment at T+24 minutes. Monitoring capabilities are interrupted at launch and are regained when the TM antennas are deployed with solar arrays. The OWS solar arrays are deployed at T+50 minutes and two systems are paralleled at T+4 Hrs and 38 minutes. They remain paralleled throughout the flights of SL-2, SL-3, and SL-4.

2.2.4.8.1 Pre-SL-2 Monitoring - During activation and during the flight of SL-1, the ATM-EPS operation will be functionally verified. ATM Load Buses 1 & 2 voltages will be verified to be between 27.1 and 30.4 VDC from TM readings M019 and M020. The buses will verified to be sharing the load current equally from reading M023 and M024.

Gross functional verification of each of the 18 solar panels during orbital day can be made based on comparative values of the output current (M329 through M346) parameters. A similar evaluation can be made in orbital night using battery discharge current (M497 through M514) for a gross CBRM and battery subsystem functional verification. These data provide an immediate overall status of the power system until sufficient data are acquired for historical reference.

2.2.4.8.2 SL-2 Monitoring - System performance will be monitored during SL-2 for assessment of individual subsystem components and the overall power system. It should be specifically determined that 1) bus voltages are within prescribed limits, 2) both main buses are functional and are equally sharing the current load, 3) each solar panel/CBRM is functional, and 4) the battery subsystem is charging and discharging at a prescribed rate and within the desired thermal environment, is reaching a prescribed state of charge during orbital day, and is exhibiting nominal load sharing between individual batteries. A determination of actual bus power capability and power margin will be made to assure confident power management decisions when required.

The performance data to be used for the overall EPS evaluation are Load Bus Voltage and Load Bus Current. Norminal dc bus voltage will be within the limits of 27.1 to 30.4 VDC, dependent on the applied load. Backup data for the bus parameters can be obtained during manned phases, if required, using onboard readouts located on the ATM C&D Console for both bus current and bus voltage. The bus ammeter is a 0 to 300 amp instrument graduated in 10 amp increments and has an accuracy of $\pm$0.8 percent. The bus voltage meter is a 20 to 40 VDC instrument graduated in 2 volt increments and has an accuracy of $\pm$0.8 percent. The functional status of the solar panels and CBRMs may be evaluated using solar panel output current parameters and battery current measurements as described in 2.2.4.8.1.

Additional CBRM statusing is available from onboard readouts if required. The CBRM output voltage can be read using the voltage meter described above. The CBRM output current can be read on a +20 amp instrument graduated in 1.0 amp increments with an accuracy of $\pm$0.8 percent. These readings are also available on TM measurements M089-M106. The battery storage subsystem should be monitored in as great detail as possible to determine that the batteries are being properly recharged during each orbital day, and that they are not being excessively discharged. The indication that the batteries have reached a prescribed state of charge is Battery Recharge Complete (K344 through K361). When charging is completed, these indications will be present until reset at the beginning of the following orbital day by the computer.

Backup data relevant to the third electrode signal status is available using onboard tape playback data and crew reports. During daylight station passes, the general charging operation of the battery may be evaluated by obsreving Battery Current (M497 through M514), Battery Temperature (C012 through C029) and Battery Voltage (M001 through M018) for nominal values and comparison with predicted data. Additionally, the Power System Output (K476) parameter can be used in the battery evaluation, allowing for determination of the average discharge for each battery during orbital night. Backup data is available from onboard readouts for battery voltage using the voltage meter described in above and for battery temperature. The battery temperature meter is a 0 to +140°F instrument graduated in 10 degree increments with an accuracy of $\pm$0.8 percent.

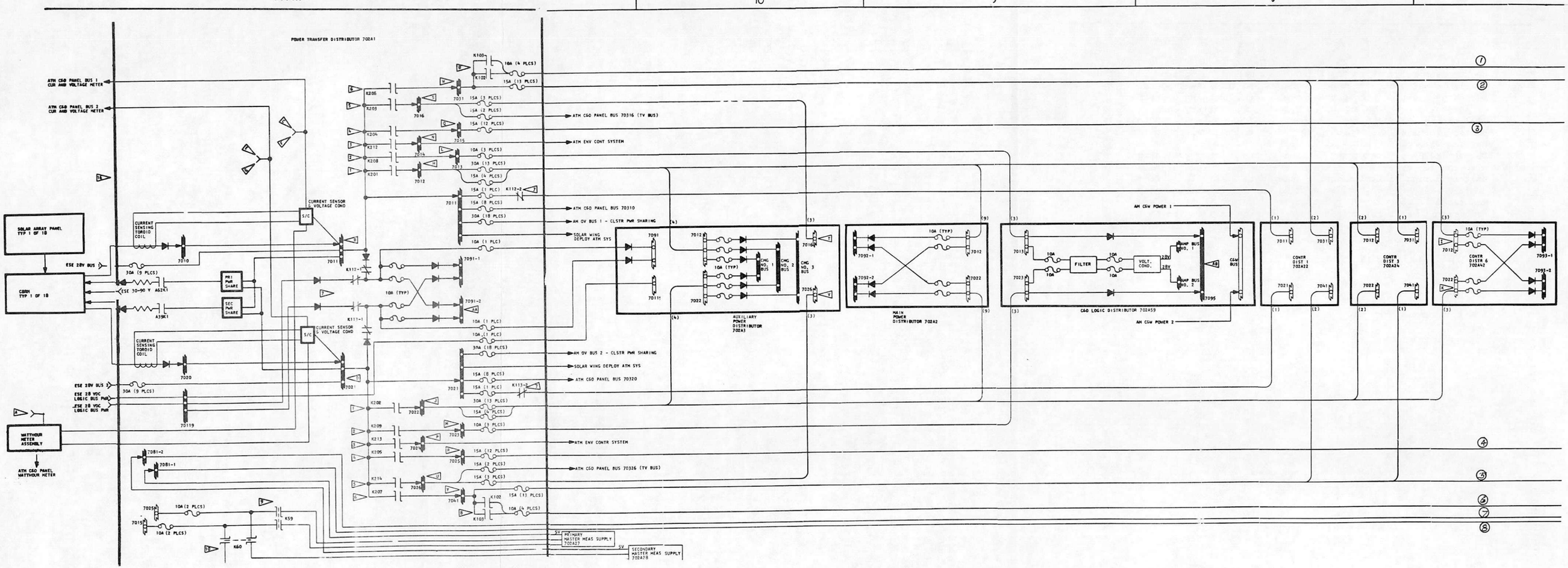

Figure 2.2-29 Electrical Power System Overview (Sheet 1 of 2)

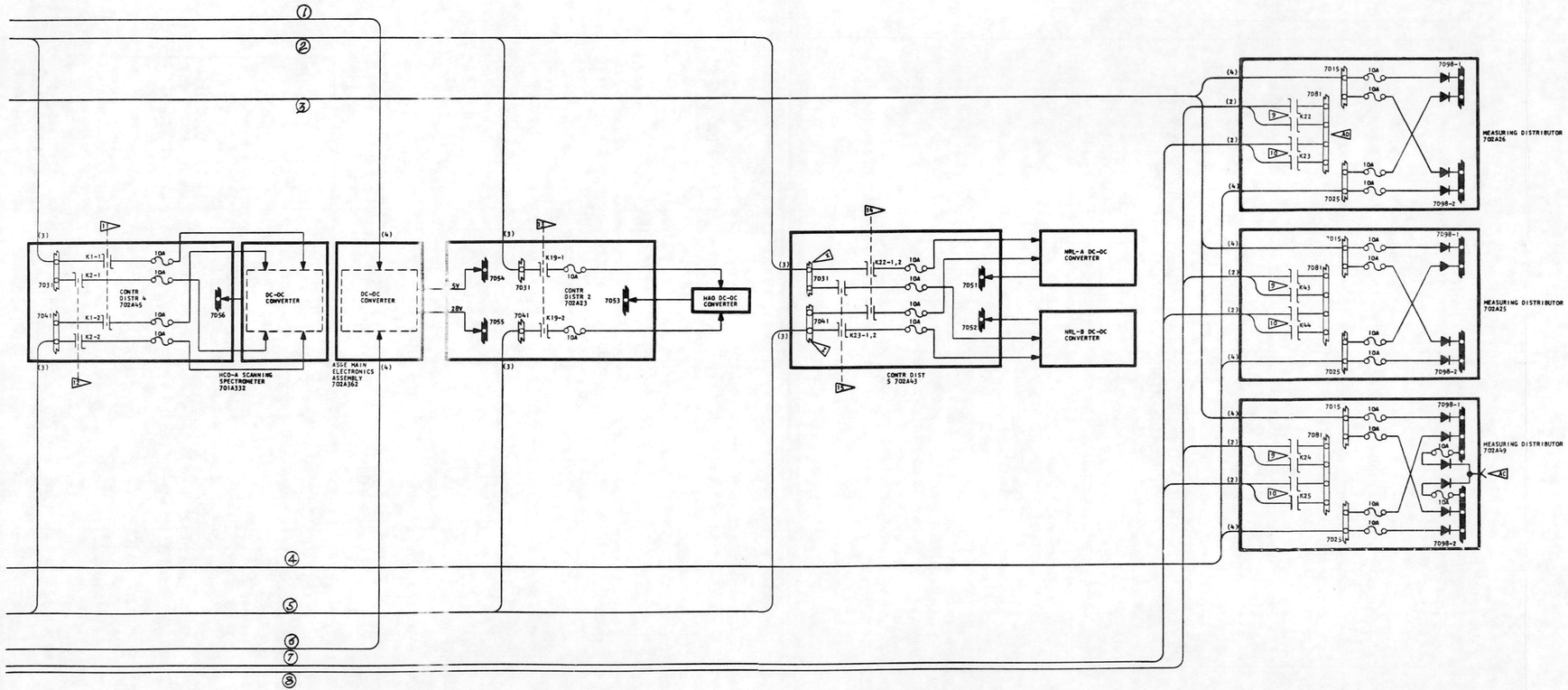

NOTES

1. BUS DESIGNATORS

7010-20	COLLECTOR BUS 1-2
7011-21	LOAD BUS 1-2
7012-22	APCS SUBSYSTEM BUS 1-2
7013-23	C&D SUBSYSTEM BUS 1-2
7014-24	ECS SUBSYSTEM BUS 1-2
7015-25	I&C SUBSYSTEM BUS 1-2
7016-26	TV SUBSYSTEM BUS 1-2
7031-41	CONTROL DISTR 1,2,3,4,5 SUBSYSTEM BUS 1-2
7051	HRL-A +28 VDC ISOLATED POWER
7052	HRL-B +28 VDC ISOLATED POWER
7053	HAD +28 VDC ISOLATED POWER
7054	ASSE +5 VDC ISOLATED POWER
7055	ASSE +28 VDC ISOLATED POWER
7056	HCO-A +28 VDC ISOLATED POWER
7081	+5 VDC MASTER MEASURING BUS
7091	ATM RELAY LOGIC BUS
7098	APCS LOGIC BUS (MAIN PWR DIST)
7093	APCS LOGIC BUS (CONT DIST 6)
7095	C&D DISTR RELAY LOGIC BUS
7098	I&C SYSTEM LOGIC BUS
70119	ESE ATM RELAY LOGIC BUS

2. POINT OF INITIAL BUS GENERATION IS DENOTED BY SHADED BUS SYMBOL.
3. REPRESENTATIVE FUSE CIRCUIT PROTECTION AS SHOWN FOR CLARITY. PARENTHETICAL NUMBERS DENOTE THE NUMBER OF INDIVIDUALLY PROTECTED LEADS FROM THE BUS SOURCE.
4. CONTROL CAPABILITY

A
- CMD "APCS PWR ON" (CWS SW SEL)
- CMD "APCS PWR ON" (AM DCS)
- CMD "APCS PWR ON" (ATM SW SEL 1)
- CMD "APCS PWR OFF BUS 1" (K201 ONLY)(ATM SW SEL 1)
- CMD "APCS PWR OFF BUS 2" (K202 ONLY)(ATM SW SEL 1)

B
- CMD "APCS PWR ON" (CWS SW SEL)
- CMD "APCS PWR ON" (AM DCS)
- CMD "CONTROL & DISPLAY LOGIC DISTRIBUTOR BUS ON" (ATM SW SEL 1)
- CMD "CONTROL & DISPLAY BUS OFF BUS 1" (K208 ONLY)(ATM SW SEL 1)
- CMD "CONTROL & DISPLAY BUS OFF BUS 2" (K209 ONLY)(ATM SW SEL 1)

D
- CMD "ATM THERMAL SYSTEM ON" (CWS SW SEL)
- CMD "PRIMARY/SECONDARY PUMP CONTROLLER ON" (ATM C&D PANEL)
- CMD "THERMAL SYSTEM PWR ON BUS 2" (K213 ONLY) (ATM SW SEL 1)
- CMD "THERMAL SYSTEM PWR OFF BUS 1 AND BUS 2 (ATM SW SEL 1)
- CMD "THERMAL SYSTEM PWR OFF BUS 1" (K212 ONLY)(ATM SW SEL 1)
- CMD "THERMAL SYSTEM PWR OFF BUS 2" (K213 ONLY)(ATM SW SEL 1)
- CMD "RACK THERMAL SYS PWR ON BUS 1" (K212 ONLY)(ATM SW SEL 1)
- CMD "CANISTER THERMAL PUMP PRIMARY" (K212 ONLY)(ATM SW SEL 1)
- CMD "CANISTER THERMAL PUMP SECONDARY" (K213 ONLY)(ATM SW SEL 1)

E
- "FLM SYS ON/OFF" (ATM C&D PANEL)
- CMD "TELEMETRY PWR ON BUS 2" (K205 ONLY)(ATM SW SEL 1)
- CMD "TELEMETRY PWR OFF BUS 1" (K204 ONLY)(ATM SW SEL 1)
- CMD "TELEMETRY PWR OFF BUS 2" (K205 ONLY)(ATM SW SEL 1)
- CMD "RACK FLM PWR ON BUS 1" (K204 ONLY)(ATM SW SEL 1)
- CMD "ATM TM ON" (CWS SW SEL)

F
- CMD "PRIMARY/SECONDARY SYNC GEN ON" (ATM SW SEL 4)
- PRIMARY/SECONDARY SYNC GEN ON/OFF (ATM C&D PANEL)
- CMD "TV PWR ON BUS 2" (K214 ONLY) (ATM SW SEL 1)
- CMD "TV PWR OFF BUS 1" (K203 ONLY) (ATM SW SEL 1)
- CMD "TV PWR OFF BUS 2" (K214 ONLY) (ATM SW SEL 1)
- CMD "RACK TV PWR ON BUS 1 (K203 ONLY) (ATM SW SEL 1)

G
- CMD "APCS PWR ON" (CWS SW SEL)
- CMD "APCS PWR ON" (AM DCS)
- CMD "CONTROL DISTRIBUTOR (1,2,3,4,5) PWR ON" (ATM SW SEL 1)
- CMD "CONTROL DISTRIBUTOR PWR OFF BUS 1" (ATM SW SEL 1)
- CMD "CONTROL DISTRIBUTOR PWR OFF BUS 2" (ATM SW SEL 1)

H. ESE CONTROL FOR LOGIC BUS ISOLATION (GROUND TEST)

J
- X-RAY SPECT "MAIN PWR ON/OFF" (ATM C&D PANEL)
- CMD "X-RAY SPECT MAIN PWR ON" (ATM SW SEL 4)
- CMD "X-RAY SPECT MAIN PWR OFF" (ATM SW SEL 4)

K
- "FLM SYS ON" (ATM C&D PANEL)
- CMD "ATM TM ON" (CWS SW SEL)
- CMD "PRIM. MASTER MEAS SUPPLY ON" (ATM SW SEL 2) (ALSO RESETS K23,K25 & K44
- CMD "MASTER MEAS SUPPLY OFF" (K59 & K60 ONLY)(ATM SW SEL 2)
- CMD "SEC MASTER MEAS SUPPLY ON" (ATM SW SEL 2)(ALSO RESETS K22,K24 & K43)
- CMD "MASTER MEAS SUPPLY OFF" (K59 & K60 ONLY) (ATM SW SEL 2)

L
- SCAN SPECT "MAIN PWR PRIM/OFF/SEC" (ATM C&D PANEL)
- CMD "SCAN SPECT MAIN PWR PRIM ON" (ATM SW SEL 4)
- CMD "SCAN SPECT MAIN PWR OFF" (ATM SW SEL 4)
- SCAN SPECT "MAIN PWR PRIM/OFF/SEC" (ATM C&D PANEL)
- CMD "SCAN SPECT MAIN PWR SEC ON" (ATM SW SEL 4)
- CMD "SCAN SPECT MAIN PWR OFF" (ATM SW SEL 4)

M
- CMD "WLC MAIN PWR ON" (ATM SW SEL 4)
- CMD "WLC MAIN PWR OFF" (ATM SW SEL 4)
- "WLC MAIN PWR ON/STANDBY/OFF" (ATM C&D PANEL)

N
- CMD "XUV SPECT MAIN PWR ON/OFF" (ATM SW SEL 4)
- XUV SPECT "MAIN PWR ON/OFF" (ATM C&D PANEL)

P
- CMD "XUV SLIT MAIN PWR ON/OFF" (ATM SW SEL 4)
- XUV SLIT "MAIN PWR ON/OFF" (ATM C&D PANEL)

R
- CMD "PRIMARY PWR SHARING ON" (ATM SW SEL 1)(SETS A62K1,RESETS A39K1)
- CMD "SECONDARY PWR SHARING ON" (ATM SW SEL 1)(RESETS A62K1,SETS A39K1)
- CMD "PWR SHARING OFF" (ATM SW SEL 1)

	YDI MEAS. NO.	LAND LINE NO.	MEASUREMENT DESCRIPTION	RANGE
A	K476		POWER SYSTEM OUTPUT (WATT-HOUR)	0-5100 W-HR
B	M019		VOLTAGE LOAD BUS NO. 1 (7011)	+24 TO +32 VDC
C		M700	VOLTAGE, BUS 7011	0 TO +31 VDC
D	M020		VOLTAGE LOAD BUS NO. 2 (7021)	+24 TO +32 VDC
E		M701	VOLTAGE, BUS 7021	0 TO +31 VDC
A	M023	M702	CUR. LOAD BUS NO. 1 (7011)	0 TO 300A
G	M024	M703	CUR. LOAD BUS NO. 2 (7021)	0 TO 300A
A	M517		VOLTAGE, AC-PCS BUS NO. 1 (7012)	+24 TO +32 VDC
A		M704	VOLTAGE, BUS +7012	+26 TO +31 VDC
A	M518		VOLTAGE, AC-PCS BUS NO. 2 (7022)	+24 TO +32 VDC
A		M705	VOLTAGE, BUS +7022	+26 TO +31 VDC
L	M519		C&D DIST BUS NO. 1 (7013)	+24 TO +32 VDC
		M706	VOLTAGE, BUS +7013	+26 TO +31 VDC
M	M520		C&D DIST BUS NO. 2 (7023)	+24 TO +32 VDC
		M707	VOLTAGE, BUS +7023	+26 TO +31 VDC
N	M521		CANISTER THERMAL BUS NO. 1 (7014)	+24 TO +32 VDC
		M708	VOLTAGE, BUS +7014	+26 TO +31 VDC
P	M522		CANISTER THERMAL BUS NO. 2 (7024)	+24 TO +32 VDC
		M709	VOLTAGE, BUS +7024	+26 TO +31 VDC
Q	M523		TM BUS NO. 1 (7015)	+24 TO +32 VDC
		M710	VOLTAGE, BUS +7015	+26 TO +31 VDC
R	M524		TM BUS NO. 2 (7025)	+24 TO + 32 VDC
		M711	VOLTAGE, BUS +7025	+26 TO +31 VDC
S	M525		TV BUS NO. 1 (7016)	+24 TO +32 VDC
T		M712	VOLTAGE, BUS +7016	+26 TO +31 VDC
U	M526		TV BUS NO. 2 (7026)	+24 TO +32 VDC
V		M713	VOLTAGE, BUS +7026	+26 TO +31 VDC
W	M527		VOLTAGE, CONT DIST BUS NO. 1 (7031)	+24 TO +32 VDC
X		M714	VOLTAGE, BUS + 7031	+26 TO +31 VDC
Y	M528		VOLTAGE, CONT DIST BUS NO. 2 (7041)	+24 TO +32 VDC
Z		M715	VOLTAGE, BUS +7041	+26 TO +31 VDC
AA		M717	VOLTAGE, BUS +7091	+26 TO +31 VDC
AB		M718	VOLTAGE, BUS +7095	+26 TO +31 VDC
AC		M719	VOLTAGE, BUS +7098	+26 TO +31 VDC
AD	M043		VOLTAGE, 5 VOLT POWER SUPPLY (7081)	0 TO 5 VDC
		M716	VOLTAGE, BUS +7081	0 TO 5 VDC

5. "ATM PWR OFF" SWITCH ON C&D PANEL OPENS ALL CONTACTORS [1] THRU [6]

6. BUSES 7091,7098,7093 & 7098 DO NOT HAVE -1 OF -2'S ASSOCIATED WITH THEIR DESIGNATORS IN NOM33662. THEY ARE DESIGNATED WITH DASH NUMBERS IN THIS DRAWING TO INDICATE THAT THESE PARTICULAR BUSES ARE PHYSICALLY AND ELECTRICALLY SEPARATED WITHIN A DISTRIBUTOR.

Figure 2.2-29 Electrical Power System Overview (Sheet 2 of 2)

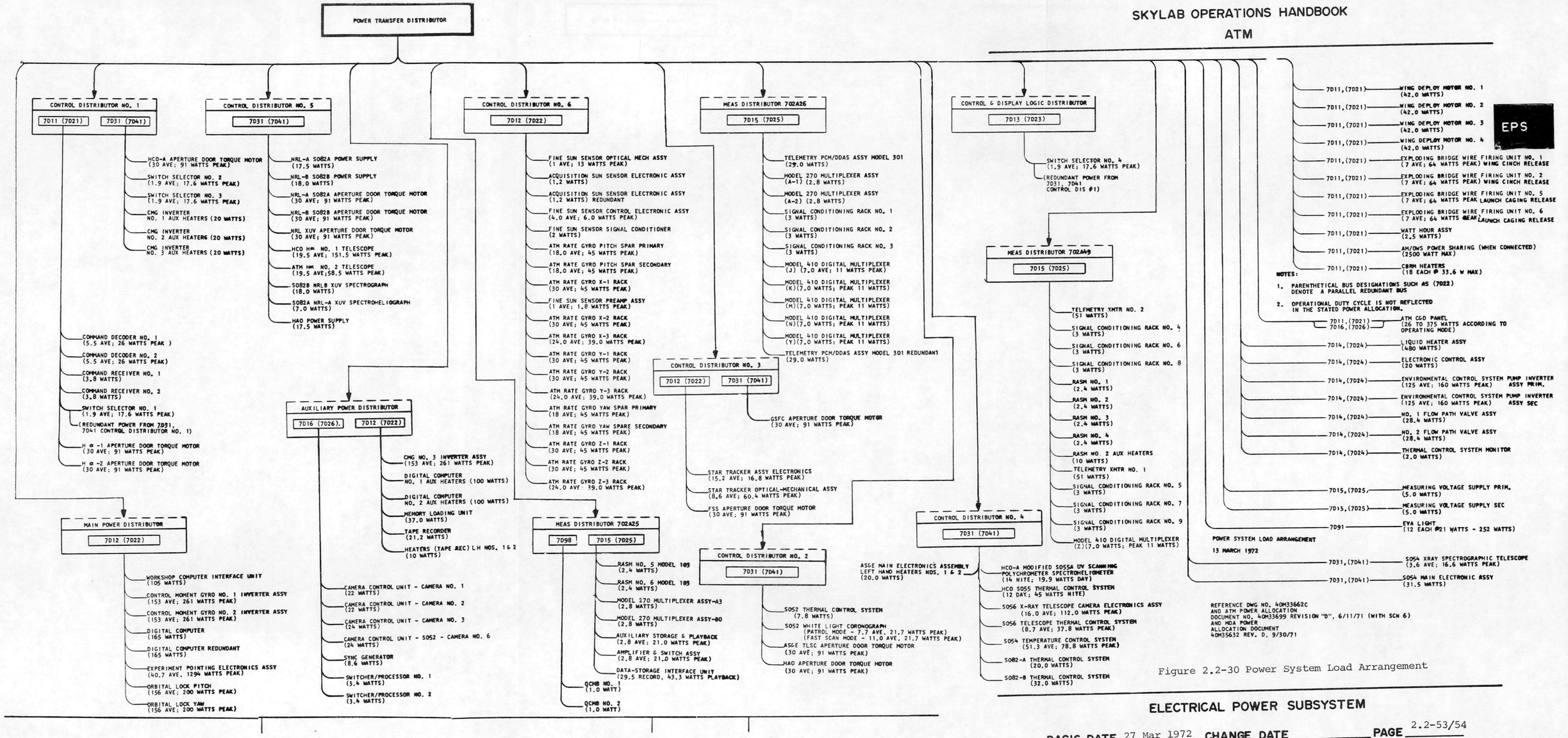

Figure 2.2-30 Power System Load Arrangement

2.2.5 Performance and Design Data And Operational Limitations

2.2.5.1 ATM Flight Electrical System Networks Power Design Requirements

SYSTEM	MAX CONTINUOUS POWER WATTS
ATTITUDE AND POINTING CONTROL SUBSYSTEM	1387
MEASURING AND TM SUBSYSTEM	417
VIDEO SUBSYSTEM	230
CONTROL AND DISPLAY SUBSYSTEM	500
COMMAND SUBSYSTEM	20
CONTROL SUBSYSTEM (EXPERIMENTS)	380
ENVIRONMENTAL CONTROL SUBSYSTEM	500
WING DEPLOYMENT SYSTEM AND EBW FIRING UNITS	165
CBRM HEATERS	432

2.2.5.2 ATM Electrical Interface Voltage Requirements - See Table 2.2-I

2.2.5.3 Cluster Power Operation - Normally in parallel with AM power. Can operate independently.

2.2.5.3.1 Power Transfer Capability - 2500 Watts to or from the Orbital Vehicle Bus.

2.2.5.3.2 Intervehicular Power Transfer - Controlled by switches located in the AM.

2.2.5.3.3 Circuit Protection - Each Bus is designed to carry the full load and has a fuse and an isolation diode in each wired portion.

2.2.5.4 Solar Cell Characteristics

2.2.5.4.1 Solar Cell Module I-V Characteristics At 60°C

Type A	Type B
Pmp = 30.4 Watts	Pmp = 32.8 Watts
Vmp = 40.5 Volts	Vmp = 42.2 Volts
Voc = 54.6 Volts	Voc = 55.2 Volts
Imp = 751.7 MA	Imp = 778 MA
Isc = 826.6 MA	Isc = 838.2 MA

2.2.5.4.2 Solar Cell Temperature Coefficients at Maximum Power Point at 55°C

Type A = -0.595 Type B = -0.591

2.2.5.5 Solar Array Shadow Effects - There are no shadow effects on the ATM solar arrays from protrusions of the vehicle.

2.2.5.6 Solar Array Temperature Profile for Sunlight Portion of Orbit

	SUNLIGHT	TIME PER ORBIT
NODE	55 MIN	65 MIN
103	49.1°C	52.0°C
104	60.5°C	62.9°C
105	48.0°C	51.3°C
107	40.6°C	44.0°C
108	52.1°C	53.4°C
109	43.5°C	46.4°C

2.2.5.7 Solar Array System Capacity - 10.480 watts at beginning of life.

2.2.5.8 CBRM Design and Performance

2.2.5.8.1 CBRM Alert Parameters

CBRM CONDITION	ALERT SPECIFICATION	HYSTERSIS
Battery voltage low	27.5±0.5 Vdc	0.3 Vdc above warning signal
Battery temperature high	35°±1°C	5°±1°C below trippoint
Battery voltage high, as a function of temperature	see figure 2.2-18	
CBRM output voltage low	20±1 Vdc	1 to 10 Vdc
Battery charge not complete	Solar array voltage below battery voltage and signal electrode battery signal is not present.	Command Charger "OFF" then command Charger "ON"

2.2.5.8.2 CBRM Automatic Response To Malfunctions

Parameter and Malfunction	Malfunction Value	CBRM Component Turned Off				
		Charger	Battery Contactor	Regulator	Input Contactor	Hysteresis
Battery Voltage Low	26.4 V+0.5,-0V	X	X			2V±0.2V
Battery Voltage High as Function of Temp	See Figure 2.2-18	X	X			See figure
Battery Temp High	50°C+0°C, -2°C	X	X			5°C±0.5°C
Battery Discharge Current High	25 A ±1A	X	X			5A±0.5A
Regulator Output Voltage High	31.8V±0.2V			X		
CBRM Internal Reference Voltage Out of Tolerence	High:15.2V±50mV Low: 14.8±50mV	X	X	X	X	50mV±1mV

Note: No provision is made to automatically turn on components if the malfunction should correct itself. The component affected may be turned on manually if the malfunction corrects itself.

2.2.5.8.3 CBRM Operating Conditions

Operating Condition	Total 94 Minute Cycle	
	58 minutes solar power input	36 minutes no solar power input
Output voltage	27.1 to 30.4 Vdc	27.1 to 30.4 Vdc
Maximum output voltage ripple	0.10 V-peak-to-peak	0.18 V-peak-to-peak
Maximum input voltage	80 Vdc	35 Vdc
Regulator minimum input voltage	40 Vdc	25.5 Vdc
Maximum power output	415 W	415 W
Continuous power output	235 W, average	235 W, average

2.2.5.8.4 CBRM Temperature Range

High +30°C
Low -20°C

2.2.5.8.5 CBRM Internal Protection - Circuits internal to the CBRM limit the CBRM output current to 20A output under "Output Short Circuit" conditions.

2.2.5.8.6 Charger Efficiency - $\geq$ 92% over the load range.

2.2.5.8.7 Charger Operating Conditions

Charger Operation Mode	Charger Output		CBRM System Condition Required
	Output Voltage	Output Current	
Constant current	Voltage necessary to provide the current indicated in the next column.	15 $\pm$ 1A	Solar panel power sufficient. Battery voltage and temperature < the trip-out points as shown in figure 2.2-17.
Constant voltage	Voltage decreased by 0.85 $\pm$0.15 vdc then controlled as a function of temperature as shown in figure 2.2-18.	Current as determined by the voltage	Battery voltage and temperature $\geq$ the trip-out points as shown in figure 2.2-17. If solar panel power is limited the output current to the charger is controlled to 13.5$\pm$-.5A.
Charge off	0 vdc	Zero amperes	Solar panel voltage $\leq$40 +0.5 vdc. Battery third electrode signal indicates a fully charged battery.

2.2.5.8.8 CBRM Battery Characteristics

a. Cell type	General Electric nickel-cadnium type AB-12
b. Number of cells	24
c. Capacity	20 Ahr min. @ beginning of life rated 27 Ahr min. @ beginning of life defined @ 1 volt/cell @ 20°C.
d. Charge cut-off control	Third electrode
e. Undervoltage trip level	26.4 vdc
f. Discharge current trip level	25.0 A
g. Maximum depth of discharge	30%

2.2.5.8.9 Battery Operating Life - 4000 cycles from -20°C to +30°C with maximum depth of discharge at 30%.

Temperature cycling to +30°C. Permissible continuous operation at +30C not to exceed 72 hours.

2.2.5.8.10 Battery Recharge Indication - The signal electrodes in three of the 24 cells provide redundant recharge sense. Any of the three will provide the battery charged singal.

2.2.5.8.11 Battery Heater Control - 50 watts maximum

2.2.5.8.12 Regulator Input Voltage - 25.5 VDC to 80 VDC

2.2.5.8.13 Regulator Output Voltage - See Figure 2.2-21.

2.2.5.8.14 Regulator Output Power

Average - 235 Watts
Peak - 415 Watts

2.2.5.8.15 Regulator Efficiency

89% minimum at loads between 100 and 200 watts.
85% minimum at peak load

2.2.5.8.16 Regulator Protection

Regulator is removed from the line when output voltage exceeds 31.8±0.2 VDC.
Crew alert indicator is initiated when output voltage drops below 20±1 VDC.

2.2.5.8.17 Regulator Load Sharing - Regulator output voltage is raised 1.0 VDC for each 0.2 amps the collector bus demand exceeds that regulator current output. Load sharing controls will not raise output voltage above 31.0 VDC.

2.2.5.8.18 CBRM Power Transfer Control

On Board - DAS or Panel Switches
Ground - Telemetry

2.2.6 Operational Limitations and Restrictions

2.2.6.1 Power Transfer

The ATM EPS is limited in the power that can be transferred to or from the AM EPS to 2500 watts.

Power transfer capability from the SWS to the CSM is limited to 2000 watts.

2.2.6.2 Batteries

The battery depth of discharge averaged over the mission shall not exceed 30%.

Battery discharge current shall not exceed 250 amps.

Battery voltage shall not be less than 26.4 volts.

Battery temperature shall not exceed $50^{\circ}C + 0^{\circ}C, -2^{\circ}C$ ($122^{\circ}F + 0^{\circ}F, -2^{\circ}F$).

2.2.6.3 Regulators

Regulator output power will average 200 watts and peak at 415 watts.

Output voltage will not exceed 31.8 ± 0.2 VDC.

Load sharing controls will not raise output voltage above 31.0 VDC.

Input voltage shall be between 40.0 and 80.0 VDC for the solar array and 25.5 and 35.0 volts for the battery.

2.3 THERMAL CONTROL SUBSYSTEM

2.3.1 Introduction

The ATM Thermal Control Subsystem provides an acceptable thermal environment for the ATM solar experiments and supporting subsystems. Thermal control is accomplished by both active and passive means. The active system controls the temperature environment of the canister experiment package while the passive system provides thermal control of the rack mounted support equipment. In addition, several ATM experiments and rack mounted equipment contain individual thermostatically controlled heaters to provide for internal temperature control.

TCS

The active thermal control system (TCS) is an integral part of the ATM canister. (See Figure 2.3-1) The entire canister is insulated with a multilayer aluminized Mylar shroud which isolates the canister (excluding the radiator) from the external environment and rack mounted equipment. The solar experiments and fine pointing control system sensors are mounted on a thermally isolated spar contained within the canister. The canister lateral wall consists of cold plates and provides a nearly constant temperature sink for the spar mounted experiments. A working fluid is circulated through the cold plates to absorb heat radiated by the experiments. The absorbed radiant energy is transferred via the fluid to radiators where it is rejected to space. Figure 2.3-2 depicts the canister thermal design concept.

The ATM rack provides structural support for the canister (through a gimbal system), the solar array panels and two thermal shields. The rack also provides mounting areas for over one hundred and forty electrical/mechanical components. The rack mounted support equipment is thermal controlled by passive means. This is achieved with insulation, low conductance mounts, thermal shields, and surface coatings. Several components also contain individual thermostatically controlled heaters.

The major hardware areas covered in depth in this section will comprise the active thermal control system. Experiment internal heating and thermal design, because they are critical experiment parameters relating to optical alignment requirements of each experiment, will be covered in the individual experiment sections. However, general canister thermal interfaces with all experiments are presented in paragraph 2.3.3.3. Rack mounted equipment that requires internal temperature control will also be discussed only at the overall thermal interface level in paragraph 2.3.3.2. Thermal control of the ATM control and display console is supplied by the AM thermal control system and is not discussed in this section.

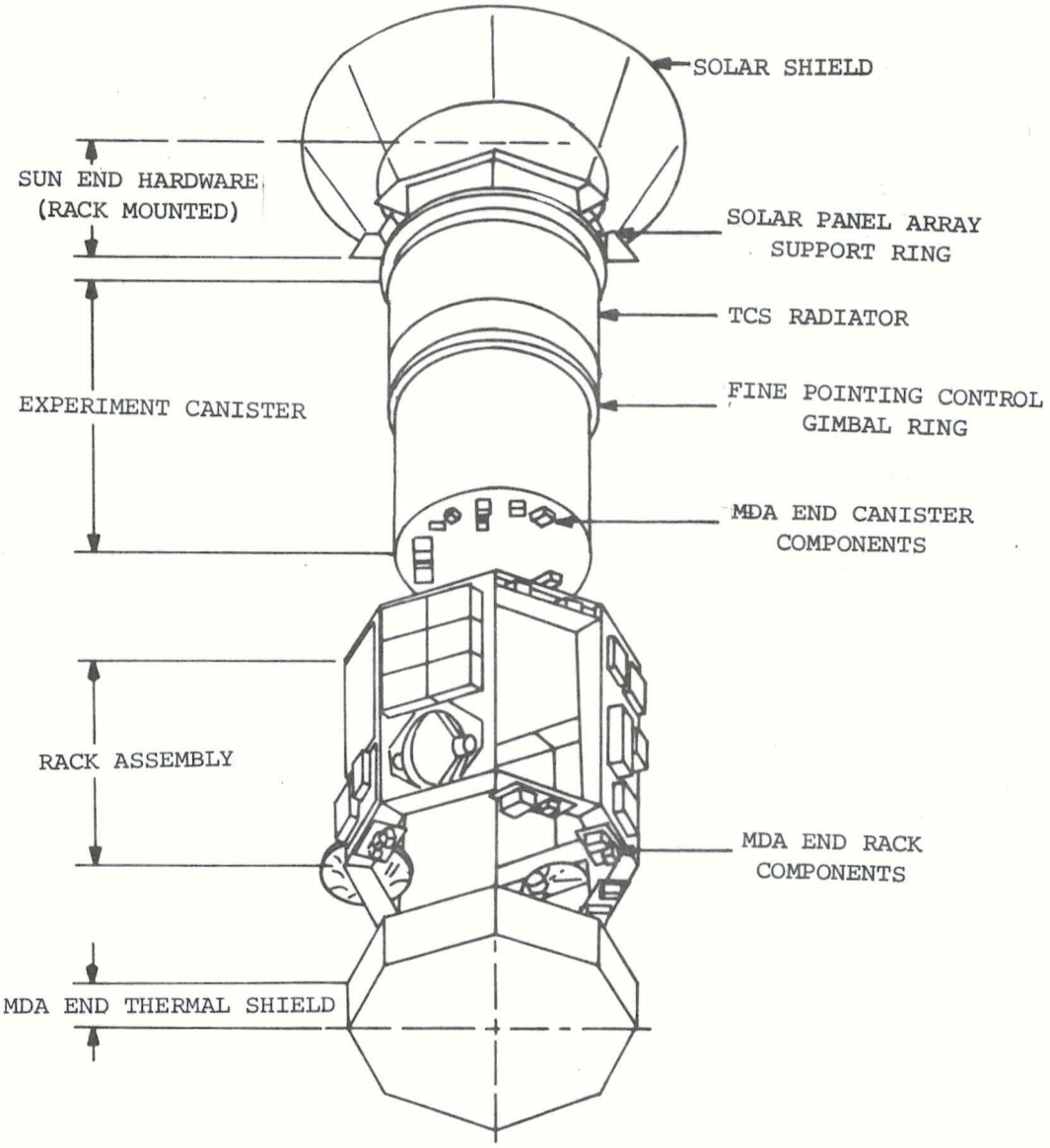

Figure 2.3-1 Exploded View of ATM

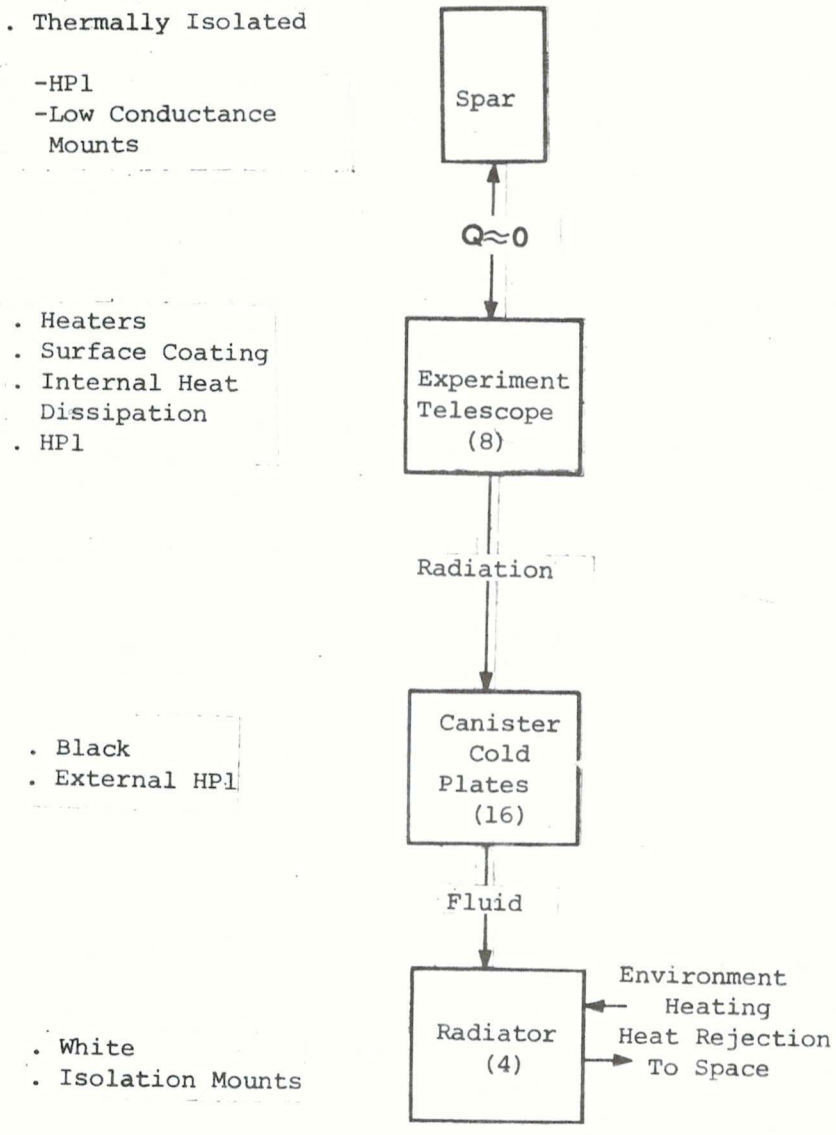

Figure 2.3-2 ATM Canister Thermal Design Concept

2.3.2 Subsystem Interfaces

The ATM thermal control subsystem interfaces are shown in Figure 2.3-3.

The electrical power subsystem provides operational power for the active TCS and individual thermostatically controlled heaters.

The control and display console interface provides the crew with control of the active TCS via switch functions and the digital address system. Active TCS performance data is supplied to the console for display.

The instrumentation and communication subsystem interface provides STDN control of the active TCS through the RF command system. Performance and status data is provided STDN via the telemetry system.

Selected active TCS performance data is routed to the caution and warning subsystem for onboard display.

Thermal interface with the experiments subsystems is by means of both active and passive techniques, the primary interface being the active TCS.

Passive thermal interface is made with the entire ATM assembly.

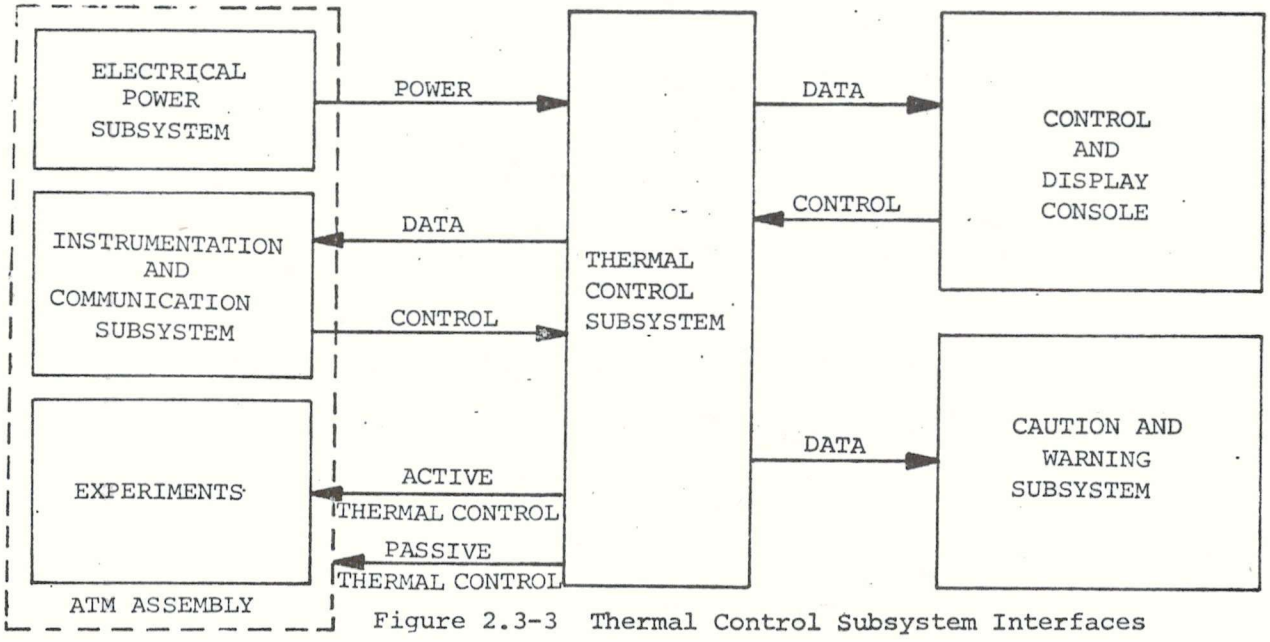

Figure 2.3-3 Thermal Control Subsystem Interfaces

2.3.3 Functional Description

2.3.3.1 Active Thermal Control System - The active TCS is a closed loop heat transport system using methanol/water 80/20 by weight as the transfer medium. Figure 2.3-4 shows the TCS functional schematic. The sun half and MDA half of the canister wall provides two parallel coolant flow paths, each consisting of eight cold plates connected in series. The inside of the canister wall has a coating to absorb radiation and the outer surface is insulated. The space radiator is mounted circumferentially around the exterior of the sun end of the canister. The other TCS components such as the pumps, accumulator, heater, etc., are mounted to the outside of the canister and within the rack structure. There are no fluid connections between the rack and the canister.

The TCS is designed to maintain the fluid entering the cold plates at 50±1°F with no more than a 3°F temperature rise as the coolant passes through the canister wall. The fluid is circulated through the system at a flow rate of 900±50 Lb/Hr to provide a maximum heat transfer capacity of 500 watts.

The circulating pump, either primary or secondary, produces a 30 psid pressure rise operating at an inlet pressure maintained between 7 and 19 psig. Only one pump can operate at a given time. The pumps are driven each by an electrical motor through 2 magnetic coupling. The pumps are parallel in the coolant loop and the direction of flow is controlled by the primary and secondary check valves. The valve serving the "ON" pump assumes the open position while the valve serving the "OFF" pump assumes the closed position.

Positive pump inlet pressure is provided by the accumulator. The accumulator has a spring loaded bellows reservoir and also accomodates for changes in fluid volume with temperature and provides reserve fluid for leakage losses.

The fluid leaving the pump is filtered by the 400 micron in-line filter to prevent possible contamination of critical flow valves downstream. The filter incroporates an internal pressure relief that allows the fluid to bypass if the element clogs.

The filtered coolant flow divides between two paths, the radiators and the radiator by-pass line. The radiators are capable of dissipating 500 watts by radiating to space while the by-pass line contains in-line heaters (primary and secondary) capable of adding up to 500 watts to the working fluid.

Proportioning of flow between the radiator and heater flow passages is determined by the temperature of the fluid entering the coldplates. This temperature is sensed by primary and secondary sensors (located in the Temperature Sensor Assembly) and fed back to the Electronic Control Assembly (ECA). The ECA contains two identical controllers (primary and secondary) only one of which can be energized at any one time. The active controller converts the input from the temperature sensor into commands to operate the modulating flow control valve (MFCV) and heater. The MFCV has continuous control from full radiator flow to full heater flow (radiator by-pass). The controller also commands the two flow path selector valves (FPSV) to direct the coolant flow through the selected (primary and secondary) inlet ports.

The heater is powered via the controller and operates at 250 watts when the control temperature decreases to 47.7 ± 0.1°F. Further decrease in control temperature to 47.0 ± 0.1°F signals the controller to activate a second 250 watt element. Both heater elements then will remain on until the control temperature rises to 48.5 ± 0.1°F.

The flow restricting valves are used to balance the flow in parallel flow passages, to adjust total system flow and to direct flow during filling and draining of the system. These valves are manually adjusted to the required settings and locked in place during ground checkout.

Temperature and pressure transducers are plumbed into the coolant fluid loop at various stations to provide TCS performance data to both the crew and STDN. Surface type temperature transducers are used on the radiators and heater exterior surfaces. The accumulator also has an internal device for sensing the bellows position. The TCS Monitor provides signal conditioning required by several temperature measurements. Both analog and discrete measurements are provided by the TCS. Those parameters available to the crew are shown on the functional schematic as going to C&W and Meter bubbles. Those parameters available to STDN have their identification callout enclosed in a rectangle.

The TCS is remotely controlled either by the crew from the ATM Control and Display console in the MDA or by STDN via RF commands. Figure 2.3-5 depicts the TCS onboard controls and indicators.

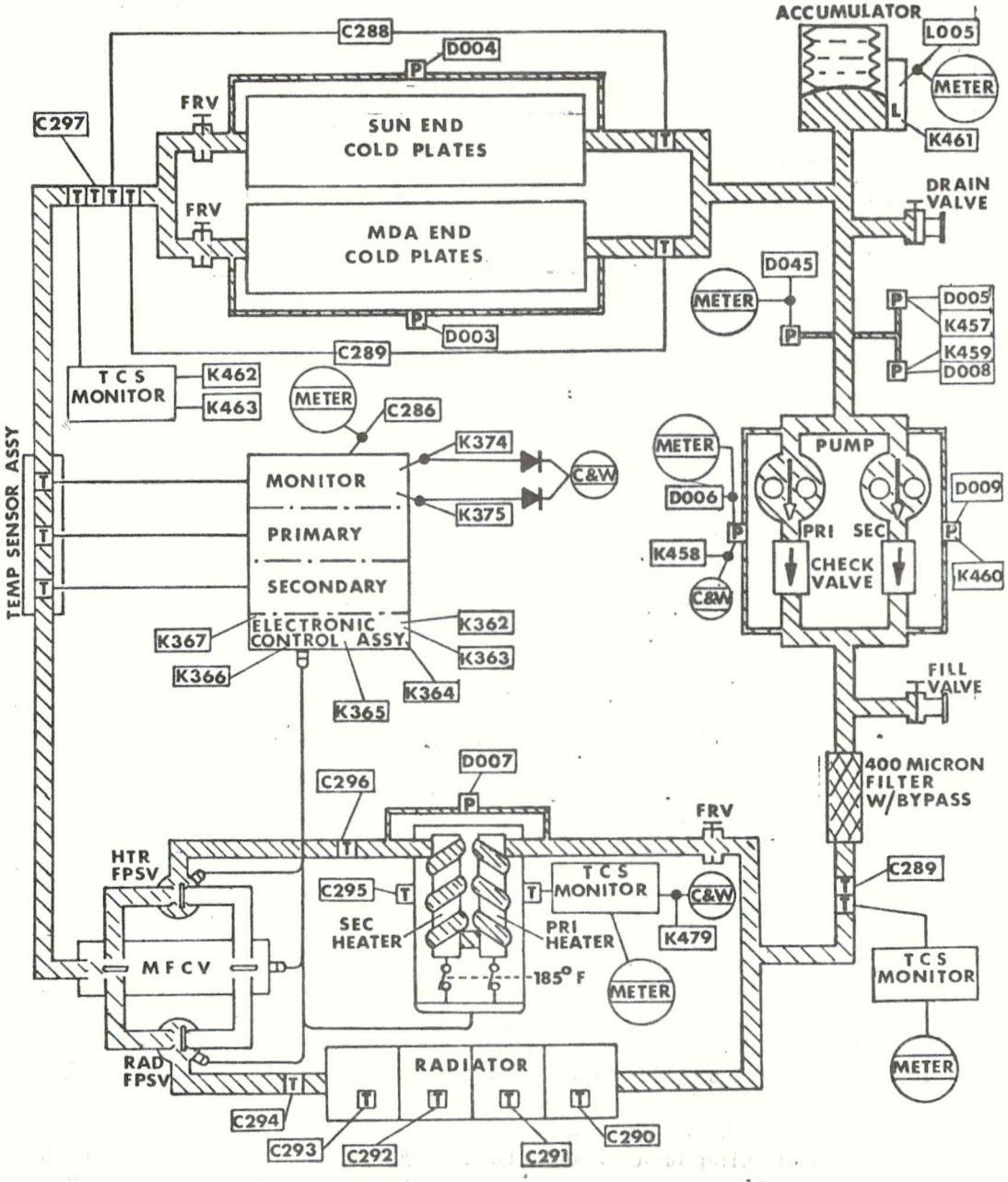

FIGURE 2.3-4 TCS FUNCTIONAL SCHEMATIC

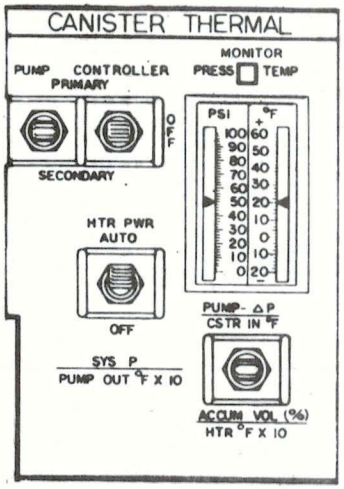

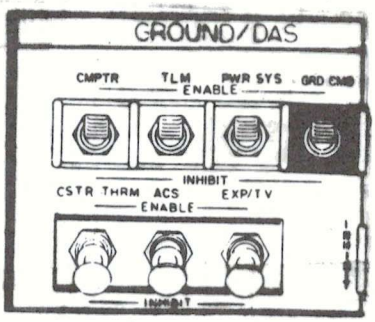

Figure 2.3-5 TCS Controls and Monitor

The function of the TCS controls and indicators are described below.

The PUMP switch selects either the primary or secondary pump to operate or turns off both pumps.

The CONTROLLER switch selects either the primary or secondary controller loop for operation or turns off both controllers. The controller loop includes the temperature sensor, temperature controller, MFCV, FPSVs, and the heater. A failure of any one of these items will necessitate the selection of the alternate controller.

The HEATER switch, when in the AUTO position, allows power to by cycled to the heater on command from the controller. The OFF position disables the input power lines to both the primary and secondary heaters.

The MONITOR switch is used in conjunction with the dual indicator MONITOR meter. The PUMP $-\Delta P$/CSTR IN ^{o}F X 10 position selects the pump differential pressure and the canister inlet fluid temperature for display. The SYS P/PUMP OUT ^{o}F position displays the pump inlet pressure and the pump outlet temperature. The ACCUM VOL (%)/ HTR ^{o}F X 10 position displays the percent of available accumulator reserve volume and heater surface temperature.

The GROUND/DAS controls provide the crew with the capability of inhibiting RF commands to the TCS. The CSTR THERM switch controls access of both RF commands and DAS commands to the TCS. For RF commands to be enabled, both the GRD CMD and CSTR THERM switches must be in the ENABLE position. If either of these switches is in the INHIBIT position, the TCS cannot be accessed via RF commands.

2.3.3.2 Rack Mounted Components - The ATM Rack, in addition to providing structural support to the canister, provides a mounting area for over one hundred and forty electrical/mechanical components. For identification purposes, the component areas are divided into several zones, as shown in Figure 2.3-6. Mounting panels which occupy the full length of a rack side are identified with the zone numbers of the upper and lower section of the rack (e.g., zone 12/20, zone 11/19).

The component locations on the rack are shown in Figures 2.3-7 through 2.3-13. The component line item numbers of the ATM Equipment List (Saturn V Workshop), 50M79200, are used to identify the various components.

The rack thermal control concept is to eliminate any operational conditions that would cause a component temperature to vary outside its operating range. To accomplish this, emphasis has been placed on maximum use of passive thermal controls and minimizing heater power requirements. Some significant thermal requirements on the ATM design are that:

a. All ATM surfaces exposed to the external environment have white surface coatings (α/ε= 0.2/0.90) to eliminate problems that result from solar heating.

b. Thermal shields protect components with low power density from cold environments. These shields are covered with various amounts of high performance insulation to reduce heat losses.

c. All major component mounting panels are conductively isolated from the rack structure.

d. All major mounting panels, except the panel mounting for the CMGs and batteries, are covered with various amounts of high performance insulation.

e. The components are located in such a way that power distribution in major zones around the rack sides is reasonably uniform.

f. Higher heat dissipating components are mounted on external panels.

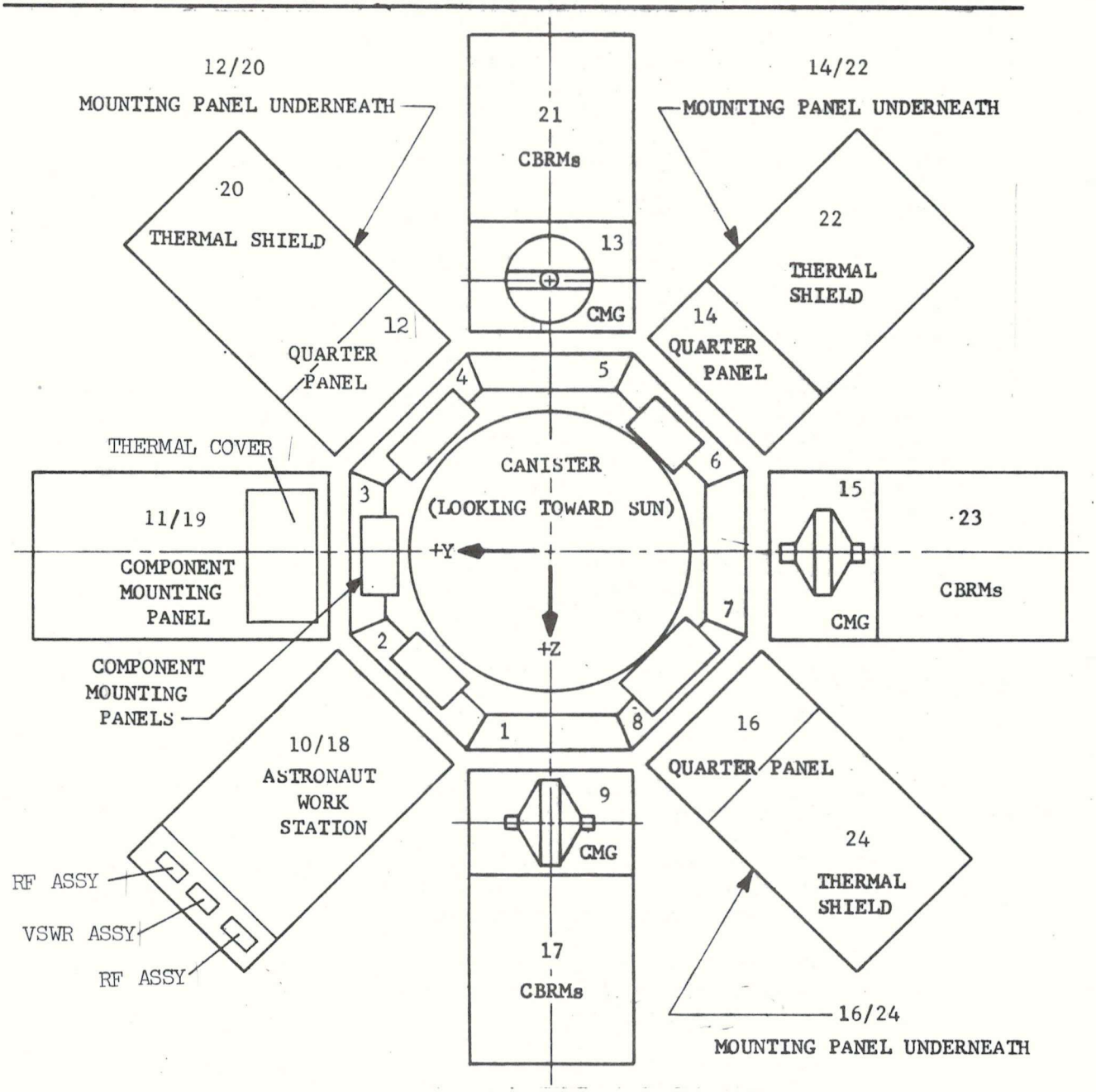

Figure 2.3-6 Top and Exploded Side Views of Rack Showing Equipment Mounting Zone Designations.

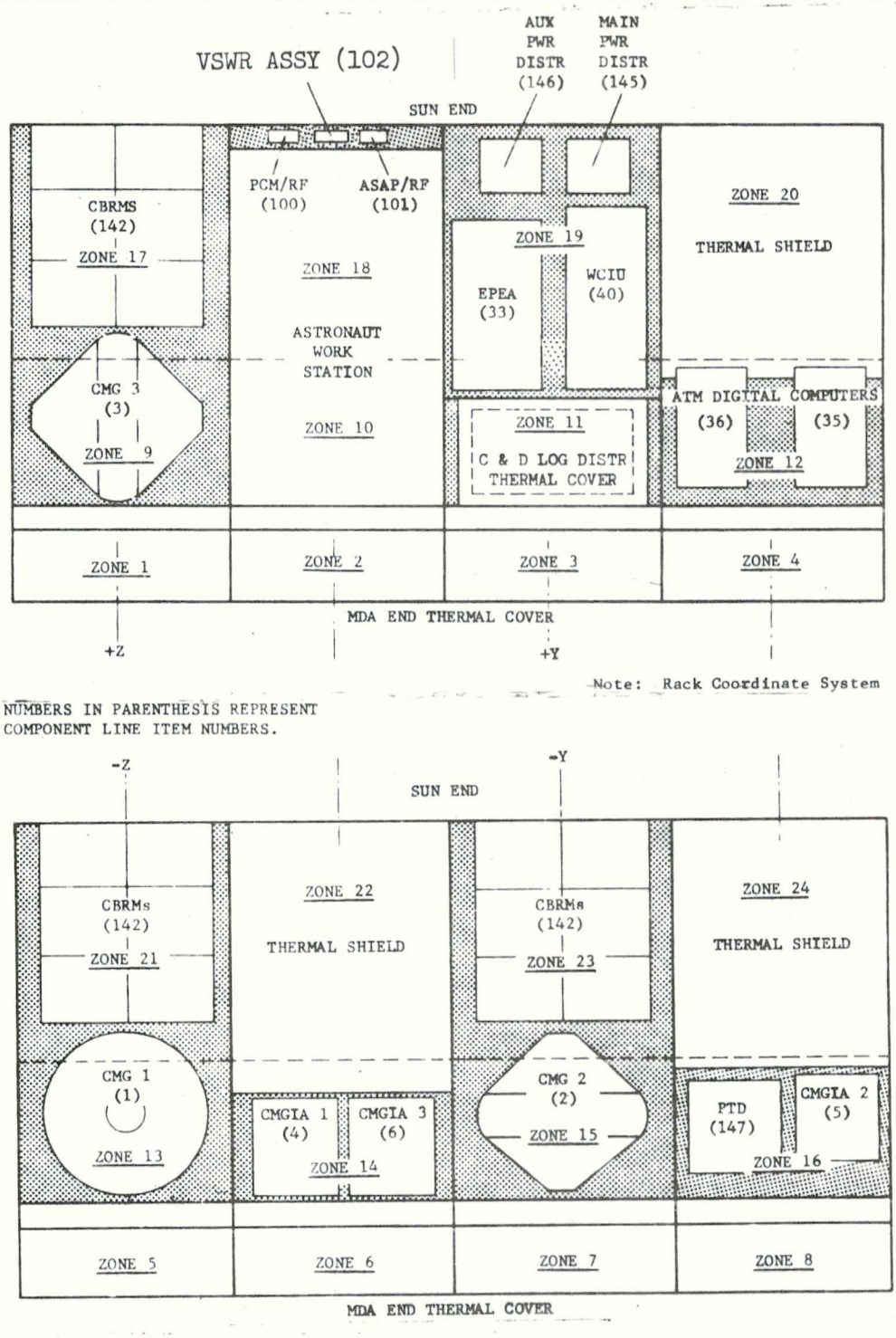

Figure 2.3-7 Schematic of the ATM Externally Mounted Rack Components and Thermal Zones

LINE ITEM NUMBER	COMPONENT DESCRIPTION
17	RATE GYRO - X-1
18	RATE GYRO - X-2
19	RATE GYRO - Y-1
20	RATE GYRO - Y-2
34	RATE GYRO - Y-3
39	RATE GYRO - X-3

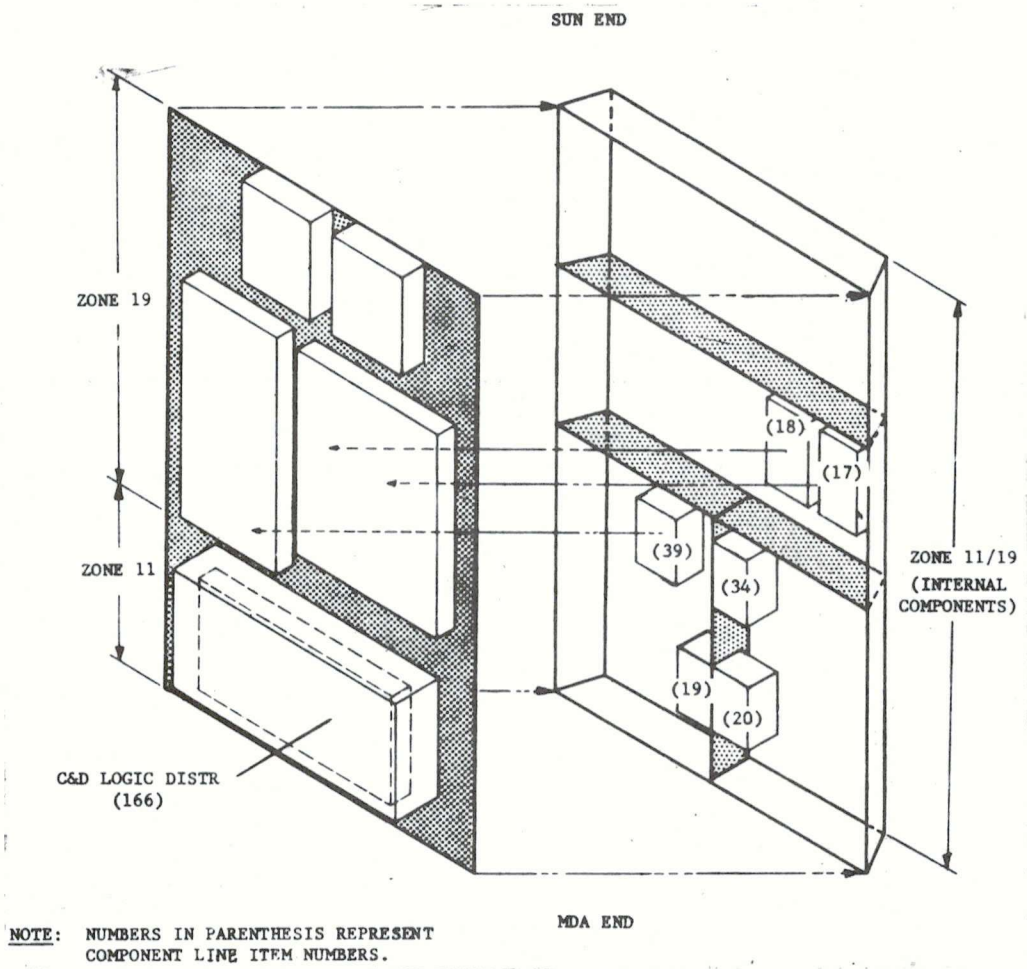

NOTE: NUMBERS IN PARENTHESIS REPRESENT COMPONENT LINE ITEM NUMBERS.

Figure 2.3-8 Schematic of the ATM Rack Zones 11/19 Internally Mounted Components

LINE ITEM NUMBER	COMPONENT DESCRIPTION
8	STAR TRACKER ELECT ASSY.
86	REM ANAL SUBM 5
118	SIG CONDITION RACK 7
119	SIG CONDITION RACK 8
120	SIG CONDITION RACK 9
121	REM ANAL SUBM 6
148	SWITCH SELECTOR 1
149	SWITCH SELECTOR 2
150	SWITCH SELECTOR 3
154	CONTROL DISTRIBUTOR 2
155	CONTROL DISTRIBUTOR 3
157	CONTROL DISTRIBUTOR 5
158	MEASURING DISTRIBUTOR 1
165	J-BOX ASSEMBLY

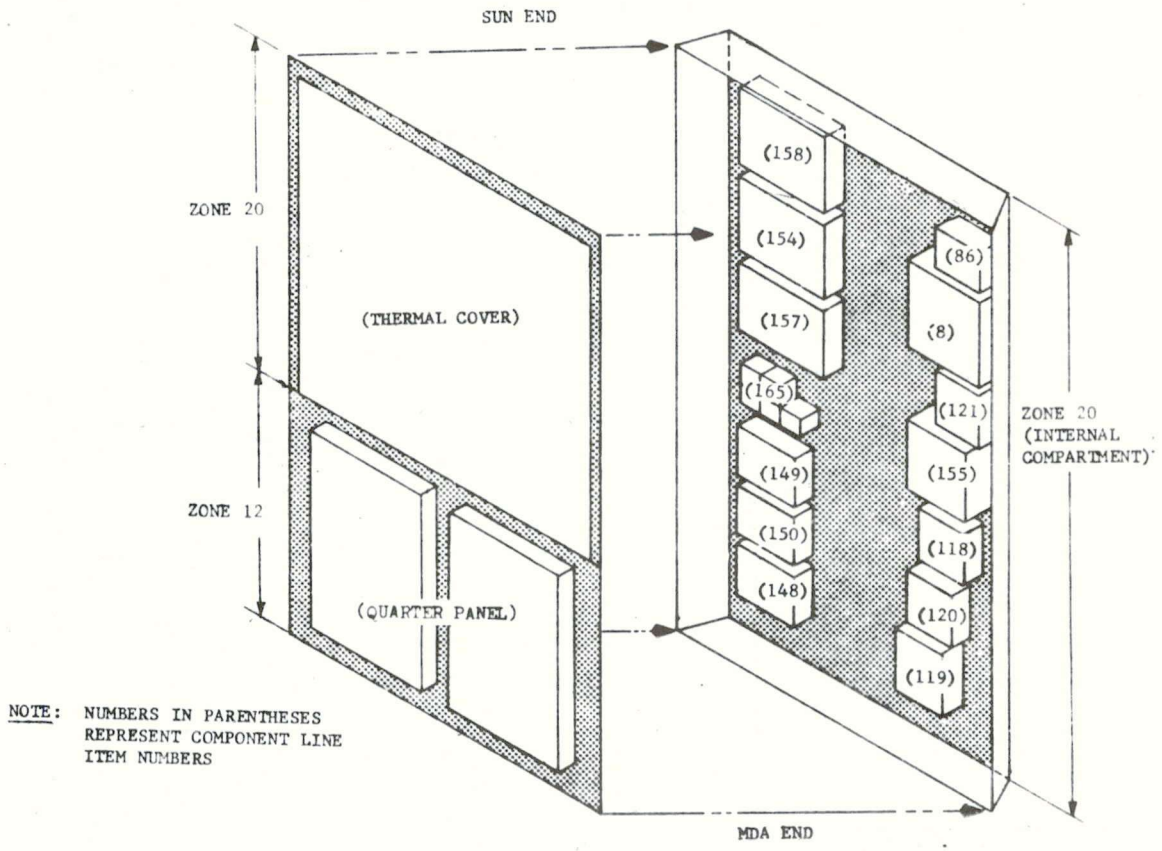

Figure 2.3-9 Schematic of the ATM Rack Zones 12/20 Internally Mounted Components

LINE ITEM NUMBER	COMPONENT DESCRIPTION
9	FSS SIG CONDITION
80	MULTIPLEXER ASSY. (B0)
83	MULTIPLEXER ASSY. (A3)
85	REM ANAL SUBM 3
87	REM ANAL SUBM 4
93	REM DIG MULT (Z)
96	AMP & SWITCH ASSY.
98	DSIU
99	ASAP MEMORY ASSY.
105	TAPE RECORDER
106	TAPE RECORDER (REDUNDANT)
107	DC-DC CONVERTER
115	SIG CONDITION RACK 4
116	SIG CONDITION RACK 5
117	SIG CONDITION RACK 6
143	MEAS VOLT SUPPLY
144	MEAS VOLT SUPPLY (RED)
151	SWITCH SELECT 4
161	NRL-A POWER SUPPY
162	NRL-B POWER SUPPY
163	HAO POWER SUPPY

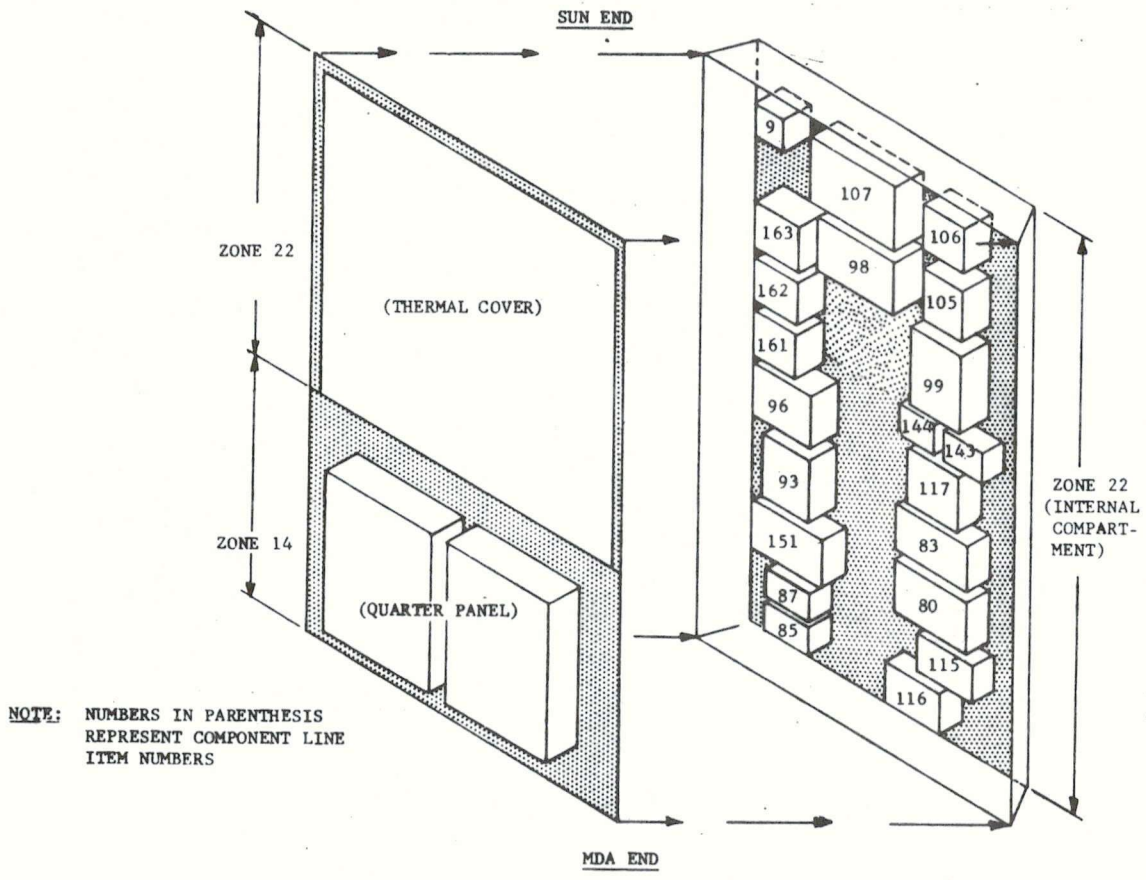

NOTE: NUMBERS IN PARENTHESIS REPRESENT COMPONENT LINE ITEM NUMBERS

Figure 2.3-10 Schematic of the ATM Rack Zones 14/22 Internally Mounted Components

LINE ITEM NUMBER	COMPONENT DESCRIPTION
71	COAXIAL SWITCH
75	COAXIAL SWITCH-FLIGHT
81	MULTIPLEXER ASSY. (A2)
82	MULTIPLEXER ASSY. (A1)
90	REM DIG MULT (M)
91	REM DIG MULT (N)
92	REM DIG MULT (Y)
94	PCM/DDAS ASSY.
95	PCM/DDAS ASSY. (RED)
112	SIG CONDITION RACK 1
113	SIG CONDITION RACK 2
114	SIG CONDITION RACK 3
122	REM ANAL SUBM 1
128	COMMAND DECODER
129	COMMAND RECEIVER
130	DIRECTIONAL COUPLER
159	MEAS DISTRIBUTOR 2
165	J-BOX ASSEMBLY
183	WATT HOUR ASSEMBLY

NUMBERS IN PARENTHESIS REPRESENT COMPONENT LINE ITEM NUMBERS.

Two RF Multiplexers, item 76, not shown

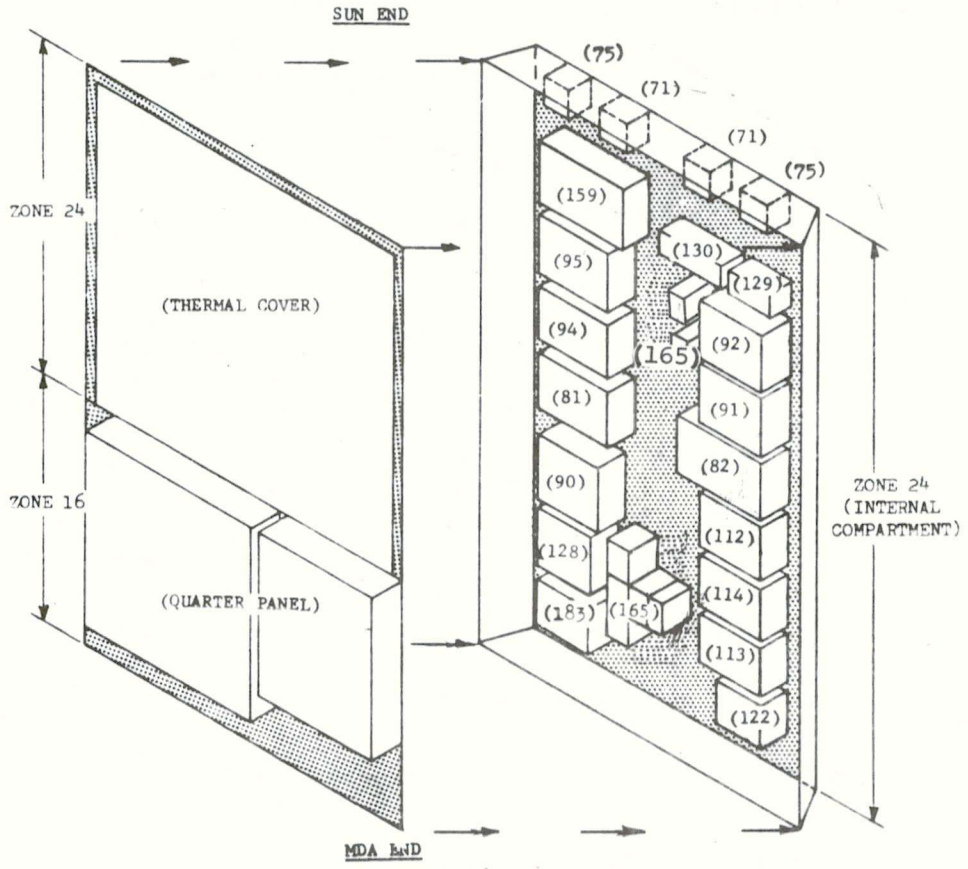

Figure 2.3-11 Schematic of the ATM Rack Zones 16/24 Internally Mounted Components

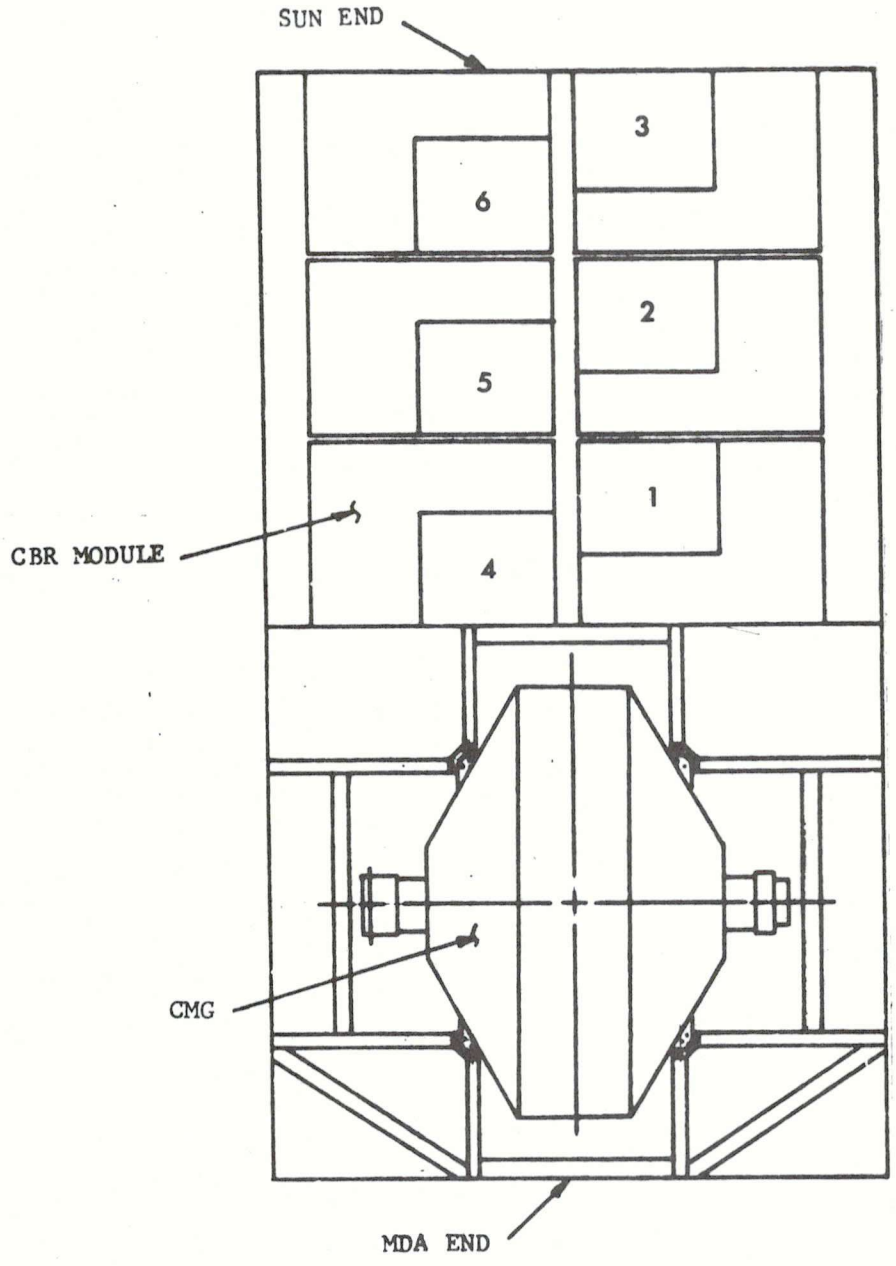

Figure 12 Schematic of Typical CMG and CBRM Configuration in Rack Zones 9/17, 13/21 and 15/23

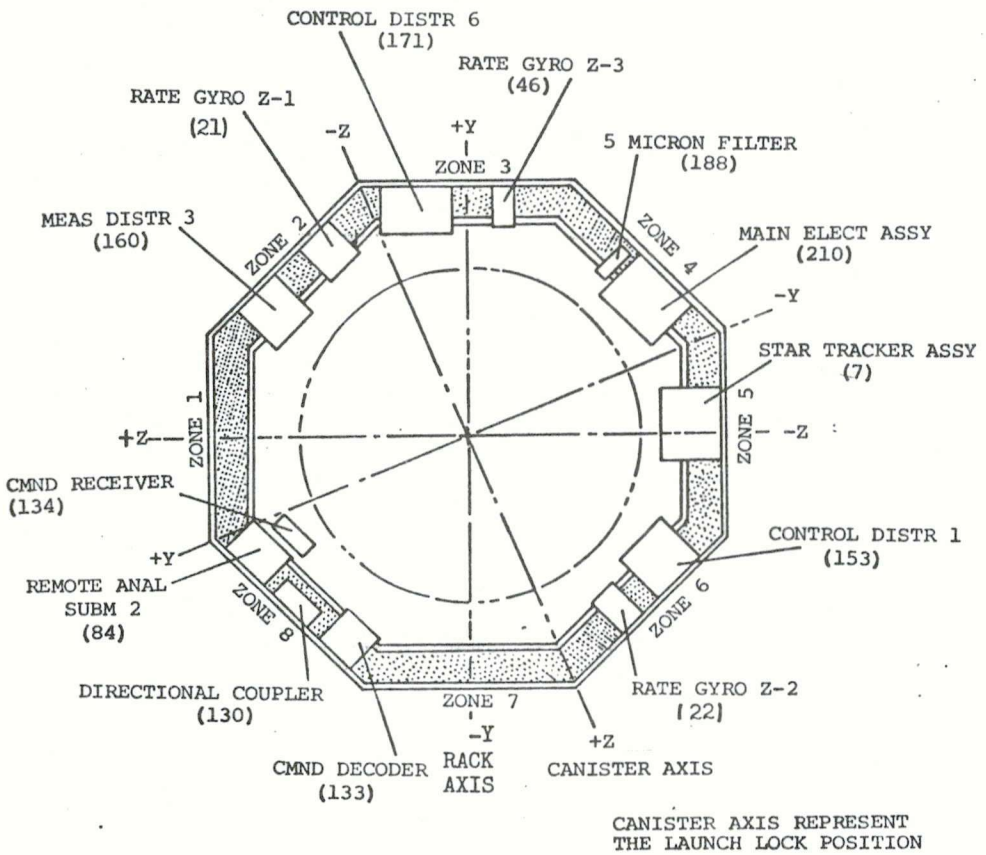

Figure 2.3-13 Schematic of ATM Rack MDA END Mounted Components

The sink temperatures for all of the rack zones are presented in Table 2.3-I. For convenience, the values of the main parameters used in the determination of the rack environments are reported in Table 2.3-II.

The maximum and minimum component heat dissipations are tabulated in Table 2.3-III. The maximum orbital average heat dissipations are used in conjunction with the extreme hot case and the minimum orbital average values used for the extreme cold case.

The heat dissipations for the nine Rate Gyros, the Control Moment Gyros (CMGs) and the Charger/Battery/Regulator Modules (CBRMs) are shown in Table 2.3-IV and 2.3-V. In the case of the gyros, the fourth heat input represents the heat dissipated by the gyro wheel.

Rack mounted components requiring auxiliary heaters for temperature control are presented in Table 2.3-VI.

The analytically calculated temperatures of the components mounted on the rack, with the exception of the CMGs and CBRMs, are presented in Table 2.3-VII. The tabulated temperatures are for the extreme cold and hot environments, and the values represent the orbital average temperature of the coldest or hottest node in the component. In the case of the Coaxial Switches (component 75), the temperature shown is that of the rack structure to which the switches are solidly attached, since these switches were not simulated in the rack thermal model.

From Table 2.3-VII, by comparison with the temperature limits, it can be observed that the component temperatures are within the prescribed limits.

The temperatures of the CBRMs and CMGs are shown in Tables 2.3-VIII, 2.3-IX, and 2.3-X. As in the case of the other components, the tabulated temperatures represent orbital average values.

In Table 2.3-VII, the temperatures of only one CBR Module per case are reported: the coldest or the hottest depending on the case. In Table 2.3-IX, the temperatures of the battery cells of the 18 modules are listed for both the extreme hot and extreme cold case. All of the reported temperatures are satisfactorily within limits and no problem is anticipated with the CBRMs.

In Table 2.3-X, only the most significant temperatures of the three CMGs are tabulated.

The heater power requirements for the extreme cold orbital conditions for the nine Rate Gyros, the three CMGs, and the eighteen CBRMs are shown in Table 2.3-XI. The tabulated values represent the average power required at equilibrium conditions (steady state) to maintain the components within the operating temperature limits. Under extreme cold conditions the total heater power required is 205 watts.

Table 2.3 XII shows the temperatures of the components mounted on the MDA end of the canister.

Table 2.3-I. Rack Sink Temperatures (°F)
(Orbital Average)

ZONE	EXTREME COLD	EXTREME HOT
Rack Sides:		
9	-96.4	-29.5
17	-102.5	-36.0
10	-43.0	26.9
18	-43.0	26.9
11	-2.5	71.4
19	-8.5	63.6
12	-45.5	33.9
20	-40.4	30.0
13	-96.6	-30
21	-102.4	-36.4
14	-72.3	-3.1
22	-73.9	-8.0
15	-64.5	5.6
23	-73.8	-9.1
16	-72.3	-2.2
24	-73.8	-7.2
Rack Sun End:		
25	-55.2	.2.6
26	-65.5	-7.4
27	-57.1	-0.1
28	-57.4	-0.2
29	-63.1	-8.2
30	-58.5	-2.9
31	-55.6	-2.8
32	-48.1	5.0
MDA End Shield:		
Top	-50.7	26.1
Side 1 (+Z)	-100.9	-34.0
2	-49.0	20.3
3 (+Y)	-13.8	57.1
4	-48.8	21.2
5 (-Z)	-98.9	-31.8
6	-87.7	-19.7
7 (-Y)	-71.2	- 1.3
8	-87.6	-18.9

Table 2.3-II Environmental Parameters

PARAMETER	HOT CASE	COLD CASE
Solar Constant, BTU/hr-ft^2	457.0	401.0
Albedo	0.42	0.18
Planetary Emission, BTU/hr-ft^2	88.4	61.6
White Paint		
Ultraviolet Absorptivity	0.5	0.2
Infrared Emissivity	0.9	0.9
Black Paint		
Ultraviolet Absorptivity	0.9	0.9
Infrared Emissivity	0.9	0.9
Orbit Eccentricity	0.	0.
Orbit Altitude, nautical miles	235.	235.

Table 2.3-III. Component Heat Dissipation (Watts) (Sheet 1 of 2)

ZONE	COMPONENT NO.	COMPONENT NAME	DISSIPATION MAX.	DISSIPATION MIN.	DISTRIBUTION (%) TOP	DISTRIBUTION (%) CENTER	DISTRIBUTION (%) BASE
14	4	CMG INVERTER	69	50	100.	0.	0.
16	5	CMG INVERTER	69	50	100.	0.	0.
14	6	CMG INVERTER	69	50	100.	0.	0.
12/20	8	STAR TRACK. ELEC.	16.77	15.1	100.	0	0.
14/22	9	FINE SS COND.	2.0	2.0	100.	0.	0.
11/19	33	EPEA	65	36	100.	0.	0.
12	35	DIG. COMPUTER	165.0	114	100.	0.	0.
12	36	DIG. COMPUTER (R)	0.0	0.0	--	--	--
11/19	40	WCIU	105.0	84	75.	20.	5.
16/24	76	RF MULTICOUPLER	8.0	4	100.	0.	0.
14/22	80	MULTIPLEXER	3.0	2.7	20.	60.	20.
16/24	81	MULTIPLEXER	3.0	2.7	20.	60.	20.
16/24	82	MULTIPLEXER	3.0	2.7	20.	60.	20.
14/22	83	MULTIPLEXER	3.0	2.7	20.	60.	20.
8	84	REM. ANAL. SUBM.	3.0	2.7	20.	40.	40.
14/22	85	REM ANAL. SUBM.	3.0	2.7	20.	40.	40.
12/20	86	REM. ANAL. SUBM.	3.0	2.7	20.	40.	40.
14/22	87	REM. ANAL. SUBM.	3.0	2.7	20.	40.	40.
16/24	90	REM. DIG. MULT.	6.8	5.1	20.	40.	40.
16/24	91	REM. DIG. MULT.	6.8	5.1	20.	40.	40.
16/24	92	REM. DIG. MULT.	6.8	5.1	20.	40.	40.
14/22	93	REM. DIG. MULT.	6.8	5.1	20.	40.	40.
16/24	94	PCM/DDAS	30.8	28.8	20.	40.	40.
16/24	95	PCM/DDAS (R)	0.	0.	--	--	--
14/22	96	AMP. + SWITCH	2.86	2.7	20	40	40
14/22	97	COMP. INTERFACE	4.0	0.4	20.	40.	40.
14/22	98	ASAP INTERFACE	8.9	4.9	20.	40.	40.
14/22	99	MEMORY MOD.	7.0	1.8	20.	40.	40.
10/18	100	PCM RF	5.5	34	5.	10.	85.
10/18	101	ASAP RF	53	37	5.	10.	85.
12/20	102	VSWR MEAS. ASSY.	1.4	0.7	0.	0.	100.
14/22	105	TAPE RECORDER	23.5	34.8	40.	10.	20.
14/22	106	TAPE RECORDER (R)	0.	0.	--	--	--
14/22	107	DC-DC CONV.	11.57	7.27	60.	10.	30.
16/24	112	SIG. COND. RACK	2.48	2.48	20.	40.	40.
16/24	113	SIG. COND. RACK	2.48	2.48	20.	40.	40.
16/24	114	SIG. COND. RACK	2.48	2.48	20.	40.	40.
14/22	115	SIG. COND. RACK	2.48	2.48	20.	40.	40.
14/22	116	SIG. COND. RACK	2.48	2.48	20.	40.	40.
14/22	117	SIG. COND. RACK	2.48	2.48	20.	40.	40.
12/20	118	SIG. COND. RACK	2.48	2.48	20.	40.	40.
12/20	119	SIG. COND. RACK	2.48	2.48	20	40.	40.

Table 2.3-III. Component Heat Dissipation (Watts) (Sheet 2 of 2)

ZONE	COMPONENT NO.	COMPONENT NAME	DISSIPATION MAX.	DISSIPATION MIN.	DISTRIBUTION (%) TOP	DISTRIBUTION (%) CENTER	DISTRIBUTION (%) BASE
12/20	120	SIG. COND. RACK	2.48	2.48	20.	40.	40.
12/20	121	REM. ANAL.	3.0	2.7	20.	40.	40.
16/24	122	REM. ANAL.	3.0	2.7	20.	40.	40.
16/24	128	COMM. DECODER	26.	3.6	4.	92.	4.
16/24	129	COMM. RECEIVER	4.5	4.0	33.	33.	33.
16/24	130	DIRECT COUPLER	0.	0.	--	--	--
8	133	COMM. DECODER	26.	3.6	--	--	--
8	134	COMM. RECEIVER	4.5	4.0	--	--	--
8	135	DIRECT COUPLER	0.	0.	--	--	--
14/22	143	MEAS. VOLT. SUPP.	3.9	3.5	45.	45.	10.
14/22	144	MEAS. VOLT. SUPP. (R)	0.	0.	--	--	--
11/19	145	MAIN POWER DISTR.	50.	50.	75.	20.	5.
11/19	146	AUX. POWER DISTR.	50.	50.	75.	20.	5.
16	147	PWR TRANS. DISTR.	225.	71.	90.	8.	2.
12/20	148	SWITCH SELECT.	17.95	3.0	0.	100.	--
12/20	149	SWITCH SELECT	17.95	3.0	0.	100.	--
12/20	150	SWITCH SELECT.	17.95	3.0	0.	100.	--
14/22	151	SWITCH SELECT	17.95	3.0	0.	100.	--
6	153	CONTR. DISTR.	15.0	15.0	75.	20.	5.
12/20	154	CONTR. DISTR.	15.0	15.0	75.	20.	5.
12/20	155	CONTR. DISTR.	15.0	15.0	75.	20.	5.
12.20	157	CONTR. DISTR.	15.0	15.0	75.	20.	5.
12/20	158	MEAS. DISTR.	20.0	20.0	75.	20.	5.
16/24	159	MEAS. DISTR.	20.0	20.0	75.	20.	5.
2	160	MEAS. DISTR.	20.0	20.0	75.	20.	5.
14/22	161	NRL-A PWR SUPP.	6.2	6.2	65.	35.	0.
14/22	162	NRL-B PWR SUPP.	6.2	6.2	65.	35.	0.
14.22	163	HAO PWR SUPP.	6.2	6.2	65.	35.	0.
12/20	165	J-BOX ASSY	0.	0.	--	--	--
11/19	166	C&D LOGIC DISTR.	40.0	40.0	75.	20.	5.
3	171	CONTR. DISTR.	15.0	15.0	75.	20.	5.
16/24	183	WATT HOUR ASSY	2.5	2.5	95.	4.	1.
4	210	AS&E MAIN ELEC.	34.4	34.4	100.	0.	0.

Table 2.3-IV. Rate Gyro Heat Dissipation (Watts)

ZONE	COMPONENT		DISTRIBUTION (%)					
	NO.	NAME	MAX.	MIN.	TOP.	CENTER	BASE	WHEEL
11/19	17	RATE GYRO X-1	45.0	19.0	50.	40.	10.	5.1
11/19	18	RATE GYRO X-2	45.0	19.0	50.	40.	10.	5.1
11/19	19	RATE GYRO Y-1	45.0	19.0	50.	40.	10.	5.1
11/19	20	RATE GYRO Y-2	45.0	19.0	50.	40.	10.	5.1
2	21	RATE GYRO Z-1	45.0	19.0	50.	40.	10.	5.1
6	22	RATE GYRO Z-2	45.0	19.0	50.	40.	10.	5.1
11/19	34	RATE GYRO Y-3	10.	6.	50.	40.	10.	0.
11/19	39	RATE GYRO X-3	10.	6.	50.	40.	10.	0.
3	46	RATE GYRO Z-3	10.	6.	50.	40.	10.	0.

Table 2.3-V. CBRM and CMG Heat Dissipation

COMPONENT	HEAT DISSIPATION (WATTS)
CBRM	
Cells	20.
Electronics	36.4
Circuit Boards	5.6
Filter	8.5
TOTAL	70.5
CMG	37.5

Table 2.3-VI. Auxiliary Heaters

COMPONENT	HEATER SIZE (WATTS)	TYPE	OPERATING LIMITS
*CBRM	43.5	PROPORTIONAL	14°F to 32°F
*CMG	48.0	ON-OFF	60°F to 80°F
*RATE GYRO	25.0	PROPORTIONAL	153°F to 155°F
*STAR TRACKER	20.0	ON-OFF	-10 to +5 °F
*EVA ROLL CONTROL	24	ON-OFF	-40 to -25 °F
DIGITAL COMPUTERS	100	ON-OFF	-15 to -5 °F
RASM #2	10	ON-OFF	-4 to +6 °F
AS&E MEA.	20	ON-OFF	32 to 42 °F
CMG INVERTERS	20	ON-OFF	-22 to -12 °F

*HEATERS INTERNAL TO COMPONENT

Table 2.3-VII. Component Temperature
(Orbital Average Extreme Environments) Sheet 1 of 3)

ZONE	COMPONENT		TEMPERATURE LIMIT (°F)		CALCULATED TEMP. (°F)	
	NO.	NAME	LOWER	UPPER	EXT. COLD	EXT. HOT
2	21	RATE GYRO	-40.	110.	52.	90.
2	160	MEAS. DISTR.	-67.	167.	30.	80.
3	46	RATE GYRO	-40.	110.	45.	92.
3	171	CONTR. DISTR.	-67.	147.	28.	77.
4	210	AS&E MAIN ELECT.	32.	100.	40.	72.
6	22	RATE GYRO	-40.	110.	46.	82.
6	153	CONTR. DISTR.	-67.	147.	20.	67.
8	84	REM. ANAL.	- 4.	122.	11.	60.
8	133	COMM. DECODER	-40.	185.	7.	57.
8	134	COMM. RECEIVER	-65.	185.	5.	55.
10/18	100	PCM RF	- 4.	122.	6.	65.
10/18	101	ASAP RF	- 4.	122.	6.	65.
11/19	33	EPEA	-67.	165.	12.	86.
	40	WCIU	-15.	165.	25.	89.
	145	MAIN POWER DISTR.	-40.	147.	21.	105.
	146	AUX. POWER DISTR.	-67.	147.	21.	105.
	166	C&D LOGIC DISTR.	-67.	167.	36.	112.
	17	RATE GYRO	-40.	110.	48.	88.
	18	RATE GYRO	-40.	110.	52.	91.
	19	RATE GYRO	-40.	110.	54.	91.
	20	RATE GYRO	-40.	110.	56.	92.
	34	RATE GYRO	-40.	110.	43.	87.
11/19	39	RATE GYRO	-40.	110.	45.	93.
12	35	WORK COMP.	-15.	165.	25.	101.
12	36	WORK COMP. (R)	-15.	165.	-18.	45.
12/20	8	STAR TRACK. ELEC.	-15.	131.	45.	90.
	86	REM. ANAL. SUBM.	- 4.	122.	40.	83.
	102	VSWR MEAS. ASSY.	-40.	165.	40.	84.
	118	SIG. COND. RACK	- 4.	122.	33.	77.
	119	SIG. COND. RACK	- 4.	122.	27.	73.
	120	SIG. COND. RACK	- 4.	122.	30.	75.
	121	REM. ANAL. SUBM.	- 4.	122.	39.	82.
	148	SWITCH SELECT.	-13.	212.	11.	63.
	149	SWITCH SELECT.	-13.	212.	19.	69.
	150	SWITCH SELECT.	-13.	212.	15.	65.
	154	CONTR. DISTR.	-67.	147.	62.	119.
	155	CONTR. DISTR.	-67.	147.	38.	88.
	157	CONTR. DISTR.	-67.	147.	51.	104.
	158	MEAS. DISTR.	-67.	167.	57.	110.
12/20	165	J-BOX ASSY.	-67.	167.	33.	80.

Table 2.3-VII. Component Temperature (Sheet 2 of 3)
(Orbital Average Extreme Environments)

ZONE	COMPONENT		TEMPERATURE LIMIT (°F)		CALCULATED TEMP. (°F)	
	NO.	NAME	LOWER	UPPER	EXT. COLD	EXT. HOT
14	4	CMG INVERTER	-22.	122.	-3.	59.
14	6	CMG INVERTER	-22.	122.	-6.	59.
14/22	9	FINE SS COND.	-15.	165.	13.	66.
	80	MULTIPLEXER	- 4.	122.	11.	62.
	83	MULTIPLEXER	- 4.	122.	9.	59.
	85	REM. ANAL. SUBM.	- 4.	122.	4.	54.
	87	REM. ANAL. SUBM.	- 4.	122.	6.	56.
	93	REM DIG. MULT.	- 4.	122.	11.	70.
	96	AMPL. & SWITCH	- 4.	122.	11.	88.
	97	COMP. INTERFACE	- 4.	122.	13.	66.
	98	ASAP INTERFACE	- 4.	122.	14.	66.
	99	MEMORY MOD.	-40.	122.	10.	61.
	105	TAPE RECORDER	32.	104.	51.	81.
	106	TAPE RECORDER (R)	0.	104.	13.	45.
	107	DC-DC CONV.	- 4.	165.	19.	74.
	115	SIG. COND. RACK	- 4.	122.	7.	57.
	116	SIG. COND. RACK	- 4.	122.	6.	55.
	117	SIG. COND. RACK	- 4.	122.	13.	64.
	143	MEAS. VOLT. SUPP.	-40.	165.	19.	73.
	144	MEAS. VOLT. SUPP.	-40.	165.	13.	64.
	151	SWITCH SELECT.	-13.	212.	6.	60.
	161	NRL-A PWR SUPP.	-40.	158.	14.	71.
	162	NRL-B PWR SUPP.	-40.	158.	15.	68.
14/22	163	HAO PWR SUPP.	-40.	158.	14.	66.
16	5	CMG INVERTER	-22.	122.	- 5.	58.
16	147	PWR. TRANS. DISTR.	-67.	147.	-16.	44.
16/24	75	COAX. SWITCH (2 UNITS)	-40.	165.	-27	19.
16/24	76	RF MULTICOUPLER	-40.	165	51.	107.
	76	RF MULTICOUPLER	-40.	165.	51.	107.
	81	MULTIPLEXER	- 4.	122.	36.	78.
	82	MULTIPLEXER	- 4.	122.	32.	75.
	90	REM. DIG. MULT.	- 4.	122.	28.	74.
	91	REM. DIG. MULT.	- 4.	122.	37.	82.
	92	REM. DIG. MULT.	- 4.	122.	41.	84.
	94	PCM/DDAS	- 4.	122.	49.	94.
	95	PCM/DDAS (R)	- 4.	122.	42.	83.
	112	SIG. COND. RACK	- 4.	122.	23.	67.
	113	SIG. COND. RACK	- 4.	122.	10.	55.
	114	SIG. COND. RACK	- 4.	122.	14.	58.
	122	REM. ANAL.	- 4.	122.	3.	50.
16/24	128	COMM. DECODER	-40.	185.	16.	62.

Table 2.3-VII. Component Temperature (Sheet 3 of 3)
(Orbital Average Extreme Environment)

ZONE	COMPONENT		TEMPERATURE LIMIT (°F)		CALCULATED TEMPERATURE (°F)	
	NO.	NAME	LOWER	UPPER	EXT. COLD	EXT. HOT
16/24	129.	COMM. RECEIVER	-65.	185.	49.	90.
|	130	DIRECT COUPLER	-40.	165.	42.	85.
|	159	MEAS. DISTR.	-67.	167.	46.	97.
|	165	J-BOX ASSY	-65.	167.	9.	55.
16/24	183	WATT HOUR ASSY	-40.	165.	3.	50.

Table 2.3-VIII. CBRM Temperature
(Orbital Average Extreme Environments)

NODE	CALCULATED TEMPERATURE (°F)	
	EXTREME COLD	EXTREME HOT
Cells	27.	85.
Cell Cover	28.	77.
Electronics	76.	128.

NOTE: CBRM Battery Cell Temperature Limits:

Lower: 14°F

Upper: 86°F

Extreme cold temperatures are for Module 6 in Zone 17.

Extreme hot temperatures are for Module 2 in Zone 23.

Table 2.3-IX. CBRM Battery Cell Temperature
(Orbital Average)

ZONE	MODULE	CALCULATED TEMPERATURE (°F)	
		EXT. COLD	EXT. HOT
17	1	32	72
	2	33	78
	3	29	67
	4	30	72
	5	32	75
17	6	27	61
21	1	34	71
	2	35	77
	3	31	67
	4	32	76
	5	34	79
21	6	28	65
23	1	33	79
	2	35	85
	3	30	76
	4	32	80
	5	34	83
23	6	29	70

NOTE: Battery Cell Upper Temperature Limit: 86°F
Lower Temperature Limit: 14°F

Table 2.3-X. CMG Temperature
(Orbital Average Extreme Environments)

ZONE	NODE	CALCULATED TEMPERATURE (°F)	
		EXT. COLD	EXT. HOT
9	WHEEL, SHAFT, MOTOR ROTORS	72.	92.
	BEARINGS AND INNER GIMBAL	60.	83.
	OUTER GIMBAL	40.	55.
9	FRAME	24.	41.
13	WHEEL, WHAFT, MOTOR ROTORS	71.	90.
	BEARINGS AND INNER GIMBAL	60.	82.
	OUTER GIMBAL	41.	55.
13	FRAME	28.	43.
15	WHEEL, SHAFT, MOTOR ROTOR	72.	92.
	BEARINGS AND INNER GIMBAL	60.	83.
	OUTER GIMBAL	40.	55.
15	FRAME	22.	40.

NOTE: CMG Temperature Limits:

Lower: -4.°F

Upper: 86.°F

Table 2.3-XI. Orbital Average Heater Power Requirements for Extreme Cold Conditions

ZONE	COMPONENT		HEATER POWER (WATTS)
	NO.	NAME	
9	3	CMG	33.
13	1	CMG	26.
15	2	CMG	26.
17	142	CBRMs (6 UNITS)	3.5
21	142	CBRMs (6 UNITS)	3.7
23	142	CBRMs (6 UNITS)	0.6
11/19	17	RATE GYRO X-1	10.
11/19	18	RATE GYRO X-2	10.
11/19	19	RATE GYRO Y-1	10.
11/19	20	RATE GYRO Y-2	10.
2	21	RATE GYRO Z-1	12.
6	22	RATE GYRO Z-2	11.
11/19	34	RATE GYRO Y-3	15.
11/19	39	RATE GYRO X-3	17.
3	46	RATE GYRO Z-3	17.
		TOTAL	204.8

Table 2.3-XII. MDA End of Canister Component Temperatures

COMPONENT		TEMP. LIMIT °F		CALCULATED TEMP. °F	
NO.	NAME	LOWER	UPPER	EXT. COLD	EXT. HOT
12	FINE SS CONTROL ELEC.	10.	116.	39.	68.
57	CAMERA CONTROL UNIT #1	-15.	165.	45.	69.
58	CAMERA CONTROL UNIT #2	-15.	165.	45.	68.
59	CAMERA CONTROL UNIT #3	-15.	165.	48.	73.
60	CAMERA CONTROL UNIT #6	-15.	165.	45.	77.
63	SYNC GENERATOR	- 4.	165.	27.	53.
69	VIDEO SWITCH #1	-15.	165.	15.	37.
70	VIDEO SWITCH #2	-15.	165.	17.	40.
88	REMOTE DIG. MULT. #2	- 4.	122.	7.	43.
89	REMOT DIG. MULT. #1	- 4.	122.	14.	44.
156	CONTROL DIST. #4	-67.	147.	0.	32.
198	PUMP INVERTER	-65.	149.	55.	84.

2.3.3.3 Experiment Package Thermal Control - The experiment package thermal design areas are divided into (1) experiments, (2) mounting structure or spar, and (3) the thermal control system (TCS). The telescopes are mounted to a thermally isolated structure (spar), and the heat dissipation from each telescope is radiated from the experiment to the canister wall. The canister wall consists of 16 cold plates that absorb the heat generated by the experiments. The working fluid (methanol/water, 80/20) transfers the absorbed heat from the canister cold plates to the radiators which reject the heat to space. The liquid-cooled wall is maintained at 47 to 58°F and the experiments operate over a temperature range of 50 to 70°F.

The ends of the canister and the sidewall film retrieval doors are not fluid cooled. These act as adiabatic surfaces because the exterior sides are well insulated and the heat losses from these areas are negligible. The entire canister, except for the sun end, has aluminized Mylar insulation wrapped around its exterior surface. The TCS components are mounted on the cold plates under the insulation. The sun end has aluminized Mylar insulation sandwiched between two aluminum sheets separated by figerglass spacers. Table 2.3-XIII gives the insulation thicknesses on the canister.

Table 2.3-XIII Insulation Requirements for Experiment Package

All Insulation is Aluminized Mylar Layer Density = 70 layers/inch $k_{design} = 5 \times 10^{-4}$ BTU/hr-ft-°F	
Location	Insulation Thickness (inches)
Spar	1 1/2
Sun End of Canister	2
MDA End of Canister	1
Canister Sidewall	2
Sun Shield	2
Girth Ring	1/2

The experiment requirements that are pertinent to thermal control are shown in Table 2.3-XIV. The pointing stability requirement is the maximum allowable experiment deflection over the stated exposure time. The experiment power is the average that is dissipated during an orbit and accounts for the energy that is rejected out the experiment aperature doors when they are open.

Table 2.3-XIV. ATM Experiment Thermal Control Requirements

EXPERIMENT	POINTING STABILITY (ARC SEC)	EXPOSURE TIME (MIN)	EXPER. POWER (WATTS)				OPERATING TEMPERATURE (°F)	TYPE HEATER REQUIRED
			AVG. ELEC.	SOLAR MINUS RERAD.		AVG. TOTAL		
				MAX.	AVG.			
S056	± 2 1/2	1.6	34	40	29	63	70	Integral
S054	± 2 1/2	5.0	48	25	15	63	70	Integral
S055A	± 2 1/2	15.0	54	28	20	74	70	Standoff
S052	± 5	16.0	15	14	10	25	70	Standoff
S082A	± 2 1/2	5.0	25	4	3	28	70	Standoff
S082B	± 2 1/2	15.0	44	4	3	47	70	Standoff
Hα1	± 2 1/2	15.0	14	2.5	1.5	15.5	50-70	None
Hα2	± 2 1/2	15.0	11	2.5	1.5	12.5	50-70	None
SOLAR SENSOR AND RATE GYROS DISSIPATION = 33 WATTS TCS COMPONENT POWER DISSIPATION = 84 WATTS								

Three basic concepts are used for thermal control of the telescopes (Figure 2.3-14). The S052 (HAO), S055A (HCO), and S082A and B (NRL) telescopes use standoff heaters to achieve temperature control. The standoff heaters were designed on the principle that the large thermal mass of the telescopes would not allow them to respond to a rapidly changing cyclical temperature. Because the canister wall temperature could be cycling at a low rate, a low mass radiation shield is placed over the telescope surfaces that have a view of the canister wall. Heaters attached to the radiation shield control the temperature level of the shield. The low thermal mass of the radiation shield responds rapidly to the heat generated by the heater. Using a narrow control temperature range ($\pm$1°F) for the radiation shield or standoff heater panel and sensing the standoff panel temperature, the heater would oscillate rapidly and cause the temperature of the panel to fluctuate within the control range. The panel temperature will be maintained lower than the telescope temperature to allow the heat generated from the telescope to be transferred by radiation to the standoff heater panels, which in turn transfer the heat by radiation to the canister wall. If the controller on the standoff heaters should fail, an over- temperature sensor maintains control of the panel. This over-temperature sensor has a temperature control range of $\pm$3°F. The standoff heaters are attached to the telescope case by thermal isolation mounts. The maximum heat rejection capability of the standoff heaters is controlled by using surface coatings on the side facing the canister wall. The surfaces of the telescope not behind standoff heaters are insulated if the heat loss from these surfaces is significant.

The S054 (AS&E) and S056 (GSFC) telescope use heaters that are internal to the telescopes. The heaters are used to maintain the temperature level of the two telescopes. Heat rejected by these telescopes is controlled by the use of insulation and surface coatings.

The two hydrogen-alpha (Hα) telescopes will be passively controlled. Their temperature level and amount of heat rejection capability is controlled only by the use of surface coatings.

All spar-mounted components must be attached by thermal isolation mounts. The maximum allowed conductance between any experiment telescope and the spar will not exceed 0.6 Btu/hr-°F with a temperature differential of 10°F between the experiment and the spar.

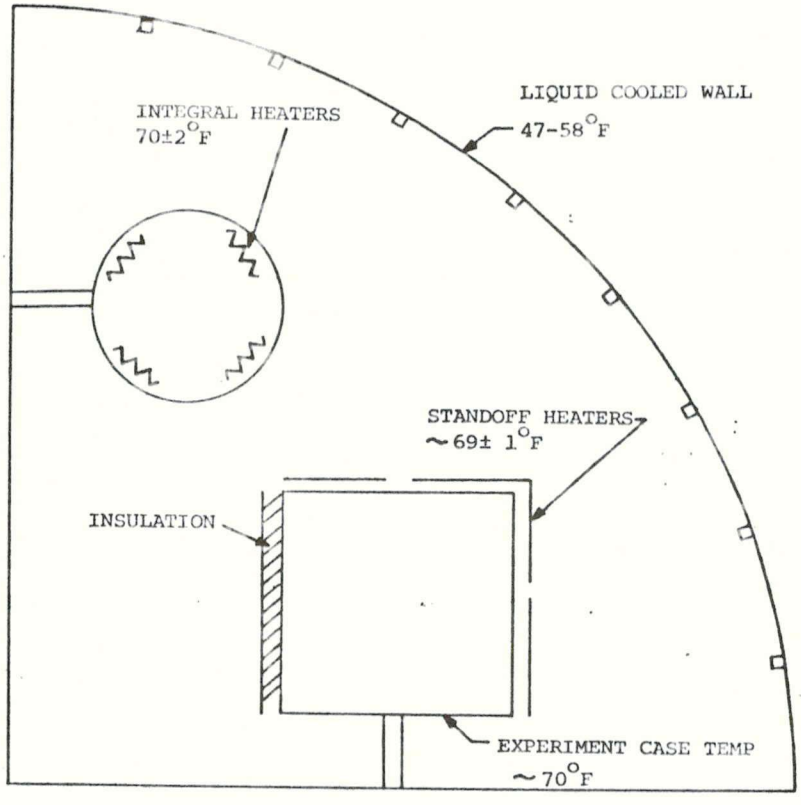

Figure 2.3-14 EXPERIMENT HEATER CONCEPTS

The following paragraphs give a thermal description of each telescope and their thermal design criteria.

a. S052 (HAO) - The S052 telescope optical bench mounts directly to the spar. The total thermal conductance of the mounts is 0.15 Btu/hr-°F. The optical bench is wrapped with aluminized Mylar insulation to minimize the heat losses. The optical bench temperature is controlled by standoff heaters mounted on the bench under the insulation. Attached to the optical bench is the optics housing. The temperature of the optics housing is controlled by standoff heaters and insulation. The light tube and the external occulting disk assembly are also mounted on the optical bench. Both of these items are passively controlled. The light tube is in poor thermal contact with the optics housing resulting in negligible heat transfer between these two assemblies. The TV camera is thermally attached to the optics housing by low conductance mounts. The major electronics components are mounted on a separate bracket. These electronic components are passively controlled. The telescope has a flexible bellows that connects the front of the light tube to the canister sun end, thereby preventing stray radiation from entering telescope.

b. S054 (AS&E) - The S054 telescope is temperature controlled by using proportional heaters located in three sections (mirror housing, front housing, and rear housing) of the telescope. The heater temperature control unit (TCU) is separate from the telescope and mounted to the spar. The thermal conductance between the telescope assembly and the spar is 0.40 Btu/hr-°F. The thermal conductance between the TCU and the spar is 0.10 Btu/hr-°F.

c. S056 (GSFC) - The temperature of the S056 telescope is controlled by heaters in three sections of the telescope assembly (mirror housing, mounting pedestal, and camera housing), and by insulation. (The entire telescope assembly, with the exception of two radiation windows and film cassette, is covered with 20 layers of aluminized Mylar insulation.) The two radiation windows located at each end of the telescope assembly reject heat from the instrument. The telescope is connected to the spar with a total thermal conductance of 0.32 Btu/hr-°F. Two spar-mounted electronic packages, a camera control unit, and a X-ray event analyzer, associated with the S056 telescope have a thermal conductance of 0.24 Btu/hr-°F. These two electronic boxes are passively controlled.

d. S082A (NRL) - The S082 telescope assembly uses standoff heaters for temperature control. Some electronic components are mounted on the exterior side of the instrument case. These boxes are mounted on thermal isolation mounts and aluminized Mylar insulation is sandwiched between the telescope case and electronic

boxes to reduce the radiant exchange between the two surfaces. The telescope case is attached to the spar by thermal isolation mounts having a total conductance of 0.17 Btu-hr-^{o}F.

e. S082B (NRL) - The S082B telescope uses the standoff heater concept for temperature control. Due to the temperature criticality of the instrument, an additional feature is incorporated in the thermal control system. This feature allows the temperature set-point of the standoff heaters to be automatically readjusted so that the telescope temperature gradients remain the same as when the instrument was optically aligned even though the alignment environment has changed. As in S082A, some electronic boxes are fastened to the exterior surface of the instrument case and are thermally isolated by insulation and thermal isolation mounts. The telescope case is attached to the spar by thermal isolation mounts having a conductance of 0.17 Btu/hr-^{o}F.

f. S055A (HCO) - The S055A (Mod) telescope used the same basic thermal control concept as the S082A telescope. The telescope has a flexible bellows that connects the sun end of the telescope to the canister sun end to prevent stray radiation from entering the telescope. The case is fastened to the spar by thermal isolation mounts having a total conductance of 0.30 Btu/hr-^{o}F.

g. Hα No. 1 - The Hα No. 1 telescope is primarily a passively controlled instrument. Temperature control is achieved by applying selected surface coatings on various portions of the telescope and thermally isolating different sections of the telescope from each other. The Fabry-Perot filter has an integral heater to maintain the desired filter assembly temperature. The total thermal conductance of the mounts connecting the telescope to the spar is 0.598 Btu/hr-^{o}F.

h. Hα No. 2 - The Hα No. 2 uses the same concept for thermal control as Hα No. 1. The total thermal conductance of the mounts connecting the telescope and the spar is 0.508 Btu/hr-^{o}F.

The preliminary surface coating requirements for the experiments are shown in Table 2.3-XV.

The preliminary operational experiment temperature ranges associated with the thermal designs discussed above are shown in Table 2.3-XVI.

Table 2.3-XV. Experiment Interfaces Surface Properties

QUADRANT	COMPONENT	SUB-ASSEMBLY	ε
I	(S056)	Telescope	0.2
		XREA	0.9
		CCU	0.9
	(S052)	Telescope	0.9
		Standoff Heaters	0.2
		Electric Bracket	0.9
	Rate Gyros	---	0.9
II	Hα1	Front Ext. Tube	0.05
		Rear Ext. Tube	0.05
		Main Telescope Assembly	0.05
		Vidicon	0.90
		Camera (Film)	0.25
	(S055A)	Telescope	0.9
		Standoff Heaters	0.3
III	(S082B)	Telescope	0.9
		Standoff Heaters	0.3
	Hα2	Front Ext. Tube	0.05
		Main Telescope Assembly	0.05
		Vidicon	0.90
	Rate Gyros	---	0.90
IV	(S082A)	Telescope	0.9
		Standoff Heaters	0.2
	(S054)	Telescope	0.9
		TCU	0.9
	Sun Sensor	Optics Package	0.9
		Electronic Package	0.9
QI	Spar Insulation	Surface	0.9
QII	Canister	Sidewall	0.9
QIII		Film Retrieval Doors	0.9
QIV		LM End	0.9
		Sun End	0.9

Solar Sensor and Rate Gyros Dissipation = 33 Watts

Table 2.3-XVI. Average Temperatures of Experiment Package Surfaces

(Sheet 1 of 2)

QUADRANT	COMPONENT	SURFACE	TEMPERATURE (°F)
I	S056	Telescope Rad. Window	69 - 71
		Telescope Insulation	53 - 66
		XREA	75 - 90
		CCU	70 - 85
	S052	Optics Housing S/O Heaters	68 - 70
		Optical Bench Insulation	54 - 66
		Light Tube	54 - 66
		Electronics Bracket	67 - 90
	Rate Gyro	Primary	90 - 110
		Redundant	58 - 64
	Canister	Cold Plates	52.1 (1) - 52.7 (0)
		FSFC Film Retrieval Door	54 - 59
		HAO Film Retrieval Door	54 - 59
		LM End	54 - 58
		Sun End	60 - 74
	Spar	Spar	60 - 65
		Spar Insulation	53 - 66
II	Hα1	Main Telescope Assembly	65 - 75
		Rear Extension Tube	65 - 75
		Front Extension Tube	52 - 57
	S055A	Telescope	70
		Standoff Heaters	66 - 70
	Canister	Cold Plates	51.5 (1) - 52.1 (0)
		HCO-A Film Retrieval Door	54 - 58
		MDA End	54 - 57
		Sun End	57 - 60
	Spar	Spar	60 - 65
		Spar Insulation	53 - 64

Table 2.3-XVI Average Temperatures of Experiment Package Surface

(Sheet 2 of 2)

QUADRANT	COMPONENT	SURFACE	TEMPERATURE (°F)
III	(S082B)	Telescope	70
		Standoff Heaters	68 - 70
	Hα2	Main Telescope Assembly	65 - 75
		Front Extension Tube	65 - 75
	Rate Gyros	Primary	90 - 110
		Redundant	58 - 64
	Canister	Cold Plates	50.0 (1) - 51.5 (0)
		MDA End	53 - 56
		Sun End	56 - 60
	Spar	Spar	60 - 65
		Spar Insulation	53 - 64
IV	(S082A)	Telescope	70
		Standoff Heaters	68 - 70
	(S054)	Telescope Assembly	68 - 72
		Camera	54 - 59
		TCU (10 watts)	101 - 106
	Sun Sensor	Optics Package	60 - 62
		Optics Package Radiator	62 - 66
		Electronic Package	63 - 67
	Canister	Cold Plates	52.7 (1) - 53.4 (0)
		AS&E Film Retrieval Door	54 - 59
		MDA End	54 - 59
		Sun End	60 - 74
	Spar	Spar	60 - 65
		Spar Insulation	54 - 64

(1) Cold Plate Inlet Temperature

(O) Cold Plate Outlet Temperature

2.3.3.4 Spar - The spar is a cruciform aluminum structure which serves as the main support and optical bench on which the experiments are mounted. The spar is machined of 1-1/8-inch thick 6061 aluminum plates and weighs 1130 pounds. The average thickness of the spar is 1 inch. Two-inch diameter lightening holes are drilled throughout the plates for approximately 40 percent weight reduction. The spar divides the canister into four quadrants. Figure 2.3-15 shows the spar and the spar girth ring. This figure depicts the launch lock attach points by which the spar is attached to the girth ring. Also shown are the spar stiffener rings. These are used to add rigidity to the spar geometry.

The temperature gradients within the spar must be minimized for correct optical alignment of the experiments. Therefore, the spar is designed to be thermally isolated from the experiments and the spar girth ring. This is done by the use of low conductance experiment and component mounts and by the use of superinsulation. The spar is wrapped with 1-1/2 inches (70 layers per inch density) of aluminized mylar insulation.

The spar insulation has an outside surface of black tedlar. This material is used to minimize thermal reflections that have a detrimental effect upon the experiments. The tedlar gives the insulation a high emissivity ($\varepsilon = 0.9$).

2.3.3.5 Solar Shield - The solar shield, which is supported by the rack, is located near the sun end of the canister and forms an annulus around the experiment canister. The shield is a frustum of a 15° cone with the large diameter (107 in.) toward the sun. The small diameter (90 in.) allows the canister to gimbal $\pm 2^{\circ}$ without interference. The shield has a white ($\alpha/\varepsilon = 0.2/0.90$) coating on the sun side and is insulated with two inches of aluminized Mylar on the rack side. The purpose of the shield is to prevent direct solar impingement on rack components.

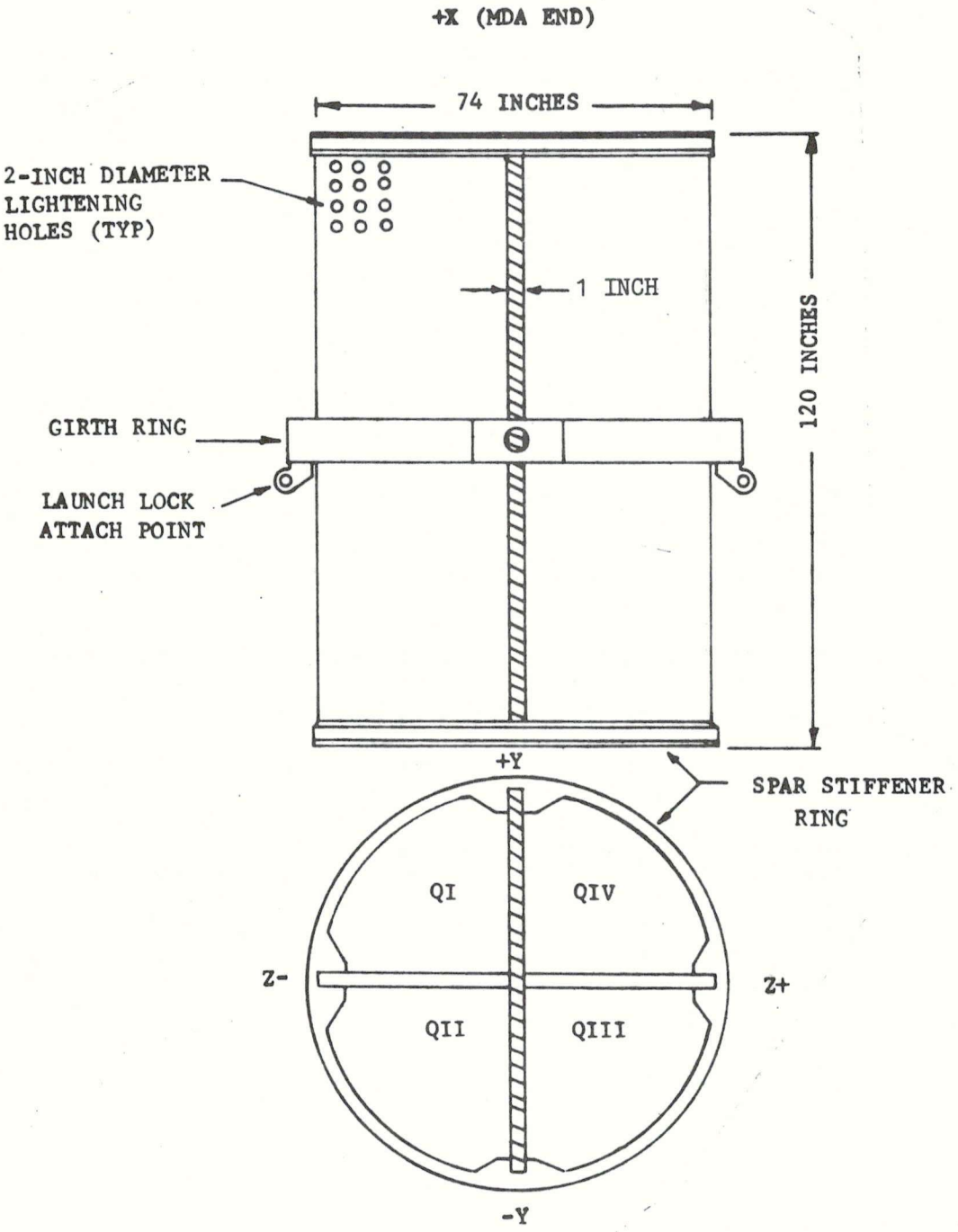

Figure 2.3-15 ATM Canister Spar

2.3.4 Major Component Functional Description

The major TCS components are depicted in Figure 2.3-16.

2.3.4.1 Canister - The canister consists of two halves that are attached to the girth ring. The cold plates compose the canister sidewall. The cold plate functional requirements are shown in Table 2.3-XVII. There are eight cold plates per canister half. All eight cold plates for each half of the canister are connected for series flow. The two canister halves are connected for parallel flow. The fluid enters the cold plates in quadrant (Q) III of the canister, flows to QII, and leaves the canister at QIV. All TCS associated components are externally mounted on the two panels of QIII. Five of the MDA end cold plates have film retrieval doors. The film retrieval doors do not have fluid passage and are not fluid cooled. The conduction between the door and the cold plates is negligible. Figure 2.3-17 shows the fluid passage routing within the cold plates. The fluid passage design is based on a maximum allowable pressure drop of 5 psi across eight cold plates, a temperature difference of approximately 1°F between the fluid and the cold plates and a minimum fin efficiency of 0.95.

Table 2.3-XVII

Cold Plate Functional Requirements
PURPOSE: REMOVE HEAT FROM EXPERIMENTS
FLOW: 450 ± 25 LB/HR
FLUID: MENTHANOL/WATER (80/20 BY WEIGHT)
PRESSURE LOSS: 5 PSID MAX @ 450 LB/HR EACH (8 COLD PLATES)
OPERATING PRESSURE: 50 PSIG MAX
PROOF PRESSURE: 75 PSIG
BURST PRESSURE: 125 PSIG MIN
LEAKAGE: 10^{-6} SCCS MAX OF HE @ 50 PSIG
HEAT ABSORPTION: 500 WATTS MAX (16 COLD PLATES)

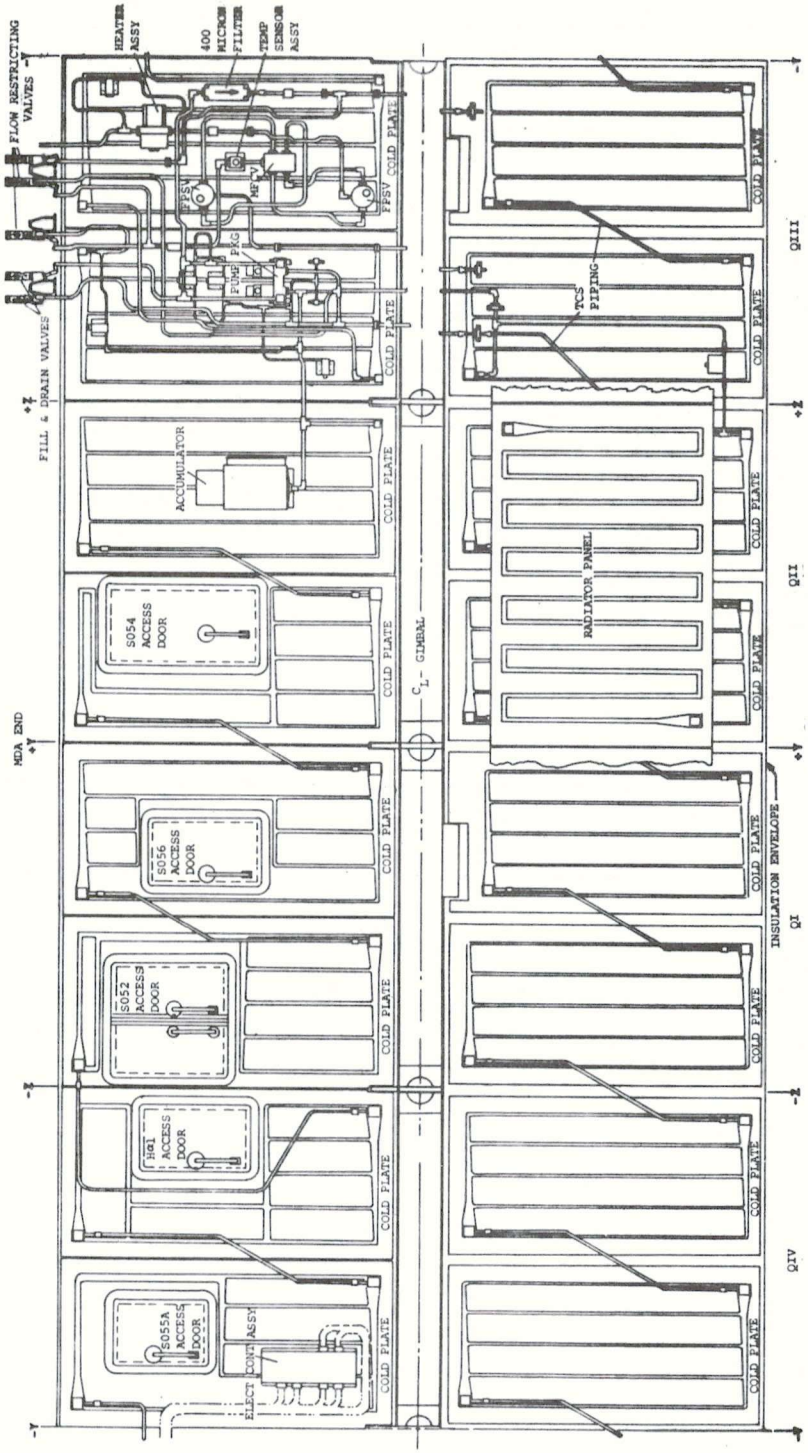

Figure 2.3-16 Canister Equipment Arrangement (Exterior Flat Layout)

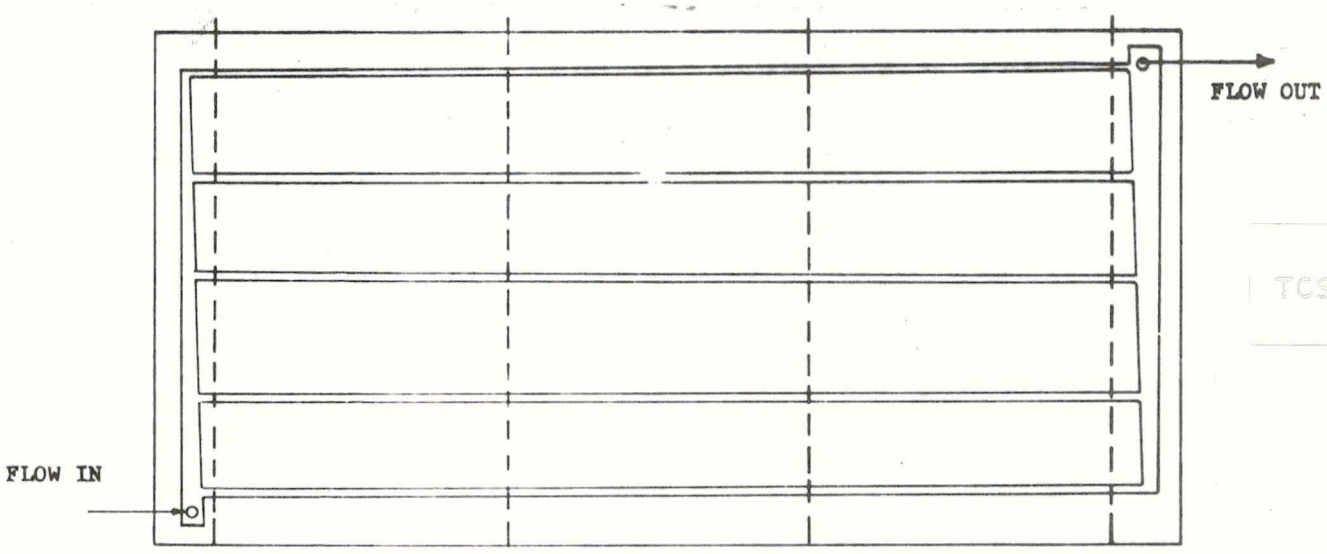

Cold Plate without Film Retrieval Door

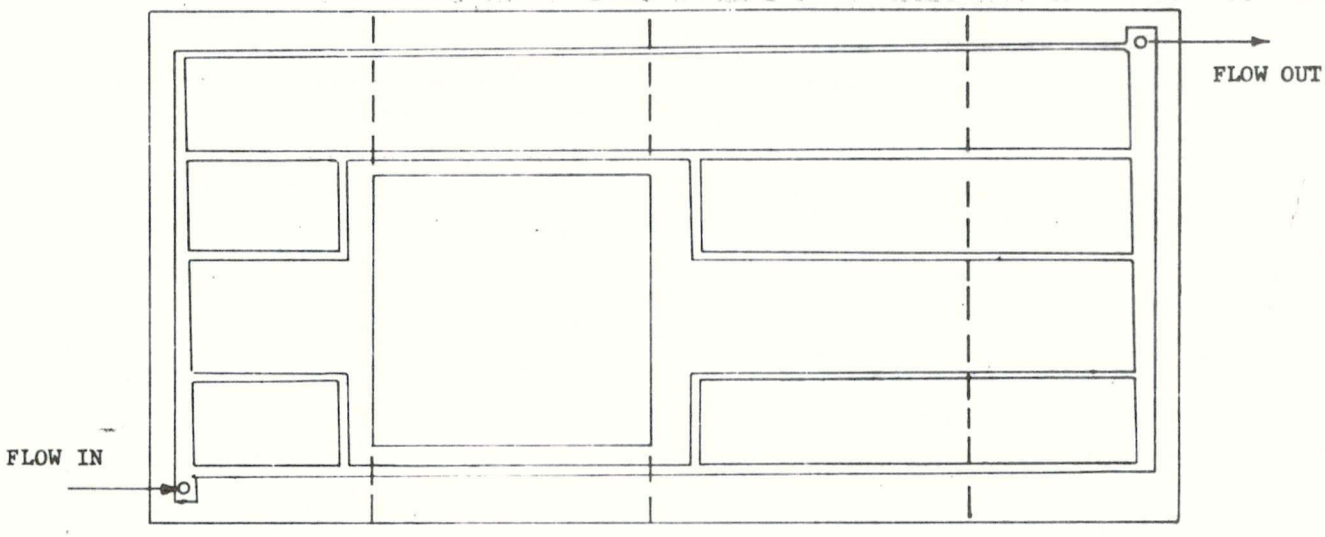

Cold Plate with Film Retrieval Door

Figure 2.3-17 Cold Plate Fluid Passage Routing

2.3.4.2 Radiator - The radiator consists of four basic panels connected in series. The radiator flow passage schematic is shown in Figure 2.3-18. The panel design is based on a 13 psi maximum pressure drop across four panels at maximum flow, turbulent flow at maximum flow, and a minimum fin efficiency of 0.95. The panel area is based on a total heat rejection capability of 500 watts. The radiator size is approximately 80 sq. ft. The four panels are located around the circumference of the canister section between the rack and sun shield. The panels are mounted on fiberglass standoffs to minimize the heat transfer between the canister and radiator. The radiator functional requirements are shown in Table 2.3-XVIII.

Table 2.3-XVIII Radiator Functional Requirements

PURPOSE: REJECT HEAT

FLOW: 19-950 LB/HR

PRESSURE LOSS: 13 PSID MAX @ 900 LB/HR FOR FOUR PANELS (3.25 PSID MAX. @ 900 LB/HR EA)

OPERATING PRESSURE: 50 PSIG MAX

PROOF PRESSURE: 75 PSIG

BURST PRESSURE 125 PSIG MIN

LEAKAGE: 10^{-6} SCCS MAX OF HE @ 50 PSIG

HEAT REJECTION: 500 WATTS FOR FOUR PANELS (125 WATTS EA AVG)

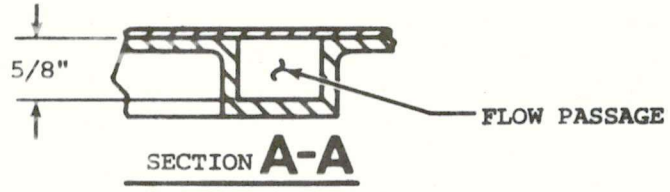

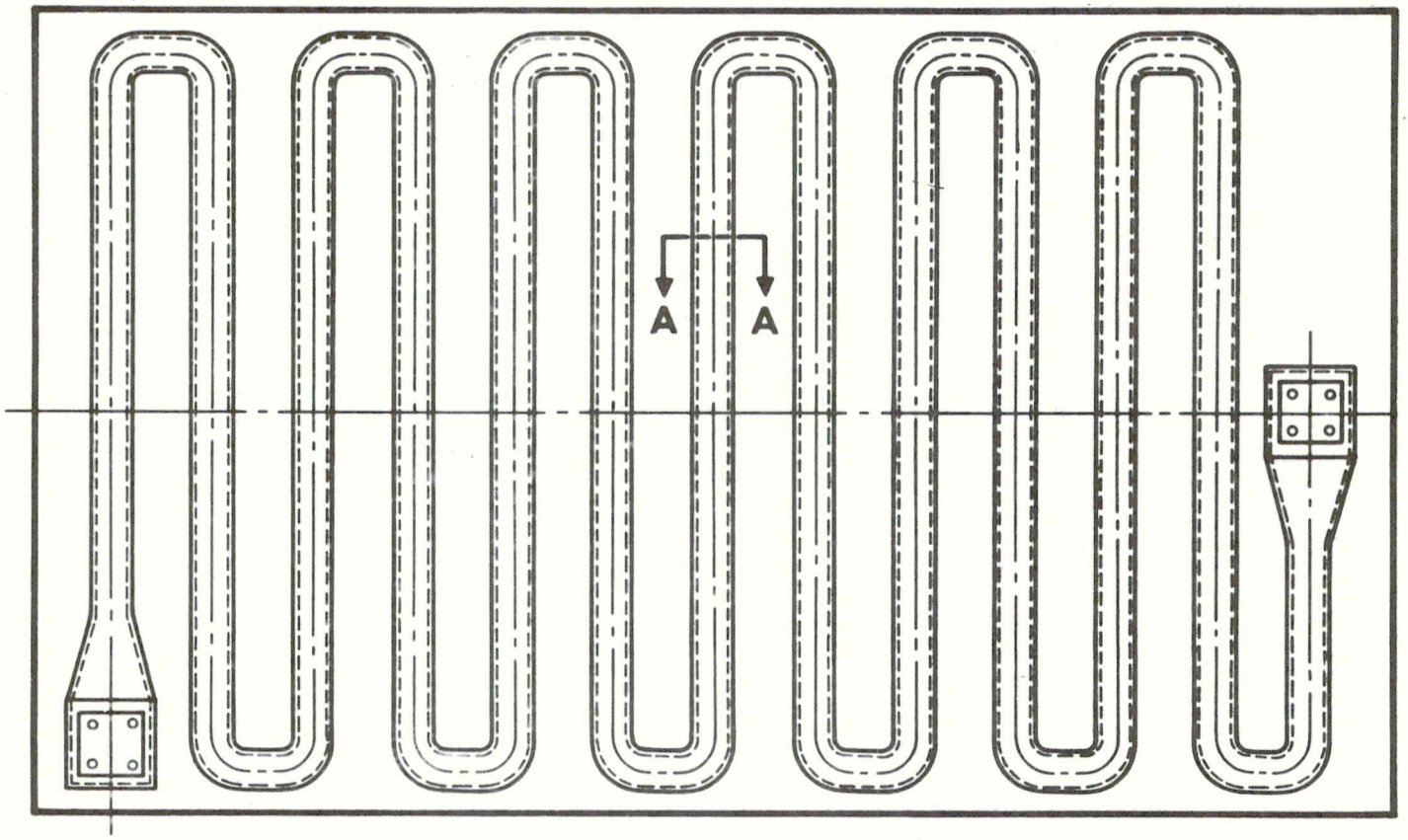

Figure 2.3-18 RADIATOR, ATM

2.3.4.3 Accumulator - The purpose of the accumulator is to provide fluid for system leakage and for thermal contraction and volume for thermal expansion, and to assure the pump inlet pressure is above the fluid vapor pressure. A schematic of the accumulator is shown in Figure 2.3-19 and the functional requirements are given in Table 2.3-XIX.

Table 2.3-XIX
Accumulator Functional Requirements

PURPOSE:	PROVIDE FLUID FOR SYSTEM LEAKAGE
	PROVIDE FLUID FOR THERMAL CONTRACTION
	PROVIDE VOLUME FOR THERMAL EXPANSION
	ASSURE PUMP INLET PRESSURE ABOVE
	FLUID VAPOR PRESSURE
VOL:	379 CU IN (USABLE)
OPERATING PRESSURE:	7 PSIG BELLOWS EXTENDED
	19 PSIG BELLOWS COMPRESSED
PROOF PRESSURE:	75 PSIG
BURST PRESSURE:	125 PSIG MIN
LEAKAGE:	10^{-6} SCCS OF HE MAX @ 50 PSIG
LIFE CYCLES:	200 CYCLES
GAGING SYSTEM:	ACCURACY: $\pm$2% OF FULL SCALE
	LINEARITY: 8.0% OF FULL SCALE
	INPUT VOLTAGE: 5 VDC
	OUTPUT VOLTAGE: 0.15 TO 7.76 VDC
FLUID:	METHANOL/WATER (80/20 BY WEIGHT)

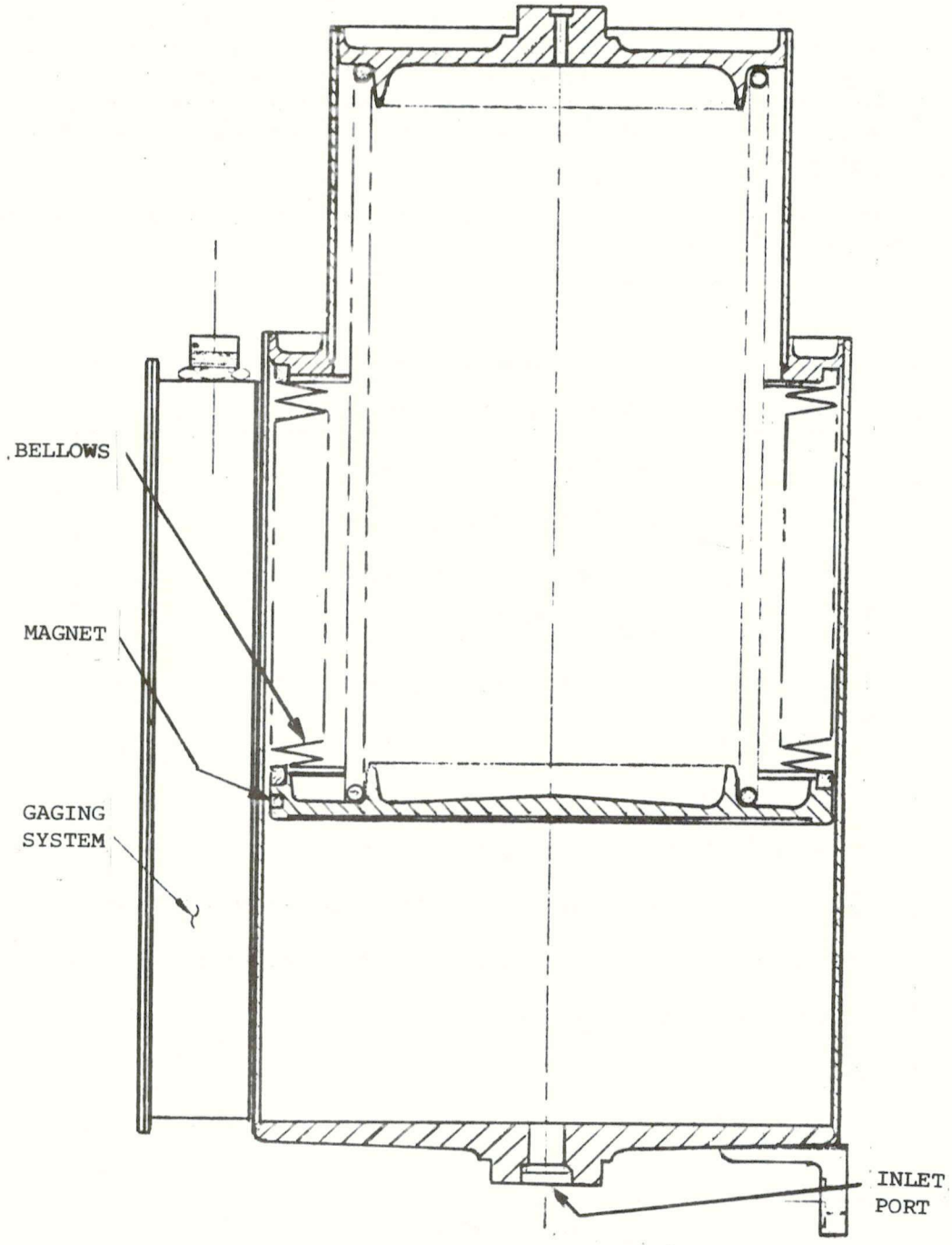

Figure 2.3-19 Accumulator Assembly

2.3.4.4 Pump - The pump package consists of two modified CSM pumps. The pumps are centrifugal units driven by ac motors through magnetic couplers for isolation. The parallel outlets are isolated by check valves to prevent back flow through the none-operating pump. The required coolant flowrate is supplied by one pump and the second pump is redundant.

The performance characteristics of the pump are shown in Figure 2.3-20 and Table 2.3-XX.

Table 2.3-XX. Pump Functional Requirements

PURPOSE:	PROVIDE FLUID CIRCULATION
FLOW:	900 ±50 LB/HR @ 31 PSID
FLUID:	METHANOL/WATER (80/20 BY WEIGHT)
OPERATING PRESSURE:	INLET: 7 to 19 PSIG
	OUTLET: 38 to 50 PSIG
PROOF PRESSURE:	75 PSIG
BURST PRESSURE:	125 PSIG
LEAKAGE:	INTERNAL: 2.5 LB/HR MAX OF M/W
	EXTERNAL: 5×10^{-6} SCCS OF HE MAX AT 50 PSIG MAX
VOLTAGE:	12.2 ± 1.4 VAC RMS, 3 PHASE @ 400 ±8Hz
POWER:	110 WATTS MAX
LIFE:	3000 HRS

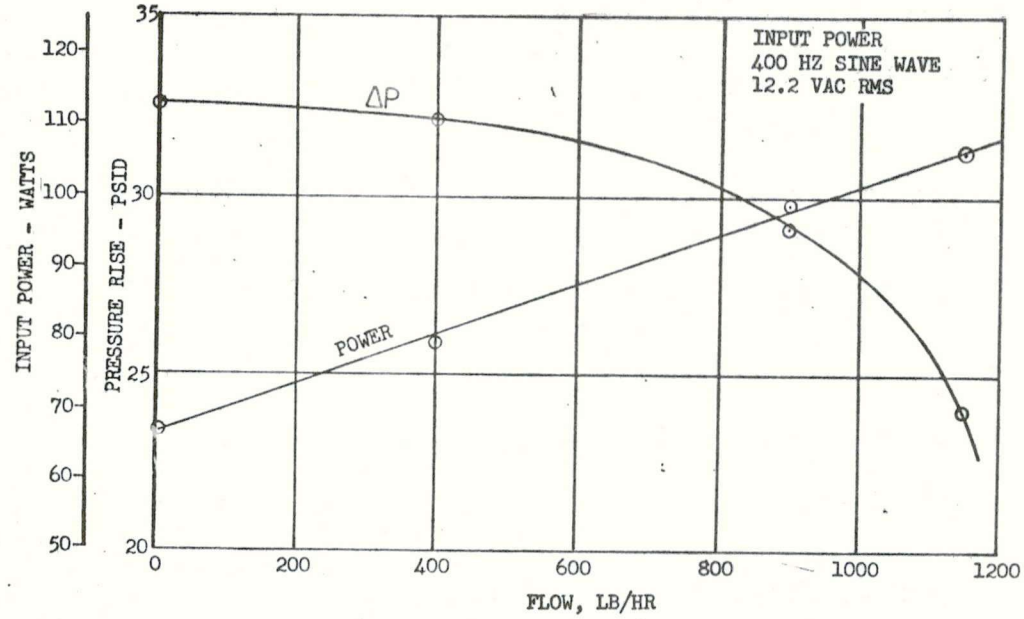

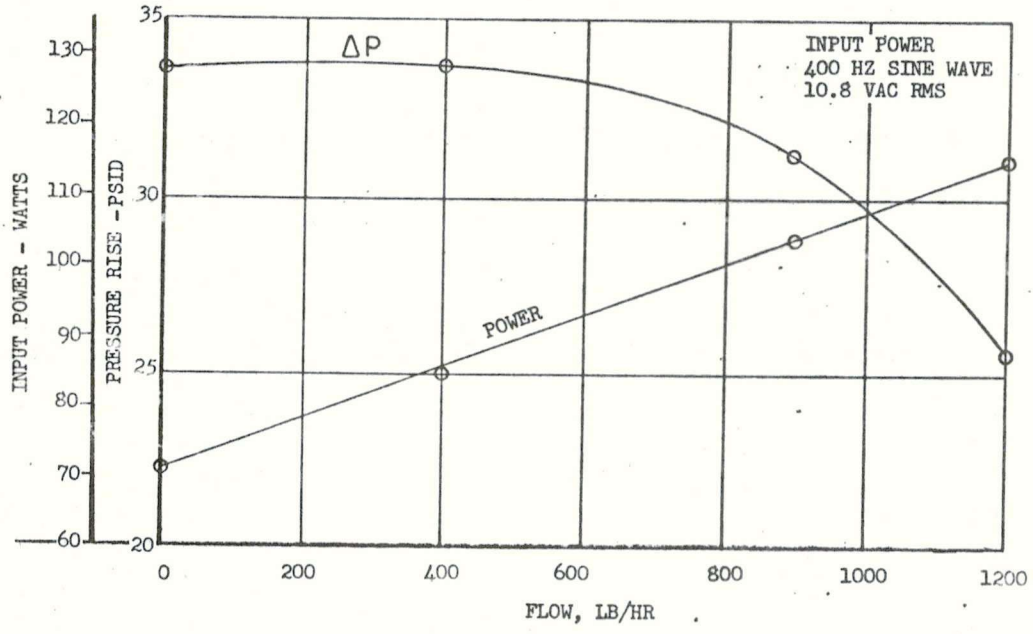

Figure 2.3-20 Performance of Pump

2.3.4.5 Flow Path Selector Valves (FPSV) - The purpose of the flow path selector valves is to select flow from the redundant MFCV. The valve functional requirements are shown in Table 2.3-XXI and a valve schematic is shown in Figure 2.3-21.

Table 2.3-XXI Flow Path Selector Valve Functional Requirements

PURPOSE:	CONTROL FLOW FROM REDUNDANT MODULATING FLOW CONTROL VALVE
FLOW:	0 to 950 LB/HR
FLUID:	METHANOL/WATER (80/20 BY WEIGHT)
PRESSURE LOSS:	0.5 PSID MAX @ 900 LB/HR (FLOW DIRECTION AS SHOWN @ INLET TEMPERATURE OF 50°F BY FIG 2.5-21)
	0.7 PSID MAX @ 900 LB/HR (FLOW DIRECTION AS SHOWN
OPERATING PRESSURE:	ZERO TO 50 PSIG BY FIG 2.8-21)
PROOF PRESSURE:	75 PSIG
BURST PRESSURE:	125 PSIG MIN
LEAKAGE: INTERNAL:	10^{-1} CCS MAX OF M/W @ 50 PSIG
EXTERNAL:	10^{-6} SCCS MAX OF HE @ 50 PSIG
VOLTAGE:	28 VDC PULSE
LIFE:	1000 CYCLES

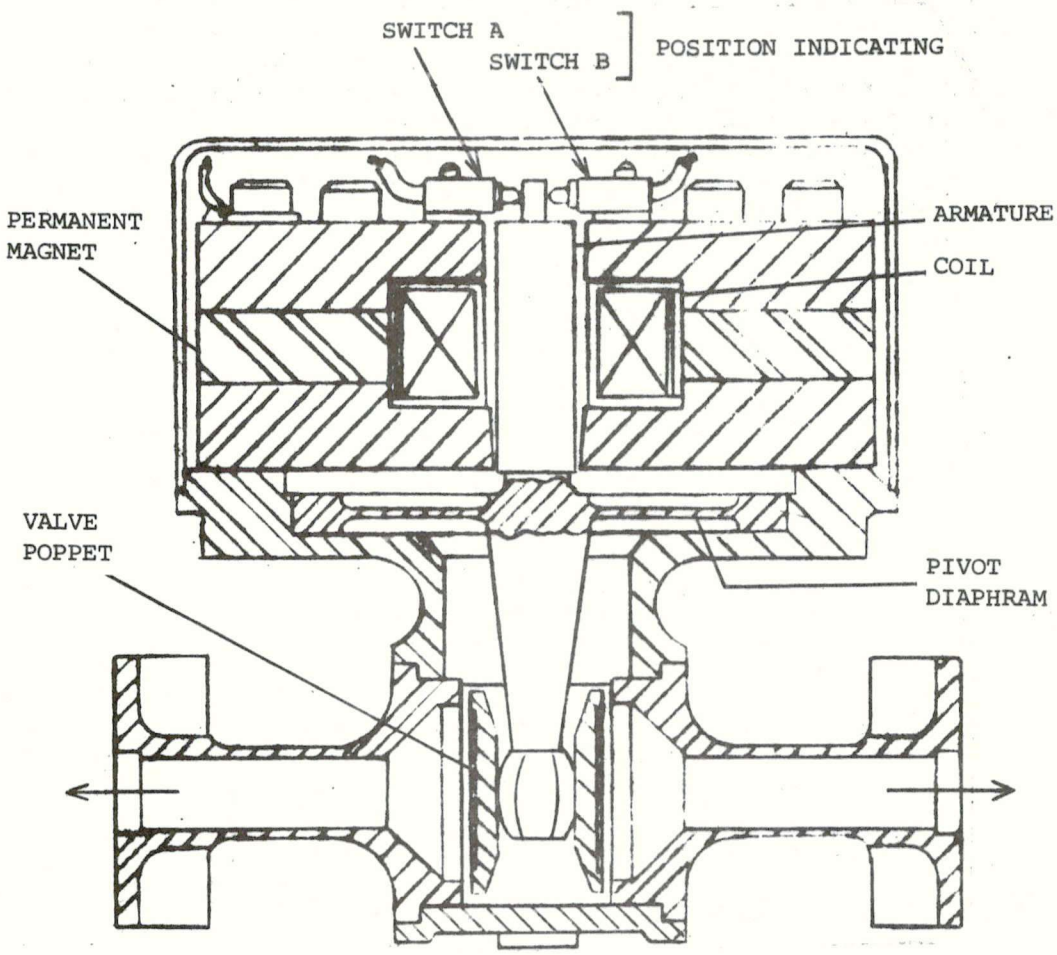

Figure 2.3-21 Flow Path Selector Valve

2.3.4.6 Modulating Flow Control Valve (MFCV) - The primary function of the modulating flow control valve (MFCV) is to maintain the cold plate inlet temperature at 50 $\pm 1^{\circ}$F. The valve is controlled by sensing the cold plate inlet temperature and proportioning the flows through the radiator and the bypass to maintain the required temperature. The functional requirements of the valve are shown in Table 2.3-XXII and a valve schematic is shown in Figure 2.3-22. The maximum allowable internal leakage through the valve in the "hard-over" position (full radiator or full bypass) is 19 lb/hr. The MFCV module contains redundant valves.

Table 2.3-XXII

Modulating Flow Control Valve Functional Requirements

PURPOSE: MODULATE FLOW BETWEEN RADIATORS AND HEATER FOR TEMPERATURE CONTROL

FLOW: INLET: 900 $\pm$50 LB/HR

RADIATOR OUTLET: 19 to 950 LB/HR

HEATER OUTLET: 19 to 950 LB/HR

LEAKAGE: INTERNAL: 19 LB/HR MAX OF M/W @ 17 PSID AND 900 LB/HR INLET FLOW RATE

EXTERNAL: 2.5×10^{-6} SCCS MAX OF HE @ 50 PSIG

PRESSURE LOSS: 8.5 PSID MAX (ACROSS ASSEMBLY WITH SECONDARY PORTS CAPPED)

OPERATING PRESSURE: 50 PSIG MAX

PROOF PRESSURE: 75 PSIG

BURST PRESSURE: 125 PSIG

FLUID: METHANOL/WATER (80/20 BY WEIGHT)

VOLTAGE: $\pm$ 16 VDC

LIFE: 7500 CYCLES

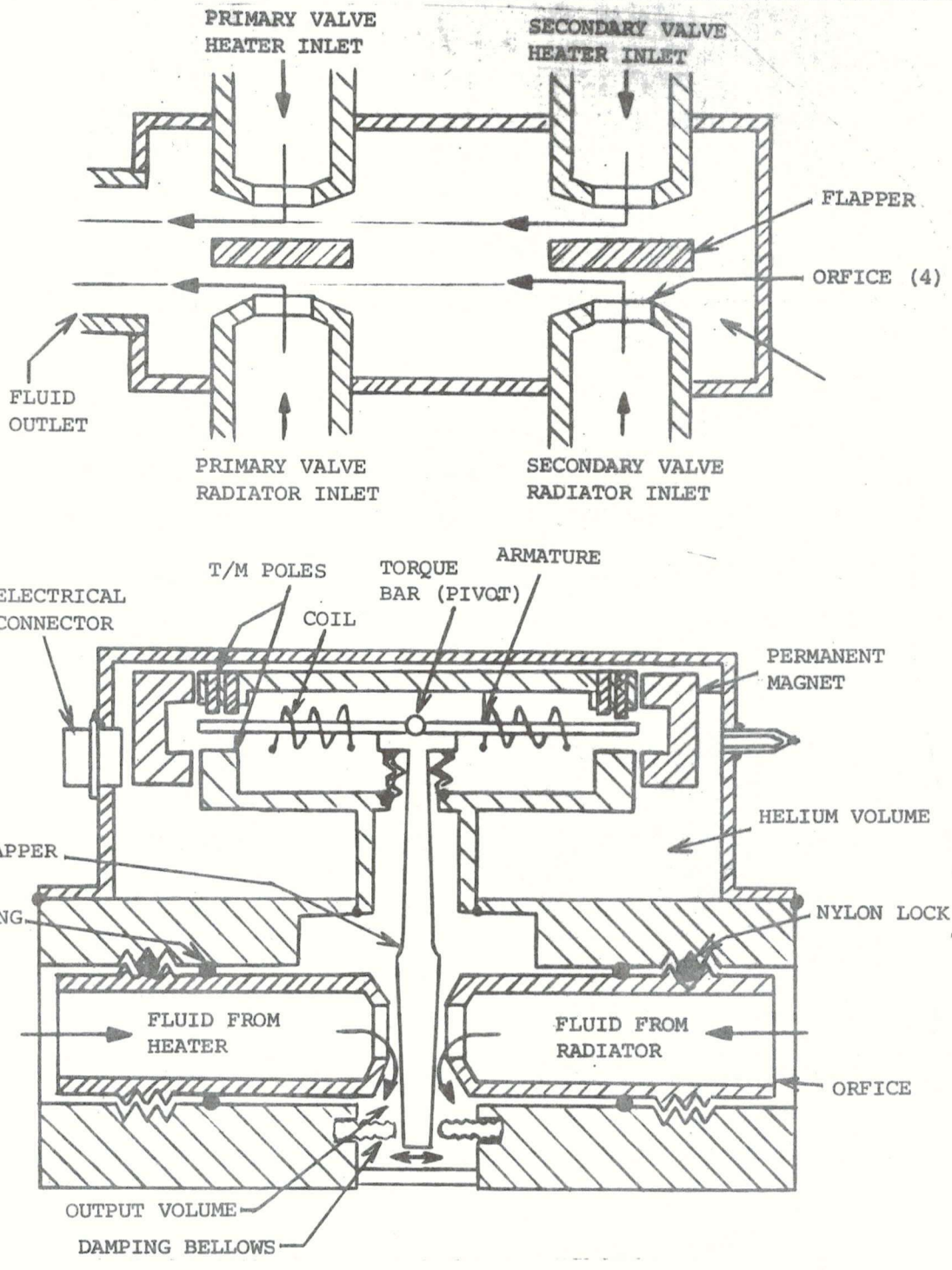

Figure 2.3-22 Modulating Flow Control Valve

2.3.4.7 Electronic Controller Assembly and Sensor - The purpose of the electronic controller and sensor is to provide power to the MFCV, switching for the heater, and a monitoring circuit for system operation. The performance requirements are shown in Table 2.3-XXIII. A cross section of a temperature control sensor is shown in Figure 2.3-23.

Table 2.3-XXIII

Electronic Control Assy and Sensor Performance Requirements

PURPOSE:	PROVIDE POWER TO MODULATING FLOW CONTROL VALVE
	PROVIDE SWITCHING OF HEATER
	PROVIDE MONITORING CIRCUIT FOR SYSTEM OPERATION
VOLTAGE OUTPUTS:	28VDC
MONITOR OUTPUTS:	0-5 VDC FOR TEMP RANGE OF 40-60°F
	28 VDC DISCRETE AT 46°F & BELOW
	28 VDC DISCRETE AT 54°F & ABOVE
	SUPPLY 24-30 VDC TO FLOW PATH SELECTOR VALVE (FPSV)
	28 VDC DISCRETE FOR FPSV POSITION
HEATER OUTPUTS:	SWITCH 250 WATTS ON @ 47.7°F AND OFF @ 48.5°F
	SWITCH 250 WATTS ON @ 47.0°F AND OFF @ 48.5°F
VALVE OUTPUTS:	VARY POWER TO VALVE BETWEEN 49 & 51°F
TIME CONSTANT:	1.5 SEC MAX

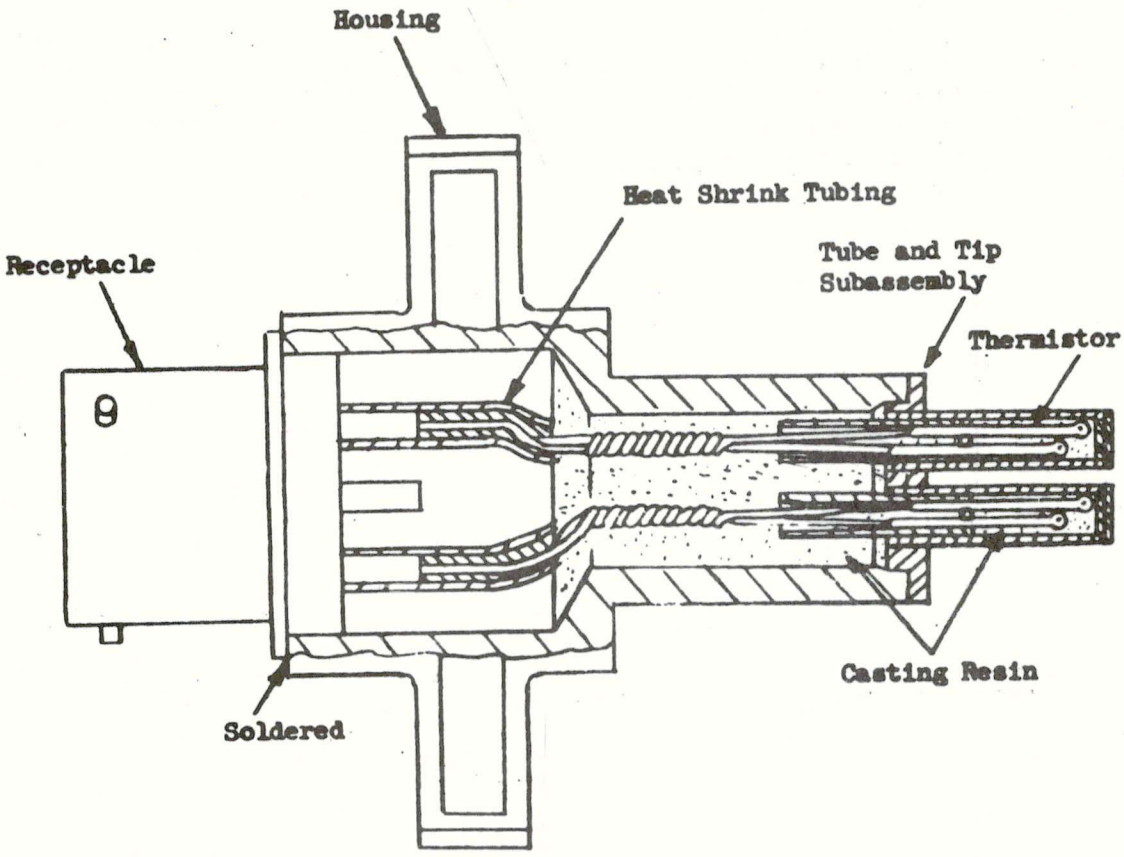

Figure 2.3-23 Cross Section of Temperature Control Sensor

2.3.4.8 Heater - A modified inline Apollo heater is used in the radiator bypass line. The heater has a maximum power dissipation of 500 watts. The power will be supplied in 250 watt steps. The first heater will activate when the cold plate fluid inlet temperature drops to 47.7±.1°F and the second heater will activate at 47.0±.1°F. A redundant heater unit (500 W) will also be installed in the bypass line. The heater will be used for system ground checkout and for initial conditioning after the TCS is activated following the preoperational mode. The heater functional requirements are shown in Table 2.3-XXIV. Figure 2.3-24 shows a schematic of the heater assembly.

Table 2.3-XXIV

Heater Functional Requirements

PURPOSE: PROVIDE HEAT AS REQUIRED
FLOW: 0 to 950 LB/HR
FLUID: METHANOL/WATER (80/20 BY WEIGHT)
PRESSURE LOSS: 5 PSID MAX @ 900 LB/HR
OPERATING PRESSURE: 50 PSIG MAX
PROOF PRESSURE: 75 PSIG
BURST PRESSURE: 125 PSIG MIN
LEAKAGE: 2×10^{-6} SCCS MAX OF HE @ 50 PSIG
POWER: 500 WATTS TOTAL
250 WATTS/ELEMENT
VOLTAGE: 28 VDC
LIFE: 7500 CYCLES
SAFETY: THERMAL SWITCH MOUNTED ON HEATING ELEMENT

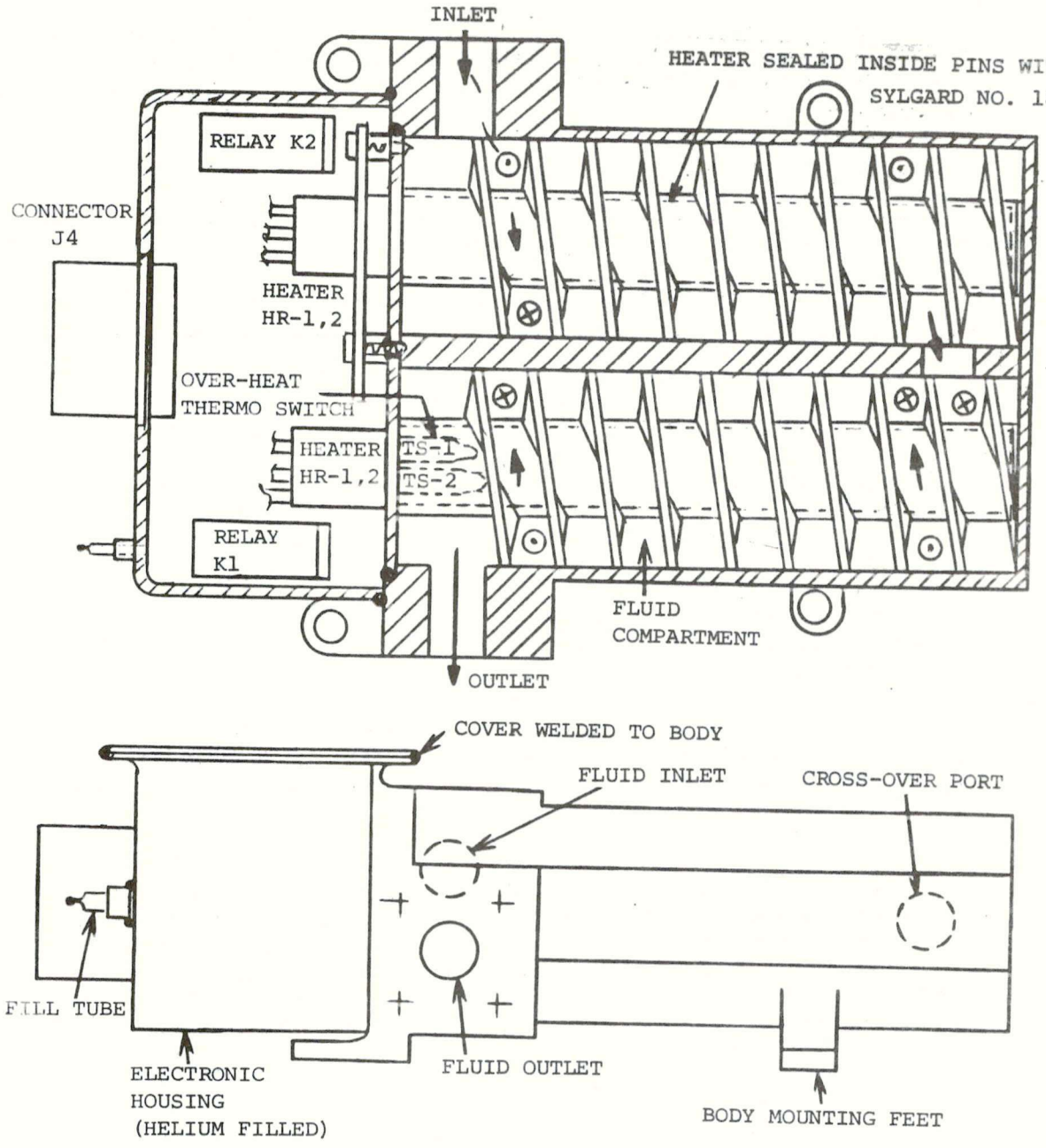

Figure 2.3-24 Heater Assembly

2.3.4.9 Flow Restricting Valve - The flow restricting valve is used to balance the flow in parallel flow passages, to adjust total system pressure drop, and to direct flow during filling and draining. Functional requirements of the valve are given in Table 2.3-XXV.

Table 2.3-XXV.

Flow Restricting Valve Functional Requirements

PURPOSE:	BALANCE FLOW IN PARALLEL FLOW PASSAGES DIRECT FLOW DURING FILLING & DRAINING DISCONNECT FOR FILL & DRAIN
FLOW:	0 to 950 LB/HR
FLUID:	METHANOL/WATER (80/20 BY WEIGHT)
LEAKAGE:	INTERNAL: 5×10^{-3} CCS OF M/W MAX @ 50 PSIG EXTERNAL: 10^{-6} SCCS OF HE MAX @ 50 PSIG
PRESSURE LOSS:	0.5 PSIG MAX @ 900 LB/HR
OPERATING PRESSURE:	50 PSIG MAX
PROOF PRESSURE:	75 PSIG
BURST PRESSURE:	125 PSIG MIN
RESTRICTION MECHANISM:	CALIBRATED FOR IDENTIFICATION OF POSITION POSITIVE LOCK FOR ANY POSITION PRESSURE DROP LINEAR WITH POSITION
LIFE:	1000 CYCLES

2.3.4.10 Filter Assembly, 400 Micron Absolute, With Bypass Valve - The filter removes any potentially interfering particles from the working fluid to prevent any possible impairment to the operation of the MFCV. The maximum pressure drop of a clean filter shall not exceed 0.5 psid at 900 lb/hr. The bypass valve cracks when the pressure drop across the filter exceeds 2.0 psid. The maximum allowable pressure drop through the bypass circuit shall not exceed 3.0 psid at 900 lb/hr.

2.3.5 Performance and Design Data The ATM TCS design goal is for the fluid entering the canister walls to be maintained at 50 $\pm 1^{\circ}F$ with no more than a $3^{\circ}F$ temperature rise as the fluid passes through the canister walls. The design limits are a $50 \pm 3^{\circ}F$ inlet temperature and a $5^{\circ}F$ temperature rise. These design goals and design limits are applicable for heat inputs into the canister walls up to 500 watts continuous.

General Description - The ATM TCS is a closed-loop heat transport system which removes heat from the heat sink (canister walls) and transports it to a space radiator where it is radiated to space. When the space radiator is colder then $50^{\circ}F$, the modulating flow control valve bypasses enough fluid around the radiator through the heater loop to maintain the system fluid temperature at $50^{\circ}F$. The heater does not operate until the system fluid temperature drops below $47.7^{\circ}F$.

Heat Transport Fluid - The heat transport fluid shall be a mixture of 80/20 by weight of methanol and water as specified by MSFC Specification 20M42501.

Flowrates and Pressure Drop -

a. Each of the two canister wall sections and orifice valves shall have a flowrate of 450 $\pm$ 25 lb/hr.

b. All other in-line components (except fill and drain valves) shall have a flowrate of 900 $\pm$ 50 lb/hr.

c. When the ATM-TCS is operated in full bypass, fluid leakage through the radiator shall not exceed 19 lb/hr.

d. The total pressure drop through the system (pump outlet to pump inlet) shall not exceed 31 psid at 900 lb/hr.

Fluid Passage Pressure Requirements -

a. Operating Pressure: 50 psig maximum.

b. Proof Pressure: All fluid handling components with the exception of the system tubing shall function without permanent damage after proof test at pressures 1.5 times operating pressure for five minutes.

c. Burst Pressure: All fluid handling components with the exception of the tubing shall withstand for three minutes without rupture pressurization to 2.5 times the operating pressure.

d. Vacuum Fill Requirements: All fluid passage sections shall be capable of withstanding an internal pressure of 500 microns (.01 psia) in a sea level ambient pressure environment.

e. Tubing: Proof pressure for tubing shall be two times the operating. Burst pressure shall be four times operating.

2.3.6 Operational Limits and Restrictions - (TBS)

2.4 INSTRUMENTATION AND COMMUNICATIONS SUBSYSTEM

2.4.1 Introduction

The Instrumentation and Communications Subsystem (I&CS) provides the communication links between the Apollo Telescope Mount (ATM) and the Spaceflight Tracking and Data Network (STDN). The subsystem processes the performance data and scientific data from the ATM subsystems and experiments and transmits these telemetry data to the STDN. The subsystem also provides the link for the command data transmitted from the STDN to the ATM subsystems and experiments. In addition, the subsystem provides television data from the ATM experiments to the Communication System in the Multiple Docking Adapter (MDA) for transmission to STDN via the Telecommunications System in the Command and Service Module (CSM).

Data transmitted to the STDN by the I&C Subsystem are classified as real-time data or delayed-time data. Real-time telemetry and television data will be transmitted to the STDN during the missions. Preselected telemetry data from the ATM subsystems and experiments will be temporarily stored by magnetic tape recorders contained within the I&C Subsystem. This delayed-time telemetry data will be transmitted to the STDN as required during the missions. The I&C Subsystem contains capability for delayed-time television data.

Command data will be transmitted by the STDN and processed by the I&C Subsystem only on a real-time basis.

2.4.2 Subsystem Interfaces

The I&C Subsystem has mechanical, thermal, optical and electrical interfaces with other ATM subsystems and experiments. Information concerning I&C equipment installation (mechanical interface) may be found in Section 2.1 of this handbook. Data on equipment heat dissipation and temperature (thermal interface) are tabulated in Section 2.3. Television (TV) cameras optically interface with experiments Hα1, Hα2, S052 and S082B for TV imaging. The various I&C Subsystem electrical interfaces are depicted in Figure 2.4-1.

2.4.3 Functional Description

The I&C Subsystem is composed of four major systems which are used in support of the ATM subsystems and experiments. These systems are:

a. Telemetry System
b. Digital Command System
c. Digital Address System
d. Television System

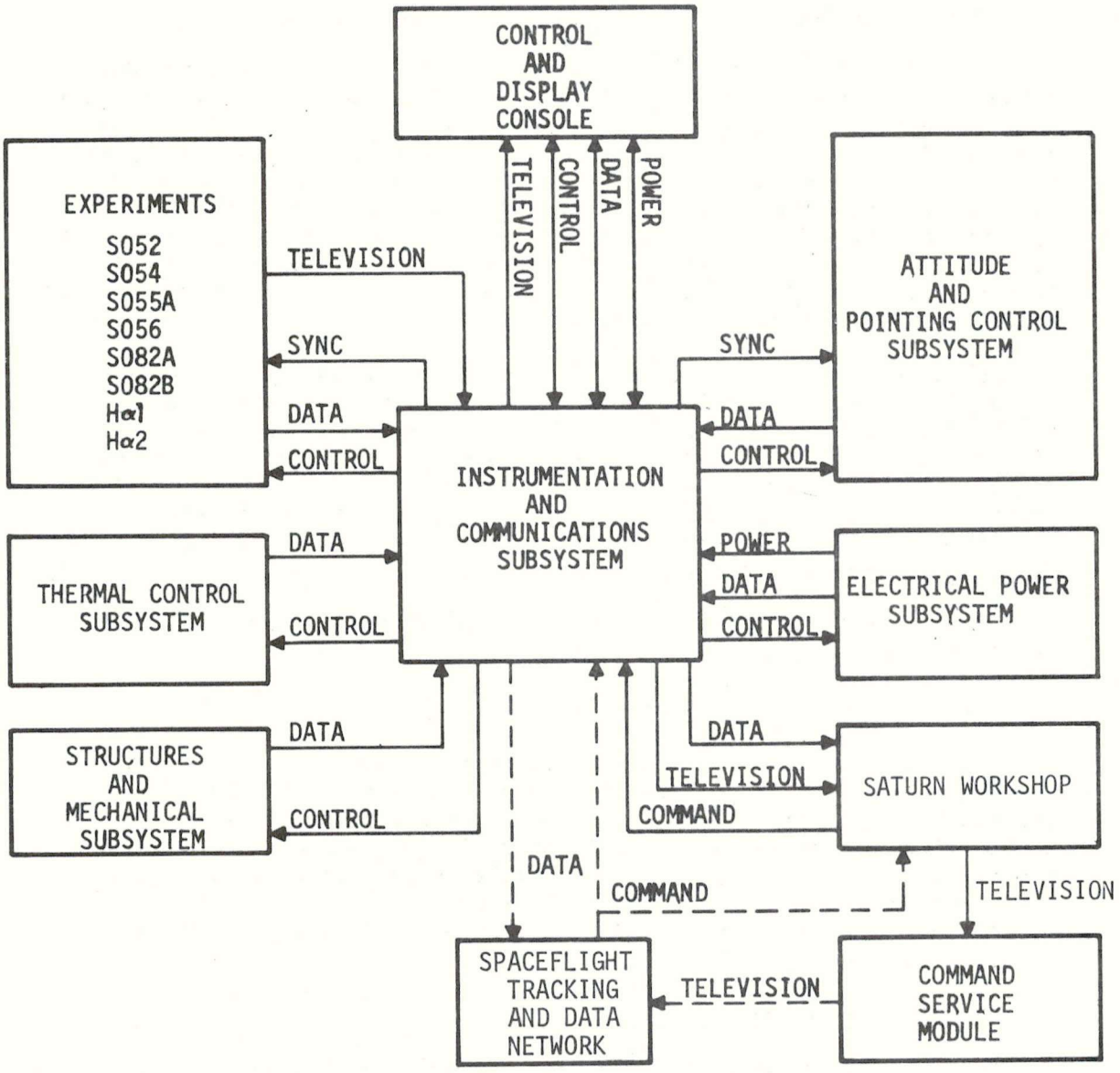

Figure 2.4-1 I&C Subsystem Electrical Interfaces

These systems perform ATM data processing and transmission, provide command control of ATM subsystems and experiments, and aid in experiment pointing for solar data acquisition.

2.4.3.1 Telemetry System - The ATM subsystems and experiments generate raw data in the form of analog, digital, or discrete measurement data. Signal conditioners are provided, as required, to condition the measurement data into amplitude limits compatible with the system equipment.

The Signal Conditioning Racks (SCR's) condition incoming analog measurement data to a voltage range compatible with the input requirements of the Remote Analog Submultiplexers (RASM's). The RASM's convert the analog data into pulse amplitude modulated (PAM) wavetrains which are input to Time Division Multiplexers (TDM's). Analog measurement data that do not require signal conditioning are input directly into the TDM's. The TDM's then transfer the multiplexed analog data to the Pulse Code Modulation/Digital Data Acquisition Subsystem (PCM/DDAS) which converts each multiplexed analog signal into a 10-bit digital word and places the word into the 72 KBPS PCM/DDAS data format.

Digital measurement data are primarily sampled by the Remote Digital Multiplexers (RDM's). The RDM outputs are transferred to the PCM/DDAS which inserts the output data into a predetermined location in the 72 KBPS PCM/DDAS data format. A limited number of digital measurements may be inserted directly into the PCM/DDAS.

In addition to the data conversion and formatting functions, the PCM/DDAS also generates various signals used to synchronize the ATM subsystems and experiments data with the Telemetry System. The PCM/DDAS provides the 72 KBPS PCM/DDAS data format (parallel and serial forms) and various synchronization signals as outputs to the Amplifier and Switch Assembly (ASA). A redundant PCM/DDAS is provided for improved system reliability and may be used, if required.

The ASA serves principally as a data and synchronization signal switching interface for the Telemetry System. This signal switching is controlled by commands issued through the ATM switch selectors. The ASA simultaneously selects all outputs from either the primary or redundant PCM/DDAS. The 72 KBPS PCM/DDAS data format is distributed by the ASA to the telemetry transmitters (serial form) for real-time data transmissions and to the Auxiliary Storage and Playback Assembly (ASAP) (parallel form) for delayed-time data selection and storage.

The ASAP extracts preselected portions of the 72 KBPS PCM/DDAS data format and compiles the 4 KBPS ASAP data format. The ASAP data format is then recorded on either of two magnetic tape recorders. The recorded 4 KBPS ASAP data format is played-back upon command and applied to the selected telemetry transmitter for transmission to STDN. The tape recorder playback speed is 18 times the record speed and equivalent to 72 KBPS.

The Transmission Subsystem consists of two very high frequency (VHF) transmitters, a voltage standing wave ratio (VSWR) measuring assembly, two coaxial switches, two radio frequency (RF) multicouplers, and two telemetry antennas. Input switching is provided such that either transmitter may transmit either the PCM/DDAS or the ASAP data format. Both transmitters may also transmit the same data simultaneously. The VSWR measuring assembly measures the incident and the reflected RF power at the output of each of the transmitters. The coaxial switches and the RF multicouplers allow either transmitter to be connected to either antenna independently or both transmitters to be connected simultaneously to either antenna. The Model 316 telemetry antenna is mounted on Wing 710 and the Model 231 telemetry antenna is mounted on Wing 713.

The Telemetry System block diagram is shown in Figure 2.4-2.

2.4.3.2 Digital Command System - The Digital Command System provides the capability for commanding the ATM subsystems and experiments via STDN during both manned and unmanned periods of the missions.

The Digital Command System consists of two antennas, two directional couplers, two receivers, and two decoders. These system components are configured to actually provide two independent, parallel systems which may be designated as System No. 1 and System No. 2. The two systems are connected in active redundancy and only one operational system is required for processing the command data transmitted by STDN. The system is designed such that STDN may address either, or both of the redundant systems.

Command data are transmitted by STDN in the form of a phase-shift-keyed/frequency modulated (PSK/FM) signal. The command data may be either an ATM switch selector command or an ATM digital computer (ATMDC) command and are coded such that only a unique function will be performed in the ATM. Command data can be placed in computer storage at any of the various STDN stations. When command data are to be transmitted to the ATM, it is removed from computer storage, encoded, and transmitted by a 450 MHz ultra high frequency (UHF) link.

The UHF signal is received by either or both of the system antennas. The Model 316 command antenna is mounted on Wing 710 and the Model 356 command antenna is mounted on Wing 712. The antenna configuration is fixed with the Model 316 antenna providing input to the directional coupler in System No. 1 and the Model 356 antenna providing input to the directional coupler in System No. 2. The primary function of the directional coupler is to couple test inputs from the Electrical Support Equipment (ESE) to the command receiver and to isolate these test inputs from the antenna. The command receiver demodulates the UHF signal and supplies the resulting audio output to the command decoder. The command decoder further demodulates and decodes this audio output, verifies the resulting decoded data, and issues an output to the signal distribution

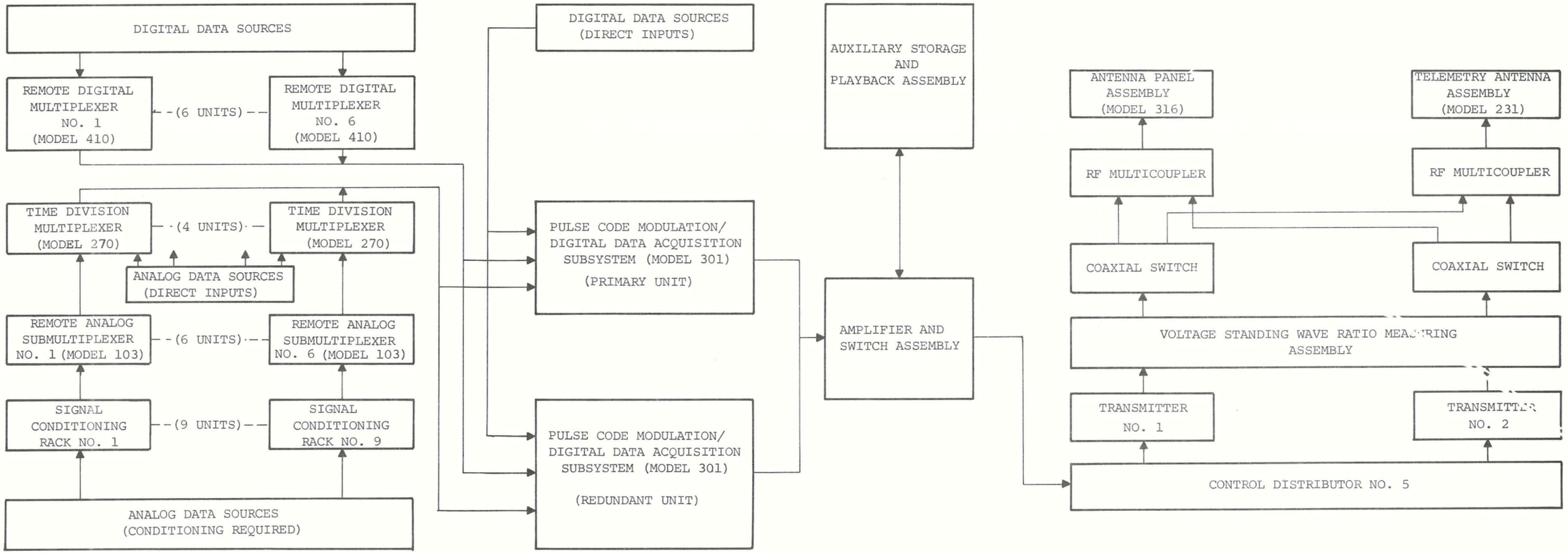

Figure 2.4-2 Telemetry System Block Diagram

circuitry in Control Distributor No. 1 based upon the decoded data.

The Digital Command System block diagram and interfaces are shown in Figure 2.4-3.

2.4.3.3 Digital Address System - The Digital Address System provides the on-board capability for commanding the ATM subsystems and experiments during manned periods of the missions.

The Digital Address System is an integral part of the ATM Control and Display (C&D) Console and consists of a keyboard located on the C&D Console and an electronics assembly contained within the C&D Console. The crew can control all switch selector outputs and ATMDC updates via the Digital Address System.

Since the Digital Address System is not redundantly designed, a separate Backup Digital Address System is provided. The backup system, designated as Panel 121, is located immediately adjacent to the C&D Console in the MDA. The backup system is normally physically disconnected from the circuitry and will be electrically connected only in the event of a Digital Address System failure.

The Digital Address System block diagram and interfaces are shown in Figure 2.4-4.

2.4.3.4 Television System - The ATM Television (TV) System provides television data from the ATM experiments to the TV monitors located on the ATM Control and Display (C&D) Console and to the Television Subsystem in the Multiple Docking Adapter (MDA) for transmission to STDN via the Telecommunication System in the Command Service Module (CSM). The ATM TV System serves four purposes:

a. To provide video displays to the crew.
b. To provide assistance in the pointing of the experiments.
c. To monitor areas of interest seen by the experiment optics.
d. To provide video downlink for ground video displays.

The TV System is comprised of five TV cameras, four camera control units, two switcher/processors, a sync generator, and two TV monitors. Each switcher/processor consists of an isolation amplifier and a video switch and sync adder.

The TV System is designed primarily for crew control and operation. However, selected control functions may be performed through the ATM Command System.

The TV System block diagram and interfaces are shown in Figure 2.4-5.

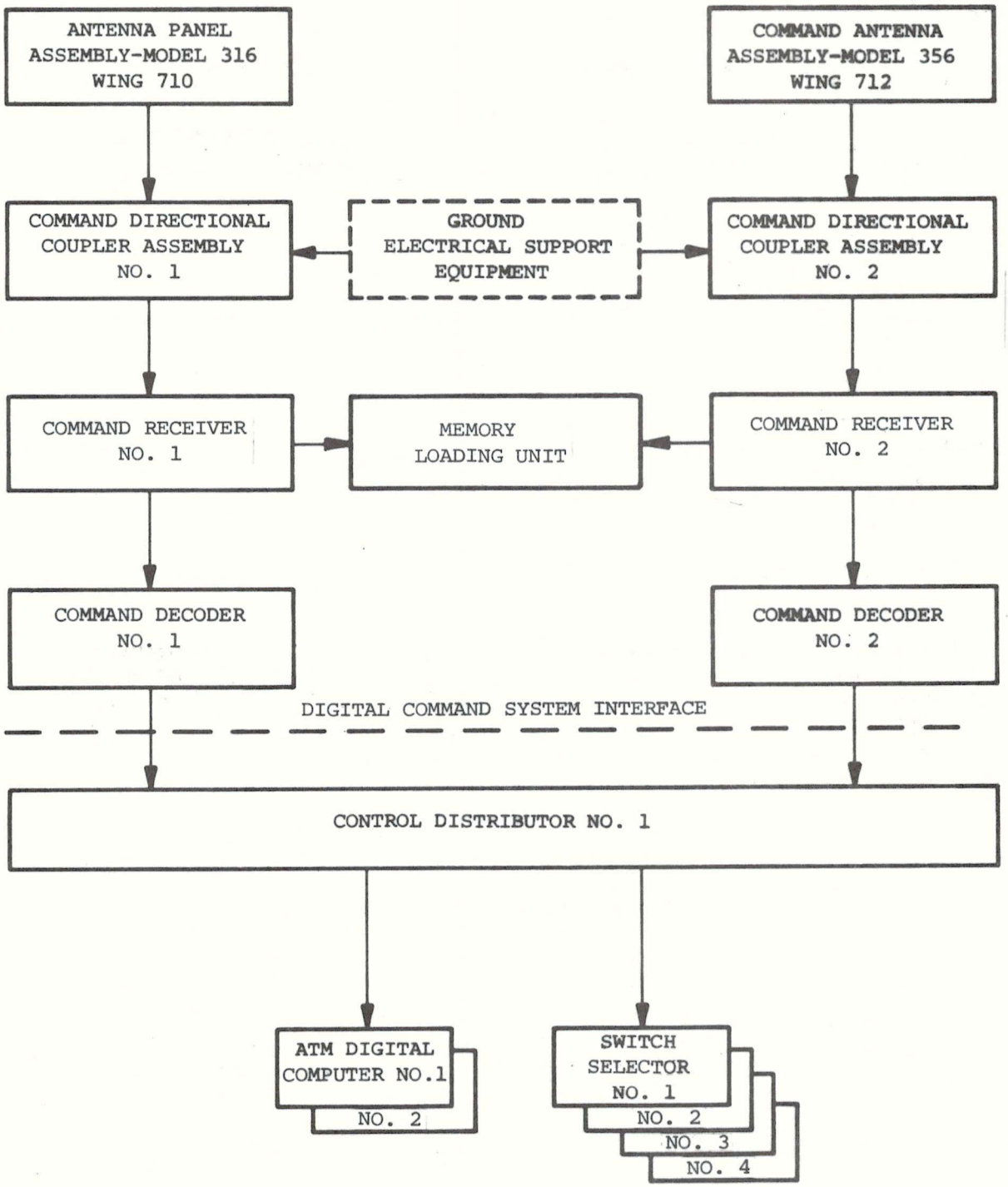

Figure 2.4-3 Digital Command System Block Diagram and Interfaces

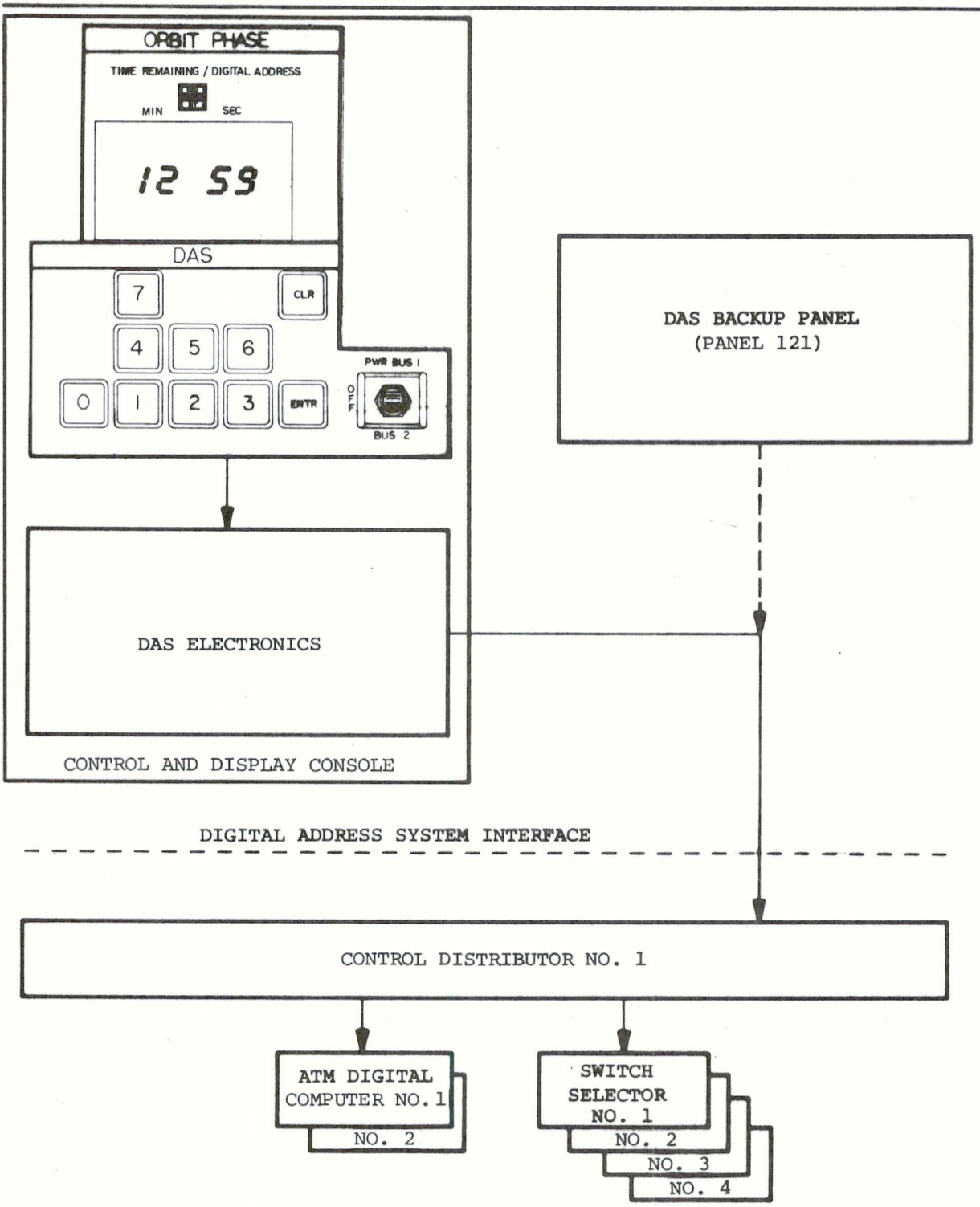

Figure 2.4-4 Digital Address System Block Diagram and Interfaces

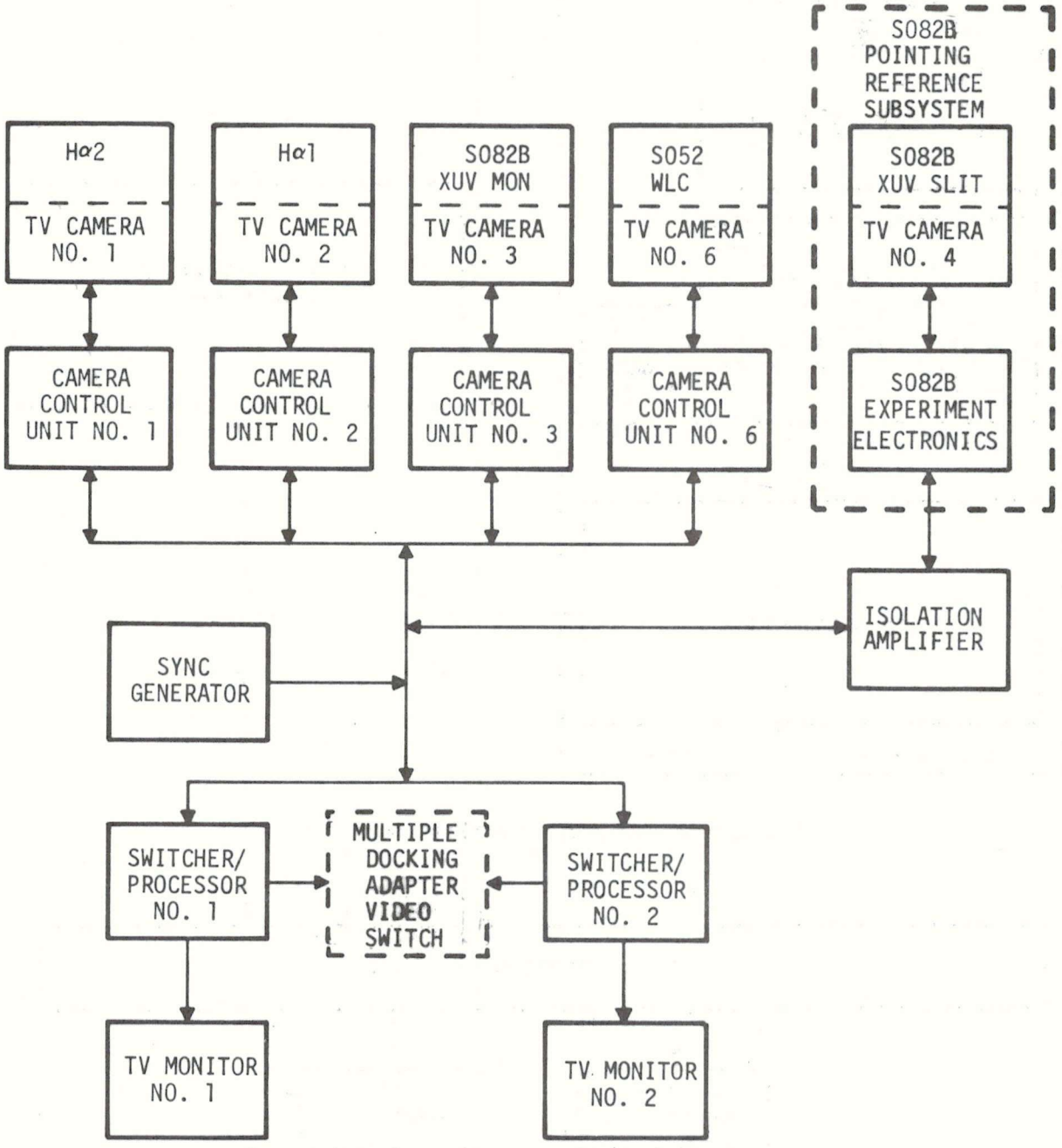

Figure 2.4-5 TV System Block Diagram and Interfaces

2.4.4 Major Component/Functional Description

2.4.4.1 Telemetry System - The Telemetry System consists of equipment for analog and digital multiplexing, encoding and formatting, storage and playback, and VHF transmission. The Telemetry System is composed of the following major functional subsystems:

a. Measuring Subsystem
b. Multiplexing Subsystem
c. Pulse Code Modulation/Digital Data Acquisition Subsystem
d. Amplifier and Switch Assembly
e. Auxiliary Storage and Playback Assembly
f. Transmission Subsystem

2.4.4.1.1 Measuring Subsystem

2.4.4.1.1.1 Signal Conditioning Racks - The Measuring Subsystem includes nine Signal Conditioning Racks (SCR's). These racks accept and condition up to 360 signals from the various analog data sources and produce output signals in the 0 to 20 millivolt dc range which represent the physical quantities being measured. Physical quantities such as pressure, temperature, and speed must be transformed by transducers into electrical signals for input to the Measuring Subsystem. Certain transducers and measuring devices have output signals which do not require signal conditioning. These signals are routed directly to the Multiplexing Subsystem bypassing the Signal Conditioning Racks.

Each Signal Conditioning Rack is divided into four sections. Each section (A, B, C and D) processes 10 signals and is so designed that a failure in one section will not affect the signals being processed by the other sections. Each section contains one multiple 6.6 vdc power supply and five range cards. Each range card processes two signals.

The primary function of the multiple 6.6 vdc power supply is to provide an isolated 6.6 vdc reference voltage for each signal being processed by the range cards. The 6.6 vdc power supply accepts an input voltage that can vary over the range of 24 to 32 volts and using a step-up regulator-chopper boosts the voltage to 32 volts as an input to a stepdown transformer with 10 outputs. Each output is rectified resulting in an output voltage of 6.6 vdc.

The isolated 6.6 vdc outputs are routed to the range cards where the voltages are stepped-down through voltage dividers. The voltages are used to excite bridge networks (one for each signal). One leg of the bridge consists of an input from a transducer. As the input from the transducer varies a 0 to 20 millivolt dc output is generated by the range card corresponding to the physical quantity being measured by the transducer.

The 0 to 20 millivolt dc analog outputs of the SCR's are compatible with the input requirements of the Remote Analog Submultiplexers (RASM's).

2.4.4.1.2 Multiplexing Subsystem - The Multiplexing Subsystem consists of six Remote Analog Submultiplexers (RASM's), four Time Division Multiplexers (TDM's), and six Remote Digital Multiplexers (RDM's).

The Multiplexing Subsystem samples all data input signals except direct digital inputs to the Pulse Code Modulation/Digital Data Acquisition Subsystem (PCM/DDAS) and provides analog and digital data inputs to the primary and redundant PCM/DDAS. The Multiplexing Subsystem samples and formats these data inputs into a form that is acceptable to the PCM/DDAS.

The Multiplexing Subsystem also provides derived sync signals to certain data sources. The subsystem accepts sync signals of 4 PPS and 3.6 kHz from the PCM/DDAS and uses these signals to derive programmed sync signals of 24 PPS for use by the ATMDC and Experiment S055A. A 12 PPS sync signal and a 3.6 kHz clock signal are also derived for internal use within the Multiplexing Subsystem.

A telemetry analog data and sync flow diagram is presented in Figure 2.4-6.

2.4.4.1.2.1 Input Data Characteristics - The Multiplexing Subsystem accepts two forms of analog input data from the data sources, a nominal 0 to 20 millivolt dc level accepted by the RASM's and a nominal 0 to 5 vdc level accepted by the TDM's. The input impedance seen by the analog data inputs is 100 kilohms resistance paralleled by one microfarad capacitance or less.

The Multiplexing Subsystem accepts two forms of digital input data from the data sources. A nominal 0 or 5 vdc level and a nominal 0 or 28 vdc level. This data is accepted by the RDM's or directly by the PCM/DDAS. Within the 0 or 5 vdc range, 0 to 1.5 vdc is a logic "0" and 3.5 to 6 vdc (nominally 5 vdc) is a logic "1". Within the 0 or 28 vdc range, 0 to 8.4 vdc is a logic "0" and 19.6 to 33.6 vdc (nominally 28 vdc) is a logic "1". The input impedance seen by the digital data is 100 kilohms resistance paralleled by 200 picofarads capacitance.

The Multiplexing Subsystem accepts discrete data inputs from the data sources that are nominally 0 or 5 vdc. This data is accepted by the RDM's or directly by the PCM/DDAS. Input impedance seen by the discrete data inputs is 100 kilohms resistance paralleled by 200 picofarads capacitance.

2.4.4.1.2.2 Remote Analog Submultiplexer - Each of the six Model 103 Remote Analog Submultiplexers (RASM's) can accept up to 60 conditioned analog measurement signals in the 0 to 20 millivolt dc range from the SCR's. Each input is sampled 12 times per second and applied to one common

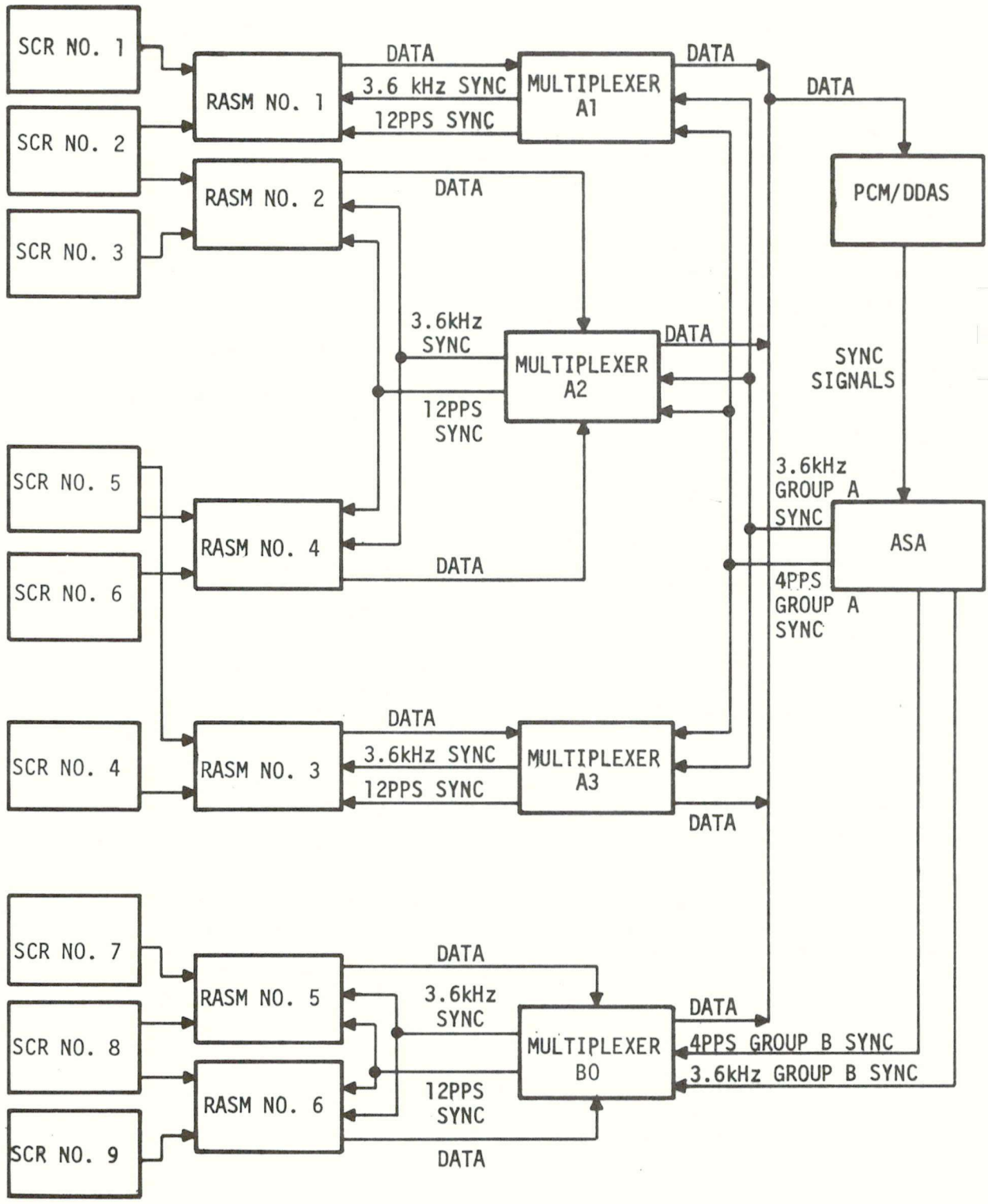
SCR NO. 1
SCR NO. 2
SCR NO. 3
RASM NO. 1
RASM NO. 2
DATA
3.6 kHz SYNC
12PPS SYNC
MULTIPLEXER A1
DATA
DATA
PCM/DDAS
3.6kHz SYNC
12PPS SYNC
MULTIPLEXER A2
DATA
SYNC SIGNALS
SCR NO. 5
SCR NO. 6
RASM NO. 4
DATA
3.6kHz GROUP A SYNC
4PPS GROUP A SYNC
ASA
SCR NO. 4
RASM NO. 3
DATA
3.6kHz SYNC
12PPS SYNC
MULTIPLEXER A3
DATA
SCR NO. 7
SCR NO. 8
SCR NO. 9
RASM NO. 5
RASM NO. 6
DATA
3.6kHz SYNC
12PPS SYNC
DATA
MULTIPLEXER BO
DATA
4PPS GROUP B SYNC
3.6kHz GROUP B SYNC

amplifier (gain of 250). Here the 0 to 20 millivolt dc signals are amplified (one at a time) to levels of 0 to 5 vdc and applied (on a single output line) to six input channels of a TDM. The RASM's receive timing signals from the TDM. The timing signals consist of 12 PPS and 3.6 kHz signals. The 12 PPS establishes the sampling rate and keeps the RASM synchronized with the internal timing of the TDM. The 3.6 kHz signal is used as a clock pulse by the RASM.

2.4.4.1.2.3 Time Division Multiplexer - Each of the four Model 270 Time Division Multiplexers (TDM's) can accept up to 270 analog measurements in the 0 to 5 vdc range. These inputs are accepted from the RASM's and directly from data sources having a 0 to 5 vdc analog output. Each TDM contains 30 primary channels which are sampled 120 times per second. Channels 1 through 27 are used for data channels. Channel 28 is used for frame identification. Channels 29 and 30 are used for amplitude reference. Channels 1 through 27 may be multiplexed externally to form 10 subchannels each thus enabling the 270 data measurements. Each TDM provides a pulse amplitude modulated (PAM) output to the PCM/DDAS.

The TDM's receive sync signals from the PCM/DDAS to ensure synchronous operation between the TDM's and the PCM/DDAS. The sync signals consist of 4 PPS (master frame sync) and 3.6 kHz (channel sync). The 3.6 kHz clock pulse is used to generate all logic functions for the TDM's.

Each TDM derives a 3.6 kHz clock signal and applies the signal to the associated RASM's. The 3.6 kHz clock rate is used as the basic timing signal by the RASM's. The 3.6 kHz clock pulse amplitude is + 5.0 $\pm$ 1.0 vdc. Each TDM also derives a 12 PPS sync signal and supplies the signal to the associated RASM's. The 12 PPS sync signal ensures that the timing of the RASM's is synchronous with the internal timing of the TDM's. The 12 PPS sync pulse amplitude is + 5.0 $\pm$ 1.0 vdc.

2.4.4.1.2.4 Remote Digital Multiplexer - Each of the six Model 410 Remote Digital Multiplexers (RDM's) can accept 100 bits of digital measurement data from the data sources. The RDM temporarily stores this information in ten magnetic core register (MCR) cards as ten 10-bit digital words. The circuitry of the MCR cards is such that the 10-bit words are accepted on ten individual conductors. A single conductor is used for signal return. If a digital input is not a multiple of ten bits, it must share the digital return conductor with other digital inputs. The ten 10-bit words stored in the MCR cards are transferred (one 10-bit word at a time) to a parallel storage register at a predetermined rate and sequence. The ten 10-bit words remain in the parallel storage register until the PCM/DDAS is ready to accept them.

The RDM receives a 4 PPS group A sync signal and a 3.6 kHz group A signal from the PCM/DDAS. Synchronization of the RDM to the PCM/DDAS causes the ten 10-bit word groups to appear as an output from the RDM when the PCM/DDAS is programmed to accept them.

A 24 PPS strobe pulse is derived and programmed within RDM's J, N, and Y. The programmed strobe signal is applied to Experiment S055A and also to the ATMDC. This strobe pulse inhibits the S055A and ATMDC output registers when the Telemetry System is sampling data outputs. This ensures that the data in the output registers is not being updated or is not changing value during the sampling periods.

The strobe pulse amplitude is + 7.5 $\pm$ 1.5 volts for a logic "1" and 0 to + 0.5 volts for a logic "0". Pulse width is 150 microseconds with a rise time less than 30 microseconds when operating into a load of not less than 10 kilohms resistance paralleled by not more than 0.002 microfarads capacitance.

2.4.4.1.3 Pulse Code Modulation/Digital Data Acquisition Subsystem- The Telemetry System contains two Model 301 Pulse Code Modulation/Digital Data Acquisition Subsystems (PCM/DDAS's) designated as primary and redundant. The subsystems operate identically and only one is active at any one given time. If the redundant PCM/DDAS is selected, the 600 kHz VCO output from the redundant PCM/DDAS is also selected.

The PCM/DDAS accepts both analog data and digital data. The PCM/DDAS encodes the analog data from the TDM's into 10-bit digital words. This data is then combined with the digital data inputs from the RDM's, the direct PCM/DDAS digital input, and the frame sync words (FSW) generated within the PCM/DDAS. The PCM/DDAS arranges the FSW and data into a standard 72 KBPS NRZ format and provides the format as outputs to the Amplifier and Switch Assembly (ASA). All sync signals for the data sources and the Telemetry System are either generated in the PCM/DDAS or derived from signals generated in the PCM/DDAS. These sync signals are routed through the ASA where isolation between sync load groupings and amplification are provided.

2.4.4.1.3.1 Data Conversion and Formatting - Four pulse amplitude modulated wavetrains (one from each TDM) are accepted by the PCM/DDAS. These wavetrains consist of samples that represent analog measurements, amplitude references, and frame identification. The PCM/DDAS accepts samples of the four wavetrains in a sequence determined by the internal timing and programming within the PCM/DDAS. Each of the analog samples is applied to the analog to digital (A-D) converter in the PCM/DDAS.

Here, each analog sample is encoded into a 10-bit digital form, which is equivalent to the analog quantity. The encoded 10-bit digital data and the digital inputs to the PCM/DDAS are combined serially with the sync data to form the output format.

Encoded data from the A-D converter, digital data inputs, and sync data from the clock programming and timing logic (CPTL) within the PCM/DDAS are accepted by the digital multiplexing and formatting logic (DMFL) within the PCM/DDAS. The DMFL combines and serializes the sync data and input data into an output format containing 1800 time slots per second. Insertion of sync data and data words into specific time slots is determined by programming from the CPTL.

The output format consists of 30 frames, each frame containing time slots for sixty 10-bit words,totaling 1800 words. This constitutes one PCM/DDAS master frame. Frame length is approximately 8.33 milliseconds (120 frames-per-second). The master frame is 250 milliseconds (4 master frames-per-second) in duration. This results in a word rate of 7200 words-per-second (bit rate of 72 KBPS).

Frame identification consists of three 10-bit code groups which are inserted consecutively during the final three time slots of each frame. These 30 bits are used in ground PCM receiving equipment as a reference for channel demultiplexing. The arrangement of "1's" and "0's" in the frame identification code is generated by permanent, nonprogrammable logic within the PCM/DDAS as follows:

Word 29B - 1011011110
Word 30A - 1010001001
Word 30B - 1100000110

During frame number 30, the CPTL generates a signal which causes the frame identification logic to complement all bits in the frame identification code. This forms the master frame identification code and provides a reference for demultiplexing of subcommutated channels.

A master-master sync word occurs in the PCM/DDAS format once every 60 PCM/DDAS master frames (once every 15 seconds); however, the master-master sync word is not generated within the PCM/DDAS. The 1 pulse/15 seconds signal from the ASAP is used as the master-master sync word. This 1 pulse/15 seconds is supplied to certain experiments where it is used to synchronize the experiment submultiplexers. It is also inserted into a telemetry channel and occurs during Frame 1 Channel 1A once every 60 PCM/DDAS master frames and is made up of all "1's".

2.4.4.1.3.2 Data Output Formats - The PCM/DDAS format is provided as three separate outputs. The outputs convey the same information in the following three different forms:

a. 72 kilobits-per-second (KBPS) serial, non-return-to-zero level (NRZL) provided as a serial output through the ASA to modulate the transmitters.

b. Parallel NRZL - Provided as a 72 KBPS parallel output through the ASA to the Auxiliary Storage and Playback Assembly (ASAP) for recording and storage.

c. 600 kHz VCO - A 600 kHz FM carrier modulated by the 72 KBPS serial data. Provided as a hardwire output via coaxial cable through the ASA to ground support equipment for pre-launch checkout.

2.4.4.1.3.3 Sync Generation - All timing and synchronization signals for the data sources and telemetry system components originate in the PCM/DDAS or are derived from signals originating in the PCM/DDAS.

A 144 kHz crystal oscillator within the PCM/DDAS serves as the clock from which all sync and timing signals are derived. The 144 kHz rate is divided into basic sync rates of 72 kHz, 3.6 kHz (channel sync) groups A and B, and 4 PPS (master frame sync) groups A and B. The 3.6 kHz group A and 4 PPS group A sync signals are applied to the data sources, TDM's (A1, A2, and A3 only), all RDM's and the ASAP assembly. The 3.6 kHz and 4 PPS group B sync signals are applied only to one TDM (BO).

The 72 kHz sync signal is provided to the data sources and to the ASAP assembly. The 72 kHz signal amplitude is + 5 $\pm$ 1 volt for a logic "1". Rise time is less than three microseconds when operating into a load of 500 ohms resistance paralleled by 2000 picofarads capacitance. The basic bit rate of 72 KBPS is established by the 72 kHz within the PCM/DDAS.

The 3.6 kHz group A and B sync signals provide channel synchronization for group A and group B components. The 3.6 kHz group A and group B sync signals are identical except, they are opposite in polarity. Group A signals are high while group B signals are low and vice versa. Therefore, logic functions and data sampling within group A and group B components occur at different times. The different times correspond to group A and group B time slots (word times) in the PCM/DDAS output format.

The 3.6 kHz sync pulse amplitude is + 5 $\pm$ 1 volt for a logic "1" and 0 $\pm$ 1 volt for a logic "0". Pulse width is 139 microseconds. The rise time is less than 3 microseconds when operating into a load of 500 ohms resistance paralleled by 2000 picofarads capacitance. The 3.6 kHz period is 278 microseconds. The PCM/DDAS word times (A and B) occur during this 278 microsecond period.

The 4 PPS group A sync signal is generated in coincidence with word times 30B and 1A (Frame 30) of the PCM/DDAS format. Group B is generated during word times 1A and 1B. The 4 PPS sync serves as the master frame sync for group A and group B components and occurs once every PCM/DDAS master frame. The 4 PPS group A and group B signals are identical except offset in time by 139 microseconds. The group A signal is high while the group B signal is low. This enables master frame synchronization to occur simultaneously in group A and group B components. The 4 PPS sync pulse amplitude is +5 ± 1 volt for a logic "1" and 0 ± 1 volt for a logic "0". Pulse width is 278 microseconds. Rise time is less than 3 microseconds when operating into a load of 500 ohms resistance paralleled by 2000 picofarads capacitance.

The telemetry sync signal distribution matrix is presented in Table 2.4-I.

2.4.4.1.4 Amplifier and Switch Assembly - The Amplifier and Switch Assembly (ASA) serves principally as a data and synchronization signal switching interface for the Telemetry System. This signal switching is controlled by the Command System through the ATM switch selectors. The ASA provides selection of data outputs from either the primary or redundant PCM/DDAS and for the primary or redundant 1PPS and 1/15 PPS sync signals. The selected PCM/DDAS data output is distributed to the telemetry transmitters for real-time data transmission and to the ASAP for delayed-time data selection and storage.

The ASA provides primary and redundant line drivers for all sync signals, parallel NRZL data, and tape recorder outputs. The ASA provides only switching for the PCM/DDAS 600 kHz voltage controlled oscillator (VCO) signal and the serial 72 KBPS NRZL data from the PCM/DDAS. The ASA also provides isolation between sync load groupings.

Counters within the ASA derive the redundant sync signals of 1 PPS and 1/15 PPS. These sync signals can be selected upon command and applied to the data sources should the primary 1 PPS and 1/15 PPS sync signals from the ASAP to the data sources fail.

2.4.4.1.5 Auxiliary Storage and Playback Assembly - The Auxiliary Storage and Playback Assembly (ASAP) accepts the parallel PCM/DDAS format and sync signals from the PCM/DDAS routed through the ASA. Sync signals are 72 kHz, 3.6 kHz group A, and 4 PPS group A. The parallel PCM/DDAS format is at a rate of 7200 words-per-second (10 bits-per-word).

Sync signals of 1 PPS and 1/15 PPS are derived within the ASAP assembly and applied to a portion of the data sources. These sync signals are used by the data sources to synchronize data to be stored by the ASAP and also to synchronize data for real-time transmission.

EXPERIMENT/ UNIT	SYNCHRONIZATION SIGNAL DISTRIBUTION								
	72 kHz	3.6 kHz GROUP A	3.6 kHz GROUP B	4 PPS GROUP A	4 PPS GROUP B	24 PPS	1 PPS	1 PULSE 15 SECONDS	REMARKS
S052	X	X							
S054	X			X			X	X	
S055A		X		X		X	X	X	24 PPS SUPPLIED BY RDM J
S056				X					
S082A		X		X			X	X	4 PPS GROUP A SUPPLIED TO BUT NOT USED IN S082A & S082B
S082B		X		X			X	X	
STAR TRACKER				X					
WCIU						X	X		24 PPS SUPPLIED BY RDM N & RDM Y
MOD 270 A1		X		X					SUPPLIES 3.6 kHz & 12 PPS TO RASM NO. 1
MOD 270 A2		X		X					SUPPLIES 3.6 kHz & 12PPS TO RASM'S NO. 2 & NO. 4
MOD 270 A3		X		X					SUPPLIES 3.6 kHz & 12 PPS TO RASM NO. 3
MOD 270 B0			X		X				SUPPLIES 3.6 kHz & 12 PPS TO RASM'S NO. 5 & NO. 6
RDM J		X		X					
RDM K		X		X					
RDM M		X		X					
RDM N		X		X					
RDM Y		X		X					
RDM Z		X		X				X(1)	(1) TLM MEAS K146-702
DSIU	X	X		X					

Table 2.4-I Telemetry Sync Signal Distribution Matrix

The ASAP contains the following component assemblies:

a. Data Storage Interface Unit (DSIU)
b. ASAP Memory Assembly (AMA)
c. Redundant DC-DC Converter Power Supply
d. Tape Recorders (2)

The ASAP block diagram and interfaces are shown in Figure 2.4-7.

2.4.4.1.5.1 Data Storage Interface Unit - The Data Storage Interface Unit (DSIU) is the central controlling unit of the ASAP. The DSIU is designed to perform interface functions between the PCM/DDAS and the nonsynchronous units, the AMA and the tape recorders. Functions of the DSIU are as follows:

a. Synchronize the internal timing of the DSIU to similar timing within the PCM/DDAS to accurately identify the occurrence of time slots in the PCM/DDAS format.

b. Accept 10 parallel bits of PCM/DDAS data, buffer this data, and present it to the AMA.

c. Accept 10 parallel bits of data from the destructive readout (DRO) section of the AMA, serialize the data, insert frame and master frame sync, and provide a 4 KBPS serial NRZ output to the tape recorders.

d. Accept 12 parallel PCM/DDAS address bits from the nondestructive readout (NDRO) section of the AMA, transfer the data corresponding to that address to the DRO inputs of the AMA, and generate a write command.

e. Recognize and disregard invalid addresses presented by the AMA.

f. Present all write, read, and reset commands to the AMA as required for proper operation.

g. Provide a 12 PPS subcommutation sync pulse, a primary 1 PPS master sync pulse, and a 1/15 PPS master-master sync pulse.

h. Provide a 4 kHz 50 percent duty cycle clock for tape recorder synchronization.

i. Provide a 600 kHz FM output of either the 72 KBPS ASAP biphase (L) or the 4 KBPS DSIU serial NRZ data as selected by command.

j. Provide 100 percent redundancy for all DSIU functions.

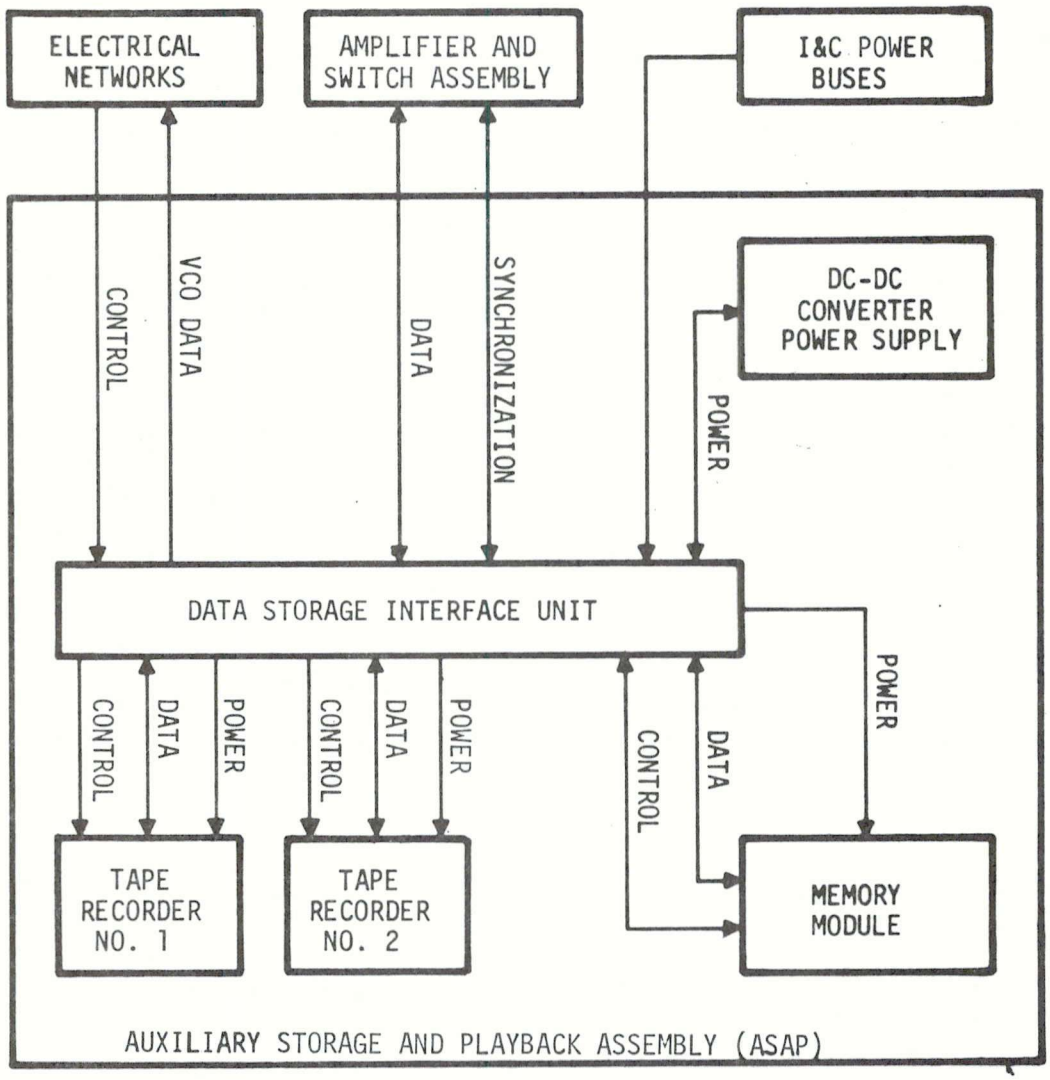

Figure 2.4-7 ASAP Block Diagram and Interfaces

The DSIU derives the primary signals of 1 PPS and 1/15 PPS and provides these signals to the data sources. The redundant signals of 1 PPS and 1/15 PPS may be provided by the ASA.

The 1 PPS sync pulse amplitude is + 5 $\pm$ 1 volt for a logic "1" and 0 $\pm$ 1 volt for a logic "0". Pulse width is 139 microseconds. Rise time is less than 3 microseconds when operating into a load of 500 ohms resistance paralleled by 2000 picofarads capacitance. The 1 PPS occurs once every four ASAP frames equaling 400 ASAP words.

The 1/15 PPS sync pulse amplitude is + 5 $\pm$ 1 volt for a logic "1" and 0 $\pm$ 1 volt for a logic "0" with a repetition rate of 1 pulse per 15 seconds. Pulse width is 139 microseconds. Rise time is less than 3 microseconds when operating into a load of 500 ohms resistance paralleled by 2000 picofarads capacitance. The 1/15 PPS occurs once every 60th ASAP frame which is equivalent to once every ASAP master frame.

2.4.4.1.5.2 ASAP Memory Assembly - The ASAP Memory Assembly (AMA) has two distinct memory sections (NDRO and DRO). The NDRO section contains 400 addresses which are routed to the DSIU. These 400 addresses are to be written into the AMA in a final program prior to installation in the vehicle. If the NDRO program should be inadvertently altered due to a power transient or some other destructive event, the NDRO program (400 address locations) can be restored by a memory reprogram command. This command will transfer the 400 address locations from a semiconductor, read-only-memory, to the NDRO section of the AMA, thus allowing normal operation to continue (100 milliseconds are required to reprogram). The DRO section provides an interface between the asynchronous systems permitting the acceptance of ASAP words at a quasi-random rate and the readout of these words at a fixed rate of 400 words per second.

Inputs to the AMA are:

a. Write destructive readout (WDRO) pulse - Initiates clear and write on the DRO portion and read and restore on the NDRO portion of the AMA. This operation causes the storing of data in the memory assembly and causes the memory assembly to furnish the next address.

b. Read pulse - Initiates reading of data output (DRO).

c. Data input - Information is supplied to the AMA using 10 data lines for DRO data and 12 data lines for NDRO data.

d. Write NDRO pulse - This pulse is used in the writing of the 400 addresses in the NDRO memory section.

Outputs from the AMA are:

a. 10 lines of data read out at 400 words per second.

b. 12 lines of address information read out at rates determined by the position of the desired words in the PCM/DDAS format.

2.4.4.1.5.3 Redundant DC-DC Converter Power Supply - The redundant DC-DC converter power supply provides power to the DSIU and AMA. The redundant DC-DC converter contains two electrically isolated sections, the A section and the B section. The A section supplies a plus 20 vdc and a plus 6 vdc output to operate the AMA. The B section supplies a plus 28 vdc and a plus 6 vdc output to operate the DSIU. Diodes are provided in both sections to provide fault isolation between the ATM 28 vdc power busses. The converter is 100 percent redundant with the primary and redundant circuits operating in parallel. A primary and redundant circuit for each of the plus 6, plus 20 and plus 28 vdc outputs exists.

2.4.4.1.5.4 Tape Recorder - The ASAP contains two identical tape recorders (primary and redundant). The recording capacity of each recorder is 90 minutes of 4 KBPS data and playback time is 5 minutes. Each tape recorder has the capacity to reproduce the data more than once before erasure.

Each tape recorder receives a 4 KBPS serial NRZL output from the DSIU parallel-to-serial converter. The output from each tape recorder is 72 KBPS serial biphase (L) double-ended (for use by the transmitters), and 72 KBPS serial biphase (L) single-ended (for use by the VCO in the ASAP).

The tape recorder accepts the serial 4 KBPS NRZL wavetrain and the 4 kHz clock rate from the DSIU and converts the serial wavetrain to biphase (L) (Manchester II) code. The maximum record time is 90 minutes. During this time, the tape recorder stores 21,600,000 bits. The 90 minute period is the approximate time required for the ATM to orbit the earth. Once per orbit a playback command is initiated and the recorder plays back the data at a rate 18 times faster than the record rate. This results in a playback time of 5 minutes and increases the bit rate to 72 KBPS. Only one of the tape recorders can be operated in record or playback mode at any given time due to an electrical interlock function. The other tape recorder may be simultaneously operated but in the opposite mode.

2.4.4.1.5.5 ASAP Word Selection and Format - The DSIU selects data words from the PCM/DDAS format in accordance with addresses supplied by the AMA. After selection of the described word, the DSIU transfers the word to the AMA. The WDRO pulse causes the selected data word to be stored in the available DRO storage location. This same WDRO pulse steps the write register to the next word location where the 12-bit address stored in that location is transferred to the address holding register to begin the process again. The data word storage rate in the AMA is dependent on the time between selected data word locations in the PCM/DDAS format;

however, the read rate (the rate the words are transferred parallel from the AMA to the parallel-to-serial converter in the DSIU) is fixed at 400 words per second (4KBPS). The AMA receives a 400 PPS read signal from the DSIU. After the read register has read all 400 storage locations, a reset pulse from the DSIU steps the register to position 1 again. The AMA must be programmed with the proper 400 address words in the NDRO register prior to installation in the ATM.

The ASAP format consists of 60 frames, each containing one hundred selected 10-bit words totaling 6000 words-per-master frame. ASAP frame length is 0.25 seconds which is equivalent to one PCM/DDAS master frame. An ASAP master frame is 15 seconds in duration during the record mode which is equivalent to 60 PCM/DDAS master frames. During playback, an ASAP master frame is 15/18 seconds in duration.

Frame identification, as in the PCM/DDAS, consists of three 10-bit code groups which are inserted consecutively during the final three time slots of each ASAP frame. These 30 bits are used in ground receiving equipment as a reference for channel demultiplexing. The arrangement of "1's" and "0's" in the ASAP frame identification code is generated by complementing the PCM/DDAS master frame code. At the end of Frame 60, the ASAP assembly allows the PCM/DDAS master frame code to be inserted without being complemented. This forms the ASAP master frame identification code and provides a reference for demultiplexing the subcommutated channels.

2.4.4.1.6 Transmission Subsystem - The Transmission Subsystem consists of two very high frequency (VHF) transmitters, a voltage standing wave ratio (VSWR) measuring assembly, two coaxial switches, two RF multicouplers, and two telemetry antennas.

The VHF transmitters are solid state frequency modulated (FM) transmitters. Each transmitter produces a minimum of 10 watts output in the 225 to 260 MHz range with a deviation of 72 kHz peak. The transmitters are modulated by either the serial NRZL output from the PCM/DDAS or the serial bi-phase (L) double-ended output from the ASAP tape recorders. Input switching is provided in order to permit either transmitter to transmit either the PCM/DDAS or ASAP data format. Both transmitters may also transmit the same data simultaneously.

The VSWR measuring assembly measures the incident and reflected RF power at the output of the VHF transmitters.

The coaxial switches and the two RF multicouplers allow either transmitter to be connected to either antenna independently or both transmitters to be connected simultaneously to either antenna.

The telemetry antenna patterns are complementary and one of the dipole antennas will usually provide good communications throughout an STDN station pass. The Model 316 antenna is mounted on Wing 710 and

is fixed to the deployable antenna panel in the plane of the wing. The Model 231 antenna is folded into Wing 713 until wing deployment. This antenna is spring-loaded and is released when the wing is extended. When deployed, the antenna is perpendicular to the plane of the wing.

2.4.4.2 Digital Command System

2.4.4.2.1 Command Message - The message to be transmitted to the ATM is received at the STDN station from the Mission Control Center at Houston, Texas (MCC-H) and placed into computer storage. When the message is to be transmitted to the ATM, it is removed from storage and the vehicle address and the decoder address are added.

I&CS

The command message format is shown in Figure 2.4-8.

The command message is comprised of the following:

a. Vehicle address - The three vehicle address bits are used to differentiate between vehicles when more than one vehicle is in flight, or between command systems on the same vehicle when the same RF frequency is used.

b. Decoder address - The 12 decoder address bits are distributed throughout the command message to perform error checking and to provide a point in time to indicate that a message has been received.

c. Information data - The 20 information data bits are used to convey a message to a specific ATM load device. The information data consists of the following:

1. Enable bits - Four of the seven available enable bits are used to enable individual switch selectors and two enable bits are used with the ATMDC for redundancy. The seventh enable bit is a spare.

2. Execute bit - The execute (read) bit causes the decoder to generate an execute pulse to the switch selectors and ATMDC.

3. Data bits - Since the switch selectors require 8 data bits and the ATMDC requires 12 data bits, 8 data bits are applied in parallel to both the ATMDC and the switch selectors,and four additional data bits are applied to the ATMDC.

The vehicle/decoder address data format is shown in Figure 2.4-9. The information data format is shown in Figure 2.4-10.

After the message is placed into command message format, it is coded into "1" and "0" sub-bit patterns. The sub-bit patterns are as follows:

a. "1" vehicle address bit - A coded pattern of five sub-bits that uniquely define a binary one in the vehicle address.

b. "0" vehicle address bit - A coded pattern of five sub-bits that uniquely define a binary zero in the vehicle address. This pattern is the complement of the "1" vehicle address pattern.

c. "1" data bit - A coded pattern of five sub-bits that uniquely define the binary one data bit. This sub-bit pattern is different than the pattern used in the "1" vehicle address bit.

d. "0" data bit - A coded pattern of five sub-bits that uniquely define the binary zero data bit. This pattern is the complement of the "1" data bit pattern.

Since the sub-bit pattern for the vehicle address bit is different from the sub-bit pattern for the data bit, the vehicle address sub-bit pattern is distinctive and indicates the beginning of a message.

After the command message has been sub-bit coded, it is converted to Phase-Shift-Keyed (PSK) data. This conversion is accomplished by algebraic addition of 1 msec period of a 1 kHz reference sine wave as shown in Figure 2.4-11. The "1" sub-bit is generated by the addition of the 1 msec positive going (at the zero crossing) 1 kHz signal to the 1 msec positive going (at the zero crossing) 2 kHz signal. The "0" sub-bit is generated by the addition of the 1 msec positive going (at the zero crossing) 1 kHz signal to the 1 msec negative going (at the zero crossing) 2 kHz signal. Figure 2.4-12 illustrates a data bit of 11001.

After the command message has been converted to PSK data, it is used to frequency modulate a 450 MHz FM carrier and is transmitted to the ATM.

2.4.4.2.2. Command Antennas - RF uplink commands are transmitted from the STDN to the ATM by a 450 MHz ultra high frequency (UHF) link. The commands are received by one or both of the Command System antennas. The Model 316 antenna is mounted on Wing 710 and is fixed to the deployable antenna panel in the plane of the wing. The Model 356 antenna is folded into Wing 712 until wing deployment. This antenna is spring-loaded and is released when the wing is extended. When deployed, the antenna is perpendicular to the plane of the wing.

2.4.4.2.3 Directional Couplers - The primary function of the Model 318 directional coupler is to couple RF test inputs from the Electrical Support Equipment (ESE) to the command receiver and isolate these test inputs from the antenna during prelaunch checkout.

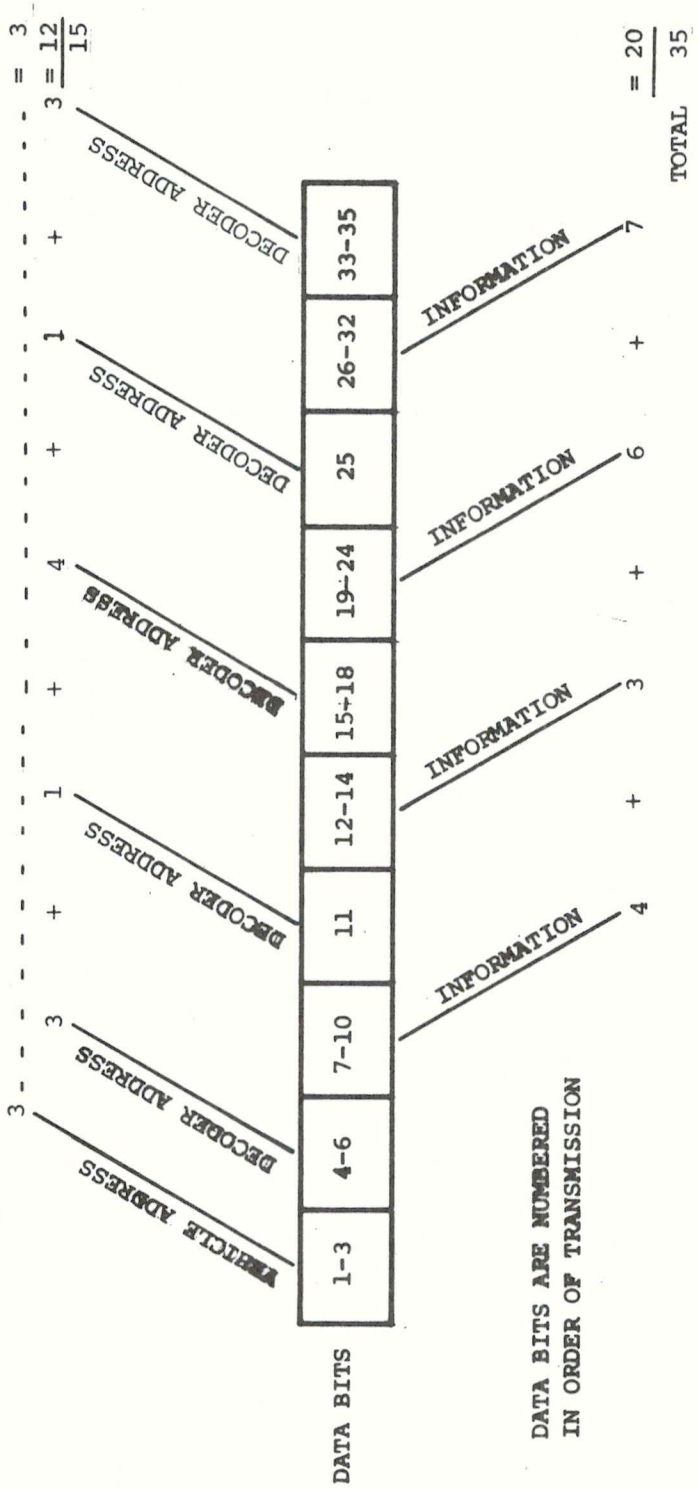

Figure 2.4-8 Command Message Format

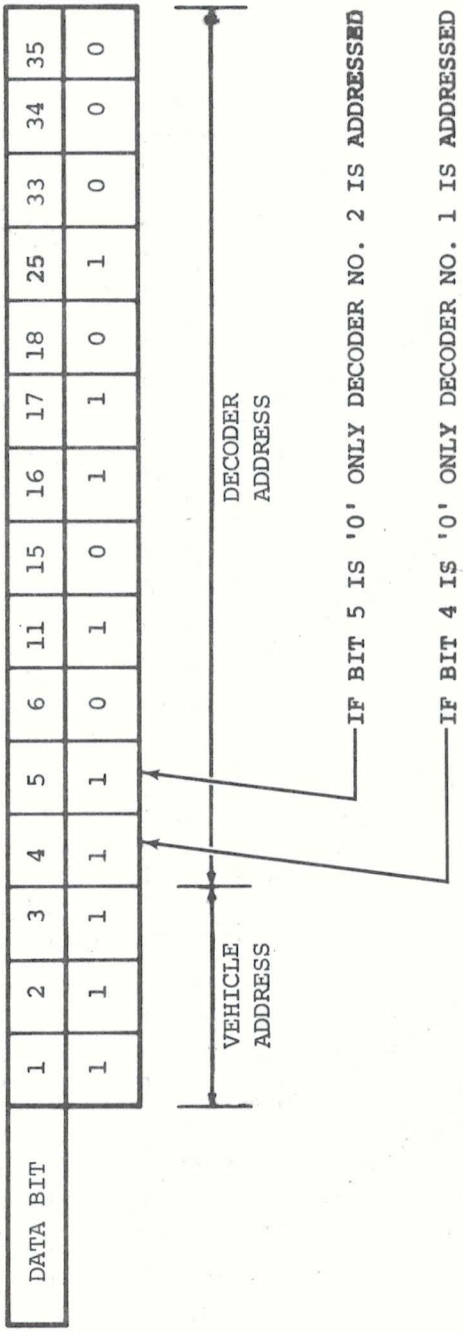

Figure 2.4-9 Vehicle/Decoder Address Data Format

DATA BIT		7	8	9	10	12	13	14	19	20	21	22	23	24	26	27	28	29	30	31	32
SWITCH SELECTOR NO. 1	ENABLE			X																	
	EXECUTE	X																			
	DATA											2^7	2^6	2^5	2^4	2^3	2^2	2^1	2^0		
SWITCH SELECTOR NO. 2	ENABLE				X																
	EXECUTE	X																			
	DATA											2^7	2^6	2^5	2^4	2^3	2^2	2^1	2^0		
SWITCH SELECTOR NO. 3	ENABLE					X															
	EXECUTE	X																			
	DATA											2^7	2^6	2^5	2^4	2^3	2^2	2^1	2^0		
SWITCH SELECTOR NO. 4	ENABLE																			X	
	EXECUTE	X																			
	DATA											2^7	2^6	2^5	2^4	2^3	2^2	2^1	2^0		
ATMDC	ENABLE		X																		X
	EXECUTE	X																			
	DATA							2^{11}	2^{10}	2^9	2^8	2^7	2^6	2^5	2^4	2^3	2^2	2^1	2^0		
SPARE	ENABLE						X														
	EXECUTE																				
	DATA																				

Figure 2.4-10 Information Data Format

2.4.4.2.4 Command Receivers - The Model MCR-503D command receiver is a crystal-controlled, transistorized, dual conversion, superheterodyne. It consists of eight functional modules of similar configuration, individually constructed, and assembled into a pressurized container.

The command receiver block diagram is shown in Figure 2.4-13.

The 450 MHz RF signal is coupled through the input connector, J1, to a fixed-tuned, low-pass filter with a cutoff frequency of 500 MHz. The output of the low-pass filter is coupled to a double-tuned bandpass filter. The filter is tunable over a frequency range of 405 MHz to 450 MHz. The filtered output is applied to the RF amplifier. The RF amplifier provides gain and additional rejection to signals outside the receiver passband. The low-pass filter, bandpass filter, and RF amplifier are contained in the Preselector Assembly. The -3dB bandwidth of the complete Preselector Assembly is approximately 4 MHz. The net gain of this assembly is approximately 6dB. The RF output of the Preselector Assembly is applied to the First IF Amplifier Assembly.

The First IF Amplifier Assembly contains the first and second mixers, first IF amplifier, crystal oscillator, and frequency multiplier. In the first mixer, the RF signal is mixed with the third multiple of the 115.175 MHz crystal-controlled oscillator frequency to provide the 104.475 MHz IF signal. This 104.475 MHz signal is applied to the first IF amplifier. The first IF amplifier has a gain of 46 dB, a bandwidth of 1.21 MHz, and a center frequency tunable over a range of 90 MHz to 110 MHz. The output of the amplifier is applied to the second mixer. In the second mixer, the 104.475 signal is combined with the 115.175 MHz crystal oscillator frequency to produce the 10.7 MHz IF signal. The 10.7 MHz signal is applied to the input of the IF bandpass filter.

The IF bandpass filter is a passive L-C type filter which determines the overall RF bandwidth of the receiver. The filter insertion loss is approximately 10 dB and the 3 dB bandwidth is 340 $\pm$ 30 kHz. The filtered 10.7 MHz output signal is applied to the Second IF Amplifier Assembly. This assembly contains two feedback amplifier pairs. Each amplifier pair has a gain of approximately 30 dB. The output of each pair is tuned to 10.7 MHz. The output of the second amplifier pair is applied to the Limiter-Discriminator Assembly and the Low Level Telemetry (TM) circuit.

The Limiter-Discriminator Assembly consists of the first and second limiters, discriminator, and emitter follower. The amplified 10.7 MHz signal is limited by the back-to-back diodes in the collector circuit of the first limiter. The second stage of limiting is accomplished by driving a transistor stage into saturation and cutoff. The output of the second limiter stage drives a Foster-Seeley-type discriminator. The discriminator sensitivity is approximately 4 millivolts rms per kHz of deviation. The discriminator phase-shift-keyed (PSK) audio output is applied to an emitter follower stage for impedance matching to the Audio Amplifier Assembly.

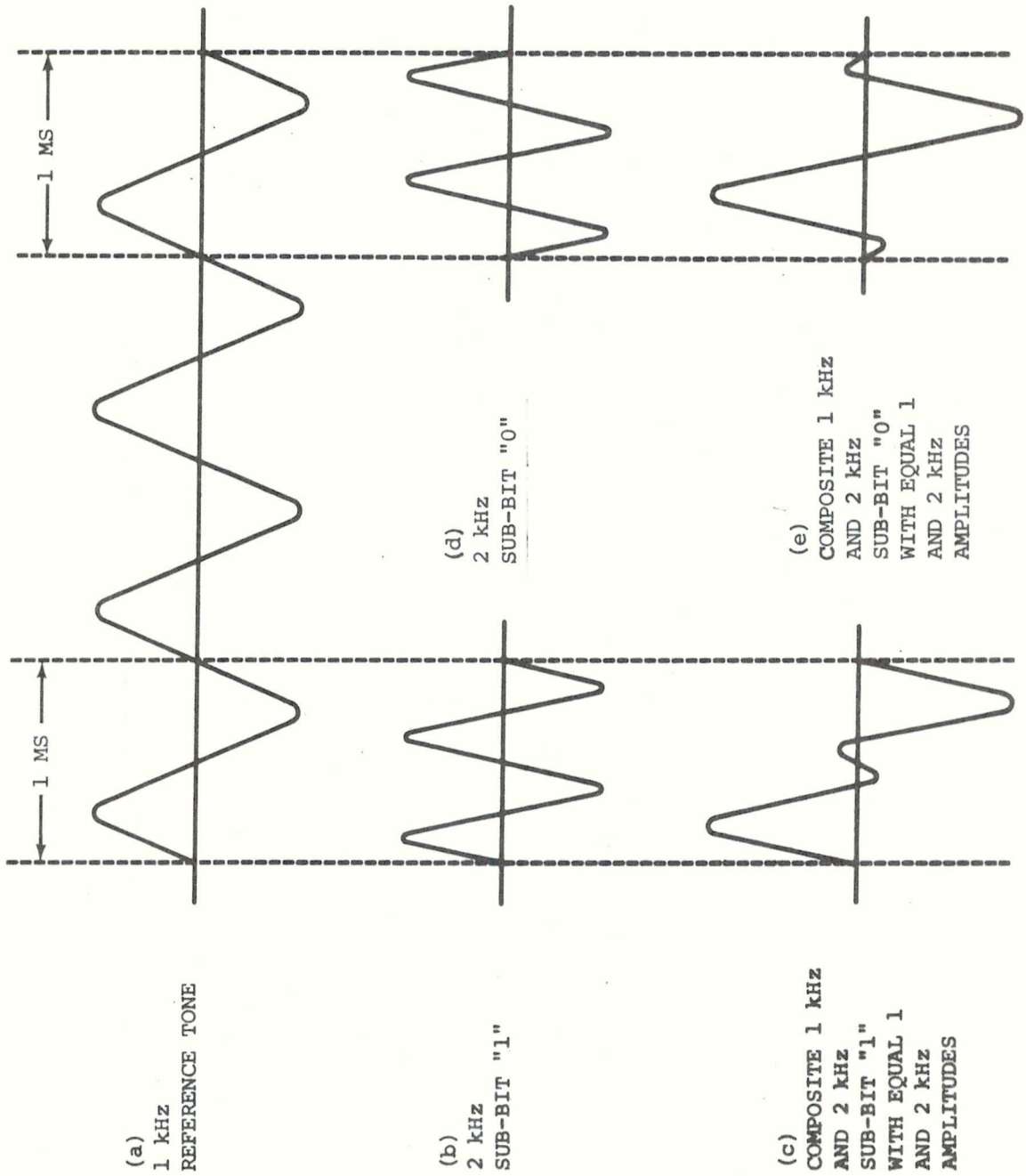

Figure 2.4-11 PSK Sub-bit Waveform Generation

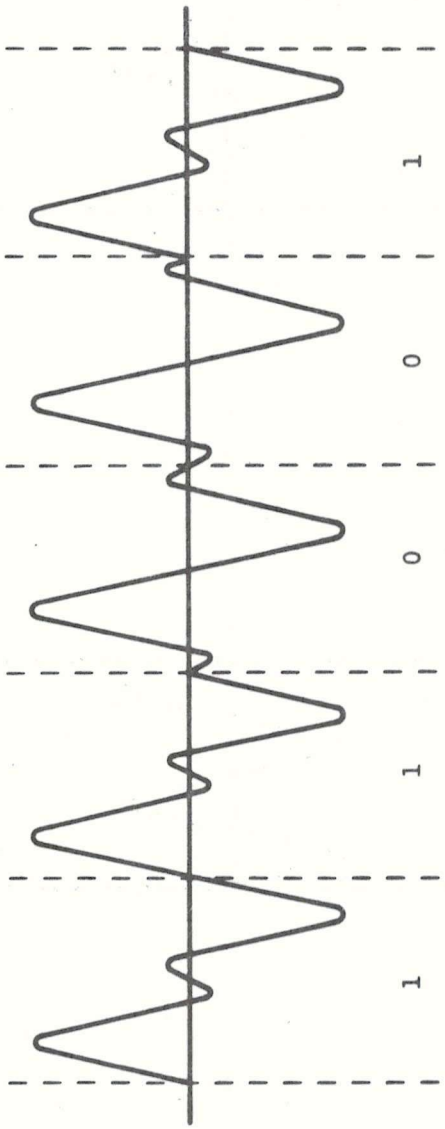

Figure 2.4-12 Data Bit 11001 Composite Waveform

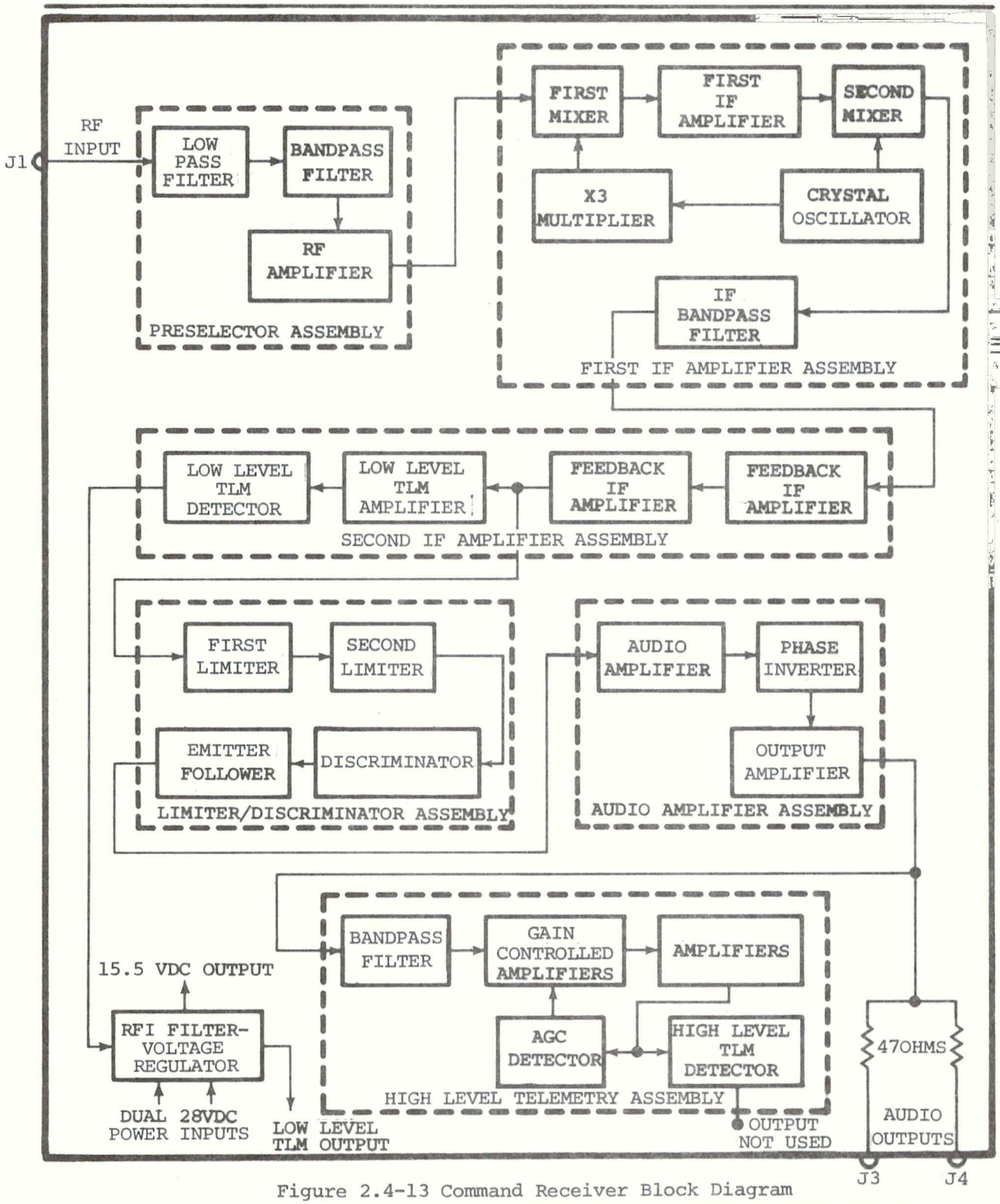

Figure 2.4-13 Command Receiver Block Diagram

The Low Level TM circuit consists of a single stage transistor amplifier which raises the level of the second IF signal sufficiently to drive a diode detector. The amplified signal is transformer coupled to the detector in order to provide isolation between the TM return lead and receiver ground. The TM voltage increases from 1.0 vdc to a level of approximately 4.0 vdc as the RF carrier level increases from -104 dbm to -87 dbm. Saturation of the Low Level TM occurs when the RF carrier level reaches approximately - 87 dbm. The Low Level TM output response time from 0 vdc to saturation is relatively slow.

The Audio Amplifier Assembly consists of a voltage amplifier stage, a phase inverter, and a low impedance output amplifier stage. The lower -3 dB frequency is approximately 30 Hz and the upper -3 dB frequency is approximately 250 kHz. The overall Audio Amplifier Assembly has a bandwidth of approximately 250 kHz and a gain of 20 dB. The audio output of the Audio Amplifier Assembly is applied to the High Level TM Amplifier Assembly and to dual isolated audio outputs.

The High Level TM Amplifier Assembly consists of a bandpass filter, five amplifier stages, and a detector. The filter is a two pole synchronous bandpass filter which samples the receiver no-signal noise output centered at approximately 99 kHz. This sample is sufficiently amplified by the five amplifier stages to provide a voltage output from the detector which is inversely proportional to the input carrier level. With no carrier input a telemetry output of between 4 vdc and 5 vdc is obtained. This output decreases linearly to about 1.0 vdc with a carrier input of 500 microvolts. This output is not used on the ATM.

One of the dual isolated PSK audio outputs is connected to the command decoder. The other audio output is used to provide an input to the Memory Loading Unit (MLU).

2.4.4.2.5 Command Decoders - The command decoder block diagram is shown in Figure 2.4-14.

The command decoder receives the PSK audio signal from the command receiver and applies it to the PSK Detector. The PSK Detector separates the 1 kHz and 2 kHz signals, and makes a comparison to determine if the 2 kHz signal is in-phase or out-of-phase with the 1 kHz reference signal. This comparison process results in the recovery of the original sub-bit data. The PSK Detector also provides shift pulses at a 1 kHz rate. The sub-bit data is applied to the Sub-bit Shift Register as an input. The shift pulses are applied to the Sub-bit Shift Register and the Five Sub-bit Counter.

When no message is being transmitted to the decoder, there is a continuous stream of sub-bit "1"s flowing through the system. The decoder samples these sub-bit patterns, at the end of each sub-bit, looking for a valid vehicle address pattern. When the decoder finds a valid vehicle address sub-bit pattern, it recognized this as the beginning of a message.

The valid vehicle address sub-bit pattern is applied through the pre-wired code plug to the Vehicle Address (VA) Bit Detector. This detector samples the sub-bit pattern and generates a "1" or "0" vehicle address bit depending upon the sub-bit pattern. This vehicle address bit is applied to the Three Vehicle Address Bit Counter and the "OR" Gates. When the vehicle address bit is received from the detector, the counter is set to the count of one, and the "OR" Gates apply the vehicle address bit to the input of the Main Shift Register. The "OR" Gates also apply the vehicle address bit to the Shift Generator and the Missing Bit Reset (MBR).

The Shift Generator produces a 1 msec shift pulse and applies it to the Main Shift Register and to the 32-Bit Counter. Since the 32-Bit Counter has not been enabled, it is not affected by the shift pulse. When the shift pulse is received by the Main Shift Register, the vehicle address bit is shifted in.

The first vehicle address bit will trigger the Missing Bit Reset circuitry removing the MBR drive (which enables the VA Bit Detector) and generating the $\overline{\text{MBR}}$ drive (which enables the 5 Sub-bit Counter). After the first vehicle address bit has been detected, the 5 Sub-bit Counter generates a 5 count pulse and applies it to the Bit Detectors after every five sub-bits.

The next five sub-bits are detected, shifted into the Sub-bit Shift Register and applied through the code plug to the Vehicle Address Bit Detector. Upon receiving the Sub-bit Counter 5 count, this detector samples the input lines and generates a vehicle address bit if the sub-bit pattern is correct.

The Shift Generator provides a shift pulse to the Main Shift Register (to shift in the second vehicle address bit) and to the 32-Bit Counter. Since the 32-Bit Counter has not been enabled, the shift pulse has no affect.

When the Missing Bit Reset circuit receives the second vehicle address bit (and each succeeding vehicle address or data bit) it continues the $\overline{\text{MBR}}$ drive. This $\overline{\text{MBR}}$ drive will be removed and the decoder reset if any one bit is invalid or missing in the message.

The next five sub-bits are detected, shifted into the Sub-bit Shift Register, and applied through the code plug to the Vehicle Address Bit Detector. Upon receiving the Sub-bit Counter 5 count, this detector samples the input lines and generates a vehicle address bit if the sub-bit pattern is correct. This third vehicle address bit is applied to the Three Vehicle Address Bit Counter and to the "OR" Gates. When the counter receives the third vehicle address bit, it is shifted to the count of three. The count of three removes the enable applied to the Vehicle Address Bit Detector and causes the Vehicle Address Verify Circuit to be enabled.

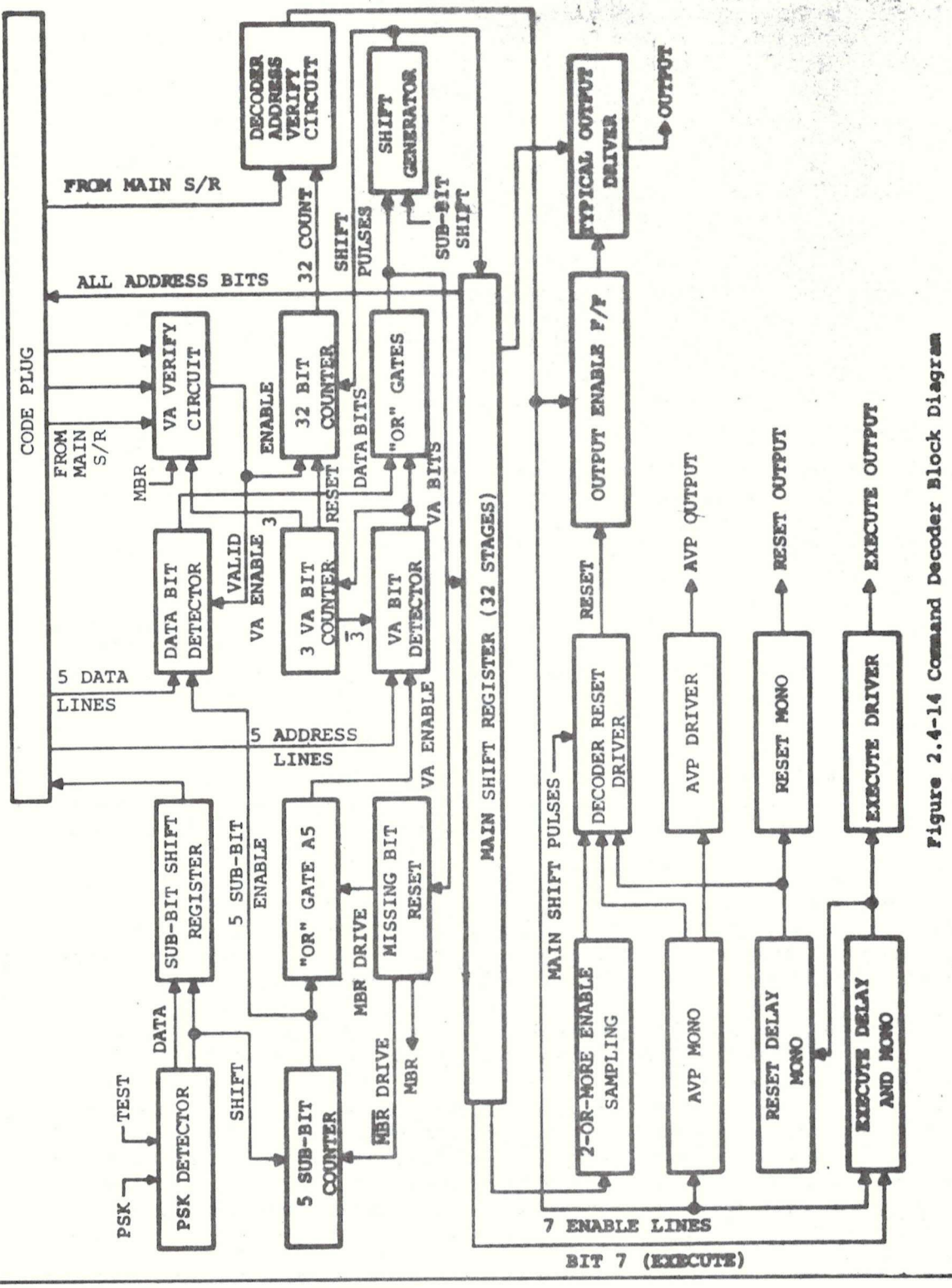

Figure 2.4-14 Command Decoder Block Diagram

The "OR" Gates apply the third vehicle address bit to the input of the Main Shift Register, to the Shift Generator, and to the Missing Bit Reset. The Shift Generator provides the third shift pulse to the Main Shift Register, to shift in the third vehicle address bit, and to the 32-Bit Counter. Since the 32-Bit Counter is not enabled, the shift pulse has no affect.

If all three vehicle address bits in the Main Shift Register are correct, the Vehicle Address Verify Circuit will enable the 32-Bit Counter and the Data Bit Detector. If the vehicle address is not correct, the decoder rejects the message.

The next five sub-bits are detected, shifted into the Sub-bit Shift Register, and applied through the code plug to the Data Bit Detector. When the detector receives the Sub-bit Counter 5 count, it samples the input lines and generates a data bit if the sub-bit pattern is correct. This data bit is applied to the "OR" Gates.

The "OR" Gates apply the data bit to the Main Shift Register, the Shift Generator, and the Missing Bit Reset. When the Shift Generator receives the data bit, it provides a shift pulse to the Main Shift Register (to shift the data bit in) and to the 32-Bit Counter to advance it to a count of one.

The decoder continues to receive the data sub-bit patterns from the PSK Detector, decoding them, and shifting the data bits into the Main Shift Register until 32 data bits are in the register and the 32-Bit Counter has reached a count of 32. At this time, the 32-Bit Counter enables the Decoder Address Verify Circuit.

The Decoder Address Verify Circuit samples the decoder address bits in the Main Shift Register. If the decoder address is found to be correct, an input is applied to the Address Verification Pulse (AVP) Monostable Multivibrator, the Output Enable Flip-Flop, and the Execute Delay Multivibrator.

The Output Enable Flip-Flop applies a 50 msec pulse to the Decoder Output Drivers. When the Output Drivers are enabled, the data is gated from the Main Shift Register to the input of the desired load device.

The AVP Monostable Multivibrator provides a 90 msec pulse through the AVP Driver to the Telemetry System for transmission to the STDN station, and a 20 msec pulse, delayed by 50 msec from the start of the AVP, to the Decoder Reset Driver to reset the Output Enable Flip-Flop, removing all data, enable, and execute outputs.

The Execute Delay Monostable Multivibrator receives the signal from the Decoder Address Verification Circuit and delays it by 25 msec. If the execute bit is present, a 25 msec pulse is then applied to the Execute Driver and the Reset Delay Monostable Multivibrator. The Execute

Driver provides a 25 msec pulse to the load devices. The Reset Delay Monostable Multivibrator delays the output of the Execute Delay Monostable Multivibrator by 20 msec and applies it to the Reset Driver and the Reset Monostable Multivibrator. The Reset Driver resets the Output Enable Flip-Flop, and the Reset Monostable Multivibrator provides a 20 msec squarewave output to reset the load devices. If the execute bit has not been transmitted, then neither the execute or reset outputs will be generated.

The Two or More Enable Sampling Circuit monitors the seven enable lines to ensure that no more than one load device is enabled at any time. If more than one load device is enabled, the decoder is reset and the complete message is rejected.

2.4.4.3 Digital Address System - The Digital Address System (DAS) keyboard contains 10 pushbuttons (eight digit buttons, numbered 0 thru 7, one "ENTR" button, and one "CLR" button). When a command is typed into the keyboard the octal code is decoded into the binary equivalent which includes a three bit device select code (i.e., one of four switch selectors or the ATMDC) and a twelve bit address code. When the fifth digit of the octal code has been typed into the keyboard, an enable pulse is sent to the internal logic which allows the address code to set appropriate latching relays and the device code to select the appropriate device line. The address code is then placed on all device inputs and the device which has been selected enables the address lines to set relays in switch selectors or registers in the ATMDC. The bit-by-bit complement of the address code is then transferred back to the DAS where the DAS logic complements the returning signals back into the true code. After 35 to 50 milliseconds from the time the fifth digit was typed into the keyboard, the internal logic enables the returned address to be displayed on the C&D Console ORBIT PHASE display. The displayed octal code should accurately reflect what was typed into the keyboard. After verifying that the displayed octal code is correct, the ENTR button is pushed and the command is executed. After the ENTR button is pushed the center digit of the ORBIT PHASE display will begin to flash at the rate of 0.5Hz. To clear the display and enable the ORBIT PHASE clock to be displayed, the CLR button must be pushed. In the case where the octal code displayed is incorrect, the CLR button must be pushed to reset the system and the correct octal code must be re-entered. If an incorrect octal code is still displayed, the system must be cleared and the alternate octal code used.

Before using the DAS, however, the crew must check the GROUND/DAS section of the C&D Console to verify that the appropriate system switch is in the ENABLE position. When the first digit of the octal code is pushed the Digital Command System signals from the STDN are automatically inhibited.

2.4.4.4 Digital Command System/Digital Address System Interface

2.4.4.4.1 Control Distributor - Control Distributor No. 1 contains the networks necessary for distribution of commands from the Digital Command System to the ATM switch selectors and ATMDC. The switch selector outputs are also routed through the control distributor to the various ATM subsystems and experiments. During prelaunch checkout commands from the Electrical Support Equipment (ESE) are supplied to the Digital Command System and the ATM switch selectors and ATMDC through Control Distributor No. 1. This distributor also provides the interface for ATM switch selector and ATMDC commands from the Digital Address System.

2.4.4.5 Television System - The Television (TV) System is designed to enable the crew to monitor telescope images from the ATM experiments since direct viewing of the images is not practical due to environmental and physical considerations.

The TV System consists of five TV cameras, four camera control units, two video switcher/processors, a sync generator, and two TV monitors. The controls for the system and the two monitors are located on the C&D Console. The TV cameras are physically attached to the various experiments and receive their images through an optical system in the experiment. This optical system is common with the experiment film camera except for the Hα2 experiment which has no film camera. Thus, the TV camera provides the same image that is seen by the film camera.

2.4.4.5.1 TV Cameras

2.4.4.5.1.1 Vidicon Camera - The 4503 vidicon tube is a ruggedized version of a standard vidicon tube assembly. The focus alignment and deflection coils are potted into a single assembly and, after initial electrical setup and mechanical alignment, the vidicon tube is potted into the deflection and focus assembly.

The camera preamplifier has low noise characteristics so that it will operate at very low signal currents and, therefore, operates at low light levels. Blanking is accomplished by sampling a portion of the horizontal and vertical deflection currents, amplifying and applying them to the vidicon cathode. This circuitry protects the vidicon by cutting off the tube in the event of sweep failure.

2.4.4.5.1.2 Low Light Level Camera - The low light level SEC tube differs in construction from the standard vidicon in that it employs an electrostatically focused image section and a special target to achieve increased sensitivity. This tube is approximately 30 times more sensitive than the standard vidicon.

A fixed voltage is applied to the target and suppressor grid. The image section voltage is used for gain control to prevent damage to the tube. The supply voltage for the image section is obtained from a miniature high voltage power supply which provides a variable output from

0 to -8 kilovolts. This supply is controlled by a low voltage input that is variable from 0 to 8 volts. The miniature high voltage power supply is synchronized with the horizontal line rate and prevents ripple in the television picture by masking it in the horizontal blanking interval.

The suppressor grid (G5) is located between grid G4 and the target and is required to keep the target from charging to too high a potential where target crossover and video inversion would occur. If target crossover occurs, this condition can be reversed by operating the GRID NORMAL/DISCH switch on the C&D Console to the DISCH position.

2.4.4.5.1.3 Image Dissector Camera - The image dissector camera is an integral part of the Experiment S082B Pointing Reference Subsystem. This camera is discussed in Section 2.9.6 of this handbook.

2.4.4.5.2 Camera Control Unit - The camera control unit provides all operational voltages and currents required by the camera system and processes the video received from the TV camera.

The low and high frequency portions of the video waveform from the TV camera are low in amplitude. These amplitudes are restored in the camera control unit so that a proper video display may be obtained.

Since the camera tube blanking contains horizontal flyback pulses that make it unusable for system blanking, a composite blanking signal is added by the camera control unit. This composite blanking signal originates in the blanking generator and is inserted into the video throughout the blanking adder.

The power supply section of the camera control unit contains timers which control the voltage application sequence to the low light level camera tube to prevent tube damage.

2.4.4.5.3 Switcher/Processor - Each switcher/processor consists of a video switch and sync adder and an isolation amplifier.

2.4.4.5.3.1 Video Switch and Sync Adder - The video switch and sync adder is a solid state device with a frequency response of dc to 10 MHz. The video switch and sync adder controls (MON 1 and MON 2) are located on the C&D Console and are used to select any one of the five TV cameras for display purposes. The outputs of video switch and sync adder No. 1 and No. 2 are displayed on TV monitor No. 1 and No. 2, respectively. The selected outputs of the video switch and sync adders are also routed to the video switch located in the MDA. This video switch is used to manually select the TV signal which will be transmitted to STDN by the CSM.

The video switch and sync adder will connect the selected camera system input to the video switch and sync adder output. The remaining four camera system inputs will be isolated and terminated in 75 ohms.

This switching operation is performed regardless of the camera system selected.

2.4.4.5.3.2 Isolation Amplifier - The isolation amplifier isolates the video and pulse grounds of the MDA end of the canister from the C&D Console and MDA video switch grounds to prevent ground loop problems.

This is accomplished by using a light emitting diode and photo transistor package termed an "opto-isolator". The only connection from one ground system to the other is via the modulated light beam. Separate power supply windings are used for input and output circuitry to maintain this isolation.

This amplifier also boosts the video and pulse signals to compensate for cable loss.

2.4.4.5.4 Sync Generator - The sync generator provides the master synchronization for the Television System. The sync generator contains two completely independent sync generators only one of which is active at any given time. This total internal redundancy is necessary since a sync generator failure will cause complete failure of the Television System. The sync generator switching is controlled by the MONITOR SYNC GEN PRIM/OFF/SEC switch on the C&D Console or by DAS/DCS command.

Each sync generator power supply has two regulated outputs: 5 volts to power the counter and pulse formers and -12 volts for the pulse output circuits. The pulse output circuits require that 1.5 amperes surge current be delivered by the -12 volt power supply without sagging.

Each sync generator contains an LC type master oscillator that provides a 31.5 kHz output to drive the counter. The counter circuitry converts the 31.5 kHz to the basic horizontal and vertical rates of 15,750 Hz and 60 Hz respectively. The counter circuitry in conjunction with the pulse former circuitry generates the horizontal and vertical drive, composite sync, and composite blanking outputs.

2.4.4.5.5 TV Monitor - The TV monitor is capable of displaying the full resolution capability of the TV cameras on its 7 inch cathode ray tube. The raster is 6 inches square with the corners being lost over the edge of the 7 inch tube. This condition is of no consequence since the scene being viewed is the circular sun. The TV monitor is synchronized by the horizontal and vertical drive outputs of the sync generator.

The TV monitor controls are located on the front panel of the monitor. Electronic vertical and horizontal crosshairs are provided to mark positions of events of special interest on the sun. Controls for these crosshair positions are mounted on the front panel along with a crosshair intensity control. Brightness and contrast controls are also provided.

The two TV monitors are permanently mounted into the C&D Console. Since the monitors must operate in the man-rated environment of the MDA, special precautions were taken with the materials used. The faceplate of each cathode ray tube contains a bonded implosion panel to prevent accidental breakage of the tube faceplate.

2.4.4.6 Communications Support - The operational support systems for the Skylab missions will consist of the Mission Control Center, the Launch Control System, the Instrumentation System, and the communication stations for tracking, telemetry, command, television, and voice communications. The computing system, communications network, landing, and recovery control systems are also included.

The Skylab missions will be controlled from the Mission Control Center at Houston (MCC-H). All launches will be conducted from the Launch Operations Center (LOC) and controlled from the Launch Control Center at Cape Kennedy. Eastern Test Range (ETR) facilities will be used to support the initial boost phases of the missions.

The STDN tracking stations provide tracking, data acquisition, command, voice and television communication with the vehicles during all phases of the missions. For the earth-orbital missions, this complex will be derived from the Apollo network augmented by the addition of unified S-Band equipment at two stations and the deletion of stations not needed for direct support of the Skylab missions.

For the earth-orbital missions, the network will provide tracking data from at least three stations during the first orbit, from at least two stations during the second orbit, and from at least one station for every three orbits thereafter. For telemetry, command, and voice communications, the network will provide the necessary contacts per orbit.

The network computation capability, in conjunction with network tracking elements, will provide data, both smoothed and as received from the stations, to the mission computing center. Bad data are suitably flagged. The network computing center evaluates, edits, and smooths all tracking data before its transmission to the mission computing center for mission control computations. Pre-mission network simulations and checkouts are also provided from the network computing system. In the event of unforeseeable outage at the mission computing center, the network computing system will supply emergency orbital computational backup.

Specific communication support for the entire mission will be provided from the NASA world-wide communications network (NASCOM). Project requirements for teletype, voice, wideband data, and television will be provided on a full-time basis with additional NASCOM support to be provided as required.

2.4.4.7 Data Handling and Storage - The ground function is to assure that as much data as possible are received and recorded on the

ground. The following circumstances can cause loss of data and should be avoided where possible.

a. A tape recorder dump of less than five minutes,

b. A tape recorder dump of five minutes during which the received signal-to-noise ratio of the signal from either ATM transmitter falls low enough to prevent accurate data reception.

It is a ground support task to predict in advance when the Orbital Assembly (OA) is going to pass close enough to one of the STDN ground stations to assure a continuous communications link both during the five minute data dump and during the time necessary to acquire the signal and perform the necessary switching functions before and after the dump.

A ground computer will be programmed to accept information on the OA orbital parameters, on the telemetry communications link parameters, on the OA orientation and the gain of each antenna as a function of the OA-to-ground look angles, and to calculate the received signal-to-noise ratio for all times when the OA will be within line-of-sight of a ground receiving station.

Based on this computer output, the most suitable ground station passes will be chosen for data dumps and the most suitable of the two ATM telemetry antennas can be selected. For an example, using orbital parameters of 235 nautical mile altitude and a 50° inclination, it is expected that the interval between suitable passes will exceed ninety minutes about once per day. In this case the second tape recorder will be used to record the remaining data. This will probably require two distinct data dumps.

It will be decided in advance which ground station will be used for a data dump. When communications are acquired, the configuration of the Telemetry System will be set as required.

The type of data and data rates vary according to ground support operations recommendations for a specific mission phase. Changes in data formats must be provided by the data handling centers whenever there is a transition from one mission phase to another. Unless specified from one mission phase to another. Unless specified otherwise, all analog data may be truncated to an 8-bit word, for transmission over the STDN high speed data line.

2.4.5 Performance and Design Data

2.4.5.1 Telemetry System

PARAMETERS	CHARACTERISTICS
Transmitter Frequencies and Powers	231.9 MHz ± 0.01%, 10W min. 237.0 MHz ± 0.01%, 10W min.
Transmitter Peak Deviations	72 ± 12 kHz
Transmitter Modulations	a. PCM/FM, 72.0 KBPS, NRZ-L Real-Time Data b. PCM/FM, 72.0 KBPS, Manchester II Bi-Phase Level Delayed-Time Data
Transmitted Bit Rate Stability, Real-Time Format	The bit rate is within ± 0.05% of 72.0 KBPS.
Transmitted Bit Jitter, Real-Time Format	Less than 0.1 of average bit period as determined from 5 successive frames (3000 bits)
Transmitted Bit Rate Stability, Delayed-Time Format	The average bit rate for any 10 second period is within ± 0.2% of 72.0 KBPS, except during the tape reversal.
Transmitted Bit Jitter, Delayed-Time Format	Less than ± 2% of average bit period as determined from 400 bits
Pre-Modulation Filters	None
Circuit Losses	4.6 db max
Transmitting Antenna System Gain	-6 db or better, referenced to a linearly polarized isotropic antenna over 97% of sphere
Transmitting Antenna Polarization	Linear

Table 2.4-II Telemetry Characteristics

PARAMETERS	CHARACTERISTICS
Link Description	PCM/FM, NRZ-L at 72.0 KBPS. transmitted most significant bit first
Bit Definition	a. Binary "1", $f_c + \Delta F$ b. Binary "0", $f_c + \Delta F$
Word Definition	10 bits
Master Frame Structure	30 frames at 60 words-per-frame
Master Frame Rate	4 master frames per second
Master Frame Synchronization	Synchronization pattern occurs in words 58, 59, and 60 of Frame 30.
Master Frame Synchronization Pattern	0100100001 - Word 58 0101110110 - Word 59 0011111001 - Word 60
Master Frame Data Coverage	60 master frames are required to sample each measurement once, due to experiment subcommutators.
Frame Structure	Sixty 10-bit words
Frame Rate	120 per second
Frame Synchronization	Synchronization pattern occurs in words 58, 59, and 60. In Frame 30, the pattern is complemented to provide the master frame synchronization.
Frame Synchronization Pattern	1011011110 - Word 58 1010001001 - Word 59 1100000110 - Word 60

Table 2.4-III Real-Time Telemetry Format

PARAMETERS	CHARACTERISTICS
Sample Rates	120 SPS (1 per frame) 40 SPS (1 per 3 frames) 12 SPS (3 per master frame) 4 SPS (1 per master frame) 1/15 SPS (1 per 60 master frames, experiment subcommutators)
Word Structure	a. Discrete data - 10 discrete channels combined into a 10-bit word. b. Analog data - Analog data are converted into 10-bit words. c. Digital data - 10-bit digital data are transmitted as 10-bit words. 25-bit digital data are transmitted as 3, nonadjacent, 10-bit words.

Table 2.4-III Real-Time Telemetry Format (continued)

PARAMETERS	CHARACTERISTICS
Link Description	PCM/FM, Bi-phase level at 72.0 KBPS, transmitted most significant bit first, recorded at 4.0 KBPS and played-back in same order at 72.0 KBPS
Bit Definition	a. Binary "1" First half-bit is $f_c + \Delta f$ Second half-bit is $f_c - \Delta f$ b. Binary "0" First half-bit is $f_c - \Delta f$ Second half-bit is $f_c + \Delta f$
Word Definition	10 bits
Master Frame Structure	60 frames at 100 words per frame
Master Frame Rate	Transmitted at 18/15 master frames per second. Recorded at 1/15 master frames per second
Master Frame Synchronization	Synchronization pattern occurs in words 98, 99, and 100 of frame 60.
Master Frame Synchronization Pattern	0100100001 - Word 98 0101110110 - Word 99 0011111001 - Word 100
Master Frame Data Coverage	One master frame samples each measurement once.
Frame Structure	One-hundred 10-bit words
Frame Rate	Transmitted at 72 frames per second. Recorded at 4 frames per second
Frame Synchronization	Synchronization pattern occurs in words 98, 99, and 100. In Frame 60, the pattern is complemented to provide the master frame synchronization.

Table 2.4-IV Delayed-Time Telemetry Format

PARAMETERS	CHARACTERISTICS
Frame Synchronization Pattern	1011011110 - Word 98 1010001001 - Word 99 1100000110 - Word 100
Sample Rates	Same as Table 2.4-III
Word Structure	Same as Table 2.4-III

Table 2.4-IV Delayed-Time Telemetry Format (continued)

2.4.5.2 Digital Command System

PARAMETER	ATM CHARACTERISTICS
Receiver Frequency	450 [redacted] ± 0.0075%
Receiving Antenna System Gain	-6 db or better, referenced to a linearly polarized isotropic antenna, over 82% of sphere for one system only -6 db or better over 95% of sphere with both systems operating (at threshold 99-100%)
Receiving Antenna Polarization	Linear
Circuit Losses	5.1 db max
Receiving System Equivalent Noise Figure	11 db
Receiving System Noise Bandwidth	340 ± 30 kHz
Command System Threshold Sensitivity (Receiver Input Terminals)	-93 db referenced to one milliwatt
Synchronization Subcarrier Frequency	1.0 kHz ± 2.0%
PSK Subcarrier Frequency	2.0 kHz ± 2.0%
Phase Displacement Between 1 and 2 KHz Subcarriers	4.0 microseconds maximum
Subcarrier Mixing Ratio	1:1 Volts Peak-to-Peak
Sub-Bit Data Rate	1 KBPS
Prime Bit Data Rate	200 BPS
Word Length	Fixed, 35 Bits

Table 2.4-V Command Characteristics

2.4.6 Operational Limitations and Restrictions - TBS

2.5 ATTITUDE AND POINTING CONTROL SUBSYSTEM

2.5.1 Introduction

The Attitude and Pointing Control Subsystem (APCS) provides three axes attitude stabilization and maneuvering capability for the Skylab OA, and provides pointing control of the ATM experiment canister during experimentation periods. The major sections of the APCS are: the ATM rack sensors; the ATM digital computer (ATMDC); and workshop computer interface unit (WCIU); the thruster attitude control system (TACS); the control moment gyros (CMGs); the ATM canister sensors; the ATM canister controls; and the experiment pointing control (EPC) system. See Figure 2.5-1.

The APCS is controlled by the flight program which is executed by the ATMDC. Flight program specifications are documented in the ATMDC Program Definition Document (PDD). The primary attitude of the Skylab is solar inertial and is defined in paragraph 2.5.3.1.4. Also, refer to Figure 2.5-2 for APCS coordinates.

2.5.1.1 ATM Rack Sensors - ATM rack sensors consist of nine rate gyros (RG) (three per axis), two acquisition sun sensors (Acq. SS), and one star tracker (ST). See Table 2.5-I.

The rate gyros (RG) are inertial sensors used to provide rate and attitude information. Normally two RGs are active in each vehicle axis with the third gyro in a standby condition e.g. heaters on, power on, and wheel not spinning.

Each Acq. SS provides a sun presence indication and analog outputs representing the deviation in vehicle X and Y axes from the solar inertial attitude.

The star tracker provides a stellar reference for determining the orbital plane error (vehicle Z axis reference). Star tracker orientation is determined by inner and outer gimbals as shown in Figure 2.5-2. In the solar inertial attitude, the star tracker field of view is in the southern hemisphere. Canopus, Achernar, and Alpha Crux are the normally selectable stars.

2.5.1.2 ATMDC and WCIU - The ATMDC is a general purpose digital computer with a memory storage capacity of 16,384 - 16-bit - words. A redundant, secondary, ATMDC is provided should the primary ATMDC malfunction.

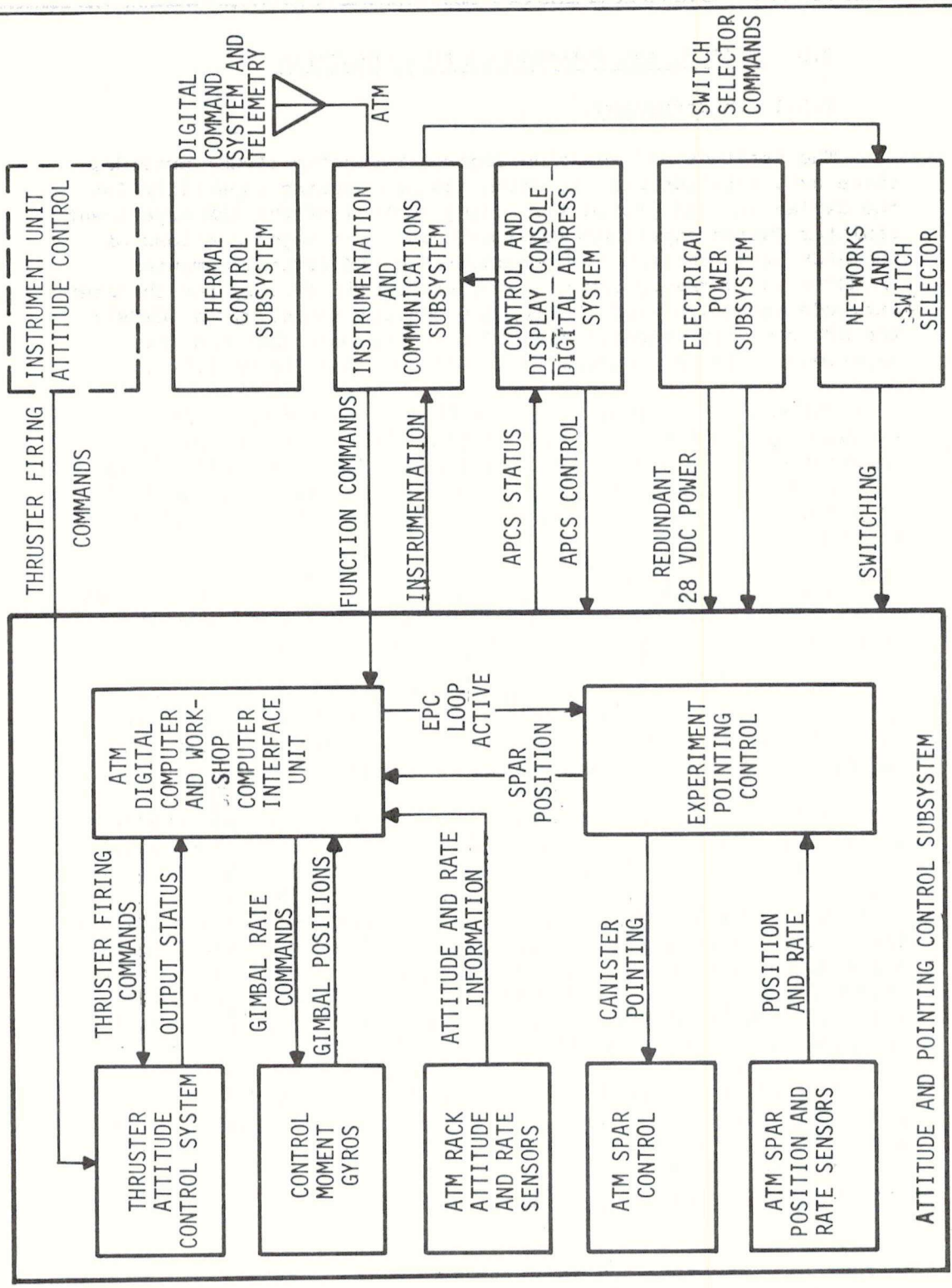

Figure 2.5-1 APCS and Interfaces

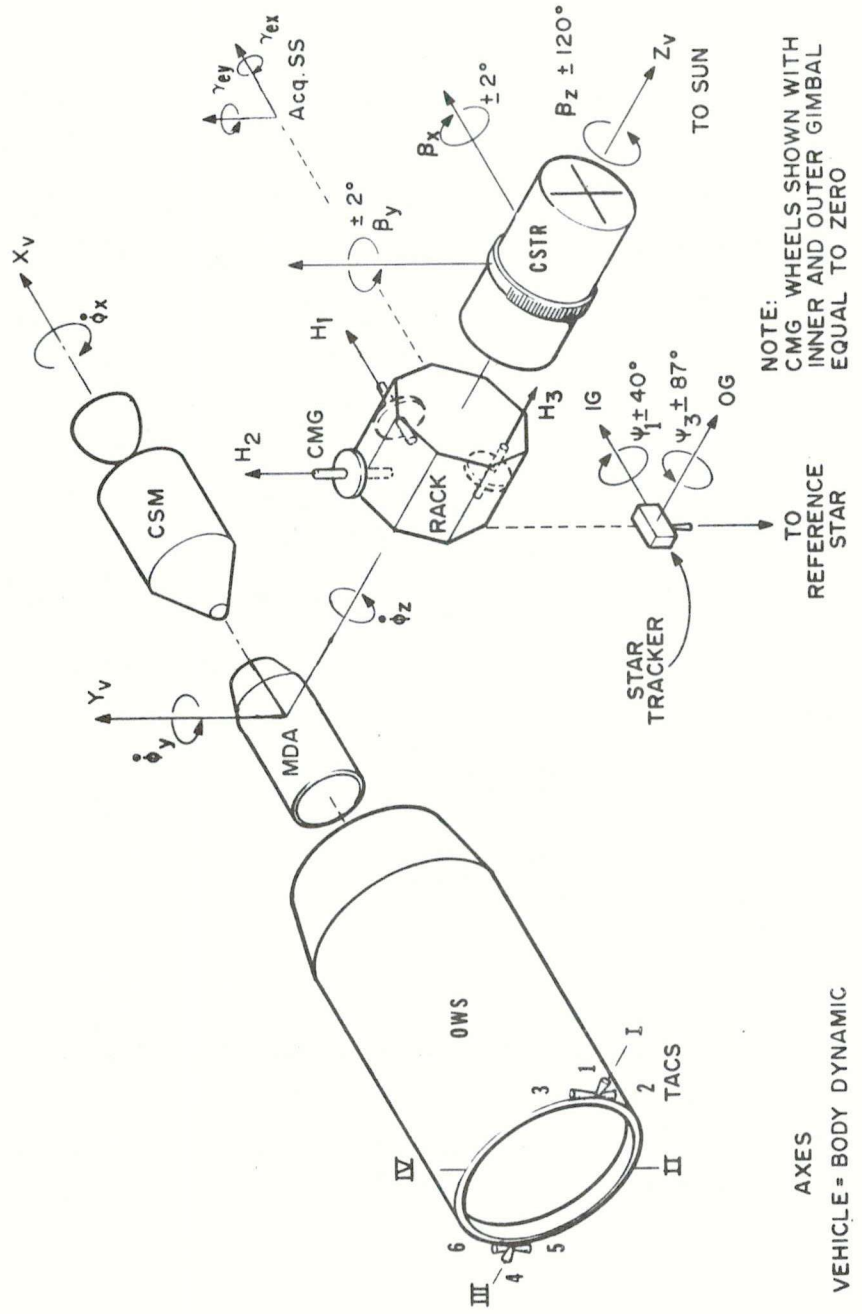

Figure 2.5-2 Attitude and Pointing Control System Coordinates

COMPONENT	QUANTITY	APCS CONTROL SUBSYSTEM	MAJOR FUNCTION	PRIMARY PERFORMANCE PARAMETER	LOCATION
SENSORS					
Rate Gyroscope	13 (Note 1)	See Note 1	Rate Sensor	Rate Sensing: ±1deg/sec (Coarse) ±0.1deg/sec (Fine)	9 on Rack 4 on Spar
Acquisition Sun Sensor	2 (Note 2)	ACS	Attitude Sensor	Field-of-view: ±20 deg (25% output) Null Acc: ≤ ± 2 arc min	Rack
Fine Sun Sensor (including signal conditioner (SC) unit)	1 (Note 3)	EPC	Fine Attitude Sensor (X and Y Axes)	Field-of-view: ± 2.25 deg Pointing Accuracy ≤ ± 1.7 arc sec	Spar (except SC which is on Rack)
Star Tracker	1	EPC	Attitude Sensor for experiment roll reference	Track accuracy: ±30 arc sec Field-of-view: 1 deg (Acq) 10 arc min (Track)	Rack
ACTUATORS					
Control Moment Gyro (CMG)	3	ACS	Provide vehicle control torques; CMGIA also provides system excitations	Angular momentum: 2300 ft-lb-sec per CMG Maximum torque: 120 ft-lb per CMG	Rack
DC Torque Motors	5 (Note 4)	EPC	Provide spar control torques	Maximum torque: ±7 ft-lb	C&G Assembly
TACS Thrusters	6	ACS		100 lb_f to 10 lb_f blowdown system	SVWS aft skirt
EXPERIMENT POINTING ELECTRONICS ASSEMBLY (EPEA)	1 (Note 3)	EPC			Rack
ATM DIGITAL COMPUTER	2	ACS	Control loops signal conditioning; mode switching; orbit update computations; CMG momentum management; system timing; etc.		Rack
WORKSHOP COMPUTER INTERFACE UNIT (WCIU)	1 (Note 3)	ACS			
THRUSTER CONTROL SWITCH ASSEMBLY (TCSA)					
CONTROL AND DISPLAY PANEL	1	Shared	Astronaut-APCS Interface		MDA

*Approximate
Note 1. Vehicle: Pair and spare per axis; EPC: Primary and Secondary in X and Y axes
Note 2. Primary and Secondary sensors in one assembly; electronics in two assemblies
Note 3. Unit contains required redundancy
Note 4. Plus one motor as a backup unit for the Roll Positioning Mechanism motor.

Table 2.5-I APCS Hardware Complement Summary

The input/output (I/O) capability of the ATMDC is extended by the WCIU. The WCIU is composed of two redundant (primary and secondary) sections, with a third section referred to as the common section.

Self test error monitoring is conducted within the flight program. If an error is detected, a switchover discrete is issued from the common WCIU section. If switchover is enabled, the on line ATMDC/WCIU is powered down, the off line ATMDC/WCIU is powered up, and initialization data is read from the triple redundant 64 bit transfer register in the common WCIU section.

The memory load unit (MLU) has been added to the ATMDC/WCIU to provide inflight capability of completely reloading a normal (16,384 word) or contingency (8,192 word) flight program into either ATMDC memory. A magnetic tape unit is contained within the MLU which is the storage device for the flight programs. The ATMDC and MLU flight program reloads are controlled by switch selector commands.

2.5.1.3 TACS - The TACS is a cold gas thruster control system that provides vehicle control during initial solar inertial acquisition, CMG spin up, contingency operation and CMG desaturation (if required).

2.5.1.4 CMG - The CMGs provide torque for attitude control of the Skylab. Three double gimballed CMGs are mounted on the ATM rack and therefore, two CMGs will provide three axes attitude control of the OA in case of a single CMG malfunction.

2.5.1.5 Canister Sensors - Canister sensors consist of four RGs (two per X and Y axis); four fine sun sensors (FSS) (two per axis) and two resolvers (one per axis).

The rate gyros are identical to the ATM rack gyros and provide rate information for damping purposes in the EPC control loops.

The FSS provides canister position information for both axes. The FSS normally operates closed loop, it can also be biased to offset point the canister ± 24 arc minutes from sun center using the Manual Pointing Controller (MPC) as a forcing function. The canister has ± two degrees of movement about the X and Y axes. UP/DN positioning of the canister takes place about the βy axis, and the L/R positioning takes place about the βx axis (See Figure 2.5-2).

The X and Y axes resolvers provide canister position to STDN. These resolvers are not used directly in the control loop.

2.5.1.6 Canister Controls - The canister controls consist of four dc torquer actuators (two per axis); four orbital cage motors; and a roll positioning mechanism (RPM).

The actuators are driven by the experiment pointing electronics assembly (EPEA) to position the canister in order to null the FSS output.

The orbital cage motors will center and cage the canister within the rack immediately after the experiment pointing control system is inhibited. When the EXP PTG mode is re-entered, the motors will release the caging mechanism and allow the control loop to function.

The RPM provides the capability to rotate the canister ± 120 degrees about the vehicle Z-axis within the rack. The drive motor is located on the rack and is geared to the canister support ring. Three large rollers provide support of the canister within the rack.

2.5.1.7 EPC - The ATM Canister is controlled by the EPC. A twp gimbal servo system provides experiment pointing control about the up/down (±2°) and left/right (±2°) axes. The canister roll axis is controlled strictly by the crew. The canister experiment pointing is accomplished using the Manual Pointing Controller on the C&D Console. The heart of the EPC is an analog computer (EPEA) which processes the sensor inputs to position the canister. The position error is provided by the FSS.

2.5.2 APCS Interfaces

2.5.2.1 APCS - Instrument Unit Interface - The Instrument Unit (IU) controls the TACS after SII separation to orient the attitude of the vehicle with the Z_V-axis aligned to within ±6 degrees of sun center and the X_p-axis in the orbit plane (solar inertial attitude). The Launch Vehicle Digital Computer (LVDC) located in the IU is programmed to deploy the ATM, deploy the solar panels, turn the APCS power buses on, maneuver to a solar inertial attitude and then switch attitude control to the ATMDC. The ATMDC comes on in the STANDBY mode when the power buses are turned on. Switch over from the LVDC to the ATMDC control occurs approximately 4.5 hours after launch.

2.5.2.2 APCS - Thermal Control Subsystem Interface - The TCS controls the canister temperature (50° ± 1°F) to help insure the integrity of the experiment data. It is a double ended system whereby it can supply heat as well as radiate it. The cold plates makeup the inner shell of the cylindrical canister and function as a constant temperature heat sink. Excessive heat is radiated by radiators which make up a portion of the outer canister shell.

2.5.2.3 APCS - Instrumentation and Communication Subsystem Interface - The instrumentation senses physical status data and monitors APCS equipment. The data signals are conditioned and converted to a series digital form for transmission to STDN.

Ground Communication supports the APCS in three major capacities. STDN can perform routine monitoring which would require a considerable portion of astronaut time, provide backup switching of subsystems should a switch failure occur on the Controls and Displays (C&D) panel, and give ground operations control of the APCS subsystems during unmanned flight. Ground commands, via the Digital Command System (DCS), will address either the ATMDC or one of four switch selectors.

Routine housekeeping operations include observation and control of computer parameters, handling the telemetry downlink transmission combinations and monitoring the power system performance.

During storage, those subsystems required to maintain the vehicle in the solar inertial attitude will be active. Ground operations will be able to observe and control these subsystems.

2.5.2.4 APCS-C&D Panel Interfaces - The C&D console is the primary means by which the crewman can control the attitude of the Skylab. Mode selection and overrides to automatic component switchover can be executed by the crew actuating a switch or keying in a five digit code on the Digital Address System (DAS). The controls and displays on the panel are tabulated in Section 3.0.

2.5.2.5 APCS - Electrical Power Subsystem Interface - Power to APCS components is distributed primarily through the ATM Power Transfer Distributor. This distributor supplies power to an Auxiliary Power Distributor, a Main Power Distributor and six Control Distributors. These distributors supply the APCS components with appropriate power.

ATM power is supplied by eighteen Charger Battery Regulator Modules (CBRM). The CBRM status is displayed on the C&D console. Though normally monitored and controlled by the ground, the crewman may isolate CBRMs (e.g. open circuit input/output lines) individually using C&D console switches. The isolated CBRM may also be put on line if its voltage, temperature etc. come up to normal.

2.5.2.6 APCS - Network and Switch Selector Interface - Four Switch Selectors provide the capability of controlling ATM subsystems through DCS or DAS commands. The APCS configuration is controlled by Switch Selector number three. A system of control distributors, power distributors, telemetry conditioners, etc. make up the network system, and provide the means to control and monitor the ATM subsystems.

2.5.3 Function Description

The APCS is comprised of two complete control systems; the Attitude Control System (ACS), and the EPC. The ACS system can further be divided into the CMG and TACS control loops (See Figure 2.5-3). The CMGs are used for overall vehicle control. The TACS will assist the CMGs whenever vehicle disturbances require correction maneuvers greater than the capability of the CMGs or when the CMGs cannot absorb changes in vehicle momentum (i.e. saturation).

Two basic attitudes are used during mission performance; Solar Inertial (SI) and Z Local Vertical (Z-LV). All other attitudes modes are attained by maneuvering or offsetting from one of the basic attitudes, SI or Z-LV.

To meet the pointing requirements for solar experiments, the EPC is needed to compensate for highly transient disturbance torques. The EPC operates independently of the ACS using the canister mounted sensors, FSS, and rate gyros. The EPC controls the experiment canister through two degree of freedom flexure bearing pivots (±2 degrees about X and Y axes). The canister contains experiments, control sensors, and actuators. See Figure 2.5-4.

2.5.3.1 APCS Coordinate Systems - Several coordinate systems are associated with the APCS. Each system provides a geometrical or physical feature which simplifies the solution of attitude control equations.

A proper coordinate system is a reference frame composed of a set of three mutually orthogonal axes that exhibit the property of right-handedness. All the following described systems are proper systems.

A space-fixed coordinate system (or a directional inertial frame) is one that retains its orientation with respect to the celestial sphere, or fixed stars, although the origin may be moving along any general curvilinear path in space. Similarly, a vehicle-fixed system retains its orientation with respect to

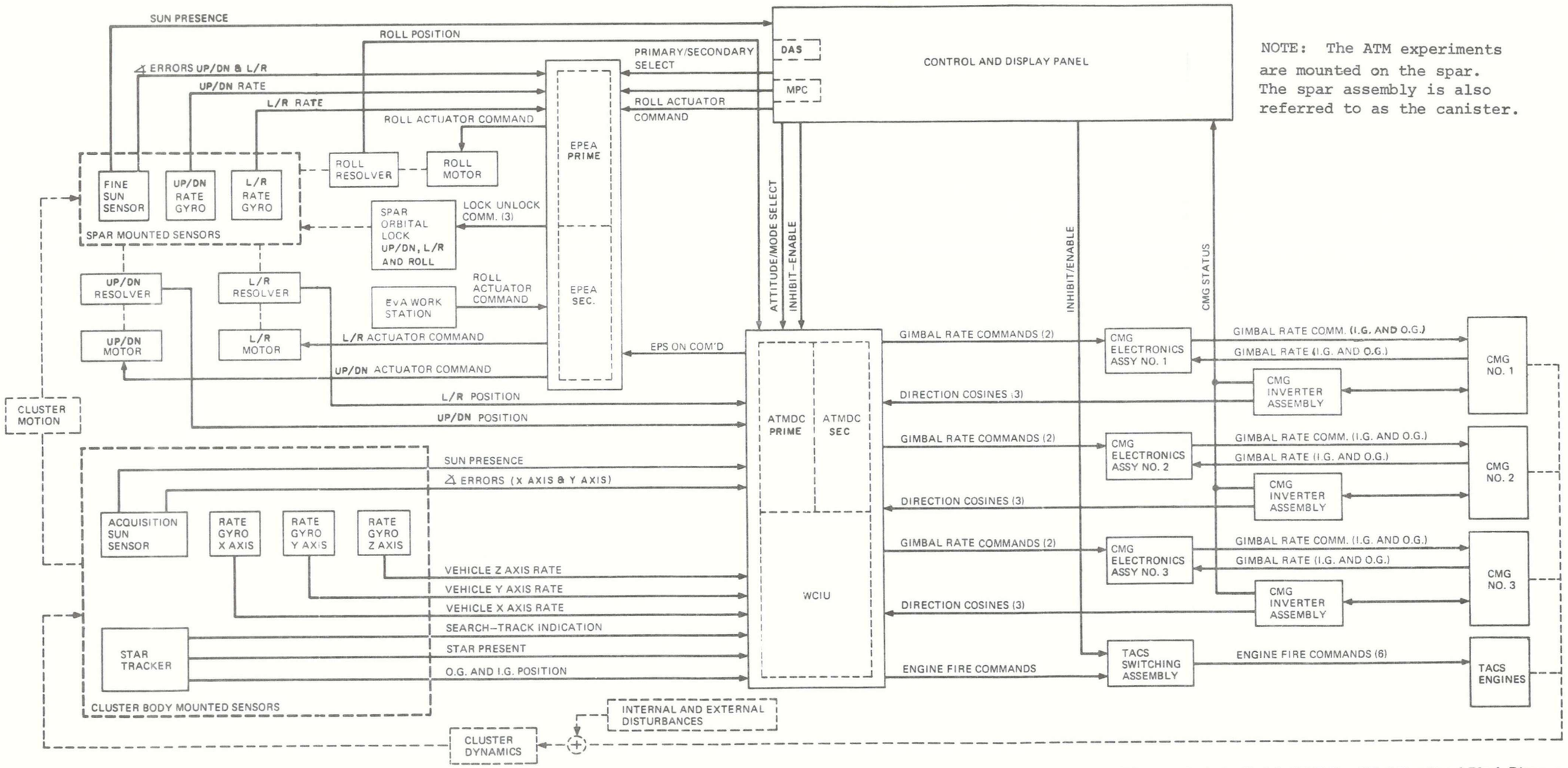

NOTE: The ATM experiments are mounted on the spar. The spar assembly is also referred to as the canister.

Figure 2.5-3 Skylab APCS Simplified Functional Block Diagram

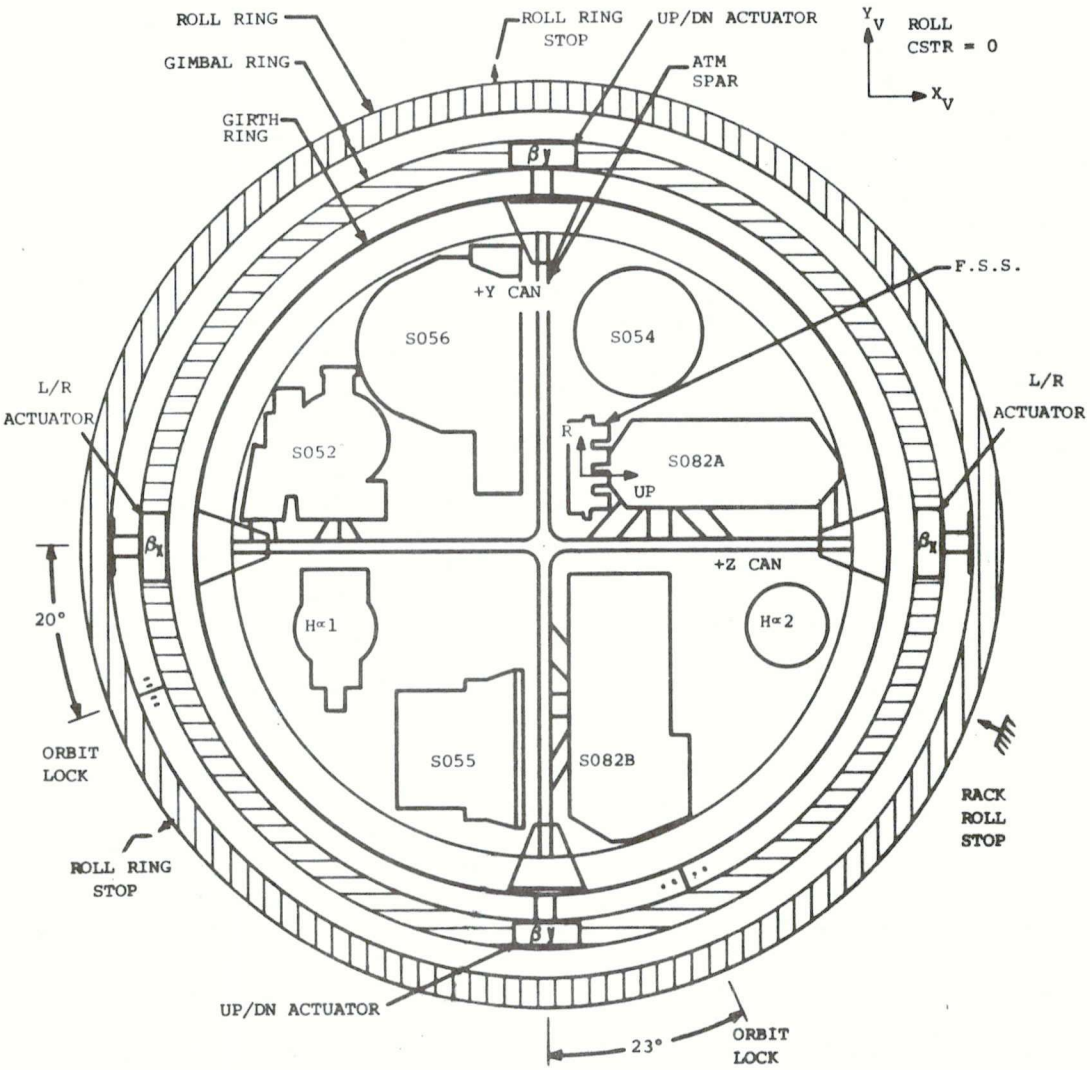

Figure 2.5-4 ATM CANISTER SUN END

the space vehicle, etc. The angular rotations relating to the orbital, ecliptic, and equatorial planes are illustrated in Figure 2.5-5.

2.5.3.1.1 Vehicle Coordinate System - The Vehicle Coordinate System (denoted by X_V, Y_V, Z_V Figure 2.5-2) is a vehicle-fixed system with origin at the geometric center of the OA. The Z_V axis is parallel to the centerline of the experiment spar, and is positive in the intended sun direction. The X_V axis lies along the centerline of the OA and is positive in the direction of the CSM docking port. This system is also defined as the cluster dynamic body axis reference system.

2.5.3.1.2 Principal Axes Coordinate System - The principal Axes Coordinate System (denoted by X_p, Y_p, Z_p) is a quasi-vehicle-fixed system with origin at the center of mass of the OA. The axes lie along the principal axes of the vehicle, and are otherwise comparable, respectively, to the Vehicle Coordinate System axes.

2.5.3.1.3 Attitude Reference Coordinate System - The Attitude Reference Coordinate System (denoted by X_A, Y_A, Z_A) is a non-space-fixed system with origin at the center of mass of the OA. The axes of this system represent, respectively, the instantaneous desired orientation of the axes of the Vehicle Coordinate System.

2.5.3.1.4 Solar Inertial Coordinate System - This is the fundamental system for vehicle orientation to perform solar observations.

The Solar Inertial Coordinate System (denoted by X_I, Y_I, Z_I) is a space-fixed system with origin at the center of mass of the OA. The Z_I axis is positive toward the center of the solar disk. The X_I axis lies at an angle νZ (See paragraph 2.5.3.1.9) from the orbital plane and is positive toward the sunset terminator (SST).

2.5.3.1.5 Ecliptic Coordinate System - The Ecliptic Coordinate System (denoted by X_S, Y_S, Z_S) is a space-fixed system with origin at the geocentric center of the earth. The Z_S axis is positive toward the vernal equinox. The Y_S axis is perpendicular to the ecliptic plane and positive in the direction of the ecliptic north pole.

2.5.3.1.6 Equatorial Coordinate System - The Equatorial Coordinate System (denoted X_E, Y_E, Z_E) is a space-fixed system with origin at the geocentric center of the earth. The Z_E axis is positive toward the vernal equinox. The Y_E axis lies along the spin axis, positive toward the earth's north pole.

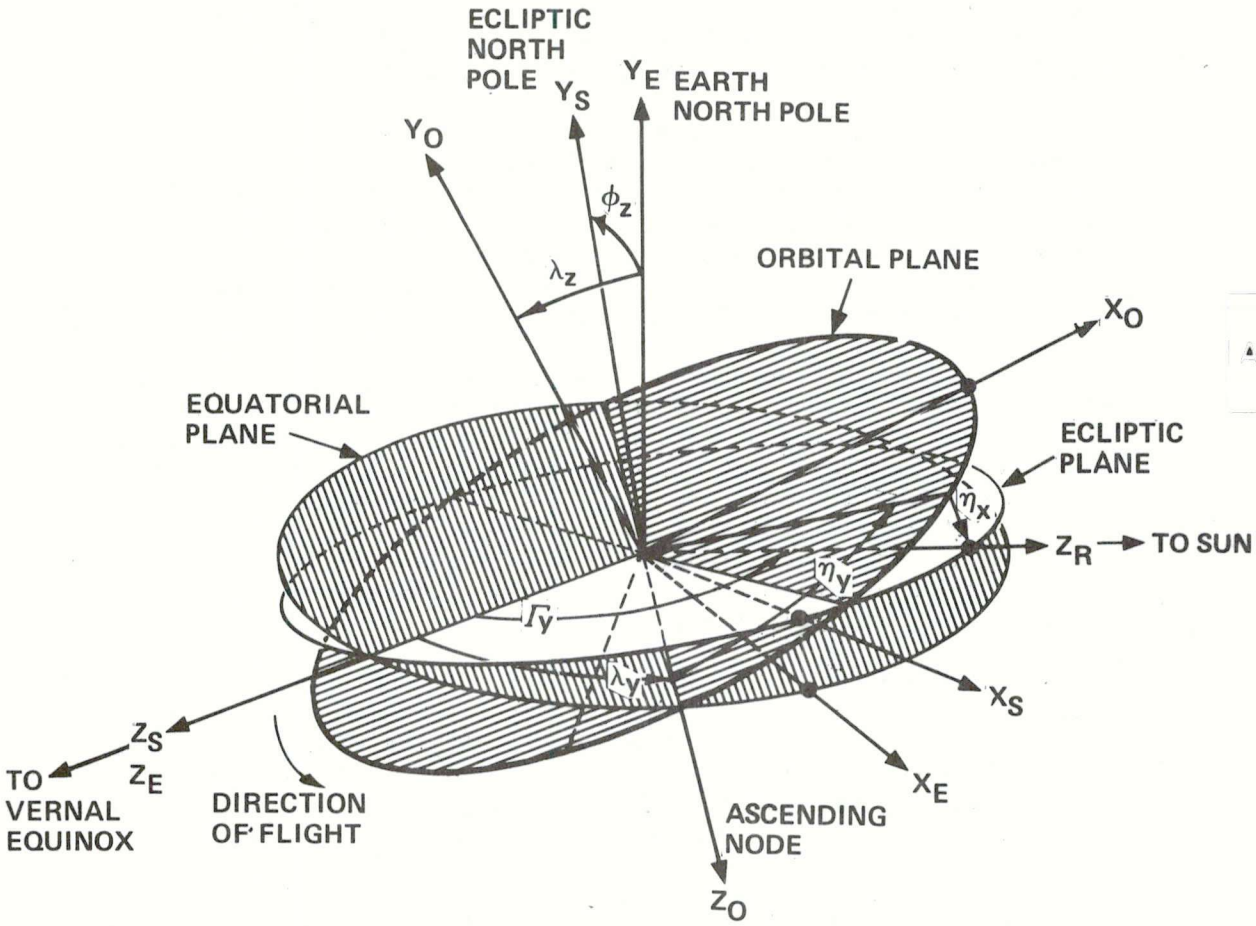

FIGURE 2.5-5 ORBITAL, ECLIPTIC, AND EQUATORIAL COORDINATE SYSTEMS

2.5.3.1.7 Orbital Coordinate System - The Orbital Coordinate System (denoted by X_O, Y_O, Z_O) is a quasi-space-fixed system with origin at the geocentric center of the earth. (This system actually precesses about the earth's spin axis at a rate of approximately 5.1 degrees/day). The Z_O axis is positive toward the ascending node of the orbit. The X_O axis lies in the orbital plane and is positive in the direction 90 degrees ahead of (down-range from) the Z_O axis. The OA orbits in the X_O-Z_O plane at all times.

2.5.3.1.8 Z - Local Vertical Coordinate System - The Z-Local Vertical (Z-LV) Coordinate System (denoted X_L, Y_L, Z_L) is a rotating coordinate system with its origin at the OA center of gravity. The $-Z_L$ axis is pointed perpendicular to the local earth tangent plane. The X_L axis is in the orbit plane perpendicular to the Z_L axis and positive along the general velocity vector. The average rotation rate is one revolution per orbit, about the Y_L axis.

2.5.3.1.9 Roll Reference - The ATM experiment roll reference angle is defined as the angle between the projections of both the solar north pole and canister UP axis as seen in the plane of the solar disc, See Figure 2.5-6. This angle is measured positively from the solar north pole projection in a clockwise direction about the solar disc. In order to accurately determine roll reference, the following conditions are required: the APCS is in the SI attitude; momentum desaturation maneuvers are not in progress; and the star tracker has star acquisition.

The angle between X_V and the canister $+\beta_X$ axis (See Figure 2.5-2) defines the canister roll (ROLL CSTR) angle (See Figure 2.5-6). When $+X_V$ and the canister $+\beta_X$ axis are coaligned, ROLL CSTR equals zero. This angle is measured positively from the X_V axis in a clockwise direction about the $+Z_V$ axis. The angle between X_V and the canister $+\beta_X$ axis is measured by roll position resolvers.

Orbital plane error is defined as the angle (in the X_V-Y_V plane) from the orbital plane to the X_V axis. This angle, νZ, provides an attitude reference about the Z_V axis. The primary method for measuring νZ is the star tracker. When the star tracker is not operational, a DAS/DCS update of νZ is required. The momentum management scheme will provide information that can be used as a source for determining orbital plane error.

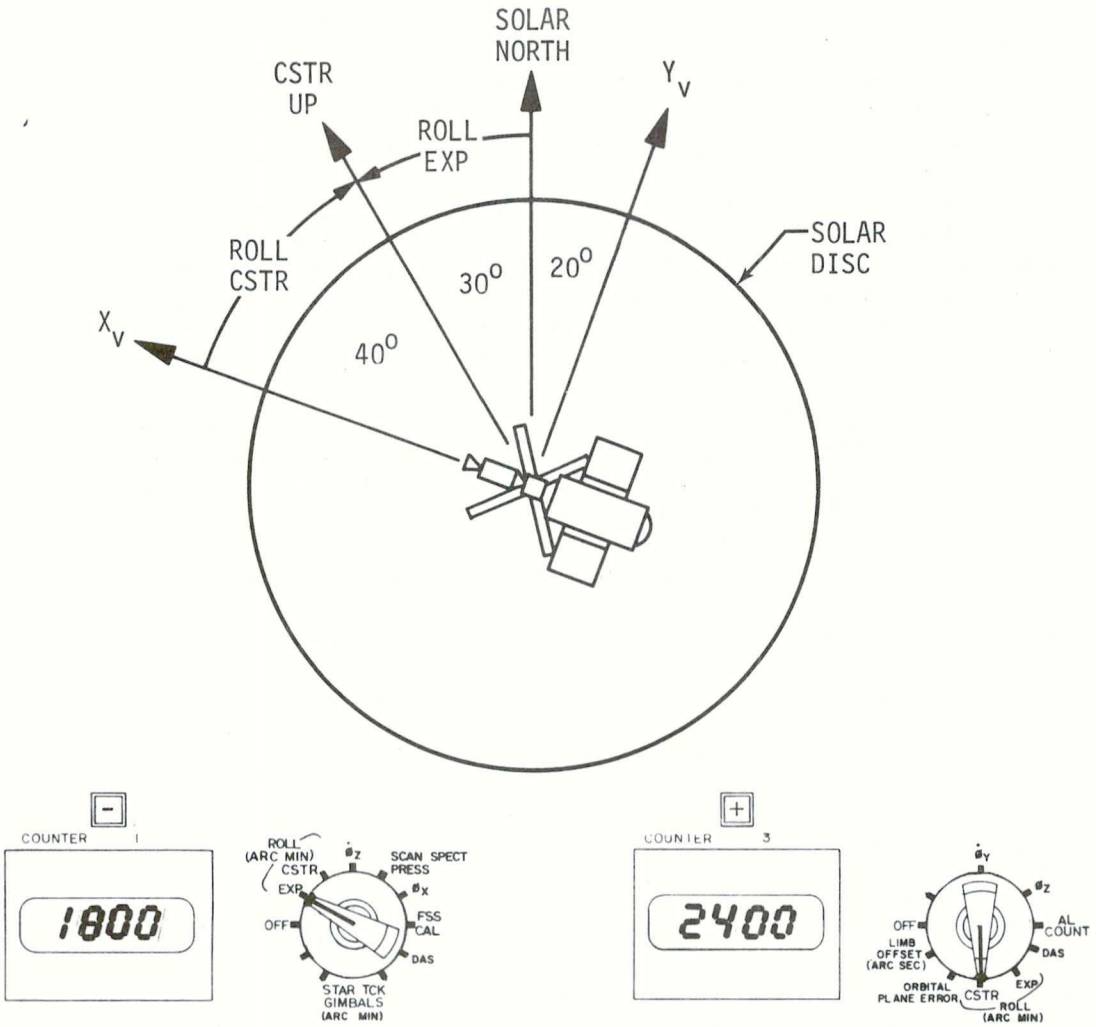

ROLL EXP (γ_{RR}) = ATM EXPERIMENT ROLL REFERENCE ANGLE.
ROLL EXP REFERENCED TO SOLAR NORTH.
POSITIVE CLOCKWISE FROM SOLAR NORTH.

ROLL CSTR (β_Z) = CANISTER ROLL ANGLE.
ROLL CSTR REFERENCED TO X_V AXIS.
POSITIVE CLOCKWISE FROM X_V.

CSTR UP = DEFINED BY $+\beta_X$ AXIS (SEE FIG. 2.5-2).

SOLAR NORTH = SPIN AXIS OF SUN.

Figure 2.5-6 ATM Coordinate System Roll Reference

2.5.3.2 Rack Sensors

2.5.3.2.1 Rate Gyro - Nine floated RGs are mounted on the ATM rack (three per axis). Two of the three RGs will be active and the third will be in a standby condition (e.g. heaters on, power on and wheel not spinning). The outputs of the two active RGs will be averaged in the ATMDC strapdown computation. Each RG can operate in a fine or coarse mode. The scale factors are ±0.1 degree/sec (fine mode) and ±1.0 degree/sec and are under ATMDC control. All nine RG scale factors are switched from fine to coarse when a rate greater than ±0.095 degrees/sec is sensed by any of the active RGs. When the rate sensed by all active RGs is less than ±0.085 degrees/sec, the fine gain is selected.

The analog output of each RG is scaled in volts/degree/sec and is converted to a digital word in radians/sec. Each RG output is scale factor corrected and drift compensated in the ATMDC to allow for individual gyro variance.

If the ATMDC determines that a RG has failed, the standby gyro will be spun-up and its output averaged with the remaining "good" gyro. (See Redundancy Management Paragraph 2.5.3.3.7).

The rate inputs to the ATMDC will be used in the strapdown computation which in turn provides rate and attitude information to the CMG and TACS control laws.

2.5.3.2.2 Acquisition Sun Sensor - Two Acq. SS are used to provide redundant attitude information about the X_V and Y_V axes in the daylight portion of the orbit while maintaining the SI attitude. Each Acq. SS provides two analog signals, one for each axis, that have a field of view of 20 degrees/axis. These analog outputs are processed by the ATMDC. Each Acq. SS provides a sun presence discrete from independent target sensors. The target sensor field of view is a cone of 18 degrees.

Normally, both Acq. SS are active and the outputs are averaged on a per axis basis. The information provided is used to update the strapdown computation. The Acq. SS outputs are compared to the strapdown computation and an error signal is generated. The error signal is controlled by a gain factor Kss (0.1 or zero).

2.5.3.2.3 Star Tracker (ST) - The star tracker is a double gimballed device which is capable of tracking stars that emit light above a certain magnitude. The stars (Canopus, Achernar and Alpha Crux) are located in the southern hemisphere. Star position with respect to the vehicle (obtained from ST optical encoders at the gimbal pivots) is used to calculate the orbital plane error and the experiment roll reference (refer to paragraph 2.5.3.1.9).

The star tracker operates in several modes and are described as follows.

MANUAL MODE: This mode allows the crew to position the star tracker gimbals to some specific values using the MPC. These values would be the approximate target star locations, and can be displayed on the C&D monitor panels. Once the desired position is achieved, the crew would normally enable the AUTO MODE immediately. This is necessary because the ST servo system is operating in an open loop configuration and would tend to drift off the required position. Should the ST detect a star in this mode, it will not track it.

AUTO MODE: The initiation of this mode starts a preprogrammed automatic search for the star. The search pattern is shown in Paragraph 2.5.4.3 (Star Tracker). Should the ST detect a star during the search, the ST electronics will switch to the track mode.

TRACK MODE: In this mode, the ST is locked on to a target star and will continue to track until commanded otherwise.

HOLD MODE: This mode electronically holds the ST gimbals and closes the telescope shutter.

The ST mode logic responds to either a C&D console command or an ATMDC command. Commands initiated from the C&D console will override commands from the ATMDC. Computer control of the ST (when the control is enabled) requires that an AUTO command from the C&D console was the last C&D ST command initiated. This prerequisite sets up the ST mode logic to pass (AND gate) the computer commands.

Two discrete inputs (DI) used by the ATMDC in controlling the ST are DI312 (star presence) and DI313 (search/track). The ATMDC controls the ST under the following conditions.

The ST Auto command will be active if all of the following conditions are met:

1. Either the Experiment Pointing Mode or the Solar Inertial Mode is active.

2. A maneuver is not active. (This includes momentum dump maneuvers).

3. The selected reference star is visible.

4. The ACS alert condition 04 (ST failure to acquire) has not been activated or DI313 (track/search) has been detected once since the ACS alert condition 04 was issued.

The ST Hold command will be active if any of the following conditions exist:

1. Neither the Experiment Pointing Mode or the Solar Inertial Mode is active.

2. A maneuver is active.

3. The selected reference star is not visible.

4. The star presence indication (DI312) has not been detected within 25 slow loops after track/search (DI313) was initiated. If this condition exists, the ACS alert condition 04 will be activated. (The check for DI312 once DI313 is detected is required only when the star is visible.)

In addition to the requirements previously defined, the ST Hold command must be issued once (even though the Hold Command may already be active) if all of the following conditions exist:

1. Either the Experiment Pointing Mode or the Solar Inertial Mode is active.

2. A maneuver is not active.

3. The selected reference star is not visible.

4. Track/search (DI313) is detected.

Two light sensors are mounted on the telescope assembly, a sun detector and an albedo detector. The sun detector closes the ST shutter whenever the trackers optical axis is within 45 degrees of the sun. The earth albedo sensor closes the shutter within five degrees of the earth. This shutter control operates independently when the ST mode logic is in search, track or manual. A close command overrides the sensor output. Because of this independence, it is possible for the ST to search with the shutter closed if a search is in progress or go to HOLD (with the shutter closed) if tracking was in progress. It should also be noted that the sensors will close the shutter on light reflected from the OA (See Figure 2.5-7). The areas of vehicle occulation of a target star will be monitored by ground to determine whether a change in target stars is required.

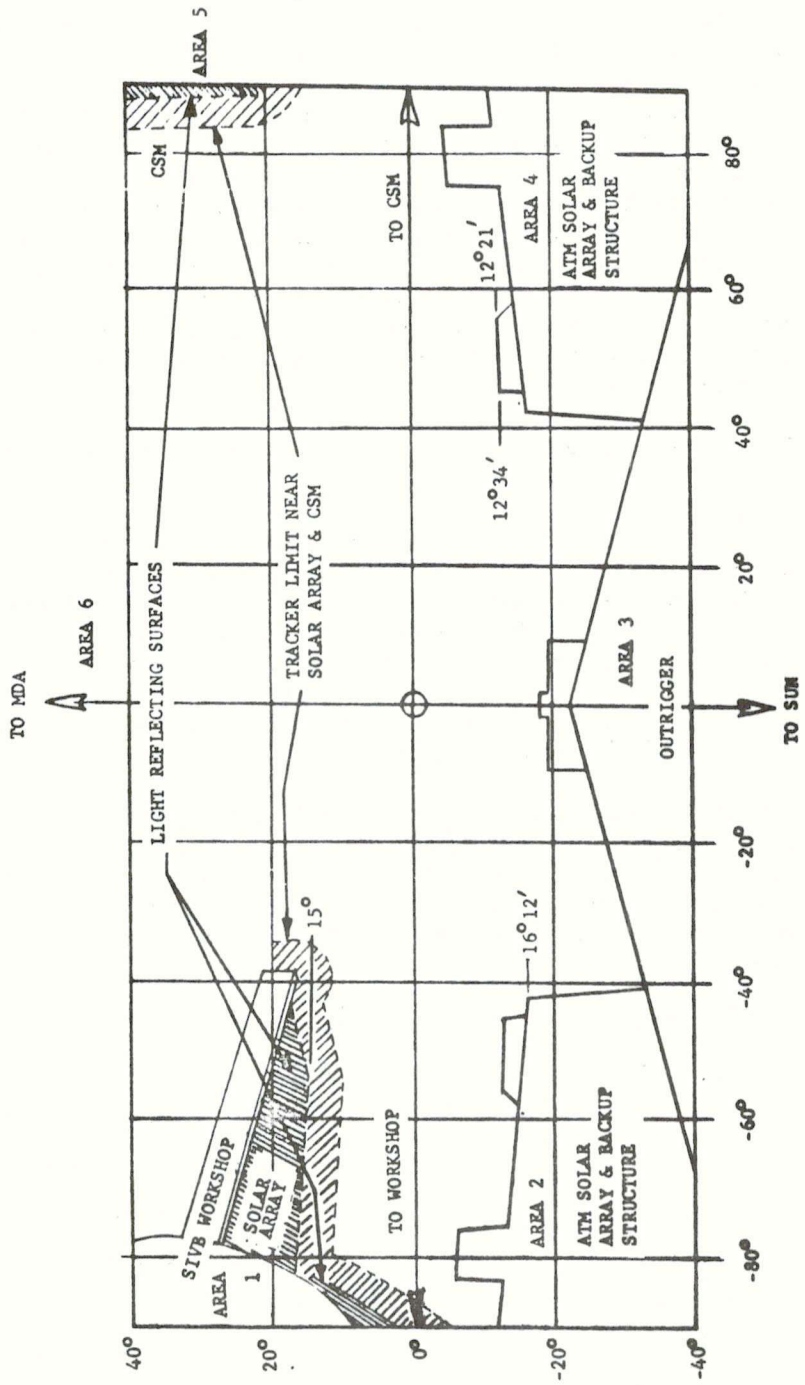

Figure 2.5-7 Field of View for ATM Star Tracker

The previous discussion is predicated on the control of the ST by the ATMDC being enabled. ATMDC control may be inhibited by keying the appropriate DAS/DCS function code. If this is the case, C&D commands will control the ST. Operation without ATMDC control is not desirable because the computer keeps track of the star visibility and star occulation intervals for the selected star. There will be orbits when one, two or all three target stars are occulted by earth and/or the vehicle. In the case where a star is occulted, the ST will be repositioned, via the MPC, to a visible star. The ground will monitor star availability and call up an appropriate change to the crew. Prior to tracking, the ATMDC should be updated, via the DAS/DCS, as to what star is going to be tracked. In the case where all three stars are occulted, the ground would supply substitute information, (via DAS/DCS), for use by the ATMDC in computing the orbital plane error.

The ST provides an accurate Z_V axis reference when a star is visible.

In the unmanned mode, the ST is powered down and the ground will provide the Z_V axis update based on the momentum profiles By observing the vehicle momentum profiles over a period of time, ground will be able to provide an update to the orbital plane error computation (in place of ST gimbal information) that will minimize the momentum bias buildup during the day portion of the orbit. This ST substitute information technique may be used in the manned mode should the ST malfunction.

2.5.3.3 ATMDC and WCIU - A functional description of the ATMDC and WCIU is essentially a functional description of the flight program that is executed by the ATMDC. Flight program specifications are documented in the ATMDC Program Definition Document (PDD). The following paragraphs of this section are functional summaries of the flight program.

Paragraph	Function
2.5.3.3.1	Operating Modes
2.5.3.3.2	Skylab Attitude Reference
2.5.3.3.3	Navigation and Timing
2.5.3.3.4	CMG Control Law
2.5.3.3.5	TACS Control Law
2.5.3.3.6	Maneuvering
2.5.3.3.7	Redundancy Management
2.5.3.3.8	ATMDC Function Commands

(CONT)	Paragraph	Function
	2.5.3.3.9	ATMDC Data Display
	2.5.3.3.10	ATMDC Telemetry
	2.5.3.3.11	ATMDC Experiment Support
	2.5.3.3.12	8K Contingency Flight Program

Figure 2.5-8 shows the ATMDC and WCIU redundancy and system configuration. Power is applied to the common WCIU section and the selected primary or secondary ATMDC/WCIU system. The primary WCIU section is dedicated to the primary ATMDC and the system cannot be re-configured. A summary of the ATMDC/WCIU system is presented in Tables 2.5-XVI and 2.5-XVII, Performance and Design Data. The ATMDC/WCIU hardware description is presented in Paragraph 2.5.4.4.

The flight program execution is controlled by a subprogram called the Executive. Three functions are performed by the Executive; (1) task scheduling; (2) interrupt processing; (3) interval timing. From a timing standpoint, the flight program consists of two loops. A slow loop completed approximately once per second, and an intermediate loop completed five times per second. The attitude control functions are performed at the five times per second rate. During the execution of the slow loop, the ATMDC will enter the wait state when no task is scheduled. In the wait state, the ATMDC consumes less power because instructions are not executed. Timing of the slow loop may vary depending on the tasks that have been scheduled; i.e. DAS/DCS command processing.

Priorities of flight program functions are established by the Executive. The priorities in descending order are:

1. TACS Firing Control
2. Input/Output Processing
3. Telemetry and DAS/DCS Processing
4. Switchover Control and Self Test Processing
5. Intermediate Loop
6. Slow Loop
7. Wait State

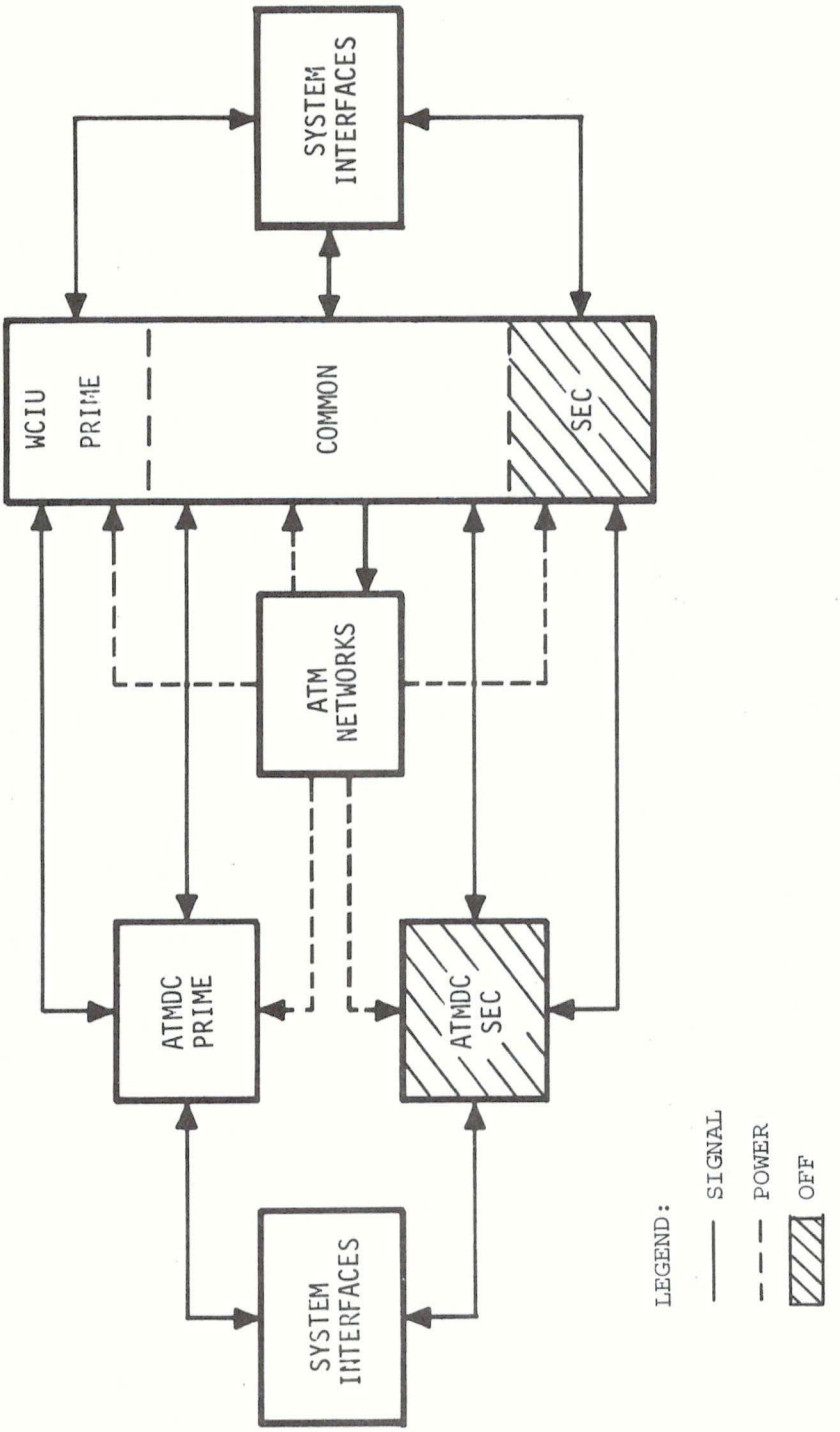

Figure 2.5-8 ATMDC/WCIU Redundancy and System Configuration

2.5.3.3.1 Operating Modes - The APCS operates in one of six primary modes. These modes, when supplemented by available mode options, provide the capability to maintain attitude control while performing tasks such as momentum desaturation, experiment pointing, docking and undocking. Requests for changes in the primary modes or mode options originate from the C&D console switches, the command system, or the flight program. Operating mode logic is controlled by the flight program. The operating modes and mode options are described in the following paragraphs.

SOLAR INERTIAL (SI): The SI attitude is the primary attitude for the OA. During SI mode the Z_V axis is pointed to sun center, the solar panels are in the prime attitude for converting solar energy to electrical energy. The prime reference for X_V and Y_V axes is the Acq. SS, and the OA attitude is controlled by the CMGs and TACS. During SI mode, the OA attitude can be biased up to ± 4 degrees about the X_V and Y_V axes.

APCS

Entry to the SI mode is made in response to the SOLAR INERTIAL switch on the C&D console, the Select APCS Mode DCS/DAS command requesting the SI mode, or when the Z-LV mode is automatically exited. When the mode is entered, the SI mode flag on the C&D console is activated. Exit from SI mode is made when either of the other primary modes is entered.

EXPERIMENT POINTING (EXP PTG): During Experiment Pointing mode the OA, with exception of the experiment canister, maintains SI attitude. In this mode, the experiment canister can be rolled ± 120 degrees about the Z_V axis, and can be pointed ± 24 arc minutes about the X_V and Y_V axes. During Experiment Pointing mode, the OA attitude can be biased up to ± 4 degrees about the X_V and Y_V axes.

Entry to the Experiment Pointing mode is made in response to the EXP PTG mode switch on the C&D console or the Select APCS Mode DCS/DAS command requesting the Experiment Pointing mode. If the APCS is in the Experiment Pointing mode, and the vehicle is in the daylight portion of the orbit, and the sum of the squares of the Acq. SS X and Y axes errors $(\gamma_{ex}^2 + \gamma_{ey}^2)$ are less than $(1.4 \text{ degrees})^2$ the EPC loop is activated. If $\gamma_{ex}^2 + \gamma_{ey}^2$ exceeds $(1.4 \text{ degrees})^2$ the EPC loop is deactivated, and will not be reactivated until $\gamma_{ex}^2+\gamma_{ey}^2$ become less than or equal to $(1.3 \text{ degrees})^2$. Also, the EPC loop is deactivated if sunset occurs or the Experiment Pointing mode is exited. The Experiment Pointing mode is exited when either of the other primary modes is entered. When a request for entry to the Experiment Pointing mode is received, the EXP flag on the C&D console is activated. This flag is deactivated when a request for entry to any other mode is received.

Z-LOCAL VERTICAL (Z-LV): The Z-LV mode is commanded for earth resources experiments and CSM rendezvous. While in the Z-LV attitude, the $-Z_V$ axis is pointed toward earth's physical geocenter. During earth resources experiments, the attitude can be biased about any axis.

The Z-LV mode is entered in response to the Z-LV switch on the C&D console, the Select APCS Mode DCS/DAS command requesting the Z-LV mode, or the Initialize Delayed Z-LV Mode DCS/DAS command. If either of the first two conditions are recognized, this mode is entered immediately and exited only when one of the other primary modes is entered. The Z-LV flag on the C&D console is activated when the Z-LV mode is entered, and deactivated when the Z-LV mode is terminated.

If the third condition is recognized, (Initialize Delayed Z-LV Mode) entry to the Z-LV mode is delayed until a specified GMT entry time, and exit from the mode occurs either when one of the other primary modes is entered or at a specified GMT exit time. Mode entry and exit times to the ATMDC are made available to the flight program by the nine data commands that accompany the Initialize Delayed Z-LV Mode DCS/DAS command. The nine data commands are required to transmit two 32-bit ATMDC words containing the times for initiation and termination of the mode. During each slow loop prior to initiating the mode, the ATMDC determines if the time for entry has been reached. When this time is reached, the Z-LV mode is entered. After entry to the mode, the ATMDC determines when the exit is reached. At that time, the Z-LV mode is exited and the SI mode entered.

ATTITUDE HOLD MODES (CMG or TACS): When either the CMG or TACS mode is commanded, the inertial attitude of the OA at the time of the command is maintained using the CMG/TACS configuration during CMG mode, or TACS only during TACS mode. Maneuvers of ± 180 degrees about X_V, Y_V, and Z_V can be commanded. All ATTITUDE HOLD MODE maneuvers must assume a Y, Z, X Euler rotation sequence.

Either the CMG or TACS Attitude Hold Mode is entered in response to the appropriate position of the ATT HOLD switch on the C&D console, or the appropriate Select APCS Mode DCS/DAS command. When either mode is entered, the ATT HOLD flag on the C&D console will be activated to the appropriate position (CMG or TACS). If any other primary mode is entered, the Attitude Hold mode is exited and the ATT HOLD flag is deactivated.

Attitude control and maneuvering capability in the TACS mode is identical to that of the CMG mode, however, CMG attitude control is inhibited. The status of the CMG control inhibit/enable does not affect the configuration of the control system during this mode. CMG cage commands are allowed in the TACS mode if requested.

STANDBY (STBY): The Standby mode is the true coast mode, no attitude control commands are issued by the ACS. The primary purpose of the standby mode is for the initial power up sequence for the APCS.

The Standby mode is entered in response to the STBY switch on the C&D console, or the Select APCS Mode DCS/DAS command requesting the Standby mode. Upon entry to this mode, the STY flag on the C&D console is activated. Standby is exited only when one of the other primary modes is entered. When Standby mode is exited, the STY flag is deactivated.

Standby mode is used when no attitude control is required of the APCS. While in the Standby mode, the CMG gimbal rate commands for attitude control are zeroed and no firing commands to the TACS thrusters are issued. If caging is active, CMG gimbal rate commands (necessary to drive and hold the CMGs to the commanded configuration) are issued.

MOMENTUM DUMP: The purpose of momentum dump maneuvers is to cancel unwanted CMG momentum buildup state. Momentum desaturation maneuvers may be executed during SI or Experiment Pointing modes only, and only when momentum desaturation has not been inhibited. This function is enabled in response to the AUTO GG ENABLE switch on the C&D console, or the Enable DCS/DAS command selecting the automatic gravity gradient maneuver. This function is inhibited in response to the AUTO GG INHIBIT switch on the C&D console, or the Inhibit DCS/DAS command inhibiting the automatic gravity gradient maneuver. When inhibited, the AUTO GG flag on the C&D console will show barber pole. When enabled, the AUTO GG flag will first show gray, then the flag will show ACT while desaturation. maneuvers are in progress.

2.5.3.3.2 Skylab Attitude Reference - The strapdown computations by the ATMDC are used to determine the Skylab attitude reference. Two attitudes are defined by strapdown, Solar Inertial (SI) and Z-Local Vertical (Z-LV). Any other attitude is controlled manually. Strapdown computations are defined in the PDD.

A functional diagram of the attitude control scheme for SI day is presented in Figure 2.5-9. The attitude reference inertial sensors are rate gyros mounted on the ATM rack and provide a vehicle or "strapdown" reference system (refer to paragraph 2.5.4.1). During the daylight portion of an orbit in the SI attitude, the Acq. SS (X_V and Y_V) inputs are compared to the strapdown attitude. If an error signal (difference) is present, the error is used to update the strapdown computations. The Acq. SS error signals are controlled by a gain factor, K_{SS}=0.1 (0.314 radians/pirad second) or zero.

When an attitude error exists, the CMG Control Law and TACS Control Law determine the proper CMG gimbal rate commands or thruster firing commands. The CMG momentum status is monitored by the flight program through the CMG direction cosine resolvers. TACS firings are monitored by a feedback (on/off) from the output of the WCIU's TACS driver circuits. Maneuvers are performed by introducing maneuver rate commands into the attitude control scheme. See paragraph 2.5.3.3.6 for a description of maneuvers.

For the Z-LV attitude reference, the strapdown computations determine a rotating reference frame with $-Z_V$ axis pointed to the center of the earth, and the $+X_V$ axis in the direction of the velocity vector. This attitude is used for earth resource experiments. When Z-LV is used for rendezvous attitude, the $-X_V$ axis is in the direction of the velocity vector. The rate of rotation is one revolution per orbit, and the orbit is assumed to be circular with a constant orbital rate.

The Z-LV passes, which may include a bias, are constrained to maneuver from and then back to the SI attitude. During Z-LV attitude, thermal, power, and TACS firing considerations must be taken into account. Therefore, several constraints are placed on the Z-LV attitude usage. Three types of Z-LV passes are defined as follows:

1. EREP - 60 orbital degrees duration, centered anywhere in the orbit with two consecutive passes allowed.

2. EREP - 120 orbital degrees duration, centered anywhere in the orbit. Consecutive passes not allowed.

3. Z-LV rendezvous for two orbits beginning and ending about orbital midnight. (CSM docking will be performed in the SI attitude.)

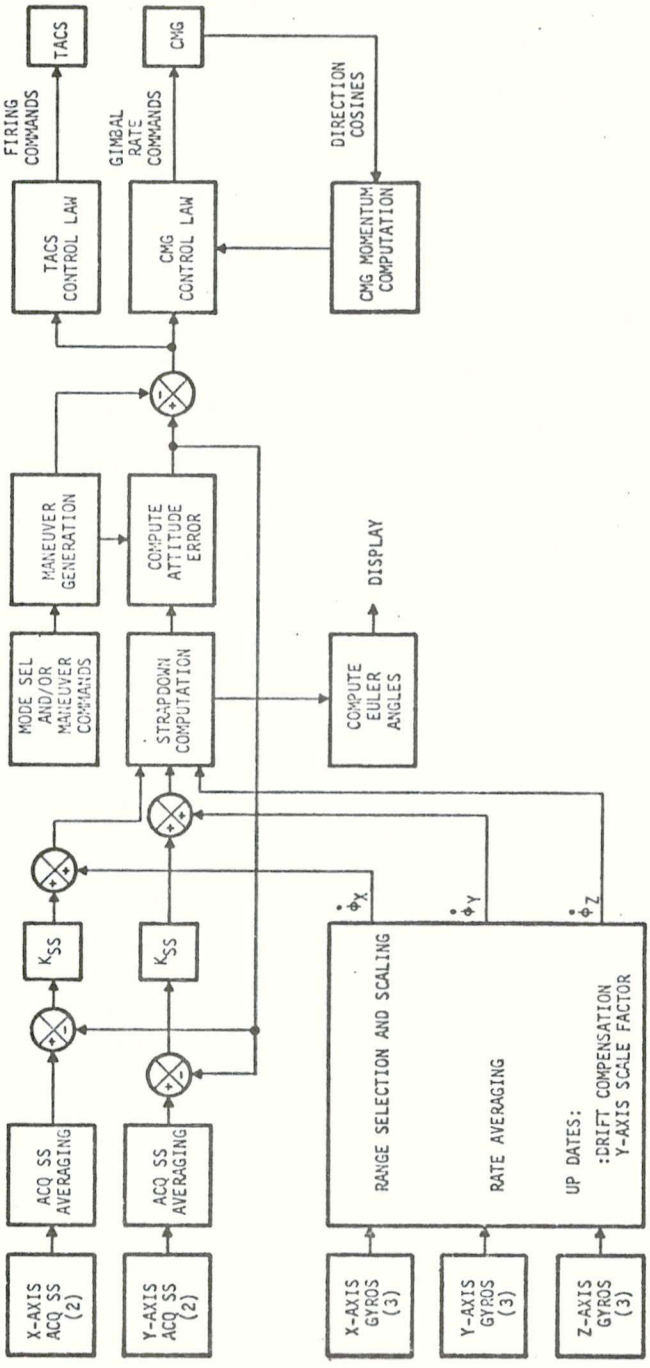

Figure 2.5-9 Simplified Solar Inertial Day Attitude Control Scheme

The maneuver to Z-LV and maintaining Z-LV attitude are dependent on the strapdown rate gyros. Z-LV attitude reference accuracy is determined by three types of error sources, initialization, time-dependent, and maneuver-dependent. The initialization errors include the accuracy of the Acq. SS and its misalignment, the star tracker error and its misalignment, and errors in computing the location of the orbital plane. The errors that depend on the length of time strapdown is computed without an update are rate gyro drift, drift in the digital computations, and analog-to-digital converter scale factor error. The errors that depend on the magnitude of the maneuver are the rate gyro scale factor and gyro misalignment.

2.5.3.3.3 Navigation and Timing - The flight program computes the orientation of the orbital plane in inertial space with respect to the equatorial plane, and the orientation of the sun with respect to the orbital plane. These computations are performed once an orbit at orbital midnight. The position of the Skylab in orbit must be determined in time displacements from orbital reference points: orbital midnight and dump midnight. The basic rate for the timing calculations is once per slow loop (approximately once per second). To perform the computations, accumulated mission time must be maintained once per slow loop.

2.5.3.3.3.1 Mission Time - Mission time is derived from either Mission Timer A in the active ATMDC or Mission Timer B in the WCIU. The redundant mission timers are 9-bit registers that store time in terms of days, hours, minutes and seconds. The day segment of the mission timers represent days from launch, and the hours, minute, and second segments contain Greenwich Mean Time (GMT). The selected mission timer contents is available for display and can be updated via DAS/DCS command.

2.5.3.3.2 Navigation and Timing - A primary and a partial method for obtaining the required navigation and timing data are provided. The primary scheme determines the necessary data from time varying functions, initialized properly. The partial scheme computations furnish only timing parameters from the primary equations.

The primary scheme determines the navigation and timing data throughout the mission except at computer switchover. Following computer switchover, the partial scheme is used in the new on-line computer until the primary scheme is properly initialized via a DCS/DAS update.

2.5.3.3.3.3 Primary Navigation and Timing Scheme - The primary scheme is designed for near-earth circular orbits. Basically, the navigation scheme assumes for approximately one orbital period, that regressing longitude of the orbital ascending node is a true Keplerian parameter and that the movement of the earth about the sun can be ignored. The timing maintains the position of the OA in terms of time displacements from predicted orbital events, determined by the navigation scheme. Its navigation and time data is valid under the following conditions:

1. An accurate knowledge of when the OA is at orbital midnight is maintained in terms of mission time (t_{GMT}).

2. The initial values and rates of change used in computing the time-varying positions of the sun (Γ_y) and of the orbital ascending node (λ_y) in inertial space are accurate.

3. The orbital inclination (λ_z) and mean orbital rate (Ω_o) are accurate.

These critical parameters, which affect the integrity of the scheme, are updatable in order to adapt the scheme to changes in the SWS orbit due to perturbations.

2.5.3.3.3.4 Partial Navigation and Timing Scheme - The partial navigation and timing scheme provides a method for obtaining the critical timing parameters after switchover. It is active after computer switchover until a navigation update is processed. At this time, the primary navigation scheme will be activated.

At computer switchover, the following special initialization for the partial scheme will be performed:

1. Mission time (t_{GMT}) and SWS time displacement from past orbital midnight (t) are set to the value in bits 24-31 of the transfer register.

2. The solar elevation from the orbital plane (η_x) is set to the value in bits 32-37 of the transfer register.

3. The time interval between orbital midnights (τ_{MID}) is set equal to the orbital period (τ_o).

4. Mission time at which the SWS was last at orbital midnight (t_M) is set to zero.

2.5.3.3.3.5 Time Remaining Calculation - The ATMDC provides the time remaining (minutes and seconds) in the current orbital phase (day or night) to the C&D console (ORBIT PHASE Time Remaining/Digital Address, See Figure 2.5-10). The time remaining indication at the C&D console indicates the time remaining until sunset when in the day portion of the orbit, or the time remaining until sunrise when in the night portion of the orbit. Once each second, the time remaining is computed and converted to the proper format for display.

The time remaining is computed using the interval between sunset (t_{ESS} or t_{SS}) and sunrise (t_{ESR} or t_{SR}) or the interval between start of momentum dump maneuver (t_{DC}) and the end of momentum dump maneuver (t_{DE}), whichever defines the larger night phase. The night phase is variable, depending upon the sun elevation angle of the orbit. The following list presents the SR/SS switch and the AUTO GG switch combinations available.

1. SR/SS to the CMP position and AUTO GG to the ENABLE position. This combination uses those two points of t_{ESR}, t_{ESS}, t_{DC} or t_{DE} that determine the largest night interval.

2. SR/SS to the CMP position and AUTO GG to the INHIBIT position. This combination uses t_{ESR} and t_{ESS} for the night interval.

3. SR/SS to the SUN position and AUTO GG to the ENABLE position. This combination uses those two points of t_{SR}, t_{SS}, t_{DC} or t_{DE} that determine the largest night interval.

4. SR/SS to the SUN position and AUTO GG to the INHIBIT position. This combination uses t_{SR} and t_{SS} for night interval.

2.5.3.3.4 CMG Control Law - The CMG control law uses the position of the CMGs (in terms of nine direction cosines) and three control law error commands to generate six CMG gimbal rate commands. Conceptually, the control law is composed of two parts: the steering law and the rotation law. The steering law generates angular velocity commands in such a way that the torques resulting on the vehicle are identical to the desired torques in magnitude and direction. This requires three degrees of freedom. The rotation law uses only a single degree of freedom, and tries to orient the CMG gimbals to prevent contact with the gimbal stops. The results of the steering law and the rotation law are then combined into angular velocity commands, and finally converted to gimbal angle rate commands which are suitable to produce the desired torques.

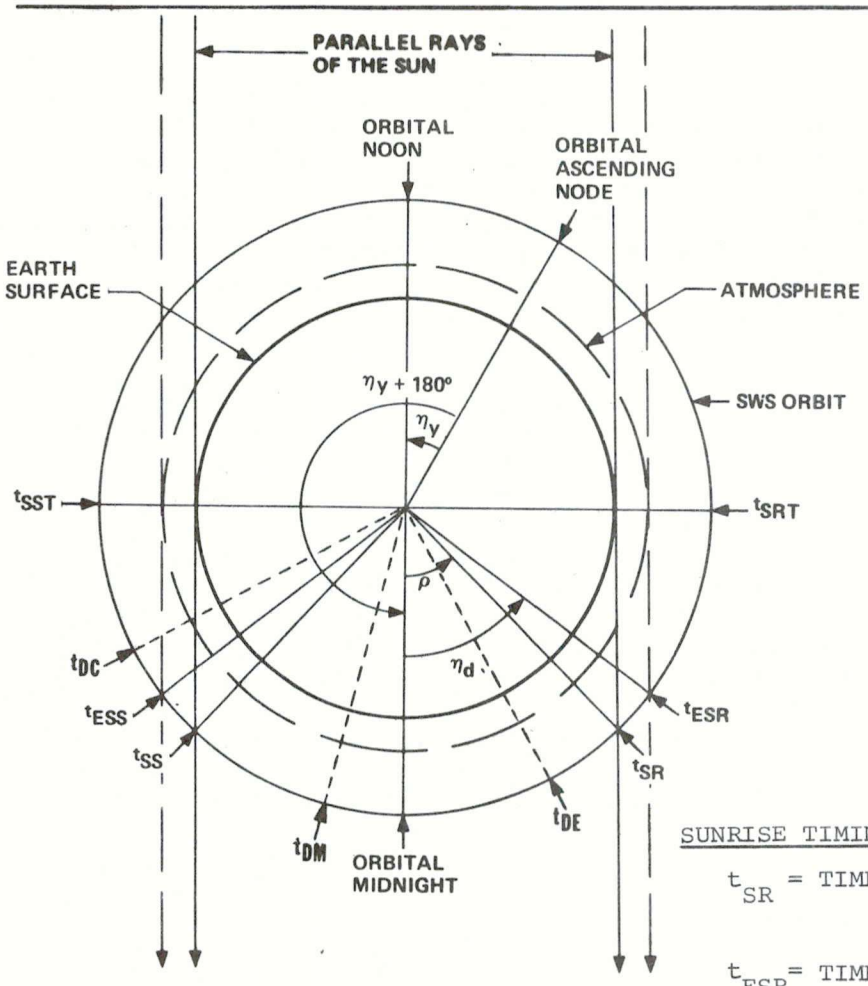

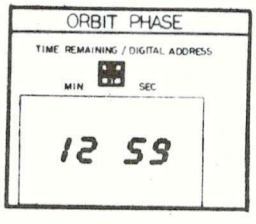

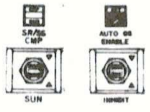

SUNRISE TIMING POINTS

t_{SR} = TIME OF SUNRISE (EARTH SHADOW)

t_{ESR} = TIME OF EFFECTIVE SUNRISE (BEYOND ATMOSPHERE)

t_{DE} = TIME OF GG DUMP END

SUNSET TIMING POINTS

t_{SS} = TIME OF SUNSET (EARTH SHADOW)

t_{ESS} = TIME OF EFFECTIVE SUNSET (INTO ATMOSPHERE)

t_{DC} = TIME OF GG DUMP COMMENCE

Figure 2.5-10 Primary Navigation Scheme Timing

If one of the CMGs fails, the ACS is required to maintain attitude control using two CMGs. This situation modifies the control law in that the momentum of each of the remaining CMGs will now operate about some momentum bias value (as seen in vehicle axis momentum profiles), whereas with three CMG operation, each CMG operates without bias. This bias momentum varies with; orbit elevation, which CMG has failed; software limits on νZ rotations; minimum TACS usage etc. and will be updatable by ground.

A reset routine is incorporated into the CMG control law to allow the CMG system to recover from undesirable gimbal angle positions and/or momentum configurations. This routine was primarily added to aid a two CMG operational situation, though it will function with three CMGs when the appropriate conditions exist. A reset will be executed if the vehicle is in either the SI mode or the EXP PTG mode and one of the following conditions is satisfied: (1) requested via a DAS/DCS command; (2) desaturation maneuvers not active and a gimbal on a mechanical stop and a total attitude error ($\phi_e^2 = \phi_{xe}^2 + \phi_{ye}^2 + \phi_{ze}^2$) greater than $(0.5)^2$; (3) desaturation maneuvers active and a gimbal on a mechanical stop and a total attitude error greater than (0.2) degrees. Conditions (2) and (3) are initiated automatically if the function is enabled in the ATMDC (See function code list Table 2.5-III).

At the initiation of the reset routine, TACS will be inhibited and the CMG will be commanded to the spin up configuration i.e. inner gimbals at 0° and outer gimbals at 45°. At 40 seconds after initiation, the CMGs will be commanded to a nominal momentum value for the orbital position. At 80 seconds after initiation, TACS will be enabled to reduce the attitude rate error to less than 0.01 deg/sec in the X_V axis and 0.005 deg/sec in the Y_V and Z_V axes while the CMGs are held at the nominal momentum value. At 120 seconds, the CMG/TACS operating configuration will be enabled to reduce any accumulated attitude error to zero.

2.5.3.3.5 TACS Control Law - TACS is used for attitude control and CMG momentum desaturation. The timing increment for TACS calculations by the flight program is once per slow loop. The TACS control law is dependent on the APCS configuration; CMG/TACS attitude control, TACS only attitude control, or CMG reset routine. The active control system configuration is determined as a function of the selected APCS mode and DAS/DCS enable/inhibit commands. The TACS control law provides thruster firing commands to null out attitude and rate errors when control dead bands are exceeded (reference PDD). The thrusters are mounted on the OWS as shown in Figure 2.5-2 and produce torque about the vehicle axes as follows:

Thruster	Torque		
	Xv	Yv	Zv
1		-	
2	-		-
3	+		+
4		+	
5	+		-
6	-		+

Two types of thruster firings are commanded, full-on and minimum impulse bit (MIB) firing time. For full-on firings, the selected thruster is fired continuously for one slow loop. The MIB firing time is DAS/DCS selectable from 40 to 400 milliseconds to compensate for pressure decrease in the TACS cold gas supply tanks. AT the beginning of the mission, a thruster will produce 450 newtons of thrust and will decrease to approximately 45 newtons at the end of the mission.

A test is conducted by the flight program to detect a thruster stuck (open or closed) condition, and provides the CLUSTER ATT warning if the following conditions are detected. (Another condition, HI RATE, is also displayed by the CLUSTER ATT warning indication, see section 2.5.3.3.9). The total impulse commanded for each thruster is accumulated for half an orbit (biased on the momentum sample points t_{S2} and t_{S6}). This integration is performed by multiplying the firing time for each thruster by the prevailing force and adding this result to the previous total. The thruster force is updated via the DAS/DCS command system to account for TACS pressure change. Once per slow loop each thruster commanded total impulse is compared to a limit stored in the flight program, and if any thruster total is greater than the limit, the CLUSTER ATT warning is issued. A new integral is started at the t_{S2} and t_{S6} point in the orbit.

2.5.3.3.6 Maneuvering - APCS maneuvers are initiated by three types of inputs; mode commands (C&D console switches or DAS/DCS); Manual (C&D console MANUAL POINTING CONTROL or DAS/DCS); and automatic (flight program). The maneuvers are summarized in Table 2.5-II.

2.5.3.3.6.1 Solar Inertial Maneuver - Solar inertial (SI) is the primary attitude of the Skylab. The SI attitude is defined by the strapdown computations. A maneuver to SI is initiated when the SOLAR INERTIAL or EXP PTG mode of operation is selected.

SI offset pointing is available when the APCS is in the SOLAR INERTIAL or EXP PTG mode during the daylight portion of the orbit. To exercise the offset pointing capability, X_V and Y_V axes attitude commands are accepted and executed via the DAS/DCS command system. Offset commands are accumulated and summed with Acq. SS X_V and Y_V axes error signals to update the strapdown computations (See Figure 2.5-9). The total SI offset pointing angles for X_V and Y_V axes are magnitude limited to 4.0 degrees, and the Z_V axis is zero degrees. SI offset pointing angles are set to zero whenever any primary APCS mode is selected. This includes re-selection of SI or EXP PTG modes while the APCS is currently in one of those modes.

When maneuvering to the SI attitude, a maneuver time (τ), which has been entered via the DAS/DCS, is used to control the maneuver time interval. Maneuvers are rate and acceleration limited within the CMG control capability. If the maneuver time specified would cause the maneuver limits to be exceeded, a longer maneuver time defined by these limits will be used. The ACS Alert Light will be turned on to indicate the maneuver time was inadequate (see paragraph 2.5.3.3.9).

2.5.3.3.6.2 Z-Local Vertical Maneuver - The Z-Local Vertical (Z-LV) mode selection initiates a maneuver to the Z-LV attitude. The Z-LV attitude is defined by the strapdown computation. A maneuvering time (τ) will be used, as previously described for solar inertial maneuvering. An eigenaxis rotation will place the OA in the Z-LV attitude. An orbital rate is applied to the strapdown computation which allows the OA to turn at orbital rate about the Y_V axis once the Z-LV attitude is acquired. The Z-LV attitude will be entered to perform earth resources experiments.

A delayed Z-LV maneuver function command specifies the time (t_{GMT}) to enter the Z-LV mode, and the time to begin maneuvering back to SI. This command will be used to perform the Z-LV attitude for rendezvous with the CSM. The rendezvous attitude differs from the EREP in that the $-X_V$ axis is in the direction of the velocity vector.

MANEUVER	CONTROL	REMARKS
Any mode to SI	Mode command and maneuver time	
Bias SI	DCS/DAS commands (52020 or 52021)	X_V and Y_V axes limited to ± 4 degrees, Z_V axis zero degrees
GG Dump	SI or EXP PTG Mode and AUTO GG ENABLE	
CSTR EXP PTG	MPC, UP/DN and L/R, or DCS/DAS command (52025)	±24 arc. min.
CSTR ROLL	MPC Roll switches	±120 degrees about Z_V or line-of-sight.
SI to Z-LV	Mode command and maneuver time	
Bias Z-LV	DCS/DAS commands (52020 or 52021)	X_L, Y_L, and Z_L axes
ATT HOLD	Mode command and maneuver time	
Random Reacquisition in ATT HOLD	Mode command plus DCS/DAS command Enable (52011 and 50005)	

Table 2.5-II APCS Maneuver Summary

2.5.3.3.6.3 Attitude Hold Maneuver - In the attitude hold mode, the OA may be maneuvered to any desired attitude in the vehicle X, Y and Z axes. The desired attitude is entered via the DAS/DCS, with a resolution of one degree. The maneuver is performed by an eigenaxis rotation when the DAS/DCS command is entered. Attitude hold maneuvers may be performed in the CMG/TACS configuration or the TACS only mode.

2.5.3.3.6.4 Experiment Canister Maneuver - The experiment canister is pointed by the EPC using manual controls at the C&D console's manual pointing controls, paragraph 2.5.3.7. The maneuvering capability of the canister is ±24 arc minutes UP/DN and L/R about the FSS βX and βY axes, and ±120 degrees of roll about the vehicle βZ axis.

2.5.3.3.6.5 Automatic CMG Momentum Dump Maneuver - CMG desaturation maneuvers are performed each orbit when SI or EXP PTG mode and AUTO GG ENABLE are selected. Momentum dump maneuvers are performed in accordance with maneuver angles generated by the momentum management scheme. The function of momentum management is to prevent bias components of gravity gradient and other disturbance torques from saturating the CMG system. At the completion of momentum dump maneuvers, the vehicle X-principal axis is placed close to the orbital plane to minimize the effect of non-cyclic gravity gradient torques.

2.5.3.3.6.6 Random Reacquisition Maneuver - The purpose of the random reacquisition maneuver is to reacquire the sunline with the Acq. SS and then place the vehicle X-principal axis near the orbital plane from any vehicle attitude. The random reacquisition sequence will be executed by the flight program when the OA is unmanned. The decision to enable random reacquisition will be made by the ground based on the telemetry of Acq. SS outputs and the solar array current.

2.5.3.3.6.7 CSM Maneuver - CSM maneuvering of the cluster will require the APCS subsystem to be placed in the standby mode. When standby is entered, the attitude control error commands to the TACS and CMG control loops are inhibited. If the CMGs are commanded to zero momentum after standby is selected, the CSM/RCS must absorb the CMG momentum. Failing to zero the CMG momentum will produce undesirable torques on the vehicle when a maneuver is made by the CSM.

2.5.3.3.7 Redundancy Management - Redundancy management is accomplished by the flight program for the CMGs, the strapdown rate gyros, the Acq. SS, and the ATMDC/WCIU. The flight program is capable of detecting errors in primary mission critical APCS subsystems, and switching to the off-line or backup units. Detection of a CMG failure is required to provide OA attitude control with the two remaining CMGs. The flight program requirements for redundancy management are specified in the PDD.

2.5.3.3.7.1 Rate Gyro Redundancy Management - The SWS vehicle attitude rate is sensed by a set of three rate gyros in each control axis. The outputs of these gyros are applied to dual scaling networks and dual analog signal condition/multiplexer gates in each half of the WCIU, primary and secondary. Initially, two gyros in each axis are powered-up with wheel spin-up enabled, and the remaining gyro is powered-up with wheel spin-up inhibited.

The philosophy of the redundancy management is to guarantee attitude pointing errors within defined limits and to prevent control system failure from occurring as a result of a rate gyro failure. During normal operations, one rate gyro per axis is designated as the prime gyro (initially, rate gyro 1 is prime, and rate gyro 2 is backup). The outputs from these two gyros are averaged for use in the prime strapdown calculations. The backup strapdown calculations are not enabled until a failure is detected. Upon detection of gyro disagreement, a prime strapdown calculation is initiated using the "prime" gyro input only. If this is the first failure, the third rate gyro is spun-up and used for comparison. A second set of strapdown calculations begin using the "backup" rate gyro. Both strapdown calculation sets are maintained, and interim control selection is made and verified until isolation of the bad rate gyro is complete. If two good gyros remain, the prime strapdown calculations are again computed from the averaged gyro inputs, and the backup strapdown calculations are discontinued.

Redundancy management for a second rate gyro failure in an axis is executed if both the following requirements are satisfied:

1. The SWS is in the Solar Inertial Mode.

2. The orbital position of the SWS is between the sunrise (SRT) terminator and the sunset terminator (SST).

Otherwise, the failure isolation for the axis is bypassed. Failure isolation is accomplished by the TACS monitor function used for interim strapdown control verification.

Second failure isolation in the SI mode between the SRT and SST is performed differently for a failure detected in the X or Y axis than for a failure detected in the Z axis. The day/night indication from sun sensor redundancy management is used to isolate a failure in the X or Y axis, and the momentum extremes are used for the Z axis.

2.5.3.3.7.2 Acq. SS Redundancy Management - Two Acq. SSs are contained in the APCS. Each of these sensors provide a sun presence discrete and two analog error signals about the SI attitude for X_V and Y_V axis. The two sun presence discretes are routed to Discrete Input register 2 (DI214 and DI215). The four analog channels are routed to the primary and secondary WCIU analog-to-digital converters. Unless a failure is detected, the analog outputs about each axis are averaged and used as an error signal by the strapdown computations.

Analog signal redundancy management is executed only in the SI and EXP PTG Modes from effective sunrise to effective sunset. The functions of analog signal redundancy management are:

1. To detect non-comparisons of the sun sensor analog outputs, and to indicate failure by turning on the ACS Alert Light (See paragraph 2.5.3.3.9.3)

2. To disable Acq. SS error signal from strapdown computation in the failed axis by using only strapdown rate gyro control until manual selection is commanded.

3. Respond to DAS/DCS redundancy management commands.

2.5.3.3.7.3 CMG Redundancy Management - The CMG subsystem consists of three CMG units. Two of the three units operating properly are adequate for CMG control of the OA. The CMG control loop redundancy includes dual networks, multiplexers, and demodulators in the WCIU for CMG momentum outputs monitoring, and dual reference voltages for CMG resolver excitation. The reference voltage redundancy is further enhanced by providing dual input lines to the WCIU, and by allowing the power to be removed from CMG resolvers on an individual basis. Considering this redundancy level, the objectives of the redundancy management are are to:

1. Manage the reference voltage V_{ref} relay configuration.
2. Designate the prime multiplexer (Mux) channel.
3. Provide CMG unit failure indication to the ground and/or to crew
4. Eliminate a failed CMG from the system.

2.5.3.3.7.4 **ATMDC/WCIU Redundancy Management** - The flight program contains a **self-test - Error Detection Program** which is capable of detecting errors in the ATMDC/WCIU system and switching to the backup system. This switchover turns off the on-line computer system and turns on the previously off-line computer system. This is accomplished manaully or automatically.

The manual switchover and automatic swtichover enable are controlled by a C&D console switch or DAS/DCS switch selector command as follows:

Function	Switch Selector No. 3 Code	C&D Console Switch
Primary ATMDC/WCIU Select	30143	PRIM
Secondary ATMDC/WCIU Select	30163	SEC
Automatic Switchover Enable	30077	AUTO
ATMDC/WCIU System OFF	30023	N/A

The last command issued controls the ATM network relay logic. Therefore, the C&D console switch position could be ambiguous. The C&D console CMPTR Flag will indicate which system is turned on.

An automatic switchover can occur due to a hardware failure or a self-test software detected failure. The automatic switchover discrete is controlled by triple redundant 2.1 second timers, voter circuits, and quad redundant drivers in the common section of the WCIU (See paragraph 2.5.4.5.7).

When switchover occurs, triple redundant data transfer registers in the WCIU common section contain initialization data for the off-line computer. The transfer registers are loaded after successful completion of the self-test routine (≈17 slowloops) by the on-line computer. Transfer register bit assignments are defined in the PDD.

2.5.3.3.8 ATMDC Function Commands - Function commands are transmitted to the ATMDC by the DAS or DCS Command System. The command system provides APCS control and display capabilities. Table 2.5-III is a list of the function command codes. Some function commands require one or more data commands to specify the desired function. The ATMDC cannot distinguish a DAS command from a DCS command. Three interrupts are sent to the ATMDC by the DAS or DCS as follows:

Command enable (INT 14)

Command enable (INT 10) (Redundant for DCS only)

Command execute(INT 11)

Command reset pulse (DI501)

These interrupts control the ATMDC flight program command processing.

2.5.3.3.8.1 DAS Operation - A five digit octal command is entered via the DAS keyboard. The first digit of a DAS command addresses one of four possible switch selectors (the first digit being 1, 2, 3, or 4) or addresses the ATMDC (the first digit being a 5). The first digit will also inhibit DCS commands, and zero the DAS digital display. The time remaining clock inputs are disconnected, and the visual verification feedback information is connected to the DAS display. The next four octal digits, that are sent to the ATMDC, represent 12 command system information bits.

After the fifth digit has been entered (INT 14), the ATMDC performs validity checks on the information bits and returns the complement of the command to the DAS for verification. The DAS recomplements the verification bits and displays them at the TIME REMAINING/DIGITAL ADDRESS counter on the C&D console. When the verification agrees with the desired input, the ENTR button is pressed (INT 11) and the command is processed by the ATMDC. The DAS automatically generates a reset pulse to clear the command system. At this point, DCS commands are enabled and the center digit of the DAS display flashes to indicate that the command was successfully entered. The command sequence can now be completed by pressing the CLR button. Pressing the CLR button results in disconnecting the visual verification display, and reconnects the time remaing display. The DAY/NT flag is not effected by DAS commands.

FUNCTION COMMAND	DATA COMMAND	DEFINITION
DISPLAY		
52001		FORMAT 1
52002		FORMAT 2
52003	(1)	ATMDC DATA
	50000	C & W CONDITIONS
	50001	ALERT CONDITIONS
	50002	ATT ERROR (XXX.1 DEG)
	50003	SI OFFSET (XXX.1 DEG)
	50004	GMT (HR; MIN; SEC)
	50005	X AXIS R G (.XXX1 DEG/SEC)
	50006	Y AXIS R G (.XXX1 DEG/SEC)
	50007	Z AXIS R G (.XXX1 DEG/SEC)
	50011	STAT WD 1
	50012	STAT WD 2
	50013	STAT WD 3
	50014	STAT WD 4
	50015	STAT WD 5
52004	(3)	ATMDC SNGL MEMORY LOC
	50AAA	AAAAA= MEMORY ADDRESS
	50AA0	
	5±YFF	Y=0 = DECIMAL; Y=1 = OCTAL ±FF = SCALE FACTOR
52005		MONITOR ACQ SS X/Y = PRI
52006		MONITOR ACQ SS X/Y = SEC
CONFIGURATION		
52010	(1)	INHIBIT (SEE ENABLE)
52011	(1)	ENABLE
	50000	CMG CONTROL
	50001	TACS CONTROL
	50002	CMPTR X-OVER FOR SELF TEST
	50003	AUTO GG DUMP
	50004	STR TRK CONTROL
	50005	RANDOM REACQ
	50006	SCAN SPECT DR AUTO CNTL
	50007	FSS DR AUTO CNTL
	50010	CMG AUTO RESET
52012	(1)	SEL SYSTEM CONFIG
	50000	STAR ACHERNAR
	50001	STAR CANOPUS
	50002	STAR ALPHA CRUX
	50003	SR/SS CMP
	50004	SR/SS SUN
	50005	INITIALIZE STRAPDOWN
	50006	DOCKED
	50007	UNDOCKED
	50010	EXIT IDLE MODE
52013	(1)	CMG REDUNDANCY MANAGEMENT
		VOLTAGE REF SOURCE
	50010	CMG 1; RM INHIBIT
	50020	CMG 2; RM INHIBIT
	50030	RM ENABLE
		CMG 1 SEL
	50012	CONTROL ENABLE; RM ENABLE
	50014	CONTROL INHIBIT; RM INHIBIT
	50016	CONTROL ENABLE; RM INHIBIT
		CMG 2 SEL
	50022	CONTROL ENABLE; RM ENABLE
	50024	CONTROL INHIBIT; RM INHIBIT
	50026	CONTROL ENABLE; RM INHIBIT
		CMG 3 SEL
	50032	CONTROL ENABLE: RM ENABLE
	50034	CONTROL INHIBIT; RM INHIBIT
	50036	CONTROL ENABLE; RM INHIBIT
52014	(1)	ACQ SS REDUNDANCY MANAGEMENT
		X AXIS SEL
	50001	PRI & SEC; RM ENABLE
	50002	PRI; RM INHIBIT
	50003	SEC; RM INHIBIT
	NOTES	ALL VALUES OCTAL SIGN + = 0; - = 1

FUNCTION COMMAND	DATA COMMAND	DEFINITION
52014	(1)	ACQ SS REDUNDANCY MANAGEMENT
		Y AXIS SEL
	50004	PRI & SEC; RM ENABLE
	50005	PRI; RM INHIBIT
	50006	SEC; RM INHIBIT
		SUN PRESENCE SEL
	50007	PRI & SEC; RM ENABLE
	50010	PRI; RM INHIBIT
	50011	SEC; RM INHIBIT
52015	(1)	RG REDUNDANCY MANAGEMENT
		X AXIS SEL
	50011	1 & 2 WITH 3 BACKUP
	50012	1 & 2
	50013	1 & 3
	50014	2 & 3
	50015	1
	50016	2
	50017	3
		Y AXIS SEL
	50021	1 & 2 WITH 3 BACKUP
	50022	1 & 2
	50023	1 & 3
	50024	2 & 3
	50025	1
	50026	2
	50027	3
		Z AXIS SEL
	50031	1 & 2 WITH 3 BACKUP
	50032	1 & 2
	50033	1 & 3
	50034	2 & 3
	50035	1
	50036	2
	50037	3
52016	(1)	APCS MODE SEL
	50000	STBY
	50001	EXP PTG
	50002	SOLAR INERTIAL
	50003	Z-LV
	50004	ATT HOLD CMG
	50005	ATT HOLD TACS
52017	(9)	INITIALIZE DELAYED Z-LV
	50BBB	B= GMT TO ENTER
	50BBB	Z-LV MODE, LSB = 1 SEC
	50BBB	
	50EEE	E= GMT TO ENTER
	50EEE	SI MODE, LSB= 1 SEC
	50EEE	
	5±XXX	X_L AXIS BIAS }
	5±YYY	Y_L AXIS BIAS } LSB=1 DEG
	5±ZZZ	Z_L AXIS BIAS }
FUNCTION		
52020	(3)	ATTITUDE MANEUVER
	5±XXX	X AXIS }
	5±YYY	Y AXIS } LSB = 1 DEG
	5±ZZZ	Z AXIS }
52021	(3)	ATTITUDE BIAS
	5±XXX	X AXIS }
	5±YYY	Y AXIS } LSB = 0.1 DEG
	5±ZZZ	Z AXIS }
52022	(3)	CMG CAGE & HOLD
	5±XXX	X MOMENTUM }
	5±YYY	Y MOMENTUM } LSB = 1% OF 3H
	5±ZZZ	Z MOMENTUM }
52023		CMG NOMINAL CAGE
52024	(3)	BIAS CMG MOMENTUM
	5±XXX	X AXIS }
	5±YYY	Y AXIS } LSB = 1% of 3H
	5±ZZZ	Z AXIS }
52025	(4)	PSG WEDGE DRIVE
	0±0RR	RRRR= RIGHT/LEFT
	0RRRR	LSB = 1 ARC SEC
	0±0UU	UUUU = UP/DN
	0RRRR	LSB = 1 ARC SEC

FUNCTION COMMAND	DATA COMMAND	DEFINITION
52027	(2)	STR TRK OG BACKUP
	5±DDD	DDDDD = MAGNITUDE OF OUTER
	50DDD	GIMBAL, LSB = 1 ARC MIN
PARAMETER UPDATE		
52030	(1)	MANEUVER TIME
	50TT	TIME MAGNITUDE, LSB = 1 MIN
52031	(1)	ESTIMATED ORB PLN ERROR
	5±DDD	Δv_{ZE} ANGLE, LSB = 0.1 DEG
52032	(1)	GG DUMP HALF ANGLE
	50DDD	ρ_D ANGLE, LSB = 1 DEG
52033	(2)	TIMER A; B
	50TOC	T= TIMER; 1=A; 2=B; 3= A&B
	5±ODD	C= SEGMENT; 0= 64th OF SEC: 1= SEC; 2=MIN; 3=HR; 4=DAY DD= MAGNITUDE, LSB SEE C.
52034	(1)	TACS PULSE WIDTH
	50DDD	FIRING TIME, LSB = 10 MILLISEC
52035	(1)	TACS THRUST
	50DDD	DDD= FORCE, LSB = 1 NEWTON
52036	(2)	RG DRIFT COMP
	500GG	GG = GYRO 01=1X; 02=2X; 03=3X;
	5±ODD	04=1Y; 05=2Y; 06=3Y;
		07=1Z; 10=2Z; 11=3Z
		±DD = DRIFT COMP (DEG/SEC)
52037	(22)	NAVIGATION
	5AAAA	A=ORBITAL ASCENDING NODE
	50AA0	
	5BBBB	B=ASCENDING NODE PERIOD
	50BB0	
	5CCCC	C=ORBITAL INCLINATION
	50CC0	
	5DDDD	D=RATIO EARTH TO ORBITAL
	50DD0	RADIUS
	5EEEE	E=CHANGE TO PREVIOUS
	50EE0	ORBITAL MIDNIGHT
	5FFFF	F=ORBITAL RATE
	50FF0	
	5GGGG	G=MEAN ANOMALY
	50GG0	
	5HHHH	H=PAST MIDNIGHT VALUE OF α_{γ}
	50HH0	
	5IIII	I=EARTH REF. LONG. OF
	50II0	ORBITAL ASCENDING NODE
	5JJJJ	J=FIRST ORDER SECULAR
	50JJ0	NODAL REGRESSION
	5KKKK	K=CHANGE TO INTERVAL
	50KK0	BETWEEN SUCCESSIVE MIDNIGHTS
ATMDC OPERATIONS		
52040		TERMINATE
52041		BACKUP DAS/DCS ENTR
52042		INITIALIZE MEMORY LOAD
52043	(V)	MEMORY LOAD
	50AAA	A=ATMDC MEMORY
	50AA0	LOCATION (LOAD SEQUENTIAL)
	8XXXX	X= FIRST 16 BIT MEMORY
	50XX0	WORD
	5XXXX	X=LAST 16 BIT MEMORY WORD
	50XX0	
52044		MEMORY LOAD COMPLETE
52045		PROGRAM IMPLEMENT
52046	(2)	MEMORY DUMP
	50RSS	R=REPETITION; S=START
	50EEE	BLOCK; E=END BLOCK
52047		SEL TROUBLESHOOT MODE

Table 2.5-III ATMDC Function Commands

ATMDC validity checks consist of checks for: (1) valid function commands; (2) function command received, data command expected; and (3) data command received, function command expected. When a command is rejected for one of the above reasons, the CMPTR REJ alert light on the C&D console will be turned on, and an octal constant of 5111 will be added to the verification display. If the ENTR button has not been actuated, the ATMDC will accept a valid command or its complement. If ENTR has been pressed, the ATMDC will only accept the Terminate function command. The CMPTR REJ alert light will be turned off when the ATMDC accepts a valid command input.

2.5.3.3.8.2 DCS Operation - When ground communication with the ATMDC is required, the STDN ground stations transmit a 35-bit DCS word to the DCS command decoder. The DCS message repetition rate is approximately 2.5 words per second. Of these 35 input bits, only the ATMDC enable bit, the execute bit, and twelve information bits are used by the ATMDC.

The enable bit is presented to the ATMDC as the command enable interrupt (INT 14 and 10). The 12 information bits are stored in the ATMDC command system input register and are placed in the high order 12 bits of the accumulator upon a request from the flight program. When the execute bit is present in the 35 bit DCS transmission, it is presented to the ATMDC as the command execute interrupt (INT 11). After the execute pulse, a clear pulse is automatically generated by the command decoder. There is no display for the crew of the DCS activity.

2.5.3.3.9 ATMDC Data Display - The ATMDC interfaces with the Control and Display (C&D) console by presenting specific data and indications to the C&D console, and by responding to signals from the C&D console. Analog data display meters, digital display counters, and discrete display flags respond to data from the ATMDC. Also, switches on the C&D console provide discrete information to the ATMDC.

2.5.3.3.9.1 Analog Data Display Support - Two pairs of analog display meters require ATMDC support. The two display meters are labelled ACS and ANGLE.

ACS Display Support - The percentage of the total momentum along the X_V, Y_V, and Z_V axes and the percentage of total available momentum currently used are displayed on the ACS analog meters. The CMG momentum along each axis, and the total momentum available are used once per slow loop to determine the percentage of the total momentum along each SWS axis, and the percentage of total available momentum currently used.

The resulting data is issued every 250 ms to the C&D console by using the ATMDC digital to analog converter. This data is transmitted to the converter such that the total available momentum is equivalent to 100 percent. The momentum along each axis can be positive or negative but the total momentum is always positive.

Angle Display Support - Acq. SS X- and Y- axes analog outputs, used for attitude control are required for display on the ANGLE display meters. The required Acq. SS for display is determined by the Acq. SS #1/#2 Display DAS/DCS commands.

2.5.3.3.9.2 Digital Displays - Four digital displays and four flags provide data display from the ATMDC. The digital displays on the C&D console are labeled ORBIT PHASE, COUNTER 1, COUNTER 2, and COUNTER 3. The flags provide DAY and NT indications for the orbit phase display, and plus/minus sign indications for COUNTER 1, 2 and 3 displays.

The digital displays on the C&D console display for only four digits. This requires special consideration for the display of numbers larger than 9999. If the number displayed is larger than 9999, then 10000 is subtracted, and the remaining number is displayed. In this case, the highest order digit on the display alternates between its calculated value and nine, at a rate of once per second.

ORBIT PHASE Display. The orbit phase display consists of a four-digit display and a DAY/NT flag. Once per second, the time remaining in the prevailing orbit phase (day or night) is provided in minutes and seconds.

The orbit phase display is also used to verify DAS keyboard input commands to the APCS. The selection and switching between orbit phase time remaining and DAS keyboard displays is performed in response to the DAS keyboard entries.

COUNTER 1, 2 , and 3 Display - Each display COUNTER consists of a four-digit display, a plus/minus sign indicator, and a selector switch. Discrete inputs, representing the selector switch positions, are monitored once per second by the ATMDC to determine what parameters are required for display on COUNTERS 1, 2, and 3. Once per second, when parameters are requested for display, these parameters are transferred to the display counters. Tables 2.5-IV thru 2.5-VI describe the parameters selectable for display, their units and least significant bit (LSB) values, and the discrete input requesting their display.

Switch Position	Description	Units	LSB Value	Discrete
ROLL (ARC MIN) EXP	Experiment roll reference angle	arc min	1.0	DI102
ROLL (ARC MIN) CSTR	EPC roll position angle	arc min	1.0	DI101
$\dot{\phi}_Z$	Attitude rate about Z_V axis used for strapdown	deg/sec	0.0001	DI109
ϕ_X	Attitude offset about X_V axis. If APCS is in Z-LV Mode, attitude error is with respect to X_L axis. In any other mode, attitude error is with respect to X_I axis.	deg	0.1	DI108
FSS CAL	FSS calibration procedure code, 0001 through 0004	-	1	DI104
DAS	Special Display	-	-	DI107
STAR TCK GIMBALS (ARC MIN) OUTER	Star tracker outer gimbal angle	arc min	1.0	DI106
STAR TCK GIMBALS (ARC MIN) INNER	Star tracker inner gimbal angle	arc min	1.0	DI105
FSS UP/DN (ARC SEC)	FSS up/down wedge position biased or unbiased	arc sec	1.0	DI103
Counter 1 Sign Flag, DO103= +, DO104= -				

Table 2.5-IV Counter 1 Display Parameters

Switch Position	Description	Unit	LSB Value	Discrete
FSS UP/DN (ARC SEC)	FSS up/down wedge position biased or unbiased	arc sec	1.0	DI201
STAR TCK GIMBALS (ARC MIN) INNER	Star tracker inner gimbal angle	arc min	1.0	DI203
$\dot{\phi}_X$	Attitude rate about X_V axis used for strapdown	deg/sec	0.0001	DI207
STAR TCK GIMBALS (ARC MIN) OUTER	Star tracker outer gimbal angle	arc min	1.0	DI204
ϕ_Y	Attitude offset about Y_V axis. If APCS is in Z-LV Mode, attitude error is with respect to Y_L axis. In any other mode, attitude error is with respect to Y_I axis.	deg	0.1	DI205
DAS	Special DAS Display	-	-	DI206
λ	Longitude of ascending node	deg	0.1	DI209
FSS L/R (ARC SEC)	FSS left/right wedge position biased or unbiased	arc sec	1.0	DI202
Counter 2 Sign Flag; DO105=+, DO106=-				

Table 2.5-V Counter 2 Display Parameters

Switch Position	Description	Units	LSB Value	Discrete
FSS L/R (ARC SEC)	FSS left/right wedge position biased or unbiased	arc sec	1.0	DI303
$\dot{\phi}_Y$	Attitude rate about Y_V axis used for strapdown	deg/sec	0.0001	DI307
$\Delta t\lambda$	Time of last ascending node	min&sec	1.0	DI309
ϕ_Z	Attitude offset about Z_V axis. If APCS is in Z-LV Mode, attitude error is with respect to Z_L axis. In any other mode, attitude error is with respect to Z_I axis.	deg	0.1	DI305
DAS	Special DAS display	-	-	DI308
ROLL (ARC MIN) EXP	Experiment roll reference angle	arc min	1.0	DI302
ROLL (ARC MIN) CSTR	EPC roll position angle	arc min	1.0	DI301
ORBITAL PLANE ERROR	Orbital plane error angle for display	deg	0.01	DI306
LIMB OFFSET (ARC SEC)	Limb offset for NRL experiment	arc sec	1.0	DI304
Counter 3 Sign Flag; DO107=+, DO108=-				

Table 2.5-VI Counter 3 Display Parameters

Discretes DI101 through DI109 originate from COUNTER 1 selector switch, DI201 through DI207 and DI209 COUNTER 2 selector switch, and DI301 through DI309 originate from COUNTER 3 selector switch on the C&D console. These discretes control the data from the ATMDC to be displayed on COUNTER 1, COUNTER 2, or COUNTER 3.

2.5.3.3.9.3 Special DAS Displays - The DAS is used to request several quantities for display on COUNTER 1, 2, and/or 3. When COUNTER 1, 2, and/or 3 selector switches are set to the DAS position, special data can be requested from the ATMDC for display at COUNTER 1, 2, and/or 3. The ATMDC data available for display is listed in Table 2.5-VII. Each ATMDC data request for display requires that function command (52003) be entered, and then that one of the following data commands be entered, depending upon the display desired.

50000 = Caution and warning conditions
50001 = Alert conditions
50002 = SWS attitude error
50003 = SWS to solar inertial offset
50004 = GMT
50005 = 3 rate gyros for X axis
50006 = 3 rate gyros for Y axis
50007 = 3 rate gyros for Z axis
50010 = Not assigned
50011 = Status word #1
50012 = Status word #2
50013 = Status word #3
50014 = Status word #4
50015 = Status word #5

Caution and Warning Indications - Discrete outputs provide eight C&W conditions. These outputs activate three C&W indicators. Table 2.5-VIII describes the C&W conditions, their corresponding discrete outputs, and their associated C&W indicator.

When the special display of C&W conditions is required, the four most recent C&W conditions can be displayed at COUNTER 1, 2 and 3 by keying in the proper function and data commands at the DAS keyboard. Each COUNTER will display the same information. The most recent C&W condition will be displayed in the most significant digit of each COUNTER, down to the fourth previous C&W condition in the least significant digit of each COUNTER. There is no sign associated with this display, and the plus/minus flags will indicate white.

DATA COMMAND	DESCRIPTION	MAXIMUM VALUE	UNITS
50000	Previous C&W conditions (refer to Table 2.5-VIII)	9999	N/A
50001	Previous alert conditions (refer to Table 2.5-IX)	1010	N/A
50002	SWS attitude error for X_V, Y_V, and Z_V axes	180.0	degrees
50003	SWS to solar inertial offset for X_V, Y_V, and Z_V axes	359.9	degrees
50004	Mission time in GMT	23/59/59	hr/min/sec
50005	3 rate gyros for X axis (1,2 and 3)	0.9999	deg/sec
50006	3 rate gyros for Y axis (1,2 and 3)	0.9999	deg/sec
50007	3 rate gyros for Z axis (1,2 and 3)	0.9999	deg/sec
50010	Not assigned	—	—
		Nominal Value	
50011	Status Word #1	1133/1100	N/A
50012	Status Word #2	0777/0000	N/A
50013	Status Word #3	0002/3100	N/A
50014	Status Word #4 (XX=TACS pulse width, 04-40MS, 50=40MS)	0000/XX00	N/A
50015	Status Word #5 (X=Star Selected, 0= Achenar, 1=Canopus, 2=Alpha Crux)	00X3/0000	N/A

Table 2.5-VII ATMDC Data Available for Display (Function Command - 52003)

The CAUTION & WARNING panel provides indications that significant problems exist with certain of the SWS systems. The ATMDC activates the following C&W indicators.

CLUSTER ATT

This warning is activated when either a THRUSTER STUCK or HI RATE is detected.

The total firing time for each TACS thruster is accumulated between the sunrise and the sunset terminator. When the SWS arrives at either the sunrise terminator or the sunset terminator, each thruster firing time accumulation is compared to a prescribed limit (500 pound - seconds). If the total firing impulse of any thruster is greater than 500 pound - seconds, a THRUSTER STUCK is indicated. The CLUSTER ATT warning, activated by a THRUSTER STUCK, can be reset if a display of the C&W codes is requested.

If the sum of the squares of the vehicle body rates being used by the strapdown calculations exceeds 0.35 degrees/second, a HI RATE is indicated. The CLUSTER ATT warning, activated by a HI RATE, will be reset only if the sum of the square becomes less than 0.35 degrees/second.

ACS MALF

This caution is activated when either CMG SAT, TACS ONLY, RATE GYRO, or a second Acq. SS failure in any axis is detected.

If the total momentum accumulation exceeds the prescribed test limit (96 percent of H_T for 3 CMG control or 98 percent of H_T for 2 CMG control) CMG SAT is detected. The ACS MALF caution, activated by CMG SAT, will be reset only if the total momentum accumulation becomes less than the test limit.

If two CMG failures occur, the APCS is placed under TACS ONLY control. The ACS MALF caution, activated by TACS ONLY, can be reset if a display of the C&W codes is requested.

If two or three rate gyro failures occur in the same axis, RATE GYRO is detected and activates ACS MALF. The ACS MALF caution, activated by RATE GYRO, can be reset if a display of the C&W codes is requested.

If both Acq. SS fail the ACS MALF caution is activated. The ACS MALF caution activated by the failure of both Acq. SS, can be reset if a display of the C&W codes is requested.

COMPUTER MALF

This caution is activated if a SELF TEST failure or X OVER (switchover) is detected.

X OVER can occur due to a hardware failure or a self test software detected failure. Refer to paragraph 2.5.3.3.7.4 for X OVER details. The COMPUTER MALF caution, activated by X OVER, is reset when the automatic switching occurs.

Alert Indications - When special display of alert conditions is required, the two most recent alert conditions can be displayed at COUNTER 1, 2 and 3 by keying in the proper function and data commands at the DAS keyboard. Each COUNTER will display the same information. The most recent alert condition will be displayed in the first two digits of each COUNTER, and the previous alert condition in the last two digits of each COUNTER. Table 2.5-IX describes the alert conditions and corresponding decimal display indications. There is no sign associated with this display, and the plus/minus flags will indicate white.

The alert panel provides an indication that a significant problem exists with APCS. The ATMDC activates the following alert indications.

ACS

This alert is activated whenever any of the ACS type of alert conditions shown in Table 2.5-IX are detected.

The ACS alert is reset when a display of the alert codes is requested.

CMG MALF

This alert is activated if any CMG failure, CMG resolver excitation failure occurs (refer to CMG redundancy management in PDD) or CMG reset activation. The CMG MALF alert is reset when a display of the alert codes is requested.

Condition Number	Discrete Outputs	C&W Condition	C&W Indicator Panel No. 207
0	_____	No C&W	_____
1	DO603, DO609	Stuck TACS Thruster	CLUSTER ATT
2	DO604, DO610	Vehicle Overrate	CLUSTER ATT
3	DO605, DO611	Computer Self-Test Failure	COMPUTER MALF
4	DO606, DO612	CMG Saturation	ACS MALF
5	DO607, DO613	Second or Third Rate Gyro Failure	ACS MALF
6	DO608, DO614	Automatic Switch to TACS Only Control	ACS MALF
7	DO607, DO613	Second Acq. SS Failure in any axis	ACS MALF
—	_____	Switchover (X OVER) discrete from WCIU	COMPUTER MALF

Table 2.5-VIII Caution and Warning Condition Display and Indicators

Condition Number	Type of Alert	Alert Condition
00	—	No Alert
01	ACS	Rate gyro failure in any axis
02	ACS	Acq. SS failure in any axis
03	—	_____
04	ACS	Star tracker failure to acquire
05	ACS	Insufficient maneuver time requested
06	ACS	Computer restart
07	CMG MALF	CMG Failure
08	CMG MALF	CMG Resolver excitation failure
09	CMG MALF	Automatic activation of CMG reset
10	ACS	Rate gyro scale switching failure

Table 2.5-IX Alert Condition Display

CMPTR REJ

This alert is activated if the ATMDC rejects any DAS/DCS command. The CMPTR REJ alert is reset when a DAS/DCS command is accepted. Refer to paragraph 2.5.3.3.8

SWS Attitude Error - When the special display of SWS attitude error is requested the attitude error signals used for control (ϕxe, ϕye, ϕze) are available for display in one of two formats. Display format 1 requires that ϕxe, ϕye, and ϕze be available for display on COUNTER 1, 2 and 3 respectively. Display format 2 requires that ϕze, ϕxe, and ϕye, be available for display on COUNTER 1, 2 and 3 respectively. This data will have units in degrees with a resolution of 0.1.

SWS to Solar Inertial Offset - When the special display of the angular offset between the SWS and the solar inertial attitudes is requested, the attitude offset angles (ϕ_{XI}, ϕ_{YI}, ϕ_{ZI}) are available for display in one of two formats. Display format 1 requires that ϕ_{XI}, ϕ_{YI}, ϕ_{ZI} be available for display on COUNTER 1, 2 and 3 respectively. Display format 2 requires that ϕ_{ZI} ϕ_{XI} and ϕ_{YI} be available for display on COUNTER 1, 2, and 3 respectively. This data will have units in degrees with a resolution of 0.1, and rounded to the nearest 0.1 degrees.

GMT - When the special display of GMT is requested, the hour-, minute-, and second-segments of the mission timer, used for navigation and timing functions, are available for display in one of two formats. Display format 1 requires that hours, minutes, and seconds be available for display on COUNTER 1, 2, and 3 respectively. Display format 2 requires that seconds, hours, and minutes be available for display on COUNTER 1, 2, and 3 respectively. Each time segment is right justified on the display with a resolution of 1.0. A positive sign is associated with this display.

Three Rate Gyro per Axis - When the special DAS display of the three rate gyro inputs of any SWS axis is requested, rate gyro inputs 1, 2, and 3 for the selected axis are available for display in one of two formats. Display format 1 requires that rate gyro inputs, 1, 2, and 3 be available for display on COUNTER 1, 2, and 3 respectively. Display format 2 requires that rate gyro inputs 3, 1 and 2 be available for display on COUNTER 1, 2 and 3, respectively. These data will have units in degrees per second with a resolution of 0.0001.

Geographic Reference - When the display geographic reference command is received, the geographic longitude of the ascending node and elapsed time since the last ascending nodal crossing will be displayed.

Status Words - Whenever the status word display is requested, the selected status word will be displayed in the following manner: If format 1 is active, the sign bit is displayed in the most significant digit position and the octal representation of bit 1-9 in the lower three positions of COUNTER 1; the octal representation of bits 10-15 and two zeroes are displayed on COUNTER 2 and 3. If format 2 is selected, the display will be the same as for format 1 except that the information on COUNTER 1 will be displayed on COUNTER 2 also. Refer to Table 2.5-X for the nominal displays of the five status words.

2.5.3.3.9.4 Display/Telemeter Single Memory Location - This function command requires that the contents of one, 16-bit, ATMDC memory location be telemetered and displayed. The memory location is specified by three accompanying data commands.

After acceptance of the third data command, the contents of the requested ATMDC memory location is displayed once per slow loop in one of two formats as shown in Table 2.5-X. If this mode command is sent more often than it can be telemetered or displayed, only the latest request is telemetered or displayed, and previous requests are ignored.

When the special DAS Display Single Memory Location is received, the contents of the specified memory location will be available for display, in two formats each, in the form of an octal number or in the form of a decimal number, whichever is requested.

The two formats for an octal display are as follows: Format 1 requires that the ATMDC accumulator register bit S and octal representation of bits 1 - 9 be displayed on COUNTER 1 (with bit S in the most significant location), the octal representation of bits 10-15 and two zeroes on COUNTER 3, and the COUNTER 3 display duplicated on COUNTER 2. Format 2 is identical to 1, except that the COUNTER 1 display is duplicated on COUNTER 2.

The two formats for a decimal display are as follows: Format 1 requires that the integer part of the number (with the appropriate sign indication) be displayed on COUNTER 1, and the four most significant digits of the fractional part of the number on COUNTER 2 and 3. Format 2 requires the integer portion on COUNTER 2, the fractional portion on COUNTER 3, and zeroes on COUNTER 1. In either case, if the magnitude of the number exceeds 9999.9999, then all digit data locations should contain nines.

C&W

52003E; 50000E
C&W CONDITION DISPLAY

A	B	C	D

A= MOST RECENT
B= NEXT MOST RECENT
C= NEXT MOST RECENT
D= NEXT MOST RECENT

CODE/CONDITION:

0= NO C&W
*1= THRUSTER STUCK (TEST)
2= HI RATE (0.35 DEG/SEC)
*3= SELF TEST (CMPTR)
4= CMG SAT
*5= RATE GYRO (2ND or 3RD)
*6= TACS ONLY
*7= ACQ SS (2ND)

* CONDITION RESET BY DISPLAY COMMAND

X OVER CAUTION CAN NOT BE DISPLAYED

ALERT

52003E; 50001E
ALERT (ACS & CMG) DISPLAY

AA	BB

AA= MOST RECENT
BB= NEXT MOST RECENT

CODE/CONDITION:

ACS lt
01 = RATE GYRO ANY AXIS
02 = ACQ SS X OR Y AXIS
03 = SPARE
04 = STR TRK NO ACQUIRE
05 = MANEUVER TIME INSUFFICIENT
06 = COMPUTER RESTART
10 = RATE GYRO SCALE SWITCHING

CMG MALF lt
07 = CMG FAILURE
08 = CMG REF VOLTAGE
09 = AUTO CMG RESET

ALL CONDITIONS RESET BY DISPLAY COMMAND

ST WD 1

52003E; 50011E
STATUS WORD 1 DISPLAY

A	B	C	D
E	F	-	-

NOMINAL
1133
1100

CODE/STATUS:

A = CMG CONTROL
0 - INHIBIT
1 - ENABLE

B = TACS CONTROL
0 - INHIBIT
1 - ENABLE

C = ACQ SS X AXIS
0 - NO STRAPDOWN UPDATE
1 - PRI USED
2 - SEC USED
3 - PRI & SEC USED

D = ACQ SS Y AXIS
0 - NO STRAPDOWN UPDATE
1 - PRI USED
2 - SEC USED
3 - PRI & SEC USED

E = SELF TEST X OVER
0 - INHIBIT
1 - ENABLE

F = STR TRK CONTROL
0 - INHIBIT
1 - ENABLE

ST WD 2

52003E; 50012E
STATUS WORD 2 DISPLAY

A	B	C	D
E	F	-	-

NOMINAL
0777
0000

CODE/STATUS:

A = STRAPDOWN CONTROL
0 - PRIME SEL
1 - BACKUP SEL

B = X AXIS RATE GYROS USED FOR CONTROL (SEE D)

C = Y AXIS RATE GYROS USED FOR CONTROL (SEE D)

D = Z AXIS RATE GYROS USED FOR CONTROL
0 - NO CONTROL
1 - #1
2 - #2
3 - #1 & #2
4 - #3
5 - #1 & #3
6 - #2 & #3
7 - #1 & #2, #3 BACKUP

E = RATE INTEGRAL TEST FAILURE
0 - NO FAILURES
1 - Z AXIS
2 - Y AXIS
4 - X AXIS

F = RATE GYRO CONTROL FAILURE INDICATION
0 - ALL AXES CONTROL
1 - NO X CONTROL
2 - NO Y CONTROL
4 - NO Z CONTROL

ST WD 3

52003E; 50013E
STATUS WORD 3 DISPLAY

A	B	C	D
E	F	-	-

NOMINAL
0002
3100

CODE/STATUS:

A = TROUBLE SHOOTING MODE
0 - NOT IN PROGRESS
1 - IN PROGRESS

B = COMPUTER COMMANDS
0 - NORMAL
1 - FUNCTION/DATA EXPECTED
2 - UNDEFINED FUNCTION CODE
4 - DATA/FUNCTION EXPECTED

C = COMPUTER MEMORY LOAD
0 - NO LOAD ACTIVITY
2 - LOAD IN PROGRESS
4 - WAITING TO BE IMPLEMENTED

D = MEMORY LOAD OVERFLOW AND DISPLAY FORMAT SEL
0 - FORMAT 2
1 - LOAD OVERFLOW AND FORMAT 2
2 - FORMAT 1
3 - LOAD OVERFLOW AND FORMAT 1

E = AUTO DOOR CONTROL
0 - FSS & SCAN SPECT INHIBIT
1 - FSS ENABLE & SCAN SPECT INHIBIT
2 - SCAN SPECT ENABLE & FSS INHIBIT
3 - BOTH ENABLED

F = ACS CONTROL GAINS
0 - UNDOCKED
1 - DOCKED

MEMORY

52004E; 50AAAE:
50AA0E; 5±YFFE;

DISPLAY ATMDC MEMORY

OCTAL FORMAT 1:

CODE = ACCUMULATOR BITS

CNTR 1:

S	1,2,3	4,5,6	7,8,9

CNTR 2 & 3:

10,11,12	13,14,15	-	-

OCTAL FORMAT 2:

CNTR 2 = 1
CNTR 3 = NO CHANGE

DECIMAL FORMAT 1:

CNTR 1:

±	D D D D

SIGN INTEGER

CNTR 2 & 3:

D D D D

FRACTION

DECIMAL FORMAT 2:

CNTR 1 = ZEROS
CNTR 2 = SIGN & INTEGER
CNTR 3 = FRACTION

ST WD 4

52003E; 50014E
STATUS WORD 4 DISPLAY

A	B	C	D
E	F	-	-

NOMINAL
0000
XX00

CODE/STATUS:

A = INTERRUPT FAILURE (CODE CHANGES STATE FOR EACH FAILURE)
0 - NONE, 2ND, 4TH, ETC.
1 - 1ST, 3RD, 5TH, ETC.

B = SPARE

C = CMG RSLVR REF VOLTAGE TEST
0 - NORMAL
1 - TEST FAILED

D = CMG ERROR DETECTED BY REDUNDANCY MGT.
0 - NO ERRORS
1 - #1
2 - #2
3 - #1 & #2
4 - #3
5 - #1 & #3
6 - #2 & #3
7 - #1, #2, & #3

E & F = TACS PULSE WIDTH (DISPLAYED IN OCTAL SCALE = 10MS)
04 - MINIMUM VALUE OF 40 MS
50 - MAXIMUM VALUE OF 400 MS

ST WD 5

52003E; 50015E
STATUS WORD 5 DISPLAY

A	B	C	D
E	F	-	-

NOMINAL
00XQ
0000

CODE/STATUS:

A = MOMENTUM SAMPLES USED FOR GG DUMP
0 - FOUR SAMPLES
1 - SINGLE SAMPLE

B = SPARE

C = STAR SELECTED
0 - ACHENAR
1 - CANOPUS
2 - ALPHA CRUX

D = SPARE

E = ACQ SS X & Y AXES TEST
0 - NORMAL
1 - X AXIS DISCOMPARE
2 - Y AXIS DISCOMPARE

F = SPARE

Table 2.5-X Caution and Warning, Alert, Single Memory and Status Word Displays

2.5.3.3.10 ATMDC Telemetry - The ATMDC flight program provides continuous real-time telemetry for real-time analysis and mission evaluation by transferring 50 bits of digital data from the ATMDC to the ATM telemetry system, 24 times per sec. This data contains flight program and SWS susbystem information along with data identification tags. The telemetry measurement number is K382-702.

Fifty-bit telemetry data words from the ATMDC are accepted by the telemetry system at a rate of 24 words per sec (one word every 41.7 ms). Approximately 41.5 ms after a 24 pps telemetry signal is transmitted to the ATMDC, the contents of the 50-bit telemetry interface register are sampled by the telemetry system and transmitted to STDN ground stations.

ATMDC telemetry is provided in 59 telemetry words, and transmitted in a fixed order. The regular ATMDC telemetry provides the following information:

Status Words
DAS/DCS Command Input History
TACS Firing Status
Star Tracker Gimbal Position
Vehicle Rates
Acq. SS Inputs
CMG Direction Cosines
4.8 kHz Reference Voltage
CMG Gimbal Rate Commands
EPC Angles
NRL Offset Angle
Vehicle to Solar Inertial Strapdown Parameters
Discrete Input Status
Discrete Output Status
Mission Time
Orbit Phase Time Remaining
Maneuver Commands
Roll Reference Angle
FSS Wedge Positions
Maneuver Rates
Display Parameters
Single Memory Location Data
Redundancy Management Failure Counters (RMC)
Integral of Vehicle Rates
Vehicle to Attitude Reference Strapdown Parameters
Navigation and Timing Parameters
Maneuver Times
ATMDC and WCIU Temperatures
Momentum Management and Desaturation Data
FSS/Experiment Bias Information

Four times per second, the ATMDC telemetry interface register is sampled by the ASAP recorder. This ASAP sample occurs after the sixth, twelfth, eighteenth, and twenty-fourth 24 pps telemetry signal following a 1 pps signal. In order to record all regular ATMDC telemetry on the ASAP recorder, the 59 word regular ATMDC telemetry table must wrap around. That is, word 1 must follow word 59 in the table. This procedure will make every regular ATMDC telemetry word available for ASAP recording once every 14.75 seconds.

Besides the regular ATMDC telemetry, two other forms of ATMDC telemetry are produced. Upon request via a DAS/DCS command, memory dump telemetry provides specified ATMDC memory information. In the event that an ATMDC self-test error occurs, one 50-bit telemetry word containing error identification information is telemetered six times in succession. The order of priority (in descending order) of each type of telemetry is as follows: (1) Self-Test Telemetry; (2) Memory Dump Telemetry; and (3) Regular ATMDC Telemetry.

2.5.3.3.11 ATMDC Experiment Support - The flight program provides the following types of ATM experiment support:

Calibration and display of four experiments with respect to the FSS.

FSS and SCAN SPECT door control

Display of XUV SLIT limb offset.

Canister position data for experiment recordings.

2.5.3.11.1 Experiment Calibration and Display - Experiment alignment calibration is necessary to meet the pointing requirements for four ATM experiments. This calibration is performed by obtaining the angular offset position of the four experiments with respect to the FSS. The angular bias obtained is then added to the FSS wedge position to indicate the offset position of the individual experiment with respect to the radiometric center of the sun.

The FSS BIAS selection switches on the C&D Console control which experiment is selected for calibration or display. Experiments selected by these switches are:

XUV SLIT (Naval Research Laboratory) Experiment

SCAN SPECT (Harvard College Observatory) Experiment

Hα1 Experiment

Hα2 Experiment

In order to perform calibration, the APCS must be in the Experiment Pointing Mode. To aid the crew in calibration, COUNTER 1 selector switch on the C&D console is placed to the FSS CAL position, and the FSS BIAS IN/OUT switch is placed to the OUT position. With these switches set to these positions, one of the following codes indicating the status of the calibration subroutine will be displayed at COUNTER 1.

CODE DISPLAYED	STATUS INDICATED
0001	ATMDC ready for first up/down point
0002	ATMDC ready for second up/down point
0003	ATMDC ready for first left/right point
0004	ATMDC ready for second left/right point

To perform calibration for the selected experiment, the crew first positions the experiment using the MANUAL POINTING CONTROL, to opposite ends UP/DN of solar diameter, then to opposite ends L/R of solar diameter. At each limb, the crew activates the MARK/CLEAR switch on the C&D console to MARK. Each time the FSS BIAS MARK/CLEAR switch is placed in the MARK position, either the FSS wedge UP/DN reading or the wedge L/R reading is stored in the ATMDC, depending on the value of the status code displayed at COUNTER 1. The information stored in the ATMDC is required to compute FSS biases for the selected experiment. When the MARK/CLEAR switch is placed in the CLEAR position, the calibration sequence is reset to the first (0001) point.

The ATMDC can be requested to display either biased or unbiased FSS wedge positions by means of the FSS BIAS IN/OUT switch, COUNTER 2, and COUNTER 3 on the C&D console. With the FSS BIAS IN/OUT switch set to the IN position, COUNTER 2 selector switch set to FSS UP/DN (ARC SEC) and COUNTER 3 selector switch set to FSS L/R (ARC SEC) the biased wedge positions calculated by the computer will be displayed at COUNTER 2 and COUNTER 3. If the FSS BIAS IN/OUT switch is set to the OUT position, the unbiased wedge positions will be displayed.

2.5.3.3.11.2 FSS and SCAN SPECT Door Control - The FSS aperture door open/close, and SCAN SPECT aperture door open/close drive functions are controlled by the ATMDC. Once every slow loop, orbital sunrise and sunset information are examined to determine the required FSS and SCAN SPECT control commands.

The FSS aperture door open command is issued if the APCS is in the Experiment Pointing Mode when the OA is in the daylight portion of the orbit. Orbital sunrise (t_{SR}) and

orbital sunset (t_{SS}) are used to determine when the OA is in the daylight portion of the orbit. If the APCS is not in the Experiment Pointing Mode, or if the OA is not in the daylight portion of the orbit, the FSS aperture close command is issued. The capability for ATMDC control of the FSS aperture door is enabled upon acceptance of the enable FSS aperture control DAS/DCS function command (52011), and data command (50007); and inhibited upon acceptance of function command (52010), and data command (50007).

The SCAN SPECT door open/close commands are determined from APCS mode status and the SCAN SPECT calibrated pointing angles. The SCAN SPECT door open/close functions also open and close the Hα aperture doors. If the Experiment Pointing Electronics Assembly (EPEA) is enabled, and the SCAN SPECT aperture door is closed; the ATMDC will issue the aperture door open command when the sum of the squares of the calibrated pointing angles becomes less than or equal to 501.75 square arc minutes. If the SCAN SPECT aperture door is open, the ATMDC will issue the aperture door close command when the sum of the square of the calibrated pointing angles becomes greater than 506.25 square arc minutes. Also, if the EPEA is not enabled, the ATMDC will issue the aperture door close command. The capability for ATMDC control of the SCAN SPECT aperture door is enabled upon acceptance of the enable SCAN SPECT aperture control DAS/DCS function command (52011), and data command (50006); and inhibited upon acceptance of function command (52010), and data command (50006).

2.5.3.3.11.3 Display Limb Offset - The XUV SLIT experiment supplies eight bits of information to the ATMDC for display of the limb offset angle (angular displacement XUV SLIT pointing vector is offset from sun center) with a range of one to 45 arc seconds. In order to display the limb offset angle, the selector switch for COUNTER 3 is set to the LIMB OFFSET (ARC SEC) position. The limb offset angle will than be displayed at COUNTER 3.

2.5.3.3.11.4 Canister Position - A 42-bit register is maintained by the ATMDC to supply roll reference angle and FSS wedge offset angles to the ATM experiments. The roll reference angle as defined in paragraph 2.5.3.1.9 is contained in 15 bits with a ±150 degree range and a resolution of one arc minute. The FSS wedge angles are contained in two 12 bit words with a ±24 arc minute range and a resolution of one arc second. Three discretes complete the 42 bit register; the calibration bias in/out discrete; the validity discrete which indicates the register is being updated by the ATMDC; and the good data discrete which presents the star tracker status for roll reference data.

2.5.3.3.12 Contingency Flight Program - Each ATMDC has two independent 8,192-word memory modules. If a memory module failure occurs, the ATMDC can be configured to an 8,192-word memory instead of the normal 16,384-word memory. A contingency flight program with reduced capability is loaded into the good memory module using the Memory Load Unit (MLU). A brief description of this 8k program follows with the emphasis on the differences from the normal flight program.

The primary objectives of the 8k Flight program are: (1) stabilization and control of the Skylab in solar inertial attitude; (2) efficient CMG momentum management; (3) adequate telemetry and displays for APCS monitoring and experiments support; and (4) C&W indications of unreasonable APCS performance. The program specifications are contained in the ATMDC 8k Program Definition Document.

Basically, the attitude control scheme is the same as the normal flight program. The TACS and CMG control laws have been simplified by removing logic associated with maneuvering. A single rate gyro in each axis will be used for strapdown reference instead of two averaged rate gyros. Likewise, only one Acq. SS is used to update strapdown reference during the day phase of the orbit in the Solar inertial attitude. Redundancy management and automatic system reconfiguration are eliminated. The command system provides the selection of APCS configuration for CMG, rate gyros and Acq. SSs.

The method of maintaing X_V axis displacement (orbital plane error) will be updated from momentum management calculations with the star tracker outer gimbal backup (ψ_3) and star angle (ψ_{3CD}) which are supplied by the command system. Experiment roll reference will be calculated using command system updates and the canister roll resolver position. The star tracker will be operated from the C&D console only and gimbal positions will be telemetered for ground processing.

APCS mode selection has been simplified and the attitude hold TACS mode deleted. This mode can be achieved by selecting ATTITUDE HOLD CMG and inhibiting CMG control via the command system. Since mode selection involves maneuvers, changes to the maneuver scheme will be discussed first.

Two types of maneuvers are provided by the 8k flight program, Z-LV and maneuver bias. The use of a maneuver time has been deleted. Instead, a Z-LV maneuver must be completely defined via the command system. A Z-LV maneuver requires a function command with 10 data commands to specify maneuver rates and maneuver times. The Z-LV maneuver is accomplished using TACS only. For Z-LV, attitude displays are attitude error signals and do not pertain to the solar inertial

attitude as in the other modes. The strapdown reference is driven to a Z-LV attitude using the command system inputs. If a Z-LV maneuver is interrupted, the OA attitude must be computed by the ground based on time into the maneuver. To reacquire the solar inertial attitude, a new maneuver profile must be defined by command updates.

In the SOLAR INERTIAL, EXPERIMENT POINTING, and ATTITUDE HOLD CMG modes, the maneuver bias command defines an attitude offset from solar inertial. A maneuver bias is treated as a step function to control system. A resolution of 0.1 degree is provided by an Euler angle rotation sequence of Y, Z, and X. Bias commands are accumulated in that a maneuver bias is added to the current desired attitude reference. The attitude offset is removed from the control loop when any mode is selected and at the start of momentum dump.

When the EXPERIMENT POINTING mode is selected, the FSS door is opened and remains open as long as the mode is selected. At sunrise (beyond earth shadow) the EPEA is activated and SCAN SPECT, Hα1, Hα2, X-ray spect, and X-ray tele doors are opened. At sunset, the EPEA is inhibited and all experiment doors are closed. The Acq. SS limit test for this mode is deleted.

The navigation and timing scheme has been simplified and will require frequent navigation update commands to specify changing orbital parameters. The effective sunrise and effective sunset timing points have been eliminated and the SR/SS switch on the C&D Console has no function. Orbit phase day or night and time remaining calculations are based on momentum dump interval and sunrise/sunset timing points.

No ACS or CMG MALF alert conditions are contained in the 8k program. The following C&W conditions are active:

HI RATE - For CMG control, hi rate will be active when the X_V axis exceeds 0.25 deg/sec or the Yv or Zv axes exceeds 0.1 deg/sec. For TACS control, hi rate will be active when the root sum square of Xv, Yv, and Zv equal to or greater than 0.35 deg/sec.

THRUSTER STUCK - Excessive TACS fuel usage will produce this warning. For CMG control, excessive TACS limit is equal to 100 pound-seconds. For TACS control, the limit is 500 pound-seconds.

TACS ONLY - This caution is issued when CMG control is abandoned and TACS only control is selected. The test limit is an attitude error of 20 degrees.

RATE GYRO - This C&W channel is now used for a caution of ACQ SS sun presence failure. At 135 orbital degrees past desaturation midnight a test is made to confirm that the Acq. SS sun presence signal from the selected Acq. SS is present.

X-OVER - ATMDC switchover signal is hardware generated. Therefore, this caution has not changed.

2.5.3.4 Thruster Attitude Control System (TACS) - This system is used to control the attitude of the vehicle during the following events:

1. Separation of the S-II stage from the OA
2. Maneuver to retrograde attitude for Payload Shroud jettison
3. Shroud jettison
4. ATM deployment
5. Maneuver to and hold Solar Inertial attitude prior to CMG spin-up
6. ATM and OA solar array deployment
7. CMG spin-up

These events occur under TACS only control using IU guidance commands. When control of APCS is transferred from the IU/LVDC to the ATMDC, the CMG/TACS configuration will control the OA for the duration of the mission.

The OA is maneuvered by TACS to the solar inertial attitude at the first orbital midnight. CMG spin-up will then be initiated and will require approximately 14 hours to reach operating speed. The TACS (See Figure 2.5-11) receives attitude and rate information from the rack sensors via the ATMDC. The ATMDC TACS control law will drive the thruster control switching assembly (TCSA) which contains the gas control valves (See Figure 2.5-12). The thruster nozzles are located on the aft skirt of the OWS (See Figure 2.5-13).

During normal operation, the CMGs will operate within the deadband of the TACS. Anytime the rate and attitude deadbands are exceeded, the TACS control law will issue commands to assist the CMGs in controlling the vehicle. Crosscoupling due to thruster location necessitates the mixing of X and Y error signals.

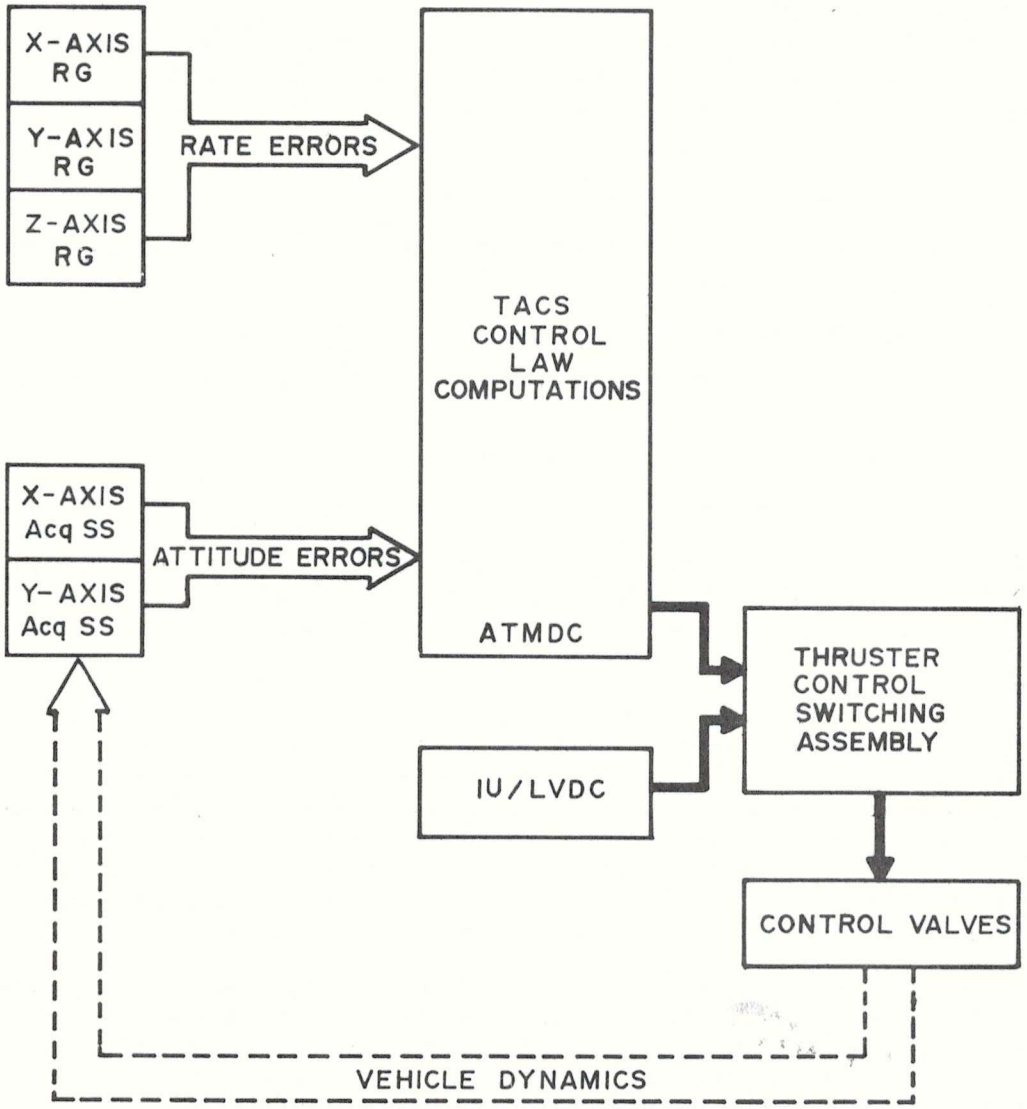

Figure 2.5-11 Simplified TACS Functional Diagram

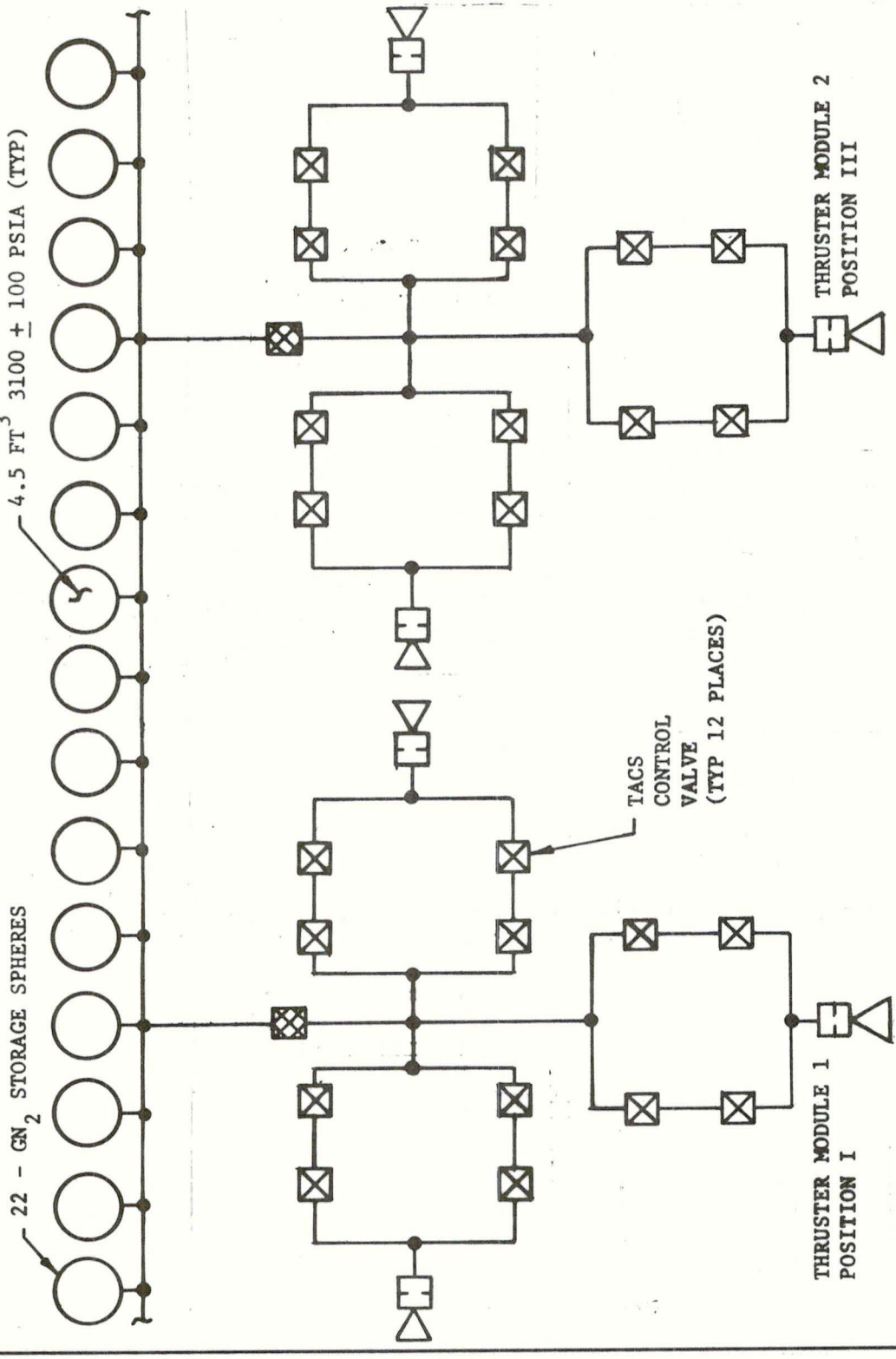

Figure 2.5-12 TACS MODULES

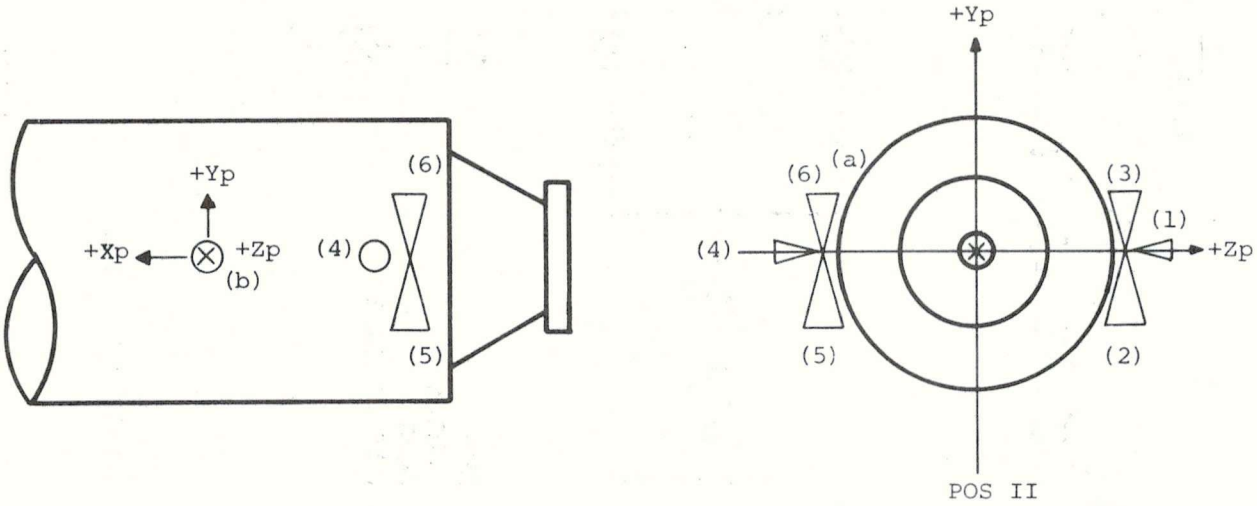

NOTES: (a) NUMBERS IN () INDICATE ATMC&D CONSOLE NOMENCLATURE
(b) COORDINATE SYSTEM AT CENTER OF MASS

Figure 2.5-13 TACS Thruster Location

Anytime the CMG system tries to exceed 96 percent of its momentum accumulation capability (9300 NMS), the TACS will take over vehicle control until the CMGs are no longer saturated.

In the event of CMG system failure, as detected by the redundancy management scheme, the TACS will take over attitude control of the OA. At the time of TACS take-over, the CMGs will be commanded to a zero momentum configuration automatically.

TACS thrusters provide rotation about the vehicle axes as listed in paragraph 2.5.3.3.5. The thruster force is dependent upon the cold gas tank pressure and will be between 100 pounds and 50 pounds at the beginning of the mission and diminish to 10 pounds at the end of the mission. The minimum impulse bit (MIB) will be maintained at a constant level within the bounds of the selectable thruster firing time (40 to 400 msec.). A DAS /DCS function command provides the capability to select a TACS pulse width specified by an accompanying data command (refer to Table 2.5-III). The TACS pulse width defines the TACS thruster firing time used during minimum impulse firing as defined by the TACS control law. See paragraph 2.5.3.3.5.

2.5.3.5 Control Moment Gyro (CMG) System - Three vehicle mounted, doubled gimballed CMGs are used as momentum exchange devices for maintaining vehicle attitude. The underlying principle of momentum exchange is the conservation of momentum. If the total OA momentum is made up of vehicle momentum plus CMG momentum, $H_{OA} = H_V + H_{CMG}$, and constrained such that the change in OA momentum, ΔH_{OA}, is equal to zero, then the change in vehicle momentum, H_V, due to external torques (i.e. gg torques, venting or crew disturbances) will have to be compensated by an equal and opposite change in CMG momentum, $\Delta H_V = -\Delta H_{CMG}$. To compensate for an external torque, a restoring torque must be generated by the CMG system. This is accomplished by rate commanding a change in direction of the three CMG spin vectors, as torque is the time rate of change of momentum, $T = \frac{dH}{dt}$. The rate command to the CMG gimbal torquers is computed in the ATMDC as part of the CMG control law. The computer commands a rate from 0 to 7 deg/sec according to the amount of torque required by each CMG to compensate for the disturbance. The gyroscopic equation, $T = \omega XH$, illustrates that a torque vector T will result by driving a CMG momentum vector H at the rate ω. Each CMG is capable of imparting as much as 200 ft-lbs of torque to the vehicle. Each CMG will be commanded in keeping with the CMG control law (See paragraph 2.5.3.3.4).

If a vehicle maneuver is required, the CMG gimbals would be rate commanded to make the vehicle maneuver in keeping with the conservation of momentum.

CMGs can compensate indefinitely for disturbance torques that are cyclic in nature. Because the torques due to gg forces, aerodynamic forces, and venting contain noncyclic components, the CMGs may saturate i.e. the three CMG spin vectors become coaligned. The saturation condition comes about due to the physics of the gyroscope - namely that the spin vector of a gyro will align itself with a torque vector in trying to absorb changes in momentum due to the torque. If the three CMG spin vectors align themselves along some constant torque vector, vehicle control about that torque vector is lost and the vehicle would start to rotate in accordance with the right hand rule.

The effects of the noncyclic gg torques can be minimized by placing the X principle axis close to the orbital plane. It will be necessary to perform momentum desaturation maneuvers during the night portion of the orbit in the SI attitude.

Momentum Desaturation Maneuvers - Vehicle maneuvers are required to prevent the noncyclic components of vehicle disturbance torques from saturating the CMG system and to place the Xp axis close to the orbital plane. The maneuvers will be performed on the dark side of the orbit and will orient the vehicle such that the gg torques acting on the Skylab will be opposite in direction from the gg torques seen on the day side of the orbit. Maneuvers will start either at t_{SS} or at some minimum time before dump midnight if the orbital night interval is too small to perform the required maneuvers (See paragraph 2.5.3.3.3). The maneuver interval is symmetric about the position in orbit where the Xp axis is perpendicular to the gravity vector (defined as dump midnight).

The weighing factors for determining the magnitude of the desaturation maneuvers are obtained by sampling normalized components of the total momentum four times during the day portion of the orbit. (See Figure 2.5-14).

These samples are valid if, at each point, all the following conditions are satisfied.

1. The SWS is in either the SI or EXP PTG mode.
2. CMG control has been enabled continuously since t_{S2}
3. The angle between the earth sunline and the Z_V axis is not greater than δs degrees.
4. CMG caging has not occurred since t_{S2}.
5. CMG reset has not occurred since t_{S2}.
6. A CMG reconfiguration has not occurred since t_{S2}.

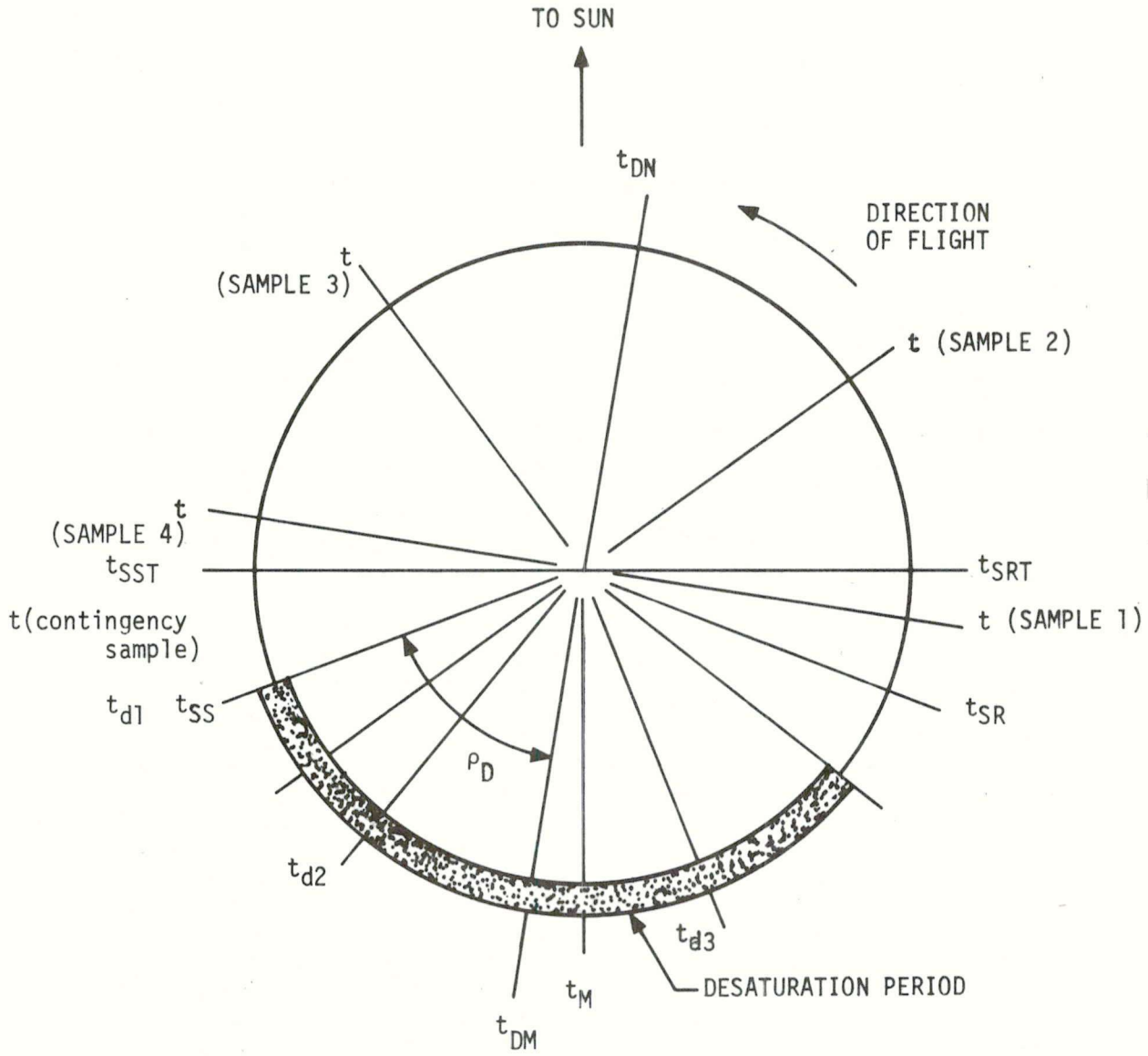

t_M	ORBITAL MIDNIGHT	t_{SST}	SUNSET TERMINATOR
t_{SR}	ORBITAL SUNRISE	t_{SS}	ORBITAL SUNSET
t_{SRT}	SUNRISE TERMINATOR	t_{DM}	DESATURATION MIDNIGHT
t_{DN}	DESATURATION NOON	ρ_D	DESATURATION INTERVAL HALF ANGLE

FIGURE 2.5-14 ORBIT DESATURATION MANEUVER GEOMETRY

If any of the four regular samples are invalid, an alternate sample may be taken at dump commence (t_{DC}) if all the following conditions are satisfied.

1. The SWS is in either the SI or EXP PTG mode.
2. CMG control is enabled.
3. The angle between the earth sunline and the Z_V axis is less than δs.
4. CMG caging is not active
5. CMG reset is not active

The information contained in the momentum samples is used to compute: the average deviation from a nominal profile (for the present orbit); the momentum drift per orbit caused by a constant disturbance torque or a constant Z axis rotation. A Z axis rotation during each orbit is necessary to eliminate the erroneous effects of gyro drift. This insures that the deviation from the desired νZ (angle) is minimized during the day portion of the orbit.

Angular momentum desaturation is accomplished by three successive eigenaxis maneuvers. The first maneuver is initiated at t_{d1} before desaturation midnight (t_{DM}), lasts for 25 percent of the desaturation interval, i.e. ΔT seconds, and results in an attitude computed with respect to the solar inertial attitude. The second maneuver is initiated at t_{d2}, lasts for $2\Delta T$ (50 percent of the desaturation interval) and results in a different attitude with respect to solar inertial attitude. The third maneuver is initiated at t_{d3} and utilizes the last 25 percent of the desaturation interval, returning the vehicle to the solar inertial attitude. Any delta Z-axis rotation ($\Delta\nu z$) necessary will be part of the third maneuver, i.e. the solar inertial attitude before the first and after the last maneuver differ by $\Delta\nu_z$. This adjustment of ν_z minimizes momentum accumulation during the next orbit. The nature of the vehicle maneuvers during a given momentum desaturation period are influenced by vents during the previous daylight period; by η_x, the angle between the orbital plane and the sunline; and by attitude drift about the sunline due to imperfect strapdown computations. Due to the possibility of a random combination of these functions, it is not possible to define a typical maneuver profile. During the maneuver interval, the momentum desaturation portion of the TACS logic will be disabled.

2.5.3.6 Canister Components - The canister components associated with the APCS are the RGs; the FSSs; the resolvers; the dc torquers; the orbital cage motors; and the RPM.

2.5.3.6.1 Rate Gyro - The spar mounted RGs (two per axis) are identical to the rack mounted RGs (See 2.5.3.2.1). They will operate in the coarse gain mode of ±1.0 degree/sec when active. Redundancy management of spar components is not required, as backup components may be selected via C&D console switches, or with the DAS. The outputs of the selected gyros are analog and scaled in volts/degree/sec. These outputs are inputed to the EPEA for signal processing. The EPEA, unlike the ATMDC, cannot compensate for drift and scale factor variance.

2.5.3.6.2 Fine Sun Sensor - The FSS provides accurate position information to the EPEA and can be used to offset point the canister for non sun centered experiments. Offset pointing is achieved by rotating an optical wedge in the path of the sun rays. With the wedge in the zero position, sunlight passes through it and impinges on a critical angle prism. If the impingement is perpendicular to the incident surface, the light rays are almost totally reflected in the prism. If the error signal is generated, the canister will be driven so that the error signal is nulled. The wedge can be rotated and refract incoming sunlight so as to cause an offset up to ±24 arc minutes (both axes) from sun center.

At all times, the FSS critical angle prism "thinks" it's looking at the center of the sun. An encoder wheel that rotates with the wedge provides offset information for display on the C&D console. The wedges remain at their last commanded position, until additional commands are initiated.

The FSS is also used to calibrate several experiments (see individual experiments.) This alignment is required because each experiment, though coaligned with the FSS, does not see the exact point on the sun that the FSS does. A FSS bias can be put into the ATMDC such that the experiment coordinates are those of the individual experiment and not those of the FSS wedge readouts.

2.5.3.6.3 Resolvers - Canister position information is supplied to the ATMDC via fine (16 speed) resolvers.

UP/DN and L/R position information is supplied by a fine resolver within one of the two actuators for each axis. This information is used by the ground only and is included in the regular ATMDC telemetry.

The roll axis uses a primary or secondary set of resolvers that are selectable via a C&D console switch. Each set comprises a fine and coarse resolver to provide the ATMDC with the canister roll position within the rack. This information is used to compute the EXP REF angle and may be displayed on the C&D console.

2.5.3.6.4 Orbital Cage Motors - Two orbital locks (See SMS 2.1.4.3.3) are used to cage the canister girth ring with respect to the gimbal ring, and the gimbal ring to the roll ring whenever the EPC has been disabled. When the EPC is enabled, the canister servo system is activated and an uncage command is given.

2.5.3.6.5 Roll Positioning Mechanism (RPM) - The RPM (See SMS 2.1.4.3.3) is used to rotate the canister within the rack. When the roll function is enabled via the C&D console or the Canister Control Panel, a brake within the RPM is released allowing the canister to rotate as commanded. When the roll function is inhibited, the brake is applied.

2.5.3.7 Experiment Pointing Control (EPC) System - The EPC system is required for accurate experiment pointing because the CMG/TACS system is not capable nor required to meet the ATM experiment pointing requirements. The EPC, therefore, operates in the dead-band of the CMG/TACS system. The FSSs provide canister position information and the RGs provide rate information, for damping, about the UP/DN and L/R axes. Each sensor output is processed and summed in the Experiment Pointing Electronic Assembly (EPEA) and then amplified to drive two dc torquers per axis.

The EPC system is enabled when the ATMDC sends two discretes to the EPEA. These discretes set appropriate relay logic, in the EPEA, which in turn activates the UP/DN, L/R control loops and uncages the orbit locks. The canister is now free to reposition itself in order to null the FSS error signal.

The EPEA has the capability to provide input/output sensor selection to either of the EPEA channels. This provides the crew or ground with the flexibility to mix the EPC UP/DN, L/R and MPC control loops between the primary or secondary EPEAs. Hardware details are discussed in paragraph 2.5.4.11.

The EPC is disabled by the removal of the enable discrete. This removes power from the servo system and cages the canister.

2.5.3.7.1 Canister Pointing - The Experiment Pointing Control System provides a fine pointing capability within the Attitude Control System to observe targets of opportunity on the sun with the ATM experiments. This capability is mechanized in the Fine Sun Sensor (FSS). The FSS is an optical mechanical device that provides an error signal to a servo system, which is proportional to the misalignment of the FSS optical axis and the suns rays. The error is processed in the Experiment Pointing Electronics Assembly (EPEA) which in turn drives torque motors located at the canister pivots. Offset pointing of the canister is accomplished by manipulation of the optics within the FSS.

The FSS optical mechanical assembly (OMA) is shown in Figure 2.5-15. Sunlight passing through the filter/alignment wedge, the deflection wedge, and the critical angle prism (CAP) is detected by a photovoltaic cell. Light rays entering the CAP (Figure 2.5-16) perpendicular to its surface provide a null output i.e. equal transmissions from sides A & B. The output is comprised of a dc level with an ac signal superimposed on it. Incident light not perpendicular to the CAP is modulated by a reed chopper providing an ac error signal on the dc level. The ac error signal is demodulated to drive the servo system such that the FSS null condition is achieved.

Offset pointing of the canister can be accomplished by rotating the deflection wedge/encoder wheel assembly in the path of incoming sunlight. The canister will then be pointed such that the sunlight going through the deflection wedge enters the CAP perpendicularly. Although the canister is no longer pointed at sun center, the FSS is operating at the sensor null.

The encoder wheel that rotates with the deflection wedge (See paragraph 2.5.4.9) provides canister position to the ATMDC and the C&D console. The FSS resolution is 0.625 arc sec and the C&D display is in secs of arc. The display will be viewed by the crew when they are rotating the deflection wedge via the Manual Pointing Controller.

2.5.3.7.2 Roll Positioning Mechanism (RPM) - The RPM is basically a motor which is geared to the canister girth ring. This provides the capability to rotate the canister ±120 degrees about the Zv axis, within the rack, at one of the following rates as determined by C&D console switch activation or rotation control panel (RCP) handle position in the clockwise or counter clockwise direction: 0.35; 0.7; 3.5; 7.0 deg/sec.

This rotation is about the Zv axis and not the line of sight of the canister, i.e. if the canister were offset pointed to the limb of the sun and then commanded in roll, the sun end of the canister would describe a circle around the limb. Zv axis rotation is dependent on the roll enable switch, roll commands and the MAN PTG switch in the enable position.

It is possible to roll the canister about its line of sight (LOS) using the FSS wedge drive capability of the ATMDC. The ATMDC uses FSS wedge position information together with roll position to calculate a LOS roll command when the EPEA is enabled. In order to roll the canister about its LOS, the MPC switch must be inhibited, the Roll switch enabled and roll rate commanded.

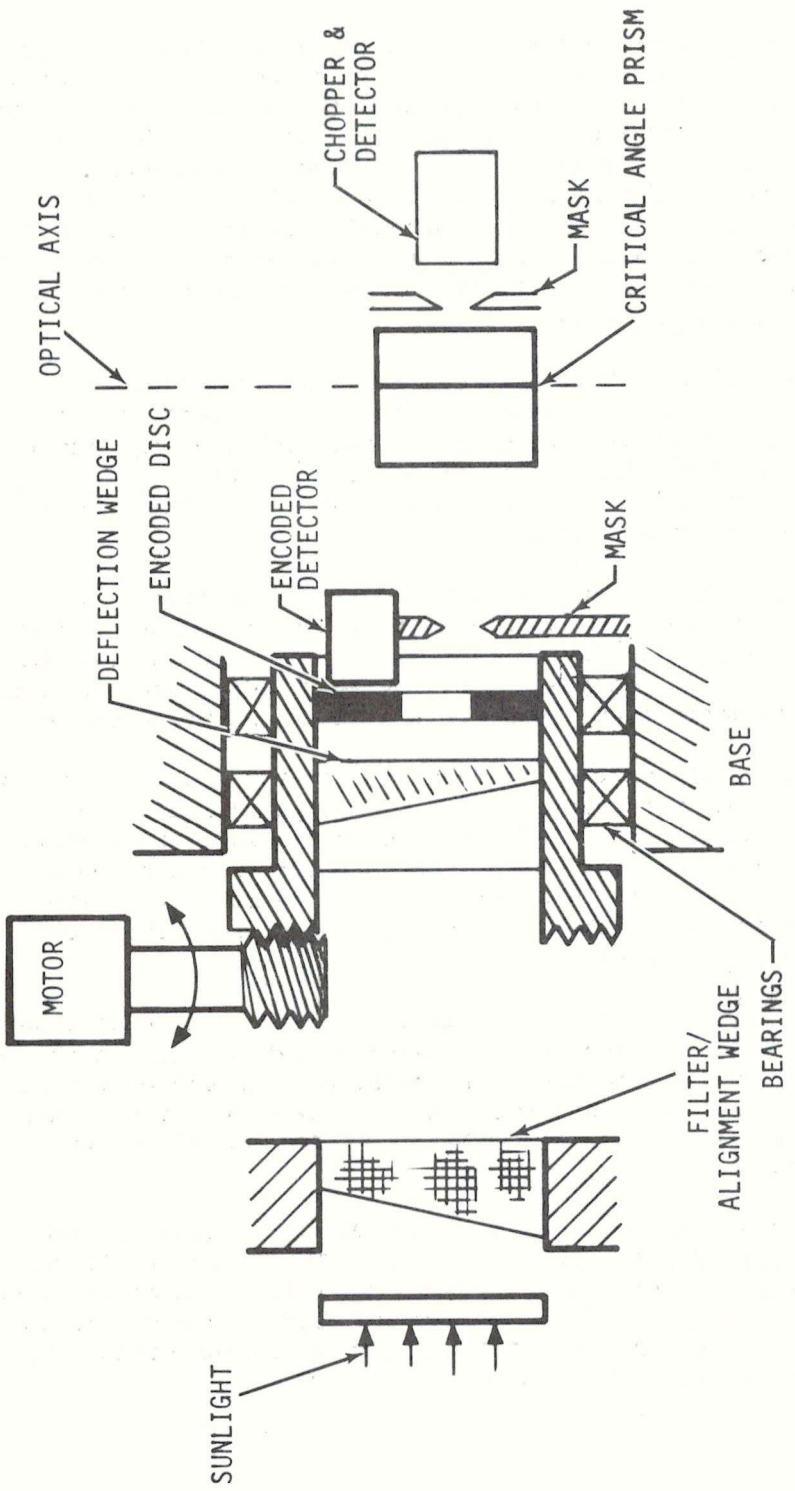

FIGURE 2.5-15 OPTICAL MECHANICAL ASSEMBLY (OMA)

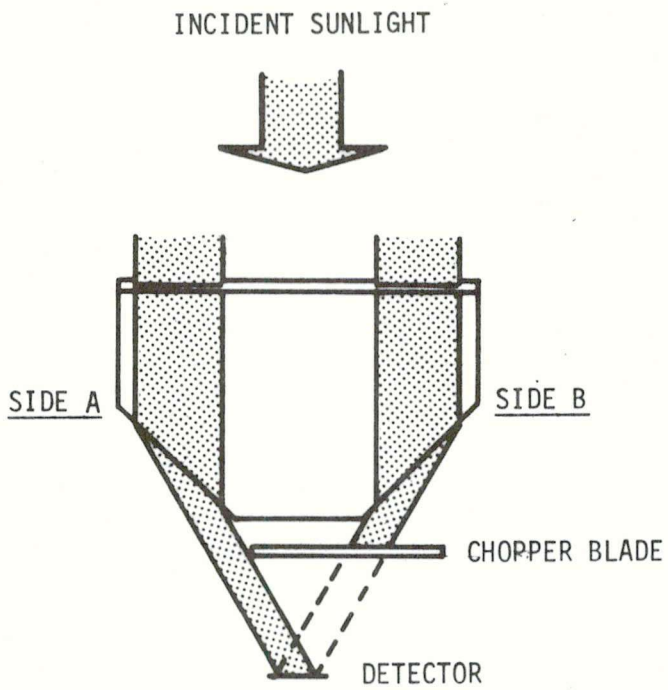

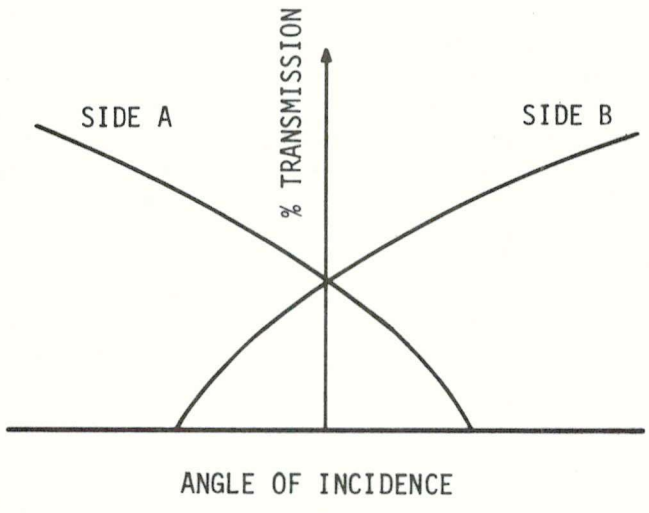

FIGURE 2.5-16 LIGHT TRANSMISSION THROUGH THE PRISM

2.5.3.7.3 Manual Pointing Control - The manual pointing control (MPC) function will be used to point the canister to targets of opportunity on the sun and to drive the star tracker (ST) gimbals to an approximate star position prior to the initiation of an automatic star search. If MPC of the canister is required (manned), the MPC enable/inhibit switch must be enabled. This switch command connects the demodulator located in the EPEA to the driving amplifier. (See Figure 2.5-17)

EXP PTG mode must be requested and the EPC system must be enabled (DO111 & DO113). Appropriate relays are energized to activate the UP/DN, L/R control loops and uncage the canister. The manual pointing talkback will be energized to the EXP position. The MPC is now connected to the FSSs and can rotate the UP/DN and/or L/R wedge and encoder wheel assembly to introduce an error for the critical angle prism CAP to detect. The error will drive the canister such that the CAP detector sees the null condition. A null condition exists whenever the sun's rays are perpendicular to the CAP. By rotating the wedge and encoder wheel assembly the sun's rays are bent. The canister will be driven to make the sunlight perpendicular again. A detector behind the encoder is processed in the FSS signal conditioner and passed on to the ATMDC upon interrogation. The ATMDC will drive BCD counters on the C&D console when the appropriate selector switch requests wedge angle information.

To position the ST, MPC must be enabled and the ATMDC recognizes a ST MAN mode command (DO112). This will disconnect the MPC from the FSSs and connect it to the ST servo loops. At the same time, the manual pointing talkback is energized to STR. Encoders on the ST gimbal pivots provide gimbal position information to the ATMDC for various computations. This information is available for display on the C&D console on request. It should be noted that the ST MAN mode selection overrides the EXP PTG mode and that if the MPC is enabled and neither DO111, DO113 nor DO116 are present, the MPC will not be connected to the FSSs or the ST.

A software backup is provided to point the canister only. This is accomplished via DAS/DCS commands either in the manned or unmanned mode. For software commands see paragraph 2.5.3.3.8, Function Commands.

2.5.4 Major Component/Functional Description

2.5.4.1 Rate Gyro (RG) - Thirteen rate gyros are used by the Attitude and Pointing Control System. Nine are used to provide vehicle rate information to the strapdown computation for vehicle control and four are used in the EPC system for rate damping the canister. All the RGs are similar and have two ranges of operation - a coarse mode where the output is scaled from zero to one degree per

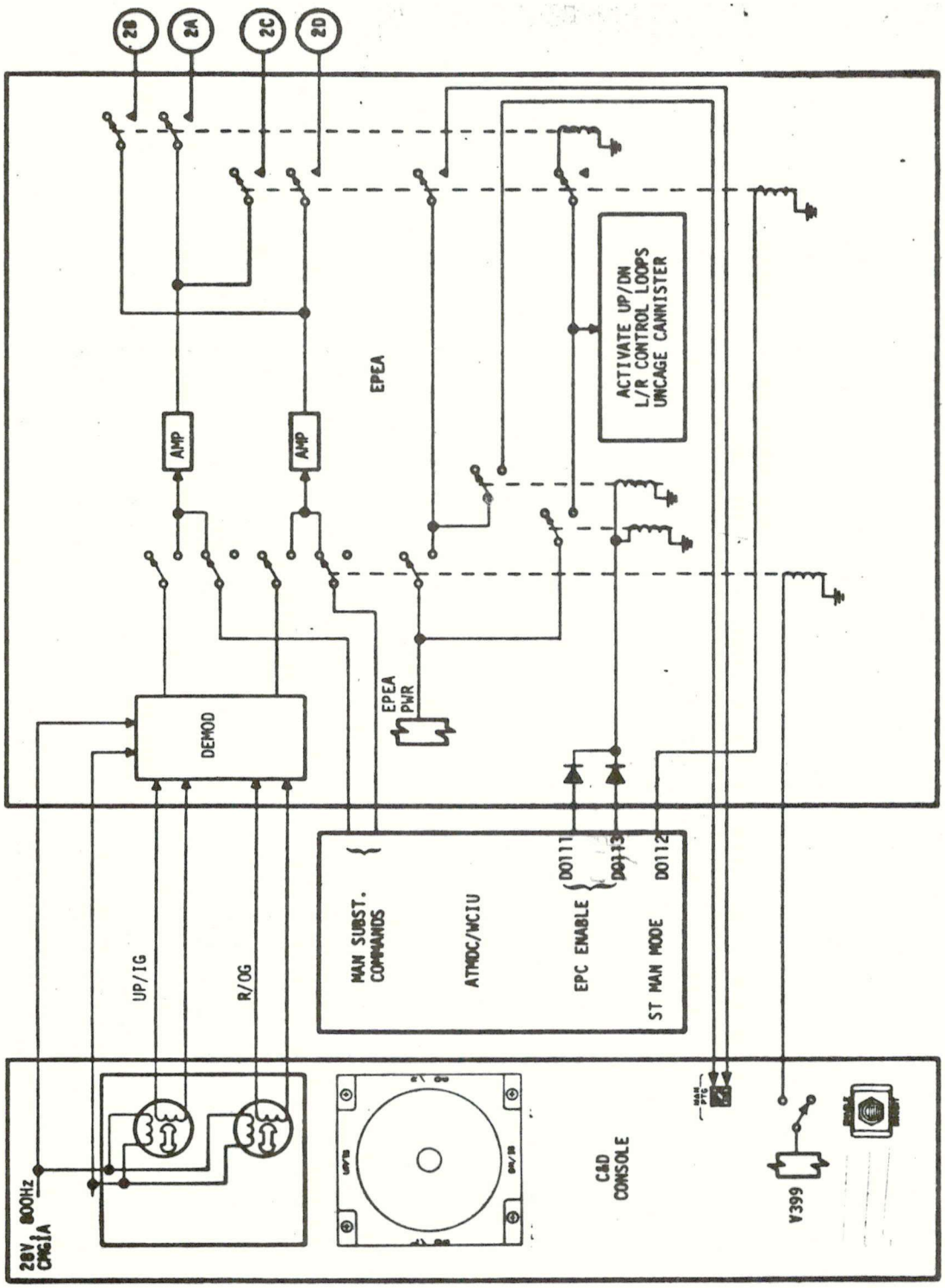

Figure 2.5-17 Manual Pointing Control Functional Diagram (Sheet 1 of 2)

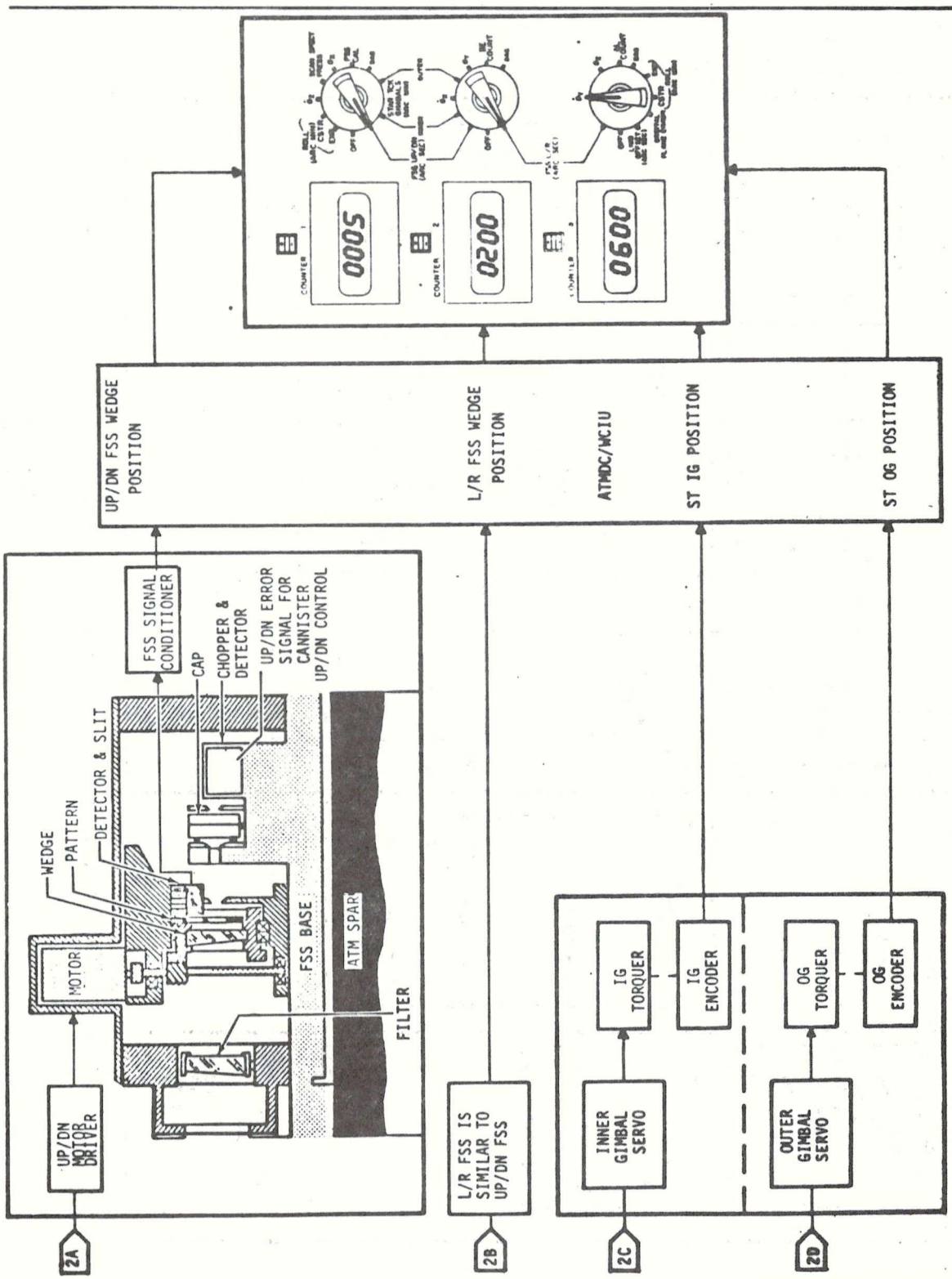

Figure 2.5-17 Manual Pointing Control Functional Diagram (Sheet 2 of 2)

second and a fine mode scaled zero to 0.1 degree per second. In the ACS, RG range or scale selection is under control of the ATMDC. A change from the coarse mode to the fine mode is made when the vehicle rate sensed by any of the controlling RGs is greater than 0.095 deg/sec. The fine mode is selected whenever the vehicle rate sensed by all of the controlling RGs is less than 0.085 deg/sec. The EPC RGs operate in the coarse mode only.

Each RG package consists of a single rate integrating gyroscope and the electronics necessary to operate it in the rate mode. The gyro wheel and gimbal asembly is fluid floated. By floating the wheel assembly in a fluid, the assembly becomes nearly weightless as the fluid provides a bouyant force equal to the weight of the displaced fluid. This type of RG offers greater accuracy and sensitivity. It is essential therefore that the fluid be maintained at the temperature required to assure proper gyro dynamic response. This temperature is 67.8°, ±1°C and is controlled by a heater circuit. Each RG has its own heater circuit. The two systems are described separately in the following paragraphs.

2.5.4.1.1 ACS Rate Gyros (Reference Figure 2.5-18) - During normal operation, two of the three RGs mounted along each of the vehicle axes are powered up and spinning. The third RG on each axis has power but is not spinning (in standby). In the standby condition, the gyro is heated to its proper operating temperature and ready for spinup on command from the ATMDC redundancy management scheme or DAS/DCS command.

Shortly after the ATMDC is powered up, initialization of the ACS is performed by the computer. One of the first systems the computer configures is the ACS RGs. This is accomplished by the issuance of a discrete output pulse (DO308) which operates on rack relay logic to power up the nine ACS RGs. The resulting configuration is that previously described for normal operation. Several DAS/DCS backup commands are provided to acquire the normal configuration. It should be noted that DO308 is a momentary discrete issued one time only and that any change to the configuration is accomplished either by ATMDC redundancy management or by DAS/DCS commands. ATMDC redundancy management can, on detecting a discompare between the two on-line RGs in an axis, send a discrete output pulse to enable the third RG on whichever axis had the RG failure. RG redundancy management is described in paragraph 2.5.3.3.7.1. Three DAS/DCS commands are provided to power up the nine RGs (A & E). Nine commands are provided to power down the RGs individually. Similarly, three commands enable wheel spinup power on all nine RGs and nine commands inhibit wheel power on an individual basis (B).

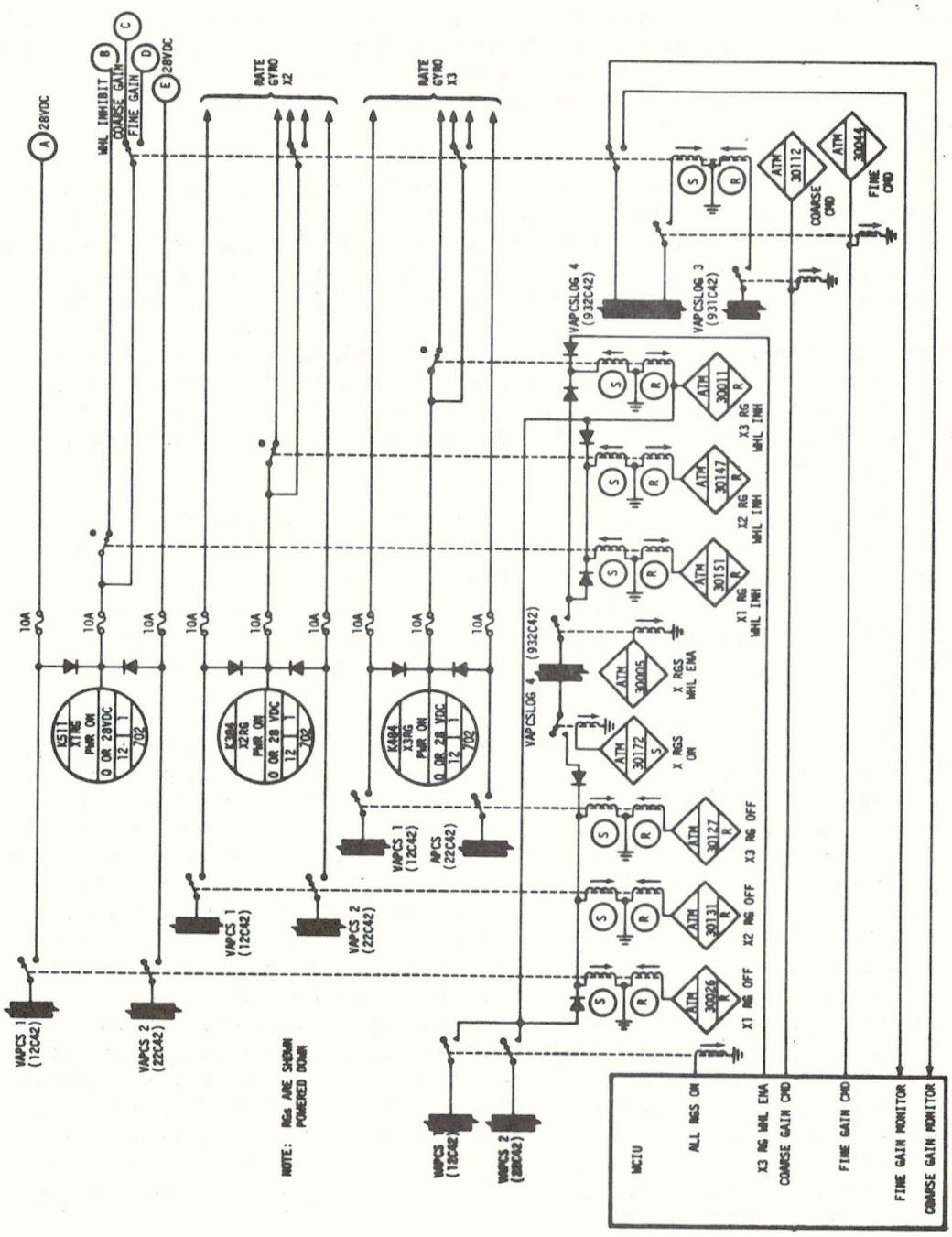

Figure 2.5-18 Rate Gyro - Power Control

The ATMDC normally selects the RG range of operation (via DO309 and DO310) and reads the status change in the network logic in discrete input register number four (DI404 and DI405). Two DAS/DCS backup commands are provided to perform these range selections.

Figure 2.5-19 is a typical functional diagram of an ACS RG. APCS buses VAPCS 1 and 2 provide the RG processor with 28VDC. The processor electronics are now operational and if the wheel power is enabled, the RG is ready for use. A 4.8 KHZ oscillator is the source of wheel, pickoff and demodulator reference excitation. When wheel power is inhibited, a relay contact grounds the input to the 400 HZ, 26VRMS amplifier, removing wheel excitation. The pickoff output is amplified and demodulated to provide information to the ATMDC. The reference for the demodulator is phase shifted 13 degrees to compensate for the phase shift between the input and output of the pickoff. The RG output is fed back through a torquer amplifier to a torquer. The torquer is used as an electrical spring and maintains the RG spin vector at the zero displacement position at all times while the gyro is operational. The measured input rate provided to the computer (in the form of a voltage) is directly proportional to the current needed to keep the spin vector at pickoff zero.

When the fine or coarse range of RG operation is selected, the gain of pickoff and torquer amplifiers is changed. For the fine mode, a low pass filter is added to the loop. The overall effect is to change the transfer function of the servo system (See Section 2.5.5).

The heater control maintains the gyro fluid at 67.8°, ±1°C. Keeping the fluid at this temperature ensures the proper response to input rates. Should the temperature fall below 67.8°C, the RG response would be sluggish or overdamped. If the heater circuit provides too much heat, the gyro response would be underdamped. If the temperature is anything but 67.8°, ±1°C the gyro performance will be degraded. Scaling options in the ATMDC are available via DAS/DCS commands (See paragraph 2.5.3.3.8)

2.5.4.1.2 EPC Rate Gyros - The EPC RGs are used for damping in the canister control loop. There are two RGs mounted along each canister axis (i.e. - the UP/DN and L/R axis) although the control loop uses only one at a time. The EPC RGs are not under the ATMDC redundancy magement scheme as are the ACS RGs. Two EPC Rate Gyro switches on the C&D panel are the primary means of activating these gyros (See Figure 2.5-20). When either the primary or secondary RG for an axis is selected, the APCS buses are connected to the selected RG and a selection command is issued to the EPEA.

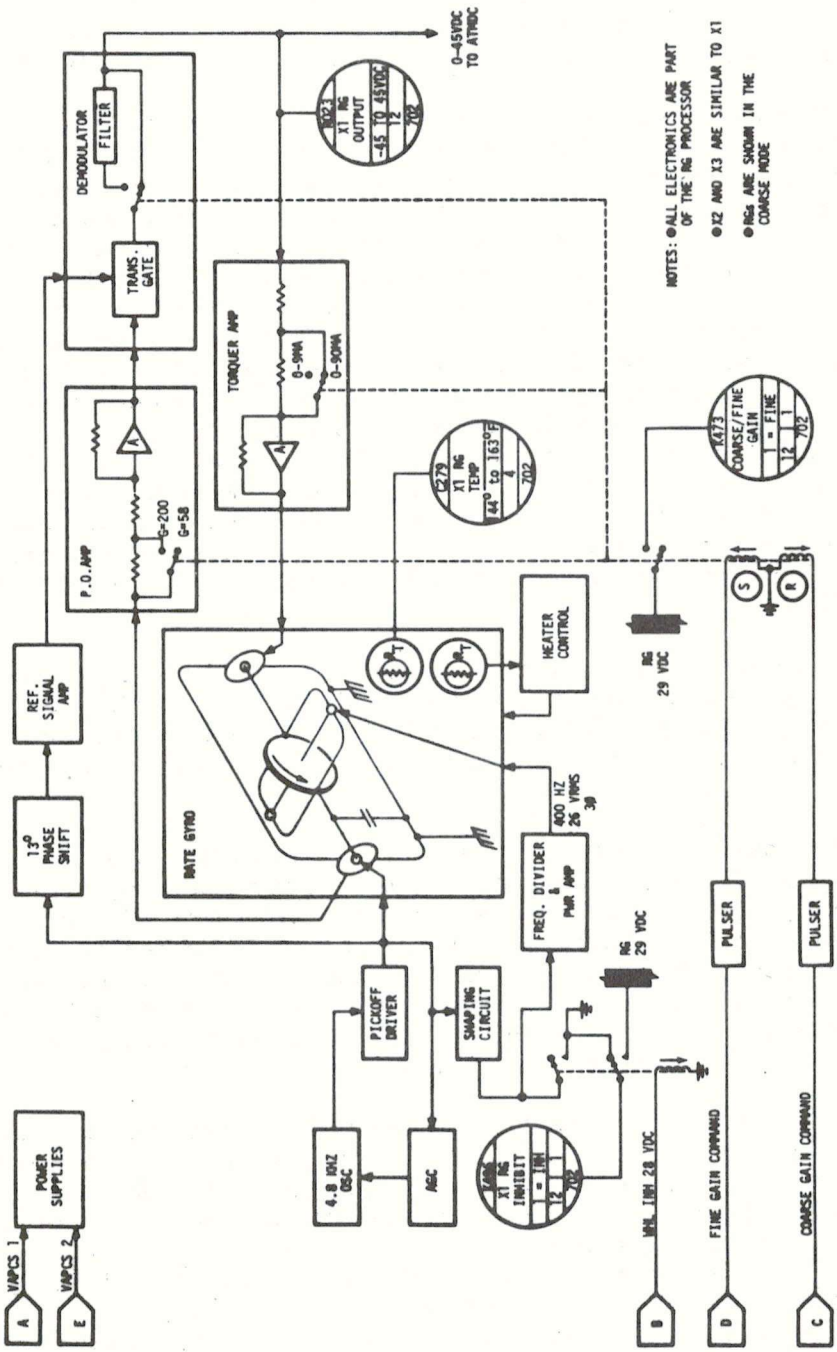

Figure 2.5-19 Rate Gyro - Functional Diagram

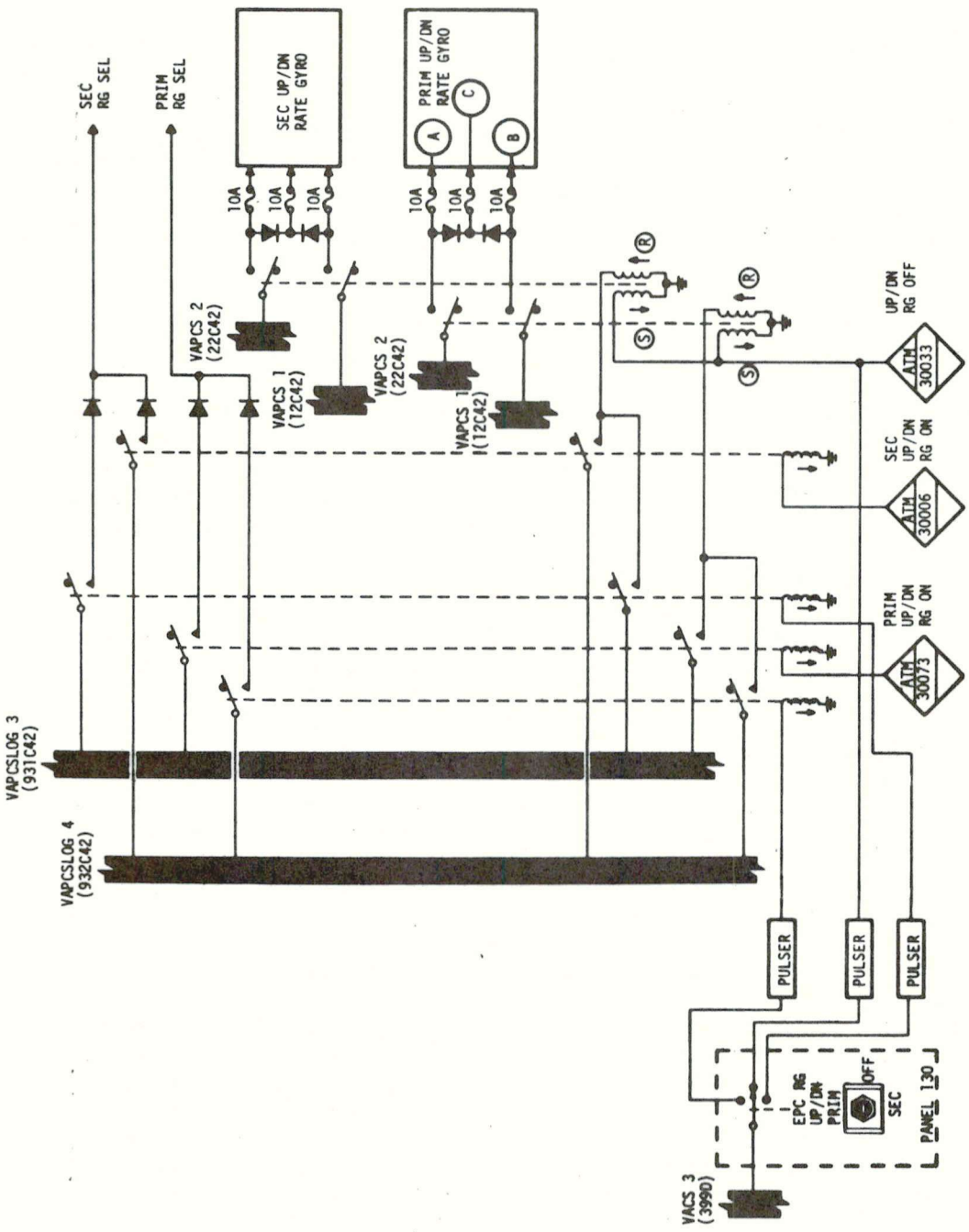

Figure 2.5-20 Up/Dn Rate Gyro - Power Control

The EPEA logic (See paragraph 2.5.4.11) only recognizes the last gyro commanded as the input to the control circuitry. When 28VDC power is applied to a RG, the coarse range of gyro operation is also selected. This ensures the coarse mode of operation every time an EPC RG is powered up.

Three DAS/DCS commands provide crew with backup capability to apply or remove RG excitation. It should be noted that the added capability can lead to an ambiguous switch position as the control loop recognizes only the last RG commanded - i.e. a RG switch in the primary position and a DAS command to power up the secondary RG for that axis.

Figure 2.5-21 is a functional diagram of an EPC RG. As mentioned above, the RGs for both the ACS and EPC are similar. Operationally, they differ in that the wheel power enable/inhibit function and the gain change logic are not used. The processor circuitry is identical to that of the ACS RGs. EPC RG outputs are processed in the EPEA along with the FSS position information (See paragraph 2.5.4.11). It should be noted that if an EPC heater circuit does not function properly and the fluid is not maintained at 67.8°, ±1°C, that there is no scaling or compensation of any kind in the EPEA.

2.5.4.2 Acquisition Sun Sensor - The Acquisition Sun Sensor (See Figure 2.5-22) provides attitude information for the X and Y control axes of the vehicle. The sensor is an array of detectors which generates solar pointing error signals. The detector is an electro-optical device which converts solar radiant energy into an electrical current. It consists of a photovoltaic cell, a lens, and baffles which control the geometry of the input-output characteristics. The system (sensor plus electronics) will provide electrical analog signals proportional to the solar pointing error of the OA and a sun presence signal to indicate when the sun is in the field-of-view of the error sensors.

An Acquisition Sun Sensor assembly contains two pairs of solar pointing detectors and a target detector (See Figure 2.5-23). Each detector pair produces an output current which is proportional to the offset error between the sensor block pointing axis and the solar vector. The two pairs of detectors are used as an energy balance null sensor. Using photovoltaic cells, radiant energy from the sun is gathered optically, divided into four paths (two per axis), and then converted into electrical signals. The optical elements of the cells are designed such that, when the sensor assembly is aligned to the, sun, equal amounts of energy are shunted along each optical path resulting in equal electrical signals being generated. The signals associated with each axis are

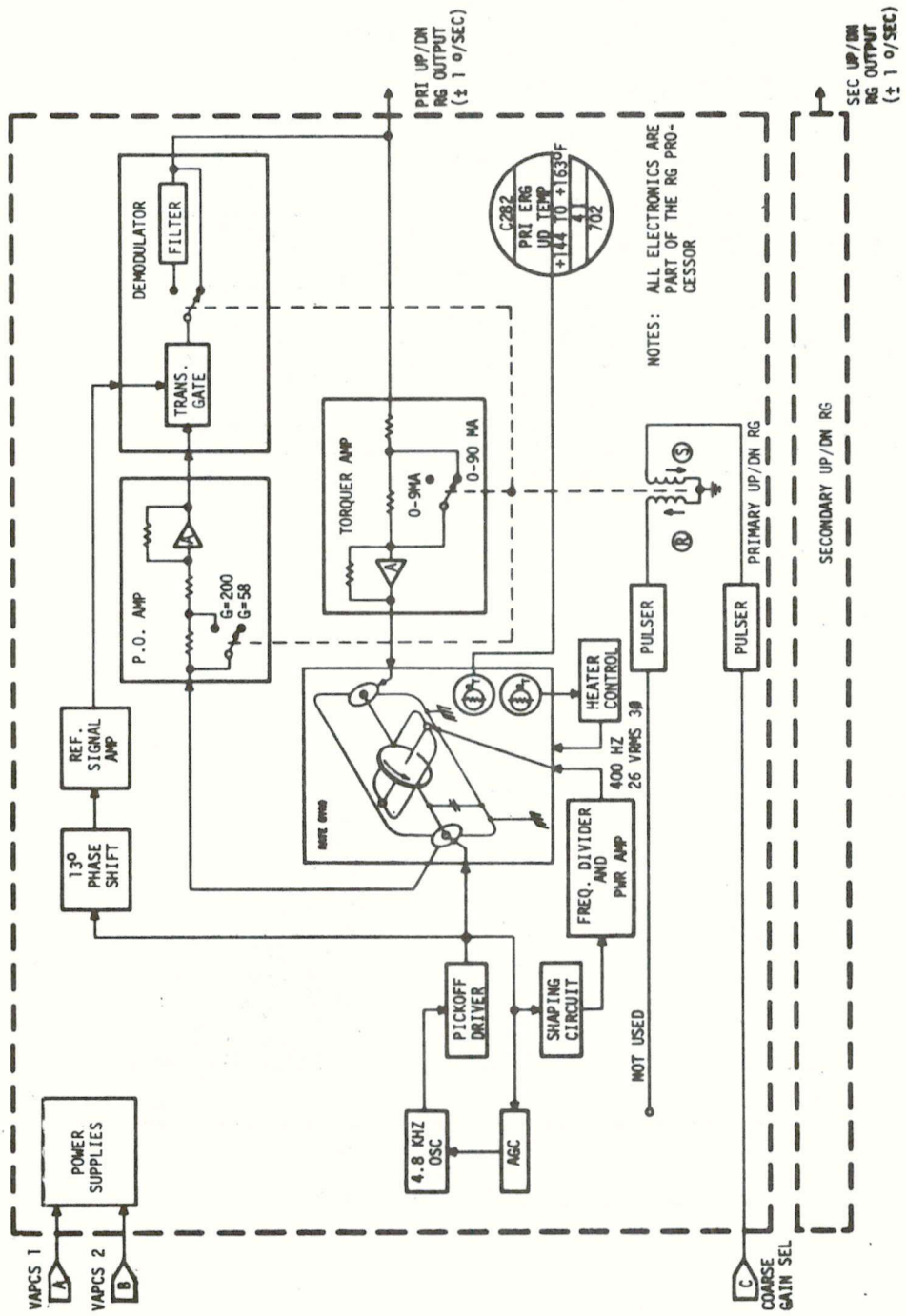

Figure 2.5-21 Up/Dn Rate Gyro - Functional Diagram

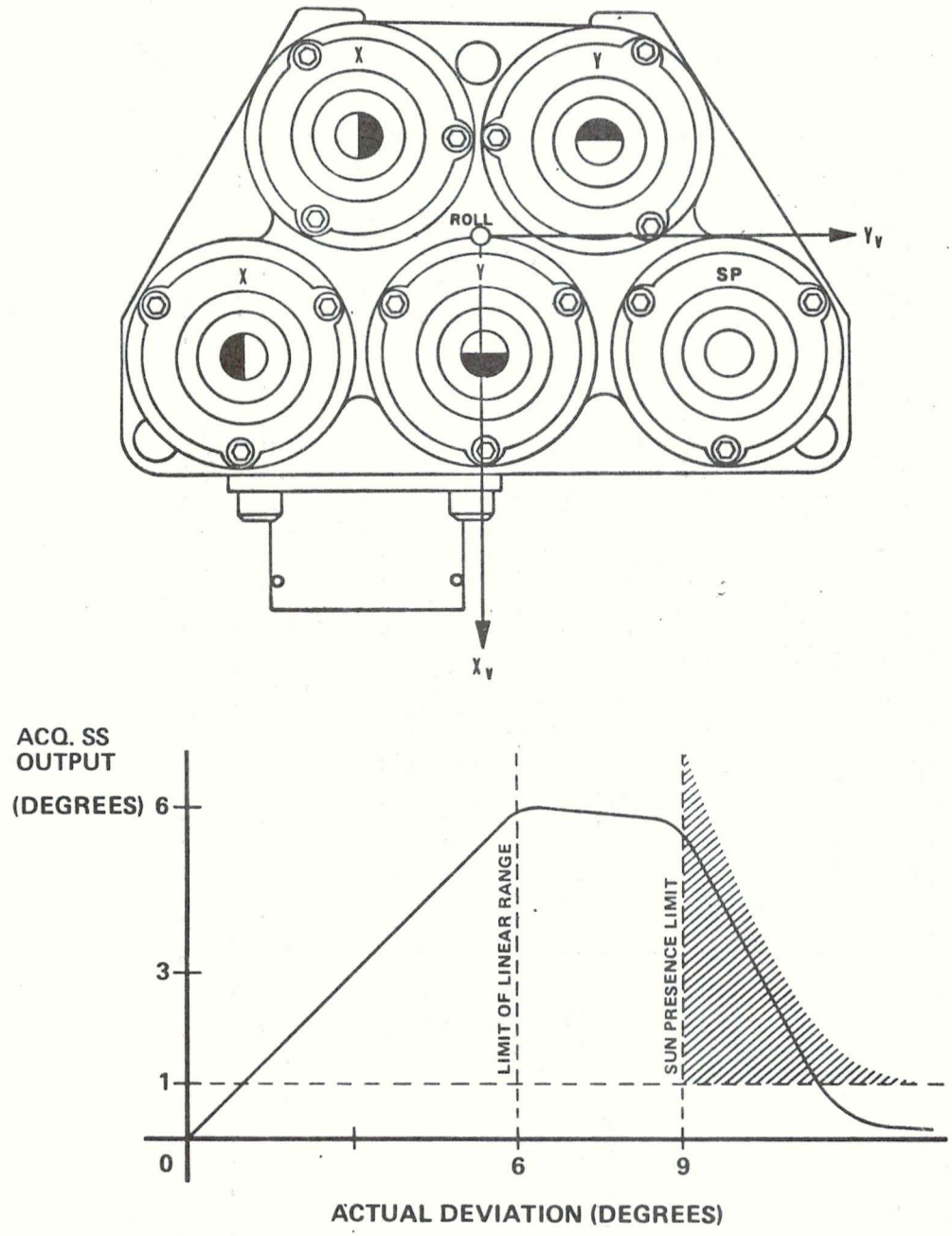

Figure 2.5-22 Acq. SS Detector Block and Output Characteristics

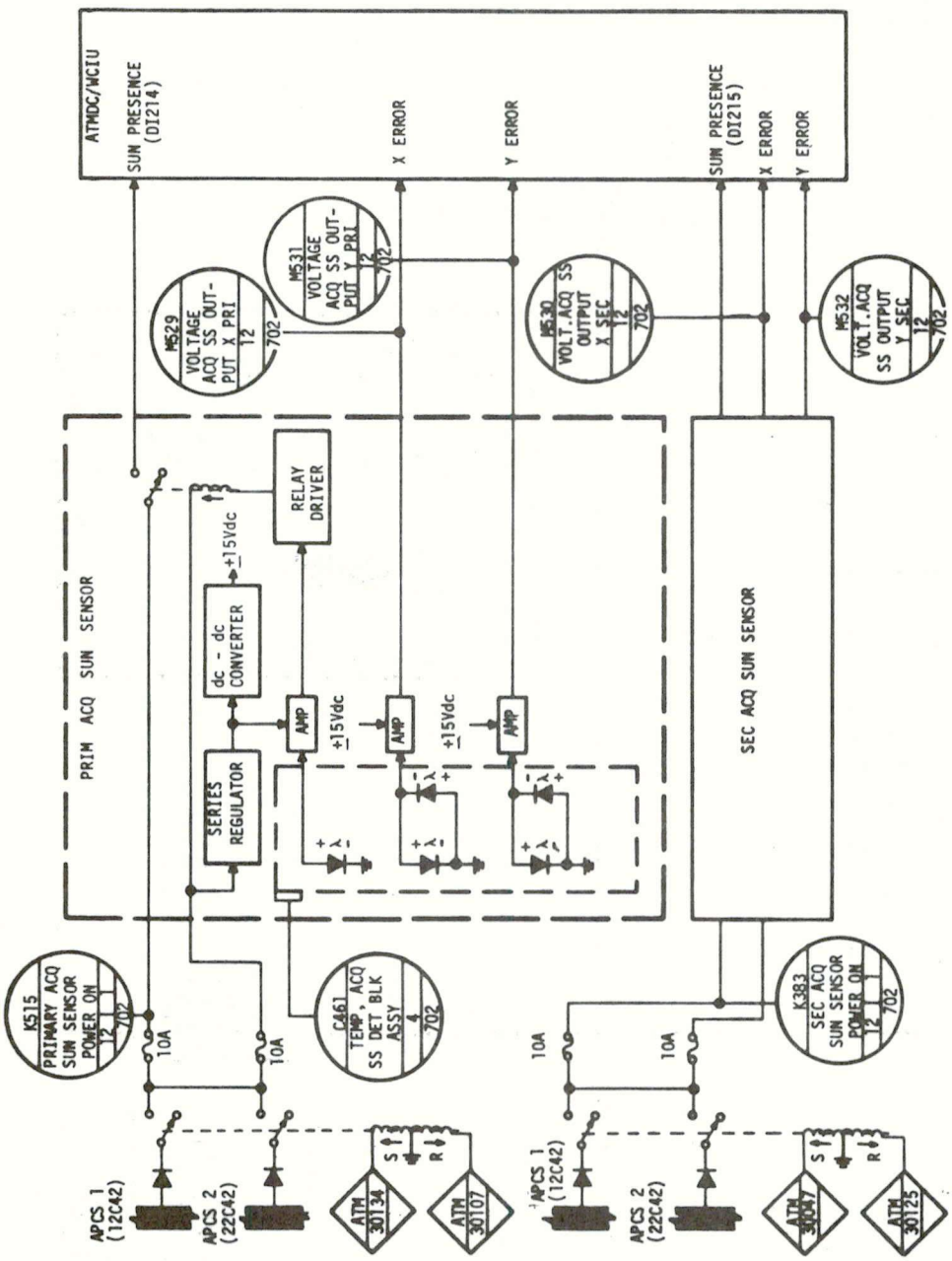

Figure 2.5-23 Acquisition Sun Sensor-Functional Diagram (1 of 2)

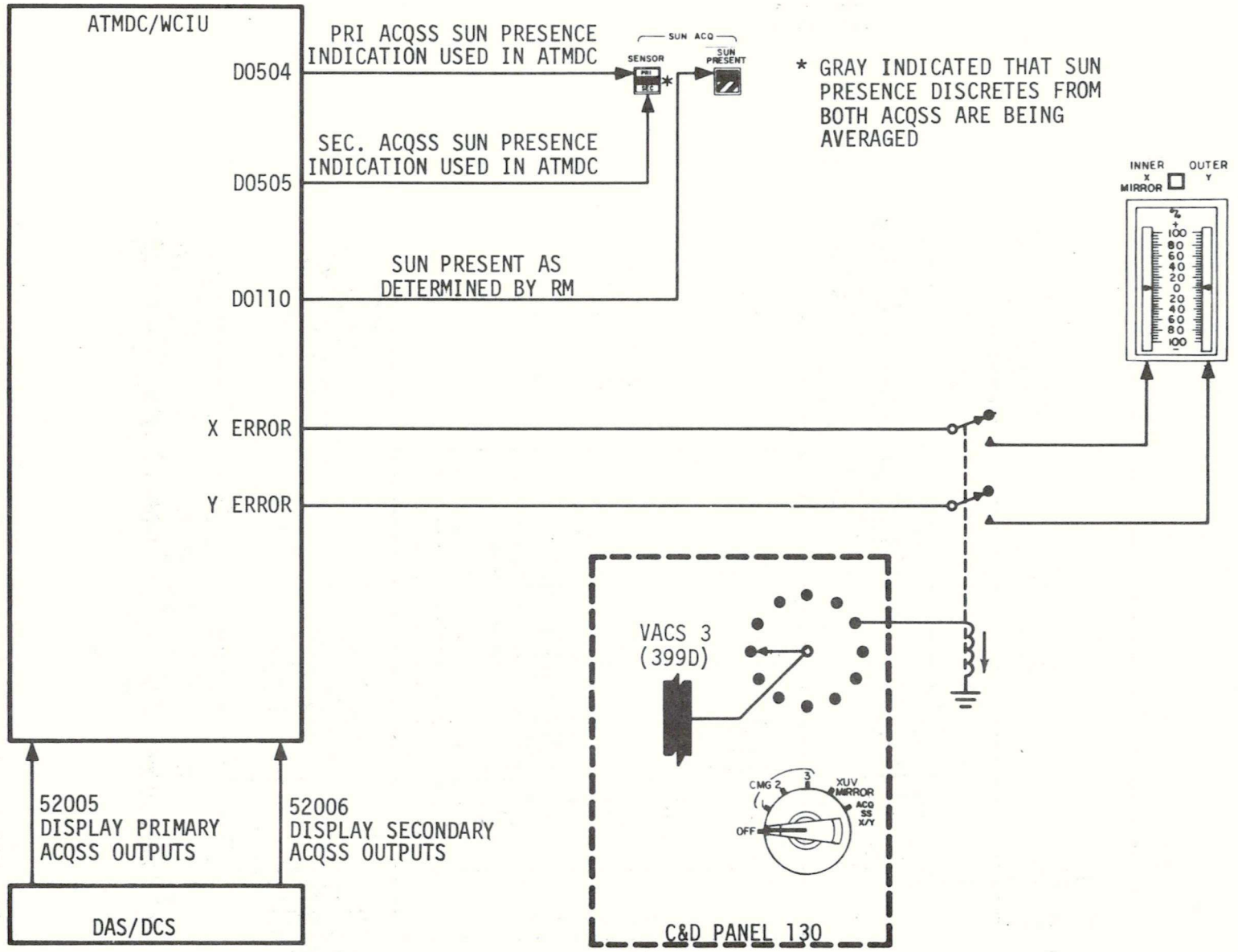

Figure 2.5-23 Acquisition Sun Sensor-Functional Diagram (2 of 2)

differenced to produce a null indication. The spectral and spherical aberrations of the detector optics produce error signals which vary linearly with sensor-sun misalignment over a limited range.

The target detector is aligned such that it produces an output signal when the sun is within the field-of-view of both pairs of solar pointing detectors. Externally, it is identical to the energy balance detectors but functionally, it is quite different. An internal optical baffle limits the unit's field-of-view in such a way that its output is essentially binary: high when the solar pointing detectors are operational and low otherwise.

2.5.4.2.1 Acquisition Sun Sensor Activation - The only way the primary and secondary ACQ SS can be powered up is by using DAS/DCS commands. Normally, both sensors are active and provide redundant attitude information to the ATMDC. Redundant sun presence signals are also fed to the computer. The ATMDC monitors all ACQ SS inputs as a part of its ACQ SS redundancy management scheme (See paragraph 2.5.3.3). The ATMDC drives the SUN ACQ talkbacks on the C&D panel according to function command 52014. The SENSOR talkback indicates which ACQ SS is being used for the sun presence signal. Gray indicates that both sensors are being used. The SUN PRESENT talkback will indicate a gray when the sun is in the ±9 degree FOV of the ACQ SS.

The analog signals of either sensor can be displayed on the C&D ANGLE meter by placing the ANGLE selector switch to ACQ SS X/Y. A DAS/DCS command is required to select which sensor is to be displayed. Function command 52005 displays the primary ACQ SS and 52006 displays the secondary.

2.5.4.3 Star Tracker (ST) Subsystem - The star tracker (See Figure 2.5-24) functions are to provide celestial position information (with respect to the sun, earth, and spacecraft) for calculating a solar experiment roll reference and orbital plane error (See paragraph 2.5.3.1.9). This information is in the form of an outer gimbal position and is used for the above computations in the ATMDC.

Figure 2.5-27 is a simplified star tracker system diagram showing the ST to be an optical tracking system nested in a pair of gimbals. The control of the ST gimbals is directed by the tracker mode logic selector. The function of the mode logic is to route various input signals to the servo amplifiers. These inputs are: a manual search; an automatic search; an electronic gimbal hold; and a tracking signal from the optical system. Inputs to the mode logic

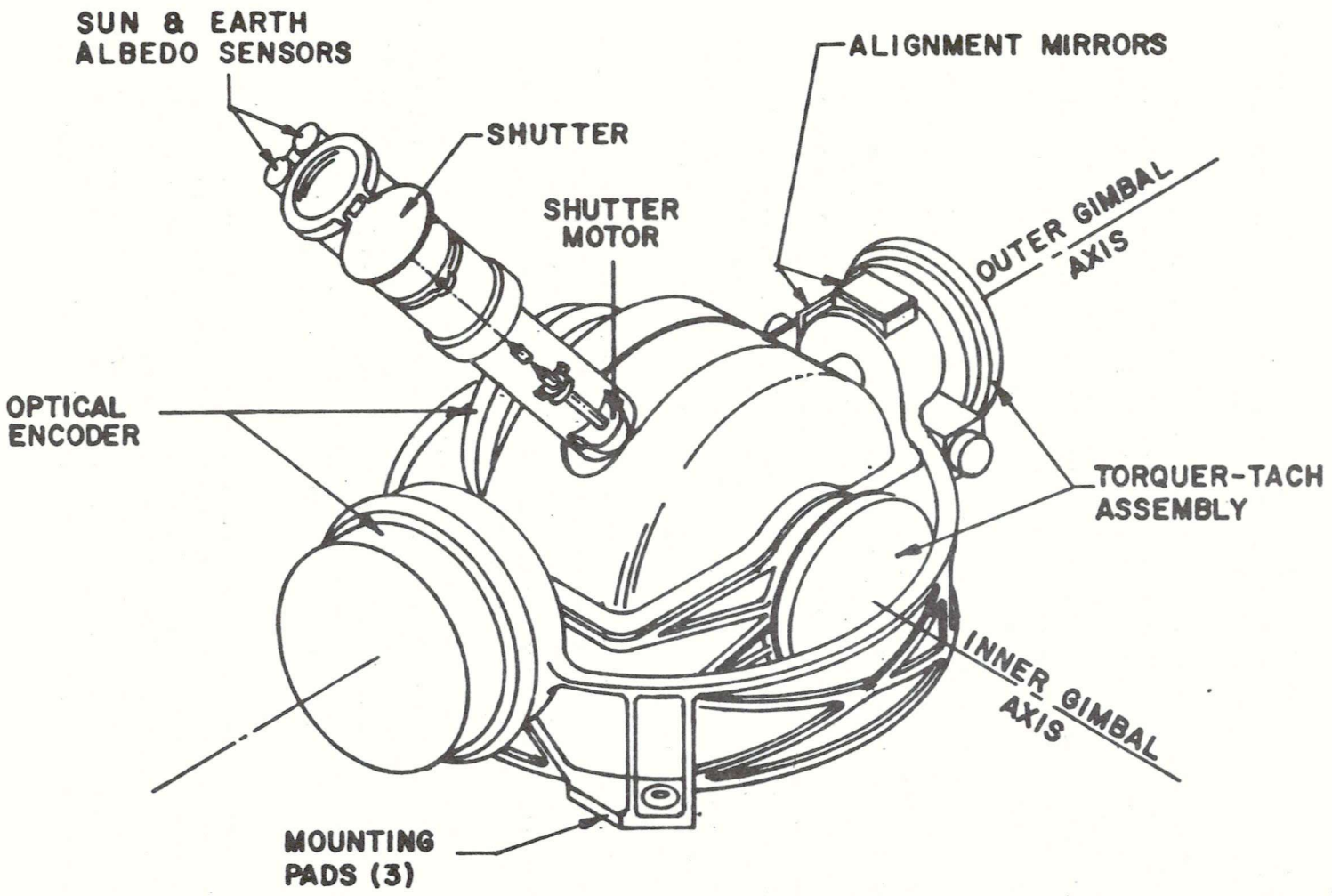

Figure 2.5-24 Star Tracker OMA

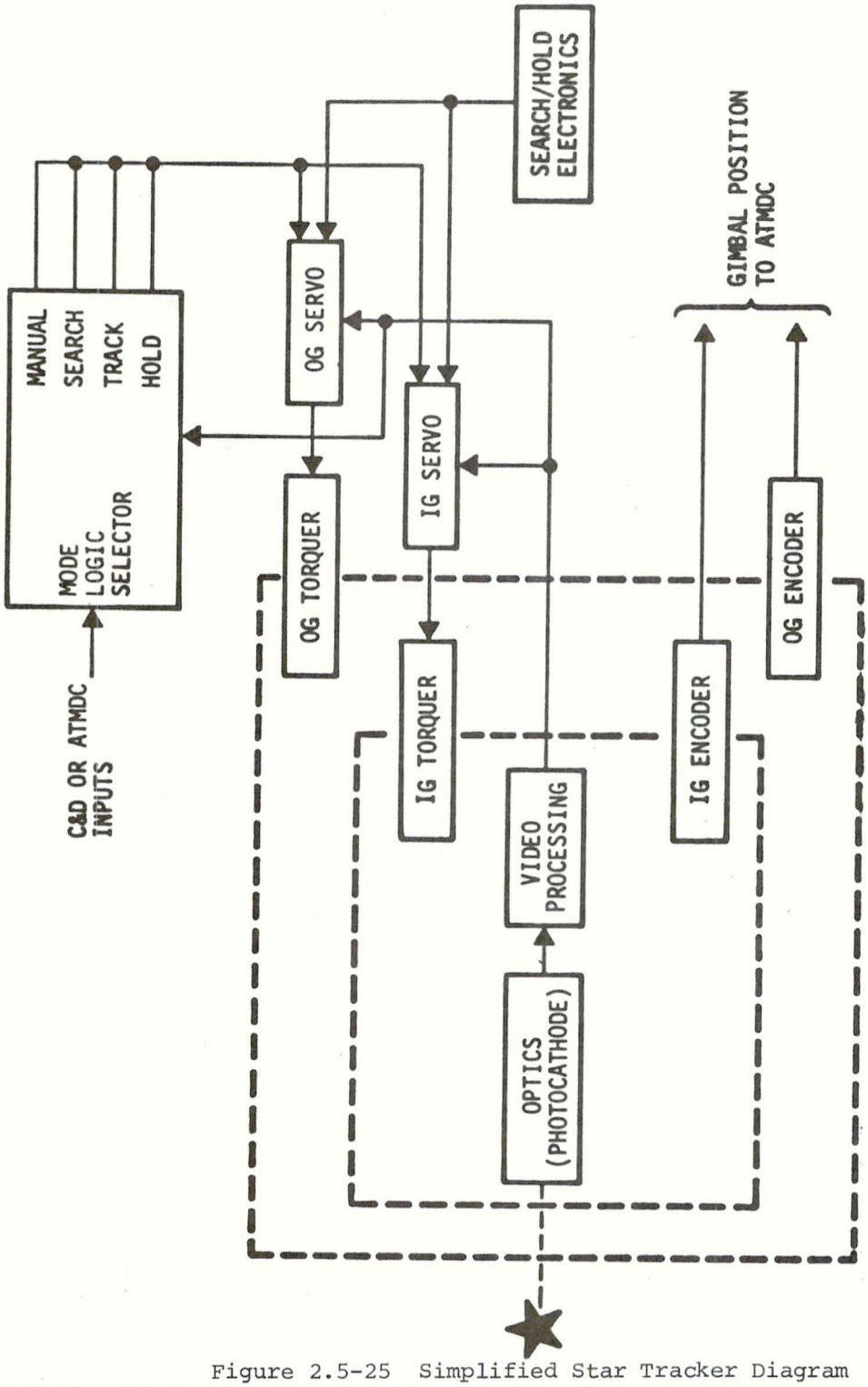

Figure 2.5-25 Simplified Star Tracker Diagram

are the C&D panel switches and the ATMDC discrete output register. Conditions for ATMDC star tracker control are discussed in paragraph 2.5.3.2.3.

The ST is powered up either by a C&D power switch or DAS/DCS commands (See Figure 2.5-26). Both 28VDC and 130v, 455Hz power are required. The dc power is supplied by the APCS buses and the ac power is supplied by one of two CMG inverter assemblies. Switch selector commands are the only means of selecting the ac source. The commands also provide a capability to remove ac power independently from the switch. The C&D power switch commands all power on or off if a primary or secondary 455Hz source was commanded on.

To locate a star initially, the crew will command the ST to the MANUAL mode of operation. This, in effect, connects the outputs of the Manual Pointing Controller (MPC) to the input of the servo amplifiers (See paragraph 2.5.3.7.3). The ST gimbals are driven open loop to the approximate star coordinates.

The gimbal positions can be read on the C&D panel by placing the ACS monitor selector switches appropriately. When the desired star coordinates appear on the C&D counters, crew will initiate the AUTO command from the C&D panel (See Figure 2.5-27). The mode logic block now sets up the servo amplifiers to receive inputs from the ST digital logic unit.

The digital logic unit (DLU) has several functions. All during the tracker operation, encoder position information is processed and delivered on command to the ATMDC and telemetry. When an AUTO command is received, the DLU drives the inner and outer gimbals through a preprogrammed search pattern (See Figure 2.5-28) using the encoder gimbal position information actively for feedback. The search is terminated by locating a star or receiving a SHUTTER CLOSE (HOLD) command from the C&D panel or ATMDC (See paragraph 2.5.3.7.3).

When a star is detected, the mode logic conditions the servo amplifiers to receive error signals from the telescope electronics. The function of the telescope electronics is to first determine whether or not a star of proper magnitude is within the acquisition one degree FOV. When this occurs, a star presence signal is generated. Secondly, it supplies coordinate analog signals that represent the error between the null reference axis (optical axis of the ST) and the impinging star line. While the ST is tracking a star, accurate information of roll reference and orbital plane error for display is available to the ATMDC on the C&D console and for telemetry.

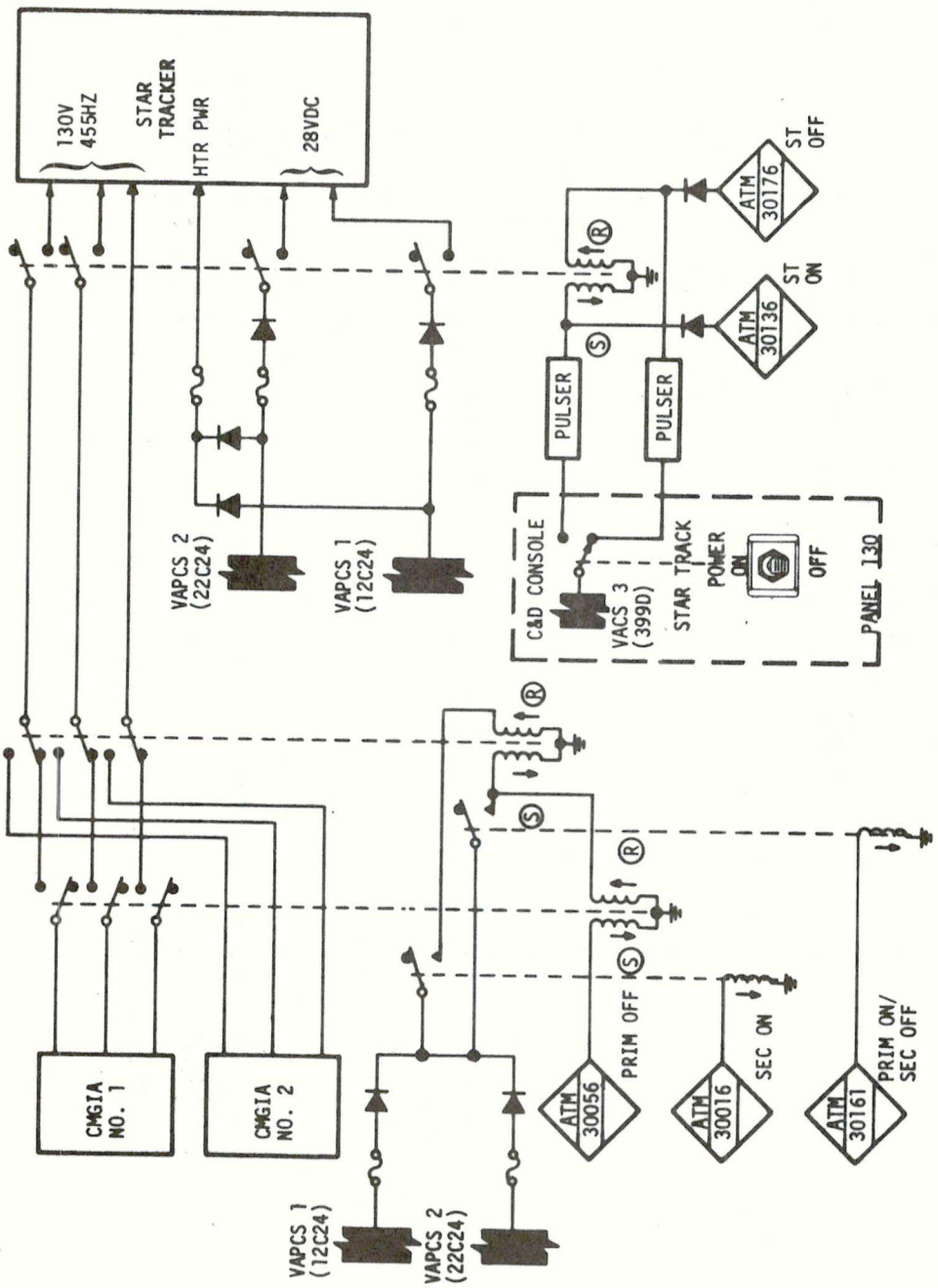

Figure 2.5-26 Star Tracker - Power Control

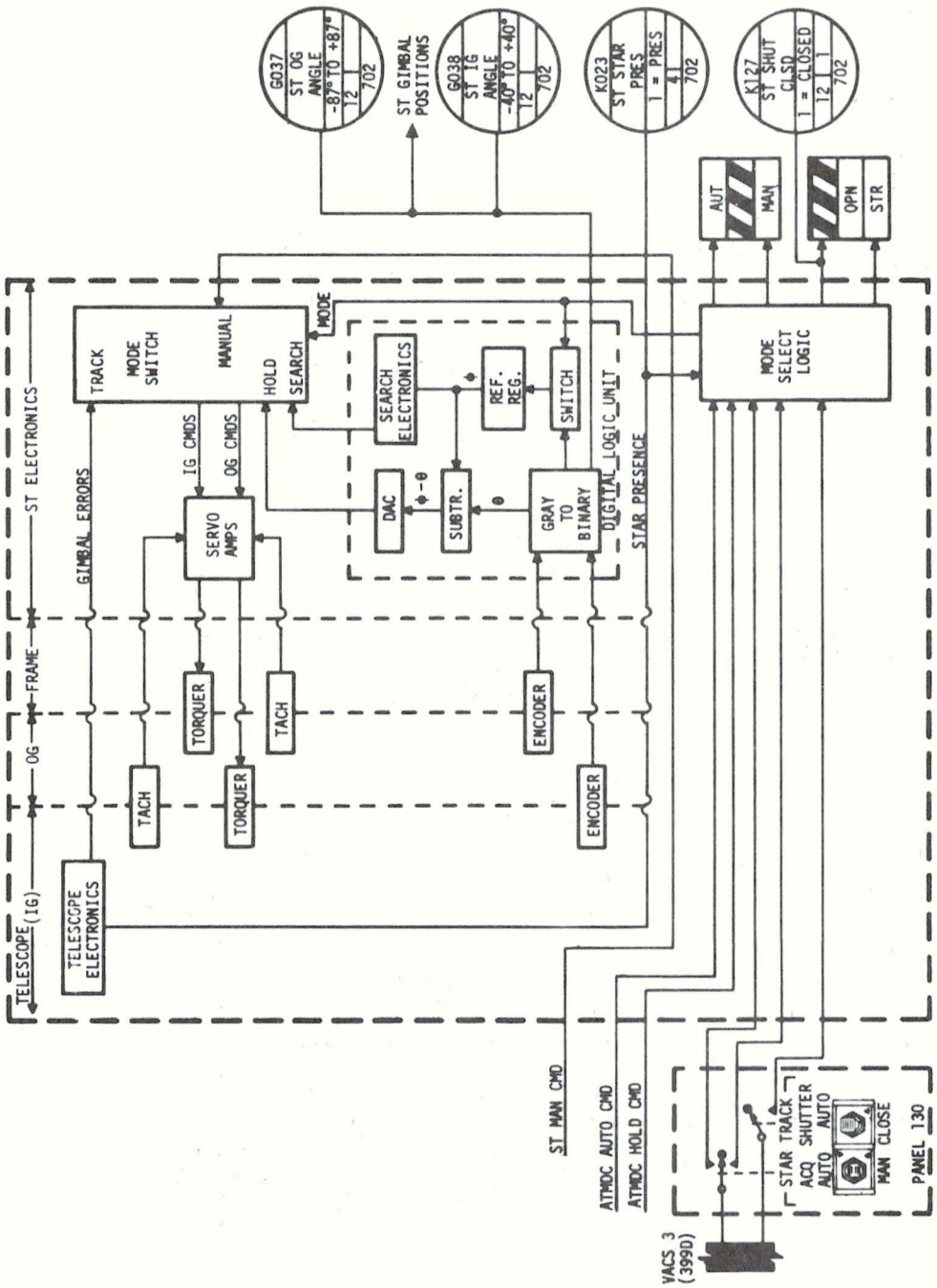

Figure 2.5-27 Star Tracker - Functional Diagram

NOTES: DASHED LINES - FINE SEARCH
SOLID LINES - COARSE SEARCH
(A) START OF FINE SEARCH
(J) START OF COARSE SEARCH
(K) IG ACCUMULATOR CLEARED AFTER FINE SEARCH
(N) IG ACCUMULATOR CLEARED AFTER COARSE SEARCH
(O) COARSE SEARCH REPEATS

Figure 2.5-28 Two Axis Gimbal Search Pattern

When a SHUTTER CLOSE (HOLD) command is received from either the C&D Console or the ATMDC, the DLU drives the servo amplifiers such that the gimbals are held electronically to their last position prior to receiving the SHUTTER CLOSE (HOLD) command.

The ST has shutter electronics which responds to various commands. When a MANUAL or AUTO command is received from the C&D or AUTO command is received from the ATMDC by the mode logic, the shutter is opened. The shutter will close in response to: a HOLD command (ATMDC); a SHUTTER CLOSE command from the C&D panel; or a close signal from the earth and sunlight sensors.

Separate sun and earth sensors will allow star tracking to within 45 degrees of the sun and five degrees of the earth albedo. Whenever either one of these sensors comes within the prescribed angle, the shutter mechanism is activated to protect the ST photocathode.

2.5.4.4 ATM Digital Computer - The ATM digital computer system is composed of two ATMDCs and one WCIU. One ATMDC and part of the WCIU are connected together to form a primary system. An identical secondary system is composed of the other ATMDC and part of the WCIU. A common section is also contained in the WCIU that operates with either system. Power is applied to the common WCIU section and the selected primary or secondary system.

The ATMDC contains a central processor, random access core storage, and several input/output channels. A simplified block diagram of the ATMDC is shown in Figure 2.5-29. The ATMDC is a general purpose digital computer i.e. a stored flight program will reside in the ATMDC memory and can be altered by the DAS/DCS command system. Therefore, the operation of the APCS is determined by the flight program. The flight program specifications are given in the Program Definition Document (PDD).

2.5.4.4.1 ATMDC Central Processor - The central processor contains the facility for addressing main storage, for fetching or storing information, for arithmetical and logical processing of data, instruction sequencing, timing and communication with external equipment.

Figure 2.5-30 is a block diagram of the ATMDC central processor. The data flow contains three data buses - X bus, Y bus, and the main bus. The Y bus gates one of three registers to the right side of the adder through true and complement gating. Output data from the adder is distributed to any one of seven registers via the main bus. Before the adder outputs are placed on the main bus, they may

NOTES: DASHED LINES - FINE SEARCH
SOLID LINES - COARSE SEARCH
(A) START OF FINE SEARCH
(J) START OF COARSE SEARCH
(K) IG ACCUMULATOR CLEARED AFTER FINE SEARCH
(N) IG ACCUMULATOR CLEARED AFTER COARSE SEARCH
(O) COARSE SEARCH REPEATS

Figure 2.5-28 Two Axis Gimbal Search Pattern

When a SHUTTER CLOSE (HOLD) command is received from either the C&D Console or the ATMDC, the DLU drives the servo amplifiers such that the gimbals are held electronically to their last position prior to receiving the SHUTTER CLOSE (HOLD) command.

The ST has shutter electronics which responds to various commands. When a MANUAL or AUTO command is received from the C&D or AUTO command is received from the ATMDC by the mode logic, the shutter is opened. The shutter will close in response to: a HOLD command (ATMDC); a SHUTTER CLOSE command from the C&D panel; or a close signal from the earth and sunlight sensors.

Separate sun and earth sensors will allow star tracking to within 45 degrees of the sun and five degrees of the earth albedo. Whenever either one of these sensors comes within the prescribed angle, the shutter mechanism is activated to protect the ST photocathode.

2.5.4.4 ATM Digital Computer - The ATM digital computer system is composed of two ATMDCs and one WCIU. One ATMDC and part of the WCIU are connected together to form a primary system. An identical secondary system is composed of the other ATMDC and part of the WCIU. A common section is also contained in the WCIU that operates with either system. Power is applied to the common WCIU section and the selected primary or secondary system.

The ATMDC contains a central processor, random access core storage, and several input/output channels. A simplified block diagram of the ATMDC is shown in Figure 2.5-29. The ATMDC is a general purpose digital computer i.e. a stored flight program will reside in the ATMDC memory and can be altered by the DAS/DCS command system. Therefore, the operation of the APCS is determined by the flight program. The flight program specifications are given in the Program Definition Document (PDD).

2.5.4.4.1 ATMDC Central Processor - The central processor contains the facility for addressing main storage, for fetching or storing information, for arithmetical and logical processing of data, instruction sequencing, timing and communication with external equipment.

Figure 2.5-30 is a block diagram of the ATMDC central processor. The data flow contains three data buses - X bus, Y bus, and the main bus. The Y bus gates one of three registers to the right side of the adder through true and complement gating. Output data from the adder is distributed to any one of seven registers via the main bus. Before the adder outputs are placed on the main bus, they may

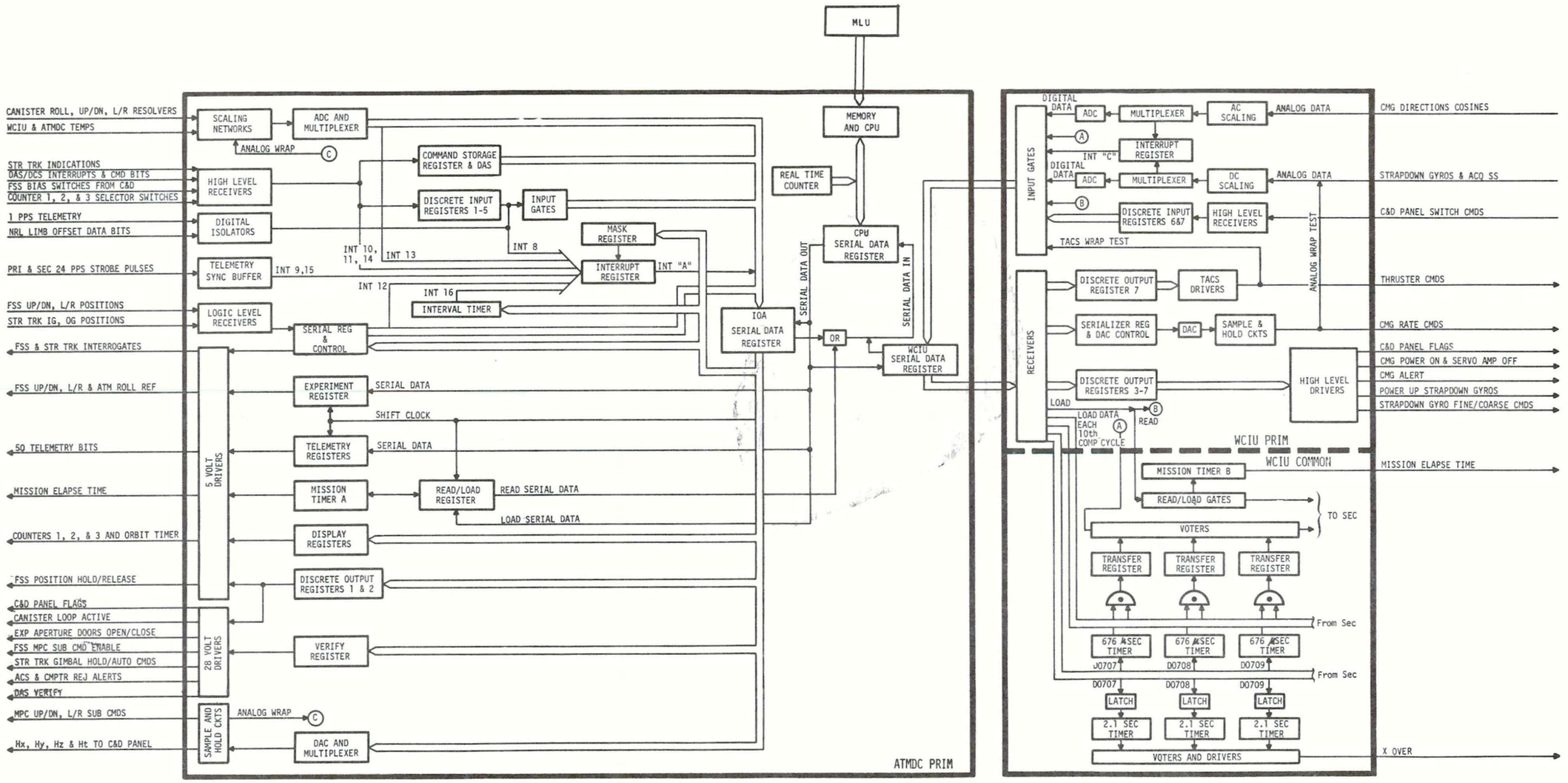

Figure 2.5-29 ATMDC/WCIU INPUT/OUTPUT - Simplified Block Diagram

be shifted left or right one to 16 bit positions by the shifter. Data inputs and outputs to and from the I/O are gated onto the main bus (See Figure 2.5-30). In the case of the instruction register, the A Register (accumulator), and the A register-Q register combination, data is gated from the low order register of the stack, and each higher order register is shifted broadside into the next lower order register.

The central processor is a bus-system design consisting of the following major components:

Accumulator (A) - The 16 bit accumulator is the principle arithmetic register. It is divided into two 8 bit registers to facilitate processing of the 16 bit data word.

Multiplier-Quotient Register (Q) - The Q register is a 16 bit low order extension of the accumulator. It is divided into two 8 bit registers.

Storage Buffer Register (SBR) - The SBR register is an 8 bit register that receives the output from the memory. The flight program is loaded from an external (ground only) tape reader through the SBR.

Displacement Register (D) - The D register is an 8 bit register that stores the address displacement. The Computer processes a displacement field of up to 256 words (16 bits) for long format instructions and up to 16 words for short format instructions. It is also used as a temporary storage register on various arithmetic and input/output operations.

Instruction Register - The register is a 16 bit register that holds the address of the next sequential instruction. It is divided into two 8 bit registers.

Operation Register (O) - The operation register is an 8 bit register used to buffer the operational code bits and a 6 bit decoder to decode the instruction to be performed.

Storage Address Register (SAR) - The Storage address register is a 15 bit register used to store and select proper memory address. It is divided into one 8 bit register and one 7 bit register. The address bits, SAR LO 0 - 6 and SAR HI 2-7, are used by main store to address a given word (16 bits). SAR LO - 7 is used to select the hi or lo byte (8 bits) which is transferred to the SAR. SAR HI 1 is used to select one of the two memories to be addressed.

Shift and Multiply Counter (S/M) - The S/M counter is used to count iteration during shift, multiply, and divide instruction. The 5 bit counter allows for a maximum of 16 shifts in either direction.

Status Register - The status register contains the wait state bit, the carry indicator, and interrupt mask bit. Bit 0 of the status register is the carry indicator and reflects the current machine state. Bit one indicates that the computer is in the wait state when set. The computer does not execute instructions in the wait state. The wait state is reset only by an interrupt or by power on reset. Bit 5, the third bit of the status register, is the mask interrupt. The third bit of the status register is referred to as bit 5 in order to maintain continuity with the status word format.

Adder/Subtractor (A/S) - The 8 bit adder executes all arithmetic and effective address update functions. The adder also has the capability to perform AND, OR, and EXCLUSIVE OR functions.

The processor section generally initiates a start memory every three microseconds. Memory addresses 0 through 31 are reserved for 16 special operations as shown in the following list. Memory address location 512 is loaded into the instruction register for system reset start and power on start points.

SPECIAL STORAGE ASSIGNMENTS IN MEMORY

Usage	Byte Address (Decimal)
Linkage Register (L) Address	0, 1
Base Register One (B1) Address	2, 3
Base Register Two (B2) Address	4, 5
Base Register Three (B3) Address	6, 7
Instruction Counter Storage - Interrupt	20, 21
Location Containing Next Instruction Address - Interrupt	22, 23
System Reset Start Location - This storage location is also used for power- on start location	512, 513

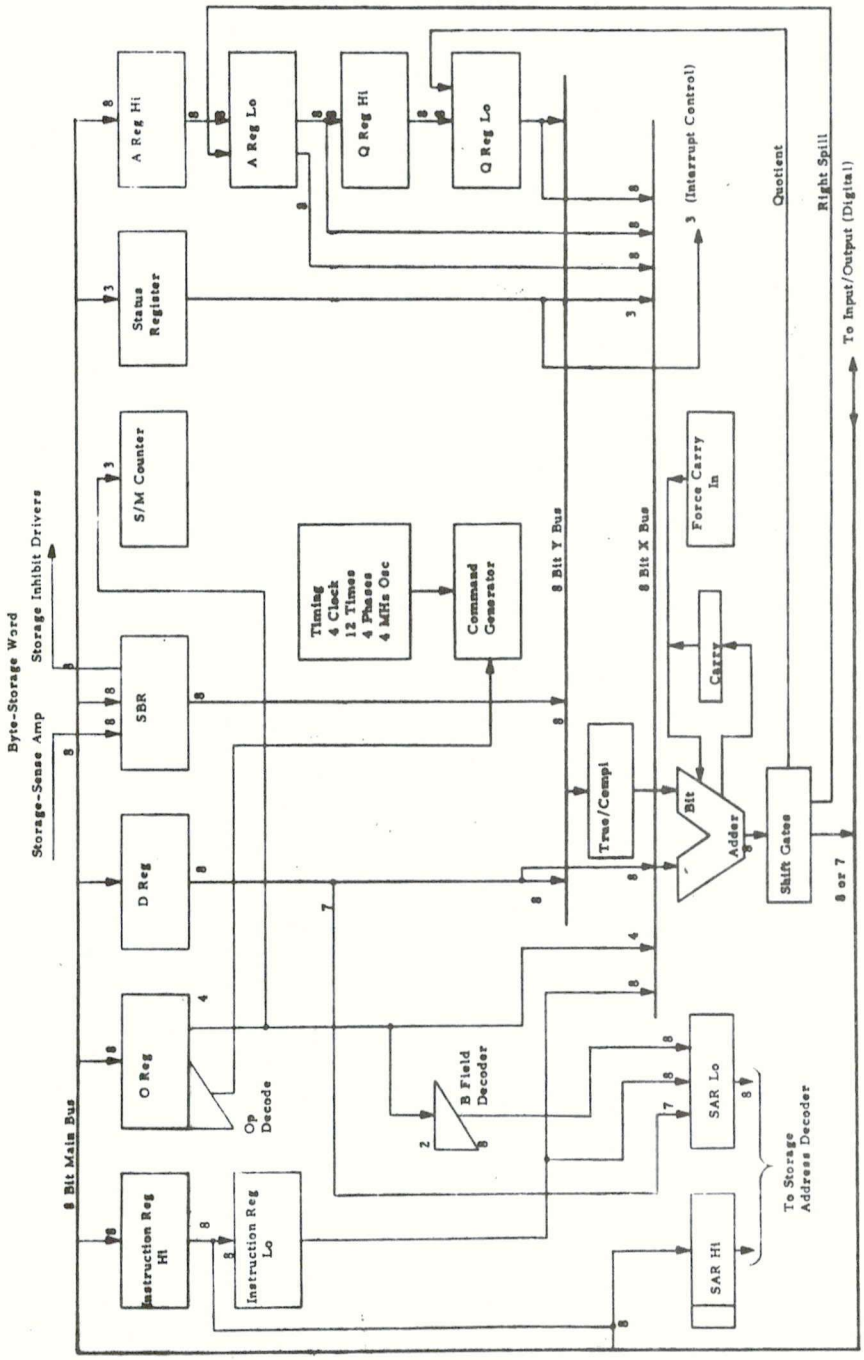

Figure 2.5-30 ATMDC CENTRAL PROCESSOR SECTION BLOCK DIAGRAM

APCS

2.5.4.4.2 ATMDC Memory - The 2.5 microsecond memory (16,384 (16 bits) words) has a parallel 8 bit transfer path to the central processor section. Memory access is accomplished by read/write cycle and operates in conjunction with a basic 3 microsecond computer cycle. The central processor is organized around the 8 bit data transfer path which minimizes hardware, and permits an 8, 16, 24, or 32 bit data format for efficient memory use.

2.5.4.4.3 I/O Section - The ATMDC I/O section is designed for the I/O to function in synchronism with the computer instructions. The execution of the IOC instruction is fixed in time (24 μs). Six microseconds are required for instruction handling and 18 μ sec are allowed to serially shift a 16 bit data word from an external source into the Central Processing Unit (CPU) serial data register (SDR). Figure 2.5-31 also shows the IOC instruction word format.

Data is transferred in two 8-bit data bytes between the processor and I/O sections. The SDR converts from parallel to serial on write (computer output) and from serial to parallel on read (computer input). The computer generates shift clocks at a one megacycle rate for timing of shift registers. These clocks are staggered in time so that the receiving register is shifted earlier than the sending register during either a read or write operation.

A computer interrupt consists of storing the updated instruction register and executing an automatic indirect branch. The instruction counter is saved in location 20 and 21, which is permanently assigned to interrupt. Another permanently assigned location, 22 and 23, contains the address of the next instruction to be executed. A test for interrupt occurs at the completion of most instructions. The status register contains an interrupt mask bit which controls the single priority interrupt. The program determines which of the possible interrupts has occurred and establishes interrupt priority. See paragraph 2.5.4.4.5.

When an interrupt occurs, an interrupt inhibit latch is set so no further interrupts will occur until this latch is reset. A load status word instruction,with bit 5 set to a one, must be given by the flight program to reset the interrupt inhibit latch to allow further interrupts.

2.5.4.4.4 Input/Output Control - The input/output control (IOC) instruction transmits 16 bits of information to (IOC read) or from (IOC write) the computer accumulator register. All computer input/output operations are conducted via the accumulator. The IOC instruction contains an eight bit code that specifies the input/output device address.

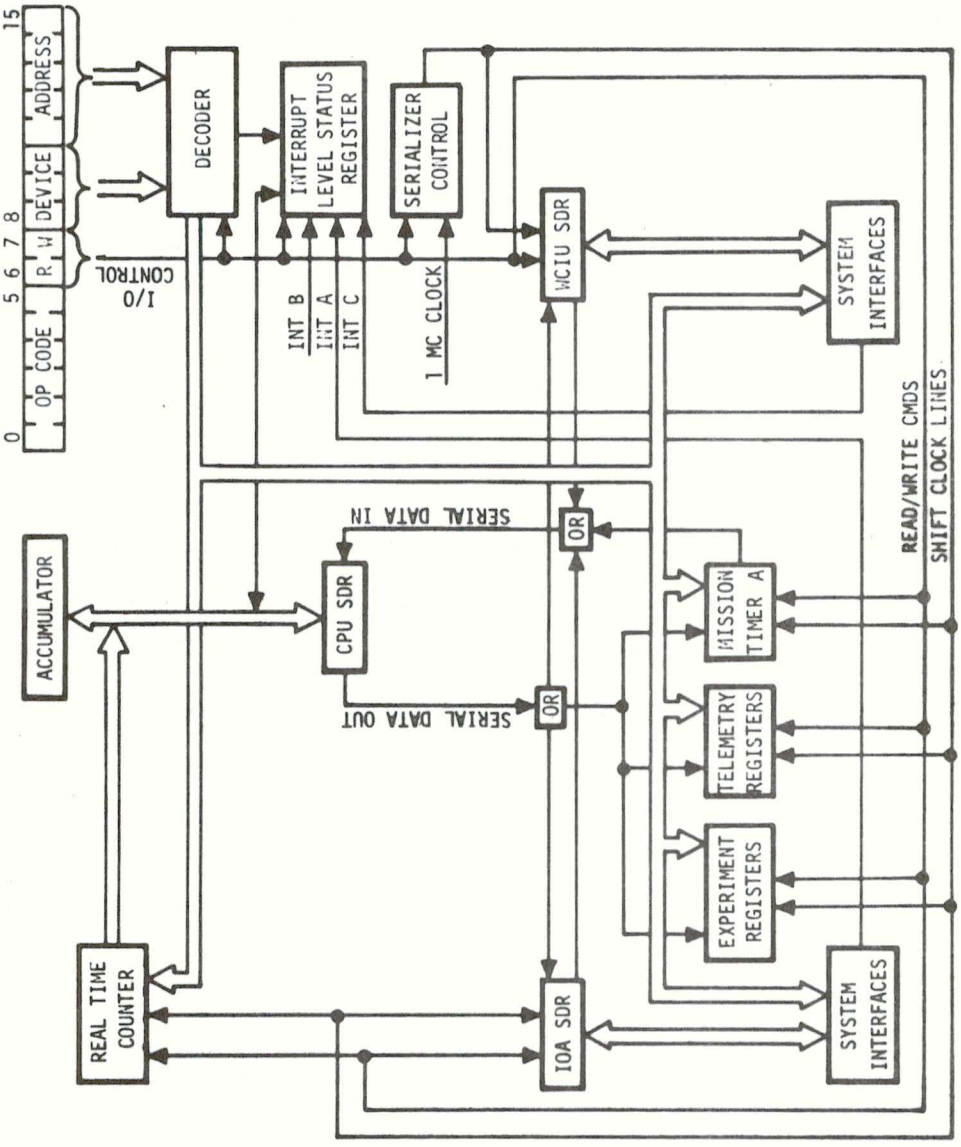

Figure 2.5-31 ATMDC I/O Control Block Diagram

Subaddressing is contained in the accumulator output bits of the special initiate commands (IOC write); initiate command for the ATMDC and for the WCIU. These commands are used to initiate acquisition or conversion of data that will later be read into the computer with an appropriate IOC read instruction. The ATMDC initiate commands are capable of requesting any one of the ac or dc analog input channel conversions simultaneously with one of the serial data input channels. Likewise, the WCIU initiate commands can select one of the ac or dc analog inputs, and load the mission timer B count into its buffer register.

2.5.4.4.5 Interrupts - There are three types of interrupts associated with the ATMDC. Type A interrupt is associated with The ATMDC input/output. The B interrupt is used by ground test equipment. Type C interrupt is associated with the WCIU input/output. Type A interrupt signals are stored in the ATMDC interrupt storage register and type C interrupt signals are stored in the WCIU interrupt storage register. Outputs of the interrupt storage registers are logically "or'ed" together, and the A, B, and C interrupts are stored in the interrupt status register.

Program control of an interrupt is accomplished with mask/unmask IOC instructions. The sources of A and C interrupts can be inhibited with the mask instruction and enabled with the unmask instruction on an individual interrupt signal basis. The computer status word register controls all interrupts.

After an interrupt has occurred, a latch in the interrupt logic will not allow another interrupt to occur until the computer status word is reloaded with a logical one in bit 5. All interrupts are masked by loading a zero in bit 5 of the computer status word.

Interrupt priority is established by the flight program (PDD) by execution of an interrupt processing sequence. This program logic is entered automatically when an interrupt is allowed to occur. The computer address of this routine is stored in location 22 and 23 and the address of the next instruction, which would have been executed if the interrupt had not occured, is stored in address 20 and 21. This allows the flight program to return to the exact point in the flight program after processing the interrupt or interrupts.

ATMDC Interrupt Storage Register "A":

Interrupt Number	Description
8	1 pps Telemetry
9	24 pps Telemetry, Secondary
10	Command Enable (Redundant DCS)
11	Command Execute
12	Serial Input (ATMDC)*
13	Analog Input (ATMDC)*
14	Command Enable
15	24 pps Telemetry, Primary
16	Interval Timer

*Not used by flight program.

WCIU Interrupt Storage Register "C" signals are analog inputs and are not used by the flight program.

2.5.4.4.6 ATMDC Power Supply - The ATMDC power supply receives redundant 28 vdc from the prime power source and converts the prime power into regulated dc output voltages. The power supply consists of duplex input line filters, +16 vdc pre-regulator, turn on/off sequencer, 25kHz oscillator, isolation power amplifier, five pulse width modulated (PWM) regulators, three series regulators, and filtered output voltages.

The ATMDC power supply either receives or develops five isolated grounds:

1. Prime power ground - This ground is received from the redundant prime power source and contains heavy switching currents generated by the power supply converters and regulators.

2. Signal ground - This ground is developed within the power supply and provides signal interface return for the computer and input/output assembly (IOA).

3. Mission timer A (MTA) ground - This ground is developed within the power supply and provides signal interface return for the MTA circuits.

4. Experiment output ground - This ground is developed within the power supply and provides the output signal return for ATM experiment circuits.

5. Experiment input ground - This ground is developed within the IOA and consists of nine transformer isolated returns for experiment input data.

Power single point ground is maintained external to the ATMDC by networks. IOA and computer single point ground is maintained internal to the ATMDC by returning all signal grounds to the power supply signal ground plane.

The sequencer inhibits computer operation during the application and removal of +28 VDC from the prime power source. The voltage sequence during "power up" is +5 VDC regulator on prior to the +30 vdc regulator turn on. The sequence during "power down" is +30 VDC regulator off prior to the +5 vdc regulator turn off. The sequencer circuits interface with the computer, +28 vdc input and the +30 vdc and +5 vdc PWM regulators. The sequence logic signals that interface with the computer are as follows: power on reset not (PORN), power off interrupt not (POIN), and storage complete not (SCN). The sequencer turn on/off timing is shown in figure 2.5-32.

Power is normally turned on and off by the application of the prime 28 vdc through the ATM network distributor. If a power transient occurs, the POIN signal is generated, changes state, under the control of a voltage monitor circuit.

When prime power is turned off or if the line voltage drops below 24 vdc for a duration greater than one millisecond, the power supply informs the computer through the POIN signal. The computer completes the last memory cycle and goes into a wait state while returning the storage complete signal to the power supply. If power returns to normal before the storage complete signal is sent from the computer, power shut down is inhibited and the computer will resume operation at the next instruction in sequence.

2.5.4.4.7 ATMDC Discrete Input Registers - Five discrete input registers (DIR) provide binary input information to the ATMDC. Each register is read by the computer through execution of the appropriate IOC read command. Discretes are referenced by register

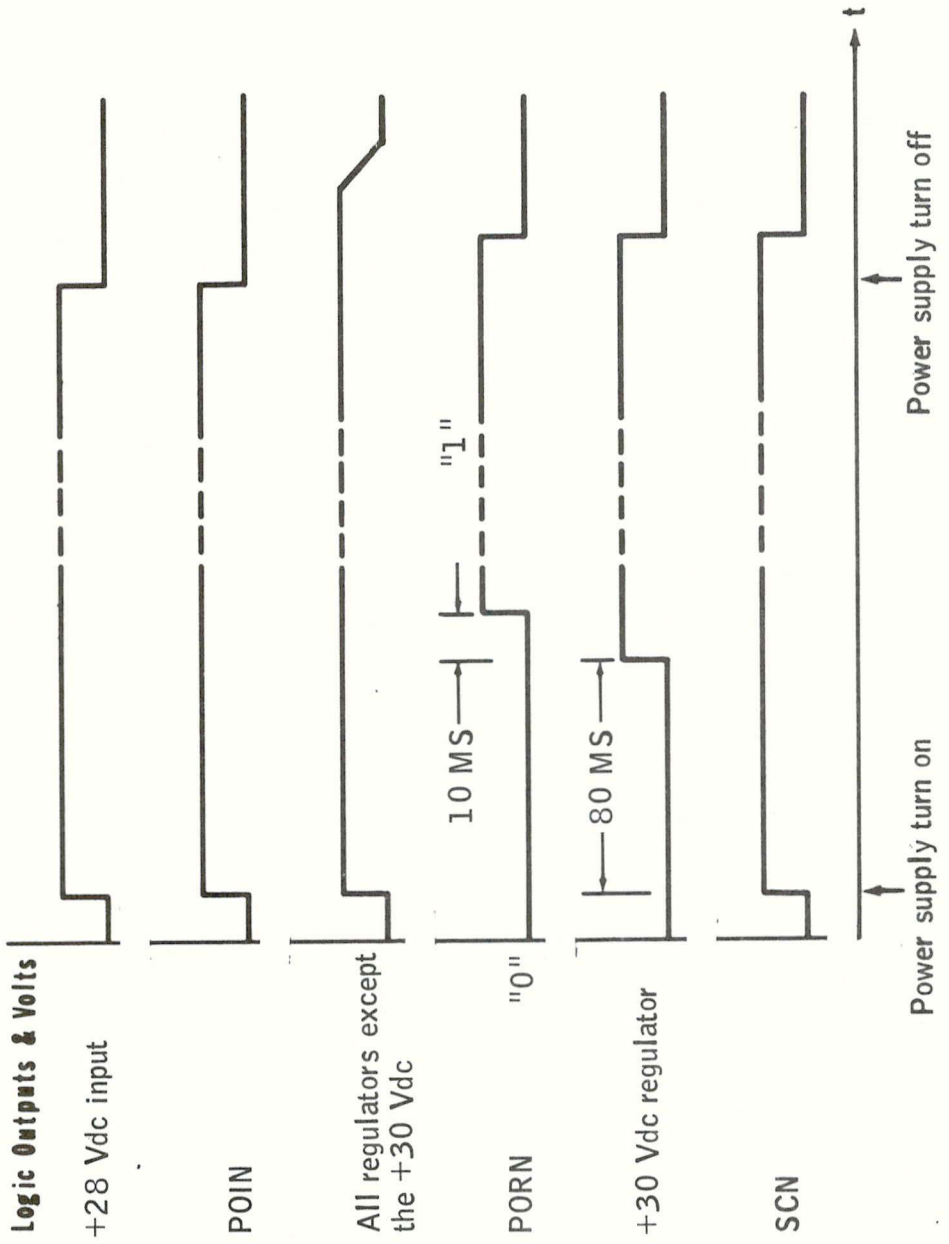

Figure 2.5-32 ATMDC Power Supply Turn ON/OFF

and bit (DI 116 discrete input register one bit 16). Two types of discretes inputs are used, continuous and momentary. A continuous discrete input state, logical one or zero, is determined by the input voltage level at the time of the IOC read command. Logic levels of 0-5 vdc and 0-28 vdc, representing a logical zero and one respectively, are used.

The momentary discrete inputs are pulsed inputs that are accepted, register set to one, if the logical one voltage level is exceeded for a duration of five milliseconds. Once the pulse is stored, the one will be held until transferred to the computer accumulator and the input signal has dropped to a zero voltage level for a period greater than 5 milliseconds. ATMDC DI's are defined in the flight program specification (PDD).

2.5.4.4.8 ATMDC Discrete Output Registers - Two discrete output registers (DOR) supply discrete output information to other systems. The computer IOC write instruction controls the state of each bit of the registers. This binary information is converted into output voltage levels of 0-5 vdc or 0-28 vdc, representing logical zero and one respectively. When a momentary discrete is loaded into a DOR, a 28 vdc, 65±15 millisecond pulse is generated on the output line. The register contains a 65 millisecond timer that automatically resets the entire register causing the outputs to go to zero. ATMDC DO's are defined in the flight program specification (PDD).

2.5.4.4.9 Timers - The following sources provide timing information to the ATMDC software. The ATMDC mission timer A provides a 64-day time reference; an ATMDC program loadable counter (interval timer) provides a timed interrupt reference; and an ATMDC real-time counter (RTC) provides a continuous incrementing time reference.

Mission timer A in the ATMDC and mission timer B in the WCIU provide redundant clock time information to a resolution of 15.625 milliseconds over a 64 day interval. Both timers are 29-bit coded counters capable of being read and loaded from the ATMDC accumulator.

The interval timer is a 16 bit decrementing timer with a resolution of 96 μsec. When the time interval reaches zero, an interrupt (INT16) is generated and the interval timer continues to decrement, starting with its maximum value (approximately 6.3 seconds). The interval timer is capable of being loaded with binary numbers from the ATMDC accumulator by execution of the appropriate IOC write instruction.

The real-time counter (RTC) is a 24 bit incrementing timer. When the timer interval reaches its maximum value (approximately 50 seconds) it will continue incrementing starting with a value of zero. The RTC is capable of being read by executing the appropriate IOC read instruction. Upon execution of this IOC read instruction, the

high order 16 bits of the RTC will be transferred to the ATMDC accumulator where the least significant bit equals 768 μsec.

2.5.4.4.10 ATMDC Serial Data Input - Serial digital data is read into the serial data register when the appropriate IOC initiate command is given by the flight program. A 10.417 kHz square wave is sent to the external source register, and controls the serial data shift into the ATMDC serial data register. Upon completion of the data transfer, an interrupt is issued to the A interrupt storage register. The data is then read by the appropriate IOC read command. The serial data channels are FSS wedge position for UP/DN and L/R axis (12 bits each) and star tracker inner and outer gimbal angles (15 bits each).

2.5.4.4.11 ATMDC Analog to Digital Input - The ATMDC analog to digital converter (ADC) uses the double ramp conversion technique. The unknown input voltage is signal conditioned and scaled; applied to an integrator (ramp up); removed from the integrator after a fixed time period; a known reference voltage is applied to the integrator in reverse polarity (ramp down) and a digital counter initiated. When the ramp down causes the integrator to cross zero volts, the counter and conversion is stopped. The counter now contains the binary equivalent of the input voltage. For dc voltages the ramp up time is controlled by a fixed timer. For ac voltages the integration time is determined by a half cycle of the ac reference voltage.

The conversion time will not exceed 0.8 milliseconds for the maximum input voltage change, and interrupt INT13 will be issued when the conversion is complete. AC channel digital outputs will contain a sign and eight bits resolution. DC channel outputs will contain a sign and seven bits resolution, with the eighth bit indicating an over voltage condition.

2.5.4.4.12 ATMDC Digital to Analog Output - The ATMDC digital to analog converter (DAC) uses the R-2R ladder network conversion technique with a sign and seven bits magnitude. The length of time required for the converter output to reach the value commanded by an IOC write instruction will be a function of the incremental change that is to be made on a given channel. A maximum change of 256 counts (±128) requires 20 milliseconds. After the conversion is completed, the DAC output voltage is gated (sampled) into the selected output channel, dc voltage hold circuit. This value will be held until the channel is reselected.

2.5.4.4.13 Memory Load Unit (MLU) - The MLU provides a flight program reload capability. Normal (16,384 words) and contingency (8,192 words) flight programs are stored on the MLU magnetic tape recorder. Under switch selector control, the selected ATMDC memory can be reloaded from the magnetic tape with the normal or contingency flight program. The MLU interfaces are shown in Figure 2.5-33 and the switch selector commands are listed in Table 2.5-XII and 2.5-XII.

Each ATMDC has two independent 8,192-word (8K) memory modules within its 16,384-word (16K) memory. If a memory failure occurs in either ATMDC, the failed ATMDC can be configured (See Table 2.5-XI) to an 8K memory instead of the normal 16K memory. This is accomplished by selecting the good memory module within the failed ATMDC through the use of switch selector commands. Then, also through the use of switch selector commands, the MLU is commanded to load the 8K flight program into the selected memory module.

During ground checkout, the MLU performs a multiplexer function by connecting either the ground equipment or the MLU tape recorder to the ATMDC test connectors. ATMDC memory load circuits are controlled through these test connectors. The MLU operating mode is selected by combinations of switch selector commands and discretes connected through the umbilical. Three of the switch selector commands listed in Table 2.5-XI are used to select the desired MLU operating mode shown in Table 2.5-XII.

After the desired operating mode has been selected, an execute command is required to initiate the mode. For example, to load a tape record containing the 8K flight program, (refer to Table 2.5-XII) control channel command 20102 is issued; followed by the execute command (20222).

A record identification (ID) is stored in the first portion of each tape record. After the execute command is issued, the tape is searched to attain a match between the channel command(s) issued and the record (ID). When the requested record is reached, the selected flight program is loaded into the selected ATMDC memory. A special bit pattern at the end of each tape record signals the MLU to stop the tape and issue a start command to the ATMDC. At this point the MLU enters the reset mode. The tape is recorded with alternating 8K/16K flight programs.

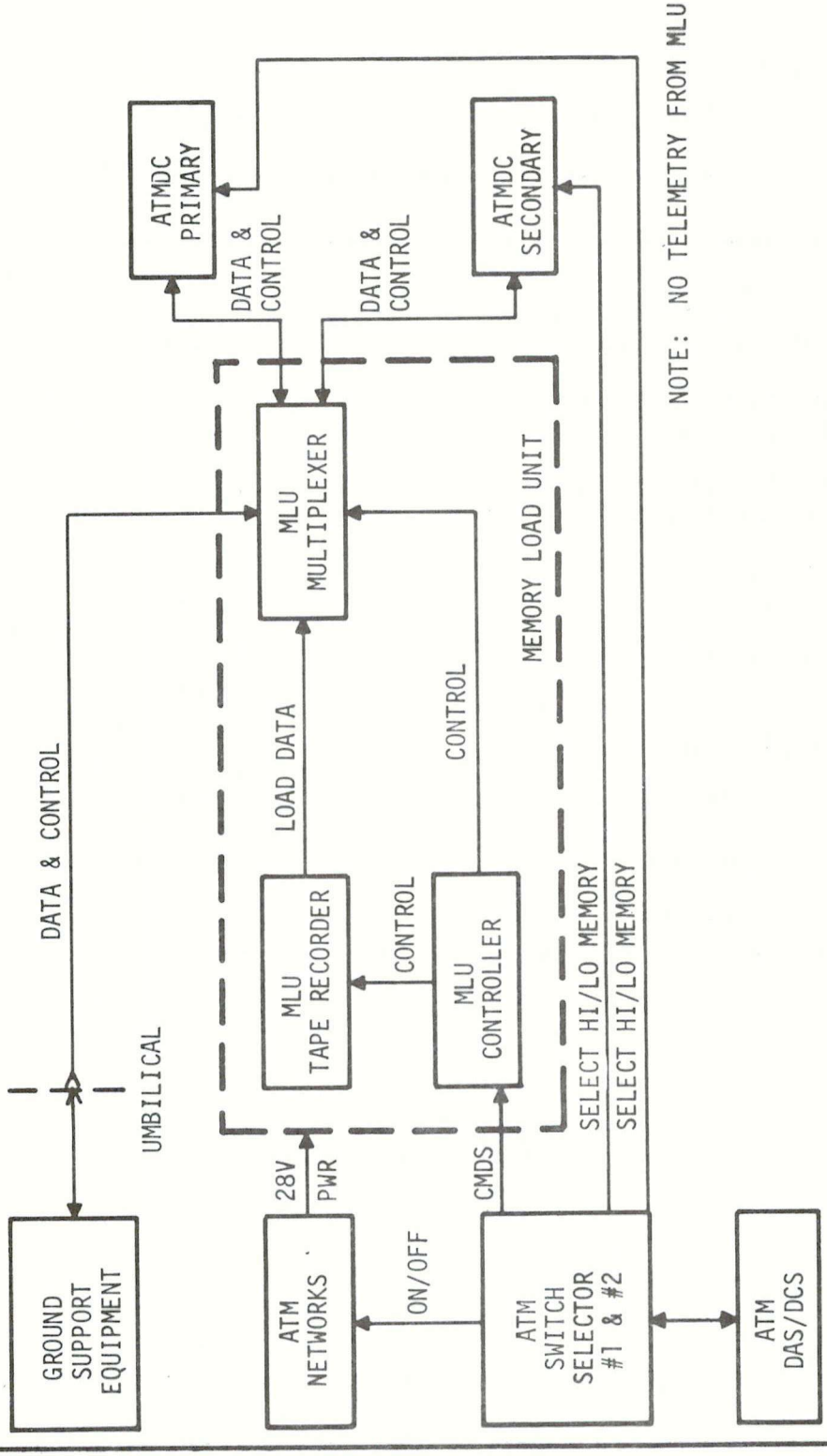

Figure 2.5-33 FUNCTIONAL DIAGRAM OF MEMORY LOAD UNIT AND INTERFACES

APCS

FUNCTION	COMMAND DCS/DAS
1. MLU power on and ATMDC memory select enable	10045
2. MLU power off and ATMDC memory select inhibit	10013
3. ATMDC primary and secondary low core select	20031
4. ATMDC primary high core select	20001
5. ATMDC secondary high core select	20051
6. Control Channel 1	20062
7. Control Channel 2	20123
8. Control Channel 3	20102
9. MLU execute command	20222

Table 2.5-XI MLU Associated Switch Selector Commands

MLU OPERATING MODE	CHANNEL 1 (20062)	CHANNEL 2 (20123)	CHANNEL 3 (20102)
Reset	-	-	-
Ground Test Mode	X	X	-
Umbilical Mode	X	X	X
Load Record 1 (8K)	-	-	X
Load Record 2 (8K)	-	X	-
Load Record 3 (16K)	-	X	X
Load Record 4 (16K)	X	-	-
Load Record 5 (16K)	X	-	X

Table 2.5-XII MLU Operating Modes

2.5.4.5 Workshop Computer Interface Unit - The WCIU provides extended 1/0 capability for the ATMDC's. The WCIU is divided into three sections, the common section and two identical sections; the primary and secondary section that are permanently connected to the primary and secondary ATMDC respectively. A simplified WCIU block diagram is shown in Figure 2.5-29. The common section contains triple redundant data transfer registers, triple redundant switch over control circuits, and mission timer B which is redundant to mission timer A in each ATMDC. WCIU I/O channels are controlled by the flight program through the IOC computer instruction. Parallel 16 bit I/O data transfer paths are provided between the ATMDC's and WCIU.

2.5.4.5.1 WCIU Power Supply - Each of the primary and secondary sections of the WCIU accepts two switched prime power inputs. The common section of the WCIU receives four unswitched inputs, two from each of the two prime sources. The common section contains four independent power supplies, one for mission timer B, and three for the TRM switchover controls and 64 bit transfer registers.

The six power supplies are each capable of detecting input voltages less than 23.0 volts for a period greater than one millisecond. Upon detecting this condition, all external digital and analog interfaces are forced to a zero state. When input power reaches a value greater than 24 volts, the circuits will be operative within 500 milliseconds. Each power supply generates its own power on reset signal which prevents spurious outputs during a power transient.

A clamp circuit is contained in the primary and secondary power supplies. These clamp circuits maintain an off state (power supply busses connected to ground through a clamp circuit) for the off line section.

During switchover between the primary and secondary systems, ATM networks insures that the time from power removal for one system to the application of power to the second system will be a minimum of 300 milliseconds.

2.5.4.5.2 WCIU Analog to Digital Inputs - The WCIU ADC uses the successive approximation R-2R ladder conversion technique. The analog to digital conversion is controlled by an IOC initiate command, an interrupt when complete, and an IOC read command.

The conversion process is accomplished by comparing the unknown input DC voltage to a known ladder network voltage. The most significant bit or ladder step voltage is switched on compared to the unknown voltage. Depending on the results of this comparison (greater or less than the unknown voltage), the bit is conditioned to a one or zero. The next step or bit is processed in the same way until all ten bits have been compared. The resultant binary number (sign and 10 bits) is the equivalent of the input voltage. For a dc voltage input, the conversion time is 150 milliseconds.

For ac voltage inputs, an integration or demodulator process is required before the unknown voltage is applied to the ADC. The integration is determined by an ac reference voltage. A negative half cycle from 30 degrees to 150 degrees is used to control the integration time. The output of the integrator is applied to the ADC to obtain the binary value of the input voltage. Redundant input signal paths are provided for CMG, strapdown rate gyros, and Acq. SS analogs.

2.5.4.5.3 WCIU Digital to Analog Outputs - The WCIU DAC uses the R-2R ladder network conversion technique. The binary information is shifted into the DAC and the state (sign and 10 bits) determines the polarity and magnitude of the dc output voltage, ±5 volts. A maximum change of 2048 counts will require 20 milliseconds. No change in a loaded value from the previously loaded value for a given channel will require 2.5 milliseconds before any other channel can be addressed. The data transfer into the DAC and ladder network selection is a fixed time. However, the voltage slewing time of the sample and hold circuit is dependent on the previous value.

2.5.4.5.4 WCIU Discrete Input Registers - WCIU discrete input registers convert discretes into digital signals which are ready by the appropriate ATMDC IOC read command. DIR6 is a momentary discrete input register and the bits used in DIR7 are continuous discrete inputs. WCIU DI's are defined in the flight program specification (PDD).

2.5.4.5.5 WCIU Discrete Output Registers - WCIU discrete output registers convert binary discretes into continuous or momentary output discretes. The registers are controlled by appropriate IOC write commands from the ATMDC. WCIU DO's are defined in the flight program specification (PDD).

2.5.4.5.6 WCIU TACS Drivers - Special TACS driver circuits (See Figure 2.5-34) actuate thruster control valves in response to firing commands. The thruster valve relay circuit is completed by the TACS driver circuit supplying a ground path. Two series connected circuits prevent a short in one power transistor from continuously firing a thruster. TACS drivers are digitally controlled by the state of DOR7 bits one through six. A thruster valve is open when a DOR7 bit is set, and closed when reset.

WCIU TACS drive wrap signals provide the flight program with a verification of the driver state. If switchover is enabled, and a discompare between the wrap signal and the commanded state are detected, switchover to the redundant ATMDC/WCIU system will be initiated.

2.5.4.5.7 WCIU Switchover Control - The circuits for switchover between primary and secondary ATMDC/WCIU systems are TMR 2.1 seconds and 676 microsecond timers, TMR 64 bit transfer registers, dual voters, and quad switchover discrete drivers. These circuits are located in the common WCIU section. See Figure 2.5-35. A functional description of the switchover logic is given in paragraph 2.5.3.3.7.4.

The reset DOR707, 708, and 709 command is issued after successfully passing the flight program checks, and the set DOR707, 708, and 709 command is issued after successfully completing the self test program for each slow loop. A latch on the DOR7 bits requires that the bits be toggled (reset and set).

The set DOR707, 708, and 709 enables a 676 microsecond window which allows the flight program to load the TMR 64 bit transfer registers, and resets the TMR 2.1 seconds timers. The transfer registers will be loaded after the completion of the self test routine approximately 17 comp cycles. The data loaded into the transfer registers will be 17 comp cycles old. If the 2.1 seconds timer (RC time constant) is not reset each computation cycle, a time-out discrete will be issued to the voter circuits. When two of the three 2.1 second timers indicate time-out, the switchover momentary discrete will be sent to ATM networks by the quad redundant drivers. ATMDC switchover enable/inhibit is controlled by ATM network relay logic.

2.5.4.6 Thruster Attitude Control System (TACS) - The TACS provides impulse for attitude control of the vehicle in all axes following separation from the SII stage. A detailed description of the TACS is given in Section 2.3 of the SLOH Volume I, MDA, OWS, AM. This section will functionally describe the APCS/TACS interface.

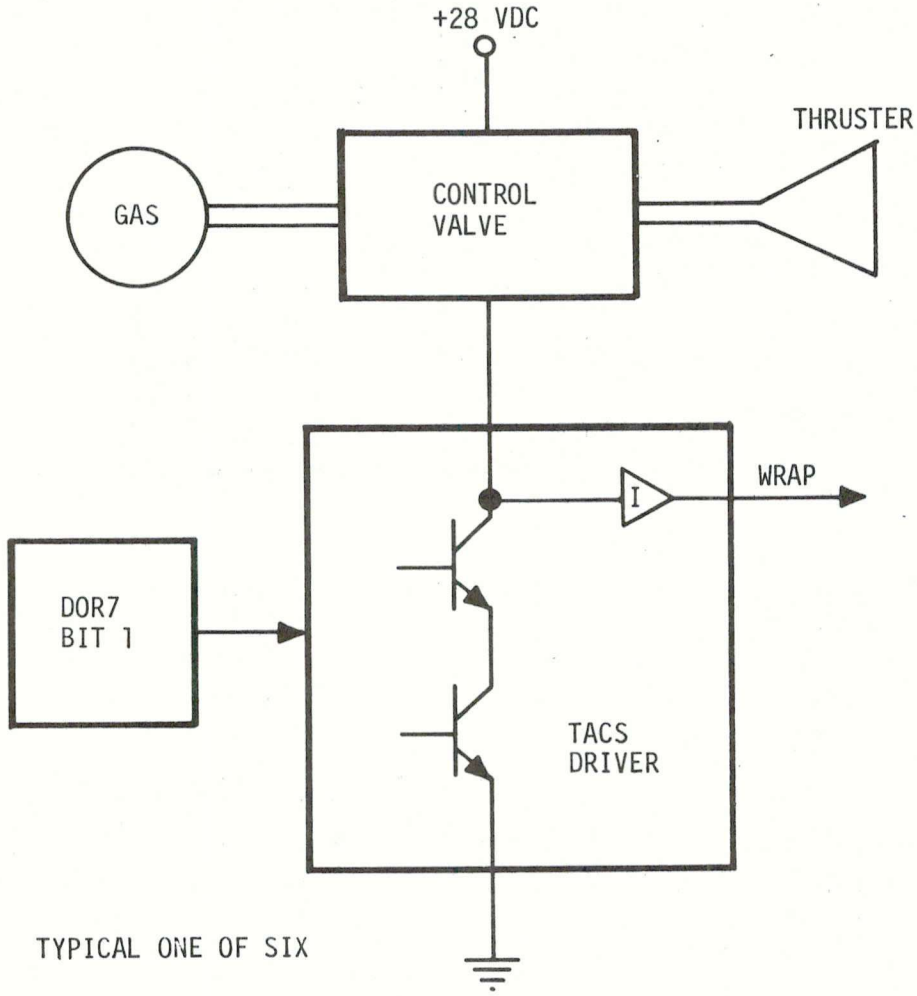

Figure 2.5-34 WCIU TACS Driver Functional Diagram

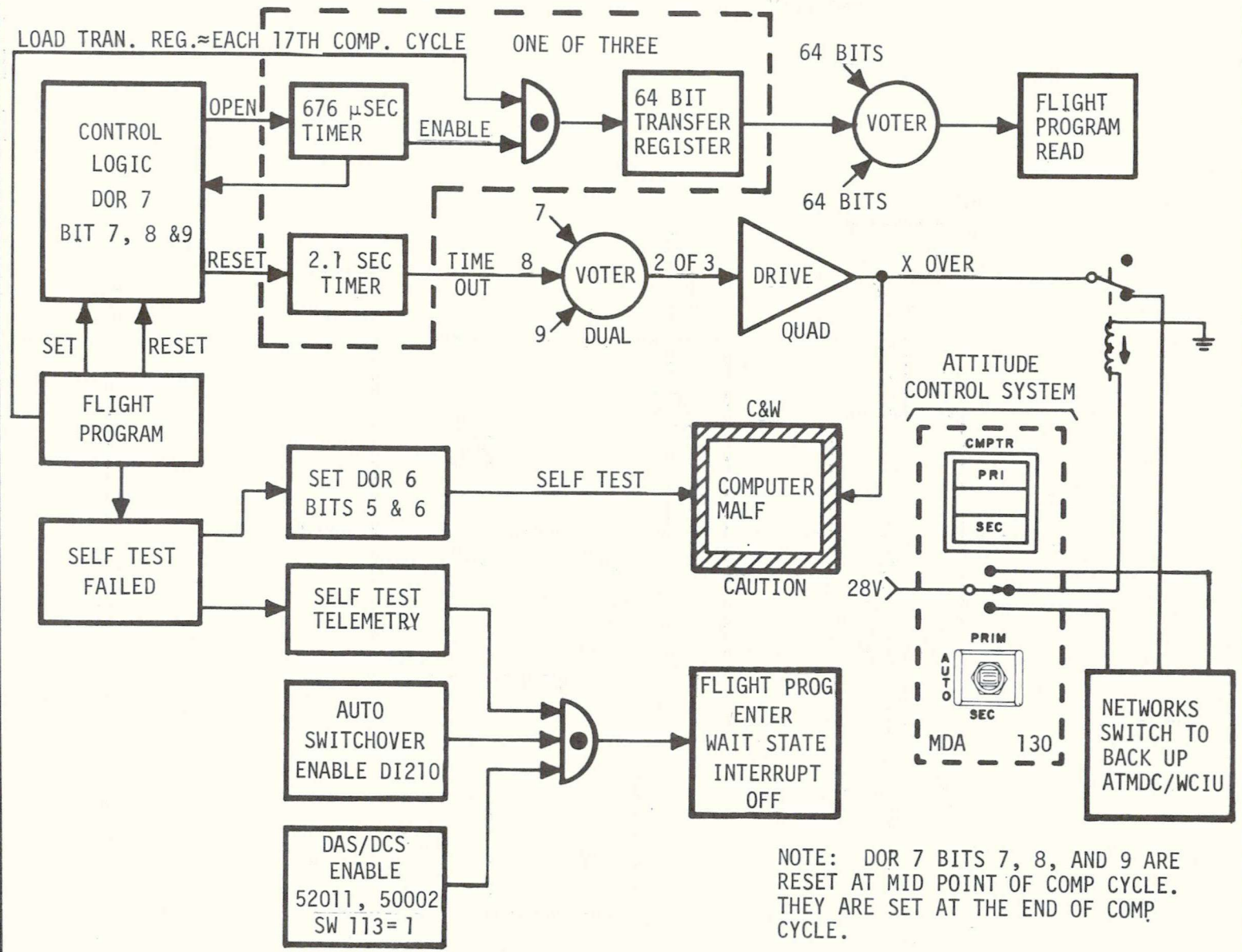

FIGURE 2.5-35 FUNCTIONAL SWITCHOVER CONTROL DIAGRAM

As shown in Figure 2.5-36, each ATMDC drives four solenoids associated with a thruster. When a computer is powered up, the APCS buses are applied to one side of the relay coils. The coils are energized by a discrete output from the active computer, which supplies a ground to the relays. Each system is redundant and isolated such that each computer can drive a thruster if TACS control is enabled. Thruster solenoid power, as shown, is provided by AM buses 1 and 2 when cbs THRUSTER BUS 1 and THRUSTER BUS 2 on STS panel 202 are closed and the C&D panel 130 TACS switches are enabled. The TACS enable switches receive power from the AM power system when the MANUAL CONTROL INHIBIT cbs are closed. If a TACS switch is inhibited, a relay contact opens and AM power is removed from the solenoid buses.

A detailed description of TACS control and IU to ATMDC switchover can be found in the above reference, Section 2.3, The TACS is then under control of the ATMDC and the TACS control law is described in paragraph 2.5.3.3.5.

2.5.4.7 Control Moment Gyro (CMG) Subsystem - The ATM rack contains three double gimballed CMGs, (See Figure 2.5-37). Each CMG has a motor driven rotor which is gimballed to provide two-degrees-of-freedom within the limits of electrical and mechanical stops. The rotor is maintained at a speed of approximately 9027 RPM, giving the CMG a momentum of 3100 NMS. The momentum vector of each CMG can be driven to any position within its gimbal freedom by commanding one or both of the rate servo loops built around each gimbal. When a gimbal (momentum vector) is driven by a rate command from the ATMDC, a torque is imparted to the vehicle. Thus, by controlling the six gimbals, attitude control of the vehicle can be achieved.

Figure 2.5-38 is a simplified CMG system diagram showing the basic interface between the CMG inverter assembly (CMGIA), the CMG electronics assembly (CMGEA) and the CMG. The CMGIA, which is powered by APCS buses VAPCS 1 and 2, supplies wheel power to its CMG wheel and reference power to other components via control distributors. Of the three CMGIAs, CMGIA No. 1 is the primary source of 4.8 KHZ and 800 HZ reference power to the control distributor and CMGIA No. 2 is the secondary source. CMGIA No. 3 is not used for 4.8 KHZ or 800 HZ reference power. The star tracker receives 455 HZ power from CMGIA No. 1 and CMGIA No. 2 which are its primary and secondary 455 HZ sources respectively. The FSS receives 455 HZ power from CMGIAs No. 1 and No. 3 which are its primary and secondary 455 HZ sources respectively.

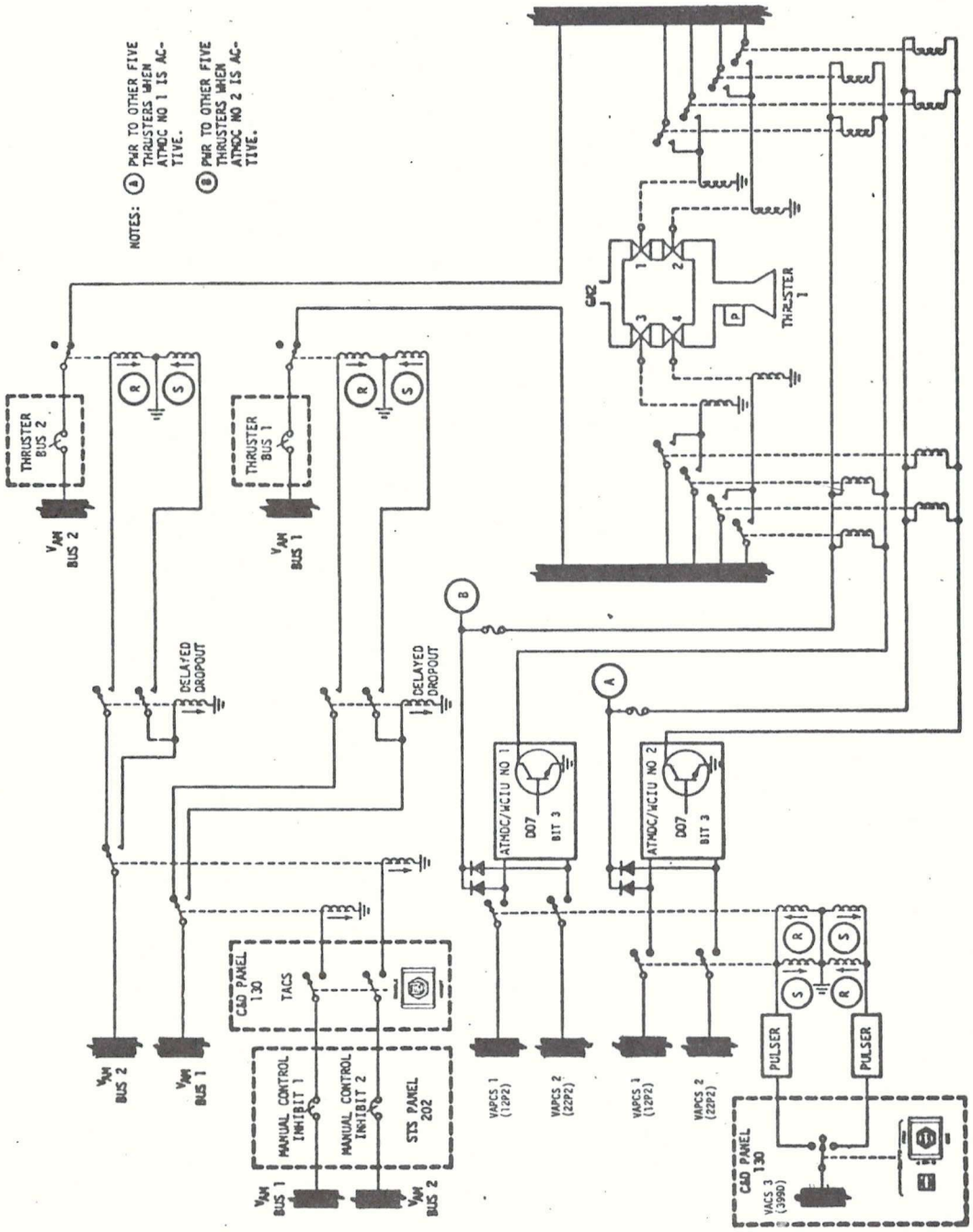

Figure 2.5-36 TACS Functional Diagram

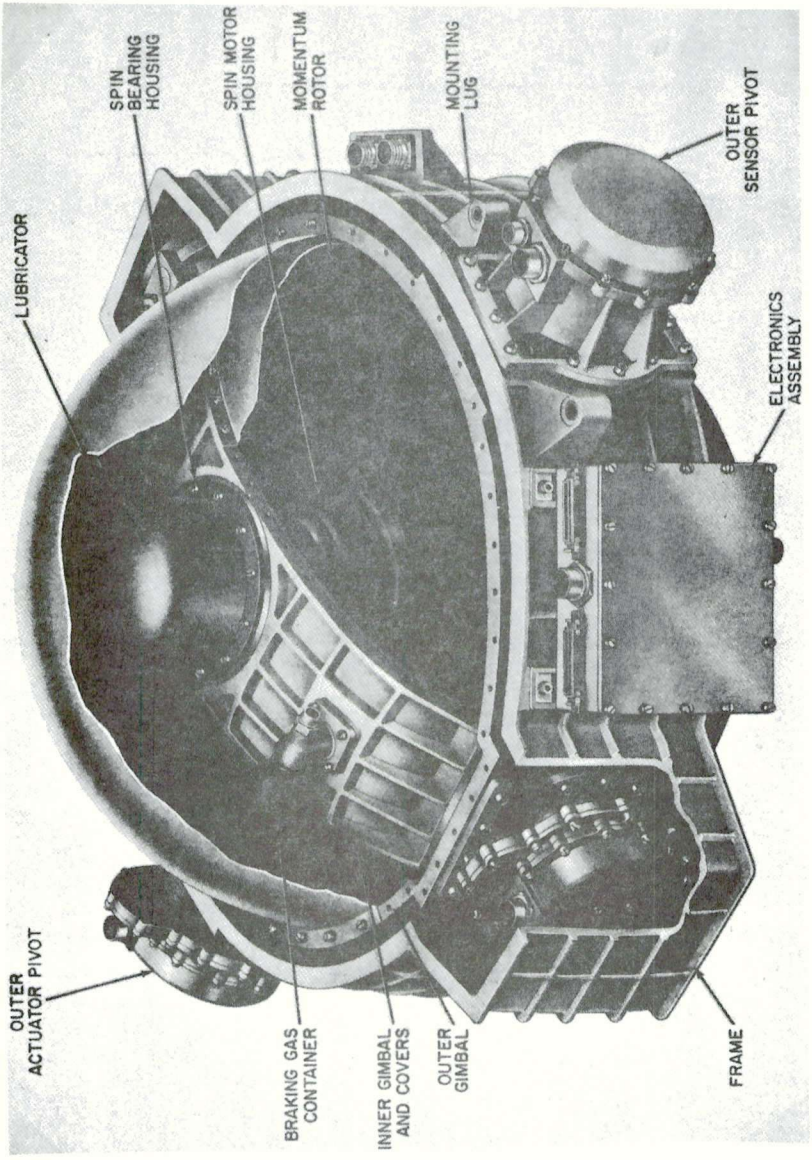

Figure 2.5-37 ATM-CMG Cutaway

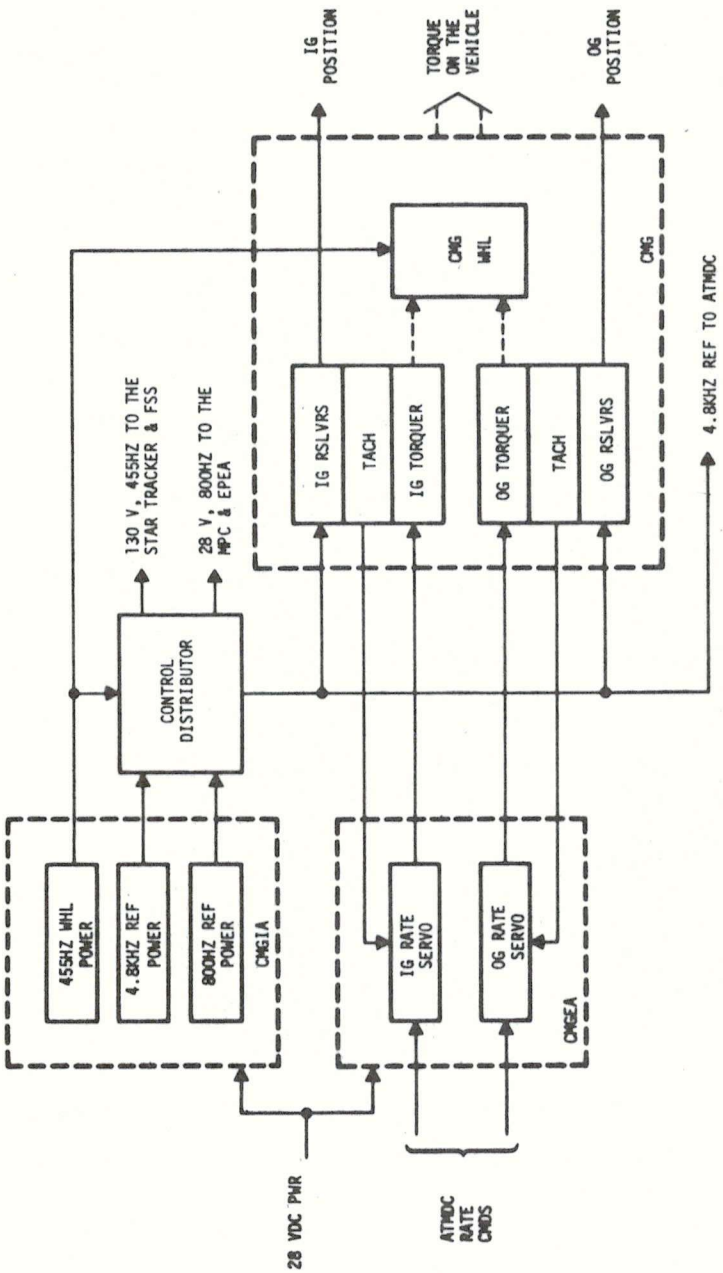

Figure 2.5-38 Simplified CMG System Diagram

The CMGs use 10 V, 4.8 KHZ as excitation to the resolver packages located at each gimbal pivot. The resolver outputs are conditioned to provide gimbal position information to the ATMDC, the C&D panel and telemetry.

Gimbal rate commands from the ATMDC are processed in the rate servo amplifiers to drive torquers located on each gimbal pivot. By commanding the gimbals (CMG wheel) to move at some rate, the CMG system is imparting a torque to the vehicle - torque is defined as the time rate of change of momentum. A detailed system description follows.

The lift-off configuration of the CMG SYSTEM switch on the C&D panel 130 will be AUTO (See Figure 2.5-39, Sheet 1 of 6). Although this switch position is not wired, it does allow the ATMDC/WCIU to command the CMG 'ON' during initial APCS power up and CMG redundancy management (RM). Other functions of the AUTO position are to allow the ATMDC to command the servo amplifier power off during CMG RM, and to enable the bearing over temperature circuits to remove wheel excitation (5D). The ATMDC ON command and the CMG SYSTEM switch 'ON' command functionally operate on the same network relay logic to: command the servo amplifiers on (2A); connect the APCS power buses to the CMGIA (2B); command wheel power on (2C); command the brake circuit off (2C) and enable the bearing heater circuits (5A). In the ON position, auto shutdown by the ATMDC or bearing temperature circuits are inhibited. This switch position can be ambiguous because DAS/DCS command AUTO SHUTDOWN ENABLE 30137 can enable auto shutdown when the switch is in the ON position.

The CMG SYSTEM OFF position, provides a command to: inhibit auto shutdown; remove servo amp power; remove CMGIA power; remove wheel power and; apply an electrical brake to the motor windings. DCS/DAS commands operate through switch selector 3 to apply or remove power from the various circuits for trouble shooting. The APCS bus input to the CMGIA (Sheet 2 of 6) is the power for the CMG system and for the 4.8 KHZ and 800 HZ reference signal generation. It should be noted that there are three inverter assemblies - one for each CMG. The 5.46 KHZ oscillator is divided down and amplified to 455 HZ, 130 V. This power is used by the CMG wheel motors (4B) and is supplied to the control distributor for star tracker and fine sun sensor excitation as described previously. The wheel on/off commands (2C) applies/removes the three phase-power from the CMG motors and also provides the CMG system on/off indication (2A)&(6H) to the C&D panel 130.

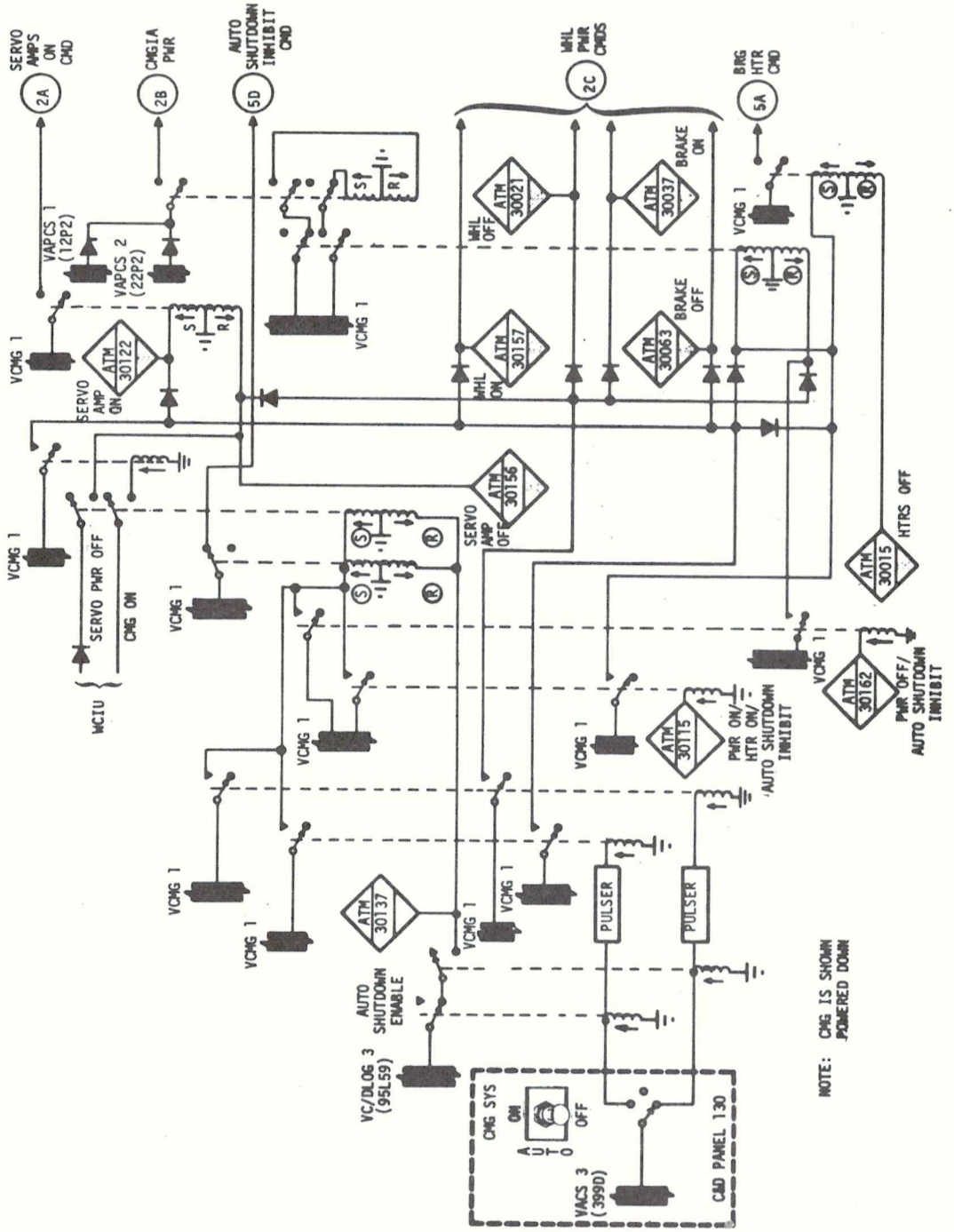

Figure 2.5-39 CMG - Power Control (1 of 6)

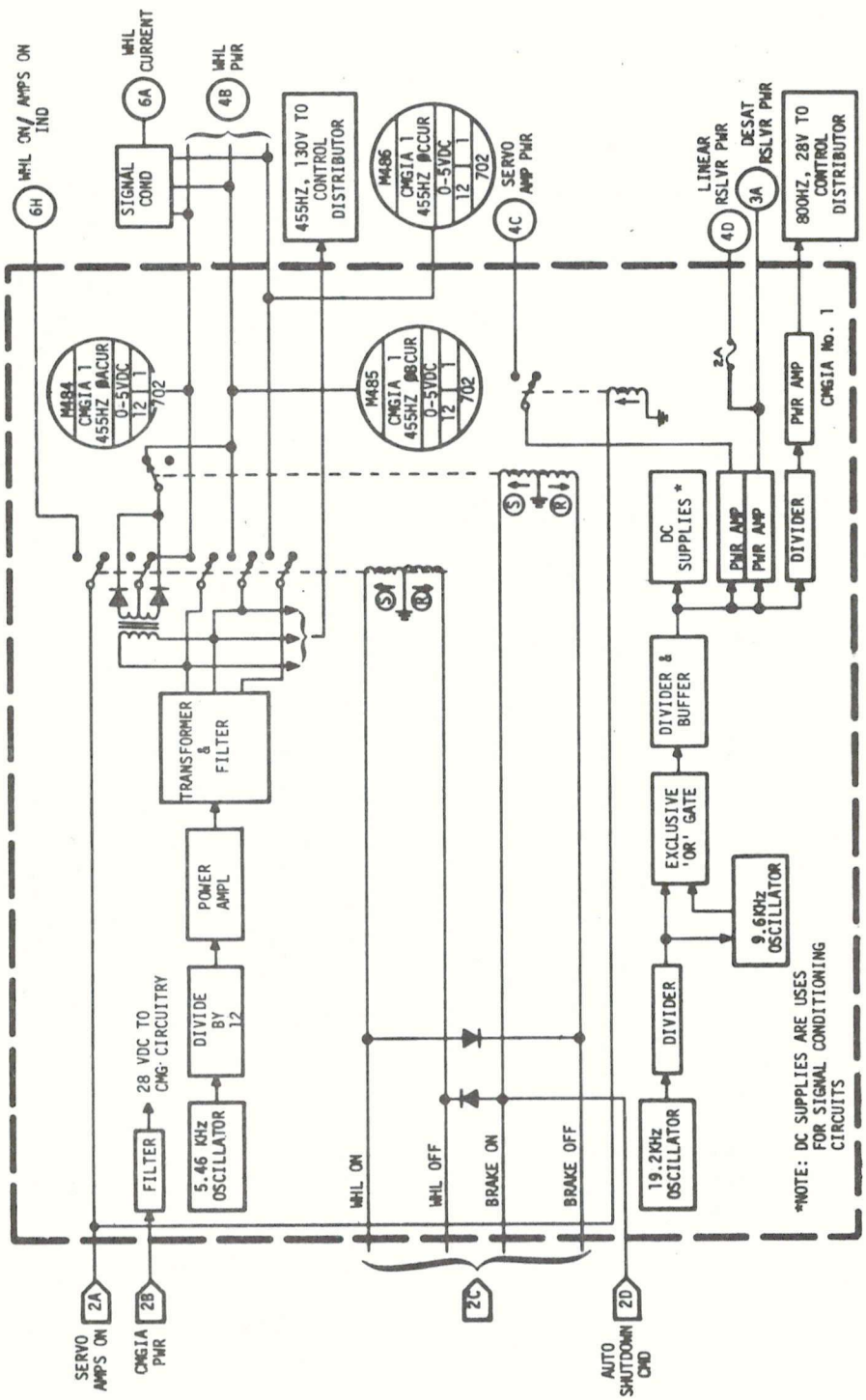

Figure 2.5-39 CMG - CMGIA (2 of 6)

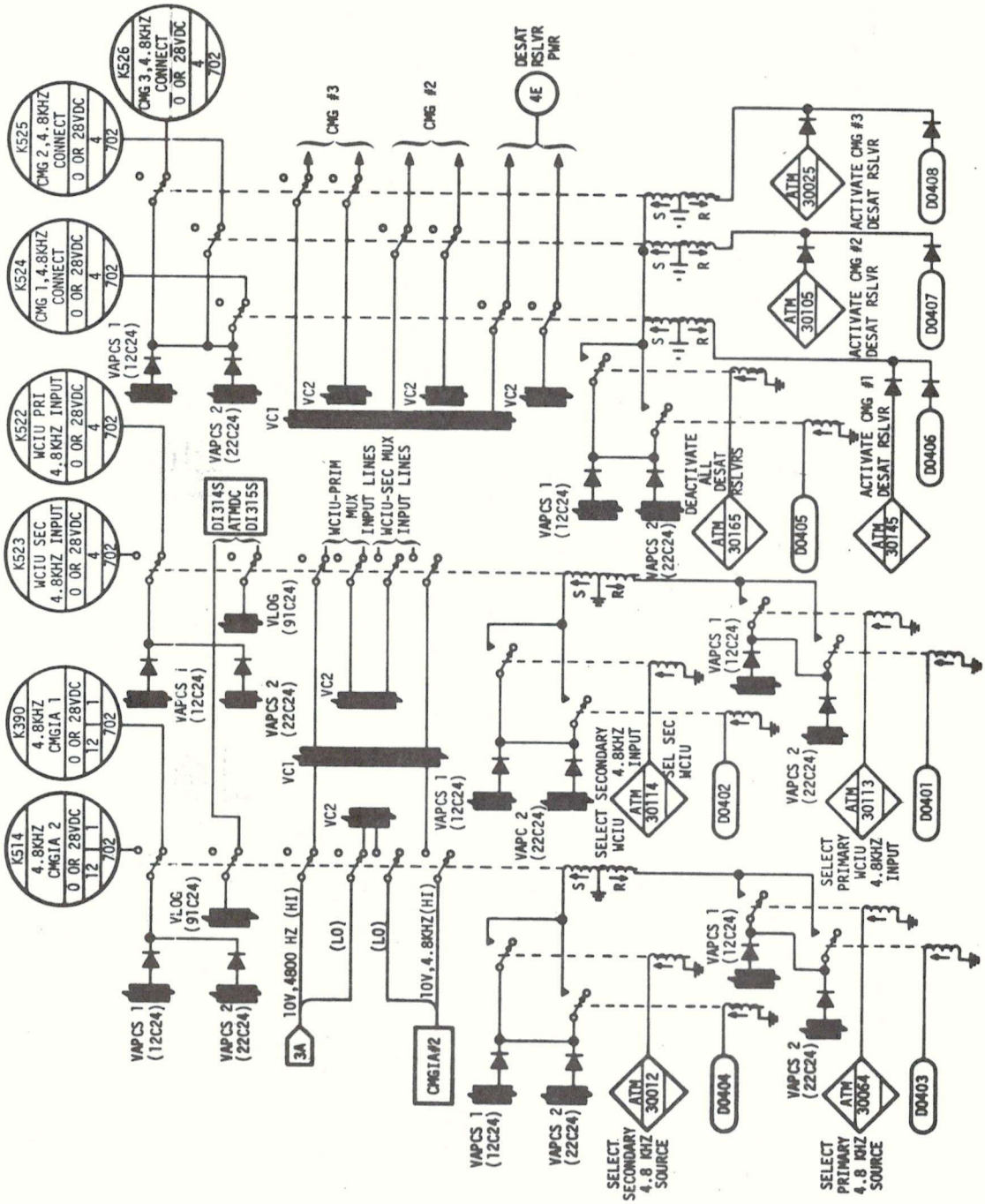

Figure 2.5-39 CMG - Reference Power Control (3 of 6)

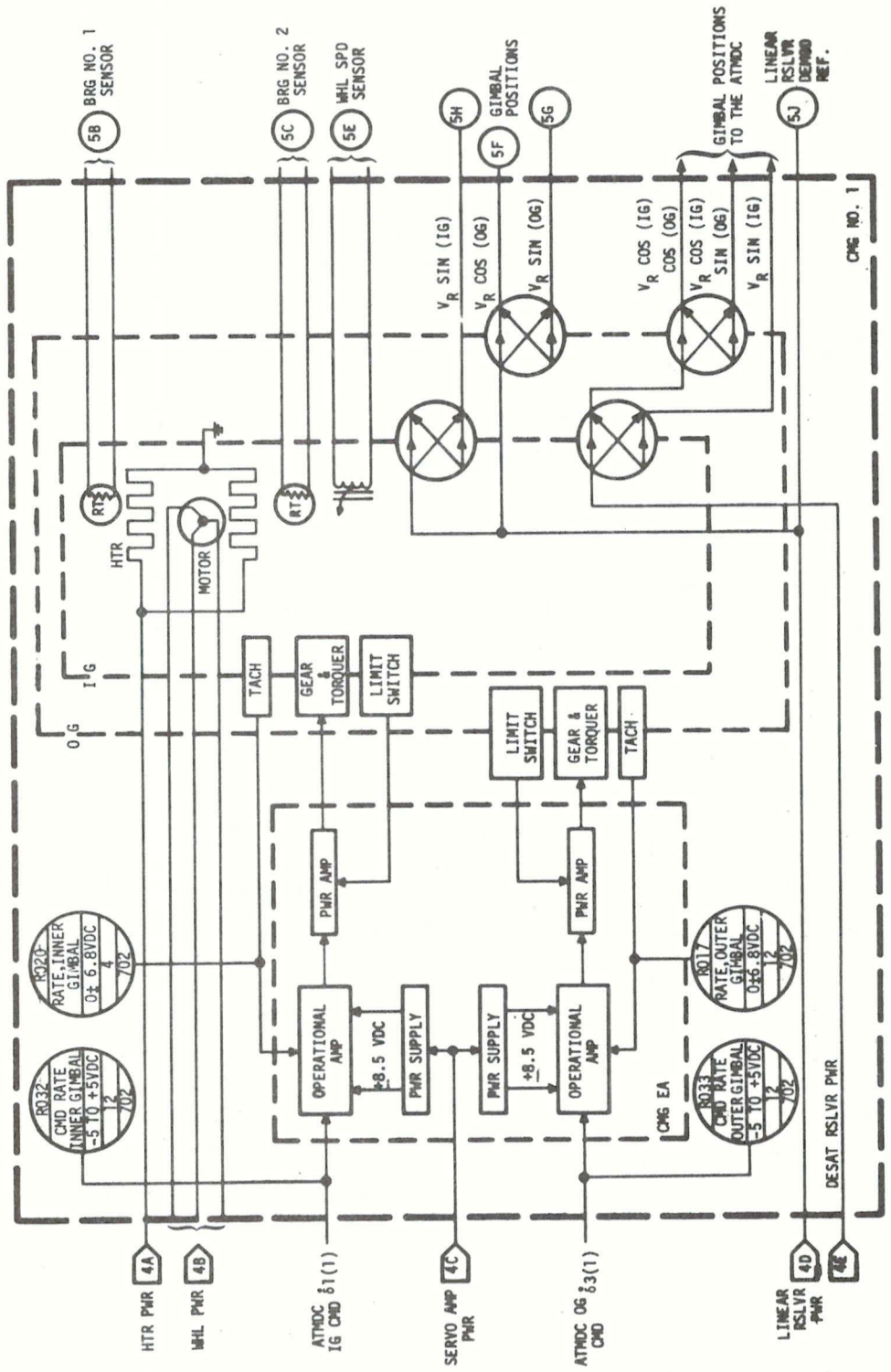

Figure 2.5-39 CMG - Servo Diagram & Performance Sensors (4 of 6)

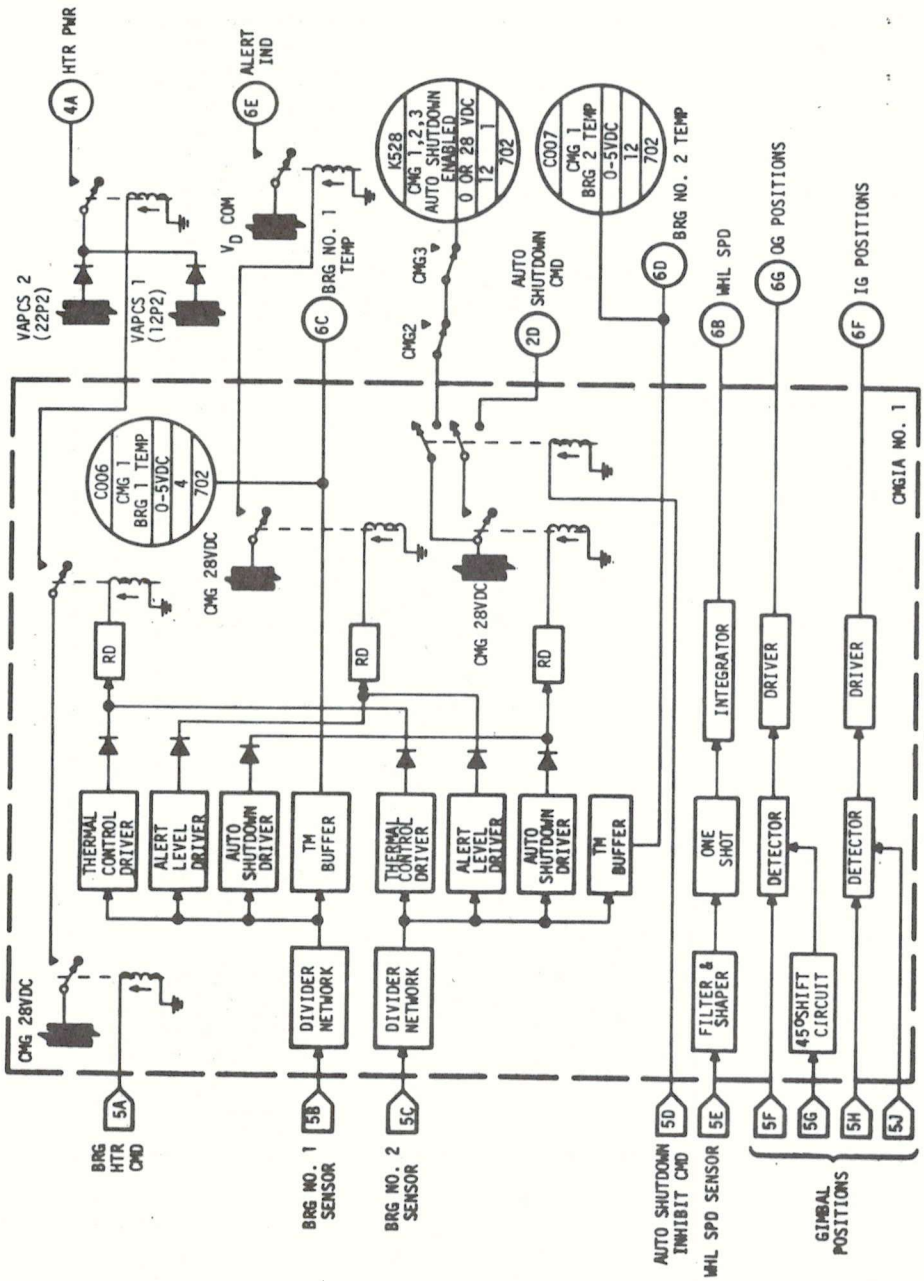

Figure 2.5-39 CMG - Conditioning Circuitry (5 of 6)

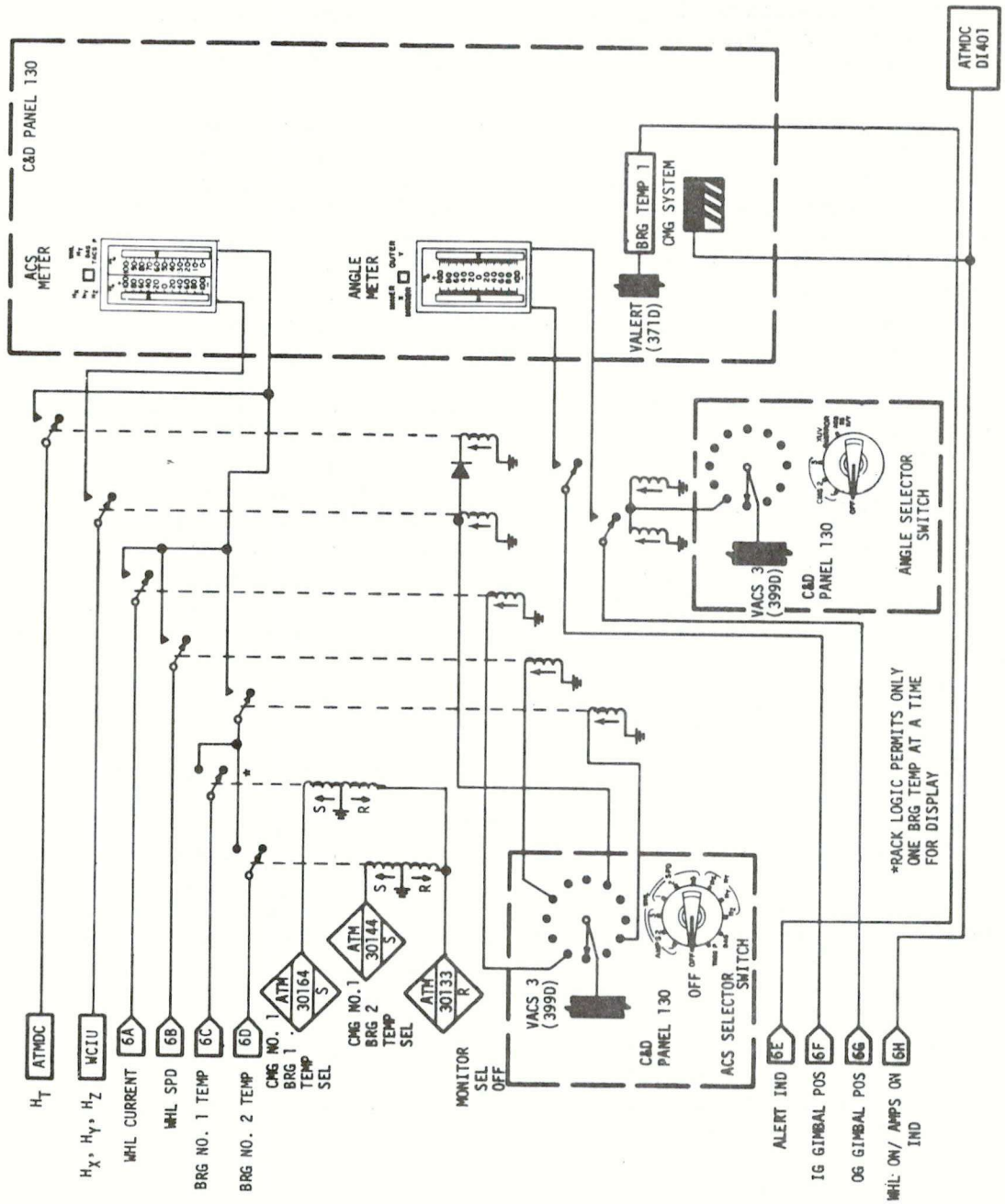

Figure 2.5-39 CMG - Monitoring (6 of 6)

The brake on/off command applies/removes a dc voltage between phase AB of the wheel excitation. It should be noted that: the brake on command also removes wheel power; the wheel power on command also removes the electrical brake and; the auto shutdown (2D) command from the bearing temperature circuits removes wheel power and applies the wheel brake.

The 19.2 KHZ oscillator is divided down and amplified to provide: a rectified dc power supply for the CMG sensor conditioning electronics (sheet 5 of 6); 10 V, 4.8 KHZ excitation for the desaturation and linear resolvers; 10 V, 4.8 KHZ excitation for servo amplifier power when required and; 28 V, 800 HZ to a control distributor for use by the Manual Pointing Controller, the Experiment Pointing Electronics Assembly and EPC resolvers. A 9.6 KHZ oscillator circuit is provided as a backup to the primary oscillator and becomes active only when the primary oscillator is not functioning.

Desaturation resolver excitation (3A) (sheet 3 of 6) from CMGIA #1 is the primary reference source and 10 V, 4.8 KHZ from CMGIA #2 is the secondary source. Initially, the primary source is connected to the primary WCIU input lines and the desaturation resolvers in all three CMGs. In the course of isolating a reference power failure, CMG redundancy management in the ATMDC can select a CMGIA source, a WCIU input line and connect (remove) the excitation to (from) the desaturation resolvers in each CMG individually (simultaneously). The computer issues discrete outputs (DOs) to the rack relay logic to perform these functions. Switch selector commands are also provided to select desired configurations should the ATMDC redundancy management malfunction.

Figure 2.5-39 (sheet 4 of 6) is a functional diagram of a CMG. Heater power (4A) is applied to two 24 watt heaters located at the wheel bearings. If the heater circuit is enabled, the bearing temperature circuits will apply 28 VDC to the heaters when the bearing sensors (5B) & (5C) indicate a temperature less than 60 degrees F. When the temperature becomes greater than 80 degrees F, the heater power is removed. The temperature sensors together with other circuits provides the BRG TEMP 1, 2 or 3 ALERT on C&D panel 130 and the shutdown command, described previously, to the wheel and brake circuitry.

The wheel excitation 130 V, 455 HZ is applied to two spin up motors. Two motors are required to spin the wheel up to synchronous speed. One motor is capable of maintaining sync speed should the other motor malfunction.

The servo amplifiers that drive the inner and outer gimbals are turned on or become operational when 10 V, 4.8 KHZ is applied to the 8.5 VDC power supply (4C). ATMDC rate commands $\dot{\delta}1(1)$ and $\dot{\delta}3(1)$ are processed to drive the gimbals at 1.4 deg/sec/volt. Tachometer feedback is used to hold the gimbals when the ATMDC commands a zero voltage. Limit switches, located five degrees before the mechanical stops, provide a signal to the rate loops to reduce torquer current. This minimizes the gimbal impact on a stop.

Two sets of resolvers are mounted on each gimbal pivot, a linear resolver and a desaturation resolver. The linear resolver receives 10 V, 4.8 KHZ (4D) excitation from one of two 4.8 KHZ power amplifiers in the CMGIA whenever the APCS busses are applied to the inverter assembly. This amplifier is the one that also supplies the desaturation resolvers with 10 V, 4.8 KHZ excitation when enabled. The outputs of the linear resolver are conditioned in the CMGIA to be displayed on the C&D panel and telemetered to STDN.

The desaturation resolvers receive 10 V, 4.8 KHZ excitation (4E) from the network relay logic as determined by ATMDC redundancy management. The desaturation resolver outputs are processed in the computer to provide momentum configuration status to the CMG control law and redundancy management. (See paragraph 2.5.3.3.7.3)

The CMGIA contains the conditioning electronics for the CMG performance sensors (sheet 5 of 6). Each of the bearing temperature sensors has a set of temperature conditioning electronics. The thermal control drivers will command heater power on (4A) whenever the circuit is enabled (5A) and the bearing temperature drops below 60 degrees F. Heater power is removed when the temperature exceeds 80 degrees F. The alert level driver provides an ACS BRG TEMP alert (6E) on the C&D panel when the bearing temperature exceeds 160 degrees F. The auto shutdown driver will command the CMG wheel power off and brake on (2D) when the bearing temperature exceeds 200 degrees F and auto shutdown is enabled (5D). The TM buffer conditions the sensor output (see figure 2.5-40) for display on the C&D (6C)& (6D) and telemetry.

The wheel speed sensor output is conditioned, as shown in Figure 2.5-41, for display (6B) and telemetry.

The IG and OG linear resolvers are scaled as shown in Figures 2.5-42 and 2.5-43. The outer gimbal resolver is mounted such that there are ±175 mechanical degrees of freedom from the plus 45 electrical degree position. (The zero HT CMG spin up configuration is the IG at zero degrees and the OG at +45 degrees). By using a 45 degree phase shift circuit, the resolvers range can be extended

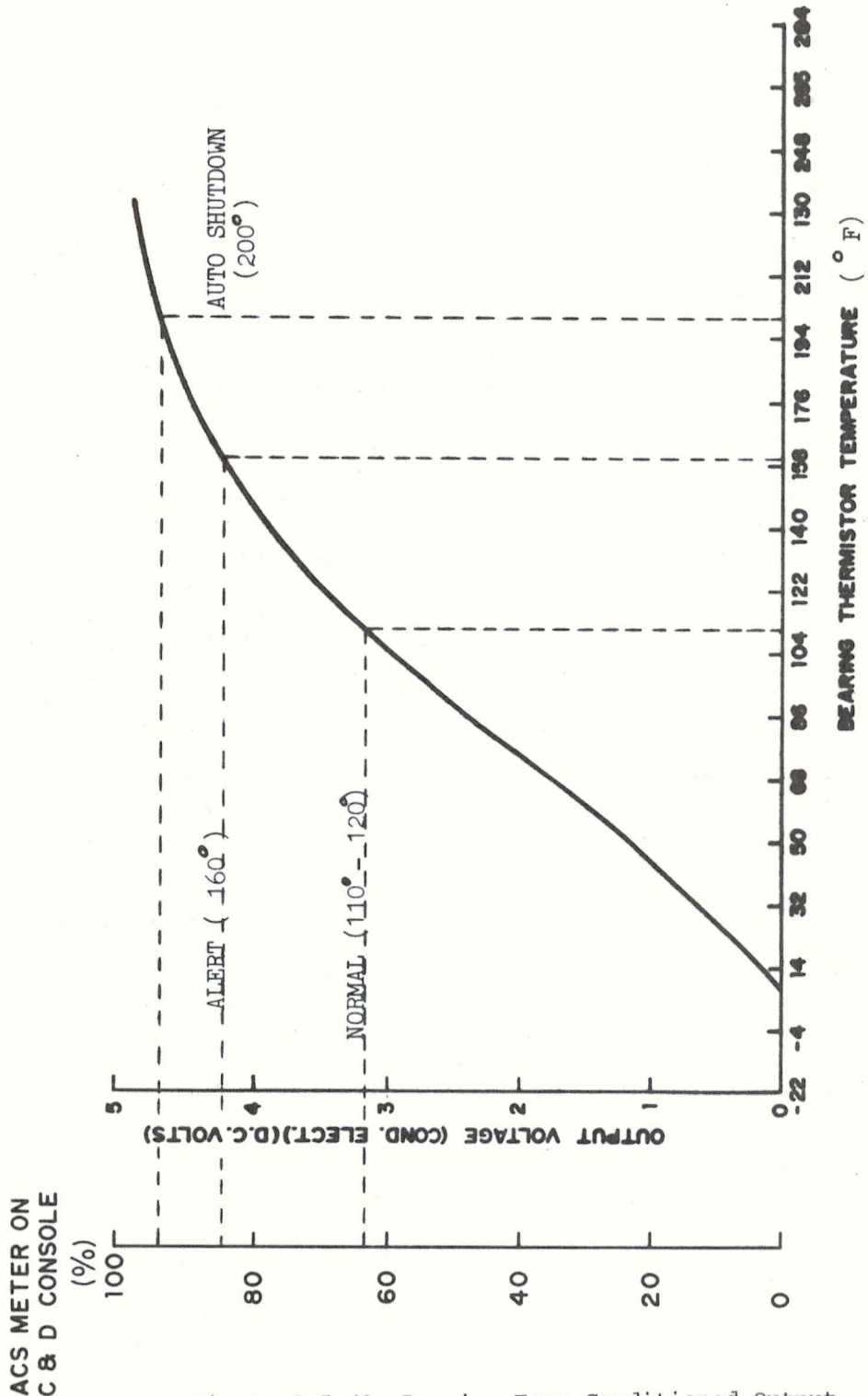

Figure 2.5-40 Bearing Temp Conditioned Output

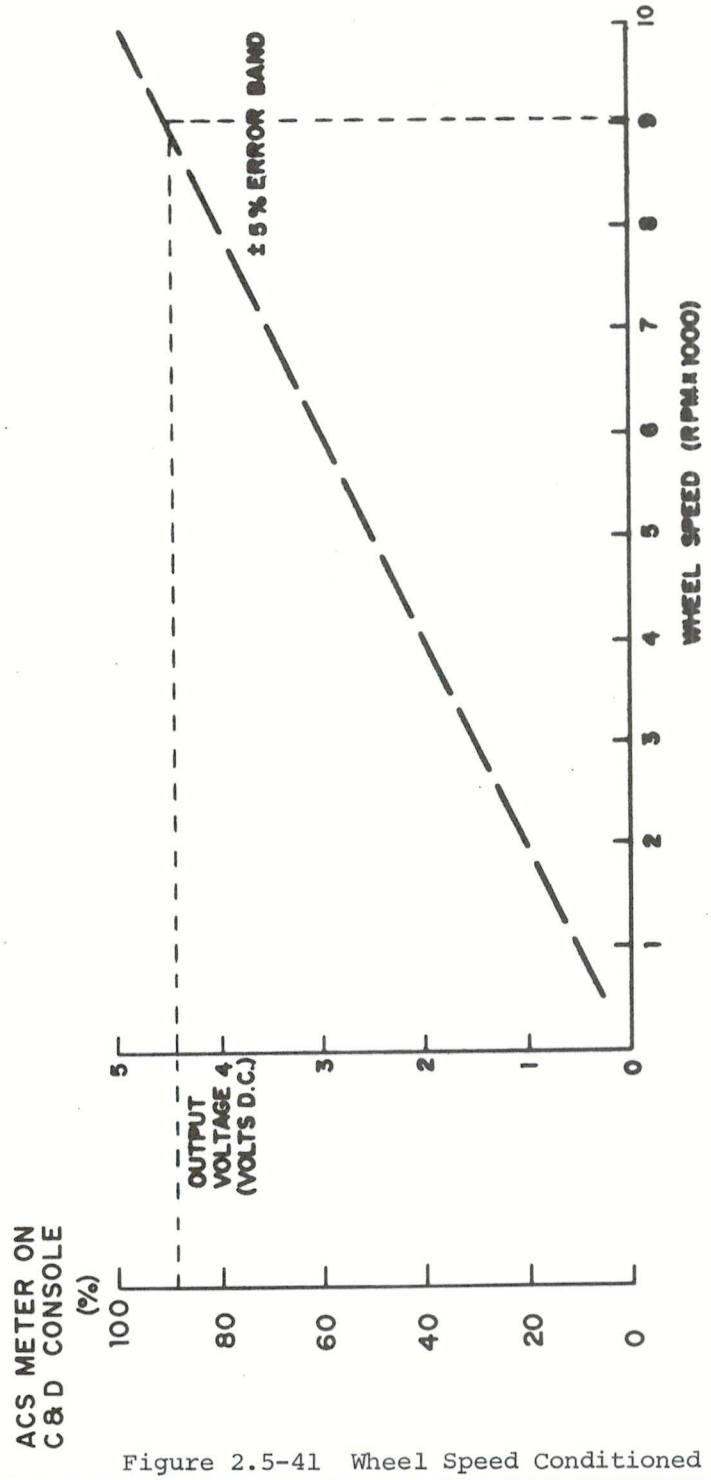

Figure 2.5-41 Wheel Speed Conditioned Output

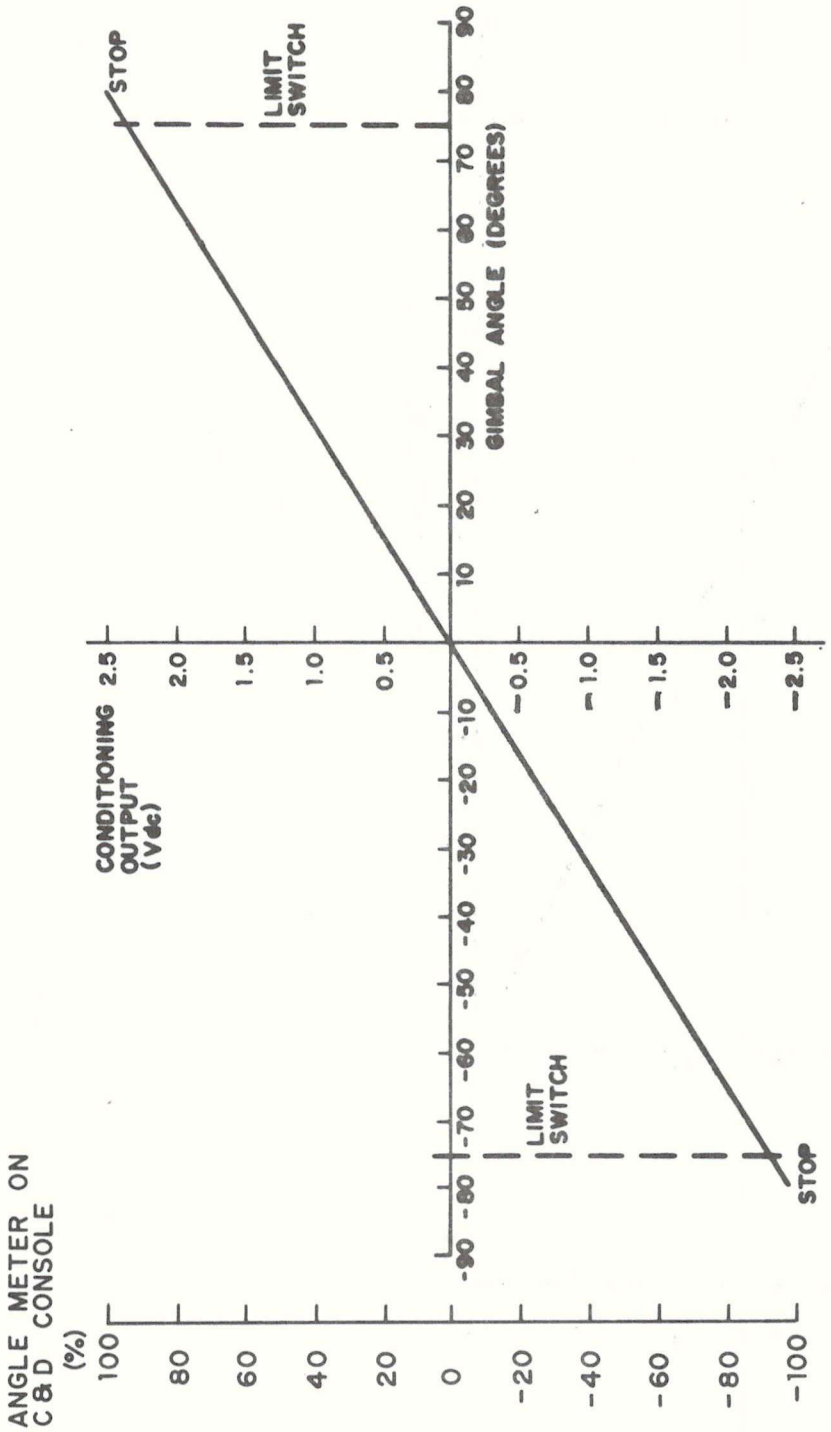

Figure 2.5-42 Inner Gimbal Conditioned Output

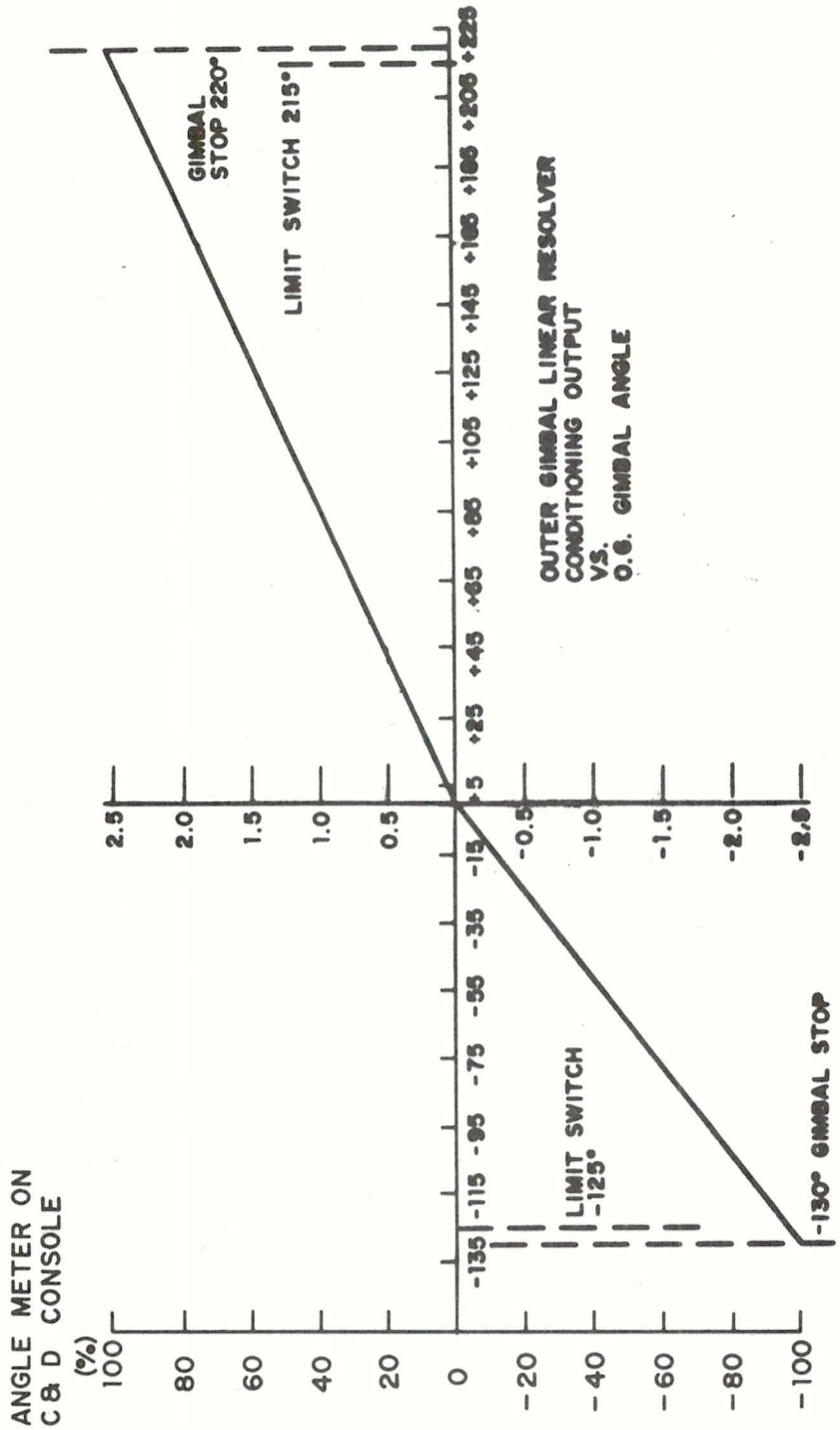

Figure 2.5-43 Outer Gimbal Conditioned Output

from 180 degrees to 225 degrees and conditioned to be linear as shown. Both the IG and OG positions are displayed on the C&D (6F)&(6G) and telemetered.

Figure 2.5-39 (sheet 6 of 6) shows the CMG display capability of the C&D panel. The ACS and ANGLE selector switches bring desired information to the ACS meter. The CMG information available to the meters include; the total CMG momentum HT, which is computed from desaturation resolver information in the ATMDC; the components of HT (HX, HX, HZ) which lie along the vehicle axis (expressed as a percentage of 3H); phase A current to each of the CMG spin motors (See Figure 2.5-44); wheel speed of each CMG rotor; bearing temperature of each thermistor sensor (this information is keyed up on the DAS); and the gimbal positions of each CMG.

The BRG TEMP alert light receives a ground (6E) when the alert temperature is exceeded (6E).

The CMG SYSTEM tb indicates a grey condition when wheel power on and servo amplifiers on have been commanded (6H). This signal also goes to the ATMDC and is used in CMG control law for determining how many CMGs are operational.

2.5.4.9 Fine Sun Sensor (FSS) - The FSS package consists of four individual sensors to provide primary or secondary UP/DN axis and L/R axis position information to the EPC system. During normal operation, the FSS provides accurate position information to the EPC control loops. This information can be about sun center or anywhere within the pointing capability of the FSS - ±24 arc minutes about each axis.

The FSS is an electromechanical device capable of detecting the sun's center to within ±2.25 arc sec. Sunlight (See Figure 2.5-45) impinging on the FSS passes through an alignment wedge which provides a spectral filter and means for the final adjustment of a null axis relative to an external reference mirror. The sunlight then passes through a deviation wedge which refracts the sunlight at a fixed angle in a controllable direction. Direction control provides the capability to offset point the canister using MPC inputs (See paragraph 2.5.4.9.1). Sunlight from the deviation wedge is then passed through the critical angle prism (CAP). The CAP is a quartz prism whose isosoles angles are cut close to the critical internal reflectance angle for sunlight entering perpendicular to the front face. When light enters perpendicularly, a part of it is internally reflected. Of the remaining light, an equal amount passes through each face of the CAP and is focused on a detector. A mechanical reed chopper permits the detector to 'look' alternately at light from each face. If the angle of light

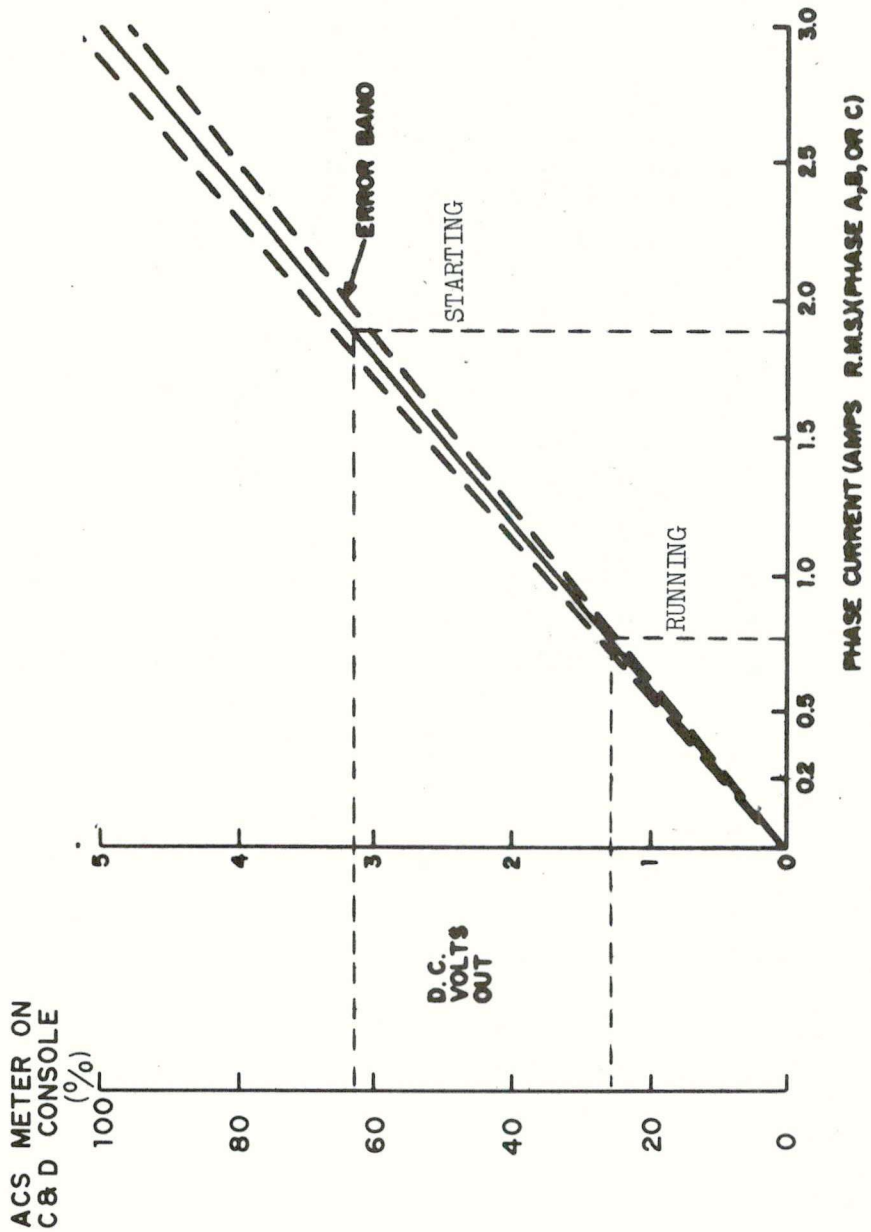

Figure 2.5-44 Wheel Current Conditioned Output

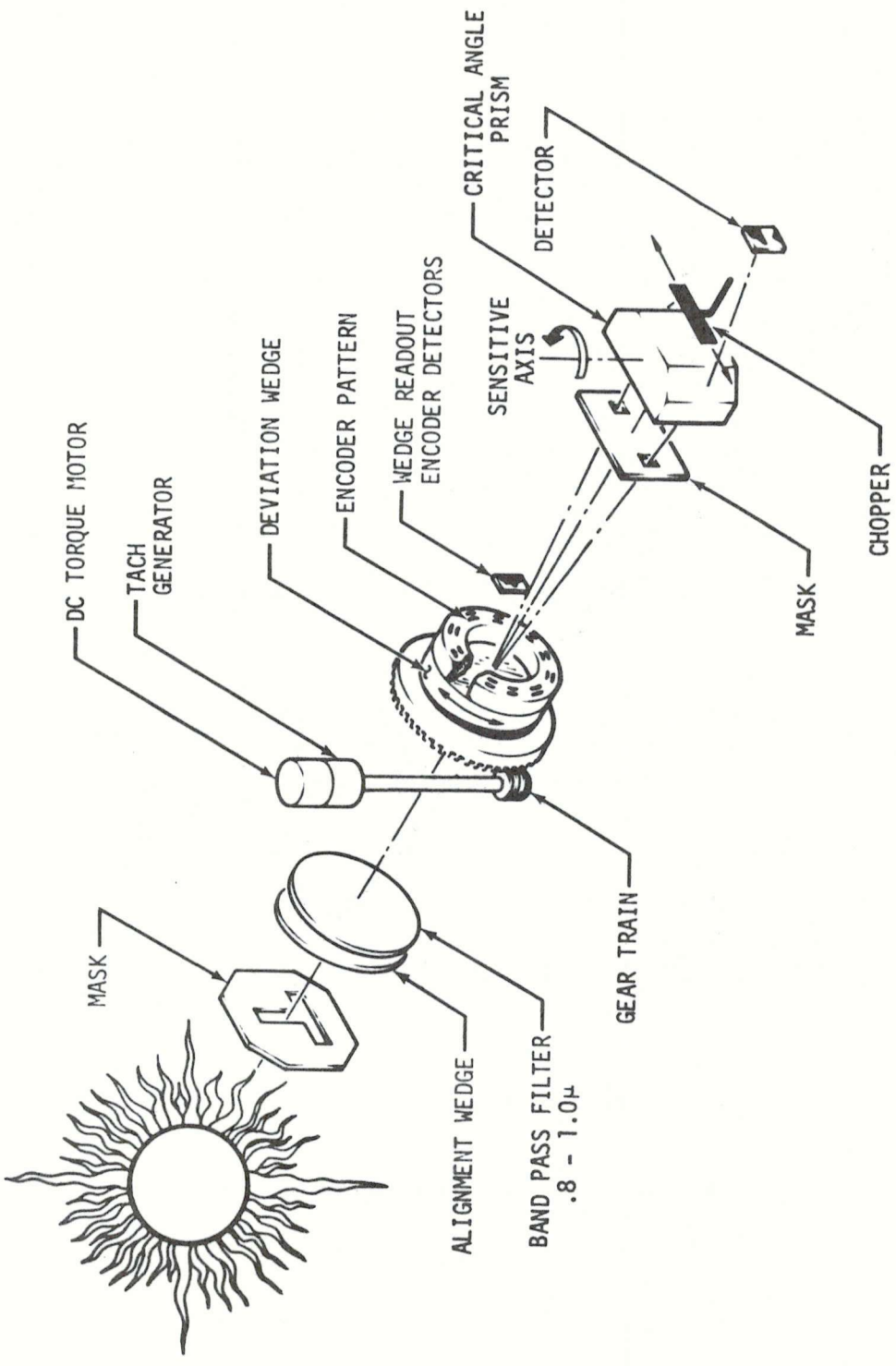

Figure 2.5-45 FSS - Optical Mechanical Assembly

incidence changes, more light passes through one side than the other. The output of the detector becomes a square wave with a peak-to-peak value proportional to the angular deviation of the incident light with respect to the front face normal. The signal is amplified, demodulated and sent to the EPEA for processing. The UP/DN and L/R loops are discussed in paragraph 2.5.4.11.2.

2.5.4.9.1 Offset Pointing - The ATM canister can be offset pointed to targets of opportunity on or about the sun using the FSS wedge drive mechanism. MPC commands are processed in the EPEA (See paragraph 2.5.4.11.4) and FSS control electronics to drive a motor. The motor in turn drives a helical gear arrangement which rotates the deviation wedge and encoder wheel assembly as shown in figure 2.5-45 with respect to the FSS base which supports the CAP, the CAP detector and the encoder detector. Rotating the deviation wedge changes the direction of the light incident to the CAP. The CAP detector detects an error signal as more light passes through one CAP face than through the other. The error is processed in the EPEA to drive canister torquers such that the canister is offset in a known direction and the incoming sunlight passing through the deviation wedge is again perpendicular to the CAP front face. The EPCS control loops are designed, therefore, to always null the FSS output. This requirement can be satisfied with deviation wedge in any rotational position. The canister however may be offset anywhere between 0 and ±24 arc minutes of sun center to obtain the FSS null. One of the unique features of the wedge assembly is that it can be rotated continously in one direction. Starting with the canister at sun center, for example, suppose the crew held the MPC lever in the Right direction continuously. While the deviation wedge is rotating, the canister moves toward the right as seen on the TV monitors. When the canister is offset 24 arc minutes to the right, it turns around and moves left towards the left limb of the sun. The canister motion is now 180 degrees out of phase with respect to the MPC input. When the canister is offset 24 arc minutes to the left, it turns around and goes right towards the sun center. The canister is again in phase with the MPC input. For a wedge rotation of 360 degrees, the canister was offset 24 arc minutes to the right, then 24 arc minutes to the left (through sun center) and returned to its original starting place - sun center. It is therefore desirable from a procedures standpoint not to exceed 24 arc minutes of canister offset in either the UP/DN or L/R axes. The wedge positions can be monitored on the C&D panel while the MPC is being commanded.

APCS

Rotating along with the deviation wedge is an encoder wheel. The wheel contains two circular tracks or channels made up of alternating transparent and opaque windows and a third track made up of one transparent window. Three detectors count the pulses of light as the encoder rotates and sends electrical pulses to the FSS signal conditioner. The signal conditioner processes the information and makes it available to ATMDC on request.

A FSS subsystem is shown in figures 2.5-46 and 2.5-47. DC power can be applied to the FSS by either the FSS switch on C&D panel 130 or DAS/DCS switch selector commands. Since the FSS package contains both the primary and secondary sun sensor, power is applied to the entire package but switched internally to the power supply requested. DC power is used for all functions except the wedge drive motor circuitry. The motor power supply requires 130 V, 455 HZ to operate. CMGIA 1 and CMGIA 3 are designated as the primary and secondary sources respectively for FSS ac power. DAS/DCS commands are provided to applied ac power to FSS, as the FSS C&D switch is not wired to provide all the power necessary to completely operate the FSS. Should the ac power be removed, the FSS will still operate as a null seeking sensor but, the capability of wedge rotation is lost.

Figure 2.5-47 is a functional block diagram of the FSS. The operation was described previously. The diagram shows that the FSS provides a sun presence signal to the FSS flag on C&D panel 130. This signal is generated by 'AND' gating either the primary UP/DN and L/R sun presence signals (SPS) or the secondary UP/DN and L/R SPS. The SPS indicates that an acceptable amount of sunlight is passing through the optics for normal operations.

As mentioned previously, the ATMDC interrogates the FSS signal conditioner for the UP/DN and L/R wedge positions. This information is available for display on the C&D monitor panel and computer telemetry.

2.5.4.10 Roll Positioning Mechanism & EPC Components - The EPC-RPM system consists of two large, concentric, welded aluminum rings supporting and connected to the ATM canister and rack structure by four frictionless actuator bearing assemblies. The rings and actuator bearings form a gimbal system which provides an UP/DN and L/R capability for the canister assembly and the whole gimbal system can be rotated for roll motion by means of a roll drive and brake actuator. Position read-out devices are provided for all three modes of motion.

a. Roll Drive and Brake Assembly - (See Figure 2.1-22) - There is one drive and brake assembly per system which consists of two brush-type dc motors, two tachometers and a two-coil solenoid operated brake assembly. The motors, tachometers and solenoid coils are arranged for redundancy and the unit is rated for one of each unit to be operational at a time. The motors drive the RPM ring assembly in the roll mode, the brake assembly provides a braking force for positioning accuracy and the tachometer measures the

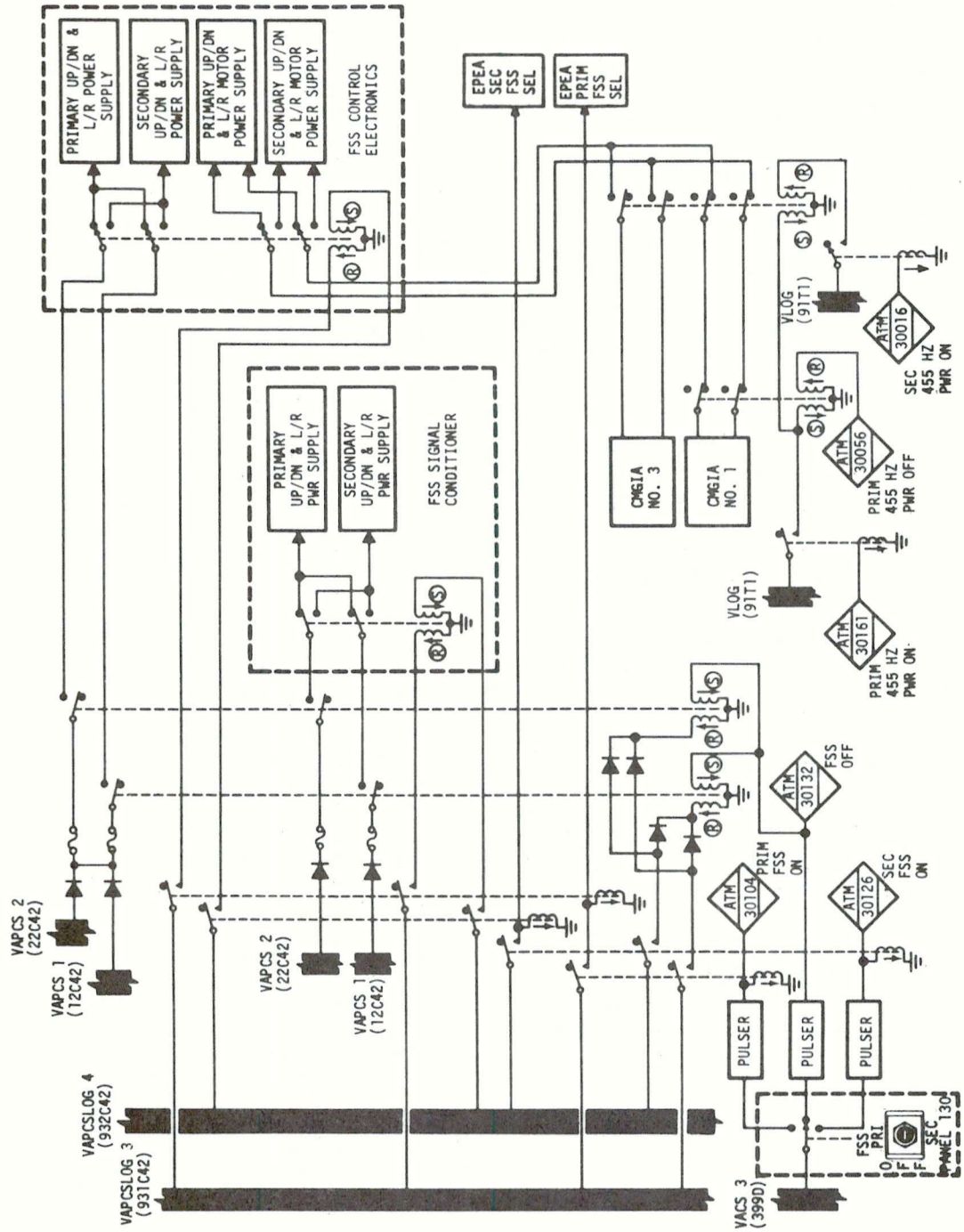

Figure 2.5-46 FSS - Power Control

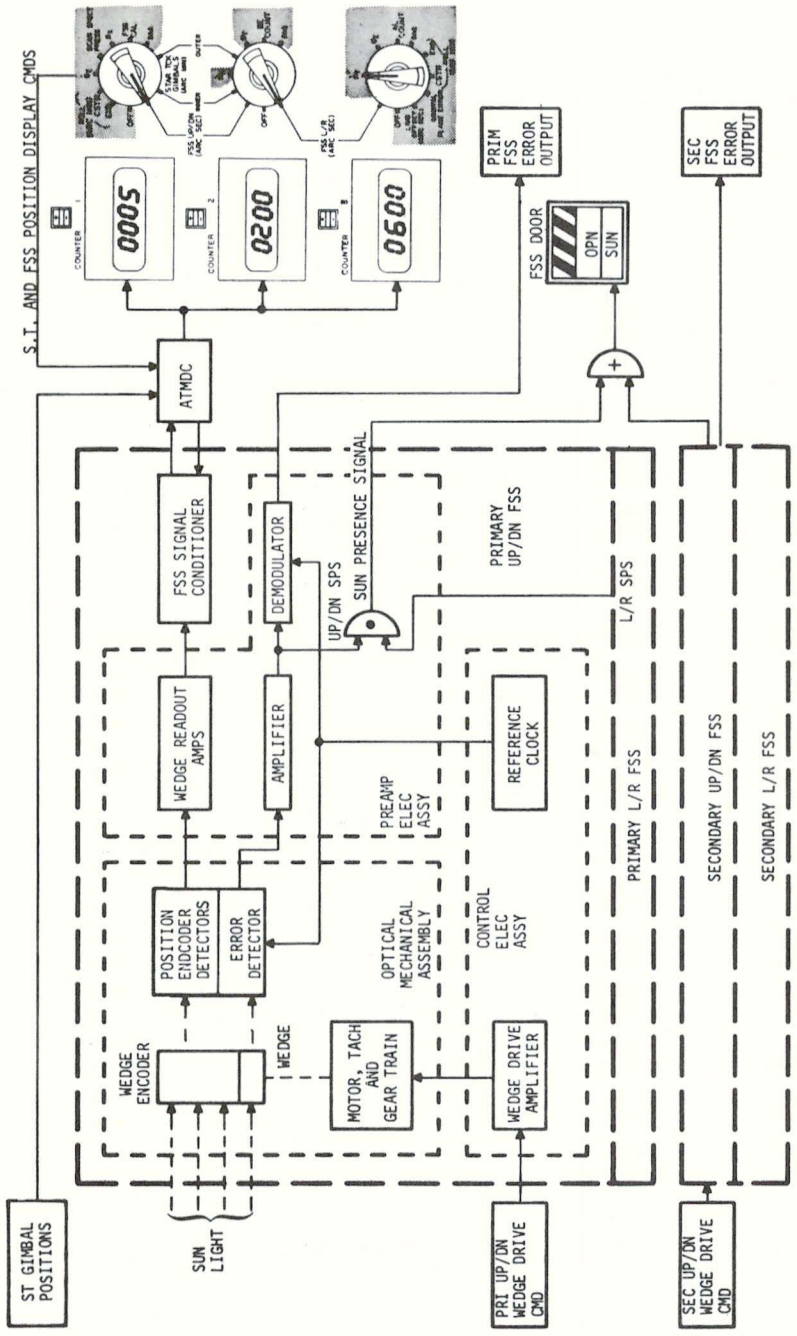

Figure 2.5-47 FSS - Block Diagram and Interface

rotational speed of the motor shaft. The components are packaged in a cast aluminum housing.

b. Roll Position Indicator Assembly (See Figure 2.1-23) - One roll position indicator assembly per system is attached to the rack structure and is engaged with the roll ring gear by means of a small gear pinion and given an electrical indication of roll axis position.

The indicator assembly consists of a tandem installation of two fine and four coarse resolution electrical resolvers. The fine resolvers used for SKYLAB are driven directly by the input shaft and rotate at sixteen times the roll axis speed. The coarse resolver comprising two coarse resolution units and two coordinate transformation units, are driven by a reduction gear train such that they revolve at roll axis speed.

A dustproof cast aluminum casing houses the mechanical and electrical components and is attached to the rack structure by means of a spring loaded bracket system to insure constant pinion-to-gear engagement and minimum gear backlash.

c. EPC Actuators - There are four EPC actuator assemblies per system, each comprised of one mechanism flexure bearing assembly, one dc brushless torque motor and two electrical resolvers.

d. Orbital Cage Assembly (See Figure 2.1-25) - There are two orbital lock assemblies in each system whose purpose is to cage the experiment canister to the inner and outer rings of the EPC-RPM assembly. Each consists of a roller mechanism driven by one or the other of two redundant brush-type dc motors.

e. Roll Axis Bearing Arrangement (See Figure 2.1-18) - The roll axis bearing arrangement is provided to contain and allow the gimbal system to rotate in the roll mode and each system consists of the following major components. (See Structures 2.1)

1.	Roller Assembly, Radial, Type	Quantity 2
2.	Roller Assembly, Radial, Type B	Quantity 2
3.	Roller Assembly, Top Axial	Quantity 4
4.	Roller Assembly, Bottom Axial	Quantity 4
5.	Roll Stop Assembly	Quantity 1

The roll bearing system is designed such that not more than 80 lb-ft of torsional force will be required to overcome the sum of the frictional forces resisting rotation in the roll mode. This parameter is applicable to, and can only be verified in a zero gravity environment.

2.5.4.11 Experiment Pointing Electronics Assembly (EPEA) - The EPEA is a multipurpose analog assembly which contains the electronic circuits for amplifying, shaping and mixing the outputs of the canister mounted sensors to obtain error signals to drive (EPC) system actuators. Provisions are included to allow internal switching of redundant sensor inputs and/or redundant electronic subsystems. The electronic subsystems are divided into 14 channels which can be switched by C&D switches or by switch selector commands.

The EPEA accepts rate and position error signals from the canister rate gyros and the fine sun sensor (FSS) respectively. Signals and commands are also sent to the EPEA from the ATM C&D console, EVA Rotation Control panel and from the ATMDC.

Figure 2.5-48 is a functional block diagram of the EPEA showing the various signal processing channels. The figure illustrates only functional primary paths through each channel. However, secondary paths and secondary channels exist for each processed signal.

Many of the illustrations in this section display both primary and secondary channels of each EPEA control loop. It should be noted that only a primary or secondary channel is active for a particular control function even though the different functions may be active in either the primary or the secondary channels of the EPEA. For example, the UP/DN control loop may be operational in the primary channel and the L/R control loop may be operational in the secondary channel of the EPEA.

The UP/DN and L/R channels accept canister position signals from the FSS and canister rate signals from the canister rate gyros. These signals are amplified, shaped and mixed to supply output currents to drive the EPC UP/DN and L/R actuators.

The roll channel accepts fixed rate commands from the ATM C&D Console or the EVA Rotation Control Panel which is processed to drive an EPC roll actuator.

The MPC UP/DN and L/R channels accept rate signals from the Manual Pointing Controller on the ATM C&D Console to drive either

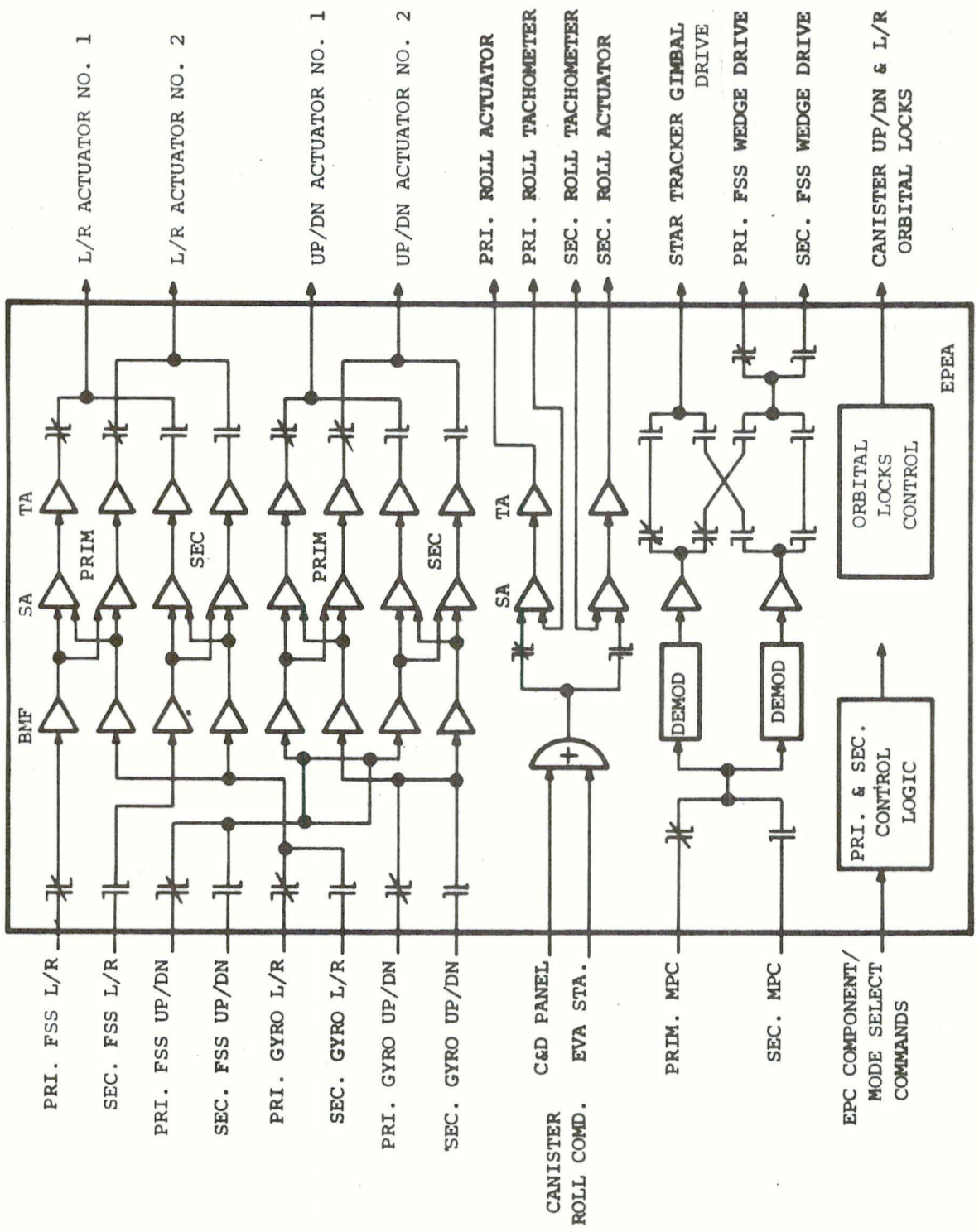

Figure 2.5-48 EPEA Functional Diagram

the FSS wedges or the Star Tracker gimbals. CAGE/UNCAGE UP/DN and L/R control loops are provided to allow in-orbit locking and unlocking of the canister assembly. The canister is locked in a zero gimbal position of the UP/DN and L/R axes during all APCS primary modes except when EPC is enabled in the Experiment Pointing Mode. In this mode, the canister is automatically unlocked by EPEA commands and is capable of being offset pointed as required for solar experimentation.

2.5.4.11.1 Activation (See Figure 2.5-49) - Power is supplied to the EPEA by either a switch command from the C&D panel or a DAS/DCS command. The APCS buses are connected to the entire EPEA package but switched internally to the commanded section (primary or secondary). The selection of either primary or secondary EPEA also configures relays internal to the package such that the inputs to and the outputs from the EPEA are from the commanded channels.

Even though the EPEA package has power, some of the control functions will not be operational until the ATMDC activates them (Reference Figure 2.5-50). The conditions necessary for EPC control loop activation are: EXP PTG Mode; the OA in orbit day; and the sum of the squares of the Acq SS errors $\gamma_{ex}^2 + \gamma_{ey}^2$ is less than or equal to $(1.3)^2$ degrees. When these conditions are satisfied, the ATMDC issues two discretes D0111 and D0113 to activate the UP/DN, L/R, and canister uncage control loops. The loops are deactivated when $\gamma_{ex}^2 + \gamma_{ey}^2 > (1.4)^2$ degrees or either of the other two conditions are not satisfied. The distinction that should be made for EPC active is that the criteria for activating the canister loops is the simultaneous presence of the conditions mentioned previously.

2.5.4.11.2 UP/DN Control Loop - The UP/DN control loop is shown in Figure 2.5-51 and is functionally identical to the L/R control loop. Inputs from either the primary or secondary UP/DN FSS (See paragraph 2.5.4.9) and primary or secondary UP/DN rate gyro (See paragraph 2.5.4.12) are filtered (Bending Mode Filters) and mixed to drive torquer amplifiers. Sensor inputs are sent to both EPEA channels, but only one channel has operating power. In each control loop, there are two current drivers and two torquer amplifiers to drive two individual actuators which provide redundancy within a channel. One actuator is sufficient to drive the canister in response to sensor inputs. The actuators are switched to receive commands from whichever EPEA was selected.

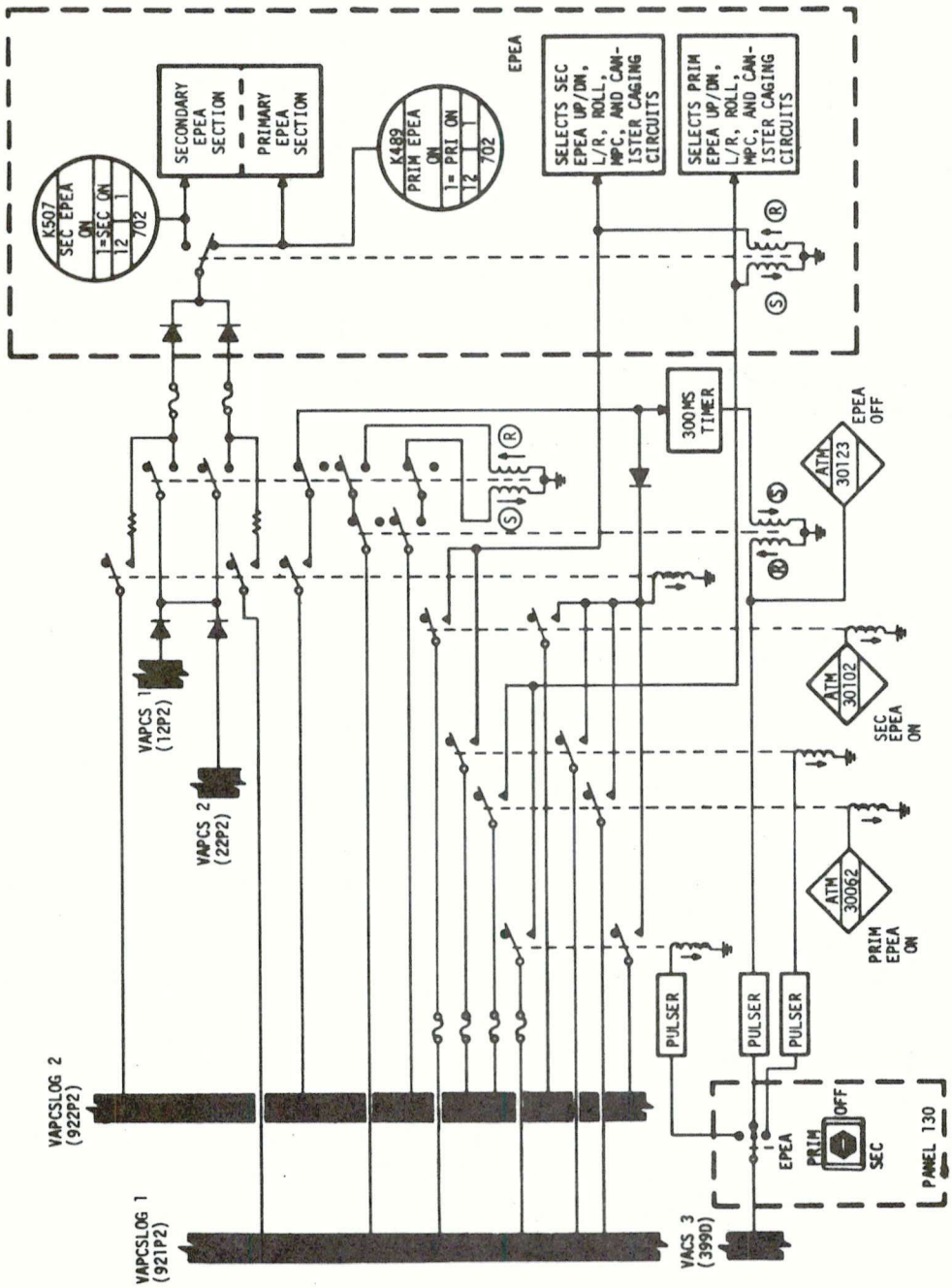

Figure 2.5-49 EPEA Power Control

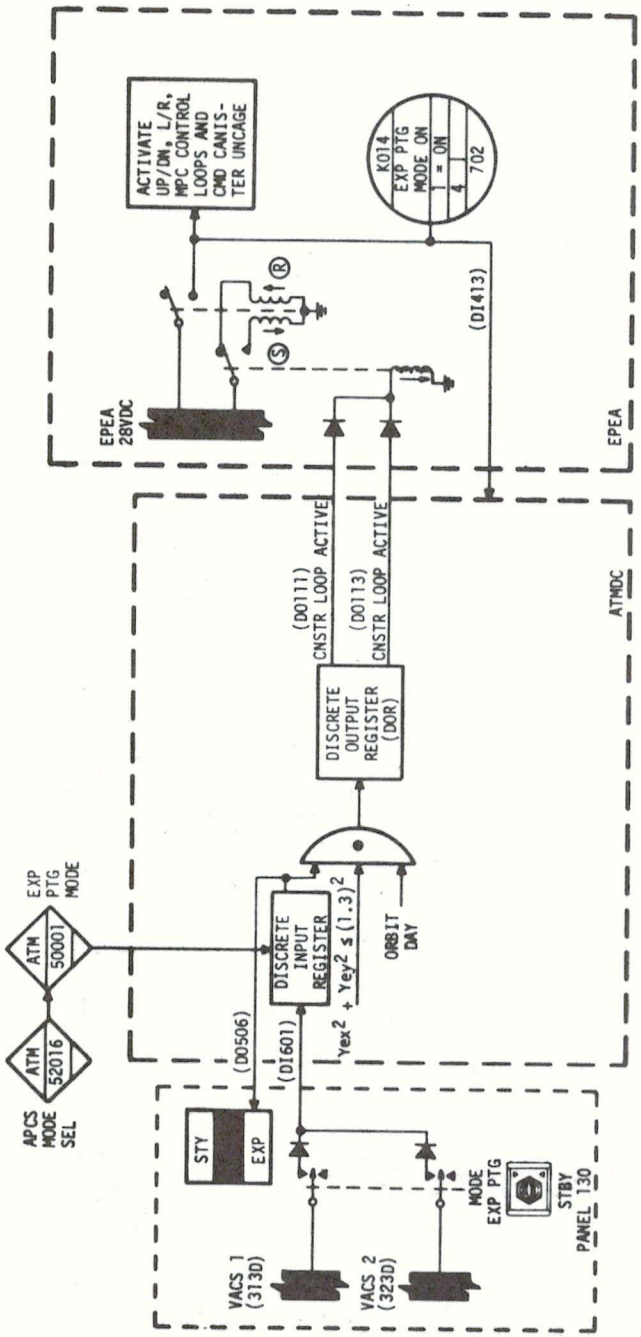

Figure 2.5-50 EPC Activation

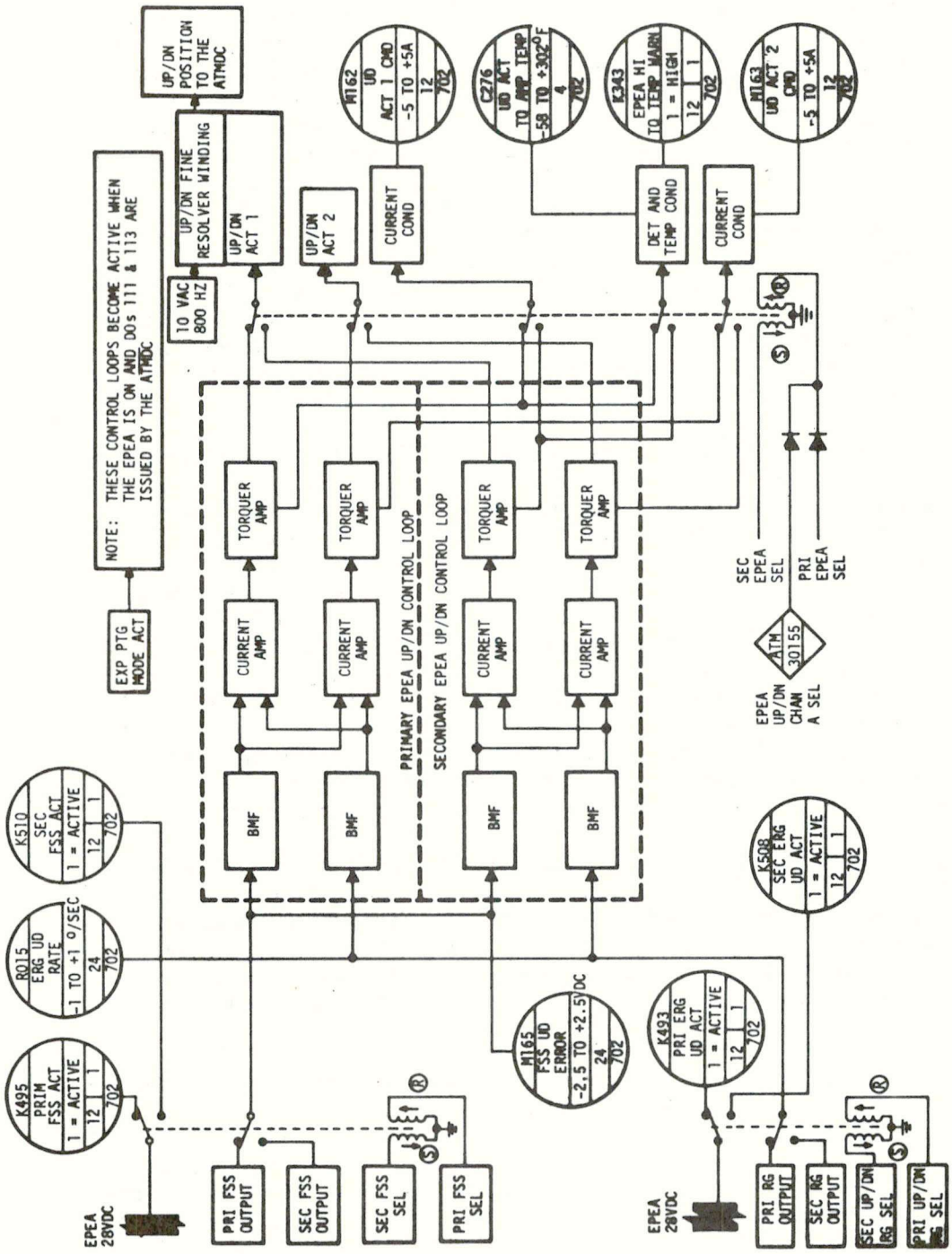

Figure 2.5-51 EPEA UP/DN Control Loops

Within each actuator package, there is a coarse and fine resolver making a total of four resolvers for each axis. Only the fine resolver located in actuator number one is used for determining the canister position with respect to the rack. This information is sent to STDN via ATMDC telemetry and is not used as part of the control loops. If the secondary EPEA was selected, all the functions provided by the EPEA would be operational in the secondary section. The capability exists via DAS/DCS commands to switch a functional channel back to the primary EPEA while the remaining functions operate in the secondary EPEA. For the UP/DN control loop, the EPEA UP/DN Channel A Select command 30155 provides this capability. Both the UP/DN and L/R control loops are dependent on the selection of the EPEA and on whether the ATMDC has issued the discretes activating the function (see the note on Figure 2.5-51).

2.5.4.11.3 Canister Caging Logic (Reference Figure 2.5-52) - When the canister control loops are not active, i.e. the computer has deactivated canister control, the canister is driven by mechanical caging devices (orbital locks) to the zero resolver positions in both the UP/DN and L/R axes. When the ATMDC recognizes the proper conditions, it issues discretes which activate the UP/DN, L/R and caging circuitry such that the canister is uncaged and driven to null any sensor inputs present in the UP/DN and L/R control loops. When this occurs, the inverter in Figure 2.5-52 changes state resulting in dc voltage being applied to the motor as shown. Note that this inverter drives the uncage relay and the EPC activate command drives the cage relay respectively. When the canister loops are deactivated, the result is a voltage is applied to the motor as shown for caging the canister.

It should be noted that there are two UP/DN cage/uncage motors and two L/R cage/uncage motors. They do not operate simultaneously. The primary UP/DN and L/R motors operate in conjunction with the primary EPEA. Similarly, the secondary cage motors operate with the secondary EPEA. There is no capability of operating a primary motor with the secondary EPEA selected

2.5.4.11.4 Manual Pointing Control Loop (Reference Figure 2.5-53) - The MPC loop provides the ATM operator with the capability of offset pointing the canister to any desired position within 24 arc minutes of sun center or the capability of manually positioning the star tracker inner and outer gimbals when searching for a star. Inputs from the MPC (See paragraph 2.5.4.12) are processed in the EPEA and routed to either the FSS or the star tracker. Normally, inputs from either the primary or secondary

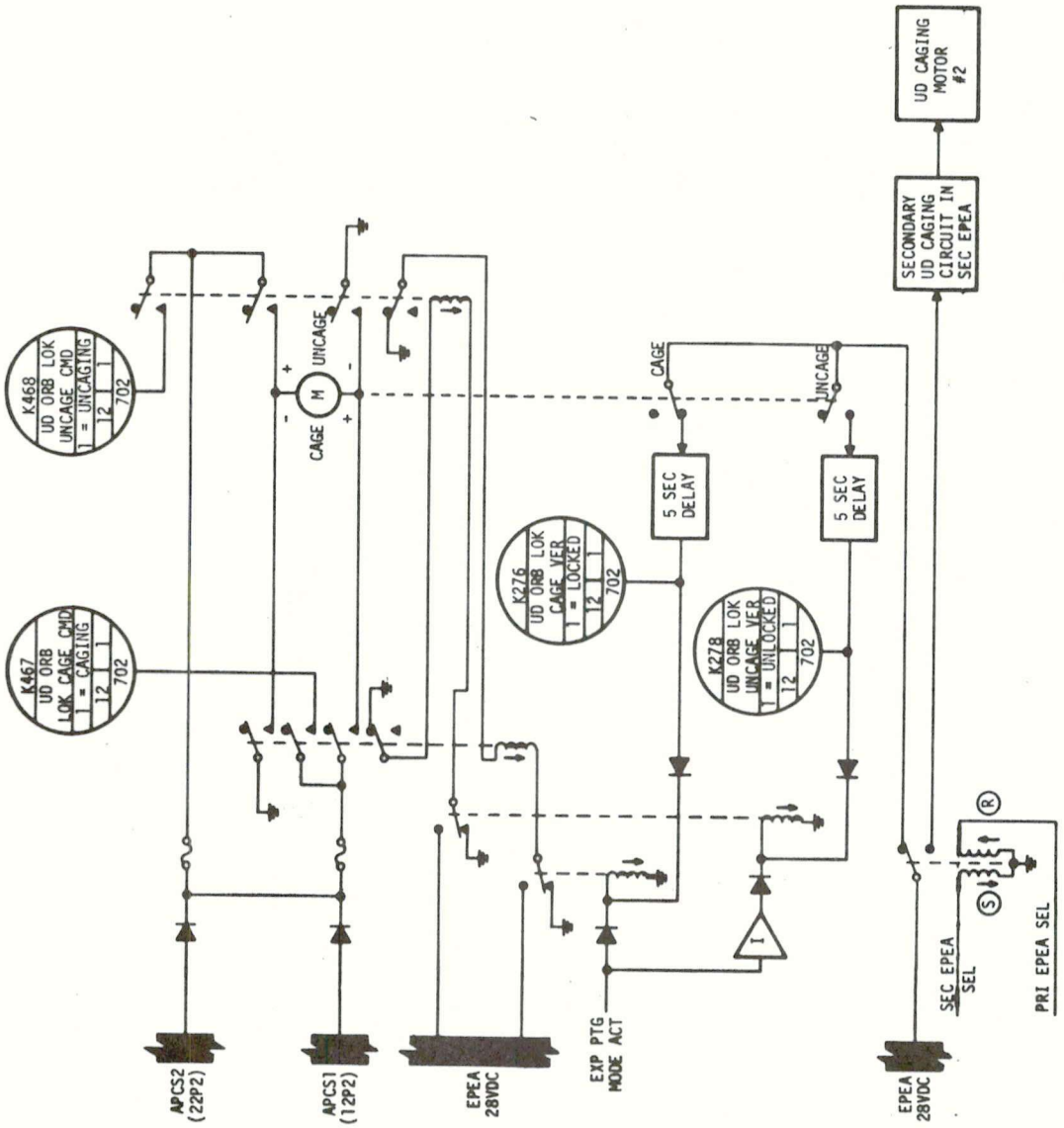

Figure 2.5-52 Canister UP/DN Caging Control

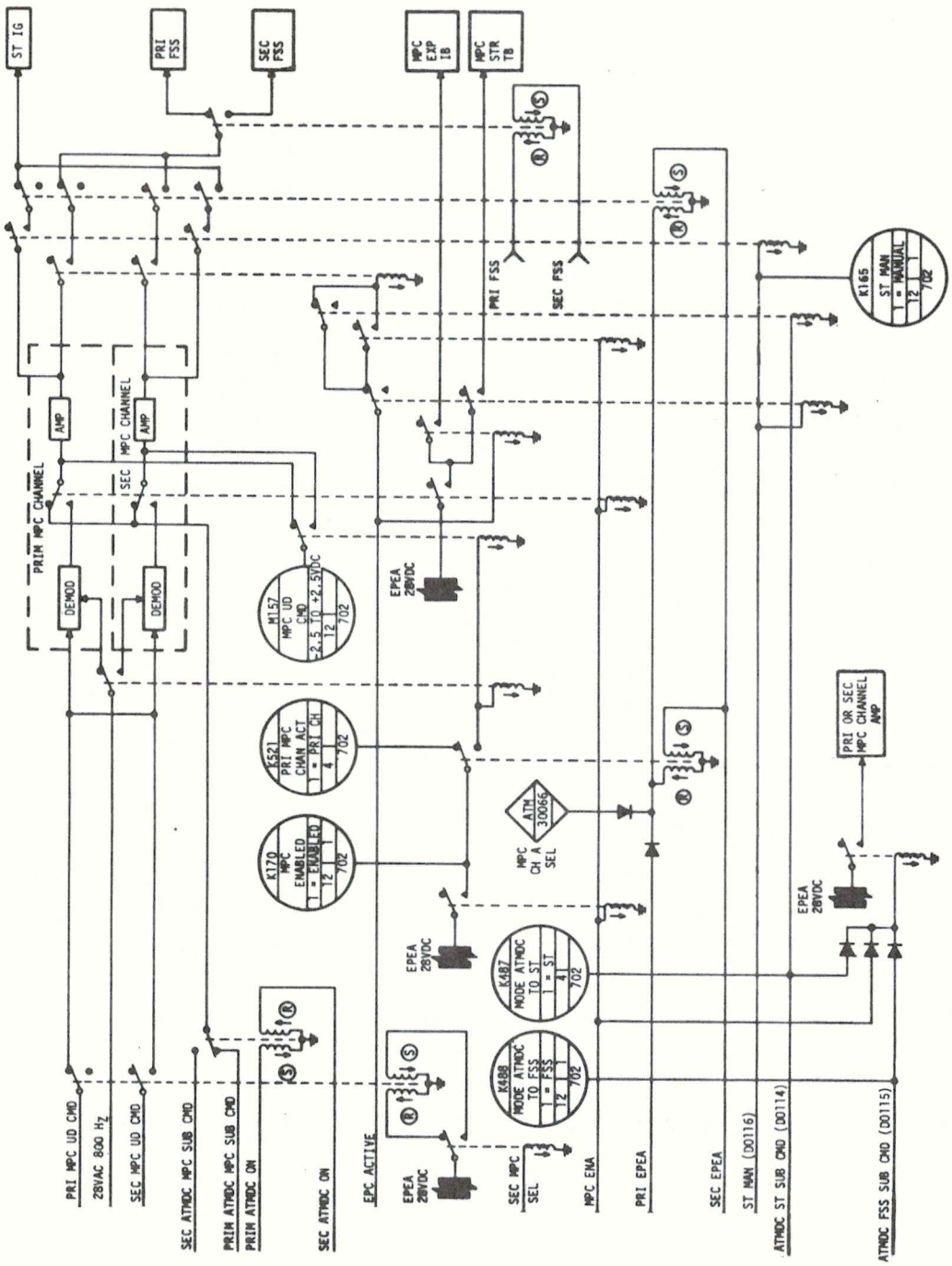

Figure 2.5-53 Manual Pointing Controller Loop

MPC are sent to both EPEAs, though only one channel is operational. The channel becomes active when the MPC is enabled (G). This applies power to the amplifiers in the loop and connects the amplifier to the demodulator. Inputs to the channel range from zero to 4.2 V, 800 HZ and are demodulated to a dc voltage for amplification. Normally, when the MPC is not enabled, the primary or secondary ATMDC is connected to the amplifier. When the computer issues the FSS SUBSTITUTE CMD, the channel becomes active and processes commands to the FSS wedge assembly.

Amplified signals drive either the ST gimbals or FSS wedges. The ST gimbals are driven when the star tracker ACQUISITION switch is placed in the MAN position. This puts the ST logic in the manual mode and informs the ATMDC of the mode change. The computer in turn issues a discrete (K) which makes the proper contact closure. This discrete also enables the STR indication on the MPC talkback, when the MPC is enabled (G).

When the computer issues the discrete which activates the canister loops (D), the MPC channel is connected to either the primary or secondary FSS, (L) or (M), and the proper indication, EXP, is given on the MPC talkback.

Miscellaneous controls in Figure 2.5-52 include a selection of MPC inputs. The MPC has two cable assemblies (See paragraph 2.5.4.12) and if in the course of malfunction isolation a switch to the secondary cable is necessary, a continuous discrete (F) is issued (See reference) which connects the secondary cable to both EPEA MPC channels.

A DAS/DCS command is provided to select the primary MPC channel even through the remainder of the EPEA control loops may be active in the secondary EPEA. This command is diode gated together with a prime EPEA select (H) such that it does not feed back to the other control functions.

The ATMDC has a discrete (DO114), which is the ST SUBSTITUTE cmd, that is currently not required for use. The EPEA has the logic built in such that should the requirement arise, the computer could issue DO114 and DO116 and command the ST gimbals. It can be noted that when the MPC is not enabled, the ATMDC is connected to the channel and can command the FSS with a dc voltage (0-5 volts). When the MPC is enabled, a demodulator is put in the loop. This demodulator requires 28V, 800 HZ which is supplied by either CMGIA 1 or CMGIA 2 (See paragraph 2.5.4.7). In either case, an 800 HZ source should be active as all EPC resolvers require 10V, 800 HZ excitation (See next paragraph).

2.5.4.11.5 Roll Channel (Reference Figure 2.5-54) - The canister can be rotated ±120 degrees from its zero position in order to maintain the FSS UP direction coaligned with solar north -i.e. keep the experiment reference angle YRR zero. Canister rotation for this requirement can be commanded by the C&D panel roll switches. The canister can be rotated during an EVA for the purpose of exchanging experiment film cartridges by using the Rotation Control Panel (RCP) 160 located at the center work station at the ATM rack. The two methods used for roll commands are shown in Figure 2.5-54.

Four roll switches on the C&D panel are used to enable the roll function and drive the canister CW or CCW at any one of the following rates: 7.0; 3.5; 0.7; and 0.35 degrees per sec. If the GAIN switch is in the X1 position and a CW or CCW HIGH RATE is commanded, the canister rolls at a rate of 3.5 degrees per sec. With the GAIN switch in the same position, a CW or CCW LOW RATE command rolls the canister at a rate of 0.35 degrees per sec. By placing the GAIN switch in the X2 position, the above rates become 7.0 and 0.7 degrees per second respectively.

When a crewman goes EVA to change film, he must first put the EVA switch in the EVA position. This action puts power on the RCP. At the center work station, he applies power to the roll control handle by placing two circuit breakers and a roll enable switch appropriately. The canister can now be rolled left or right as viewed from the center work station. The left direction corresponds to the CW direction.

A diode matrix in the EPEA roll channel OR GATES all the roll commands, all the CW commands, all the low rate commands and the roll enable commands, from the C&D and the RCP, and uses the OR GATE outputs to reconfigure the control loop shown in Figure 2.5-55. All roll commands are dioded to energize a relay whose contacts complete the control loop between the operational amplifier and the current amplifier. The CW roll commands reverse the input to the current amplifier via another set of relay contacts. The low rate and gain commands change the input and feedback paths to the operational amplifier respectively giving the desired rate. An example of a roll command which would only energize the relay which completes the loop would be a CCW high rate, X2 command of 7.0 degree per second. All roll rate commands also address the secondary EPEA channel, however, EPEA power made available by the roll enable command (G), is directed to whichever EPEA is selected. As with the other control functions, the primary roll channel can be DAS/DCS commanded while the remainder of the control functions are active in the secondary channels. It can be noted that the GAIN switch on the C&D panel determines whether the RCP commands roll the canister at 7.0 and 0.7 or 3.5 and 0.35 degrees per second.

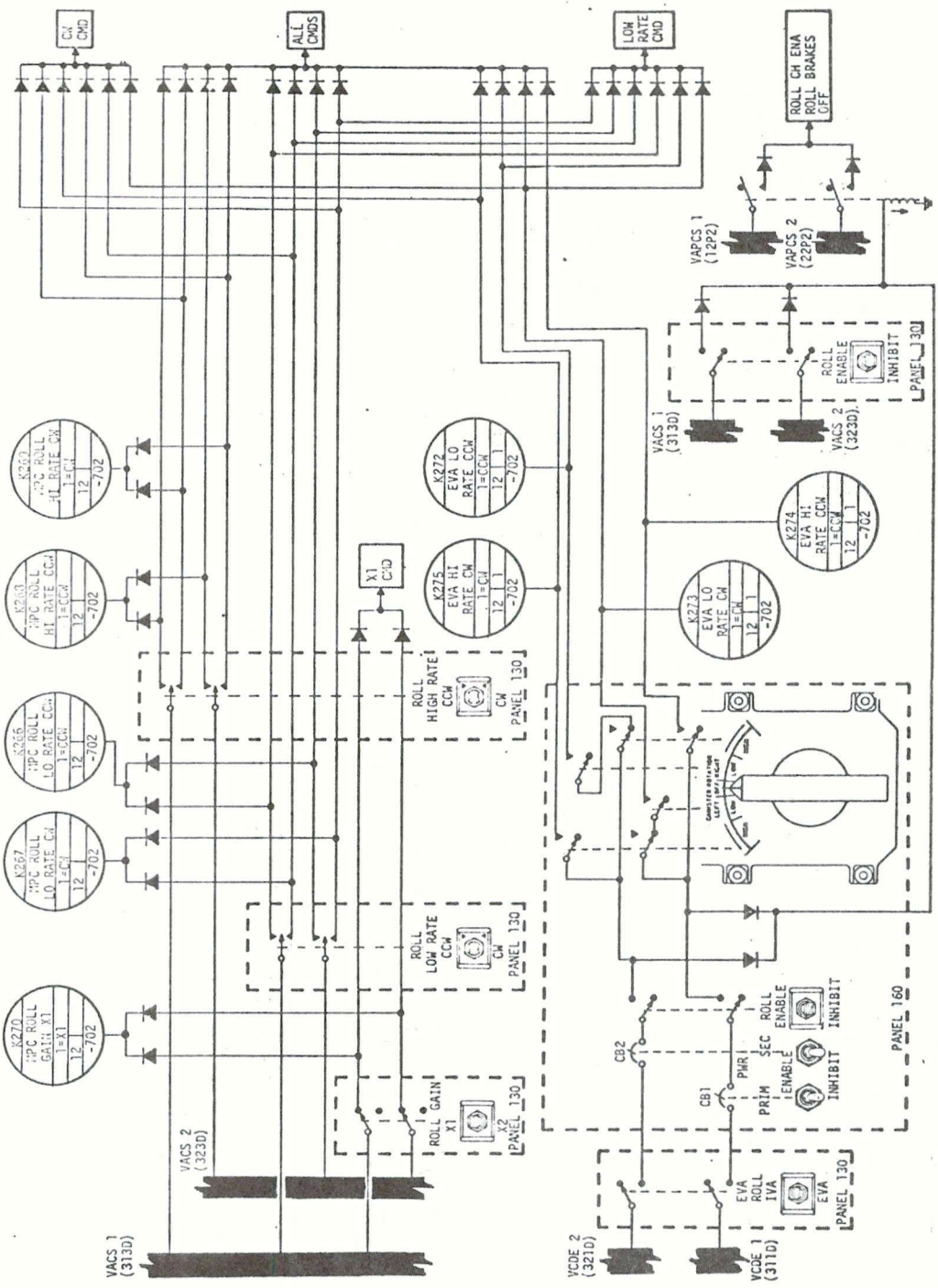

Figure 2.5-54 Roll Channel Control

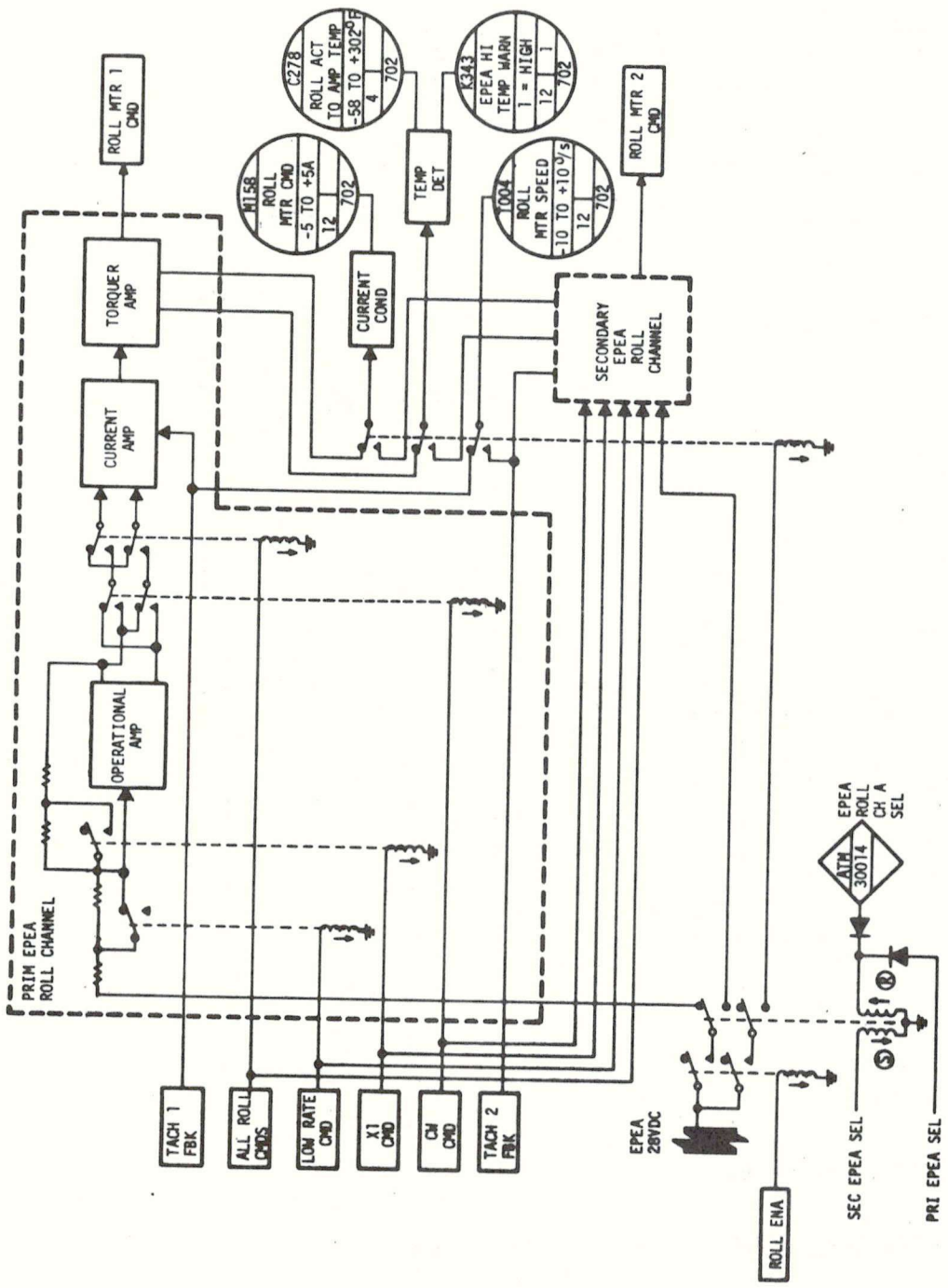

Figure 2.5-55 Roll Channel Control (CONTD)

Each channel drives one roll motor (See Figure 2.5-56). Both motors are in the same package along with the roll brake. The roll brake is a spring load clutch plate which is pressed against the roll motor rotor. When the roll enable command is given, redundant solenoids disengage the clutch from the motor. It should be noted that the roll motor cannot operate against the clutch and that one solenoid is sufficient to disengage the clutch. Tachometer feedback to the current amplifiers complete the loop and provide some degree of stiffness to the system.

Two fine and two coarse resolvers are used to provide roll information to the ATMDC (See Figure 2.5-57). All the resolvers are in a package called a Roll Position Indicator. As shown in the figure, a C&D panel switch selects a primary or secondary set by switching 800 HZ excitation to the desired input and connecting the requested resolvers to the computer. The ATMDC then uses this information in the calculation of γ_{RR}.

Finally, the source for all 800 HZ excitation is either CMGIA 1 (primary) or CMGIA 2 (See Figure 2.5-58). Selection of a source can be made by a C&D panel switch only as there are no DAS/DCS commands provided for backup. The CMGIA excitation 28V, 800 HZ is used by the MPC and EPEA for demodulation of MPC commands. A transformer is used to obtain 10V, 800 HZ for the UP/DN, L/R and ROLL resolver packages and for the ATMDC to demodulate the resolver information.

2.5.4.12 Manual Pointing Controller (MPC) - The Manual Pointing Controller (See Figure 2.5-59) allows the astronaut to command signals in pure UP/DN, or pure L/R, or combinations thereof, into the APCS. The MPC is used to either offset point the ATM solar instrument package or to manually search for a desired star. In either case, the MPC signal outputs are conditioned in the EPEA and then routed to the FSS or the ST, depending on the operational mode. The FSS provides drive circuitry to position optical wedges for offset pointing operations (See paragraph 2.5.4.9). The MPC UP/DN output is routed to the inner gimbal circuitry of the ST and the MPC L/R output is routed to the outer gimbal circuitry whenever the ST is in the manual mode.

The MPC has an upright control handle which can be titled from a center null position to a left/right position to an up/down position, or a combination of both positions. These positions are with respect to the MPC mounting configuration on the ATM Control and Display console. The MPC consists of a spring loaded two-axis gimbal control handle and mechanism, two linear transducers, and a housing with connectors for the input/output wiring. The UP/DN and L/R output signals are proportional to the handle deflection. The

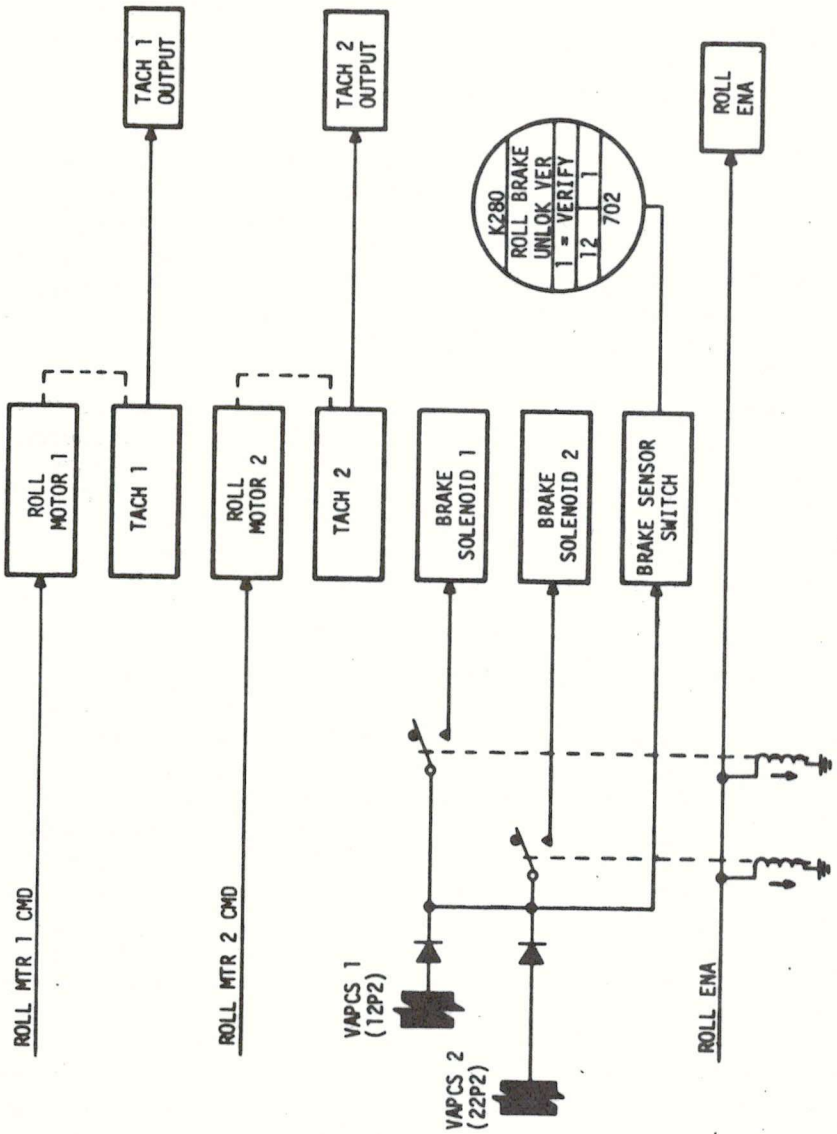

Figure 2.5-56 Roll Channel Control (CONTD)

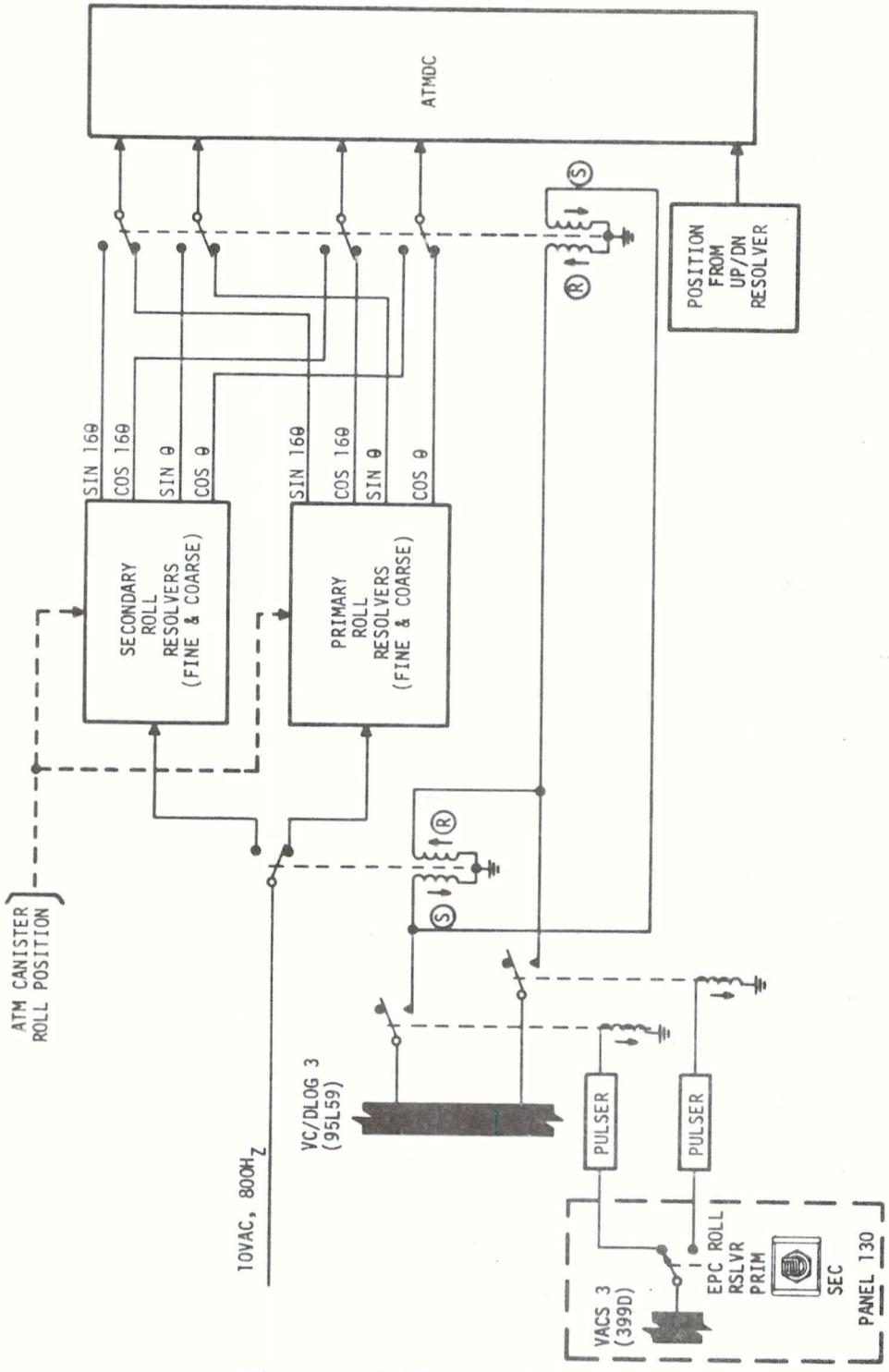

Figure 2.5-57 EPC Roll Resolver Control

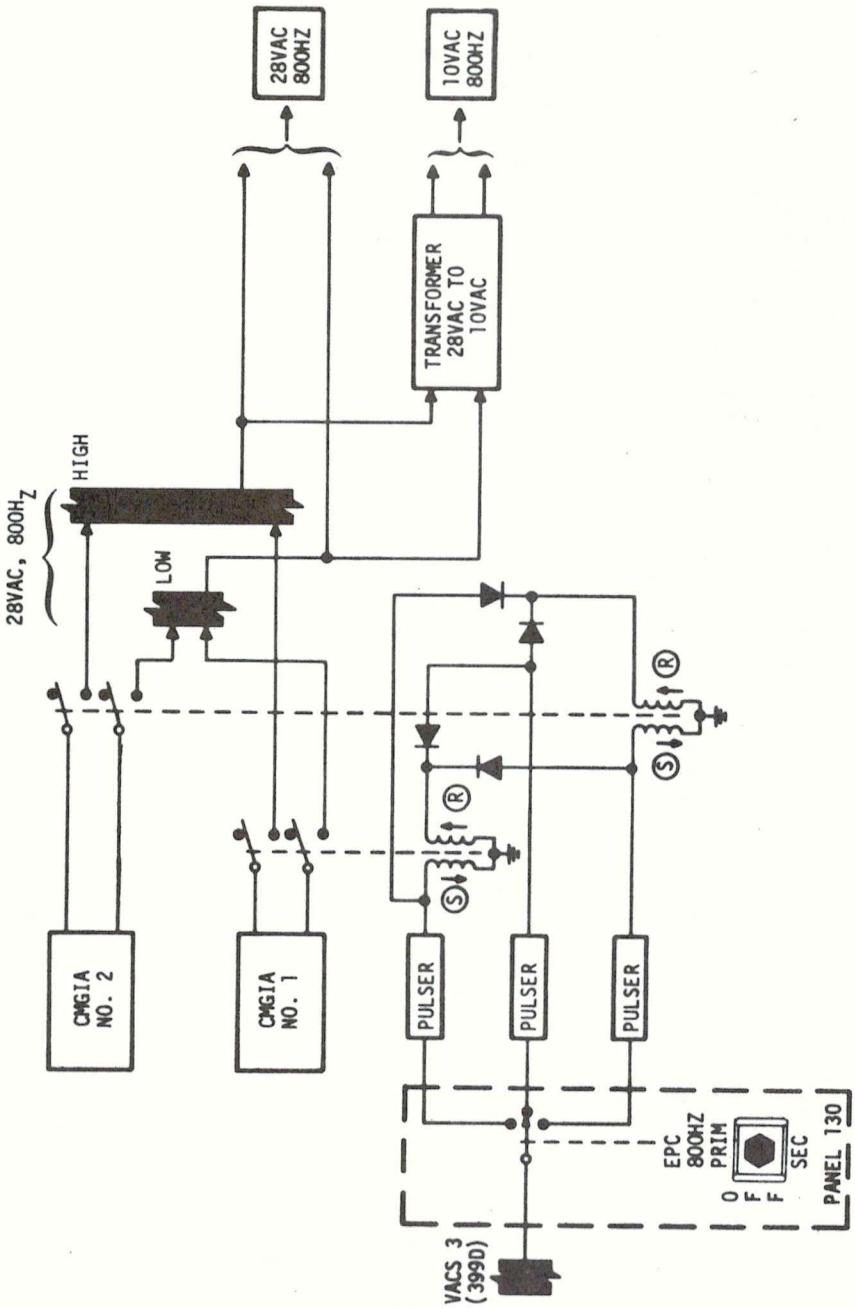

Figure 2.5-58 EPC 800 HZ Power Control

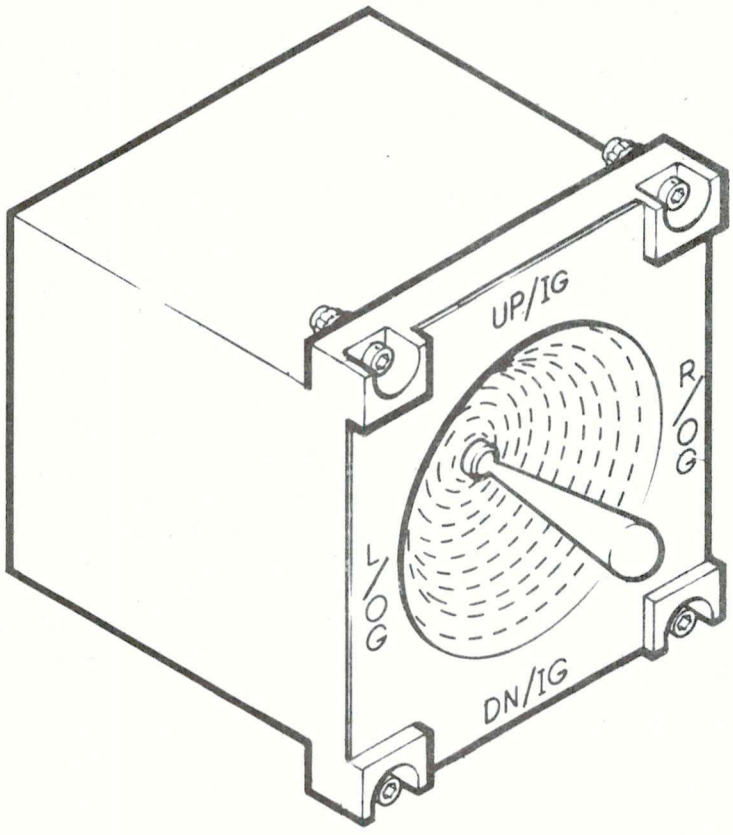

Figure 2.5-59 Manual Pointing Controller

output signals are generated by stator-to-case mounted brushless linear transducers actuated by a two-axes gimbal system, thereby eliminating slip ring and flex lead assemblies. The handle has an automatic center return feature and built-in mechanical limit stops. Input/output wiring is accommodated by a single connector with a second pinless connector available for redundant harness retention. Quick disconnect type mounting hardware permit convenient inflight replacement.

A functional diagram of the MPC is shown in Figure 2.5-60. The input excitation to the transducers is 28 V, 800 HZ. The output of each transducer is proportional to the amount of handle deflection or electrical coupling between the input and output windings. Each output is sent to the appropriate EPEA channel for demodulation.

Should malfunction procedures call for a change in MPC cables, the deadended secondary cable can replace the primary cable by removing the MPC from the C&D panel. The secondary cable has two extra wires in it, which are shorted together in the MPC when the change is made. Now when the MPC is enabled, a discrete is issued through the extra wires to the EPEA commanding the EPEA to pickup the secondary cable instead of the primary. (See paragraph 2.5.4.11.4) When the MPC is enabled, the EPEA sends back a talkback signal, indicating which component the MPC rate commands are addressing.

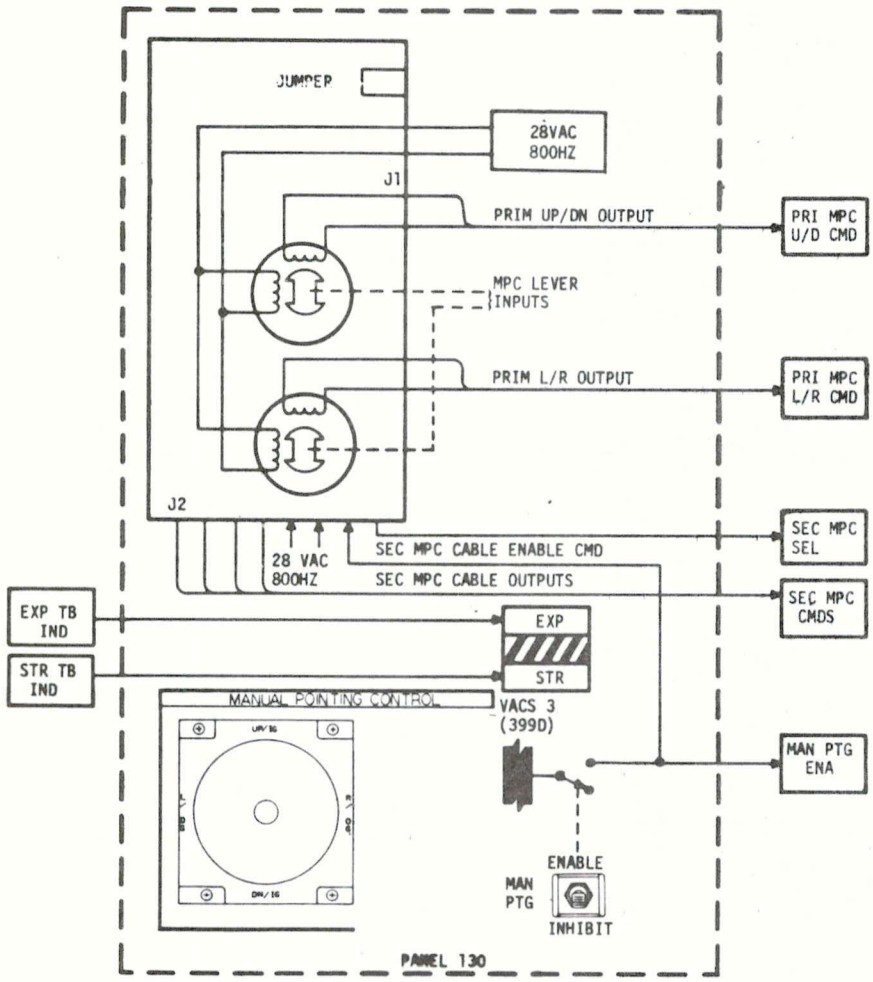

Figure 2.5-60 Manual Pointing Controller Interface

2.5.5 PERFORMANCE AND DESIGN DATA

PERFORMANCE CHARACTERISTICS

Rate (maximum)	
Coarse Mode	± 1 deg/sec
Fine Mode	± 0.1 deg/sec
Null Drift Rate	
Coarse Mode (Compensated)	0.1 deg/hour
Fine Mode (Compensated)	0.1 deg/hour

ELECTRICAL

Voltage Output - either mode	0 to ± 45 vdc ± 1%
Null Uncertainty	2 millivolt
Transfer Function	
Coarse	$\frac{45 \text{ vdc/deg/sec}}{\left(\frac{s}{180}\right)^2 + \frac{2(0.7)s}{180} + 1}$
Fine Mode	$\frac{450 \text{ vdc/deg/sec}}{\left(\frac{s}{50}\right)^2 + \frac{2(0.8)s}{50} + 1}$
Bandpass	
Coarse Mode	26 ± 4 Hz
Fine Mode	8 ± 1 Hz
Power	
Running	12 watts (estimated)
Heater	0 to 25 watts

PHYSICAL

Weight	11.5 lbs.
Size (nominal)	12 by 8.7 by 5.5 inches

Table 2.5-XIII Rate Gyroscope

PERFORMANCE AND DESIGN DATA

PERFORMANCE CHARACTERISTICS

Fine Null Sensor (both axes):	
Fine-of-View	± 10 degrees minimum (full output) ± 20 degrees (20 percent output)
Linear range	± 5 degrees minimum (±6 degrees typical)
Null accuracy	2 arc minutes or better at 0 ± 5 mV null error
Target Sensor:	
Field-of-View	± 9 degrees (circular) ± 1 degree

ELECTRICAL

Power:	
Input voltage	+ 28 vdc ± 4 vdc
Input power	1.2 watts maximum
Signal:	
Transfer Function	$\frac{114.6 \text{ volts/radian}}{\frac{s}{62} + 1}$
Angular sensitivity	1.9 volts/degree to 2.1 volts/deg (within ± 3 deg of null), 2 volts/deg nominal
Frequency response	0 to 10 Hz (3 db) minimum
Output Voltage Range	± 12 vdc nominal

PHYSICAL

Weight	Sensor Assembly - 3.7 lbs Electronics - 1.5 lbs
Maximum dimensions:	
Sensor package	6.9 by 6.5 by 3 inches*
Electronics package	5 by 5 by 2 inches*

*Includes prime & redundant sensor.

Table 2.5-XIV Acquisition Sun Sensor

APCS

PERFORMANCE AND DESIGN DATA

PERFORMANCE CHARACTERISTICS

Target Stars	Canopus (Primary) Achernar Alpha Crux
Field-of-View:	
Acquisition	1 arc degree (approx)
Track	$\leq$ 10 arc minutes (approx)
Tracking Accuracy	$\pm$ 10 arc seconds

Capable of tracking to within 5 degrees of earth (0.35 albedo), 45 degrees of sun, 2 degrees of structure (black), and 5 degrees of OWS solar array

Provide safety shutter for pointing toward the earth or sun.

Search Angles	Coarse - $\pm$ 15 deg(outer), $5\frac{1}{4}$, - $4\frac{1}{2}$ deg (inner) Fine - $\pm$ 2 deg(outer), $\pm$ 1.5 deg (inner)
Gimbal:	
Freedom	
Outer Gimbal	$\pm$ 87 degrees
Inner Gimbal	$\pm$ 40 degrees
Readout	Serial binary (ATMDC), parallel binary (telemetry)
Gimbal Position Resolution	30 arc sec (serial binary and parallel binary)
Gimbal Position Accuracy	$\pm$ 1 Bit

Capable of operating in automatic search/track, manual (from Manual Pointing Controller), and shutter closed/hold modes.

ELECTRICAL

Power:	
Optical Mechanical Assembly (OMA)	50.36 watts (max) 8.6 watts (avg)
Star Tracker Electronics (STE)	18.7 watts (max) 15.1 watts (avg)

PHYSICAL

Weight:	
OMA	40.0 lb
STE	32.0 lb

Table 2.5-XV Star Tracker

PERFORMANCE AND DESIGN DATA

PERFORMANCE CHARACTERISTICS

Type Computer	Digital, general purpose
Storage	16,384 words (16 bits) 2.5μsec memory cycle time
Instruction Set	54 command repertoire
Instruction format	8 bits - short, 16 bits-long, 24 bits - immediate
Data format	sign + 15 bits, sign +31 bits
Arithmetic unit	Fixed point, negative numbers in twos complement form
Interrupt	Single Priority
Computation Cycle	1/sec slow loop, 5/sec intermediate loop

ELECTRICAL

Voltage Input	24 to 31 vdc
Power Average	168.7 watts

PHYSICAL

Weight	98 lbs
Dimensions	19.0 x 7.3 x 31.8 inches

INPUTS

Discretes, continuous	59 bits
Discretes, Momentary	3 bits
Discretes, DAS/DCS	12 bits
Discretes, Experiment	8 bits
Discretes, Interrupt A	9 bits

Table 2.5-XVI ATM Digital Computer (1 of 3)

PERFORMANCE AND DESIGN DATA

INPUTS (cont)	
Serial Data:	
Single channel conversion	4 channels
Conversion time	1.632 ms/channel
Resolution	sign +11 bits - two channels (Star Tracker)
	sign +14 bits - two channels (FSS)
DC Inputs Analog - to - Digital:	
Single channel conversion	3 channels - (Strap, WCIU Temp, and ATMDC Temp)
Input range	± 2.5 vdc
Resolution	Sign + 7 bits
Accuracy	±0.3% of full scale input
Conversion time	800μ sec max.
AC Inputs Analog-to-Digital:	
Dual, sin and cos, channel conversion	9 channels
Input range	0 to 360 degrees (10 vrms)
Resolution	Sign + 8 bits
Accuracy	3 parts in 1250
Conversion time	≈ 3.5 ms max
OUTPUTS	
Discretes, continuous	20 bits
Discretes, Momentary	9 bits
Discretes, DAS/DCS Verify	13 bits

Table 2.5-XVI (CONTD) ATM Digital Computer (2 of 3)

PERFORMANCE AND DESIGN DATA

OUTPUTS (cont)

Discretes, Experiment	42 bits
Discretes, Telemetry	50 bits
Discretes, BDC	16 bits/counter - 3 counters 16 bits - time remaining
DC Outputs Digital-to-Analog:	
Single channel Conversion	7 channels - sample and hold
Output range	± 5 vdc
Resolution	7 bits plus sign
Accuracy	0.3% of full scale (10 volts)

TIMERS

Mission Time A	29 bits
Resolution	15.625 ms
Max. Time	63 days, 23 hrs, 59 mins. 59 sec., 984.375 ms
Real Time Counter	16 bits
Resolution	768 μ sec
Max. Time	50.3 sec
Interval Timer	16 bits
Resolution	96 μ sec
Max Time	6.291 sec

Table 2.5-XVI (CONTD) ATM Digital Computer (3 of 3)

PERFORMANCE AND DESIGN DATA

PERFORMANCE CHARACTERISTICS

Input/Output extension for ATMDC

Sections	Primary Secondary Common

ELECTRICAL

Voltage Input	24 to 31 vdc
Power Average	94 watts

PHYSICAL

Weight	107 lbs
Dimensions	20x43x5.3 inches

INPUTS

Discretes, Continuous	2 bits
Discretes, Momentary	12 bits
Discretes, Transfer Reg	64 bits, voter output
Discretes, TACS Wrap	6 bots

DC Inputs
Analog-to-Digital:

Single channel conversion redundant input multiplexers		29 channels
Input range		Nine ± 45 vdc (Rate Gyros) Four ± 12 vdc (Acq SS) One ± 5 vdc (Internal) Six ± 5 vdc (Gimbal Drive Wrap)
Resolution		10 bits magnitude plus sign
Accuracy	CMG Direction Cosine	± 0.1% of full scale input ± ½ LSB
Conversion Time		150 μ sec/channel

Table 2.5-XVII Workshop Computer Interface Unit (1 of 2)

PERFORMANCE AND DESIGN DATA

OUTPUTS	
Discretes, continuous	43 bits
Discretes, Momentary	24 bits
Discretes, Transfer Reg	64 bits, TMR
Discretes Momentary Switchover	one
DC Outputs Digital-to-Analog:	
Single channel conversion	7 channels,(1 wrap 6 Gimbal Drive) sample and hold
Output range	± 5 vdc
Resolution	Ten bits plus sign
Accuracy	± 0.3% of full scale (10 volts)
Conversion Time	20 ms max.
TIMERS	
Mission Timer B	29 bits
Resolution	15.625 ms
Max Time	63 days, 23 hrs., 59 min., 59 sec., 984.375 ms
Switchover Timers, TMR	2.1 sec ± 20%
Transfer Reg load Window Timers, TMR	676 μ sec ± 20%

Table 2.5-XVII Workshop Computer Interface Unit (2 of 2)

PERFORMANCE AND DESIGN DATA

PERFORMANCE CHARACTERISTICS

Momentum Storage	3100 nms
Degrees of Freedom	2
Output Torque:	
Range	160 ±25 Ft.-Lb. When one Gimbal is held At 0 deg/sec and the other Gimbal is driven +45 deg to - 45 deg at a rate of 4 deg/sec
Threshold	0.25 ft-lb
Gimbal Rates:	
Range	0 to 7.0 degrees per second
Threshold	0.0057 degrees per second
Gimbal Rate Servo:	
Bandwidth	70 radians per seconds
Phase Margin	70 degrees
Gimbal Pivot:	
Actuator (dc motor)	
Torque (max)	7.0 ft-lb
Tachometer Gain	1 vdc/rad/sec
Tachometer Amplifier Gain	1.013
Gear Ratio	56.55:1
Resolvers Speed	single (4.8 kHz excitation)
Gimbal Freedom	
Inner	± 80 degrees (mechanical)
Outer	± 220 degrees, -130 degrees (mechanical)

Table 2.5-XVIII Control Moment Gyro (1 of 2)

Wheel:	
Operating Speed	9027 rpm
Acceleration Time	14 hrs maximum
Deceleration Time	4.5 hrs
ELECTRICAL	
Power:	
Bearing Preheat 50°F to 70°F	48 watts
During Wheel Acceleration	130 watts per CMG (Max)
Wheel at Operating Speed	55 watts per CMG
PHYSICAL	
Size (approximate):	
CMG	39 inch sphere
CMG Electronics Assembly (CMGEA)	9.8 by 8.6 by 3.0 inches
Weight:	
CMG	
Inner Gimbal and Wheel	242.0 lbs
Outer Gimbal	75.3 lbs
Frame	94.7 lbs
CMGEA	8.2 lbs

Table 2.5-XVIII Control Moment (2 of 2)

PERFORMANCE AND DESIGN DATA

PERFORMANCE CHARACTERISTICS

Voltage Regulation (All Voltages)	5%
Frequency Regulation (All Frequencies):	
Using Primary 19.2 KHz Oscillator	±0.002%
Using Redundant 9.6 KHz Oscillator	±1.0%
Frequency Regulation on 5.46KHz Oscillator	±1.0%
Voltage Distortion (All Voltages)	5%
Power Output:	
3Ø, 455 Hz, 130V	600 VA
1Ø, 800 Hz, 28V	12.5 watts
1Ø, 4.8 kHz, 10 V	6.0 watts
Power Loads:	
CMG Wheel Runup	130 watts
CMG Wheel at Run Speed	55 watts
Distributor Buses:	
455 Hz	100 VA
800 Hz	12.5 watts
4.8 kHz	6.0 watts

ELECTRICAL

Voltage Input	28 vdc + 4 vdc
Current Input	10 amps (maximum)

PHYSICAL

Size	25.0 by 22.5 by 3.5 inches
Weight	52 lbs (estimated)
Volume	1969 cubic inches

Table 2.5-XIX CMG Inverter Assembly

PERFORMANCE AND DESIGN DATA

PERFORMANCE CHARACTERISTICS

Sensitivity	176 $\pm$32 MV/arc-sec
Output Voltage Range	$\pm$ 12.5($\pm$2.5V) ($\pm$14 volts nominal)
Pointing Accuracy	$\pm$ 2.25 arc sec (max)
Pointing Resolution	$\pm$ 0.625 arc sec (nominal)
Pointing Stability, Short Term	$\pm$ 0.1 arc sec (nominal)
Pointing Stability, Long Term	$\pm$ 0.5 arc sec (goal)
Temperature Stability	$\pm$0.2 arc sec/deg F (nominal)
Field-of-View	5.0$\pm$.5 deg $\geq \theta \geq$ 80 arc min
Spectral Response	0.8 microns to 1.0 microns
Frequency Response	$\geq$ 10 Hz
Offset Pointing Capacility	$\pm$ 24 arc min (each axis)
Offset Pointing Drive Rate ($\dot{\theta}$):	$\leq$ 2 $\frac{\text{sec}}{\text{sec}}$ >/ 80 $\frac{\text{sec}}{\text{sec}}$

ELECTRICAL

Power (Peak)	21.5 watts
Power (Average)	9 watts
Transfer Function	$\frac{176 \text{ mv/arc-sec}}{0.05 \tau s + 1}$

PHYSICAL

Weight (without Signal Conditioner)	46.9 lb

Table 2.5-XX Fine Sun Sensor

APCS

PERFORMANCE AND DESIGN DATA

A. INPUTS

1. From ATMDC

Interrogation pulse	Rate: 4 pps Pulse width: 1.3 ms Max fall time: 25 ms/volt
Clock Pulses	Frequency: 10.4 kHz Pulse width ≥48 μsec
Logic Levels	Logic "O" min = 0 vdc max = 0.8 vdc Logic "1" min = 2.4 vdc max = 5.0 vdc
Hold Position Command	+5 vdc discrete

2. From FSS PAE

Drive rate (wedge encoder)	I51 arc sec/sec (max) 80 arc sec/sec (avg)
Angular displacement (wedge encoder)	$\pm$ 24 arc min (max)

B. OUTPUTS

1. To ATMDC

Code	Binary (serial)
Logic levels	Logic "O" min = 0 vdc max = 0.5 vdc I_{sink} = 16 m amps
Logic levels	Logic "1" min = 2.4 vdc max = 5.0 vdc I_{load} = 400 amp
Direction bit	"1" = CCW from zero "O" = CW from zero
Zero pulse	pulse ≥ 15.625 m sec

Table 2.5-XXI FSS Signal Conditioner

PERFORMANCE AND DESIGN DATA

RPM

PERFORMANCE CHARACTERISTICS

Shaft:	
Output Torque	6.2 ± 10% lb-ft max
Speed	65 ± 10% RPM max
Rating	Continuous operation, either direction
Brake Capacity:	
De-energized torque	8 lb-ft min, 15 lb-ft max
Energized torque	0.1 lb-ft max
Angular Rotation	± 120°
Brake-out torque	80 ft-lbs max

ELECTRICAL

Motor Input Nominal Voltage	36.7 vdc
Motor Input Current	Not to exceed 3.75 amps maximum
Tachometer Sensitivity	2.45 volts/radian/second ±10%
Brake Solenoid Nominal Input Voltage	28 vdc
Brake Solenoid Input Current	Not to exceed 1.50 amps

Table 2.5-XXII Roll Positioning Mechanism (1 of 4)

PERFORMANCE AND DESIGN DATA

RPM READOUTS

PERFORMANCE CHARACTERISTICS

Fine Resolution	±1 arc-minute
Coarse Resolution	±30 arc-minutes
Co-ordinate Transformation	±30 arc-minutes
Input Shaft Speed	56 RPM maximum
LImit of Rotation	±5.6 Revolutions

ELECTRICAL

Resolvers:	Coarse	Fine
Nominal Excitation Frequency	800 hz	800 hz
Nominal Excitation Voltage	10 vac	10 vac
Primary Phases	2 (one shorted)	2 (one shorted)
Secondary Phases	2	2
Maximum Input Current	0.03 amps	0.06 amps
Output Impedance	75 ohms	75 ohms
Transformation Ratio	1.0 ±3%	1.0 ±3%
Nominal Output Voltage	10 vac	10 vac
Output Phase Angle	5° max.	5° max.
Accuracy	±6 arc-min	±6 arc-min.
Harmonic Distortion	0.2%	0.2%

Table 2.5-XXII Roll Positioning Mechanism (2 of 4)

PERFORMANCE AND DESIGN DATA

Co-ordinate Transformation Resolvers

Poles	2
Primary	Rotor
Excitation Frequency	4800 Hz
Nominal Excitation Voltage	10 vac
Primary Phases	2
Secondary Phases	2
Input Power	0.03 watts
Input Impedance	8K ohms
Output Impedance	1.5K ohms
Transformation Ratio	1.0 ± 4%
Nominal Output Voltage	10 vac
Output Phase Shift	1.0 degrees ± 5
Accuracy	± 30 arc-min
Total Nulls Fund	50 mv

ORBITAL CAGE MECHANISM

PERFORMANCE CHARACTERISTICS

Range	Functional at any point from 0° to 2° gimbal deflection.
Power Requirements	Power required only during locking and unlocking. Maximum operating time is five (5) seconds.
Capacity	Capable of operating with maximum torque output from one pitch or yaw actuator with a reserve factor of two.

ELECTRICAL

Torque Output (each motor)	1.10 ± 10% lb-ft
Input Voltage, Nominal	24.2 vdc
Current	4.64 amps max

Table 2.5-XXII Roll Positioning Mechanism (3 of 4)

PERFORMANCE AND DESIGN DATA

EPC ACTUATORS

PERFORMANCE CHARACTERISTICS

Angular Rotation	0° to 2° $\pm$5% in either direction
Torsional Spring Rate	53.0 lb-in/radian/actuator max
Breakaway Torque	0.10 lb-ft/actuator

ELECTRICAL

Motor:	
Maximum Torque Output	7.0 $\pm$ 10% lb-ft at 3.75 amps
Nominal Voltage	36.7 vdc
Current	3.75 amps max
Torque Breakaway	0.07 lb-ft max
Resolver:	
Nominal Input Voltage	10 vac
Nominal Frequency	800 Hz
Output	Sin 1θ and Cos 1θ
Error	Less than 1.0 arc min

Table 2.5-XXII Roll Positioning Mechanism (4 of 4)

PERFORMANCE AND DESIGN DATA

PERFORMANCE CHARACTERISTICS

Roll Channel:	Output ± VDC	Roll Rate Deg/Sec
+VDC=CCW	4.2	7.0
-VDC=CW	2.1	3.5
	.42	0.7
	.21	0.35

Up/Dn or L/R Channels:

Displacement Loop Scale Factor	3.5 Amps / Volt
Rate Loop Scale Factor	4.625 Amps / Volt
Torquer Amplifier Saturation	3.5 Amps

MPC Channel:

Input Voltage	0 to 4.2 volts, 800HZ
Scale Factor	1 Volt DC / 1 Volt AC

ELECTRICAL

Power Consumption:	
Quiescent	40 watts
Maximum	130 watts
Input Voltage	+28VDC

PHYSICAL

Weight	200.8 pounds
Maximum dimensions:	24x7.25x40.7 inches

THERMAL CHARACTERISTICS

Operation Temp	-40° to $+165^{\circ}$F
Storage Capability	-67° to $+185^{\circ}$F

Table 2.5-XIII Experiment Pointing Electronics Assembly

PERFORMANCE AND DESIGN DATA

PERFORMANCE CHARACTERISTICS

Electrical Output:	
Amplitude	4.2 to 5.5 VRMS at handle cardinal positions (limits)
Phase Shift	$\leq$ 7 degrees from full output, nominal
Linearity	$\pm$ 5 percent
Null	$\leq$ 100 millivolts RMS
Output impedance	16.7 K ohms, resistive
Handle Parameters:	
Tilt	$\leq$ 30 degrees at cardinal positions
Force	$\leq$ 3.25 lbs, cardinal positions
Breakout force	0.40 lb, minimum either axis

ELECTRICAL

Excitation:	28.0 $\pm$ 1.4 VRMS 800 $\pm$ 8 Hz sinusodal
Impedance:	$\geq$ 750 ohms 80 $\pm$ 10 degrees impedance angle

Table 2.5-XXIV Manual Pointing Control

2.5.6 Operational Limitations and Restrictions

TBS

2.6 CAUTION AND WARNING SUBSYSTEM (C&W)

2.6.1 Introduction

This section will explain how the ATM inputs to and uses the cluster C&W subsystem. The ATM C&W subsystem covers the areas of EPS Bus 1 and 2 low, a number of APCS signals, a computer malfunction and inputs from the TCS. All signals output as either a Caution or a Warning on the AM/STS Control and Display Console, or as Alert lights on the ATM C&D console in the MDA. None of the ATM signals are of an emergency nature and there is no Master Alarm section in the ATM C&D console. The C&W requirements are called out in the Cluster Requirements Specification RS003M00003, appendix H of 23 June 1970. Figures 2.6-1, -2, -3, -4 and 2.6.5 show the relationship of the ATM C&W elements to the cluster. Figures 2.6-5 and 2.6-6 describe the features of the C&W subsystem. Exerpts from Skylab Caution and Warning Technical Manual MSFC 40M5107 have been used extensively in the interest of uniformity of information.

2.6.2 Subsystem Interface

The ATM C&W Subsystem interfaces with the integrated EPS, the ATM APCS, the ATM TCS, the ATM C&D console via cluster logic. Table 2.6-IV and V show the measured parameter lists for the ATM interfaces. The ATM has C&W signals that are used as a part of the cluster system and an ALERT "ATM only" system. Applicable Interface Control Documents are identified in drawing 10M01840F, ICD Identification Matrix Skylab Program dated 23 June 1970. Those of ATM interest are:

MDA to ATM - C&D Panel	40M35601
MDA to AM	40M35662
AM to ATM	40M35659
OWS to AM	40M35594

ATM CEIs has more detailed information. Cable Interconnect Drawings (CID) appear in the Skylab Caution and Warning Technical Manual MSFC 40M35701.

Figure 1.0-5 - is a photograph of the ATM C&D Console in the MDA.

Figure 2.6.52 shows the signal Alert elements on the ATM C&D Console in the MDA.

Figure 2.6-18 shows the ATM Caution Warning lights and control panel in the AM.

Figure 2.6-26 and Table 2.6-I show hardware location.

SLOH/SWS Volume I, McDonnell Douglas Astronautics Company MDCE0097 also contains much detail on the SWS C&W Subsystem.

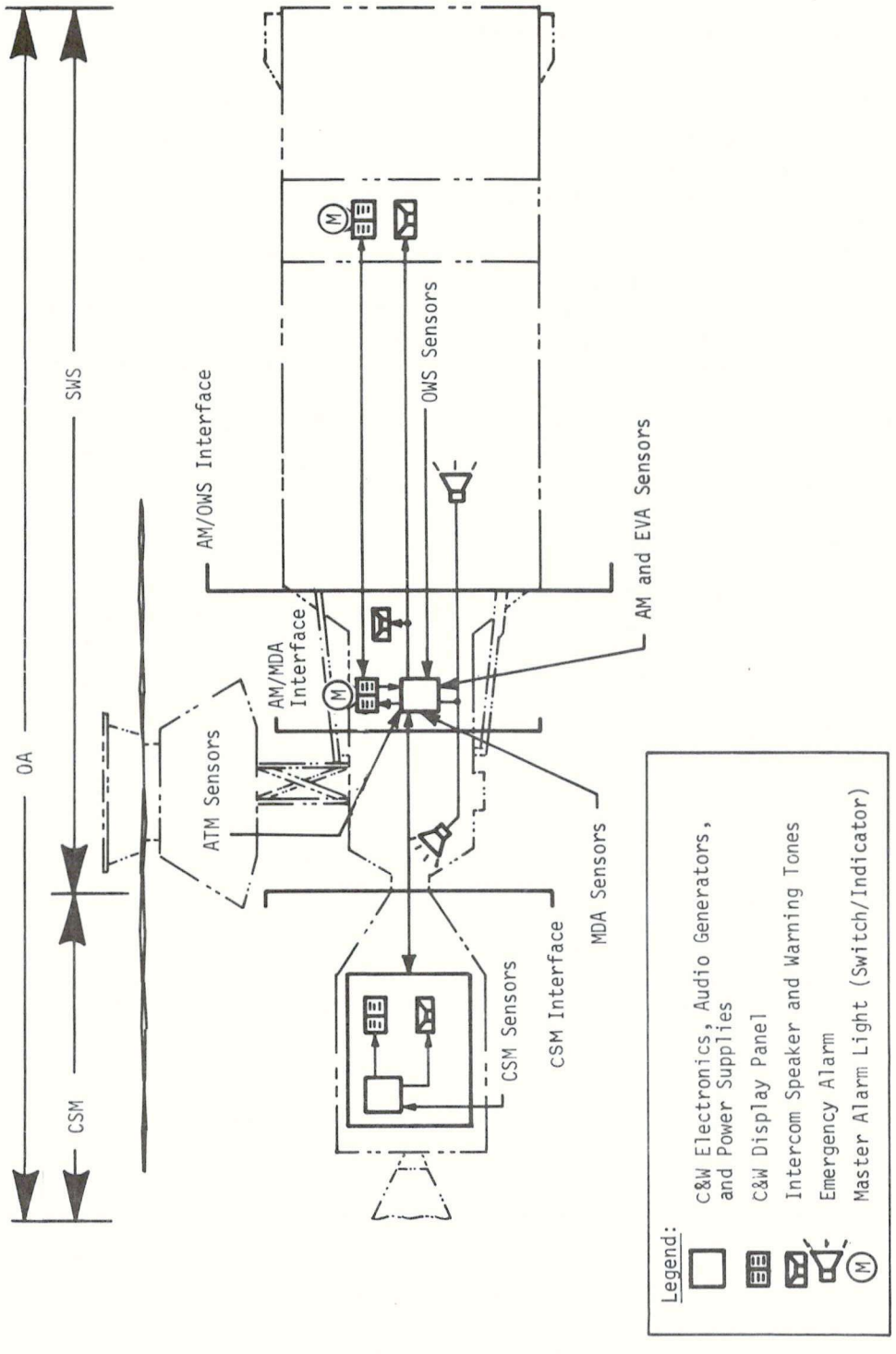

Figure 2.6-1 Caution and Warning System Diagram

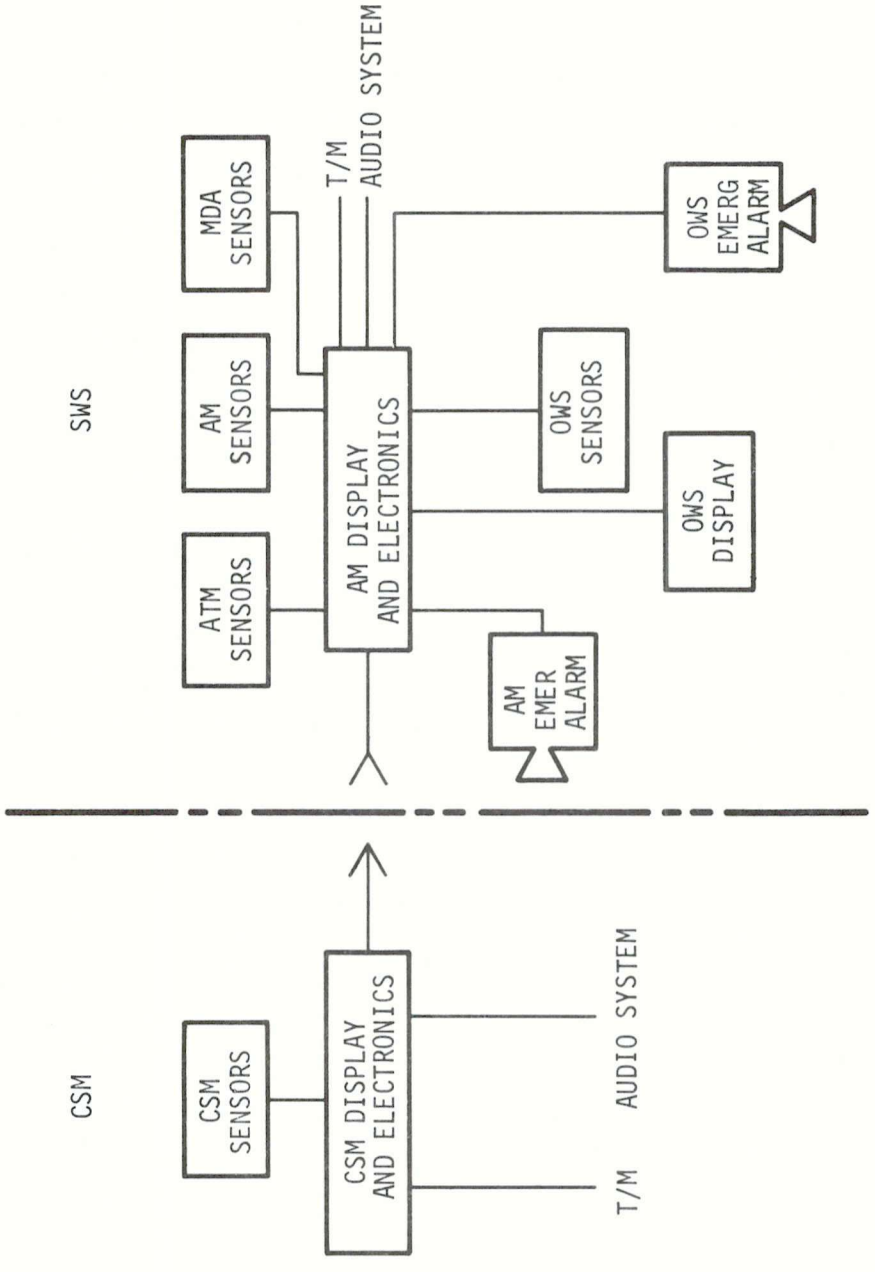

Figure 2.6-2 C&W System Block Diagram

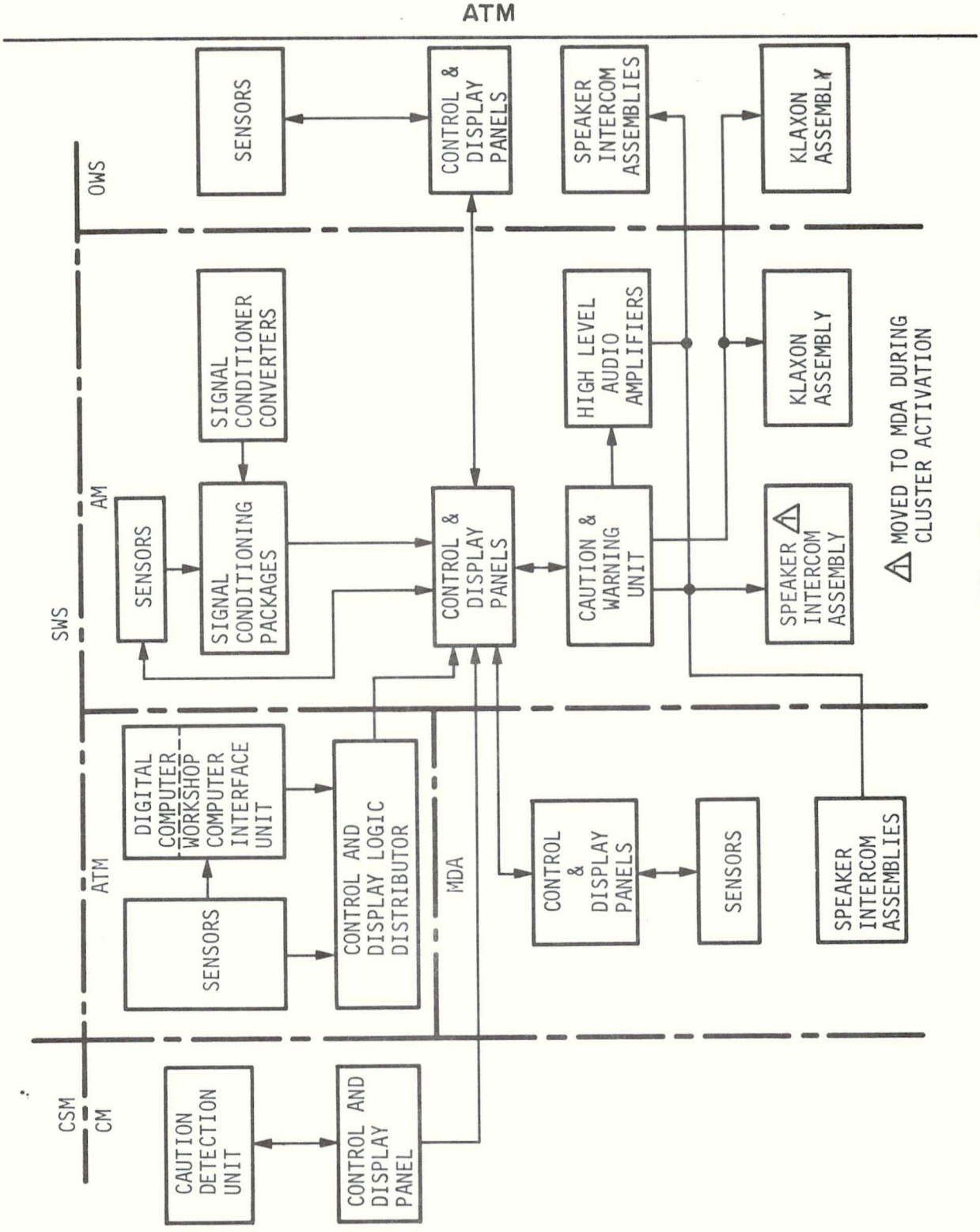

Figure 2.6-3 Cluster Caution and Warning System

Figure 2.6-4 CAUTION AND WARNING SUBSYSTEM BLOCK DIAGRAM

The Cluster Caution and Warning System consists of C&W Systems installed in both the Saturn Workshop (SWS) and the Command and Service Module (CSM). Each system provides the crew with visual displays and audio tones when selected parameters reach out-of-tolerance conditions. In the docked configuration, the two C&W Systems interface by means of discrete contact closure to provide for cluster wide monitoring of selected parameters. The C&W System equipment used to monitor these parameters is depicted in block diagram form in Figure 21.6-2.

The SWS Caution and Warning System monitors the performance of specified vehicle systems and alerts the crew to hazards or out-of-limit conditions which could result in jeopardizing the crew, compromising primary mission objectives, or if not responded to in time could result in the loss of a system. The monitored parameters are categorized as either EMERGENCY, WARNING or CAUTION parameters. The SWS C&W System utilizes two independent subsystems, a Caution and Warning Subsystem for monitoring various system parameters and an Emergency Subsystem for detecting fire or rapid loss of pressure.

2.6.3 Functional Description

2.6.3.1 C&W System - During manned phases of the Skylab mission, the CSM will be docked to the SWS to form the Cluster Assembly. Both vehicles (CSM and SWS) have their own separate C&W System to monitor critical system parameters and conditions. Since parameters are being monitored throughout the Cluster and since the systems interface with each other, it is advantageous to discuss the C&W System on a cluster level rather than two systems on a vehicle level. The Cluster C&W System is made up of two separate subsystems, the C&W Subsystem for monitoring caution and warning parameters and the Emergency Subsystem for monitoring emergency parameters. The following paragraphs are devoted to the operation of the individual subsystems. See Figure 2.6-6.

2.6.3.2 C&W Subsystem Operation - The Cluster C&W Subsystem is shown in Figure 2.5-5 in block diagram form. The Cluster C&W Subsystem encompasses the SWS C&W Subsystem and the CSM C&W Subsystem. The CSM C&W Subsystem monitors preselected caution and warning parameteres in the Command Module (CM) and Service Module (SM). An out-of-tolerance condition results in the generation of an audio tone and the illumination of visual displays in the CM. In addition, the Caution Detection Unit (CDU) in the CM provides output signals which initiates redundant relays to provide contact closures to the SWS C&W Subsystem. These closures provide for two separate signals which are treated as warning inputs to the SWS Subsystem. The SWS C&W Subsystem monitors preselected parameters in the ATM, AM, and OWS, and through the CSM C&W Subsystem, monitors the performance of critical systems in the CSM. An out-of-tolerance condition in the SWS or CSM will cause a caution or warning tone to be generated in the MDA, the AM, and the OWS. Display lights located on the SWS C&W control and display panels and the Speaker Intercom Assemblies (SIA's) will become illuminated.

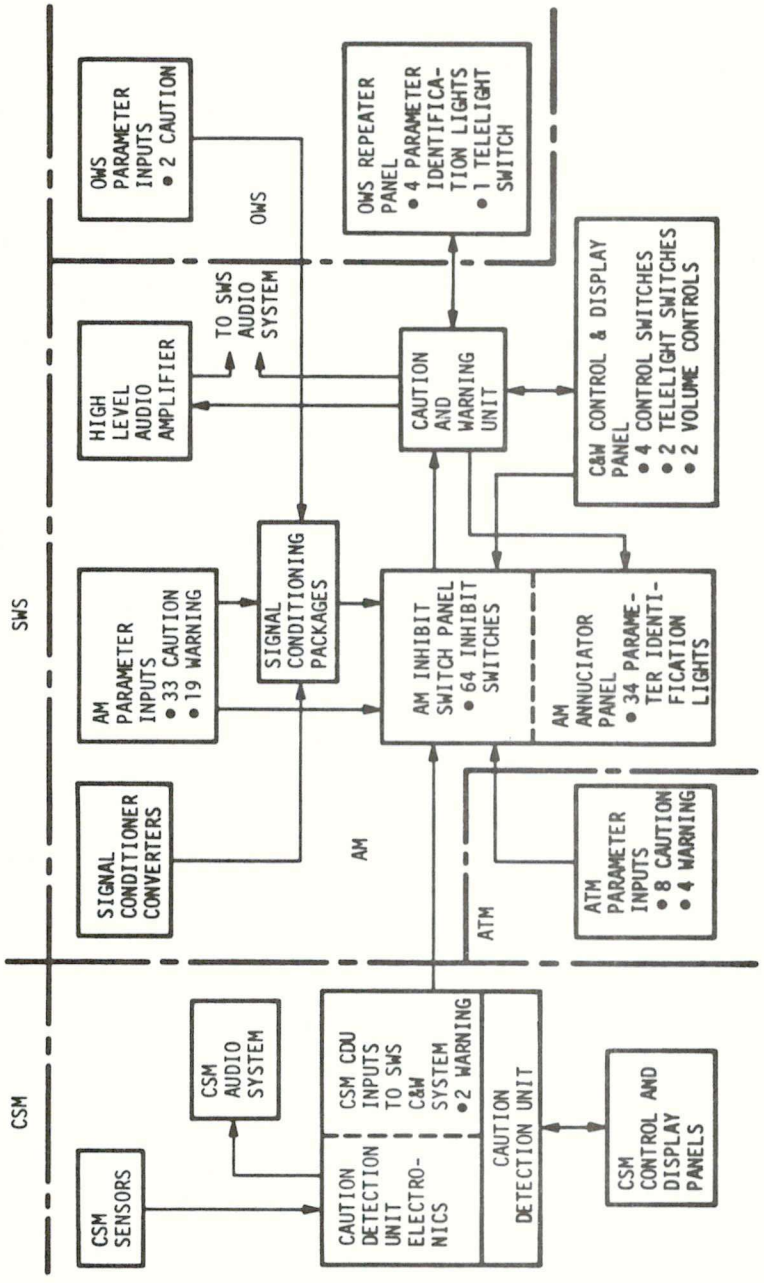

Figure 2.6-5 Cluster Caution and Warning Subsystem

C&W

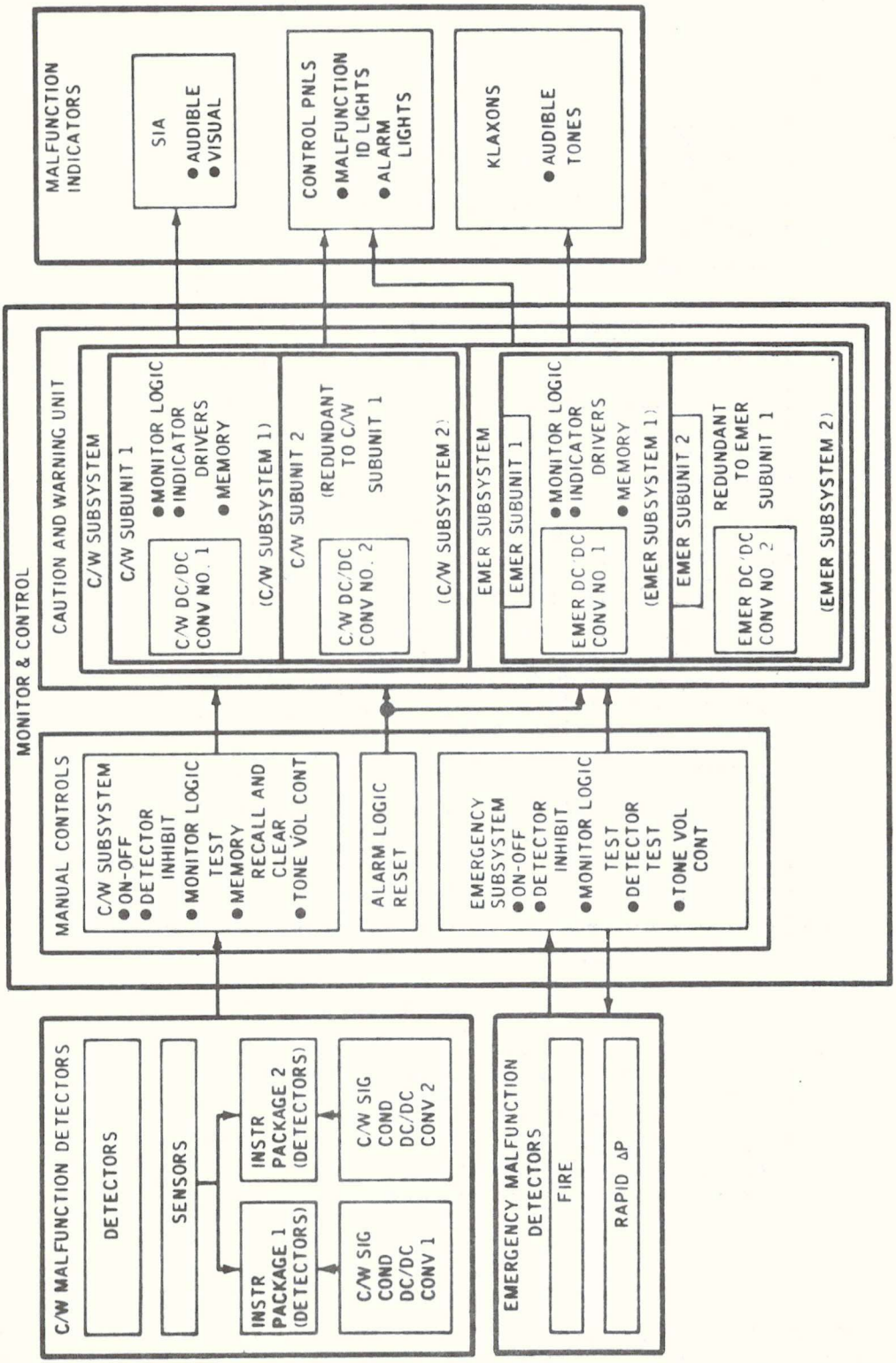

FIGURE 2.6-6 CAUTION AND WARNING SYSTEM FEATURES

2.6.3.3 Power Distribution - Figures 2.6-7, -8, & -9 shows the power distribution for the components in the SWS C&W Subsystem and for the CDU in the CSM C&W Subsystem. The major SWS components such as the C&W Unit, the Signal Conditioner Converters, the Signal Conditioning Packages, and the High Level Audio Amplifier (HLAA) are all powered off the EPS Control Buses. These buses are the highest priority buses in the AM Electrical Power System and cannot be powered down by crew or ground action. The C&W Unit and the HLAA have redundant subunits each powered from a separate power source. Redundant Signal Conditioning Packages and Signal Conditioner Converters are also provided, each powered from a separate EPS Control Bus. Therefore, the loss of either bus will not prevent the C&W Subsystem from functioning satisfactorily in monitoring the system parameters and alerting the crew to an out-of-tolerance condition. The CSM CDU is powered by DC Main Bus A and DC Main Bus B.

2.6.3.4 Power Control - The circuit breakers used for controlling power to the C&W Subsystem components are indicated in Figure 2.6-8&-9. During launch, the SWS C&W Subsystem is in the powered down configuration with the C&W Subsystem circuit breakers in the open position. These circuit breakers are closed by the crew during activation of the SWS Converters C&W 1 and 2 and Converters Signal Conditioner 1 and 2 circuit breakers allow power to be applied to the C&W power switch on AM Panel 206. Sensors C&W 1 and 2, Tone Amplifier C&W 1 and 2, and Master Alarm Status Lights 1 and 2 allow power to be applied to the C&W Relay Panel. The CSM CDU is powered prior to launch with the circuit breakers in the closed position.

C&W

Placing the Panel 206 C&W power switch in the "ON" position allows power to be applied to the C&W Unit, to the Signal Conditioner Converters, to the Signal Conditioning Packages, and to set selected relays in the AM C&W Relay Panel. Setting these relays allows power to be applied to the High Level Audio Amplifier, to preselected caution and warning sensors, and to the master alarm status light relay closure.

2.6.3.5 Caution and Warning Sensor Closures - When the SWS C&W Subsystem is powered, a combined C&W control voltage of + 28 VDC is provided from both C&W Subunits. This control voltage is applied to sensor closures either directly or via system control switches. An out-of-tolerance conditions on any of the caution or warning monitored parameters will result in a closure. This closure allows the C&W control voltage to be applied to the AM Inhibit Switch Panel 207 for routing to the C&W Unit. There are three basic typed of caution and warning sensor closures utilized in the SWS. They are shown in block diagram form in Figure 2.6-10. The first is a mechanical closure in which a mechanical movement will close a set of contacts. The second corresponds to an event which energizes a relay driver to provide a closure for the C&W control voltage The third is an analog signal from a transducer which is fed into a level detector. The level detector initiates a relay driver when the input analog signal reaches a preset level.

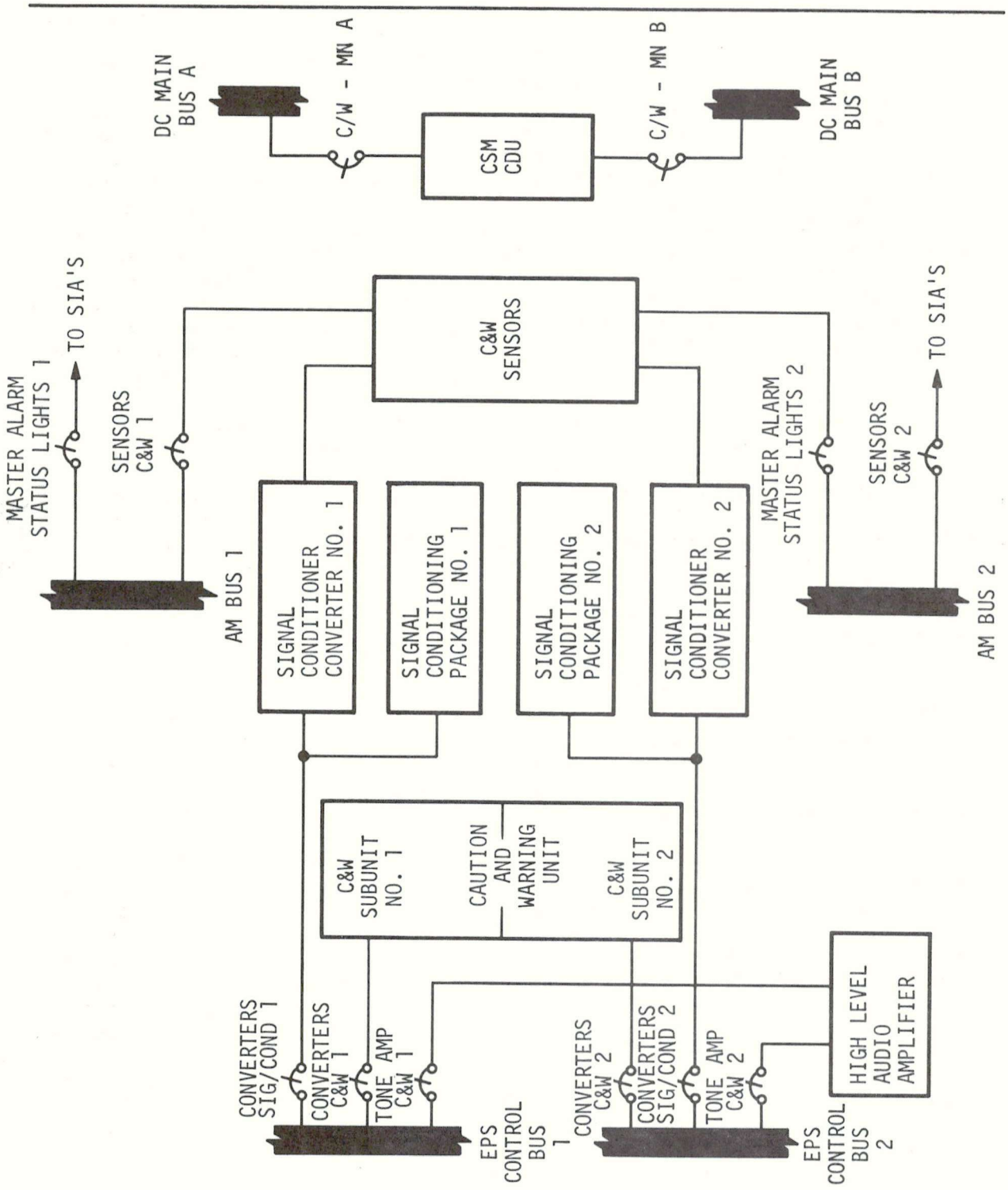

Figure 2.6-7 Power Sources for C&W Subsystem

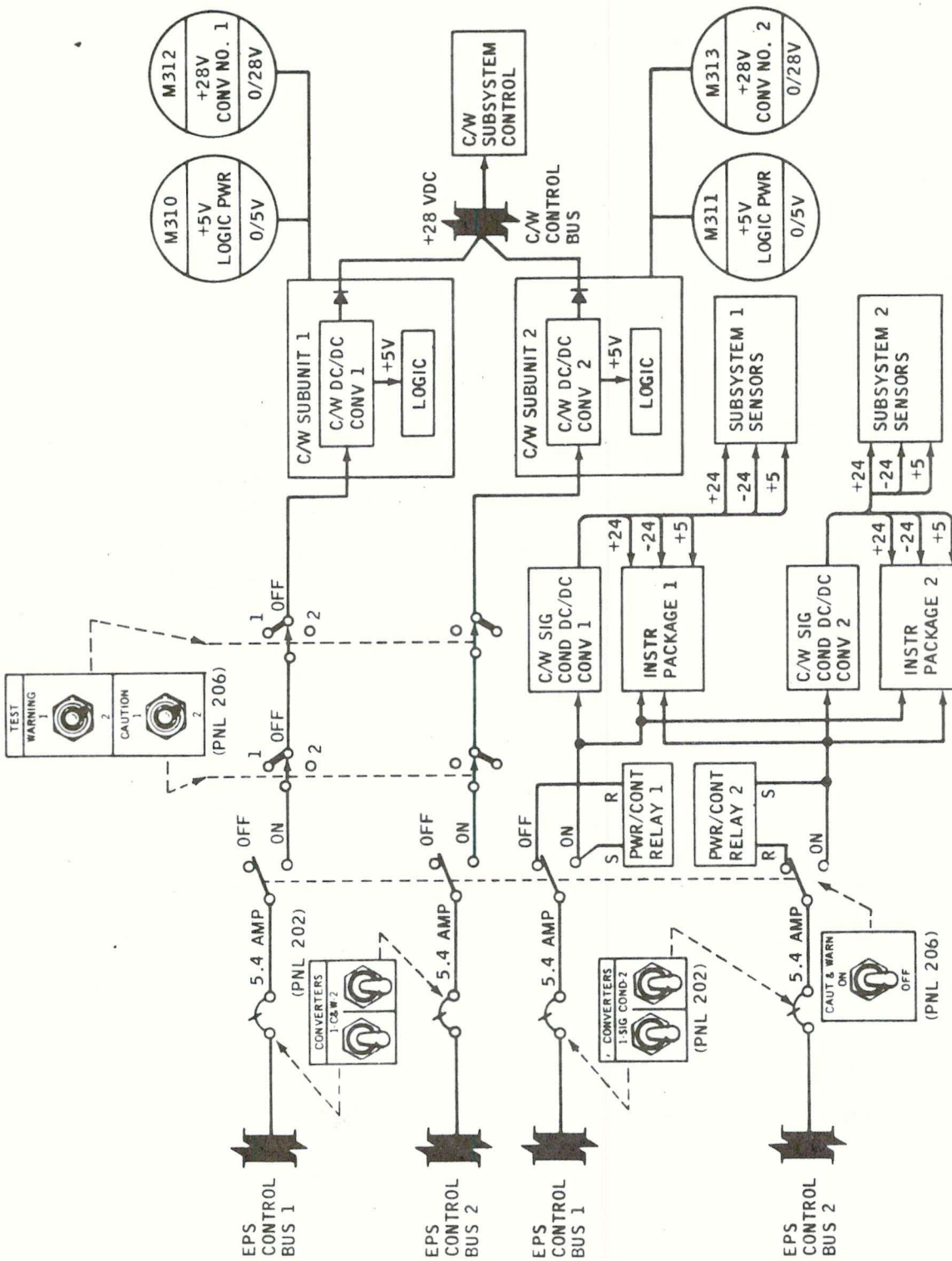

FIGURE 2.6-8 CLUSTER C/W SUBSYSTEM POWER DISTRIBUTION

C&W

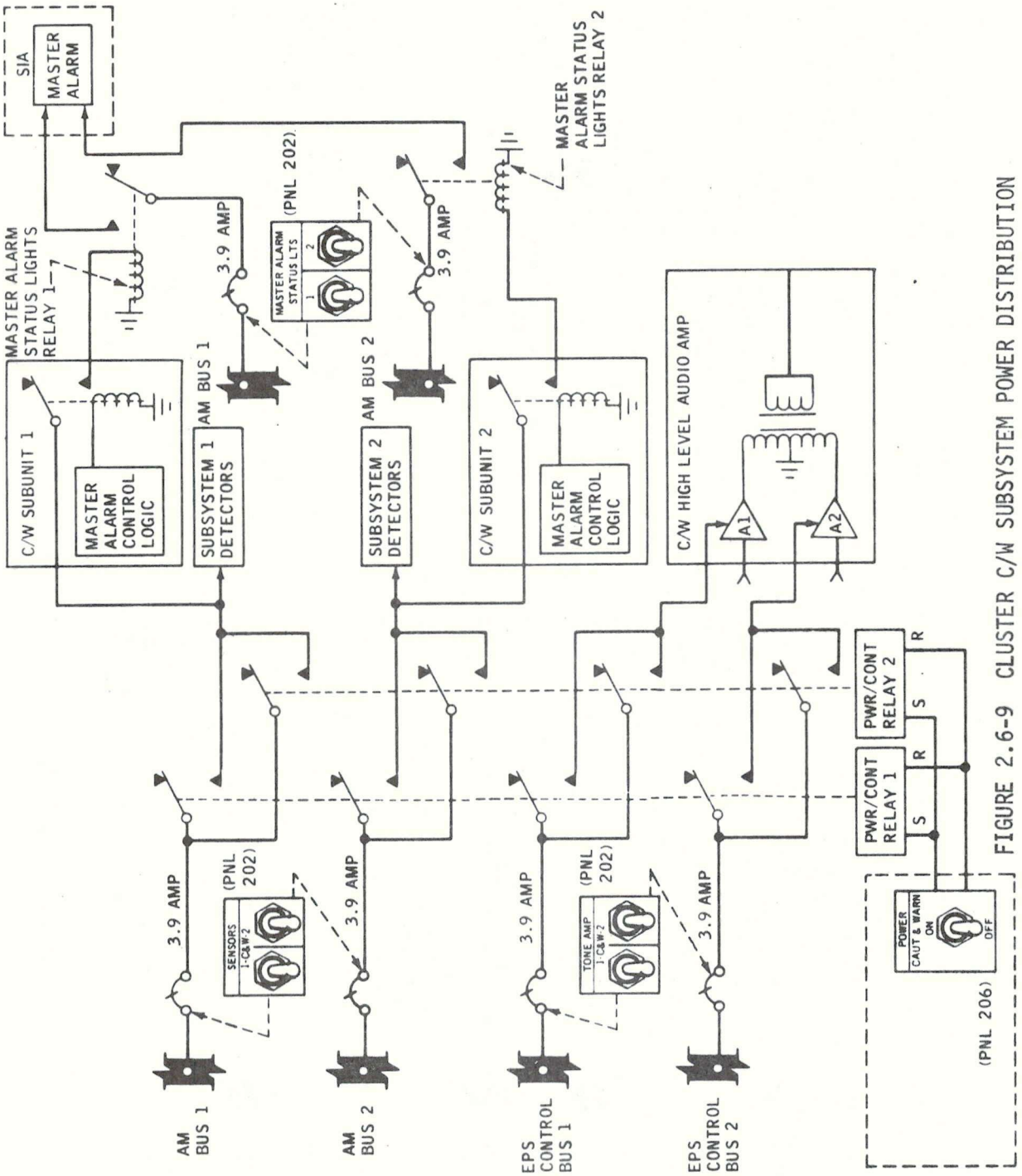

FIGURE 2.6-9 CLUSTER C/W SUBSYSTEM POWER DISTRIBUTION

TABLE 2.6-I C&W SUBSYSTEM HARDWARE LOCATIONS

	MODULE				
	AM (STS)	OWS	ATM	MDA	CSM
1. Channel Displays	X	X (Slave)			
2. Inhibit Switches	X				
3. Master Alarm Light/Reset Switches	X	X			
4. Memory Recall Switch	X				
5. Memory Reset Switch	X				
6. C&W Subsystem Power Circuit Breakers	X				
7. Emergency Subsystem Power Circuit Breakers	X				
8. Caution and Warning Sub-Units	X				
9. Emergency Sub-Units	X				
10. Sensors	X	X	X	X	X (CSM Alert Contact Closure Only)
11. Signal Conditioning	X	X	X	X	
12. Klaxon	X	X			
13. Audio Intercoms	X	X		X	
14. Austronaut Headsets	X	X		X	

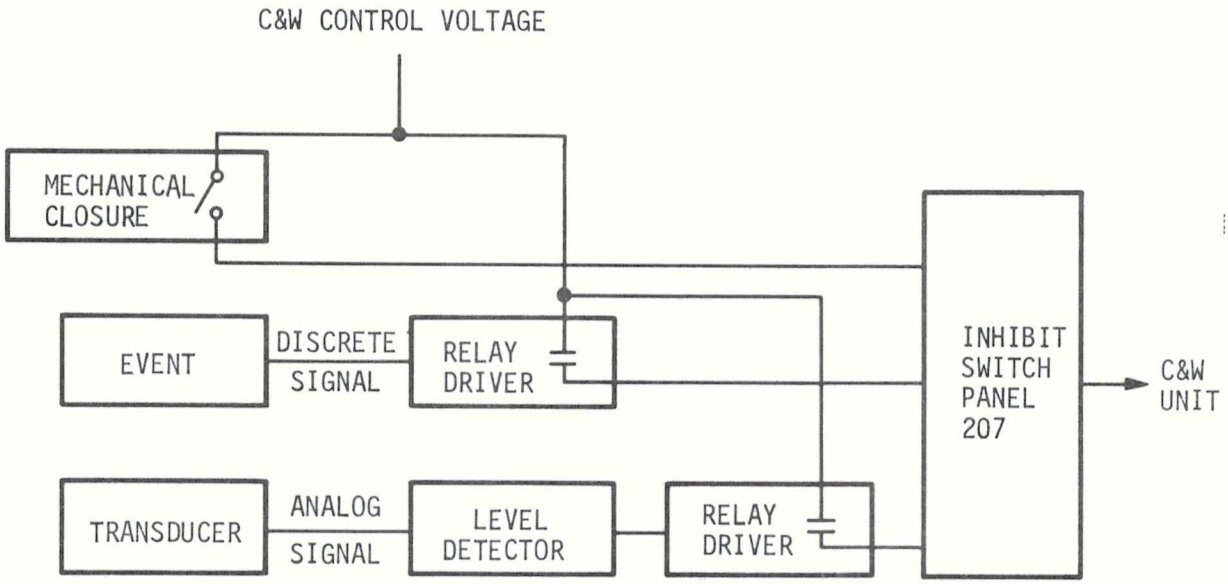

Figure 2.6-10 Caution and Warning Sensor Closures

2.6.3.6 Signal Conditioning Packages - Two separate and electrically isolated Signal Conditioning Packages are included in the SWS C&W Subsystem for Redundancy. Figure 2.6-11 is a block diagram showing the operational aspects of a Signal Conditioning Package. All signals fed into the packages are routed into individual signal conditioning cards. Each card contains a level detector, a relay driver, and a relay. The level detectors are preset by resistor selection during assembly of the units to trigger at a specified signal level. The detectors will turn on relay drivers when a signal of a specified level is detected. The relay driver, in turn provides a relay closure for the C&W control voltage.

2.3.6.7 Inhibit Switches - All C&W control voltages from the sensor closures and Signal Conditioning Packages pass through AM Inhibit Switch Panel 207 before entering the C&W Unit. The inhibit switches are double pole single throw miniature toggle switches. The switches are used by the crew to electrically isolate a faulty detector or system from the C&W Subsystem. They can also be used to determine which parameter malfunctioned in those cases where more than one input uses a common parameter identification light.

C&W

2.3.6.8 C&W Subunit - Figure 2.6-12 is a logic diagram showing the input and memory logic for one of the redundant C&W Subunits. Sample inputs are shown for caution and warning parameters. The caution example shows a "2 or" input gate in which two different caution parameters are monitored by the same channel in the C&W Subunit. As shown the inputs are "ored" together (when more than one parameter input exists per channel) after the buffers and before the AC couplers. The output of this "or" gate sets a memory flip-flop and illuminates the associated parameter identification light on Display Panel 207 and for preselected parameters on OWS Repeater Panel 616. Setting the memory flip-flop enables the crew to determine which parameter identification light was illuminated if the parameter returns within the tolerance limits before the crew has had time to determine the faulty parameter. The memory recall telelight switch is used for this purpose and is illuminated when a parameter memory flip-flop is in the set position. Depressing the memory recall telelight switch causes the illumination of the previously activated parameter identification light. See Figures 2.6-13 and -14.

The warning example shows a single input gate in which one warning parameter is monitored by one channel in the C&W Subunit. The operation is the same as in the caution example. Each caution and warning input is AC coupled to the caution and warning master flip-flops respectively. In the set position, these flip flops initiate the outputs shown in Figure 2.6-14. The caution master flip-flop activates the caution audio tone, initiates a relay closure to illuminate the master alarm status lights on the Speaker Intercom Assemblies, and provides a relay closure to the telemetry system. Likewise the warning master flip-flop, in the set position activates the warning audio tone, provides a relay closure to illuminate the master alarm status lights on the Speaker Intercom Assemblies, and provides a relay closure to the telemetry system.

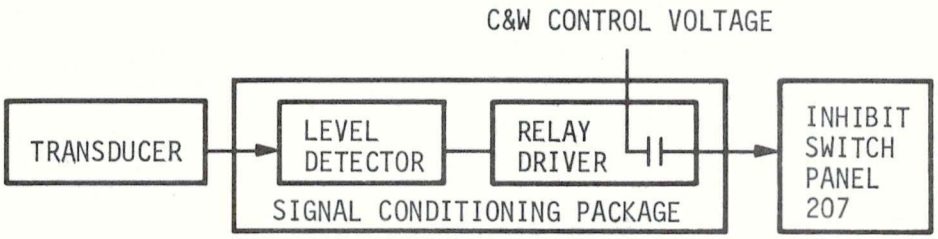

Figure 2.6-11 Signal Conditioning Package Operation

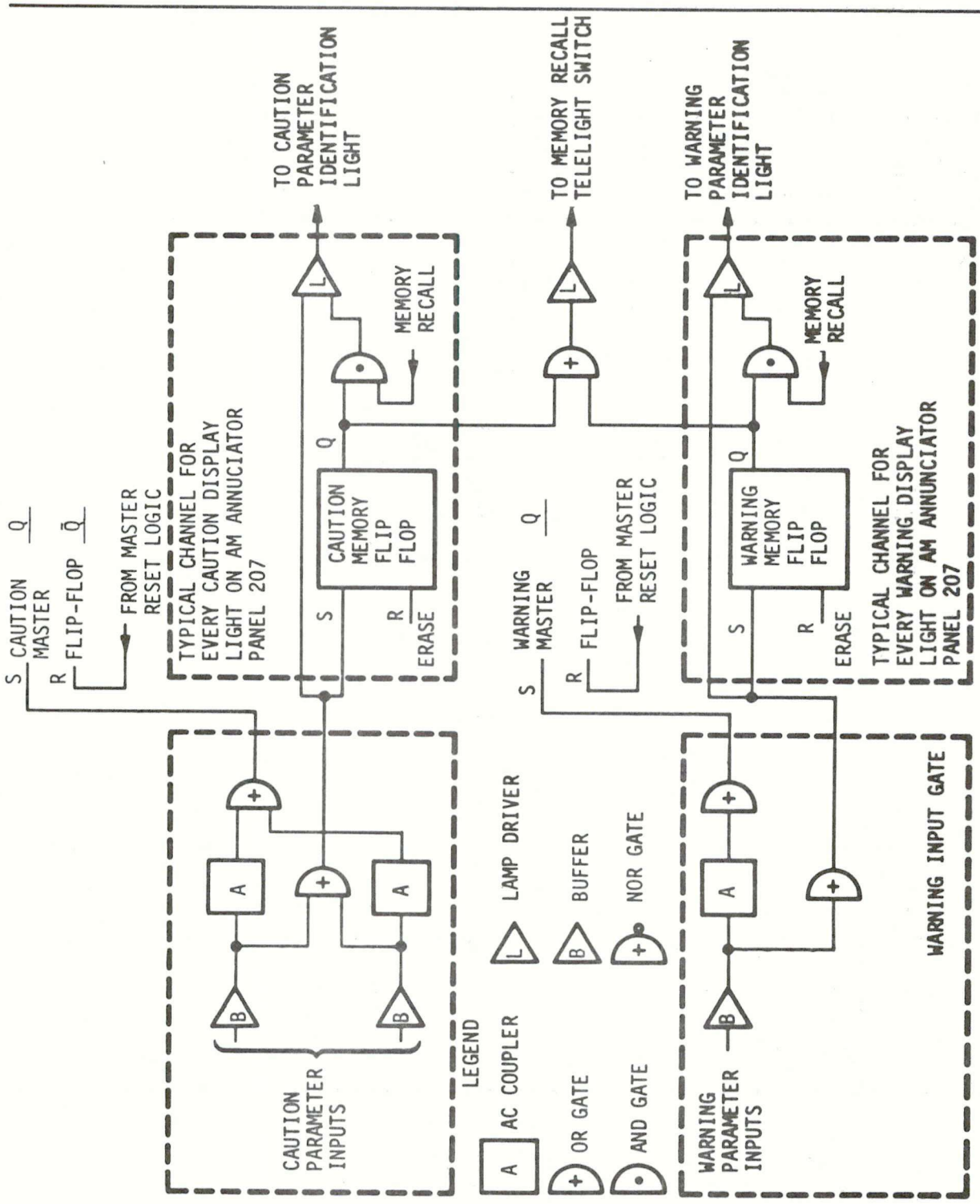

Figure 2.6-12 C&W Subunit - Input and Memory Logic

C&W

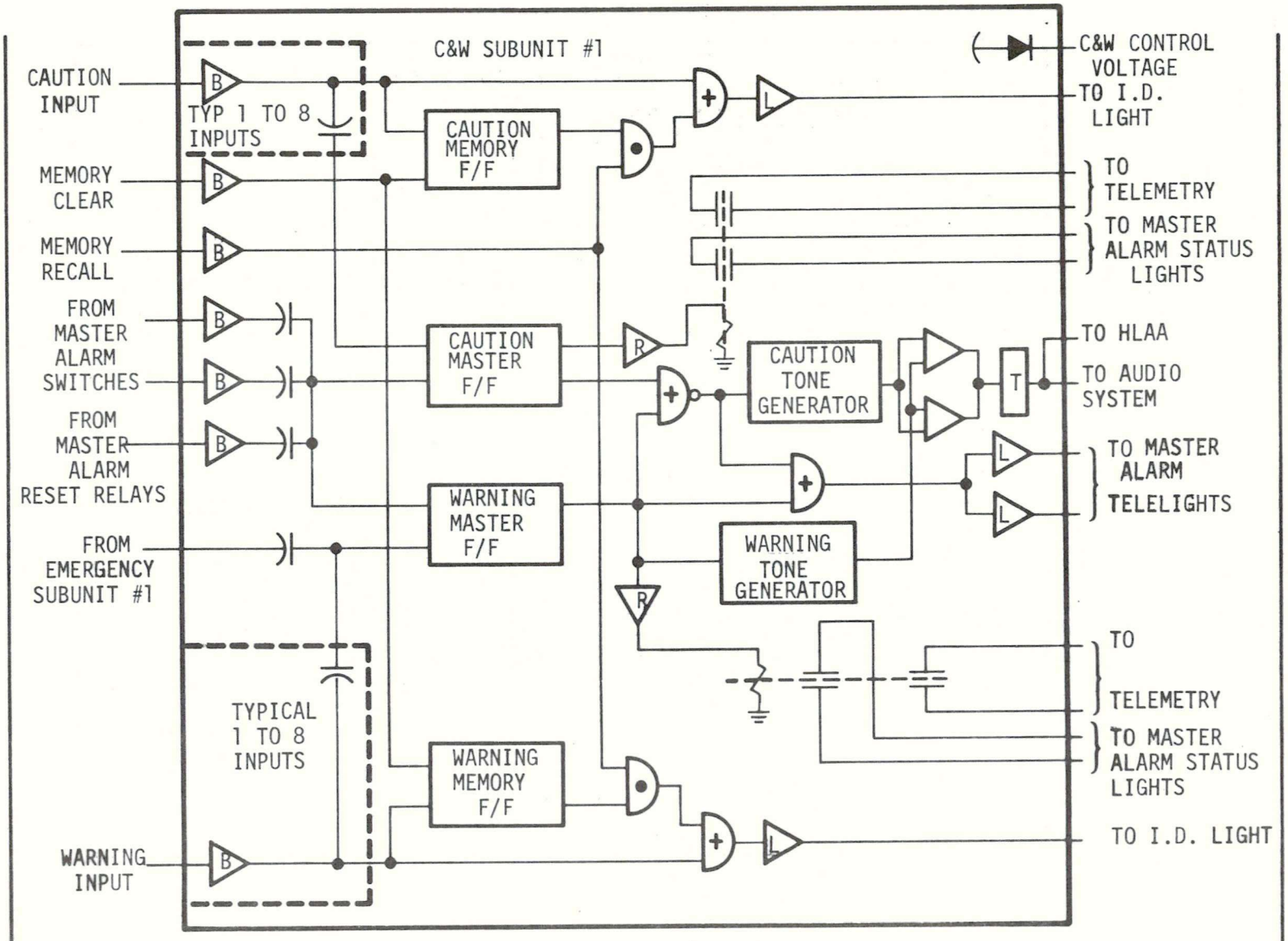

FIGURE 2.6-13 CAUTION AND WARNING SUBUNIT #1 ELECTRONICS

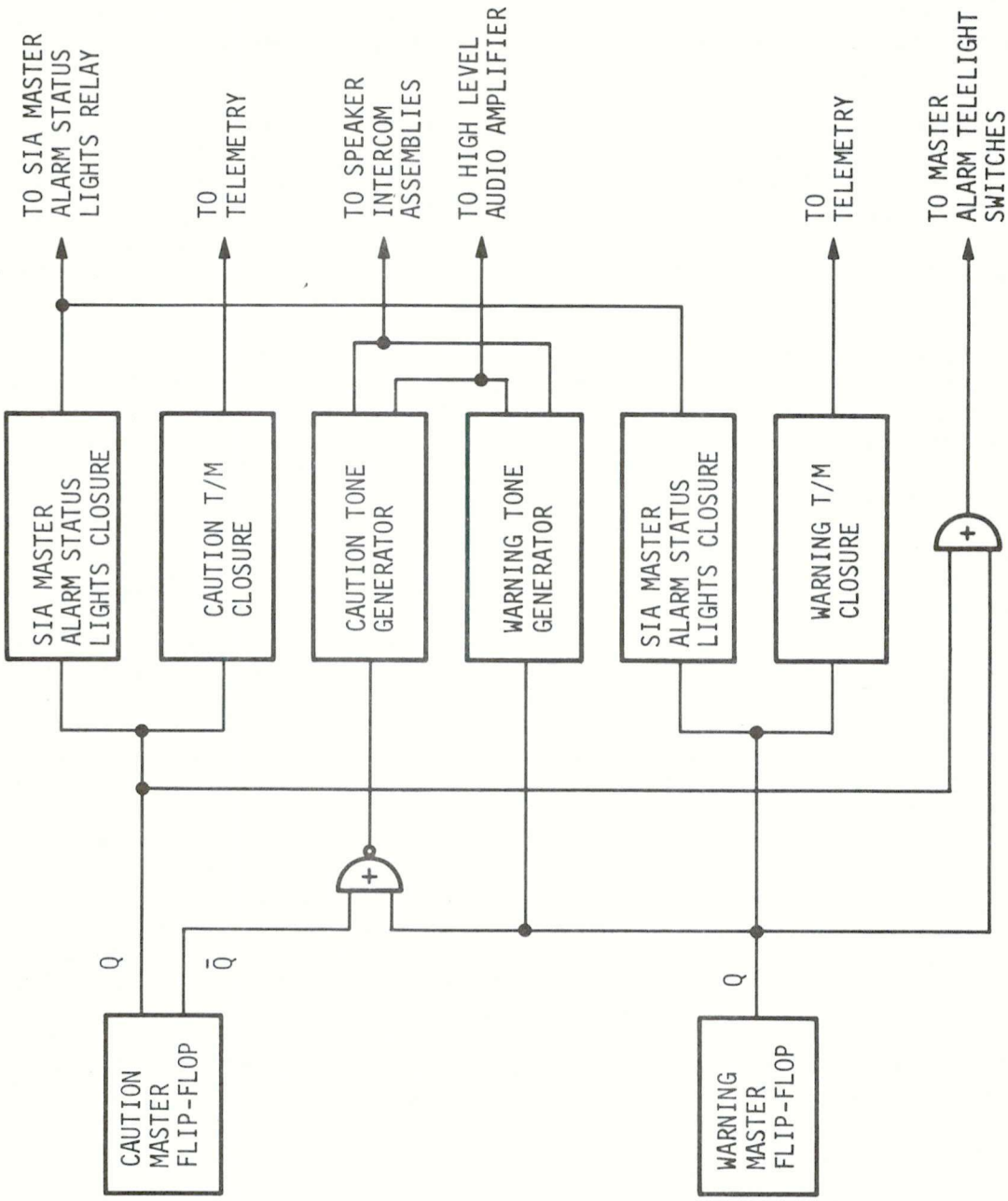

C&W

Figure 2.6-14 C&W Subunit - Output Logic

As depicted in Figures 2.6-15 and -16, the warning tone has priority over the caution tone, i.e., if a caution and warning condition both exist before the master reset is utilized, only the warning tone will be heard. The master flip-flops will also cause the illumination of the master alarm reset telelight switches.

2.6.3.9 Parameter Identification Lights - The status of the parameters monitored by the C&W Subsystem are displayed on Display panel 207 in the AM with various parameters displayed on Repeater Panel 616 located in the OWS. The parameter identification lights follow the status of the parameter being monitored, i.e., remain illuminated as long as the out-of-tolerance condition exists or until the parameter is inhibited. Each light contains two separate bulbs for redundancy with each bulb driven from separate C&W Subunits.

2.6.3.10 Telemetry - As seen in Figure 2.6-14 the master flip-flops, in the set position, provide relay closures to the telemetry system in the AM. These closures provide for discrete telemetry parameters which enable ground control to distinguish when a caution or warning signal has been generated. The relay closures will exist until the corresponding master flip-flops are reset.

2.6.3-11 Speaker Intercom Assemblies - As described in paragraph 2.6.3.8, an out-of-tolerance condition will result in the caution or warning master flip-flop being set in each C&W Subunit. This in turn activates the caution or warning audio signal. The audio signals are routed to the Speaker Intercom Assemblies (SIA) in the SWS. The caution and warning audio tone operation in the SIA's is shown in Figure 2.6-16. The audio signals bypass the volume control in the SIA and are fed through impedance matching transformers into the SIA electronics where the signals are amplified for driving the speaker assembly. The signals are also routed to the headsets via Crewmen Communications Umbilicals (CCU's) and the Lightweight CCU. The audio signals in the SIA are routed through the communications channel select switch and through both umbilical mode switches. In either case, the audio signals are inhibited from reaching their individual designations if the corresponding switch is in the "SLEEP" position and if the CCU mode switch in in the "OFF" position. The audio tones are coded to enable the crew to readily identify the nature of the alarm. The caution tone is a continuous 1 KHz frequency while the warning tone is 1 KHz frequency modulated at a 1.4 Hz rate. The minimum audio intensity level is 63 db above 0.0002 dynes/cm^2 at a distance of 12 inches in front of the SIA in a 5 PSIA atmosphere. In addition to the audio signals, each C&W Subunit provides a relay closure which enables the master alarm status light on each SIA to become illuminated.

2.6.3.12 High Level Audio Amplifier - The High Level Audio Amplifier (HLAA) accepts caution and warning signals from the C&W Unit, amplifies these signals, and provides an output which is routed to the Speaker Intercom Assemblies. The level of the signal is capable of driving the speakers in the SIA's directly. The HLAA signal bypasses the SIA electronics and

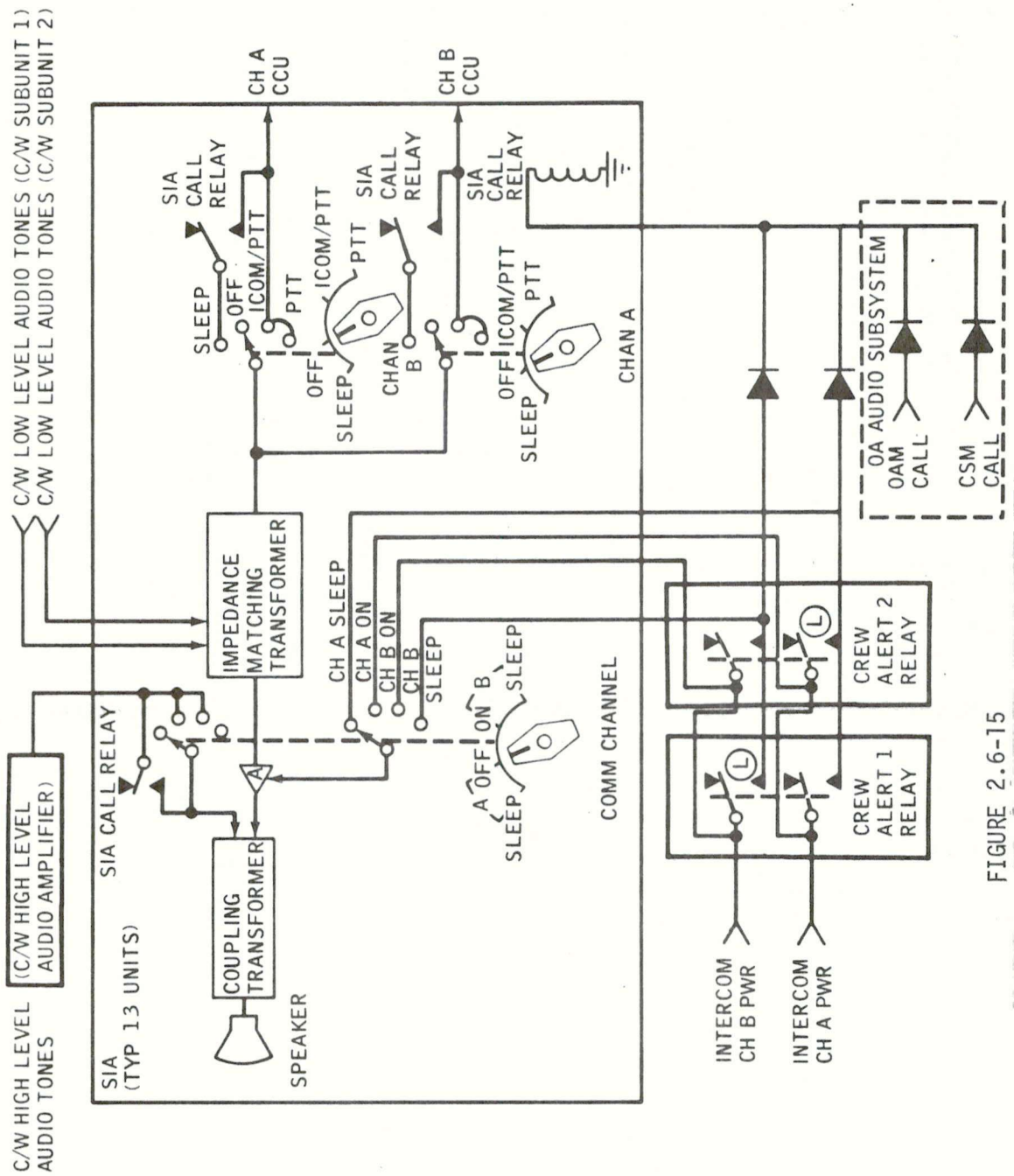

FIGURE 2.6-15
SIA-C/W AUDIO SIGNAL FUNCTIONAL INTERFACE

C&W

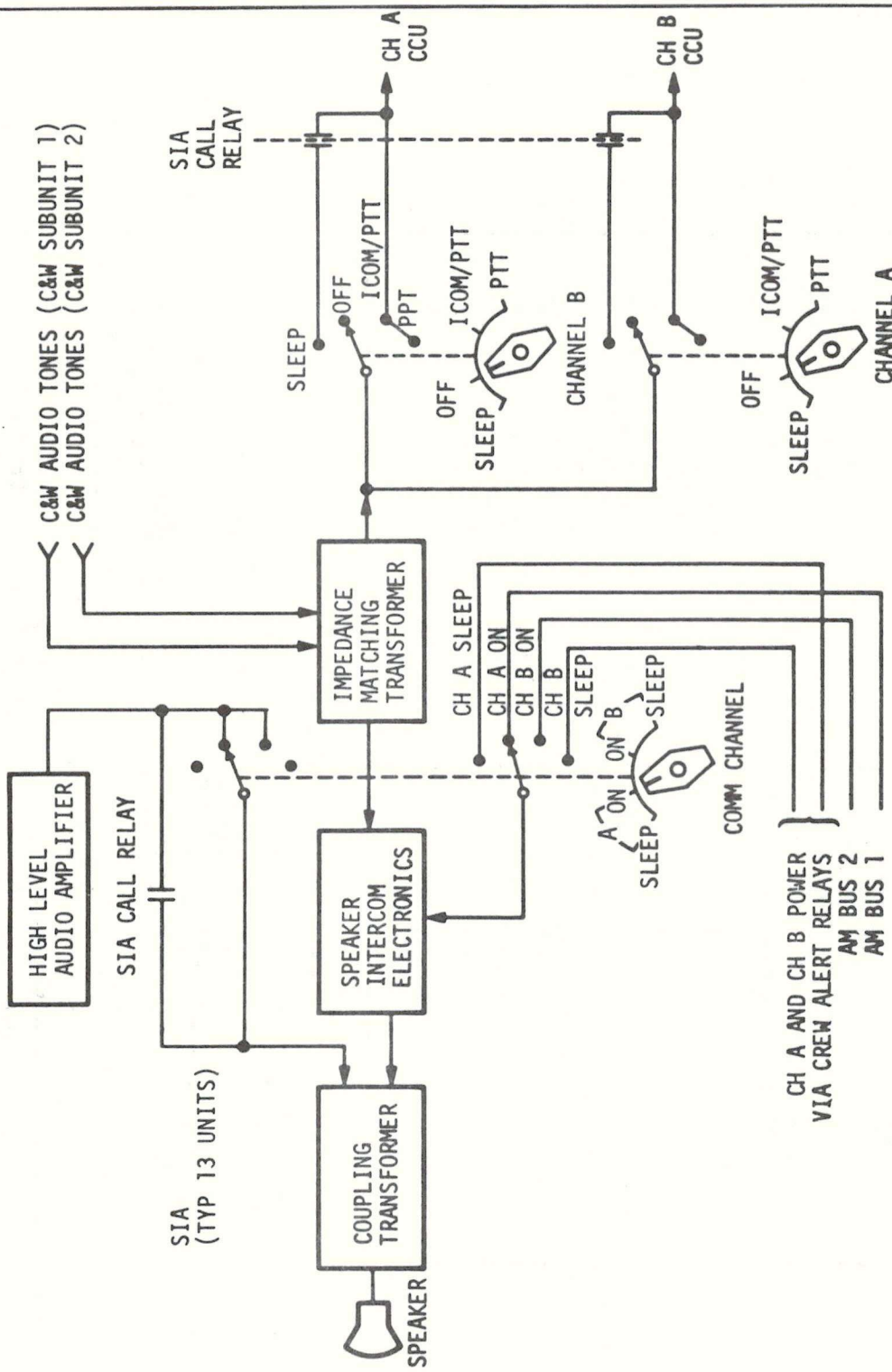

Figure 2.6-16 Speaker Intercom Assembly C&W Tone Operation

is fed through the communications channel select switch directly to the speaker. Placing the SIA communications channel select switch in the "SLEEP" position will prevent the caution and warning signals from reaching the speaker.

2.6.3.13 Master Reset - Two basic types of master reset switches are utilized by the crew to reset the C&W Subsystem. Two master alarm telelight switches are provided, one on AM Panel 206 and one on OWS Repeater Panel 616. One master alarm reset switch is provided on each Fire Sensor Control Panel. Momentarily depressing either master alarm telelight switch or initiating one of the master alarm reset switches causes the caution and/or warning master flip-flops to reset. This action terminates the audio tones, opens the telemetry relay closures, and extinguishes the lights in the reset telelight switches and the master alarm status display lights on the SIA's.

2.6.3.14 Memory Recall and Clear - As shown in Figure 2.6-12, the caution and warning memory flip-flops in the set position cause the illumination of the memory recall telelight switch located on AM Panel 206. The illumination of this display signifies to the crew that the memory may be utilized if desired. The memory is used by the crew when a parameter has returned within its tolerances before the crew has determined the faulty parameter(s) or system. The parameter identification lights track the status of the parameter being monitored i.e, should a parameter go back in tolerance the light will be extinguished. When the memory recall telelight switch is depressed the associated parameter identification light(s) will become illuminated. This memory recall feature can be used until the memory has been cleared.

C&W

After the crew has determined which parameter or system had earlier caused the alarm, the memory in the C&W Subunit should be cleared. This is accomplished by momentarily initiating the "CLEAR" switch located on APM Panel 206. This action resets all of the memory flip-flops in the C&W Subunits.

2.6.3.15 Audio Volume Controls - The intensity of the caution and warning tones can be varied by setting potentiometers located on Panel 206. Two separate controls are provided, one for the caution tone and one for the warning tone. These potentiometers are capable of controlling the output voltage of the C&W Subunits from 0.16 to 1.6 volts RMS. This provided a dynamic range of approximately 20 dB. When at their minimum level, the caution and warning tones are still audible, but low enough that satisfactory voice communications can occur. See Figure 2.6-17.

2.6.3.16 Test Switches - Two test switches are provided on AM Panel 206 to enable the crew to perform inflight verification of the C&W Subunit electronics, the audio tones, and the visual displays. Placing the warning test switch in the No. 1 position removes power from C&W Subunit

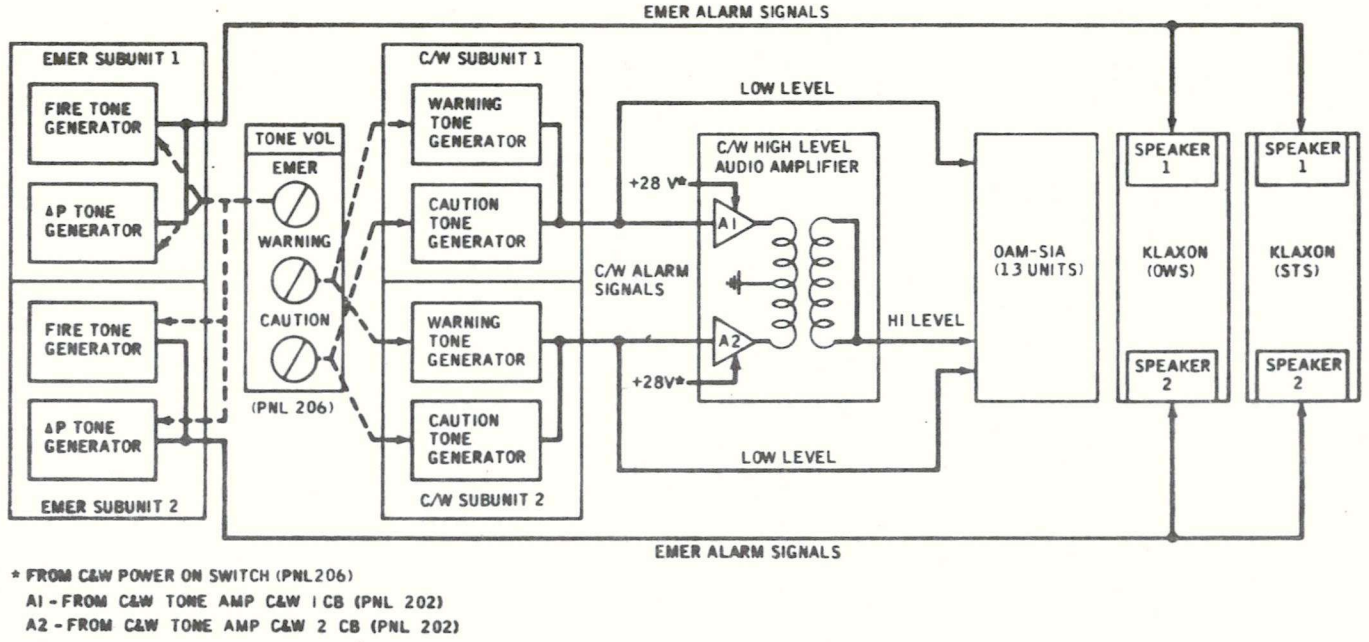

* FROM C&W POWER ON SWITCH (PNL206)
A1 - FROM C&W TONE AMP C&W 1 CB (PNL 202)
A2 - FROM C&W TONE AMP C&W 2 CB (PNL 202)

Figure 2.6-17 Audible Alarm Signal Distribution

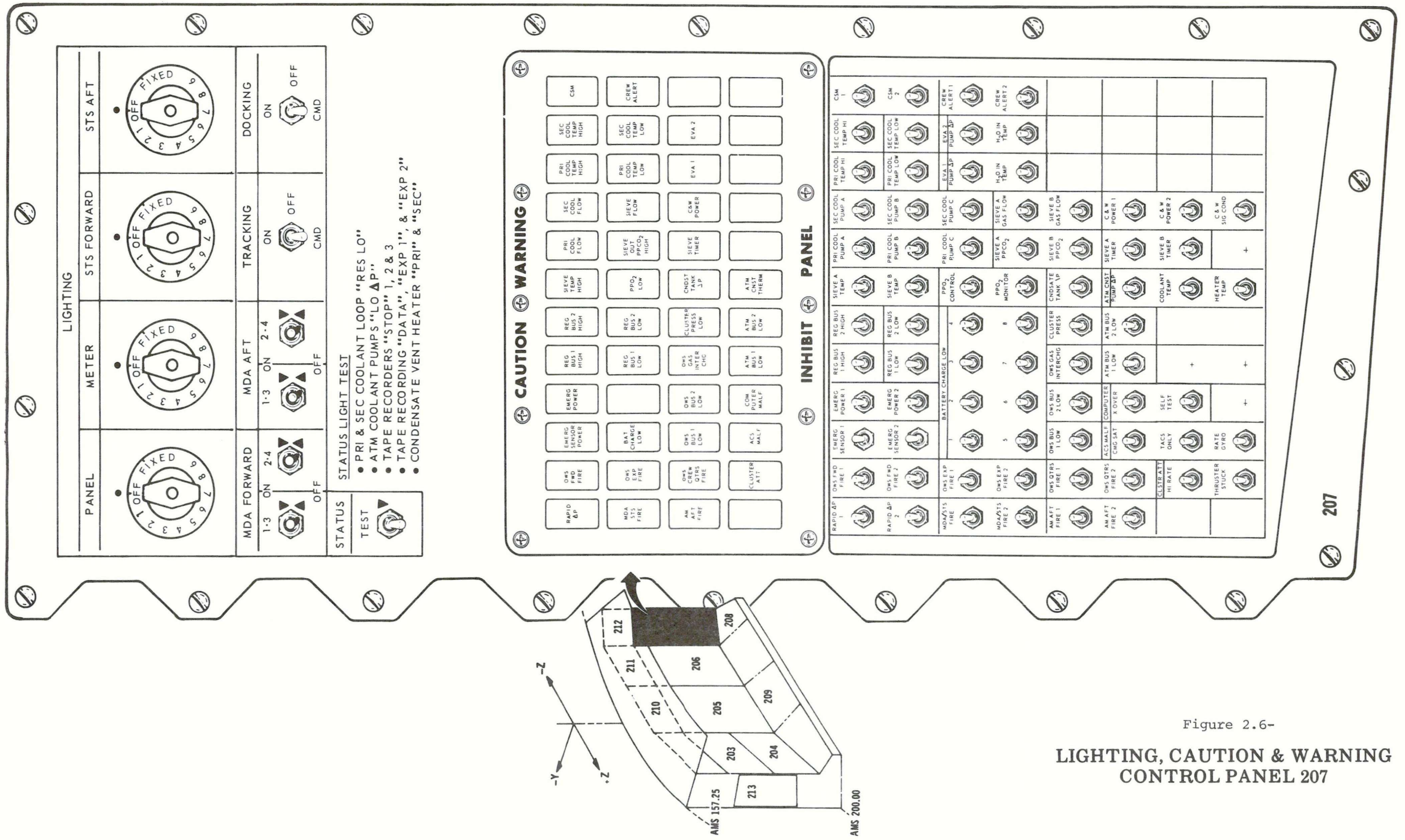

Figure 2.6-

LIGHTING, CAUTION & WARNING CONTROL PANEL 207

No. 1 electronics allowing Subunit No. 2 to be checked independently and will provide similar results. By utilizing the inhibit switches and the warning test switch, every warning channel in the SWS C&W Unit can be checked for proper operation. The same tests can be performed on the caution electronics and displays by utilizing the caution test switch.

2.6.3.17 Emergency Subsystem Operation - The Emergency Subsystem monitors fire and rapid spacecraft pressure loss conditions. An out-of-tolerance condition results in the generation of audio tones and visual displays. In addition, discrete telemetry signals are telemetered to the ground indicating the type of emergency situation present. The Emergency Subsystem is shown in Figure 2.6-19 in block diagram form. Fire sensors are located throughout the SWS to alert the crew to the existance of a fire. Two rapid AP sensors are located in the Structural Transition Section (STS) of the Airlock Module. There are no Emergency C&W signals generated by the ATM.

2.6.4 Major Components/Functional Description

C&W

2.6.4.1 Introduction - The purpose of Section 2.6.4 is to provide a more detailed description of the parameters monitored by the C&W System. Section 2.6.4 is comprised of separate subsections for each of the parameter identification lights located on Display Panel 207 in the Airlock (Figure 2.6-18). Each subsection contains a general introduction into the particular system or condition being monitored. A brief operational discussion of the system or purpose for monitoring the condition is also given. Where applicable, a functional block diagram is included to illustrate the relationship between the C&W sensor(s) and the parameter being monitored. The nominal operating ranges for the parameters and the C&W trigger levels are discussed. Each subsection also contains sensor descriptions for each parameter, test descriptions, and a parameter functional schematic. A brief description of the contents of these items is given in the following paragraphs.

2.6.4.2 Sensor Descriptions - The sensor descriptions describe the monitoring techniques used for each C&W System parameter. The transducer aspects of the sensor(s) are discussed in detail with the aid of block diagrams. Pertinent characteristics of each sensor such as size, power consumption, and weight are given and, where applicable, a photograph of the sensor is included. A summary of the Caution and Warning System parameters is included and contains nominal operating ranges, nominal trip points, worst case trip points, corresponding telemetry measurement numbers, and onboard displays.

2.6.4.3 Test Descriptions - The Skylab Caution and Warning System test program is organized to (1) demonstrate the flight readiness of each module when delivered by the respective contractors, (2) reverify C&W System operation during building up at KSC and (3) provide inflight assessment of system operation. The objectives of the test program are

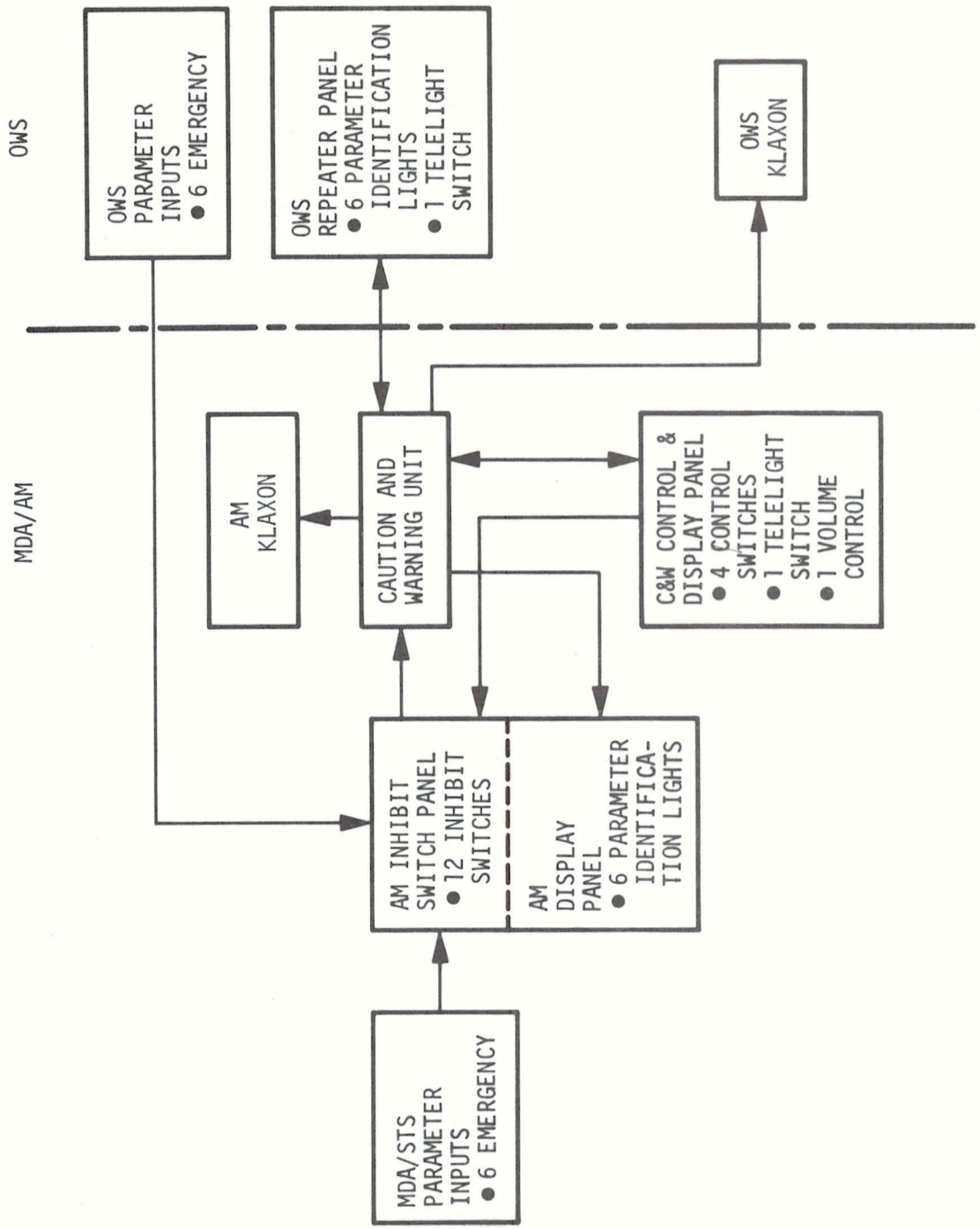

Figure 2.6-19 Cluster Emergency Subsystem

to validate hardware integrity and system compatibility, determine system performance versus design requirements and provide confidence in the C&W System's capability to perform mission objectives. To accomplish this task the C&W System test program includes the tests identified in the Test Flow Diagram shown in Table 2.6-II. C&W Test Logic are laid out in Figures 2.6-20 through 2.6-25.

Table 2.6-III depicts the Caution and Warning System Test Summary which defines the items tested during the scheduled Module Systems Tests at the contractor(s) during Pre-launch Testing performed at KSC, and Inflight.

2.6.4.4 Module Systems Test - The following tests will be conducted on the respective module(s) prior to delivery to KSC for assembly. The tests are designed to demonstrate to both the contractor and the customer that the C&W System segments will perform as specified and are flight ready. Where required, simulators will be used to verify the respective mating interfaces.

a. AM System Validation - The AM System Validation test will include a complete verification of the C&W System. The test will include verification of interface and modular wiring, component validation and operation, proper handling and display of input/output signals and redundancy. Simulators will be used to verify that the respective interface requirements are met.

b. MDA System Test and Checkout - The MDA System Test and Checkout will include wiring verification and operational checkout of the MDA C&W System segment. The test will include verification of interface and modular wiring, component installation and operation, proper handling of input/output signals, and redundancy. Breakout boxes will be used to verify that the respective interface requirements are met.

c. AM/MDA System Assurance - The object of this test is to verify the AM/MDA Systems after mating the AM and MDA. The C&W Systems test will consist of a functional test that will verify all C&W System functions which cross the AM/MDA interface.

d. AM/MDA Simulated Flight - All AM/MDA Systems are operated in the modes and sequences specified for flight. The C&W System test will consist of a functional check using the C&W System test switches. The C&W System will remain operational to monitor vehicle systems during the entire simulated flight.

e. AM/MDA Altitude Chamber - The AM/MDA will be subjected to one unmanned simulated flight in a simulated environment of 150K feet. A pre-test functional check of the C&W System will be made using the C&W System test switches. During the altitude chamber test, the C&W System will

TABLE 2.6-II CAUTION AND WARNING SYSTEM TEST FLOW DIAGRAM

Module Systems Tests

- AM System Validation
- MDA System Test and Checkout
  - AM/MDA System Assurance
    - AM/MDA Simulated Flight
      - AM/MDA Altitude Chamber

- ATM Post Manufacturing Checkout
  - ATM Post Vibration Test
    - ATM Thermal/Vacuum Test

- OWS Post Manufacturing Checkout
  - OWS Systems Integration Test

- CSM Integrated Systems Checkout

Pre-launch Testing

- AM/MDA Integrated Systems Test
  - CSM-AM/MDA Interface Test
    - ATM Systems Test
      - AM/MDA-OWS-ATM Electrical Interface Test
        - ATM Systems Verification Test
          - AM/MDA-OWS End-to-End System Test
            - SWS Simulated Flight

Inflight Tests

- Functional Tests

TABLE 2.6-III CAUTION AND WARNING SYSTEM TEST SUMMARY

Test	Function																Major Components										
	Circuit Breakers	Power Switches	Test Switches	Inhibit Switches	Parameter Identification Lights	Master Alarm Telelight Switch	Memory Recall Telelight Switch	Clear Switch	Tone Volume Control (s)	Master Alarm Status Lights	OWS Repeater Panel 616	Telemetry	Caution Tone	Warning Tone	Emergency-Fire Tone	Emergency- P Tone	Sensor (s)	Digital Computers	Workshop Computer Interface Unit	Control and Display Logic Distributor	Caution and Warning Unit	High Level Audio Amplifier	Fire Sensor Control Panel (s)	Klaxon Assembly (s)	Signal Conditioner Converters	Instrumentation Packages	Wiring
Module Systems Tests (Contractor)																											
AM System Validation	X	X	X	X	X	X	X	X	X	X		X	X	X	X	X	X				X	X	X	X	X	X	X
MDA System Test & Checkout										X			X	X			X						X				X
AM/MDA System Assurance	X	X	X	X	X	X	X	X	X	X		X	X	X	X	X	X				X	X	X	X	X	X	X
AM/MDA Simulated Flight	X	X	X	X	X	X	X	X	X	X		X	X	X	X	X	X				X	X	X	X	X	X	X
AM/MDA Altitude Chamber	X	X	X		X	X	X	X		X		X	X	X	X	X	X				X	X	X	X	X	X	X
ATM Post Manufacturing Checkout												X					X	X	X	X							X
ATM Post Vibration Test												X					X	X	X	X							X
ATM Thermal/Vacuum Test												X					X	X	X	X							X
OWS Post Manufacturing Checkout						X				X	X		X	X	X	X	X						X	X			X
OWS Systems Integration Test						X				X	X		X	X	X	X	X						X	X			X
CSM Integration Systems Checkout																											X
Pre-launch Testing (KSC)																											
AM/MDA Integrated Systems Test	X	X	X	X	X	X	X	X	X	X		X	X	X	X	X	X				X	X	X	X	X	X	X
CSM-AM/MDA Interface Test					X	X	X	X		X		X		X							X				X	X	X
ATM Systems Test												X					X	X	X	X							X
AM/MDA-OWS-ATM Electrical Interface Test	X	X	X		X	X				X	X	X	X	X	X	X	X				X			X	X	X	X
ATM Systems Verification Test												X					X	X	X	X							X
AM/MDA-OWS End-To-End System Test	X	X	X	X	X	X	X	X	X	X	X	X	X	X	X	X	X				X	X	X	X	X	X	X
SWS Simulated Flight	X	X	X	X	X	X	X	X	X	X	X	X	X	X	X	X	X	X	X	X	X	X	X	X	X	X	X
Inflight Tests																											
Functional Tests	X	X	X	X	X	X	X	X	X	X	X	X	X	X	X	X	X				X	X	X	X	X	X	X

C&W

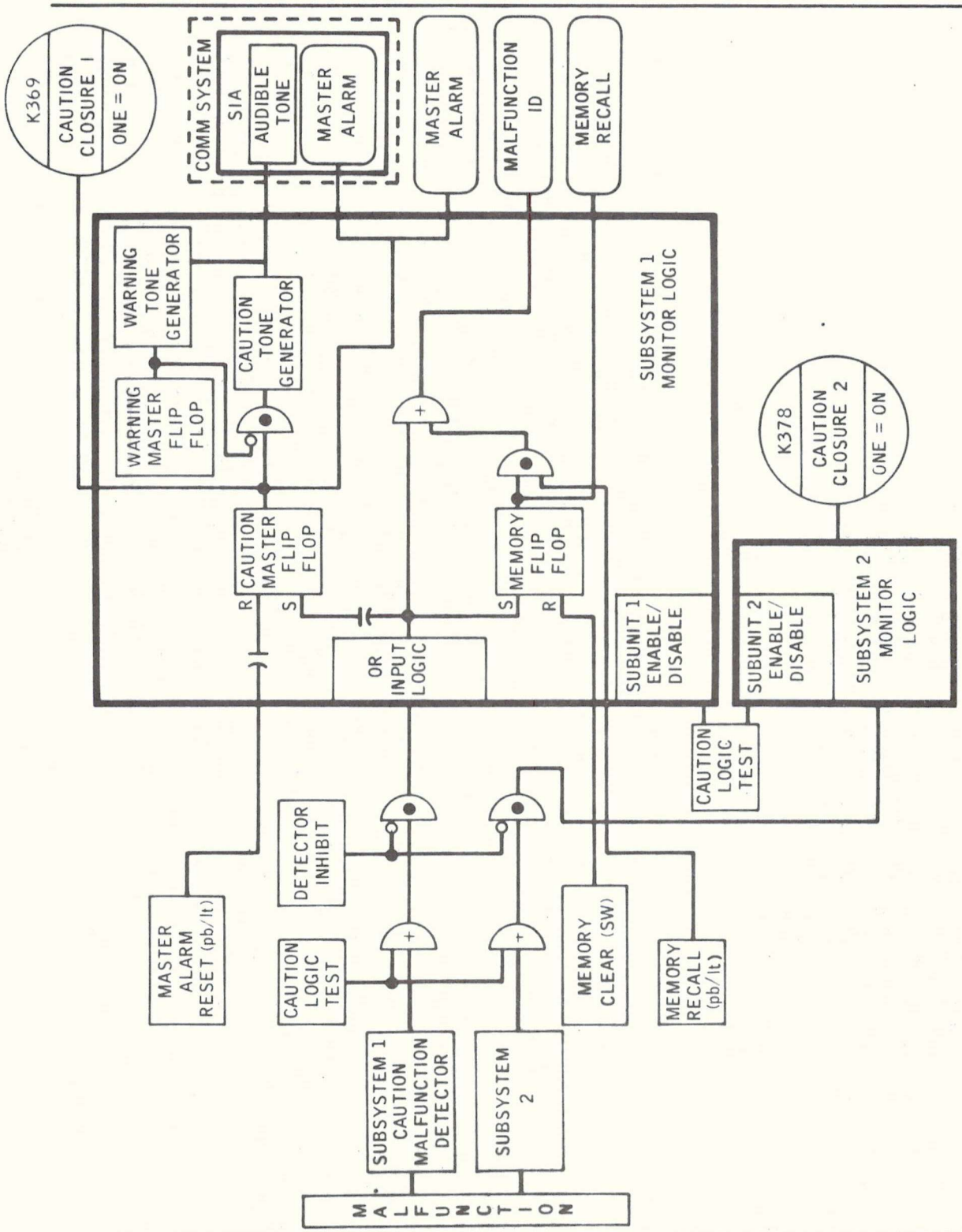

FIGURE 2.6-20 CAUTION MALFUNCTION LOGIC

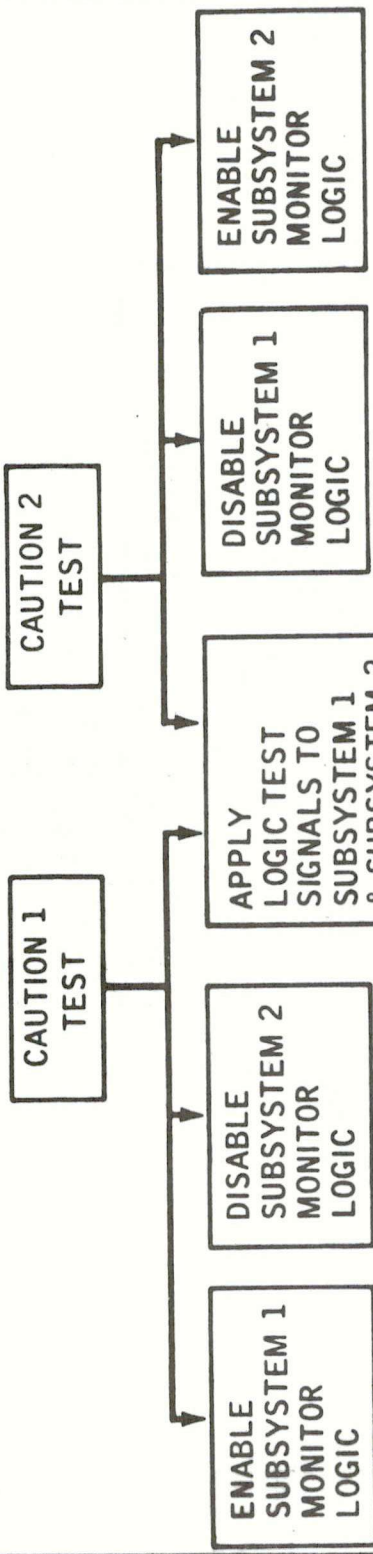

FIGURE 2.6-21 CAUTION LOGIC TEST

C&W

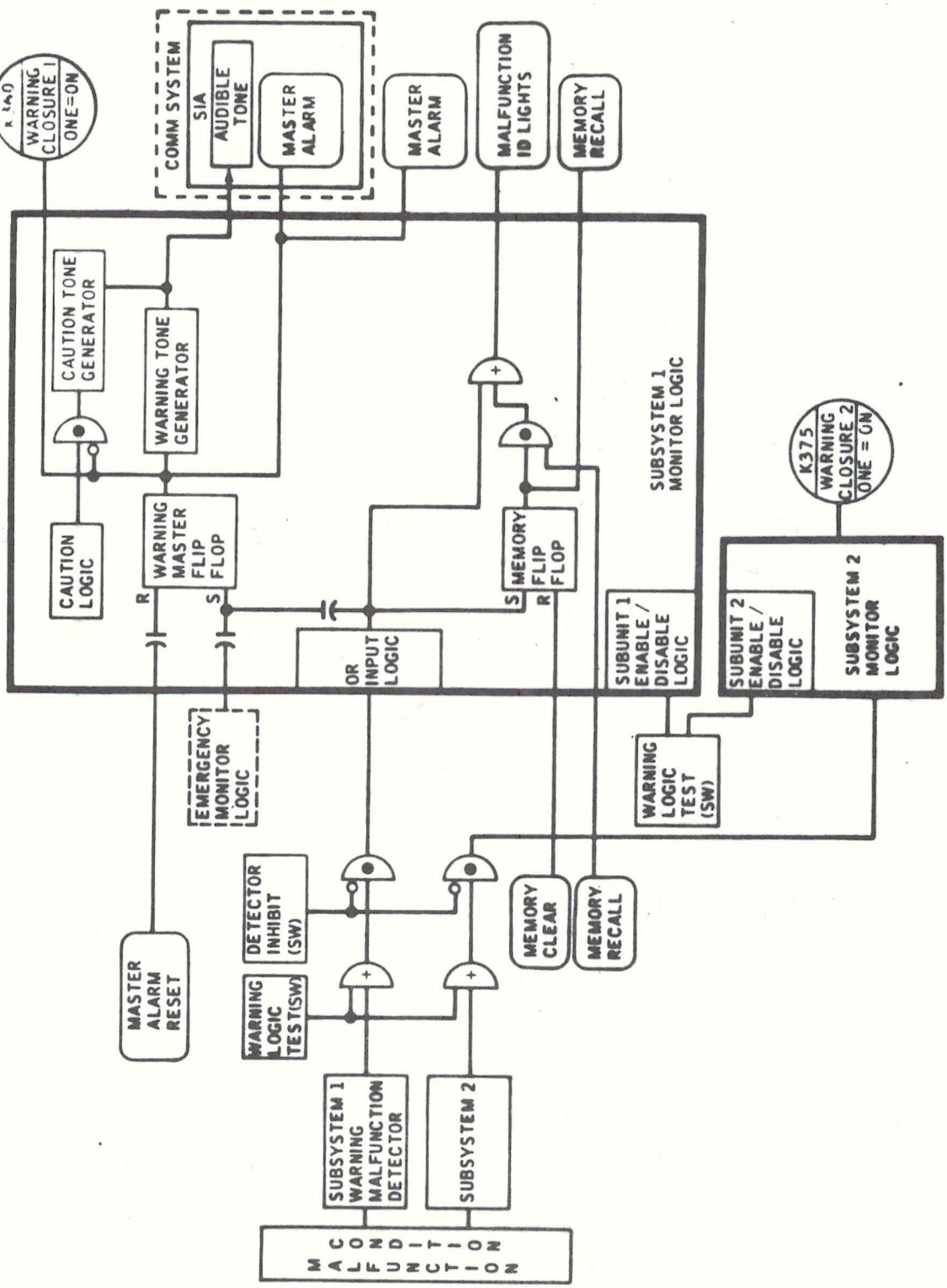

FIGURE 2.6-22 WARNING MALFUNCTION LOGIC

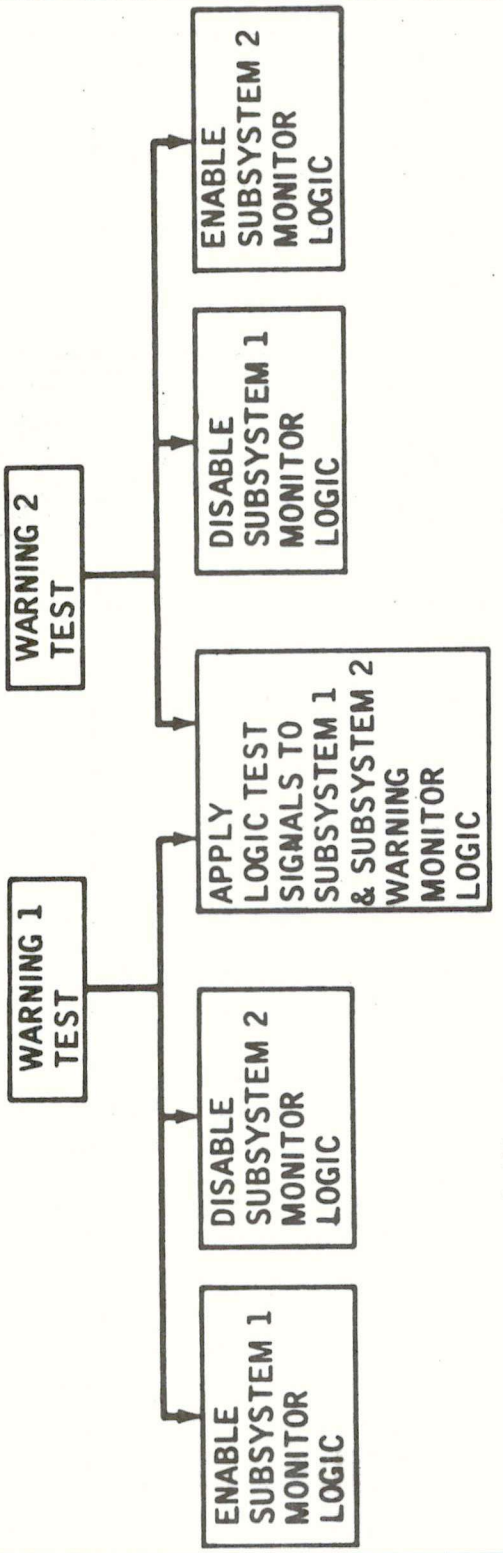

FIGURE 2.6-23 WARNING LOGIC TEST

C&W

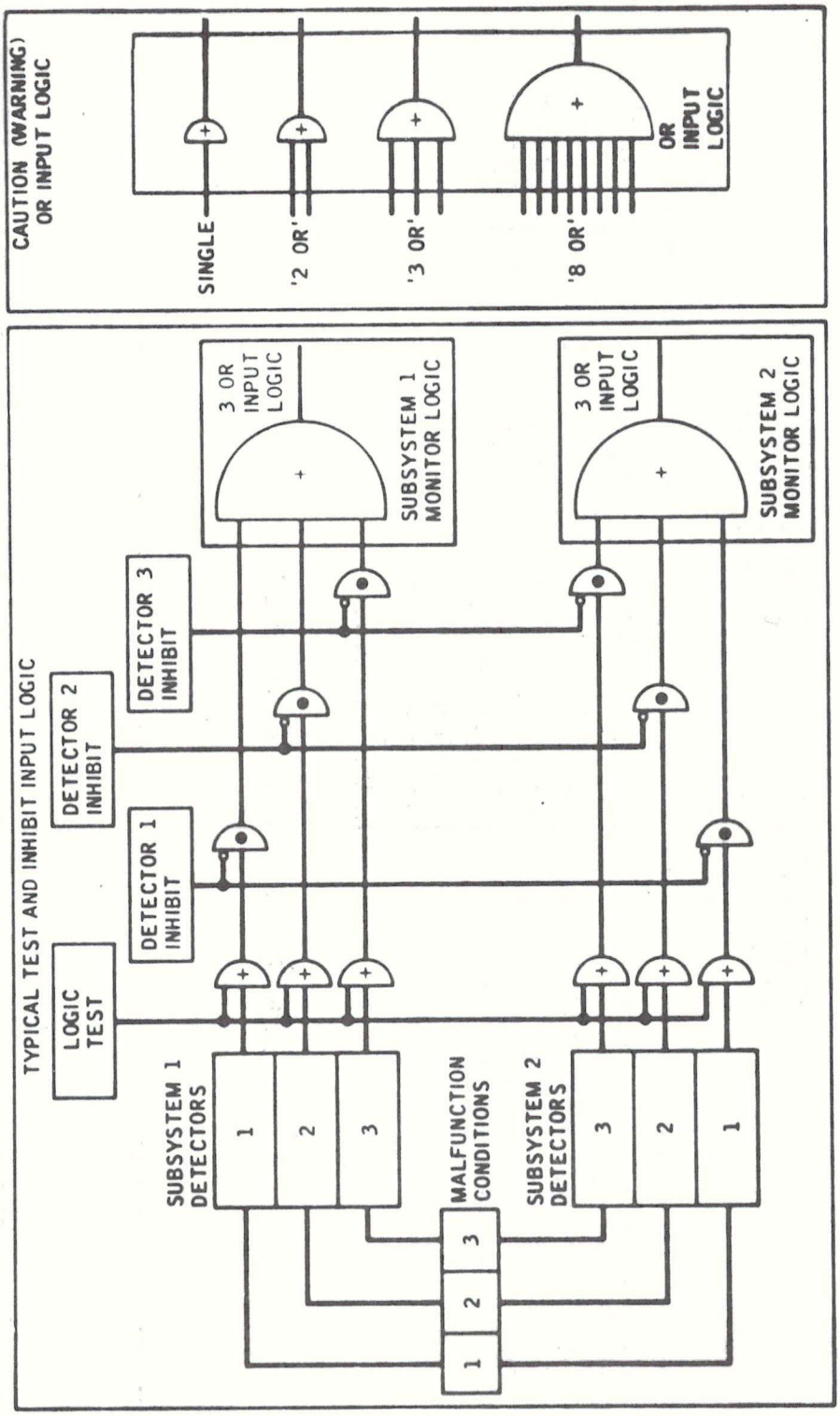

Figure 2.6-24 Typical Test and Inhibit Input Logic

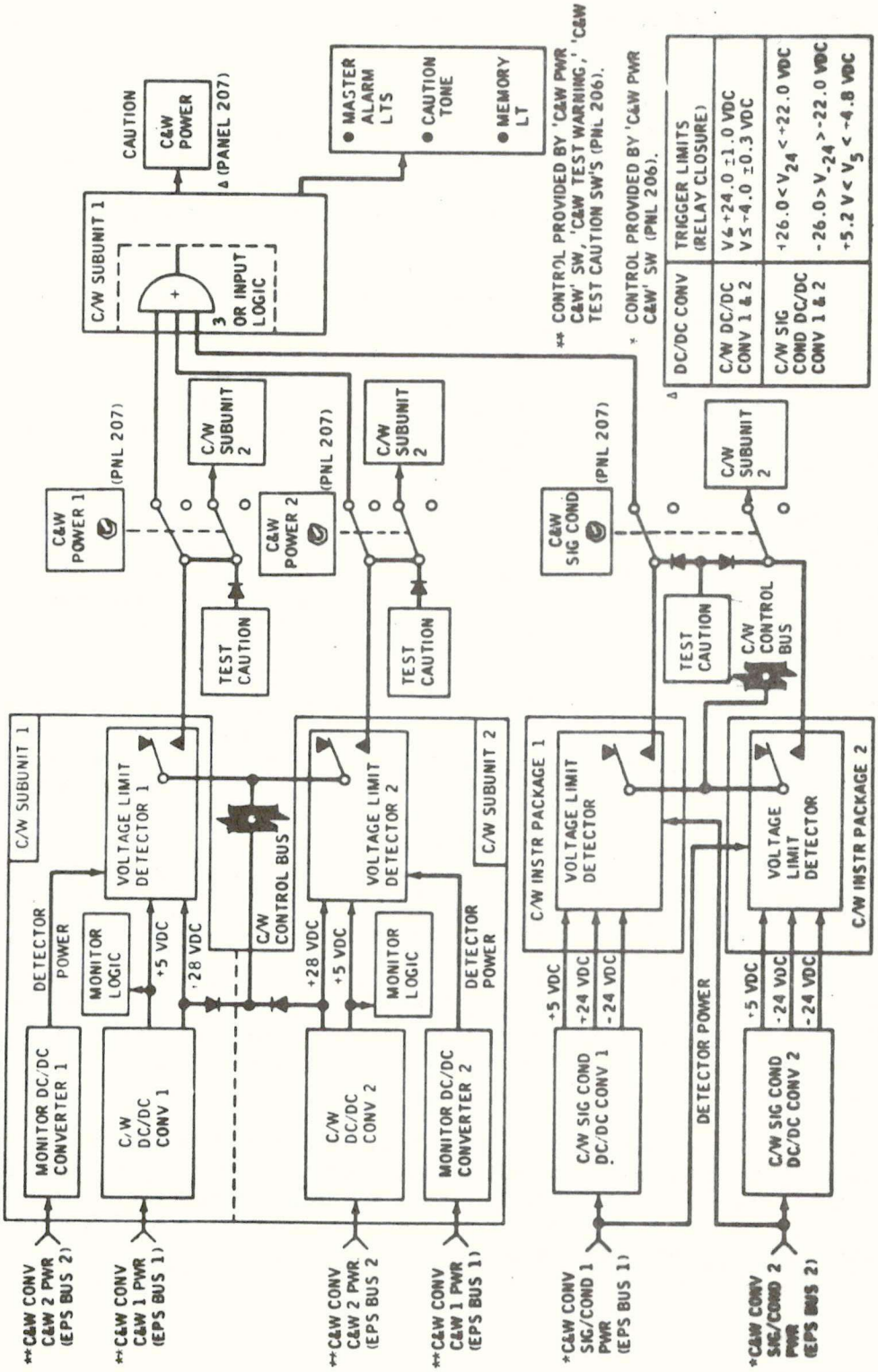

Figure 2.6-25 C&W Subsystem Self Monitoring Set-Up

C&W

remain operational to monitor all required parameters and to provide indications of out-of-tolerance conditions.

f. ATM Post Manufacturing Checkout - The ATM Post Manufacturing test will include a thorough verification of the ATM segment of the C&W System. The test will include verification of modular wiring and proper handling of input/output signals. The ATM pre-flight computer program and GSE simulators will be used to provide the necessary interface functions.

g. ATM Post Vibration Test - Abbreviated systems tests, which include the C&W System, will be performed to insure that no detrimental effects occurred during vibration testing. GSE simulators, in conjunction with the ATM pre-flight computer program, are used in conducting this test.

h. ATM Thermal/Vacuum Test - Using GSE simulators and the ATM pre-flight computer program, the C&W System is reverified before, during, and following the ATM Thermal/Vacuum testing.

i. OWS Post Manufacturing Checkout - The OWS Post Manufacturing test will include a thorough checkout of the OWS portion of the C&W System. The test will include verification of interface and modular wiring, installation, and operation of all components, and demonstration of proper handling and display of input/output signals. GSE simulators will be used to provide cluster interface functions.

j. OWS Systems Integration Test - The OWS will be subjected to an integrated test in which the OWS systems are operated independently and collectively. The orbital mode of operation will be followed to demonstrate that the equipment and subsystem satisfy design and mission objectives.

k. CSM Integrated Systems Checkout - The CSM Integrated Systems Checkout will verify the CSM/SWS C&W System interface by simulating an out-of-tolerance condition in the CSM. The CSM CDU will issue a CSM alarm and provide discrete signals across the CSM/MDA interface.

2.6.4.5 Pre-Launch Testing - The following tests will be conducted on the various vehicle configurations during pre-launch assembly at KSC. The tests will demonstrate the ability of the C&W System to perform the mission requirements and objectives and verify system compatibility with other vehicle systems.

a. AM/MDA Integrated Systems Test - Each of the AM/MDA C&W Systems will be operated independently and collectively at KSC to examine specified levels of performance. This test will verify major hardware components, proper signal handling and system redundancy. Compatibility of the system will be observed during all phases of testing.

b. CSM-AM/MDA and the CSM will be verified during this test. Activation of the CSM CDU master alarm will issue a warning alarm signal across the CSM/MDA interface to verify proper C&W System operation. Throughout this interface test, the CSM and AM/MDA Systems will be observed for EMC effects.

c. ATM Systems Test - An abbreviated module test will be performed to reverify the combined operation of the ATM's C&W System and associated telemetry. The C&W System interface wiring, sensor operation, and associated telemetry parameters will be verified. The ATM pre-flight computer program will be used to provide discrete outputs and the GSE simulators will provide interface verifications.

d. AM/MDA-OWS-ATM Electrical Interface Test - The purpose of this test will be to ascertain the performance of the complete SWS power and distribution system. After this verification, the electrical system will be utilized in supporting other systems testing. A functional check of the C&W System will be made at this time.

e. ATM Systems Verification Test - This test will provide a detailed checkout of all ATM systems. The C&W System will be activated to support the ATM Systems test. Simulators will be utilized to verify other cluster interfaces. The test will demonstrate all ATM originated C&W System parameters including redundancy. This test will utilize the ATM computer flight test program.

C&W

f. AM/MDA-OWS End-to-End System Test - This series of tests will verify all OWS/AM/MDA C&W System interfaces. ATM and CSM simulators will be used to verify all required end-to-end responses where possible. The C&W System will be tested in depth to verify proper operation. The test will include verification of sensor operation; functional operation of all C&W System controls and displays; verification of proper handling and display of discrete inputs from the AM, ATM, CSM, MDA, and OWS; verification of proper caution, warning, and emergency alarm tones; and validation of proper telemetry output.

g. SWS Simulated Flight - Where possible, all systems will be operated in the modes and sequences specified for flight. A functional block of the C&W System will be made using the C&W System test switches. The C&W System will remain operational during the simulated flight to monitor and detect out-of-tolerance conditions.

2.6.4.6 Inflight Tests - Onboard Capability is provided to permit inflight crew assessment of the C&W System. The individual parameters will be verified periodically by simulating out-of-tolerance conditions to the C&W Subunits via the various C&W System test switches and by subjecting certain sensors to abnormal conditions. Activation of the C&W System will demonstrate functional operation of the system and will include: proper handling and display of the discrete input/output signals; proper caution, warning, and/or emergency alarm tones; and telemetry outputs.

2.6.4.7 Functional schematics showing the wiring and electrical routing paths related to each C&W parameter monitored are available in the Skylab Caution and Warning Technical Manual MSFC No. 40M35701.

2.6.4.8 Table 2.6-IV lists the ATM C&W Measured Parameters. Figure 2.6-18 shows the Caution Warning and Inhibit Panels of Control Panel 207. Table 2.6-V gives the details of the ATM Parameter Information such as Nominal Range, Normal Trip Point, Worst Cast Trip Points, Measurements and Display Information.

Paragraphs 2.6.4.10 through 2.6.4.15 describe the operation of the CWS associated with ATM parameters, i.e., Cluster Attitude Hi Rate and Thruster Stuck; ACS Malfunction CMG Saturate, TACS only and Rate Gyro; Computer Malfunctions Cross Over and Self Test; ATM Canister Thermal Malfunctions Pump ΔP, Coolant Temperature and Heater Temperature as well as ATM Bus 1 and 2 having low voltage. Paragraph 2.6.4.16 describes the ATM ALERT Subsystem.

2.6.4.9 ATM C&W Equipment Locations - The ATM contains equipment used for monitoring the ATM Attitude and Pointing Control System, the Thermal Control System, and the ATM buses. The locations of the various components used for monitoring these parameters are depicted in Figure 2.6-26.

2.6.4.10 Cluster Attitude - Attitude control of the Cluster is performed by three Control Moment Gyro's (CMG's) located on the ATM along each of the three body axes and by the Thruster Attitude Control System (TACS). The attitude error commands for the CMG's are derived from the strap down reference calculations which are performed by the ATM Digital Computer using rate gyro outputs. These calculations are continuously modified by error information from the acquisition sun sensors during the daylight portion of the orbit. The TACS is used when the rate and attitude deadbands are exceeded or when the CMG's become saturated or inorperative. Each of the six cold gas thrusters located on the OWS can be fired continuously for one second or for one minimum impulse bit (MIB). The firing time, ranging between 40 and 400 milliseconds, for the MIB can be changed by the crew using the Digital Address System (DAS) or by ground command using the ATM Digital Command System (DCS).

The C&W System monitors two abnormal conditions related to Cluster attitude; namely, stuck TACS thruster and vehicle overrate.

The thruster stuck condition is monitored in the following manner. Once each second, the impulse provided by each thruster is updated in the computer by adding the product of the thruster force and the duration of the last firing (one second or one MIB) to the previous accumulated impulse. If the calculated impulse for any thruster exceeds a prescribed limit, that thruster is considered to be stuck. The calculation of

TABLE 2.6-IV ATM C&W MEASURED PARAMETER LIST

	ITEM/PARAMETER	MONITORED MODULE	CRITICALITY	NO. OF C&W SYSTEM CHANNELS	LIGHT LABELING
1.	ATM Bus 1 Low	ATM	W	1	ATM Bus 1 Low
2.	ATM Bus 2 Low	ATM	W	1	ATM Bus 2 Low
3.	ACS - Overrate	ATM	W	1	CLUSTER ATT.
4.	ACS - Thruster Stuck	ATM			
5.	ACS - CMG Saturate	ATM	C	1	ACS MALF
6.	ACS - TACS only	ATM			
7.	ACS - 2nd/3rd Rate Gyro Fuel	ATM			
8.	Computer Test Fail	ATM	C	1	CMPTR MALF
9.	Computer X Over	ATM			
10.	ATM Coolant Fluid Temp	ATM	C	1	ATM CNSTR Thermal
11.	ATM Coolant HTR Temp	ATM			
12.	ATM Coolant Pump ΔP	ATM			

C&W

TABLE 2.6-V ATM C&W PARAMETER INFORMATION (1 of 2)

PARAMETER NAME		NOMINAL RANGE	NORMAL TRIP POINT / WORST CASE TRIP POINT	CORRESPONDING INDICATORS (R) INDICATES SENSOR REDUNDANT		C&W INHIBIT SWITCH TITLE (PNL 207)	C&W DISPLAY TITLE (PNL 207 & 616)	REMARKS
				TM MEASUREMENTS	ON BOARD DISPLAYS			
ATM BUS 1 LOW	DETECTOR (LOCATED IN ATM) SEE REMARKS	28-30 VDC	V≤25 VDC 24.5≤V≤25.5 VDC	M019-702	METER PANEL 130	ATM BUS 1 LOW	ATM BUS 1 LOW (WARNING)	ATM PROVIDES CONTACT CLOSURES TO C/W SUBSYSTEMS. SEE FIG. 2.6-45-51.
ATM BUS 2 LOW	DETECTOR (LOCATED IN ATM) SEE REMARKS	28-30 VDC	V≤25 VDC 24.5≤ ≤25.5 VDC	M020 702	METER PANEL 130	ATM BUS 2 LOW	ATM BUS 2 LOW (WARNING)	ATM PROVIDES CONTACT CLOSURES TO C/W SUBSYSTEMS - SEE FIGURE 2.6-45 to 51.
ATM COOLANT PUMP ΔP	DETECTOR (LOCATED IN ATM) SEE REMARKS	31 psid at FLOW RATE 900+50lb/hr	ΔP≤26 psid 25≤ΔP≤27 psid	K458-D006-704	METER PANEL 130	ATM CNST PUMP ΔP	ATM CNST THERM (CAUTION)	ATM PROVIDES CONTACT CLOSURE TO C/W SUBSYSTEMS SEE FIG. 2.6-37 THRU 2.6-44.
ATM COOLANT FLUID TEMP	DETECTOR (LOCATED IN ATM) SEE REMARKS	49°F-51°F	T≤45°F T≥55°F 44.9°F≤T≤45.1°F 54.9°F≤ ≤55.1°F	C286-C297-K375-K374-704	METER PANEL 130	ATM CNST COOLANT TEMP		
ATM COOLANT HEATER TEMP	DETECTOR (LOCATED IN ATM) SEE REMARKS	HTR CASE TEMP 40-60 (HTR OFF NORMALLY)	T≥150°F 149.64°F≤T≤150.36°F	K479-C295-704	METER PANEL 130	ATM CNST HEATER TEMP		
ACS OVER RATE	DETECTOR (LOCATED IN ATM) SEE REMARKS	DEPENDS UPON ATTITUDE MODE	$\geq 2.59 \times 10^6$ (Piradians/Sec)^2 (.28°/Sec)^2-(.30°/Sec)^2	K382-704	COUNTER INDICATOR	CLSTR ATT HI RATE	CLUSTER ATT (WARNING)	ATM PROVIDES CONTACT CLOSURES TO THE C/W SUBSYSTEMS-SEE FIGURES 2.6-37 and 2.6-39.
RCS THR THRUSTER STUCK	DETECTOR (LOCATED IN ATM) SEE REMARKS	N/A	HALF OR BIT IMPULSE ≥ 500LB SEC N/A	K382-704	COUNTER INDICATOR	CLSTR ATT THRUSTER STUCK		

C&W

TABLE 2.6-V ATM C&W PARAMETER INFORMATION (2 of 2)

PARAMETER NAME		NOMINAL RANGE	NOMINAL TRIP POINT ..... WORST CASE TRIP POINTS	CORRESPONDING INDICATORS (R) INDICATES SENSOR REDUNDANT		C&W INHIBIT SWITCH TITLE (PNL 207)	C&W DISPLAY TITLE (PNL 207 & 616)	REMARKS
				TM MEASUREMENTS	ON BOARD DISPLAYS			
ACS-CMG SATURATE	DETECTOR (LOCATED IN ATM) SEE REMARKS	≈95% MOMENTUM CAPABILITY (9500FTLBS)	SYSTEM MOMENTUM MINUS COMMANDED MOMENTUM ≥ 2.88 (NORMALIZED) 2.87-2.89	K382-702	COUNTER INDICATOR	ACS MALF CMG SAT	ACS MALF (CAUTION)	1.92 WITH ONLY TWO CMGS.
ACS-AUTO TACS ONLY OPTION	DETECTOR (LOCATED IN ATM) SEE REMARKS	N/A	TACS ONLY MODE SELECTED WHEN 2 CMGS FAIL N/A	K382-702	COUNTER INDICATOR	ACS MALF TACS ONLY		ATM PROVIDES CONTACT CLOSURE TO THE C/W SUBSYSTEMS SEE FIGURES 2.6-30 THRU 2.6-33.
ACS-2ND, 3RD RATE GYRO FAILURE	DETECTOR (LOCATED IN ATM) SEE REMARKS	N/A	RATE GYRO FAILURES DETERMINED BY REDUNDANCY MGMT. N/A	K382-702	COUNTER INDICATOR	ACS MALF RATE GYRO		
COMPUTER X-OVER	DETECTOR (LOCATED IN ATM) SEE REMARKS	N/A	OCCURS (IF NOT INHIBITED) OPEN FAILURE OF SELF TEST, TACS WRAP OR WCIU WRAP TEST N/A	K382 702	TALKBACK	COMPUTER X OVER	COMPUTER MALF (CAUTION)	ATT. PROVIDES CONTACT CLCS RES 10 C/W SUBSYSTEMS SEE FIGURES 2.6-34 AND 2.6-36.
ACS COMPUTER SELF TEST FAILURE	DETECTOR (LOCATED IN ATM) SEE REMARKS	N/A	CHECKS COMPUTER SOFTWARE FUNCTIONS N/A	K382-702	COUNTER INDICATOR	COMPUTER SELF TEST		

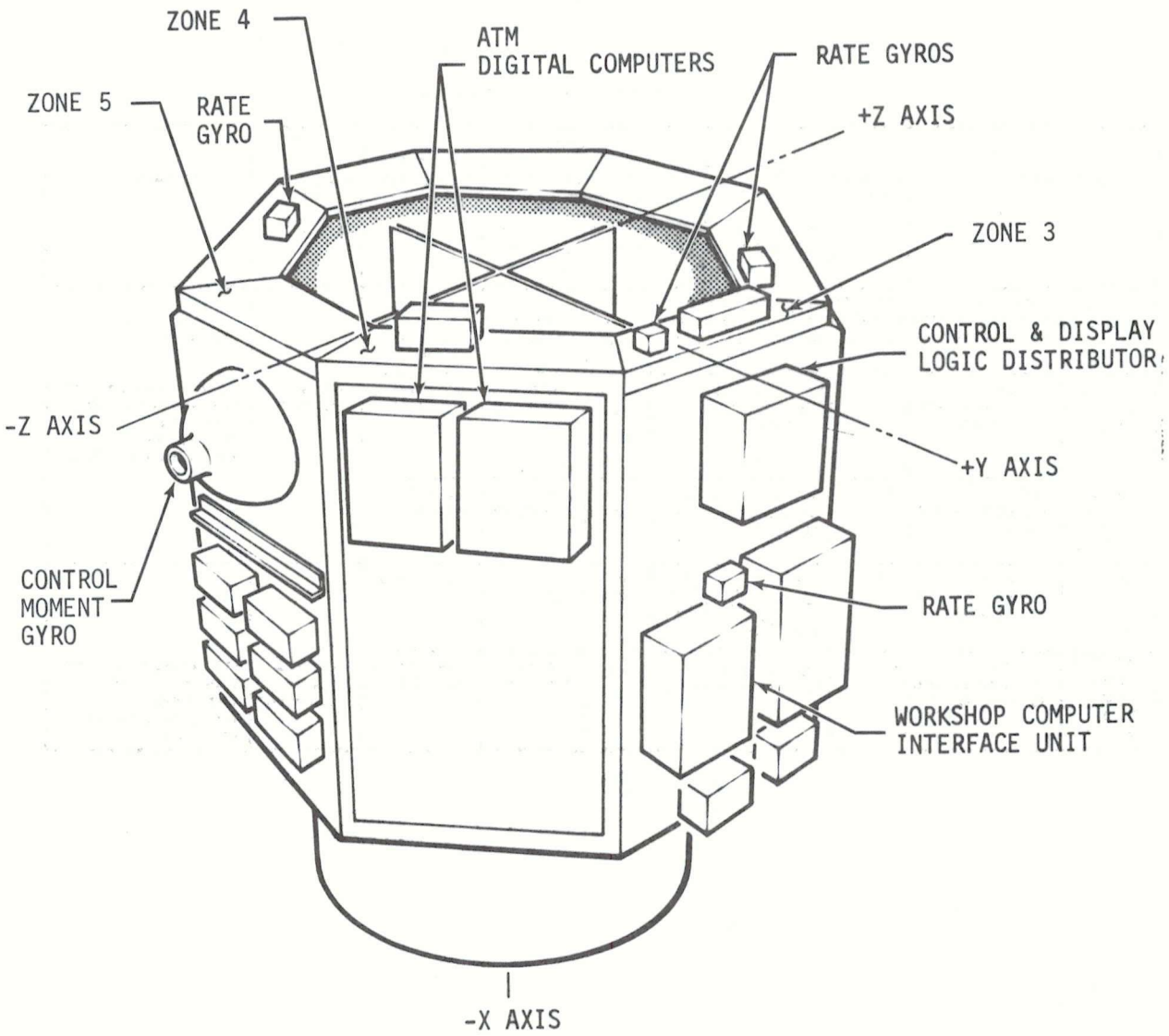

Figure 2.6-26 ATM C&W Equipment Locations

thruster impulse and comparison to the prescribed limit is performed once per second by the TACS Application Module of the flight computer program. An indication of a stuck thruster causes two discretes in an output register of the Workshop Computer Interface Unit (WCIU) to be set which results in redundant C&W relay closures in the Control & Display C&D Logic Distributor. The two discrete outputs remain set until there is a DAS/DCS acknowledgement of the C&W condition, i.e., a request to display the C&W conditions on the ATM Control and Display Panel.

Calculation of vehicle overrate is performed in the computer five times per second using the Strapdown Reference Application Module of the flight computer program. The sum of the squares of the body rates about the three vehicle axes are calculated and compared to the vehicle overrate limit. If the sum exceeds 2.59×10^{-6} $(\text{piradians/sec})^2$, two discretes are generated in an output register of the WCIU which again cause redundant C&W relay closures in the C&D Logic Distributor. The discrete outputs remain set until the sum of the squares of the vehicle body rates become less than the critical value stated above.

A functional test is performed on the Cluster Attitude C&W System parameter during Module Systems Testing by the respective module contractors and during Pre-launch Testing at KSC. The tests will verify modular circuitry, interface compatibility and system operation (including redundancy). The Cluster Attitude High Rate and Thruster Stuck warning signals are simulated and the resulting alarm signal verified. During integrated tests, the ATM Rate Gyro outputs will be verified by torquing the Rate Gyros at predetermined rates using GSE and verifying that the computer detects and out-of-tolerance condition.

C&W

A functional block diagram of this parameter is shown in Figure 2.6-27.

The circuitry associated with the Cluster Attitude parameter is verified during ATM and AM/MDA Module Systems Testing.

Verification of the ATM circuitry associated with the Cluster Attitude parameters is accomplished by issuing signals via the ATM computer pre-launch program. Both the Cluster Attitude High Rate and the Thruster Stuck warning signals are provided. The AM/MDA-ATM interface simulator verifies proper handling and display of the alarm signal resulting from these contact closures.

The AM and MDA circuitry associated with this parameter is verified in the following manner utilizing the ATM-MDA interface simulator:

a. Power is applied to the EPS control buses using GSE power supplies.

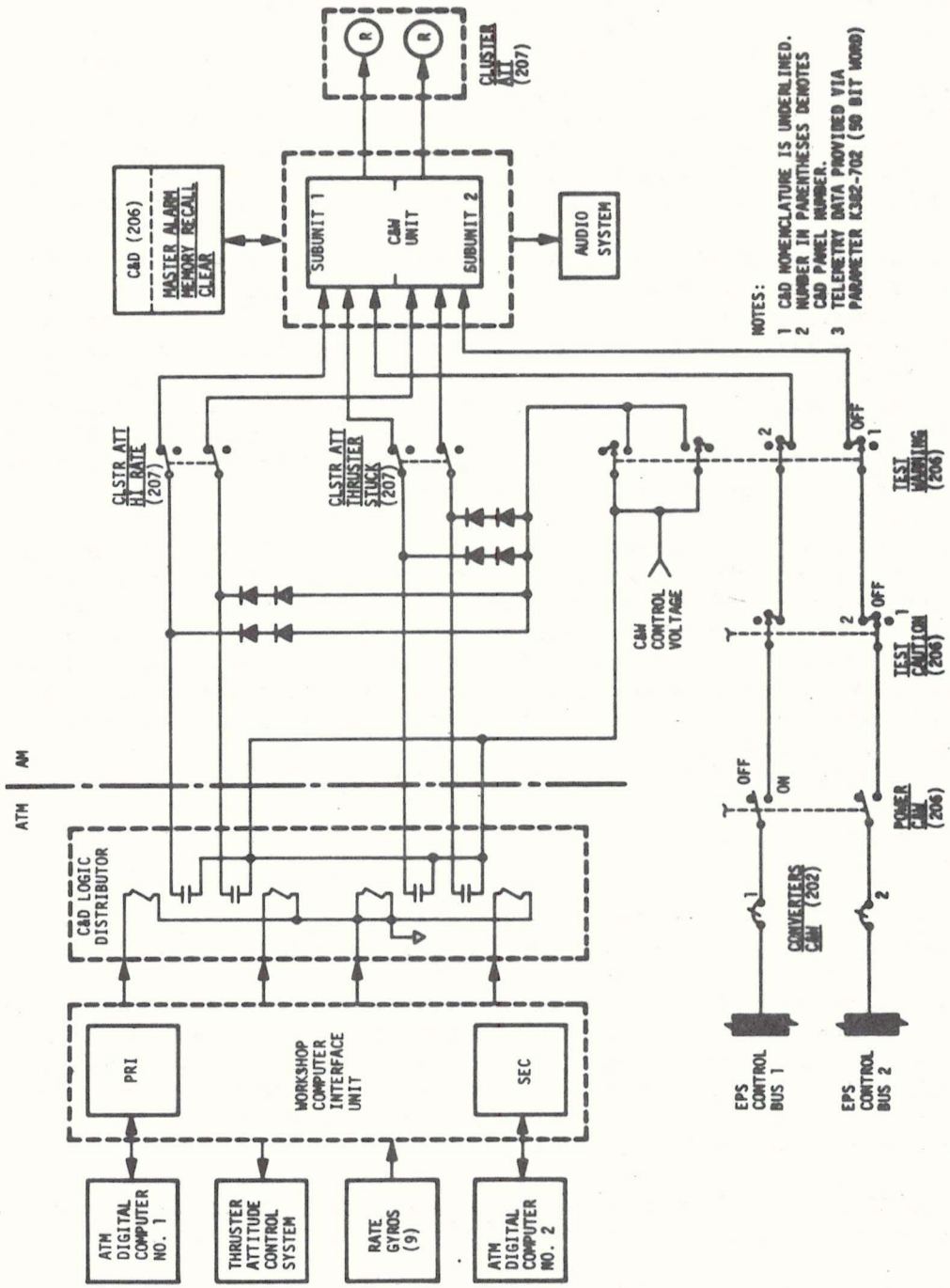

Figure 2.6-27 Cluster Attitude Functional Diagram

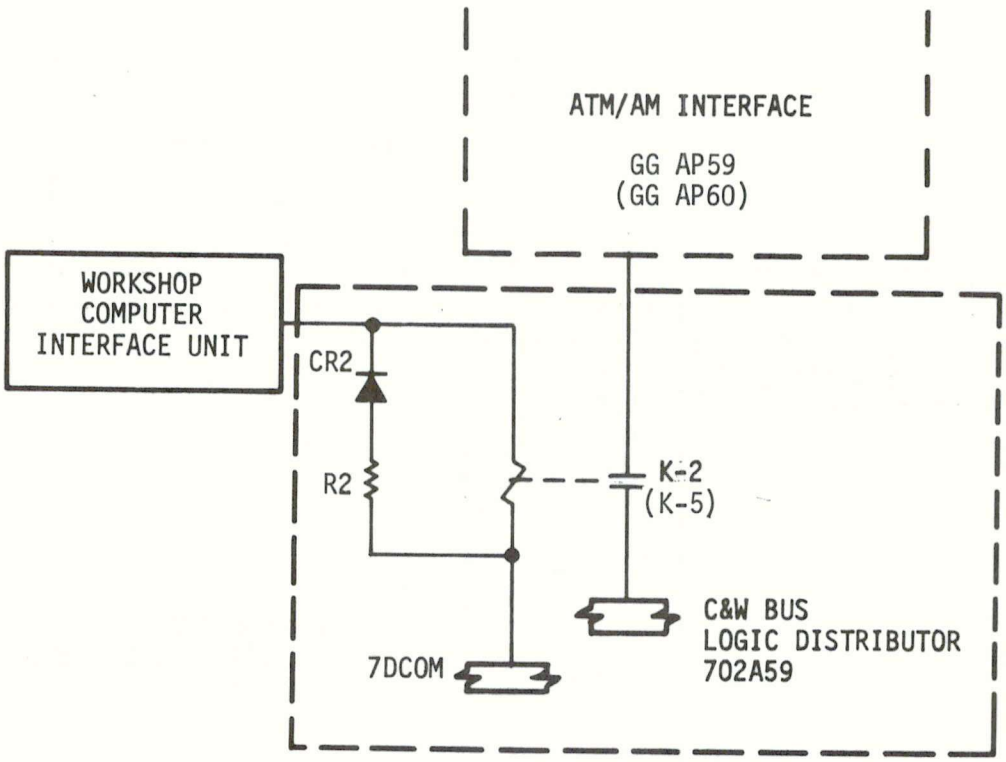

A DISCRETE SIGNAL FROM THE WORKSHOP COMPUTER INTERFACE UNIT ENERGIZES RELAY K-2 OF MODULE A55 CAUSING CONTACT CLOSURE TO AM REDUNDANCY BY RELAY K-5 OF MODULE A56.

FIGURE 2.6-28 ACS OVERATE

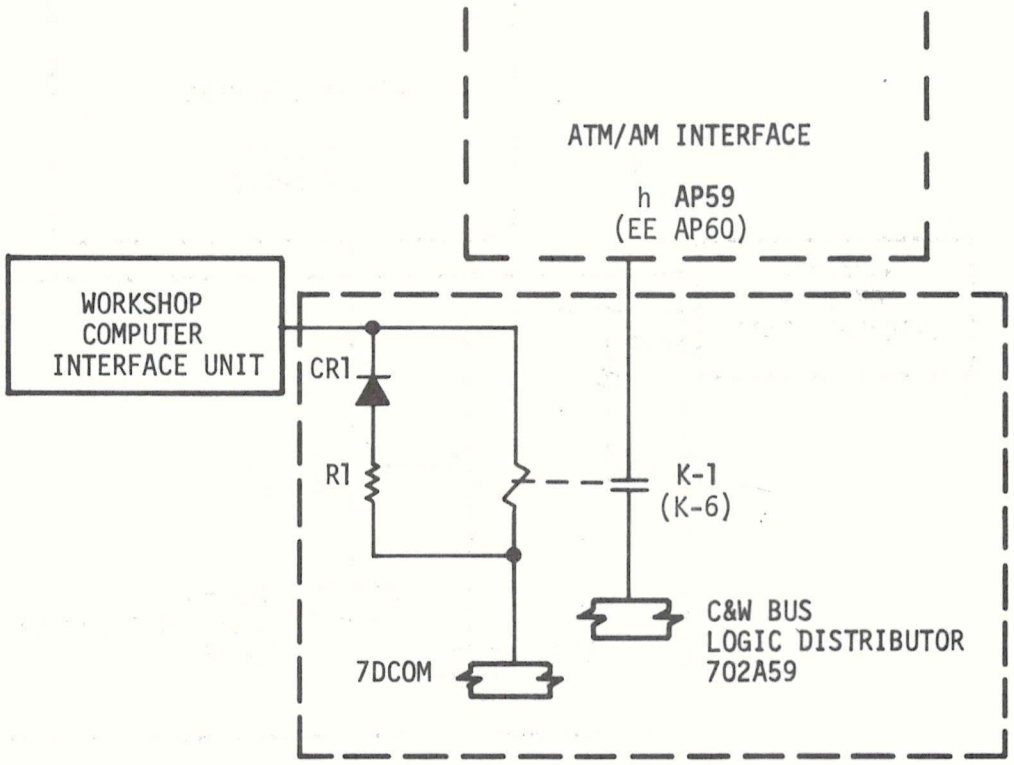

A DISCRETE SIGNAL FROM THE WORKSHOP COMPUTER INTERFACE UNIT ENERGIZES RELAY K-1 OF MODULE A55 CAUSING CONTACT CLOSURE TO AM. REDUNDANCY BY RELAY K-6 OF MODULE A56.

FIGURE 2.6-29 ATM THRUSTER STUCK

b. The C&W Power parameter is inhibited to preclude inadvertent C&W System alarms by switching:

C&W POWER 1 & 2 inhibit switches to OPEN

C&W SIG COND inhibit switch to OPEN

c. C&W Subunit 1 and the circuitry associated with Attitude High Rate and Thruster Stuck inhibit switches are verified by switching:

CONVERTERS C&W - 1 circuit breaker to CLOSE

CONVERTERS C&W - 2 circuit breaker to OPEN

POWER C&W switch to ON

HI RATE or THRUSTER STUCK inhibit switch to CLOSE

NOTE: Verification of C&W Subunit 2 and associated circuitry is accomplished by switching:

CONVERTERS C&W - 1 circuit breaker to OPEN

CONVERTERS C&W - 2 circuit breaker to CLOSE

d. Out-of-tolerance conditions are provided by simulating contact closures associated with this parameter using the ATM simulator.

e. Upon contact closure, the warning tone will sound and the appropriate parameter identification light will illuminate.

f. Depressing the master alarm telelight switch turns off the warning tone and extinguishes the master alarm telelight switch and the master alarm status lights. The Cluster Attitude parameter identification light will remain on until the simulated contact closures are removed.

The Cluster Attitude parameter circuitry is reverified during Prelaunch Testing at KSC. The method of conducting this test is similar to the Module Systems Test defined above. In addition, an integrated test is conducted in which the ATM inflight computer program is used. The ATM Rate Gyros are torqued to predetermined rates, using GSE, to provide out-of-tolerance conditions. The warning signal to each SWS Speaker Intercom Assembly and the respective C&W System master alarm status lights are also monitored.

The circuitry associated with this parameter will be periodically verified inflight by simulating an out-of-tolerance condition. This test will be accomplished using the test warning switch which will apply the

C&W control voltage to the C&W Unit via the Hi Rate and/or Thruster Stuck inhibit switches.

A functional schematic of the Cluster Attitude parameters is available in 40M35701, Figure 5.28.3-1, Skylab Caution and Warning Technical Manual.

2.6.4.11 ATM ACS Malfunction - Attitude control of the Cluster is provided by three Control Moment Gyros (CMG's) located in the ATM along each of the three body axes and by the Thruster Attitude Control System (TACS). Actual vehicle rate information is provided by three rate gyros located along each of the three body axes and is compared with the body rates necessary to maintain the desired attitude. After making the comparison between actual and desired vehicle body rates, the ATM Digital Computer generates gimbal rate commands for each of the three Control Moment Gyros or selects certain thrusters to be fired. Normally, only two rate gyros per axis are operative; the average of the two rate gyro readings are used to determine vehicle rate about that axis. The difference between the accumulated time integrals of the two rate gyro outputs on each axis is calculated and compared to a fixed test value once each second. If the absolute value of the difference between the integrals exceeds the test value, a gyro failure is assumed to have occured. When this occurs, the third gyro for the failed axis is made operative, and tests are begun to isolate the failure. If two rate gyros from the same axis fail, the C&W System is activated.

The CMG Redundancy Management Application Module tests the excitation voltage to the CMG resolvers by comparing the voltage to a standard reference. This module also checks the status of the individual CMG's by comparing actual gimbal angles to expected angles based on the integral of the commanded gimbal rates. An excitation voltage failure or two CMG failures result in the TACS Only mode being commanded on and generation of a C&W alarm.

The CMG Control program calculates the difference between system momentum and commanded momentum. If this difference exceeds a preset constant, the system is considered saturated and again the C&W System is activated.

The determination of the three C&W conditions associated with the Attitude Control System (ACS) is made by three difference Application Modules in the computer flight program, Rate Gyro Redundancy Management is responsible for detecting the 2nd/3rd Rate Gyro Failure, CMG Redundancy Management causes switchover to the TACS Only mode, and CMG Control determines CMG System saturation.

2nd/3rd Rate Gyro Faulure - The Rate Gyro Redundancy Management module checks the status of the three rate gyros along each axis once per second. Assuming no previous failures, only two rate gyros per axis operative and the average output of the two gyros serves as the input

for the primary strapdown calculations. On each cycle through the Rate Gyro Redundancy Management program, the absolute value of the difference between the accumulated time integrals of the two rate gyro outputs is calculated and compared to a test constant. If the difference of the integrals exceeds the test value, the third rate gyro for the failed axis is spun-up for use in the isolation procedure to identify the faulty rate gyro. Two sets of strapdown calculations are started; one set using the primary rate gyro and the second set using the backup rate gyro. The primary set of strapdown calculations are used for attitude control unless it is determined that the TACS has been "full on" for ten seconds (ten consecutive slow loops). Attitude control is then maintained using the backup calculations until the TACS "full on" test is again failed. At that time attitude control for the suspect axis is suspended.

Failure isolation begins when the third rate gyro reaches full speed. Rate gyro spin-up requires approximately three minutes. The difference between the integrated outputs of the first and third rate gyros is compared with the difference between the integrated outputs of the second and third rate gyros. This test is continued until it is determined that the first or second rate gyro is faulty. At that time a new primary-backup gyro configuration is designated using the two good rate gyros and the strapdown calculations revert to using the average of these two gyros.

C&W

A second gyro failure along any axis is detected in the same manner as noted above. The strapdown calculations, attitude control, and TACS "full on" test are conducted in the same manner; however, the isolation procedure is different and can only be performed during the daylight portion of the orbit while in the Solar Inertial Mode. The reason for this is that a loss of sun presence is used to identify which gyro failed in the X or Y axis. Identification of the failed gyro in the Z axis is determined by comparing the change in the Z axis rotation to a preset test constant. Once the second failed gyro has been identified, the primary strapdown calculations are reinitialized using the remaining good gyro. Identification of the second rate gyro failure causes two discrete outputs in an output register of the Workshop Computer Interface Unit (WCIU) to be set which provides signals to the C&D Logic Distributor for initiating redundant C&W relay closures. The discrete outputs can only be reset by a DAS/DCS C&W acknowledgement of the C&W condition, i.e., a request to display the C&W conditions on the ATM Control & Display Panel.

TACS Only - The CMG Redundancy Management module checks the status of the three CMG's once per second using a Voltage Reference Redundancy Management (VRRM) test and a Rate Command Integral test. In the VRRM test the excitation voltage for the CMG Desaturation Resolvers is provided by either of two inverter assemblies and enters the WCIU via either of two redundant inputs. Nine resolver signals (two from the outer gimbals and one from the inner gimbal for each of the three CMG's) and the selected reference voltage are applied to either one of two identical processing networks. A comparison of the reference voltage with a standard voltage

is made and a failure is noted if the absolute value of the difference between the two voltages exceeds a preset test constant. Three consecutive failures of this test results in a reconfiguration of the relays controlling the reference voltage and processing networks. If three consecutive reference voltage test failures occur for each of the four possible reference voltage/processing network configurations, the TACS Only mode is commanded on.

The Rate Command Integral (RCI) test consists of an H-vector magnitude test, a short term RCI test and a long term RCI test. The H-vector magnitude test determines the inner and outer gimbal angles relative to the gimbal stops and isolates faulty resolver information. When a gimbal is within a preset number of degrees from the stop, the sum of the squares of the momentum components of the associated CMG is compared to two preset constants. If the sum of the squares is outside the range of the test constants the test has failed. Five consecutive failures indicates that the CMG being testedis faulty. If a gimbal makes contact with a stop, the fault isolation is performed during the RCI tests.

The RCI tests compare the actual gimbal angles as calculated by the CMG Redundancy Management module to the expected angles derived from the time integral of the commanded gimbal rates. Test failure occurs when the difference between the actual and expected angles for both inner and outer gimbals is greater than a preset constant. The short term RCI test is conducted for a 10 second interval while the long term RCI test is performed for a 100 second interval providing that there have been 10 consecutive successful short term tests. If there is a failure of a short term test, both the short term and long term tests are reinitialized. Five, not necessarily consecutive, test failures (short term or long term) indicate a faulty CMG. If two CMG's have failed, power is removed from all three CMG;s and the TACS Only mode is commanded on. When this occurs, the two AUTO TACS Only C&W discrete outputs in the WCIU are set which provide signals to the C&W Logic Distributor for initiating redundant C&W relay closures. The discrete outputs can only be reset by a DAS/DCS acknowledgement of the C&W condition.

CMG System Saturation - Once every 200 milliseconds the CMG Control module determines the combined momentum of the CMG's and the vehicle. If the vehicle momentum plus the CMG momentum minus the commanded momentum exceeds a preset constant, the system is considered to be saturated and the two CMG SAT C&W discrete outputs in the WCIU are set. This provides for redundant C&W relay closures in the C&D Logic Distributor. The discretes remain set until the system momentum becomes less than the test limit. The saturation level test limit for three CMG control is 2.88. The value is reduced to 1.92 when only two CMG's are being used for attitude control.

The ACS Malfunction C&W System parameter is functionally tested during Module Systems Testing by the respective module contractors and during Prelaunch Testing at KSC. The tests will verify modular circuitry, interface

compatibility, and system operation including redundancy. The CMG Saturation, TACS Only control, and Second/Third Rate Gyro failure signals are simulated and the resulting caution signal verified.

Block diagrams of these parameters are shown in Figures 2.6-30 through 2.6-33.

The circuitry associated with the ACS Malfunction paramater is verified during ATM and AM/MDA Module Systems Testing.

Verification of the ATM circuitry associated with this parameter is accomplished by issuing discrete signals via the ATM computer pre-launch program. Individual and combined discrete signals associated with this parameter; i.e., CMG Saturation, TACS Only, and the Rate Gyro Failure are simulated. The AM/MDA-ATM interface simulator will verify proper handling and display of these alarm signals.

The AM and MDA circuitry associated with the ACS Malfunction parameter is verified in the following manner utilizing the ATM simulator:

C&W

a. Power is applied to the EPS Control buses using GSE power supplies.

b. The C&W Power parameter is inhibited to preclude inadvertent C&W System alarms by switching:

   C&W POWER 1 & 2 inhibit switches to OPEN

   C&W SIG COND inhibit switch to OPEN

c. C&W Subunit 1 and the circuitry associated with the three inhibit switches are verificed by switching:

   CONVERTERS C&W - 1 circuit breaker to CLOSE

   CONVERTERS C&W - 2 circuit breaker to OPEN

   POWER C&W switch to ON

   CMG SAT, TACS ONLY, or RATE GYRO inhibit switch to CLOSE

   NOTE: Verification of C&W Subunit 2 and associated circuitry is accomplished by switching:

   CONVERTERS C&W - 1 circuit breaker to OPEN

   CONVERTERS C&W - 2 circuit breaker to CLOSE

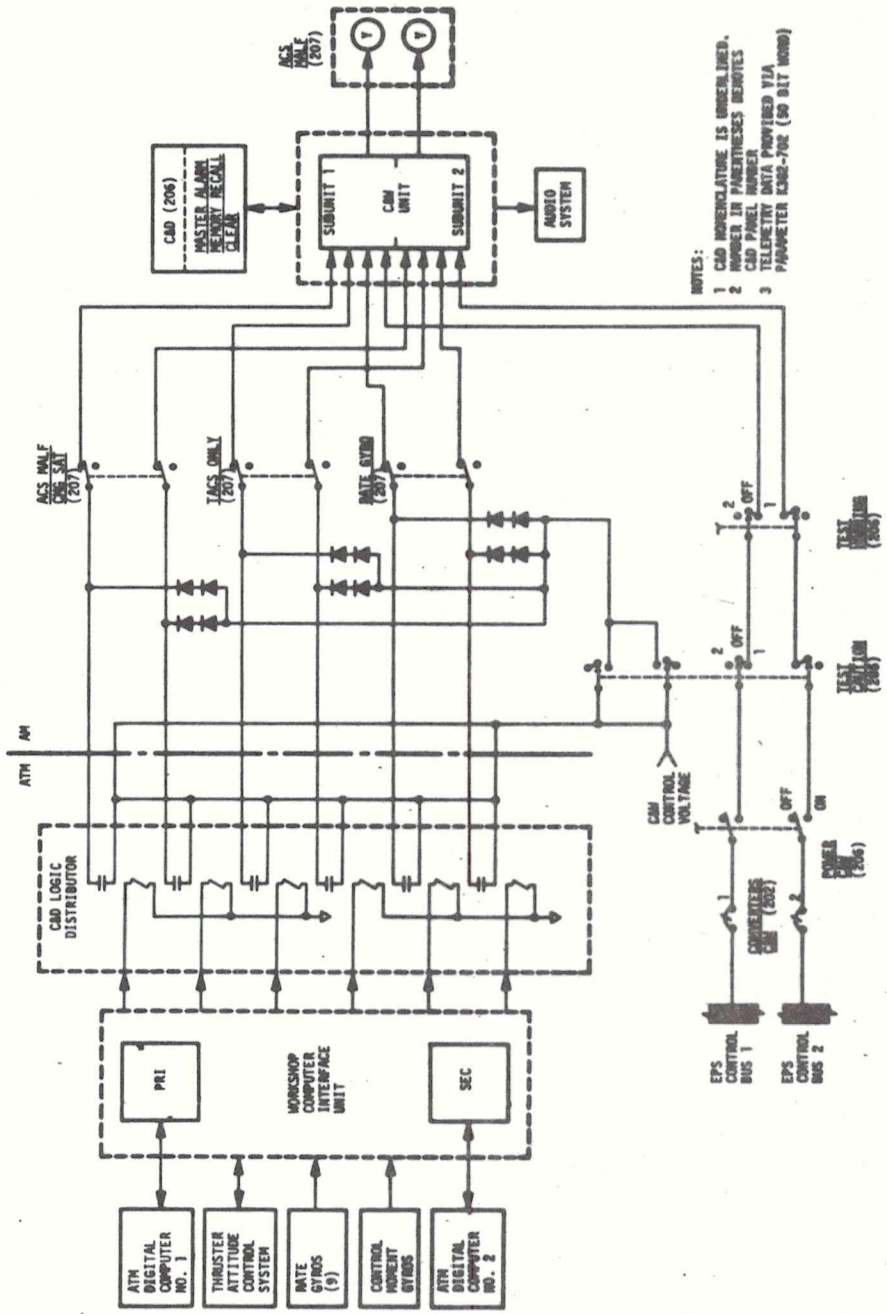

Figure 2.6-30 ATM ACS Malfunction Functional Diagram

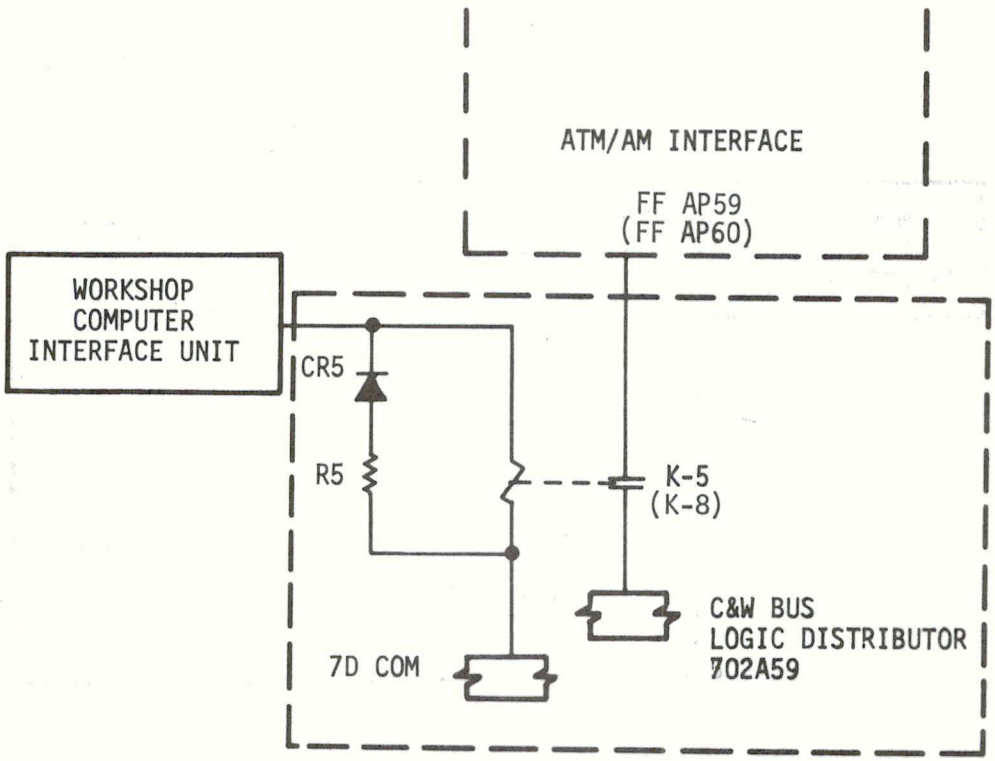

A DISCRETE SIGNAL FROM THE WORKSHOP COMPUTER INTERFACE UNIT ENERGIZES RELAY K-5 OF MODULE A55 CAUSING CONTACT CLOSURE TO AM REDUNDANCY BY RELAY K-8 OF MODULE A56.

FIGURE 2.6-31 ATM CMG SATURATED

C&W

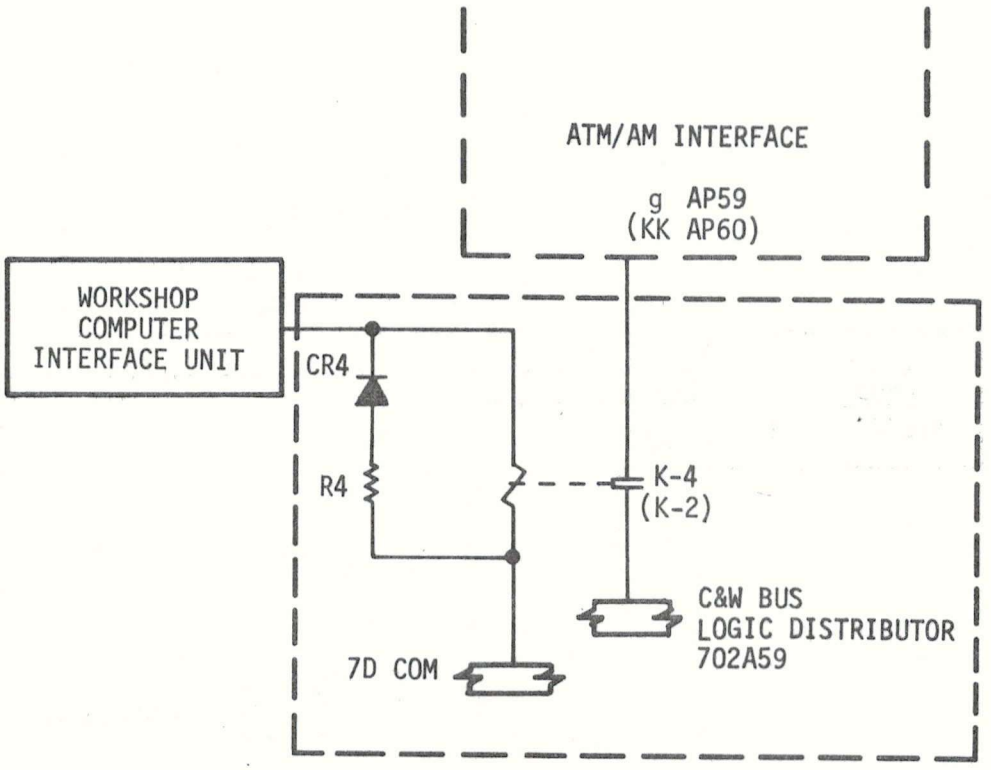

A DISCRETE SIGNAL FROM THE WORKSHOP COMPUTER INTERFACE UNIT ENERGIZES RELAY K-4 OF MODULE A55 CAUSING CONTACT CLOSURE TO AM REDUNDANCY BY RELAY K-2 OF MODULE A56.

FIGURE 2.6-32 ATM AUTO TACS ONLY

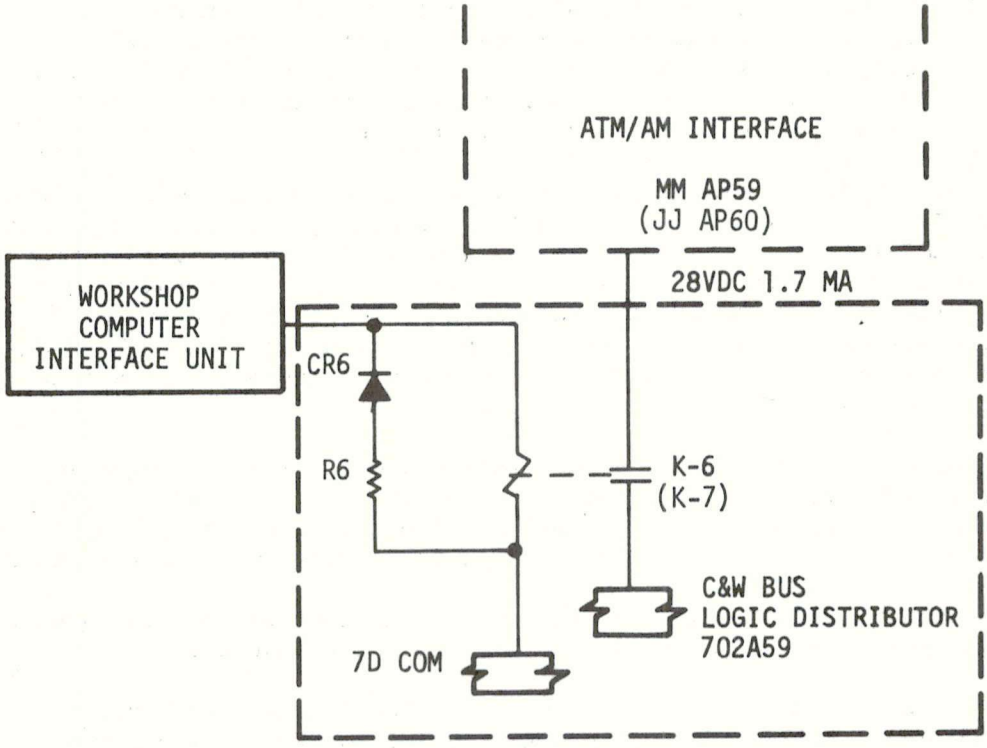

A DISCRETE SIGNAL FROM THE WORKSHOP COMPUTER INTERFACE UNIT ENERGIZES RELAY K-6 OF MODULE A55 CAUSING CONTACT CLOSURE TO AM. REDUNDANCY BY RELAY K-7 OF MODULE A56.

FIGURE 2.6-33 2ND/3RD RATE GYRO FAILS

d. The three contact closures, i.e., CMG Saturation, TACS Only control, and failure of a Second/Third Rate Gyro in a given axis, are simulated using the ATM simulator.

e. When contact closure occurs, the caution tone will sound and the appropriate display and parameter identification lights will illuminate.

f. Depressing the master alarm telelight switch turns off the caution tone and extinguishes the master alarm telelight switch and the master alarm status lights. The ACS Malfunction parameter identification light will remain on until the simulator contact closures are removed.

The ACS Malfunction parameter circuitry is reverified during Prelaunch Testing at KSC. The method for conducting this test is similar to the Module Systems Tests described above. In addition, an integrated test is conducted in which the ATM inflight computer program is used. The appropriate malfunctions are simulated and the discrete outputs and resulting alarm signals are verified. The caution signal to each SWS Speaker Intercom Assembly and the respective C&W System master alarm status lights are also monitored.

The circuitry associated with this parameter will be periodically verified inflight by simulating an out-of-tolerance condition. This test will be accomplished using the test caution switch which will apply the C&W control voltage to the C&W Unit via the parameter inhibit switches.

A functional schematic of the ACS Malfunction parameters is shown in 40M35701, Skylab Caution and Warning Technical Manual.

2.6.4.12 ATM Computer Malfunction - The ATM employs a digital computer to provide attitude reference processing and control, ATM experiment support, mission navigation and timing, information display, telemetry, command processing, and ATM subsystem redundancy management. The Computer System consists of two identical Digital Computers and a Workshop Computer Interface Unit (WCIU). The WCIU contains three sections which perform data processing functions such as analog to digital (A to D) conversion, scaling and multiplexing. Two sections interface with the digital computers while the common section contains the memory and necessary hardware required for controlled switchover from one computer to the other. Only one computer and its associated section in the WCIU is operative at any given time. The common section of the WCIU remains active independent of which computer is functioning.

The flight computer program has provisions for evaluating the status of the computer. A self-test routine, executed once per second, checks the ability of the computer to enter and retain data in memory and to perform required mathematical operations. Besides the self-test routine, a WCIU

Wrap Test and a Thruster Attitude Control System (TACS) Wrap Test are also performed. In the WCIU Wrap Test, the computer checks both the A to D and D to A converters in the WCIU by comparing a known analog input at the A to D converter to the analog output from the D to A converter. The TACS Wrap Test is perfomed once per second or prior to changing the commands to fire or turn off each thruster. The previous command for each thruster is reread and compared to a stored command. A comparison of the reread and stored commands indicates a successful TACS Wrap Test.

A failure in the self-test routine, WCIU Wrap Test, or TACS Wrap Test provides for the C&W Self Test relay closures and results in switchover to the off-line computer if both software and hardware switchover inhibits are not present. Switchover causes the C&W Computer Switchover relay closures. Either the Self Test closures or the Switchover closures will provide for activation of the C&W System via the C&W control voltage. However, if switchover occurs, the C&W System activation will be momentary and the memory recall feature must be utilized to determine the cause of the alarm. When switchover is inhibited, the COMP MALF light will remain illuminated due to the Self Test closure and will stay on until there is a DAS/DCS acknowledgement of the condition, i.e., a request to display the C&W conditions on the ATM Control and Display Panel.

Detection of computer Self Test malfunctions and computer switchover is controlled by several application modules and three redundant timers in the common section of the WCIU. The three timers must be reset every 1.50 to 2.75 seconds to prevent them from reaching a threshold. If two of the timers reach threshold, switchover is initiated unless inhibited by means of hardware and/or software provisions. The three timers are reset by three discrete outputs from a register which are alternately set and reset every 0.5 seconds by the Switchover Processor subroutine. Setting the discretes after they had previously been reset, resets the timers. Failure to either set or reset the discretes results in computer switchover. Once every second, the Switchover Processor initiates Self Test, the Thruster Attitude Control Module initiates the TACS Wrap Test, and the Output Writer Module initiates the WCIU Wrap Test. A failure in any one of these tests causes a transfer of program control to the Error Processor Module which sets two Computer Self Test failure discretes providing redundant C&W closures and causes the computer to enter a non-interruptable wait state if switchover is not inhibited. When the computer is in the non-interruptable wait state, program control cannot be returned to the Switchover Processor to set the three timer discretes, and switchover results in approximately 0.5 to 1.75 seconds after detection of an error. Switchover provides redundant momentary C&W closures for approximately 65 milliseconds. Since the C&W Unit was previously activated when the Self Test failure discretes were set, no further C&W COMP MALF outputs are generated. When switchover occurs, power is removed from the failed computer and its associated WCIU section. This results in the loss of the Self Test and Switchover C&W outputs since C&W failure indications are not transferred to the backup computer. Illumination of the COMP MALF parameter identification display will last for

a period of time less than 2 seconds. If switchover is inhibited, program execution continues, and the Self Test failure discretes remain set until acknowledgment of the condition.

A functional test is performed on the Computer Malfunction C&W System parameters during Module Systems Testing by the respective module contractors and during Pre-launch Testing at KSC. The test will verify modular circuitry, interface compatibility and system operations (including redundancy). Interface simulators are used during Modular Systems Testing to provide and/or verify proper signal handling and displays.

Block diagrams of these parameters are shown in Figures 2.6-34 through 2.6-36.

The circuitry associated with the ATM Computer Malfunction parameter is verified during ATM and AM/MDA Module Systems Testing.

The ATM Computer Malfunction parameter circuitry is verified by issuing the Computer Switchover and/or Self Test signals via the ATM Computer pre-flight program. The AM/MDA interface simulator will verify interface compatibility and proper handling and display of these alarm signals.

The AM and MDA circuitry associated with this parameter is verified in the following manner utilizing the ATM simulator:

a. Power is applied to the EPS Control buses using GSE power supplies.

b. The C&W Power parameter is inhibited to preclude inadvertent C&W System alarms by switching:

   C&W POWER 1 & 2 inhibit switches to OPEN

   C&W SIG COND inhibit switch to OPEN

c. C&W Subunit 1 and the circuitry associated with the two inhibit switches are verified by switching:

   CONVERTERS C&W - 1 circuit breaker to CLOSE

   CONVERTERS C&W - 2 circuit breaker to OPEN

   POWER C&W switch to ON

   COMPUTER X OVER or COMPUTER SELF TEST inhibit switch to CLOSE

   NOTE: Verification of C&W Subunit 2 and associated circuitry is accomplished by switching:

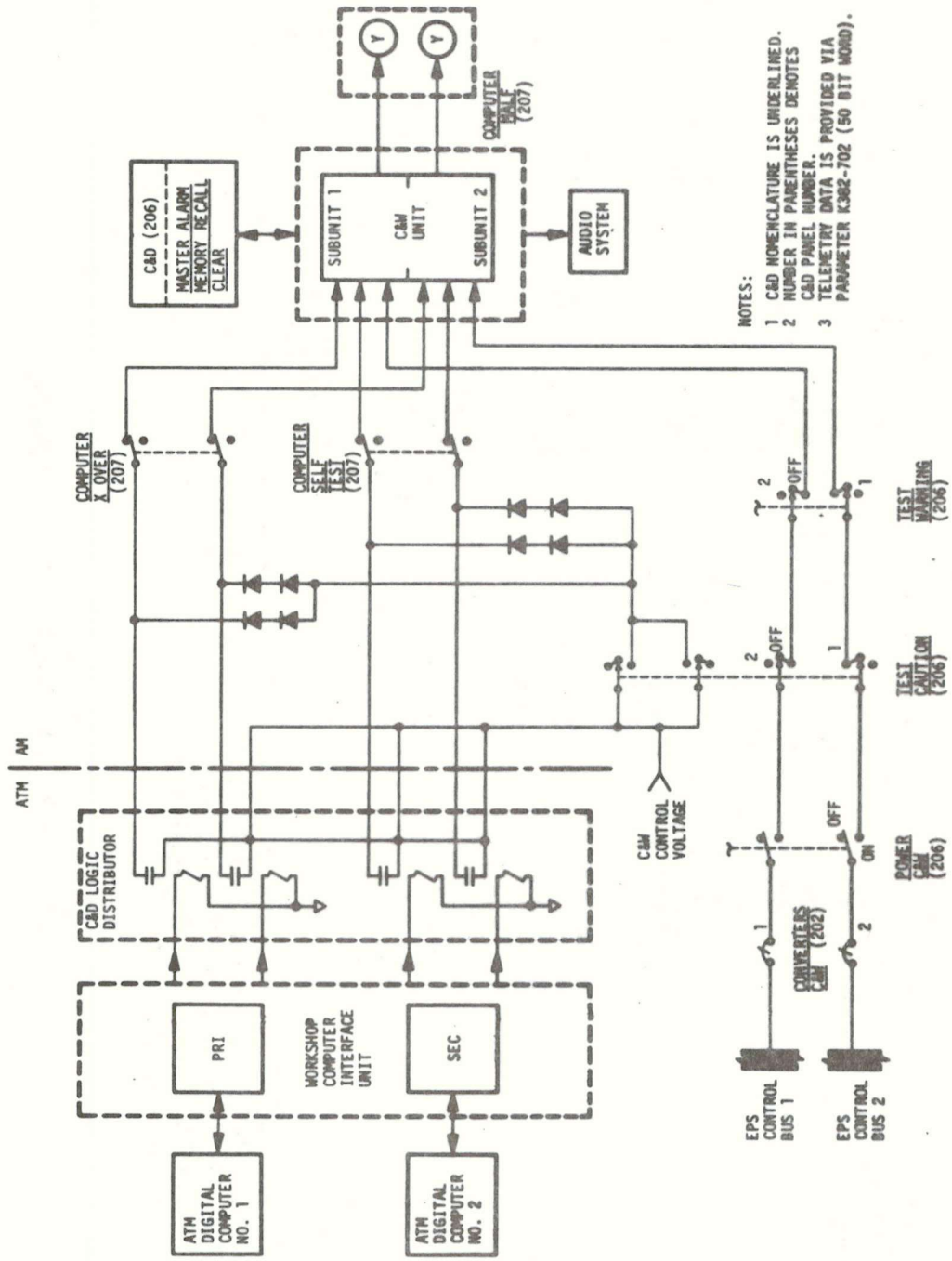

Figure 2.6-34 ATM Computer Malfunction Functional Diagram

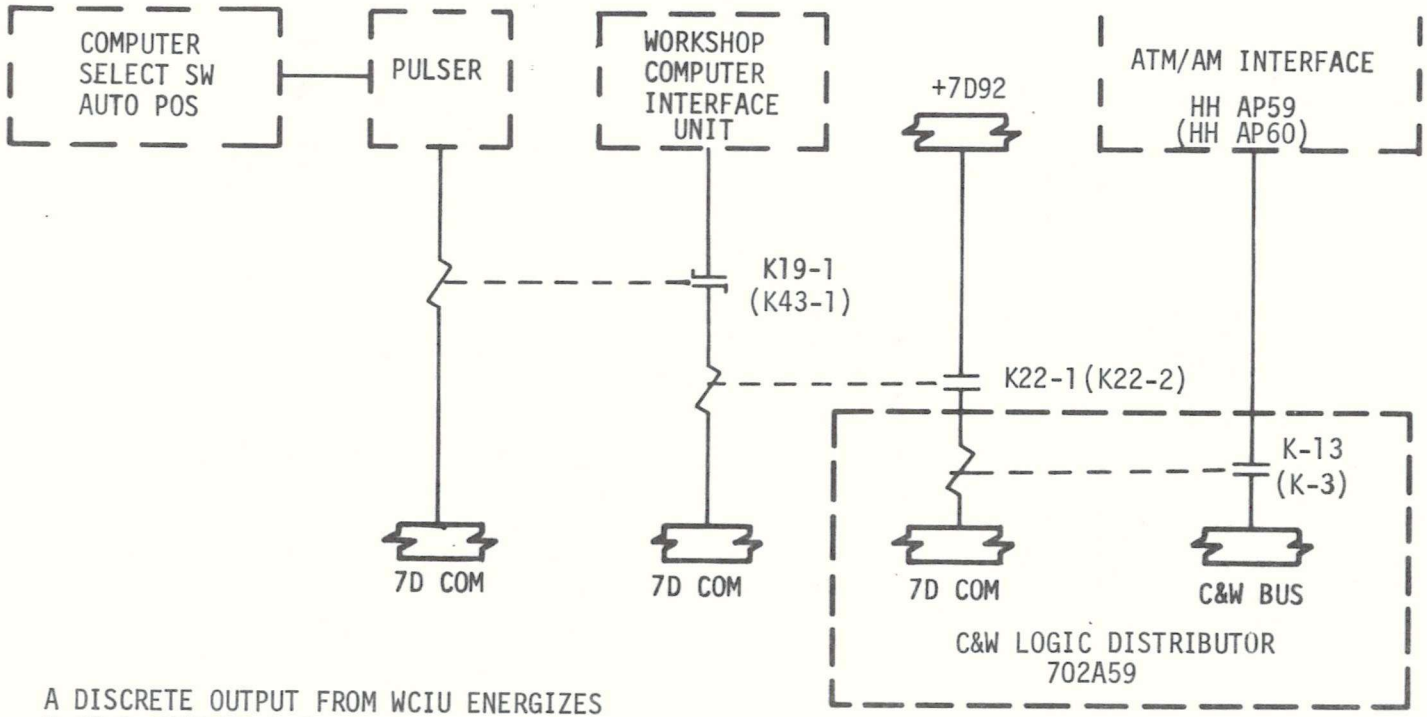

A DISCRETE OUTPUT FROM WCIU ENERGIZES K-22-1 CAUSING K-13 CLOSURE TO AIRLOCK MODULE. REDUNDANT COILS AND CONTACTS PROVIDE SIGNAL TO K-13 RELAY. REDUNDANCY BY RELAY K-3 OF MODULE A34.

FIGURE 2.6-35 ATM A&PCS COMPUTER CROSSOVER

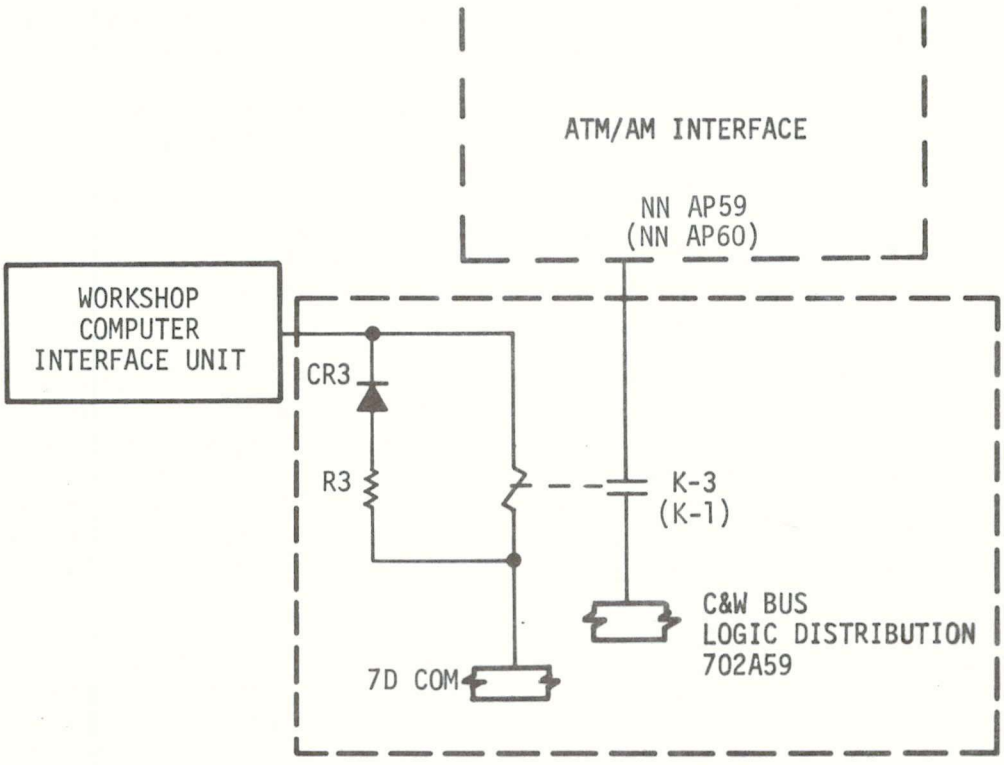

A DISCRETE SIGNAL FROM THE WORKSHOP COMPUTER INTERFACE UNIT ENERGIZES RELAY K-3 OF MODULE A55 CAUSING CONTACT CLOSURE TO AM. REDUNDANCY BY RELAY K-1 OF MODULE A56.

FIGURE 2.6-36 ATM COMPUTER SELF TEST FAILURE

CONVERTERS C&W - 1 circuit breaker to OPEN

CONVERTERS C&W - 2 circuit breaker to CLOSE

d. The two contact closures, i.e., computer switchover and computer self test failure are simulated using the ATM simulator.

e. With contact closure, the caution tone will sound and the appropriate parameter identification light will illuminate.

f. Depressing the master alarm telelight switch turns off the caution tone and extinguishes the master alarm telelight switch and the master alarm status lights. The ACS Malfunction identification light will remain on until the simulated contact closures are removed.

The ATM Computer Malfunction parameters are reverified during Prelaunch Testing at KSC. The method for conducting this test is similar to the Module Systems Tests described above. In addition, an integrated test is conducted in which the ATM inflight computer program is used. The appropriate malfunctions are simulated and the discrete outputs and resulting alarm signals are verified. The caution signals to each SWS Speaker Intercom Assembly and the respective C&W System master alarm status lights are also monitored.

The circuitry associated with the Computer Malfunction parameter will be periodically verified inflight by simulating an out-of-tolerance condition. This test will be accomplished using the test caution switch which will apply the C&W control voltage to the C&W Unit via the two parameter inhibit switches.

A functional schematic of the ATM Computer Malfunction parameters is shown in 40M35701, Skylab Caution and Warning Technical Manual.

2.6.4.13 ATM Canister Thermal - The ATM has an active cooling system for controlling the temperature of the experiment package. The experiment packages are mounted on a cruciform spar structure and are surrounded by sixteen coldplates. Heat from the experiment packages is radiated to the coldplates where it is transferred to the coolant fluid. The coolant fluid rejects the heat to space through four radiator panels. A functional representation of the ATM coolant loop is shown in Figure 2.6-37. Three conditions of the ATM coolant loop are monitored by the C&W system. These are: (1) the differential pressure across the pump, (2) the temperature of the coolant fluid, and (3) the temperature of the coolant fluid heater. If the coolant fluid temperature becomes greater than 55 $\pm$ 1° or less than 45 $\pm$ 1°F, if the coolant fluid heater temperature becomes greater than 150 $\pm$ 36°F, or if the differential pump pressure becomes less than 26 + 1PSID, the C&W System will generate a caution alarm.

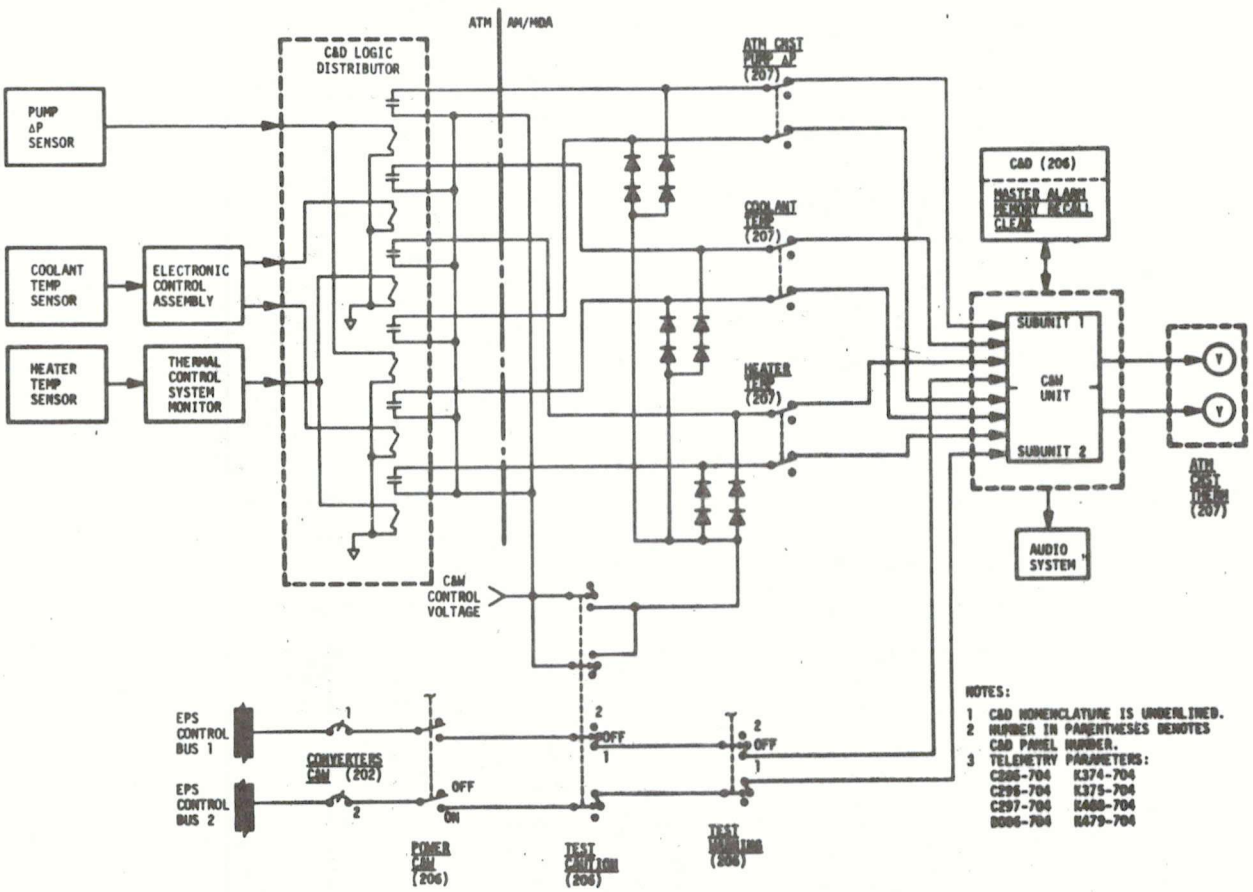

Figure 2.6-37 ATM Canister Thermal Functional Diagram

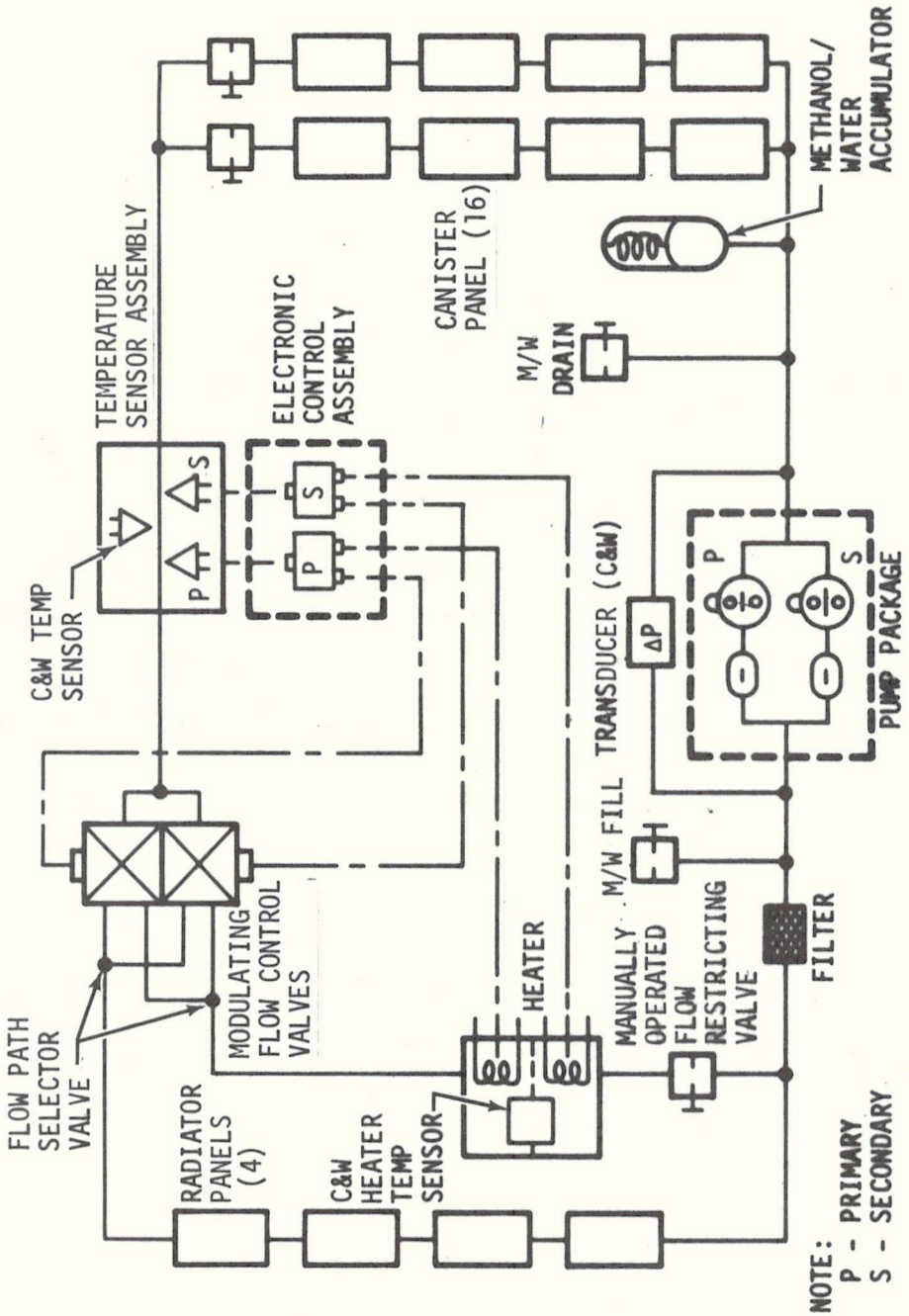

Figure 2.6-38 ATM Coolant Loop

The temperature monitoring of both the coolant fluid temperature and the heater temperature is accomplished in essentially the same manner. A resistive element whose resistance changes with temperature forms one leg of resistive bridge network. The output of the bridge is amplified and applied to a level detector. When the threshold of the level detector is reached, one or more relay closures occur resulting in the C&W control voltage being applied to the C&W Unit via the inhibit switches on Panel 207. Block diagrams for both the coolant fluid temperature and the heater temperature monitoring are shown in Figures 2.6-38 through 2.6-42.

The pressure sensor which measures the differential pressure across the pump package is of the Linear Variable Differential Transformer (LVDT) type. As shown in Figure 2.6-43, the LVDT sensor consists of a power supply, an oscillator, a transformer with movable core, a rectifier, and an amplifier. The oscillator provides a fixed amplitude input to the primary of the transformer. Changes in pressure cause the sensor diaphragm to alter the position of the movable transformer core thereby changing the secondary voltage of the transformer. The secondary voltage is rectified and amplified to provide an analog output proportional to the differential pressure. The analog signal is also applied to a level detector which provides a relay closure whenever the differential pressure becomes less than 26 $\pm$ 1 PSID. See Figures 2.6-43 and 2.6-44.

The ATM Canister Thermal C&W System parameters and associated circuitry is functionally tested during Module Systems Testing by the respective module contractors and during Pre-launch Testing at KSC. The ATM canister coolant pump ΔP, coolant fluid temperature, and coolant heater temperature signals to the C&W System are simulated and the resulting caution signal verified. Interface simulators are used during Modular Systems Testing to provide and/or verify proper signal handling and displays. A functional block diagram of the Canister Thermal parameters is shown in Figure 2.6-37.

The circuitry associated with the ATM Canister Thermal parameter is functionally verified during ATM and AM/MDA Module Systems Testing.

The ATM Canister Thermal parameter circuitry is verified by simulating the three sensors outputs associated with this parameter, i.e., ATM canister pump ΔP, coolant temperature, and heater temperature. The AM/MDA interface simulator will verify interface compatibility and the proper handling and display of these alarm signals.

The AM and MDA circuitry associated with this parameter is verified in the following manner utilizing the ATM simulator:

a. Power is applied to the EPS Control buses using GSE power supplies.

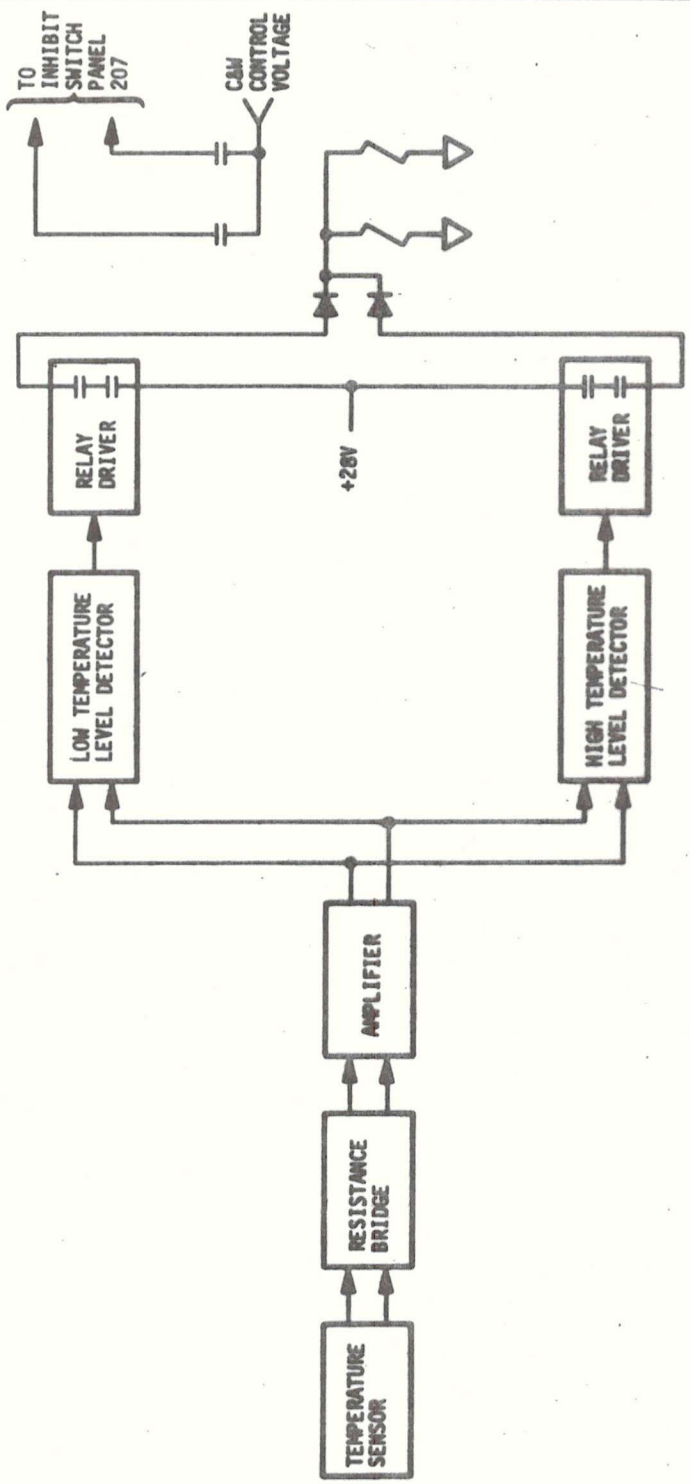

Figure 2.6-39 Coolant Fluid Temperature Monitor Diagram

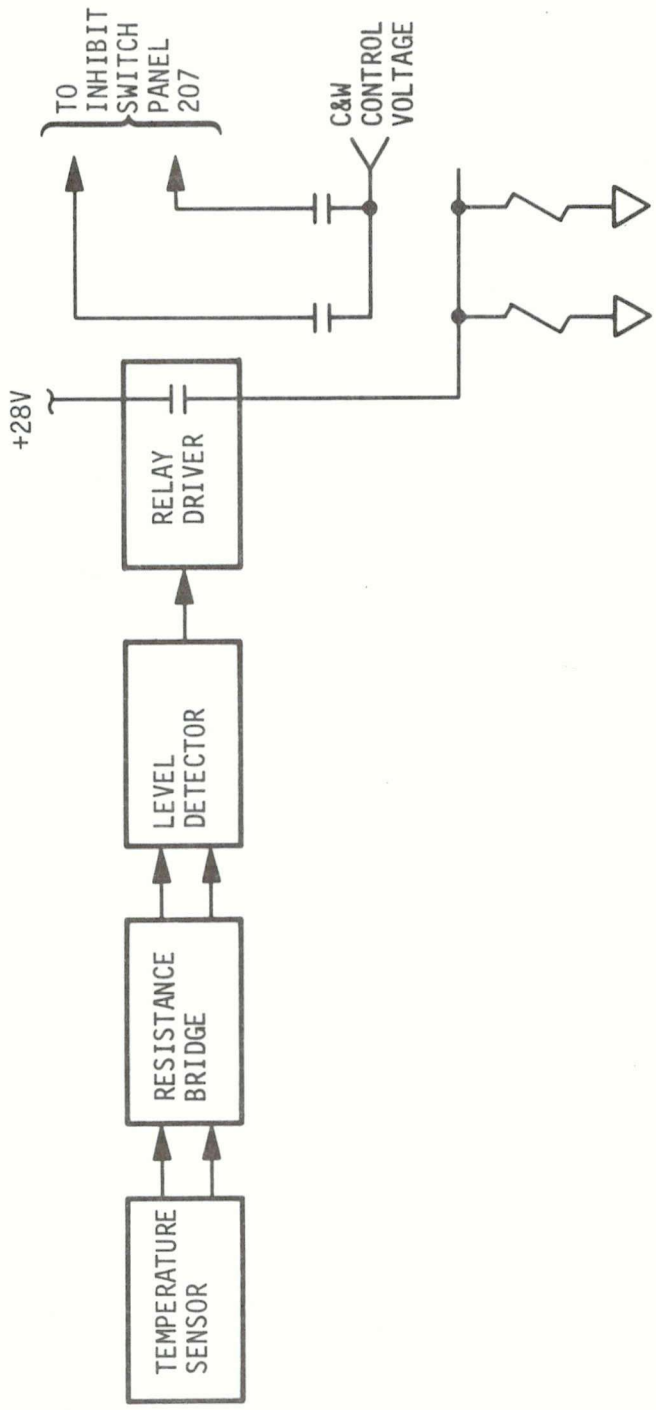

Figure 2.6-40 Coolant Heater Temperature Monitor Diagram

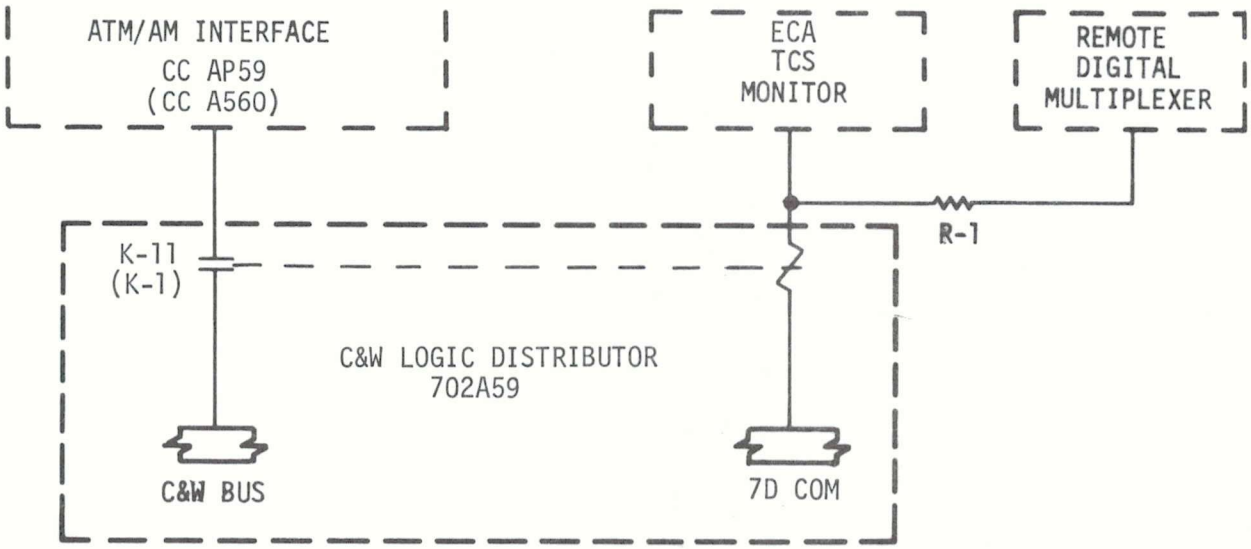

A SIGNAL FROM THE TCS MONITOR ACTUATES K-11 RELAY GIVING COOLANT FLUID TEMPERATURE INDICATION (HIGH).

REDUNDANCY IS PROVIDED THRU K-1 OF MODULE A76, C&W SYSTEM B.

FIGURE 2.6-41 ATM COOLANT FLUID TEMPERATURE C&W SYSTEM A

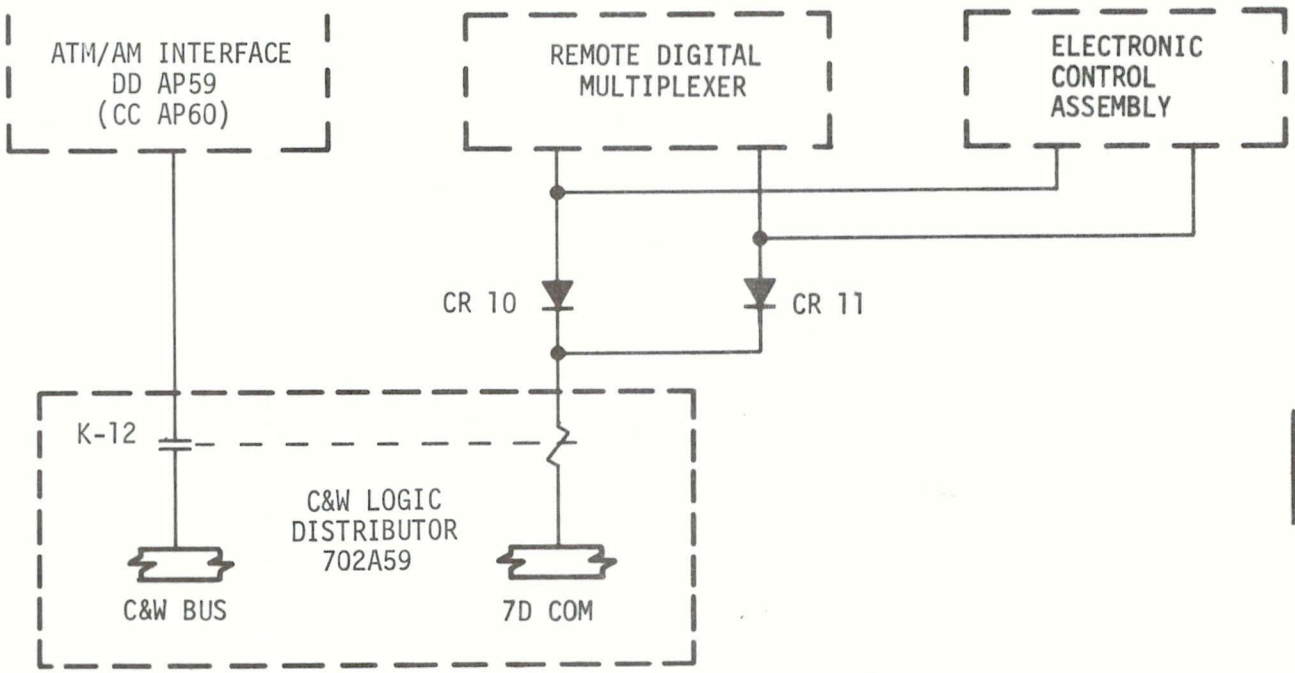

A SIGNAL FROM THE ELECTRONIC CONTROL ASSEMBLY THRU REDUNDANT DIODES CR 10, AND CR 11 CAUSES K-12 RELAY CLOSURE AND AN INDICATION OF HIGH TEMPERATURE.

REDUNDANCY IS PROVIDED THRU RELAY K 11 OF MODULE A 32, C&W SYSTEM B.

FIGURE 2.6-42 ATM COOLANT HEATER TEMPERATURE
C&W SYSTEM A

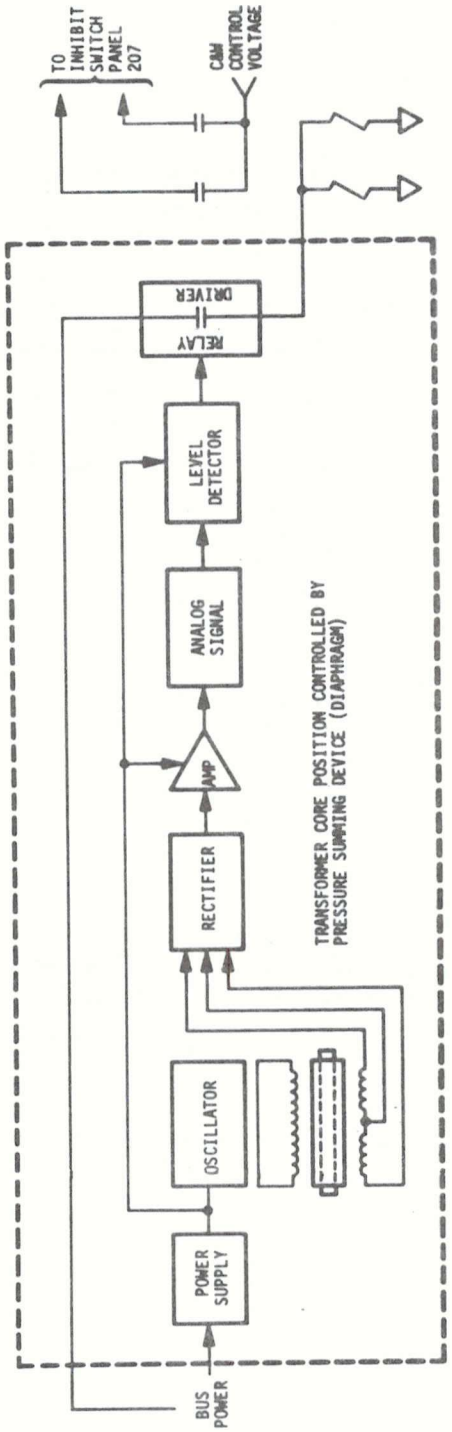

Figure 2.6-43 ΔP Pressure Sensor Diagram

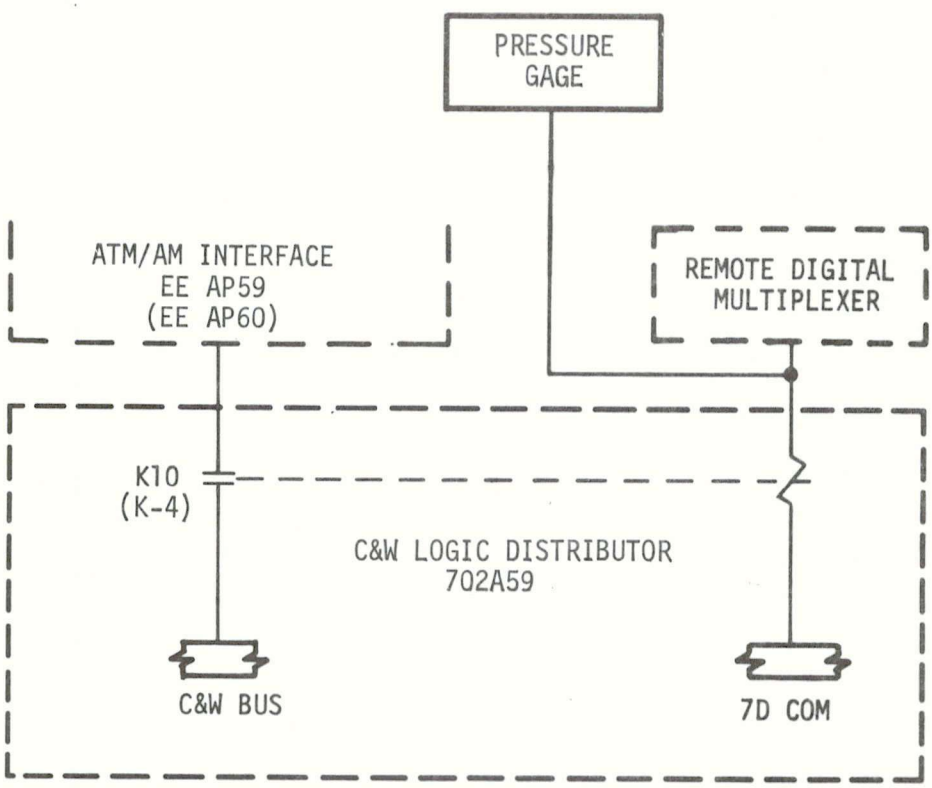

A SIGNAL FROM THE PRESSURE TRANSDUCER ACTUATES K10 RELAY GIVING COOLANT TEMPERATURE INDICATION (HIGH).

REDUNDANCY IS PROVIDED THRU K4 OF MODULE A 34.

FIGURE 2.6-44 ATM COOLANT PUMP ΔP

b. The C&W Power parameter is inhibited to preclude inadvertent C&W System alarms by switching:

C&W POWER 1 & 2 inhibit switches to OPEN

C&W SIG COND inhibit switch to OPEN

c. C&W Subunit 1 and the circuitry associated with the three inhibit switches are verified by switching:

CONVERTERS C&W - 1 circuit breaker to CLOSE

CONVERTERS C&W - 2 circuit breaker to OPEN

POWER C&W switch to ON

ATM CNST PUMP ΔP, COOLANT TEMP, or HEATER TEMP inhibit switch to CLOSE

NOTE: Verification of C&W Subunit 2 and associated circuitry is accomplished by switching:

CONVERTERS C&W - 1 circuit breaker to OPEN

CONVERTERS C&W - 2 circuit breaker to CLOSE

d. During AM testing, the three contact closures are simulated via the ATM simulator and the AM wiring and circuitry are verified.

e. With contact closure, the caution tone will sound and the appropriate parameter identification light will illuminate.

f. Depressing the master alarm telelight switch turns off the caution tone and extinguishes the master alarm telelight switch and the master alarm status lights.

The ATM Canister Thermal parameter circuitry is reverified during Pre-launch Testing at KSC. The method for conducting this test is similar to the Module System Tests described above. In addition, an integrated test is conducted. The appropriate temperature and pressure sensors are simulated and the discrete outputs and resulting alarm signals are verified. The caution signal to each SWS Speaker Intercom Assembly and the respective C&W System master alarm status lights are also monitored.

The circuitry associated with this parameter will be periodically verified inflight by simulating an out-of-tolerance condition. This test will be accomplished using the test caution switch which will apply the C&W control voltage to the C&W Unit via the parameter inhibit switches.

A functional schematic of the ATM Canister Thermal parameters is shown in 40M35701, Skylab Caution and Warning Technical Manual.

2.6.4.14 ATM Bus 1 Low - The ATM Electrical Power System generates, conditions, stores controls, and distributes 28 to 30 VDC power to the ATM system and experiment loads and to vehicle transfer buses during normal orbital operations. The ATM Electrical Power System consists of 18 solar panels, 18 charger-battery-regulator modules (CBRM's), and a bus distribution system. The output of each solar cell panel is connected to a single CBRM to form a separate power generation unit. The output of each CBRM is connected in parallel through isolation diodes to the ATM load buses via the connector buses in the Power Transfer Distributor as shown in Figure 2.6-45.

The solar panels deployed from the ATM rack provide unregulated DC power during the sunlight portion of each orbit to the CBRM's. The CBRM's provide continuous regulated DC power to the ATM loads, the ATM Control and Display console in the MDA, and the CSM loads through the Airlock Electrical Power System. Conversely, the Airlock Power Distribution System which is fed from the OWS Solar Arrays and AM batteries can supply power for the ATM Load Buses. In either case, the C&W System monitors the voltage of ATM Load Bus 1. Whenever the voltage of ATM Load Bus 1 becomes less than 25 $\pm$ 0.5VDC, the C&W System will generate a warning alarm.

C&W

The voltage levels of ATM Load Bus 1 are monitored separately by two level detectors located in two separate modules. Both level detectors are powered by ATM Load Buses 1 and 2 which are paralleled through isolation diodes as shown in Figure 2.6-46. Both level detectors power separate relays which provide closures for the C&W control voltage. When the voltage level of ATM Load Bus 1 becomes less than 25 $\pm$ 0.5VDC, the level detectors will provide relay closures for the C&W Unit via the ATM Bus 1 Low inhibit switch on Panel 207.

A functional test is performed on the ATM Bus 1 Low C&W System parameter during Module Systems Testing by the respective module contractors and during Pre-launch Testing at KSC. The tests will verify modular circuitry interface compatibility and system operation including redundancy. Interface simulators are used to provide and/or verify proper signal handling and displays.

A functional block diagram of this parameter is shown in Figure 2.6.-47.

The circuitry associated with the ATM Bus 1 Low parameter as verified during ATM and AM/MDA Module System Testing.

Verification of the ATM circuitry assoecated with this parameter includes a demonstration of the actual voltage detector trip point. The GSE

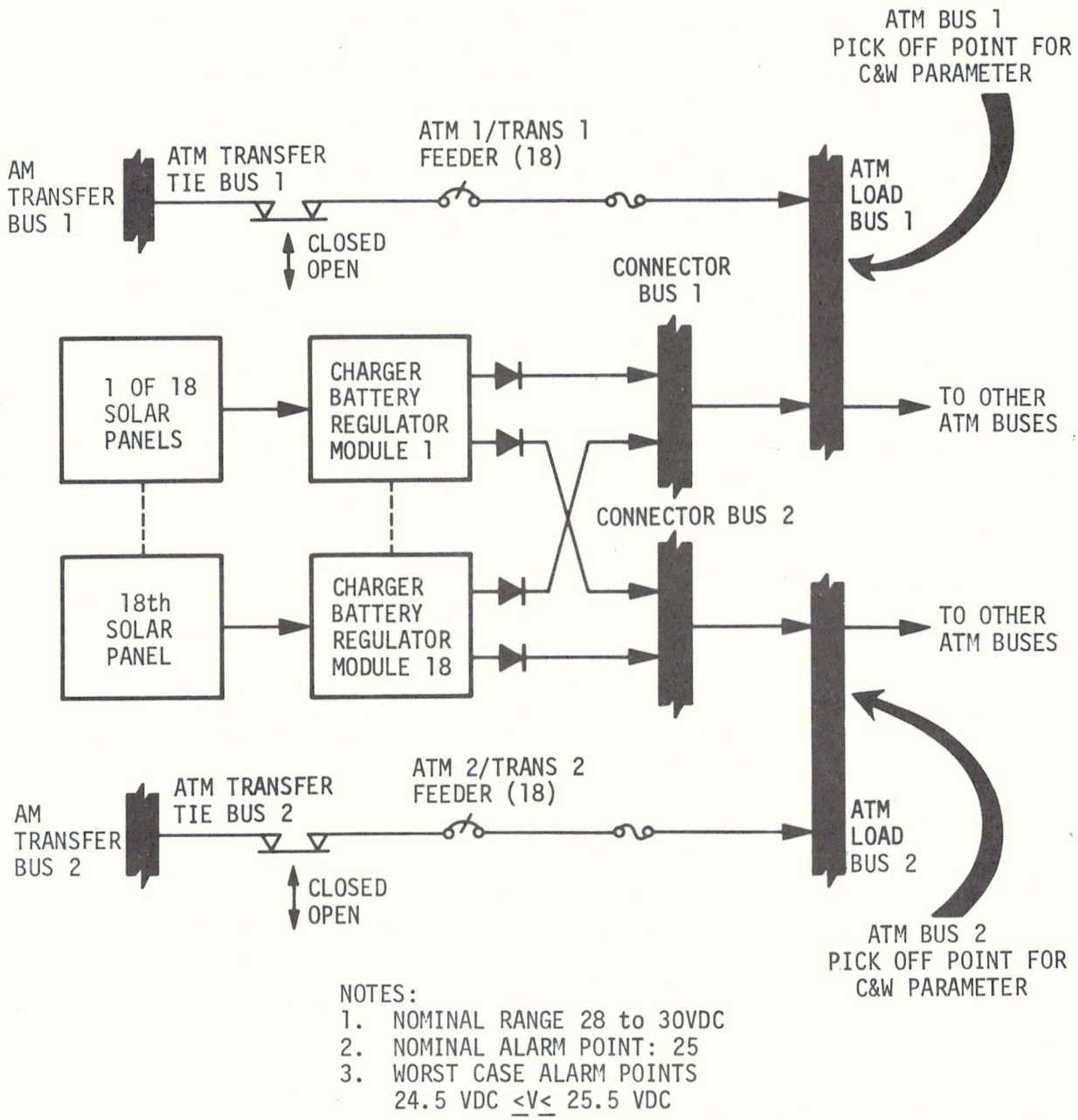

NOTES:
1. NOMINAL RANGE 28 to 30VDC
2. NOMINAL ALARM POINT: 25
3. WORST CASE ALARM POINTS
   24.5 VDC $\leq V \leq$ 25.5 VDC

Figure 2.6-45 ATM Power Distribution Diagram

power supply voltage to ATM Load Bus 1 is decreased to a sensor detection level. Contact closure will occur at 25 ± 0.5 VDC. The AM/MDA-ATM interface simulator will verify proper handling and display of the alarm signal resulting from the contact closure.

The AM circuitry associated with this parameter is verified in the following manner utilizing the ATM-AM/MDA interface siumlator:

a. Power is applied to the EPS Control Buses via GSE power supplies.

b. The C&W Power parameter is inhibited to preclude inadvertent C&W System alarms by switching:

   C&W POWER 1 and 2 inhibit switches to OPEN

   C&W SIG COND inhibit switch to OPEN

c. Verification of the No. 1 ATM BUS 1 LOW closure to the AM and the associated circuitry is accomplished by switching:

d. The ATM Bus 1 Low parameter contact closures are provided via the ATM-AM/MDA interface simulator.

e. Upon contact closure, the warning tone will sound and the appropriate parameter identification light will illuminate

f. Depressing the master alarm telelight switch turns off the warning tone and extinguishes the master alarm telelight switch and master alarm status lights. The ATM Bus 1 Low status display light will remain on until the simulator switch closures are removed.

The ATM Bus 1 Low parameter circuitry is reverified during Pre-launch Testing at KSC. The method for conducting this test is similar to the Module Systems Tests defined above. The warning signal to each SWS Speaker Intercom Assembly and the respective C&W System master alarm status lights are also monitored.

The circuitry associated with this parameter will be periodically verified inflight by simulating an out-of-tolerance condition. This test will be accomplished using the test warning switch which will apply the C&W control voltage to the C&W Unit via the ATM Bus 1 Low inhibit switch.

A functional schematic of the ATM Bus 1 Low parameter is shown in 40M3701, Skylab Caution and Warning Technical Manual.

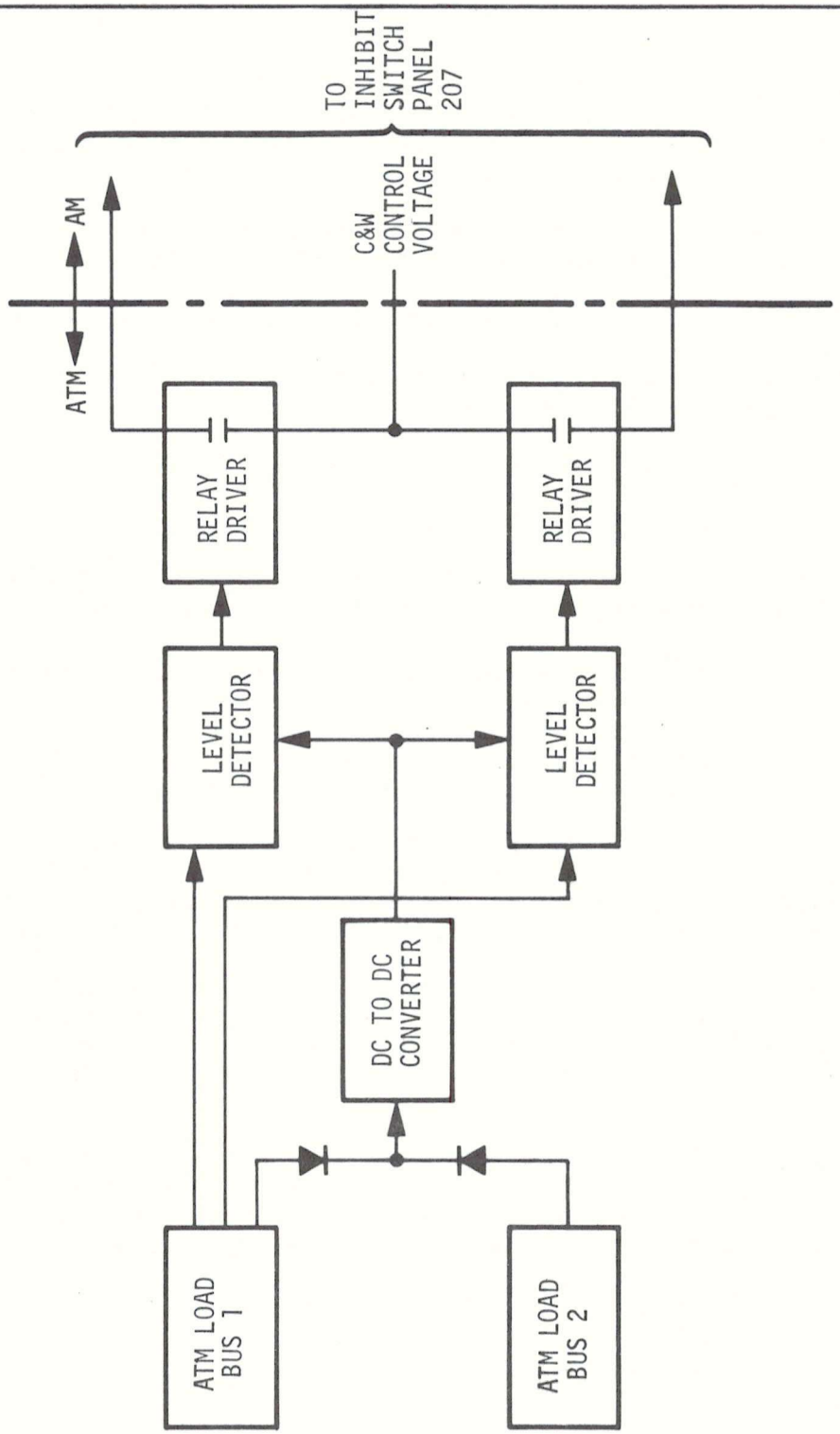

Figure 2.6-46 ATM Bus 1 Monitor

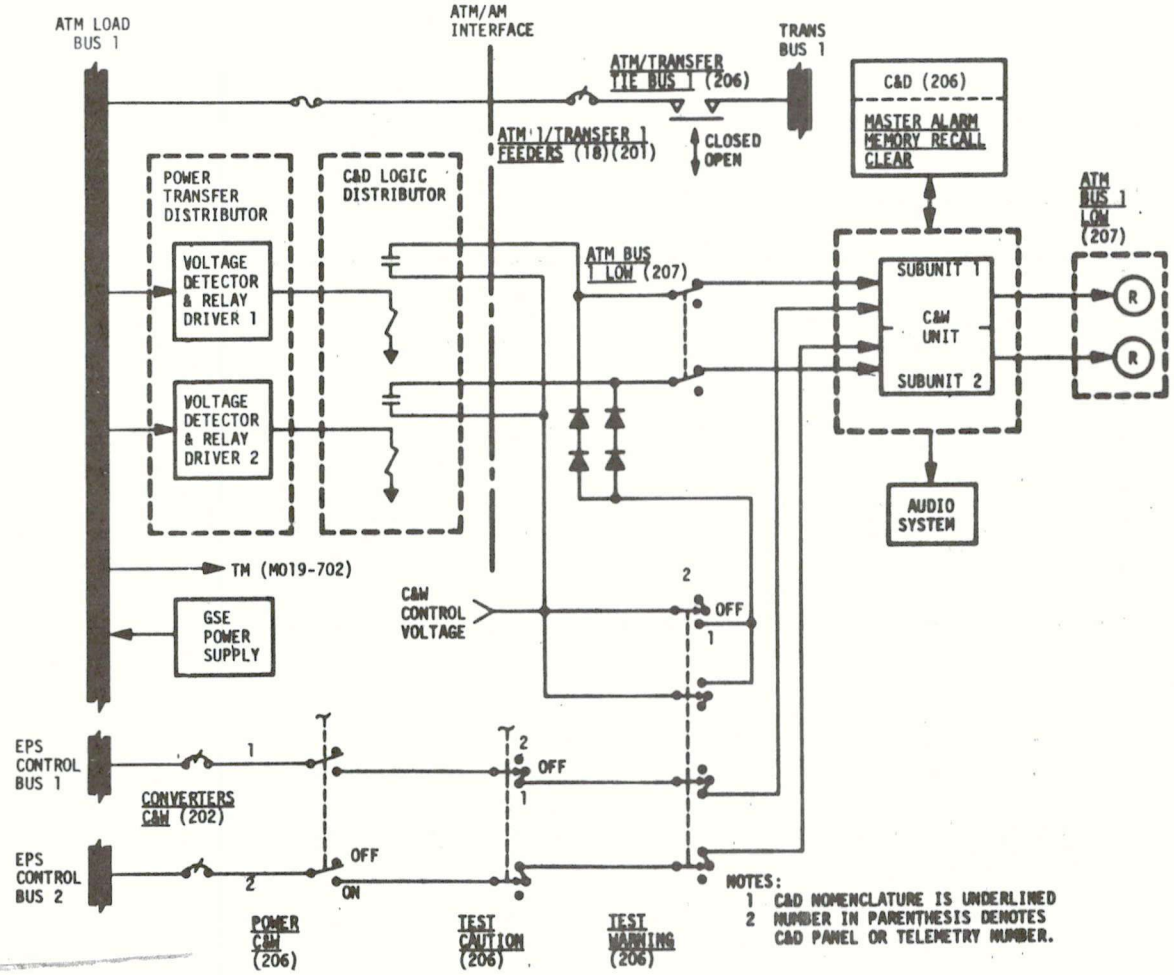

Figure 2.6-47 ATM Bus 1 Low Functional Diagram

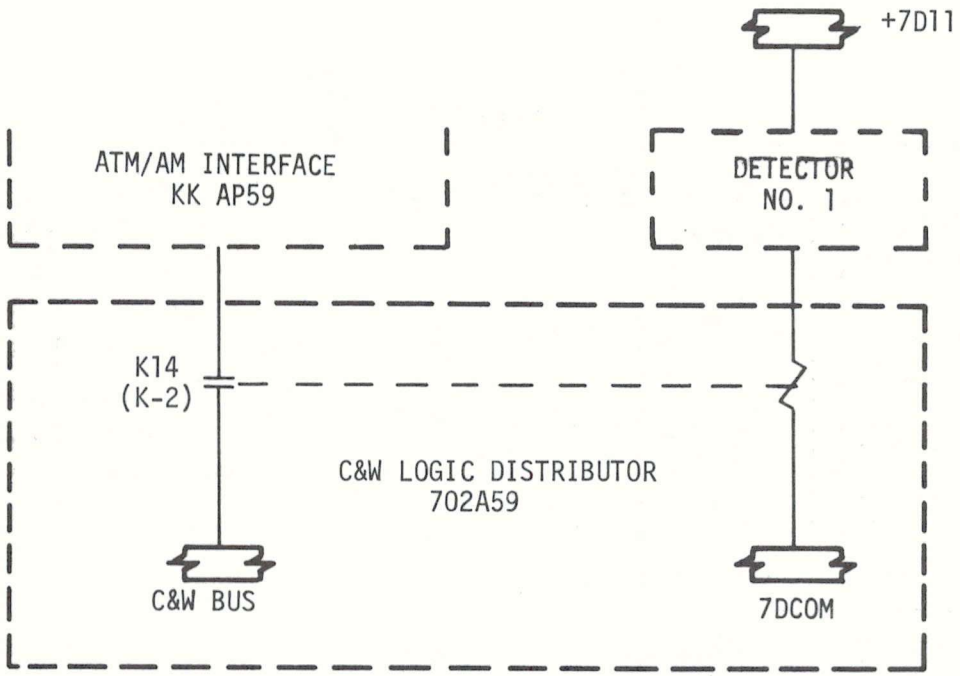

A BUS LOW VOLTAGE OF 25±.5 VDC OR LESS WILL TRIP DETECTOR NO. 1 CAUSING K14 RELAY CLOSURE AND A SIGNAL TO THE AM.

REDUNDANCY IS PROVIDED THROUGH K2 RELAY.

FIGURE 2.6-48 ATM BUS NO. 1 LOW

2.6.4.15 ATM Bus 2 Low - The ATM Electrical Power System generates, conditions, stores, controls, and distributes 28 to 30 VDC power to the ATM system and experiment loads and to vehicle transfer buses during normal orbital operations. The ATM Electrical Power System consists of 18 solar panels, 18 charger-battery-regulator modules (CBRM's) and a bus distribution system. The output of each solar cell panel is connected to a single CBRM to form a separate power generation unit. The output of each CBRM is connected in parallel through isolation diodes to the ATM load buses via the connector buses in the Power Transfer Distributor as shown in Figure 2.6-50.

The solar panels deployed from the ATM rack provide unregulated DC power during the sunlight portion of each orbit to the CBRM's. The CBRM's provide continuous regulated DC power to the ATM loads, the ATM Control and Display console in the MDA, and the CSM loads through the Airlock Electrical Power System. Conversely, the Airlock Power Distribution System which is fed from the OWS Solar Arrays and AM batteries can supply power for the ATM Load Buses. In either case, the C&W System monitors the voltage of ATM Load Bus 2. Whenever the voltage of ATM Load Bus 2 becomes less than 25 $\pm$ 0.5 VDC, in the C&W System will generate a warning alarm.

C&W

The voltage levels of ATM Load Bus 2 are monitored separately by two level detectors located in two separate modules. Both level detectors are powered by ATM Load Buses 1 and 2 which are paralleled through isolation diodes as shown in Figure 2.6-49. Both level detectors power separate relays which provide closures for the C&W control voltage. When this voltage level of ATM Load Bus 2 becomes less than 25 $\pm$ 0.5 VDC, the level detectors will provide relay closures for the C&W control voltage which is routed to the C&W Unit via the ATM Bus 2 Low inhibit switch on Panel 207.

A functional test is performed on the ATM Bus 2 Low C&W System parameter during Module Systems Testing by the respective module contractors and during Pre-launch Testing at KSC. The test will verify modular circuitry interface compatibility and system operation including redundancy. Interface simulators are used to provide and/or verify proper signal handling and displays.

Block diagrams of this parameter are shown in Figures 2.6-49 through 2.6-51.

The circuitry associated with the ATM Bus 2 Low parameter is verified furing ATM and AM/MDA Module System Testing.

Verification of the ATM circuitry associated with this parameter includes a demonstration of the actual voltage detector trip point. The GSE power supply voltage to ATM Load Bus 2 is decreased to this sensor

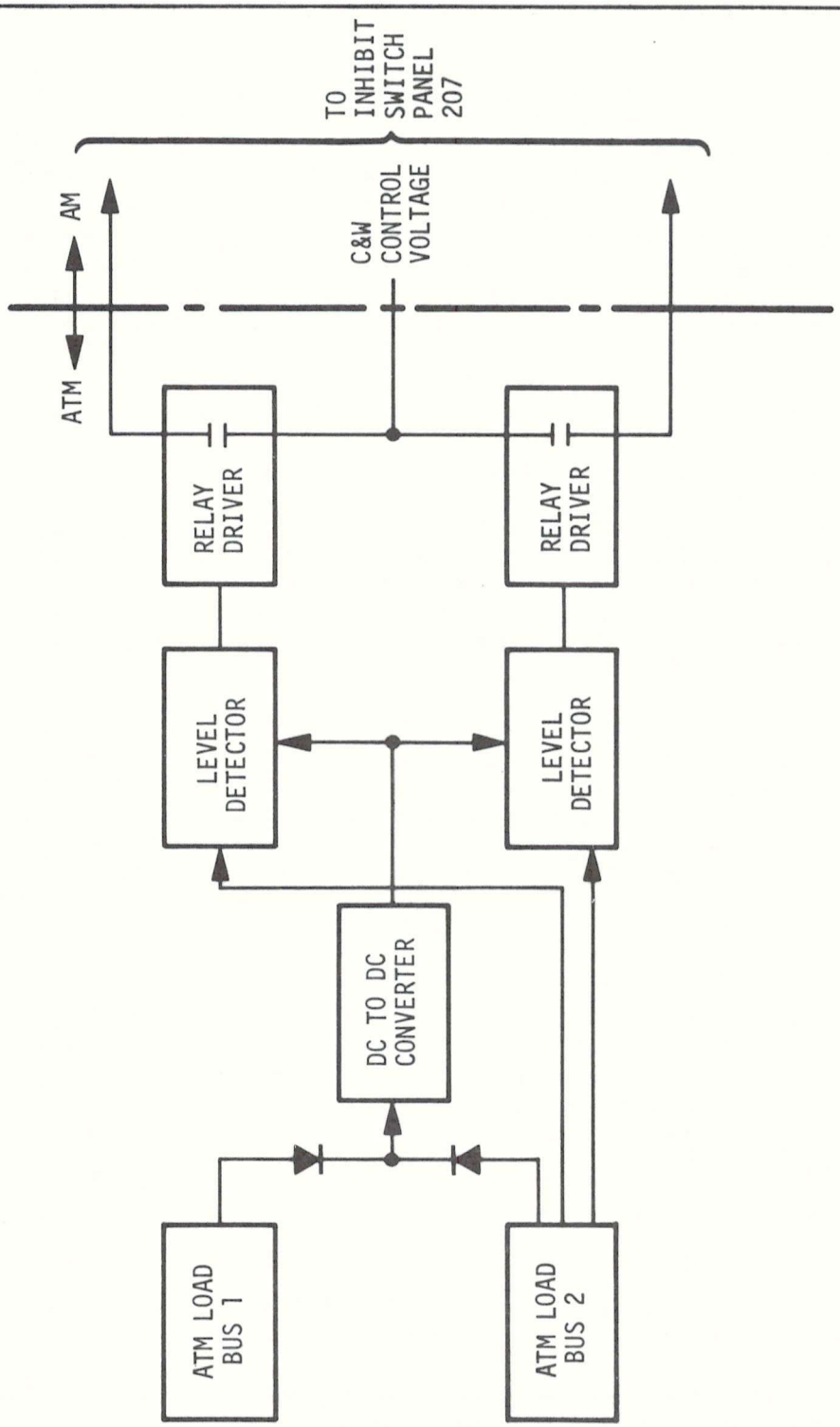

Figure 2.6-49 ATM Bus 2 Monitor

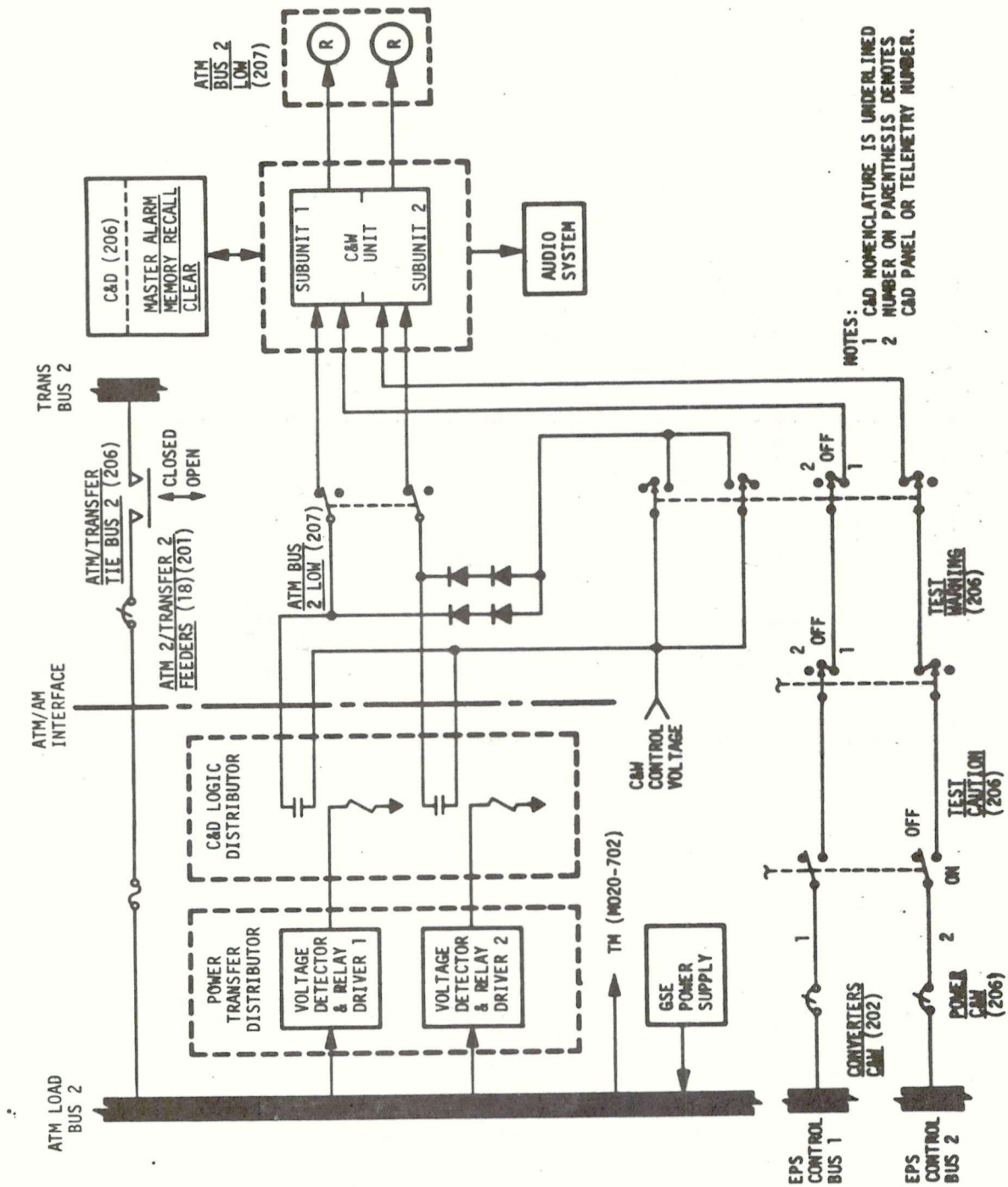

Figure 2.6-50 ATM Bus 2 Low Functional Diagram

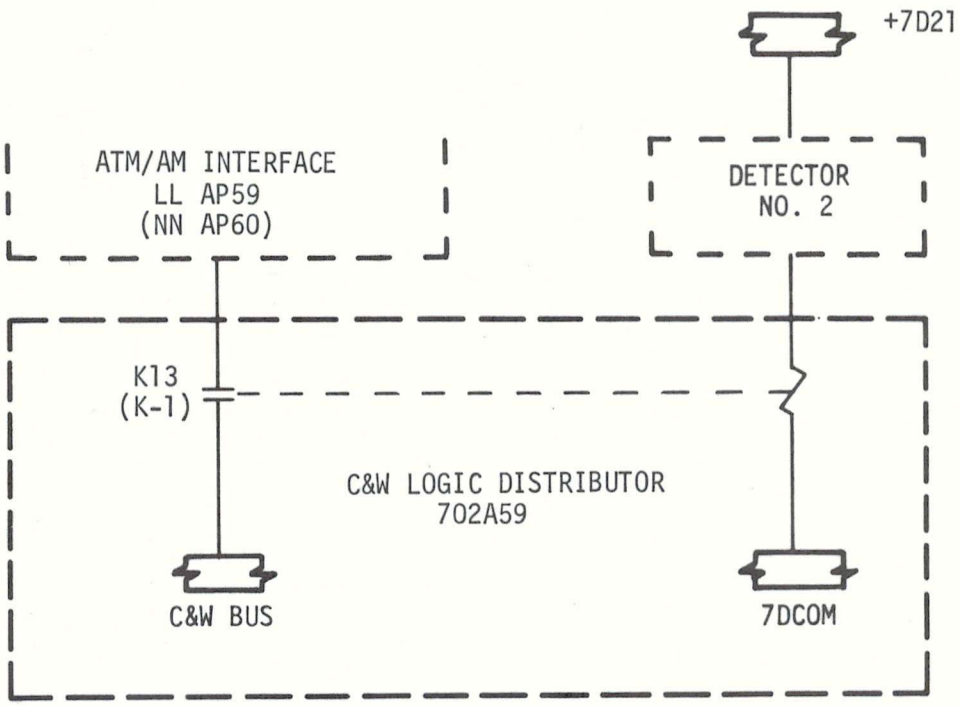

A BUS LOW VOLTAGE OF 25±.5 VDC OR LESS WILL TRIP DETECTOR NO. 2 CAUSING K13 RELAY CLOSURE AND A SIGNAL TO THE AM.

REDUNDANCY IS PROVIDED THROUGH K1 RELAY.

FIGURE 2.6-51 ATM BUS NO. 2 LOW

detection level. Contact closure will occur at 25 + 0.5 VDC. The AM/MDA-ATM interface simulator will verify proper handling and display of the alarm signal resulting from the contact closure.

The AM circuitry associated with this parameter is verified in the following manner utilizing the ATM-AM/MDA interface simulator.

a. Power is applied to the EPS Control buses via GSE power supplies.

b. The C&W Power parameter is inhibited to preclude inadvertent C&W System alarms by switching:

C&W POWER 1 and 2 inhibit switches to OPEN

C&W SIG COND inhibit switch to OPEN

c. Verification of the No. 1 ATM BUS 2 LOW closure to the AM and the associated circuitry is accomplished by switching:

CONVERTERS C&W - 1 circuit breaker to CLOSE

CONVERTERS C&W - 2 circuit breaker to OPEN

POWER C&W switch to ON

ATM BUS 2 LOW inhibit switch to CLOSE

NOTE: Verification of the redundant closures and associated AM circuitry is accomplished by switching.

CONVERTERS C&W - 1 circuit breaker to OPEN

CONVERTERS C&W - 2 circuit breaker to CLOSE

d. The ATM Bus 2 Low parameter contact closures are provided via the ATM-AM/MDA interface simulator.

e. Upon contact closure, the warning tone will sound and the appropriate parameter identification light will illuminate.

f. Depressing the master alarm telelight switch turns off the warning tone and extinguishes the master alarm telelight switch and master alarm status lights. The ATM Bus 2 Low status display light will remain on until the simulator switch closures are removed.

The ATM Bus 2 Low parameter circuitry is reverified during Pre-launch Testing at KSC. The method for conducting this test is similar to the Module System Tests defined above. The warning signal to each SWS Speaker

Intercom Assembly and the respective C&W System master alarm status lights are also monitored.

The circuitry associated with this parameter will be periodically verified inflight by simulating an out-of-tolerance condition. This test will be accomplished using the test warning switch which will apply the C&W control voltage to the C&W Unit via the ATM Bus Low inhibit switch.

A functional schematic of the ATM Bus 2 Low parameter is shown in 40M35701, Skylab Caution and Warning Technical Manual.

Real Time telemetry support requirements for the ATM subsequent to a Caution or Warning alarm are shown in Table 2.6-IX.

2.6.4.16 The ATM ALERT Subsystem - This subsystem alerts the crewman on the ATM C&D Console to specific out-of-tolerance conditions, on ATM only, requiring evaluation and corrective action to avoid system damage or loss, and to avoid loss of valuable experiment data. These ALERT signals are visual (blue lights) on the ATM C&D Console shown in Figure 2.6-53. Table 2.6-VI lists the monitored ATM parameters. The ALERT system is laid out in a generalized schematic in Figure 2.6-54. Figures 2.6-55 through 2.6-63 are electrical schematics of the ATM ALERT system inputs to the C&D Console. Table 2.6-VII summarizes these ALERT parameters.

ALERT signals to the ATM C&D Console are in no way connected to the Cluster C&W subsystem. An ALERT light, however, could be an indication of a possible future Caution or Warning signal if corrective action is not taken.

Real Time telemetry support requirements for ATM subsequent to an ATM C&D Console ALERT light are listed in Table 2.6-X.

The function of the ATM ALERT signals are listed on pages 3-53 and 3-54 of this handbook under ATM Control and Displays (Panel 130), Section 3, C&D, switch positions, circuit breaker information and power source for the ALERT system are also described.

TABLE 2.6-VI ATM ALERT PARAMETER LIST

	PARAMETER	CONSOLE	CRITICALITY	LIGHT LABELING
1.	High voltage failure of one or more channeltrons SO55A	ATM	ALERT	SCAN SPECT
2.	High supply failure in SO56	ATM C&D	ALERT	X-REA HV
3.	Malf of automatic aperture control BE detector tube SO56	ATM C&D	ALERT	BE COUNT
4.	Malf of automatic aperture control AL detector tube SO56	ATM	ALERT	AL COUNT
5.	An aperture door is open after night signal receipt	ATM C&D	ALERT	DOOR OPEN
6.	Out-of-tolerance condition in CBRM power system	ATM C&D	ALERT	PWR SYS
7.	Battery not correctly charged	ATM	ALERT	BAT CHG
8	ATMDC has switched to back-up mode or star not acquired in 25 seconds	ATM C&D	ALERT	ACS
9.	Computer has rejected input data	ATM	ALERT	CMP TR REJ
10.	Manual/automatic CMG Shutdown	ATM C&D	ALERT	CMG MALF
11.	CMG 1 bearing temperature has approached (not exceeded) automatic shut down temperature	ATM C&D	ALERT	BRG TEMP 1
12.	Same for CMG 2	ATM C&D	ALERT	BRG TEMP 2
13.	Same for CMG 3	ATM C&D	ALERT	BRG TEMP 3

C&W

TABLE 2.6-VII ATM ALERT PARAMETER INFORMATION (1 of 3)

PARAMETER NAME		NOMINAL RANGE	TRIGGER LIMITS	CORRESPONDING INDICATORS (R) INDICATES SENSOR REDUNDANT		C&W INHIBIT SWITCH TITLE (PNL 207)	C&W DISPLAY TITLE (PNL 207 & 616)	REMARKS
				TM MEASUREMENTS	ON BOARD DISPLAYS			
S055A HV FAILURE ONE OR MORE CHANNELTRONS	DETECTOR (LOCATED IN ATM)	4000V ± 10% at 10 ma.	250% ± 10% of 10 ma. ≈ 25 ma.	SEE TABLE 2.6-X	NONE		SCAN SPECT	
S056 HV SUPPLY FAILURE	DETECTOR (LOCATED IN ATM)	<60 ma.	60MA	SEE TABLE 2.6-X	NONE		X-REA HV	
FAIL S056 AUTO APERTURE CONTROL BE DETECTOR TUBE	DETECTOR (LOCATED IN ATM)	SEE FIGURE	≥4.5VDC 2048 COUNTS/SEC	K113-056	COUNTER INDICATOR		BE COUNT	
SAME AL	DETECTOR (LOCATED IN ATM)	SEE FIGURE	≥4.5VDC 2048 COUNTS/SEC	K113-056	COUNTER INDICATOR		AL COUNT	
APERTURE DOOR OPEN AFTE CLOSE OR NIGHT SIGNAL	DETECTOR (LOCATED IN ATM)	DOOR OPEN	DOOR OPEN	SEE TABLE 2.6-X	TALKBACK		DOOR OPEN	
CBRM OUT OF TOLERANCE	DETECTOR (LOCATED IN ATM)	SEE FIGURE	LO 27.5V HI:TEMP 35°C	SEE TABLE 2.6-X	METERS		PWR SYS	

TABLE 2.6-VII ATM ALERT PARAMETER INFORMATION (2 of 3)

PARAMETER NAME		NOMINAL RANGE	TRIGGER LIMITS	CORRESPONDING INDICATORS (R) INDICATES SENSOR REDUNDANT		C&W INHIBIT SWITCH TITLE (PNL 207)	C&W DISPLAY TITLE (PNL 207 & 616)	REMARKS
				TM MEASUREMENTS	ON BOARD DISPLAYS			
BATTERY NOT CORRECTLY CHARGED	DETECTOR (LOCATED IN ATM)	SEE FIGURE	NO CHARGE DURING DAY	SEE TABLE	TALKBACK		BAT CHG	
ATMDC TO BACK UP MODE OR STAR ACQUIRED IN 25 SEC	DETECTOR (LOCATED IN ATM)	SEE FIGURE	25 SEC	K382-702	COUNTER INDICATOR		ACS	
COMPUTER HAS REJECTED INPUT DATA	DETECTOR (LOCATED IN ATM)	N/A	N/A	K382-702	ORBIT PHASE DISPLAY		CMP TR REJ	
MANUAL OR AUTOMATIC CMG SHUTDOWN	DETECTOR (LOCATED IN ATM)	SEE FIGURE	N/A	K382-702	COUNTER INDICATOR		CMG MALF	
CMG1 BEARING HAS APPROACHED AUTO SHUTDOWN TEMPERATURE	DETECTOR (LOCATED IN ATM)	160 - 200°F	200°F	C006-702 C007-702	METER		BRG TEMP 1	

C&W

TABLE 2.6-VII ATM ALERT PARAMETER INFORMATION (3 of 3)

PARAMETER NAME		NOMINAL RANGE	TRIGGER LIMITS	CORRESPONDING INDICATORS (R) INDICATES SENSOR REDUNDANT		C&W SWITCH TITLE (PNL 207)	C&W DISPLAY TITLE (PNL 207 & 616)	REMARKS
				TM MEASUREMENTS	ON BOARD DISPLAYS			
SAME CMG2	DETECTOR (LOCATED IN ATM)	SAME	200%	C008-702 C009-702	METER		BRG TEMP 2	
SAME CMG3	DETECTOR (LOCATED IN ATM)	SAME	200%	C101-702 C011-702	METER		BRG TEMP 3	

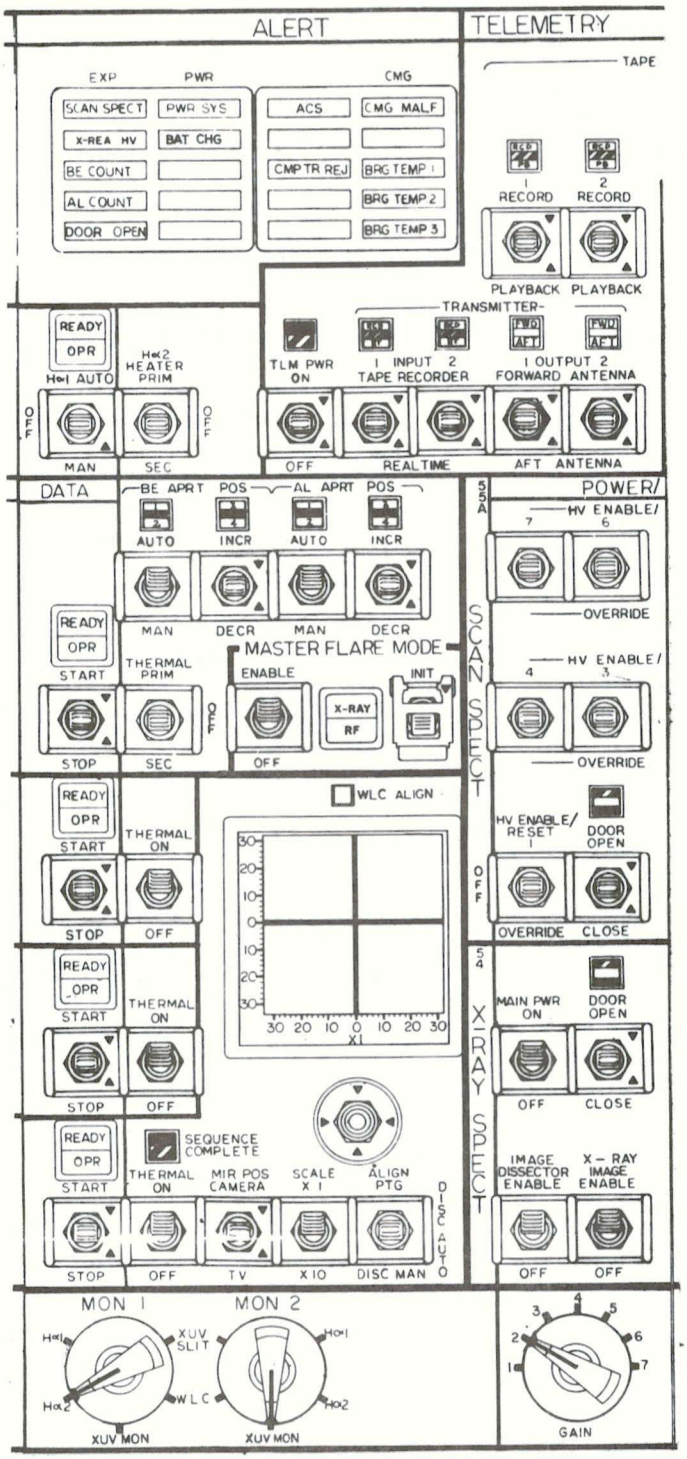

Figure 2.6-52 ATM C&D Console Alert Lights

C&W

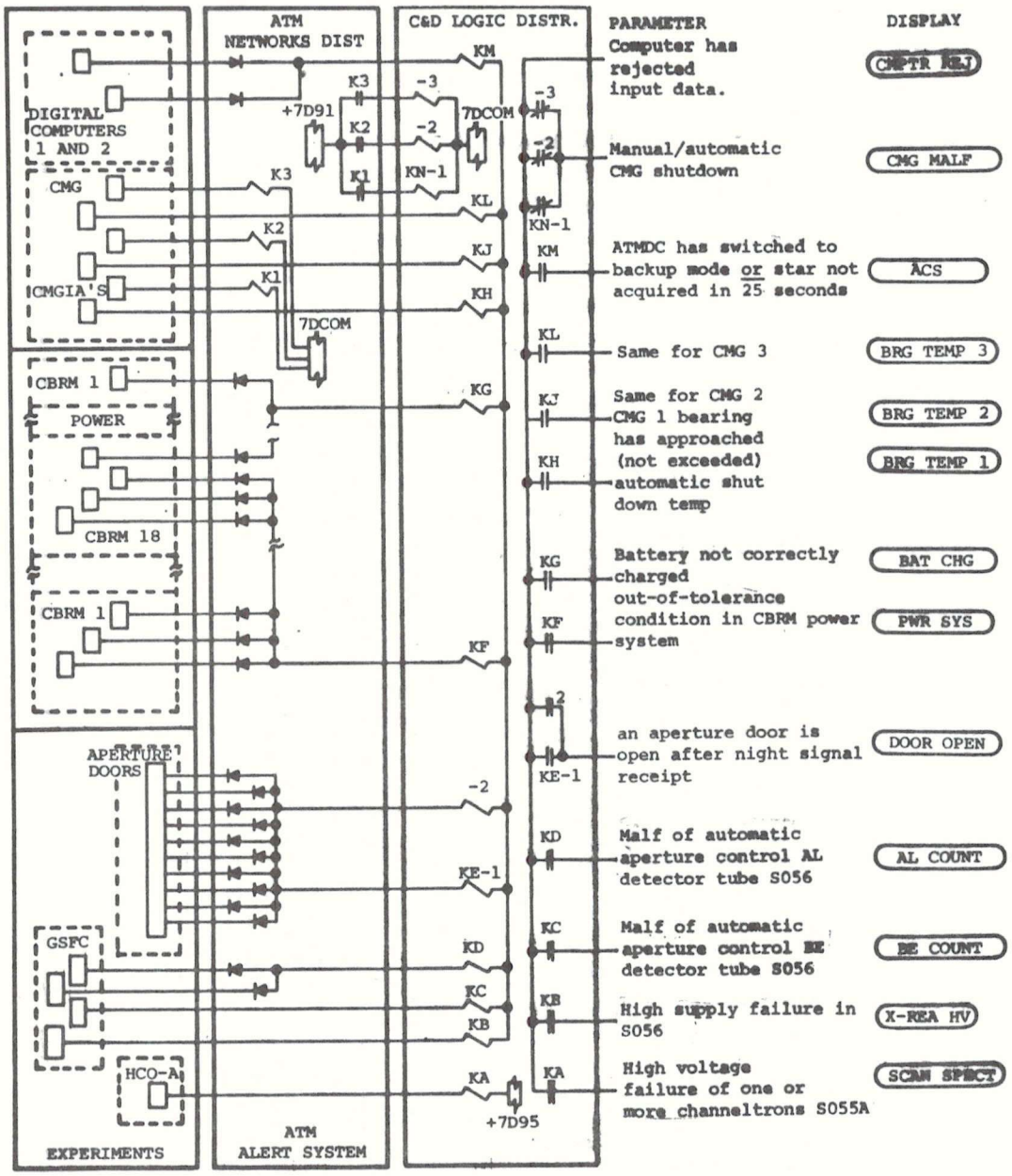

Figure 2.6-53 ATM ALERT Overview

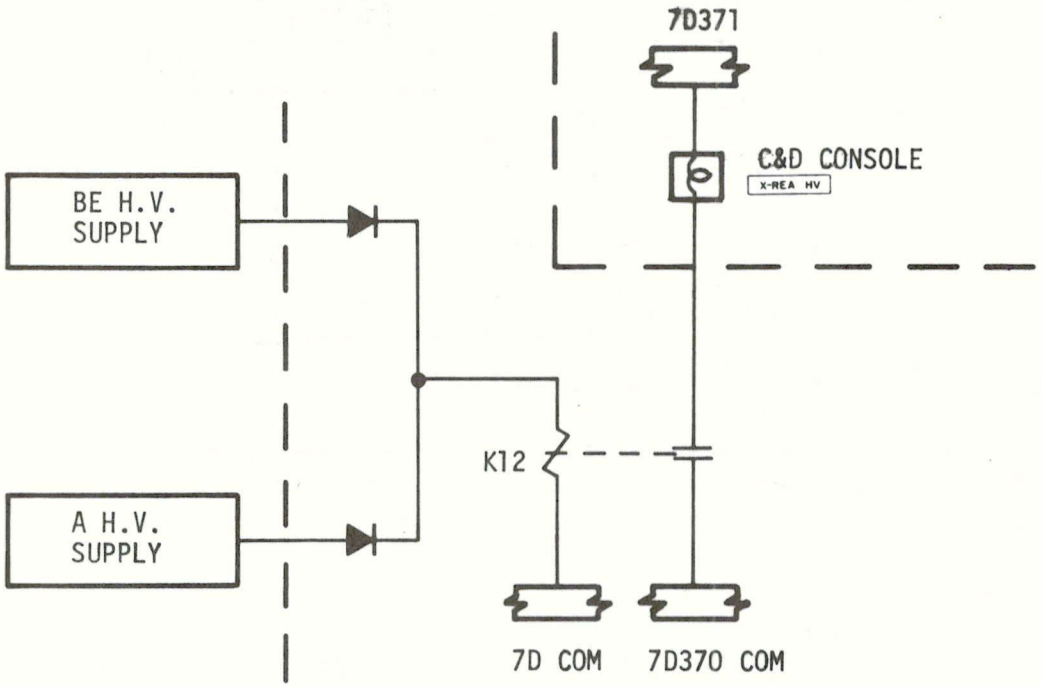

IF BE H.V. SUPPLY OUTPUT CURRENT EXCEEDS PRESET LEVEL, THE SUPPLY AUTOMATICALLY TURNS OFF THE HIGH VOLTAGE OUTPUT CIRCUIT AND SENDS A 28 VDC SIGNAL TO AN "OR" CIRCUIT FOR WARNING DISPLAY. THIS SIGNAL IS "OR'D" WITH THE A H.V. SUPPLY MALFUNCTION OUTPUT. THE SUPPLY WILL REMAIN IN THIS CONDITION UNTIL H.V. POWER SWITCH IS CYCLED.

FIGURE 2.6-54 X-REA HV ALERT

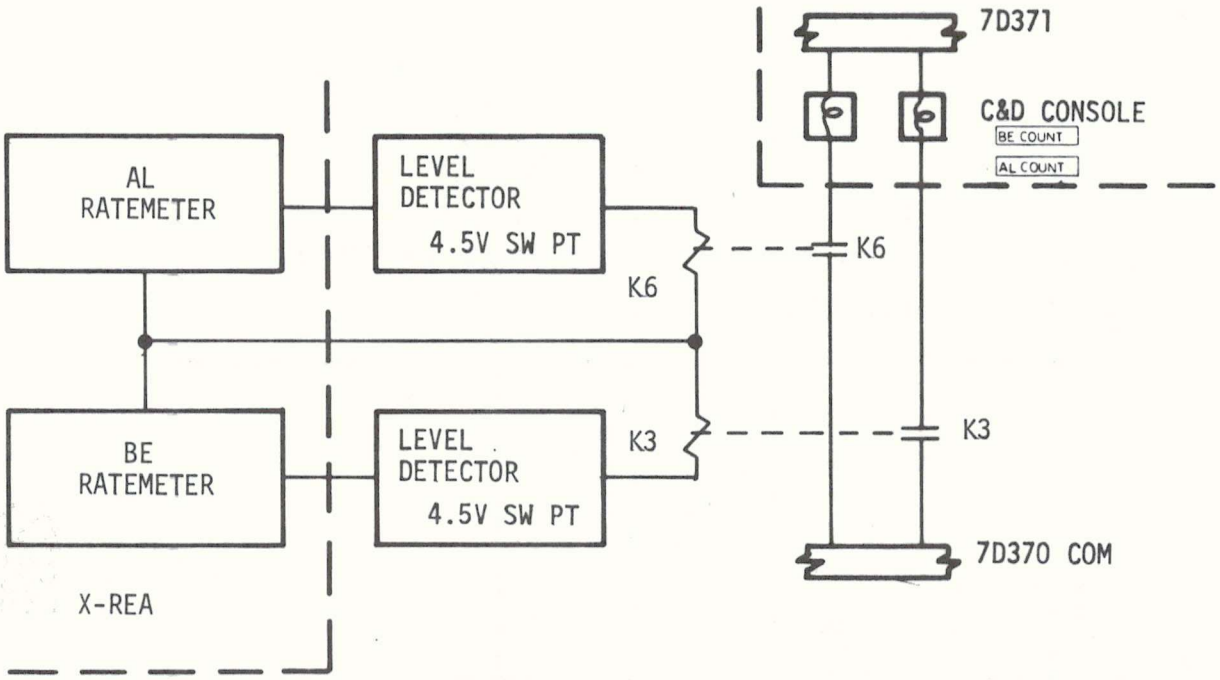

TYP. EXAMPLE BE CHANNEL:

CONDITIONS	RESULT	ACTION
1. COUNT $\leq$ 2048	NO LIGHT	NOTHING
2. COUNT > 2048 RATEMETER V_{out} >4.5VDC TIME ELAPSED >5 SEC HIGH VOLTAGE "ON"	LIGHT	AUTO/MAN SW TO MAN, INC./DEC SW TO DEC UNTIL LIGHT EXTIN- GUISHES
3. ALL CONDITIONS OF "2" PLUS APERTURE POS "1" TIME ELAPSED>5 SEC AFTER WARNING LIGHT	LIGHT	TURN OFF BE H.V. SUPPLY

FIGURE 2.6-55 BE AND AL COUNT HIGH ALERT

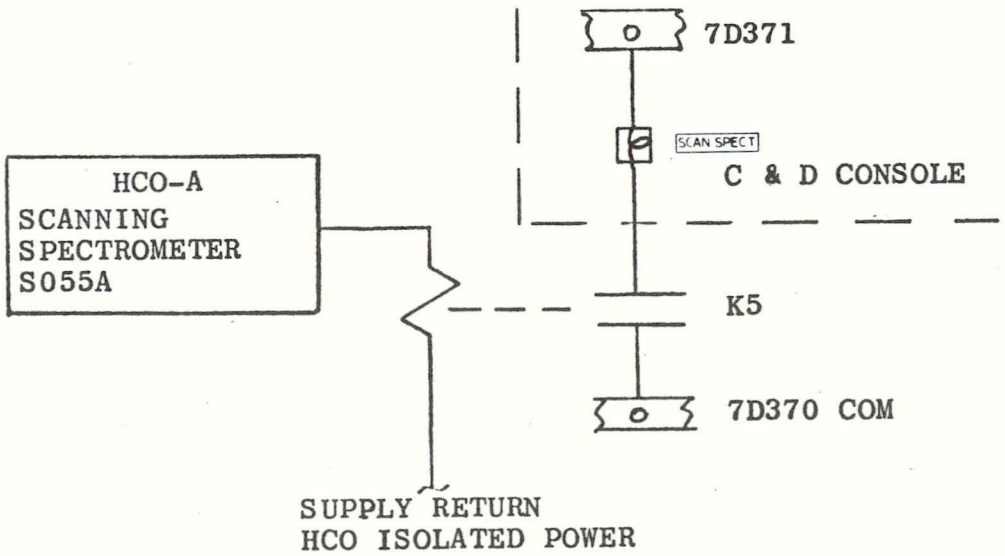

An "AND/OR" Gate Signal from Scan Spectrometer energizes K5 relay allowing power to flow to light on C & D alert panel which provides a visual indication of SCAN SPECT high voltage failure of one or more of the seven High Voltage power supplies. Alert condition exists if power supply is not on, or aperture door is closed.

Figure 2.6-56 Scanning Spectrometer ALERT

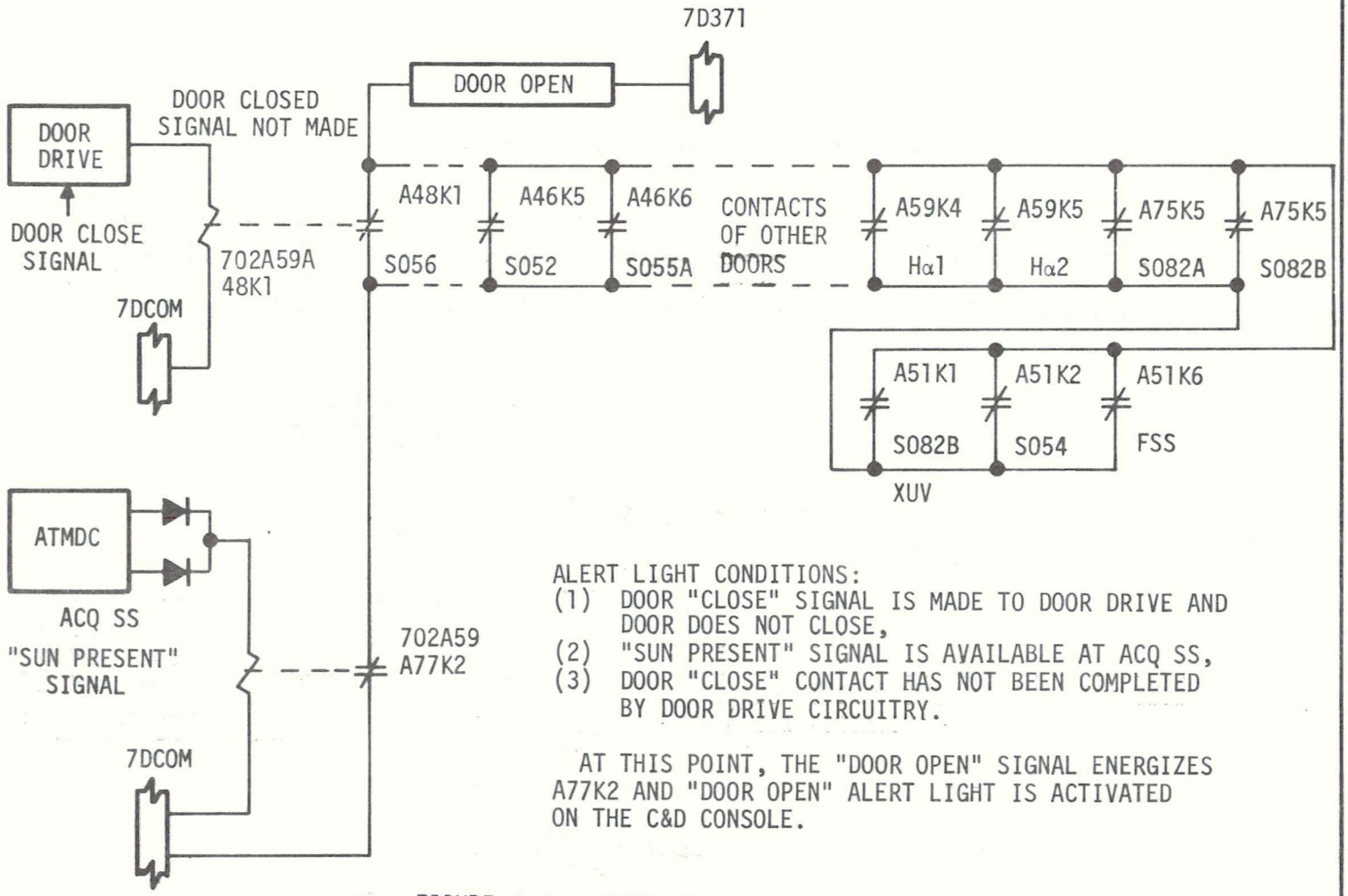

FIGURE 2.6-57 DOOR OPEN ALERT

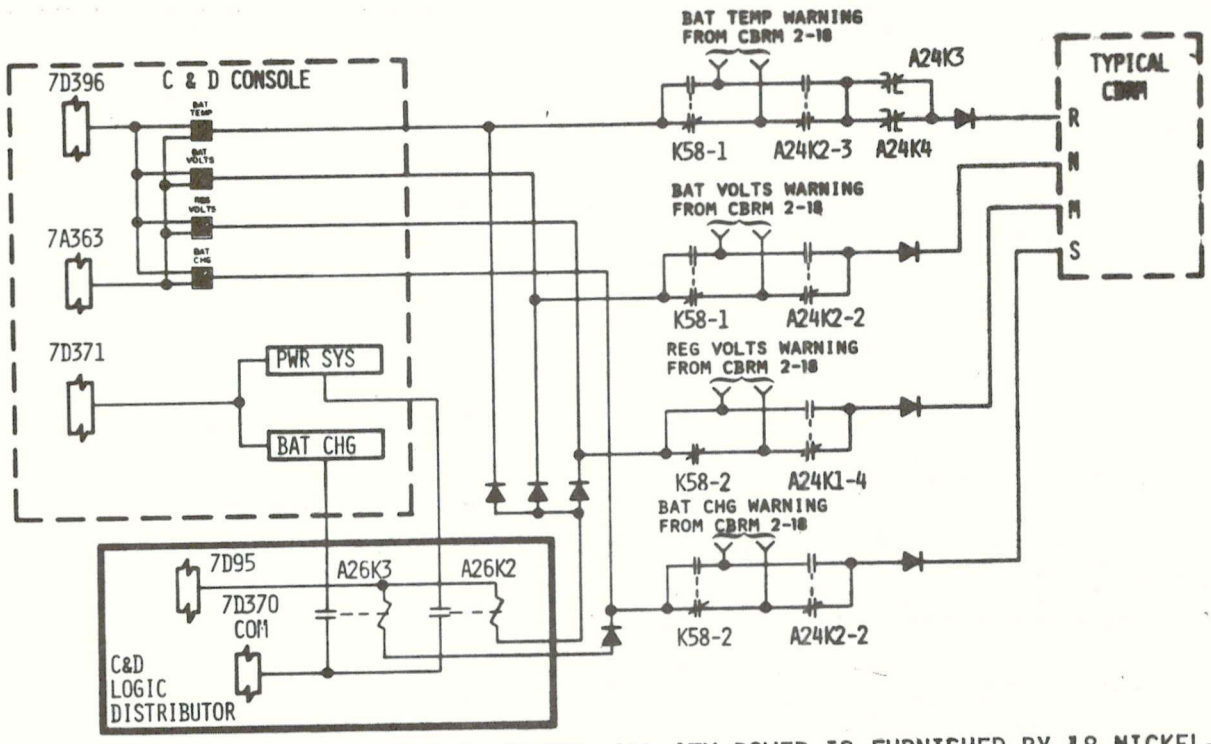

C&W

BATTERY SECTION - DURING ORBITAL NIGHT, ALL ATM POWER IS FURNISHED BY 18 NICKEL-CADMIUM STORAGE BATTERIES EACH OF WHICH HAS A RATED CAPACITY OF 20 AMPERE HOURS. POWER IS PROVIDED TO THE INPUT OF THE REGULATOR WHENEVER THE SOLAR PANEL VOLTAGE DROPS BELOW THE OPEN CIRCUIT VOLTAGE OF THE BATTERY. THE BATTERY IS PROTECTED FROM LOW TEMPERATURES (BELOW 0°C) BY A PROPORTIONAL HEATER CONTROL CAPABLE OF UP TO 50 WATTS DELIVERED TO A HEATER ELEMENT IN EACH CBRM. SENSING IS PROVIDED TO ACTIVATE A C&D POWER SYSTEM PANEL FLAG (BAT CHG) AND AN ALERT SYSTEM LIGHT (BAT CHG) IF ANY BATTERY FAILS TO FULLY RECHARGE DURING ORBITAL DAY. BATTERY TEMPERATURE SENSING WILL ACTIVATE A C&D POWER SYSTEM PANEL FLAG (BAT TEMP) AND AN ALERT SYSTEM LIGHT (PWR SYS) IF ANY BATTERY TEMPERATURE EXCEEDS 35°C. BATTERY VOLTAGE IS MONITORED FOR A HIGH CONDITION (RELATED TO TEMPERATURE) OR A LOW CONDITION (27.5 VDC). AN ABNORMAL CONDITION WILL INITIATE A C&D POWER SYSTEM PANEL FLAG (BAT VOLTS) AND THE ALERT SYSTEM LIGHT (PWR SYS) PREVIOUSLY DESCRIBED. MALFUNCTION PROTECTION IS FURNISHED WHICH WILL AUTOMATICALLY DEACTIVATE THE CHARGER AND THE BATTERY WHEN:

A. BATTERY VOLTAGE EXCEEDS THE MAXIMUM DESIRED LEVEL FOR THE SPECIFIC BATTERY TEMPERATURE DURING CHARGING.
B. BATTERY VOLTAGE DROPS BELOW 26.4 VDC; +0.5, - 0 VDC.
C. BATTERY TEMPERATURE EXCEEDS 50°C; +0, -2°C.
D. BATTERY DISCHARGE CURRENT EXCEEDS 25A $\pm$1A.

IF AN OUT-OF-TOLERANCE CONDITION RETURNS TO WITHIN LIMITS, OPERATION CAN BE RESTORED BY A CHARGER OFF COMMAND FOLLOWED BY A CHARGER ON COMMAND. AUTOMATIC RECOVERY IS NOT PROVIDED.

FIGURE 2.6-58 POWER SYSTEM AND BATTERY CHARGE ALERT INDICATION

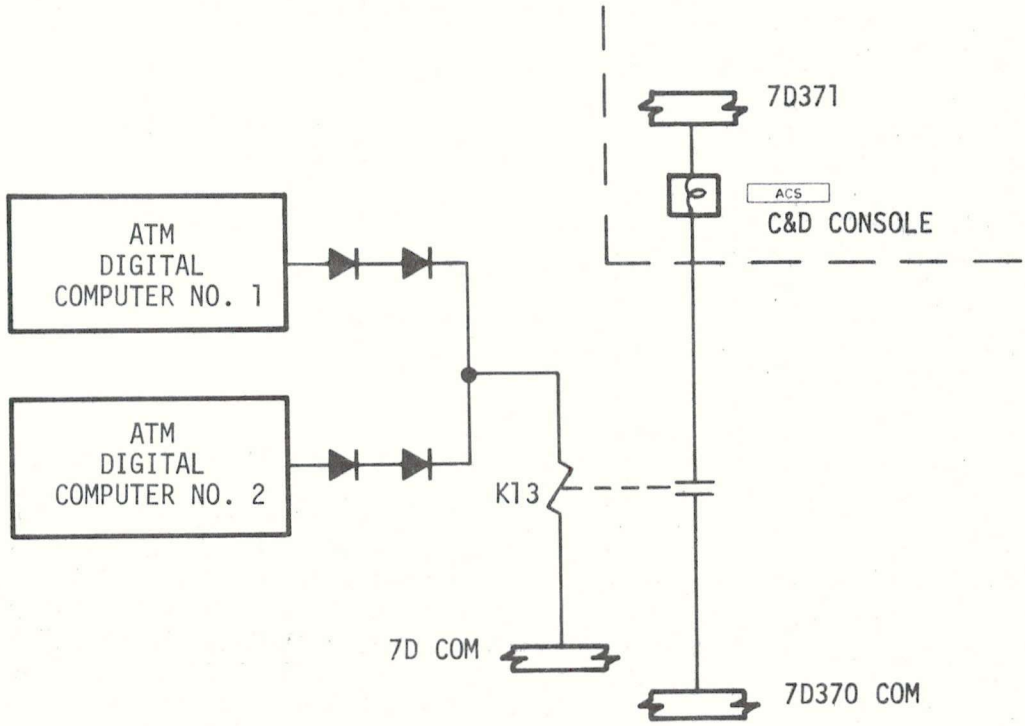

A DISCRETE SIGNAL FROM THE ATM DIGITAL COMPUTER CAUSES RELAY TO ENERGIZE WHICH ALLOWS VOLTAGE TO FLOW TO LIGHT ON C&D CONSOLE WHICH PROVIDES A VISUAL INDICATION THAT ONE OR MORE OF THE FOLLOWING CONDITIONS HAVE OCCURED:

(1) Rate gyro failure in any axis as determined by redundancy management.
(2) ACQ SS failure in either axis as determined by redundancy management.
(3) ACQ SS sun presence failure.
(4) Star Tracker failure to acquire star in 25 seconds.
(5) Primary and backup navigation discompare.
(6) Computer restart.
(7) Insufficient maneuver time requested.

FIGURE 2.6-59 AUTO ACS ALERT

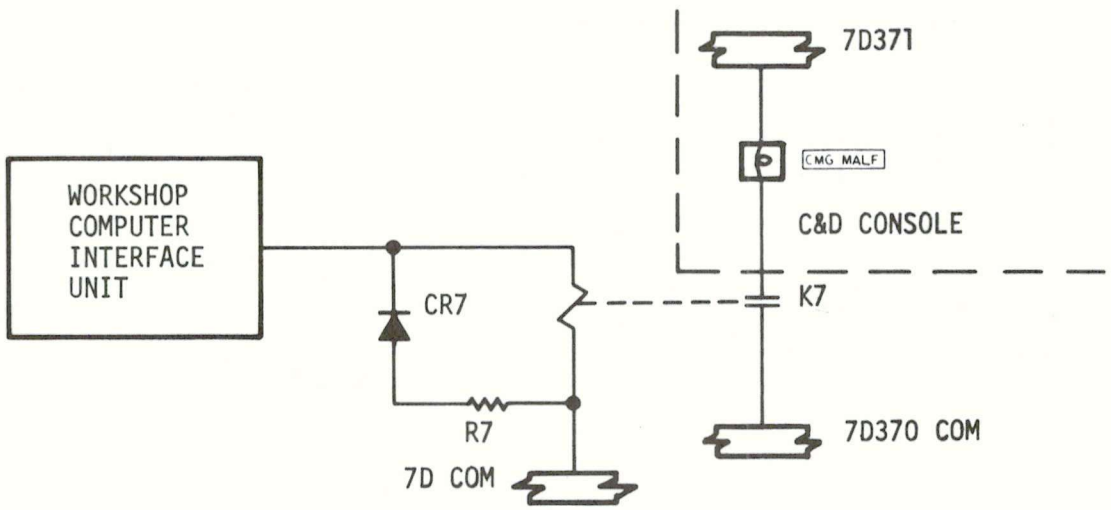

C&W

A DISCRETE SIGNAL FROM THE WCIU CAUSES RELAY K7 TO ENERGIZE WHICH ALLOWS VOLTAGE TO FLOW TO LIGHT ON THE C&D CONSOLE. THIS PROVIDES AN INDICATION THAT ONE OR MORE OF THE CMGs HAVE BEEN SHUT DOWN EITHER MANUALLY OR AUTOMATICALLY.

FIGURE 2.6-60 CMG MALFUNCTION ALERT

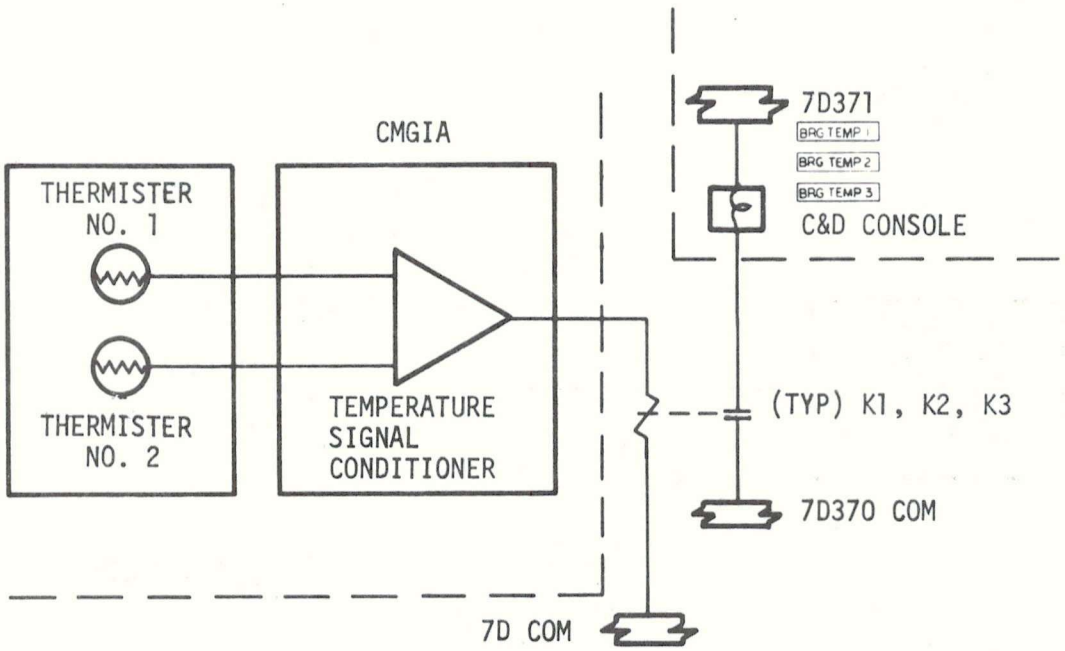

THE TEMPERATURE OF EACH CMG WHEEL BEARING IS MONITORED BY A THERMISTER AND A SIGNAL CONDITIONER. IF THE TEMPERATURE OF EITHER BEARING REACHES 160°F, THE TEMPERATURE SIGNAL CONDITIONER SENDS 28 VOLTS DC TO OPERATE THE RELAY. THE RELAY GIVES AN INDICATION TO THE C&D PANEL THAT THE TEMPERATURE OF A CMG BEARING IS ABOVE NORMAL AND SHOULD BE MONITORED CLOSELY. IF THE TEMPERATURE INCREASES TO 200°F, THE SIGNAL CONDITIONER WILL SHUT THE CMG WHEEL DOWN.

FIGURE 2.6-61 CMG BEARING TEMPERATURE ALERT

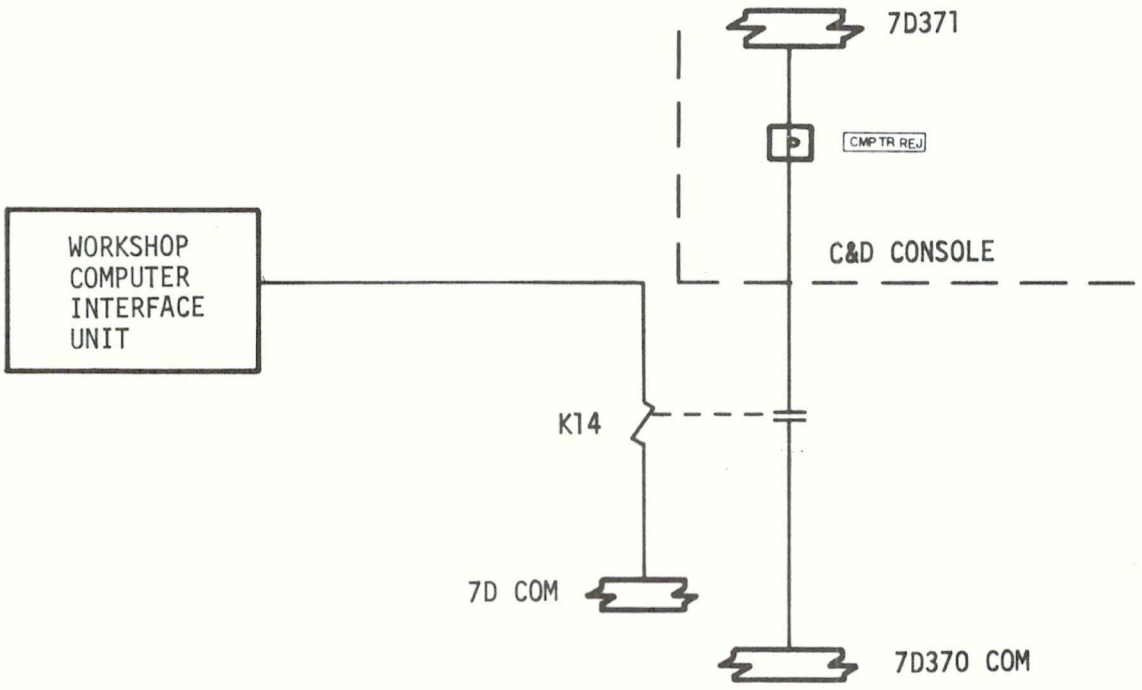

A DISCRETE SIGNAL FROM THE WORKSHOP COMPUTER CAUSES RELAY TO ENERGIZE WHICH ALLOWS VOLTAGE TO FLOW TO LIGHT ON C&D CONSOLE. THIS INDICATES THAT FAULTY INFORMATION HAS BEEN RECEIVED.

FIGURE 2.6-62 COMPUTER REJECT ALERT

2.6.5 Performance and Design and Design Data

2.6.5.1 C&W System Purpose - The Caution and Warning (C&W) System for the Cluster (CSM docked to SWS) shall monitor the performance of itself (voltage only) and other systems, and alert the crew to hazards or out-of-limit conditions which constitute or could result in jeopardizing the crew, compromising primary mission objectives, or if not responded to in time could result in a loss of a system. This specification shall apply to the integrated cluster system. Existing hardware shall demonstrate compliance to the requirements contained herein. Where deviations occur with existing hardware, each shall be considered individually for modification, redesign, or waiver. Parameters monitored by the C&W System shall be categorized as either EMERGENCY, WARNING, or CAUTION. Criticality and/or crew response shall be used to determine the category or a parameter. Emergency, warning, and caution categories are defined as follows:

a. EMERGENCY - Any condition which can result in crew injury or threat to life and requires immediate corrective action, including predetermined crew response.

b. WARNING - Any existing or impending condition or malfunction of a cluster system that would affect crew safety or compromise primary mission objectives. Immediate action by the crew is required.

c. CAUTION - Any out-of-limit condition or malfunction of a cluster system that effects primary mission objectives or could result in loss of a cluster system if not responded to in time. Crew action is required although not immediately.

The number of monitored parameters must be consistent with effective monitoring. When any of the monitored parameters reach the predetermined out-of-tolerance level appropriate visual and acoustical signals shall be activated. A block diagram of the C&W System is shown in Figure 2.6-2.

2.6.5.2 C&W Subsystems - Each vehicle (SWS or CSM) C&W System shall consist of the following:

Emergency Subsystem - The Emergency Subsystem shall alert the crew to defined emergency conditions requiring predetermined immediate action by triggering an acoustical alarm system within the vehicle atmosphere and by providing typical warning category outputs. The Emergency Subsystem shall be DC isolated from the Caution and Warning Subsystem.

Caution and Warning Subsystem - The Caution and Warning Subsystem shall alert the crew to defined caution or warning out-of-tolerance conditions. All outputs of the Caution and Warning Subsystem shall be displayed on the Caution and Warning Subsystem panel(s) and shall cause the generation of an appropriate caution or warning tone for routing to

the crewman earphones and Speaker Intercom Assemblies (SIA'S).

2.6.5.3 Design - The C&W System shall be designed per the following requirements.

Functions - The C&W System shall provide the necessary visual indicators and audible signals to alert the crew to the out-of-tolerance conditions defined in Paragraph 2.6.3. When any monitored parameter reaches an out-of-limits value, the following shall result without impairing the capability of sensing other out-of-limit parameters.

Emergency Functions -

a. Sound appropriate audible alarm.

b. Provide warning category discretes to the C&W System to to trigger the warning tone generator and illuminate the master alarm telelight switches (red switch/indicator lights with reset capability).

c. Illuminate the applicable red lights on the C&W System panel(s).

d. Illuminate the master alarm status lights on the SIA's.

Warning Functions -

a. Illuminate all master alarm telelight switches (red).

b. In the originating vehicle illuminate applicable red lights on the C&W System panel(s) to identify the nature of the out-of-limits condition or malfunction.

c. Trigger warning tone generator.

d. Provide an appropriate input to the memory function.

e. Illuminate the memory light.

f. Illuminate the master alarm status lights on the SIA's.

Caution Functions

a. Illuminate all master alarm telelight switches (red).

b. Illuminate applicable yellow lights on the C&W System Panel(s) to identify the nature of the out-of-limit condition or malfunction. (SWS Only)

c. Trigger the caution tone generator.

d. Provide an appropriate input to the memory function.

e. Illuminate the memory light.

f. Illuminate the master alarm status lights on the SIA's.

2.6.5.4 Telemetry - Individual discretes indicating activation of the Caution and Warning or Emergency Subsystem will be telemetered to the ground.

Interfaces - The C&W System shall be designed in such a manner as to operate as an integrated system while the CSM is docked to the SWS. Electrical interfaces for the C&W System in respective vehicle (CSM, SWS) are shown in Figure 2.6-1 and shall be in accordance with the following requirements:

a. All C&W System vehicle to vehicle electrical interfaces shall be by means of discrete contact closures.

b. No raw or unprocessed signals or display information shall be routed across a vehicle interface.

c. The intervehicular signal from the CSM will be treated as a warning signal by the SWS, and shall result in illumination of a warning light on the C&W panel(s), labeled "CSM."

d. Warning audio tones shall not cross a vehicle interface, i.e., each vehicle shall have its own tone generator system.

2.6.5.5 Verification Requirements - The following verification requirements shall apply:

a. The Caution and Warning System within each module (major elements of a vehicle; e.g., MDA, AM, OWS, ATM, CM, SM) shall be designed to remain in the "on-orbit" configuration from acceptance testing through launch; i.e., system integrity will be maintained.

b. The Caution and Warning System shall be capable of integrated checkout prior to launch.

c. The Caution and Warning System shall be designed to permit testing by a crew member in flight. In the Emergency Subsystem capability shall be provided to permit checkout from each transducer input through the electronics, to illuminate the applicable lights and trigger the acoustical devices.

2.6.5.6 Inhibit - The capability shall exist to inhibit, or disable the system, a malfunctioning circuit or input signal for each parameter

monitored without disabling other active signals or circuits. The capability shall also exist to restore the inhibited signal or circuit to its original monitored configuration.

2.6.5.7 Transient Response - The signal conditioning must be sufficient to prevent inadvertent C&W System signals being generated by transients (EMI-Noise).

2.6.5.8 Power Sources - Each C&W Subsystem prime power feed shall be protected by a suitable protective service, be the only load on that device, and be capable of drawing power from two or more independent normally energized buses without action required from the crew.

2.6.5.9 Audible Alarm and Audio Tones - The alarm tones shall meet the following specifications:

a. The Emergency Subsystem audible alarm shall be coded in a unique manner to identify the type of emergency condition (e.g., fire vs. rapid pressure loss): and shall be generated by an acoustical transducer (such as a Klaxon horn, bell, or similar device). Initiation of the Emergency Subsystem shall, through a discrete to the C&W Subsystem, also activate the warning audio tone to crewman earphones and Speaker Intercom Assemblies.

b. Caution and warning tones shall be coded in a manner to permit distinct recognition by the crew of the category of signal being generated.

c. The caution and warning audio tones shall be fed to all crewmen earphones and Speaker Intercom Assemblies.

d. No C&W System tones shall be routed to EVA or IVA crewmen.

e. The caution and warning tones shall be fed to earphones and Speaker Intercom Assemblies via separate wires from those employed by the communication system and shall bypass crew members' intercom volume controls.

f. Volume controls shall be provided for the audio tone, designed such that the tone is still barely audible with minimum control setting. The tone level shall be adjustable so that satisfactory voice communication can occur.

g. The tone signal or audible alarm shall recongize the highest category of unacknowledged signal present; i.e., a warning category signal shall override an existing caution tone and result in the warning tone being generated.

h. The C&W System shall not override any activated sleep switches.

2.6.5.10 Reset - Capability shall be provided to perform reset by depressing any master alarm telelight switch in the originating vehicle. Depressing the master alarm telelight switch in the vehicle where the emergency, warning, or caution signal originated shall accomplish the following simultaneously:

a. Turn off all master alarm telelight switches and master alarm status lights in the vehicle.

b. Turn off the audio tones and emergency audible alarm if triggered.

c. Turn off any emergency parameter lights for which the input is returned with in limits.

d. Leave the system ready to accept another master alarm trip and tone generation actuation.

e. The master alarm telelight switch, master alarm status lights, and audible alarm shall remain on until the master alarm is reset. Malfunction lights shall be responsive or track the parameter being monitored.

2.6.5.11 Warning Parameter - Ground Command - Capability shall be provided to allow generation of a warning through the Command System. This command shall activate the C&W System to perform the functions of Paragraph 2.6.5.3 and shall simultaneously energize "CALL" function to permit the warning tone to bypass all activated sleep switches.

2.6.5.12 Isolation - The requirements for isolation shall be as follows:

a. The Emergency Subsystem shall be independent from the Caution and Warning Subsystem, but shall activate the warning tone generator, the master alarm telelight switches, and the master alarm status lights. This shall be by means of discrete contact closures to maintain isolation of the Emergency Subsystem.

b. The Caution and Warning Subsystem and the Emergency Subsystem shall be separate and independent. Failures in other systems shall not cause a malfunction in the Caution and Warning or Emergency Subsystems.

c. Isolation shall be included for all C&W System sensors having multipurpose usage, i.e., also used by the instrumentation system. Use dual sensors (independent C&W sensors) for all parameters wherever practical.

2.6.5.13 Memory - Means shall be provided to permit determination of the identity of short term C&W Subsystem activations after the fact. Such provisions may require discrete crew action to perform the identification and to reset the system but shall not rely on support from the ground.

2.6.5.14 Displays - Parameter and display requirements are enumerated in Table 2.6-V. The first table lists the parameters to be monitored. The category (emergency, warning, or caution) and the title of the display. The last table lists the items to be displayed on each C&W System display panel. The parameter display lights shall be color-coded as follows:

a. Emergency - Aviation Red

b. Warning - Aviation Red

c. Caution - Aviation Yellow

2.6.5.15 Parameter Trigger Level Adjustment - As a design goal, the signal conditioning for a parameter which initiates the C&W System shall be pad adjustable. The amount of adjustment above and below a trigger level shall be at least 50% greater than the range between the nominal operating value of the parameter and the original identified trigger level.

2.6.6 General Design Requirements -

The C&W System shall meet the following design requirements.

2.6.6.1 Reliability - The design goal of the C&W System shall be as follows:

a. Components shall be selected such that the maximum allowable failure rate for the C&W System shall not exceed 1.145 failures per million hours of operation.

b. Failures which will trigger false alarms shall not exceed 2.289 failures per million hours of operation.

Analytical verification will be required to assess the design against the above failure rate goals.

2.6.1.2 Redundancy - There shall be no singlepoint failures in the Caution and Warning System whose failure would definitely result in loss of the crew and/or mission termination. A single-point failure is a failure of a single item of lowest component level hardware having an independent mode of failure which results in the functional loss of a system. Examples of this hardware are valves, regulators, pumps, motors, switches, relays, transistors, resistors, diodes, etc. A single path of

passive electrical hardware (i.e,, wiring, solder joint, connectors, etc.) that could open or short circuit and result in a catastrophic condition shall also be considered as a single point failure. Passive hardware such as structures, supports, brackets, pressure containers, pressure tubing, etc., are not included; this type of hardware is designed and quality controlled to meet established safety factors.

2.6.6 Operational Limitations and Restrictions

See Table 2.6-VIII Caution, Warning, and Emergency Subsystem Requirements page 2.6-109.

System verification tests are in process. They are described in BD-14052 dated 26 April 1971. "Skylab Caution and Warning Assessment Update Report", Skylab Caution and Warning Technical Manual MSFC No 40M35701 and ED-2002-1038 Volume I Revision A of 1 July 1970 "Caution and Warning System Adequacy Analysis" Volume I. The Caution and Warning parameters as specified in the CRS have been found adequate for ATM monitoring.

Table 2.6-IX lists the Real-Time Telemetry Support required for the ATM C&W subsystem in the event of an alarm.

Table 2.6-X lists the Real Time Telemetry Support required for the ATM ALERT subsystem in the event of an alarm.

TABLE 2.6-VIII CAUTION, WARNING AND EMERGENCY SUBSYSTEM REQUIREMENTS

Requirement	Design Implementation	
C&W system shall consist of the following: Emergency subsystem C&W subsystem	C&W unit contains redundant emergency and C&W subsystems.	Test planning provides for operation of most parameters from redundant supplies and test of redundant sensors were applicable.
Provide visual indicators and audible signals to alert the crew to out-of-tolerance conditions .	Identification lights are provided for all parameter channels. Master alarm lights are provided on the STS panel and on each speaker intercom assembly. Separate tones are provided for caution, warning, fire, and rapid loss of pressure.	Operational verification is achieved by parameter stimulation and noting proper "on" condition of proper I.D. lights, master alarm PB/LTS, appropriate caution, warning and/or emergency tones.
Provide discrete telemetry signals to indicate activation of the C&W system .	Discretes are provided to indicate activation of caution, warning, fire, and rapid loss of pressure .	TM is frequently used to verify on condition of parameter where access to I.D. LTS is difficult; i.e., altitude chamber
CSM and SWS C&W shall operate as an integrated system when vehicles are docked.	The CSM provides the SWS a closure which is treated as a warning input to the AM C&W system.	Difficulties with this interface are being worked. There are several single point failures in the CSM parameter which have been brought to the contractors attention.
Provide capability for end-to-end checkout during ground testing.	End-to-end checkout of AM parameters can be accomplished by operational procedures except for molecular sieve over temperature.	An end-to-end test is planned or feasible for AM, OWS, CSM, ATM, MDA parameters at either STL or KSC in addition. Integrated C/O is planned at KSC. Test switches will be used to test fire sensors.

TABLE 2.6-VIII CAUTION, WARNING AND EMERGENCY SUBSYSTEM REQUIREMENTS

Requirement	Design Implementation	
Provide capability for integrated checkout prior to launch.	The C&W system permits integrated checkout.	
Provide capability for test of C&W system in flight.	Switches are provided on the STS C&W panel for in-flight test of inhibit switches. C&W unit electronics, alarms displays and rapid P sensors	
Provide capability to inhibit a malfunctioning circuit or input signal for each parameter monitored.	Switches are provided on STS panel to disable C&W parameter inputs. Fire sensors may be individually disabled at the sensor control panels.	
Prevent inadvertent C&W signals from being generated by transients (EMI noise).	Transients of +50 V in amplitude and 2.0 MS or less in duration will not activate the C&W unit.	Verified in development test. No additional information at this time.
Each C&W system prime power feed shall be protected by a suitable device, be the only load on that device, and be capable of drawing power from two or more independent normally energized buses.	Two independent buses are used to power the C&W unit. Each converter in the C&W unit is protected by a circuit breaker and is the only load on that breaker.	Parameters are tested on one bus; then on the other
The caution, warning and each emergency tone shall be coded to permit distinct recognition.	Caution tone is a continuous 1 Khz signal interrupted at a 1.4 Hz rate. Fire alarm is a siren and rapid pressure loss a modulated buzzer.	

TABLE 2.6-VIII CAUTION, WARNING AND EMERGENCY SUBSYSTEM REQUIREMENTS

Requirement	Design Implementation	
Caution and warning tones shall be fed to all crewmen earphones and speaker intercoms via separate wires from those employed for communications. Tones shall by-pass intercom volume controls.	Design complies	
Volume controls shall be provided for the audio tones.	Three volume controls are provided on the STS control panel. One for the caution tone, one for the warning tone, and one for the emergency tone.	
Capability shall be provided to perform reset by depressing any "master alarm light" in the originating vehicle.	Master alarm light/switches are provided at the STS and OWS C&D panels. Depressing either of these switches results in the following: Master alarm lights are extinguished Tones and alarms are turned off Emergency ID lights are extinguished if parameters are within limits Caution and warning ID lights track the monitored parameter.	Adequately tested verification.
Provide capability to allow generation of a warning signal through the AM command system.	TWO DCS channels are utilized for crew alert, either of which provide a warning input to the C&W system. These commands also activate the audio system "call" function and bypass sleep switches.	No C&W test information on "call" activation and sleep switch override.

TABLE 2.6-VIII CAUTION, WARNING AND EMERGENCY SUBSYSTEM REQUIREMENTS

The emergency subsystem shall be separate and independent from the C&W subsystem. Isolation shall be included for all C&W system sensors.	DC isolation is provided between the C&W subsystem and the emergency subsystem. Isolation is provided on all sensors having multipurpose usage.	Capacitor isolation is provided.
Memory shall be provided to permit determination of the identity of short term C&W subsystem activations after the fact.	Memory is provided which allows recall of any C&W channel by depressing the memory light/switch. Memory may be cleared via the momentary clear switch.	
There shall be no single-point failures in the caution and warning system.	There are no known single point failures on items of lowest component level hardware which could result in the functional loss of the caution and warning system.	MSFC found MDAC definition of SPF T00 liberal. MDAC orginal def. interperted SPF as item causing functional loss of entire system. New definition requires review of each parameter in the light of endangering astronaut safety. Item being worked.

TABLE 2.6-IX REAL-TIME TELEMETRY SUPPORT REQUIREMENTS FOR ATM SUBSEQUENT TO A CAUTION AND WARNING ALARM

	Name	Measurement No.
1.	ATM BUS NO. 1 LOW	MO19-702
2.	ATM BUS NO. 2 LOW	MO20-702
3.	ATM COOLANT HEATER TEMPERATURE	K479-704
4.	ATM COOLANT FLUID TEMPERATURE	K374-704
5.	ATM COOLANT PUMP DELTA P	K458-704
6.	TO VERIFY 3. THROUGH 5.	
	a. TEMP. SEC. M/W INLET TO CANISTER PANELS	C297-704
	b. TEMP. PRI. M/W INLET TO CANISTER PANELS	C286-704
	c. TEMP. DIFF. M/W INLET TO OUTLET MDA END CANISTER PANELS	C287-704
	d. TEMP. DIFF. M/S INLET TO OUTLET SUN END CANISTER PANELS	C288-703
	e. TEMP. M/W OUTLET OF PUMP PACKAGE	C289-704
7.	ATM COMPUTER SELF TEST FAILURE	ATMDC TLM WORD 19
8.	ATM APCS COMPUTER SWITCHOVER	ATMDC TLM
9.	ATM CMG SATURATED	ATMDC TLM WORD 19
10.	ATM APCS OVERRATE	ATMDC TLM WORD 19
11.	ATM THRUSTER STUCK	ATMDC TLM WORD 19
12.	ATM AUTO TACS ONLY	ATMDC TLM WORD 19
13.	ATM APCS FAILURE NO. 2	ATMDC TLM WORD 19

C&W

TABLE 2.6-X REAL-TIME TELEMETRY SUPPORT REQUIREMENTS FOR ATM SUBSEQUENT TO A C&D CONSOLE ALERT LIGHT

Name	Measurement No.	
BATTERY CHARGER ALERT	K 344-702	K 353-702
	K 345-702	K 354-702
	K 346-702	K 355-702
	K 347-702	K 356-702
	K 348-702	K 357-702
	K 349-702	K 358-702
	K 350-702	K 359-702
	K 351-702	K 360-702
	K 352-702	K 361-702
POWER SYSTEM ALERT	C012-702	
	C013-702	M001-702 M089-702
	C014-702	M002-702 M090-702
	C015-702	M003-702 M091-702
	C016-702	M004-702 M092-702
	C017-702	M005-702 M093-702
	C018-702	M006-702 M094-702
	C019-702	M007-702 M095-702
	C020-702	M008-702 M096-702
	C021-702	M009-702 M097-702
	C022-702	M010-702 M098-702
	C023-702	M011-702 M099-702
	C024-702	M012-702 M100-702
	C025-702	M013-702 M101-702
	C026-702	M014-702 M102-702
	C027-702	M015-702 M103-702
	C028-702	M016-702 M104-702
	C029-702	M017-702 M105-702
		M018-702 M106-702
COMPUTER REJECT	ATMDC TLM WORD 17	
AUTO ACS ALERT	ATMDC TLM WORD 17	
CMG NO. 1 BEARING TEMPERATURE ALERT	C006-702	
	C007-702	
CMG NO. 2 BEARING TEMPERATURE ALERT	C008-702	
	C009-702	
CMG NO. 3 BEARING TEMPERATURE ALERT	C010-702	
	C011-702	

TABLE 2.6-X REAL-TIME TELEMETRY SUPPORT REQUIREMENTS FOR ATM SUBSEQUENT TO A C&D CONSOLE ALERT LIGHT

Name		Measurement No
CMG MALFUNCTION		ATMDC TLM
SCAN SPECTROMETER ALERT		M250-55A M251-55A M362-55A M363-55A M364-55A M365-55A M366-55A
X-REA HV ALERT		M189-056 M190-056 M191-056
BE COUNT HIGH ALERT		K113-056
AL COUNT HIGH ALERT		K113-056
DOOR OPEN ALERT	K282-703 K284-703 K286-703 K288-703 K290-703 K292-703 K294-703 K296-703 K300-703 K298-703	K281-703 K283-703 K285-703 K287-703 K289-703 K291-703 K293-703 K295-703 K299-703 K112-052

C&W

2.7 EXPLOSIVE DEVICES SUBSYSTEM

2.7.1 Introduction

Ordnance actuated devices are used on the ATM to accomplish various functions associated with the structural mechanical systems. This section describes the current configuration of the ATM Explosive Devices Subsystem (ordnance) and associated equipment utilized in the SKYLAB A ATM. Also included are physical and functional descriptions, locations diagrams and other pertinent data for each ordnance device in the Explosive Devices Subsystem. (See Figure 2.7-1 and Table 2.7-I) SL-1 Ordnance System Document Skylab A ED-2002-1163 of August 1971 with Change 1 dated 17 December 1971 is the basic reference. The ATM Explosive Devices Subsystems are the Solar Panel Decinching Mechanism and the ATM Launch Lock Release Mechanism.

2.7.2 Subsystem Interfaces

Both the ATM Solar Panel Decinching Mechanism and the ATM Launch Lock Release Mechanism interface with the IU and the AM DCS for primary and secondary initiation signals. ICD 40M33633 calls out these signals.

The Solar Panel Decinching Mechanism interfaces with the Solar Array mechanically via the torque tubes and arm assemblies, while the Launch Lock Release Mechanism has a mechanical interface with the canister and rack via the launch lock pins. See Section 2.1 of this handbook for the details of these mechanical interfaces. Figure 2.7-1 shows the relative positions of the ATM Ordnance. Sections GG and HH are detailed in Figures 2.7-3,4,7, and 10.

EDS

Table 2.7-I

ATM Ordnance Systems (Location)

Ordnance Equipment	(1) ATM Solar Panel Decinching Mechanism	(2) ATM Launch Lock Release Mechanism
EBW Firing Unit	2	2
EBW Detonator	2	2
Detonator Block		
CDF Assembly	16	21
CDF Manifold	2	2
CDF Tee		2
CDF Pressure Cartridge	16	18

(1) See Figures 2.7-3 and 4
(2) See Figures 2.7-7 and 10

2.7.3 Functional Description with Major Component Functional Description, 2.7.4, Combined

2.7.3.1 - The ATM Solar Panel Decinching Mechanism is actuated by pyrotechnic devices at the start of ATM solar panel deployment. During launch the ATM solar panels are stacked in a vertical orientation. These panel stacks are supported by cinching them to a mounting structure. Ordnance in the decinching mechanism (Figure 2.7-10) consists of two EBW firing units, two EBW detonators, two CDF manifolds, sixteen CDF assemblies, and sixteen CDF pressure cartridges. See Figures 2.7-2,3,4, 5, and 6.

The decinching mechanism consists of two redundant ordnance systems with primary initiation by a signal from the IU system and a secondary initiation by a signal from the AM system. These signals are used to trigger the EBW firing unit. The firing unit energizes the EBW detonator which is installed in a CDF manifold. The explosive force is propagated through the CDF manifold and CDF assemblies to CDG pressure cartridges. The output charge of the CDF pressure cartridge actuates the solar panel decinching mechanism.

The decinching mechanism consists of a thruster assembly, actuator adapter, torque tube and arm assemblies. One decinching mechanism is mounted on the upper beam and one on the lower beam of the ATM solar panel support structure. The decinching mechanism on the upper beam has five arm assemblies and the one on the lower beam has seven arm assemblies The arm assemblies are attached at one end to the outer solar wing panel or antenna panel. Balls on the other end are inserted in keyhole slots in the torque tube. In the prelaunch configuration the torque tube is rotated to retain the arm assemblies and the tube is pinned with shear pins. A turnbuckle in the middle of the arm tightens the cinch.

The gas pressure from the pressure cartridges, which are installed on the upper and lower thruster assemblies, drives a piston which rotates the torque tube and shears the pin. The ball end of the arm assembly is pulled out of the keyhole slot in the rotated torque tube releasing the wing. Torsion springs in the arm assemblies fold them against the outer wing pannel. Refer to 10 M 24550 B.

The thruster assembly (Figure 2.7-6) is designed to accept two CDF pressure cartridges. Retracted pistons in the assembly are retained in the retracted position during the launch phase by a retaining device. When ATM solar panel decinching is commanded, expanding gas from the CDF pressure cartridges produces a force on the retracted piston to overcome the friction of the retainer and drive the pistons out. The pistons are connected to thruster adapters which connect to the torque tubes. Rotation of the torque tube allows the panels to unlock. Operation of either CDF pressure cartridge will rotate the torque tube.

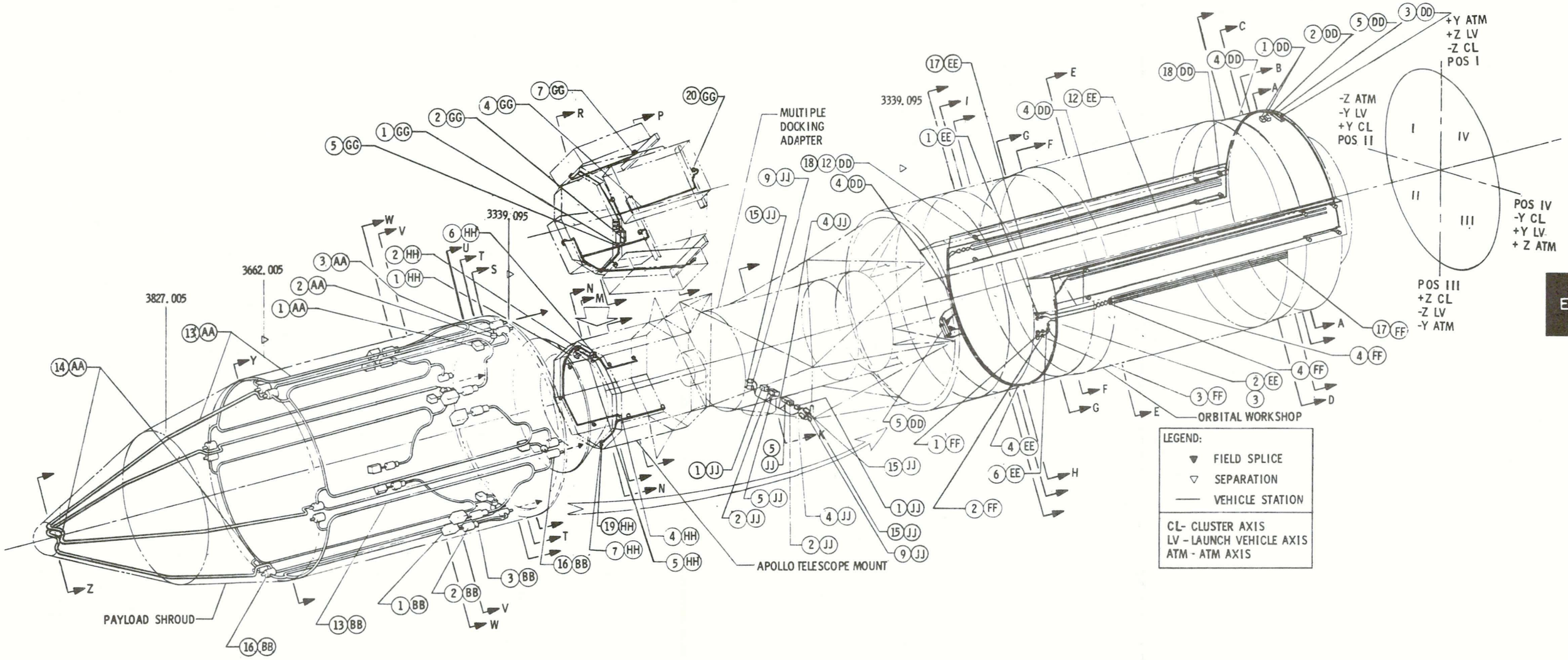

Figure 2.7-1 Ordnance Systems, Skylab A (Location)

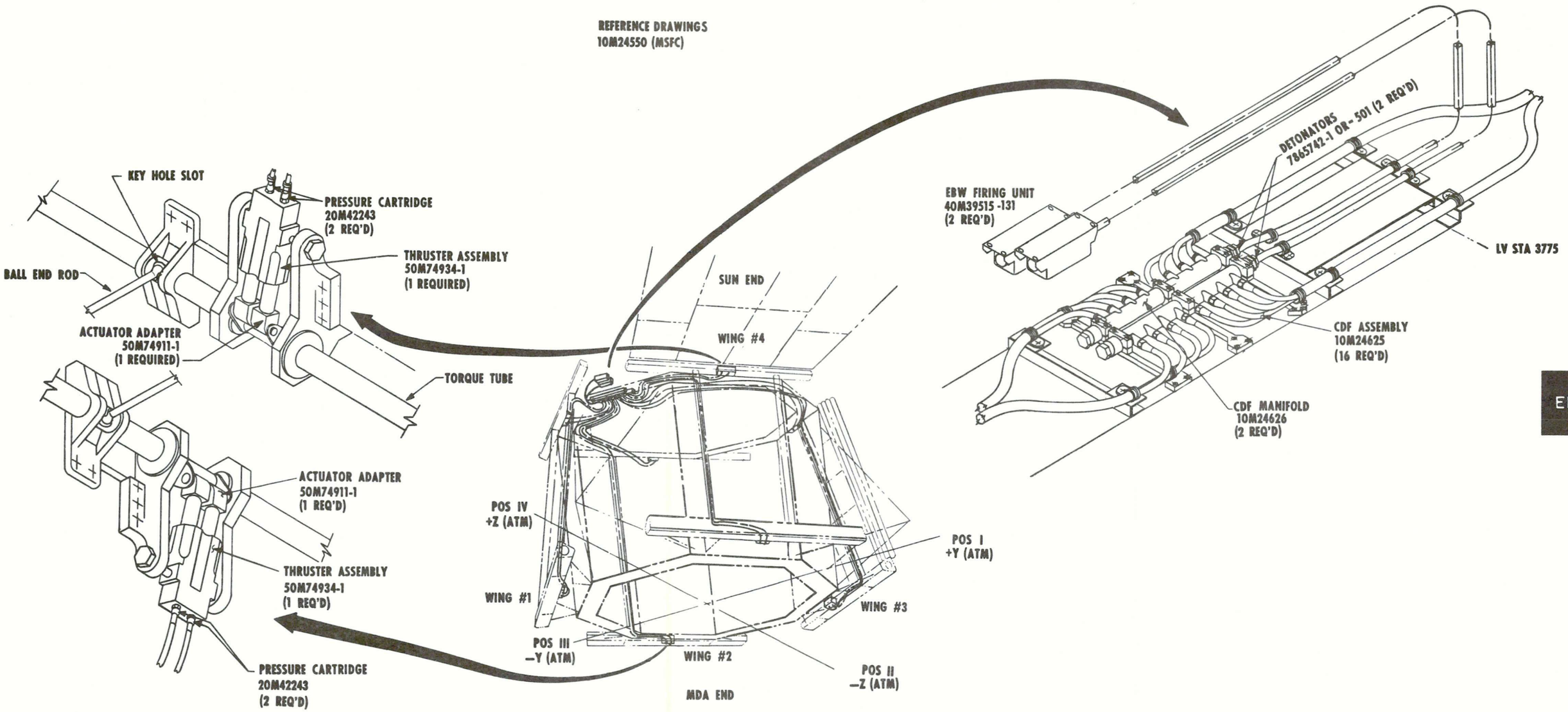

Figure 2.7-2 ATM Solar Panel Decinching Mechanism

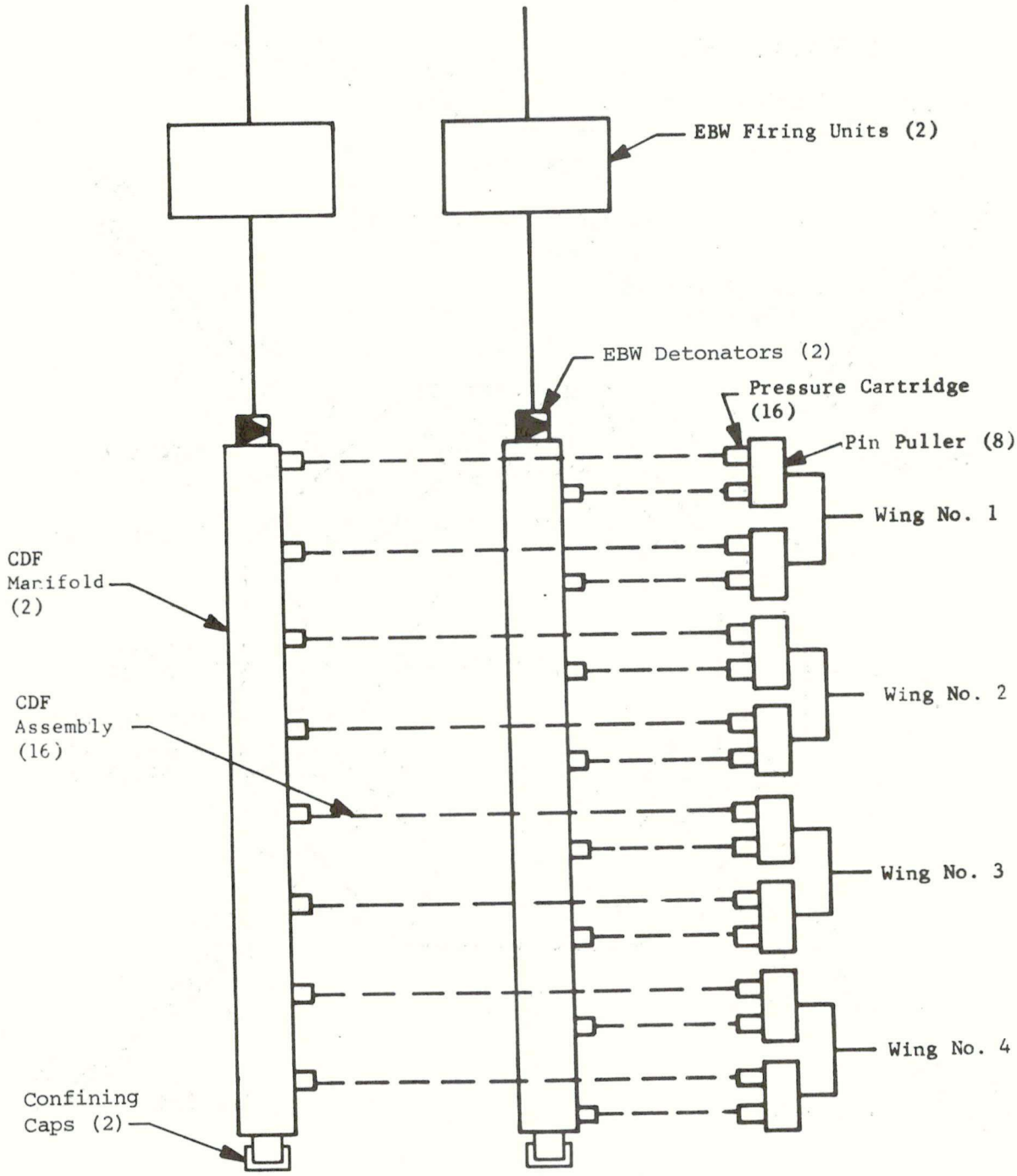

Figure 2.7-3 ATM Solar Panel Cinching Release Schematic

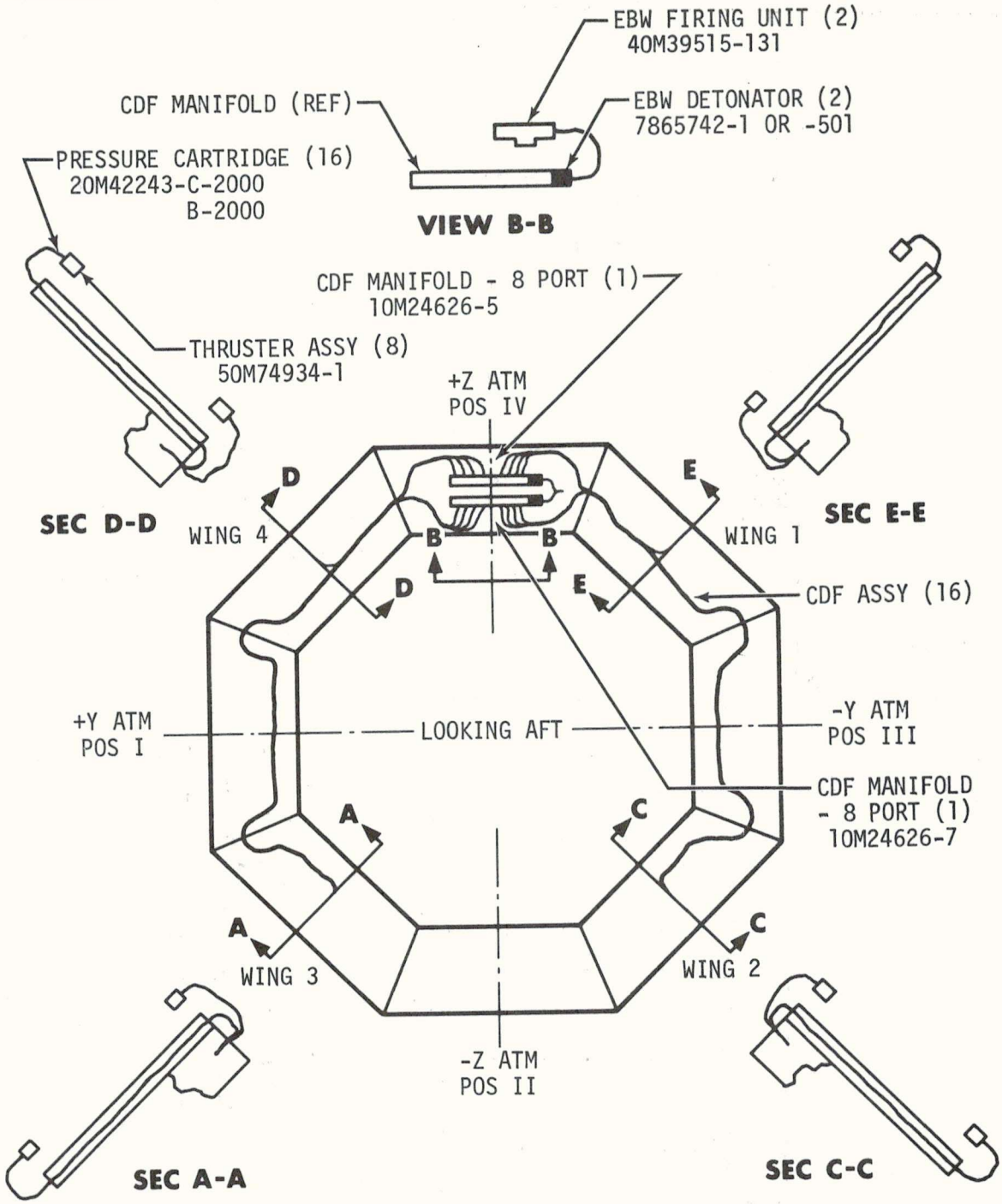

Figure 2.7-4 Ordnance System for ATM Solar Panel Cinching Release

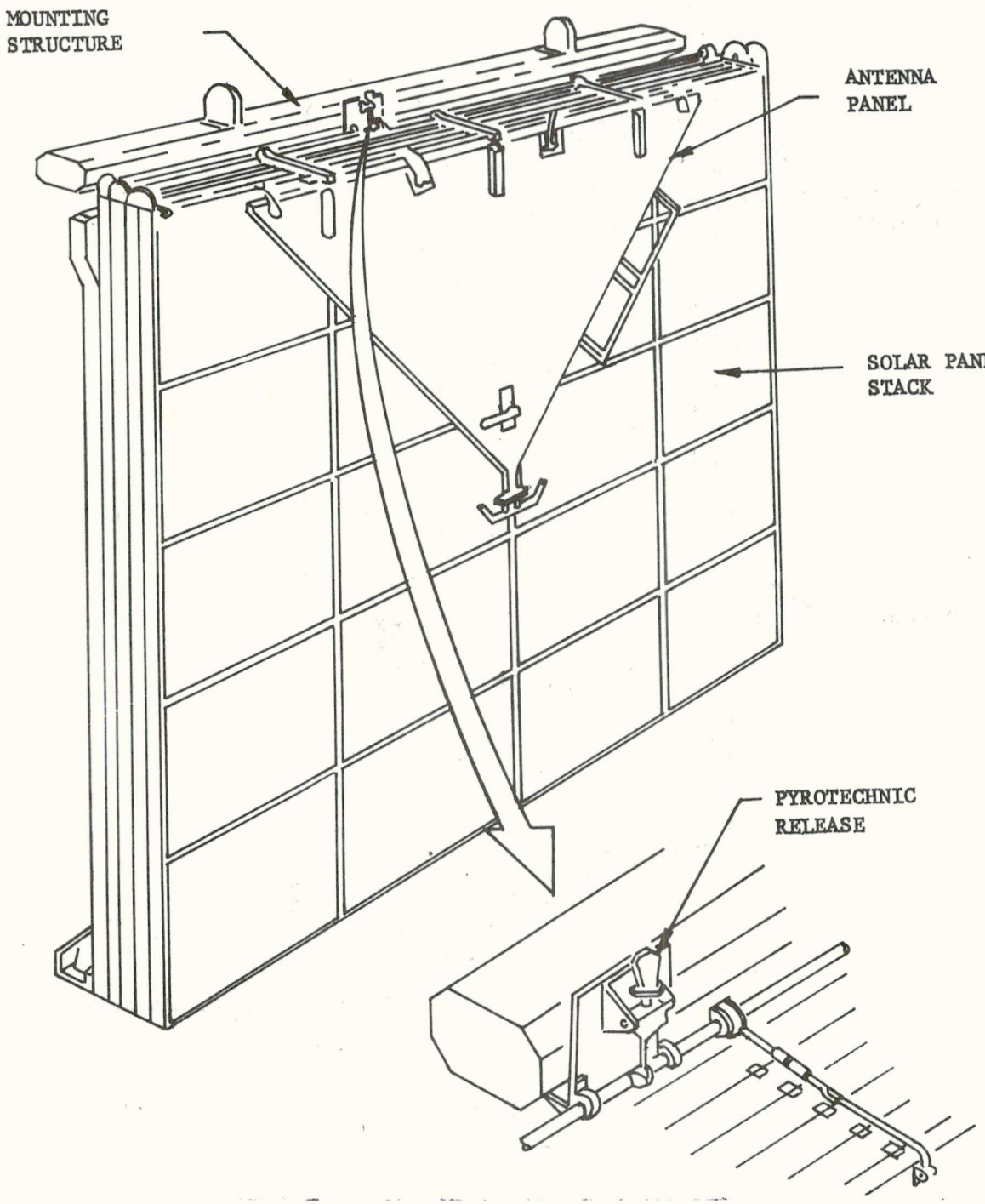

Figure 2.7-5 ATM Solar Panel Decinching Mechanism

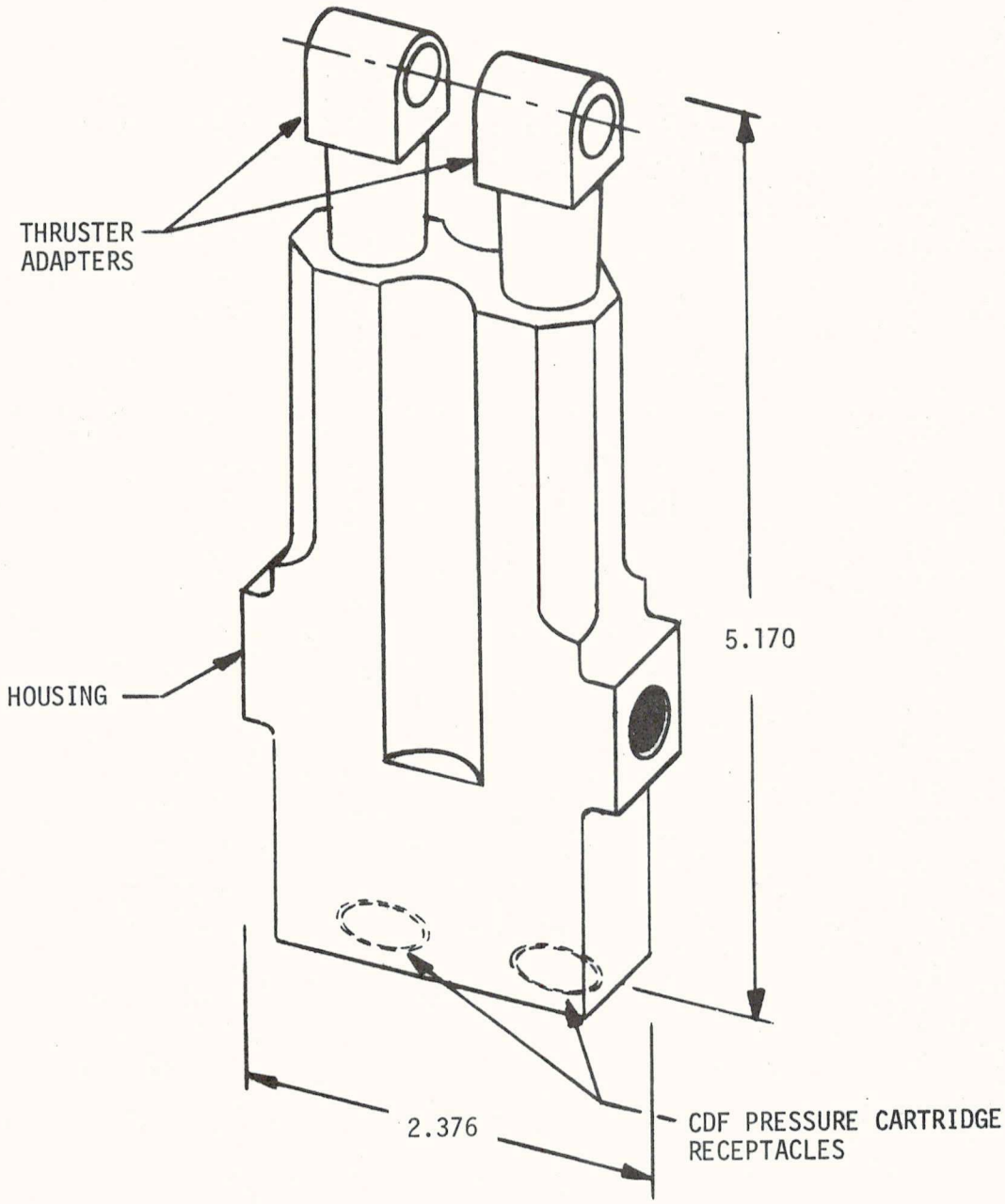

Figure 2.7-6 Thruster Assembly

EBW Firing Unit - See Section 2.7.5.1

EBW Detonator - See Section 2.7.5.2

CDF Assembly - See Section 2.7.5.3

CDF Manifold - See Section 2.7.5.4

CDF Pressure Cartridge - See Section 2.7.5.8

2.7.3.2 - The function of the ATM Launch Lock Release Mechanism is to remove the constraints that hold the ATM canister during launch. The ATM experiment canister is a cylinder approximately seven feet in diameter, ten feet long and is closed at both ends except for experiment viewing doors. The canister is positioned inside a rack by means of two gimbal rings. The ATM launch locks secure the canister within the rack during launch phase. The mechanism consists of upper and lower lateral launch locks as well as a torsional launch lock that are released by ordnance devices after acceleration and vibration loads have subsided. See Figures 2.7-7, 2.7-8, 2.7-9, 2.7-10, and 2.7-11 for ordinance installation and mechanism. Refer to 10M24550-B.

Ordnance in the release mechanism consists of two EBW firing units, two EBW detonators, two CDF manifolds, two CDF Tees, twenty-one CDF assemblies, and eighteen CDF pressure cartridges.

EDS

The initiation for this ordnance is accomplished automatically by the IU or by the AM DCS concurrent with solar array decinching.

The launch lock pin puller (Figure 2.7-11) is a device which withdraws an extended pin upon receiving a pressure pulse from a CDF pressure cartridge. The pressure cartridge is mated to this pin puller by insertion via a screw thread. The pin is installed extended and a shear pin inserted in the housing to keep the pin extended until actuation. Initiation of the pressure cartridge increased the pressure until it overcomes the shear pin and frictional resistance and retracts the pin thereby unlocking the ATM canister from the ATM rack.

EBW Firing Unit - See Section 2.7.5.1

EBW Detonator - See Section 2.7.5.2

CDF Assembly - See Section 2.7.5.3

CDF Manifold - See Section 2.7.5.4

CDF Tee - See Section 2.5.7.5

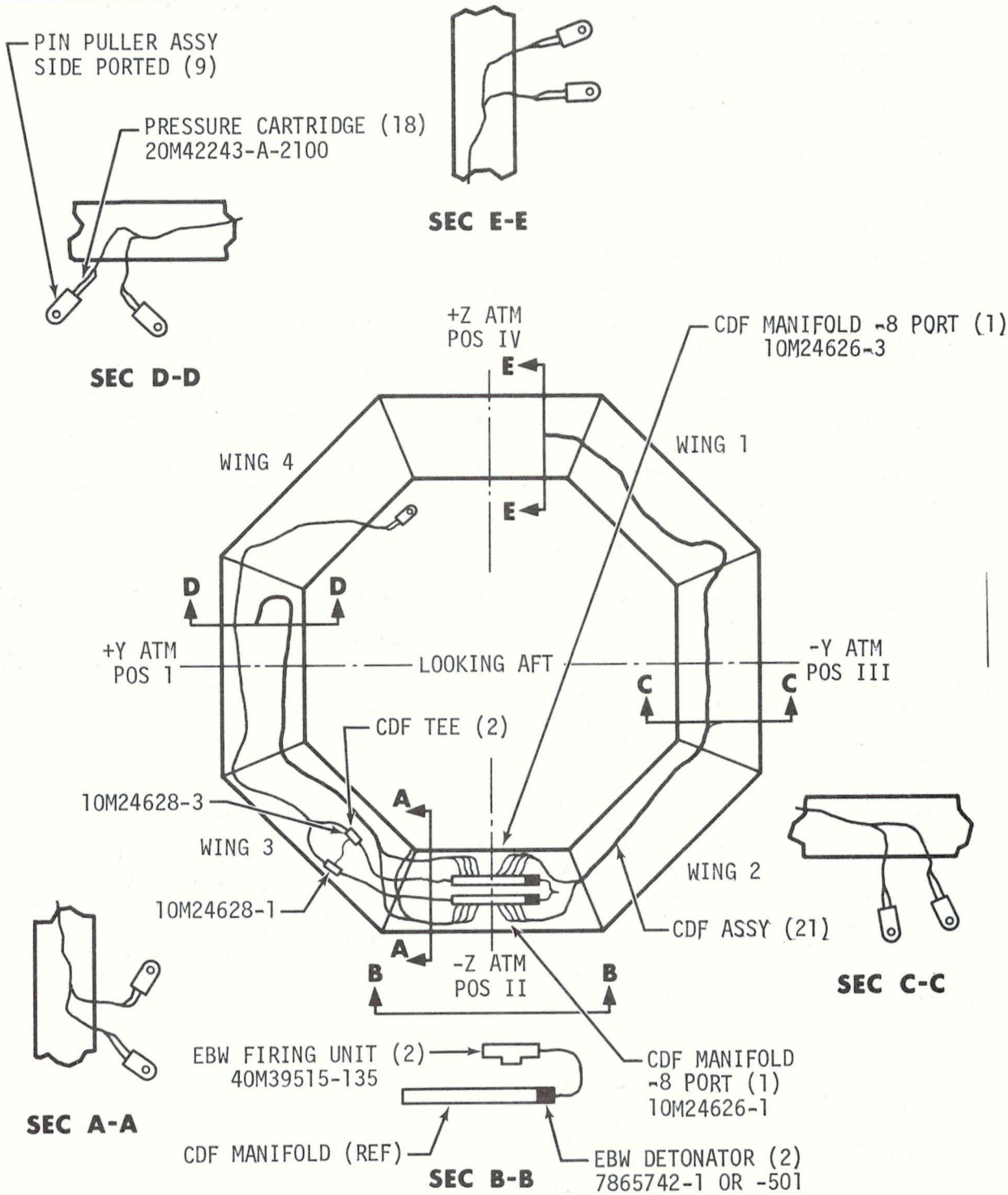

Figure 2.7-7 ATM Launch Lock Release Ordnance Routing

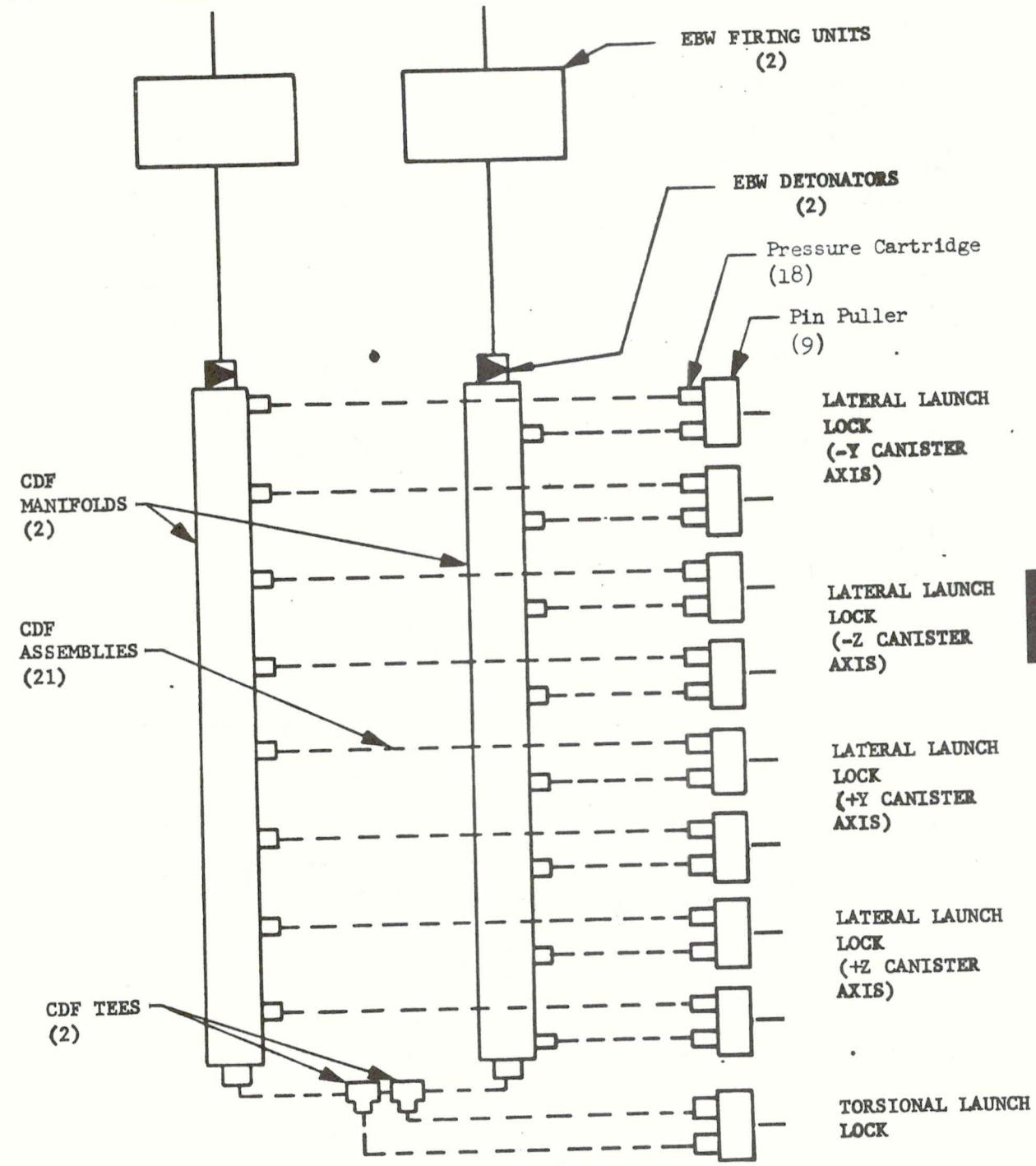

Figure 2.7-8 ATM Launch Lock Release Schematic

EDS

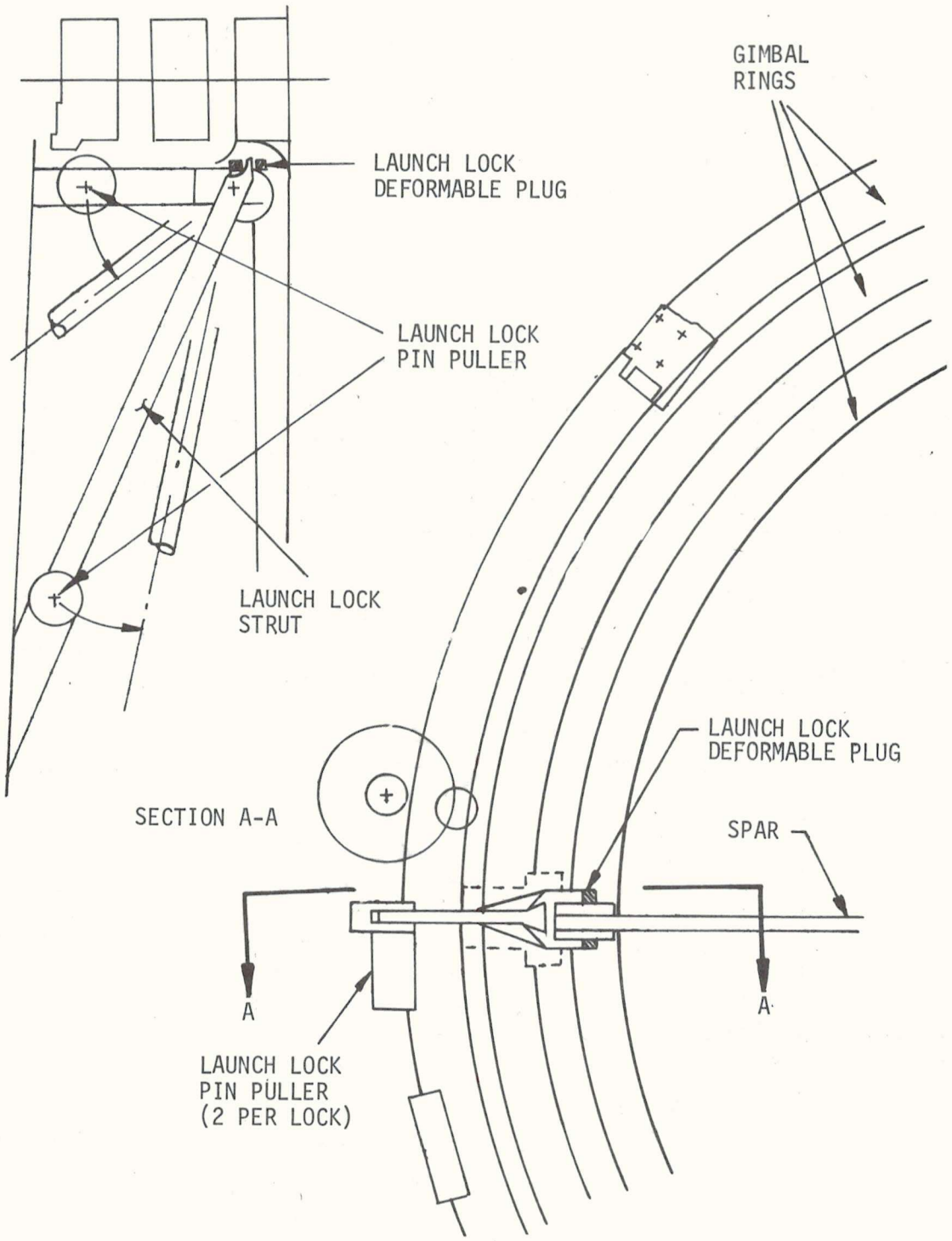

Figure 2.7-9 ATM Launch Lock Mechanism

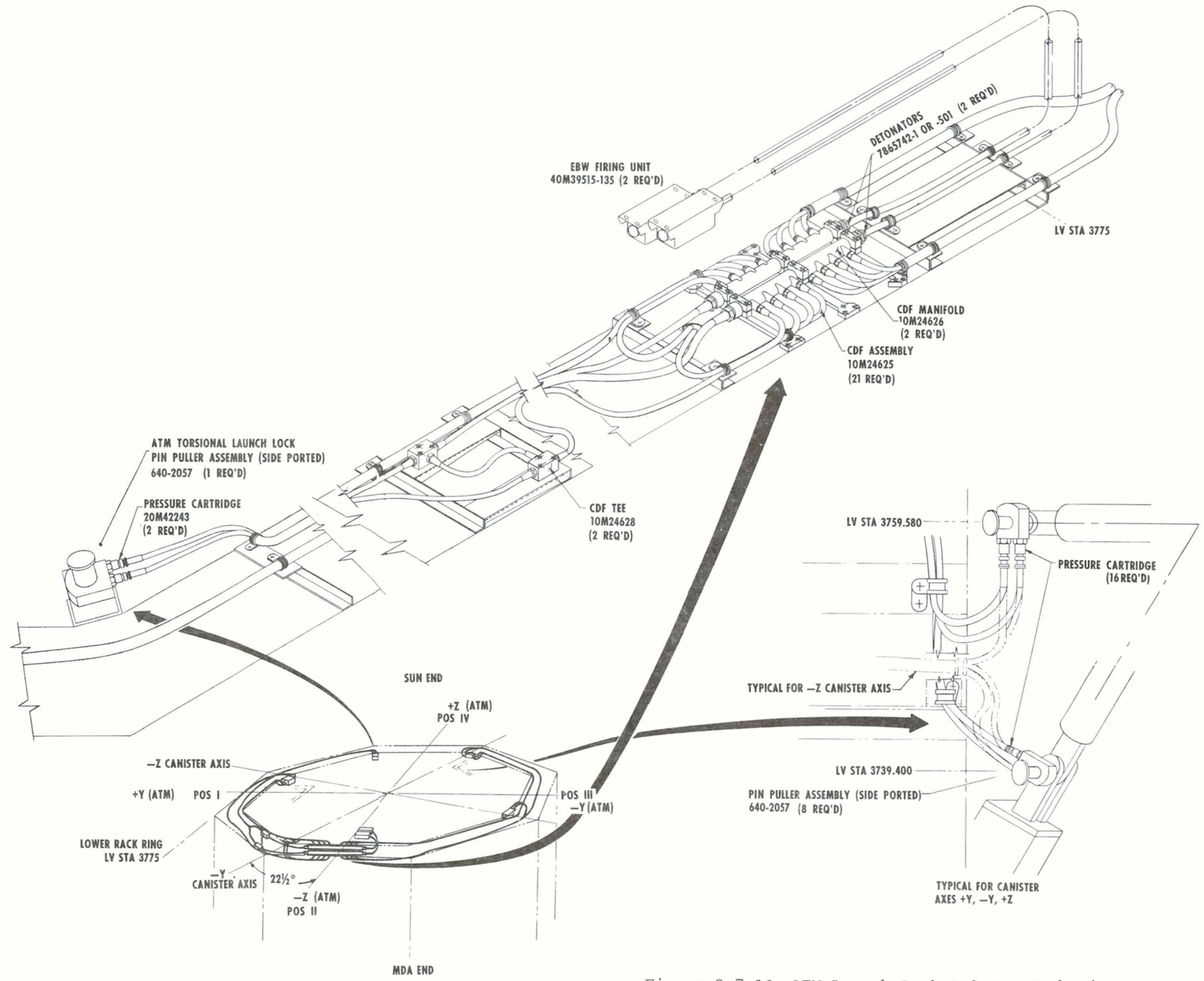

Figure 2.7-10 ATM Launch Lock Release Mechanism

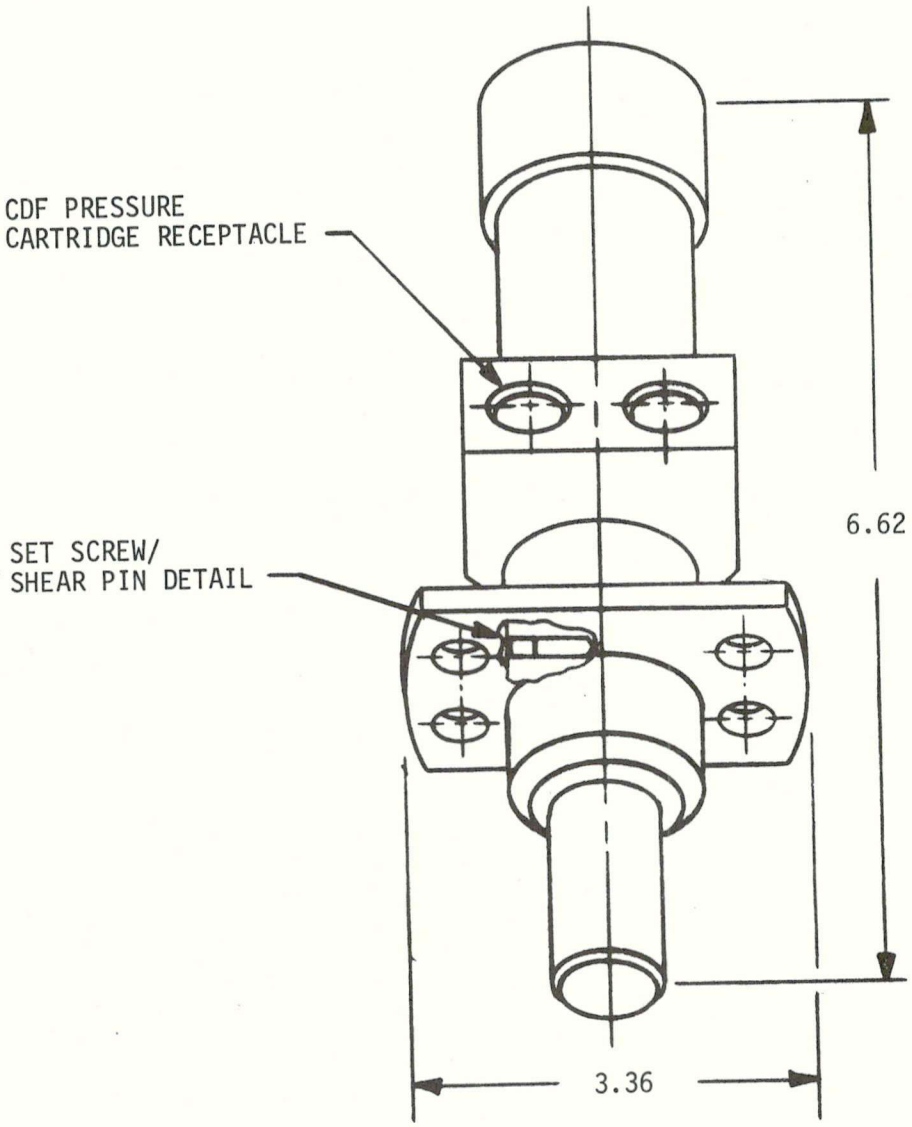

NOTE: ALL DIMENSIONS IN INCHES

Figure 2.7-11 ATM Launch Lock Pin Puller

CDF Pressure Cartridge - See Section 2.7.5.8

2.7.5 Performance and Design Data (with Operational Limitations and Restrictions, 2.7.6, combined).

The following performance, Design Data, Operational Limitations and Restrictions are described for the common ordnance items used for more than one function on SKYLAB ATM.

2.7.5.1 Exploding Bridgewire Firing Unit - Description. The exploding bridgewire (EBW) firing unit (Figure 2.7-12) is a solid-state electronic device that provides a high current pulse to fire an EBW detonator. Two input signals are necessary to the firing unit function. The first signal applies power to the charging circuitry, allowing a storage capacitor to charge to 2300 vdc. The second signal triggers an electronic switch, causing the storage capacitor to discharge into the EBW detonator.

Characteristics.

A. Electrical

1. Power Input: 28 ± 4 vdc; maximum continous, 36 vdc.

2. Peak Current Input: 2.0 amps.

3. Steady-State Average Current Input: 250 milliamps.

4. Storage Capacitor Output Voltage: 2300 ± 100 vdc.

5. Storage Capacitor Charge Time: Charge to 2200 vdc in 1.5 seconds maximu m

6. Storage Capacitor Bleed Discharge Time: The storage capacitor bleed circuit will discharge the storage capacitor to 300 vdc within 15 seconds after input power removal. The bleed circuit shall provide redundant bleed paths so that a single failure will not cause complete loss of the bleed circuit. Either bleed path shall allow the stored voltage to decay to 300 volts within 90 seconds after input power removal.

7. Storage Capacitor Monitor Circuit: The firing unit has a monitoring circuit which indicates the voltage to which the storage capacitor is charged. Monitor circuit impedance is 10K ohms ± 1.0 percent. Monitor voltage does not exceed 4.9 vdc under normal operating conditions or 3 vdc when the storage element is out of the circuit. Nominal sensitivity is 500 volts per volt under open circuit conditions.

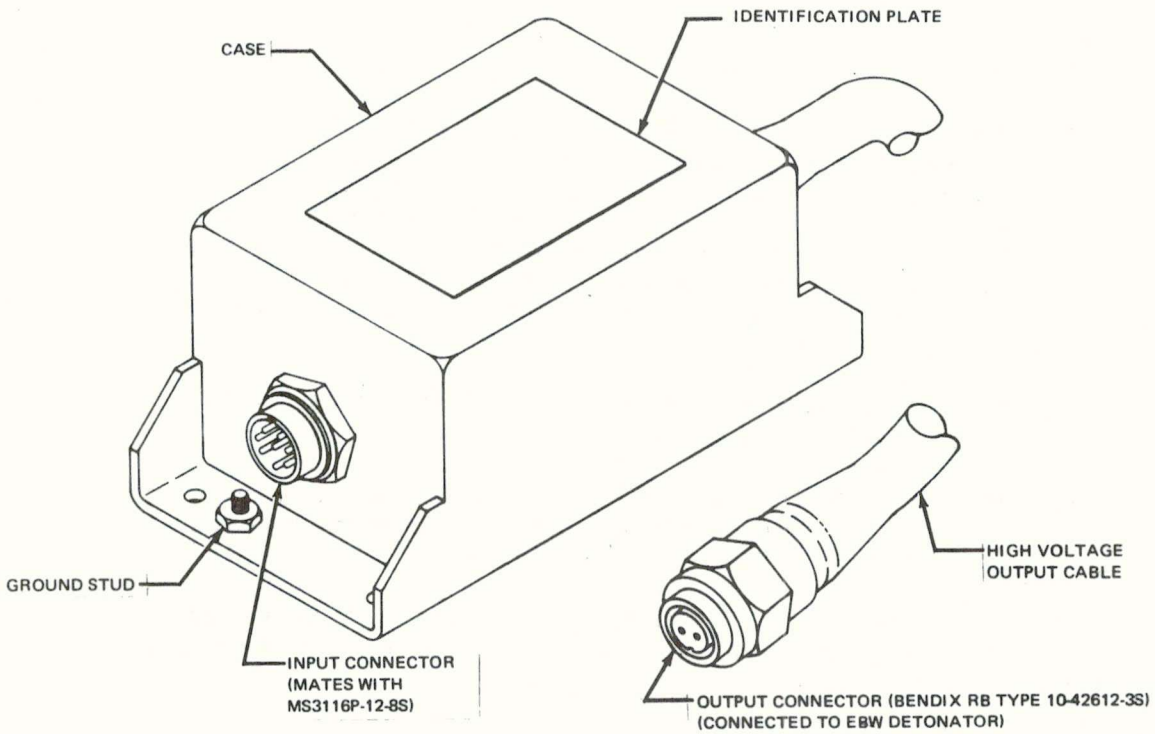

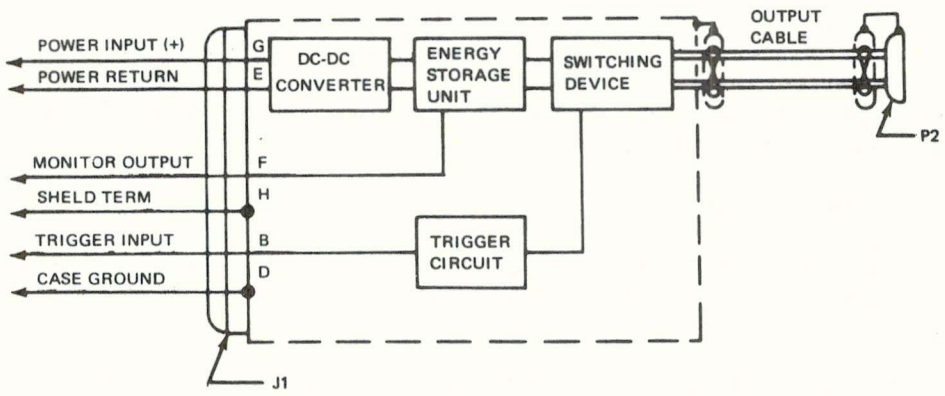

BLOCK DIAGRAM

Figure 2.7-12 EBW Firing Unit

8. Trigger Circuit Power Input: 28 ± 4 vdc.

9. Trigger Circuit Response Time: 4 ± 1 milliseconds.

10. Trigger Circuit Sensitivity: Requires a peak input current of 110 milliamps minimum, 250 milliamps maximum, to operate. After operation, steady state average trigger circuit input current will not exceed 75 milliamps. The trigger circuit will not actuate when subjected to an 8 vdc input signal or an input transient pulse of 50 volts amplitude and 10 microsecond duration.

11. Peak Input Current to Power Supply After Trigger Signal Application: 50 milliamps.

12. Switching Device Hold-Off Characteristics: Shall hold off 4000 vdc minimum when subjected to 45 g zero-to-peak vibration at 60 Hz.

B. Input Connector J1. Mates with an MS 3116P-12-8S connector and is in accordance with MIL-C-26482. Pin assignments shall be as follows:

PIN	FUNCTION
A	No Connection
B	Trigger Input (+)
C	No Connection
D	Case Ground
E	Power Return (-)
F	Storage Capacitor Monitor Output
G	Power Input (+)
H	Shield Termination (Case Ground)

C. Output Connector P2. Bendix RB Type 10-42612-3S using pin B for the output and pin A for return.

D. Operating Temperature. -65 to +200°F.

E. Component Life. In a continually "on" state, the firing unit will perform 1000 operations minimum, receiving a trigger signal every 15 minutes.

F. Output Cable. The EBW firing unit output cable is an integral part of the unit, and its length varies with each installation.

G. Configuration. See General Laboratory Associates Drawing 41496 thru 41515.

H. EBW Firing Unit Installation. See Table 2.7-II.

I. EBW Firing Unit Storage and Handling Requirements. The EBW firing unit is an electronic hardware item and not a true ordnance item; therefore, the storage and handling requirements are not critical and not covered in this manual.

Specification Drawing Number. 40M39515B (MSFC)

Qualification Test. See Section VI, paragraph 6.4.1 of SE005 003 2H.

2.7.5.2 Exploding Bridgewire (EBW) Detonator - Description - The EBW detonator (Figures 2.7-13 and 14) an electrically activated device, initiates high explosive trains installed on the Skylab A systems. The detonator functions on the EBW principle: when a high-voltage, high-energy pulse is applied to a small-diameter, low-resistance wire element, the element explodes with a rapid release of a large amount of energy, adequate to initiate an explosive charge.

Table 2.7-II EBW Firing Unit Installation Summary

EDS

SYSTEM	MSFC P/N	QUANTITY	REF. DWG.	CABLE LENGTH (in.)
ATM Solar Panel Decinching Mechanism	40M39515-143	2	10M24550	36
ATM Launch Lock Release Mechanism	40M39515-147	2	10M24550	48

The detonator does not contain heat-sensitive explosives and is not sensitive to static discharges, rf energy, or inadvertent application of ground or vehicle power. A spark gap in the detonator electrical circuit precludes accidental dudding of the unit. The gap in PIN B of the detonator has a breakdown voltage of 600 to 1200 vdc.

The small end of the detonator, containing the bridgewire and explosives, is installed into the explosive train assembly. Bendix connector RB type 10-4212-3S on the EBW firing unit output cable is connected to the larger end.

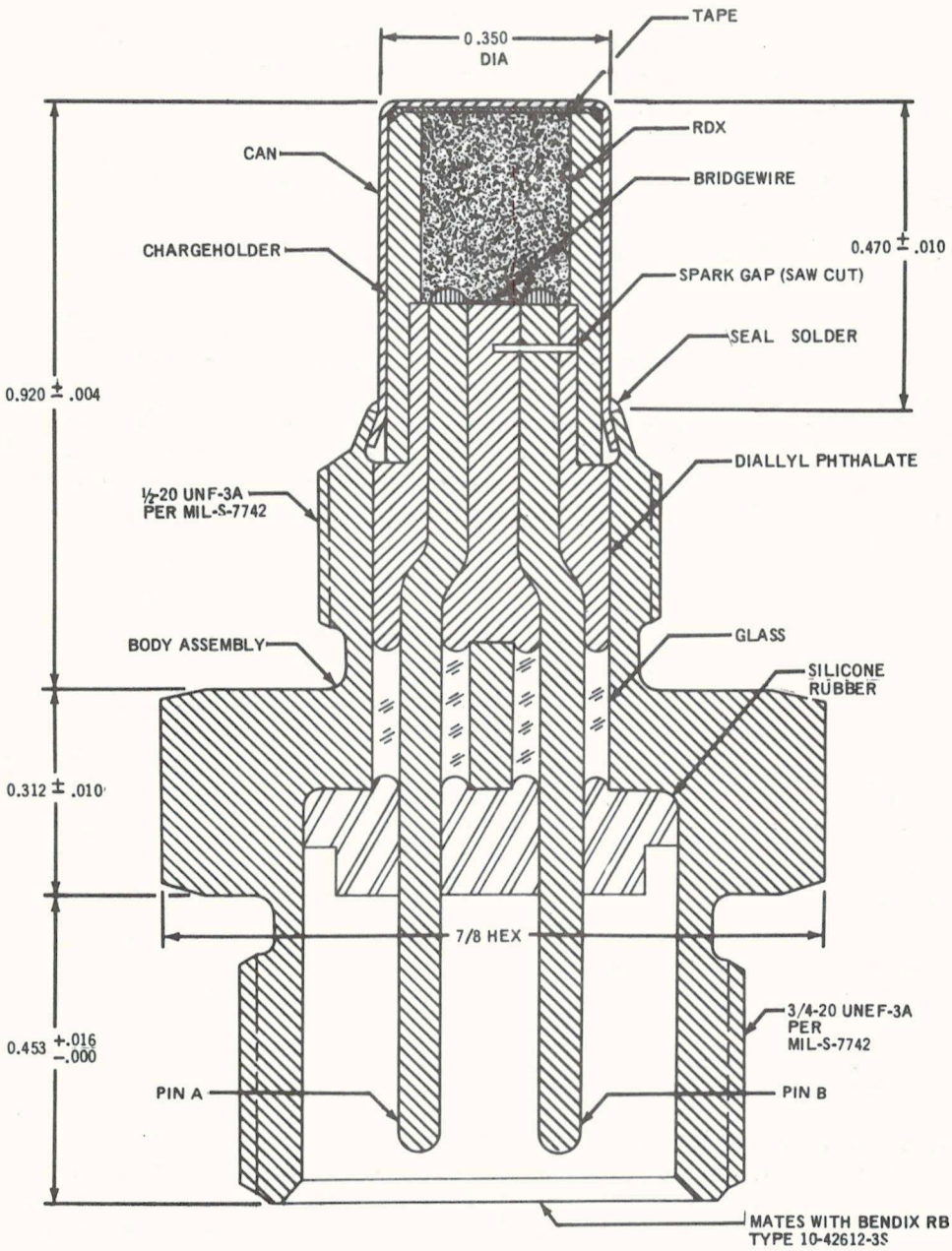

Figure 2.7-13 EBW Detonator (Sectional View)

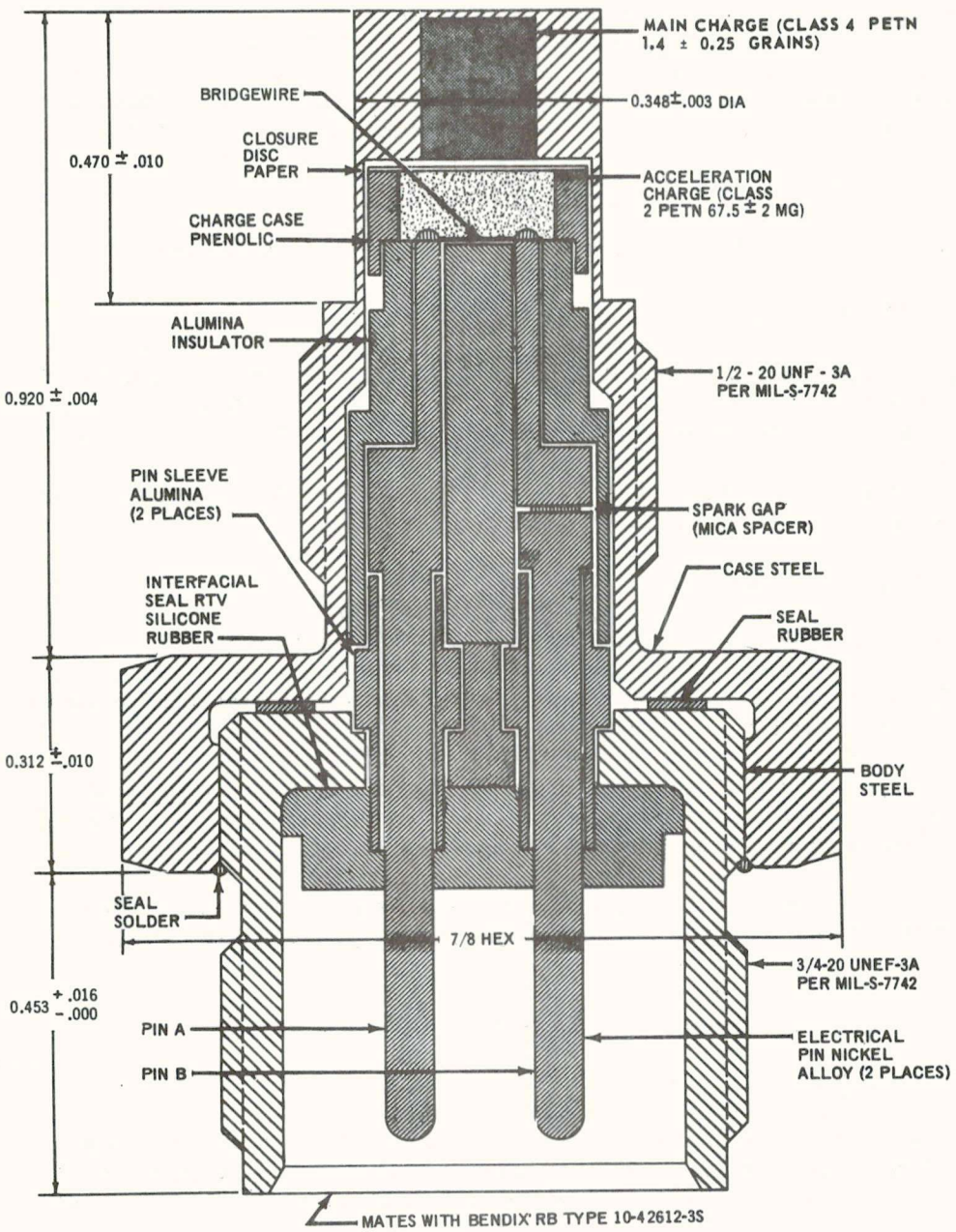

Figure 2.7-14 EBW Detonator, 7865742-1 (Sectional View)

EDS

A 2300 vdc discharge from the EBW firing unit melts the fine bridgewire; however, the magnetic field created by the current causes the melting wire to form a series of lobes. When the lobes become unconnected spheres of molten metal, arcing occurs between the spheres. Very high internal pressures within the molten spheres result in the explosive propulsion of hot particles into the explosive charge. This energy release and shock of the exploding wire are sufficient to initiate charge detonation. McCormick-Selph manufactures the EBW detonator, part number 805630, to MDC specification 7865742.

Characteristics for 7865742-1 (MDC)

A. Main Charge. 1,40 $\pm$ .25 grains of Class 4 PETN per MIL-P-387-A pressed at 18,000 $\pm$ 3000 psi.

B. Acceleration Charge. 67.5 $\pm$ 2.0 mg of Class 2 PETN per MIL-P-387A pressed to a density of 1.08 gm/cc. See paragraph 2.7.5.6 in this section for PETN explosive information.

C. Bridgewire. Composition is Secon 443, diameter 0.002 inch, length 0.087 inch, resistance 0,17 $\pm$ .03 ohm.

D. Insulation and Protective Devices.

1. Alumina sleeves hold the electrical pins in place.

2. Mica spacer, 0.004 to 0. 005 inch thick square, installed between the two sections of pin B.

3. A 0.004 to 0.005 inch spark gap is created in the four areas where the mica spacer does not cover the pin B end sections. Arc-over occurs between 600 tol200 vdc.

4. Connector end of the detonator contains and interfacial seal, RTV silicone rubber bonded in place, to prevent electrical losses.

E. Case. Cadmium plated per QQ-P-416A, Type I, Class 2.

F. Assembled Unit.

1. Detonator Circuit Resistance: with the bridgewire assembly installed, the detonator electrical circuit resistance shall be a minimum of 100 megohms measured between pins in either direction at 500 vdc and 70° F.

2. Dielectric Characteristics: In the loaded condition, resistance from the shorted pins to case is a minimum of 100 megohms at 1200 vdc, for 60 seconds measured at ambient conditions.

3. Detonator No - Fire Conditions: The detonator shall not function and shall remain operable when subjected to the conditions specified in paragraphs 3a through 3h, following, applied in any sequence. With the spark gap shorted, the detonator shall not function when subjected to these conditions.

   a. Direct Current: 36 vdc from a 0.1 ohm impedance source, applied across terminals and between the terminals and case for a minimum of 15 minutes.

   b. Alternating Current:

      (1) 115 vac, 60 Hz from a 0.2 ohm impedance source or 115 v, 400 Hz from a 1.0 ohm impedance source, across the terminals and between the terminals and case for a period of 15 minutes.

      (2) Same for 250 VAC.

   c. Static Discharge: A 9000-vdc discharge from a 500 picofarad capacitor across the detonator terminals and between the terminals and case.

   d. Under-Charged Firing Unit: The 40M39515 EBW firing unit storage capacitor charged to 500 vdc across the detonator terminals and between the terminals and case using test leads with a maximum length of 4.0 feet.

   e. RF Energy: A radio frequency (RF) field of 100 milliwatts per square centimeter over a frequency range of 2 to 30,000 MHz.

   f. Firing Unit Capacitor Out: A signal simulating the EBW firing unit output without the storage capacitor in the circuit, applied across the terminals and case for 15 minutes. This signal, a 6000 vdc discharge from a 1,000 picofarad capacitor, is to be repeated 800 to 1000 times per second.

   g. No-Fire Power Sensitivity: The detonator shall not fire, but may be rendered inoperative (dudded), as the result of the application of a direct current power of 1-watt for five minutes to the bridgewire.

   h. No-Fire Current Sensitivity: The detonator shall not fire, but may be rendered inoperative (dudded), as the result of the application of a direct current of 1-ampere for five minutes to the bridgewire.

EDS

4. Functioning Time and Firing Energy: Under all temperature environmental conditions specified in MDC Control Specification 7865742, the detonator shall function (high order detonation) in 5 microseconds or less when subjected to a firing pulse from the 1.0 microfarad system storage capacitor in EBW firing unit 40M39515 that has been charged through a range of 2000 to 2400 volts. The firing pulse will be transmitted to the EBW detonator through the firing unit cable having a maximum length of 4.0 feet.

5. Safe and Operable Conditions: The detonator is capable of functioning both during and after exposure to the following conditions:

   a. Temperature: -65 to 165°F for five years, 250°F for 30 minutes.

   b. Humidity: 100% relative humidity at 75 to 80°F for 10 hours.

   c. Salt Spray: 20% NaCl solution by weight in spray form at 95°F.

   d. Altitude: Sea level to 985,000 feet, provided there is no electrical loss external to the hermetically sealed portion of the detonator.

   e. Vibration: Random in nature with sinusoidal components. The levels experienced in flight will not exceed the values listed.

5 to 25 Hz	0.50 inch double amplitude displacement
25 to 65 Hz	20 g-vector
65 to 120 Hz	0.08 inch double amplitude displacement
125 to 2200 Hz	65 g-vector

   f. Acceleration: 7.0 g's

   g. Shock: 100 g's for 10 milliseconds (triangular wave).
   100 g's for 8 milliseconds (Sine Wave):
   100 g's for 6 milliseconds (Square Wave).

   h. Drop: 8 foot fall onto a steel plate.

6. Storage:

   a. Temperature: -65 to 160°F.

   b. Humidity: Unit is hermetically sealed and not affected by relative humidity.

   c. Procedure: Bendix 7-0-12, -37, -35, and -46.

   d. Storage Life: Contact MDC Engineering for disposition (5) years from date of manufacture.

7. ICC Classification: Class C.

C. EBW Detonator Installations. See Table 2.7-III

Table 2.7-III EBW Detonator (7865742) Installation Summary

SYSTEM	QUANTITY	REF. DWG.
ATM Solar Panel Decinching Mechanism	2	10M24550
ATM Launch Lock Release Mechanism	2	10M24550

EDS

Characteristics for 7865742-501 (MDC)

A. Main Charge. 162 ± 2 mg of RDX Type B, Class E, per MIL-R-398C loaded at a density of 0.95 ± 0.5 gm/cc. See paragraph 2.7.5.6 in this section for RDX explosive information.

B. Bridgewire. Composition is Tophet "A", diameter 0,002 inch, length 0.080 in., resistance 1.10± .15 ohms.

C. Insulation and Protective Devices.

1. Glass inserts hold the electrical pins in place.

2. A 0.004 to 0.005 inch spark gap is cut into pin B during assembly. Arc-over occurs between 600 to 1200 vdc.

D. Case. Gold plate per MIL-G-45204, Type II, Class I

E. Assembled Unit. See paragraph 2.7.5.2.

F. EBW Detonator Installations. See Table 2.7-III.

Specification Drawing Number. MDC Specification Control Drawing 7865742.

2.7.5.3 Confined Detonating Fuse Assembly - Description. The confined detonating fuse (CDF) assembly is an explosive device which provides a means of detonation propagation between ordnance devices. It is the basic explosive transfer assembly used in the Skylab A systems. A total of (37) assemblies are used on the ATM Solar Array Decinching Mechanism and Launch Lock Release Mechanism.

The assembly (Figures 2.7-15 and 2.7-16) consists of a lead tube to encase the explosive core, layers of material as confining agent, identical end connectors and sleeves, locking devices, and booster charges. Each sleeve incorporates index keys (Figure 2.7-15) to prevent connection of unrelated ordnance systems. The purpose of the booster and carrier charges is to ensure detonation transfer to the mating device. The end fitting assemblies are provided with confining caps during storage, shipping, and handling which along with the fuse confining materials render the device incapable of causing injury or damage to personnel and equipment.

Characteristics.

A. Explosive Core

1. Chemical Composition: PETN

2. Quantity: 2.0 $\pm$ .2 grains per foot (gpf).

3. Loading Pressure: Not applicable.

4. PETN Explosive Information: See paragraph 2.7.5.6 in this section.

B. Carrier Charge.

1. Chemical Composition: PETN, superfine

2. Quantity: 0.3 grains $\pm$ 10%.

3. Loading Pressure: Compacted to 1090 to 1190 psi.

4. PETN Explosive Information: See paragraph 2.7.5.6 in this section.

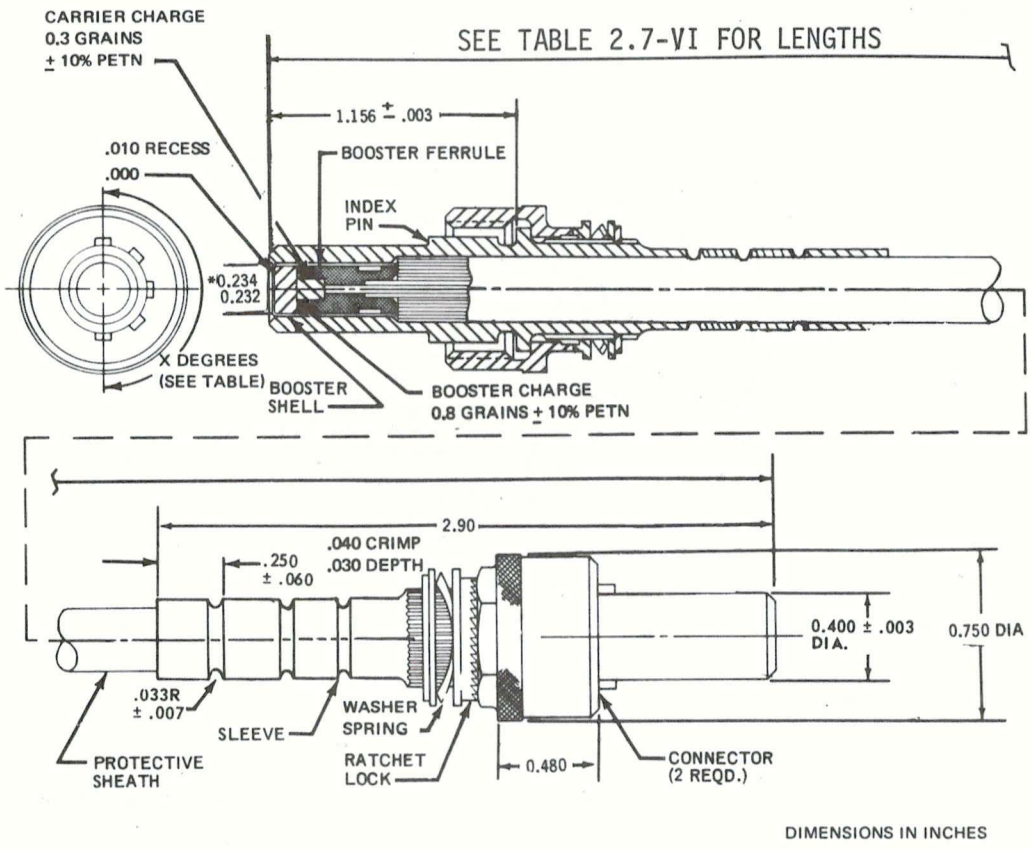

END FITTING INDEX PIN ORIENTATION

SERIES	INDEX PIN ORIENTATION (±0.5°)	APPLICATION
A	45°	Launch Lock Release
B	90°	Solar Array Decinching
C	135°	Solar Array Decinching

Figure 2.7-15 Confined Detonating Fuse Assembly (Sectional View)

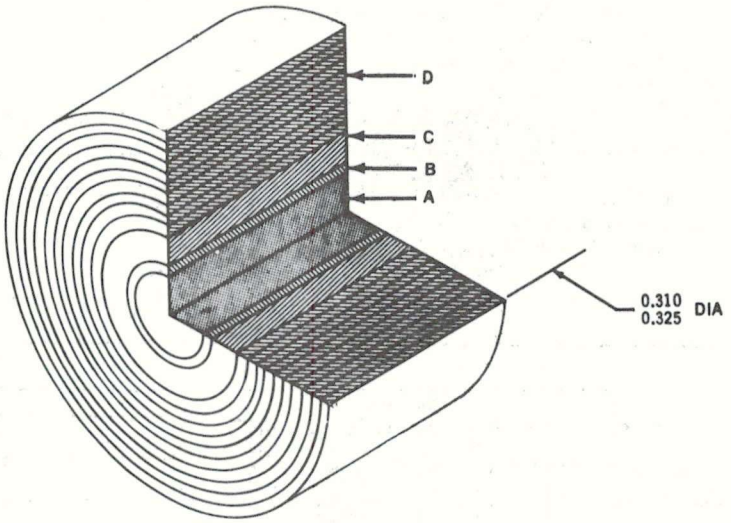

DIMENSIONS IN INCHES

LEGEND

A	2.00 + .2 GPF PETN MDF
B	Lead Sheath, .050 + .002 DIA.
C	Plastic Jacket, .095 + .003 DIA.
D	Fiberglass Braid, 10 Layers

Figure 2.7-16 Confined Detonating Fuse (Section View)

C. Booster Charge

1. Chemical Composition: PETN, superfine.

2. Quantity: 0.8 grains ± 10%.

3. Loading Pressure: Compacted to 488 to 512 psi.

4. PETN Explosive Information: See paragraph 2.7.5.6 in this section.

D. Complete Assembly.

1. Configuration and Dimensions: See Figure 2.7-15. and the Table 2.7-IV.

2. ICC Classification: Class C

3. Impact Sensitivity: 10-pound steel weight with a 1-inch diameter striking face dropped from a height of 16 feet.

4. Auto-ignition Temperature: Not less than 275°F.

5. Storage.

a. Temperature: -65 to 160°F.

b. Humidity: 0 to 100%

c. Procedure: Bendix 7-0-12, -37, -35.

d. Storage Life: 3 years from date of delivery.

E. Confined Detonating Fuse Assembly Installation. See Table 2.7-IV.

Specification Drawing Number. NR ME901-0053, Ensign-Brickford Co. 202024E, and 202035F (insulated).

Qualification Test. See Section VI, paragraph 6.4.4 of SE005 003 2H.

Table 2.7-IV CDF Assembly Installation Summary

SYSTEM	PART NUMBER	END FITTING INDEX PIN ORIENTATION	LENGTH (INCHES-REF)
ATM Solar Panel Decinching Mechanism	10M24625-43	135°	93
	-45	90°	93
	-47	135°	246
	-49	90°	240
	-51	135°	186
	-53	90°	183
	-55	135°	348
	-57	90°	336
	-59	135°	188
	-61	90°	188
	-63	135°	348
	-65	90°	348
	-67	135°	99
	-69	90°	99
	-71	135°	252
	-73	90°	252
ATM Launch Lock Release Mechanism	10M24625-1	45°	33
	-3		30
	-5		66
	-7		66
	-9		72
	-11		69
	-13		186
	-15		186
	-17		183
	-19		186
	-21		144
	-23		144
	-25		144
	-27		144
	-29		240
	-31		240
	-33		246
	-35		240
	-37		15
	-39		144
	-41		150

2.7.5.4 Confined Detonating Fuse Manifold - Description. The confined detonating fuse (CDF) manifold (Figure 2.7.17) is a device capable of simultaneously initiating a number of CDF assemblies. It consists of an explosive charge contained in a metal block of sufficient strength to confine all products of detonation. The CDF manifold is designed to be initiated by either an EBW detonator installed in the detonator part or a CDF assembly installed in the jumper port (Figure 2.7.18).

Normal propagation through the manifold proceeds from the EBW detonator through all the CDF assembly boosters as well as through the jumper port. If the EBW detonator fails to initiate the manifold, the CDF assembly installed in the jumper port will provide a redundant ignition path to the manifold.

Characteristics.

A. X-Cord.

1. Material: Cyclotrimethylene-trinitramine (RDX), 20 $\pm$ 2 gpf per MIL-R-398C.

2. Configuration: See Explosive Technology drawing 40233.

3. RDX Explosive Information: See paragraph 2.7.5.6 in this section.

EDS

B. Manifold Housing:

1. Materials: 1-1/8 diameter 2024-T4 aluminum rod per QQ-A-268 COND T.

2. Configuration: Refer to Explosive Technology drawing drawing 20242.

C. Booster Cap.

1. Location: Cap soldered to each end of the RDX cord using pure indium solder.

2. Configuration: Refer to Explosive Technology drawing 20235.

D. Confining Cap

1. Material: 3/4 Hex stock type 303 free machined stainless steel.

2. Configuration: Refer to Explosive Technology Drawing 20239.

E. Seal.

1. Material: Polyethylene per MIL-P-3803.

2. Configuration: Refer to Explosive Technology drawing 20279.

F. Threaded Bushing:

1. Material: Type 303 free machining stainless steel.

2. Configuration: Refer to Explosive Technology drawing 2033 (Two Keyways, cernterlines are 45 degrees apart).

G. Retainer Nut.

1. Material: Type 303 free machining stainless steel.

2. Configuration: Refer to Explosive Technology drawing 20288.

H. Assembled Unit.

1. Autoignition: Manifold shall not autoignite when subjected to a temperature of 275°F.

2. Impact: Manifold shall withstand the impact of a 10 pound steel weight dropped from a height of 16 feet without detonation.

3. Operation: One time only.

4. Service - Operation: Manifold shall operate during and after exposure to any combination of the following environmental conditions.

a. Minimum temperature: -65°F for 12 hours.

b. Maximum temperature: 250°F for 15 minutes.

c. Pressure: 10^{-8} torr for 15 seconds.

d. Shock: 90 g's for 10 milliseconds (triangular wave)

e. Vibration:

(1) 15 to 35 Hz transient: 0.4 inch double amplitude displacement. Steady state: 0.2 inch double amplitude displacement.

(2) 35 to 116 Hz transient: $\pm$ 25.3 g Steady state: $\pm$12.6 g.

(3) 116 to 160 Hz transient: 0.037 inch double amplitude displacement. Steady state: 0.019 inch double amplitude displacement.

(4) 160 to 2000 Hz transient: ± 50.0 g. Steady state: ± 25.0 g.

f. Acceleration: 6.25 g in any of the 3 major axes.

g. Acoustics.

Octave (Hz)	Sound Pressure Level (db)
9.375-18.75	146
18.75 -37.5	151
37.5 -75	154
75 - 150	156
150-300	157
300-600	156
600-1200	154
1200-2400	151
2400-4800	147
4800-9600	142
Overall	162.8 (+0, -3)

5. Safe Nonoperating Conditions: Shall be capable of operating after exposure to the following environments under conditions of normal installation without deterioration, damage, or degradation of performance:

a. Temperature: Minimum of 0°F for 12 hours, maximum of 160°F for 4 hours (without solar radiation).

b. Humidity: 0 to 100% including condensation.

c. Fungus: As encountered in a tropical climate.

d. Salt Spray: Equivalent to a 20% NaCl solution for a period not less than 50 hours.

e. Sand and Dust: Equivalent to 140 mesh silica flour with particle velocity up to 500 feet per minute.

f. Ozone: 0.3 part per million for a 3 year exposure period.

6. Weight

a. 2 boss manifold - maximum of 1.5 pounds.

b. 4 boss manifold - maximum of 2.5 pounds.

EDS

c. 8 boss manifold - maximum of 4.0 pounds

7. Detonator Port: Shall accept an EBW detonator in accordance with MDC 7865742.

8. Configuration: Refer to Explosive Technology drawing 20240.

9. Storage Requirements.

a. Temperature: Minimum of -65° for 8 hour periods maximum of 160° for 4 hour periods.

b. Altitude: 0 to 50,000 feet.

c. Shock: 20 g peak with a half sinusoidal pulse of 20 milliseconds duration.

d. Vibration.

2-14 Hz	0.4 inch double amplitude
14-50 Hz	± 4 g
50-500 Hz	± 1.5 g

e. Confining Plug and Caps: Detonator port, jumper port, and output bosses shall be provided with plug and/or caps adequate to confine explosive effects within the manifold body in event of inadvertent operation of the manifold.

f. Storage Life: 3 years from date of delivery.

g. Procedure: Bendix 7-0-12, -37, -35 and -46.

10. ICC Classification: Class C.

I. CDF Manifold Installation. See Table 2.7-V.

Specification Drawing Number. NR Procurement Specification MC288-0001.

Qualification Test. See Section VI, paragraph 6.4.5 of SE005 003 2H.

TABULATION

NO. OF BOSSES	A	B	NET EXPLOSIVE WEIGHT
2	3.375	1.50	
4	6.375	4.50	.750 GRAMS
8	12.375	10.50	1.40 GRAMS

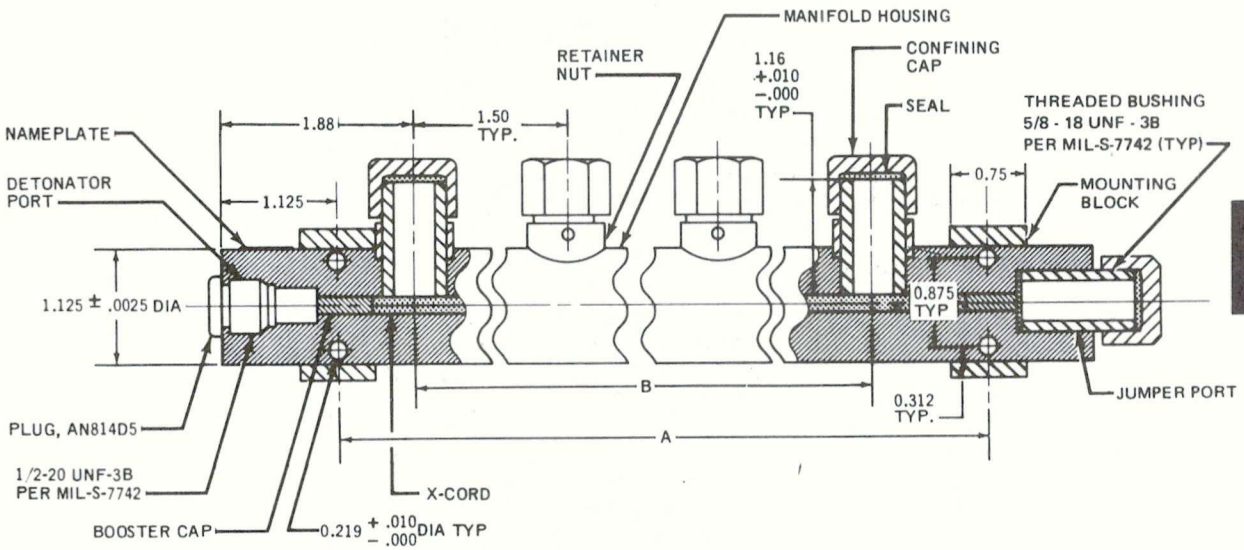

DIMENSIONS IN INCHES

NOTES:

1. 4 BOSS MANIFOLD SHOWN; ALSO USED ARE 2 BOSS & 8 BOSS MANIFOLDS. See Table 8-4 for applications
2. SEE TABULATION FOR DIMENSIONS A&B
3. 8 BOSS MANIFOLD HAS 3 MOUNTING BLOCKS, CENTER BLOCK BETWEEN FOURTH AND FIFTH BOSSES.
4. DIMENSIONS IN INCHES
5. ONE DETONATOR PORT - ONE JUMPER PORT TYPE SHOWN; ALSO USED IS TYPE WITH 2 JUMPER PORTS AND NO DETONATOR PORT.

Figure 2.7-17 Confined Detonating Fuse Manifold (Sectional View)

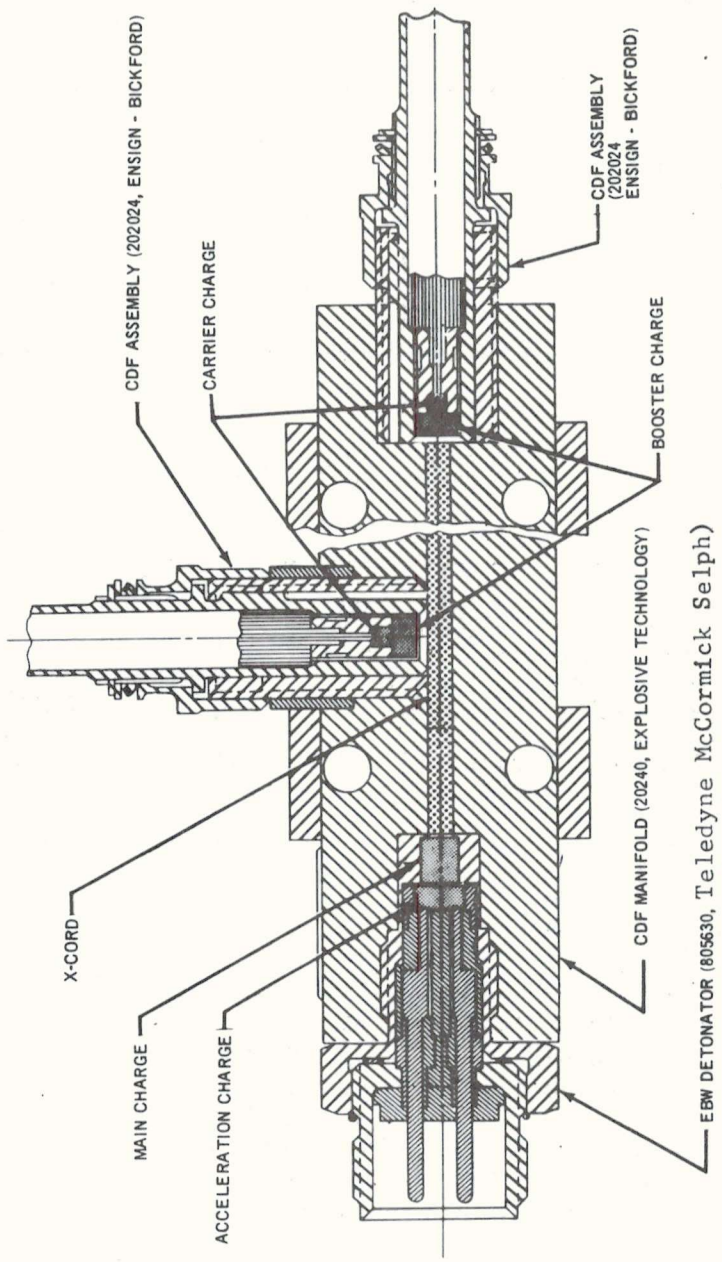

Figure 2.7-18 CDF Manifold and Attached Components (Sectional View)

Table 2.7-V CDF Manifold Installation Summary

SYSTEM		QUANTITY	REF. DWG.	NO. OF BOSSES
ATM Solar Panel Decinching Mechanism	ME 288-0001-0109	1	10M24626-5	8
	ME 288-0001-0209		10M24626-7	8
ATM Launch Lock Release Mechanism	ME 288-0001-0009	1	10M24626-1	8
	ME 288-0001-0009	1	10M24626-3	8

EDS

2.7.5.5 Confined Detonating Fuse Tee - Description. The confined detonating fuse (CDF) tees (Figure 2.7-19) provided an ignition path to the CDF assemblies.

The CDF tee contains a 172 milligram PETN booster charge to ensure the propogation of the detonation wave across the CDF interfaces. It is supplied with caps which are capable of withstanding the force of inadvertent detonation before installation. When installed, the CDF connector and tee are capable of withstanding the force of the detonation.

Characteristics.

A. Booster Charge.

1. Chemical Composition: PETN Class 4 per MIL-P-387.

2. Quantity: 172 $\pm$ 2 milligrams.

3. PETN Explosive Information: See Paragraph 2.7.5.6.

4. Loading Pressure: 5,000 psi.

5. Configuration and Dimensions: Cylindrical 0.130 $\pm$ .001 inch long.

B. Case (Booster Charge).

1. Material: Stainless Steel.

2. Configuration and Dimensions: flared cylindrical cup with cap; cup: 0.140 $\pm$ .001 inch diameter, 0.240 inch diameter at flare. Cap: 0.240 inch diameter, 0.005 $\pm$ .001 inch thick. See Explosive Technology 20224.

C. Case (Tee Housing).

1. Material: 2024-T4 aluminum.

2. Configuration and Dimensions: See Figure 2.7-19.

D. Bushing, Threaded.

1. Material: Type 303 Stainless Steel.

2. Configuration and Dimensions: See Figure 2.7-19.

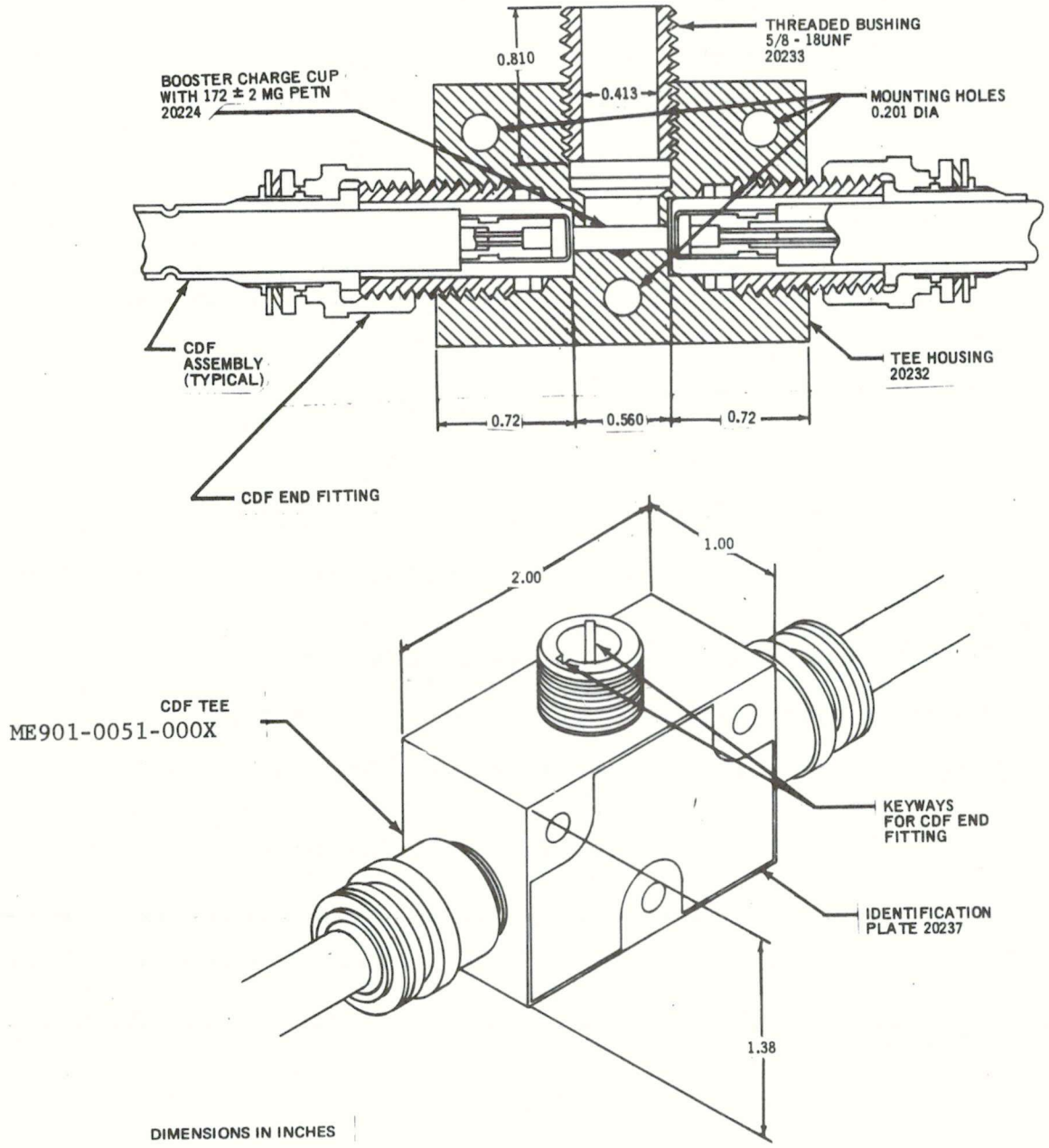

Figure 2.7-19 CDF Tee and CDF Assembly (Sectional View)

E. Complete Assembly.

1. Configuration and Dimensions: See figure 2.7-19.

2. Operational Limits.

   a. Minimum Temperature: -215°F for 12 hours.

   b. Maximum Temperature: 250°F for 15 minutes.

3. ICC Classification: Class C.

4. Shock: 90 g shock level with a triangular pulse have a rise time of 10 milliseconds and a decay time of 1.5 milliseconds.

5. Storage.

   a. Temperature: -65 to 160°F for 4 hours.

   b. Humidity: 0% to 100%.

   c. Procedure: Bendix 7-0-12, -37, -35, and -46.

   d. Storage Life: 3 years from date of delivery.

CDF Tee Installation Locations. There are four CDF tees located on the Skylab A. Installation data are shown in Table 2.7-VI.

Specification Drawing Number. MC 901-0051 (NR).

Qualification Test. See Section VI, paragraph 6.4.6 of SE005 003 2H.

Table 2.7-VI CDF Tee Installation Summary

SYSTEM	SPECIFICATION CONTROL DRAWING P/N	QUANTITY	REF. DWG.	INDEX
ATM Launch Lock Release Mechanism	ME901-0051-0001	1	10M24628-1	45°
	ME901-0051-0001	1	10M24628-3	45°

2.7.5.6 Pentaerythrite Tetranitrate - Description. Pentaerythrite Tetranitrate (PETN) is a commonly used explosive compound which is relatively insensitive to heat and shock. These characteristics, combined with its explosive capabilities, contribute to the safety and reliability of the Skylab A ATM ordnance systems.

Applications. PETN is used in the Skylab A ATM ordnance systems and common ordnance items in a variety of weights and configurations as outlined below.

A. Detonator

B. CDF Assembly

C. CDF Tee

The EBW detonator (7865742-1) contains 67.5 $\pm$ 2 mg primary charge and 1.4 + .25 grains output charge PETN. MIL SPEC MIL-D-387 established the following classes:

1. Class 1: For use in detonating cord.

2. Class 2: For use in primers for small arms ammunition.

3. Class 3: For use in Pentolite.

4. Class 4: For use in blasting caps and detonators.

Charateristics.

A. Synononyms: Pentaerythritol Tetranitrate, Nitropentaerythrite, pentrit, Penta, PETN.

B. Description: White Crystals.

C. Chemical Formula: $C(CH_2NO_3)_4$

D. Crystal Density: 1.77

E. Molecular Weight: 316

F. Melting Point: 141°C (286°F)

G. Decomposes: In 5 seconds at 225°C (437°F)

H. Detonation Rate: 8,300 meters (27,224 feet) per second at 1.70 gram/cc (1.0 inch diameter sample).

I. Heat of Combustion: 1960 Calories/gram

J. Explosion Temperature Test:

0.1 second	272°C	(522°F)
1 second	244°C	(471°F)
5 seconds (decompose)	225°C	(437°F)
10 seconds	211°C	(412°F)

K. Impact Sensitivity: 2Kg wt, Bureau of Mines (20 mg sample) 17 cm: Picatinny ARsenal (16 mg sample) 6 inches.

L. ICC Classification: Class A

M. Specification: MlL-P-387

2.7.5.7 Cyclotrimethylene-Trinitramine - Description. Cyclotrimethylene-trinitramine (RDX) is a commonly used explosive compound which is relatively insensitive to heat and shock. These characteristics, combined with its explosive capabilities, contribute to the safety and reliability of the Skylab A ATM ordnance system.

Applications. RDX is used in the Skylab A ATM ordnance systems and common ordnance items in a variety of weights and configuration as outlined below:

A. CDF Manifold

B. Detonator

C. CDF Pressure Cartridge

D. The CDF manifold which contains variable lengths of 20 gpf detonating cord as required in 2-, 4-, and 8-boss configurations and the EBW detonator, 7865742-501, which contains 162 $\pm$ 2 mg. The CDF Pressure Cartridge Donor Cavity of 75 $\pm$ 2 mg of detonating cord works with the Receptor Cavity of 40 $\pm$ 2 mg of cord.

Characteristics.

A. Synonyms: Cyclonite, Hexogen, T4, RDX.

B. Description: White, Crystalline Powder.

C. Crystal Density: 1.82 Gram/c.c.

D. Chemical Formula: $(CH_2)_3N_3(NO_2)_3$

E. Molecular Weight: 222

F. Melting Point: 204°C (399°F)

G. Decomposes: In 5 seconds at 260°C (500°F)

H. Detonation Rate: 8180 meters (26,830 feet) per second at 1.65 gm/cc (1.0 inch diameter sample).

I. Heat of Combustion: 2285 calories/gram.

J. Explosion Temperature Test:

0.1 second	405°C (761°F)
1 second	316°C (601°F)
5 seconds (decomposes)	260°C (500°F)
10 seconds	240°C (464°F)
15 seconds	235°C (455°F)

K. Impact Sensitivity: 2 kg wt Bureau of Mines (20 mg sample) 32 cm; Picatinny Arsenal (18 mg sample) 8 inches.

L. ICC Classification: Class A

M. Specification: MIL-R-398.

1. Class A: For use in Compositions A-3, B, C-4, and Cyclotol.

2. Class B: For use in Compositions A-3 and C-4.

3. Class C: For use in preparation of RDX booster and detonator pellets.

4. Class D: For use in Cyclotols.

5. Class E: For use in Composition C-4 and Plastic Bonded Explosives.

EDS

2.7.5.8 Confined Detonating Fuse (CDF) Pressure Cartridge - Description - Confined detonating fuse (CDF) pressure cartridges are used in the ATM solar panel decinching and ATM launch lock release system.

The CDF pressure cartridge (Figure 2.7-20) is a device designed to produce a pressure output adjustable from 1500 psig to 3000 psig peak when fired into a 22 cc closed bomb. The pressure output is adjusted by seclection of the output charge pellet and weight of loose explosive mix.

The CDF pressure cartridge is initiated by a detonation from the CDF assembly. The CDF detonation propagates to the donor charge and across the bulkhead to the receptor charge. After transfer of the detonation across the bulkhead, the receptor charge initiates the output charge to produce the required pressure. The donor and receptor charges are packed intimately against both sides of the bulkhead in a manner that insures detonation propagation through the bulkhead without rupturing the bulkhead. This provides an effective seal against the pressure resulting from output charge ignition.

The CDF pressure cartridge is manufactured by the Hi-Shear Corporation, Torrance, California, to MSFC Specification 20M42243. The Hi-Shear basic part number for the cartridge is 939805.

Characteristics

A. Donor Charge: 73-77 mg of RDX, Type A, Class C, to MIL-R-398. RDX powder is pressed into place with a force of 380-420 pounds with a loading die.

B. Receptor Charge: 38-42 mg of RDX, Type A, Class C, to MIL-R-398. RDX powder is pressed into place with a force of 275-280 pounds with a loading die.

C. Output Charge:

1. Composition: Refer to Hi-Shear drawing 939321 and Hi-Shear Specification 700517.

2. Quantity: TBS

D. Body:

1. Material: Inconel 718 per AMS 5664, annealed.

2. Configuration: See figure 8-9 and HiShear drawing 939804.

E. Donor Charge Closure Disk:

Material: 302 stainless steel, Condition A.

F. Receptor Charge Closure Disk:

Material: Onion skin paper.

G. Output Charge Insulator Disk:

Material: Isomica

H. End Closure Disk:

Material: 347 Stainless Steel

I. Assembled Unit:

1. Configuration: See Figure 2.7-20 and Hi-Shear drawing 939805.

2. Storage Life: Five years minimum from date of delivery.

3. Functioning Time: When initiated by an ME901-0052 CDF assembly, the pressure cartridge shall fire within one millisecond and reach maximum pressure with 5.0 millisecond.

4. Autoignition and Melting Points: The explosive materials shall not autoignite or melt at temperatures below 250°F (121°) when either confined or unconfined for a minimum period of four hours.

5. Operational Temperatures: The explosive materials used in the pressure cartridge shall be capable of reliable operation over the temperature range from -150°F (-101°C) to +212°F (100°C). The explosive materials shall be capable of being subjected to either temperature extreme for a minimum period of four hours without degradation of performance.

NET EXPLOSIVE WEIGHT:
ICC CLASSIFICATION:
AUTOIGNITION TEMPERATURE: 250° F
STORAGE HUMIDITY:
STORAGE LIFE: 5 YEARS FROM DATE OF MANUFACTURE
ALL DIMENSIONS IN INCHES

REFERENCE DRAWINGS:
939805 (HI-SHEAR)
20M42243 (MSFC)

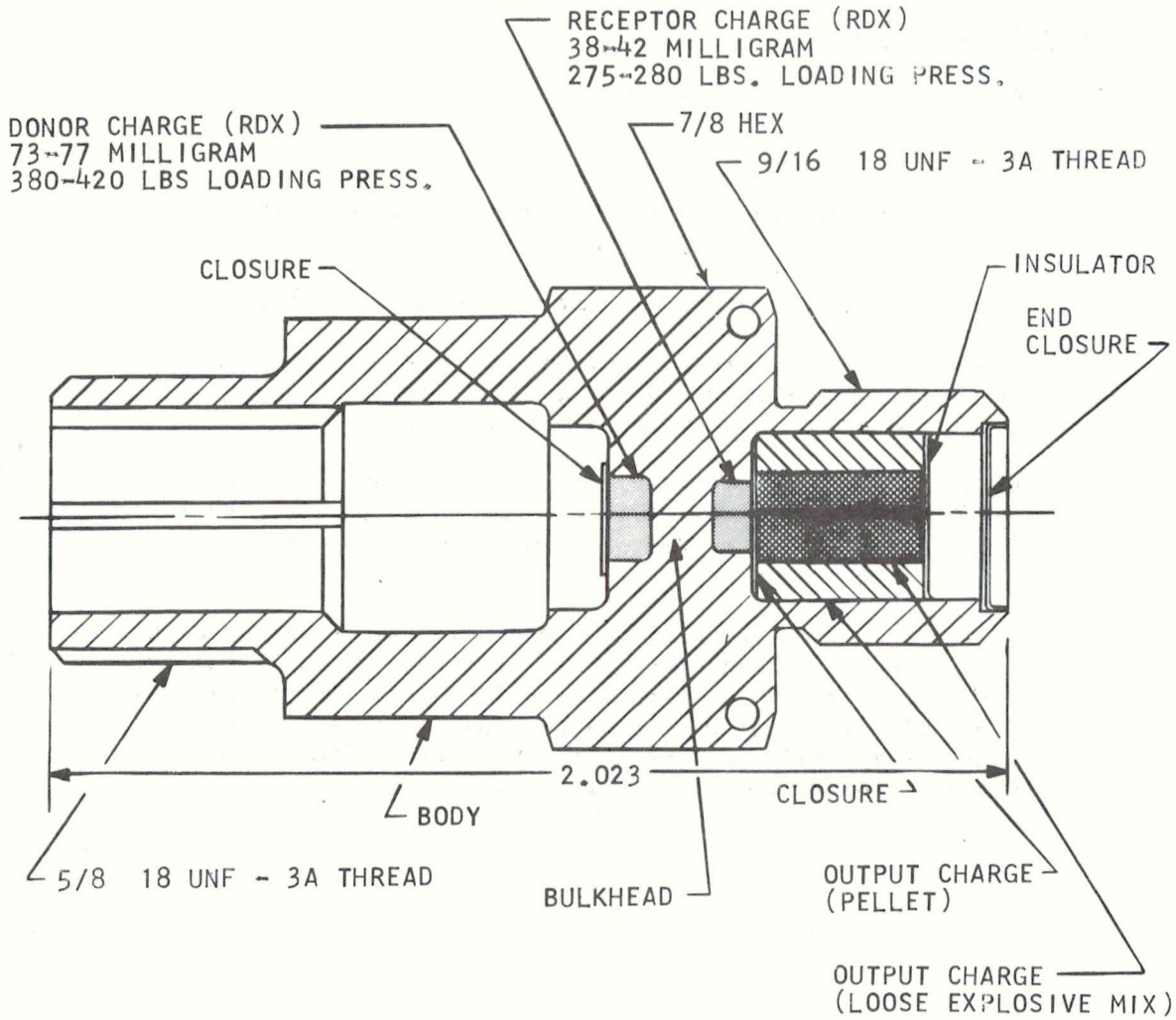

Figure 2.7-20 CDF Pressure Cartridge

6. Installation Torque: The pressure cartridge shall withstand 350 inch-pounds installation torque without affecting the performance.

7. Procedures: Bendix 7-0-12, -37, -35, and -46.

Pressure Cartridge Installations. On the Skylab Workshop there are a total of 34 pressure cartridges used. The ATM solar panel decinching mechanism utilizes 16 cartridges and the ATM launch lock release system requires 18 cartridges. See Table 2.7-VII.

Table 2.7-VII. CDF Pressure Cartridge Installation Summary

SYSTEM	VENDOR P/N	SPECIFICATION CONTROL DRAWING	QUANTITY	INDEX
ATM Solar Panel Decinching Mechanism	939805 (PC85)	20M42243	8	C(135°)
	939805 (PC85)	20M2243	8	B(90°)
ATM Launch Lock Release System	939805 (PC85)	20M2243	18	A(45°)

EDS

2.8 CREW SYSTEMS

2.8.1 Introduction

This section covers items of crew systems equipment that are required to execute the Extra Vehicular Activity (EVA) needed to service Skylab cameras, film magazines and experiments. This is accomplished through the use of restraints, translation aids, Film Transportation Boom (hereafter referred to as Boom), EVA lighting the Transfer Workstation, FAS, Center and Sun End Workstations. These units assist in crewman and film magazine movement from the AM to the work stations and facilitate Eva during both sunlight and darkness periods. Acronyms for each of the EVA Workstations are as follows:

1. Center Workstation - VC
2. Fixed Airlock Shroud - VF
3. Transfer Workstation - VT
4. Replacement Workstation - VR (if utilized)
5. Sun-end Workstation -VS

2.8.2 Subsystem Interface

Crew systems interfaces are shown in Table 2.8-I. Other interfaces with the Crew Systems are:

1. Caution and Warning Subsystem covered in Section 2.6.
2. ALERT subsystem covered Section 2.6.
3. MDA and CSM camera and film vaults.
4. AM stowage for umbilicals, pallets, video camera and 16mm camera.

CS

2.8.3 Functional Description

The primary function of the crew systems is to facilitate crew operations during the performance of the ATM EVA tasks.

EVA systems shall be capable of supporting a two man EVA for a maximum duration of three hours with an additional hour for contingency. Restraints will be used to assist the crewman in maintaining position. Translation, handling and transfer devices are part of the system. Design criteria for Eva aids are displayed in Table 2.8-IV, page 2.8-78.

To best describe the crew systems functionally, it is necessary to go through a typical EVA indicating the use of the various subsystems and elements. The EVA translation route is shown in Figures 2.8-1 and 2.8-2. Therefore, a brief statement of the total mission definition, followed by a typical EVA, is presented. Table 2.8-II defines the EVA missions.

Table 2.8-I Crew Systems Interfaces

ELEMENT	ATM CENTER WORKSTATION (VC)	TRANSFER WORKSTATION (VT)	ATM SUN END (VS)	FAS WORKSTATION (VF)
Mobility and Stability Aids	Restraints and Translation Gear	Same as VC	Same as Center W/S	Same as Center W/S
Lighting	EVA lights Panel 160 Lights	EVA Lights	EVA Lights	Lock compartment EVA Lighting Switch Panel 316 STS EVA Lighting Switches AM Panel 202
EVA Panel	Roll EVA; Auto Doors Inhibit			
Experiment Support	Boom and Clothes-line Door Controls Panel 160 Ro-tation Control Film Receptacles Access Doors Temporary Stowage Hook		Tree Stowage Temporary Camera Camera Doors S082 FTB and ACTS	Boom Film Tree Container Tree Clothesline
Roll Positioning	Panel 160 Roll Alignment Pointer		S082A & B Doors	
Mechanisms	ATM C&D Console Eva Prerequisites: MPC Enable, Roll Gain Xl, Roll EVA			
ACS	Local Vertical			
Power Doors	Experiment Power Door: Off Auto Doors: Inhibit			
EPS	Experiment HV off			

TABLE 2.8-II: ATM EVA MISSION DEFINITION

EVA MISSION	SKYLAB MISSION	DAY IN MISSION	FILM MAGAZINE RETRIEVAL/REPLACEMENT	FILM MAGAZINE NO.
FIRST	SL 1/2 (28 days)	26	Retrieve: S-052, S-054, S-056, Hα1, S-082A, S-082B	1
			Replace: S-052, S-054	2
			Retrieve: D-024	A
90 DAYS - UNMANNED OPERATIONS				
FIRST	SL 1/3 (56 days)	4	Replace: S-056, S-082A, S-082B, Hα1	2
SECOND	SL 1/3	29	Retrieve: S-052, S-054	2
			Replace: S-052, S-054	3
			Retrieve: S-056, S-082A, S-082B, Hα1	2
			Replace: S-056, S-082A, S-082B, Hα1	3
THIRD	SL 1/3	55	Retrieve: S-052, S-054	3
			Replace: S-052, S-054	4
			Retrieve: S-056, S-082A, S-082B, Hα1	3
			Retrieve: D-024	B
90 DAYS - UNMANNED OPERATIONS				
FIRST	SL 1/4 (56 days)	4	Replace: S-056, S-082A, S-082B, Hα1	3
SECOND	SL 1/4	54	Retrieve: S-052, S-054, S-056, S-082A, S-082B, Hα1	4

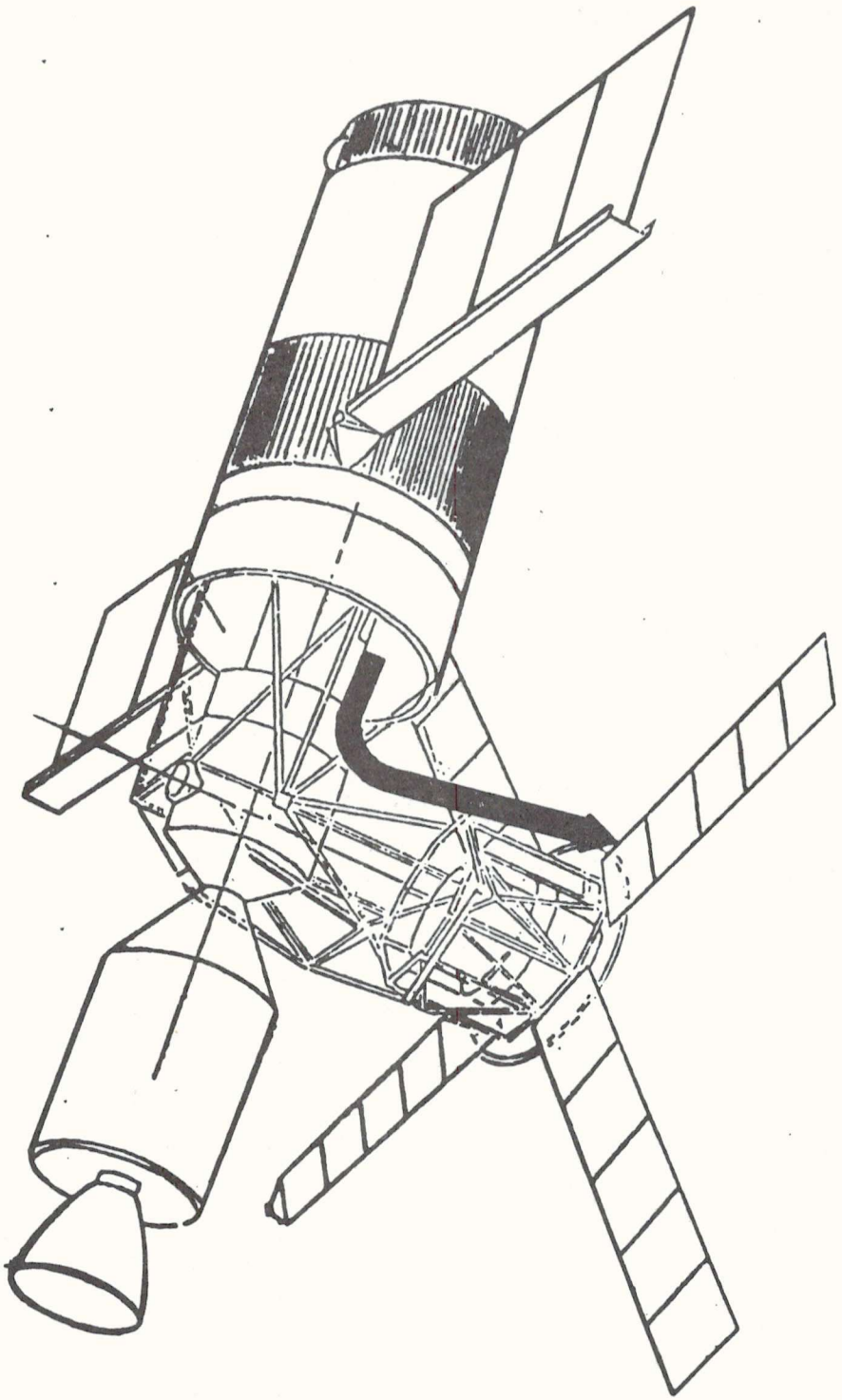

Figure 2.8-1 ATM EVA Route

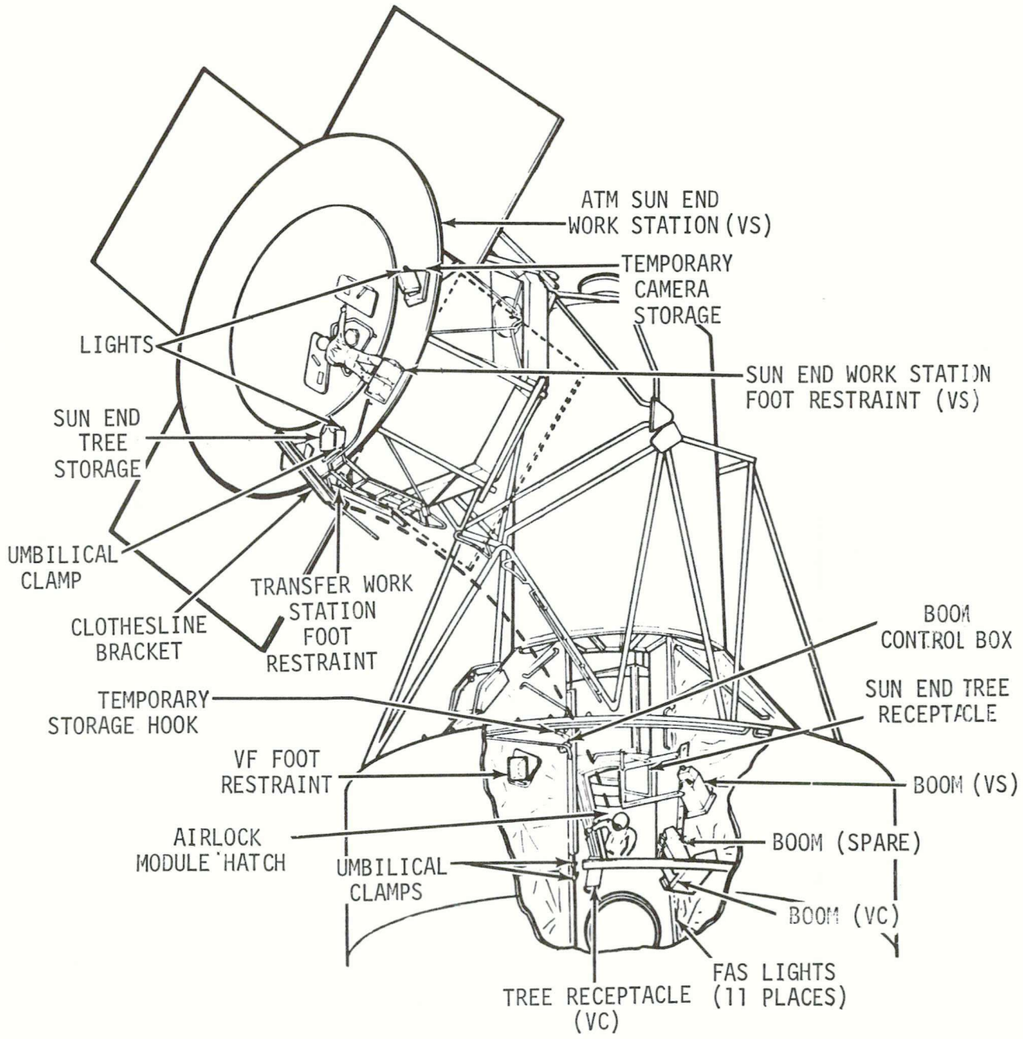

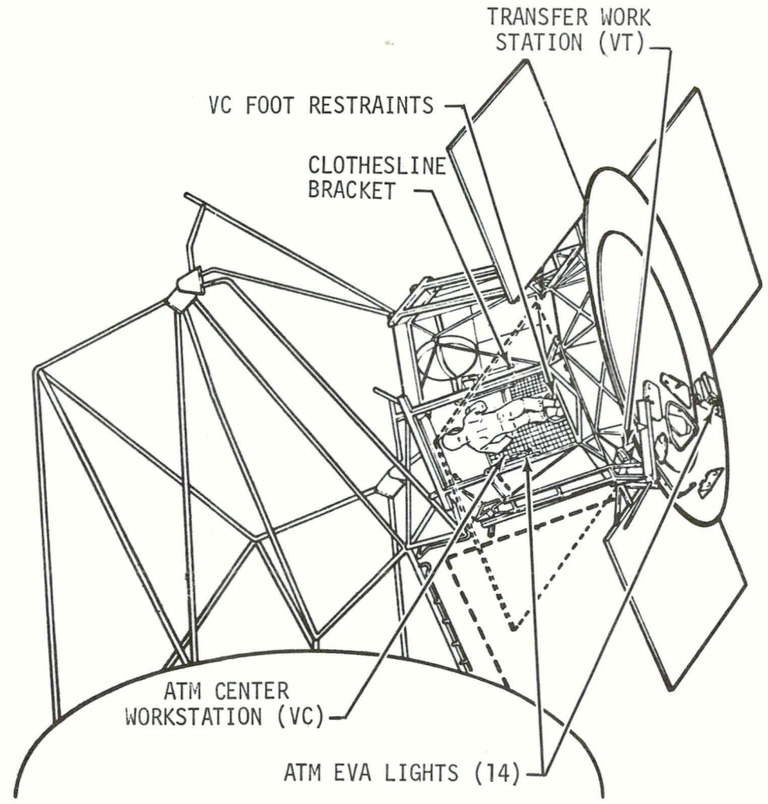

Figure 2.8-2 EVA ROUTE DETAILS

CS

Typical EVA tasks are listed below:

EVA CREWMAN NO.	LOCATION TASK IS PERFORMED	TASK
Assume all pre-EVA tasks are completed before EVA hatch is opened. Crewman 2 is on ATM, Crewman 1 at VF with Crewman 3 at STS.		
1	AM/CC	Open AM EVA hatch and latch in open position
2	AM/CC	Extract EV1 LSU from stowage position and manage
1	AM	Egress AM EVA hatch
1	VF	Translate to foot restraint system
1	VF	Ingress foot restraints
1	VF	Clamp LSU
2	AM/CC	Unlock ATM VC film magazine stowage tree from temporary stowage
2	AM/CC	Remove ATM VC magazine stowage tree from temporary stowage
2	AM/CC	Pass tree out hatch to EV1
1	VF	Receive the VC film magazine tree
1	VF	Place and lock VC film magazine tree in stowage position
2	AM/CC	Unlock ATM VS film magazine stowage tree from temporary stowage
2	AM/CC	Remove ATM VS film magazine stowage tree from temporary stowage
2	AM/CC	Pass tree out hatch to EV1

CS

EVA CREWMAN NO.	LOCATION TASK IS PERFORMED	TASK
1	VF	Receive the Sun End Workstation film magazine pallet
1	VF	Place Sun End Workstation film magazine pallet in stowage position
2	AM/CC	Pass 16mm camera to EV1
1	VF	Install 16mm camera in photo position
2	AM/CC	Remove section of own LSU from stowage sphere
2	AM/CC	Egress AM through EVA hatch
1	VF	Assist EV2 in translation
1	VF	Activate 16mm cameras
1	VF	Manage EV2 LSU
2	AM/ATM Translation Rails	Translate to ATM VC
2	VC	Ingress VC foot restraints
2	VC	Clamp own LSU
1	VF	Clamp EV1 LSU
2	VC	Activate "PRI" and "SEC POWER" switches on panel 160
2	VC	Activate "ENABLE ROLL" on Panel 160
2	VC	Roll ATM can to S054 access door
2	VC	INHIBIT ROLL sw

EVA CREWMAN NO.	LOCATION TASK IS PERFORMED	TASK
1	VF	Activate & deploy empty VC Boom to intermediate point to left of VC film magazine loading position
2	VC	Pull D-Ring launch lock and place in stowage clip.
2	VC	Push S054 film retrieval access door handle to unlock
2	VC	Pull handle to open S054 film retrieval access door
1	C W/S	Unlock and remove exposed S054 film magazine. Activate and deploy empty VC Boom to VC film magazine loading position.
2	C W/S	Attach and lock exposed S054 film magazine #1 to Boom.
1	VF	Activate and retract VC Boom.
1	VF	Unlock & remove exposed S054 film magazine from Boom
1	VF	Place exposed S054 film magazine on temporary stowage hook and lock
1	VF	Unlock & remove S054 film magazine from VC tree
1	VF	Attach and lock unexposed S054 film magazine to Boom
1	VF	Activate and deploy loaded Boom to VC
2	VC	Remove unexposed S054 film magazine from Boom
1	VF	Activate and retract empty VC Boom clear of VC area

CS

EVA CREWMAN NO.	LOCATION TASK IS PERFORMED	TASK
2	VC	Install unexposed S054 film magazine in ATM receptacle
2	VC	Lock unexposed S054 film magazine
2	VC	Verify S054 magazine is seated
2	VC	Close lock S054 access door
2	VC	Verify S054 access door is closed
1	VF	Unlock & remove exposed S054 film magazine from temporary stowage hook
1	VF	Place & lock exposed S054 magazine on VC tree
1&2	VC & VF	Repeat tasks for S056, S052 and Hα1
1	VF	At completeion of all VC film retrieval/ replacement, actuate and retract empty VC Boom to stowage position
2	VC	ENABLE ROLL sw on Panel 160
2	VC	Roll ATM canister to Sun End magazine retrieval/replacement position
2	VC	INHIBIT ROLL sw on Panel 160
2	VC	Actuate sw to open Sun End aperture doors
2	VC	Verify Sun End aperture doors indicate open position
2	VC	Unclamp LSU
1	VF	Unclamp EV2 LSU
2	VC	Egress foot restraints and VC
2	Translation Rails to VT	Translate from VC to VT (no LSU clamps along route)

EVA CREWMAN NO.	LOCATION TASK IS PERFORMED	TASK
1	VF	Manage EV2 LSU
		VF AND VT OPERATIONS
2	VT	Rotate 90° and ingress Sun End transfer Workstation foot restraints
1	VF	Clamp EV2 LSU
1	VF	Activate VS Boom to VS tree loading position
1	VF	Unlock and remove VS tree from receptacle
1	VF	Place & lock VS tree on VS Boom
1	VF	Activate and deploy VS Boom to EV2 in VT
2	VT	Release & remove VS tree from VS Boom
1	VF	Activate and retract VS Boom to right of VS tree loading position
2	VT	Position & lock VS tree in receptacle on solar shield
1	VF	Unclamp EV2 LSU
2	VT	Egress VT foot restraint
2	VS	Translate along solar shield to VS foot restraints
		VS and VF OPERATIONS
2	VS	Ingress VS foot restraints
1	VF	Manage EV1 and LSU
1	VF	Clamp EV1 LSU

CS

EVA CREWMAN NO.	LOCATION TASK IS PERFORMED	TASK
2	VS	Unlock S082A film magazine container
2	VS	Open S082A container
2	VS	Retrieve unexposed S082A magazine from container
2	VS	Install S082A magazine in temporary stowage
2	VS	Open S082A ATM access door
2	VS	Activate S082A camera latch handle
2	VS	Pull exposed film magazine to first detent and fold handle
2	VS	Retrieve exposed S082A film magazine
2	VS	Place exposed S082A film magazine in container
2	VS	Verify exposed S082A magazine is seated
2	VS	Close S082A film magazine & rotate handle to close position
2	VS	Lock film S082A magazine container
2	VS	Remove unexposed S082A film magazine from the VS temporary stowage container
2	VS	Place new S082A film magazine in the ATM canister, unfolding the handle
2	VS	Secure new S082A film magazine in the ATM canister

EVA CREWMAN NO.	LOCATION TASK IS PERFORMED	TASK
2	VS	Place S082A film magazine restraining latch handle in the restraining position and verify flag indication
2	VS	Close S082A access door
2	VS	Repeat steps for S082B
1	VF	Unclamp EV2 LSU
2	VS	Egress VS foot restraints
2	VS	Translate back along solar shield handrail to VT
1	VF	Manage EV2 LSU
	VT and VF OPERATIONS	
2	VT	Ingress VT foot restraints
1	VF	Clamp EV2 LSU
1	VF	Activate and deploy empty VS Boom to VT
2	VT	Unlock & remove VS tree receptacle on solar shield
2	VT	Attach VS tree to VS Boom and lock
1	VF	Retract VS Boom
1	VF	Unlock & remove VS tree from Boom
1	VF	Install & lock VS tree in receptacle at VF
1	VF	Activate & retract VS Boom stowage position
1	VF	Unclamp EV2 LSU
2	VT	Egress VT foot restraints

CS

EVA CREWMAN NO.	LOCATION TASK IS PERFORMED	TASK
2	Translation rails from VT to VC	Translate from VT to VC
1	VF	Manage EV2 LSU
	VF AND VC OPERATIONS	
2	VC	Ingress VC area ingress
2	VC	Place Sun End aperture door sw in close position
2	VC	Verify Sun End aperture doors closed
2	VC	INHIBIT PRIM and SEC POWER sw
2	VC	Egress VC
2	VC	Translate from VC to AM
2	VC	Ingress AM
	VF and AM OPERATIONS	
2	AM/CC	Stow own LSU
1	VF	Unlock & remove VC tree from stowage
1	VF	Hand VC tree to EV2
2	AM/CC	Receive VC tree from EV1
2	AM/CC	Place & lock VC tree in AM
1	VF	Unlock & remove VS tree from stowage
1	VF	Hand VS tree to EV2 in AM
2	AM/CC	Receive VC tree from EV1

EVA CREWMAN NO.	LOCATION TASK IS PERFORMED	TASK
2	AM/CC	Place & lock VC tree in AM temporary stowage
1	VF	Pass 16mm camera to EV2
2	AM/CC	Stow 16mm camera
1	VF	Unclamp LSU
1	VF	Egress VF foot restraint
1	VF	Translate to AM EVA hatch
2	AM/CC	Manage EV1 LSU
1	AM	Ingress AM
1	AM/CC	Close AM EVA hatch and lock

AM/ATM EVA COMPLETE

CS

Detailed procedures and check lists will be available for the crew for Prime System with Sun End Boom Replacement, Center Workstation Clothesline Replacement, Center Workstation Clothesline Installation, Center Workstation FTB Replacement, ATM Backup Transfer System, Intermediate Boom and for any additional tasks or contingencies as they are identified. Figures 2.8-3, 2.8-4 and 2.8-5 depict crewman carrying out EVA tasks directly from VF hatch workstation to ATM VC Workstation and the VS workstation via the VT workstation

2.8.4.1 Major components of the extravehicular support equipment include:

1. The film magazine and camera transportation system having:

   Film Transfer Boom (Boom) (with clothesline as backup system) from AM to Center Workstation (VC).

   Boom (with clothesline as backup system) from AM to ATM Sun End Workstation (VS).

   MDA film magazine storage for VC film and

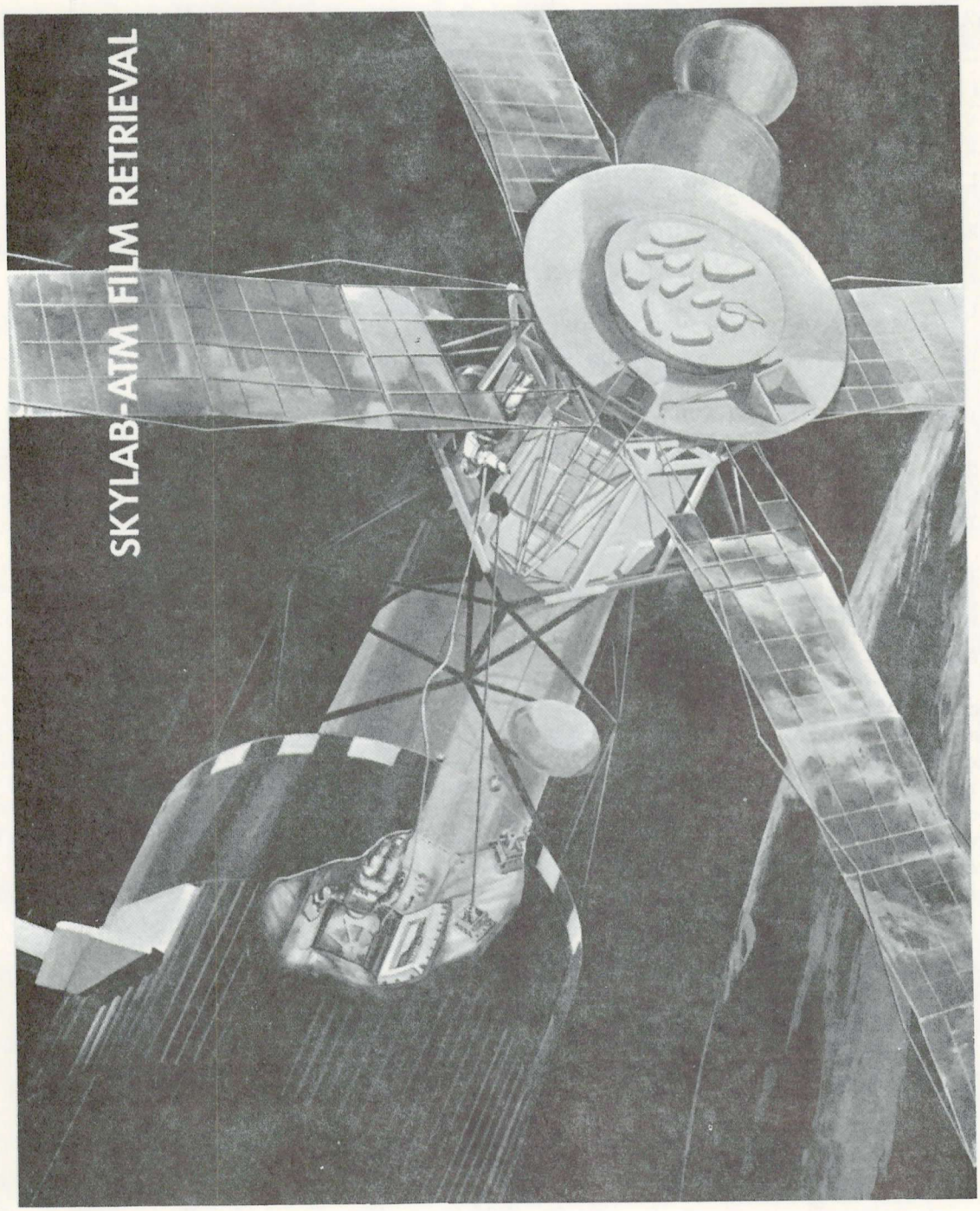

Figure 2.8-3 ATM EVA - Center Workstation (VC)

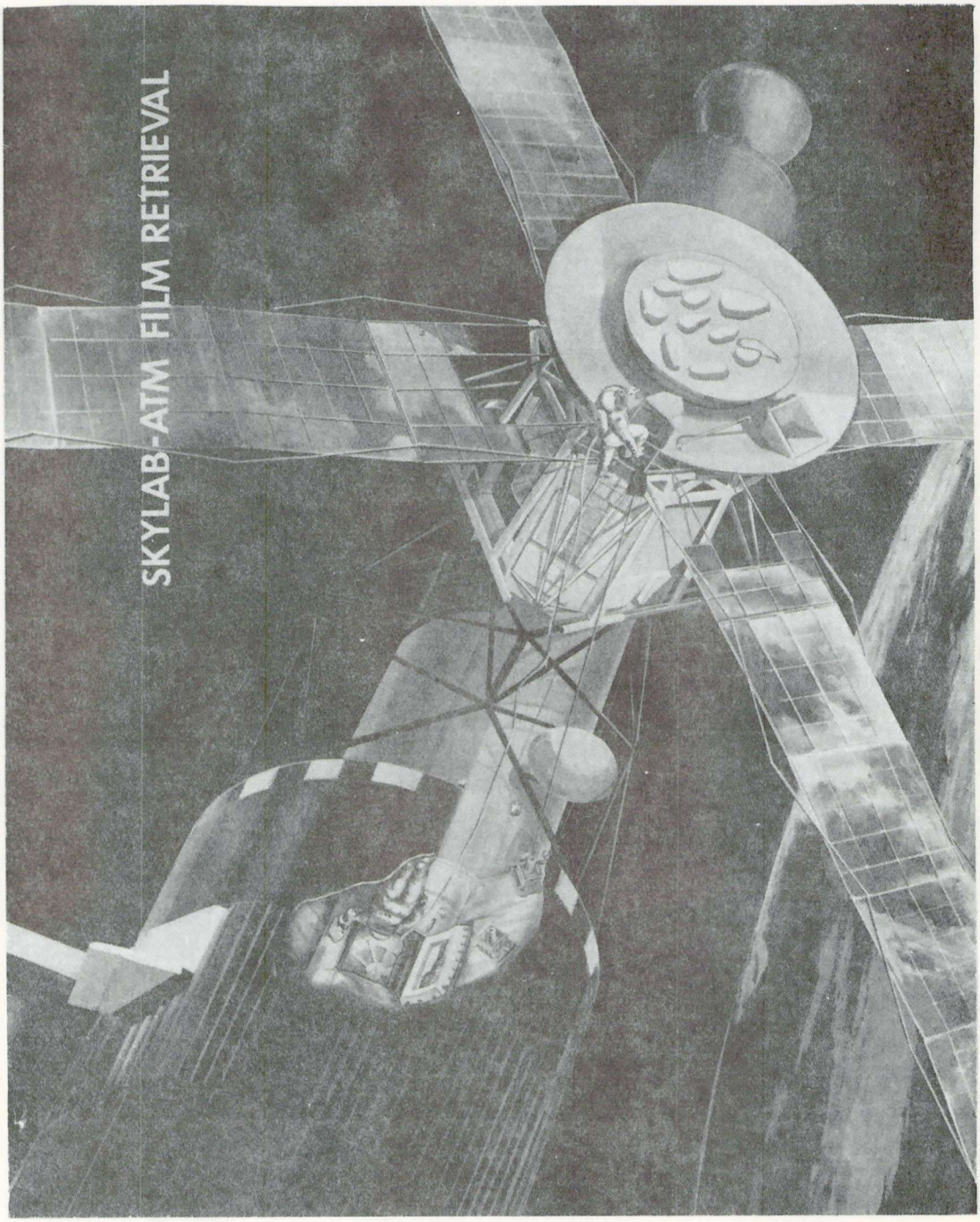

Figure 2.8-4 ATM EVA - Transfer Workstation (WT)

CS

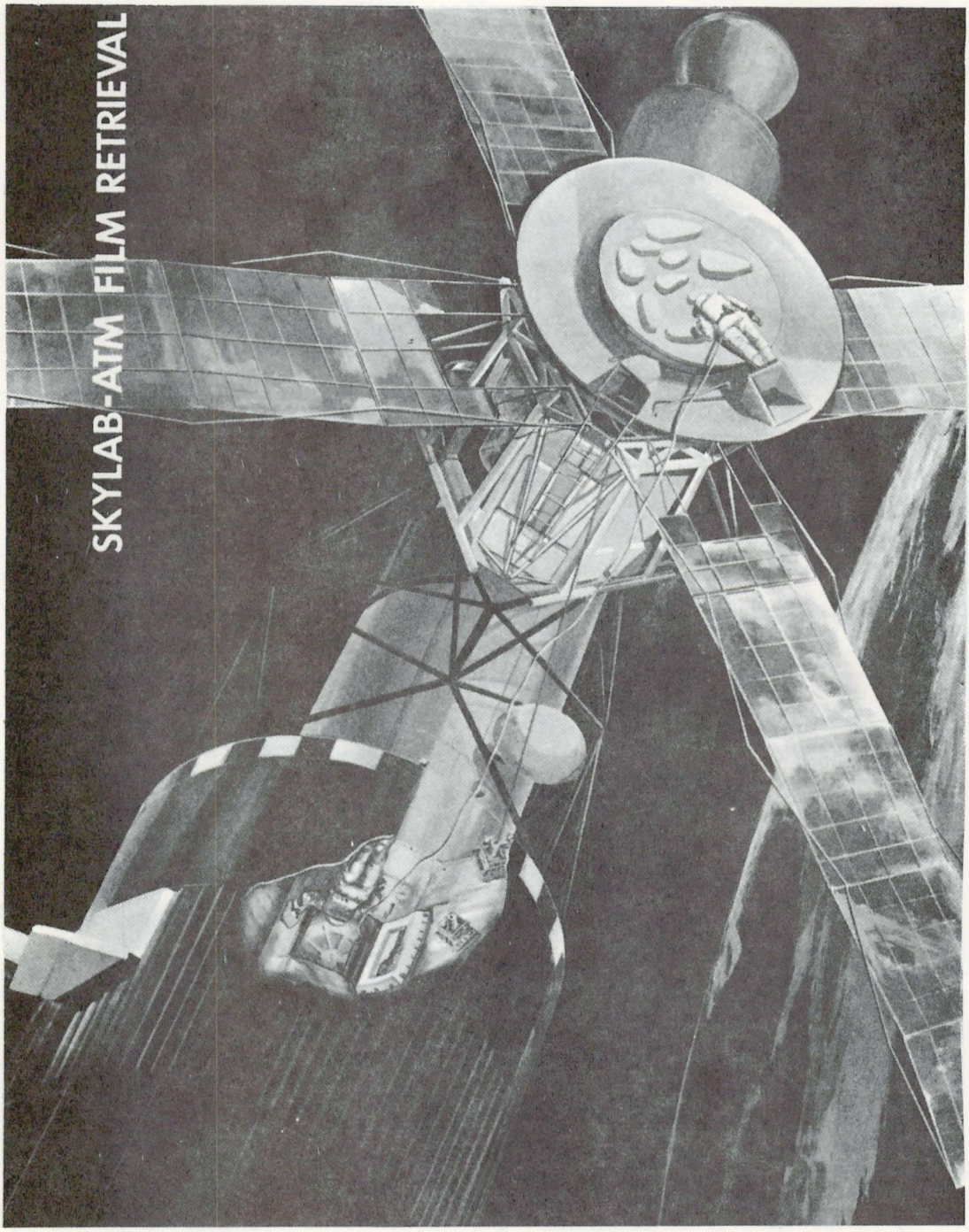

Figure 2.8-5 ATM EVA - Sun End Workstation (VS)

MDA film magazine storage for VS film container along with CM stowage for film return to earth.

2. Skylab Cluster Subsystem

- Airlock Module (AM)
- Airlock Module External or FAS Workstation (VF)
- ATM Center Workstation (VC)
- ATM Sun End Workstation (VS)
- Astronaut Translation System
- Primary Film Magazine Transportation System - Film Transfer Boom (Boom) to VC and VS
- Backup Film Magazine Transportation System - Clothesline VC and to VS

3. Airlock Module (AM) EVA Hardware

- AM Hatch
- AM Hatch Lock
- VC Tree Receptacle
- VS Tree Receptacle
- LSU Tether Clamps on EVA Panel
- Handrails in AM Center Comp (AM/CC)
- VC tree
- VS tree
- LSU Stowage Covers
- LSU Stowage Spheres
- Interior Lights

CS

4. Airlock Module External Workstation or VF

- Handrail Below Hatch
- Boom Replacement Workstation (VR)
- Handrail on Truss #4
- VF Foot Restraint
- VS tree Receptacle
- VS tree Receptacle Handrail
- VC tree Receptacle
- VC tree Receptacle Handrail
- VS Boom Bracket
- VC Boom Bracket
- Replacement Boom Bracket
- VS Boom
- VC Boom
- Spare Boom
- Boom Hooks
- Temp. Stowage Hook
- Boom Control Panel

- VS Clothesline
- VC Clothesline
- VS Clothesline Container
- VC Clothesline Container
- VF Area Lights
- Photographic Equipment
- LSU Clamps
- Deployment Assembly Handrails
- DO-24 Experiment

5. Center Workstation (VC)

- VC Protective Screen
- EVA Lights
- VC Clothesline Attachment Bracket
- VC Foot Restraint
- Panel 160
- VC Film Access Doors (4)
- VC Film Access Door Flags
- VC Film Access Door Handles
- VC Film Access Door Launch Locks
- S-052 Camera Receptacle
- S-054 Camera Receptacle
- S-056 Camera Receptacle
- Hα1 Camera Receptacle
- S-052 Camera
- S-056 Camera
- Hα1 Camera
- S-054 Camera

6. Transfer (VT) and Sun End (VS) Workstation

- VT
- VT Foot Restraints
- VT EVA Light
- VS tree Receptacles
- Temporary Film Stowage Container
- VS Clothesline Bracket
- VS EVA Lights
- VS Foot Restraints
- VS Foot Restraint Platform
- S-082 Doors
- S-082 Door Handles
- S-082A Receptacle
- S-082B Receptacle
- S-082A Cameras
- S-082B Cameras
- S-082 Containers

- Hair Pin Handrail (Outrigger) A-1
- Lateral Handrail
- Solar Panel Backup Structure Handrail
- Dual Rails
- Solar Shield Handrail
- VS Handrail

7. The Astronaut Translation System includes:

handrails (single from AM to VC, dual along ATM to Sun End @+Z axis), Foot Restraints

EVA lighting, and

LSU Clamps

8. Motion Picture and TV Camera Stowage:

A 16mm camera and a TV Video Camera are stowed in the AM and are located for use near the VF during EVA. They will record EVA.

9. Rotation Control Equipment with:

Fourteen (14) lights on ATM workstations.

2.8.4.2 Functional Descriptions of Major Components follow:

CS

1. Booms are located at the VF. They are used to transfer ATM film/camera trees from the VF to either the VC or the VS (via the VT) and vice versa. Figures 2.8-6 and 2.8-7 show possible configurations of this device. Figure 2.8-41 indicate probable locations at the VF. The Boom hook shown in Figure 2.8-12 will be improved to the extent that hook opening will be at the end and the hook will be rotatable. The Boom is a tubular extendable device capable of extension to 30 feet and suitably marked at intervals. One Boom will extend to the VC while the other will go to the VT adjacent to the VS. The Boom will be operated by Crewman number 1. One spare Boom will be provided.

Clothesline backup systems to the Boom will be available (see Figure 2.8-13 and 14). It will be stowed on the side of the Boom housing in an aluminum container. This container has velcro fasteners holding the cover closed. The clothesline is TBS feet long with half of it colored TBS and the other half TBS. At each end are rings to snap into clothesline attach brackets at the workstations and a ring at each end to act as a sheave through which the clothesline moves. The line shall be suitably marked at useful intervals.

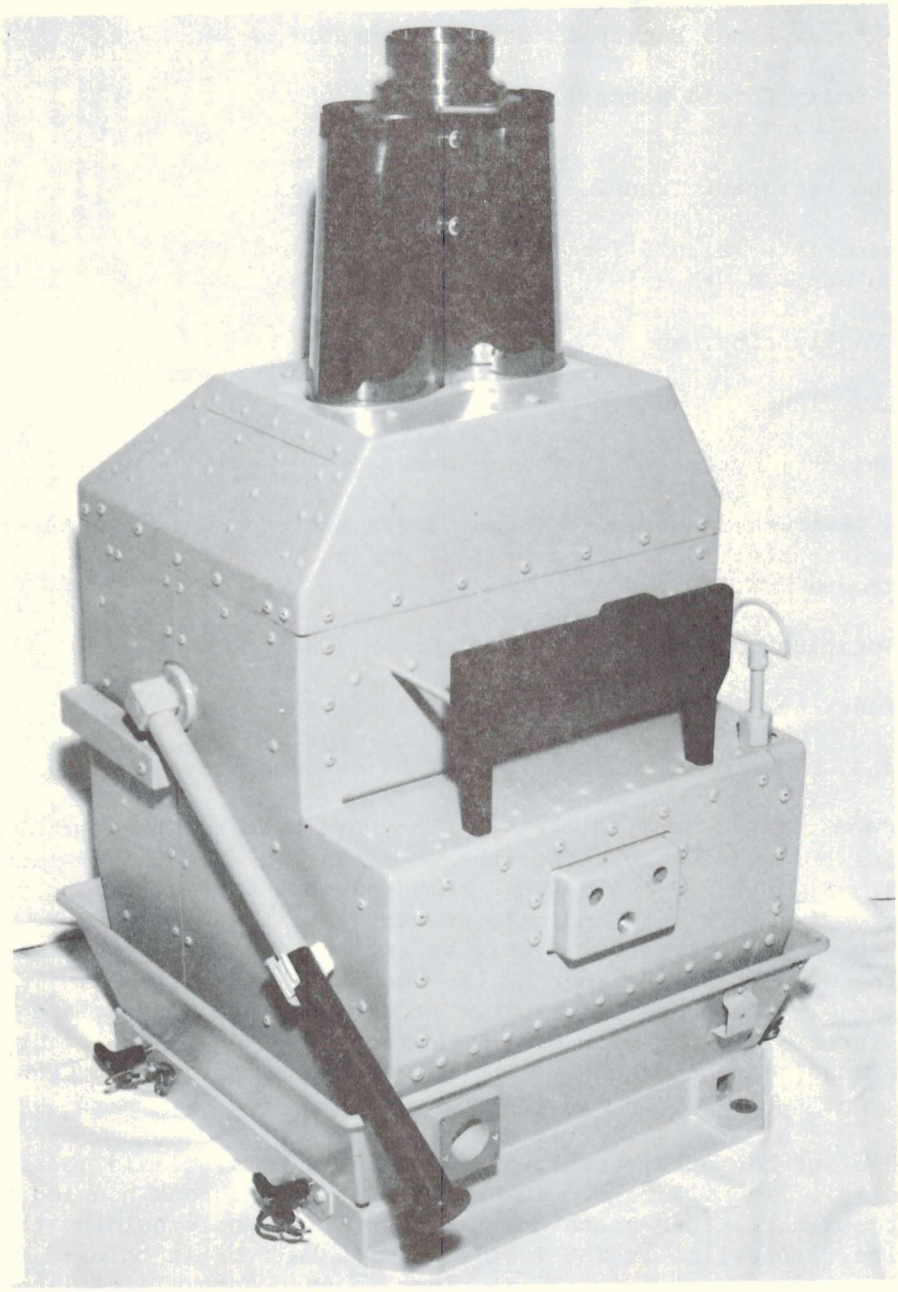

Figure 2.8-6 Film Transfer Boom (WIF Unit)

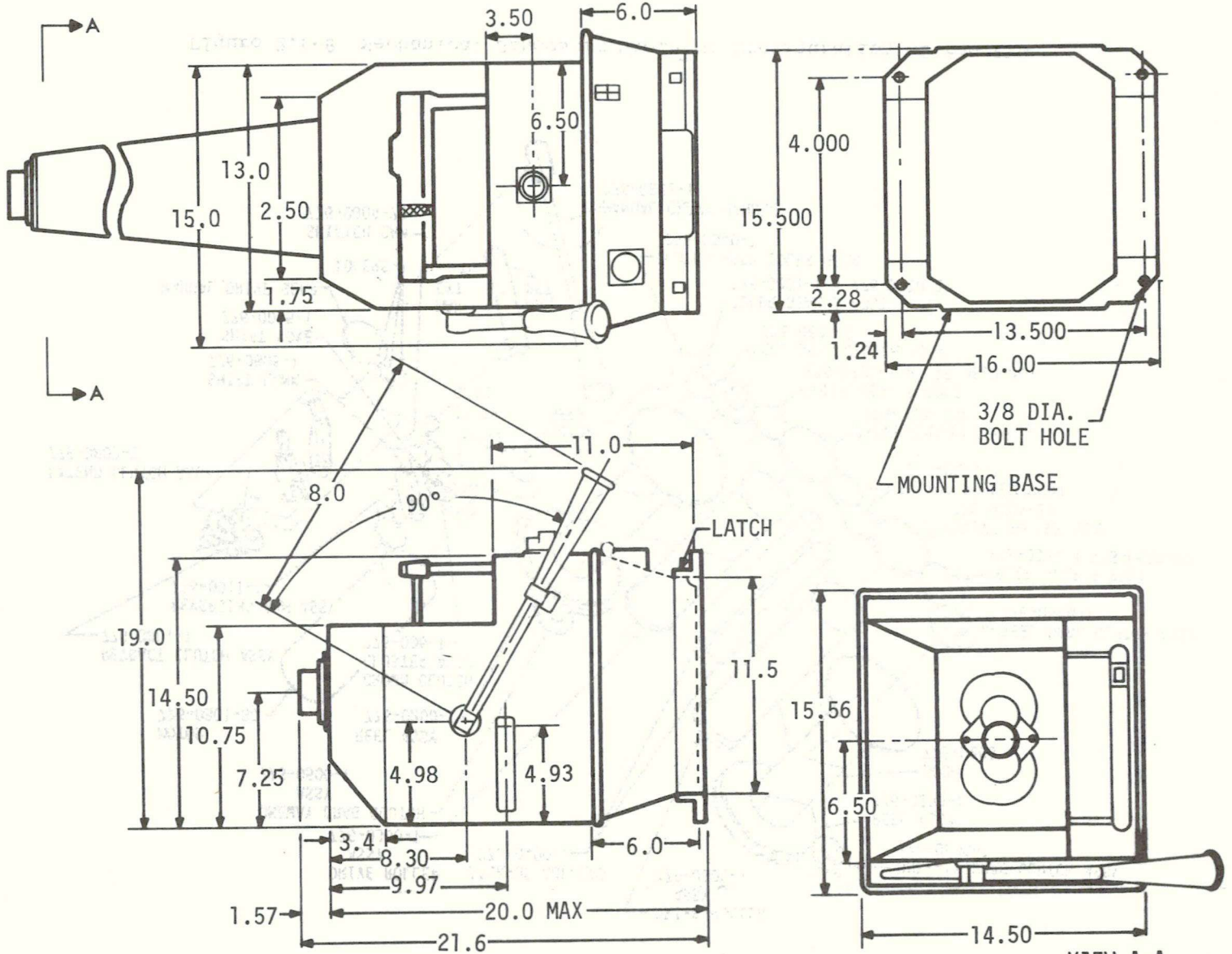

Figure 2.8-7 Envelope Drawing ATM Film Transfer Boom

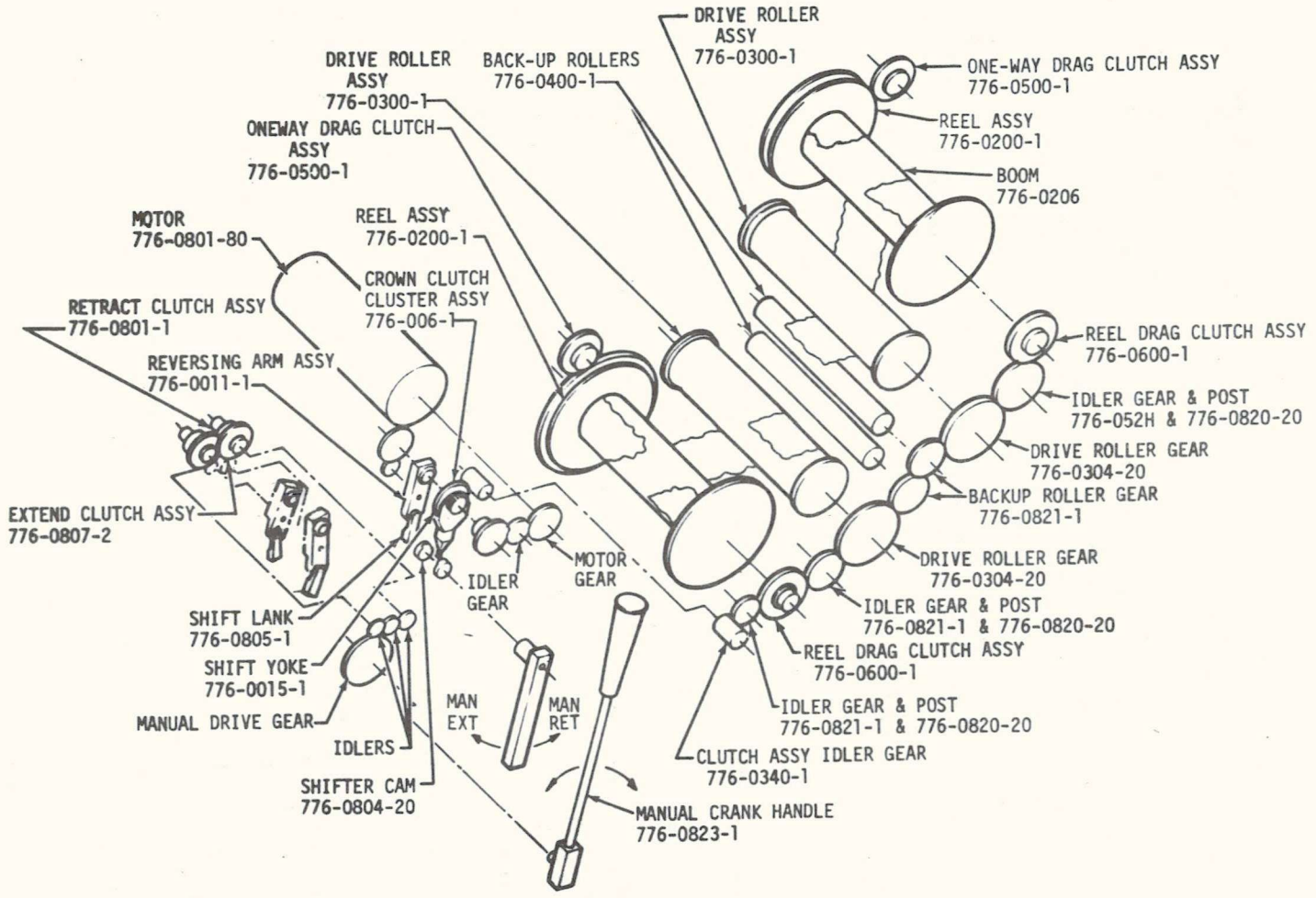

Figure 2.8-8 Mechanical Schematic Shot-Gun Configuration of the FTB

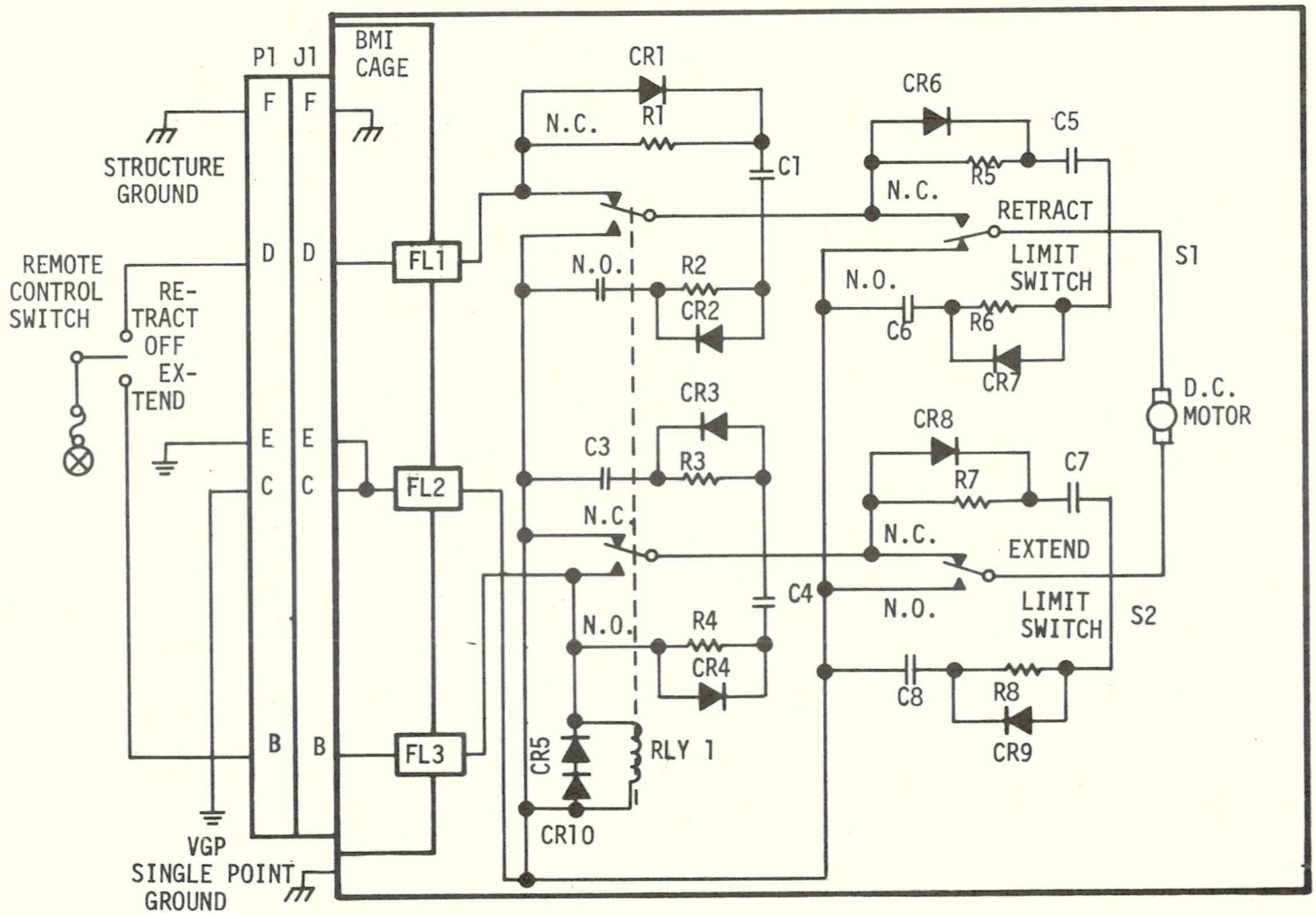

Figure 2.8-9 FTB Wiring Schematic (Element Fully Retracted)

Film and Camera disposition after EVA retrieval may be summarized as follows:

S052	Camera and film replaced with used camera and film removed to AM to be temporary stowed in an MDA vault after handle is removed and shutter cover placed in position. Both camera and film will be stowed in CSM for transportation to ground.
S054	Film magazine is replaced, removed to AM and the take up reel only is then moved to CSM stowage for delivery to ground.
S055A	No film.
S056	Film magazines replaced, removed to AM. After cassette handle is removed, whole magazine is returned to ground in CSM stowage.
Hα2	No film
S082A S082B	Camera and film removed as a unit, and stowed in a container, then moved to a CSM vault for return to ground at mission end.

The stowage in the MDA is arranged in two catagories: Container stowage and open stowage. Eight stowage containers are installed in the MDA, a flight data file, CO_2 absorber container, miscellaneous stowage vault, in flight spares container and four film vaults.

The flight data file panel is composed of a two shelf container with a bungee cord across each shelf. The bungee cords retain the documents in the file when the door is open. The data file is designed to retain all operational checklists and manuals.

The miscellaneous stowage vault is used for various support equipment. Retention devices and internal configuration is not established at the present time.

No expended film magazines are stowed in the MDA except those retrieved on SL 1/3 post second EVA and these will be transferred to the CM following SL 1/3 third EVA.

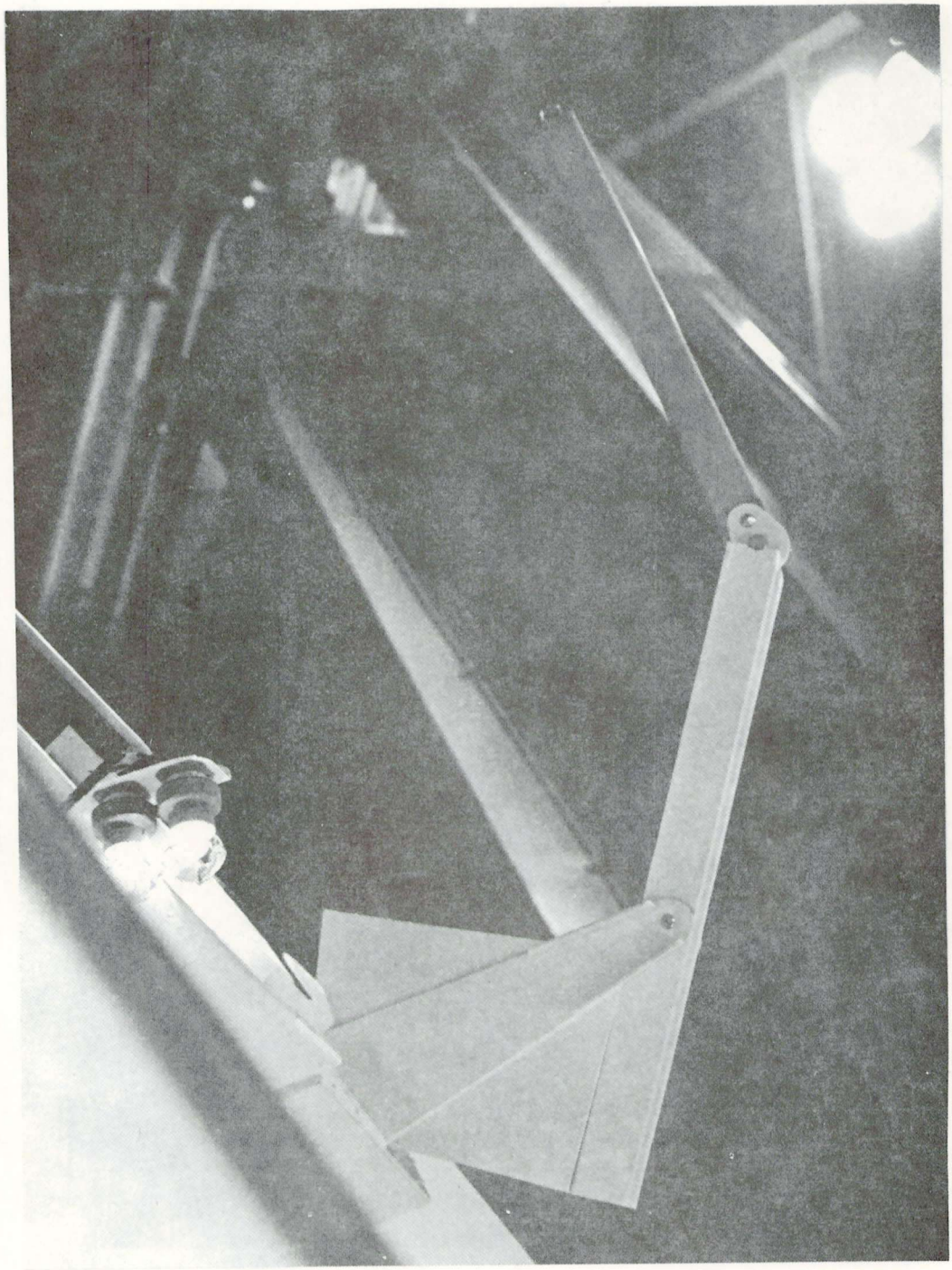

Figure 2.8-10 Type of Clothesline Attach Point

CS

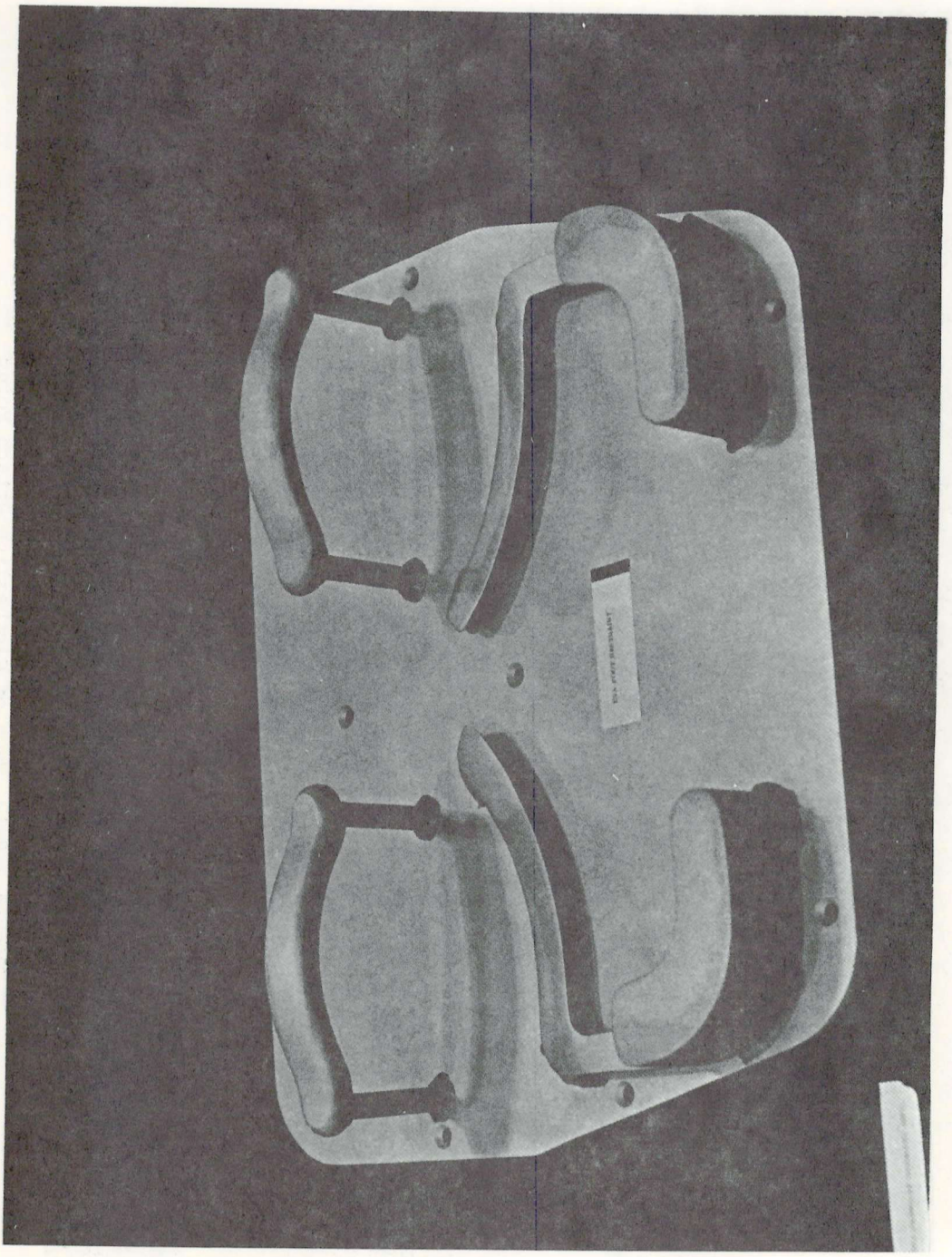

Figure 2.8-11 Foot Restraints

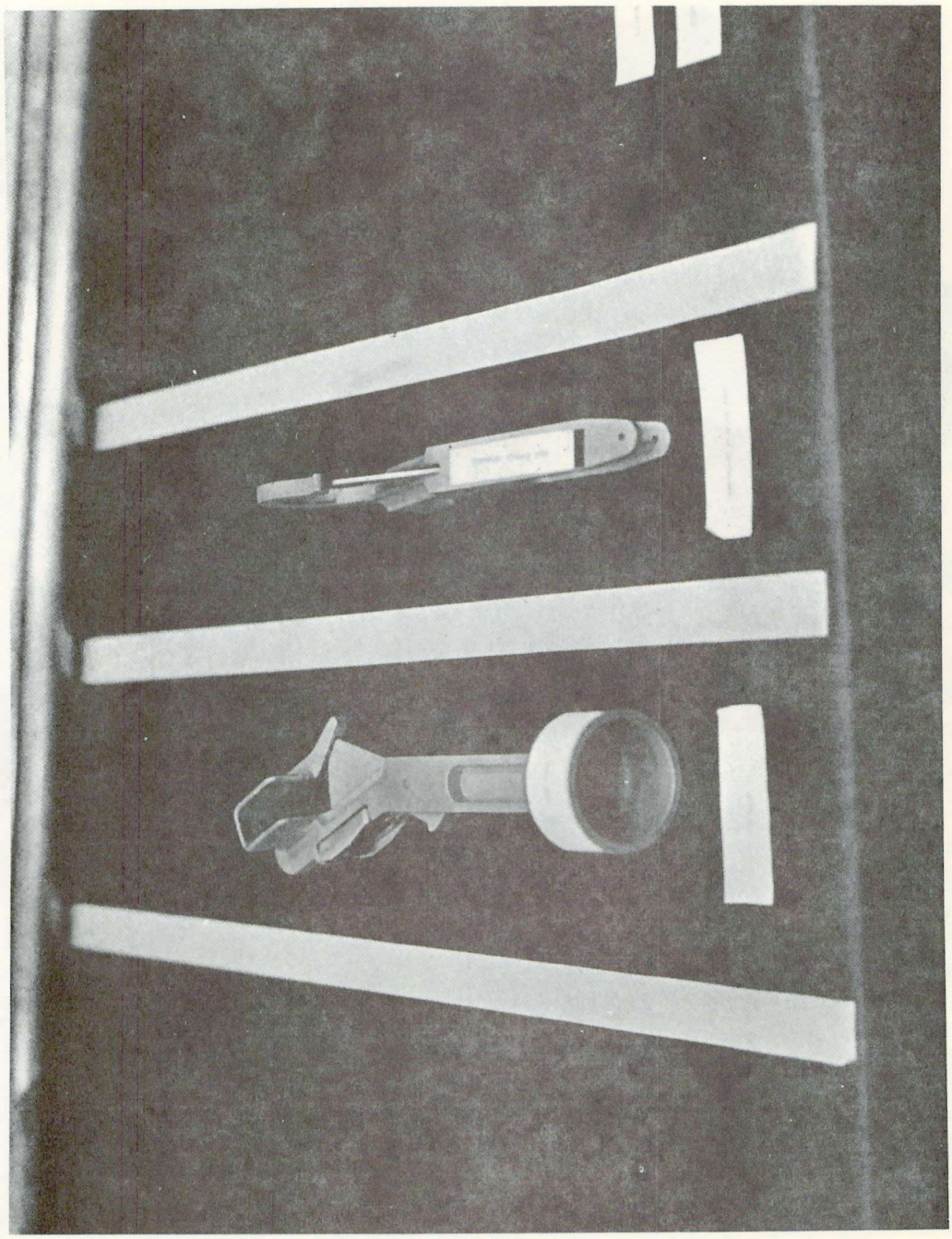

Figure 2.8-12 FTB Hooks

CS

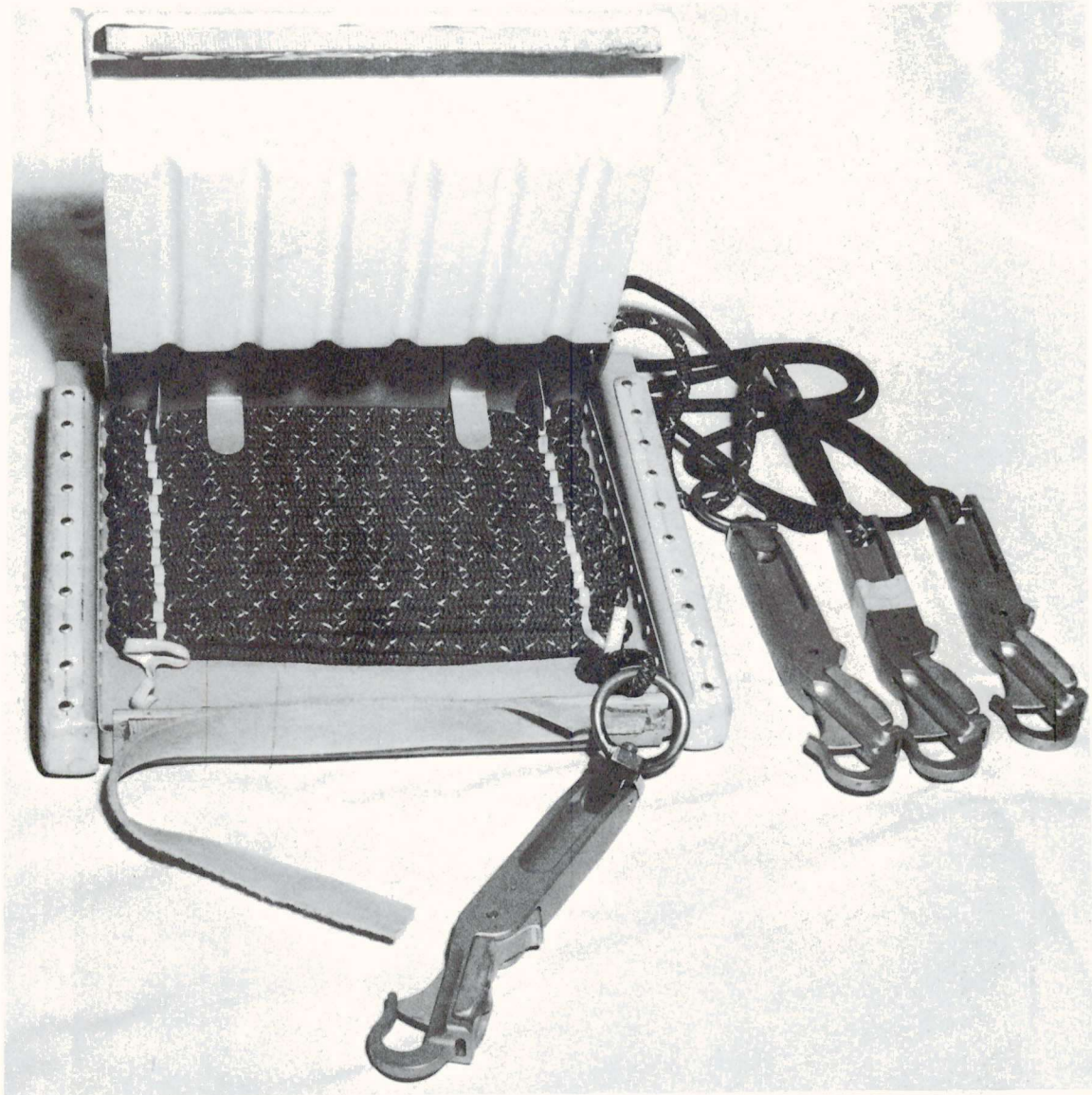

Figure 2.8-13 Clothesline Transfer System

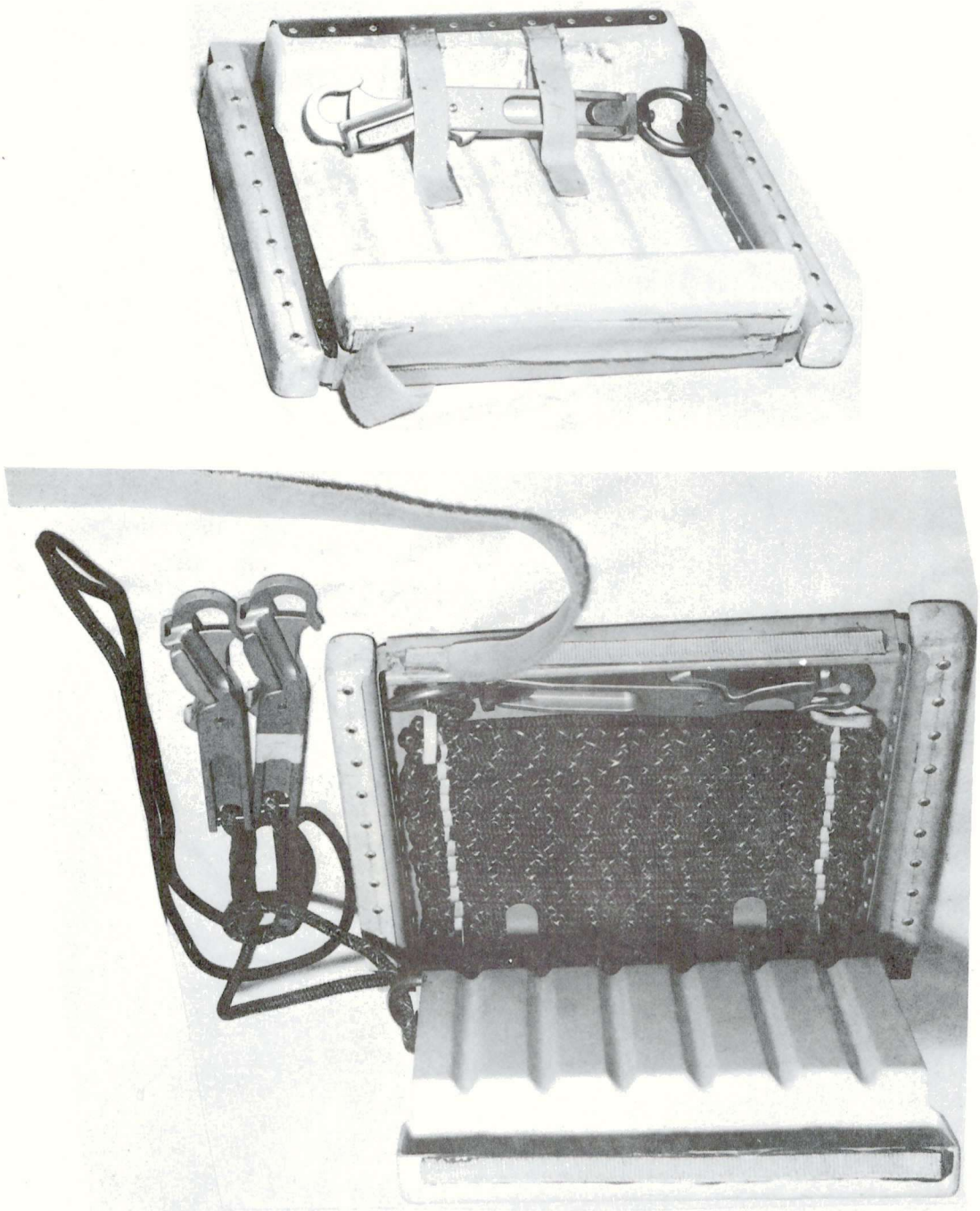

Figure 2.8-14 Clothesline Transfer System

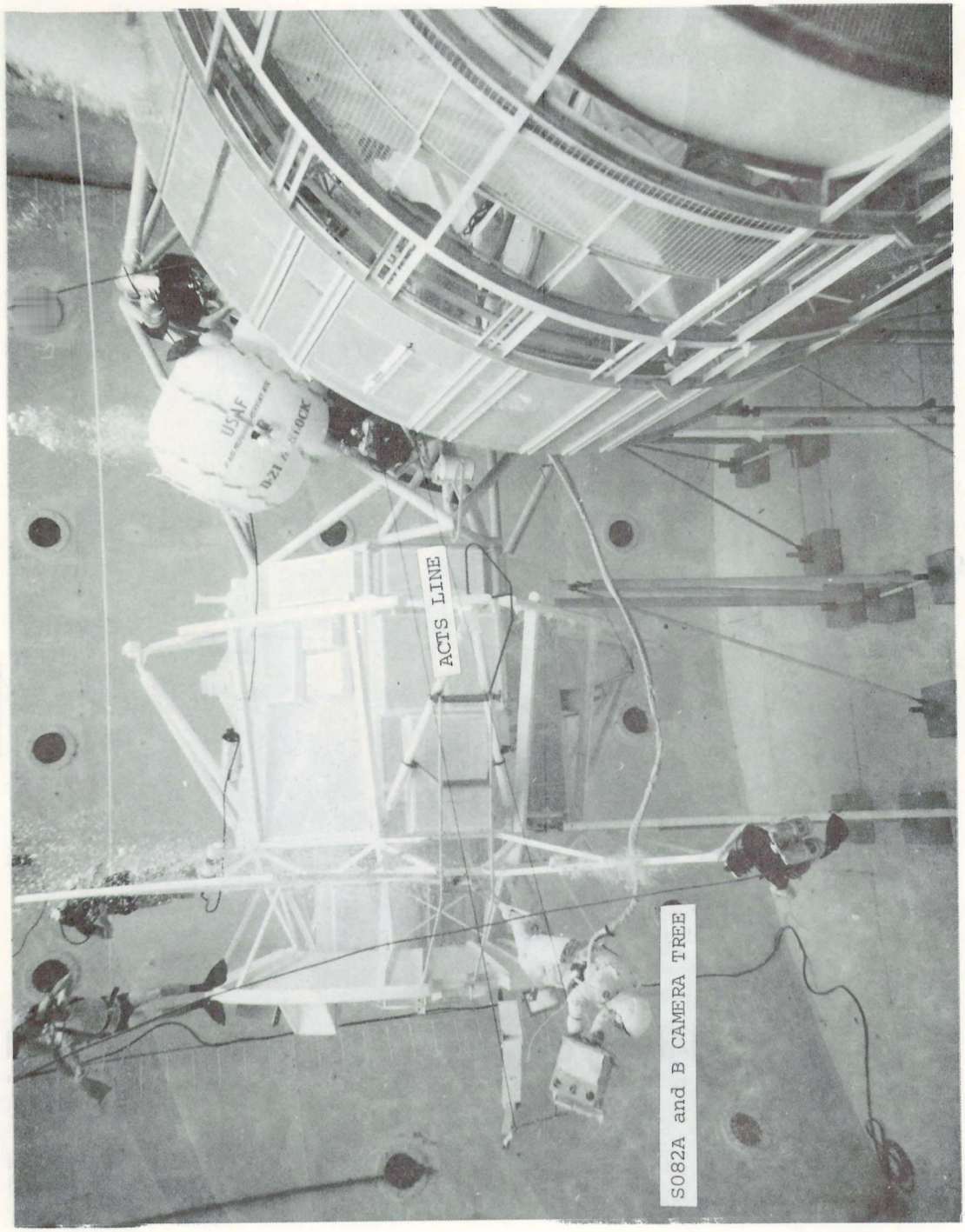

Figure 2.8-15 Clothesline use in WIF

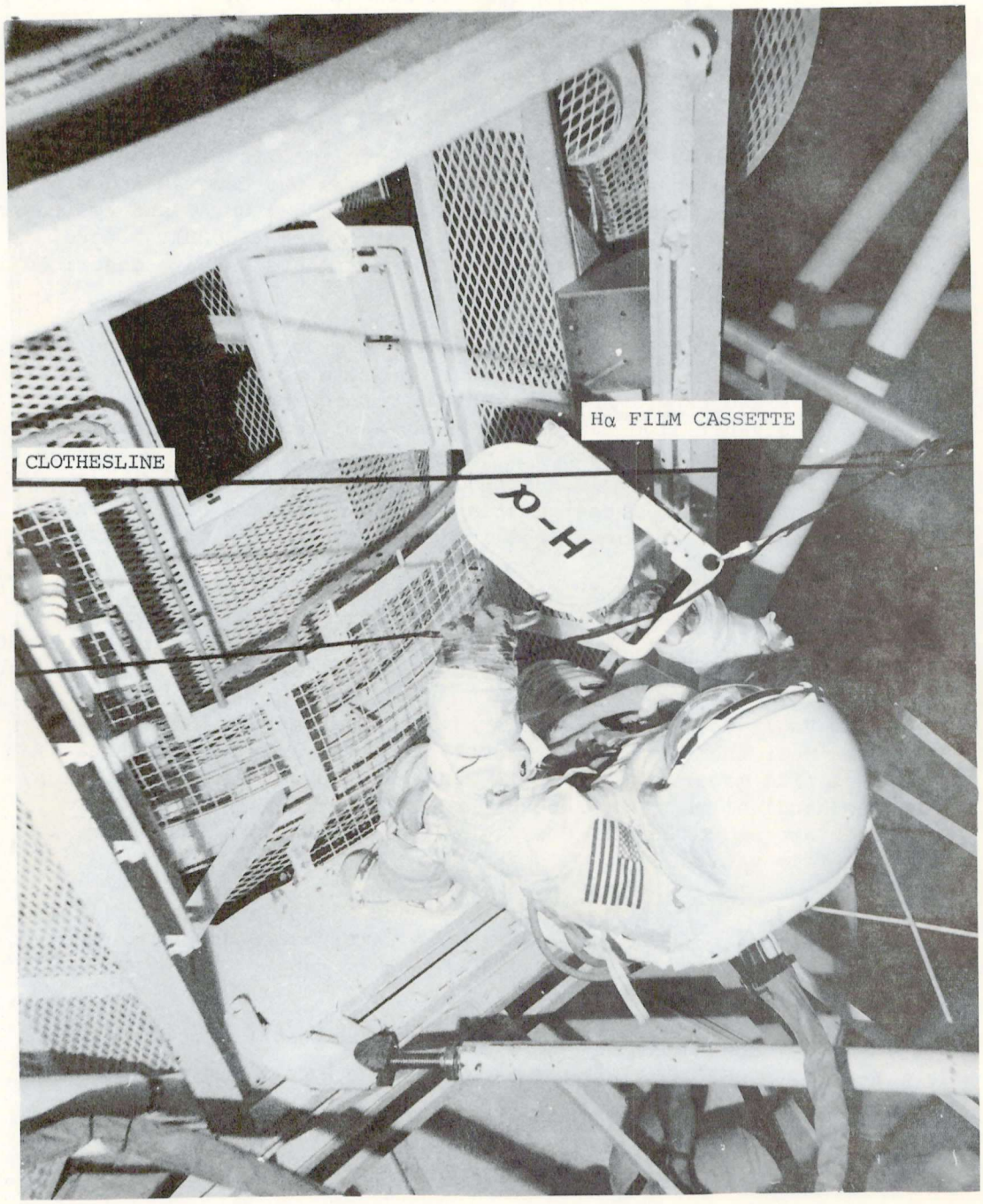

Figure 2.8-16 Clothesline use at VC

CS

The spare CO_2 absorbers are stowed in the MDA adjacent to the ATM C&D Console. The absorbers are the lithium hydroxide, activated charcoal type and are identical to the units used in the CSM.

The inflight spares container is launched in the AM and installed in the MDA on initial activation of the SWS.

Film Vault #1 (M-141) is located between the miscellaneous stowage vault and film vault #4. The film vault houses two cameras and containers for the experimental UV Spectroheliograph (S082A) and two cameras and containers for the experimental UV Spectrograph (S082B). These cameras are an integral part of the ATM experiments and are described in detail in their sections of this handbook.

Film Vault #2 (M512) is located between area fan #2 and the tape recorder just aft of the radial port. The film vault has mounting provision for two experiment White Light Cornograph (WLC) cameras (S-052). The vault also houses two X-Ray Spectrograph film magazines (S-054) and two X-Ray telescope magazines (S-056). Two S056 handles two S052 handles, two S054 Cassettes, and two S056 Shoes are also stored in this vault. These cameras and magazines are part of the ATM experiments and are described in detail in the ATM OH Section 2.9.

Film Vault #3 (M143) is located between the ATM C&D foot restraint and the spare tape recorder. This vault houses an S052 camera, S054 magazine, an S056 magazine, an S052 handle, and S054 Cassette, two S056 Shoes, two S056 Shoe covers and an S056 handle for the ATM experiments.

Film Vault #4 (M-124) is located between the vent panel and the ECS ducts near the forward dome section. This vault houses three H-Alpha 1 film magazines, an S082A and an S082B camera. In addition, three Hα handles, three Hα shoes, one 82A container and one 82B container are stowed here. See Figure 2.8-17 for location of the four MDA film vaults.

Figure 2.8-18 is a view of the Command Module storage facilities. The film records for ATM experiments are returned to ground in the following stowages:

A-1: S082A, S082B
A-3: S082A, S082B
A-8: S052, 54, 56, & Hα1
A-2: S082B
A-5: S082A

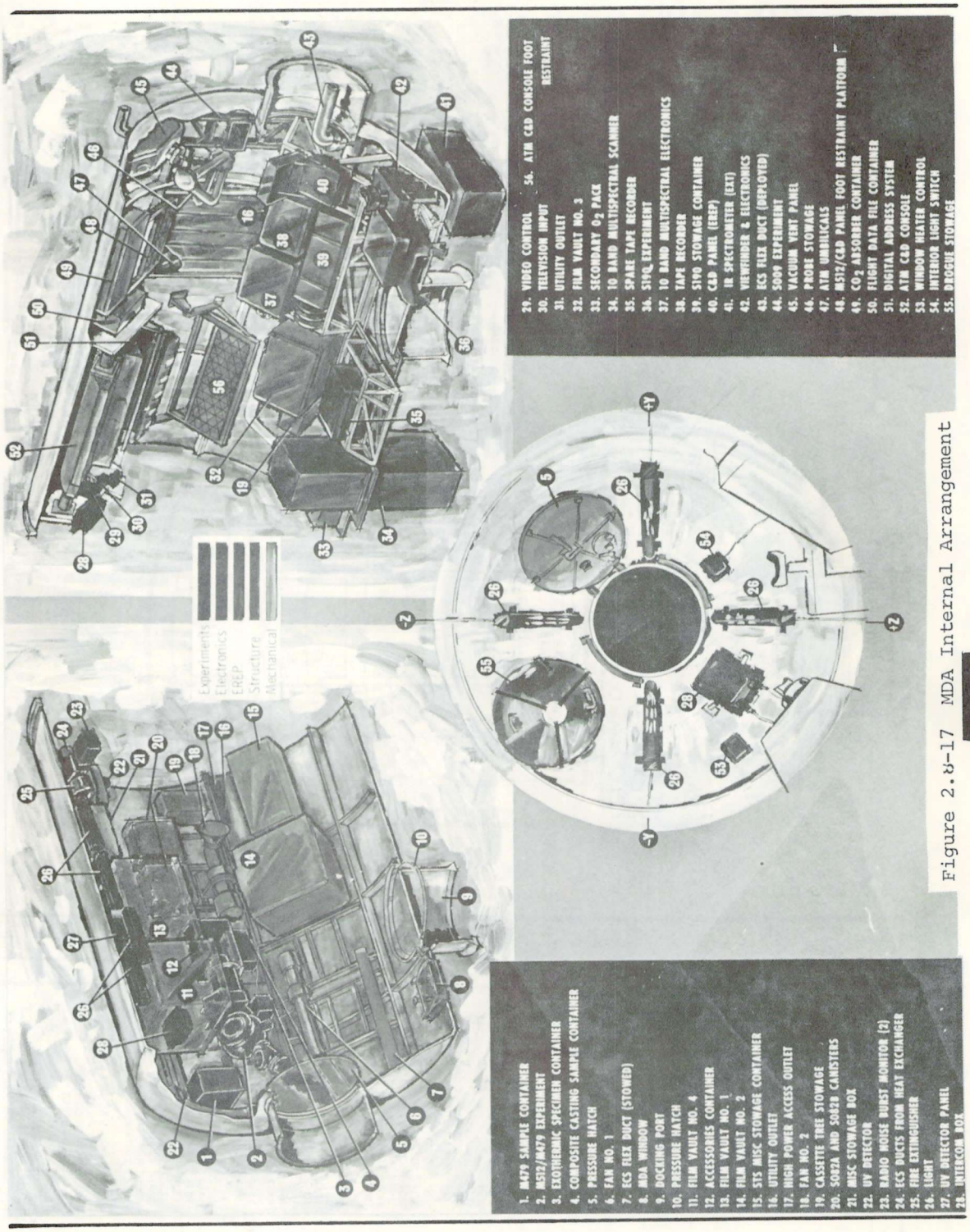

Figure 2.8-17 MDA Internal Arrangement

CS

LOC	NR	ITEM	L	O	R
A6	111	LOCKER	X	X	X
		CO_2 ABSORBERS	X		
	0686	M512 MELT SPECIM (3)	W	W	X
	0686	M512 EXO SPECIM	W	W	X
	0686	M512 CRYST SPECIM	W	W	X
	0686	M512 COMPO SPECIM	W	W	X
	0686	M512 SPHER SPECIM (28)	W	W	X
	0695	T003 FIL IMP UNIT	W	W	X
	1305	S190 FILM MAG (10)	M	M	X
A7	1112	LOCKER	X	X	W
	0009	SOP (2) & CASE	X	W	W
	0600	URINE CHILLER	W	W	X
	0600	M071/73 URINE SAMPLES	W	W	X
A8	1113	LOCKER	X	X	X
	0008	PCU (2) & CASE	X	W	W
	0002	LCG'S (3)	X	A	W
	0080	CWG'S (3)	X	W	X
	1066	MDA PWR UMB	X	X	W
	1067	MDA CONTROL UMB (2)	X	X	M
	0688	5052 CAM & FILM	M	M	X
	0689	5054 FILM MAG	M	M	X
	0691	5056 FILM MAG	M	M	X
	0692	H ALPHA FILM MAG	M	M	X
	0699	T027 SAMPLE SYS	W	W	X
		16 MM FILM MAGS (26)	M	M	X
A9	1114	LOCKER	X	X	X
	1150	IVA UMB & CASE	X		
	1151	OXY VENT VLV, HOSE, CASE	X		
		EREP MAG TAPE CONTS (4)	X	W	X
		EREP MAG TAPE REELS	X	W	X
		S019 FILM MAGS	M	M	X
		S020 FILM MAGS (2)	M	M	X
	504	D021 SAMPLE CONT	W	W	X
	506	D027 SAMPLE CONT	W	W	X
		S149 DETECT MAG	W	W	X
		S190 FILM MAGS (8)	M	M	X
TOP LDG	1032	PGA BAG	C		X
		PGA HELMETS (3)			X
		PGA HELMET BAGS (3)			X

LOC	NR	ITEM	L	O	R
B1	0057	HEADREST (3)	X	X	X
	0082	TISSUE DISPENSERS (4)	X	X	W
	0083	UTIL TOWELS (R, W, B)	X	X	X
	0701	PERSONAL DOSIMETER	X	X	X
	1139	RET WATER BAGS (3)	W	W	X
	1167	HEEL REST & BAG	X	X	X
B2	0202	PGA ELEC CONN COV (3) & BAG	X	W	W
	1022	OXY HOSE COUPLING (3)	X	C	W
	1149	OXY HOSE SCREEN CAPS (3)	X	C	
B3	0063	2 SPEED TIMER	X	W	X
	0100	16 MM DAC	X		
	0102	16 MM FILM MAG	X	C	X
	0106	75 MM LENS	X	C	W
	0108	18 MM LENS	X	C	W
	0111	RT ANGLE MIRROR	X	C	W
	0113	DAC PWR CABLE	X	C	W
	0120	70 MM HEC	X	X	X
	0121	70 MM FILM MAG	X		X
	0133	AUTO SPOTMETER	X	W	W
		PHOTAR FILTER 2A	X	W	W
	1043	UTILITY STRAP	X	W	W
B6		S015 ZERO G CELL EXP	X	X	X
B7	0121	70 MM FILM MAGS (2)	M	M	X
	1141	CHLORINE DISP PACK	X	C	W
B8	0102	16 MM FILM MAGS & BAG	X	C	X
	0121	70 MM FILM MAGS & BAG	X	C	X
	1031	DAC CAM MNT & BAG	X	C	M
LEB	0708	RAD SURVEY METER	X	C	X
	1155	CLOSEOUT CURTAIN	X	X	X
	1156	FLT DATA RESTRAINTS	X	C	W
	1164	TEMP STOW POUCH (2)	X	X	X
A1	1107	LOCKER	X	X	W
	0694	S082 FILM LOCKER	W	W	X
	0694	S082 FILM MAGS	W	W	X
A2	1108	LOCKER	X	X	X
	1060	CONTINGENCY RESUPPLY	X	W	W
A3	1109	LOCKER	X	W	W
		M071/73 RETURN BAGS	X	X	X
		BELLY BANDS	X	X	X
	1048	PROBE STOW BAG	X	M	M
	1151	O_2 VENT VLV, HOSE, & BAG	X	X	W
	0693	S082 FILM LOCKER	M	M	X
	0693	S082 FILM MAGS	M	M	X
A4	1118	LOCKER	X	X	X
	1052	CO_2 ABSORBERS (4)	X		
A5	1110	LOCKER	X	X	X
	1201	TV CAM & LENS	X	W	W
	1201	TV MONITOR	X	W	W
	1201	TV MON CABLE	X	W	W
	1201	TV PWR CABLE	X	W	W
	1201	RING SIGHT	X	W	W
	1014	TV CAM MOUNT	X	W	W
	1220	EVA GLOVES	X	W	W
	1302	16 MM MAG RET BAGS	X	X	X
		16 MM FILM MAG (400')	X	X	X
	0610	TAPE RECORDER	W	W	X
	0654	S009 DETECT PACK	W	W	X
TOP LDG		M071/73 RETURN BAGS	W	W	X
	1300	M071/73 SPECIMEN PACKS	W	W	X
		BELLY BANDS (2)			X
TOP LDG	1300	M071/73 SPECIMEN PACK	W	W	X
TOP LDG	1300	M071/73 RETURN BAG M071/73 SPECIMEN PACKS	W W	W W	X X

Figure 2.8-18 Skylab CM Stowage Chart

2. Skylab Cluster Subsystem hardware listed in Paragraph 2.8.4.1 Item 2 above is a broad listing of the major EVA supporting elements.

3. Airlock Module EVA Hardware is covered in the SLOH/SWS Volume I. The VC and VS Tree is used as a film magazine transfer units to enable a work load unit of each variety to be moved from the VF to either the VC or the VS. The VC Tree holds the S052, S054, S056, and Hα1 film magazines as a unit. The sun End Pallett holds the S082A and S082B Camera canisters as a unit. When a film retrieval EVA is in progress the same Trees transport the expended film/camera groups from their respective workstations to the VF. At this point, the containers/ magazines are moved into the MDA where they are configured for storage in the CM film vaults.

4. VF equipment is listed in paragraph 2.8.4.1 Item 4, above. The VF is displayed by photographs and sketches in Figure 2.8-46 through 2.8-47 where most of the equipment items are identified. Crewman number 1, suited, operates at this station while Crewman number 2 works on the ATM. Crewman number 3 will be inside Skylab, unsuited.

At the VF, crewman number 1 will send the loaded film and camera trees to crewman number 2, as he requires them during the film/camera retrieval or replacement operations the ATM as shown in the typical scenario pages 2.8-7 to 2.8-18 Boom or clothesline will be used as a backup to send and receive loaded film/camera trees. (The photographic and video equipment will be discussed in 8 below.)

5. The ATM VC is the main ATM station in that it contains the Rotation Control Panel 160, described in 9 below, necessary for positioning the canister for both film retrieval/replacement at the VC and at the VS. Section 5 of paragraph 2.8.4.1 above lists the equipment installed at the VC. Photos and line drawings of the VC appear in Figures 2.8-48 through 2.8-49 indicating all equipment listed, except the cameras and their receptacles which are inside the canister. (See Figures 2.8-17 through 2.8-22.)

In all cases note the Canister Alignment Pointer and the associated experiment door positioning decal.

Cameras/film containers/film trees/camera containers are covered in detail in each of the ATM Solar Experiment sections in this handbook as applicable.

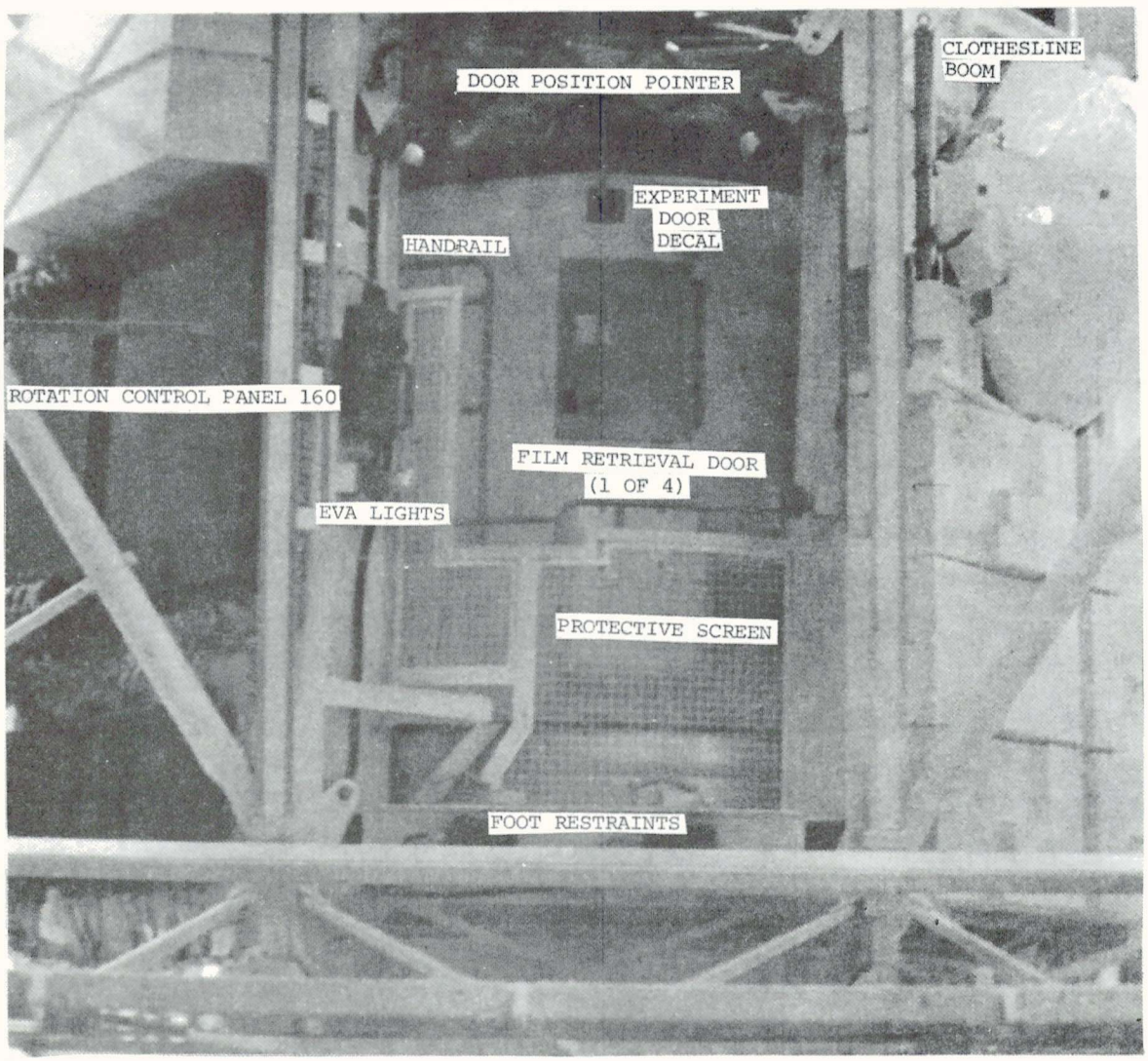

Figure 2.8-19 Center Workstation (VC)

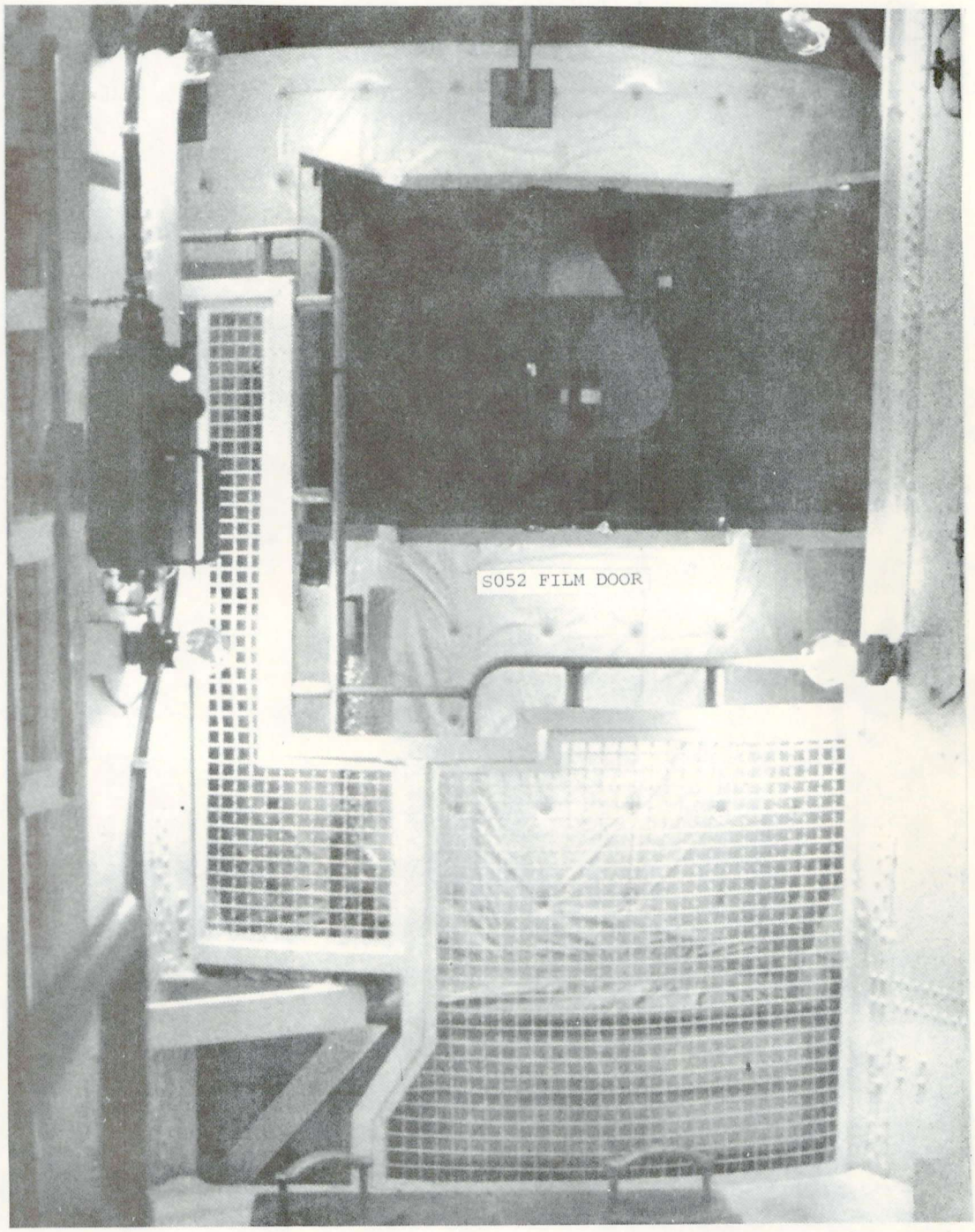

Figure 2.8-20 S052 Double Film Door in Canister at VC

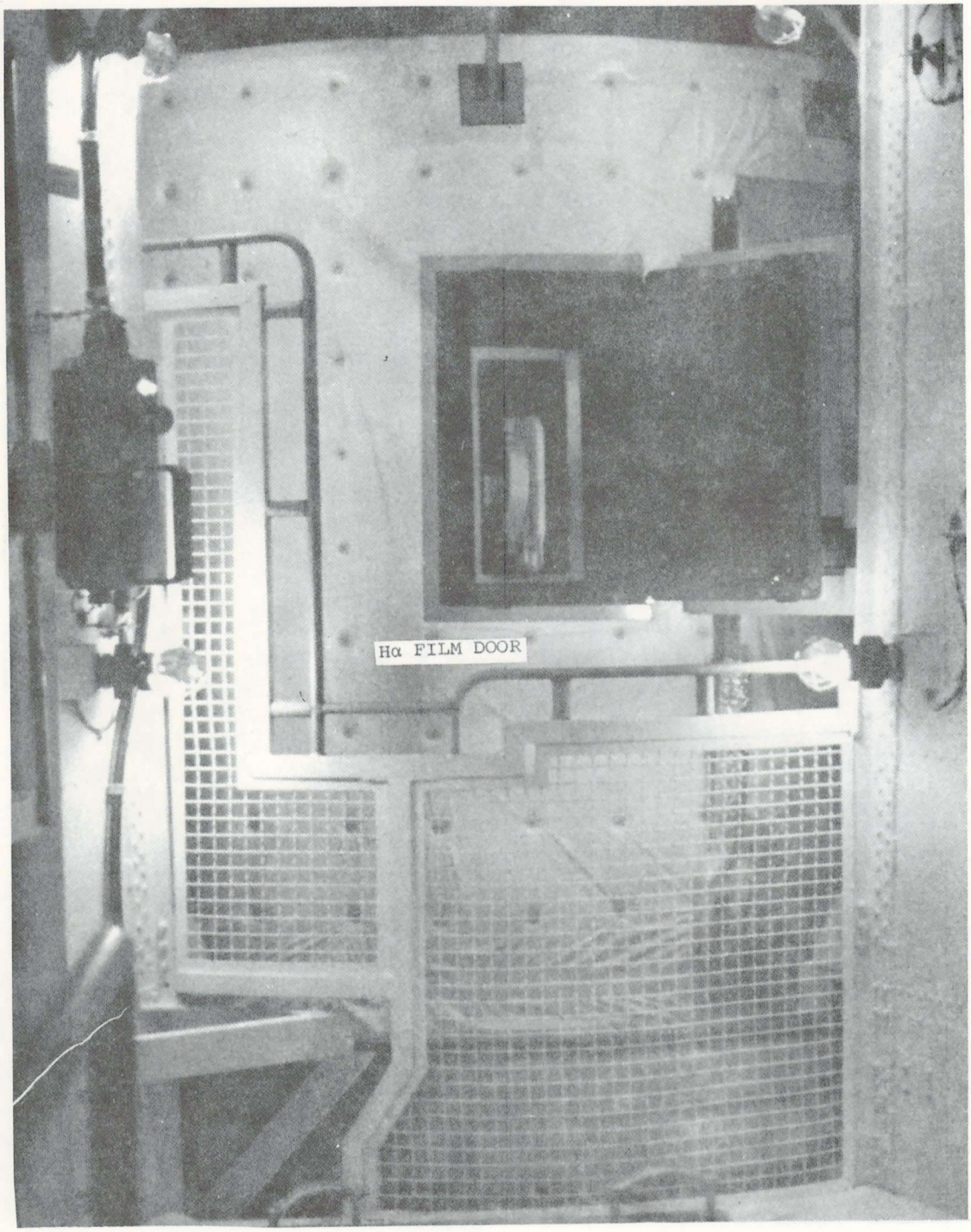

Figure 2.8-21 Typical Single Film Door in Canister at VC (Hα Door)

Film Retrieval/Replacement Access Doors are provided for S052, S054, S056 and Hα1 solar experiments in the canister and are operable at the VC. S055A does not use film, all of the data is electronically recovered. Door latch handles are integral with the door and operable with one gloved hand. Doors hinge on sides parallel to the vertical axis of the ATM canister with spring loaded retractable dogs operating to open or close doors with a force not in excess of 10 pounds. See Figures 2.8-19 through 2.8-21 for photographs of these doors. These access doors are provided with a positive restraint to hold the door open in any position and the openings have a minimum of 2.0 inches clearance on each side of the camera. At the bottom left of each of the doors is a flag OPEN indicator. Further mechanical details are available in Section 2.1 of this handbook.

6. The VT and VS are in reality a single station since the film for the Sun End Cameras comes to Crewman number 2 as he stands in the foot restraints of the VT. He then puts the tree in the receptacle on the Solar Shield and translates to the Sun End foot restraints where he proceeds with replacement and/or retrieval of the S082A and S082B cameras (film enclosed). (This is preceded by rotating the canister and opening the Sun End aperture Doors at the VC using Panel 160 before translating to the VT.) Door details are in the SMS section 2.1 of this manual. Figure 2.8-45 through 2.8-56 are photographs of the VT and Vs with most of the equipment listed in 2.8.4.1 Item 6 above identified.

Film Retrieval Access Doors are provided at the VS for S082A and S082B. These doors can be opened with one gloved hand and the handles are an integral part of the door. The doors operate with a single handle having a mushroom shaped pushbutton latch. Doors will hold in the closed to open position. The experiment sun end aperture doors must be opened by the momentary door switch on Panel 160 at the VC before the film access doors can be opened and the S082 cameras removed. See Figures 2.8-22 and 2.8-23 for pictures of these doors. Further mechanical details are available in Section 2.1 of this handbook.

CS

7. Astronaut Translation system equipment includes single handrails from the VF to the ATM VC with a dual rail ladder to the VS. Each workstation is equipped with a single rail for movement about that particular station. EVA lighting and LSU clamp are also part of the translation system. Figures showing photographs and sketches of the ATM EVA Route and the various workstations have identified on them the main elements of the Astronaut Translation System.

8. Stowage is provided for a 16mm Motion Picture Camera. Emplacements are positioned on the VF for eady access by the EVA crewman so that a film record may be made of each EVA. Figure 2.8-43 shows a 16mm emplaced on the VF. A video TV record will also be taken.

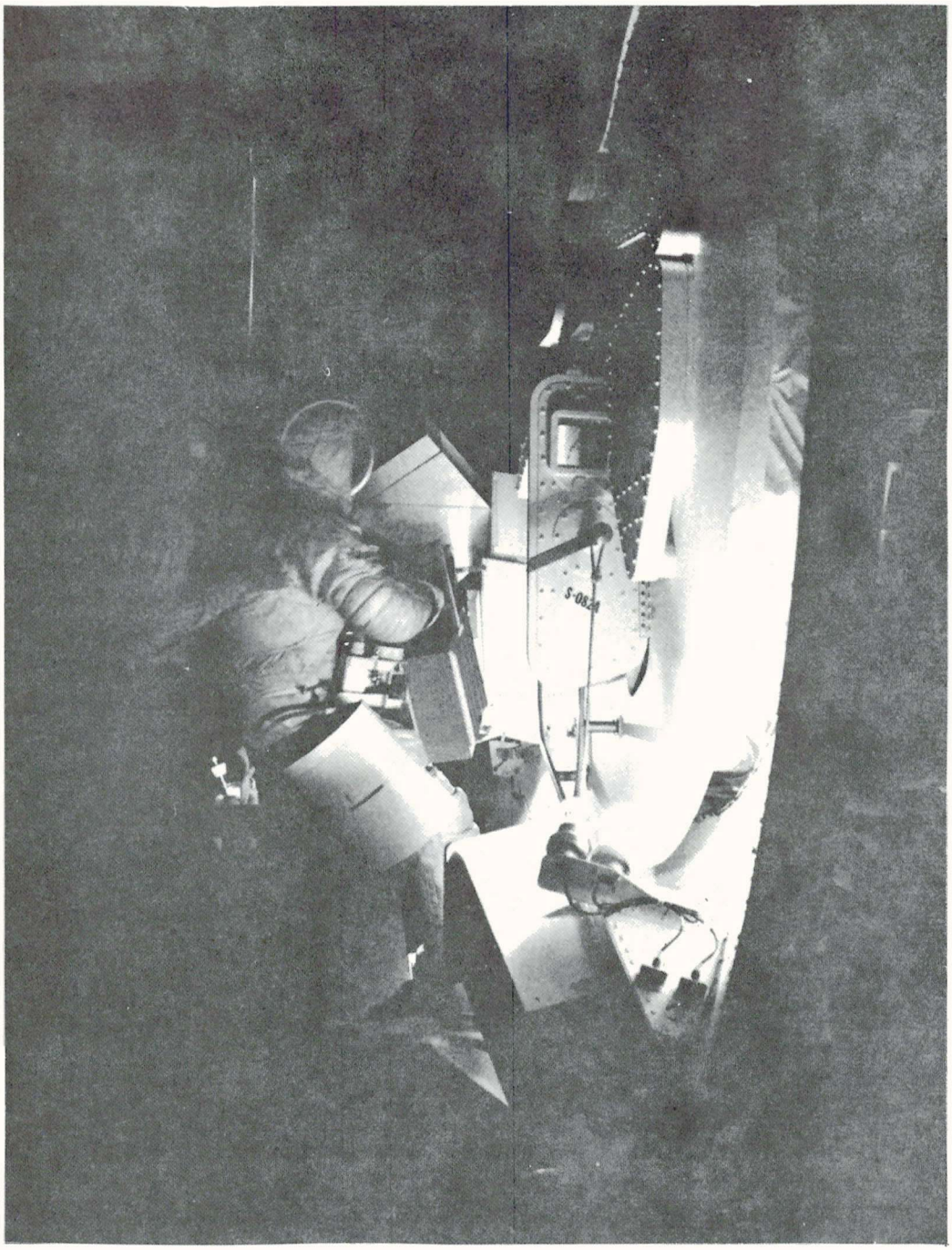

Figure 2.8-22 Sun End Camera Replacement

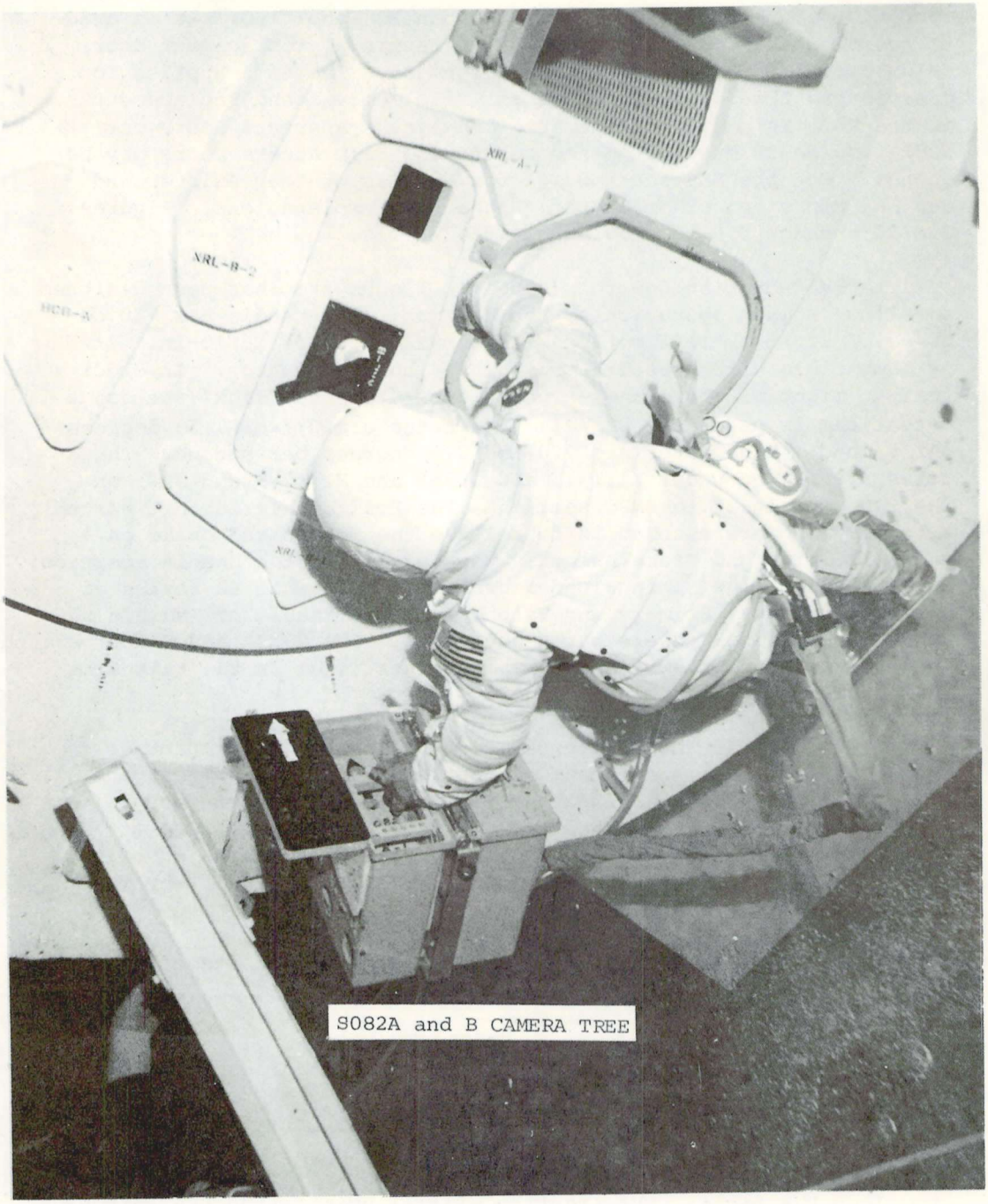

Figure 2.8-23 Sun End Film Doors

9. Rotation Control Panel 160 is located at the VC for the operation of the Rotation Control Mechanism Panel 160. It is used to position the four canister VC film retrieval/replacement doors by used of the pointer and decal alignment. The same applies to positioning the S082A & B doors for film removal and replacement at the VS. In addition, the Sun End Access Aperture Doors for S082A and S082B must be opened before the Film Access Doors may be opened. See the SMS section 2.1 for details of the canister and Sun End Doors and other Electro-Mechanical explanations. Figures 2.8-24 through 2.8-26 show Panel 160 details.

The EVA Rotation Control (Panel 160) subsystem has been designed to allow "Blind" operation by the crewman. The handle has ±40 degrees of right or left motion with a max torque of 26 lb-in. It is compatible with pressure suit gloved hand operation. In order that it might be obvious wnen going from "Low" to "High" speeds, a detent cam is used as a signal. Low rates are 0.7 or 0.35 degrees per second. High rates are 7.0 and 3.5 degrees per second. These rates are paired under X1 (3.5 and 0.35) and X2 (7.0 and 0.7) on the C&D Console at the MPC section. The Roll Enable/Inhibit switch actually empowers a solenoid to release the mechanical brake on the Roll Drive and Brake Assembly when placed in the Enable Position. Inhibit allows the spring-loaded brake to operate at 80 ft/lbs of breakout torque. Primary and Secondary power Enable or Inhibit redundant electrical power to the subsystem. The S082A and B door switch is an instantaneous switch with a five watt light in the talkbacks that back light OPEN or barber pole.

Prior to EVA, there is a certain C&D Console configuration that must be established in order that the Rotation Control Panel 160 may be properly used and that EVA may be safely conducted. Figure 2.8-27 shows the areas from the C&D Console that are of EVA interest. Table 2.8-III lists the proper configuration of the switches in Figure 2.8-27. Table 2.8-III also tells why the particular set up is necessary.

Table 2.8-VI covers the Performance and Design Data of the Canister Rotation Control Panel 160.

Figure 2.8-25 is a functional schematic of Panel 160 and the associated Roll Drive, Brake Assembly and C&D major controls.

Figure 2.8-26 is an electrical functional schematic of the Rotation Control Panel 160 itself.

10. EVA Light: EVA Lighting will illuminate the EVA Astronaut routes to each workstation with aminimum of 2.0 ft lambert. Workstations will be illuminated with 5.0 ft lambert level minimum.

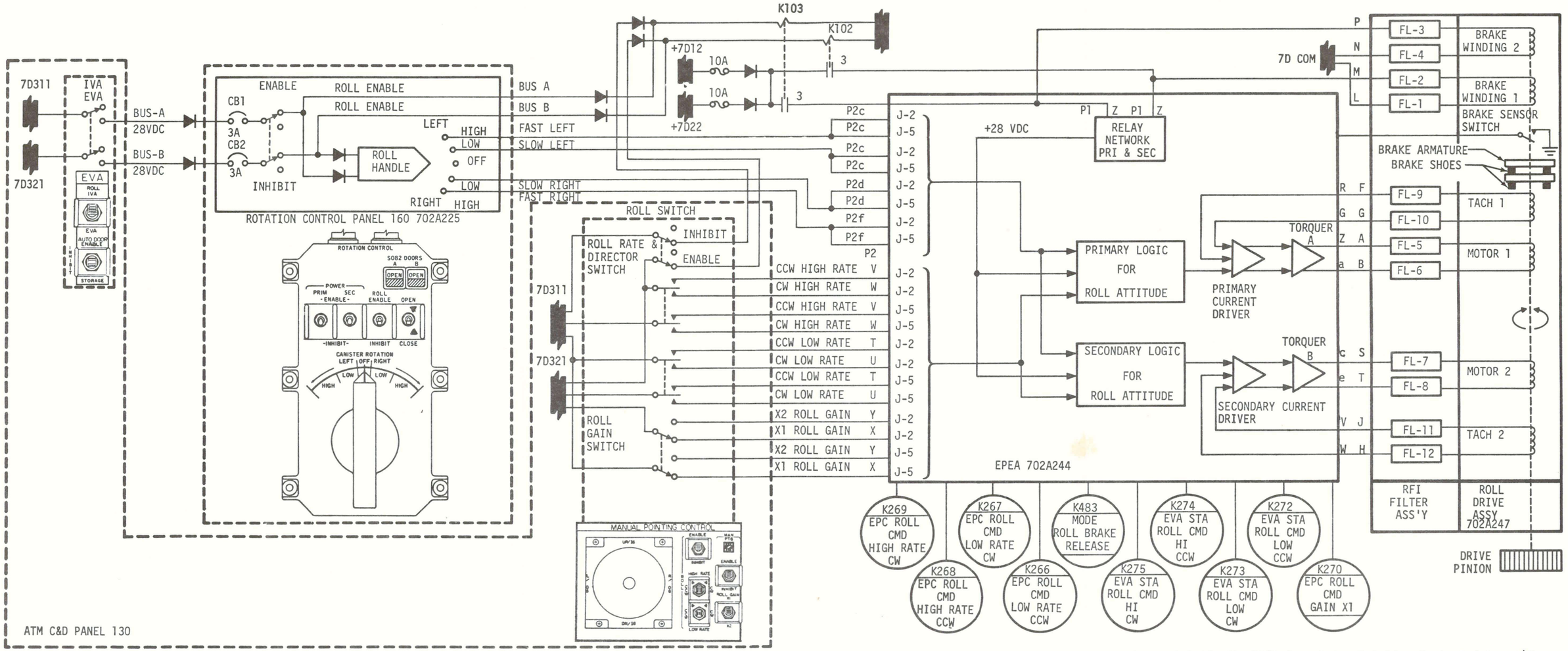

Figure 2.8-24 Simplified Canister Rotation Control Schematic

CS

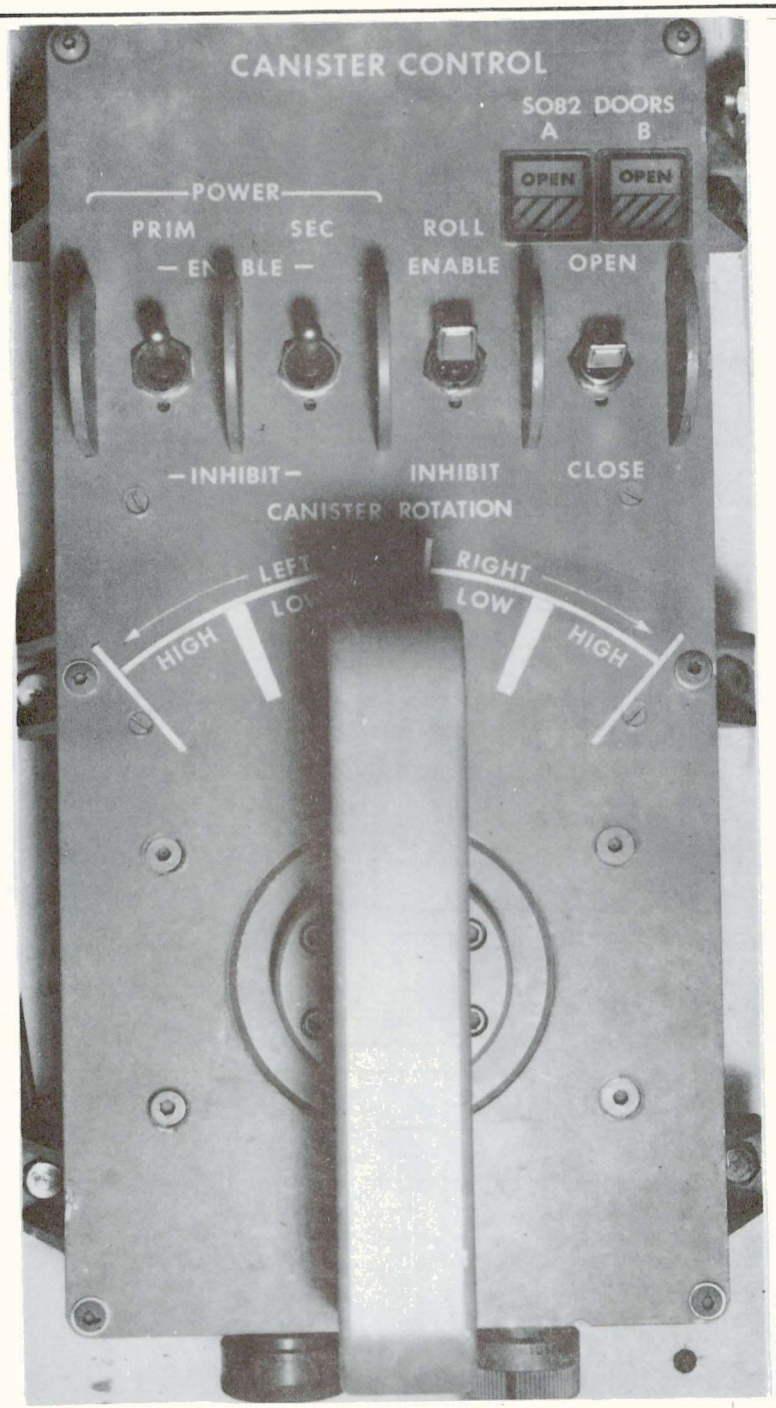

Figure 2.8-25 Rotation Control (Panel 160)

CS

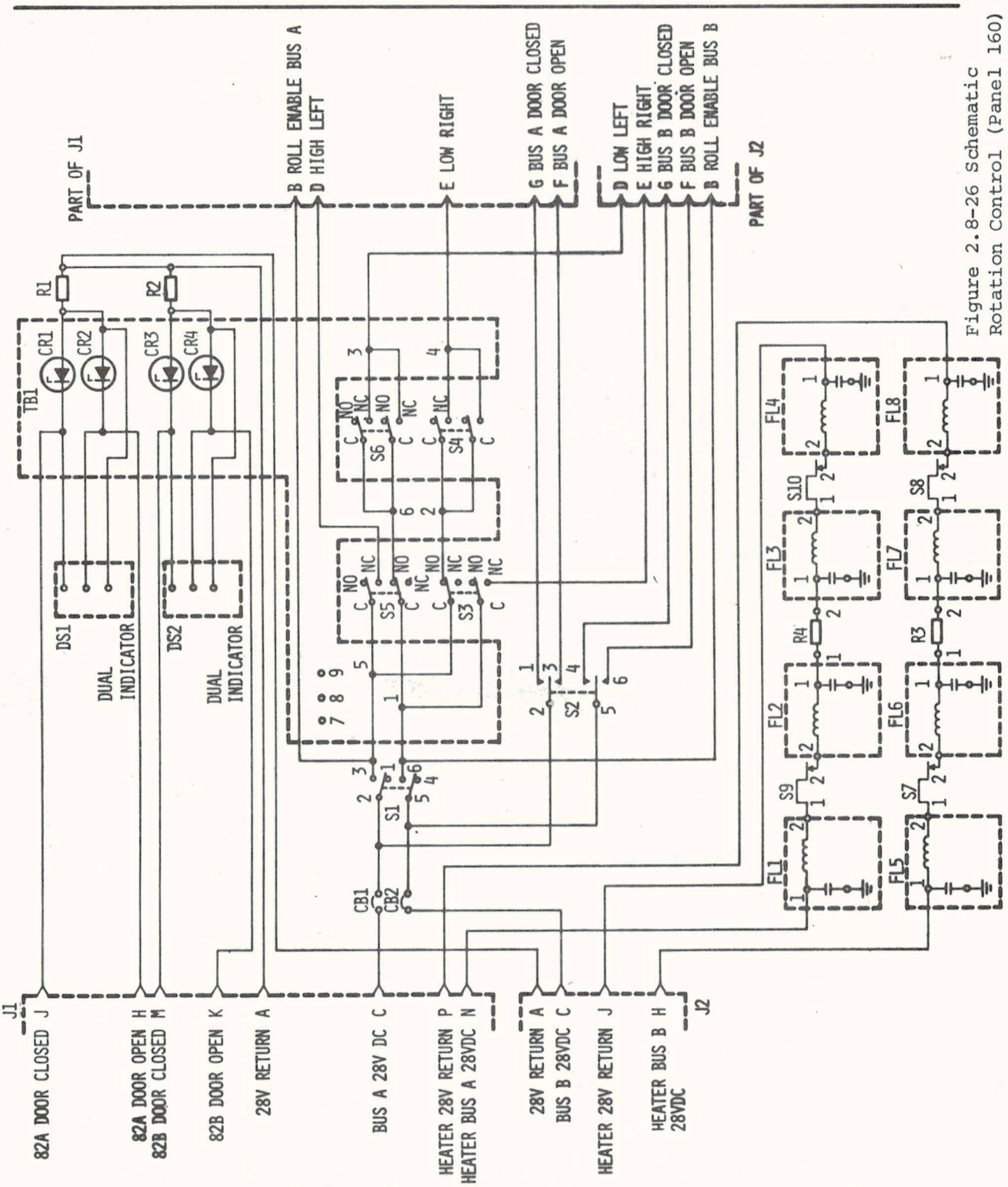

Figure 2.8-26 Schematic
Rotation Control (Panel 160)

EVA lighting is provided as follows:
AM EVA lights - five (5)
FAS & DA EVA lights - six (6)
ATM EVA lights - fourteen (14)

Each light unit is an 18.75 watt incandescent lamp. See Figure 2.8-34 and Table 2.8-VIII.

The EVA lights are supplied by AM bus 1 and AM bus 2 power through EVA LIGHTS 1 and EVA LIGHTS 2 circuit breakers on Panel 202. See Figure 2.8-32.

Control of all EVA lighting is provided on Panel 316 in the Lock Compartment by switches LIGHTING-EVA: AM, DA, and ATM (See Figures 2.8-33).

Switch commands are redundant. They provide AM bus 1 and AM bus 2 power to their respective lights in such a manner that loss of a single bus will disable only half of the lighting in a given area.

Figure 2.8-28 is a simplified EVA Lighting Diagram.

Figure 2.8-29 shows the location of the AM and DA EVA lights.

CS

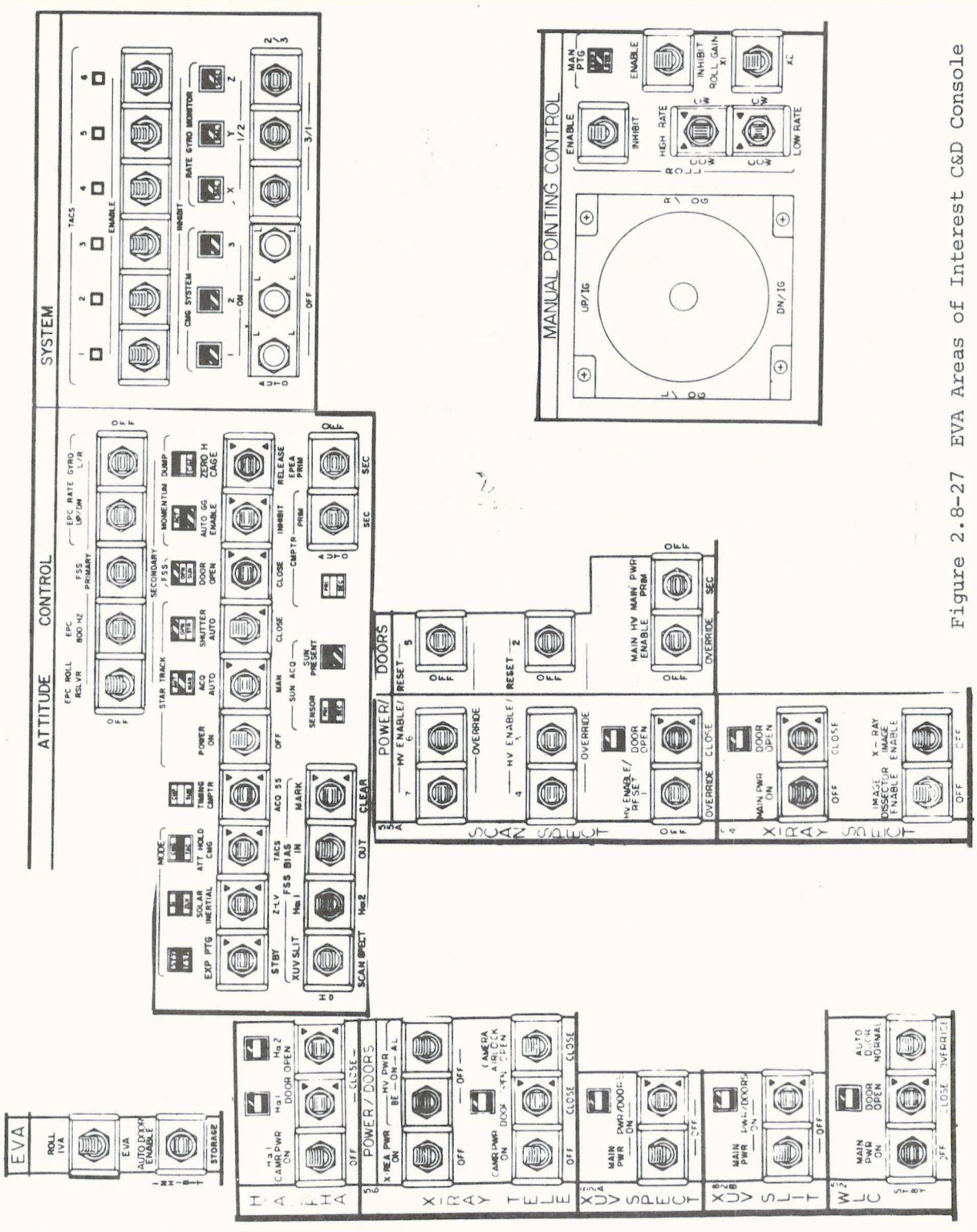

Figure 2.8-27 EVA Areas of Interest C&D Console

Table 2.8-III SUMMARY OF EVA C&D PREREQUISITES

C&D SWITCH		POSITION	COMMENT
EVA ROLL IVA/EVA		EVA	SIGNAL ACTIVATION OF PANEL 160
AUTO DOOR		INHIBIT	INACTIVATE AUTOMATIC DOOR OPERATION DURING EVA
ATTITUDE CONTROL SYSTEM: MODE: Z LOCAL VERTICAL		Z L-V	SIGNAL CONSTANT ATTITUDE OF THE ORBITAL ASSEMBLY DURING EVA
H-ALPHA: CAMR : DOOR		OFF CLOSED	TURNS OFF HV AND KEEPS DOORS CLOSED DURING EVA
X-RAY TELE (56):	HV PWR DOOR	OFF CLOSED	SAME
XUV SPECT (82A):	MAIN PWR PWR/DOORS	OFF OFF	SAME, BUT ADDITIONALLY KEEPS EXPERIMENT DOORS CLOSED WHEN APERTURE DOORS ARE OPENED AT PANEL 160
XUV SLIT (82B):	MAIN PWR PWR/DOORS	OFF OFF	SAME
WLC (52):	MAIN PWR DOOR	STBY CLOSED	KEEPS T/M ON. ALL POWER IS 28V KEEPS CLOSED DURING EVA
SCAN SPECT (55A):	HV ENABLE/RESET : DOOR : MAIN HV : MAIN PWR	OFF CLOSED OFF PRIM	TURNS OFF HV AND KEEPS DOORS CLOSED DURING EVA, BUT KEEPS EXPERIMENT ALIVE
X-RAY SPECT (54):	MAIN PWR DOOR	OFF CLOSED	KEEPS HV OFF AND DOORS CLOSED DURING EVA
MANUAL POINTING CONTROL:	ROLL MAN PTG ROLL GAIN	ENABLE ENABLE X1	ENABLES CANISTER DOOR POSITIONING AND GIVES SLOW ROTATION OF .35 AND 3.50/SEC OF CANISTER
MONITOR: COUNTER 1 SW: ROLL CSTR			PLACE MPC ROLL SW TO ENABLE AND ROLL CANISTER CW TO PROPER COUNTER 1 READING.

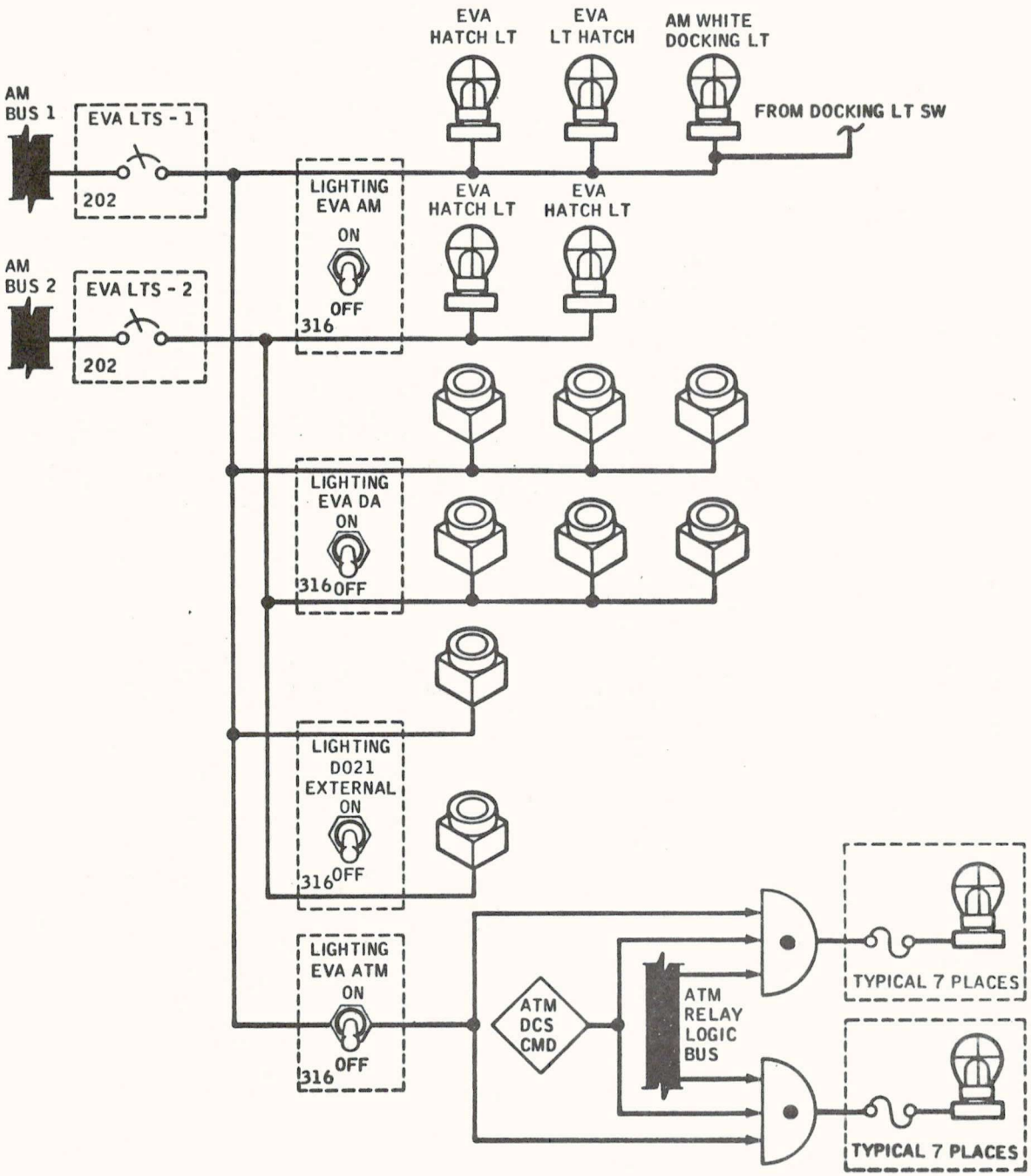

Figure 2.8-28 EVA Lighting Diagram

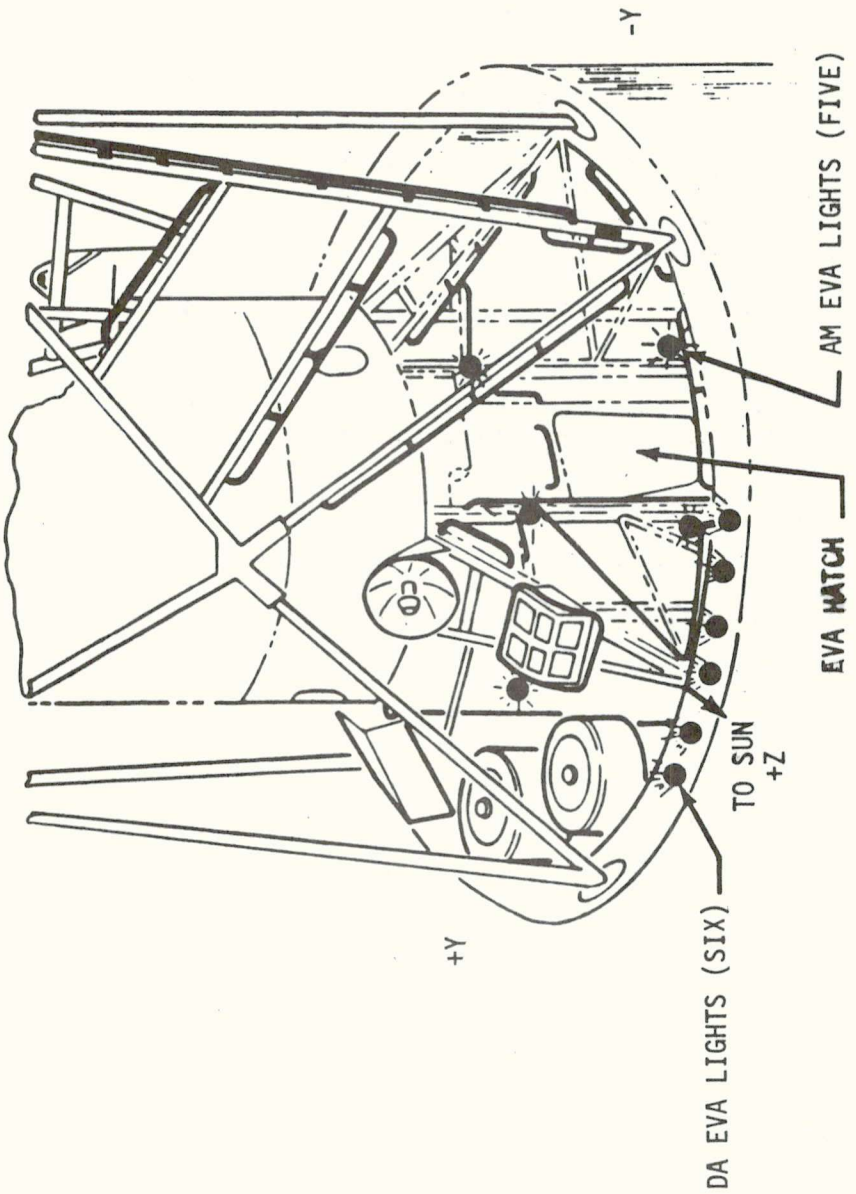

Figure 2.8-29 AM and DA EVA Lights

CS

Figure 2.8-30 shows the location of the ATM EVA lights, eight on the VC and five on the VS and one at VT.

Figure 2.8-31 is a schematic of the ATM EVA Lighting circuitry.

Table 2.8-VIII shows the EVA Lamp specifications.

Figure 2.8-35 through 2.8-38 show various EVA stations lighted by EVA lights.

2.8.5 Performance and Design Data

2.8.5.1 Crewman Translation and stability equipment. Detailed information may be found in "Man/System Design Requirements" 10M32158 Revision C and the Operational Data Book (ODB) Volume V. Performance and design data is summarized in Table 2.8-IV.

2.8.5.2 Film Transfer Boom - Performance and design data information is summarized in Table 2.8-V.

2.8.5.3 Canister Rotation Control - Detailed information is available in the "Cluster Requirements Specification" RS003M0003, ODB Volume IV, CEI detail CP1941200 Parts L & II and 40M37795 Revision B. Performance and design information is summarized in Table 2.8-IV.

2.8.5.4 Clothesline Transfer System. See Table 2.8-VII.

2.8.5.5 EVA Lighting. See Table 2.8-VIII

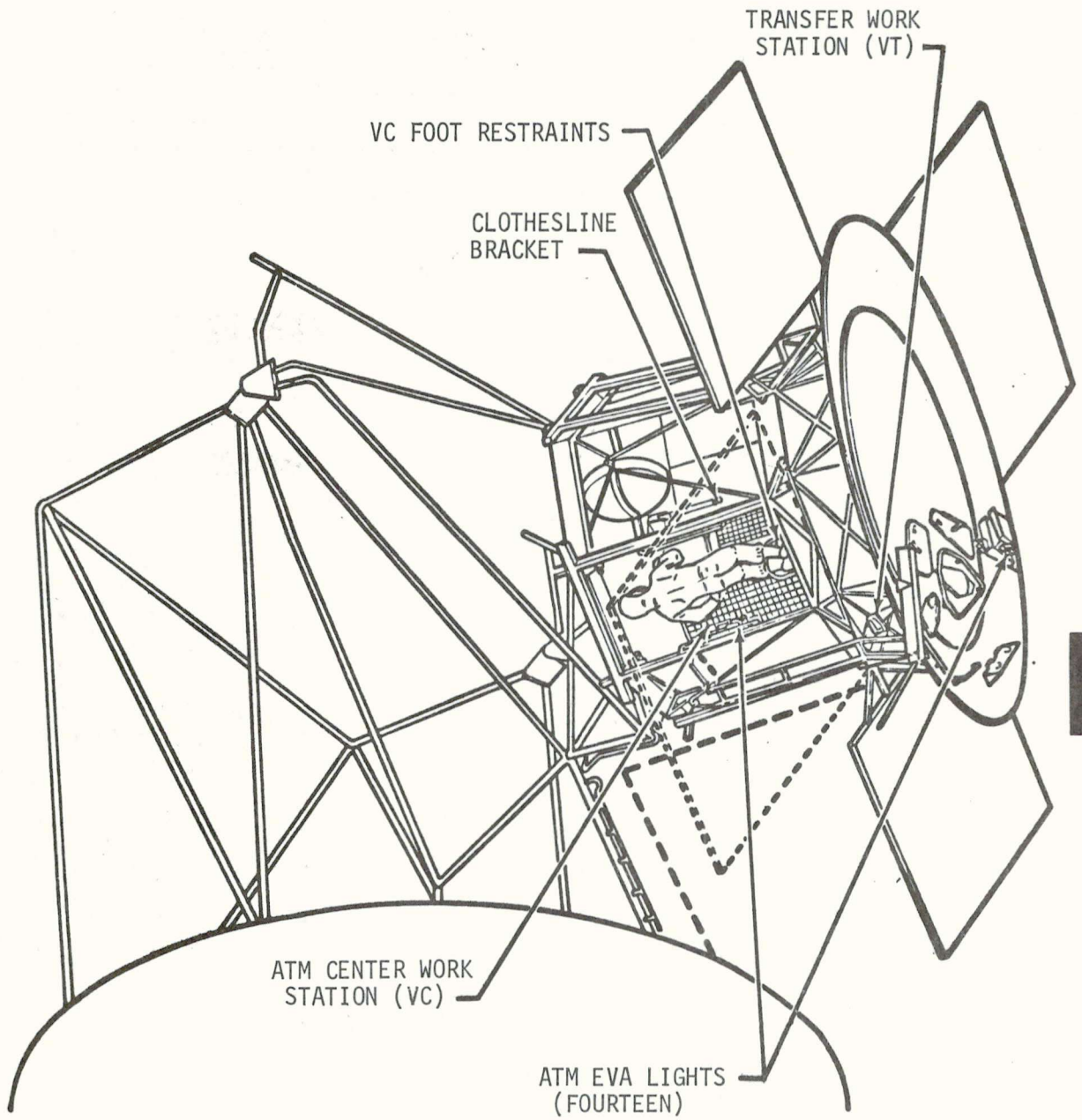

Figure 2.8-30 ATM EVA Lights

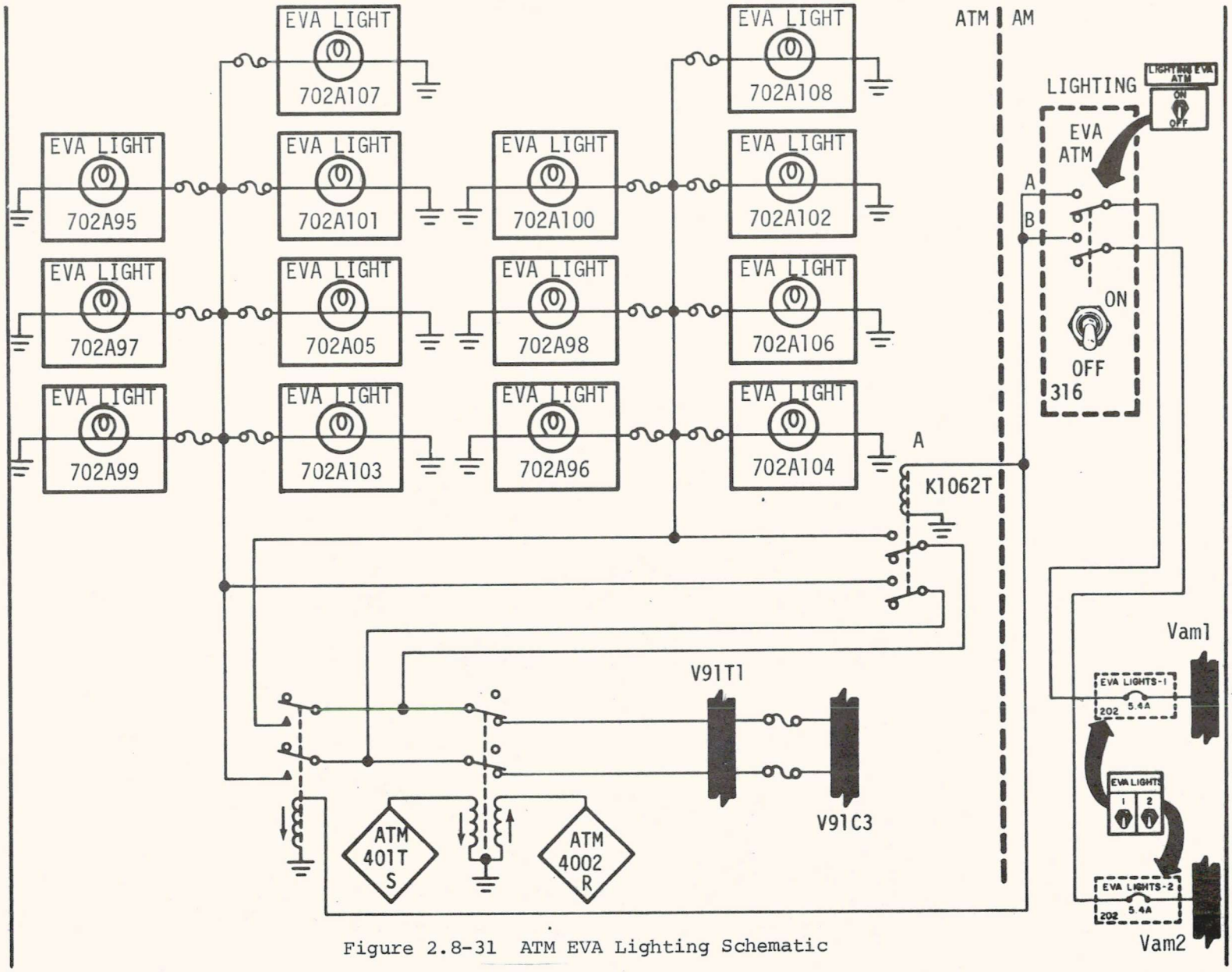

Figure 2.8-31 ATM EVA Lighting Schematic

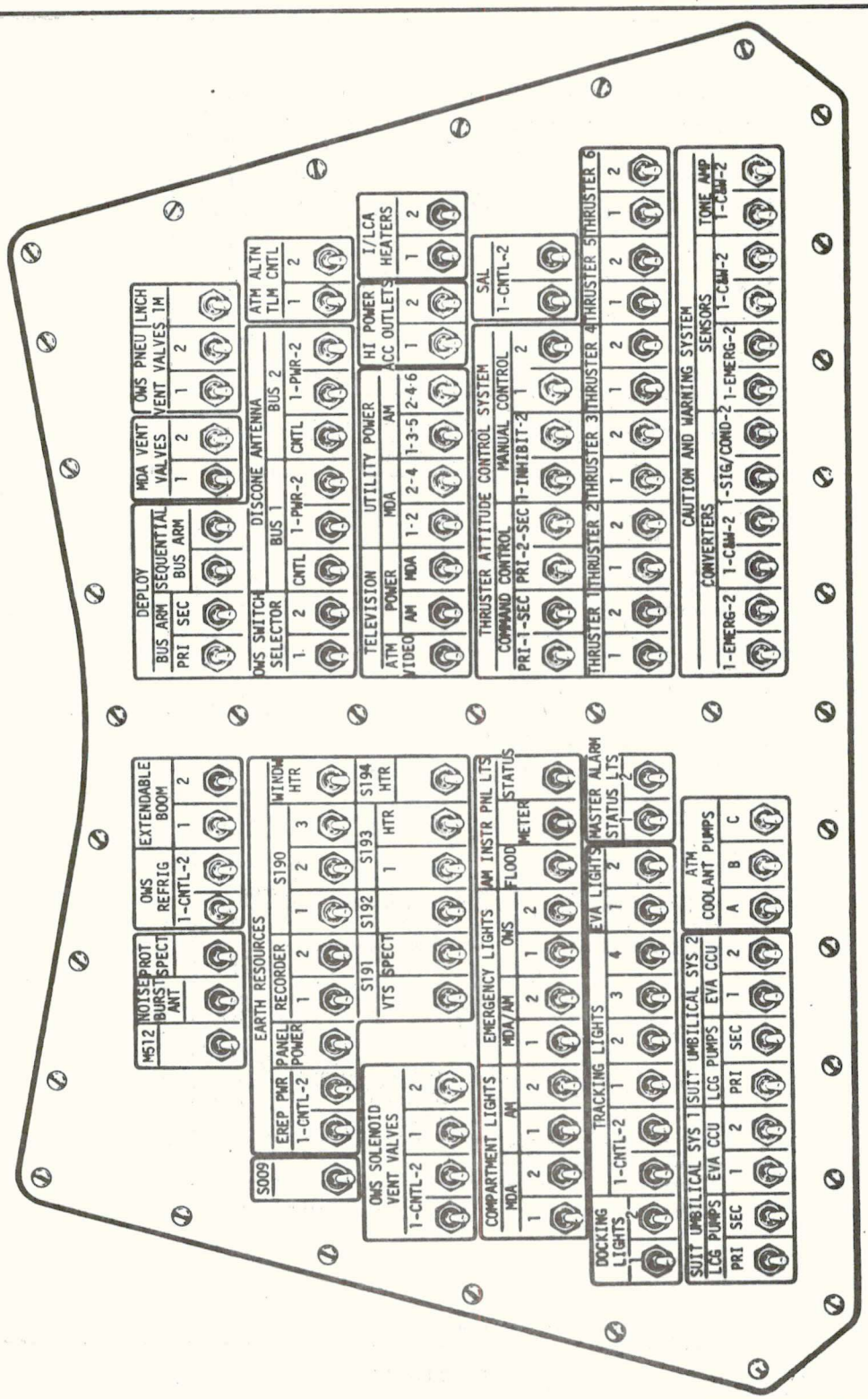

CIRCUIT BREAKER PANEL 202

Figure 2.8-32 SWS Panel 202

CS

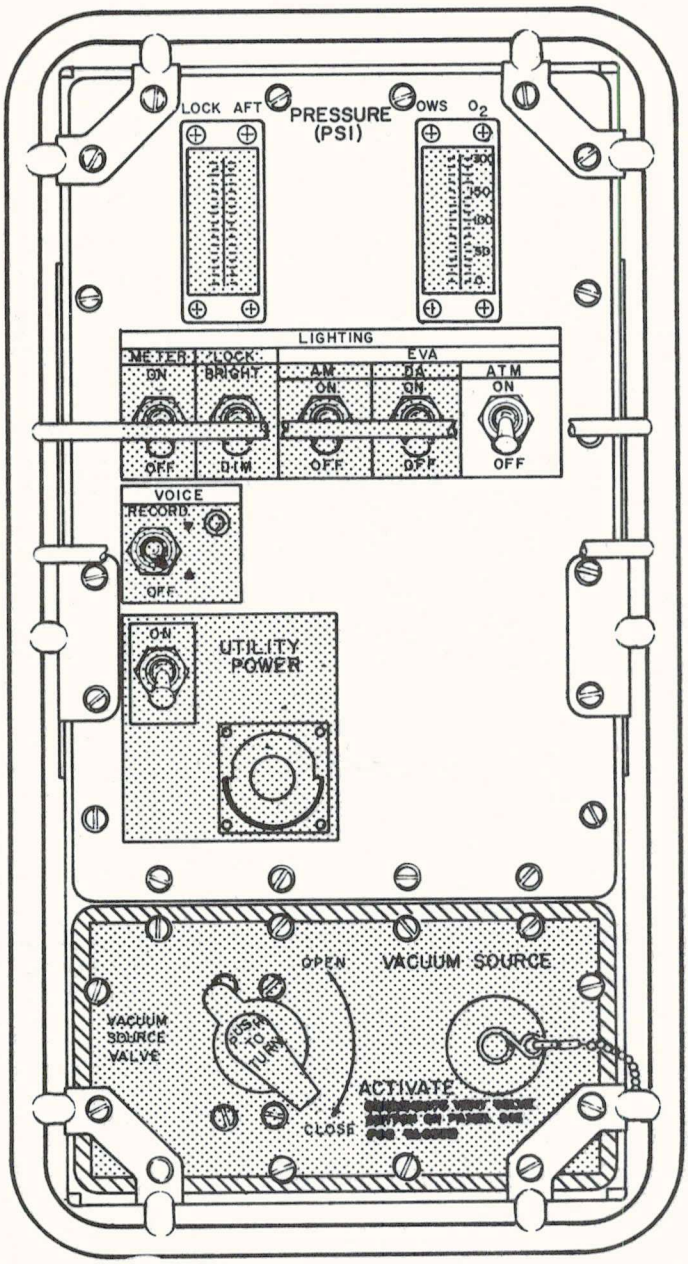

Figure 2.8-33 Lock Compartment Control Panel 316

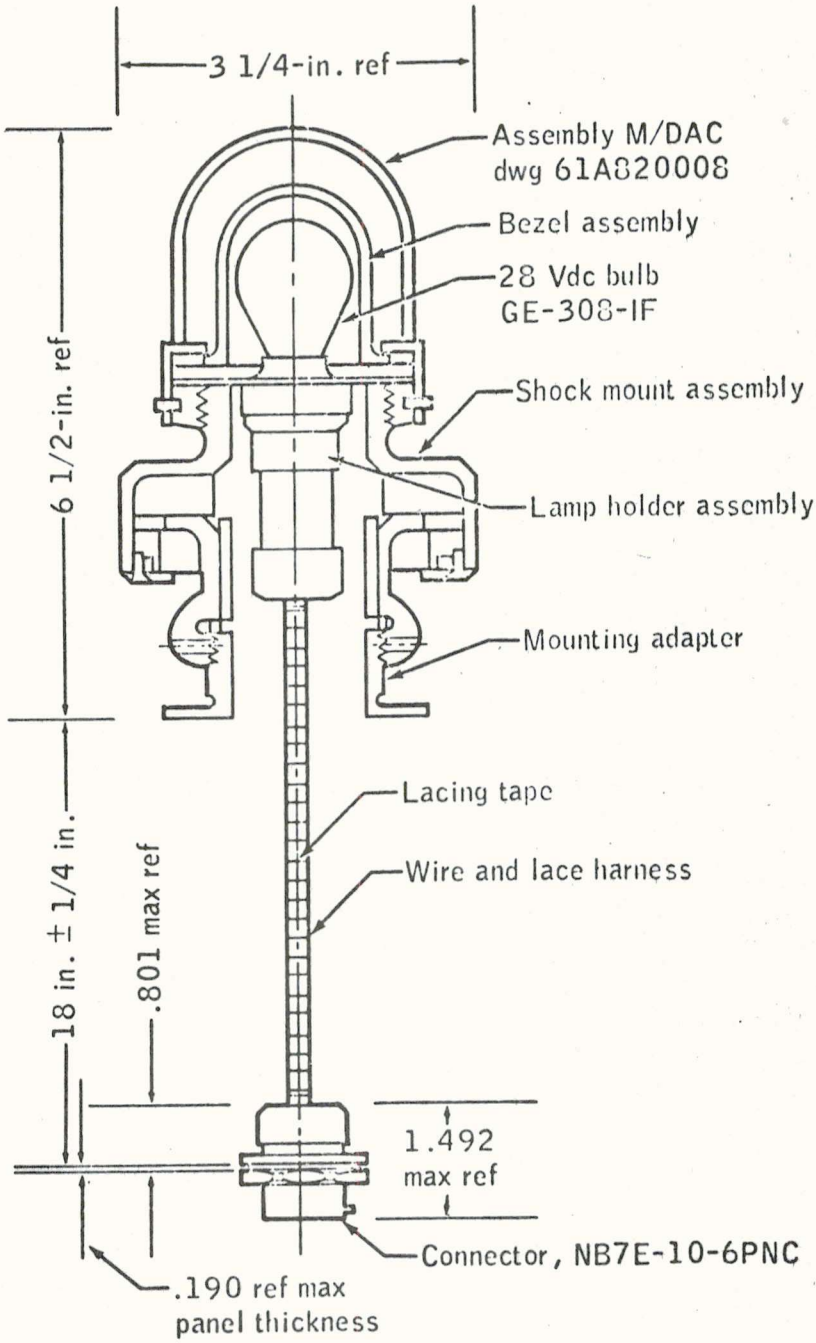

Figure 2.8-34 ATM EVA Light Assembly

CS

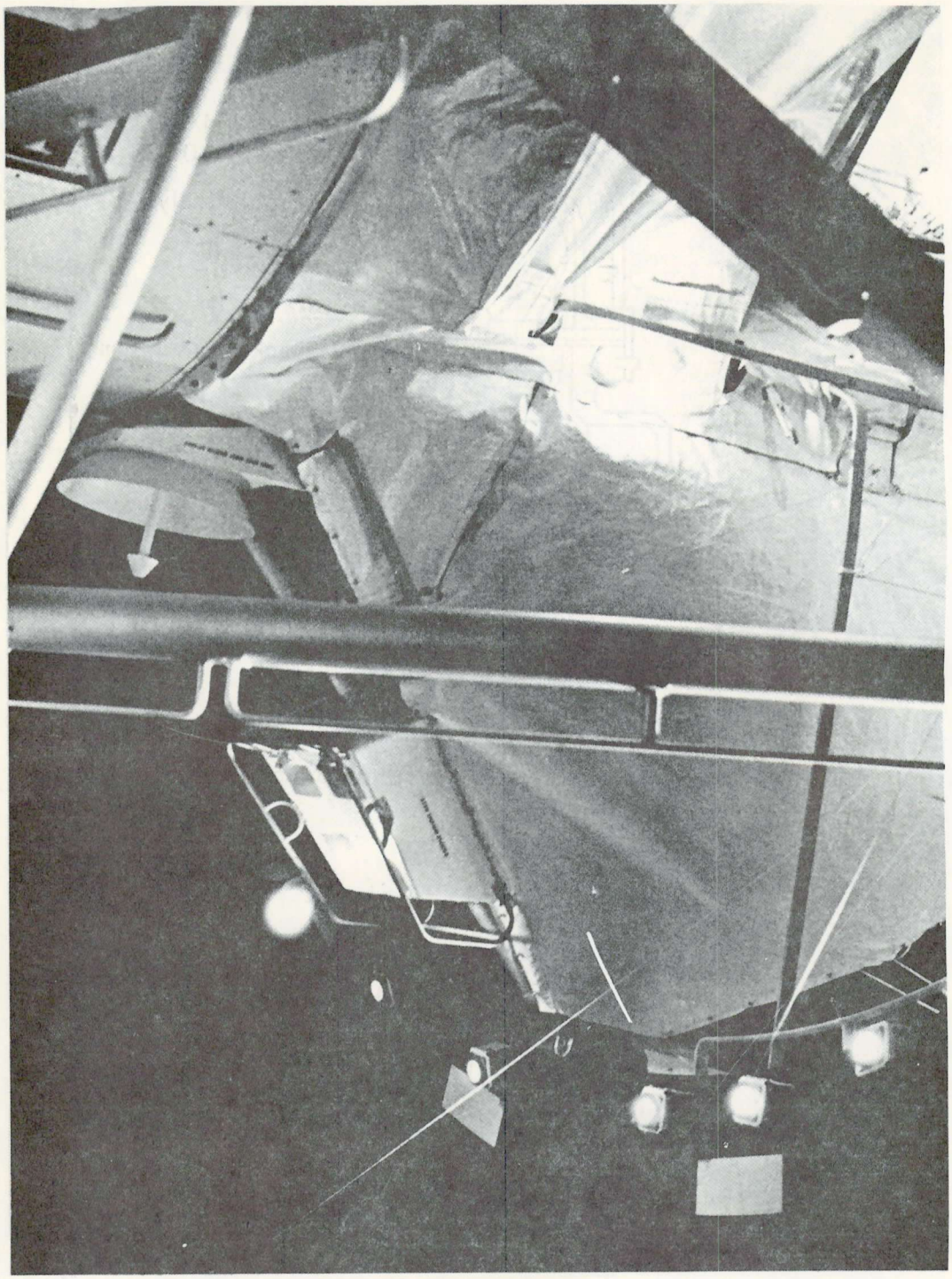

Figure 2.8-35 EVA Lights ATM EVA Route

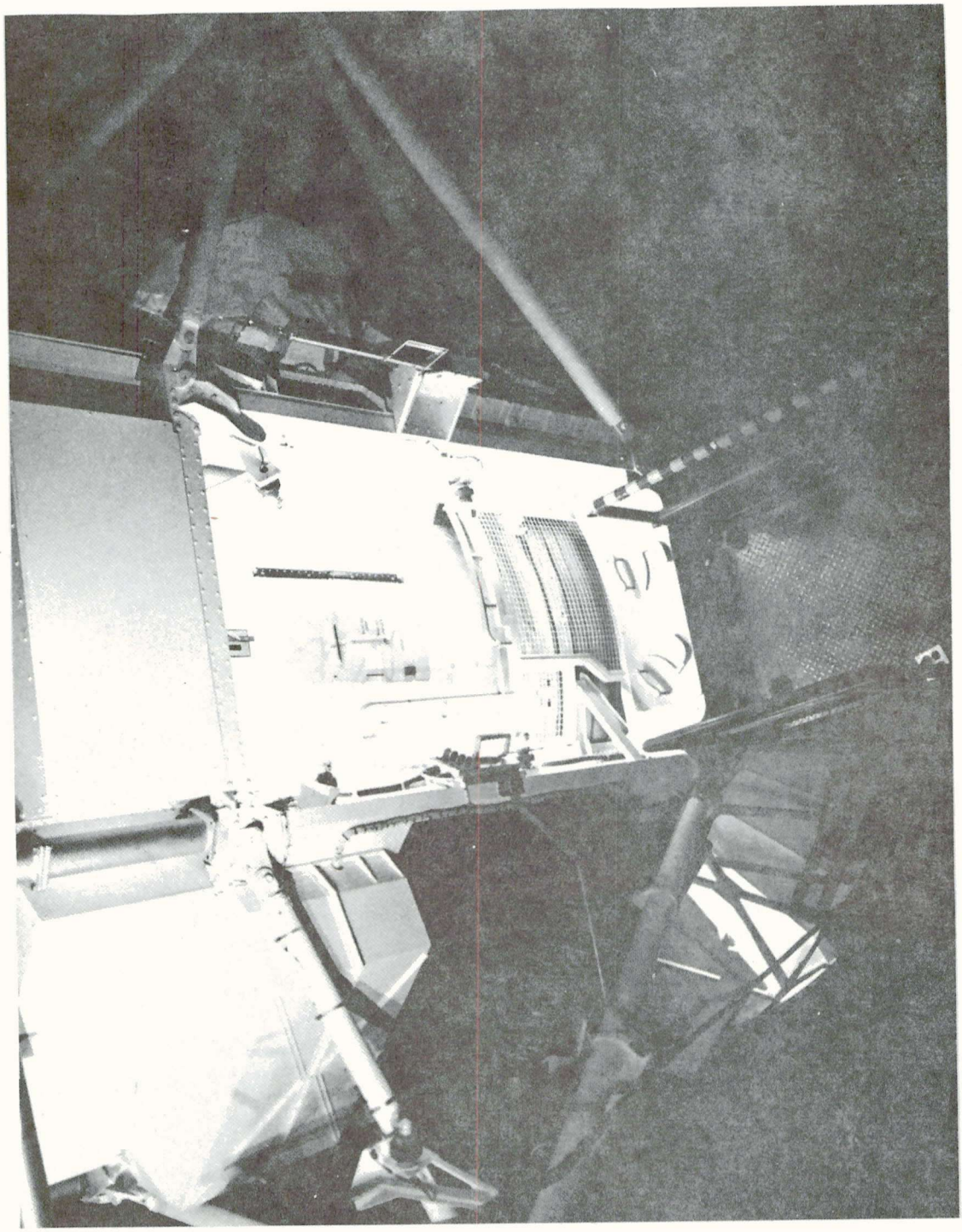

Figure 2.8-36 EVA Lights Center Workstation (VC)

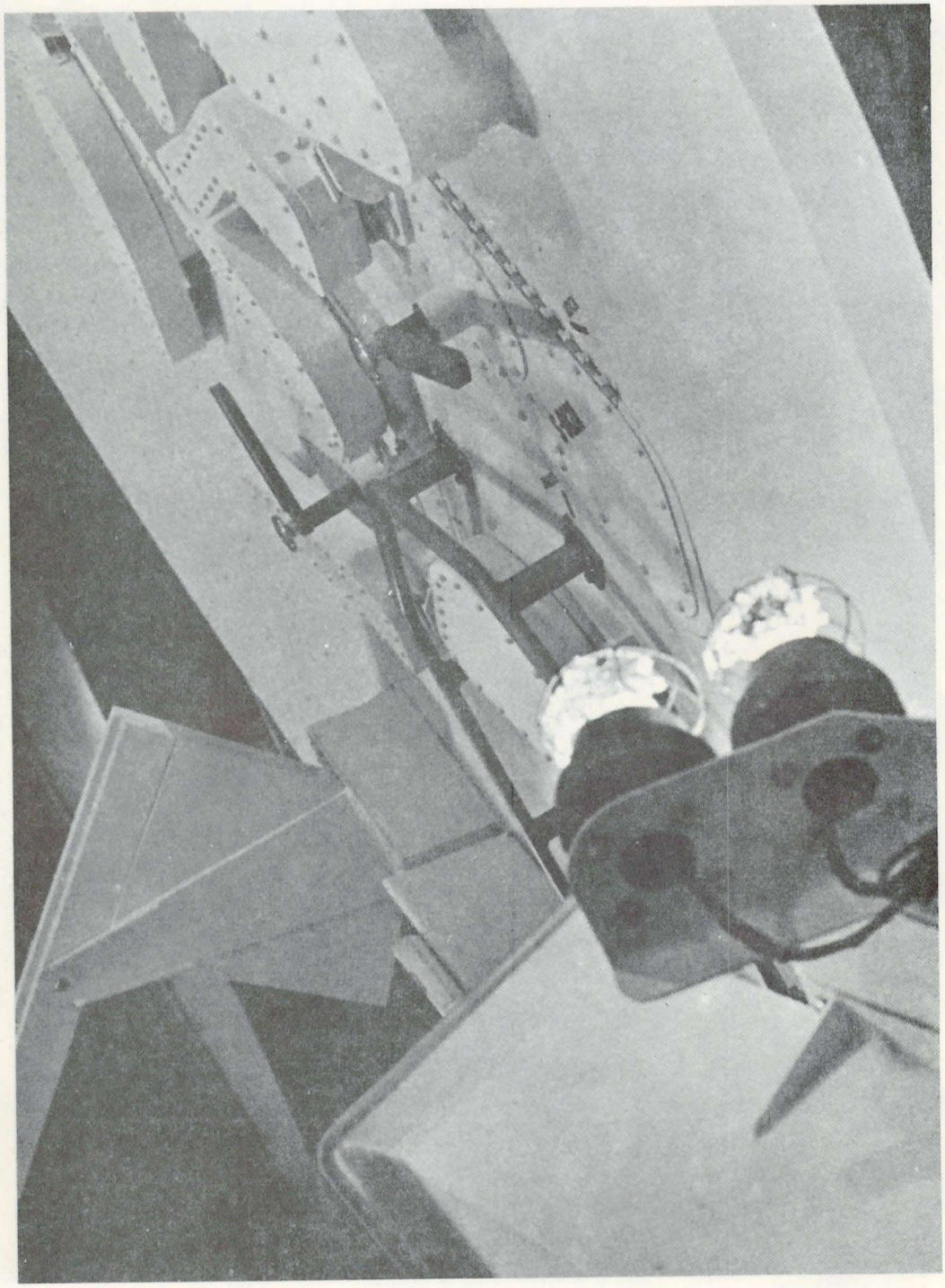

Figure 2.8-37 EVA Lights Sun End Workstation (VS)

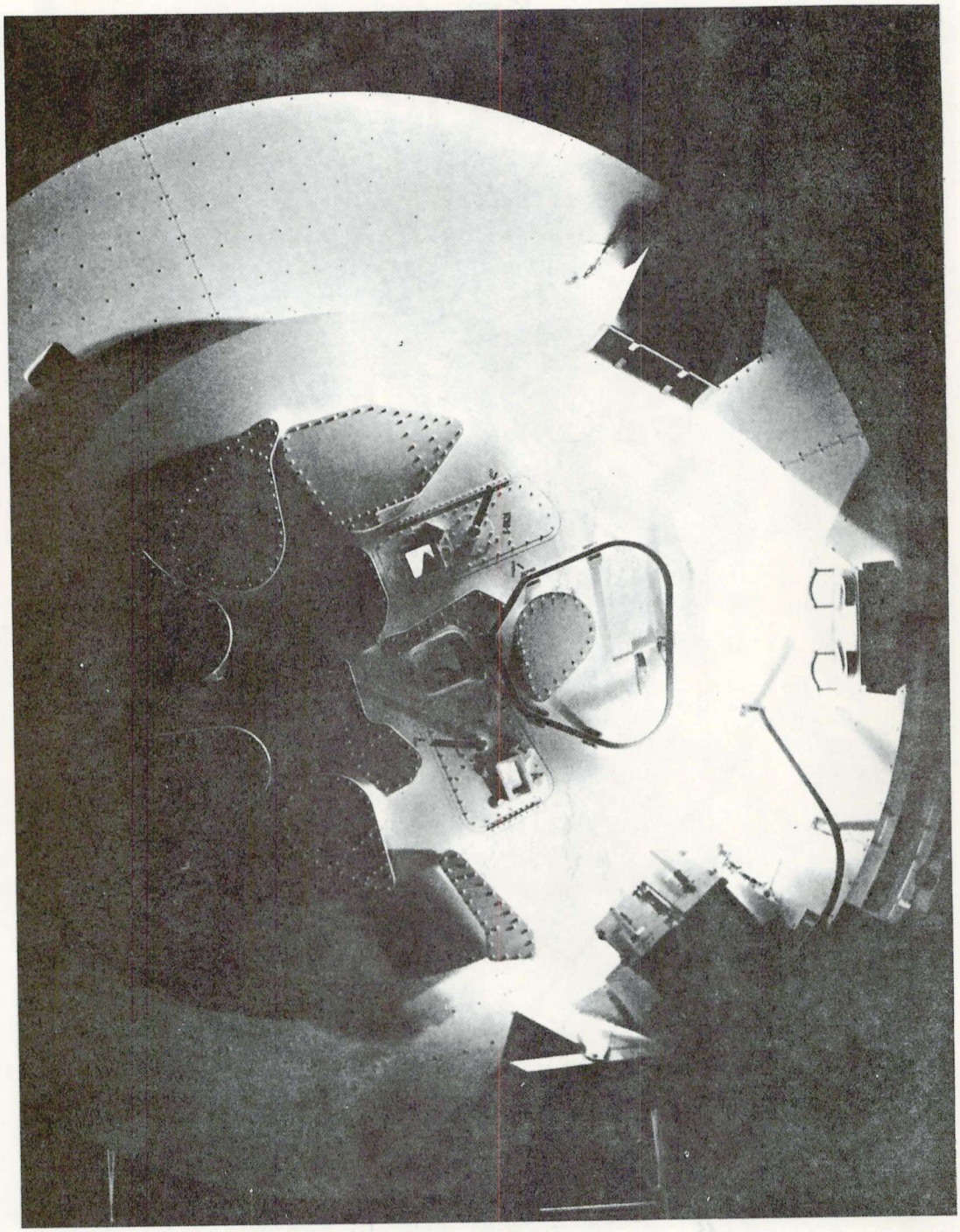

Figure 2.8-38 Sun End Workstation with EVA Lights (VS)

CS

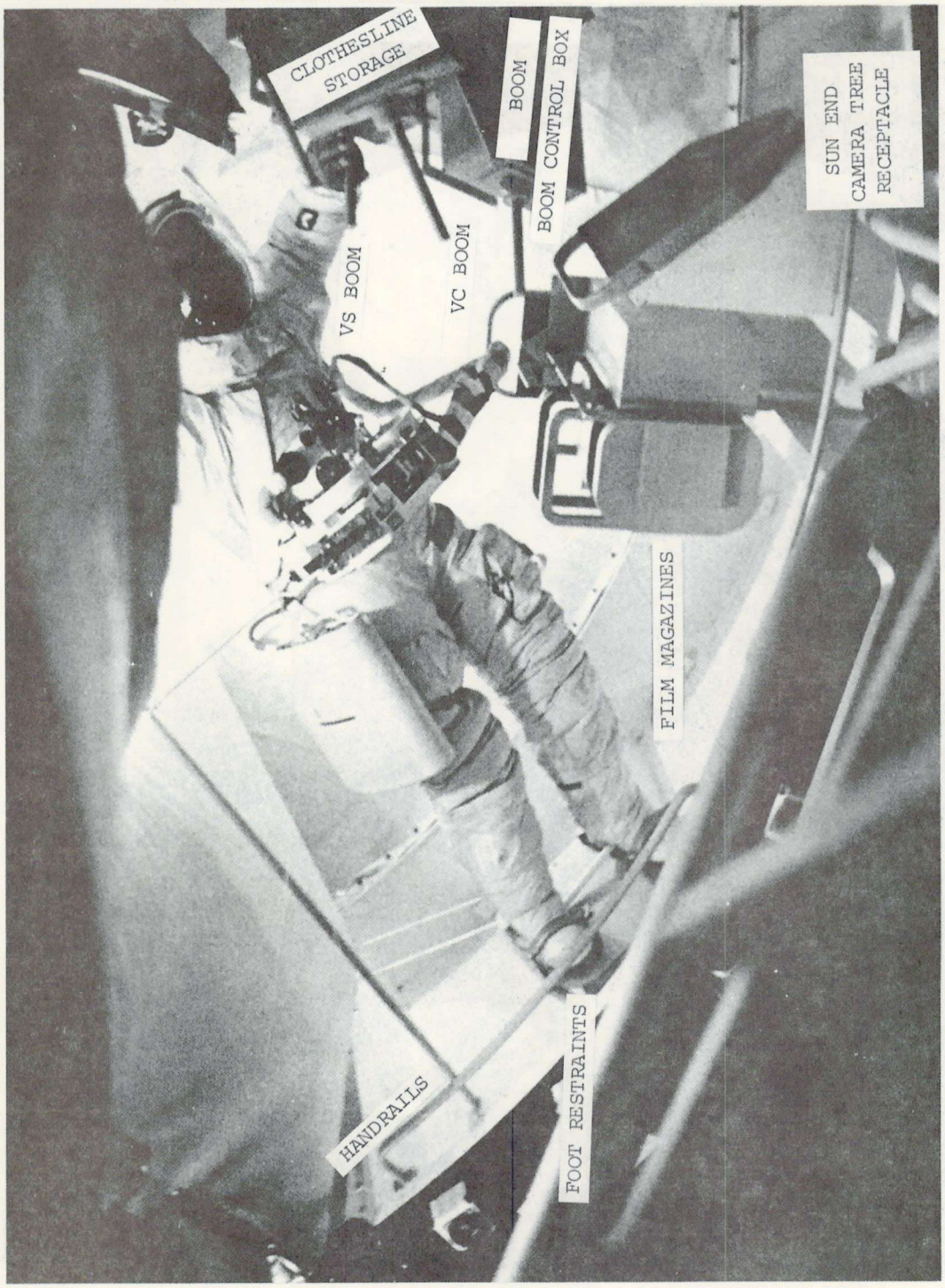

Figure 2.8-39 Fixed Airlock Shroud Workstation (VF)

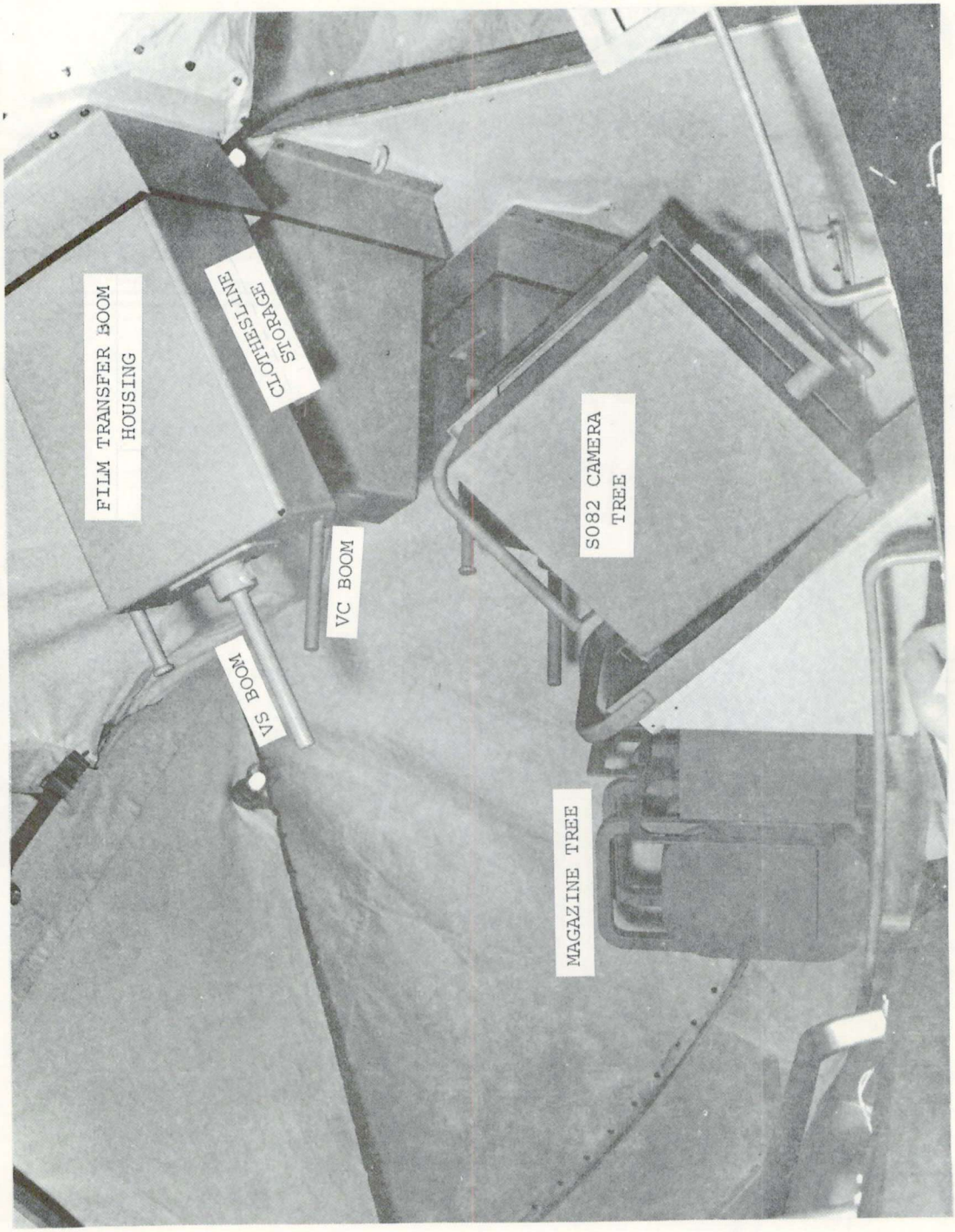

Figure 2.8-40 FAS Workstation (VF)

CS

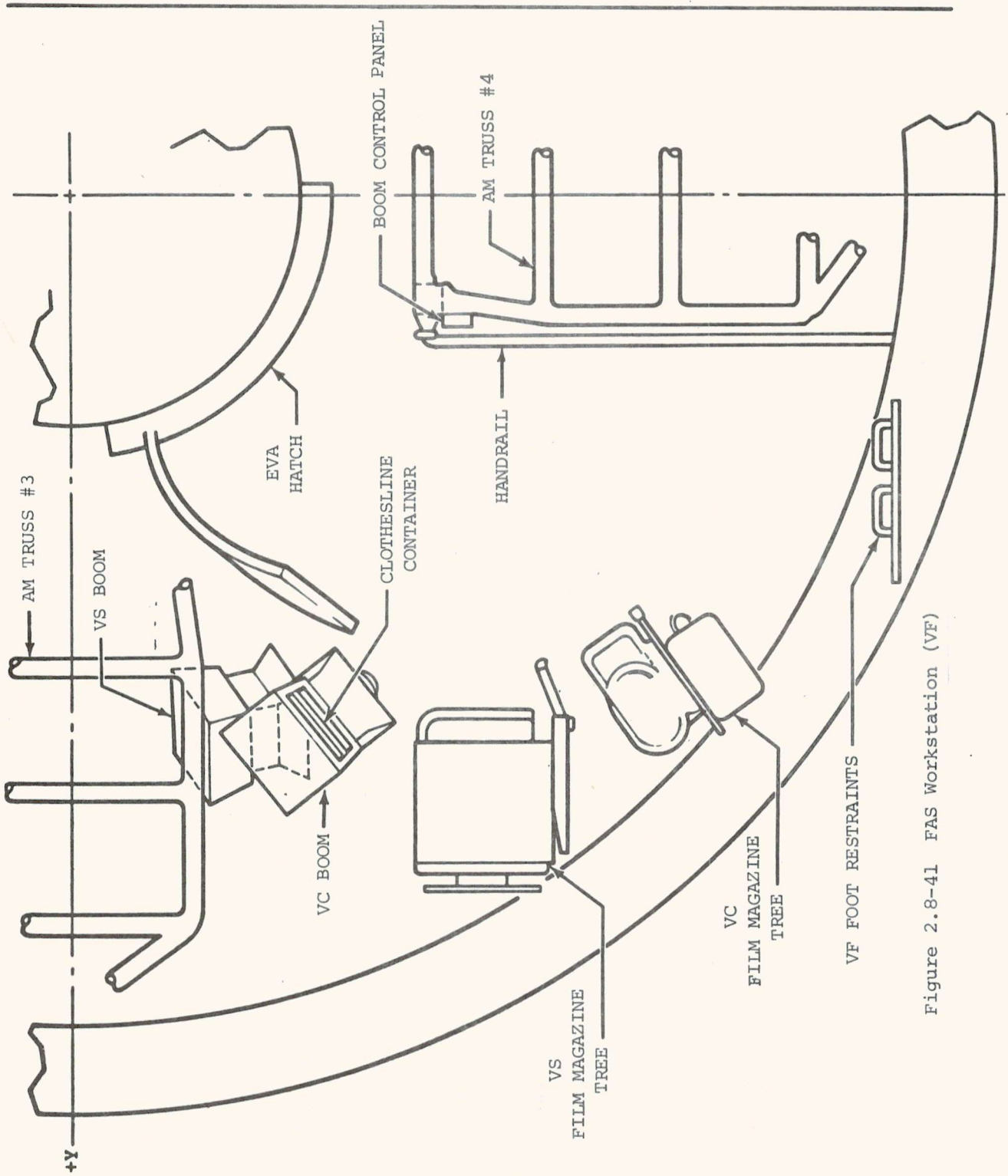

Figure 2.8-41 FAS Workstation (VF)

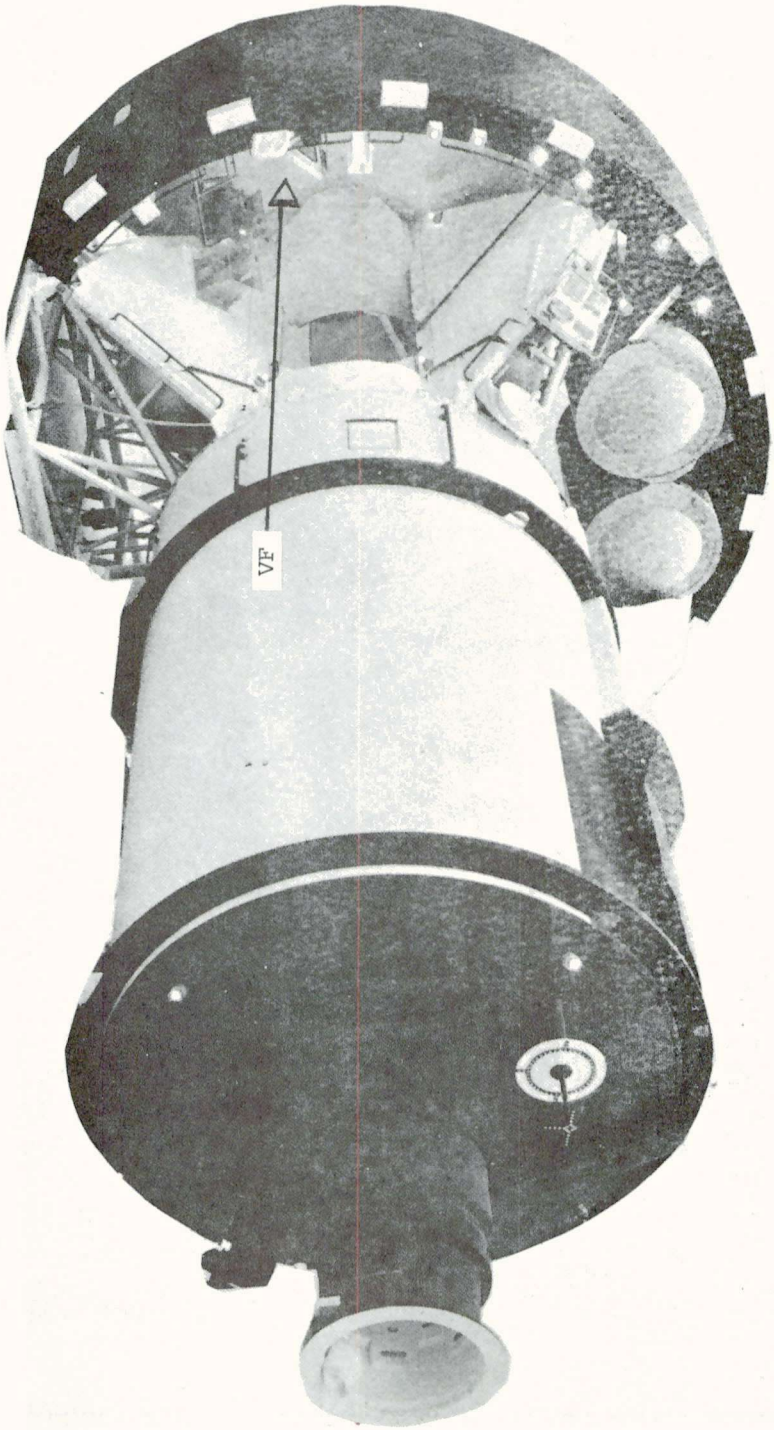

Figure 2.8-42 FAS Workstation (VF) - MDA Mockup

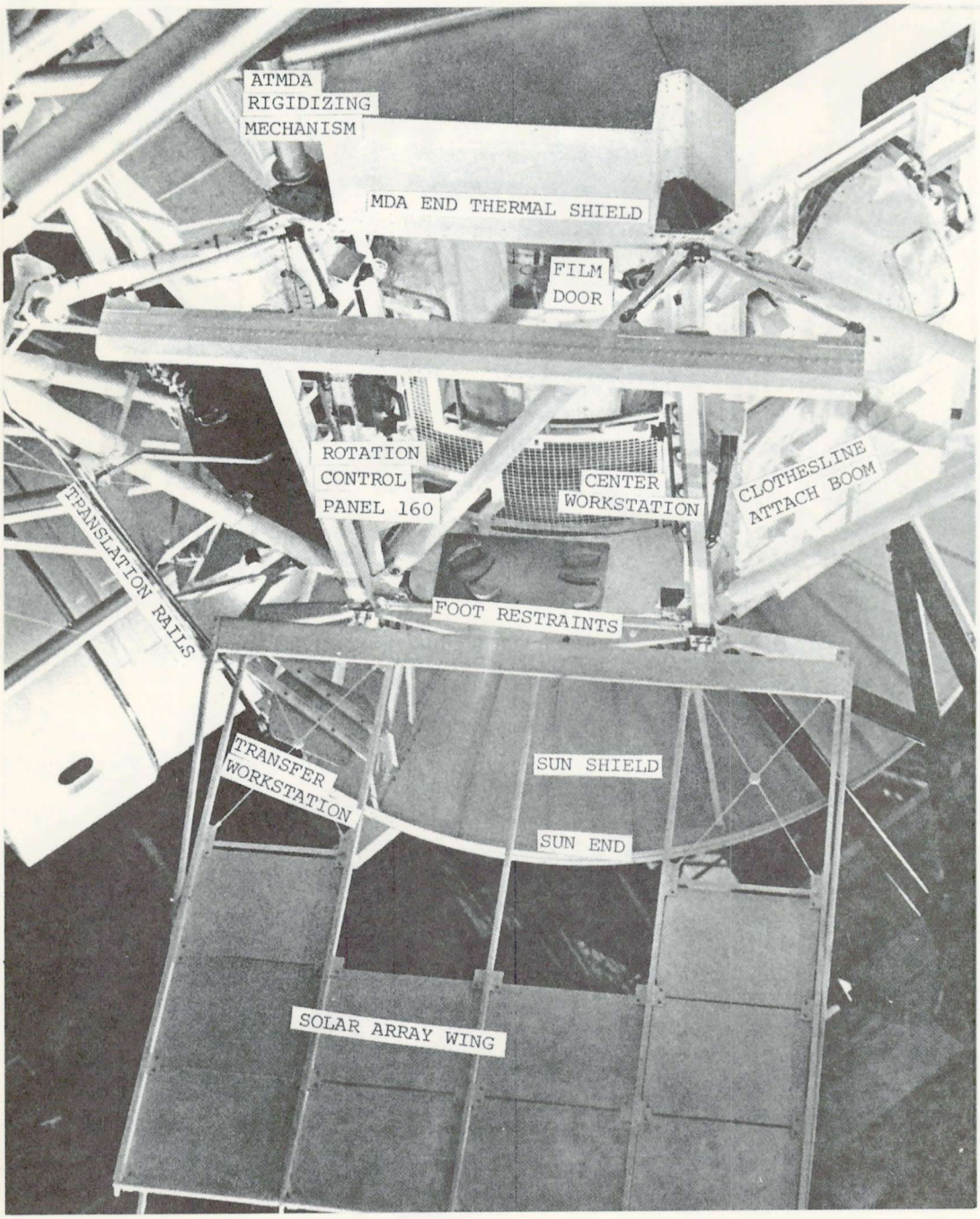

Figure 2.8-44 Center Workstation (VC)

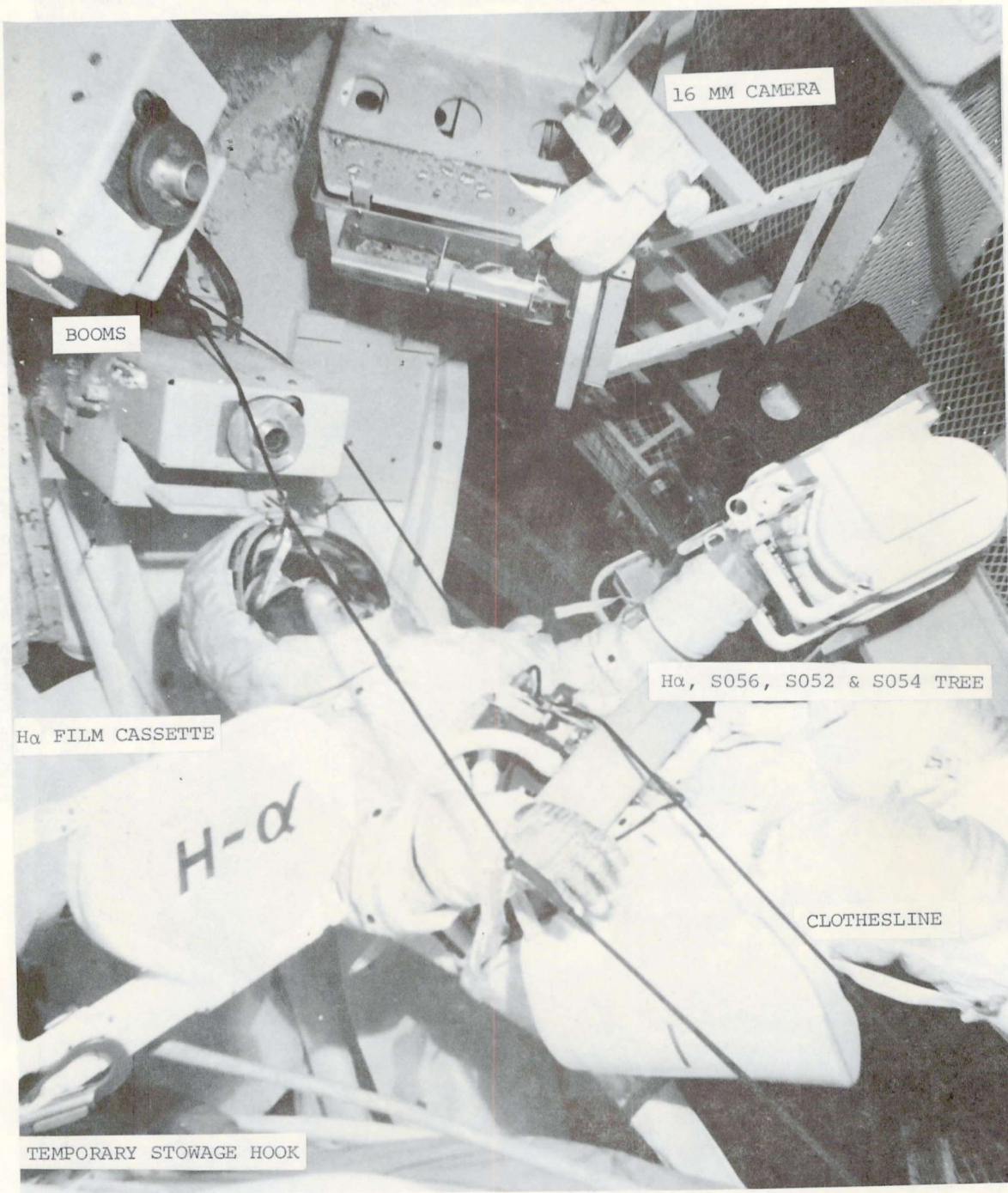

Figure 2.8-43 FAS Workstation Equipment

CS

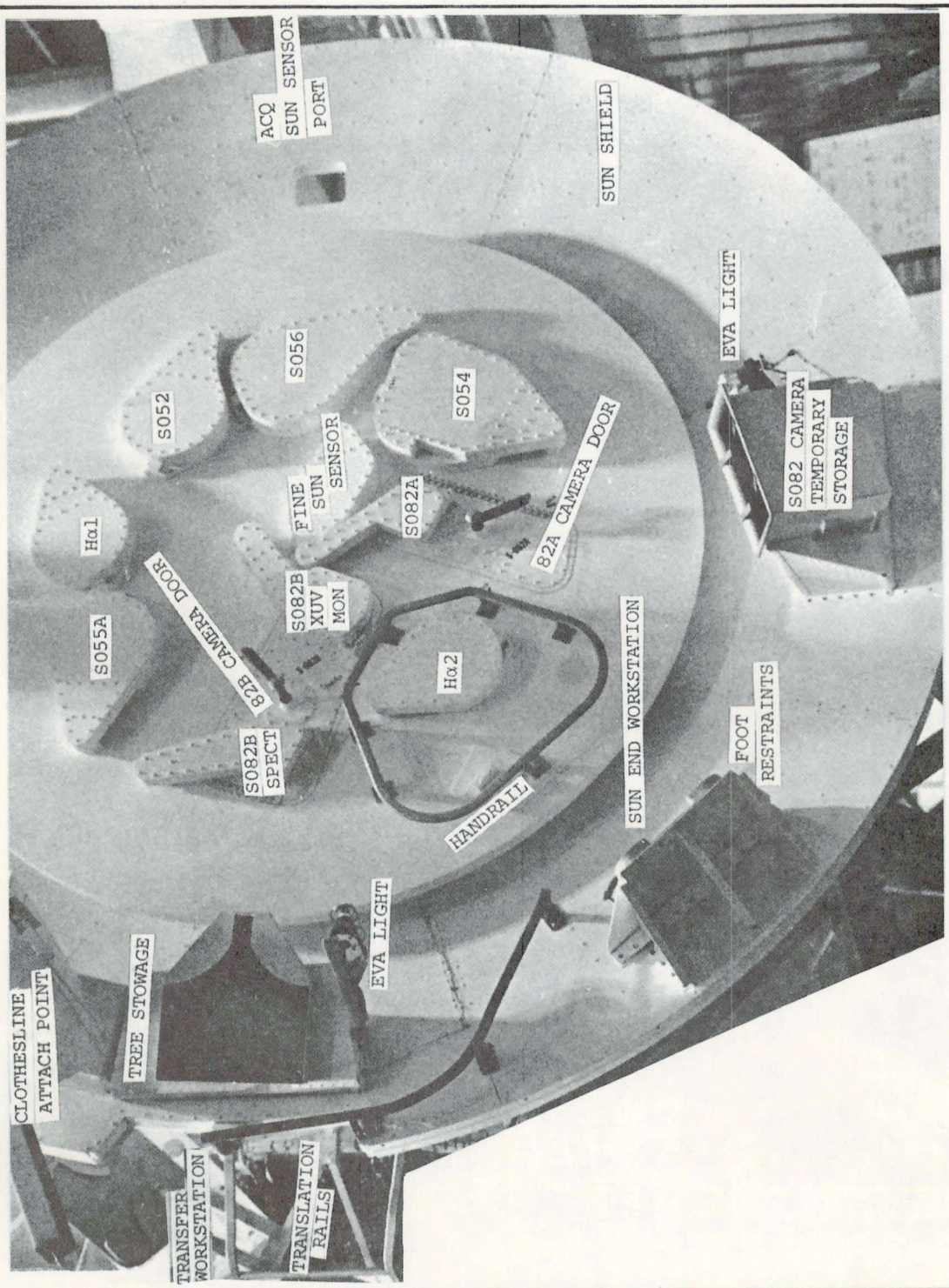

Figure 2.8-45 Sun End Workstation (VS)

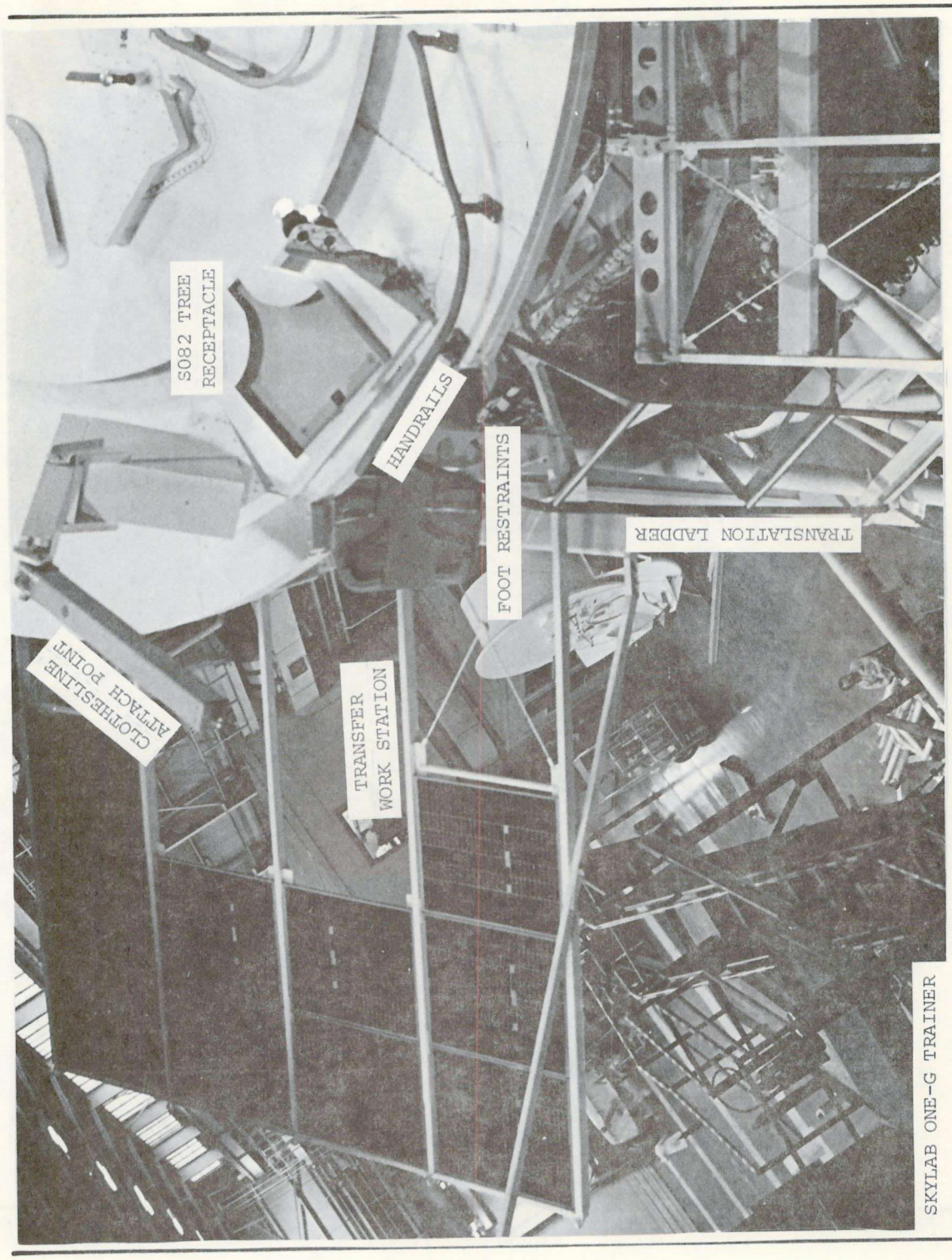

Figure 2.8-46 Transfer Workstation (VT)

CS

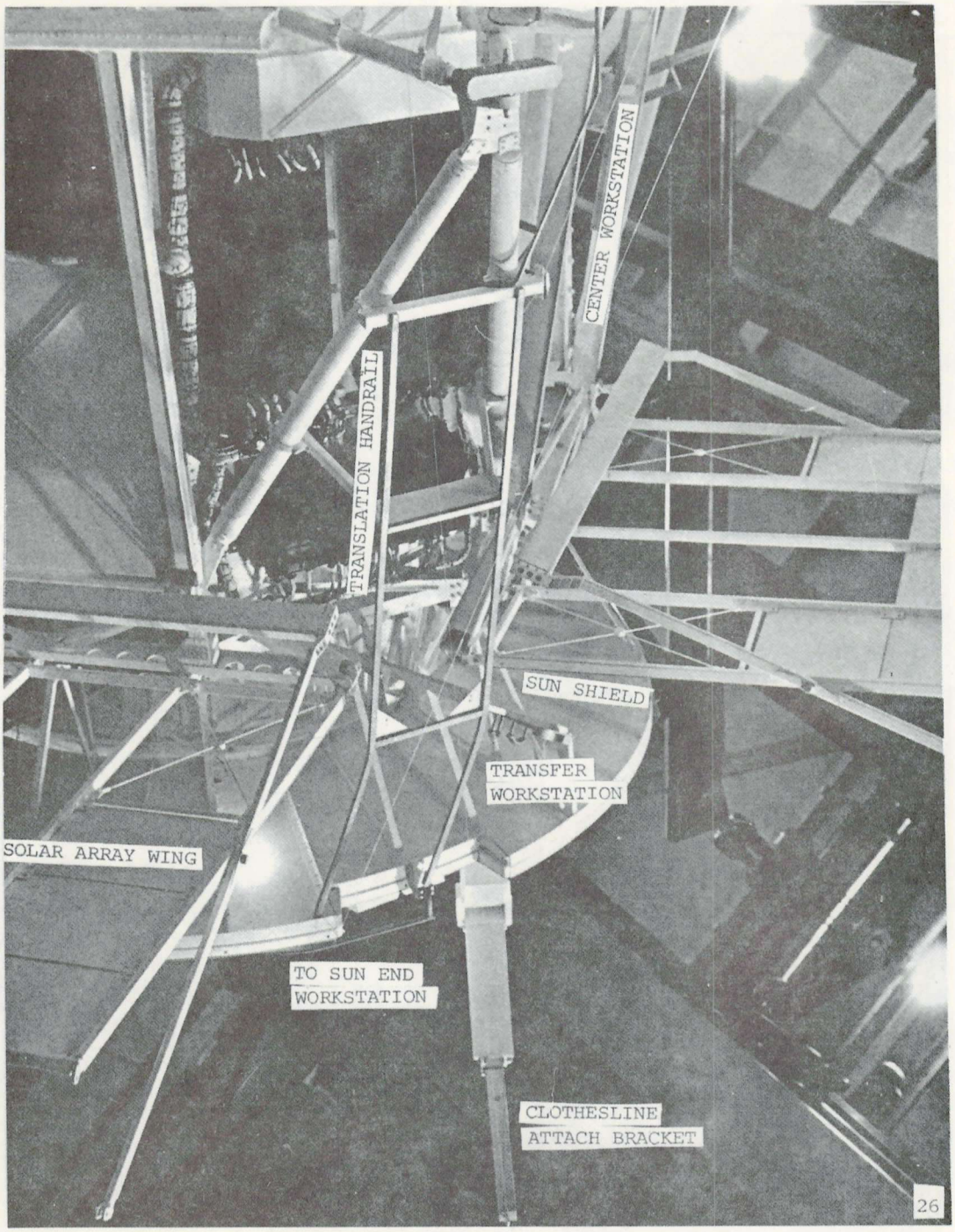

Figure 2.8-47 Translation to Sun End Area

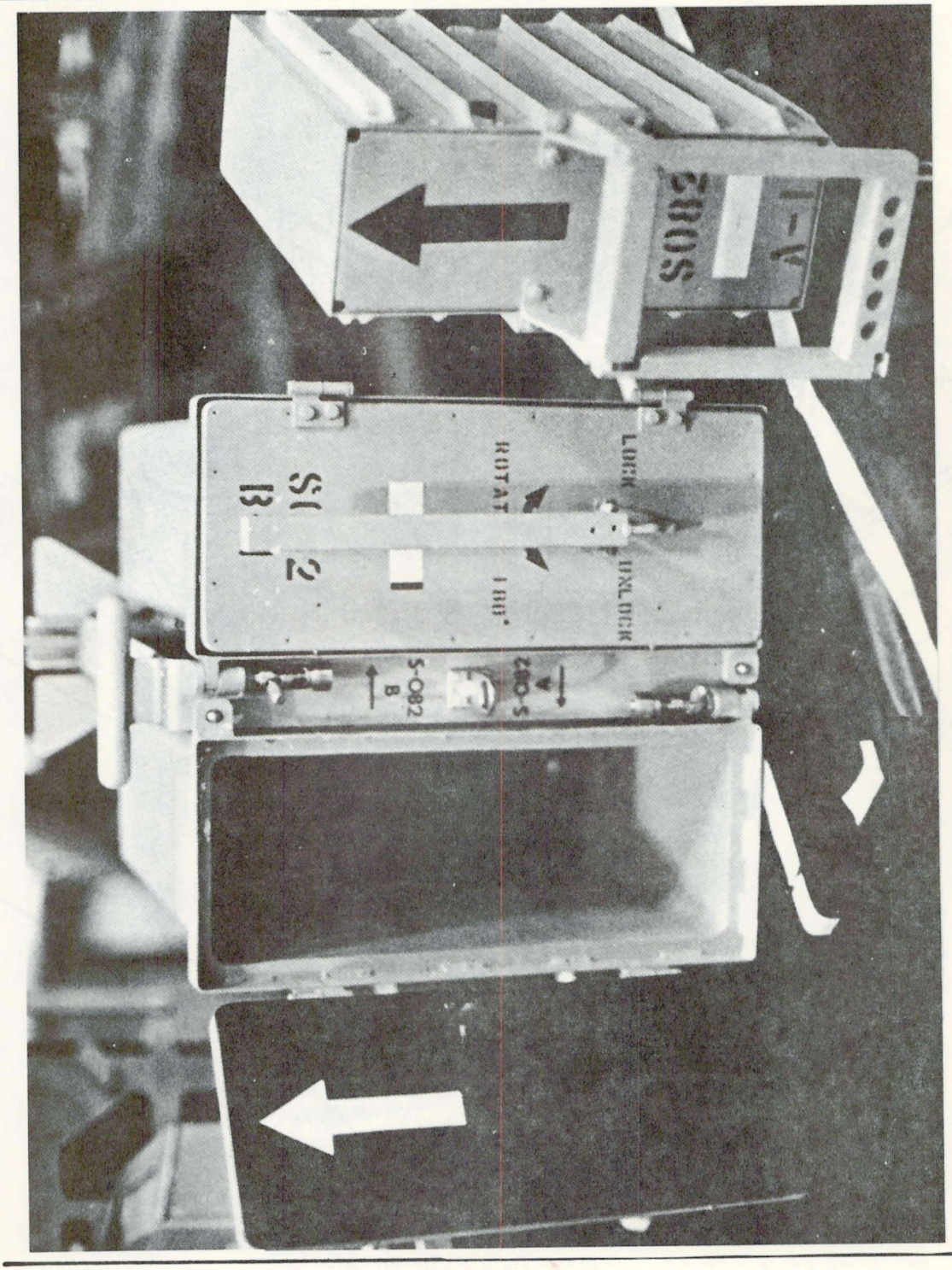

Figure 2.8-48 S082 Dummy Cameras and Pallet/Tree

CS

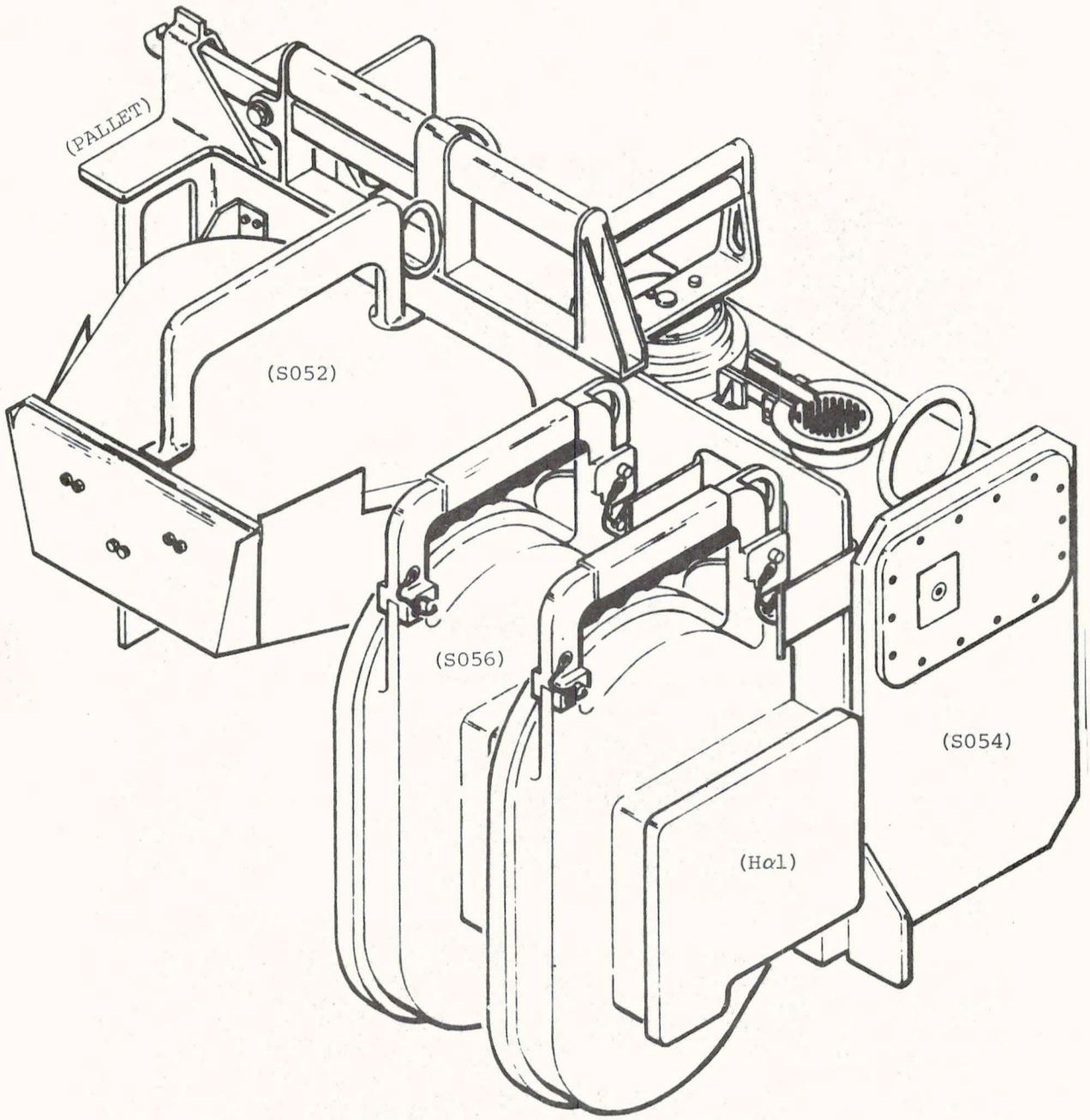

Figure 2.8-49 Center Workstation Experiments
Camera and Film Pallet/Tree

TABLE 2.8-IV (One of Three)

STRUCTURAL DESIGN REQUIREMENTS FOR MOBILITY AIDS, TETHERS AND STABILITY/TRANSFER/HANDLING EQUIPMENT

CREW SYSTEM OF STRUCTURE	TYPE OF LOAD	DESIGN LIMIT LOAD	DIRECTION OF LOAD	ALLOWABLE DEFLECTION AT LIMIT LOAD (IN.)	COMMENTS
1. TETHER (EACH)	PULL (TENSION)	75 LBS	ANY POSSIBLE DIRECTION	N/A	EACH ATTACHMENT
2. TETHER ATTACH POINT					
A. EXTERNAL TO CLUSTER	CONCENTRATED LOAD	600 LBS	ANY POSSIBLE DIRECTION		FACTOR OF SAFETY IS HIGHER FOR TETHER ATTACH POINT
B. INTERNAL TO CLUSTER	CONCENTRATED LOAD	125 LBS (SEE COMMENT)	ANY POSSIBLE DIRECTION		FORWARD OF CREW QUARTERS FLOOR
3. HANDHOLDS (FIXED)					
A. EXTERNAL TO CLUSTER	CONCENTRATED ON MOST CRITICAL 2 IN. OF MEMBER	600 LBS	ANY POSSIBLE DIRECTION	0.5	STANDARD APOLLO TYPE MINIMUM WEIGHT
B. INTERNAL TO CLUSTER	TO BE GRASPED	125 LBS (SEE COMMENT)	ANY POSSIBLE DIRECTION	0.5	75 LBS DEPENDING ON LOCATION: See 10M32158
4. HANDHOLDS (PORTABLE)	CONCENTRATED LOAD APPLIED ON MOST CRITICAL @ IN. OF MEMBER TO BE GRASPED	75 LBS	ANY POSSIBLE	0.5	EACH UNIT
5. HANDRAILS					5.5 INCHES OF STRAIGHT GRASPING SURFACE

TABLE 2.8-IV (Two of Three)

CREW SYSTEM OF STRUCTURE	TYPE OF LOAD	DESIGN LIMIT LOAD	DIRECTION OF LOAD	ALLOWABLE DEFLECTION AT LIMIT LOAD (IN.)	COMMENTS
A. EXTERNAL TO CLUSTER	CONCENTRATED LOAD APPLIED ON MOST CRITICAL 2 IN. OF MEMBER TO BE GRASPED	600 LBS	ANY POSSIBLE DIRECTION	1.0	
B. INTERNAL TO CLUSTER		125 LBS (SEE COMMENT)	ANY POSSIBLE	0.5	75 LBS DEPENDING ON LOCATION: See 10M32158
6. FOOT RESTRAINT (EACH)	CONCENTRATED LOAD	75 LBS	ANY POSSIBLE DIRECTION	1/200 OF SPAN	REQUIREMENTS APPLY TO BOTH CONSTANT WEAR GARMENT AND PRESSURE GARMENT ASSEMBLY FOOT RESTRAINTS.
7. A. LEVERS, HANDLES, OPERATING WHEELS	PUSH OR PULL CONCENTRATED ON MOST EXTREME TIP OR EDGE	$\frac{50 \times L \times R}{3}$	ANY POSSIBLE DIRECTION	N/A	R = RADIUS IN INCHES L = LOAD LIMITS: NOT LESS THAN 50 LB NOR GREATER THAN 150 LBS
B. SMALL KNOBS	TWIST (TORSION)	113 IN LB	ANY POSSIBLE DIRECTION	N/A	RS003M00003 APPLIES CAPABLE OF OPERATION WITHIN THE NATURAL ENVIRONMENTS SPECIFIED IN TM X-53521.

TABLE 2.8-IV (Three of Three)

CREW SYSTEM OF STRUCTURE	TYPE OF LOAD	DESIGN LIMIT LOAD	DIRECTION OF LOAD	ALLOWABLE DEFLECTION AT LIMIT LOAD (IN.)	COMMENTS
9. ALL RESTRAINTS	N/A	75 LBS	ANY DIRECTION		INCORPORATE REDUNDANT RELEASE, QUICK ACTION, ONE HAND OPERATION. RS003M00003 APPLIES.
10. HANDLING/ TRANSFER DEVICE	CONCENTRATED (FILM CANISTERS/CAMERA)	TBS	TO CENTER & SUN END WORK STATION	TBS	ONE HAND OPERATION (PRESSURIZED GLOVES)
11. LATCHES	N/A	10 LBS to OPERATE	DIRECT PUSH OR PULL	N/A	
12. GUIDERAILS	N/A	N/A	N/A	N/A	PROVIDE GUIDERAILS TO ALLOW BIND-PROOF ALIGNMENT OF CANISTER/ CAMERA WITH EXPERIMENT INTERFACE
13. PROTECTION GUARD	N/A	N/A	N/A	N/A	PROVIDED BETWEEN CREWMAN AND ATM CANISTER TO PROTECT CANISTER ASTRONAUT AND EQUIPMENT.

Table 2.8-V PERFORMANCE AND DESIGN DATA FILM ON FILM TRANSFER BOOM

Fairchild Hiller Space and Electronics Systems Division has designed the Film Transfer Boom around the following parameters:

1. A development program with:

   a. Thermal bend and twist analyses
   b. Storage stress study showed 153KSl design max.
      Actual yield strength is > 260KSl.
      Tests fill well within yield at 163KSE max.
   c. Torsional Stiffness and damping study.
      Bending, Stiffness, Strength and damping actuals satisfactory.
   d. Fatigue, creep and dynamic analysis 2300-3200 cycles.
      This was satisfactory by test and analysis.

2. Thermal design at max temperature of 250°F to give a deflection of 7.0 inches. This was satisfactory in test and analysis. Material is polished stainless steel with inside painted black.

3. At 30' deployment length, 15 lbs. of force generates a vertical deflection of 3.5 inches. While 5 lbs force laterally moves the end of the FTB 7.0 inches. This is well within specifications.

4. Reliability predictions for the FTB:

   Complete system: R = .9998
   Electrical system R = .9977
   Mechanical system R = .9997

5. The Manual Extend and Retract Handle has been designed for a forty pound impulse type load in any direction.

6. Analysis indicates the most probable failure mode of the electrical system is in the Retract Mode. More information TBS.

7.

TABLE 2.8-V (2 of 4)

8. Highlights of the design:

   a. No exposed edges.
   b. Enhanced strength over designs currently in use. Long axis of the figure 8 has twice the bending rigidity of dual-nexted booms.
   c. Device is simple, rugged and inherently reliable.
   d. Hermetically sealed motor is a scaled up version of one successfully employed before.

9. Fairchild Hiller Corporation has never had an in-flight mechanism failure on this type of device.

10. Skylab design is a scaled-up adaption of a previous design. It features:

    a. Two structural side plates supporting the drive mechanism and boom.
    b. Powered by a hermetically sealed, reversible, DC gear motor having an output torque of 20 in lbs @ 120 RPM.
    c. Power transmitted through direct drive train for retraction.
    d. Boom deployed by pinch and drive rollers geared to the drive train by a friction slip clutch.
    e. Clutch serves dual function of compensating for differential rates of the drive roller and as a tensioning device for the boom.

11. Guide ploys provide tracking and root fixity when the boom is extended.

12. Where applicable rollers are fabricated from DELRIN plastic and supported by shafts between the side plates.

13. Rollers and gears are bearing mounted.

14. Manual backup drive system provided in event of power loss. To operate:

    a. Operator shifts to manual by pulling a knob, then turn it to EXTEND or RETRACT position.
    b. Drive the mechanism by pulling and pushing a drive lever.
    c. Advantage of this over a rachet is a decrease in the torque required for driving it over the 60 quarter cycles.
    d. Combination of one-way clutches provides reciprocating to rotating motion.

CS

TABLE 2.8-V (3 of 4)

15. Quick release attaches mechanism to spacecraft.

16. Mechanism covered with EMI shield.

17. Boom deployed has a figure 8 shape, each lobe having a 1.67 inch diameter.

18. Width of flattened boom 11.25 inches.

19. Boom material is 7.5 mil beryllium copper, heat treated, silverplated, polished.

20. External surface highly polished silverplate.

21. Boom marked for monitoring deployment length with Kypton strips.

22. All materials will be space qualified.

23. Majority of the mechanism will be aluminum alloy (2024).

24. Shafting for the gears will be stainless steel.

25. Guide rollers and take-up reel will be Delrin.

26. Gears of alum alloy or stainless steel.

27. Boom will be silver plate BeCu and highly polished for reflectivity.

28. No magnesium parts used in the deployment mechanism.

29. Solid film lubricants or Apizion grease will be used on gears and mechanisms (as required).

30. AGE required consists of:

    a. Bench Test Set - provides all mechanical interface between interfaces.
    b. Vibration Test Fixture - provides a mechanical interface between the boom assembly and vibration table.
    c. Vacuum Decoupling Mechanism - used during thermal vacuum soak test to simulate an astronaut disconnecting the unit from its mounting.
    d. Deployment Load Pallet - provides a low friction support for the load at the boom tip during test.

TABLE 2.8-V (4 of 4)

31. Boom mechanism assembled measures 25x13x12 inches.

32. 24 inches of deployable bellows (boot) on the front to insure astronaut does not contact sharp edges of the boom in the ploy configuration.

33. Only component hermetically sealed will be the DC gear motor. This motor design has been flown and functioned satisfactorily.

34. Project weight for mechanism is less than 55 lbs.

35. No additional interference type electronic components other than the DC motor or micro switches, (circuits contain normal compliment of resistors and capacitors).

36. Maintenance and service requirements will be kept to a minimum as a result of simplified design.

37. Design of the boom element eliminates all external edges that may damage the astronauts pressure suit by simply rolling them under.

38. No power conversion device is needed as a result of the selection of the DC motro as the basic drive unit.

39. Boom will deploy 30-foot measured from the end of the deployment mechanism. Nominal operating length is 28 feet 7 inches.

40. Power required to extend or retract - estimated to be 75 watts.

41. Limit switches are used to control extension and retraction.

42. Boom will be tested to prove its ability to extend and retract a 70 lb mass @ .05 g.

CS

TABLE 2.8-VI (1 of 3) PERFORMANCE AND DESIGN DATA CANISTER ROTATION CONTROL (PANEL 160)

Design guidelines:

1. SHALL ENABLE THE ASTRONAUT "BLIND" OPERATION DURING CANISTER ROTATION.

2. SHALL HAVE ENABLE-INHIBIT SWITCH

3. PROVIDE POSITION STATUS FOR THE TWO S082 DOORS AND CONTROL FOR S082 DOORS FOR CAMERA LOADING AND UNLOADING.

4. DESIGN TO BE COMPATIBLE WITH GLOVED HAND IN PRESSURE SUIT.

5. PROVIDE FOR LOW AND HIGH ROLL RATES IN BOTH THE CLOCKWISE AND COUNTER CLOCKWISE DIRECTIONS. (.35 & 3.5; .75& 7.5 degree/sec)

6. NO OFF POSITION BETWEEN THE LOW AND HIGH RATES.

7. A DETENT SHALL EXIST IN THE LOW RATE RANGE POSITION.

8. THE HANDLE SHALL BE CAPABLE OF $\pm$ 40 DEGREES OF ROTATION WITH A MAXIMUM TORQUE OF 25 IN-LB.

9. PROVIDE FOR MINIMUM ASTRONAUT EFFORTS.

TABLE 2.8-VI (2 of 3) PERFORMANCE AND DESIGN DATA CANISTER ROTATION CONTROL (PANEL 160)

Size

Height - 13.65 inches maximum
width - 7.875 inches maximum
depth - 6.40 inches maximum
(including handle)
weight - 18 lbs maximum

All verified by inspection and test at acceptance.

Handle Function

Center OFF position ±3 ±2°
Low rate position ±22.5 ±2°
Maximum position ±40 ±2°
Verified by development, qualification and acceptance tests.

Handle Forces

Linearly increasing torque
Dentent and soft stop action at scientific points
Center position 0 to ±1.5°
Torque 6±4 in-lb.

Rotation Speeds

At X1: .35 and 3.5 degrees per second.
At X2: .75 and 7.5 degrees per second.

CS

TABLE 2.8-VI (3 of 3)

High rate soft stop ±18.5°

Torque 1.75 times torque prior to stop.

End stop ±40 ±2°

Torque 20±.5 in-lb

Verified by test at development qualification and acceptance tests.

Thermal Control System

Thermal resistance 30°F/Watt Max
Power consumption 20 watts at 28 VDC
Verified by development test.

Reliability

Goal - 0.997 for 3360 hours of intermittent operation.
Verified by FMECA analysis.

Environmental Criteria

Specified in 50M02408

Electromagnetic Compatibility

Specified in 50M12725

TABLE 2.8-VII ATM BACKUP TRANSFER SYSTEM CLOTHESLINE PERFORMANCE AND DESIGN DATA

The Clothesline is essentially two (2) endless clothesline pulleys. One will reach to the VC attach boom while the other will reach to the attach boom at the VS. The lines are of plastic material suitably marked at intervals for distance judging. They have been rove through rings at each end that act as sheaves for the lines. These rings also have hooks for snapping on to the attach booms at the Work Station. It has been recommended that one half of each clothesline be of a different color to assist in locating the position of the item being transported.

The current plan is to have the Clothesline gear stowed in aluminum boxes in the VF (as shown in Figure 2.8-13) attached to the Boom Mounting Structure. The Clothesline will will be laid in the box with the attach hooks coming out first and the cargo hook last. The box will use easy open snap fasteners (See Figures 2.8-13, 2.8-14, 2.8-15, 2.8-16, and 2.8-43).

CS

Table 2.8-VIII

ATM EVA LAMP SPECIFICATION

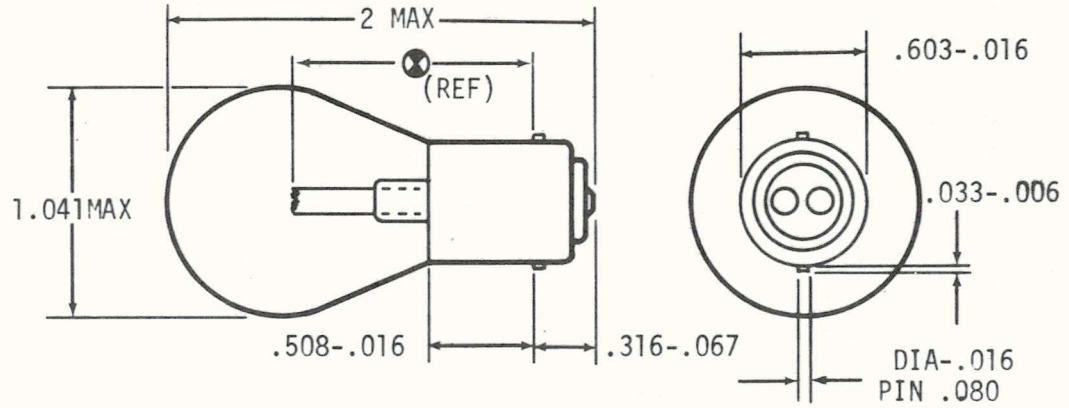

MS PART NUMBER	TRADE NUMBER	CANDLE POWER		DESIGN			LIGHT CENTER LENGTH ⊗	FIL CONST	AVG LIFE (HOURS)	F11N
		MAJOR FIL	MINOR FIL	VOLTS	AMPS MAJOR FIL	AMPS MINOR FIL				
MS15584-16	308	21±15%		28.00	.67±8%		1-1/8	C-2V	300	155-7790

NOTE: 18.75 WATT INCANDESCENT LAMPS S-8 BULB, DOUBLE CONTACT, 21 CD ON EACH FILAMENT, BAYONET CANDELABRA BASE.

2.8.6 Operational Limitations and Restrictions

2.8.6.1 One EVA is allowed per day although EVAs may be conducted during both light and dark periods. Sufficient artificial lighting (independent of hand-held lights) will be supplied to accomplish all EVA tasks during the dark side of the orbit. Maximum EVA time will be three hours, exclusive of preparation and post EVA activity. Maximum time to perform film magazine removal/replacement at the ATM shall not exceed two hours.

Crewman number 2 will accomplish all tasks unaided at ATM workstations with Crewman number 1 acting as observer, photographer, umbilical tender and helper in film transportation tasks. Crewman number 3 will be at the STS C&D Console when Crewman number 2 is changing location, number 1's only task will be LSU management. Crewman must be able to perform all tasks after 55 days in space. The average workload must be less than 1200/BTU hour. EVAs are to be peformed while three crewmen are awake. One crewman will monitor systems during EVA and will not be required to solve EVA contingencies. Crewman EVA capabilities shall be based upon the use of A7L-B pressure suit assembly. The A7L-B suit umbilical will contain one gaseous oxygen line for breathing and pressurization; and provisions for hardline communications, biomedical data, mechanical tether, liquid cooling loop, electrical power line and thermal protection. The Astronaut Life Support Assembly (ALSA) will be worn during LSU EVA. Eva egress and ingress will be accomplished from the AM and AM internal volume will remain as presently designed. The capability of manual crew translation from the ATM workstations to the ATM/EVA hatch is provided. Handrails and other EVA assist hardware will be used for EVA translation with the provision that direct return to the AM EVA hatch must be possible from any EVA workstation within 15 minutes. Rescue Capability of Crewman number 2 by Crewman number 1 from the ATM Sun End workstation must be provided (the capability to jettison the LSU in an emergency should be considered). A tether or each A7L-B suit is required for backup film translation or astronaut rescue. Astronaut translation should be accomplished independently of the primary mode of film magazine transfer. Power to the ATM canister during EVA is limited to gimbal rotation control, EVA lighting operation and Sun End Aperture door control. Inadvertent canister rotation must be prevented. High voltage is turned off.

EVA equipment and aids shall be capable of operation within the natural environments specified in TM X-53521. Crew restraints systems shall incorporate redundant methods of release with all restraint release mechanisms of the quick action types and be designed for one handed (pressurized EVA gloves) operations. EVA equipment and aids which are fixed to the orbital assembly shall be capable of operation at a minimum of a one year orbital lifetime. Handling of auxiliary parts during EVA

CS

shall be minimized. Film canister protective shoes and covers shall not be carried EVA, except where such handling will reduce the overall workload of the EVA crewman. Umbilical guides shall be provided when a corner is rounded or when umbilical entanglement is possible. A manual backup mode of operation shall be provided for all mechanical EVA and film magazine transfer devices. Mechanical devices should be simple in design and operation and require a minimum of equipment handling so that tethering of the crewman to structure is not required during translation to the orkstations, or at a workstation when a positive foot restraint system is available. (The umbilical provides emergency restraint.) Tethering of equipment is not required when "hard" locks are provided, or when transferring equipment from one locked location to another if both hands are available for the tasks. Tethering of equipment is required in all other conditions. Film magazines and ATM structure must be protected from damage by protecting structure rather than constraining crew position or procedures reasonably. The AM and ATM rack structures will be used for location of checklists. The center film retrieval/replacement workstation will be located between the ATM +Y and +Z axes. The ATM Sun End translation route will be along the ATM +Y axis.

2.8.6.2 Detailed mechanical information on the Film/Camera retrieval/replacement doors is available in Section 2.1 of this handbook. At the VC the doors for H∝1 and S052 open when the handles are moved upward while the doors for S056 and S054 open when the handles are moved downward. At the Sun End, the S082A and S082B aperture doors must be open before the retrieval doors can be opened. All doors will re-lock if the handles are moved in the opposite direction after operating to open.

2.8.6.3 The canister rotation control system does not contain a positive mechanical lock mechanism. The electro-mechanical break out force of 8 to 14 foot pounds on each of the two rotation motors is considered to give stability coupled with the rates of rotation (high = 7 or 3.5 degrees per second. Low = 0.7 or 0.35 degrees per second) plus the use of a "low" detent in the force profile of the handle operation. See paragraph 2.8.4.2 Part 9.

2.8.6.4 EVA lighting operational limitations and restrictions are covered in Table 2.8-VIII and paragraphs 2.8.4.2 Part 10.

2.8.6.5 Film Transfer Boom (FTB) and ATM Backup Clothesline Transfer System details are in paragraph 2.8.4.2 Part 1 and Tables 2.8-V and 2.8-VIII and Figures 2.8-13 thru -16 and Figures 2.8-43.

TABLE 2.8-IX

SUMMARY OF EVA CONSTRAINTS

1. Two crewmen will be fully suited for each EVA.
2. CMG dumps will be inhibited for all EVA's.
3. Maximum EVA duration is 3 hours.
4. Attempt to schedule EVAs over Continental U. S. to achieve maximum network coverage.
5. Attempt to avoid scheduling EVA while in the South Atlantic anomoly.
6. Non EVA crewman will be soft suited and will be in AM/MDA or CSM.
7. Use T027 Boom to cover EVA by television.
8. Schedule EVA in morning if at all possible and avoid other major activities prior to EVA.
9. All ATM HV power will be disabled.
10. Aperture door Ground and ATMDC commands will be disabled.
11. Camera electrical interfaces will be inhibited during film replacement.
12. The C&D canister roll command will be inhibited.
13. Prior to EVA close out, all ATM experiment cameras, replaced with film during EVA, will be cycled to assure proper camera or magazine operation.
14. Transfer ATM film to CM following EVA.

CS

TABLE 2.8-X

SUMMARY OF POSSIBLE CONTINGENCY EVA OPERATIONS

BOOM Failures

1. If one BOOM fails; replace with spare BOOM.
2. If more than one BOOM fails; use CLOTHESLINE exclusively.
3. If BOOM motor fails; use MANUAL extension and retraction.
4. If both BOOM fails partly extended; remove film.
5. If both BOOMS fail extended; remove and stow.

APERTURE DOOR Failure

1. If doors will not function; use manual operation with pin system.
2. TBD

S052 MIRROR POSITION Failures

1. No additional EVA for operation of override lever.

CS

2.9.1 WHITE LIGHT CORONAGRAPH EXPERIMENT (SO52)

2.9.1.1 Introduction

The SO52 experiment is an externally occulted white light coronagraph. This instrument is designed to take photographs of the solar corona in the visible region of the electromagnetic spectrum from 3500Å to 7000Å. The experiment field of view is from 1.5 to 6 solar diameters. Three external occulting disks mounted forward of the optics housing occult the image of the solar disk to 1.5 solar radii. The primary optics are contained in the optics housing mounted at the rear of the experiment. Both the external occulting disk assembly and the optics housing are attached to an optical bench which mounts to the Apollo Telescope Mount (ATM) spar. Between the optics housing and the external occulting disk assembly is a light baffle tube. The experiment film camera mounts on the side of the optics housing, and a low light level television camera is installed on the top of the optics housing. The White Light Coronagraph Experiment (SO52) is illustrated in Figure 2.9.1-1.

The primary operational elements of the experiment are (1) the thermal shield aperture door, (2) the pointing error sensors, (3) the internal occulting disk, (4) the television camera, (5) the film camera, and (6) the thermal control system. The SO52 experiment is operated by remote command from the ATM C&D Console or ground commands.

2.9.1.1.1 Thermal Shield Aperture Door - The thermal shield aperture door protects the experiment from contamination and micrometeroic impact as well as providing protection from direct sunlight and extreme heating when the ATM is in an offset pointing mode.

2.9.1.1.2 Pointing Error Sensor - The pointing error sensor (PES) system consists of four photovoltaic detectors that detect the location of the shadow of the external occulting disks on the primary objective lens aperture. The PES outputs are used to present experiment pointing error information to the astronaut, providing an inflight fine pointing capability.

2.9.1.1.3 Internal Occulting Disk - The internal occulting disk provides internal alignment capability for the coronagraph. Under normal operating conditions the internal occulting adjustment is performed automatically using error signals from the internal alignment sensors (IAS), however, this may also be performed manually by the astronaut from the C&D Console.

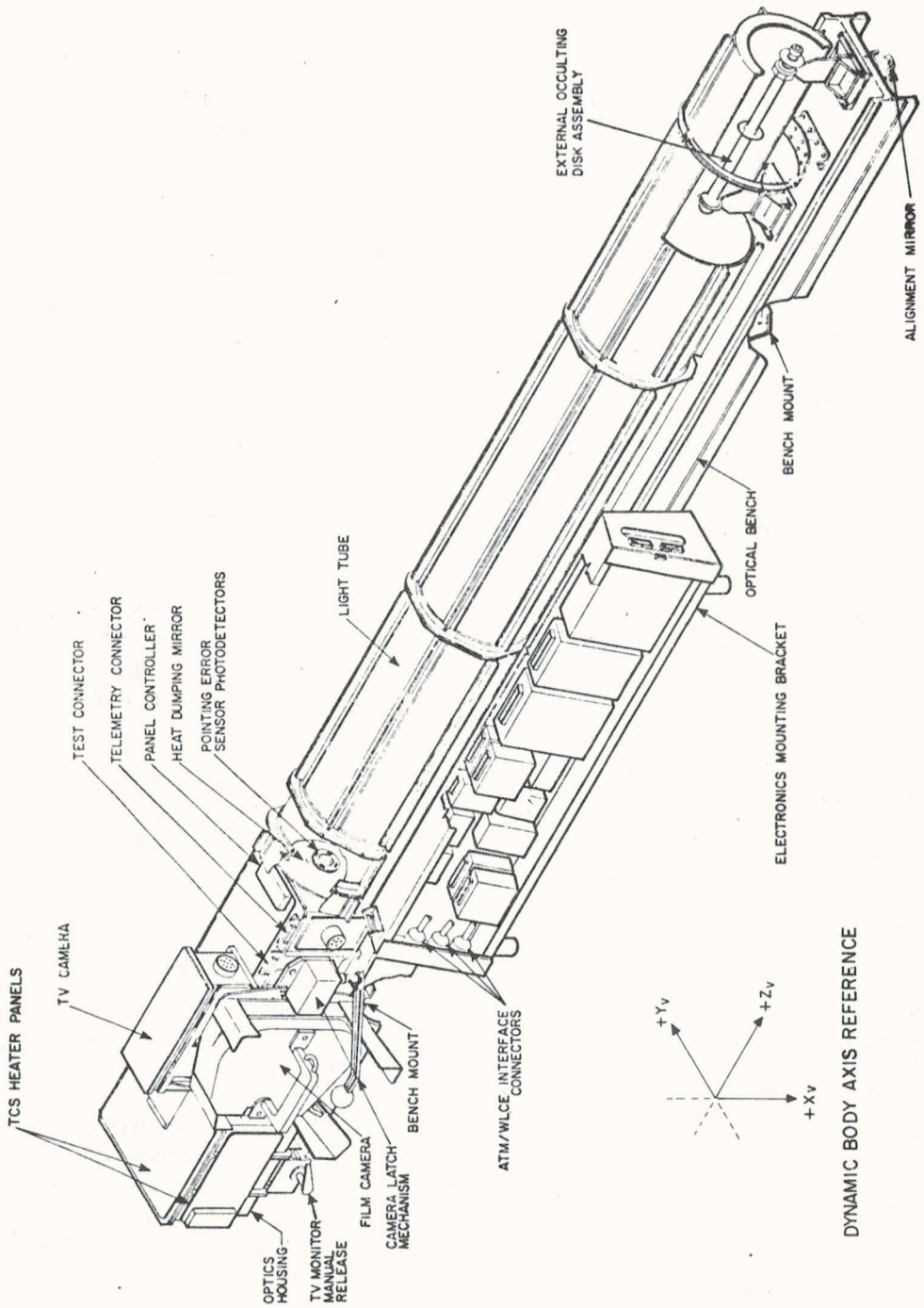

WHITE LIGHT CORONAGRAPH (S052)

Figure 2.9.1-1 White Light Coronagraph (S052)

2.9.1.1.4 Television Camera System - The television Camera system uses a low light level camera at the image plane to present a coronal image to the astronaut monitor(s) on the ATM C&D in the multiple docking adapter (MDA). The TV camera allows the astronaut to make visual observations of the solar corona that will aid in the determination of the most opportune times to obtain film data using the S052 film camera. Further, the TV camera subsystem provides a method of monitoring particulate contamination surrounding the ATM, and provides secondary ATM pointing capability.

2.9.1.1.5 Film Camera - Four 35mm sequential film cameras will be used for the Skylab ATM mission to provide photographic sequential recording of the coronal image, calibration pattern, and other required data on film. The cameras will be preloaded with film and pressurized before launch. During launch, one camera is located on the instrument, and three cameras will be stored in the MDA. During experiment operation, a camera must be on the instrument. Cameras are retrieved and replaced by EVA and stored in the CM for return to earth. The film camera may be operated in the following modes:

a. Standard Patrol Mode
b. Extended Standard Patrol Mode
c. Fast Scan Mode
d. Continuous Patrol Mode
e. Secondary Program Mode

2.9.1.1.6 Thermal Control System - The semi-passive thermal control system consists of an array of panel heaters and controllers located on the optics housing and the optical bench. It automatically controls the experiment temperature to minimize temperature gradients within the optics housing and optical bench. Thermal control is further enhanced through the use of insulation and surface finishes. Six temperature monitors are located in the instrument and one temperature monitor is located in each film camera. These monitors provide analog voltage outputs to the ATM telemetry to indicate local inflight instrument temperatures.

S052

2.9.1.2 Subsystem Interfaces

The experiment interfaces mechanically, electronically, thermally and operationally with the ATM. Additional interface details are covered in MSFC document 50M02414, S052 Experiment Interface Defining Document.

2.9.1.2.1 Installation - The instrument is permanently mounted to the spar in the ATM canister as shown in Figure 2.9.1-2. During any operational phase, a film camera will be mounted on the experiment as shown in Figure 2.9.1.1 .

2.9.1.2.2 Electrical Power - The ATM provides 28 vdc to the experiment for operation. Isolation diodes are installed on the power lines, internal to the experiment, to separate the ATM buses The operating power characteristics are as follows:

	VDC	Ave Power
Main	26.0 to 30.5	12.5 watts maximum
Standby	26.0 to 30.5	1.0 watt maximum
TCS	26.0 to 30.5	8.5 watts maximum

2.9.1.2.3 Timing and Synchronization - The ATM provides the experiment with synchronization signals of 3.6 kilohertz and 72 kilohertz for experiment timing operations. (Ref Section 2.4 for additional information).

2.9.1.2.4 Measurements - The experiment provides twelve analog and fourteen digital measurements to the ATM for recorded telemetry to ground. The instrument functions to be measured are presented in Table 2.9.1-I. In addition, the ATM provides roll pointing and time of day information to the experiment for film encoding. Additional ATM measurements significant to the S052 experiment are listed in Table 2.9.1-II. The functional relationship of all telemetry measurements associated with the S052 experiment are illustrated in Figure 2.9.1-11. A cross reference between Figure 2.9.1-11 and telemetry measurements is presented in Table 2.9.1-I.

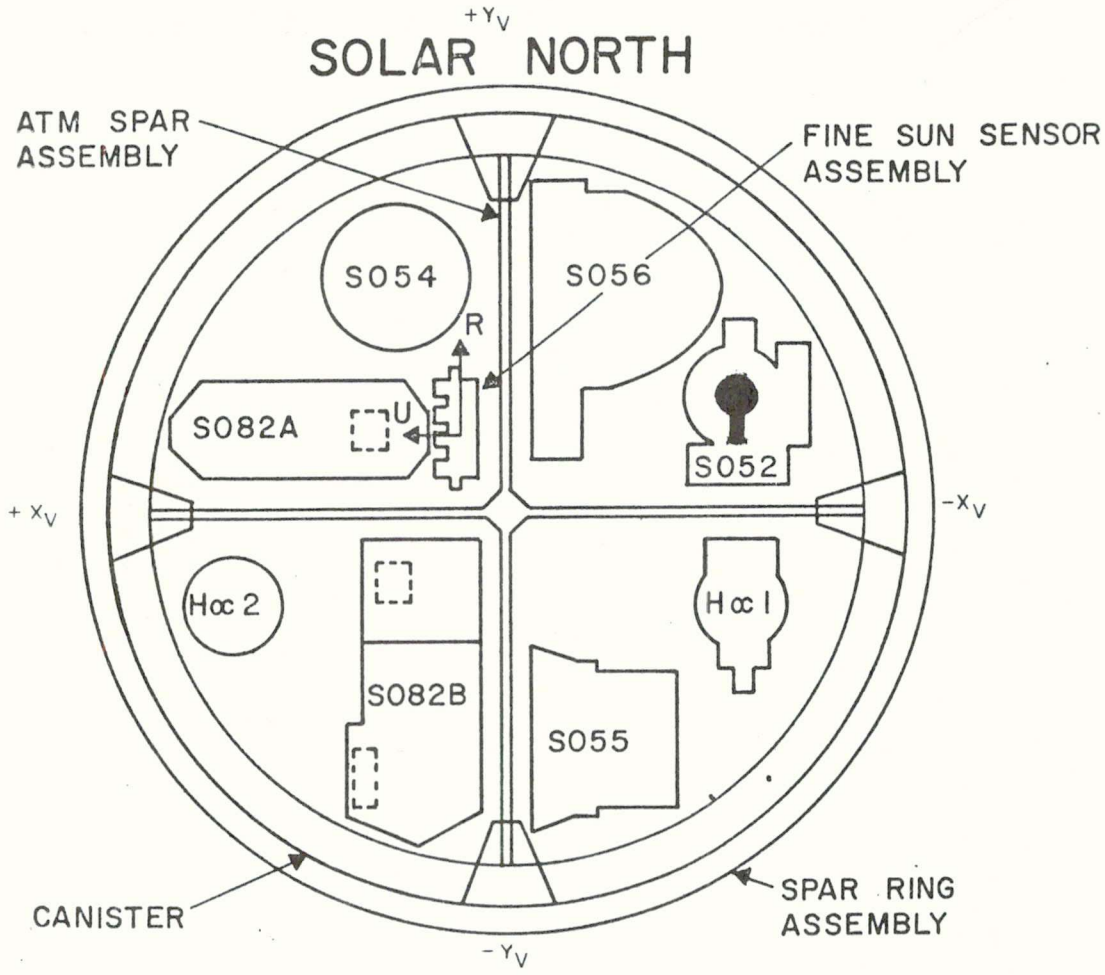

Figure 2.9.1-2 ATM CANISTER SPAR LOCATION

Table 2.9.1-I

SO52 Telemetry Measurements

Name of Measurement	Meas. Number	Meas. Type	Meas. Format	Remarks	Ref Fig. 2.6.1-11
Temp, Internal No. 1	C069-052	H	A		1
Temp, Internal No. 2	C070-052	H	A		1
Temp, Internal No. 3	C071-052	H	A		1
Temp, Internal No. 4	C072-052	H	A		1
Temp, Internal No. 5	C073-052	H	A		1
Temp, Internal No. 6	C074-052	H	A		1
Temp, Internal No. 7	C149-052	H	A		1
Std or Extd Std Patrol Mode	K112-052	S	D	Bit 1	2
Fast Scan Mode	K112-052	S	D	Bit 2	2
Continuous Patrol Mode	K112-051	S	D	Bit 3	2
Polaroid Wheel Pos.	K112-052	S	D	Bit 4	3
Polaroid Wheel Pos.	K112-052	S	D	Bit 5	3
20 arc sec discr	K112-052	S	D	Bit 6	4
Exposure time	K112-052	S	D	Bit 7	5
Exposure time	K112-052	S	D	Bit 8	5
Aperture Door Open	K112-052	S	D	Bit 9	6
5 arc min discr.	K112-052	S	D	Bit 10	7
Mirror Position, TV	K433-052	S	E		8
Mirror Position, Film	K434-052	S	E		8
Primary/Redundant Converter	K481-052	S	E		9
Primary/Redundant Programmer	K482-052	S	E		10
Voltage, +10 Vdc	M120-052	H	A		9
Voltage, +15 Vdc	M121-052	H	A		9
Voltage, + 5 Vdc	M122-052	H	A		9
Voltage -10 Vdc	M349-052	H	A		9
Voltage +12 Vdc	M350-052	H	A		9
Pointing Error (UP-DN)	G042-52	P	A		11
Pointing Error (L/R)	G043-52	P	A		11
Internal Alignment Error (UP/DN)	G044-52	P	A		12
Internal Alignment Error (L/R)	G045-52	P	A		12

Table 2.9.1-II

S052/ATM Correlation Measurements

Name of Measurement	Meas. Number	Meas. Type	Meas. Format	Remarks
Mission Elapsed Time	K122-072	T	D	25 Bits
Thermal Shield Aperture Door Closed Position (WLC)	K298-703	S	E	
ORBITAL ATTITUDES Fine Sun Sensor Yaw Coordinate	K382-702	P	D	12 Bits
Fine Sun Sensor Pitch Coordinate	K382-702	P	D	12 Bits
Roll Coordinate	K382-702	P	D	15 Bits
Voltage Load Bus 1	M019-702	H	A	
Voltage Load Bus 2	M020-702	H	A	
Temp., HAO Door	C299-704	H	A	
Temp., HAO Door Insulation	C306-704	H	A	
Temp., HAO Camera (TV)	C446-701	H	A	
Cur, Filament HAO Camera (TV)	M457-704	H	A	
Volt, Blanking & Sweep HAO Camera (TV)	M459-704	H	A	
Volt, 450 V Sup HAO Camera (TV)	M460-704	H	A	

Table 2.9.1-II (cont'd)

Name of Measurement	Meas. Number	Meas. Type	Meas. Format	Remarks
Cur, I/P HAO Camera (TV)	M461-704	H	A	
Volt, AGC HAO Camera (TV)	M462-704	H	A	

Legend

A	analog
D	digital
E	event
H	housekeeping
S	status
T	time
P	performance

Table 2.9.1- III
WLC DSC/DAS CONTROLS

	CMD	OCTAL
MAIN PWR ON	381	(40017)
STBY	382	(40057)
OFF	383	(40116)
APERTURE DOOR OPEN	376	(40117)
CLOSED	377	(40036)
STD PATROL	389	(40155)
FAST SCAN	388	(40102)
TSC POWER ON	384	(40136)
OFF	385	(40176)
MODC STOP	395	(40041)
UP	393	(40016)
DOWN	394	(40056)
LEFT	391	(40014)
RIGHT	392	(40161)
AUTOMATIC D_4 OVERRIDE	390	(40054)
CONVERTER PRIMARY	386	(40062)
SECONDARY	387	(40123)

2.9.1.2.5 Console Control - Normally, the experiment will be controlled from the ATM C&D Console. The astronaut operator will provide experiment pointing, experiment activation and deactivation control, experiment internal alignment, and experiment operating mode selection. Figure 2.9.1-3 illustrates the WLC command and display console controls and indicators. A detail discussion of the S052 operating procedures are presented in the Skylab Operations Handbook Vol. II, paragraph 4.4.3

2.9.1.2.6 Ground Control - The experiment can be operated by ground control (DCS) or the C&D Console DAS in limited modes of operation. Table 2.9.1-III presents the DCS/DAS control capability.

2.9.1.2.7 Extra Vehicular Activity - The astronaut will replace and return exposed film cameras by EVA. In the event of failure of the TV monitor, in the "TV" position, the astronaut will manually deactivate the mirror by EVA. The film cameras are the only removable items, being shifted from storage in the MDA to the coronagraph and back to the CM for return to earth upon mission completion.

2.9.1.3 Functional Description

The experiment is operated by remote command from the ATM C&D Console. The coronagraph experiment operates only when the ATM is pointed at the center of the sun. The experiment pointing error sensor will automatically stop any data accumulation if the coronagraph pointing error exceeds ±20 arc seconds, and it will automaticallly send a signal to the ATM to close the aperture door when the coronagraph pointing error exceeds ±5 arc minutes. The fundamental subsystems of the experiment are as follows:

a. Optics Subsystem - The optics subsystem produces a high quality image of the solar corona from 1.5 to 6 solar radii at the film plane, and reduces scattered light to a minimum. Principle elements included are the external and internal occulting disk assemblies, apertures, light baffles, lenses and mirrors, optical filters, and calibration optics.

b. Electronics Subsystem - The electronics subsystem accepts commands from the command and display console and provides automatic experiment operation sequencing. Conversion of unregulated

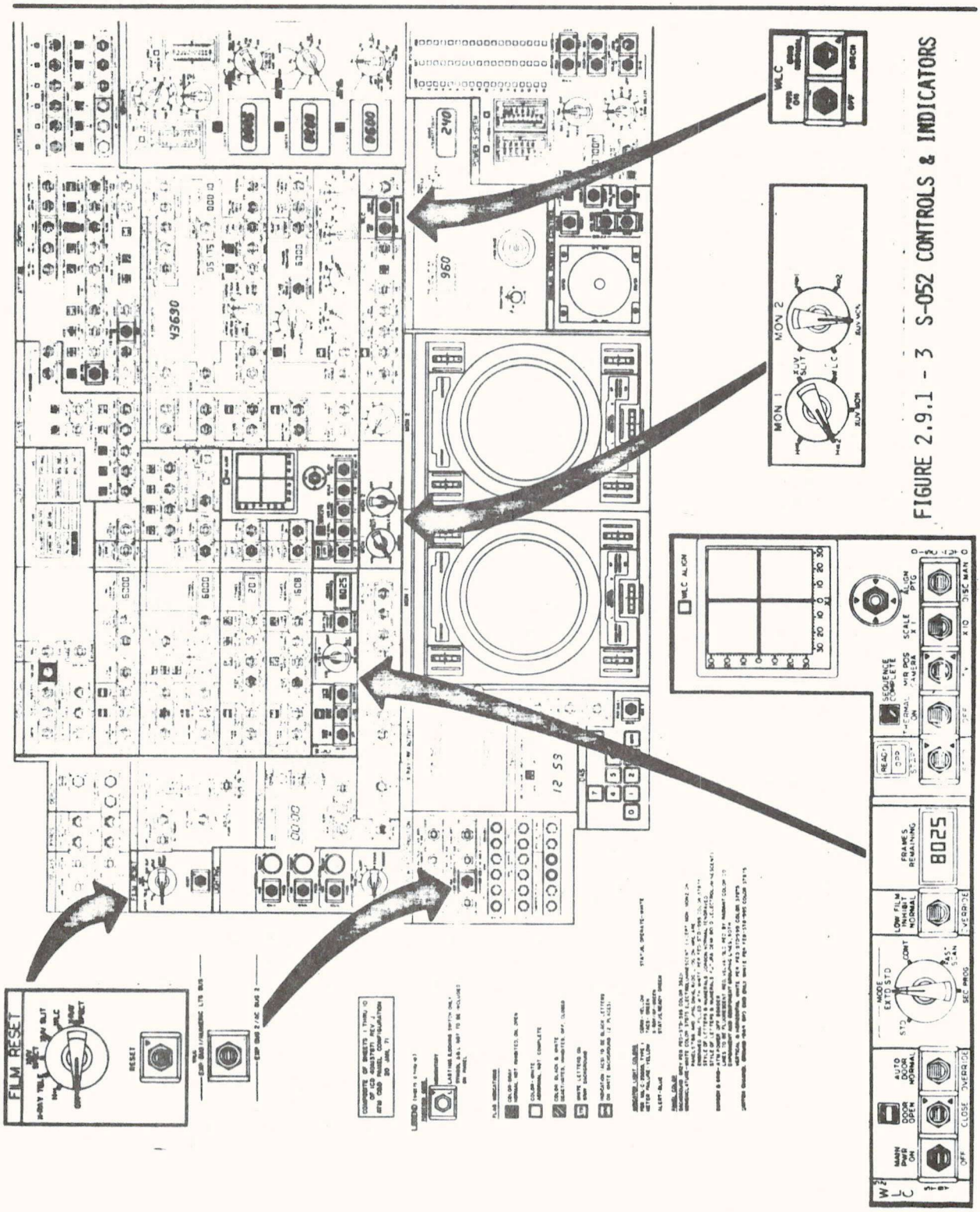

FIGURE 2.9.1 - 3 S-052 CONTROLS & INDICATORS

supply bus voltage is also provided. The electronic components are contained in electronic boxes mounted on the electronics mounting bracket which is mounted to the spar separately from the instrument.

c. Pointing Reference Subsystem - The pointing reference subsystem (PRS) provides error sensing output to the astronaut operator. These error signals are used to determine proper experiment pointing at the solar disk center, and provides error sensing to determine correct alignment of the internal occulting disk assembly. The (PRS) is composed of a pointing error sensor (PES), and and internal alignment error sensor (IAS) with their associated electronics.

d. Film Camera Subsystem - The film camera subsystem provides photographic recording of the coronal image, calibration pattern, and other required data on film. Camera sequencing and film exposure time is controlled by the electronics subsystem. Figure 2.9.1-4 illustrates the WLC film format.

e. TV Camera Subsystem - The TV camera sybsystem allows the astronaut to make visual observations of the solar corona which will aid in the determination of the most opportune times to obtain film data using the experiment film camera. The TV camera provides a method of monitoring particulate contamination surrounding the ATM, and a secondary pointing capability. Figure 2.9.1-5 illustrates the WLC TV format as viewed on the C&D console monitors.

f. Thermal Control System - Both semi-passive and passive thermal control system elements maintain the experiment temperature at 70 $\pm 6^{\circ}$F. Temperature monitors provide measurements of local instrument temperatures.

g. Mechanical Subsystem - The mechanical subsystem provides mounting support and housing for subsystem components, thermal isolation, experiment protection, and physical interface with the ATM.

SO52

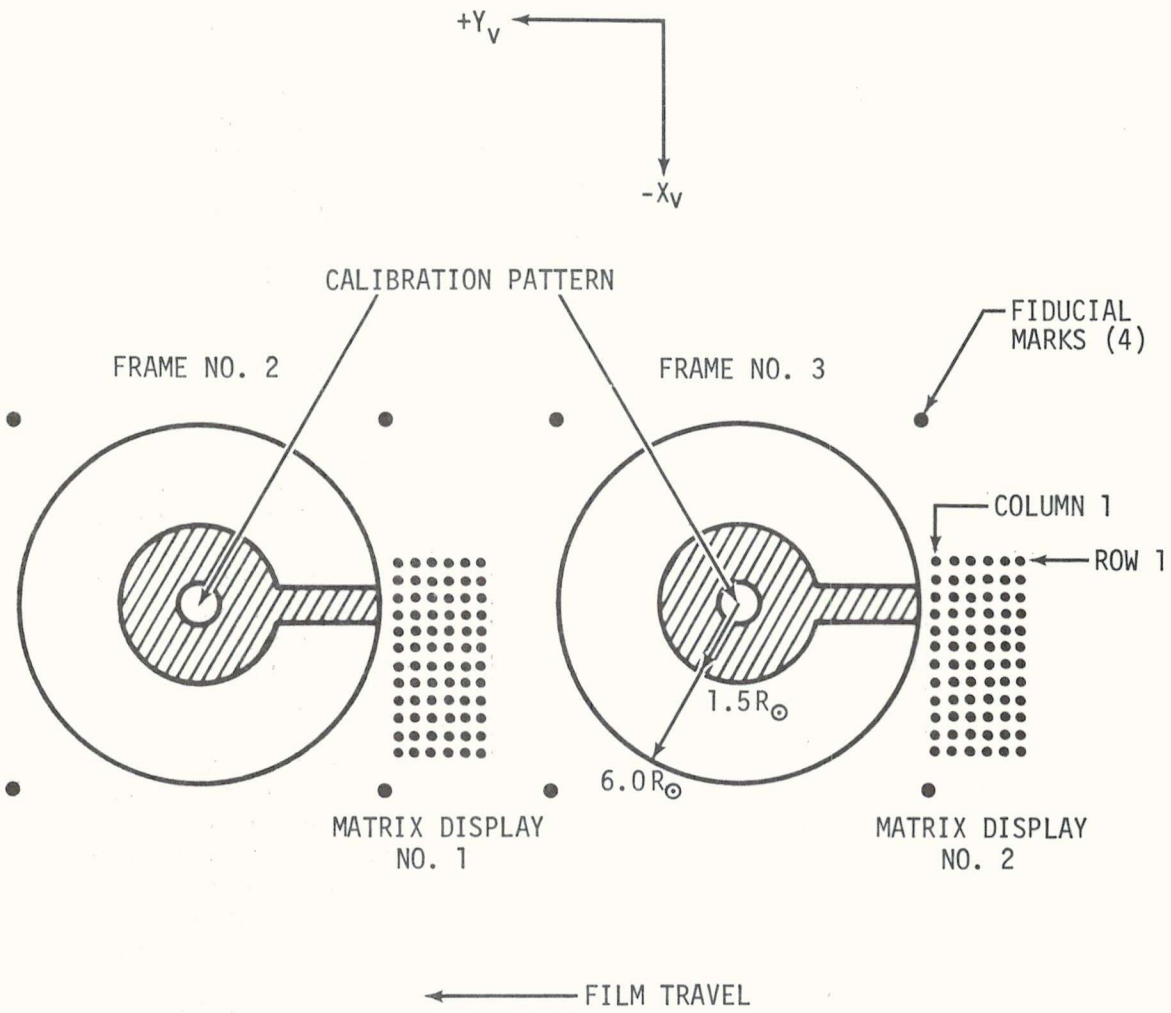

Figure 2.9.1-4 FILM FRAME AND DIODE MATRIX ORIENTATION

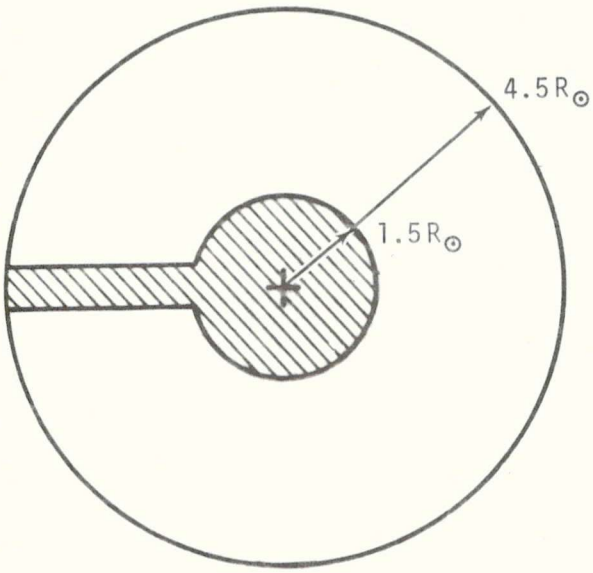

SCALE 1 IN = 2 IN

Figure 2.9.1-5 WLC TV FORMAT

2.9.1.4 Major Component Functional Description

2.9.1.4.1 Optics Subsystem - The optics subsystem is comprised of the occulting elements, the optical elements, polaroids and the intensity calibration components. See Figure 2.9.1-6 for location and layout of the optics subsystem.

a. Occulting - Three external occulting disks (D_1, D_2, and D_3) mounted forward of the optics housing occult the solar disk and inner corona to 1.5 solar radii and block difraction, thereby producing a high quality occulted solar image on the primary objective lens (O_1). The distance between D_1 and O_1 is approximately 90.1 inches.

The internal occulting disk (D_4) is mounted just forward of the field lens (F_1) and blocks diffraction from D_3. The functional operation of the internal occulting disk is covered in paragraph 2.9.1.4.2.3. A Lyot spot is mounted on the forward surface of the first secondary objective lens (O_2 (ab)) and blocks the multiply reflected image of D_3. Photographs of the external occulting disks and the internal occulting disk mechanism are shown in Figures 2.9.1-7 and 2.9.1-8 respectively.

b. Optical Elements - Apertures are provided in the ATM canister and throughout the instrument to provide a field of view of the solar corona to six solar diameters. The occulted solar corona is imaged by the primary objective lens (O_1). Secondary lenses and mirrors transmit the occulted solar image to either the film camera or TV camera focal planes. Coatings of the transmission optics and film emulsion are effective over the wavelength band from 3500 Å to 7000 Å.

c. Polaroid Filters - A polorization wheel assembly is provided to record coronal polarization at three displaced positions. The wheel has one clear aperture and three polaroid aperatures with polarization planes displaced 60° from each other. A photograph of the polarization wheel mechanism is presented in Figure 2.9.1-9.

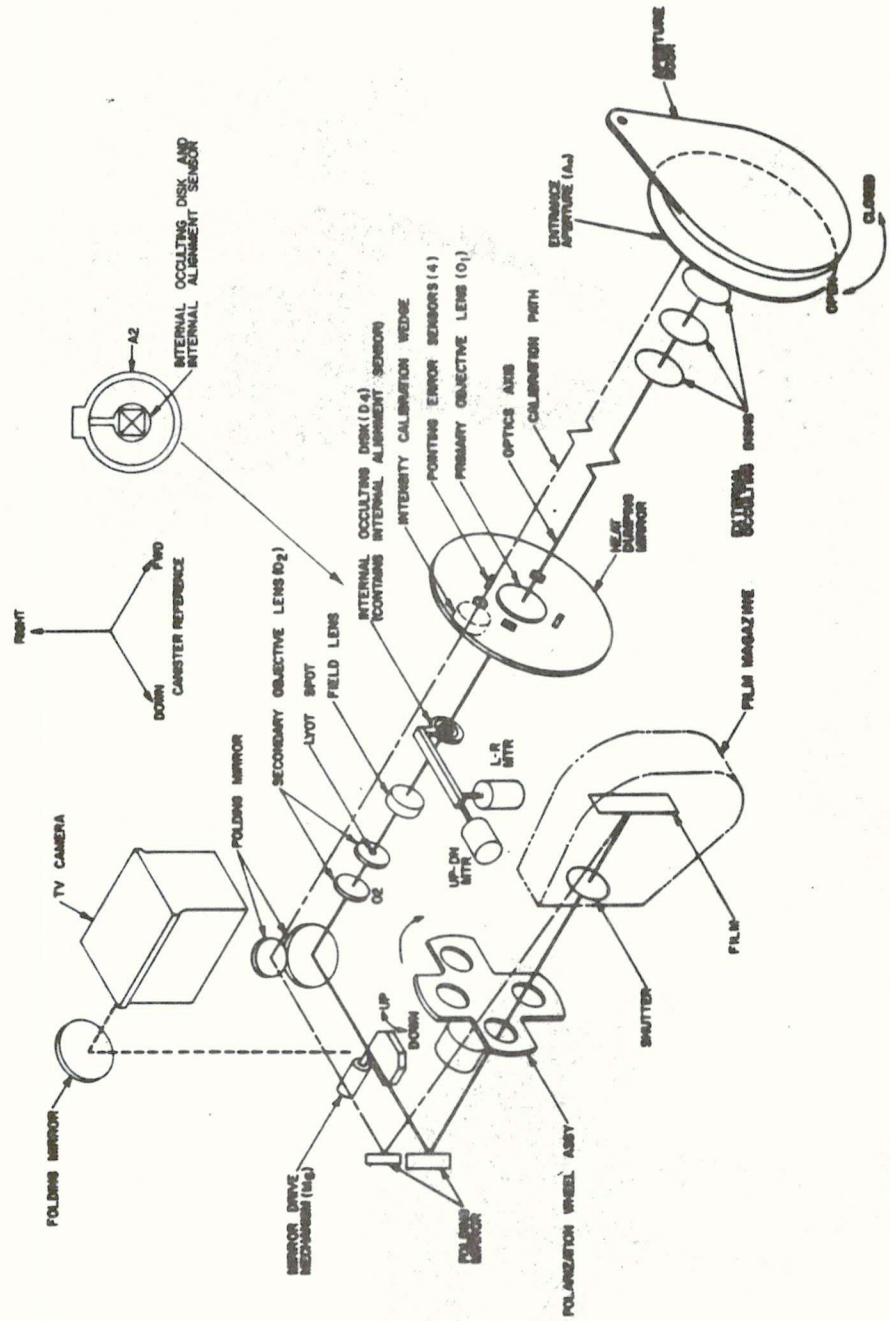

Figure 2.9.1-6 Optics Layout

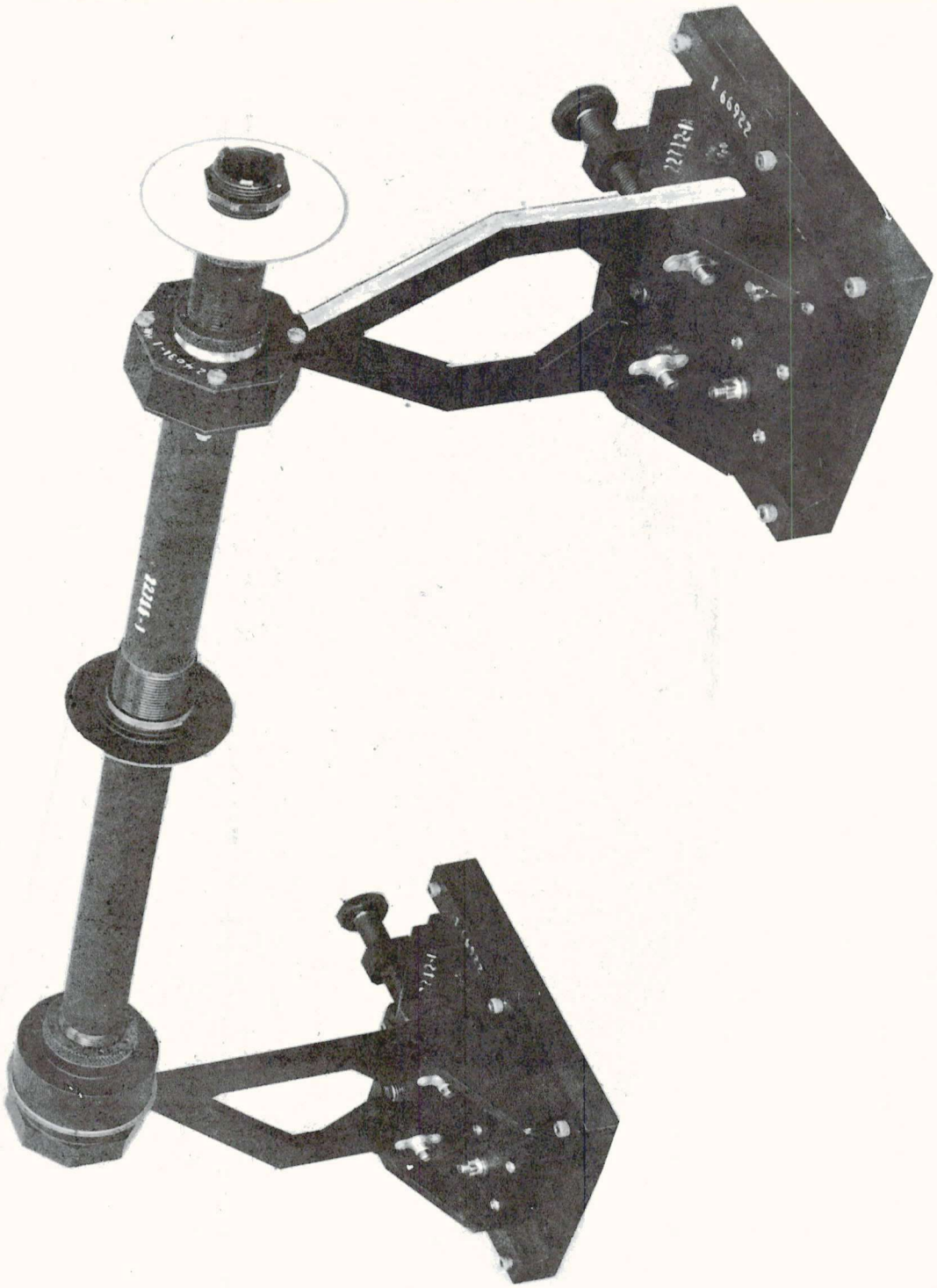

Figure 2.9.1-7 External Occulting Disks

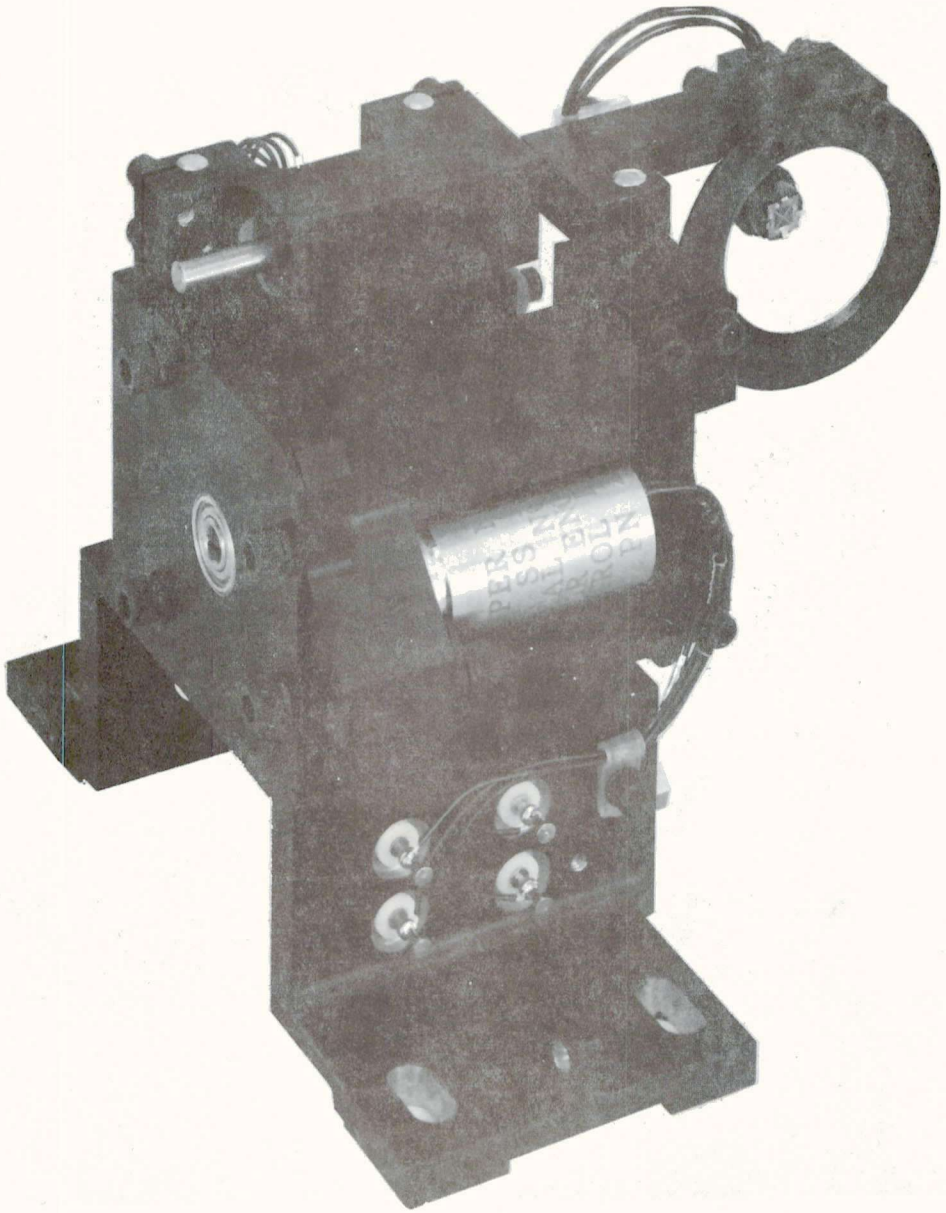

Figure 2.9.1-8 Internal Occulting Disk Mechanism (D_4)

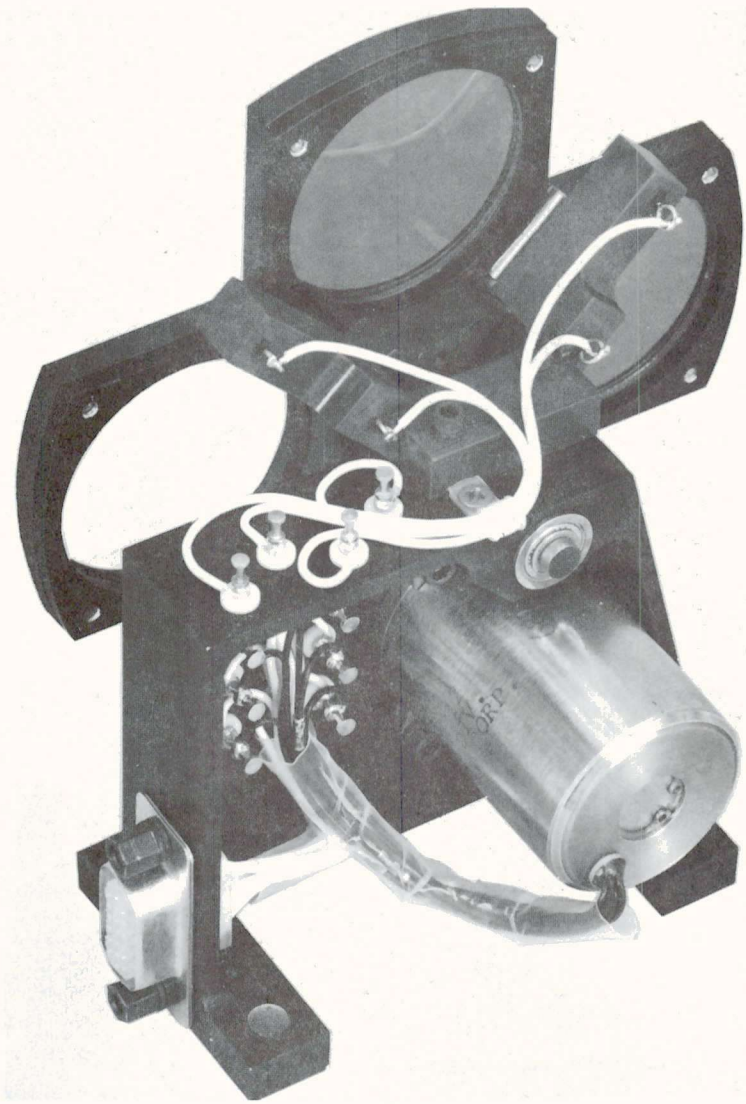

Figure 2.9.1-9 Polarization Wheel Mechanism

d. Intensity Calibration - A calibration image of absolute light intensity is placed on the film in the occulted area so that various coronal phenomeon may be compared against the image for accurate determination of the solar corona light levels. The sun is used as the source of unvarying light which is attenuated by means of a calibration wedge, and imaged on that portion of the coronal picture that is occulted by the external occulting disks. The principle components are the calibration wedge, opal diffuser objective lens, calibration aperture and mirrors M_4 and M_5. See Figure 2.9.1-10.

2.9.1.4.1.2 Electronics Subsystem - The electronics subsystem is identified by the following functional circuit groupings.

a. Camera programmer
b. Camera diode matrix drive
c. Internal occulting disk drive
d. Polarization wheel drive
e. TV monitor mirror drive
f. Thermal shield aperture door drive
g. Pointing error and internal error digitizer
h. Experiment status indicator
i. Power supplies (Main, Redundant and TCS)
j. Pointing error sensor signal conditioners
k. Internal alignment sensor signal conditioners

The electrical subsystem block diagram is presented in Figure 2.9.1-11.

2.9.1.4.2.1 Camera Programmer - The primary and redundant camera programmers operate the film camera in five distinct modes.

S052

a. Standard Patrol Mode - The standard patrol mode is the basic mode to be used for synoptic data accumulation. This mode provides three different exposure durations (9, 27, and 3 seconds) at four different polaroid positions, expending 12 frames for a duration of 5.5 min. The exposure durations and polaroid positions are automatically sequenced and the mode is automatically terminated when the 12 exposures are completed.

b. Extended Standard Mode - This patrol mode is identical to the standard patrol mode except the sequence duration is 16.2 minutes, thus repeating the standard patrol mode three times. The extended standard patrol mode automatically

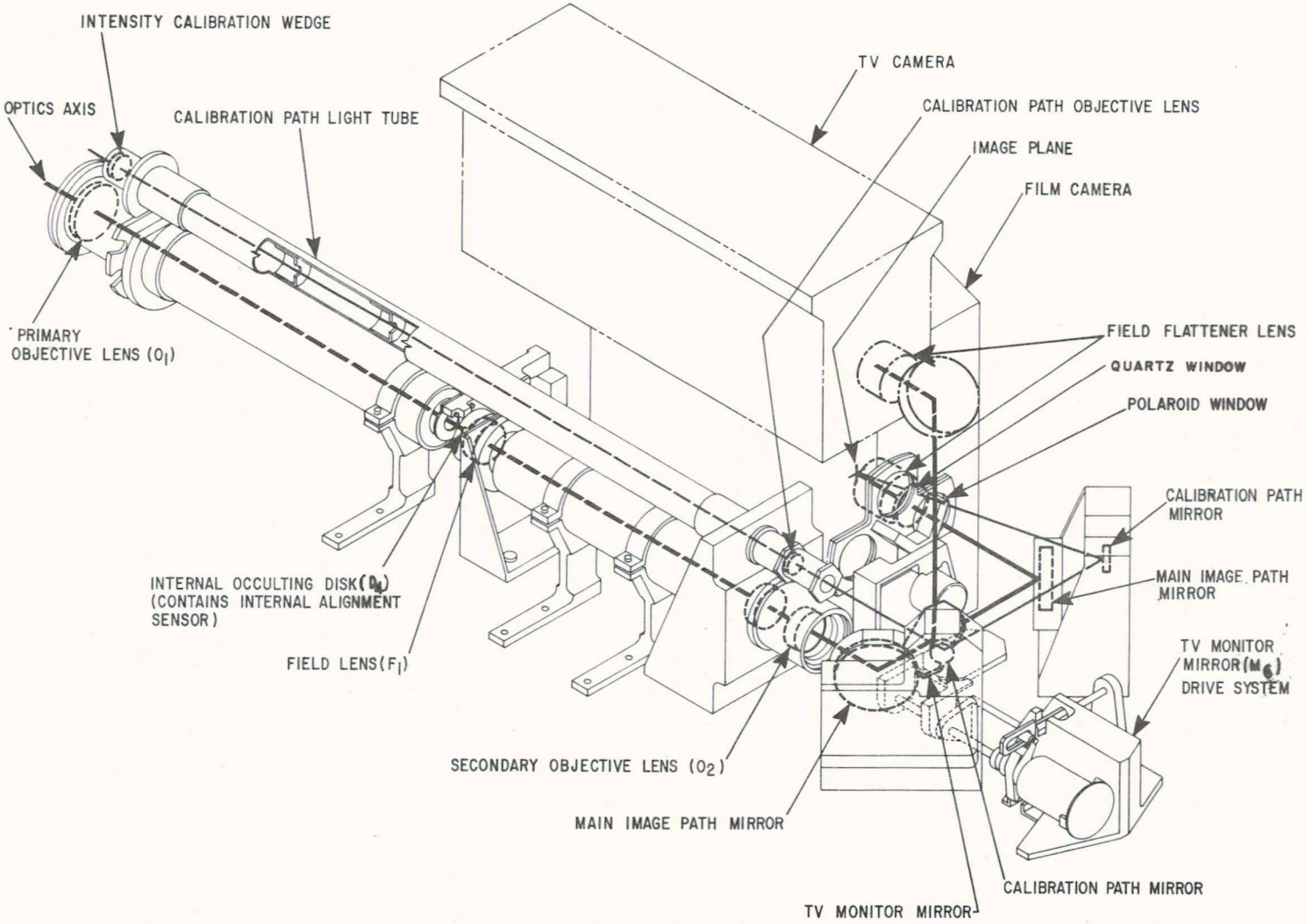

Figure 2.9.1-10 Optics Housing Details

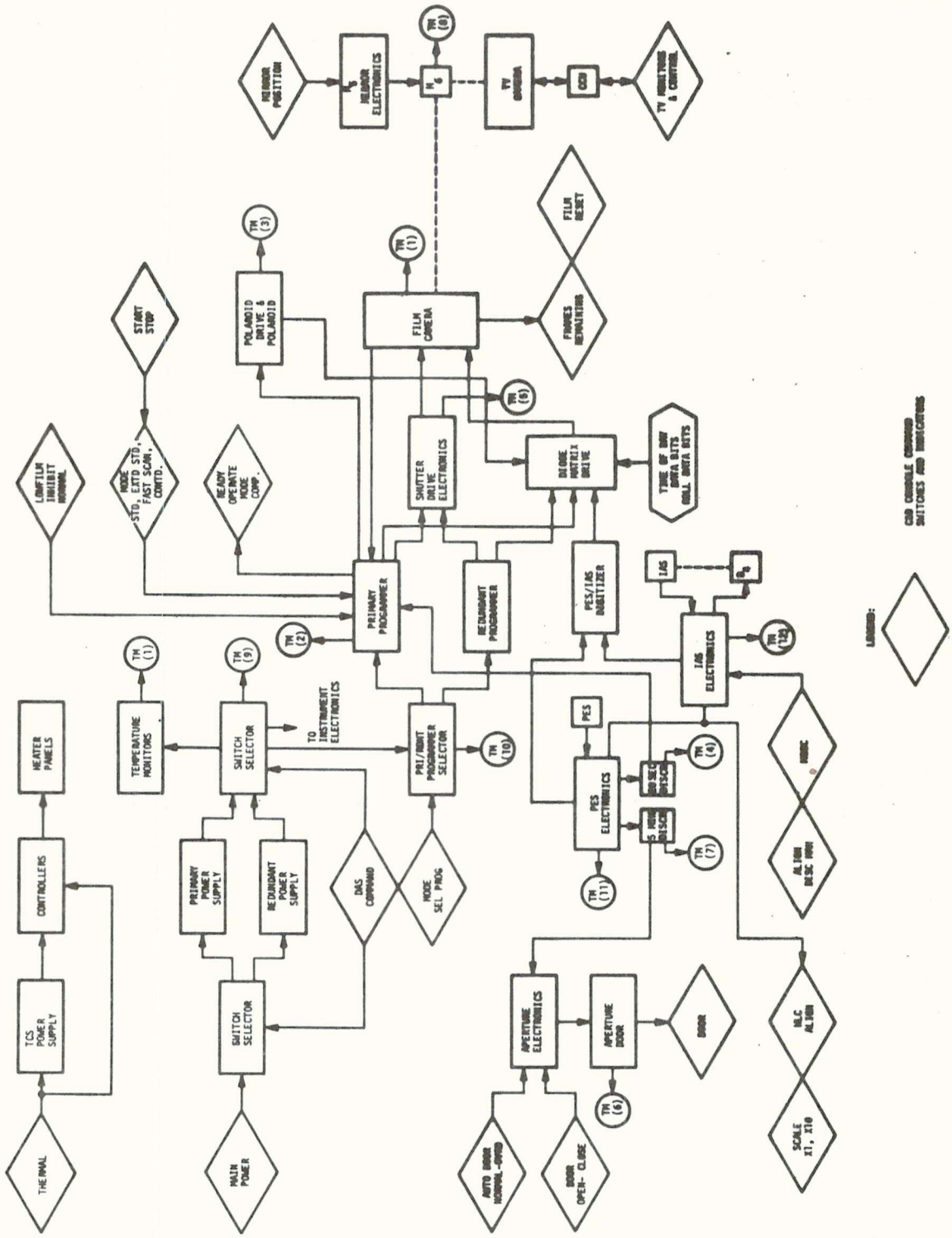

Figure 2.9.1-11 WLC Functional Block Diagram

terminates after the full 16.2 minutes of data is taken expending 36 frames.

c. Continuous Patrol Mode - The continuous patrol mode takes one exposure every 27.5 seconds sequencing through 9,27, and 3 second exposures with the polaroid wheel locked in the clear position. The mode is manually terminated using the START/STOP switch or the MODE select switch.

d. Fast Scan Mode - The fast scan mode takes pictures at the maximum rate possible, expending 72 frames in 16.2 minutes. Film exposures are sequenced through 27, 3 and 9 second exposures with the polaroid wheel locked in the clear position. The fast scan mode is automatically terminated after 16.2 minutes of data taking. The mode is automatically inhibited when less than 5% of unexposed film remains. The low film inhibit can be overridden using the LOW FILM INHIBIT switch on the C&D console.

e. Secondary Program Mode - A redundant programmer is provided giving a backup program mode operation in the event of a failure of the primary programmer. The secondary program mode provides three exposures per 64 seconds, sequenced 6, 18 and 2 seconds with the polaroid locked in the clear position. The sequence is continuous until it is manually stopped using the MODE selector switch.

2.9.1.4.2.2 Camera Diode Matrix Drive - A diode Matrix contained in the camera receives signals from the camera diode matrix drive electronics, and exposes the camera film thereby uniquely identifying certain operational experiment parameters. A typical diode matrix film exposure array is shown in Figure 2.9.1-4 .

2.9.1.4.2.3 Internal Occulting Disk Drive (D_4) - The internal occulting disk is capable of either automatic or manual adjustment in the up-down or left-right directions. The internal occulting disk drive mechanism is controlled by the C&D Console switches ALIGN sw (DISC AUTO and DISC MAN) and MODC (Manual Occulting Disk Control).

2.9.1.4.2.4 Polarization Wheel Drive - The camera programmer electronics automatically controls the polarization wheel drive mechanism to rotate the polarization wheel through four positions. In the STANDARD and EXTENDED STANDARD patrol mode operation the polarization wheel is rotated 90 degrees after each completion of three different exposure pulses until all polaroid wheel positions are used. In the FAST SCAN, CONTINUOUS AND SECONDARY PROGRAM modes, the polarization wheel is driven into the clear position and remains in this position during the entire mode.

2.9.1.4.2.5 TV Monitor Mirror Drive - Control circuits are provided to the TV monitor mirror drive mechanism for rotating the TV monitor mirror (M_6) in and out of the optical path as required for astronaut viewing on the C&D console monitors or film recording. (See Figure 2.9.1-14). The TV monitor mirror is automatically driven to the film camera position when the aperture door open command or 5 arc minute discriminator command are given, and after the first frame of film is exposed in an operational mode.

2.9.1.4.2.6 Thermal Shield Aperture Door Drive - The coronagraph electronics provides an automatic close pulse command to the ATM thermal shield aperture door drive mechanism and power amplifier when the S052 pointing error exceeds plus or minus 5 arc minutes. The circuit is capable of manual override by the astronaut using the C&D Console AUTO DOOR switch.

2.9.1.4.2.7 Pointing Error and Internal Error Discriminator and Digitizer - The electronics provided continuous DC signal and digitizer error out puts as follows:

a. Pointing error discriminator provides output signals when the coronagraph pointing error exceeds 5 minutes and 20 arc seconds.

b. Pointing reference system digitizer identifies the $\pm$5 arc minute PES and IAS output to 255 increments with a digitizing accuracy of $\pm$2 increments for film recording.

S052

2.9.1.4.2.8 Experiment Status Indicators - The experiment electronics provide signals that indicate "Experiment Ready", "Experiment Operating", "Mode Complete" and "Frames Remaining". (See Figure 2.9.1-3).

2.9.1.4.2.9 Power Supplies (Main, Redundant and TCS) - There are three principle DC/DC converters which supply regulated voltages to the experiment electrical systems each operating from the ATM nominal ±28 VDC bus. The characteristics of the three converters are as follows:

Table 2. 9.1-IV

POWER CHARACTERISTICS

DC/DC Converter	C&D Console Sw	Voltage Output (VDC)
Primary or Redundant	MAIN PWR - ON	+10, -10, +12, +5
	MAIN PWR - STBY	+15
TCS	THERMAL - ON	+10, -10

Only the primary or redundant converter is used at a given time. Selection of use is made through the C&D Console digital address system.

2.9.1.4.3 Pointing Reference Subsystem - The pointing reference subsystem (PRS) provides signals to initiate closure of the ATM canister aperture door and TV monitor mirror acutation; control of D_4 automatic operation; signals for direct readout on the C&D Console, and photographic recording of the cornagraph pointing attitudes and internal alignment; and pointing error inhibit signals. The PRS consists of the pointing error sensor (PES) assembly, coordinate conversion, internal alignment error sensor (IAS) assembly, and their associated electronics. In discussing the functions of the PRS and

and IAS, an understanding of the experiment reference axes is necessary.

2.9.1.4.3.1 Experiment Reference Axes

a. Coronagraph Axis - The instrument coronagraph axis is defined as an imaginary line connecting the geometric center of the forward external occulting disk (D_1) and the geometric center of the first objective lens (O_1).

b. Pointing Error Sensor Axes - The PES axes are an orthogonal reference system containing the coronograph axis and two orthogonal control planes (elevation and azimuth) which are each inclined 45 degrees to the experiment optical bench.

c. Internal Alignment Axis - The IAS axis is defined as the line connecting the geometric center of the first objective lens (O_1) and the geometric center of the internal occulting disk (D_4).

2.9.1.4.3.2 Pointing Error Sensor Assembly - The pointing error sensors are photovoltaic detectors located around the periphery of the first objective lens (O_1), each inclined 45 degrees to the optical bench, and entirely within the penumbra formed by the external occulting disk. See Figure 2.9.1-12. The PES provides coronograph axis-solar line of sight error signal outputs. Performance requirements are as follows:

a. Error Signal Linearity - Proportional to error angles over a range of minus 5 to plus 5 arc minutes about zero error.

b. Error Signal Accuracy - The angle between the solar line of sight and coronograph axis is 20 $\pm$2 arc seconds or less for zero PES output in both control planes.

c. Angular Sensitivity - The nominal angular sensitivity is one volt per arc minute within $\pm$5 arc minute proportional range.

Pointing error sensor output signals are displayed on the C&D Console WLC ALIGN indicator when the ALIGN switch is on PTG. Control of the experiment pointing is accomplished utilizing the MANUAL POINTING CONTROL lever which controls the ATM.

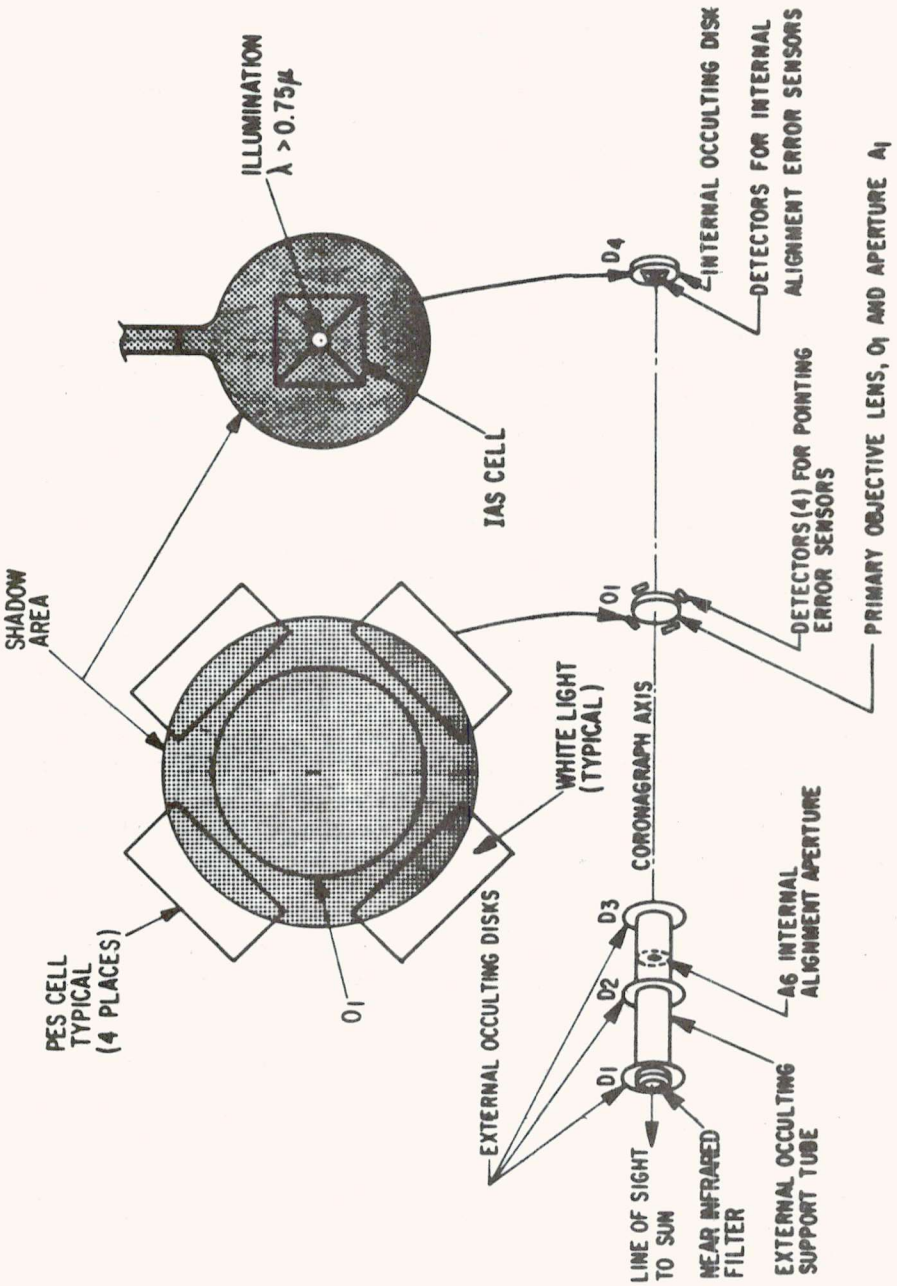

Figure 2.9.1-12 Pointing Reference System Elements

2.9.1.4.3.3 Coordinate Conversion - The pointing error coordinate conversion translates the planes of the pointing error sensor readout to match the elevation and azimuth planes of the ATM spar.

2.9.1.4.3.4 Internal Alignment Error Assembly - The IAS assembly provides the error signals for both automatic and manual experiment inflight alignment of D_4. The internal alignment sensors are mounted on the internal occulting disk (D_4) (See Figures 2.9.1-6 and 2.9.1-12) providing two analog error signals, one in the elevation (up-down) and one azimuth (right-left) orthogonal to the internal alignment axis. The internal alignment sensors are similar to the PES and function electrically the same. Performance requirements are as follows:

a. Error Signal Linearity - Proportional to error angles over a range of minus 3 to plus 3 arc minutes about zero error.

b. Error Signal Accuracy - The angle between the coronagraph and internal alignment axes is 10 arc seconds or less for zero IAS output with the constraint that the experiment pointing error is less than 20 arc seconds.

c. Angular Sensitivity - The nominal angular sensitivity is one volt per arc minute with ± 3 arc minute proportional range.

d. Illumination - The IAS is illuminated with infrared light passing thru a near infrared filter ($\lambda > 0.75\ \mu$) and aperture located in the external occulting support tube.

Internal alignment error sensor outputs are displayed on the C&D Console WLC ALIGN indicator when the ALIGN switch is on DISC AUTO or DISC MAN. Control of the D_4 position is accomplished utilizing the Manual Occulting Disk Control (MODC) lever with the ALIGN sw in DISC MAN.

SO52

2.9.1.4.4 Film Camera Subsystem - The film camera is a 35mm sequential camera which is pre-loaded with film, sealed and pressurized prior to launch. Figure 2.9.1-1 shows the film camera installed on the experiment in the operational mode. Figure 2.9.1-13 shows the film camera as it is configured for storage in the MDA. The camera operation is controlled by the experiment electronics.

2.9.1.4.4.1 Film Type - The camera is pre-loaded with approximately 750 feet (8025 exposures) of 35mm roll film, Kodak Special 026-02 thin base.

2.9.1.4.4.2 Camera Pressurization - The camera is pressurized with nitrogen gas at an internal pressure of 5.6 PSIA maximum. The nitrogen temperature is $70 \pm 5^{\circ}$F at relative humidity of 60% maximum.

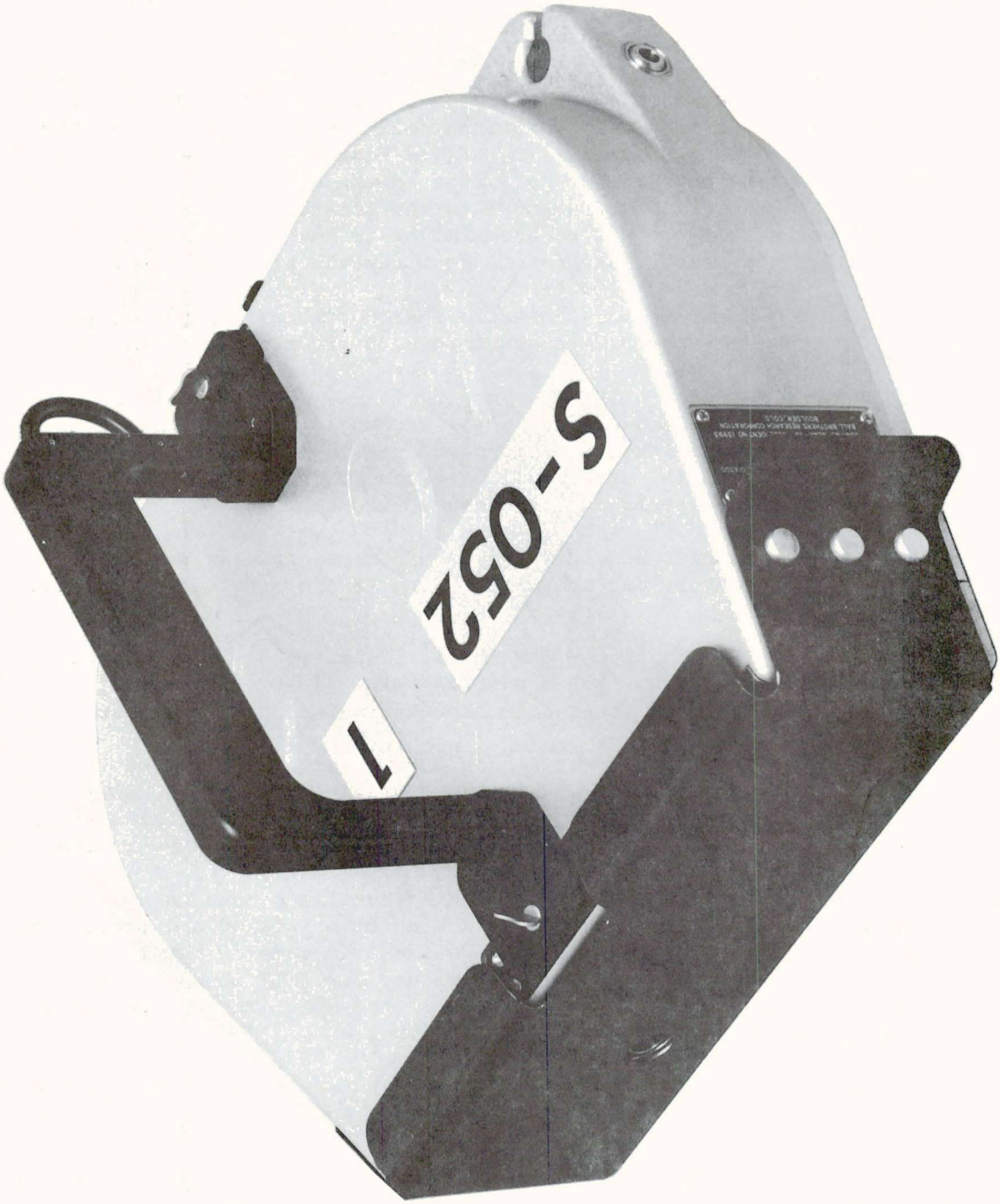

Figure 2.9.1-13 WLC FILM CAMERA

2.9.1.4.4.3 Camera Latch Mechanism - The camera latch mechanism is shown in Figure 2.9.1-1. The latching lever is a double action mechanism for removal and insertion of the film camera by an astronaut on EVA. The lever is operated by a direct push or pull action, and is equipped with detent to key the lever in either latched or unlatched position, and a launch lock pin for stowing of the lever during the launch vibration environment.

2.9.1.4.4.4 Film Camera Handle - During launch one film camera will be attached to the instrument and three will be stowed in the MDA. The cameras will be changed during EVA and the expended cameras stored in the CM for return. A detachable and interchangeable handle is provided with each camera. The handles are detached and discarded when each expended camera has been returned to the CM for stowage and return to earth. The handle is removable using positive, finger actuated type fasteners capable of being operated by an ungloved astronaut in a shirt sleeve environment. Each handle is provided with a tether ring for lanyard attachments.

2.9.1.4.4.5 Camera Face Plate - A detachable face plate is provided for each film camera for protection of the field flattener lens during non-operational use. The face plate is detached from the camera and stored in the MDA when a fresh camera is cycled for use by EVA.

2.9.1.4.4.6 Operation - When the camera is operating, the WLC C&D Console operate light is on. Decreasing readout of the FRAMES REMAINING indicator is an indication that film is advancing and therefore is another indication that the camera is operating. The FRAMES REMAINING indicator is reset to 8025 using the FILM RESET switch each time a film camera is replaced by EVA. Post-flight, cameras with exposed film are delivered unopened to the Principal Investigator for film processing. The film camera can be operated in the five camera modes described in paragraph 2.9.1.4.2.1.

SO52

2.9.1.4.5 TV Camera Subsystem - Principal elements of the TV camera subsystem include the camera housing (CH), the camera control unit (CCU) and interconnecting cables, TV monitor mirror drive mechanism and associated electronics. The CH, CCU and interconnecting cables are GFE.

2.9.1.4.5.1 Camera Housing and Camera Control Unit - The camera housing which includes the low light level camera tube is mounted to the experiment as shown in Figure 2.9.1-1. The camera control unit is installed in the ATM separately from the instrument and is not considered as a component of the White Light Coronagraph experiment. Interconnecting cables provide power and control signals for the operation of the TV camera separately from the experiment with the WLC-TV switches on the C&D Console.

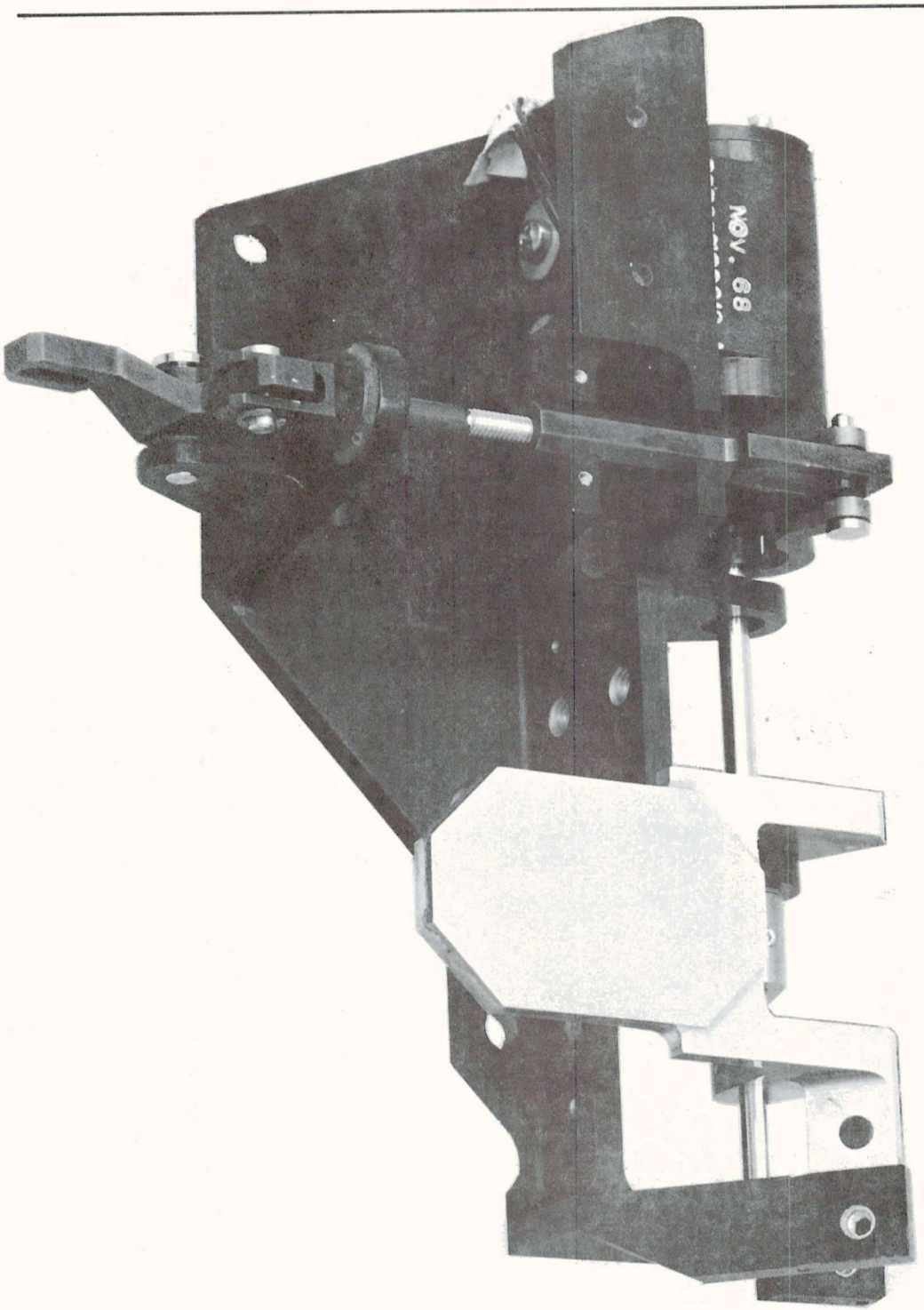

Figure 2.9.1-14 TV Monitor Mirror Mechanism

CAUTION: The gain of the low-light-level camera is set to maximize sensitivity thus bright coronal features can cause permanent damage. Therefore, the coronal image must not be left on the SEC Vidicon for more than 10 min. before removing the beam for at least a 5 min. rest period.

2.9.1.4.5.2 TV Monitor Mirror Drive Mechanism - The coronal image can be displayed on the C&D Console TV monitors when the TV monitor mirror (M_6) is rotated into the optical path. The position of the mirror is controlled by C&D Console switch MIR POS. A photograph of the TV monitor mirror mechanism is presented in Figure 2.9.1-14.

A manual override is provided to allow the astronaut, by EVA, to manually move the mirror (M_6) from the optical path should failure of the mechanism or the associated electronics occur.

2.9.1.4.6 Thermal Control System - The experiment thermal control system (TCS) consists of semi-passive and passive components to maintain the absolute mean temperature of the instrument critical components (i.e., optics housing and optical bench) at 70 $\pm 6^{\circ}$ F, and monitors to measure instrument temperatures. The principle elements of the thermal control system are the thermal shield aperture door, heat rejection mirror, heater panels and controllers, temperature monitors, thermal insulation and surface finishes.

a. Thermal Shield Aperture Door - The thermal shield aperture door remains closed at all times except during experiment operation. The door operation is controlled by the door switch on the C&D Console with the exception that the instrument automatically sends a signal to the ATM door mechanism to close the door when the experiment pointing error exceeds 5 arc minutes, the ATM DC issues a night signal, or the WLC power switch is set to STBY or OFF. (See paragraph 2.9.1.4.3). This closure signal can be overridden by use of the AUTO DOOR switch. The specified operation time for full close to full open or open to close is 10 seconds minimum, 30 seconds maximum. The open or close status during experiment operation is displayed on the C&D Console DOOR talkback.

S052

b. Heat Rejection - A thermally isolated mirror is located in front of the optics housing around the primary objective lens (O_1) to reflect incident sunlight out through the experiment entrance aperture (A_o). (See Figure 2.9.1-1). The mirror has two entrance apertures, one for the optical path and the second for

the calibration path.

c. Heater Panels - There are seven heater panels which supply heat to the temperature critical optical bench and optics housing. See Figure 2.9.1-15. The panels are mounted to the experiment by thermal isolating mounts. Operation of the heater panels is controlled by the TCS controllers. The experiment TCS is activated by the C&D Console THERMAL switch.

d. Temperature Controllers - There are four controllers which regulate four temperature control zones; optics housing top, optics housing left-side, optics housing right side, and the optical bench.

e. Temperature Monitors - Seven temperature monitors are located on the instrument to monitor local instrument temperatures (See Figure 2.9.1-15). Outputs from these monitors are relayed to ground by recorded telemetry.

f. Passive Thermal Control - In addition to the active thermal control subsystem, thermal insulation is used around the optical bench and on the aft end of the optics housing. The optical bench is wrapped with multiple layers of aluminized mylar which serves as a highly efficient thermal blanket. The finishes used on the surfaces of the instrument have been selected to optimize the required thermal emission from those surfaces.

2.9.1.4.7 Mechanical Subsystem - The mechanical subsystem includes all structural components which serve to provide protection, support, thermal isolation, and subsystem and ATM physical interface. The major components of the mechanical subsystem are the optical bench and spar interface mounts, the light tubes, optics housing and electronics mounting bracket. (Refer to Figure 2.9.1-1).

2.9.1.5 Performance and Design Data

Significant scientific and engineering performance and engineering design data are presented below in Table 2.9.1-IV. Additional information can be obtained in BBRC document CP22876 S052 Design and Performance Specification.

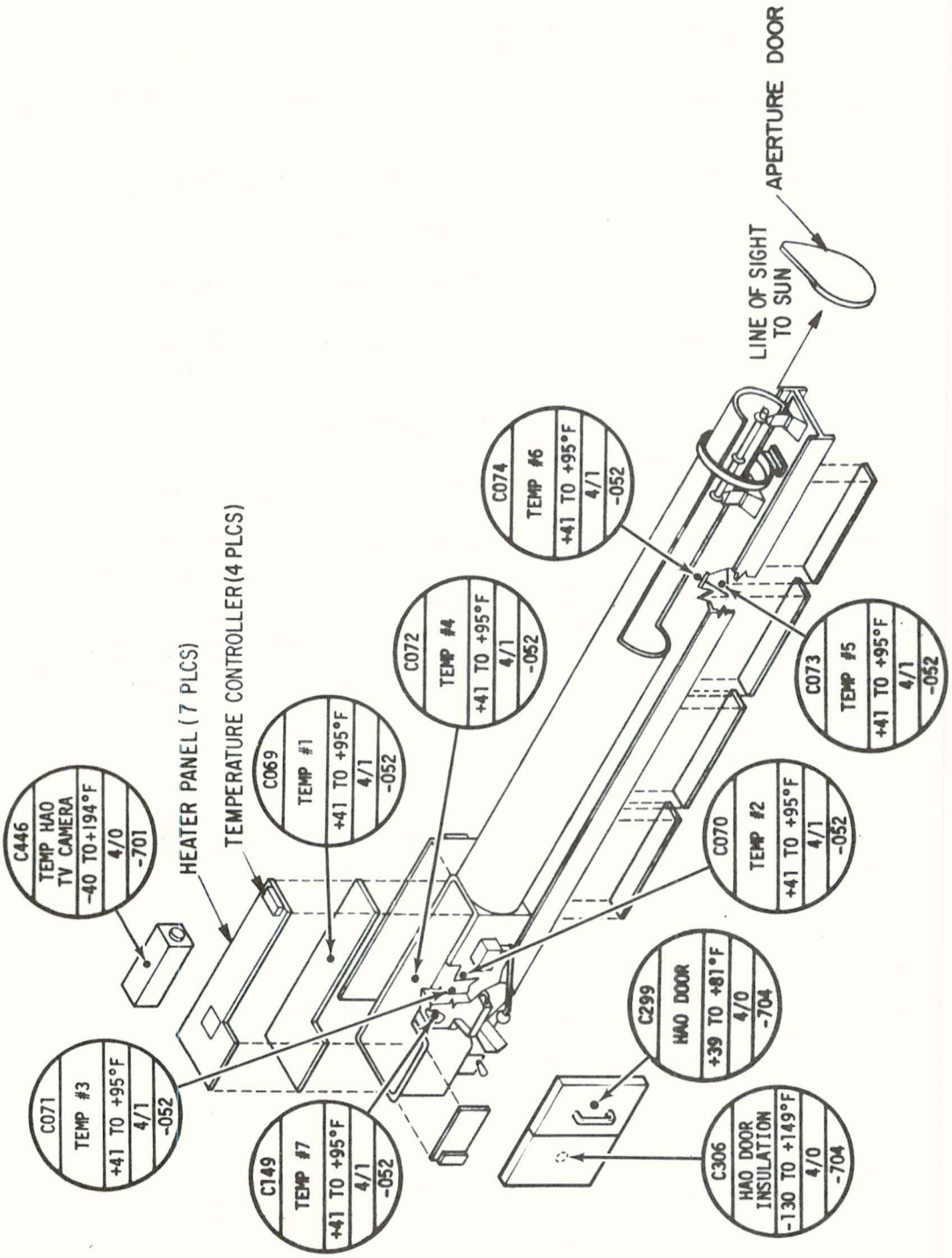

Figure 2.9.1-15 Thermal Heater Panels, Control and Temperature Sensors

TABLE 2.9.1- V

SCIENTIFIC PARAMETERS

Spectral Range:	White Light (3500Å to 7000Å)
Solar Field of View	1.5 to 6 solar diameters
Spatial Resolution:	8 arc seconds
Solar Image Scale:	486 arc seconds per mm
Coronal Brightness:	1.5 $R_\odot$, B cor ~$1.5 \times 10^{-7} B_\odot$
	4.5 $R_\odot$, B cor ~$8 \times 10^{-10} B_\odot$
	6.0 $R_\odot$, B cor ~ $1 \times 10^{-10} B_\odot$
Pointing Stability Elevation and azimuth:	± 5 arc seconds for 16 min
Roll:	±0.5 arc minute for one min

ENGINEERING SPECIFICATIONS

Weight	EXP = 320 lbs max (Including camera excluding cabling)
	Camera = 22 lbs max (with handle and film)
Experiment Envelope	Length = 124 in max
	Height = 22 in max
	Width = 21 in max
Camera Envelope: (without handle)	Length = 12.6 in max
	Height = 8.2 in max
	Width = 3.2 in max
Operating Power:	Peak = 75 watts
	Average= 12.5 watts
TCS Operating Power:	Average = 8.5 watts
Heat Discipation:	Solar = 16 watts max
	Electrical = 21 watts ave
Thermal Isolation:	6.0 BTU/hr max at 10°F diff. temp. between experiment and ATM spar
Latch Mechanism:	Push - pull = 10 lb force max
	Detent pin = 10lb force max

2.9.1.6 Operating Limitations and Restrictions

2.9.1.6.1 Thermal Stability - The ATM canister should be thermally stable between 47°F and 58°F prior to initiation of the experiment TCS. Should the ATM canister temperature be less than 47°F, the differential temperatures can create mechanical stresses which may cause permanent deformation to the experiment. Should the ATM TCS temperature exceed 58°F, thermal control may be degraded. The WLC TCS requires the low temperature for heat dissipation and the increase in canister temperature could result in hot spots.

The instrument may require as much as twenty-four hours for stabilization period from the time of WLC TCS Turn-On, with the ATM canister thermally stable. The experiment temperatures should be between 40°F and 70°F before the WLC TCS is turned on, otherwise the experiment may be damaged by differential temperature stressing. Instrument thermal stability is monitored via seven temperature probes. The temperature of the instrument must be within the temperature range of 70 ±6°F for data acquisition.

2.9.1.6.2 Power Input - The experiment is designed to operate from ATM supplied power between 26 to 30.5 volts DC. Experiment operation for voltages in excess of these values must be determined. (TBS)

2.9.1.6.3 Command Parameters - Discrete, and continuous control, commands have an amplitude of 28 ±VDC. The minimum duration for a discrete command is 10 milliseconds. Experiment operation for voltage amplitudes and pulse duration not meeting these parameters must be determined. (TBS)

2.9.1.6.4 Aperture Door - The aperture door must not be opened if the ATM pointing does not put the line of sight to the sun within 5 arc minutes of the instrument coronagraph axis. This restriction is to preclude the possibility of damage to the instrument from excessive heating that could result from direct sunlight entering the light tube at angles in excess of 5 arc minutes.

The WLC electronics issues a signal to cause closure of the door should mispointing in excess of 5 arc minutes occur. However, this is inhibited during the time period the door is opening. The command is also inhibited when the "AUTO DOOR, NORMAL - OVERRIDE" switch is in override.

2.9.1.6.5 Pointing Accuracy and Stability - The experiment is designed to operate for sun centered pointing. The following limitations and restrictions are cited for total experiment pointing requirements.

2.9.1.6.5.1 Initial Pointing Accuracy - Initial ATM pointing accuracy requirements using the C&D Console attitude control system monitor displays are as follows:

Elevation: ±3 arc minutes

Azimuth: ±3 arc minutes

Roll Orientation: The experiment axis should be parallel to the solar poles within ±5 arc minutes.

These ATM elevation and azimuth initial pointing accuracies are required to bring the pointing error within range of the instrument pointing reference system so that astronaut control can be accomplished using the instrument pointing error sensors. Initial roll pointing accuracy is required to properly align the instrument with the solar poles for data correlation.

2.9.1.6.5.2 Pointing Stability - ATM pointing stability requirements which minimize data smearing are as follows:

Elevation: ±5 arc seconds for 16 minutes

Azimuth: ±5 arc seconds for 16 minutes

Roll: ±0.5 arc minute for one minute

2.9.1.6.6 Internal Occulting Disc Alignment - The internal occulting disc (D_4) is automatically aligned to within 10 arc seconds of the WLC solar axis when the ALIGN, PTG - DISC AUTO - DISC MAN switch is in either PTG or DISC AUTO. In DISC MAN the automatic centering electronics are disabled and the control is through the manual occulting disk control switch (MODC).

Should the D_4 indicate an alignment error in excess of 10 arc seconds, as read on the WLC ALIGN indicator, control of the D_4 should be transferred to manual operation.

2.9.1.6.7 TV Monitor Mirror - The TV camera low light level vidicon tube is highly sensitive to direct sunlight and therefore must be protected at all times. The TV monitor mirror should always be ir the film camera position unless it has been verified that the ATM pointing error is less than 5 arc minutes. Further, the TV monitor mirror should be in the film camera position when the aperture door is opening or when abnormalities exist in the WLC pointing signals which dictate the use of the aperture door override to maintain door in the open position. The maximum operation of the TV camera at any one time should not exceed 10 minutes followed by at least 5 minutes of non-operation.

2.9.1.6.8 Low Film Inhibit - The prime mission of the White Light Coronagraph is to obtain daily observations of the solar corona, therefore the minimum requirement for synoptic observations is a standard patrol mode operation every 12 hours. Optimum patrol mode operation is a single standard patrol every orbit. In order to insure sufficient film for this requirement, a low film inhibit automatically inhibits the fast scan mode of operation after 95% of the film in the camera has been expended. An override command is available in case the minimal requirements have been met and a fast scan operation is considered necessary. However, the final 5% of the film shall not be used at the expense of losing synoptic observations.

2.9.1.6.9 Scattered Light - It is essential that scattered light in the coronagraph be kept to a minimum by proper alignment of the overall system, and such operational components as the internal occulting disk (D_4). Final inflight alignment is accomplished by the astronaut prior to data taking. By means of the TV monitor, the astronaut can evaluate the accuracy of the instrument alignment and take corrective measures. A small flight atlas showing the WLC correctly aligned and under various states of misalignment will be used by the astronaut to be compared with the view presented by the TV monitor.

2.9.1.6.10 Contamination - The White Light Coronagraph is sensitive to external and internal contamination which could produce excessive scattered light. Criteria for evaluating excessive levels of contamination as viewed on the TV monitor will be determined. (TBS)

2.9.2 X-RAY SPECTROGRAPHIC TELESCOPE (SO54)

2.9.2.1 Introduction

The instrument (Figure 2.9.2.-1) has been designed around an x-ray telescope which consists of two nested grazing incidence x-ray mirrors which are both coaxial and confocal. These mirrors form the primary x-ray optics of the experiment and the high resolution images which they produce are recorded photographically. Exposures of varying duration between 1/64 and 256 seconds can be selected automatically or manually in pre-selected sequences. The instrument is sensitive to wavelengths between 3 and 60Å. Spectral information will be obtained by the use of band pass filters, but in the case of flares, detailed spectra can be recorded by using x-ray transmission gratings. In order to orient the x-ray photographs, visible light images of the sun will be imaged on the film with each x-ray exposure, using an achromatic doublet.

To aid the astronaut in aligning the telescope he is provided with a real time TV display of the x-ray emission from the sun. This is obtained from the image produced by a third smaller mirror "finder" which is mounted on the same optical axis as the major mirrors.

A solar flare detector consisting of a beryllium shielded sodium iodide crystal coupled to a photomultiplier will provide a visible and audible alarm to alert the astronaut to the onset of a flare and will simultaneously provide information which will determine the most suitable exposure sequence for the camera. In addition, this instrument will measure the spectrum of the x-rays beyond the short wavelength cut-off of the telescope. These systems are all operated from the control and display console which is mounted in the multiple docking adapter.

The major scientific objectives of the X-ray Spectrographic Telescope involve the study of the spatial and spectral distribution of the x-ray emission of the active and quiet corona. Information will be obtained relevant to such major problem areas as flares, the structure and evolution of active regions, the configuration and time behavior of large scale solar magnetic fields, and coronal heating.

Flare x-ray spectra will be measured as a function of time and position within the flaring region in order to investigate such problems as the location of the point at which flares are triggered, the role of non-thermal processes in soft x-ray emission from flares, and the relative roles of radiation and conduction in flare energy dissipation.

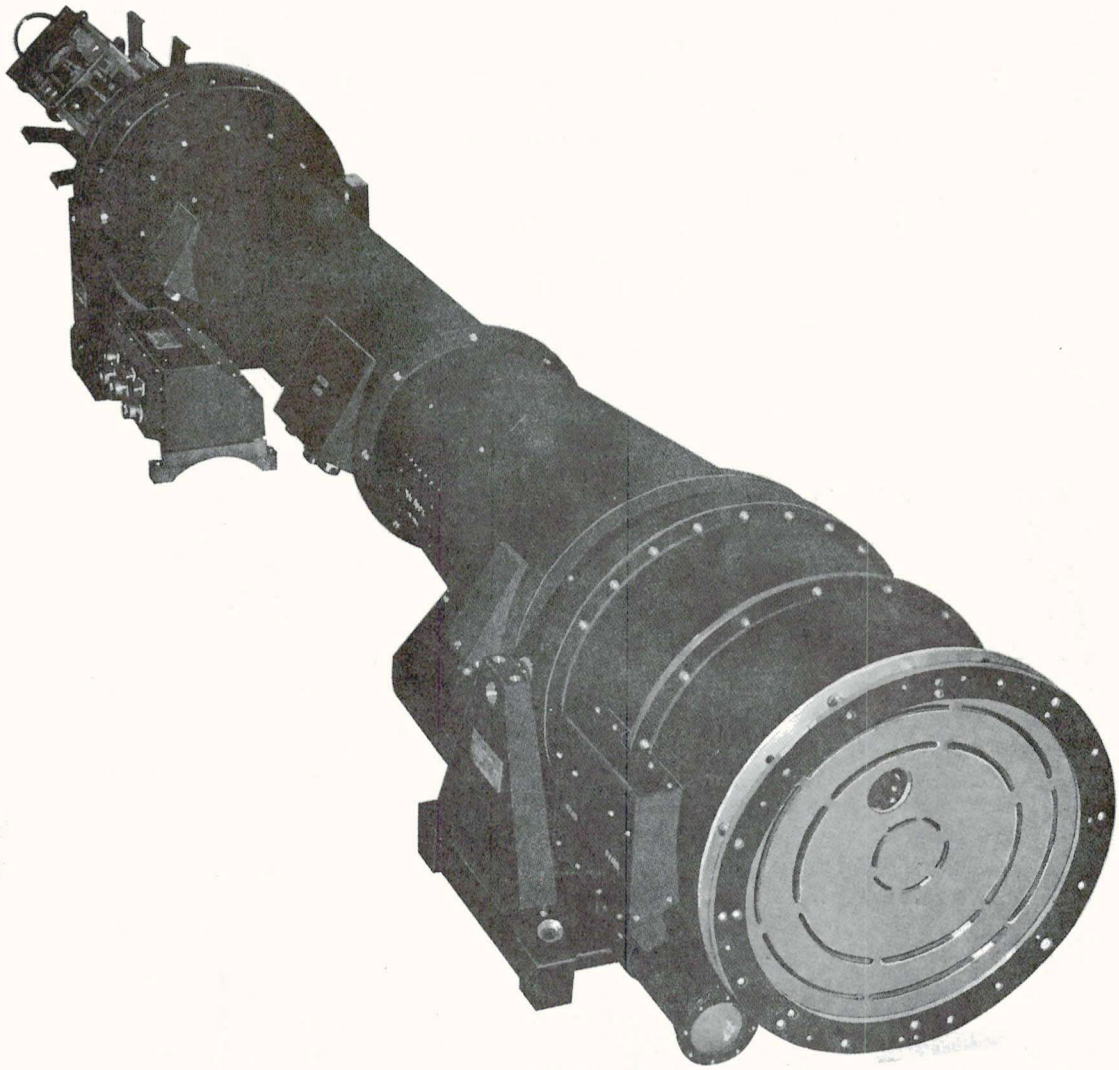

FIGURE 2.9.2-1 S054 TELESCOPE ASSEMBLY

X-ray photographs of active regions or other x-ray emitting features taken over a period of several days will reveal the three-dimensional configuration of the x-ray emitting structures due to the change in projection angle caused by solar rotation ("stereoscopic view"). The coronal structure can then be compared with magnetic field measurements in order to determine the coronal magnetic configuration of the active region. The evolution of active region structures will be followed as a function of time. These data will be applied to studies of energy balance in active regions, energy storage, and the role of flares and more long enduring events in the evolution of active regions. Similarly the coronal structures associated with filaments and other chromospheric features will be studied.

X-ray photographs of the structures interconnecting active regions and of the large-scale structures of the general corona provide a means of tracing the configuration of the large-scale solar magnetic fields through the lower corona with sufficient resolution to distinguish between alternative models of the field. These photographs will be used to investigate such questions as the relationship between the sources of the large scale field and the interplanetary sector structure, or the evolution of the large-scale magnetic field.

Long exposures display the features of the quiescent corona on the disc as well as at the limb. These exposures and x-ray spectra of the solar limb will be used to study the problem of coronal heating. Such problems as the location of the energy transfer across the chromosphere-corona interface, the influence of the magnetic field on coronal heating, and the geometrical structure of the chromosphere-corona interface, will be investigated.

2.9.2.2 Subsystem Interfaces

2.9.2.2.1 Controls and Displays - Controls and displays required for the astronaut to operate the S054 experiment are located on the ATM Controls and Display Panel (Figure 2.9.2-2). Specific requirements and descriptions of the above may be found in 50M02429, ATM Experiment Interface Defining Document (EIDD) S054, X-Ray Spectrographic Telescope, and in Section 3 of this document. Control from the ground is also required during the unmanned and unattended portions of the mission. These commands are listed in 40M35604, ATM Digital Address System Function Code List and in the EIDD.

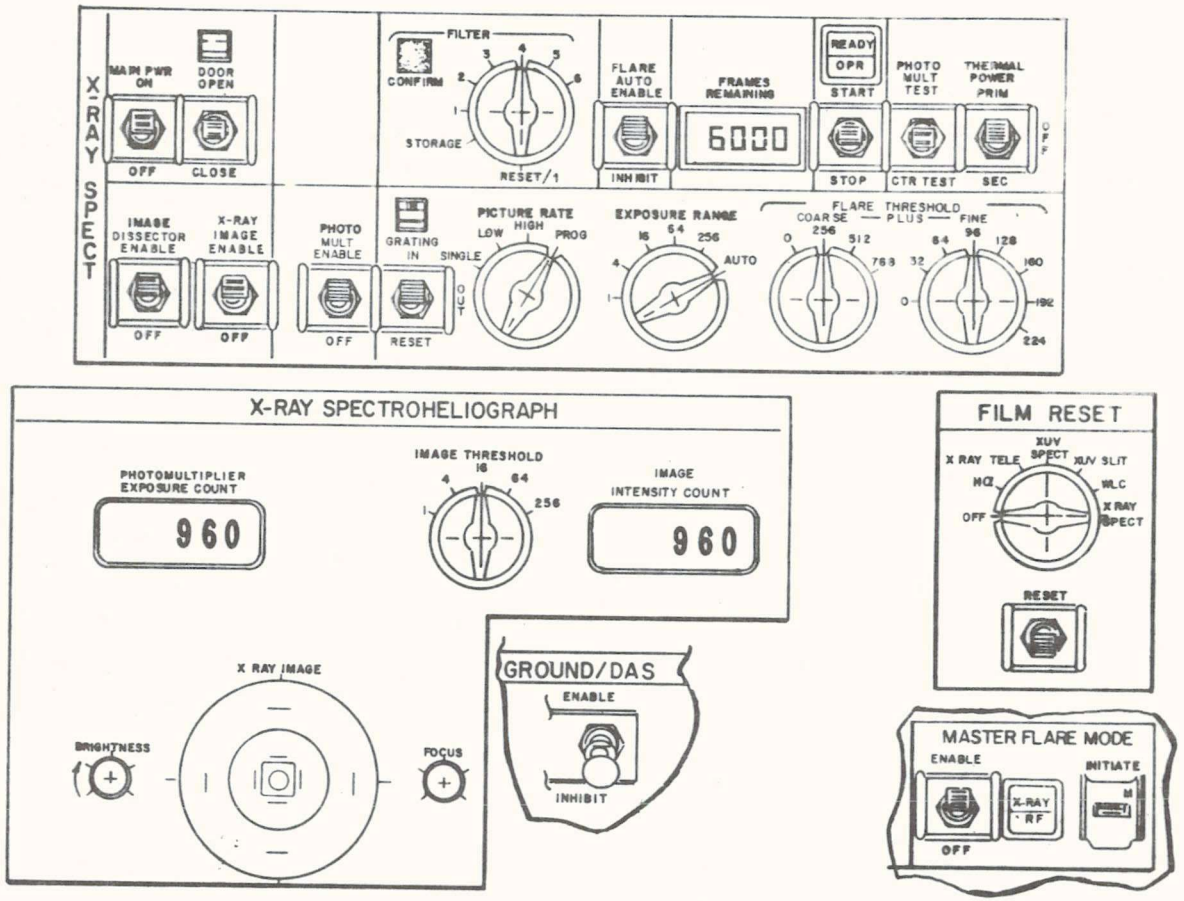

Figure 2.9.2-2 ATM C&D Console S054

2.9.2.2.2 Power - +28 VDC, 115 VAC and dimmer voltage lines are required to power the S054 experiment. An interface block diagram (figure 2.9.2-3) shows the distribution of these voltages. The power requirements for the above are listed in ASE-1600, Design and Performance Specification (DPS) ATM Experiment S054.

2.9.2.2.3 Timing and Telemetry - Four signals are required from the PCM/DDAS for synchronization of S054 with telemetry. They are 72 kpps, 4 pps, 1 pps and one pulse per 15 seconds. An additional signal, Spacecraft mission elapsed time, is to be supplied to the camera. Downlink telemetry data requirements including scientific data, status data, and analog housekeeping may be found in Section 9 of the EIDD (50M02429) and a measurements list in 50M12711, ATM Instrumentation Program and Components List (ATM No. 1).

2.9.2.3 Functional Description

2.9.2.3.1 General - The primary function of the S054 X-ray telescope (Figure 2.9.2-4) is to photograph X-ray images of the solar disc during flare and non-flare conditions. In order to accomplish its objectives the S054 system contains the necessary elements to detect, photograph, and transmit data of these solar phenomena, and also the housekeeping requirements to maintain an operable system.

These elements can be funtionally broken down into the following basic areas.

1. PHOTOMULTIPLIER (PM) SYSTEM

   a.) Flare Detection System: monitors the overall solar activity and transmits a signal to the ATM C&D Console when a flare occurs.

   b.) Pulse Height Analyzer System: monitors and processes data on solar activity in the energy range of 10 to 80 KEV for subsequent scientific analysis.

2. POINTING SYSTEM: consisting of a small X-ray mirror, image dissector and associated electronics; locates flare activity and provides a display (X-Ray Image) for the astronaut so that he may align the telescope with the flare.

3. IMAGING SYSTEM: consisting of the large X-ray mirrors, gratings, filters, camera, and associated electronics. Obtains both spatial and spectral photographic data on X-ray activity in the 3 to 60 angstrom range.

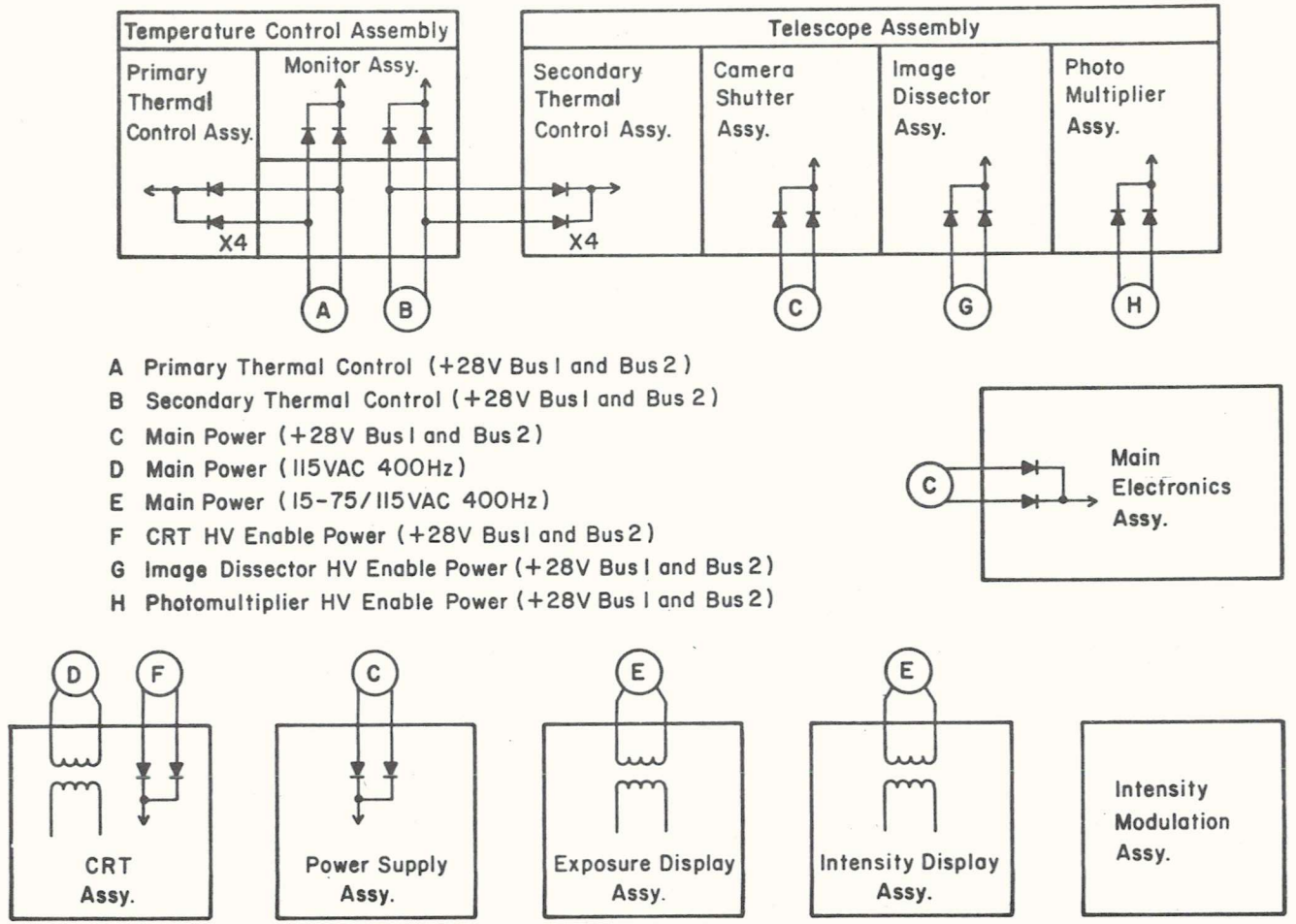

Figure 2.9.2-3 Power Interface Block Diagram

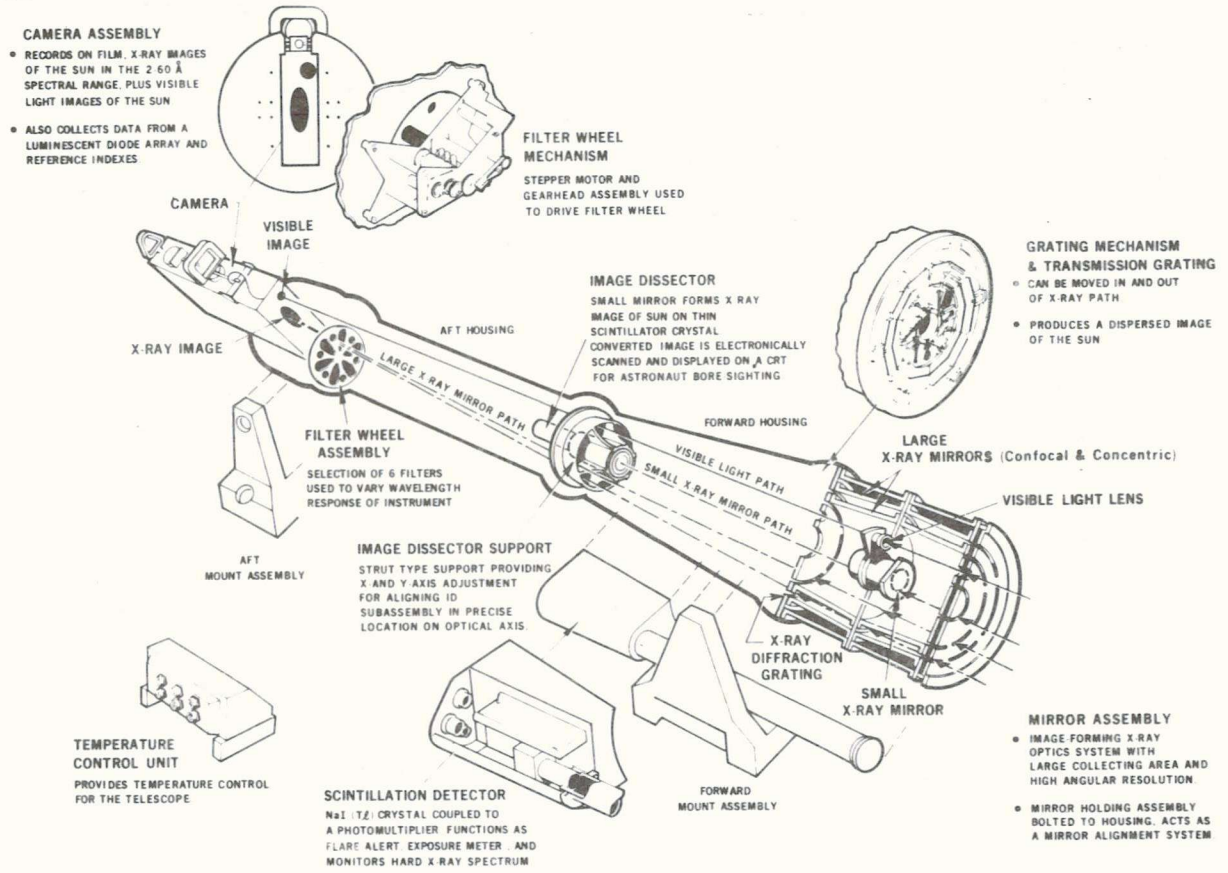

Figure 2.9.2-4 Functional Diagram of SO54 X-Ray Spectrographic Telescope

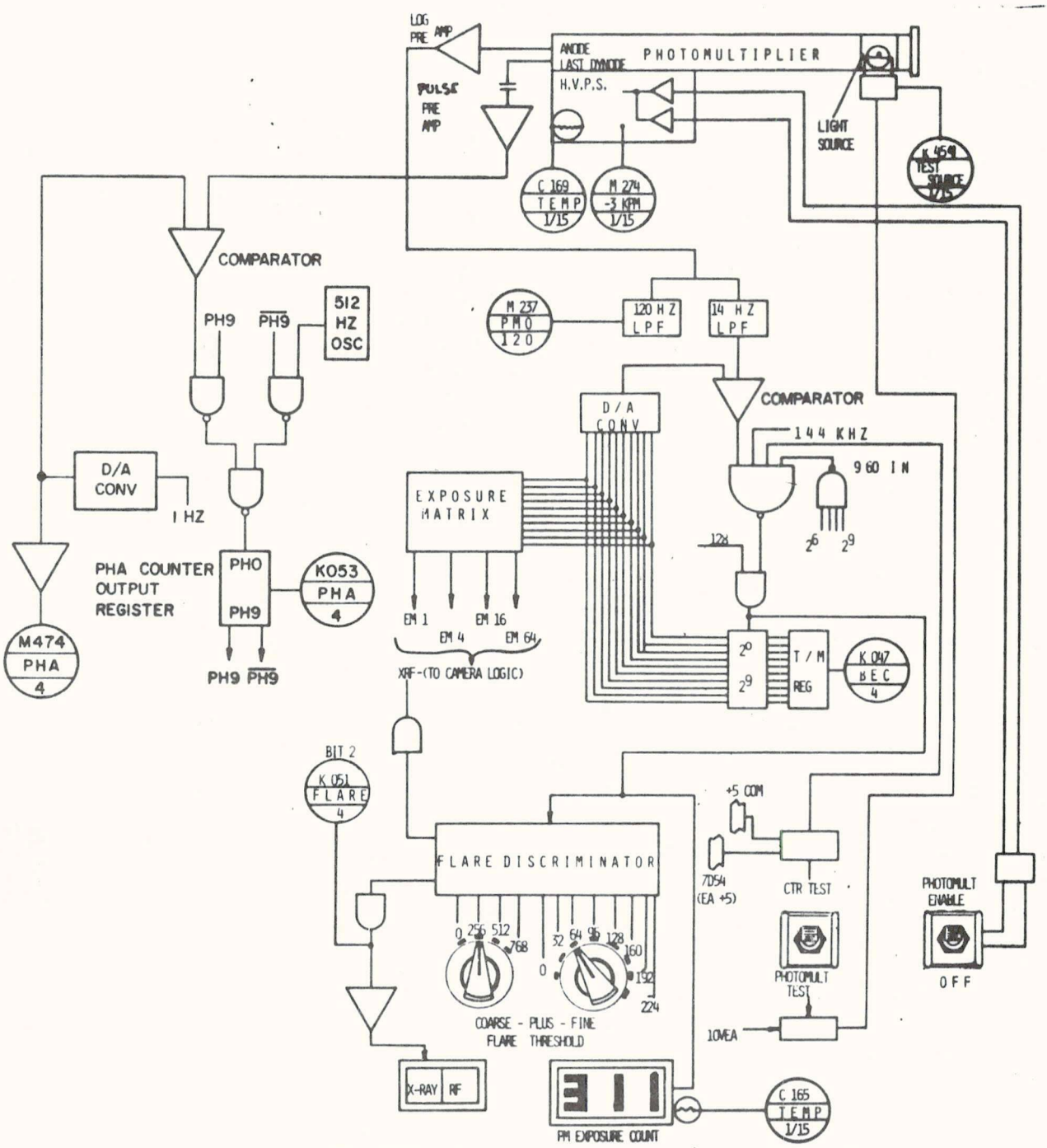

Figure 2.9.2-5 PHOTOMULTIPLIER SUBSYSTEM

4. TEMPERATURE CONTROL SYSTEM: senses and regulates temperatures within the telescope assembly (TA) and monitors telescope, camera, and temperature control assembly temperatures for telemetry.

2.9.2.3.2 Photomultiplier (PM) System - The PM System, a block diagram of which appears in Figure 2.9.2-5 detects x-rays in the energy range of 1 to 80 Kev. The system starts with the Photomultiplier Assembly from which two types of signals (one an ac and the second a dc signal) emerge. The ac signal, actually a series of pulses, is processed through an eight-level pulse height analyzer, located in the Main Electronics Assembly (EA) and sent via telemetry back to Earth for later scientific analysis. The dc signal produced mainly by low energy x-rays is routed to the flare detection system where it is filtered and converted to digital form in the EA. This digital information is then used for automatic control of camera exposure durations in addition to being sent to a Discriminator in the Intensity Modulation Assembly (IMA) and to the Photomultiplier Exposure Counter, located on the ATM Control and Display Console.

2.9.2.3.2.1 Flare Detection System - The Flare Detection System consists of two active low-pass filters, an analog-to-digital (A/D) converter and associated Exposure Counter, Photomultiplier Exposure Counter, and Discriminator.

Active Low Pass Filters - The output of the Logarithmic Preamplifier is routed to the low pass filters located in the Main Electronics Assembly. These filters have cutoff frequencies of 14 Hz and 120Hz. Each active filter utilitzes an operational amplifier and input impedance and feedback networks to achieve frequency response.

The output of the 120 Hz filter is fed to analog telemetry to provide data on the average level of X-ray activity and fluctuations of this average level up to a frequency of about 200 Hz. The 14 Hz Filter inverts the signal to present a slowly varying negative dc signal at the input to an A/D converter.

A/D Converter and Exposure Counter - The analog to digital converter located in the EA, counts a burst of pulses and using a digital to analog converter in the feedback loop compares this analog output to the 14 Hz filter output and terminates the pulse burst when the correct analog voltage is reached. More specifically the conversion process proceeds as follows:

S054

1. At the beginning of each second a 144KHz pulse train is simultaneously gated into the 10-bit digital Exposure Counter, Photomultiplier Exposure Counter, and Flare Discriminator.

2. The digital outputs of the Exposure Counter are converted to an analog signal by a bit-weighted summing amplifier. Counting of the 144 KHz signal, therefore results in an incrementally increasing output voltage (i.e., staircase waveform) from the amplifier. This staircase waveform is sent to a comparator.

3. The negative going analog signal from the 14-Hz filter is also sent to this comparator.

4. The comparator compares the sum of the negative signal from the low pass filter and the positive staircase signal from the inverter with ground (i.e., zero volts).

5. When the comparator threshold is equalled or exceeded, the 144K Hz pulse train is inhibited to prevent additional pulses from being counted by the Exposure Counter, Photomultiplier Exposure Counter, or Discriminator.

6. The contents of the Exposure Counter now represents the digital equivalent of the analog value at the output of the 14 Hz filter.

7. To prevent overflow of the counters, the 144KHz pulse train is inhibited at the count of 960 by feedback of the four most significant bits. The time required for a pulse rate of 144 KHz to reach this limit is about 7 milliseconds.

8. The contents of the exposure counter are transferred to the telemetry storage buffer once each second.

9. The outputs of the Exposure Counter are also connected to the Decoding Matrix (see Camera System) to provide automatic exposure range control.

Photomultiplier Exposure Counter - This Assembly, which is located on the ATM Control and Display Console will be discussed in detail in the following section. Its function in the photomultiplier subsystem is to provide digital readout as a measure of flare intensity. It uses the output of the A/D converter and displays digitally the same information that is sent to telemetry in binary form, via the Exposure Counter.

Discriminator - The Discriminator is part of the Intensity Modulation Assembly located in the Control and Display Console. It provides outputs to the X-ray Alert Indicator and to the Camera Sequence Control for automatic operation of the camera.

2.9.2.3.2.2 Pulse Height Analyzer - The Pulse Height Analyzer consists of a Buffer Amplifier, an Eight-level Staircase Generator, a Comparator and One Shot, and a Binary Counter and Buffer.

The output of the Pulse Preamplifier, in the Photomultiplier, is terminated in 50 ohm on one side of a T network at the Buffer Amplifier. Signal injection from ground support equipment is terminated in 75 ohms at the other side of this T network. For proper operation of the system both sides of this T network must be working from the appropriate characteristic impedance. The amplifier input is taken from the T intersection. It is non-inverting and has an overall gain of about 2 from the 50 ohm input and slightly less from the 75 ohm input. The amplifier output goes to the Comparator and One Shot for comparison to the staircase reference level.

The heart of any Pulse Height Analyzer is its pulse height discriminator. This system uses a serial threshold discriminator technique because of its simplicity and minimum hardware requirements. The heart of this technique is the staircase generator. This system uses a 3-bit counter and a D/A summing amplifier to generate the required 8 levels between 0 and -5 volts. The counter is incremented by the 1 Hz TM sync. signal. The staircase is also inverted and sent via an analog telemeter channel to ground.

S054

Comparator and One Shot - One input of the Comparator/One Shot circuit is the Buffer Amplifier output. The other input is the reference level from the staircase generator. All pulses from the Buffer Amplifier exceeding the reference level are passed by the comparator to the on-shot which generates a logic "1" pulse having the following approximate characteristics: Rise time, 200 n sec, Fall time 100 n sec, pulse width 800 n sec. The

one-shot is so designed that its recovery time prevents response to any input received within one microsecond of the last pulse to which it responded.

The Comparator/One Shot pulses are gated to a 10-bit binary counter. The first nine stages of this counter count the number of pulses per second above the reference level. If the count exceeds 511, the tenth stage is toggled to a logic "1" which now prohibits the counter from counting any more photomultiplier pulses and enables the counter to count pulses from a 512 Hz pulse train generated by the timing circuit. The "overflow" condition continues until the end of the second for that level, thus providing compression of the counting scale and greater dynamic range. The formula for finding the count in an "overflow" condition is:

$$PHA = \frac{512^2}{512 - N} = \frac{262144}{512 - N}$$

Where N is the count given by the nine least significant bits. At the end of one second, the Buffer is cleared of the previous count and the new count is stored, the staircase generator is incremented, and the PHA counter is reset to start counting for a new PHA level.

2.9.2.3.3 Pointing System - The Pointing System shown in Figure 2.9.2-6 provides positional information on solar flare activity. Flare activity is noted by the presence of the target displayed on the X-Ray Image monitor, located on the ATM C&D console. The presence of a target allows the astronaut to boresight the optical axis of Experiment S054 to the region of activity on the solar disc.

In the S054 Experiment the 3-inch X-ray mirror forms an X-ray image of the sun on a thin scintillator placed at its focal plane. The scintillator, an X-ray-to-visible-light converter, is placed on the front face of the Image Dissector (See Figure 2.9.2-7). Image resolution is preserved by using a fiber optic faceplate to couple the visible photons from the scintillator crystal to the photocathode of an image dissector tube. For observation of the solar flares, the image diameter of an X-ray source will probably not exceed 0.01 inch, or one resolution element of the electronic detection system. Since the Image Dissector (ID) is designed to provide a resolution of one arc minute, a 48 x 48 raster, which divides the image into 2304 individual resolution elements, is sufficient to cover a region of one and one-half solar diameters.

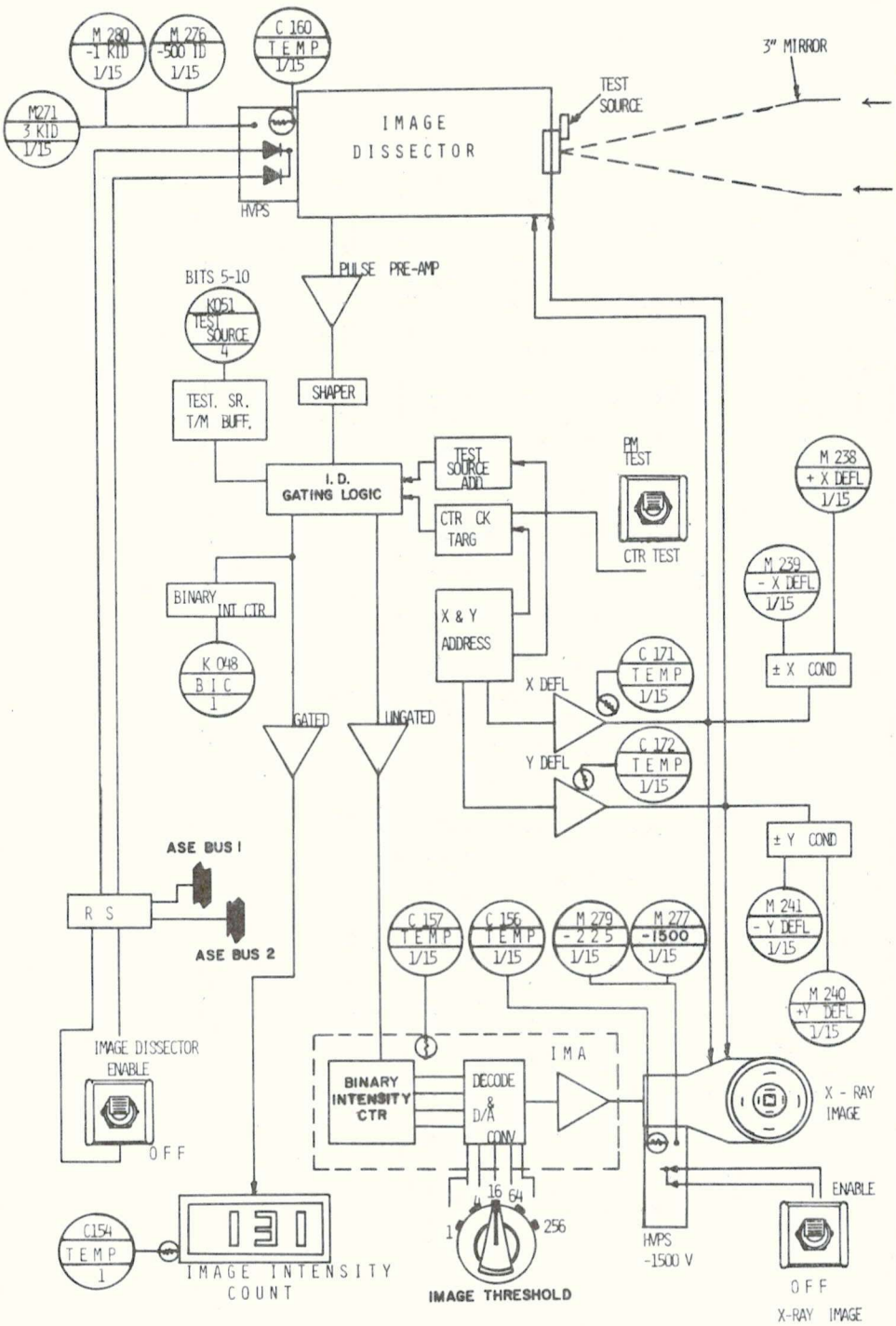

Figure 2.9.2-6 POINTING SYSTEM

S054

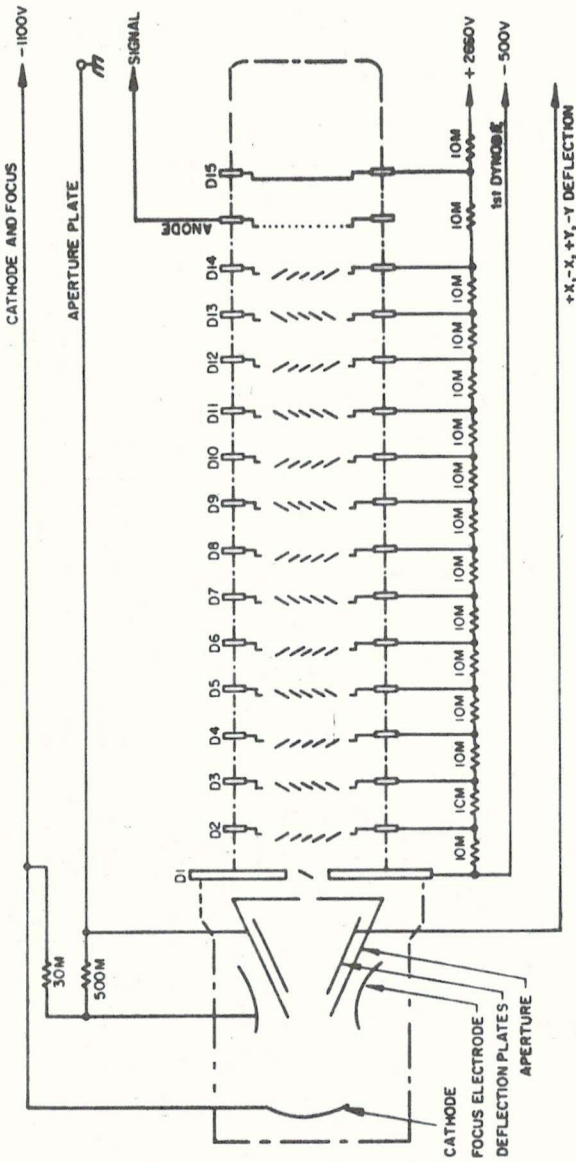

Figure 2.9.2-7 Electrostatic Image Dissector, Schematic Diagram

The photocathode of the Image Dissector, converts the visible photon image into an electron image. The electron image is sequentially scanned by applying a digitally stepped voltage to the deflection plates. The function of the deflection plates is to provide for a point-by-point sampling of the electron image. A one-second scan time was chosen with a dwell time of about 430 microseconds and a measuring time of 380 microseconds per resolution element. This is of sufficient duration to detect the lowest X-ray intensity of interest for the Experiment. Electrons transmitted through the aperture strike the first dynode of the electron multiplier chain. Each electron produces a cascade of from 10^6 to 10^8 electrons at the anode. A single electron cascade can be detected as a count.

The output of the image dissector tube is a sequence of variable height pulses which are proportional to the intensity of the scintillation. This output is then amplified, shaped, and gated into the Intensity Counter. The output of this counter is a pulse train which is converted to an analog signal to intensity-modulate the trace on the X-ray Image Monitor. Since the same deflection signal is applied to both the ID tube and the X-Ray Image Monitor, the intensity-modulated trace on the monitor is related to the solar activity present in the scanning window of the ID tube. The gated output of the ID tube is also monitored by the Image Intensity Counter located on the ATM C&D console, and displayed as a three-digit readout.

Image Dissector Preamplifier - The Image Dissector Preamplifier is located in the Image Dissector Assembly. This circuit performs the dual role of pulse amplification and impedance matching. It has a nominal output impedance of 50 ohms, and when driving a matched load, has a variable voltage gain of 20 - 150, and a bandwidth of approximately 10 MHz. The input impedance is approximately 1.7 kilohms and its power dissipation is less than 85 milliwatts. Signal pulses received from the image dissector will be typically greater than one millivolt with a full width at half maximum amplitude (FWHM) of at least 40 ns. The equivalent input noise peak amplitude for this circuit has been measured to be 100 microvolts. A signal-to-noice ratio of 10 is therefore achieved.

S054

Preamplifier Shaper - The preamplifier Shaper is located in the Main Electronics Assembly (EA). It provides a 50-ohm termination for the ID preamplifier, discriminates against low level noise, and amplifies and shapes ID pulses to be compatible with the subsequent logic. The low level noise discrimination is accomplished by a variable threshold setting. Since the equivalent

input noise peak amplitude will be 16 mv, and the typical signal pulse input is at least 160 mv, the variable threshold is set for pulses of about 70 millivolts amplitude. Output pulses are +3 to +5 volts on a baseline of -0.5 to +0.5 volts, and are 3 sec in duration. Since the basic circuit is nonsaturating, the recovery time is essentially zero and one output pulse can immediately follow the previous one. The maximum counting frequency is 3 MHz. Higher pulse rates will cause the shaper to remain in the high output state (+3 to +5 volts) until the pulse rate is reduced to 3 MHz. This is consistent with the dynamic range of the system, since a pulse rate of 2.7 MHz will completely fill the counters in the dwell time (382 microsecond) of one resolution element. Even if a pulse rate (of a flare) greater than 3 MHz were encountered, the periphery of such a flare would be within the pulse rate capability of the system and would be observed on the X-Ray Image Monitor.

T/M Synchronization and Frequency Divider Control - The T/M sync. signals, 72KHz, 4 Hz, 1 Hz , and 1 Hz per 15 seconds are buffered and sent to the Subcom or Frequency Divider Control, located in the EA. It generates the overall system timing and maintains synchronization. The fundamental output is a 2304-pps signal which steps the X and y address counters to produce the 48 x 48 element raster in one second. The 72 KHz is doubled and then divided by 2304. Since division by 2304 is 62.5, a direct division is not possible. The solution employed is to divide the 144 KHz by 125 and factor out two pulses of the required duration. Figure 2.9.2-8 shows the resolution element timing. In this figure, CEN is the Count Enable pulse. When it is high (+3 to +5 volts), pulses from the Image Dissector are counted and processed. When it is low, pulse counting is inhibited and X address counter is incremented. In addition the Intensity Counter and D/A converter, which provides the Z-modulation of the X-Ray Image display are reset. The frequency divider control and the address counters are reset by the 1 Hz signal to provide positive synchronism between the one-second raster scan and the telemetry.

Gating Logic - The Gating Logic is located in the EA and is controlled by the logic outputs of the X and Y address counters and the Counter Enable (CEN) pulse. It performs the following functions:

1. Enables counting of the data pulses from the Image Dissector Preamplifier Shaper during the 381 microsecond dwell time of each of the 2304 resolution elements and disables counting during the address transients.

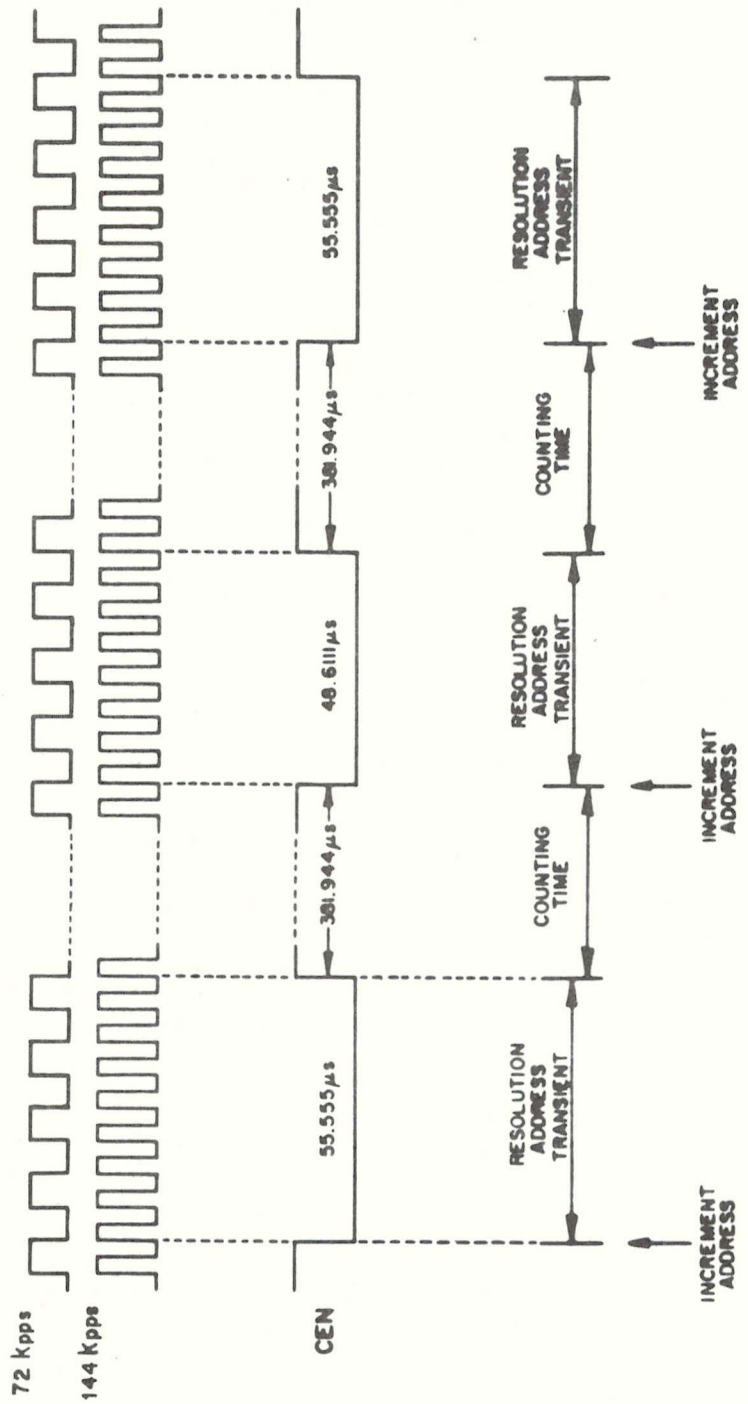

Figure 2.9.2-8 Resolution Element Timing

S054

2. Inhibits the first pulse received during each resolution element. This operation significantly increases the signal-to-noise ratio of the Intensity Count and the X-Ray Image Display by eliminating stray counts due to background sources. No significant error is introduced by the possible elimination of 2304 pulses each second because the probability is high that flare activity will exceed one count per resolution element.

3. Routes the data to its proper destination during each of the resolution element dwell times. Data pulses received during the nine resolution elements representing the I D Test Source are routed to the X-Ray Image Assembly via the D/A Converter in the Intensity Modulation Assembly and to the I D Test Source counter. The input to the Intensity Counter and the Image Intensity Counter is inhibited during this period to eliminate erroneous readings. Conversely, at all resolution elements other than the nine representing the I D Test Source, the input to the I D Test Source Counter is inhibited and the intensity data pulses are routed to the Intensity Counter, the Image Intensity Counter, and the D/A Converter in the Intensity Modulation Assembly.

4. Controls the data routing during the Counter Check Mode.

X and Y Address Counter and Deflection Amplifier- The X and Y Address Counters and deflection amplifiers are located in the EA. The outputs of each address counter are connected to a D/A converter to provide an analog equivalent of the digital address . The analog signal is amplified by the deflection amplifier to generate the staircase waveform used to simultaneously drive the X and Y deflection plates of the I D and X-Ray Image Monitor. (Figure 2.9.2-9).

X-Ray Image Monitor Assembly - This assembly, located on the ATM Controls and Display Console, is scanned simultaneously with the image dissector using the same deflection voltages. During the one second scan the output of the Image Dissector is routed through the intensity modulation assembly to the X-Ray Image monitor modulating the grid. This technique allows the same image to be obtained on both the image dissector and the X-Ray Image display enabling the astronaut to maneuver the spacecraft to center the image on the display.

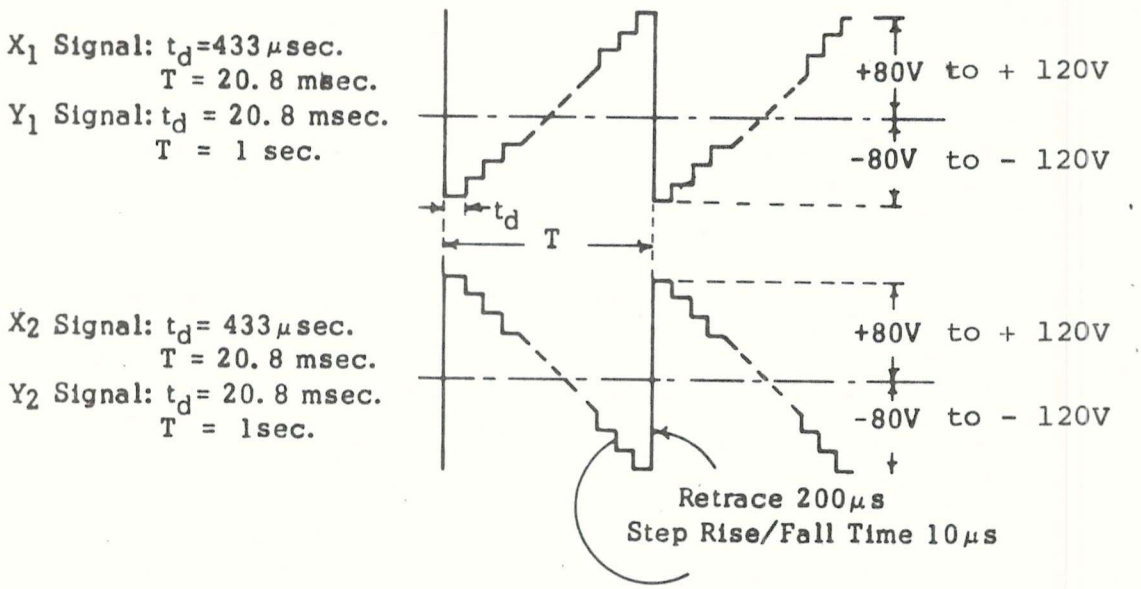

S054

Figure 2.9.2-9 CRT and Image Dissector Deflection Voltages

Image Intensity Counter - The Image Intensity Counter located in the ATM Control and Display Console, is a three-digit decimal display device monitoring the total number of pulses emitted each second from the Image Dissector. Considering the time lost during address transients and data transfer and reset, the actual counting time is 850 ms. The electronics associated with each digit is the same. The input is a pulse train of +3 to +5 volt amplitude on a -0.5 to +0.5 volt baseline. These pulses are counted in BCD counter. After the 1 HZ TM synchronization signal, a clear pulse is received from the EA clearing the storage buffer, thereby displaying 888. Simultaneously a store puls is received longer in duration than the clear pulse, transferring the count data to this storage buffer for decoding and display. Approximately 14 milliseconds later, the BCD counter is reset. The decoding circuit is a logic matrix.

Counter Test - The Counter Test Circuitry is located in the EA. When the Counter Test command is initiated, the Gating Logic inhibits the data pulses from the Photomultiplier Detector and the Image Dissector (except for the window viewing the I D Test Source) and enables an 18KHz pulse train derived from the Frequency Divider Control to permit 128 pulses to be routed to the Intensity Counter, the Image Intensity Counter, the Exposure Counter, the Photomultiplier Exposure Counter, and the X-RAY IMAGE monitor. The number 128 will be displayed to the astronaut on the display counters and will appear in the corresponding telemetry data for ground display. The X-RAY IMAGE monitor display consists of eight pulses modulating each element of the center 4 x 4 resolution elements (X_{23} - X_{26} of the Y_{23} - Y_{26} scans). Astronaut and ground display of the I D Test Source are uninterrupted during the Counter Test Mode.

Image Dissector Test Source - A test source is provided for end-to-end checks of the pointing system. A 6-bit counter, located in the EA, is used to accumulate the intensity data received from the test source window which covers about nine resolution elements (X_{24}, X_{25}, and X_{26} of the Y_1, Y_2, and Y_3 scans) on the Image Dissector.

2.9.2.3.4 Imaging System - The Imaging System consists of:

1) A Camera to gather photographic data

2) Camera Control Logic

3) A Grating to produce spectroheliograms

4) Filters to isolate various spectral bands

Camera - The camera located in the Telescope Assembly consists of a shutter assembly and a magazine assembly. The shutter assembly contains the visible and X-Ray shutters, the data annotation diodes, and the major portion of the camera electronics. The magazine contains the film transport mechanisms, pressure and film used indicators, and a handle for its installation and removal.

The camera is controlled by two signals from the camera control circuitry located in the Main Electronics Assembly. These signals are the Shutter Open Command (SOC) and the Film Advance Command (FAC). Referring to the Camera Timing Diagram. Figure 2.9.2-10, it is seen that the leading edge of SOC starts the visible light shutter as well as one of the X-Ray shutter blades to move. A signal from the camera (SHC) confirms that the SOC pulse has been received. The visible light exposure time is fixed but the X-ray exposure time is governed by the duration of the SOC. Thus, the second X-ray shutter blade starts its movement on the falling edge of SOC. The confirm signal (SHC) remains high until the second X-ray shutter blade comes to rest. Note that the sequence of blade movement is reversed on successive exposures.

Figure 2.9.2-10 also shows that the leading edge of the Film Advance Command (FAC) initiates a sequence of operations in the camera which are not all related to advancing film. At the completion of these camera operations a Film Advance Finished (FAF) signal is generated by the camera and used to terminate FAC. The termination of FAC allows the camera control function to initiate the next Shutter Open Command.

Camera Control - The Camera Control circuitry provides automatic and manual picture sequencing, high and low picture rates, and eight exposure durations. Figure 2.9.2-11 lists the various camera programs. The major elements are housed in the EA which send and receive commands to and from the camera, the timing signals, the housekeeping outputs to telemetry and the ATM C&D Console and the astronaut controls.

S054

The following is a description of a single exposure. The example assumes a manually selected exposure sequence in the high picture rate. (See camera logic diagram Figure 2.9.2-12).

1. When the Camera Mode subsystem receives a START (manual) command or a FLARE AUTO command followed by an X-RAY FLARE signal, it provides an EXPOSURE ENABLE (EXE) signal to the Camera Control of the Picture Rate and Control subsystem.

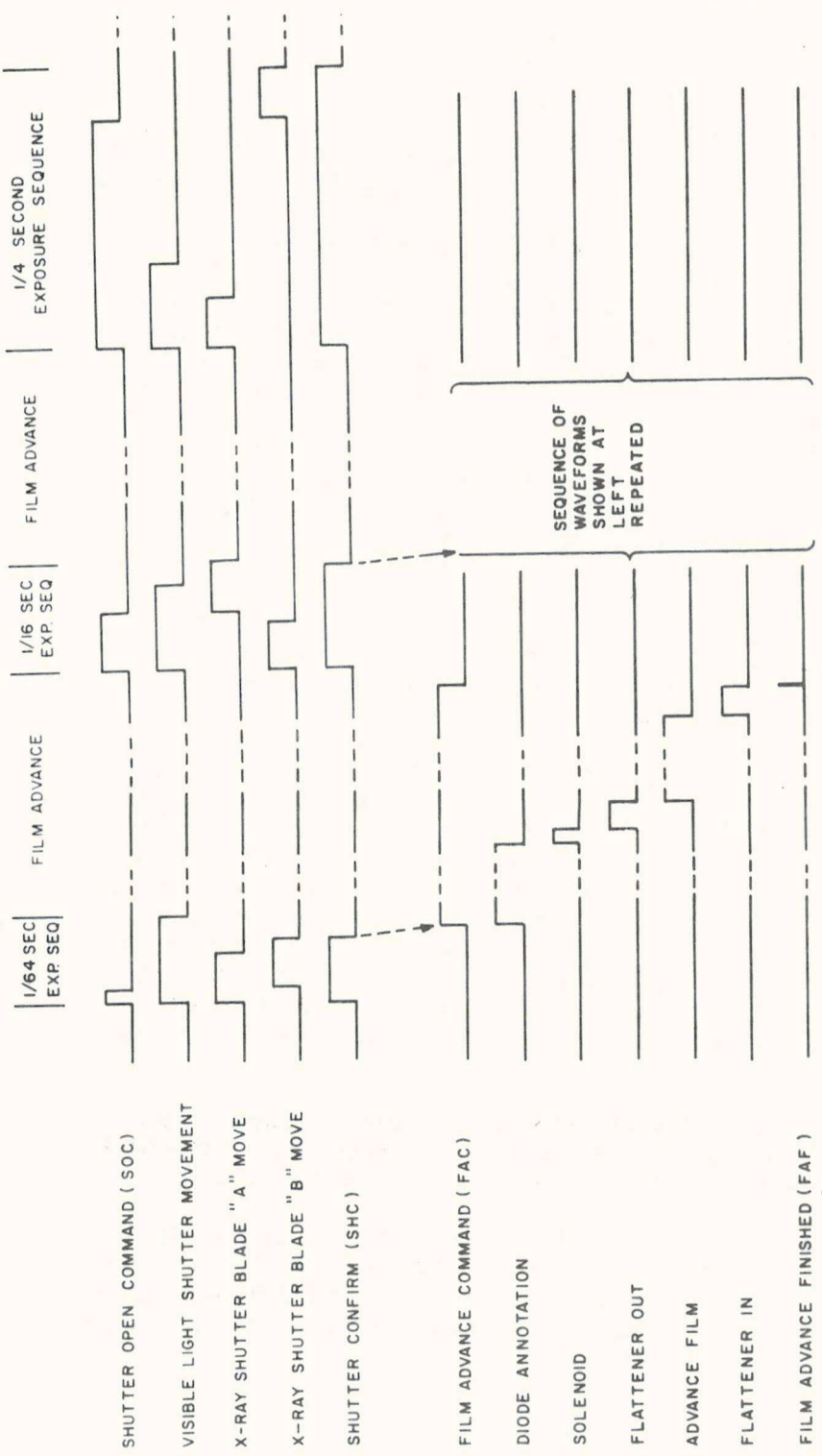

Figure 2.9.2-10 Camera Timing Diagram

EXPOSURE RANGE SW. POSITION	SEQUENCE — EXPOSURE SEQUENCE CYCLE EXECUTED BY CAMERA (1/64, 1/16, 1/4, 1, 4, 16, 64, 256)	TOTAL TIME FOR SEQ. HIGH RT ΔT=0.3 SEC	TOTAL TIME FOR SEQ. LOW RT ΔT=12 SEC
1		2.5 SEC	49.3 SEC
4		6.8 SEC	65.3 SEC
16		23.1 SEC	93.3 SEC
64		87.4 SEC	169.3 SEC
256		343.7 SEC	437.3 SEC
AUTO	NOTE 1		

■ - SHUTTER OPEN TIME
▨ - TIME DELAY BETWEEN EXPOSURES = ΔT

NOTE 1: IN AUTO, PROPER EXPOSURE SEQUENCE IS AUTOMATICALLY SELECTED BY FLARE DETECTION SYSTEM, PER RELATIONSHIP BELOW.

PHOTOMULTIPLIER EXPOSURE COUNT	EXPOSURE RANGE
0-239	256
240-479	64
480-599	16
600-839	4
840-960	1

PICTURE RATE SW. POSITION	RATE — DETERMINES RATE(HIGH OR LOW) AND DURATION(SINGLE OR REPETATIVE) OF EXPOSURE SEQ.	
	MANUAL MODE *	FLARE AUTO MODE**
SINGLE	1 SEQ. @ HIGH RATE (ΔT=0.3 SEC)	1 SEQ. @ HIGH RATE (ΔT=0.3 SEC)
LOW	SEQ. REPEATED @ LOW RATE (ΔT=12 SEC) FOR 13 MIN OR UNTIL STOP CMD ISSUED	SEQ. REPEATED @ LOW RATE(ΔT=12 SEC) AS LONG AS FLARE THRESHOLD EXCEEDED OR UNTIL FLARE AUTO-INHIBIT CMD ISSUED
HIGH	SAME AS LOW RATE ABOVE WITH ΔT=0.3 SEC	SAME AS LOW RATE ABOVE WITH ΔT = 0.3 SEC
PROG.	1ST 4 MIN @ HIGH RATE THEN LOW RATE FOR 9 MIN OR UNTIL STOP CMD ISSUED	1ST 4 MIN @ HIGH RATE THEN LOW RATE AS LONG AS FLARE THRESHOLD EXCEEDED OR UNTIL FLARE AUTO INHIBIT CMD ISSUED

* INITIATED BY "START" CMD
TERMINATED BY "STOP" CMD

** INITIATED BY FLARE SIGNAL WITH FLARE AUTO SW ENABLED
TERMINATED BY FLARE AUTO. INHIBIT CMD.

Figure 2.9.2-11 S054 CAMERA PROGRAMMING AND EXPOSURES

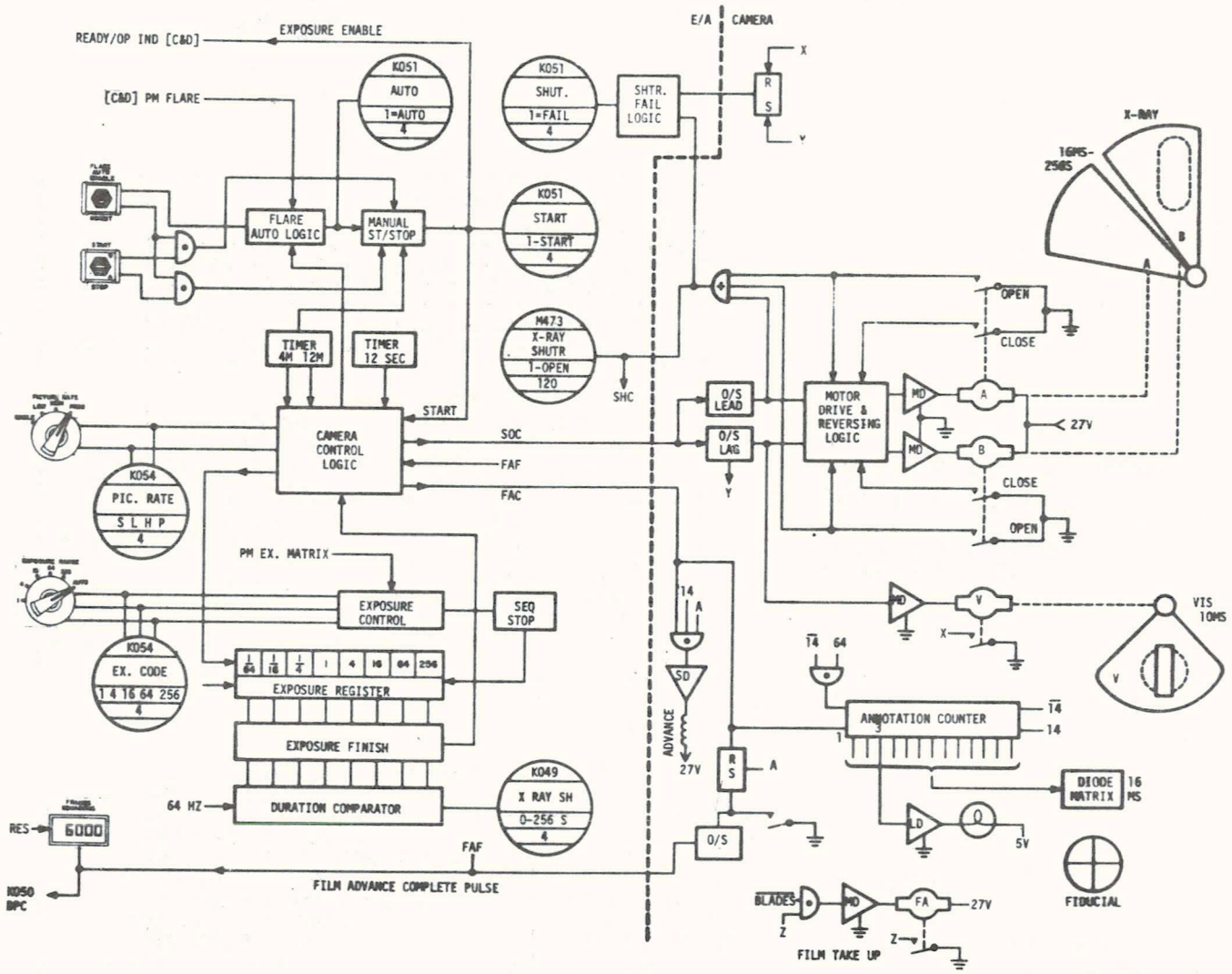

Figure 2.9.2-12
SO54 CAMERA CONTROL DIAGRAM

2. The Camera Control produces a Shutter Open Command which is sent to the camera to initiate movement of the first shutter blade.

3. The Shutter Confirm signal is returned from the camera to reset the Shutter Duration Comparator and to enable the clock (64 pps) that increments the Shutter Duration Counter.

4. The Exposure Subsystem determines the exposure duration of each frame by utilizing inputs from the Exposure Range Switch and Exposure Counter. These inputs control the outputs of the Exposure Register via the exposure Mode Control.

5. The outputs of the Exposure Register are compared to those of the Shutter Duration Comparator to obtain the proper exposure duration. When coincidence between these signals is detected, an exposure stop signal is generated and routed to the camera through the Camera Control to initiate movement of the second shutter blade. The Shutter Confirm signal remains high until the second blade has completed its movement.

6. A few milliseconds after the Shutter Confirm Signal is terminated, the Film Advance Command (FAC) is sent to the camera. At that time, annotation of the diode array begins. When annotation is completed, the film advances.

7. When the film is fully advanced to the next frame, the camera generates a film advance finished signal of about 100 microseconds duration. This signal terminates the Film Advance Command and enables the Camera Control logic to initiate the next exposure.

S054

Housekeeping - In addition to the camera control circuitry, logic is provided to present and up date information to telemetry and to the C&D panel.

Telemetry data consists of:

1. Auto, Start, Stop, X-Ray Flare, Visible Light Shutter, and Film Magazine Confirm status information.

2. X-Ray Shutter Duration information in Analog (120 SPS) and Digital (10 bit word binary coded, 1SPS and 4 SPS); Binary Picture Counter (10 bit Binary Word).

Control and Display Panel data consists of:

1. Frames Remaining Counter which is decremented by the Film Advance Finished (FAF) Signal.

2. Operate light which is energized by the Picture Sequence (DSI) Signal.

Grating System

The transmission grating located behind the rear apertures of the mirror, intercepts a portion of the incident energy and produces a dispersed image over the range of 3 to 60A°. Under control of the astronaut, the gratings may be moved either into (IN) or out of (OUT) the radiation path. A failure mode (RESET) position moves the grating out of the X-Ray path.

The grating system is physically distributed in three locations: the drive electronics are located in the Main Electronics Assembly; the Grating control switch (IN,OUT, RESET) is located on the astronaut's C&D Console; and the motor, clutch, gratings and mechanical assembly are located just behind the mirror within the telescope main body.

The grating material is a thin parylene grating replica (1400 l/mm) with gold evaporated on it at near grazing incidence.

Because the gratings are rather fragile they are mounted in rigid grating support frames which are in turn attached to radially sliding ball bearing assemblies. The grating mechanism is activated by a gear head stepping motor driving a small gear thru an electromagnetic clutch. When the clutch is engaged, the small gear drives a rotating ring, concentric to the telescope central axis, which moves the support frames by direct connection thru a series of links. In the event of a motor or gear train failure, the RESET command may be used to disengage the clutch and a negator spring will cause the rotating ring to return the gratings to the "OUT" position.

The electrical system, as shown in Figure 2.9.2-13 controls grating position via a closed loop technique. Commands generated by a switch closure on the C&D panel provide the stimuli for the system. Two SPDT microswitches (S2 and S3 in Figure 2.9.2-13 mechanically coupled to the grating mechanism provide the two grating location feedback signals which stop the stepping motor when the commanded position is reached.

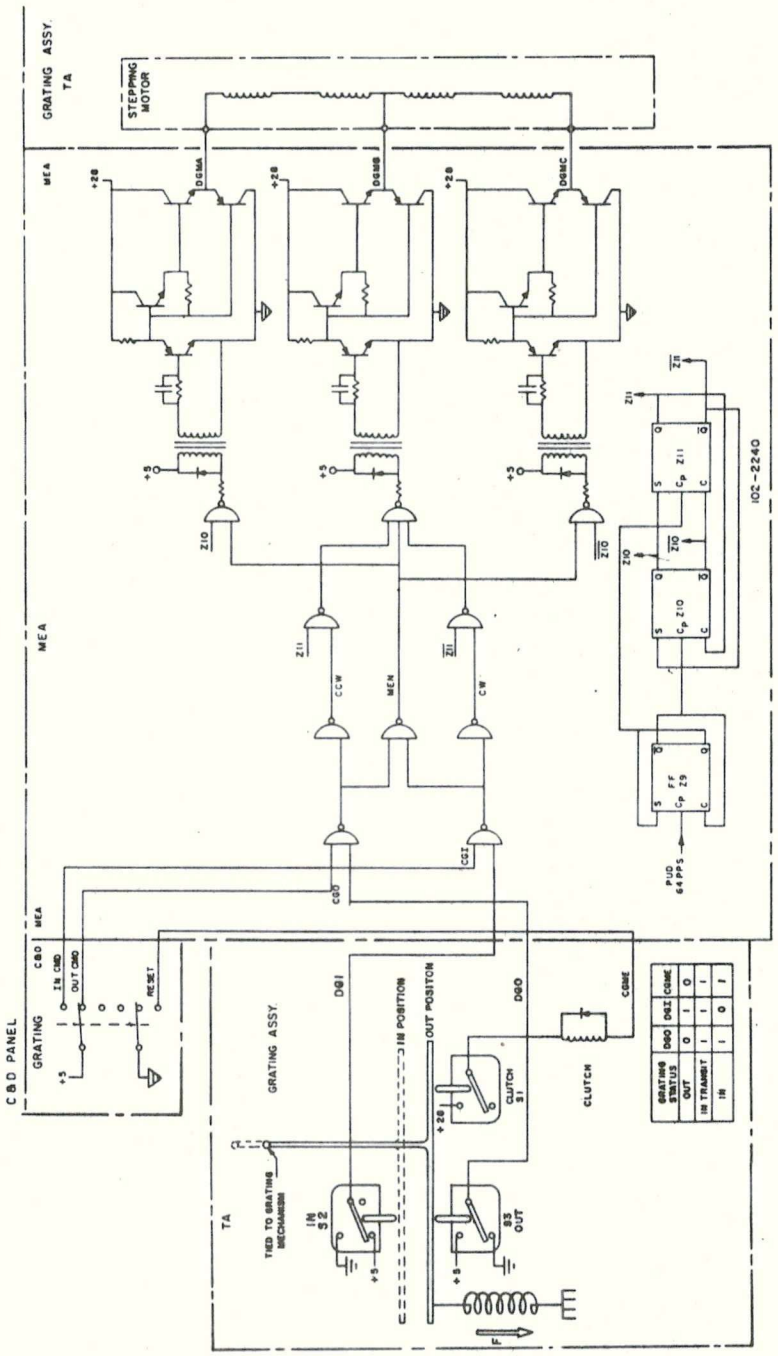

Figure 2.9.2-13 Grating System

S054

The stepping motor drive electronics is excited by a 64 pps clock which drives three flip-flops. Two of these flip-flops are connected in a circular shift configuration and outputs from these two flip-flops are gated to the primary sides of three transformers.

Each signal has a period of four 64 Hz clock pulses. Two of the three signals are 180° out of phase while the third is either advanced or retarded by two clock pulses depending on the motor phase rotation desired.

The three transformer coupled discrete power amplifiers operate in the following manner. The input waveforms are differentiated in the transformer coupling circuit. Hence a positive pulse is generated from the rising edge and is applied to the gate of the trigistor causing that device to turn ON and conduct. Similarly, a negative pulse is generated from the falling edge and is applied to the gate of the trigistor causing that device to turn OFF. As a result, the waveform at the transformer primary, is reconstructed (albeit inverted and amplified) at the trigistor anode. When the Trigistor is OFF, the amplifier output is high or a source of motor drive current; and when the Trigistor is ON, the amplifier output is low or a sink for motor drive current.

Should the mechanism fail for any reason in something other than the OUT position, microswitch S1 will provide 28 volts to one end of the clutch winding; and the astronaut may complete the circuit by selecting the RESET position on the Grating Switch. Current flowing in the clutch winding causes it to disengage, and the negator spring motor restores the grating to the OUT position which subsequently causes S1 to disconnect the +28V from the clutch winding.

Filter Wheel System - The six-position filter wheel assembly containing five filters and an open position is physically located just in front of the camera within the main telescope body. Any one of the six positions may be selected via the FILTER selector located on the ATM C&D Console. The drive electronics contained within the EA is the same as the Grating subsystem but with modified wiring as shown in Figure 2.9.2 - 14.

The filter wheel assembly includes the drive motor, electromagnetic clutch, a negator spring for fail-safe operation, a filter wheel drive shaft on which seven cams are mounted, a seven-microswitch subassembly containing cam followers, and two parallel plates tied together by standoffs which serve as the major structure and mounting surfaces for all the components.

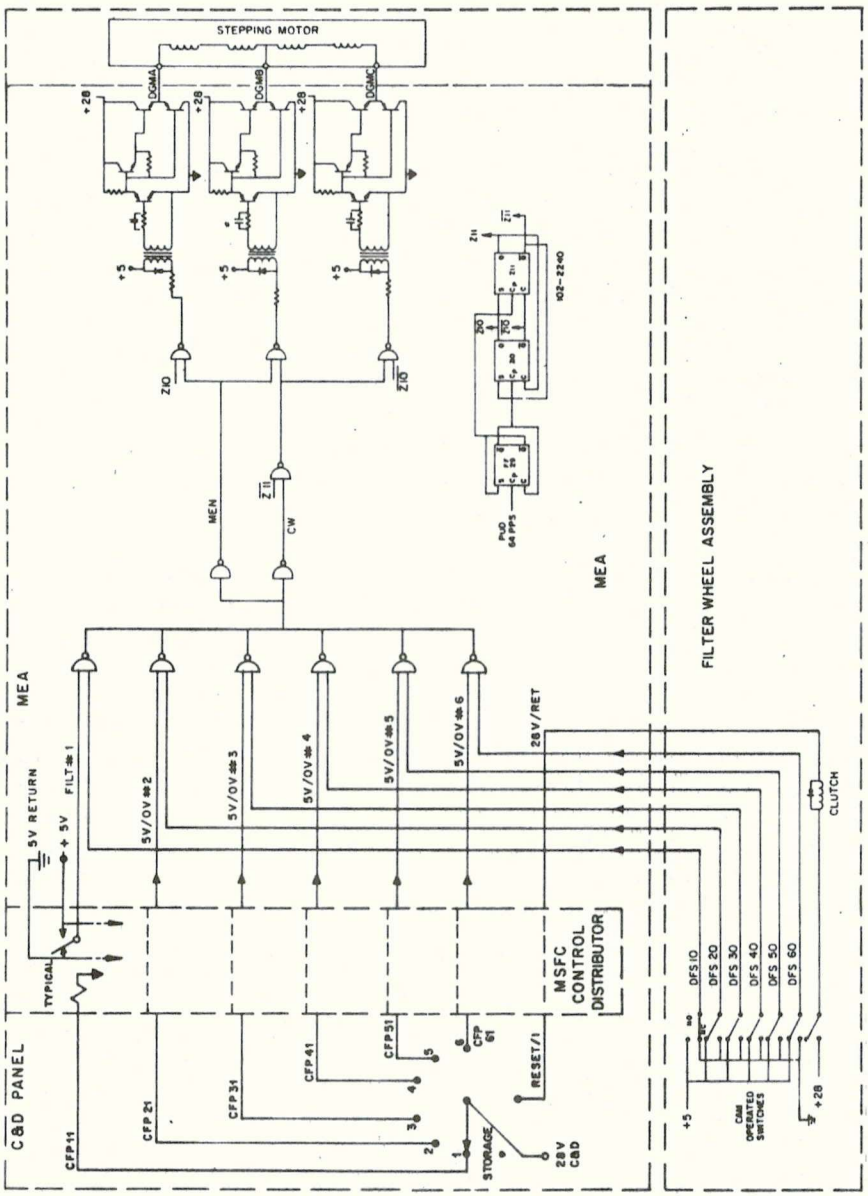

Figure 2.9.2-14 Filter Wheel System

S054

The clutch, which is normally engaged, couples the stepping motor to the filter wheel drive shaft. However, in the event of a failure the clutch may be disengaged by means of the "RESET" switch position and the negator spring will return the filter wheel to the number one position.

The electrical system is identical to the Grating Electronics subsystem with the following exceptions:

1. The filter wheel rotation is always clockwise.

2. There are six stable positions (rather than just two) established by six of the cams and their associated switches. The cams are arranged so that only one of the six microswitches will close at each filter wheel position providing the feedback signal to turn off the drive motor.

3. The seventh cam and switch permits +28V to be applied to the clutch winding at all filter wheel positions except position one.

4. A "storage" position is provided for use during unmanned and unattended operation. This will allow for the selection of one of 3 filters (1,2 or 3) via DCS command.

2.9.2.3.5 Temperature Control System (TC) - The temperature control system is shown in Figures 2.9.2-15 and 2.9.2-16. Primary and secondary control loops provide a fully redundant thermal control capability. Telemetry sensors monitor four telescope assembly and two camera temperatures, as well as the temperature of the TC. A telemetered status signal provides an indication of primary thermal control, secondary thermal control, or OFF.

The four primary temperature sensors, located within the telescope assembly, regulate proportional controllers which supply power to the primary elements of heater blankets located within the telescope assembly. The primary thermal control loop provides a telescope average temperature of $70^{\circ} \pm 2.^{\circ}F$ when the telescope is in a $50^{\circ}F$ environment of the ATM canister. The proportional controllers and the telemetry temperature signal conditioner are located in the TC. The secondary temperature control loop is controlled by four mercury thermostat temperature controllers located on the telescope assembly. These elements have a set point of $70^{\circ} \pm 1.0^{\circ}F$ (with a deadband region of $1.0^{\circ}F$), and supply power to the secondary elements of the heater blankets. The thermistors used for monitoring the telescope assembly temperature via telemetry are contained within the mercury thermostat temperature controller.

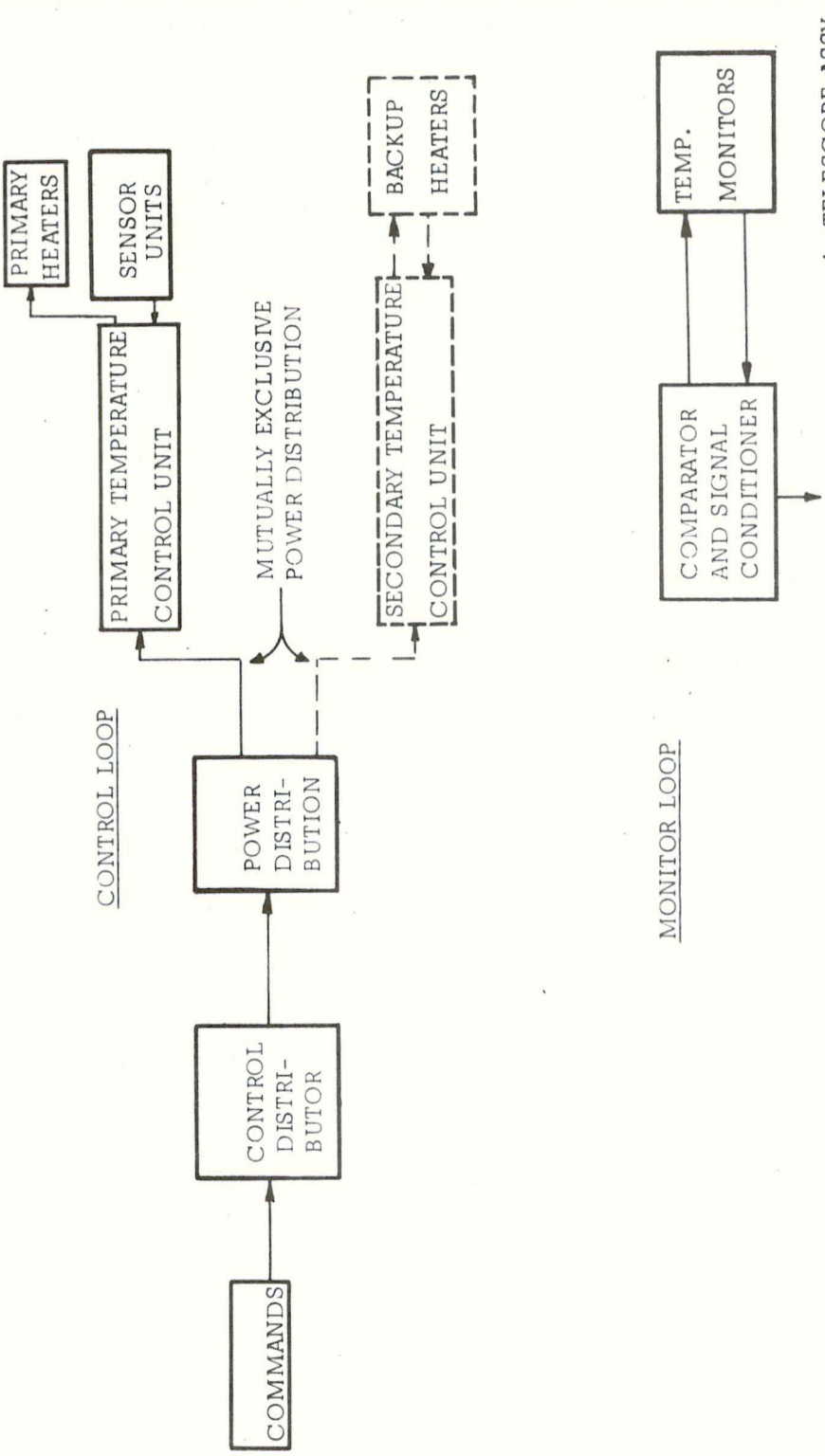

Figure 2.9.2-15 ATM Experiment S054 Temperature Control Subsystem

S054

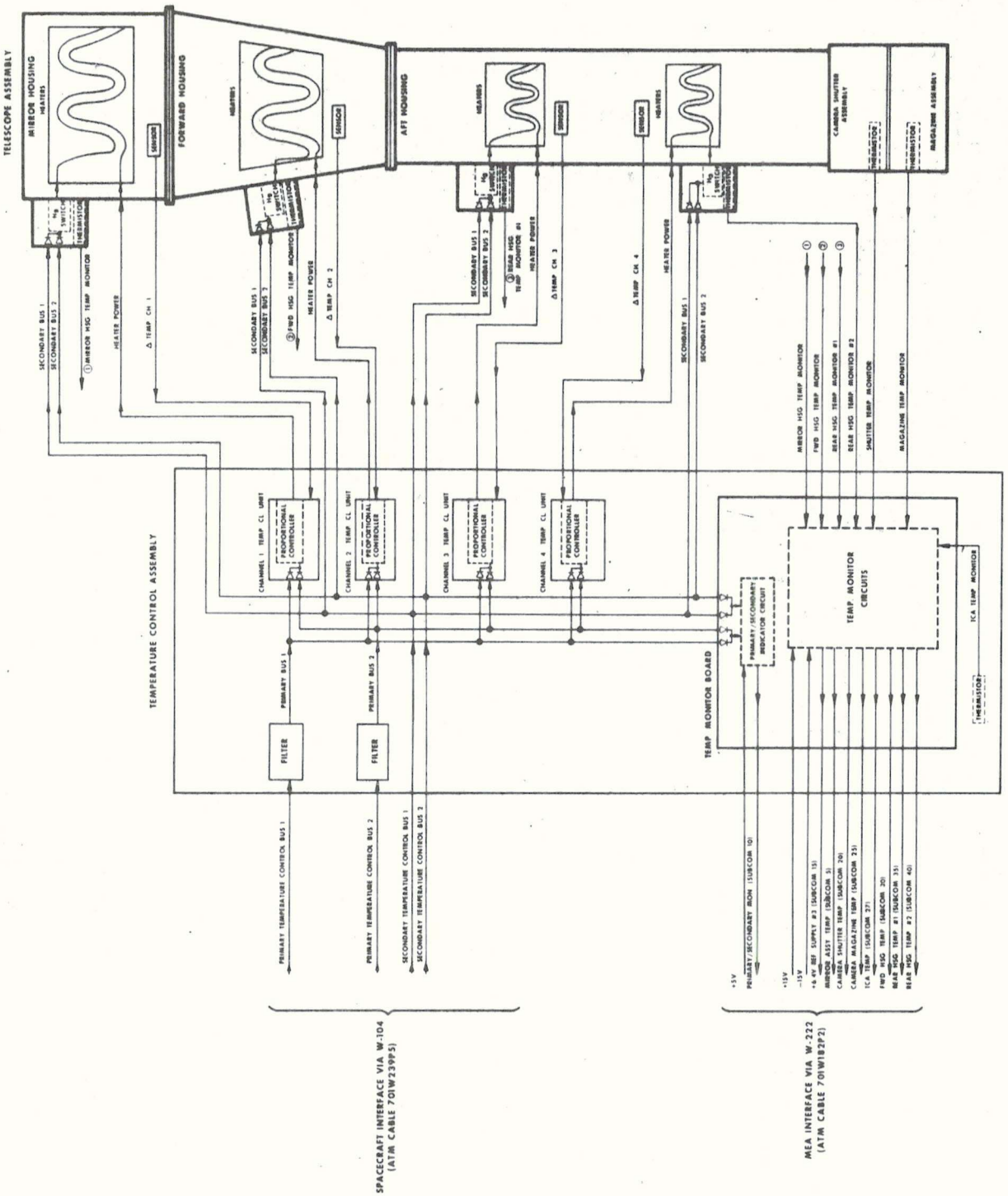

Figure 2.9.2-16 Telescope Temperature Control System

2.9.2.4 Major Component/Functional Description

2.9.2.4.1 General

The X-ray Spectrographic Telescope System, Experiment S054 condists of eight major assemblies. These assemblies and their subassemblies are listed below with abbreviation designations. A diagram showing the relationship of the assemblies and subassemblies is given in Figure 2.9.2-17.

	Assembly	Abbreviation
1.	Telescope Assembly	TA
	Photomultiplier Subassembly	PM
	Image Dissector Subassembly	ID
	Grating Mechanism Subassembly	GA
	Filter Wheel and Drive Subassembly	FW
	Camera Subassembly	CA
2.	Temperature Control Assembly	TC
3.	Main Electronics Assembly	EA
4.	Power Supply Assembly	PS
5.	Intensity Modulation Assembly	IM
6.	X-Ray Image Monitor Assembly	CR
7.	Photomultiplier Exposure Counter Assembly	EC
8.	Image Intensity Counter Assembly	IC

S054

2.9.2.4.1.1 Telescope Assembly (TA) - The primary elements of the assembly are the AS&E developed grazing incidence mirror, and a camera. A secondary imaging-detecting system for fine-pointing control has been designed integral with the telescope consisting of a small X-ray telescope, a scintillation crystal, and an image dissector. A photomultiplier subassembly is included for flare detection and exposure determination.

The Telescope Assembly shown in Figure 2.9.2-18 will be located in Quadrant IV of the ATM Canister. It is constructed of Titanium 55A and 6061-T6 aluminum, and the mirrors of Beryllium HP-20 coated with Kanigen. It includes eleven major subassemblies, each of which is described in the following paragraphs.

Photomultiplier Subassembly (PM) - The PM is used as an exposure meter to determine the camera shutter speeds and as a monitor of the energetic X-ray flux. The subassembly consists of a flare detector (sodium-iodide crystal, and a photomultiplier tube,) a preamplifier, and a high voltage power supply. A Collimating tube, somewhat larger in diameter than the PM tube, is located in front of the PM tube. The subassembly is located in the lower left (at about 7 o'clock), as viewed from the forward end of the Telescope Assembly. Attachments are made at the front flange of the mirror housing and to a mounting surface provided on the forward housing.

The Photomultiplier Detector consists of a beryllium (Be) filter, a thallium-doped sodium iodide (NaI(Tl)) crystal, a one-inch diameter, semi-transparent bi-alkali photocathode, and a 14-stage multiplier tube. The tube operates at a gain of approximately 10^6 at voltages between - 1790 and -3110 volts. The photocathode has a peak quantum efficiency of between 4 and 6 percent at 4100Å. A miniature lamp is directed at the photocathode and may be energized to facilitate system checkout.

High voltage for operation of the PM detector is supplied by a DC-DC converter contained in the PM Assembly. The output voltage is adjustable from -1790V to -3110V (by selection and installation of a suitable resistor) and has a current rating of 100 microamperes.

The Light Source Drive provided a means of simulating the miniature lamp in the PM Detector to perform a closed loop test of the Flare Detection System. It consists of a zener regulated voltage supply, which energizes the lamp and is preadjusted to produce a simulated X-ray intensity level of about 500 counts as monitored by the Photomultiplier Exposure Counter and the corresponding Analog and Digital Telemetry signals.

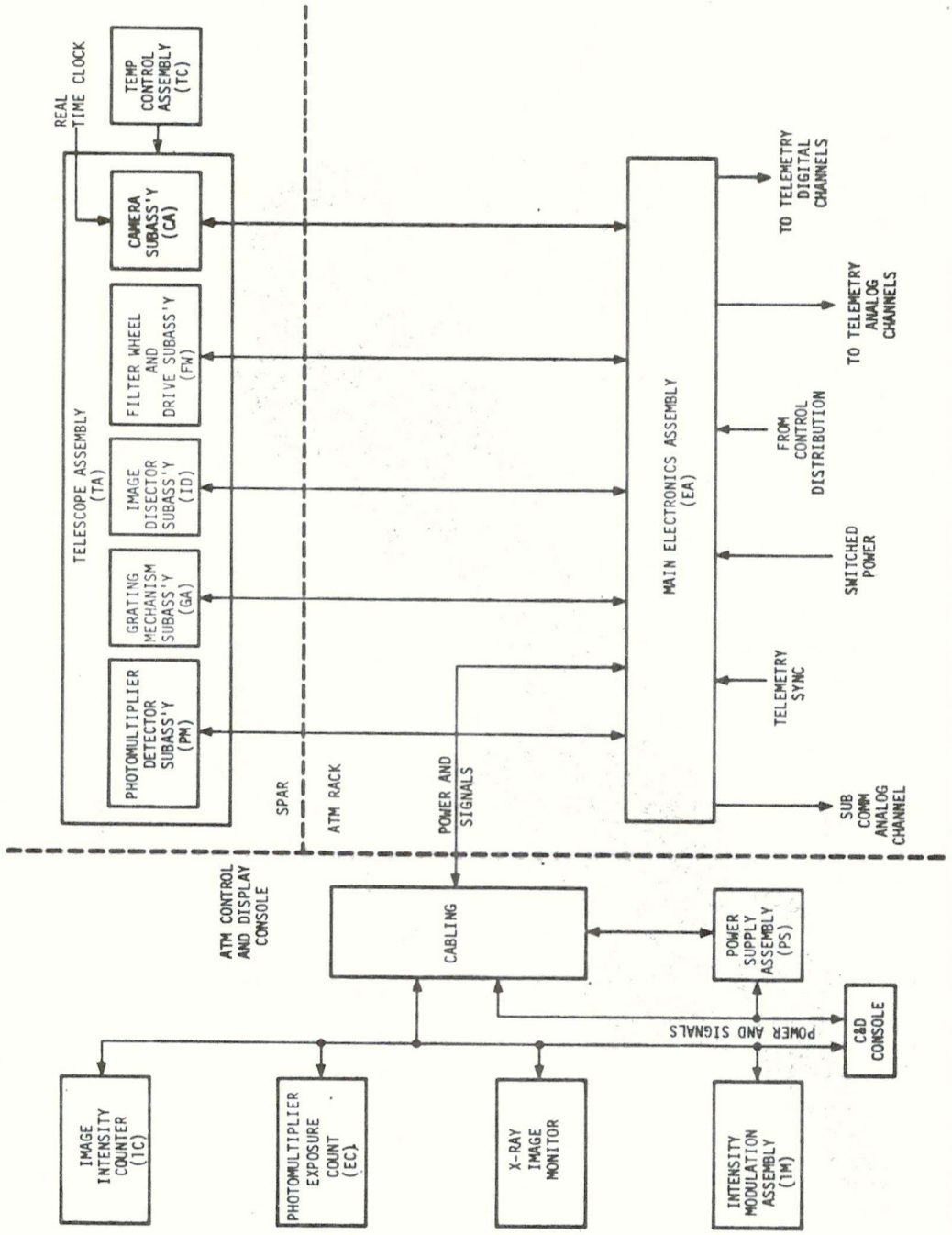

Figure 2.9.2-17 Experiment S054 Simplified Block Diagram

S054

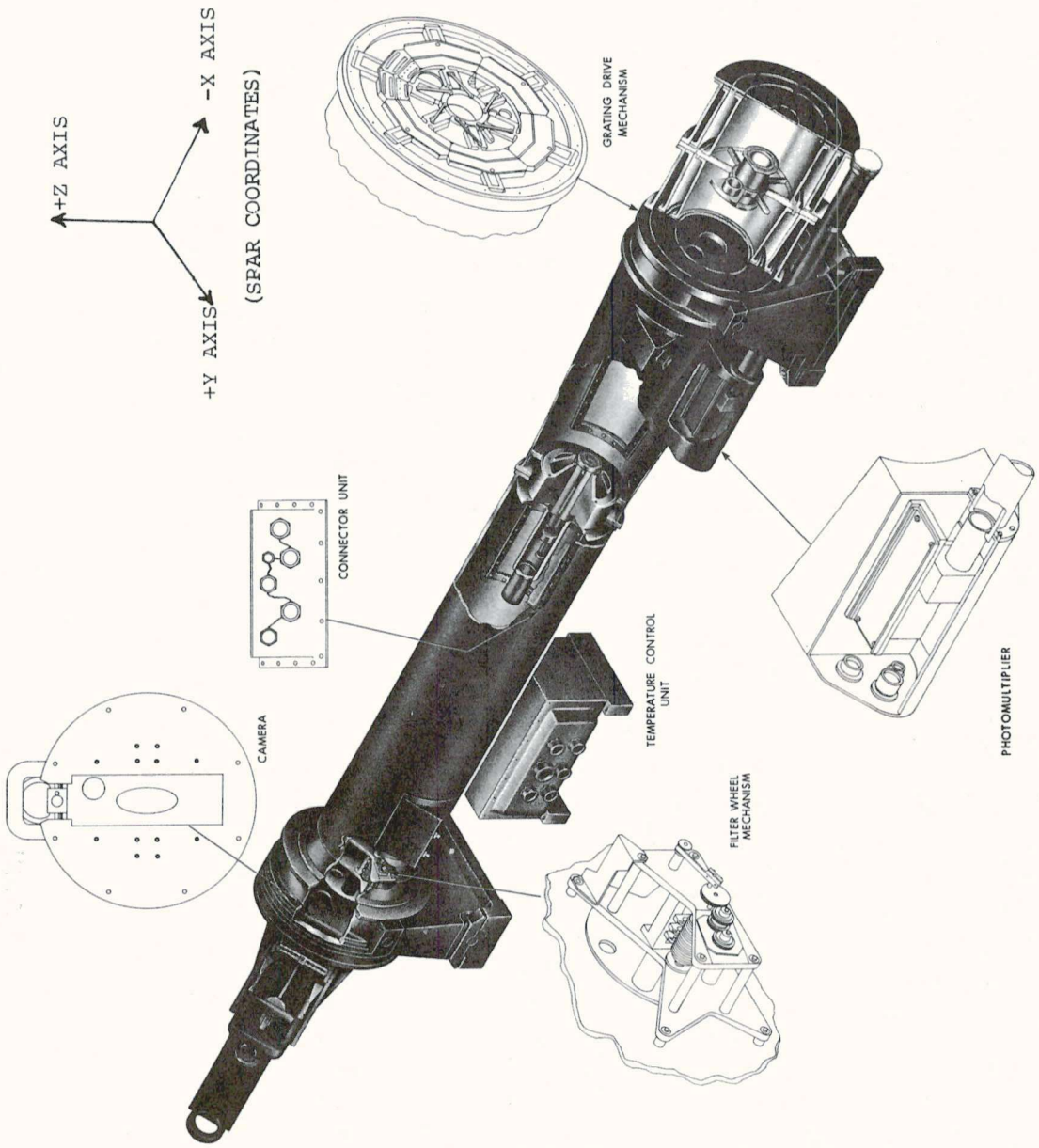

Figure 2.9.9-18 Telescope Assembly

The logarithmic Preamplifier is directly coupled to the anode of the PM tube and is stimulated by an average current of 10^{-10} to 10^{-5} amperes. The logarithmic transfer characteristic of the preamplifier provides compression of the input dynamic range. The output voltage varies from approximately zero volts to +10 volts for the 10^{-10} to 10^{-5} ampere input variation.

The Pulse Preamplifier is capacitor coupled to the last dynode of the PM tube, and is stimulated by positive pulses containing frequency components up to 20 MHz. The preamplifier is an inverting amplifier having a voltage gain that is presettable between 10 and 100X. It supplies negative pulses of 0 to -5 volts amplitude through a 50-ohm triaxial transmission line to the Buffer Amplifier located in the EA.

Grating Mechanism Assembly (GA) - The transmission gratings serve effectively as a controllable iris that is actuated by command from the C&D Console. The grating subassembly is positioned so that the gratings are normally behind the rear apertures of the large mirrors (9 and 12 inch mirrors) where they intercept and disperse the incident radiation to produce spectroheliograms. This position (see Figure 2.9.2-19) will be denoted as the IN position as commanded from the C&D Console; the position where the gratings are moved out of the optical path, is denoted as the "OUT" position. In the event of a malfunction a "RESET" position is provided to drive the grating assembly to the "OUT" position.

The grating drive is a small stepping motor with a high reduction gear head to produce the required torque. The gear head output shaft drives an electromagnetic clutch which, when engaged, drives a rotating ring, concentric to the optical axis, moving the six frames outward, by direct connection, through a linkage arm. The rotating ring is spring loaded to fail-safe in the "RESET" position. Should either the drive motor or gear head fail, the clutch will disengage allowing free rotation of the ring; the grating will then return to the "OUT" position. The travel of the grating frames is to two positions, and positional information is provided by limit switches.

S054

Mirror Subassembly (MA) - The Mirror Subassembly is an image-forming X-ray optics system having a large collecting area and high angular resolution. The assembly shown in Figure 2.9.2-20 includes a large x-ray mirror, a small x-ray mirror, a mirror holding fixture, front and rear aperture plates, a visible light lens assembly and a thermal Prefilter Assembly.

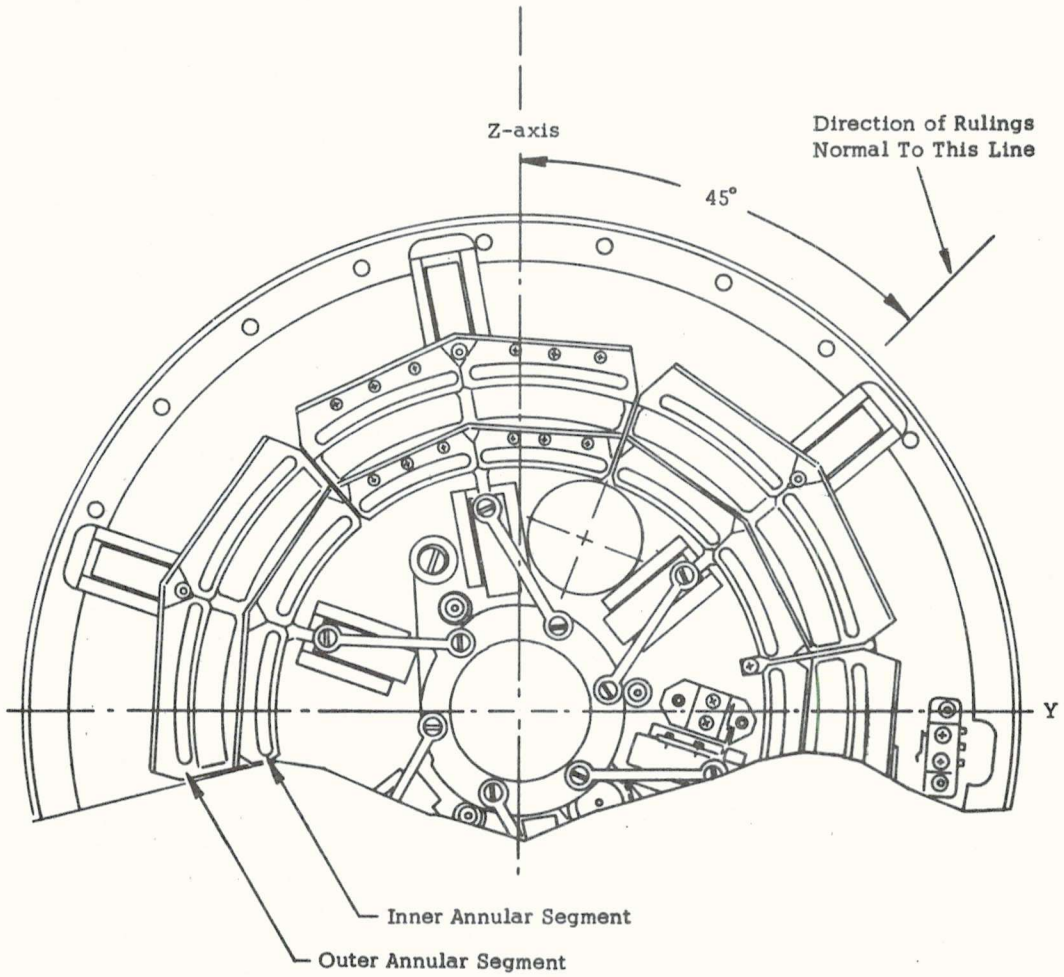

Figure 2.9.2-19 Portion of Grating
(Viewed from Camera end with gratings at IN position)

The large mirror consists of two concentric optical elements each having a focal length of 84 inches. The outer element has an inside diameter of approximately 12 inches; the second or inner element has an I.D. of approximately 9 inches. The inner surfaces of the two mirrors have a Kanigen coating deposited upon them and are polished to obtain the required reflectance. At assembly, mechanical adjustments are made so that the mirror images will be coincident at the focal point.

The small X-ray mirror consists of one element having a 3-inch inside diameter and a length of six inches. The focal length of this mirror is 32 inches. The inner surface is Kanigen coated and polished to produce the required reflection. This mirror and the Image Dissector Assembly are parts of the fine-pointing system for the Experiment.

A mirror holding assembly is bolted to the telescope housing to support the mirrors, and to serve as an alignment system with provisions for adjusting concentricy and parallelism to meet the optical requirements of the system. The holding assembly is made up of a holding plate and a support housing. The paraboloid sections of the mirror are cantilevered from the front face of the support plate; the hyperboloid sections are cantilevered from the rear face of the support plate. The support plate with the mirrors is bolted to the support housing which is attached to the front flange of the forward housing. Aperture plates are attached to the front and rear flanges of each mirror to exclude undesirable visible light.

An achromatic visible light lens assembly, Figure 2.9.2-21 with an 84 inch focal length is included in the mirror sub-assembly. This lens system provides orientation images of the sun to be recorded directly on film. A filter is used to provide attenuation of the image.

S054

A Thermal Prefilter Assembly will be mounted by shock mounts to the Forward Mirror Housing at the front of the Telescope Assembly. The prefilters cover the input apertures of the 9-inch 12-inch and 3-inch telescope mirrors. While the prefilters generally reduce the amount of undesirable solar irradiation that enters the Telescope Assembly, their specific purpose is to prevent thermal damage to the thin organic window in the Camera Magazine and to the filters of the Filter Wheel Assembly.

Image Dissector Subassembly (ID) - The Image Dissector consists of a scintillation crystal, fiber optics plate, an image dissector tube, and associated electronics. Coupled with the X-Ray Image monitor display, it provides a visual display of the solar disc as viewed by the S054 experiment.

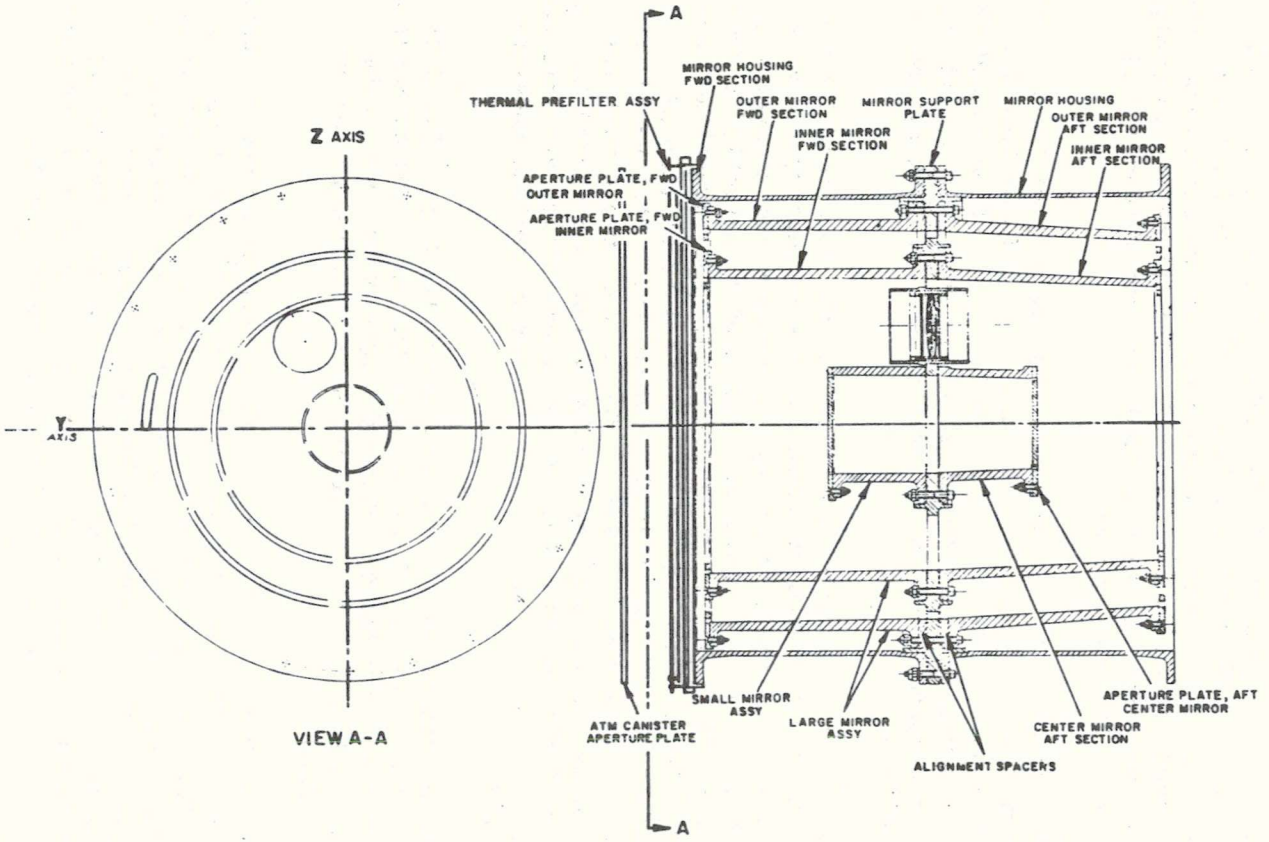

FIGURE 2.9.2-20 MIRROR SUBASSEMBLY

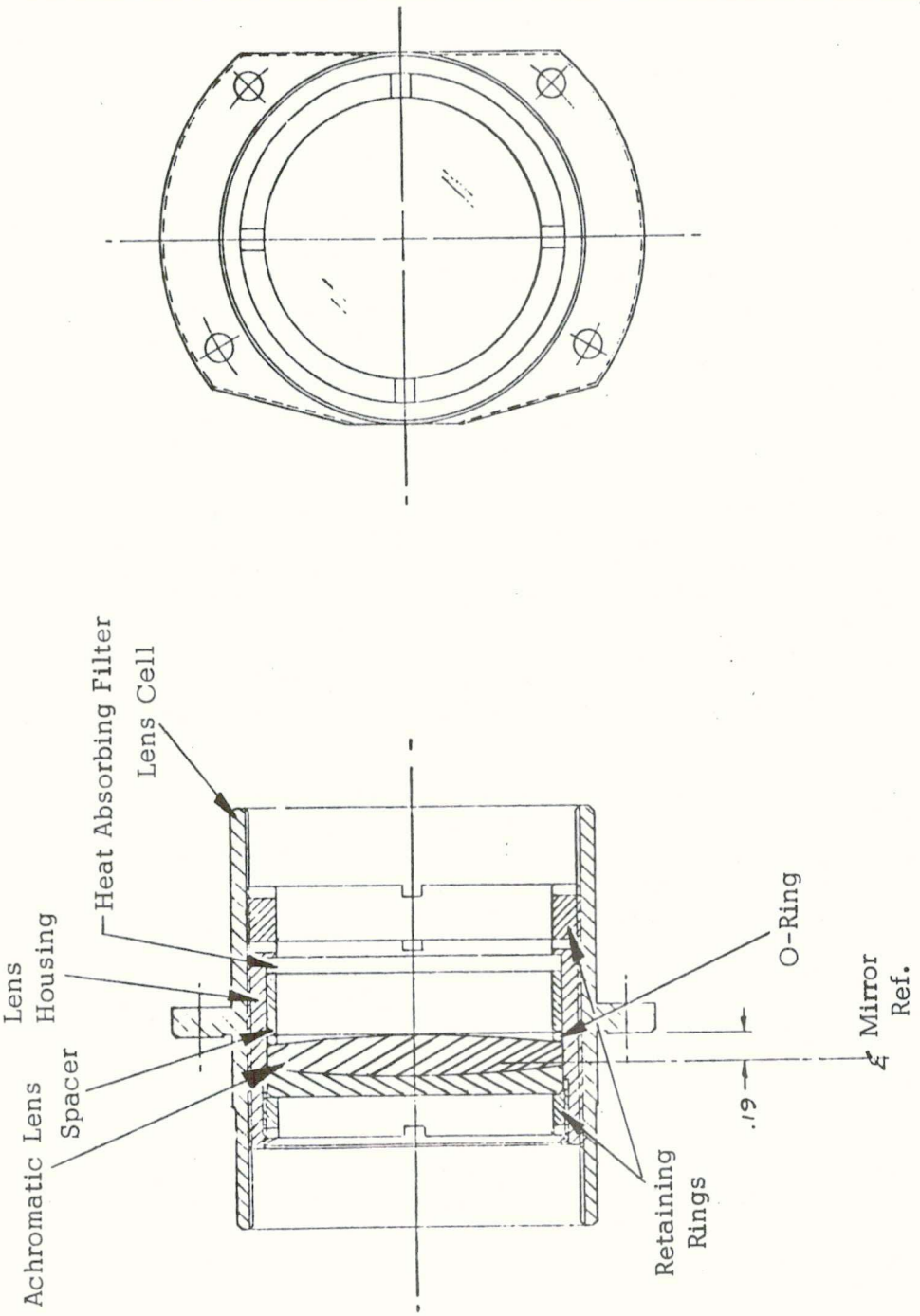

Figure 2.9.2-21 Visible Light Lens Assembly

S054

The general theory of operation is relatively straightforward, in that the device can be thought of as consisting of two independent parts; i.e., an imaging section and an electron multiplier section.

For a visible light image incident on the photocathode, the emitted photoelectron flux at any point will be proportional to the photon flux at that point. The photocathode material in the image dissector tube is a high efficiency trialkali with a peak spectral response of 4100 Å, and a peak quantum efficienty of 20 to 25 percent. If the cathode is held at a high negative potential (e.g. 1Kv), emitted photoelectrons will be accelerated toward the grounded aperture plate. An intermediate electrode provides the necessary focusing.

The aperture plate has a 0.010 inch diameter hole which allows the passage on only those electrons arising from a 0.010 inch diameter section of the photocathode. The particular section "seen" through the aperture is determined by the voltages applied to the X and Y deflection plates. Thus, by sequentially stepping the deflection voltages, the entire photocathode area can be scanned. The resulting information will be in the form of electron flux passing through the aperture as a function of the X and Y deflection voltages.

After the passage of the photoelectrons through the aperture plate, they strike the first dynode of a fourteen stage electron multiplier. Typical operating gain is 1×10^7 at an overall multiplier voltage of around 2500V. The multiplier has been designed so as to minimize ion feedback and dynode photo-emission.

Since only those electrons produced from a small area of the photocathode are able to reach the multiplier section, very little thermal dark current is collected. Because of the extremely low dark current and dynode noise in the device, it is possible to resolve and count the anode pulses corresponding to single photoelectrons released from the photocathode.

Filter Wheel Drive Subassembly - A six position filter wheel is provided to vary the wavelength response of the instrument. The filters and filter holders are attached to a wheel and drive assembly mount located forward of the X-ray camera. A stepping motor

and gear head, drives the filter wheel assembly. The filter position is selected from the ATM C&D Console. The Filter selector also includes a "RESET" position used to return the filter wheel to the "1" position in the event of a failure. For unmanned operation, a "storage" position will be used disabling the filter selection switch on the C&D Console so as to allow filter selection via ground command.

Camera Subassembly (CA) - The camera, (Figure 2.9.2-22) is located at the back flange of the rear housing. It consists of a shutter assembly and a magazine assembly, and records 3 to 60Å X-ray and visible light images of solar flare activity, data from a luminescent diode array, and reference indexes. The camera will record the undispersed image of the solar disc or the dispersed spectral image focused on the film plane by the large X-ray mirrors through the X-ray shutter.

The dispersed spectral image will be recorded when the grating is in the optic path. Images will be recorded simultaneously with the X-ray exposure through the visible light shutter. Orientation of the X-ray images is determined by means of the visible images and fiducial reference marks. (See Figure 2.9.2-23)

The camera uses 70mm format film and has a film capacity of approximately 1400 feet. The film magazine is to be replaced by EVA. In addition to X-ray and visible light images recorded on the film, a data block from a luminescent diode array records indices on the film. This information includes shutter speed, real time, filter wheel and grating positions, and film position data. Shutter operation and film advance for the total exposure range is electronically controlled. The camera can be activated either manually or automatically.

The film magazine is designed for one-hand removal or insertion by the astronaut. The locking mechanism and handle are designed so that film magazines can be easily changed and secured.

S054

The camera incorporates a thin window at the X-ray aperture.

Magazine Guide Assembly - The magazine guide assembly is attached to the rear of the Telescope Assembly. A support subassembly provides for adjustment in the Y and Z axes. Spacers are used to provide close tolerance positioning of the camera in the X axis.

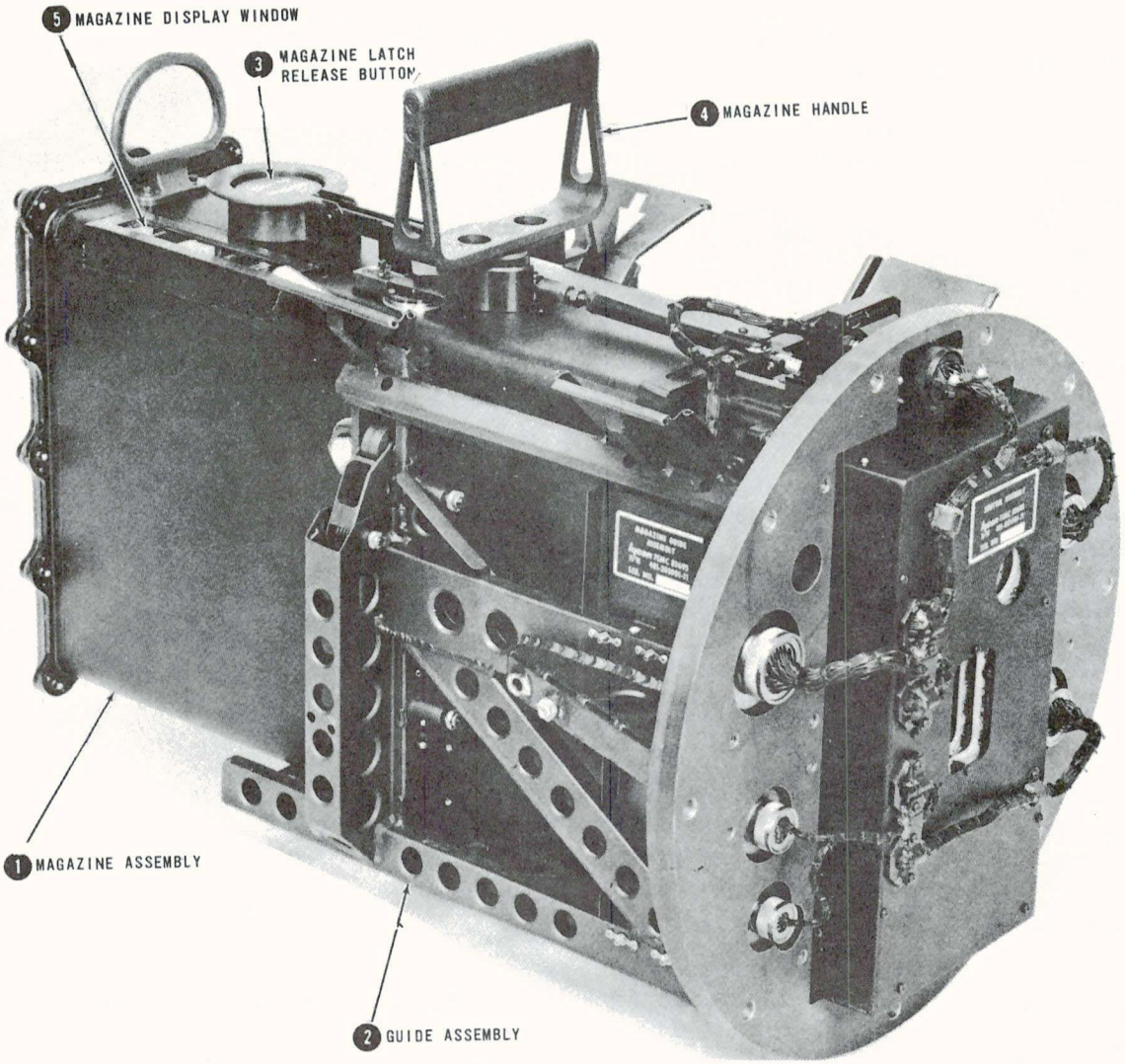

2.9.2-22 CAMERA ASSEMBLY

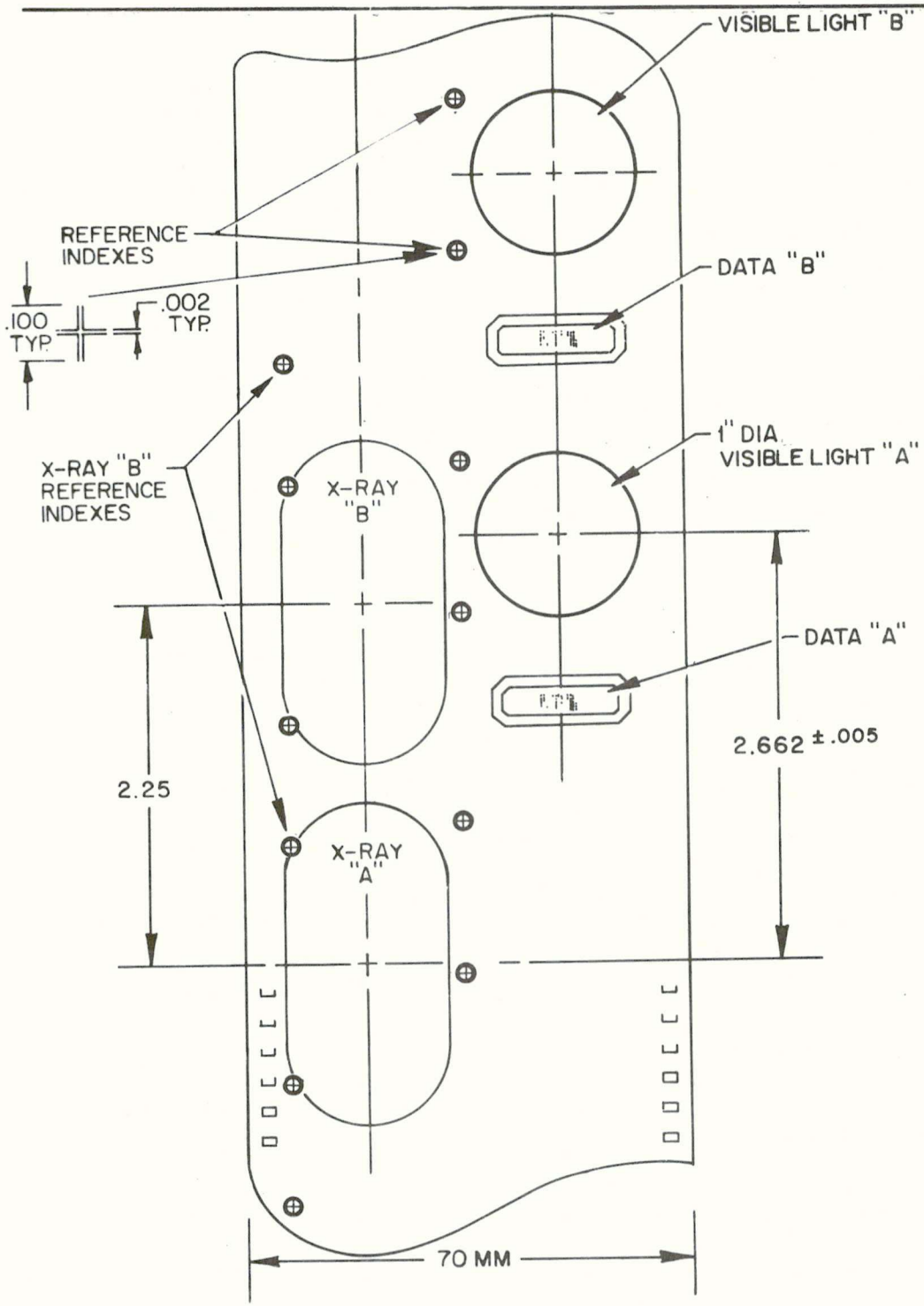

Figure 2.9.2-23 Film Format as Viewed from the Mirror End of the Telescope Assembly

Forward and Rear Housings - Both forward and rear housings are of tubular titanium construction and will serve as the optical bench of the Telescope Assembly. The housings will also serve as the support structure for the X-ray Mirror Subassembly, the Image Dissector Subassembly, and the Grating Mechanism Subassembly.

Forward and Rear Mounts - The forward mount is fixed in the X and Z axes and permits rotation about the Y axis only. All loads in the X directions are taken on the forward mount.

Translation along the X axis and rotation about the Y axis are the features of the rear mount. Flexure pivots are used at the points of rotation. Both the forward and rear mounts will take loads in the Z direction. The thermal conductance limit of the mounting system will be met by the flexure pivots alone. A mount material with a low coefficient of thermal conductance (Titanium) has been chosen to increase the thermal impedence of the mounting system.

The mounts provide for mechanically adjusting the line-of-sight of the Experiment in the Y and Z axes to plus or minus ten arc minutes. Adjustment in the Z axis is made by shims at the forward mount. The Y axis adjustment shall be made by a cam at the forward mount about a pivot point located in the rear mount.

2.9.2.4.1.2 Temperature Control Assembly (TC) - The Temperature Control Assembly (TC) consists of four control components which receive signals from sensors monitoring temperatures in the Telescope Assembly. The controllers proportionally adjust the ratios of the ON-OFF Time of the heating elements in the Telescope Assembly. The time ratio is adjusted in direct proportion to the deviation of the monitored temperature from the control point temperature of 70°F (21°C). This assembly shall be spar mounted in the Quadrant IV of the ATM canister. (Refer to Figure 2.9.2-18).

2.9.2.4.1.3 Main Electronics Assembly (EA)- This assembly will be mounted on the ATM Rack and contains the major portion of the system signal control and data processing circuits. The circuitry and functions are discussed in Section 2.9.2.3.

2.9.2.4.1.4 Power Supply Assembly (PS) - The Power Supply Assembly is mounted in the ATM Control and Display Console and will supply the low voltage power for the C&D Assemblies. All outputs are monitored via telemetry and in addition a thermistor is provided for temperature monitoring of the supply.

2.9.2.4.1.5 Intensity Modulation Assembly - This assembly provides the discriminator logic for threshold detection plus the necessary circuitry to modulate the grid of the CRT

Discriminator - The Discriminator is designed to select any one of 31 solar flare threshold levels which are in equal increments over the range of operation of the photomultiplier detector system. The levels are selected at intervals of 32 counts (as read by the Photomultiplier Exposure Counter) by the operation of two switches on the ATM C&D Console.

The first switch (FLARE THRESHOLD, COARSE) selects one of the following major count thresholds:

POSITION	MAJOR COUNT INCREMENT
1	0
2	256
3	512
4	768

The second switch (FLARE THRESHOLD, FINE) selects one of eight minimum threshold counts which are added to the above major count increment. The minimum count thresholds are:

POSITION	MINIMUM COUNTS
1	0
2	32
3	64
4	96
5	128
6	160
7	192
8	224

S054

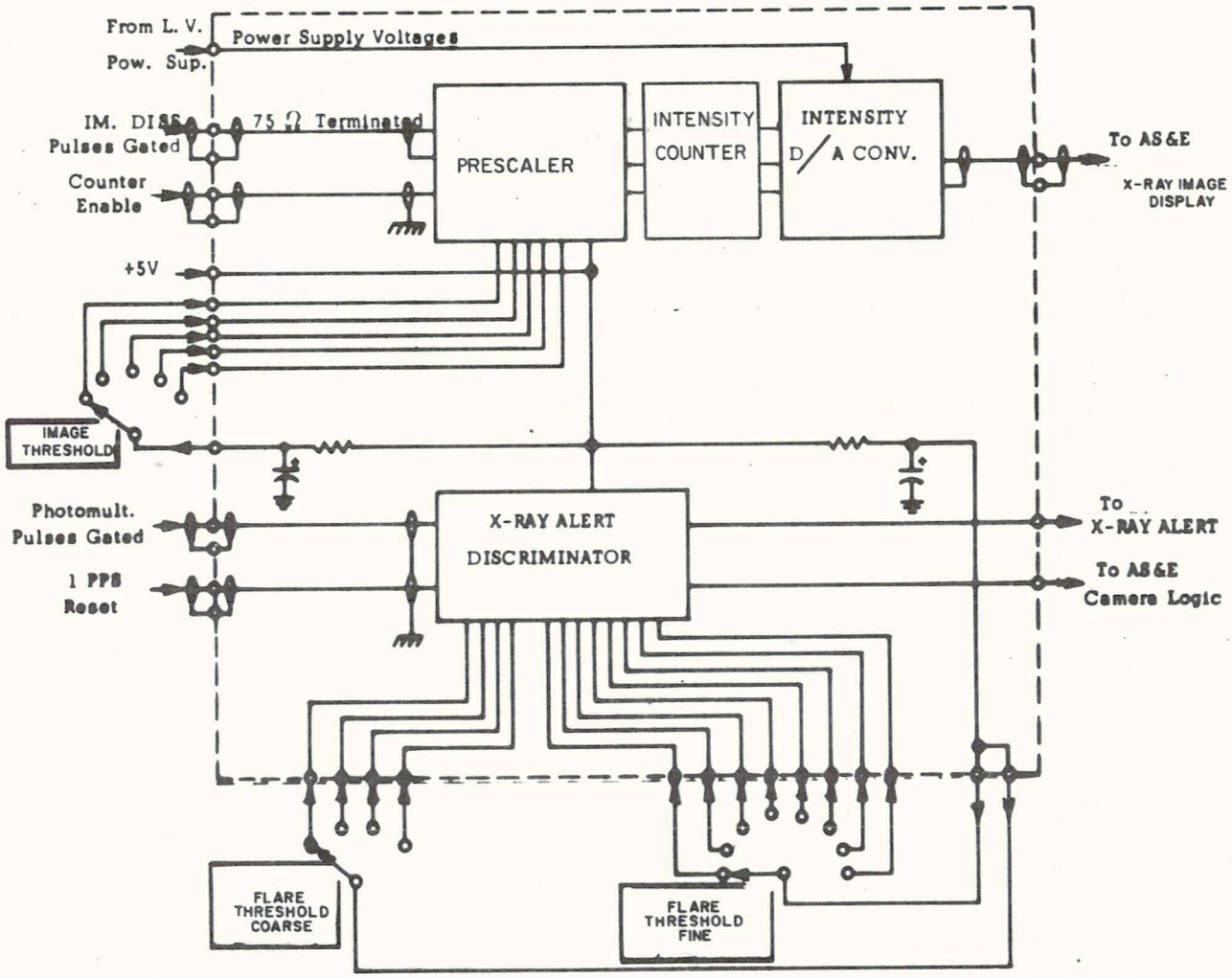

Figure 2.9.2-24 Intensity Modulation Assembly

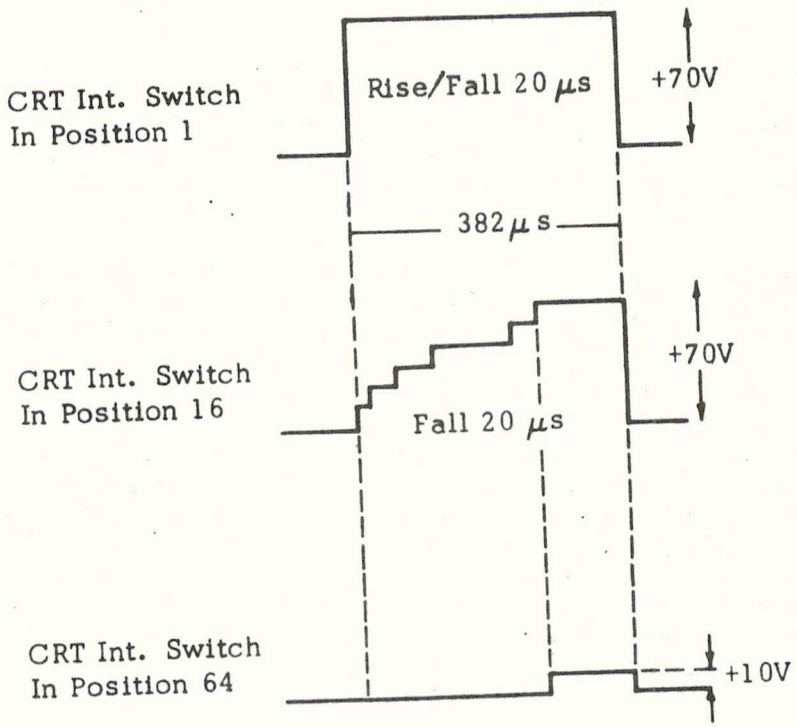

Modulation Signal for a Count of 112 for the 1, 16, and 64 CRT Intensity Switch Positions

S054

Figure 2.9.2-25 Examples of Intensity Modulation Signals

The number of counts selected for the X-Ray/Flare Alert signal is determined by the sum of the counts selected by each of the switches. Thus, if the first switch is set to Position 2, and the second to Position 3, an Alert signal will be generated and maintained when the Photomultiplier Exposure Counter reads 256 + 320, or greater and will be terminated when the count decreases below 576.

Intensity Counter and D/A Converter - The Intensity Counter and D/A Converter consists of a three bit D/A converter and counter with selectable prescaling by factors of 1, 4, 16, 64 or 256 controlled by the Image Threshold switch. A block diagram is shown in Figure 2.9.2-24.

Data pulses from the Image Dissector are routed to this Intensity Counter and D/A Converter via the Gating Logic. The prescaling provides X-Ray Image intensity control by reducing the effect of excessively high counts. It does this by allowing the three bit counter to count only every Nth pulse, where N is the selected prescale factor. The counter itself contains logic to prevent over-flow by stopping at a maximum count of seven. As the counter increments, the D/A converter generates a staircase waveform which is routed to the CRT to display a dot in the appropriate location. The transfer characteristics of the Intensity Counter and C/A Converter are shown in Figure 2.9.2-25 and examples of the resulting staircase waveform are shown in Figure 2.9.2-26. This design matches the Z-modulation signal characteristics with the dynamic range of intensities perceptable on the selected CRT phosphor.

2.9.2.4.1.6 X-Ray Image Monitor Assembly - The X-Ray Image Monitor Electronics Assembly is located on the ATM Control and Display Console. A Block Diagram of the assembly is shown in Figure 2.9.2-27 with its biasing circuits and power supply. The heater of the tube's cathode is energized by 6.3 volts rms, stepped down by a transformer from the 115 volt rms, 400 Hz line. The CRT has a two-inch, dual phosphor face and is potted in a mu-metal shield.

General CRT Data

Focusing	-	Electrostatic
Deflection	-	Electrostatic
Phosphor	-	P14
Fluorescence	-	Blue (short persistence)
Phosphorescence	-	Orange (long persistence)
Faceplate	-	Clear

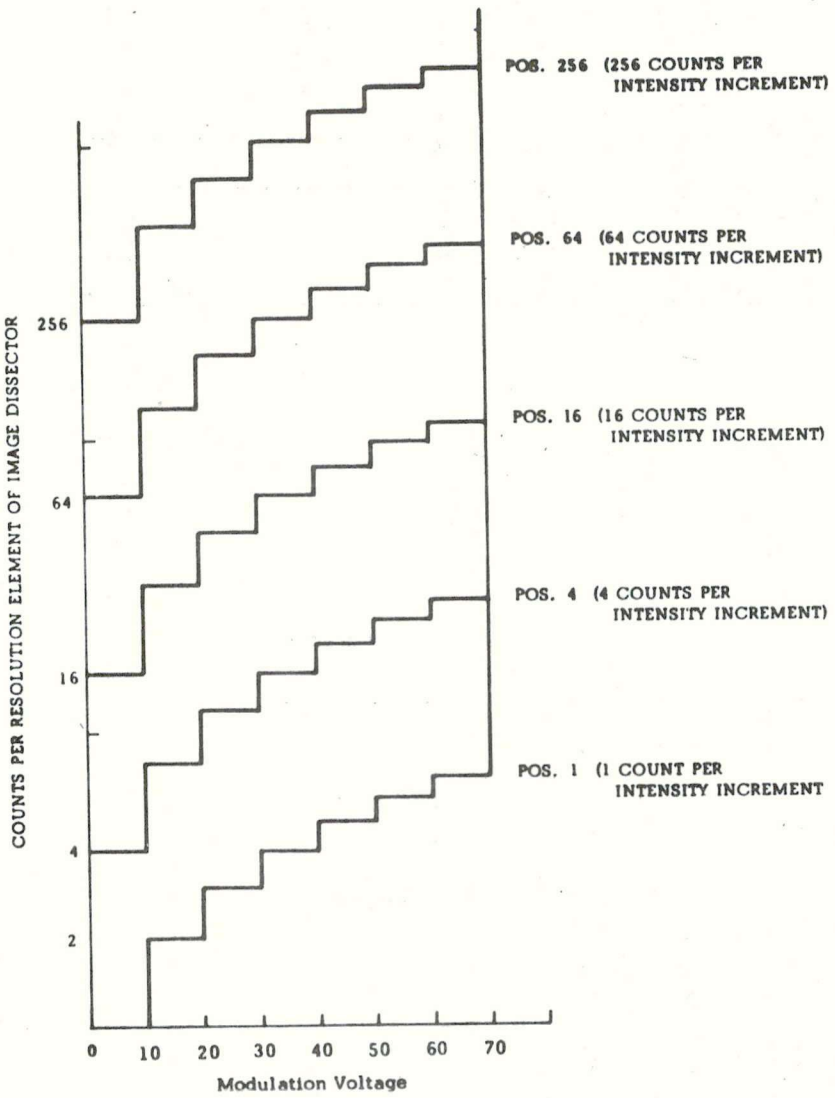

Figure 2.9.2 - 26 Intensity Modulation Transfer Characteristics

S054

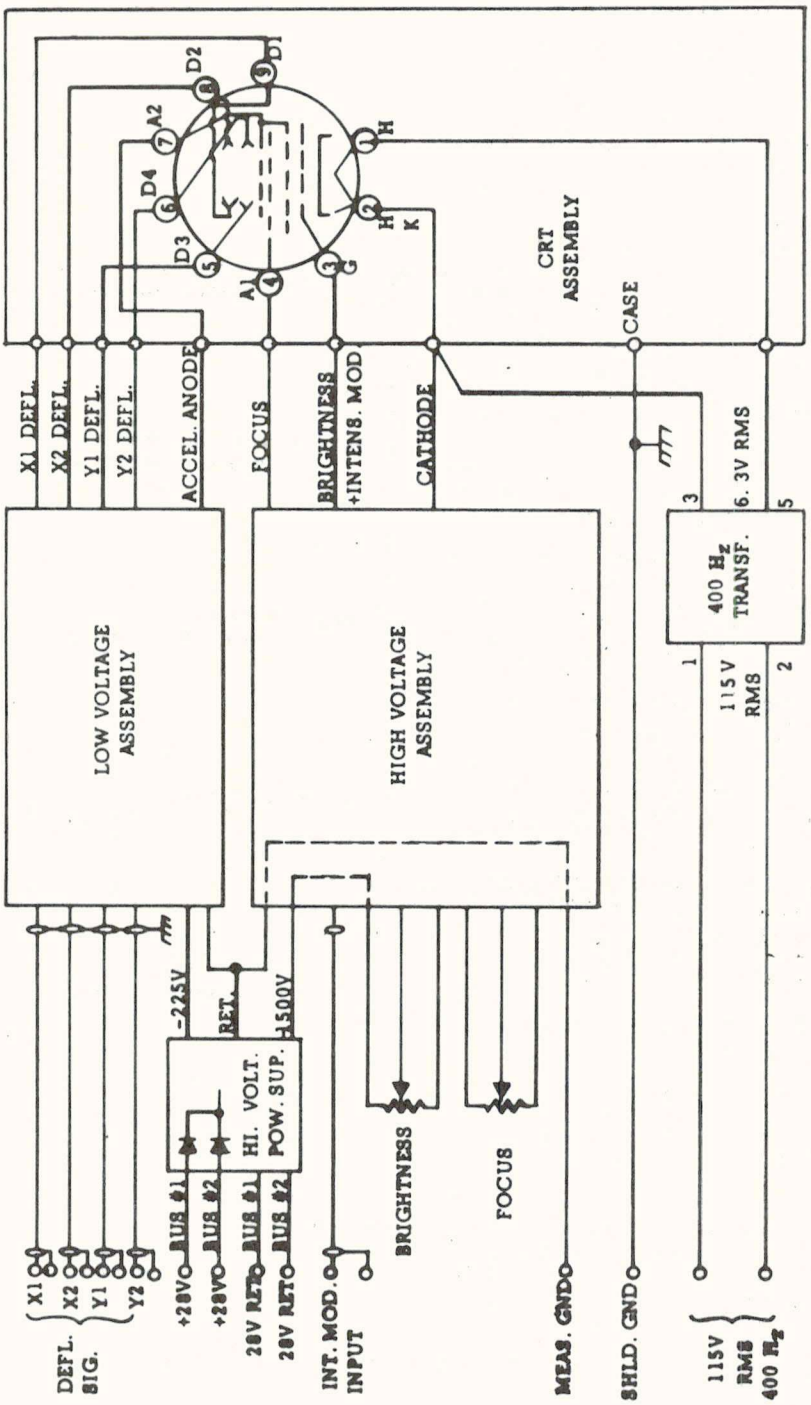

Figure 2.9.2-27 X-Ray Image Monitor Assembly

Staircase waveforms received from the deflection amplifiers in the Main Electronics Assembly drive both deflection plate pairs. Both waveforms consist of 48 steps and repeat at a frequency of 48 Hz for the X deflection plates and at 1 Hz for the Y deflection plates to produce a 48 x 48 raster on the screen each second. Since the deflection amplifiers drive the Image Dissector plates simultaneously, synchronism is achieved.

The brightness control varies the negative bias on the CRT grid. It is set to a point where the background raster just disappears. The grid is modulated by a signal from the Intensity Counter and D/A Converter consisting of positive pulses of about 382 microseconds duration. These pulses occur only at those raster increments where X-ray counts being received by the Image Dissector exceed the threshold setting of the Intensity D/A Converter. The image received by the Image Dissector is therefore, duplicated on the monitor screen

The dual phosphor screen of the P14 type gives an immediate blue presentation of the image with a short persistence phosphor and a prevailing orange presentation with a phosphor of sufficiently long persistency to memorize the image until the subsequent scan. The long persistence display of the X-ray source will enable the astronaut to trace the movement of the selected source as he guides it into the center of the X-Ray monitor screen with the manual pointing controls.

The FOCUS control, which varies the positive bias on the first anode, is adjusted for maximum clarity and definition of the image in conjunction with the BRIGHTNESS control. Screen burn-out is prevented by current limiting in the circuit which provides the accelerating voltage to the second anode. The power supply provides -1500 volts at a rated current of 0.75 ma and -225 volts at a rated current of 0.80 ma for the biasing circuits. It also contains a temperature sensor, providing information for telemetry.

S054

The CRT is potted within an implosion proof enclosure which hermetically seals the glass envelop from the environment. In case of glass envelope breakage, the heater would not be exposed. The BRIGHTNESS and FOCUS controls are also hermetically sealed. No connectors are used within the assembly. All electrical connections are hard-wired.

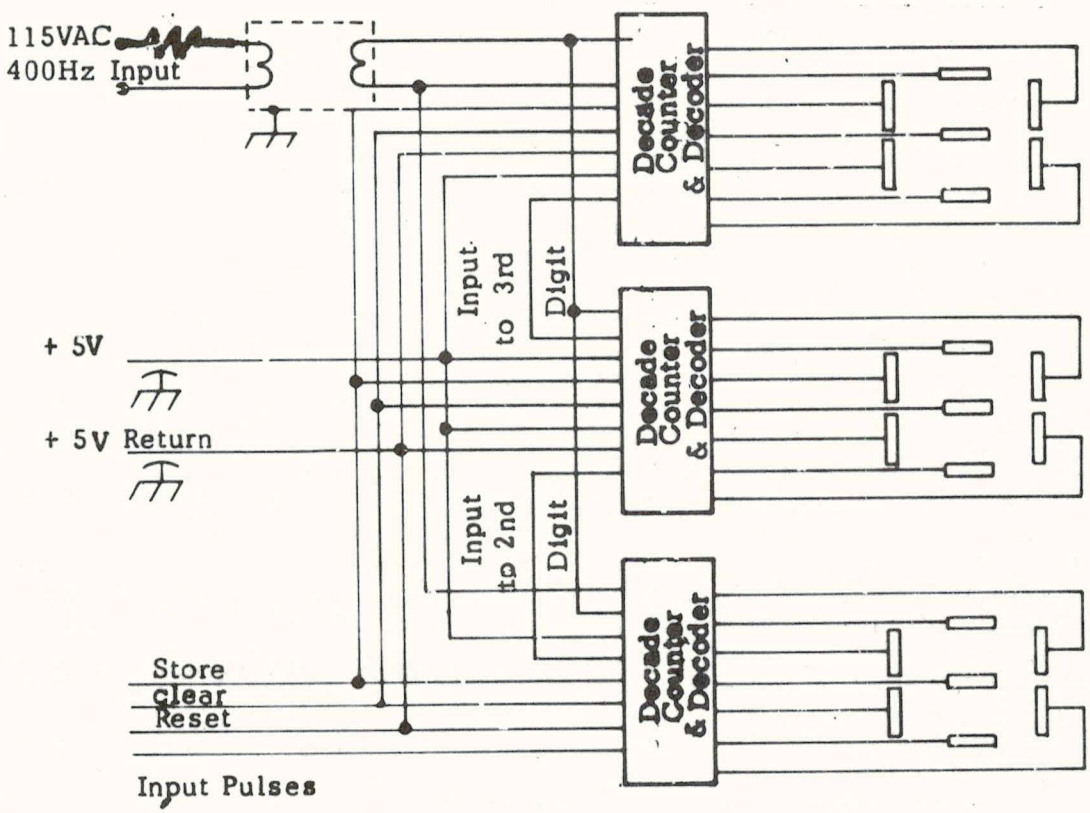

Figure 2.9.2-28 Exposure/Intensity Counter Assembly Block Diagram

2.9.2.4.1.7 - Photomultiplier Counter - The Photomultiplier Exposure Counter, a three-digit-decimal display unit, is located on the ATM Control and Display Console, to monitor the photomultiplier current and provide a measure of the flare intensity. A block diagram is shown in Figure 2.9.2-28. The monitoring is accomplished by counting the number of pulses in a burst from the A/D Converter. These pulses stop when the digital equivalent of the analog current is reached. The displayed exposure count may be used to aid in manually selecting an exposure time. The electronics associated with each digit is the same. The input is a pulse train of +3 to +5 volt amplitude on a -0.5 to +0.5 volt baseline and are counted in a BCD counter. After the 1-Hz TM synchronization signal, a clear pulse is received from the EA which clears the storage buffer displaying 888. Simultaneously, a store pulse longer in duration than the clear pulse, transfers the count data to this storage buffer for decoding and display. Approximately 14 milliseconds later, the BCD counter is reset. The decoding is accomplished in a logic matrix. The display is an hermetically sealed electroluminescent (EL) from the indicator driven by silicon-control rectifiers from the decoding matrix. The voltage required by the indicator is 115 volts, 400 Hz for full brightness, and is controlled by the panel dimmer. An isolation transformer is provided inside the assembly for separation of the 400 Hz power ground and the signal ground. A temperature sensor is included for telemetry information.

2.9.2.4.1.8 Intensity Display Counter - The Intensity Display Counter is located on the Control and Display Panel and monitors the total number of pulses emitted each second from the Image Dissector. The operation of this assembly is identical to that of the Exposure Display Counter discussed in the previous paragraph.

2.9.2.5 Performance and Design Data

TABLE 2.9.2-I

SCIENTIFIC PARAMETERS

S054

X-Ray Mirrors	Combined 9" and 12" diam.	3" diam.
Focal length	84 in. (213.4 cm)	32 in. (81.3 cm)
Collecting Area	6.5 in^2 (42.0 cm^2)	.32 in^2 (2.1cm^2)
Surface Material	Kanigen	Kanigen
Angular Resolution	< 3 arc sec.	< 20 arc sec.
Plate Scale	0.00041 in. (0.0010cm) arc sec	.0093 in. (.024cm) arc min

	Combined 9" and 12" Diam	3" Diam
Diameter of Solar Image	.757 in (1.92 cm.)	.289 in. (.73 cm^2)
Field of View	48 arc min	48 arc min

Visible Light Lens

Focal Length	84 in. (213.4 cm)
Diameter	1.75 in. (4.45 cm)
Description	Achromatic Doublet with neutral density filter
f-number	48.0
Angular Resolution	< 5 arc seconds
Plate Scale	0.00041 in./arc sec. (0.0010 cm/arc sec)
Diameter of Solar Image	.757 in (1.92 cm)
Field of View	40 arc min.

Image Dissector System

X-ray to visible light converter	.005 in. CaF_2 (Eu)
Resolution Element - 0,010 in.:	1 arc minute
Field of View:	48 arc minutes
Window-:	.002 in Beryllium
Spectral Range:	2 - 10 Å
Scan Time:	1 second

Photomultiplier System

Phototube	14 stage photomultiplier
Phototube Gain -	10^6
Scintillator	3/8 in. thick, 1 in. diam NaI (TI) crystal

Window	.002 in. Beryllium plus .0005 in. aluminized Mylar
Spectral Range	DC Mode: 2-12Å; PHA Mode: 10-80KeV (eight levels)
Dynamic Range DC Mode -	Five Decades in Phototube current
Dynamic Range PHA Mode -	512^2 counts/seconds
Time Resolution DC Mode -	1 second and 1/120 second (TM)
Time Resolution PHA Mode -	8 seconds

Filter Wheel

Filter	Material	Spectral Band*
1	.0005 in. Beryllium	3 - 18 Å
2	.000125 in. Teflon (CF_2)	3 - 14 Å, 18 - 30 Å
3	Blank	
4	.00057 cm Parylene (C_8 H_8)	3 - 18 Å. 44 - 70 Å
5	.002 in. Beryllium	3 - 11 Å
6	.001 in. Beryllium	3 - 14 Å

*1% transmission limit and 3 Å mirror cut-off

S054

Camera

Film Type	-70 mm aerial film, Panatomic - X type emulsion
No. of Frames	- 7200
Length of Film	- 1400 ft.
Window	- 0.0003 cm aluminized polypropylene
Minimum exposure time	- 1/64 second

Maximum exposure time - 256 seconds

Best Time Resolution - ~ 2.5 seconds

Frame Information:

X-Ray image, visible light image, fiducial marks, and diode array.

Minimum Time between exposures - .3 seconds

Maximum time between exposures - 12 seconds

Transmission Gratings

Grating Description:	1.2 micron parylene replica 1000 Å gold shadowing 1400 lines/mm (36,500 lines per inch)
Dispersion -	.5 arc min/Å
Resolution -	$\lambda/\Delta\lambda$ 50 at 7 Å (0.15Å at 7Å)

2.9.2.6 OPERATIONAL LIMITATIONS AND RESTRICTIONS

(TBS)

2.9.3 UV SCANNING POLYCHROMATOR SPECTROHELIOMETER (S055A)

2.9.3.1 Introduction

The S055A Scanning Polychromator Spectroheliometer, which is mounted in the Skylab ATM cannister, will be used for photometric ultraviolet observations of the solar atmosphere near or above active and quiet regions on the solar disk. The data obtained will yield information about the composition, structure, and processes involved in both quiet and active solar phenomena.

Unlike other ATM Experiments, S055A carries no film. Its data are recorded on the ATM tape recorder in digital form and transmitted to the ground throughout the mission. The experiment has two basic modes of operation that provide solar ultraviolet data in two different forms, the Mirror Raster Mode and the Grating Scan Mode.

In the Mirror Raster Mode, the primary telescope mirror will be rastered in two axes while the spectrometer grating remains stationary, permitting reconstruction of monochromatic ultraviolet spectroheliograms (slow scan pictures) of a region of the sun. Because the experiment contains seven ultraviolet detectors, spectroheliograms may be obtained simultaneously in up to seven different wavelengths.

In the Grating Scan Mode, the telescope mirror will remain fixed, pointing at a 5 arc second by 5 arc second portion of a feature of interest, while the grating is rotated to scan the entire operating spectrum past one of the photo-multiplier detectors. After transmission to the ground, this digital data is used to reconstruct the detailed UV spectra of the feature under observation.

From the ATM Control and Display Console, the crew can select the mode of operation, spectral line (or lines) to be observed, and detector(s) employed. They can also monitor experiment status, grating position, and the digital output from detector 1 or 3. While the crew is guiding or pointing the S055A experiment to a feature or region of interest, the Hα1 or 2 telescope displays will be used in the role of a guide telescope.

S055

2.9.3.2 Subsystem Interfaces

All S055A Interface Control Documents and drawings are listed in the ATM Experiment Interface Defining Document, MSFC Document 50M02430.

2.9.3.2.1 ATM Control and Display Console - All controls for operation of the experiment are located on the SCAN SPECT portion of the ATM C&D Console. See section 2.9.3-3 of this document for switch nomenclature, position and function. In addition, the S055A experiment will

require the use of the H-alpha 1 telescope and C&D TV monitors for location of solar features of interest during pointing, the Manual Pointing Control system for positioning the canister and experiments, the DAS and Monitor counters for internal pressure checks, the SCAN SPECT ALERT light, and a mirror unlock switch on the Deploy panel.

2.9.3.2.2 Power - The S055A instrument is powered from two ATM 28 volt DC busses which are used in parallel for redundancy. These busses provide for overall operation and control of the instrument and temperature control system. Isolated busses are generated within the instrument to provide power for command functions and to provide power to the seven high voltage power supplies.

The Instrument's power budget appears in sections 7 and 8 of the EIDD, MSFC Document 50M02430.

2.9.3.2.3 Telemetry - The S055 telemetry interface consists of 21 analog measurements, 15 analog subcommutated measurements, and 15 discrete measurements. Detailed information on these measurements are discussed in the EIDD, MSFC Document 50M02430.

2.9.3.2.4 Other Experiments - The S055A experiment will be nominally operated during periods of operation of all or some other ATM experiments. Simultaneous visual observations and film records from the H-alpha 1 camera will be made on a routine basis during S055A observing sequences. There will be certain portions of the S055A observing program when co-alignment with the S082B experiment is required. During these periods the S055A will be operated in its line scan mode.

2.9.3.3 Functional Description

In operation, light from the sun enters the instrument entrance aperture parallel to the primary optical axis. (Fig. 2.9.3-1). The primary mirror, an off-axis paraboloid, images the solar disc in the plane of the spectrometer entrance aperture, which is sized to define and pass light from a 5 arc second by 5 arc second element of the solar image. This radiation is then dispersed and imaged in the spectrometer exit slit plane by the concave diffraction grating. Seven Photomultiplier Detector Units (PDUs), each consisting of a spectrometer exit slit assembly, a channel photomultiplier tube, data handling electronics, and power supply, are located in the spectrometer exit plane. These 7 PDUs are positioned so that (with the grating in optical reference position) the spectrum is dispersed corresponding to the wave lengths shown in Table 2.9.3-1. The $\Delta\lambda$ shown in this table refers to the width of the individual exit slit in terms of spectral band pass.

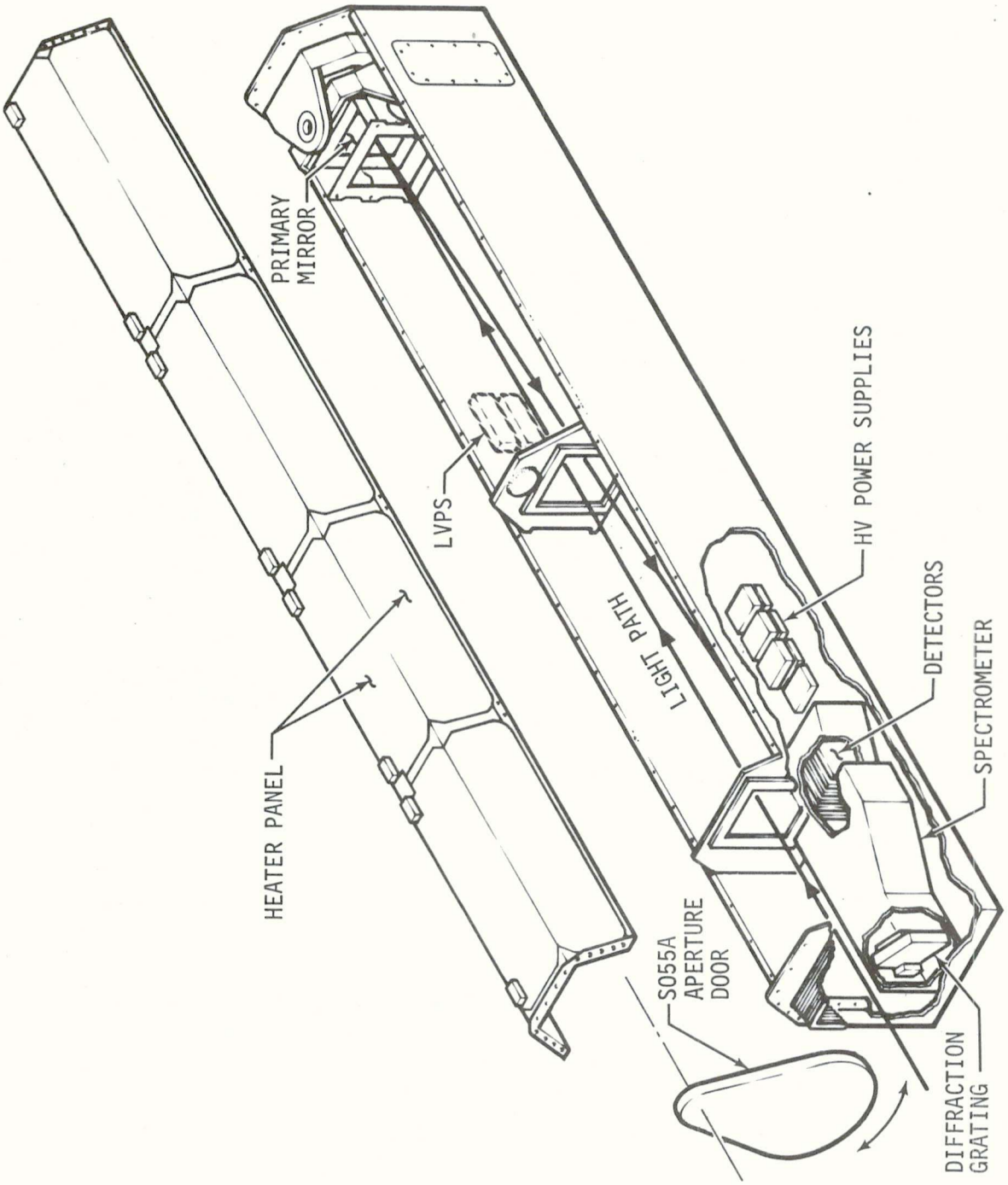

Figure 2.9.3-1
ATM EXPERIMENT S055A UV SCANNING POLYCHROMATOR/SPECTROHELIOMETER
HARVARD COLLEGE OBSERVATORY

Table 2.9.3-I Spectral Position of S055A Photomultiplier Detector Units (PDU) with Grating at Optical Reference Position

PDU	λ	Δλ
1	1335.10Å	1.6Å
2	1219.0Å	8.3Å
3	1031.91Å	4Å
4	977.8Å	4Å
5	912Å	8.3Å
6	625.28Å	4Å
7	554.6Å	4Å

The output from all seven detectors is sampled 24 times per second and recorded on magnetic tape for playback to the ground.

The primary mirror has been provided with a two-axis drive which in MIRROR AUTO RASTER or MIRROR 3 RASTER generates a 60 line, 5 arc min by 5 arc min, raster for the generation of up to 7 simultaneous spectroheliograms of a selected region of the sun. The primary mirror can also be commanded to MIRROR LINE SCAN MODE in which the scanning function is limited to the "stow position" line. Initially upon instrument turn-on or following loss and reapplication of main power, the stow position line will be line 30, but can be changed by using the LINE SELECT UP/DOWN switch, to any of the raster pattern's 60 lines, permitting better co-alignment with S082B. MIRROR LINE SCAN MODE will be used to provide observations of a 5 arc sec x arc min portion of a region of interest when better time resolution than that provided by MIRROR AUTO (or 3) RASTER is required. Mirror Line Scan will also be used to provide better co-alignment with S082B (with LINE SELECT) when co-observations with that experiment are desired.

Additionally, a single axis diffraction grating drive system permits spectral scanning of the wavelength range 300-1350Å across detector number 1 (others to a lesser extent) or, when desired, the selection of spectral elements other than those noted in the table above for monitoring during raster modes of operation.

The instrument contains an internal thermal control system consisting of sensors, heating elements, and electronic controls that actively maintain a constant instrument temperature when the instrument is subjected to changing environmental temperatures.

Modes of operation are given in the following paragraphs.

2.9.3.3.1 Raster Scan - The raster scan mode is the primary operating mode of the instrument. In this mode, the grating is

stationary at a position which images preselected spectral lines on the entrance slits of the photomultiplier detectors. The desired detectors are activated and the instrument is pointed at the desired location on the sun. The primary mirror executes a raster pattern to scan a 5 x 5 arc minute region of the sun across the spectrometer entrance slit. The raster pattern is formulated from sixty line scans, 5 arc seconds wide by 5 arc minutes long. The line scans alternate back and forth across the pattern. (Figure 2.8.3-2).

2.9.3.3.2 Line Scan - The line scan mode is similar to the raster scan mode with respect to instrument setup and operation. In this mode, one of the sixty lines forming the raster pattern is selected by the astronaut. The instrument then continuously scans this line across the spectrometer entrance slit. MIRROR LINE SCAN MODE will be used to provide observations of a 5 arc sec x 5 arc min portion of a region of interest when better time resolution than that provided by MIRROR AUTO (or 3) RASTER is required. Mirror Line Scan will also be used to provide better co-alignment with S082B (with LINE SELECT) when co-observations with that experiment are desired.

2.9.3.3.3 Wavelength Scan - In the wavelength scan mode the primary mirror remains in a fixed position and the grating is rotated to scan the wavelength range of 300 to 1350Å past the No. 1 detector. The No. 3 detector can be used as an alternate to the No. 1 detector but it will sample a portion of the spectrum displaced approximately 300Å to the short wavelength end. The remaining six detectors will not be energized. During wavelength scan, the instrument is pointed at regions of interest on the sun.

2.9.3.3.4 Wavelength Select - In this mode the astronaut will use the grating drive system to position a desired spectral line at the entrance slit of the No. 1 detector. The astronaut will have a numerical display on the instrument control panel which indicates grating position relative to the reference position. When operating in the wavelength select mode, he will be able, by the stop switch on the console, to stop the grating drive in the vicinity of the desired wavelength. He will then advance the grating position in single steps, while observing the numerical display on the instrument control panel or detector readout, to position the grating for maximum response. Once the grating is positioned, the instrument will be operated in either the raster scan or the line scan modes.

S055

2.9.3.4 Major Components/Functional Description

This discussion of the instrument subsystems and major components is limited to operational features of the instrument. Those elements which require no service in the operational mode, and which do not possess control or display features, will not be included in the dis-

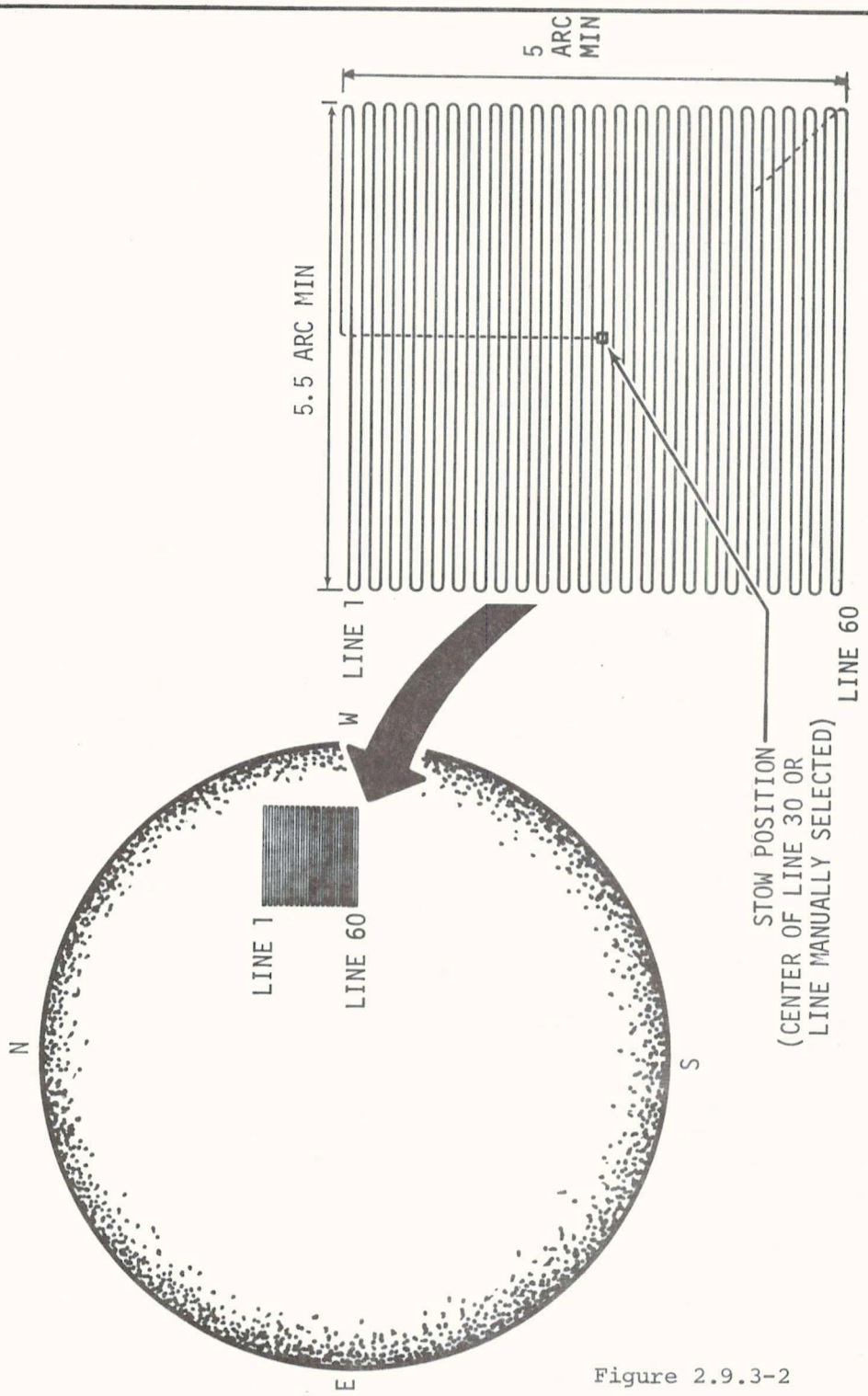

Figure 2.9.3-2
SO55A RASTER PATTERN - EXPERIMENT ROLL 00000

cussion except by reference where appropriate. The control and displays for the operation of this instrument are shown in Figure 2.9.3-3 which should be used for reference during the following discussion.

2.9.3.4.1 Telescope Subsystem - The primary purpose of the telescope subsystem is to provide an image of the solar disc at the entrance slit to the spectrometer subsystem. This is accomplished by allowing the light from the sun to enter the instrument entrance aperture parallel to the primary optical axis. The entrant radiation follows the optical path to the primary mirror (an off-axis paraboloid). From the primary mirror the entrant radiation is reflected back to the spectrometer entrance slit where an image of the solar disc is formed.

The elements which will be discussed as part of the telescope subsystem are the entrance aperture door, and the primary mirror.

2.9.3.4.1.1 Entrance Aperture Door - It should be noted that the aperture door is functionally a part of the telescope subsystem even though it is set apart in terms of contractual responsibilities. For this reason it will be discussed here as part of the instrument.

The entrance aperture door is to perform three primary functions. These are:

a. To assist in maintaining the required thermal environment.

b. To prevent sunlight from entering the instrument at an angle such that damage could be caused due to the inability to reject heat.

c. To prevent contaminants from entering the instrument.

2.9.3.4.1.1.1 Operational Characteristics - The operational features of the entrance aperture door are:

a. The door opens automatically at the beginning of each orbit day and closes automatically at the beginning of each orbit night.

b. The door automatically closes any time the instrument is being pointed more than 22 arc minutes away from the center of the sun.

c. The door can be opened or closed at any time by manual operation of a switch that supplements the automatic opening and closing capabilities.

S055

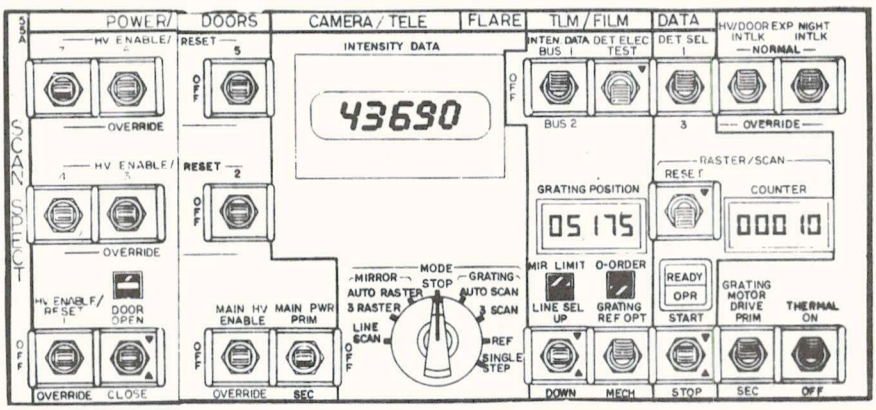

Figure 2.9.3.3 S055A Controls & Displays

2.9.3.4.1.2 Primary Mirror Assembly - The primary mirror assembly is located at the aft end of the instrument. The assembly includes the mirror itself, the mechanisms necessary to perform a raster scanning motion by the mirror raster control electronics, and the necessary structural support elements as well as a launch lock/unlock mechanism. The primary mirror assembly is provided to:

a. Focus an image of the solar disc in the plane of the spectrometer entrance slit.

b. Provide a means of moving the solar image with respect to the spectrometer entrance slit so as to scan a preselected area or feature on the solar disc.

c. Provide a means of performing inflight alignment of the S055A instrument with the S082B instrument.

Operational Characteristics - Operational characteristics of the primary mirror are.

a. The mirror can be programmed to perform three scans of the raster pattern shown in Figure 2.9.3-2 and then stop.

b. The mirror can be programmed to perform a continuous series of scans of the raster pattern.

c. The mirror can be programmed to perform a continuous series of scans of any one of the lines of the raster pattern.

d. The mirror can be programmed to stow in the center of any one of the lines of the raster pattern.

e. Once the stow position is selected the mirror automatically returns to this position upon completion of any mode of operation as long as the main power switch remains on.

f. Mirror will stow at the center of line 30 after reapplication of power.

Control, Display, and Telemetry Features - The controls, displays and telemetry features associated with the S055A mirror drive system are shown schematically in Fig. 2.9.3-4. The features of the mirror launch lock/unlock system are shown in Fig. 2.9.3-5.

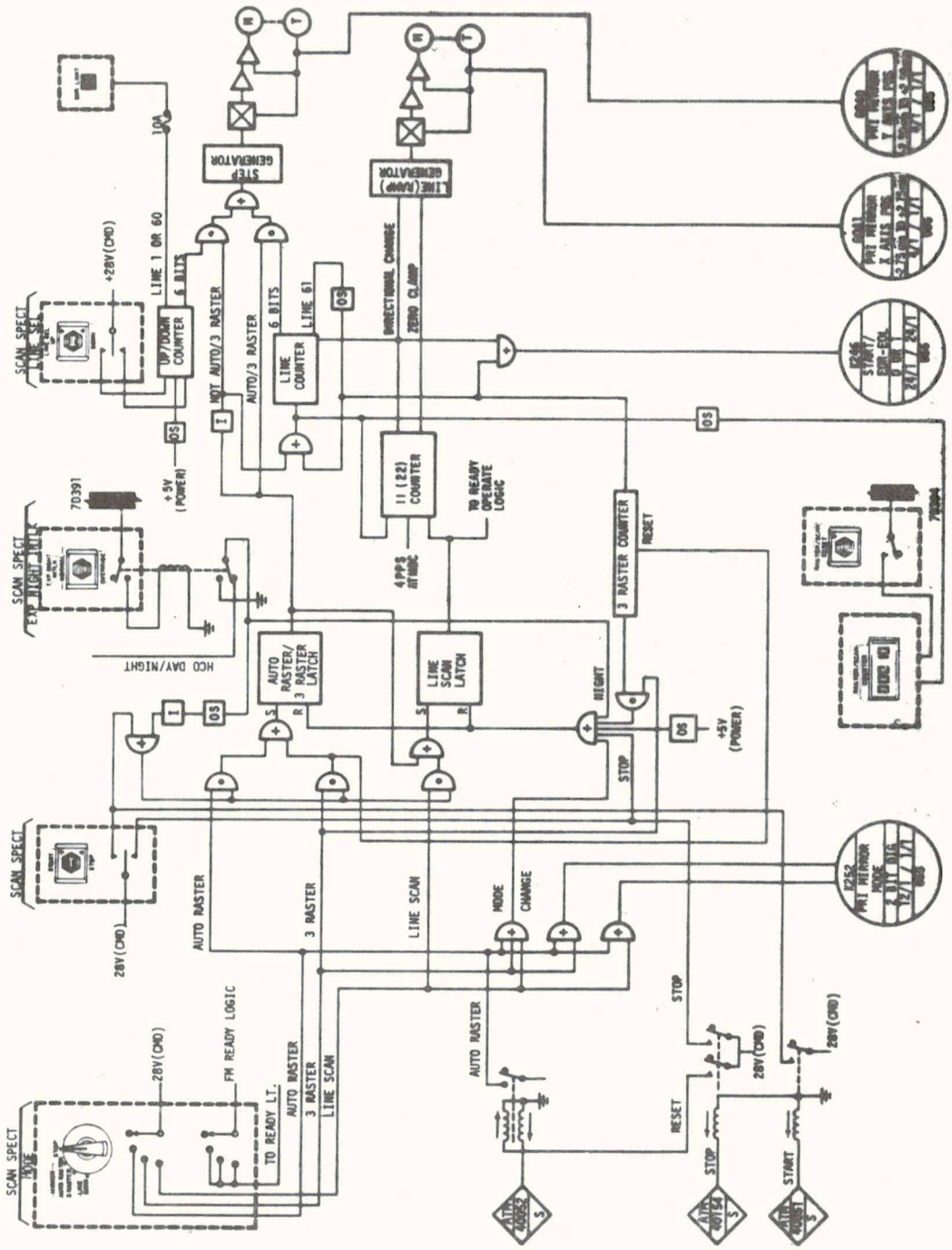

Figure 2.9.3-4
SO55A MIRROR DRIVE SYSTEM

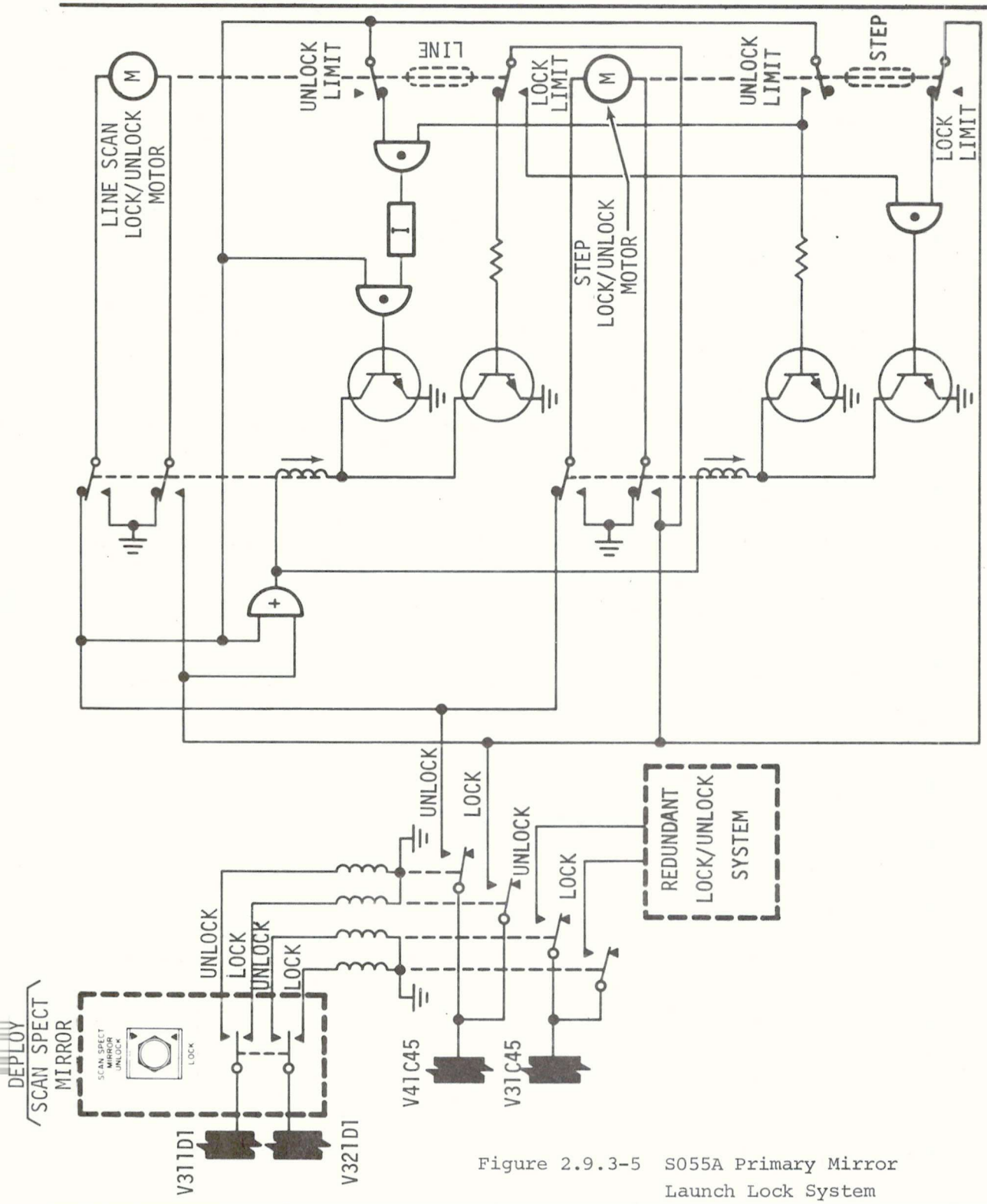

Figure 2.9.3-5 S055A Primary Mirror Launch Lock System

S055

2.9.3.4.2 Spectrometer Subsystem - The primary purpose of the spectrometer subsystem is to diffract the solar energy that is admitted through the entrance slit and to measure the intensity of the resultant spectrum at seven positions. The light which emanates from a particular solar feature passes through the spectrometer entrance slit to the spectrometer grating. The light is diffracted by the grating and the diffracted images of the entrance slit fall on the entrance slits of seven photomultiplier detectors which measure the light intensity. The intensity measurement is provided as an output of the detectors in terms of counts/unit time.

The spectrometer grating may be rotated by its drive about one axis in 0.2 Å steps so that the grating scans the spectrum between 300 and 1350 Å past detector No. 1. Detector No. 3 is an alternate to detector No. 1 for spectral scan but the portion of the spectrum sampled by detector No. 3 is displaced approximately 300 Å toward the short wavelength end. The operational elements, which will be discussed as part of the spectrometer subsystem are the grating assembly and the primary detector assembly.

2.9.3.4.2.1 Grating Assembly - The grating assembly includes a normal incidence concave grating, a grating drive system, electronic controls, and a support structure. The grating assembly is provided to:

a. Diffract the incident light and image it on the seven exit slits simultaneously.

b. Provide a means of scanning the spectral array at Detector No. 1.

c. Provide a means of imaging any spectral line between 300 and 1350 Å at Detector No. 1.

Operational Characteristics - Operational characteristics of the grating assembly are:

a. The grating can be stopped in a reference position such that an image of the entrance slit area is formed at each of the seven exit slits. Two methods (one back-up) are provided for indexing the grating in a reference position. The primary, or optical, index uses an electrical output from the zero order detector to stop the grating in the polychromatic position. The secondary, or mechanical reference is indexed from the grating assembly such that the output from a microswitch is used to stop the grating in a position different than the polychromatic position. The two positions are 102 grating steps apart.

b. The grating can be programmed to rotate about an axis such that the spectral lines from 1350 to 300 Å are driven past Detector No. 1 in a continuous series of scans, or for a sequence of three scans, after which the grating automatically stops in the reference position.

c. The grating can be positioned with respect to the rotational axis such that any spectral line between 300 and 1350 Å is imaged at Detector No. 1.

Control, Display, and Telemetry Features - The controls, displays and telemetry features associated with the S055 Grating Drive System are shown schematically in Fig. 2.9.3-6.

2.9.3.4.2.2 UV Detector System - The UV detector system includes seven photomultiplier detector units, a detector mounting structure, seven power supply modules, and electrical cables connecting the detector units to power supply modules. Each detector unit consists of a slit, a photomultiplier, and electronics necessary to convert detected photons of light to electrical pulses. Each power supply module provides the necessary high voltages to its respective detector unit. The primary functional requirements of the detector system are as follows:

a. The detector assembly receives diffracted light from the grating, amplifies, and converts the energy received to electrical pulses so that the number of pulses generated per unit time is proportional to the intensity of the light received.

b. Each power supply module provides 4KV and 2.4KV to the detectro module, and automatically disables itself in the event of excess current and generates a failure signal.

CAUTION: No failure signal is generated when high voltage switch is in OVERRIDE position.

Controls, Displays and Telemetry Features - The controls, displays and telemtry features associated with the S055A Detection System are shown schematically in Fig. 2.9.3-7.

S055

2.9.3.4.3 Thermal Control System - The S055A thermal control system consists of sensors, heating elements, and electronic controls and provides a means of maintaining a constant instrument temperature when the instrument is subjected to changing environmental temperatures.

Operational Characteristics - The system provides continuous automatic temperature control after power ahs been applied to the system.

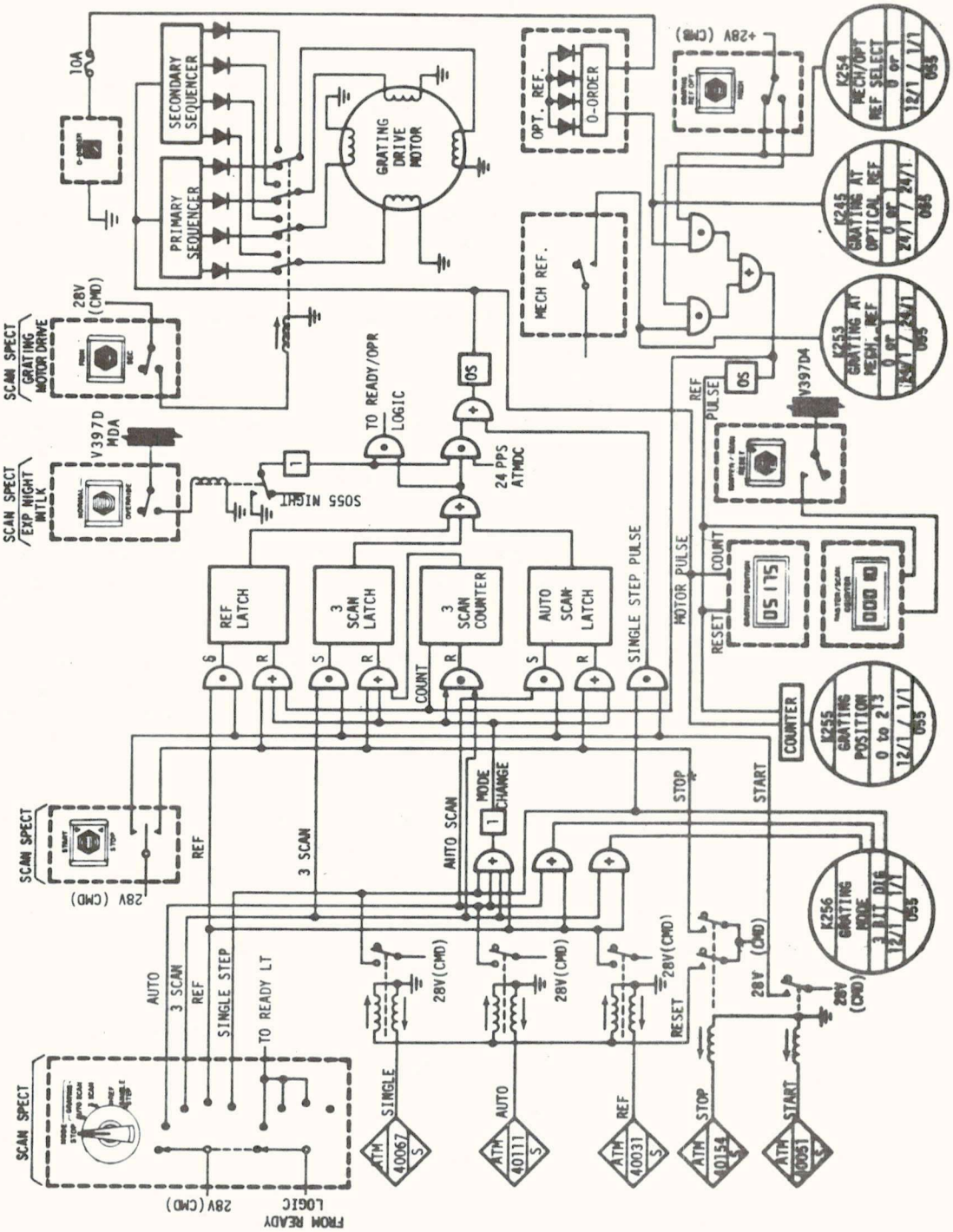

Figure 2.9.3-6
SO55A GRATING DRIVE SYSTEM

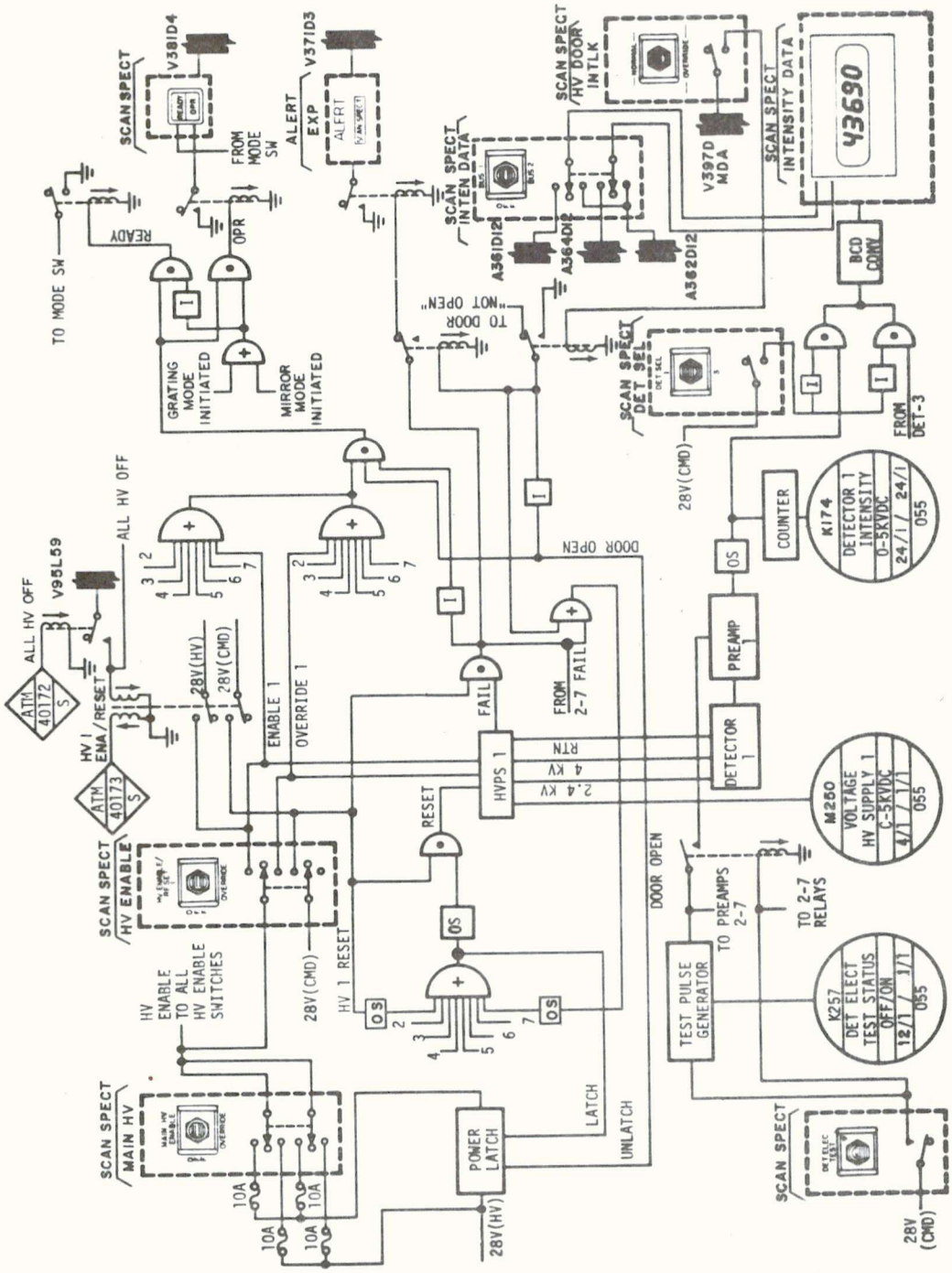

Figure 2.9.3-7
SO55A UV DETECTOR SYSTEM

Over-temperature sensing is included to prevent overheating in the event of failure of the control circuitry.

Controls, Displays and Telemetry - The controls associated with the S055A Thermal Control System are shown scematically in Fig. 2.9.3-8. There are no displays or telemetry functions associated with this system.

2.9.3.4.4 Main Power System - The main power system provides low voltage power for the operation, control and monitoring of the instrument. Two (redundant) low voltage power supplies, selectable from the C&D Console or by DAS/DCS are included in this system.

Controls, Displays and Telemetry - The controls, displays and telemetry functions associated with the S055A Main Power System are shown schematically in Fig. 2.9.3-9.

2.9.3.4.5 Temperature Monitoring Electronics - Temperature monitoring electronics are provided for the purpose of monitoring the temperatures of critical elements of the instrument while in orbit. This system is completely independent of the S055A Temperature Control System.

Controls, Displays and Telemetry - The telemetry signals associated with the S055A Temperature Monitoring System are shown schematically in Fig. 2.9.3-10. The system is activated when the S055A main power switch is on. No displays are associated with this system.

2.9.3.4.6 Spectrometer Pressure Gage - A cold cathode ionization (pressure) gage has been located on the spectrometer case to monitor the pressure in the vicinity of the detectors.

Controls, Displays and Telemetry - The controls, displays and telemetry functions associated with the Spectrometer Pressure Gage are shown schematically in Fig. 2.9.3-11.

2.9.3.5 Performance and Design Data

2.9.3.5.1 Telescope - An off-axis parabola, first surface mirror images the solar disc on the entrance slit of the spectrometer. The mirror has a two axis drive for performing raster scans of 5 x 5 arc minutes and line scans of 5 arc minutes x 5 arc sec. A plane mirror mounted in front of the entrance slit of the spectrometer deflects the major portion of the solar image to the heat rejection system, allowing only a small region of the solar image to pass through a central aperture in the deflection mirror and to fall on the entrance slit of the spectrometer. (Fig. 2.9.3-12)

2.9.3.5.1.1 Optical Characteristics - Table 2.9.3-II outlines the salient telescope optical data.

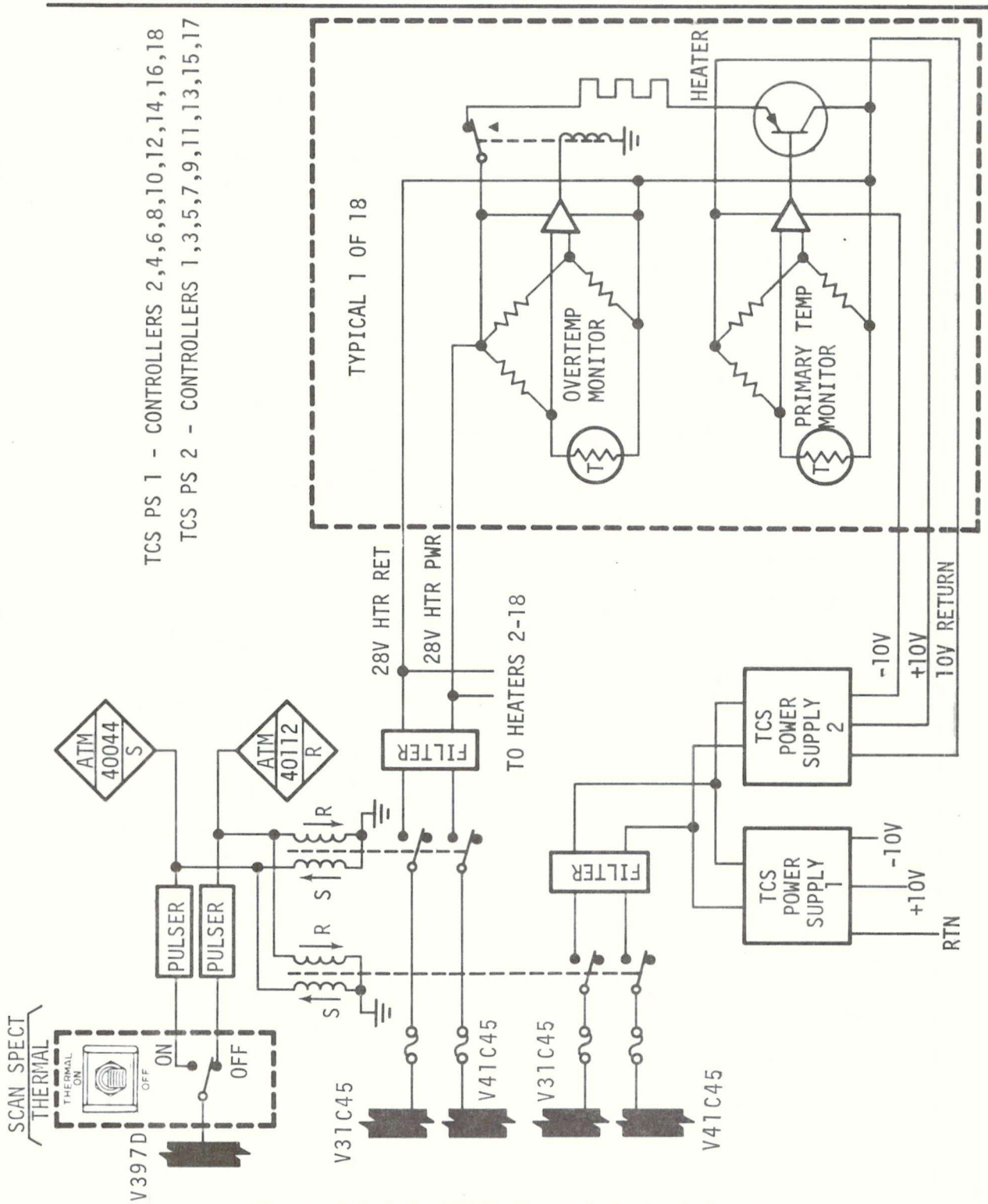

Figure 2.9.3-8 S055A Thermal Control System

S055

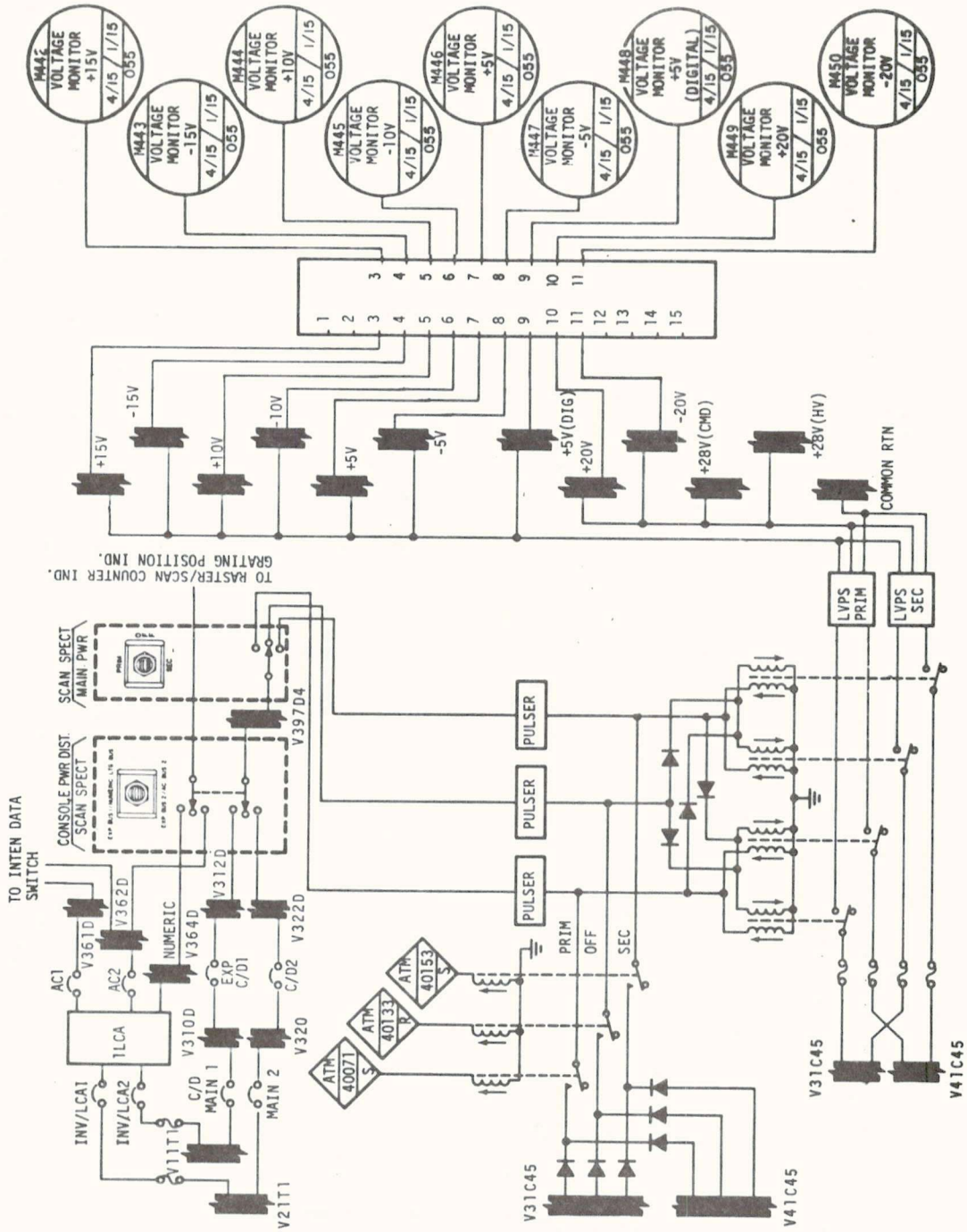

Figure 2.9.3-9 S055A Main Power System

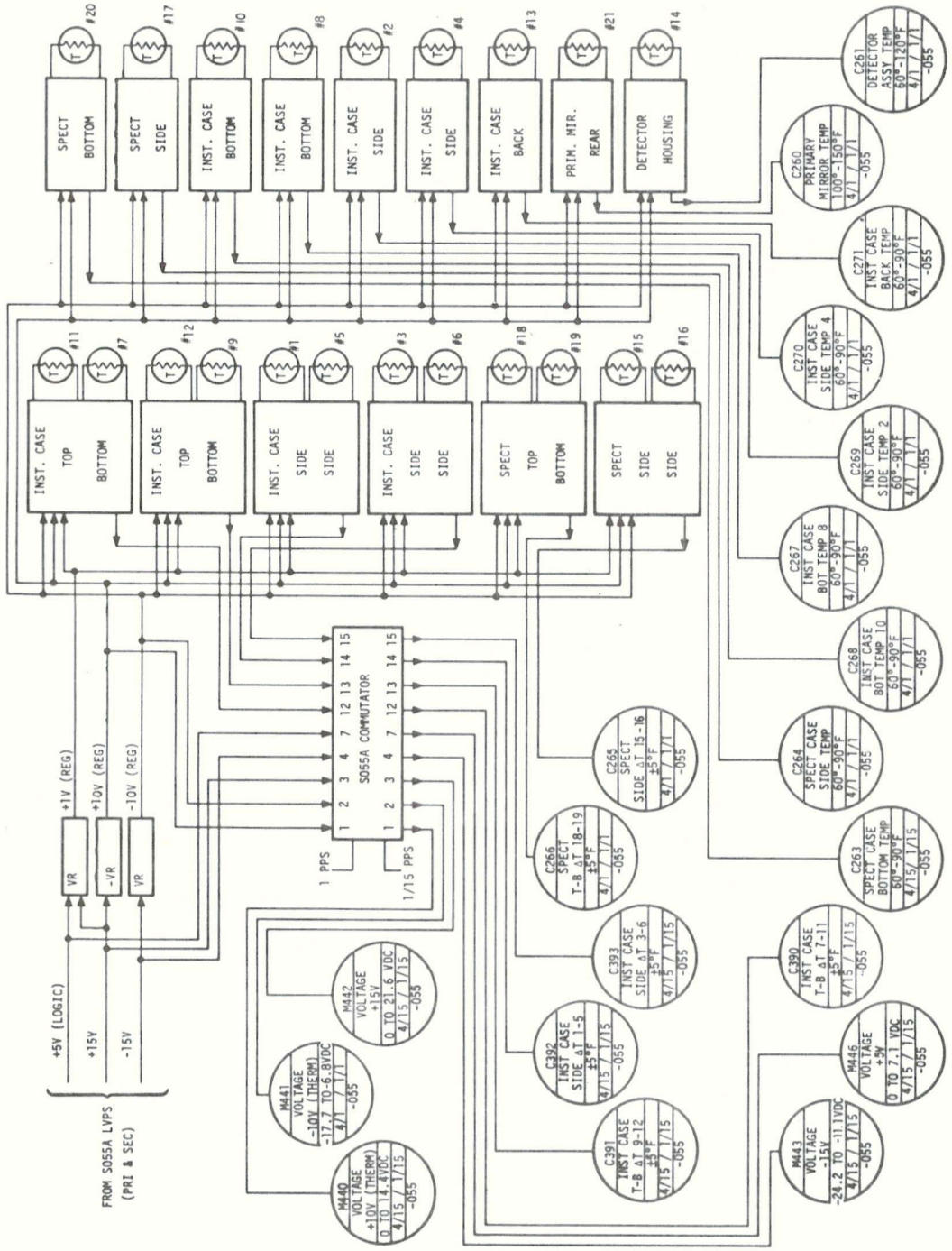

Figure 2.9.3-10 S055A Temperature Monitor System

S055

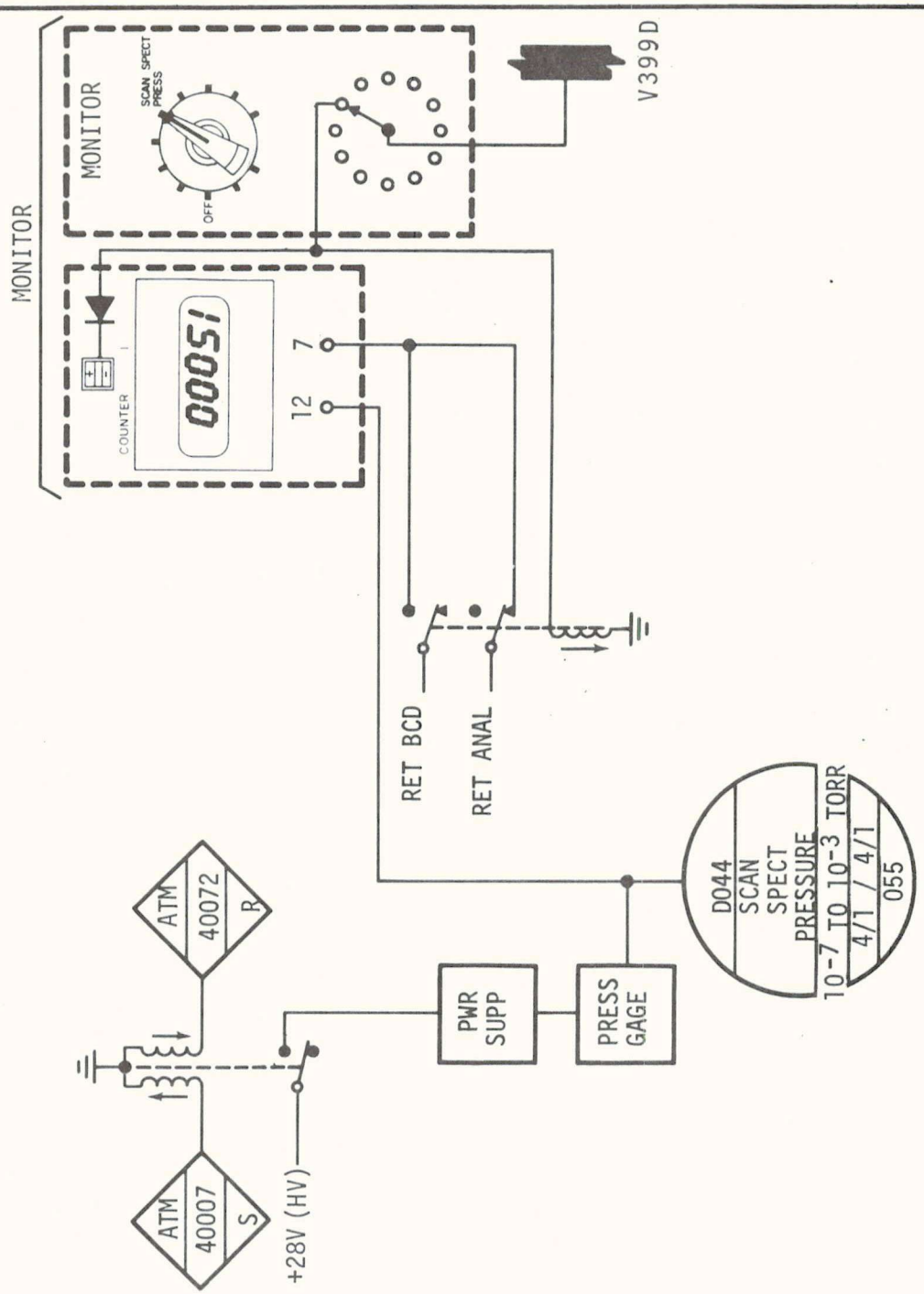

Figure 2.9.3-11 S055A Spectrometer Pressure Gage

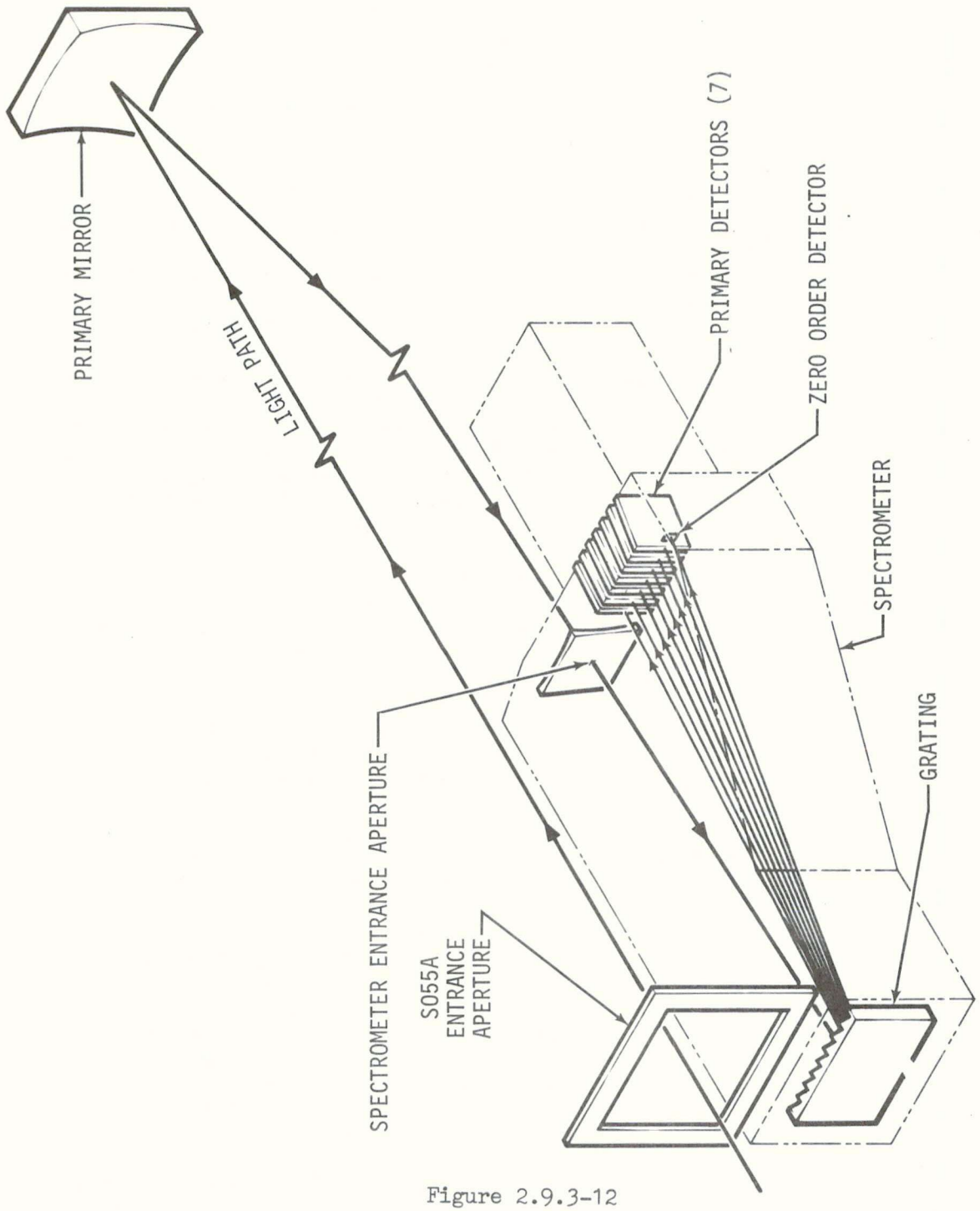

Figure 2.9.3-12
ATM EXPERIMENT S055A UV SCANNING
POLYCHROMATOR/SPECTROHELIOMETER OPTICAL SCHEMATIC

Table 2.9.3.II Telescope Optical Characteristics

CHARACTERISTIC	VALUES
Focal length	2297 ± 2.3 mm
Focal ratio	f/12.5
Focus tolerance	± 350 μ
Entrance aperture	5 arc min field of view
Effective mirror size	18.4cm square
Mirror coating	Evaporated Iridium Film
Off-axis distance	152.4mm
Figure tolerance	± 0.1 at 5461 Å
Smoothness tolerance	>50 Å (rms)
Solar image at Spectrometer slit	2.14 cm diameter

2.9.3.5.1.2 Raster Scan - The primary mirror is capable of being rotated about two perpendicular axes to provide the scanning function of the raster type to examine a preselected square area located on the solar disk. Any line of the 60-line raster pattern may also be selected and scanned individually.

The scanning function is accomplished by rotating the mirror about two mutually perpendicular axes. The scan pattern of the optical axis (center line of reflected light beam) from the paraboloid mirror is shown in Figure 2.9.3-2. Listed below are the principal scanning parameters:

Scan velocity	1 ± 0.01 arc min per second
Turnaround time	0.5 seconds, max
Total scan time (complete raster)	5.5 mintes, max

Raster Scan - Each raster line follows the preceding line by 5 arc seconds ±1 arc second. The total accumulative error over the entire raster pattern will not exceed ± 10 arc seconds.

Mirror Stowed Position - Whenever the scanning function is discontinued, the mirror will stow in a position placing the central ray of the reflected light beam in an area as shown in Figure 2.9.3-2 on the selected line. The stowed position is repeatable within a 5 arc second diameter area. The system, on initial or reapplication of power, automatically places the 5 arc second entrance slit area at the center of line 30. For coalignment purposes the stow position may be manually commanded to appear in the center of any of the 60 lines of raster pattern.

2.9.3.5.2 Spectrometer - Included in the spectrometer is a normal incidence concave grating that is mounted in a rotating mount for the purpose of scanning the specified portion of the UV spectrum.

The grating position may be varied, using a stepper motor and a mechanical drive system to pivot the grating about an axis parallel to the grating lines, thus scanning the diffracted spectrum across the (300-1335Å) Detectors (Figure 2.9.3-6).

2.9.3.5.2.1 Optical Characteristics - Table 2.9.3-II below outlines the salient spectrometer optical data.

Table 2.9.3-III Spectrometer Optical Characteristics

CHARACTERISTIC	VALUES
Entrance Slit	56± microns square (5 arc sec square)
Grating Blank Size	50.0 ± 0.1mm square
Ruled Area	41.0 $^{+1.0}_{-0.0}$ mm square
Grating Constant	1800 lines per mm
Rowland Circle dia.	498.1 mm diameter
Radius of Curvature	498.1 mm ± 0.1%
Blaze Wavelength	800 Å first order
Linear Dispersion on Rowland Circle	11.2 Å per mm
Scattered Light	≥ 0.1% @ 800Å
Focal Ratio	f/12.5

2.9.3.5.2.2 - Spectral Scan - The spectrometer grating can be rotated about one axis to permit wavelength scanning using Detector No. 1. The grating can be stopped at any point in the scanning range to select a desired wavelength at one or several of the detectors. When the grating is fixed at the "optical reference" position, all seven photomultiplier detectors will be illuminated by the wavelengths listed in Table 2.9.3-I.

Table 2.9.3-IV lists salient operational characteristics of the grating drive.

S055

Table 2.9.3-IV Scanning Mechanism Characteristics

CHARACTERISTICS	VALUES
Effective Scan Range	1350 to 300Å (No. 1 Detector)
Total Grating Rotation	5.49°
Direction	From long to short wave length
Total Scan Time	3.81 minutes
Scan Steps	0.2Å per step over full range
Scan Rate	24 steps per second
Repeatability	± 0.2Å

2.9.3.5.3 Spectral Positions - A bank of seven exit slits and their photomultiplier detectors are positioned at near normal incidence on the Rowland Circle. Each of the photo multiplier detector systems feeds a binary counter that is read out into the ATM telemetry system 24 times per second.

(12)

Table 2.9.3-V S055A Operational Limitations

Limitations	Results of Exceeding Limits
STRUCTURES AND DYNAMICS	
Differential Pressure. Instrument differential pressure must not exceed 0.50 psi.	Optical alignment will be permanently affected.
ENVIRONMENT CONTROL	
Ambient Pressure. Instrument pressure must be $\geq 10^{-5}$ torr.	Operation of detectors at pressures greater than 10^{-5} torr may adversely affect detector lifetime. Operation in corona region (10^{-3} to 10^{-4} Torr) will cause HV arcing and detector failure.
Thermal. The TCS must maintain the instrument at nominal 70°F with no thermal gradients across or along instrument greater than ±5°F.	Thermally induced distortions will cause mechanical misalignment of the telescope optics. Deviations from 70°F will cause loss of focus in optical system.
Contamination. No waste dump while aperture door open.	Contamination will cause loss of optics efficiency and detectors performance.
APERTURE DOOR	
The Sun Shield Aperture Door should be closed, either manually or automatically when the optical axis is greater than 22±0.5 arc min from sun center.	Excess solar energy will not be rejected by rejection mirrors. Burning or melting of instrument interior elements possible.
ELECTRICAL POWER	
Voltage. ATM-supplied dc voltage must be within 26.0 to 30.6 vdc.	Permanent damage or data degradation may be experienced.

S055

2.9.4 EXPERIMENT S056, EXTREME UV AND X-RAY TELESCOPE

2.9.4.1 Introduction

A comprehensive study in solar physics requires an investigation of solar radiation across a wide portion of Electromagnetic Spectrum. The S056 experiment was developed to obtain and record data in the X-Ray region of the spectrum. Although the X-Ray radiation intensity level is small when compared with levels at other wavelengths, such as the visible light region, it will provide a considerable amount of information regarding the physical state of the sun, with special emphasis on active solar phenomena such as solar flares.

The S056 Experiment is comprised of two seperate and independently operated instruments. They are the X-Ray Telescope (X-RT) and the X-Ray Event Analyzer (X-REA). The Experiment is deisgned to provide both X-ray filtergrams (solar images of narrow wavelength intervals) in five bandwidths from 5 to 33 angstroms (X-RT) and spectral data (intensity vs wavelength) in two adjacent channels of 10 wavelength bands from 25 to 20 angstroms (X-REA).

The X-Ray Telescope employs glancing indidence optics and six different filters to provide an image of the sun to a photographic film camera. One loaded film magazine is placed in the camera prior to launch and three are stored in the MDA for later replacement by the crew during EVA. Each magazine contains film for 7,200 data frames. The magazines are returned to earth in the CM.

The other instrument is the X-Ray Event Analyzer (X-REA). It consists of two gas filled proportional counters with thin metallic windows, pulse-height analyzers and associated electronics. The two gas filled proportional counters produce linear outputs proportional to the intensity of the energy detected. The pulse-height analyzer sorts the output of the proportional counters, with respect to amplitude, into six energy levels in one channel and four energy levels in the other. These data are transmitted via TM to MSFN or either one of the channels can be displayed on counters or the history plot on the ATM C&D Console in the MDA.

2.9.4.2 Subsystem Interfaces

2.9.4.2.1 Control and Display Panel - Operation of the camera and the X-REA is controlled by the astronaut from the controls available on the MDA-ATM Control and Display panel. Camera mode and X-REA aperture selection as made by the astronaut is based primarily on the information available to him at the panel. An enlarged sketch of the S056 controls and displays is shown in Figure 2.9.4.1.

S056

Two control counters (Control Counters 2 and 3) display, on a

real time basis, a voltage proportional to the counts processed by the pulse-height analyzers. From the activity history recorder, the astronaut can determine the trends in solar X-ray and microwave flux. From these displays, the astronaut establishes the proper controls to operate the camera. The camera status displays indicate the mode and filter sequencing of the camera. All of these are available on the panel.

The only additional information that the astronaut will need are the H-Alpha scope display and the basic ATM mission plan. Occasional voice inputs or requests from the ground mission control center may modify the basic data gathering schedule.

Also available to the astronaut on the panel is the information required to decide emergency shut-down. This would be based primarily on the displays of high count rates and loss of X-REA voltage.

Indication and Experiment status - A number of verification and experiment status signals are required to be transmitted from the experiment to the ATM control console. These signals are of three types:

a. Discrete - Flag indicators
   28 plus 3, minus 4 Vdc
   2.0 kilohms minimum impedance

b. Logic - Binary
   Logic 1: 3.5 to 6 Vdc
   Logic 0: 0 to 1.5 Vdc

c. Analog - 0 to 5 Vdc
   100 kilohms minimum impedance

Control and Display Console switch and display functions for S056 are described in Section 3.0.

2.9.4.2.2 Electrical Power - A summary of the power required by the ATM Experiment S056 follows:

a. X-RT Instrument Power at +28 VDC

(1) Average power: 10 watts
(2) Peak power: 112 watts (300 msec max)
(3) Standby power: 8 watts

b. Camera/Thermal Power at +28 VDC

(1) Average power: 11.2 watts
(2) Peak power: 30 watts
(3) Standby power: 11.2 watts (average)

c. X-REA Power at 28 VDC

(1) Average power: 15 Watts
(2) Peak power: 16 watts
(3) Standby power: 14 Watts

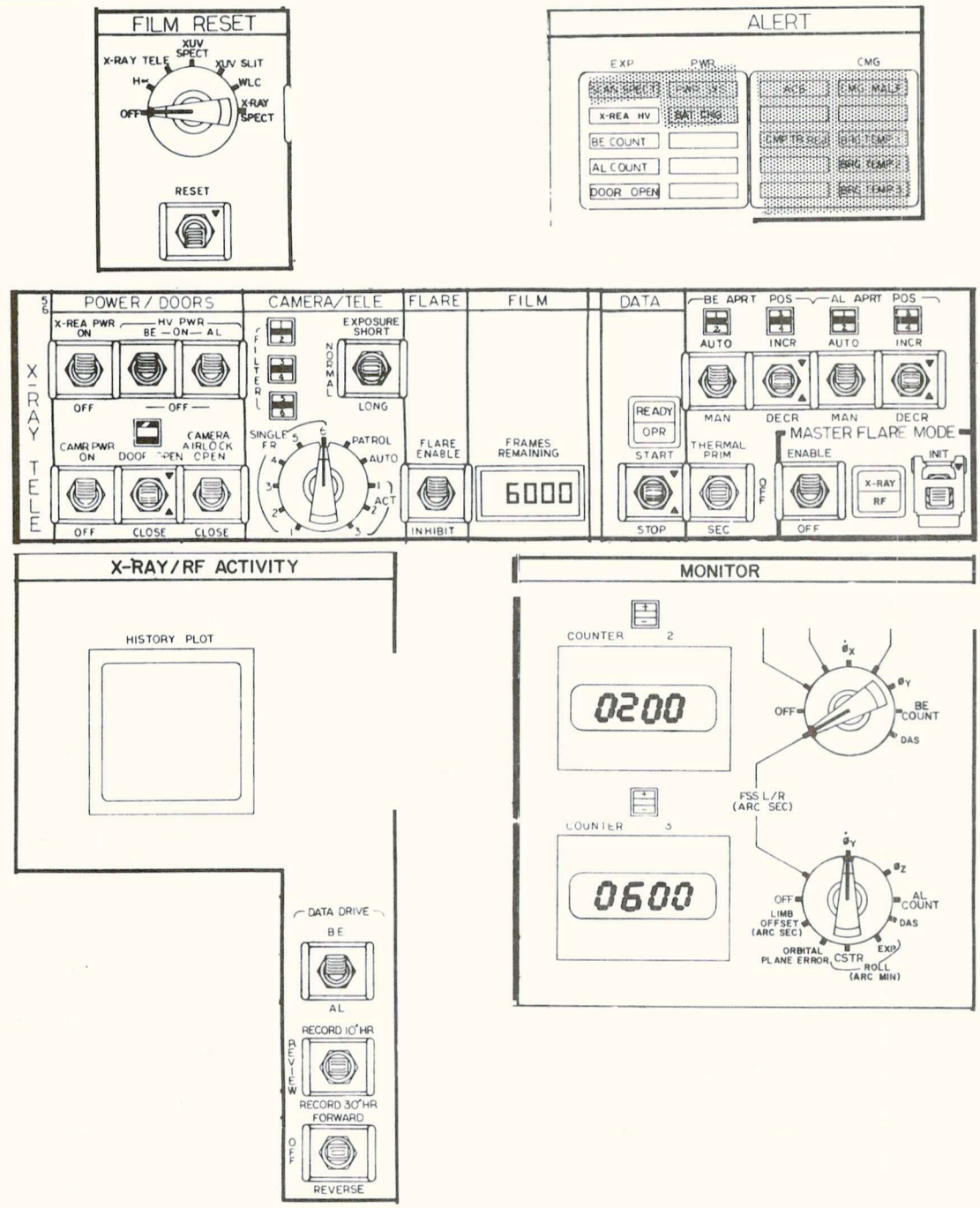

Figure 2.9.4-1 S056 Controls and Displays

A summary of power requirements versus time is shown in figure 2.9.4-2. Figure 2.9.4-3 shows the over-all electrical interface for S056.

2.9.4.2.3 Experiment Measurements and Telemetry - The experiment measurement list consists of 19 housekeeping measurements and one scientific data measurement. Descriptions of these measurements follow.

Housekeeping

a. Analog - The 14 analog measurements consist of five current measurements and nine temperature measurements as shown in Table 2.9.4-I.

b. Event - The five event measurements consist of camera shutter and airlock status, and filter wheel position, thermal shield aperture door closed and thermal shield aperture door open.

Scientific Data - The experiment scientific data consists of 20 bits of information originating in the X-REA. The data describes the X-ray spectrum observed by the X-REA. See Table 2.9.4-I.

2.9.4.2.4 Discrete Commands - A summary of the discrete commands available for the activation of the X-ray telescope are shown in Table 2.9.4-II.

2.9.4.2.5 Environmental

2.9.4.2.5.1 Thermal Interface - The active Thermal Control Subsystem provides the basic thermal environment for the canister in which this experiment will operate. The experiment contains semi-passive electrical heaters and passive insulation and coatings which provide the fine temperature control required for telescope optical alignment. A detailed thermal profile of the experiment is provided in section 2.9.4.5.1.

2.9.4.2.5.2 Outgassing and Contamination Control - Since the operation and orbital storage of the X-RT are to be accomplished in a vacuum environment, the consideration of material outgassing becomes important. Outgassing properties have been a major factor in material selection. All materials selected for the construction of this experiment are compatible with MSFC 50M02442, "ATM Materials Control for Contamination Due to Outgassing." This does not apply to the film.

2.9.4.2.6 Structure and Alignment - The X-RT will be mounted on the X-spar of the ATM canister so that in a zero-G condition the optical alignment reference of the X-RT will be aligned in pitch and yaw to the ATM reference within $\pm$ 1 arc minute measured to a precision of $\pm$ 10 arc seconds.

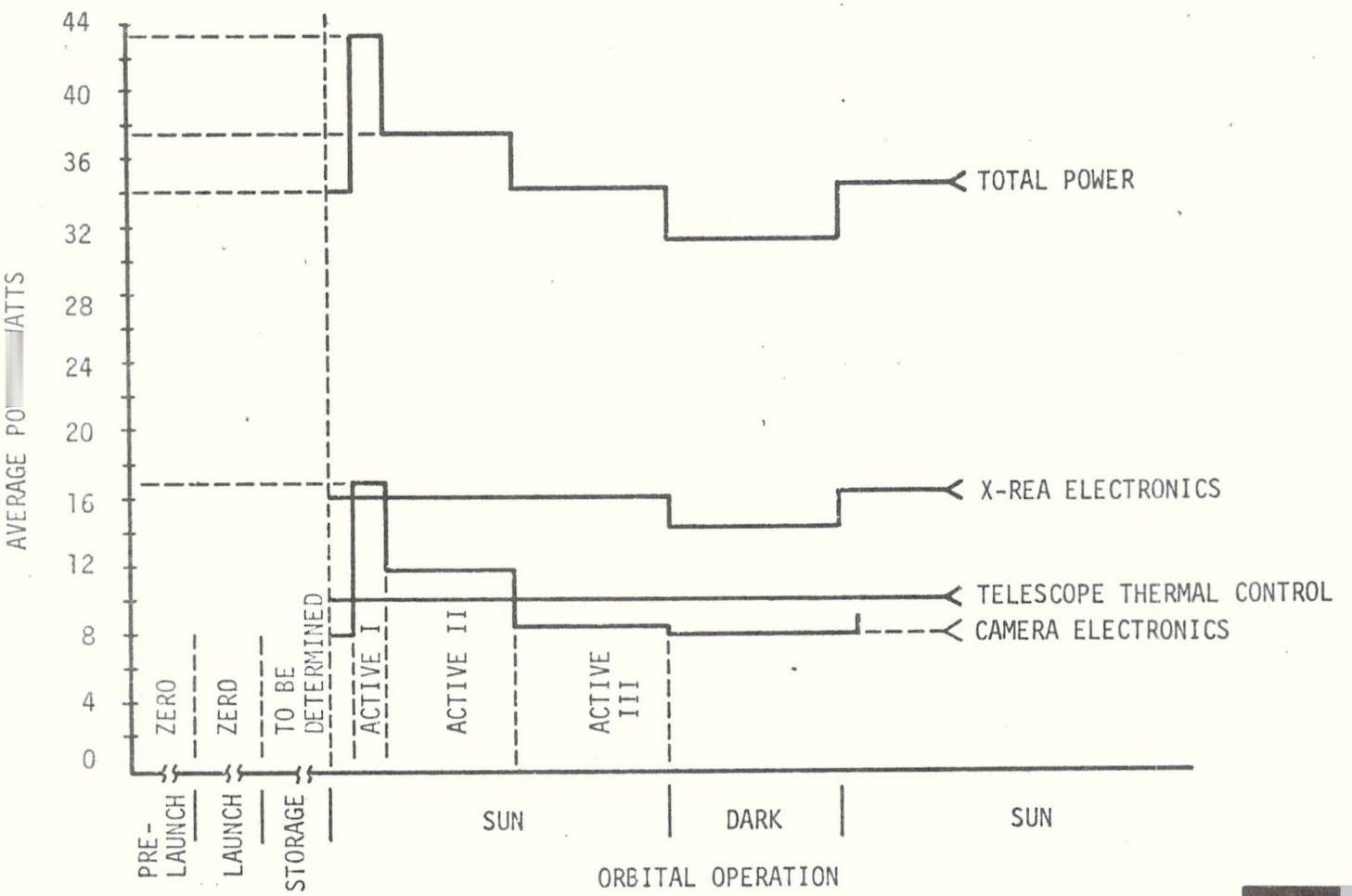

S056

Figure 2.9-2 S056 Power Requirements/Time

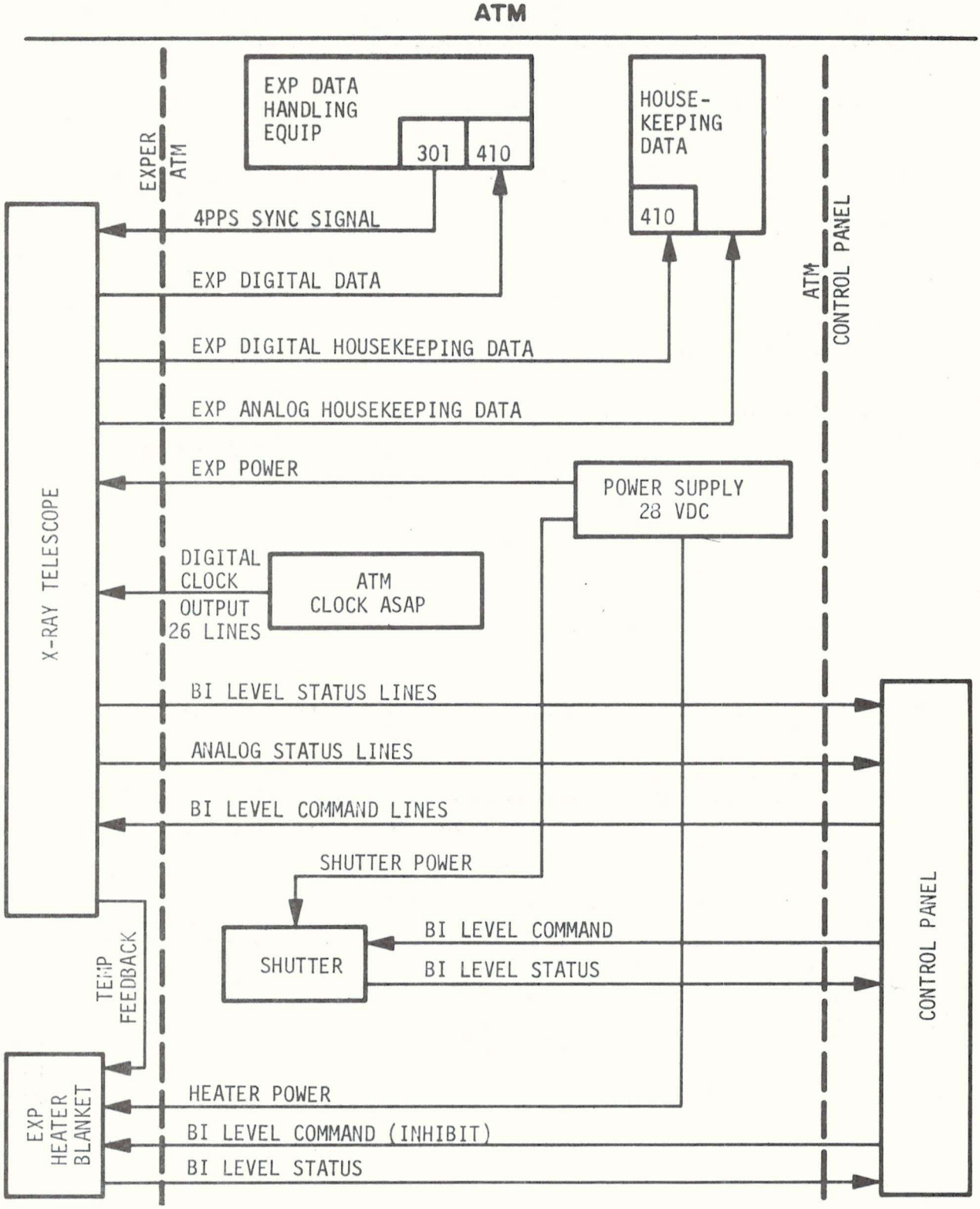

Figure 2.9.4-3 Experiment S056 Electrical Interface Diagram

Table 2.9.4-I S056 Telemetry

	Analog	Discrete	Digital
X-REA	Temperature, X-REA Case Temperature, Be Analog Mod. Current Be HV Current, Al HV Current, X-REA		1-20 Bit Word for Scientific Data
Camera	Current, Camera Elect. Temperature, Camera Elect. Case Temperature, Camera Shutter Temperature, Camera Interface Plate (AFT TUBE)	Shutter Open/Closed Air Lock Open/Closed Filter Position, 1	
Structures	Current, Thermal Control Temperature, Forward Tube Temperature, Mirror Temperature, Center Mount Base Temperature, Center Tubes	Thermal Shield Aperture Door Closed Thermal Shield Aperture Door Open	
TOTAL	14	5	1-20

Table 2.9.4-II - X-Ray Telescope Discrete Command List

COMD NO.	COMMAND NAME	BINARY CODE BIT POSITION SS ADD	DATA								OCTAL CODE
		31	22	23	24	26	27	28	29	30	
362	PRIM	1	0	1	1	0	1	1	1	0	40 156
363	X-RAY TELE THERMAL SEC	1	0	1	0	0	0	0	0	1	40 101
364	OFF	1	0	1	0	1	0	0	0	1	40 121
365	ON	1	0	0	1	0	0	0	1	0	40 042
	X-RAY TELE CAMR PWR										
366	OFF	1	0	0	0	1	0	0	1	0	40 022

S056

2.9.4.2.7 **Film Requirements** - Film should not be **subjected to temperatures in excess** of 80°F, however, if it becomes imperative to subject the film to temperatures exceeding 80°F the following restraints apply:

a. Specifications listed in column A below may not be exceeded.
b. A combination of any four conditions listed in Column B may not be exceeded.
c. Humidity must be between 45-50%.

TEMPERATURE	A	B
Below 45°F	------	1 year
45° - 70°F	1 year	2 months
70° - 80°F	8 months	1 month
80° - 95°F	2 months	12 days
95° - 110°F	4 weeks	5 days
110° - 125°F	2 weeks	2 days

Unexposed film kept at temperatures below 45°F can be stored indefinitely. Temperatures above 125°F may not be exceeded since softening of the emulsion may begin and possible damage cannot readily determined.

Preflight - The storage temperature required for the film is 40° plus or minus 5°F at a relative humidity of between 40 and 60 percent.

Orbital - Storage - The storage range required for the film at a relative humidity of between 40 to 60 percent is between minus 15 and 80°F providing:

a. The rate of descent does not exceed 5°F per hour.

b. The rate of ascent does not exceed 10°F per hour or a temperature of 70°F is maintained for an equivalent number of hours. (Example: Temperature change from 25° to 70°F - 10°/hr = 4.5 hours or a temperature of 70° must be maintained for 4.5 hours after an instantaneous change).

2.9.4.3 Functional Description

2.9.4.3.1 Objectives - The purposes of the experiment is to gather data that will contribute to a better understanding of the processes occurring in the solar atmosphere, primarily in solar flares. To date, the terrestrial **atmosphere has limited the majority of flare data** to the visible and radio **regions. Several rocket and balloon-carried** instruments have indicated **that flares consist of very energetic short**

wavelength processes, but due to limited observation time available and insufficient spectral and spatial resolution, it has not been possible to develop and verify detailed models.

The spectral data obtained by the experiment will be analyzed to give flare temperatures, densities, and chemical abundances. The filtergrams will indicate both the temporal and spatial variations of these quantities in flare regions.

The strong nonthermal X-ray emission characteristic of flares will be used to gain an increased understanding of the influence of the magnetic field on flare development. This understanding should lead to more definite relationships between sunspots and flare formation. Of particular interest will be the processes occurring during the initial stages of flare development and the comparison of flare emanations as observed and measured in the X-ray spectrum with those recorded in the H-Alpha and radio regions.

2.9.4.3.2 Concept - The spatial information required to satisfy the objectives will be obtained with two separate and independent instruments to obtain complementary data:

The X-ray Event Analyzer (X-REA) provides spectral data (intensity vs. wavelength) in two adjacent channels divided further into 10 wavelength bands from 2 to 20 angstroms, using proportional counters and pulse height analyzers. Gas-filled proportional counters with metallic windows on the counters provide a basic band-pass for X-ray photons.

Proportional counters have the property of generating output pulses that are linearly proportional to the energy of the detected photons. Analysis of the output pulses on an amplitude basis provides a satisfactory method of photon energy resolution. The process of sorting the pulses (in pulse-height analyzers) is performed with high-speed digital circuitry, and, therefore, the speed of response of the proportional counters is not (appreciably) decreased.

Two limitations of proportional counters should also be identified. One is that the energy resolution is limited to no more than 15 percent (E_o/E 0.15) which is generally not sufficient to identify individual spectral lines, but is sufficient for the purposes of this study. The other is that the characteristics of proportional counters change after a high but limited number (about one billion, 10^9) of photons have been detected. The counters should therefore never be exposed to extremely high counting rates, and particularly, should be turned off whenever crossing through the South Atlantic Anomaly.

S056

The X-ray Telescope (X-RT) employs glancing-incident optics to provide spatial data in the form of X-ray filtergrams (solar images of narrow wavelength intervals) in five bandwidths from 5 to 33 angstroms.

(See figure 2. 9.4-4 and figure 2. 9.4-5). Locations of the X-RT and X-REA on the ATM X-Spar are shown in figure 2. 9.4-6.

Soft X-ray solar images are formed using a two-element, double-reflection aplanatic telescope (see Figure 2. 9.4-7). Paraboloidal and hyperboloidal elements placed confocal to each other and used in regions where their surfaces are nearly parallel to their axis of revolution form surfaces which are at high angles of incidence to the incoming solar photons. The properties of such a combination are that incoming paraxial rays first strike the paraboloidal surface, undergo total external reflection and are imaged toward the focal point. Before focusing, the rays strike the confocally-placed hyperboloidal surface, where they again undergo total external reflection and are imaged at the hyperboloid's second focal point.

The camera's film plane is placed coincident with this second focal point and six different filters are positioned ahead of the film plane. The resulting data are 5 solar filtergrams in the 5 to 33 angstroms region and one in the visible range.

Note that the image quality of this focusing device is excellent on the optical axis, but is degraded with angular deviations from the optical axis greater than 7 arc seconds.

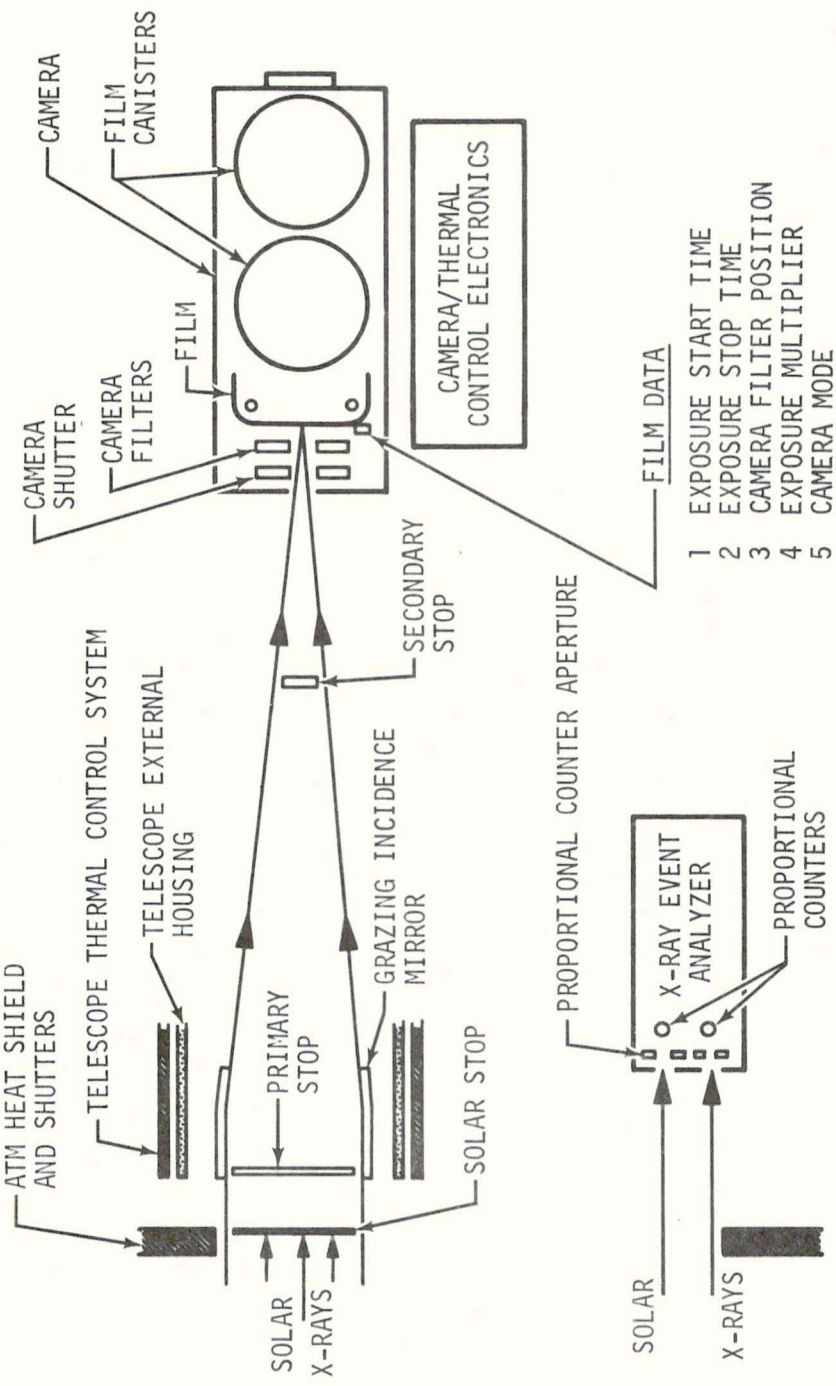

Figure 2.9.4-4 X-Ray Telescope Experiment S056 Block Diagram

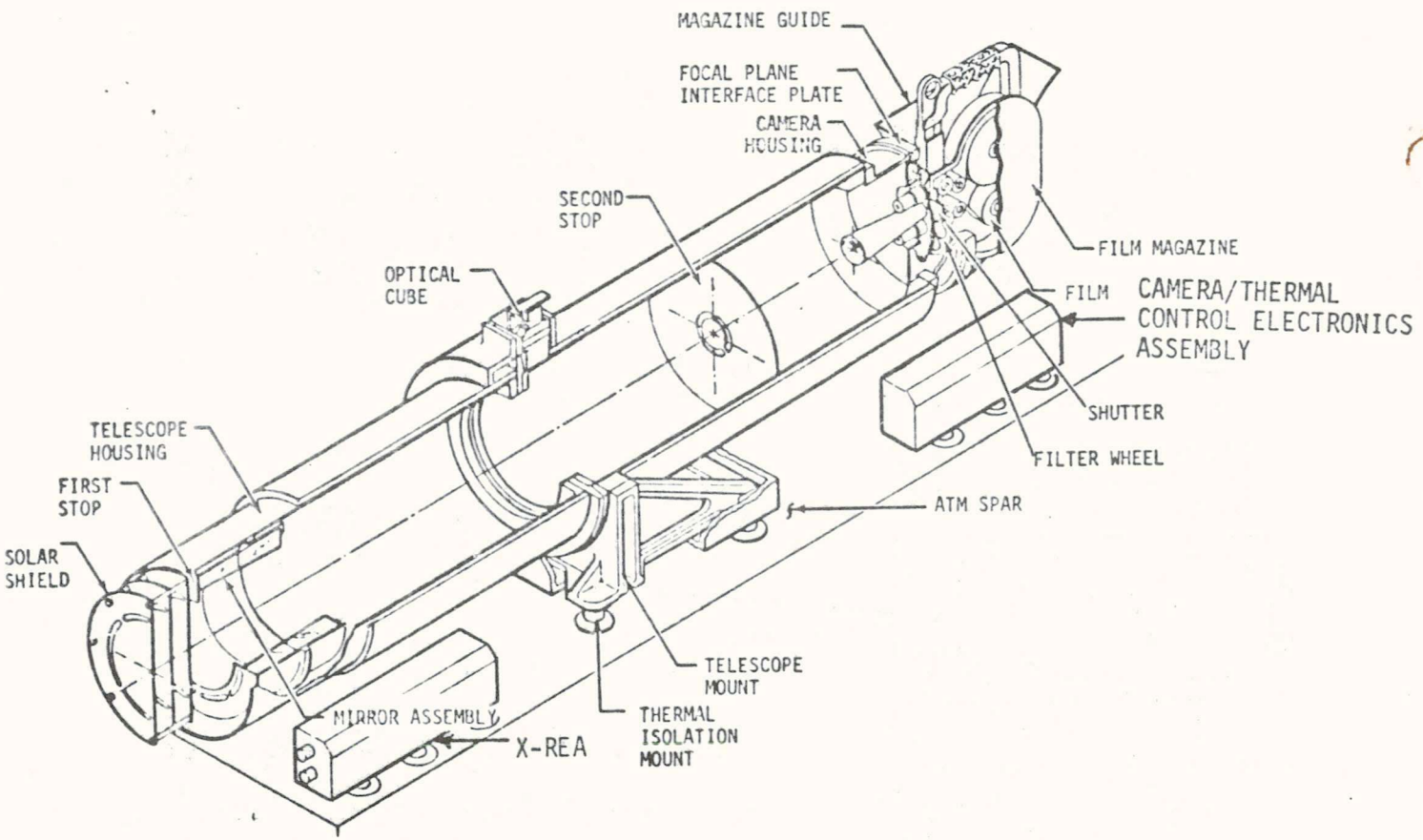

Figure 2.9-4 Experiment S056 Grazing-Incidence X-Ray Telescope

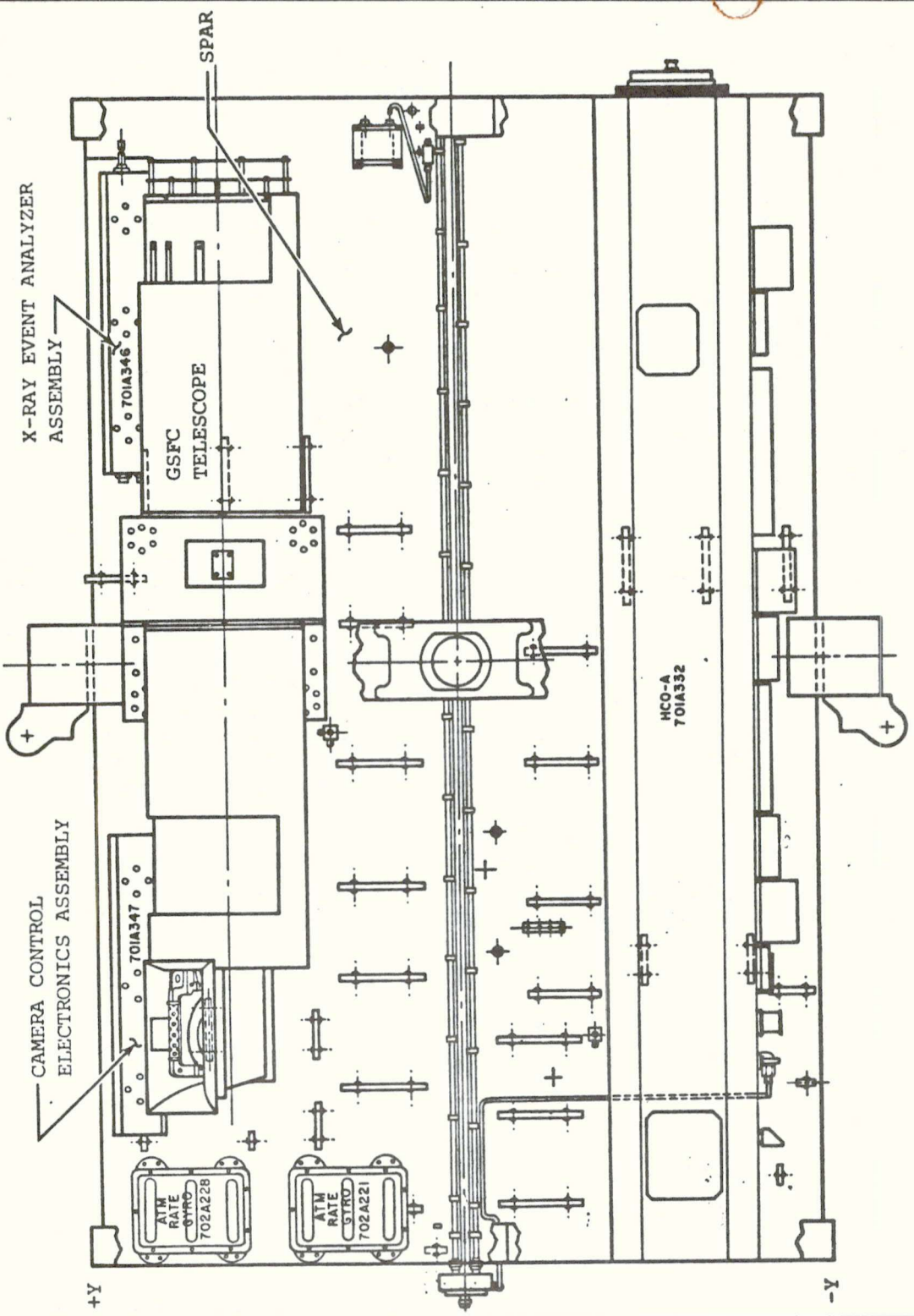

Figure 2.9.4-6 Location of S056 Telescope on ATM Spar

S056

2.9.4.4 Major Component Functional Description - Of the three major assemblies of the experiment, two are concerned with the photographic portion of the experiment. They are the telescope and camera assembly, and the camera/thermal control electronics assembly which comprise the X-ray Telescope. The X-Ray Event Analyzer is a separate major assembly of the experiment which can operate independently of the photographic portion.

The telescope subassembly is the prime structural unit of the X-ray Telescope. It forms the X-ray images of the sun and provides the physical support for the camera. Grazing incidence mirrors, supporting tubes, centermount, and thermal control components are parts of the telescope subassembly.

The camera records the X-ray image on film along with ancillary data describing the experiment conditions that exist at the time of exposure. The camera subassembly consists of the film magazine, the interface plate, the shutter and filter wheel, and associated drive mechanisms.

The camera/thermal control electronics assembly controls the operation of the electromechanical components within the camera assembly and the operation of the telescope assembly thermal environmental control system. It consists of exposure sequencers, timers, mode logic circuitry, and motor drive power generators for the camera assembly, and thermal control units for the thermal control system.

The X-ray Event Analyzer provides a voltage output which is proportional to the level of solar activity. This output can be recorded by the activity history recorder for a record of solar activity and monitored by control Counters 2 and 3 to aid the astronaut in the selection of camera modes of operation. The analyzer will also acquire information on the spectral distribution of solar X-ray flux which is telemetered to ground as primary experiment data.

The X-ray Event Analyzer is mounter immediately beside the X-ray Telescope. It consists of two proportional counters with aperture size control, pulse height analyzers, digital channel counters, ratemeter and activity history recorder drive circuits, signal conditioners, and power supplies

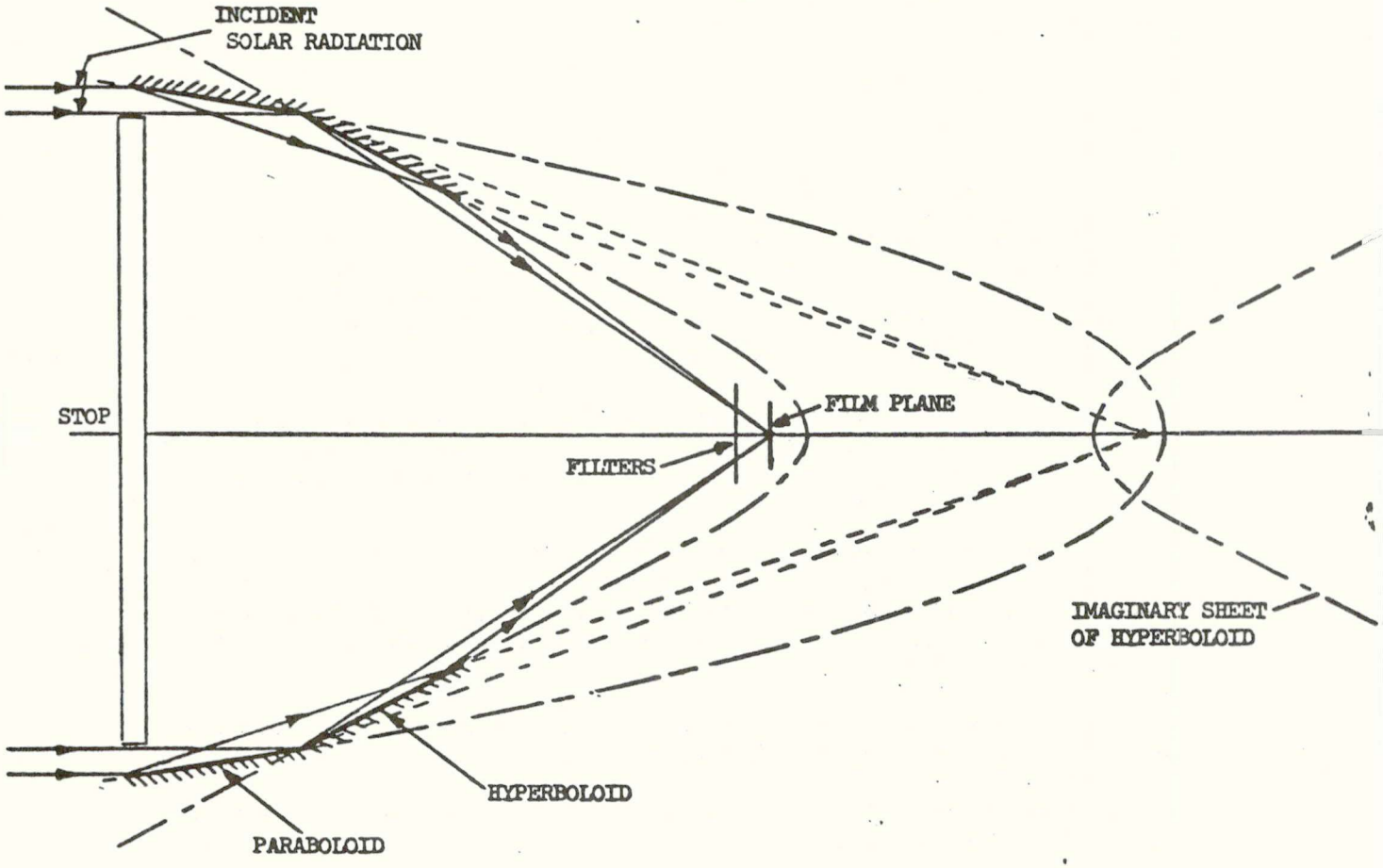

Figure 2.9.4-7 -Optical Configuration of the X-Ray Telescope

2.9.4.4.1 Telescope Assembly - The telescope assembly consists of the following major sections:

a. Mirror Assembly
b. Forward Tube
c. Aft Tube
d. Mounting Plate
e. Insulator Plate
f. Optical Cube Assembly
g. Thermal Shroud
h. Solar Shield
i. Thermal Isolation Mount
j. Center Mount
k. Thermal Control System

The sections of the telescope assembly are bolted together to form a unitized tubular assembly with the parabolic-hyperbolic mirror assembly mounted in the forward tube and the camera mechanism attached to the aft tube. The mounting plate, about which both the forward and aft tubes are joined, is bolted through a spherical seat to the center mount casting.

The thermal isolation mounts complete the interface between the center mount casting and the Y-Spar. Thermal protection is also provided by means of the forward, aft, and center mount thermal shrouds which consist of multilayered NRC-2 super insulation wrapped around the telescope.

Each component is described in more detail in the following paragraphs.

2.9.4.4.1.1 Mirror Assembly - The X-RT uses a grazing incidence parabolic-hyperbolic mirror to focus the X-rays on the focal plane of the camera for recording on 35 mm film.

The mirror assembly consists of the front aperture stop plate, the parabolic and hyperbolic mirror elements, and the mirror cell.

The stop plate controls the field-of-view of the telescope. It is attached to the front of the mirror cell.

The mirror cell, bolted to the forward tube, supports the mirror elements and acts as an alignment system to obtain concentricity with the telescope mechanical axis. The mirror cell and stop plate are machined from beryllium.

The mirror elements are manufactured from fused silica. The forward fused-silica element has a parabolic inner surface while the rear fused-silica element has a hyperbolic inner surface. Flat surfaces, polished to $\lambda/4$, are visible through six equally-spaced holes in the front stop for alignment purposes. Outline drawings of the two mirrors are shown in Figures 2.9.4-8 and 2.9.4-9.

The mirror cell is designed for zero clearance with the mirror elements at 90°F. At the nominal experiment operating temperature of 70°F, the elements will be held by a flange machined at the rear of the cell and by a stop plate at the front of the cell.

2.9.4.4.1.2 Forward Tube - The forward tube of the X-RT is machined from beryllium. The forward tube is 14-5/8 inches outside diameter with a wall thickness tapering linearly from 1/4-inch at the central flange to 1/8-inch at the mirror mount. This linear taper is an approximation of the deflection curve of a cantilevered beam with a concentrated load at the end. The deviation between the true parabola and a straight line is only 0.002 inch. Twelve equispaced internal castellations at the mirror end of the tube are provided as a mounting surface for the parabolic-hyperbolic mirror. The face of the castellations is tapered 2 degrees and will be lapped with the mirror spacer. This lapped seat acts as a spherical surface and permits fine angular corrections between the optical axis of the mirror and the mechanical axis of the tube. Movement of the mirror spacer is made by four adjustment screws having 40 threads per inch.

The castellations reduce the radial rigidity of the tube. Twelve slots 1/8-inch wide and 6 inches long, equispaced between the castellations around the circumference, provide spring action. This spring action is necessary to compensate for differences in thermal expansion between the mirror and the tube. The slots also provide a vent path for gasses trapped in the tube. At the opposite end of the tube an internal bolt flange is provided for joining the forward tube, aft tube, and mounting plate. A large fillet is provided at the flange-tube junction to limit stress concentration at that point. The cantilevered end of the tube is provided with 32 number 6-32 tapped holes, used to attach the solar shield and the thermal shroud to the tube. The internal surfaces of tube are painted with 3M Black Velvet paint.

2.9.4.4.1.3 Aft Tube - An internal bolt flange is provided at the forward end of the aft tube with a pattern matching the 24 bolt holes in the forward tube and the central mounting flange. At the rear end of the tube, the 1/8-inch wall thickness is flared to 3/4-inch thickness to provide sufficient material for the tapped holes used in attaching the camera mechanism housing. Slots are provided at the tapped holes to vent any trapped gasses.

S056

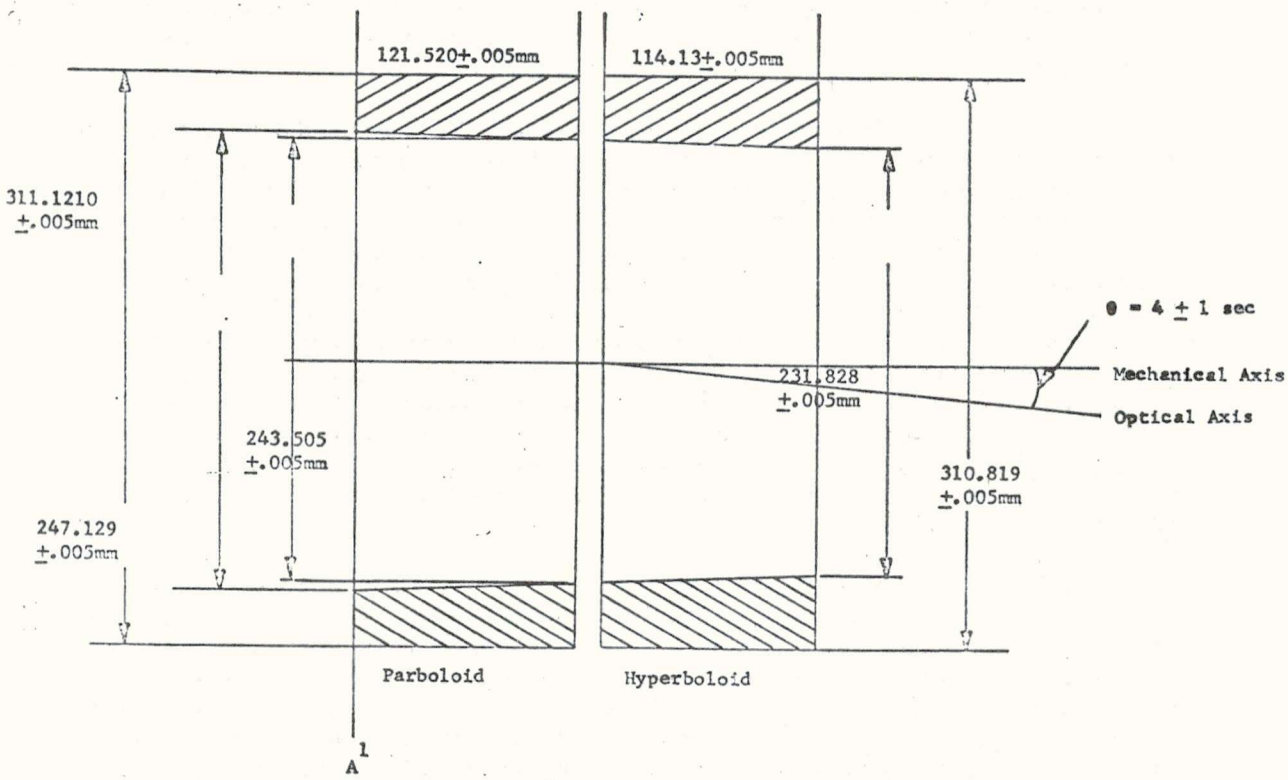

Figure 2.94-8 Physical Constants of Telescope Mirror for Flight Unit

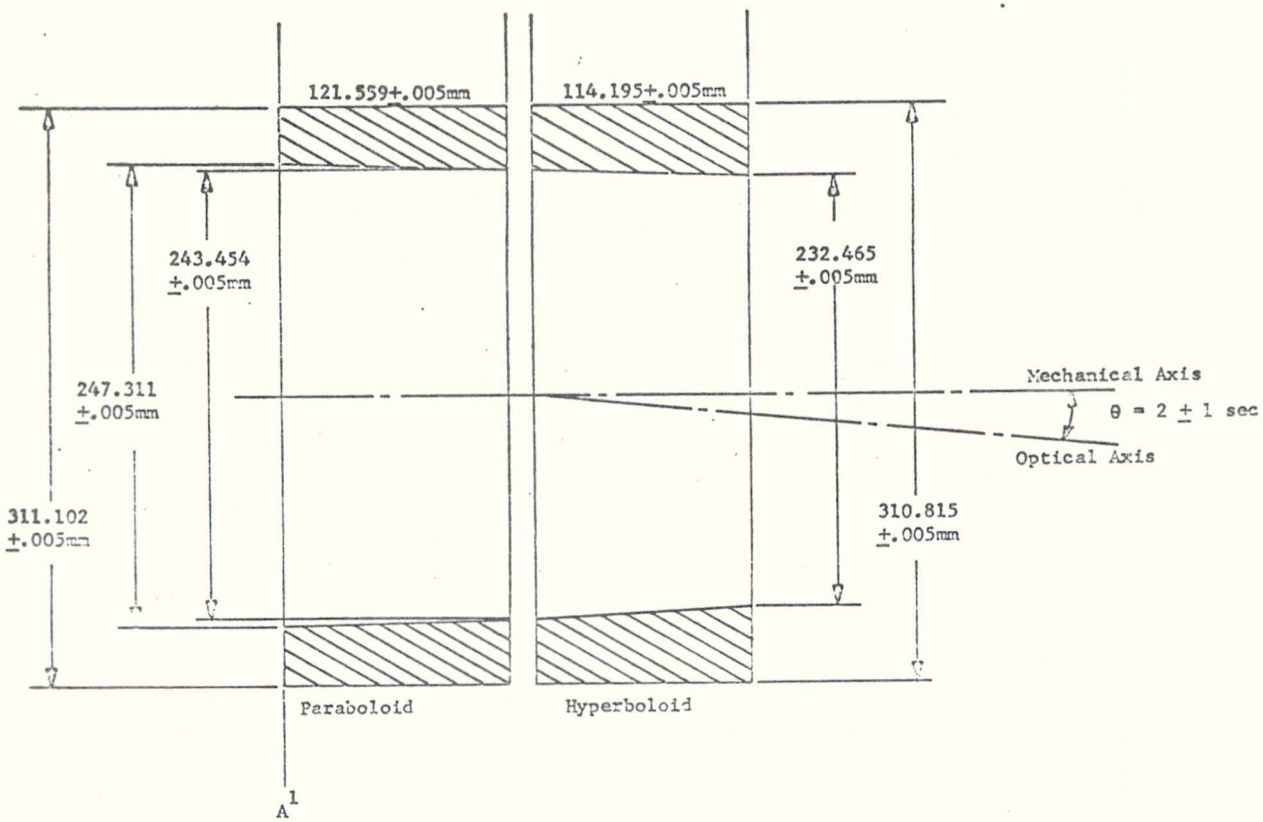

S056

Figure 2.9.4-9 Physical Constants of Telescope Mirror for Flight Back-up Unit

2.9.4.4.1.4 Mounting Plate - The mounting plate is used to bolt the forward and aft tubes together. The plate is 1/2-inch thick titanium. Two pins are provided to align the tubes at assembly. Twenty-four 5/16-inch diameter bolts are used to fasten the assembly together.

Another function performed by the mounting plate is to align the X-RT optical axis to the pointing vector of the ATM by means of a spherical seat.

2.9.4.4.1.5 Insulator Plate - The insulator plate serves as the mating half (nonmovable) of the spherical seat and as a thermal barrier between the tube and the mount casting.

The insulator plate has a shoulder that pilots into the center mount casting and is held in place by eighteen bolts. Clearance holes are provided in the mounting to clear the 3/8-inch mounting bolts and the adjustment tooling.

2.9.4.4.1.6 Optical Cube Assembly - The optical cube assembly mounts to the boss at the top of the center mount casting. The optical cube is used as a primary alignment reference so that the optical axis of the X-RT can be aligned with the pointing axis of the ATM. The optical cube assembly consists of the mount plate, base plate, optical cube, and the protective cover. The mount plate and base plate are machined from beryllium and are lapped together to form a 20-inch radius spherical seat. Angular adjustments are made by turning six 64-pitch screws which are part of the alignment tooling. The optical cube is made of quartz, 1 1/2 inches on each side. The surfaces are mutually perpendicular within 1 arc second. A protective frame surrounds the optical cube to prevent damage while allowing five surfaces of the cube to be viewed during experiment external alignment.

2.9.4.4.1.7 Thermal Shroud - The forward and aft tubes and center mount of the X-RT are insulated to maintain a predetermined temperature profile along with longitudinal axis of the X-RT. See Figure 2.9.4-11 for an exploded view of the thermal control components. The thermal insulation consists of 20 layers of NRC-2 super-insulation (1/4-mil thick aluminized mylar) wrapped around the X-RT. A carrier keeps the insulation approximately 0.2 inch away from the X-RT tube. The shroud is an aluminum cylinder perforated with holes which remove approximately 68 percent of the material from the sheet from which the shroud is made. Stainless steel leaf springs maintain the required spacing between the shroud and the X-RT. The springs limit the amount of conductive heat transfer to the shroud. An alumnized mylar retainer, held away from the shroud by KEL-F standoffs, covers the outside of the NRC-2 insulation.

2.9.4.4.1.8 Solar Shield - The solar shield is designed to reflect most of the nonfocusing solar radiation incident on the face of the X-RT. The solar shield (Figure 2.9.4-10), consists of three thin discs separated from each other by a standoff ring. Each disc is made of 0.015-inch thick aluminum and consists of two basic parts: the outer annulus has a rolled lip on both the inner and outer diameters to provide stiffness; the inner disc has a rolled lip on its outer edge for the same purpose. The two parts are held together by six T-section ribs, each 1/16-inch wide. The ribs of the three discs are aligned to each other and to the ribs in the front stop of the parabolic-hyperbolic mirror assembly.

The discs are held 2 inches apart by a series of tubular standoffs on the ring weldment. The weldment, made of titanium, consists of tubes electron-beam welded to the face of a ring. The ring is 14.6 inches outside diameter (OD), 13.3 inches inside diameter (ID) and 1/4-inch thick. The tubes are 5/16 OD with .030-inch thick walls. Raised pads are provided on the face of the ring to reduce the area of contact between the ring weldment and the forward tube of the X-RT.

The dimensions of the slot in each shield is dictated by the optical field-of-view. A 1/32-inch radial clearance plus a 1/2-degree angular clearance is provided beyond the field-of-view. As a result, the slot width of each shield is different.

2.9.4.4.1.9 Thermal Isolation Mount - The thermal isolation mount is designed to support the X-RT, maintain optical alignment of the X-RT, and thermally isolate the X-RT from the X-spar. Thermal conduction between the X-spar and the X-RT is limited to 0.6 BTU/Hr°F.

Three basic parts comprise the thermal isolation mount, (Figure 2.9.4-11); the standoff, the thin wall component; the flange; and the insert. When the mount is assembled, the insert is placed into the standoff with an excess of epoxy applied to the internal mating surfaces. Additional epoxy is applied to threads of the flange and its cavity. Then the assembly is threaded together. Vent holes are provided in the flange to allow excess epoxy to escape. The insert is totally encapsulated in epoxy with outgassing limited only to the exposed area of the vent holes.

2.9.4.4.1.10 Center Mount - The center mount is a machined aluminum casting consisting of an annulus 17 3/4 inch outer diameter, 14 7/8 inch inner diameter and 2 3/8 inch wide. A groove with threaded inserts is provided in the face of the annulus to attach the insulator plate and the mounting plate. The annulus sets perpendicular to a 19 1/2 inch square base plane. Ribs span diagonally from the centerline of the annulus to the rear of the base and laterally from the annulus to the base plane. Pads are provided on the center mount for the mounting of the optical cube assembly and the thermal isolation mounts.

S056

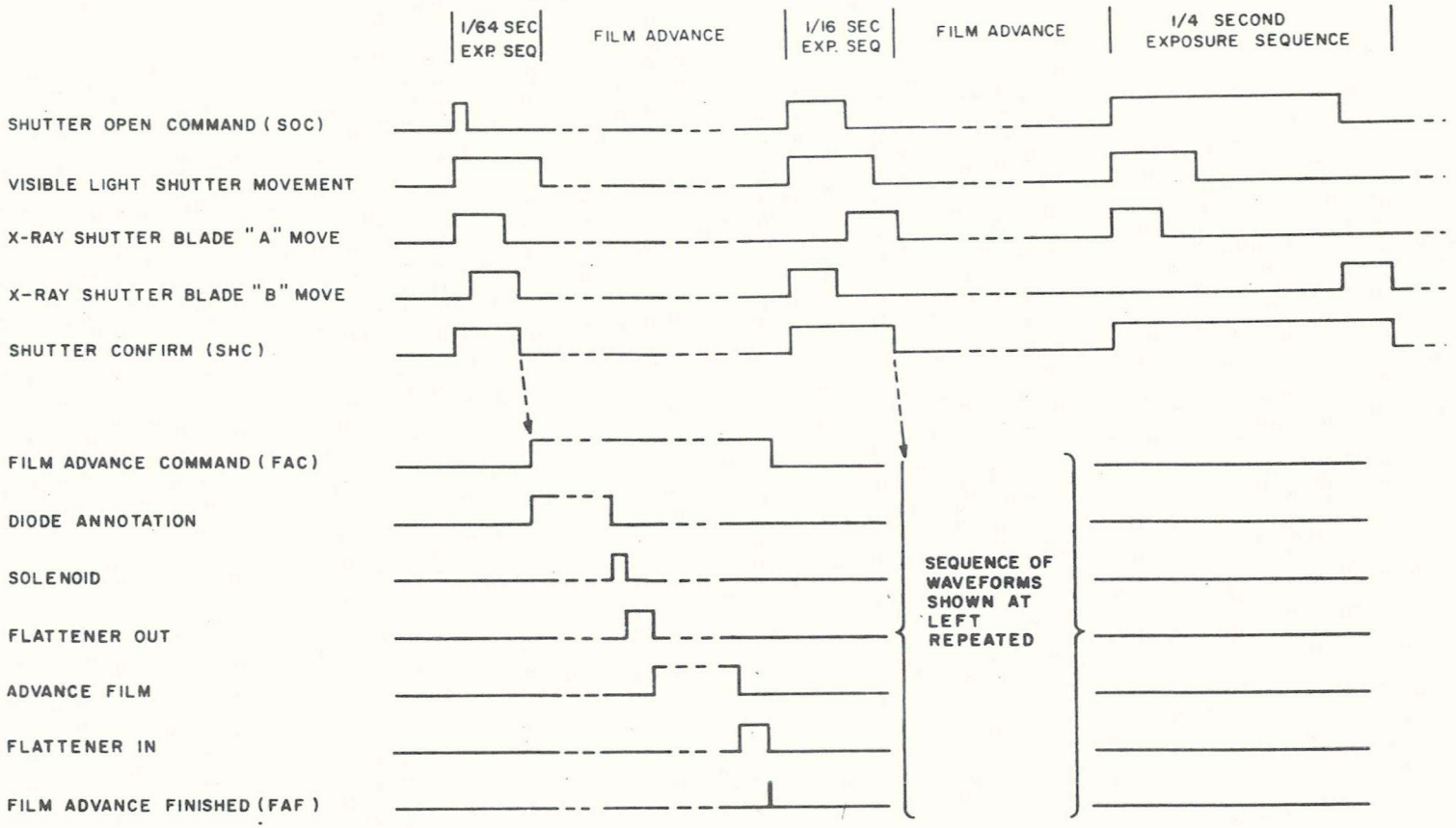

Figure 2.9.2-10 Camera Timing Diagram

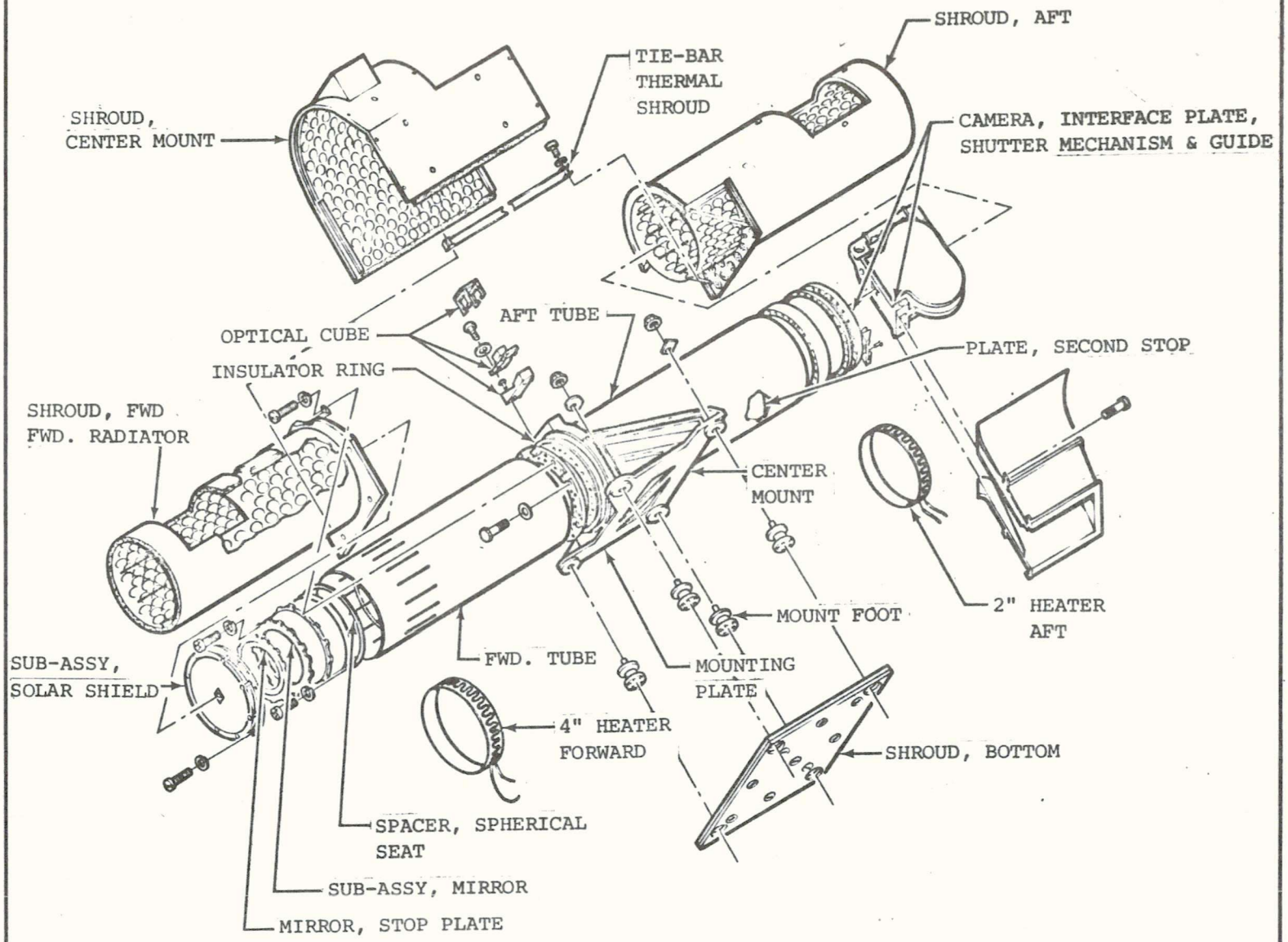

Figure 2.9.4-11 Thermal Control Components

2.9.4.4.1.11 Telescope Assembly Thermal Control System - The function of the thermal control system is to maintain a constant temperature of 70 ± 0.1°F along the X-RT. A constant temperature is required in order to maintain the film plane within ± 0.002 inches of the focal plane of the glancing incidence optics.

To perform this function, the thermal environmental control system installed in the X-RT consists of the following components:

a. Control Thermistors
b. Thermostats
c. Heaters
d. Thermal Control Units

The built-in total redundancy of the system consists of duplicate control thermistors, thermostats, heaters and thermal control units. Either of the two redundant thermal control systems can be selected by a three-position switch mounted on the Control and Display Panel or by ground command.

A block diagram of the telescope assembly thermal environmental control system is shown in Figure 2.9.4-12. The system components are described in the following paragraphs.

Control Thermistors - The function of the control thermistors is to provide a voltage proportional to the telescope temperature to the input of thermal control unit. Six sets of control thermistors (one for each heater) are mounted on the telescope. Four thermistors wired in series comprise a set. Two control thermistor sets are located at the forward and two at the aft end of the beryllium tubes. Another two sets are located on the center mount casting. The control thermistors are metal-encased temperature sensitve resistors, MSFC drawing number 50M10346.

Thermostats - The thermostats function as high temperature cutoff devices. If the control thermistor system fails and the X-RT temperature exceeds 71.8 to 73.5°F, the thermostats automatically shut the heaters off. One thermostat is associated with each set of control thermistors. Therefore, the forward tube, camera mechanism housing and center mount each contain two thermostats. The thermostats are shown on MSFC drawing number 50M16067.

Strip Heaters - The strip heaters are thermofoil heaters which are etched foil patterns laminated between thin layers of insulation. This type heater permits efficient heat transfer without hot spots and with a minimum sacrifice of space and weight.

The heater elements are wrapped circumferentially about the X-RT and held in place with a shrink band. Two four-inch wide heaters are located at the sun end of the forward tube and two two-inch wide heaters are located around the camera mechanism housing. Each heater is capable of delivering 10 watts of power.

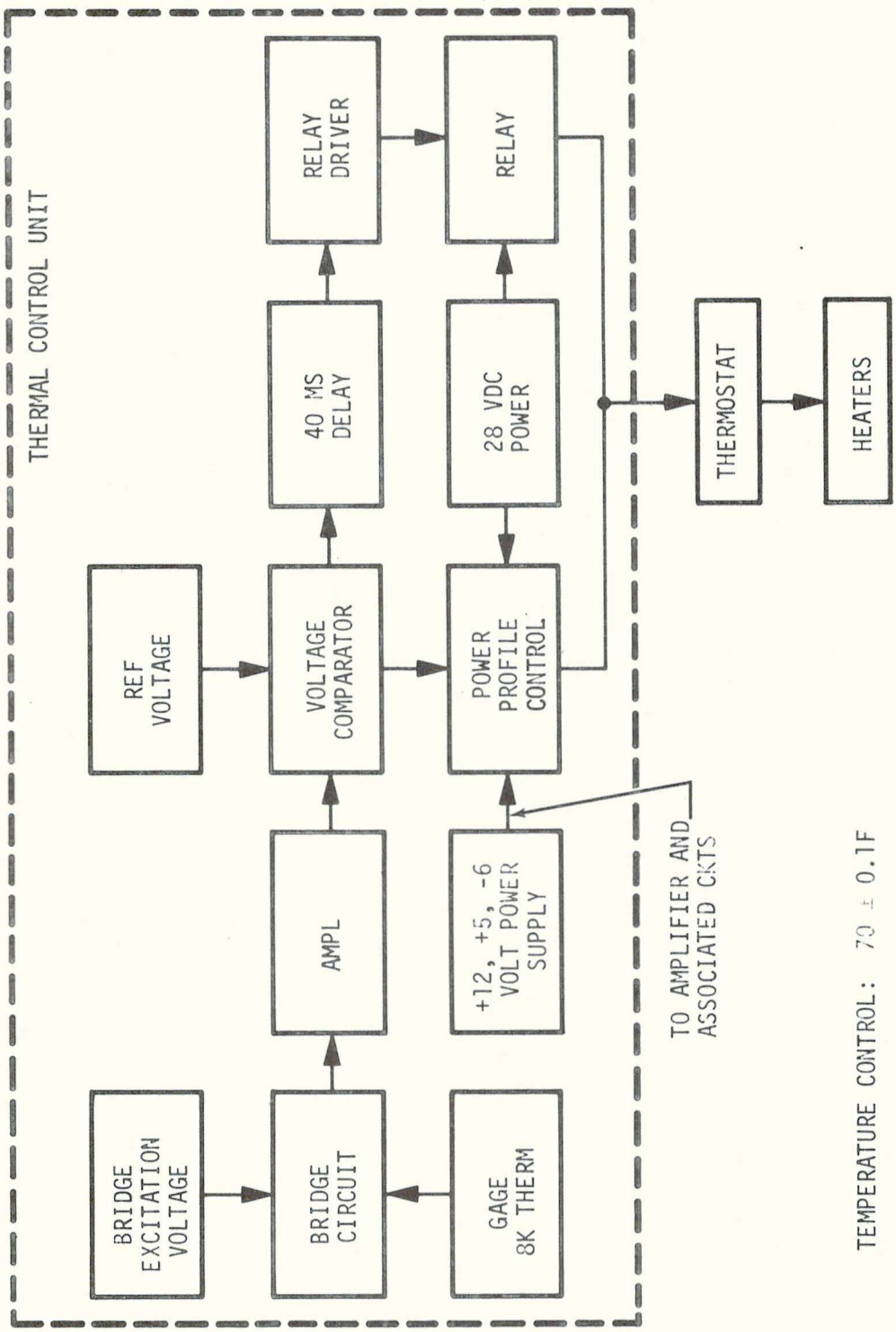

Figure 2.9.4-12 Telescope Assembly Thermal Control System Block Diagram

S056

Resistors - The center mount heaters each consist of six 15ohm resistors connected in series and located equispaced about the annulus of the center mount casting. The resistor values and power ratings have been selected to produce 10 watts peak power (2 watts average).

Thermal Control Units - The function of the thermal control units is to control the heaters using the control thermistors as sensors. Each heater (forward tube (2), center mount (2), camera mechanism housing (2)has its own control unit and because the telescope assembly thermal control system is redundant, six thermal control units are required. The four control thermistors, as a set, are connected in series and mounted near the heater. The thermistors are then connected as one leg of a Wheatstone bridge providing a bridge output voltage that is proportional to the average temperature sensed by the thermistors. The temperature set point is adjustable by means of a potentiometer in an adjacent leg of the bridge circuit. The bridge output voltage is amplified and then fed into a voltage comparator circuit. When the bridge output is large enough the voltage comparator output changes levels and turns on the power profile control while simultaneously initiating a 40 millisecond delay signal to the relay driver transistor. The power profile control turns the heater power on at an approximately linear rate over a 10 millisecond time duration to reduce switching transients on the 28 VDC line. After the 40 millisecond delay, the relay is switched on and the voltage applied to the heater changes from approximately 26 volts to the full 28 VDC.

Telemetry Thermistors - Telemetry thermistors (not part of the telescope assembly thermal control system) have also been installed in the X-RT to monitor its temperature at selected points. The five thermistors are mounted on the forward tube, center tube, aft tube, center mount casting and camera shutter/filter mechanism. The thermistor output is telemetered to ground via the spacecraft telemetry system. The thermistors are metal encased temperature sensitive resistors (MSFC drawing number 50M10346).

2.9.4.4.2 Camera Assembly - A sequential 35mm camera has been developed for the X-Ray Telescope Experiment S056 for the ATM mission. The camera is located on the aft end of the telescope assembly, and with the exception of the film magazine, is an integral part of that assembly. The film magazine has been designed to facilitate astronaut retrieval and replacement from the remainder of the camera and telescope during extravehicular activity (EVA).

The major functional elements of the camera are discussed in the following paragraphs.

2.9.4.4.2.1 Film Magazine - The film magazine is designed to contain 1000 feet of 2.5-mil base film. The film magazine size is 18.56 inches long by 3.91 inches wide by 10.78 inches high. The weight is 14.76 pounds per magazine including film.

The volume is approximately 0.3 cubic feet. See Figure 2.9.4-13 for details of the magazine components.

The handle to assist in magazine maneuvering contains a latching mechanism for attaching the magazine to the interface plate. This handle has been made removable in an effort to reduce film magazine storage space. The magazine size without handle is 15.125 inches long by 3.91 inches wide by 10.78 inches high.

Power to advance the film is supplied to the film magazine through a mechanical coupling. No electrical power is introduced to the magazine. Film will advance over the platen at a maximum rate of one frame (1.5 inches) every 3 seconds or a maximum frame rate of eight per minute.

2.9.4.4.2.2 Filter Wheel - The filter wheel is a 4.5 inch diameter wheel containing six filter apertures on 60 degree centers. The assembly is rotated by a 36-degrees-per-step stepper motor through a 60-degree internal gear head whose output is directly coupled to the filter wheel. The rim of the filter wheel passes through grooves cut in five randomly spaced pins mounted perpendicular to the plane of the wheel. The wheel does not make contact with the grooved pins. The pins serve to dampen excessive vibration of the wheel. The drive motor advances the filter wheel through 60 degrees within 240 milliseconds.

The filters contained in the filter wheel apertures are five metal X-ray filters and one neutral density as shown in Table 2.10.4-III.

The filter wheel has been designed to accommodate either total wheel replacement or individual filter replacement. The filter wheel is manufactured from aluminum.

2.9.4.4.2.3 Rotary Disc Shutter - The shutter is a 4.5 inch diameter disc having three blades spaced 120 degrees apart and is driven by a 36-degree-per-step stepper motor via a 60-degree internal gear head coupled direct to the shutter hub. Shutter speeds from 1/3-second to infinite are obtainable. The outer edges of the shutter blades are contained in a continuous track to reduce excessive blade vibration during operational periods. The sun side of the shutter disc has a highly reflective finish to accommodate the reflection of solar energy back up the telescope tube. The shutter is constructed of beryllium.

2.9.4.4.2.4 Film Drive Assembly - The film drive assembly is designed to interface with the magazine through a mechanical multi-jaw coupling. The film drive motor is a 36-degrees-per-step bi-directional stepper motor and is coupled directly to the spring loaded half of the multi-yaw coupling located in the camera interface plate. The motor is required to be stepped 10 times (360-degrees) to advance the film 1.5 inches across the platen.

S056

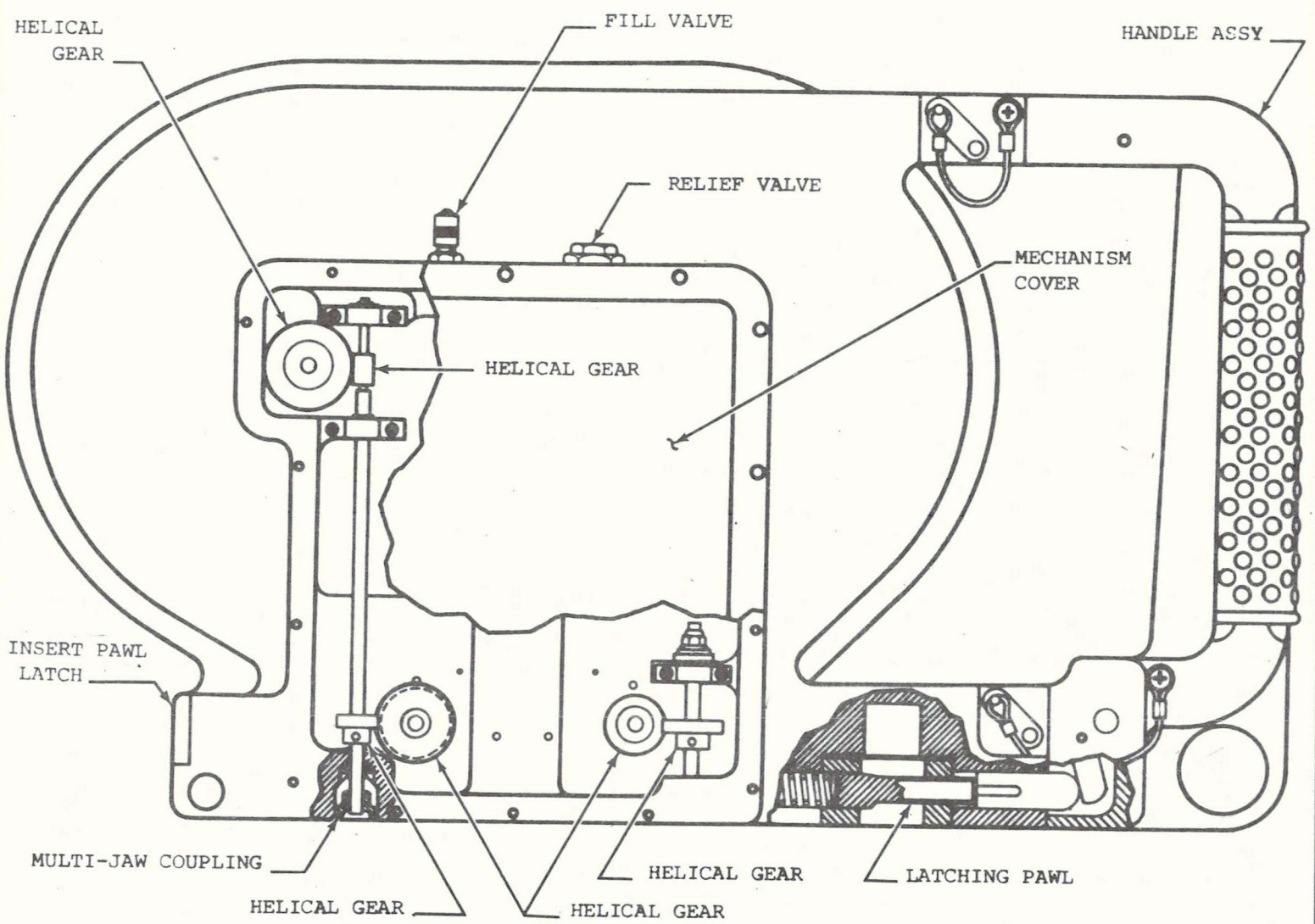

Figure 2.9.4-13 S056 Film Magazine Assembly

Table 2.10.4-III- S056 Filter Assignment

FILTER NO.	MATERIALS MATERIAL THICKNESS	NORMAL EXPOSURE TIME*		
		PATROL	ACTIVE	
1	Beryllium 3×10^{-3} Inches	90 sec	5 sec	
2	Aluminum 2.5×10^{-4} Inches	30	N/A	
3	Titanium 8.6×10^{-5} Inches	50	5	
4	Beryllium 1×10^{-3} Inches	60	N/A	
5	Aluminum 5×10^{-4} Inches	60	5	
6	"Visible" (Neutral Density)	1	N/A	

*Exposure times given here are nominal. Actual exposure times could vary as much as 25%. Actual times will be supplied with each set of delivered hardware.

S056

2. 9.4.4.2.5 Data Block - The data block and its associated optical system is composed of 44 subminiature incandescent lamps arranged in three rows occupying an area of 1.6 inch by 0.25 inch. The image of this data block is reduced optically to one-fourth its original area and projected onto the film adjacent to the exposed frame. Data displayed by the data block includes the following:

Table 2.9.4-IV- Data Block Content

Shutter Open Time	25 bits
Filter Wheel Position	3 bits
Shutter Close Time	11 bits
Mode	3 bits
Exposure Multiplier	2 bits

The data block electronics, contained in the camera/thermal control electronics system, provides the commands for driving the lamps.

2.9.4.4.2.6 Mechanism Housing and Interface Plate - The camera mechanism housing and the interface plate together form the interface between the X-RT aft tube and the camera. The mechanism housing is an extension of the X-RT aft tube and contains the camera mechanism. The nominal length of the mechanism housing is 4.25 $\pm$ 1 inches. The housing may be machined to any length between 3.25 and 5.25 inches to compensate for variations in the focal length of the parabolic-hyperbolic mirror. The mechanism housing is made of beryllium.

The interface plate is attached to the aft end of the mechanism housing. The interface plate provides the mounting base for various components. The shutter, filters, film advance motor, and data block are mounted on the aft side. An aperture in the interface plate permits images to pass from the parabolic-hyperbolic mirror to the film plane. An electromechanically operated airlock door seals the aperture during launch.

2.9.4.4.2.7 Film Magazine Guide - The film magazine guide is designed to maintain the film magazine in position and to form a funnel for sliding the film magazine into position by the astronaut during extravehicular activity.

This guide is mounted to the camera interface plate and is contoured to accept the insertion of the film magazine.

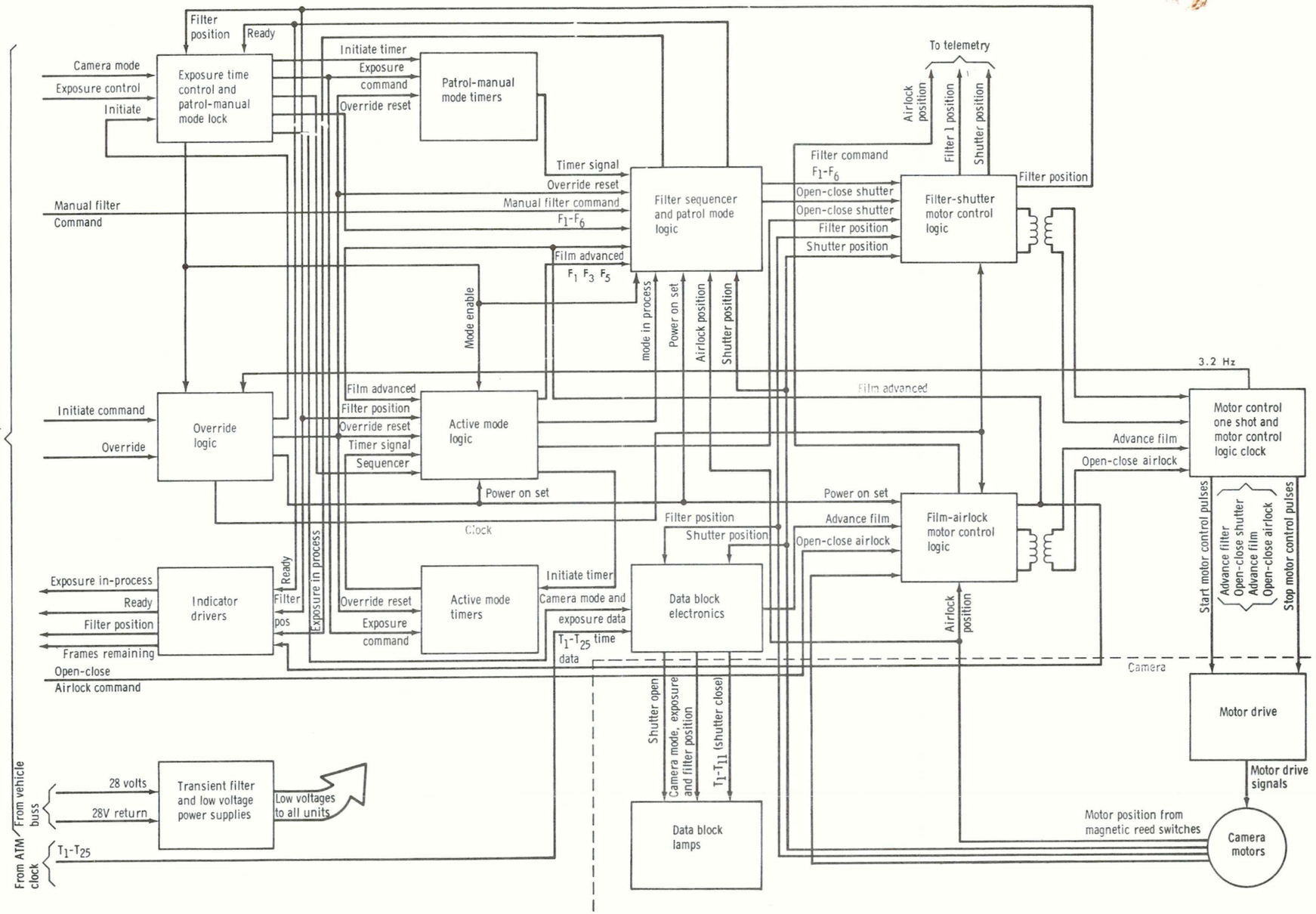

Figure 2.9.4-14 Camera Electronics Block Diagram

2.9.4.4.2.8 Airlock System - An airlock door is located on the camera interface plate and seals the magazine aperture when the magazine is in position and no film usage is planned for an extended period of time.

2.9.4.4.3 Camera Electronics - The operation of all electromechanical components of the camera assembly is controlled through the various circuits of the camera electronics assembly. A simplified block diagram of the camera electronics is shown in Figure 2.9.4-14. The block diagram is further explained in the following paragraphs.

2.9.4.4.3.1 Exposure Timer Control - The exposure timer control performs the following functions:

a. From the position of SHORT/NORMAL/LONG switch on the Control and Display Panel, the timer control selects the proper signal to be supplied to the timers, thereby determining the exposure time multiplier.

b. From the position of the MODE SELECT switch on the Control and Display Panel, the timer control inhibits the logic not applicable to the mode selected.

c. Determines which exposure timer will be initiated, according to the position of MODE SELECT switch and the position of the filter wheel.

d. Codes the position of the SHORT/NORMAL/LONG switch and the CAMERA MODE SWITCH for recording.

2.9.4.4.3.2 Timers - Three sets of timers are contained in the camera electronics system. The patrol and manual modes of operation require six timers to determine the film exposure duration. One timer is associated with each filter mounted on the filter wheel. Both modes use the same timers.

The active modes of operation ACTIVE 1, ACTIVE 2, ACTIVE 3, and AUTO, require three timers because only filters 1, 3 and 5 are used for exposures. These three timers provide for exposure times different from the patrol and manual mode timers, because of the different level of solar activity existing when the active modes are used.

In addition to the timers used to determine film exposure time, in the ACTIVE 1 mode, a 5 minute time is used to determine the mode operation time. In the ACTIVE 2 and ACTIVE 3 modes, a 1-and 10-minute timer, respectively, is used for determining the delay time between sets of exposures.

S056

2.9.4.4.3.3 Filter Sequencer - The functions of the filter sequencer are as follows:

a. During manual mode, generates the command to position the filter wheel according to the setting of the MODE SELECT switch.

b. During the patrol mode and manual mode, generates the shutter open and close signal from the leading and trailing edge of the timer signal.

c. During patrol mode, generates the signal which commands the filter/shutter motor control to drive to the next filter.

d. During patrol mode, active modes and during each frame of the manual mode generates the operate signal while the selected mode is in progress.

e. During patrol mode, and active mode, and after each frame during manual mode, generates the READY signal upon completion of the selected mode.

2.9.4.4.3.4 Filter/Shutter Motor Control Logic - The functions of the filter/shutter motor control logic are as follows:

a. Compares the actual filter wheel position to the desired position as commanded by the filter sequencer and generates the drive signal for the motor control to drive the filter wheel to the correct position.

b. Performs the same function for the shutter as described for the filter wheel in "a".

c. Generates the signal that indicates the filter wheel position on the Control and Display Panel.

d. Generates the shutter and filter 1 position signals for telemetry.

e. Generates the "filter-in-position" signal that allows the film to advance.

2.9.4.4.3.5 Film/Airlock Motor Control Logic - The functions of the film/airlock motor control logic are as follows:

a. Generates signal pulses for film advance.

b. Generates signal pulses that open/close the airlock door upon command.

c. Generates the signal which drives the FRAMES REMAINING indicator.

d. Generates the airlock position signal for telemetry.

e. Generates the "film advanced" signal that allows the next exposure to begin.

2.9.4.4.3.6 Motor Control One-Shot - The motor control one-shot amplifies the 5-volt 10-microsecond pulses from the motor control logic to 28-volt pulses of the proper duration for the motor drive.

2.9.4.4.3.7 Exposure Data Block Electronics - The data block electronics provides the drive signals for the data block to mark the time of exposure, camera mode, filter, and exposure mode on the film.

The 44 data inputs to the data block consist of a 25-bit time input, 3-bit camera mode, 3-bit filter code, and a 2-bit multiplier code, and an 11-bit shutter closed code. A shutter open signal initiates the film marking process.

Upon receiving a shutter-open signal, the flip-flops are reset, the time gates are then opened, and the time is stored in the flip-flops. The lamp driving gates are then opened and the data is marked on the film. Upon receipt of the shutter close signal, the procedure is again repeated except that only the last 11 bits of the time word are marked on the film.

The data block requires a 5.0-VDC, 70-milliamperes power supply for the data electronics and 6.0-VDC, 130-milliampere power supply for the lamp circuits. The unit is capable of operation over a range of -20°C to +85°C.

2.9.4.4.3.8 Active Mode Logic and Active Mode Sequencer - The active mode logic and sequencer performs the following functions:

a. Determine which exposure timer will be initiated according to which filter is in position.

b. Generates the command to start the 5 minute mode duration timer in the ACTIVE 1 mode and the 1 and 10-minute delay timers in the ACTIVE 2 and ACTIVE 3 modes.

c. Generates the command signal for the filter sequencer to select filters 1, 3 and 5 when required.

d. Generates the command singal for the filter/shutter motor control to open/close the shutter when required.

e. Counts 20 sets of observations when in ACTIVE 2 and six sets of observations when in ACTIVE 3. This stops the sequence and returns the camera to the "READY" condition.

S056

2.9.4.4.3.9 Override Logic - The override logic performs the following functions:

a. Generates the "power-on-set" signal that sets all electronics to their respective initial conditions.

b. Generates the "initiate" signal that starts camera operation when START function on Control and Display Panel is operated. .

c. Generates "override" signal that terminates camera operation when STOP function on Control and Display Panel is operated.

2.9.4.4.3.10 Indicator Drivers - The indicator drivers provide the inputs to the OPERATE, READY, FILTER POSITION and FRAMES REMAINING displays on the ATM Control and Display Console.

2.9.4.4.3.11 Transient Filter - The transient filter protects the low voltage power supply from damaging transients.

2.9.4.4.4 X-Ray Event Analyzer (X-REA) - The X-REA system consists of a Beryllium-window (Be) and an Aluminum-window (Al) proportional counter subsystem. A simplified block diagram for the assembly is shown in Figure 2.9.4-15. Each proportional counter subassembly consists of the following:

a. Proportional Counter
b. Preamplifier and amplifier
c. Variable high voltage supply (1600 to 2300 volts)
d. Differential pulse height analyzer (PHA)
   (1) Al-4 channels
   (2) Be-6 channels
e. Ratemeter and activity history plotter circuit
f. Calibrator
g. Aperture control logic
h. Aperture stepping motor
i. Aperture wheel
j. Digital signal conditioner

The operation of a proportional counter subsystem can be understood by referring to the block diagram in Figure 2.9.4-15. An incoming photon in the proportional counter tube ionizes the counter gas. The high voltage multiplies each ion pair produced by the incoming photon. The output of the tube is measured by the preamplifier. The height of the output pulse of the preamplifier is directly proportional to the incoming photon energy. The preamplifier output is amplified and shaped by RC time constants to result in a narrow gaussian bandwidth with a center frequency near 500 KHz. The output of the amplifier is then fed to a pulse height analyzer which compares the amplifier pulse height to a set of reference voltages. The voltage comparators determine to which channel the pulse should add its count. The output of this channel goes to the corresponding 14-bit counter which registers one count. The count is also registered by a ratemeter circuit output converted to a logrithmic DC output and displayed on control counters 2 and 3 and the activity history recorder on the control panel. An auxiliary counter determines the total counting rate of the proportional counter. If the rate is too high or too low, the counter sends an increase or decrease pulse to the aperture control which steps the aperture motor to place a smaller or larger aperture in front of the proportional counter window. The ratemeter output and history plotter input are adjuster accordingly.

The Digital Signal Conditioner (DSC) reads each of the ten 14-bit counters once every 2.5 seconds. At this time, the contents of the 14-bit counter, the PHA channel number, the proportional counter tag (Al or Be) and the aperture position are transmitted real time and recorded.

SQ56

Detailed functions of the individual components are covered in the following paragraphs.

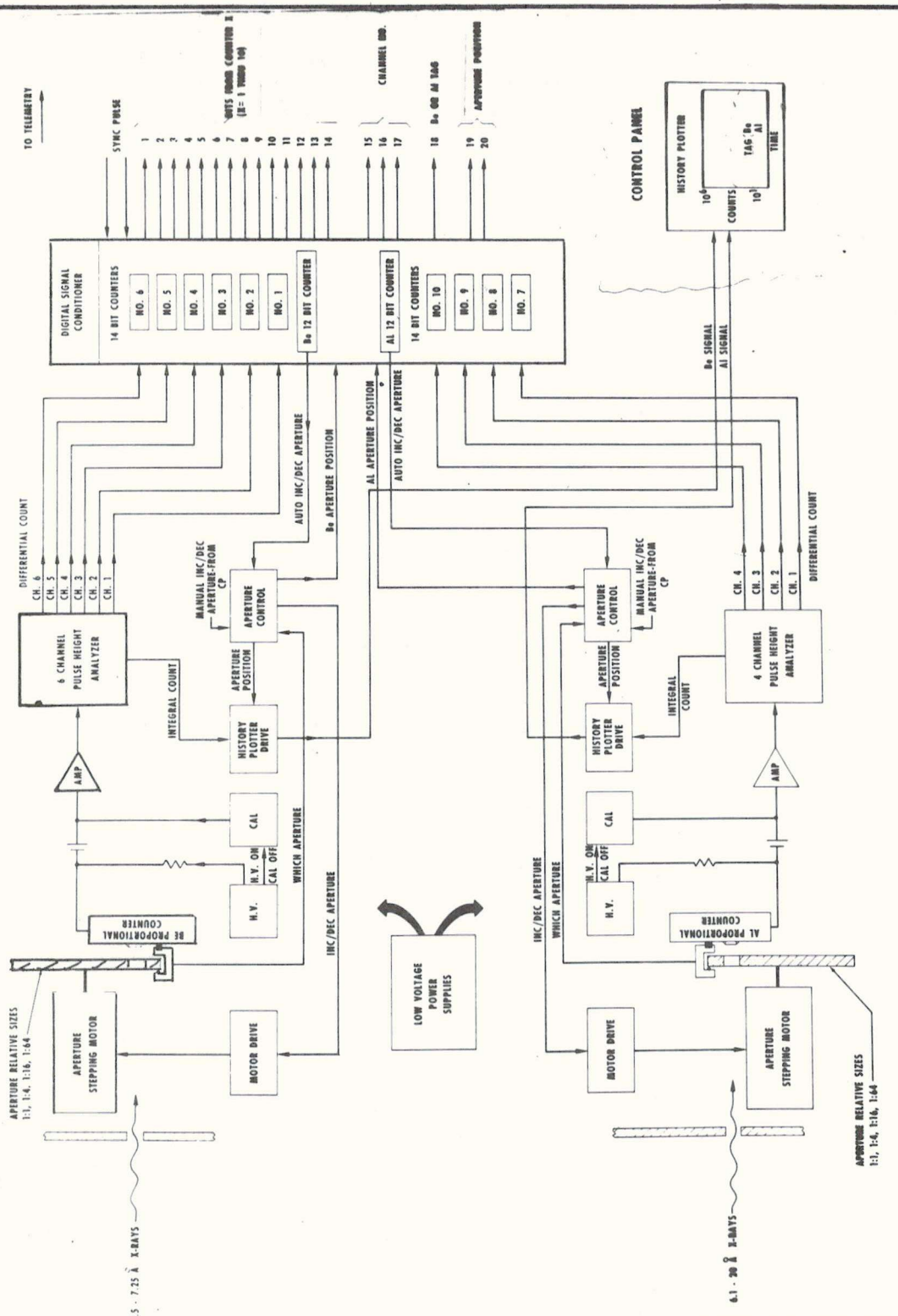

Figure 2.9.4-15 X-Ray Event Analyzer Extreme Ultraviolet Telescope GSFC ATM Experiment S056

2.9.4.4.4.1 Proportional Counters - The proportional counters are conventional coaxial type with a cathode 7/8-inch in diameter and a central wire of 2-mil tungsten. Xenon/methane and argon/methane gas mixtures are being used in the Be and Al proportional counters respectively.

2.9.4.4.1.1 Maximum Counting Rate - The maximum counting rate of the tube is 6,000 counts per second. Any higher rate will cause a baseline shift either up or down.

2.9.4.4.4.1.2 Window Characteristics -

a. Be Counter - The window is 10 mils in thickness and 1/2-inch in diameter. The Be window transmits X-rays in the 2 to 8 angstrom wavelength range.

b. Al Counter - The window is 1/4 mil in thickness and 1/8-inch in diameter. The Al window transmits X-rays in the 8 to 20 angstrom wavelength range.

2.9.4.4.4.2 Aperture Control - The aperture control unit consists of an encoder, function controller, and pulse generators.

2.9.4.4.4.2.1 Encoder - This unit consists of logic circuits which determine which magnetic switches are closed on the aperture wheel and converts this data into output information which is fed to the history plotter, control panel, and the DSC. The unit also supplies inhibit signals to the motor logic to prevent the stepping motor from increasing the aperture if in position four, or decreasing the aperture if in position one.

2.9.4.4.4.2.2 Function Controller - This unit controls the functional mode of the aperture control. The two modes are as follows:

a. Automatic Position - In the automatic position, the aperture is controlled by signals from the DSC. In this position the aperture cannot be controlled from the control panel.

b. Manual Position - In the manual position, the aperture is controlled by means of increase and decrease signals from the control panel, and any inputs from the DSC are inhibited.

2.9.4.4.4.2.3 Pulse Generator - This generator supplies a pulse of sufficient duration to the motor drive unit to turn the aperture wheel through one position.

S056

2.9.4.4.4.3 Aperture Motor Drive - This circuit accepts the pulse from the aperture control, discharges a capacitor into the motor circuit, causing the motor to step. Between pulses, the circuit recharges the capacitor for the next stepping function.

2.9.4.4.4.4 Amplifier - The amplifier is charge sensitive and has an output proportional to the charge induced by the proportional counter. This charge, in turn, is proportional to the photon energy.

The amplifier consists of two inverting operational amplifiers with a variable gain control on the first stage. The variation of gain is 0 to 1000. A block diagram is shown in Figure 2.9.4-16. The maximum nonlinearity of gain is ±0.5 percent. The drift is less than ±10 millivolts.

2.9.4.4.4.5 Calibrator - The calibrator is used in the system as a pulse generator which produces a series of four or six pulses to functionally test the operation of each amplifier, each channel of the pulse height analyzers, and each 14-bit counter in the Digital Signal Conditioner (DSC). The Be calibrator produces a series of six pulses at 600 HZ and the Al Calibrator produces a series of four pulses at 900 HZ. A block diagram and timing sequence is shown in Figures 2.9.4-17 and 2.9.4-18. The calibrator consists of a switching circuit, a free-running multivibrator, a logic and delay circuit, and six or four output channels. The BE and AL calibration signal is displayed on Control and Display panel counters two and three respectively when the Be and Al high voltage power supplies are turned off. Figure 2.9.4-19 shows the conversion graph used to convert the voltage displayed on counters two and three to counts per second.

2.9.4.4.4.5.1 Switching Circuit - This circuit supplies operational power to the multivibrator, logic and delay circuit, and the output channels, when the HV supply is turned off. When the HV supply is turned on, power is removed from the calibrator circuits.

2.9.4.4.4.5.2 Logic and Delay Circuits - This circuit establishes the timing sequence of each pulse and the delay between the pulses.

2.9.4.4.4.5.3 Output Channel - This circuit accepts the timing pulse and produces a pulse shape similar to that of the proportional counter.

2.9.4.4.4.6 Differential Pulse Height Analyzer (PHA) - The components and the functions of the PHA consist of the following:

a. Voltage comparators - The comparator is a device with one input biased at a dc level. Any signal on the second input which exceeds the dc bias level causes the comparator to change logic state.

b. Delayed one-shot multivibrator - The one-shot is triggered by comparator 1. The output of the one-shot occurs 4 microseconds after the input is triggered. This delay inhibits the NOR gates until the input signal has obtained its highest amplitude and has triggered all of those comparators with bias levels below this amplitude. The delayed one-shot also sends a pulse to the ratemeter circuit. The pulse to the ratemeter is an integral count because the one-shot triggers every time there is an input pulse of interest.

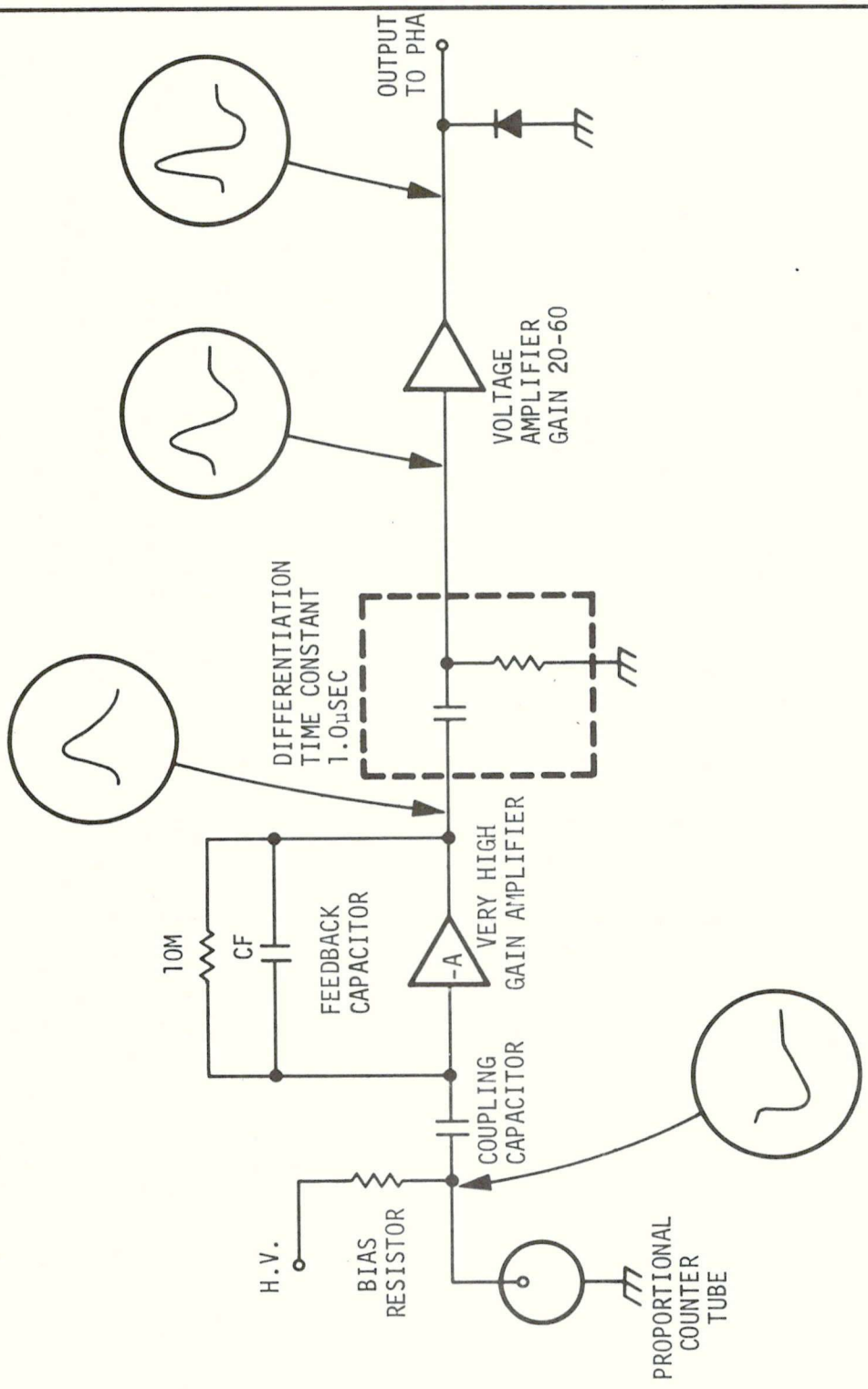

Figure 2.9.4-16 Charge Sensitive Pulse Amplifier Block Diagram

S056

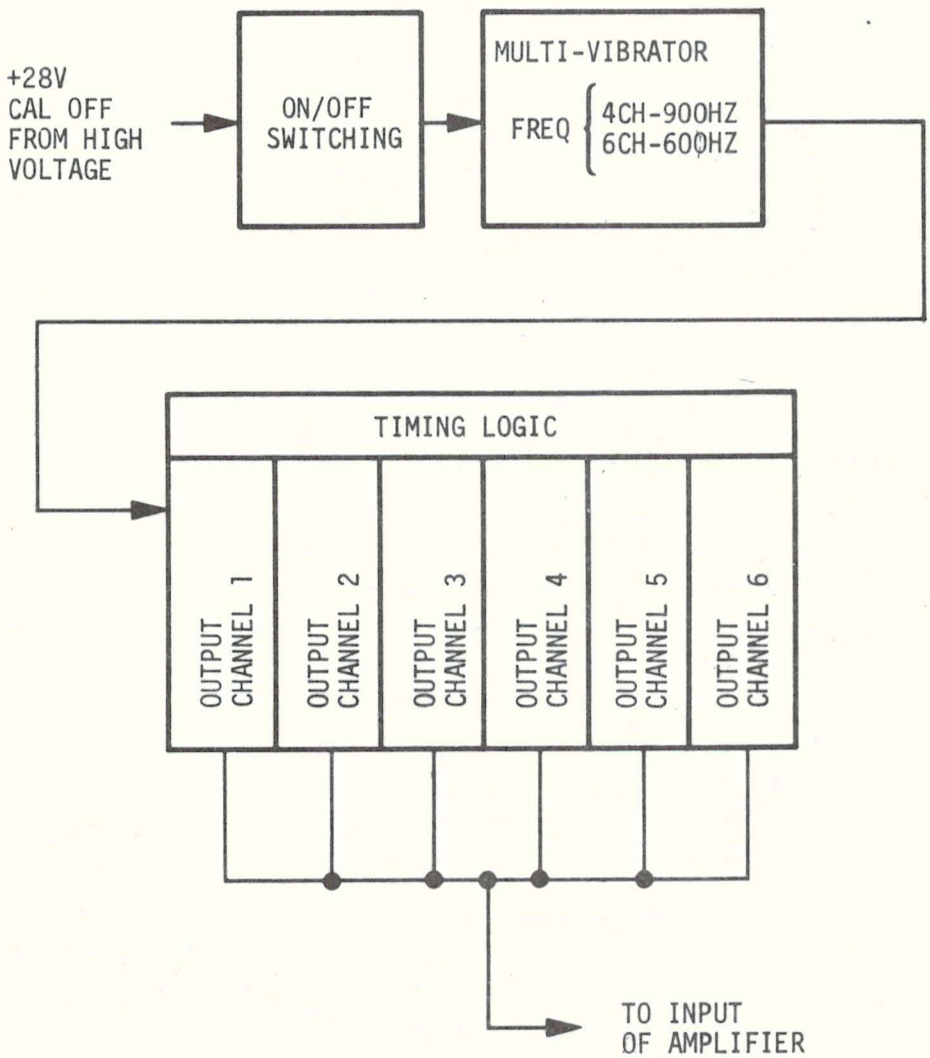

Figure 2.9.4-17 Six Channel Calibrator Block Diagram

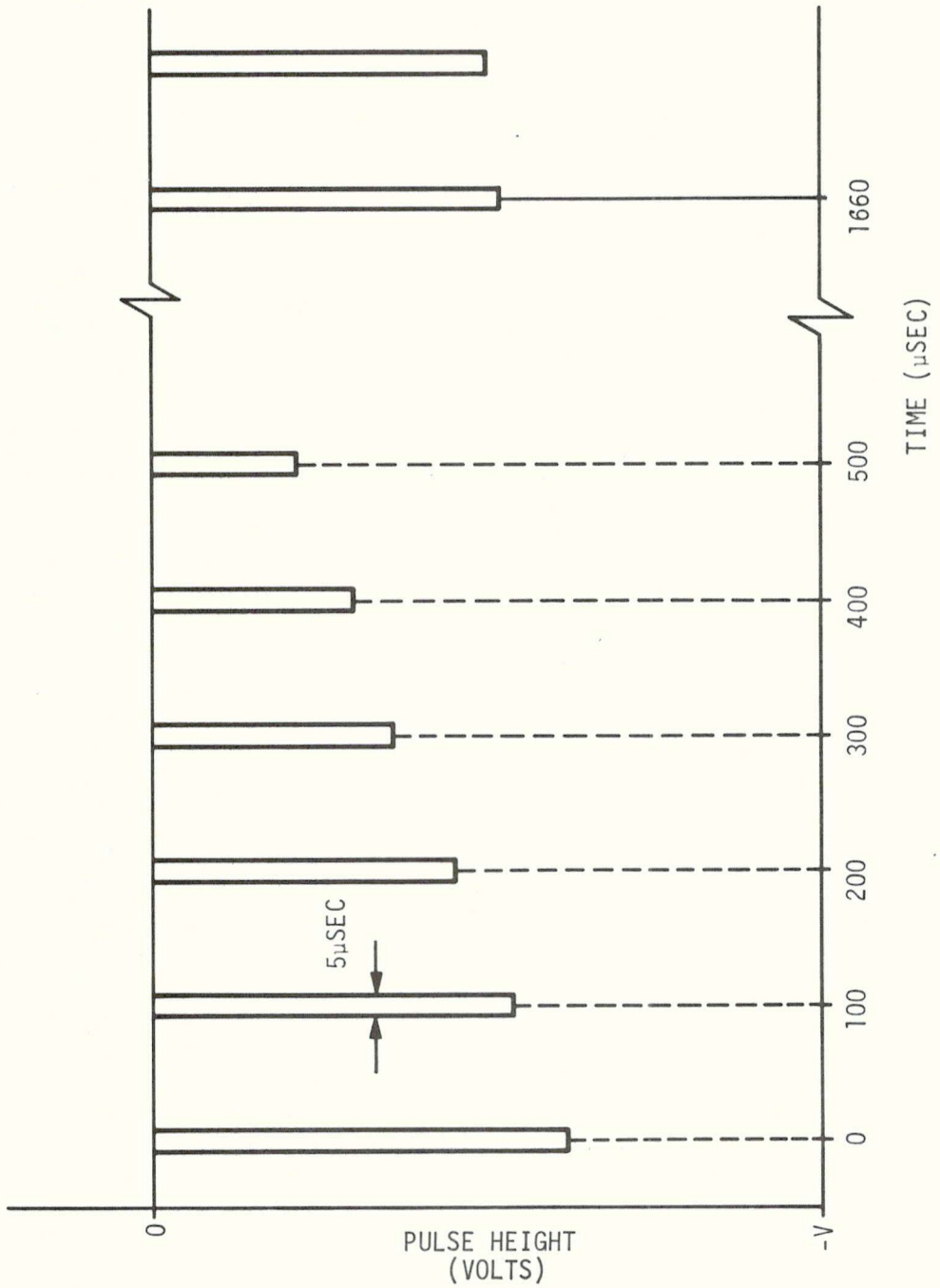

Figure 2.9.4-18 Six Channel Calibrator Time Sequence

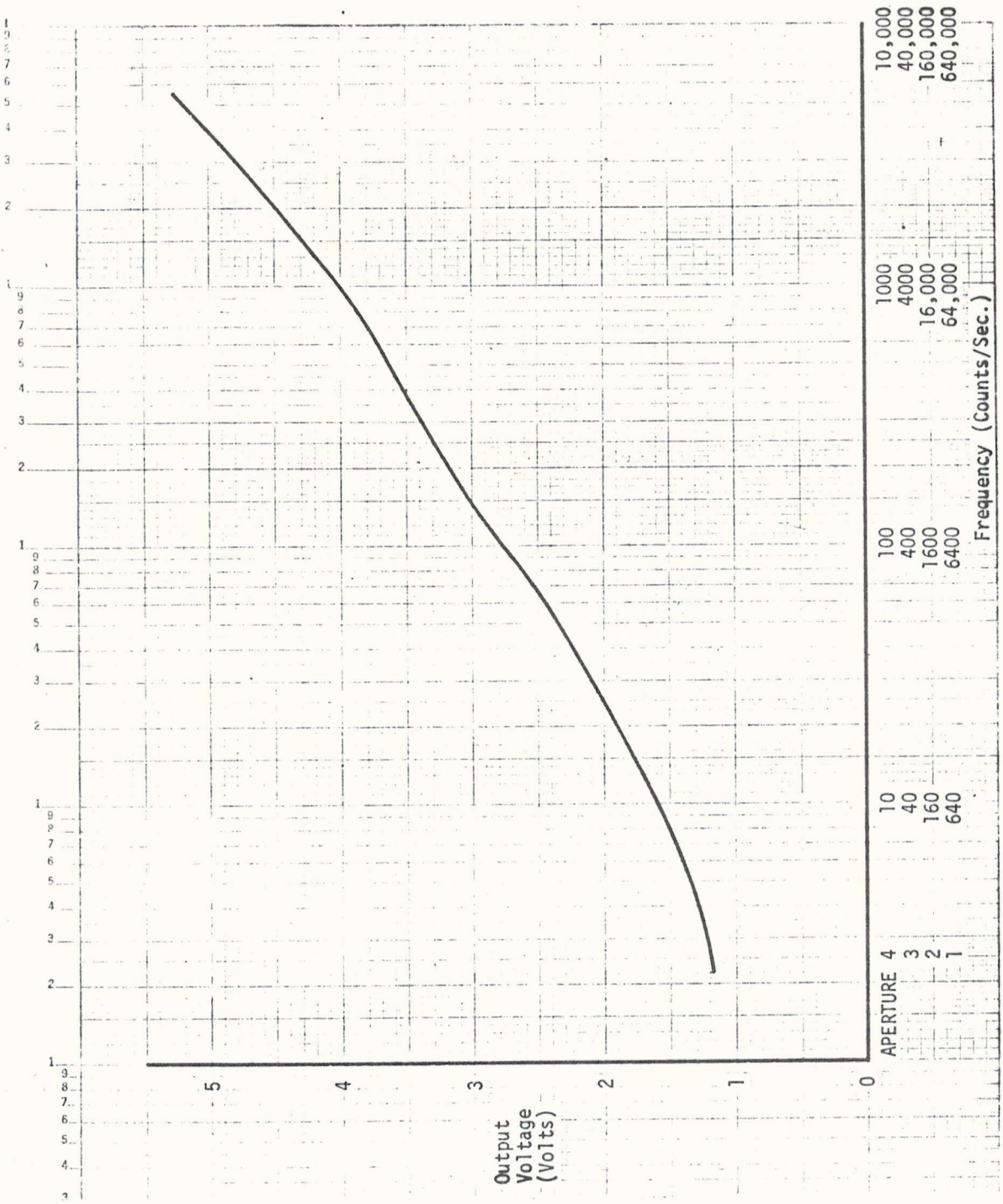

Figure 2.9.4-19 Control Monitor Flux Rate Calibration Curve

c. One-shot multivibrator - The one-shot is triggered by comparator 2. The multivibrator has two outputs, 0 (negative going) and 1 (positive going). The 1 output inhibits NOR gate 1, and the 0 output resets the flip-flops at the end of the pulse.

d. Flip-flops - The flip-flops are set by their comparators. The 0 output goes to the NOR gate input and resets the next higher flip-flop. The 1 output inhibits the NOR gate of the comparator whose bias level is lower.

e. Six channel PHA - The six channel PHA is similar to the four channel PHA except that two additional voltage comparators, multivibrators, and NOR gates are used to increase the spectral resolution.

2. 9.4.4.4.6.1 Bias Levels (Channel Heights) Versus Wave Length - The bias levels which correspond to the output of the proportional counter-preamplifier-amplifier combination for various wavelengths are typically as follows:

a. Four Channel PHA

Wavelength (angstroms)	Channel Number	Bias Level (volts)
6.1	———	4.00
8.0	4	3.05
12.0	3	2.03
16.0	2	1.53
20.0	1	1.22
∞	Noise or Inactive Region	0

S056

b. Six Channel PHA		
Wavelength (angstroms)	Channel Number	Bias Level (volts)
2.50	_____	4.00
3.75	6	2.67
4.50	5	2.22
5.00	4	2.00
5.50	3	1.82
6.00	2	1.67
7.25	1	1.33
∞	Noise or Inactive Region	0

2.9.4.4.4.7 Digital Signal Conditioner - The function of the Digital Signal Conditioner (DSC) is to measure the average frequencies of the pulses received from the pulse height analyzer and present this information to the Model 410 RDM in a suitable format. The DSC also uses this frequency information to control the size of the apertures on the aluminum and beryllium proportional counters.

2.9.4.4.4.7.1 Theory of Operation - Data from the pulse height analyzer goes directly into the ten 14-bit ripple-thru counters. Data entering a counter is inhibited in two instances: (1) when the counter is being read and (2) if the counter fills up. The 10 14-bit counters are read one at a time, at a rate of four per second, into the output registers, where incoming data erase the previous data. (In 2.5 sec all 10 counters are read once).

2.9.4.4.4.7.2 The Ten Counter - This counter is a modified ripple-thru counter that gates the output of the ten 14-bit counters to the output register. The position of the Ten Counter is also fed to the output registers to indicate which 14-bit counter is being read.

All of the incoming data from the Be and Al PHAs are fed to two 12-bit counters. These counters are sampled once per second to determine whether or not the 2^5 and the 2^{11} bits have operated. If the 2^5 bit has not been a "1" during the 1-second internal, the aperture control puts

out a "shift larger" pulse to the appropriate aperture (Be or Al). If the 2^{11} bit is a "1" at the end of 1 second, the aperture control puts out a "shift smaller" pulse to the appropriate aperture.

2.9.4.4.7.3 The Logic Timer - This timer receives a 4 pps telemetry sync signal and generates the following pulses:

a. Clock Pulse
b. 14-bit read
c. 14-bit clear
d. 12-bit read
e. 12-bit clear
f. 12-bit inhibit

2.9.4.4.4.7.4 Output Register - This register transfers all X-REA data to telemetry. Information transferred to telemetry from the X-REA includes the 14 bit counter data (bits 1-14), 14 bit counter identification (bits 15, 16, 17), beryllium-aluminum tag (bit 18), and aperture position (bits 19 and 20).

2.9.4.4.4.8 Ratemeter and Activity History Plotter

2.9.4.4.4.8.1 Ratemeter - The ratemeter has a logarithmic dc output proportional to the input frequency. The circuit consists of a monostable multivibrator for constant time pulses, a constant current source for charging a capacitor, and a logarithmic discharge to provide log type outputs.

Maximum count rate: The circuit is calibrated for 2,048 pps and will saturate with approximately 4,000 pps input.

The output is 0 to 5 vdc signal to drive a digital display (Control Counters 2 and 3) on the ATM Control and Display Console.

2.9.4.4.4.8.2 Activity History Plotter Drive Circuit - The activity history plotter drive circuit consists of two operational amplifiers, a voltage comparator, and a FET gate. The logarithmic output of the voltage comparator and the signal from the aperture logic which indicates the position of the aperture and multiplies the count rate by 1, 4, 16 or 64 is applied to the operational amplifiers. The output of the Activity History Plotter drive circuit is a voltage which approximates the equation; V = Log f-1 for a frequency of 10 HZ to 250 KHZ.

V = voltage (volts)
f = frequency (Hertz)

The voltage comparator and the gate also prevent the output of the history plotter drive from going negative.

S056

2.9.4.4.4.9 Variable High Voltage Power Supply - The power supply uses conventional techniques to convert the 28 vdc to 1600 to 2300 vdc, as shown in Figure 2.9.4-20.

a. Input power is applied to the dc/dc converter (required for isolation) which inputs to the series regulator. The regulator is controlled by the output high voltage.

b. The dc/dc converter has a step-up ratio of 1 to 15.7 and in conjunction with a voltage multiplier is used to obtain the high voltage.

c. A 50 megohm resistor is used for feedback to the regulator for voltage control.

d. Output voltage adjustment is obtained by adjusting the reference potential on the first differential amplifier. This method allows for a wide change in output voltage while keeping the differential amplifier near a balanced condition.

e. Filtering is accomplished by a series of RC sections.

2.9.4.4.4.9.1 Output Voltage - The output voltage is adjustable from 1600 to 2300 vdc. The adjustment is made with a 20 turn trimpot with about 50 volts change per turn. This gives resolution to about 1 to 2 volts or 0.05 to 0.1 percent.

2.9.4.4.4.9.2 Output Current - The power supply is capable of furnishing up to 40 microamperes but at a loss of accuracy in regulation and increased ripple. However, with a light load of 1 microampere the output voltage and ripple specifications are met.

2.9.4.4.4.9.3 Noise or Ripple Level - Less than 2 volts.

2.9.4.4.4.9.4 Long Term Stability - The stability of the power supply is $\pm$ 5 volts over an 8-hour period.

2.9.4.4.4.9.5 Regulation -

a. Line = $\pm$ 1 volt with $\pm$ 3 volt input change.

b. Load - The change here will be due to the drop across the filter resistors, because the sensing voltage is taken off before the output is filtered. The voltage at the output of the multiplier will not change more than 100 millivolts with a load change of 1 microampere.

2.9.4.4.5 Low Voltage Power Supplies - The low voltage power supplies (Figure 2.9.4-21) use a switching preregulator, a dc-to-dc converter, and a series regulator, to obtain the specified output voltage.

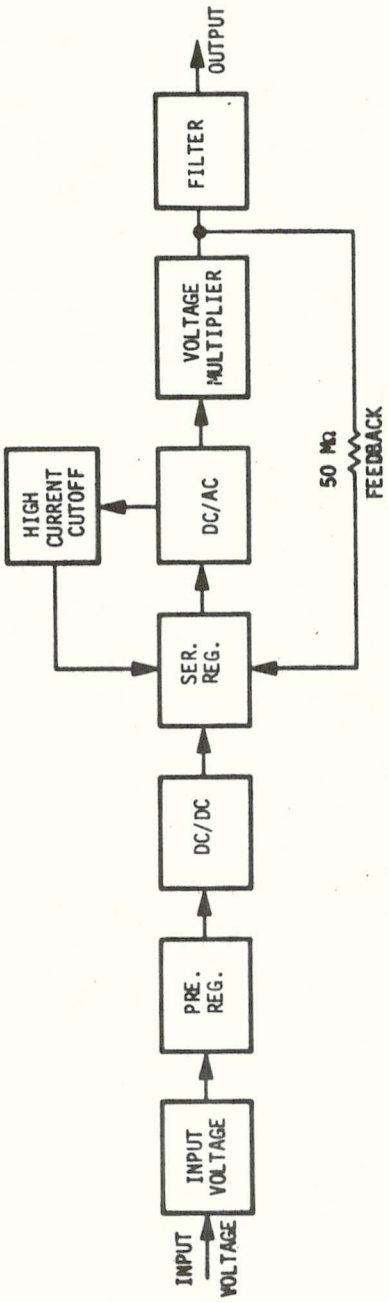

Figure 2.9.4-20 High Voltage Power Supply Block Diagram

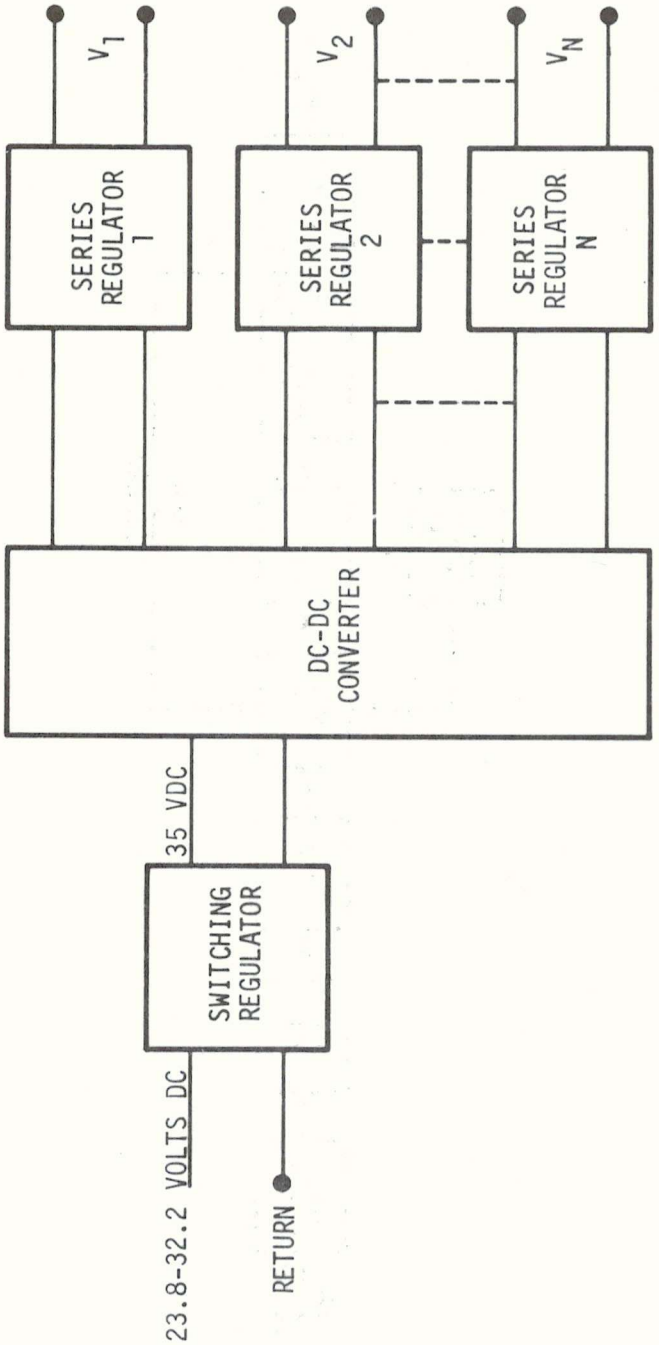

Figure 2.9.4-21 Low Voltage Power Supply Block Diagram

The 28 ± 4 vdc is applied to the switching preregulator. The preregulator steps the input voltage to a regulated 35 volts. This regulated voltage is applied to the dc-to-dc converter. The output of the converter is applied to a series regulator and voltage is regulated to the required output voltage.

The low voltage power supplies are capable of operation over a temperature range of -20 to +85°C with an input voltage of 23.8 to 32.2 volts.

The power supplies for the X-REA system are packaged in four modules. The +5 volt unit provides power for all the integrated circuits. The +12 volt unit and the -6 volt unit provide power for the pulse amplifier The ±12, 28, and 29 volt supply is used to provide power to the control panel, history plotter, and stepping motors.

The camera utilizes a +20 volt unit, and a -5, 3.1, 7.0 and +19 volt unit for the camera timers. A +6 volt supply is used to provide power for the lamps on the Data Block. A +5 volt supply is used to provide power for integrated circuits, 28 volts are used to drive the indicators.

2.9.4.5 Performance and Design Data

2.9.4.5.1 Environmental - Telescope Assembly Heating and Cooling - The main structure of the telescope assembly is a long hollow cylinder mounted in a quadrant of the ATM canister. The assembly includes surfaces which reflect and absorb solar radiation, and electrical components which dissipate heat. A glancing-incidence mirror which partly absorbs and partly reflects solar radiation entering the telescope is mounted inside the forward end of the telescope. Field-of-view and offset-pointing requirements lead to some irradiation of outer surfaces at the forward end of the telescope assembly, and part is transferred to the telescope solar shield.

Two shields serve to block solar radiation which would otherwise strike the telescope assembly on areas other than the glancing-incidence mirror surface. The outer shield is the aperture plate in the forward wall of the ATM canister. Oversize slits in the aperture plate permit the sun's rays to reach the solar shield and front stop at the forward end of the telescope. Radiation passing the slits of the three closely spaced plates making up the solar shield and front stop will strike the mirror surface. Figure 2.9.4-11 is a schematic showing the main component of the telescope assembly.

The ATM heat shield aperture is approximately 0.31 ft^2 and transmits 40 watts of solar energy into the ATM enclosure. It is estimated that of this, 40 watts incident to the X-ray telescope shield, approximately 1 watt will enter the telescope through the aperture in the optical system, 5 watts will be transmitted by thermal conduction to the telescope structure, and 0.05 watts will be radiated to the telescope structure. The balance of the incident solar energy, i.e., approximately 36 watts, will be reflected and reradiated within the ATM canister. The 2.35 watts of solar energy that enters the telescope aperture will be incident on the camera shutter or filters and film. Normally, this energy will be reflected back into the system and absorbed by the telescope structure.

Other sources of heat input to the experiment are (1) the camera assembly, (2) the two electronic packages associated with this experiment and (3) other experiments (HAO telescope) and operational equipment (rate gyro) located within the same quadrant occupied by this experiment.

The average total power dissipated in the camera shutter/filter motor, film drive, and magazine seal motor is estimated to be 0.05 watts. The X-Ray Event Analyzer electronic system will dissipate 14 watts of electrical power. In addition, 1.5 watts of solar energy will enter through the aperture in the ATM heat shield and be absorbed by the proportional counters.

The Camera/Thermal Control electronics package and the camera drive and logic system will dissipate 10 watts of electrical energy.

Heat will be removed from the telescope assembly by conduction to the Y-spar support structure through the single low-conductance mount by radiation to the inner surface of the ATM canister cold plates. To limit heating of the telescope assembly by the incident radiation striking the telescope solar shield, the outermost plate of the shield will have a reflective coating to reradiate this energy to the inner surface of the forward end of the ATM canister. Also, to limit solar heating of the telescope assembly by conduction, the shield support is titanium. The absorbed solar heat and the electrically dissipated heat in the telescope assembly will be radiated mainly to the inner surfaces of the canister cold plates.

Heating of the telescope assembly by the two electronic packages and other heat sources external to the telescope assembly will be minimized by a thermal shroud placed around the telescope assembly.

The temperatures on the inside surface of the ATM canister circumference (Quadrant I) will be controlled by the active TCS coolant loop to 47-58°F. Table 2.9.4-VI depicts the heat dissipation during the operational profile.

The heat generation when the experiment is not operational will be as follows:

a. Solar heating of the X-Ray Telescope and X-Ray Event Analyzer system will be zero because the ATM heat shield shutters will be closed.

b. There will be zero power dissipation in the X-REA and camera drive electronic systems and in the camera assembly system.

Temperature Control Requirements in the Telescope Assembly - The temperature control accuracy required in the telescope assembly is determined by the thermal tolerance on focal length in the assembly, and on the pointing alignment requirement. The thermal tolerance on focal length is determined by the properties of the material of which the telescope tube or housing is fabricated, the materials used for the mirror, and the levels of the mirror temperature and of the average temperature of the connecting mirror housing.

The X-RT focal length (approximately 75 inches) will be maintained within $\pm$0.002 inch by temperature control.

The flight model X-RT has beryllium tubes, aluminum center mount casting, and a quartz mirror in a beryllium housing.

The pointing stability requirement of 2.5 arc seconds for a 320-second exposure time (maximum) places limits on the allowable amount of bowing of the supporting X-spar by temperature gradients.

Table 2.9.4-V Heat Dissipation/Operational Profile*

Sunlight or Dark	Solar Heating (Watt)	Instrument Heating (Watt)	Thermal Control Subsystem Heating (Watt)
SUNLIGHT			
Telescope	3.4	**2.2	5.0
X-REA	1.4	16.0	0.0
Camera Control	0.0	7.6	1.1
DARK			
Telescope	0.0	0.0	5.0
X-REA	0.0	14.0	0.0
Camera Control	0.0	7.6	1.1
TOTAL AVERAGE ORBITAL POWER	3.2	24.4	6.2

*Over a 90 minute orbit - 60 minute sunlight and 30 minute dark.
**Camera in auto mode.

Thermal Design of the Telescope Assembly - The thermal design of the telescope assembly has two objectives:

a. Maintain the focal length within tolerance.

b. Satisfy the pointing alignment requirement.

Different rates at which heat is dissipated from the various parts along the length of the assembly were taken into account in achieving these objectives. To assure an even temperature throughout the length of the telescope, the thermal resistances between the parts of the assembly and their heat sink are adjusted. The values of thermal resistance are set by applying selected thermal coatings or insulation to the outside surfaces of the telescope assembly, and by the choice of appropriate materials for the assembly mount. The resistance values are based on the temperature levels expected on the inside surfaces of the ATM canister.

To limit the transfer to the telescope housing of heat absorbed by the telescope solar shield, the shield support has a total conductance of less than 0.3 BTU/HR-^{o}F. The total thermal conductance of the telescope thermal isolation mounts is less than 0.40 BTU/HR-^{o}F.

The insulation used on the telescope is NRC-2 aluminized mylar wrapped to the desired thickness. The location and thickness of insulation required for the telescope assembly was based on thermal vacuum test results.

Temperature Control in the Telescope Assembly - The passive devices of the thermal design are supplemented by an electrical heater control system. The strip heater system surrounds the part of the telescope housing enclosing the mirror assembly and mechanism housing. Resistor heaters are distributed around the centermount. Multiple temperature sensors are mounted along the length of the telescope.

The heater system is controlled automatically. The maximum available heater power is approximately 30 watts. Ground control of this system is provided. An identical backup system is provided. Thermal sensors are installed on the experiment for the purpose of providing a readout for telemetry.

Thermal Design of the Mirror Assembly - The thermal design of the telescope assembly minimizes angular distortions in the mirror.

The three sources of heat to the mirror are:

S056

a. Solar energy passed through the apertures and absorbed by the mirror.

b. Solar energy incident on the mirror assembly front stop and not reradiated to the inner plate of the telescope solar shield.

c. The heater power required to maintain the desired operating temperature level.

The heat absorbed by the mirror must be conducted through the mirror system to the telescope housing and ultimately radiated to the inner surface of the canister wall. Insulation on the telescope housing eliminates the possibility of a circumferential gradient around the mirror sleeve.

The second source of heat transferred through the mirror system is the unwanted solar energy absorbed by the front stop. This is thermally coupled directly to the mirror sleeve to prevent this heat from flowing into the mirror. A relatively thick, highly conducting mirror assembly mounting spacer between the mirror sleeve and the telescope housing reduces the circumferential gradient seen by the mirror. The mirror sleeves also provide support for the mirror and front stop.

The heater power is required for temperature control to compensate for the remaining temperature variables.

The operational temperature limits requirement of 70 ± .5°F is met by a suitable balance of heat generated in the camera assembly, that conducted to the camera assembly from the telescope tube, and that radiated to the inside surface ATM canister uninsulated surfaces of the camera assembly housing.

Electronics Packages Thermal Requirements - Two of the major heat sources in the S056 Quadrant of the ATM canister are the two electronics packages associated with the X-Ray Telescope experiment. The X-Ray Event Analyzer electronic system dissipates 16 watts of electrical energy. Both packages are mounted on metal plates which are attached to the Y-spar by means of thermal isolation mounts having a total of less than 0.4 BTU/HR°F per electronic package. The operational temperature limits for the electronic package are 32°F to 80°F.

2.9.4.5.2 Experiment Pointing - Coarse Acquisition - Coarse acquisition of the sun shall be accomplished by means of the ATM pointing control system before the experiment's front aperture is opened. The ATM experiment pointing control system shall provide pointing of the experiment package axis to any target area in a sun-centered, 40 by 40 arc minutes square, with an accuracy of plus or minus 2 arc minutes. The allowable error between this reference and the experiment axis is plus or minus 2 arc minutes.

Roll Orientation - Not required.

Visual Reference - A visual reference for fine pointing of the experiment is not required. Visual pointing targets will be identified primarily through use of the HCO H-alpha telescope TV display with backup from the ATM H-alpha telescope TV display and other experiment displays, if required.

2.9.4.5.3 Mirror Design Characteristics - The telescope mirror design characteristics are summarized in Table 2.9.4-VII.

Table 2.9.4-VI - Characteristics of Fused Silica Mirrors

	Flight Unit	Flight Backup Unit
Inside diameter		
Front	247.129 mm	247.311 mm
Rear	231.828 mm	232.465 mm
Outside diameter		
Cell	12.750 in.	12.750 in.
Mounting appendages	14.00 in.	14.00 in.
Length		
Overall	9.75 in.	9.75 in.
Weight	less than 43 lbs.	less than 43 lbs.
Surface figure (specified)	0.125	0.125
Power Tolerance	0.500	0.500
Focal Length (measured)	75 ± 3/8 in.	75 ± 3/8 in.
Field of view diameter	40 arc min	40 arc min
Resolution	1 arc sec	1 arc sec
Resolution (optics and film)	2.5 arc sec	2.5 arc sec

2.9.4.6 Operational Limits and Restrictions

2.9.4.6.1 Experiment Constraints - There are several equipment operating constraints that must be observed to insure proper instrument performance:

a. Before proceeding to retrieve an exposed film cassette, all power to S056 must be off.

b. X-Ray Event Analyzer Detector operation is limited to a total of approximately 10^9 counts. This will require that the X-REA High Voltage be turned off when crossing South Atlantic Anomaly.

S056

c. To protect optical surfaces from contamination by control-jet exhaust, the external cover and heat shield should be closed whenever the RCS must be operated for attitude control or for momentum management.

d. The HIGH VOLTAGE for the X-REA beryllium and aluminum proportional counters shall not be turned on until the canister pressure reaches 10^{-5} torr. This is to reduce chance of arcing of the high voltage power supplies.

2.9.5 XUV SPECTROHELIOGRAPH EXPERIMENT (SO82A)

2.9.5.1 Introduction

The XUV Spectroheliograph Experiment (SO82A) is designed to photographically record images of the solar chromosphere and corona to 1.5 $R_\odot$ in the extreme ultraviolet wavelengths between 150 and 625 Å. The experiment will be mounted on the ATM spar as shown in Figure 2.9.5-1. It will be pointed in conjunction with the ATM canister and remotely operated by an astronaut from the ATM C&D Console, or by RF commands from the ground.

The spectroheliograph experiment housing is a long, light-tight, aluminum housing, consisting of a rigid case and removable cover to enclose the optical subsystem. See Figure 2.9.5-2.

The optical subsystem, consisting primarily of a 3600 line/mm grating and film strip camera, is used to focus and photograph full solar images. The film strip camera must be installed and removed by EVA during the mission. The experiment provides four modes of operation (TIME, AUTO 1, AUTO 2 and FLARE) any one of which may be selected by the astronaut for the solar phenomena existing at a given time. Either of two wavelength bands (LONG and SHORT) and three ranges of exposure times (SHORT, normal and LONG) are also controlled by the astronaut using the ATM C&D Console. A detailed description of these features is presented in Section 2.9.5.3.

The experiment is powered by five separate 28 vdc lines provided by the ATM. The major elements of the experiment electronics are the power supply; reset and preset logic; aperture door, mirror/grating, camera and diode array electronics; AUTO 1, AUTO 2, and FLARE mode logic; and a temperature monitoring subsystem.

The Thermal Control Subsystem (TCS) consists of five heater panels that operate independently of the experiment electronics to maintain the experiment case at a predetermined alignment temperature. The heater panels cycle on and off automatically, as necessary to maintain the proper average temperature.

2.9.5.2 Subsystems Interfaces

All SO82A Interface Control Documents and drawings are listed in the "Experiment Interface Defining Document", MSFC Document 50M02462.

2.9.5.2.1 ATM Control and Display Console - Most controls for operation of the experiment are located on the ATM C&D Console. See Figure 2.9.5-3 and Section 3.0 for switch nomenclature, position and function. In addition, the SO82A experiment will require the use of the XUV MONITOR and/or one of the H-alpha telescopes to locate solar features

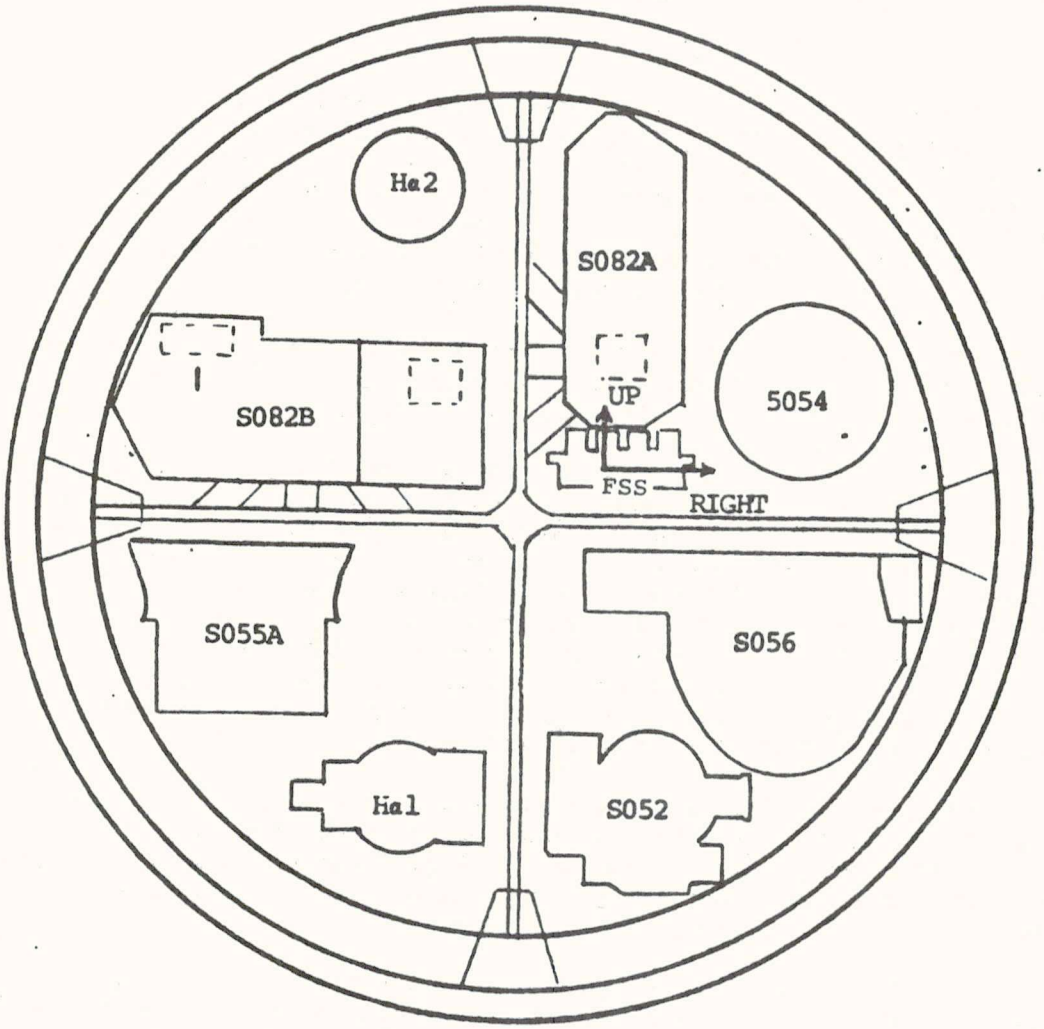

ATM CANISTER
VIEW TOWARD SUN

Figure 2.9.5-1 S082A Mounted in ATM Canister

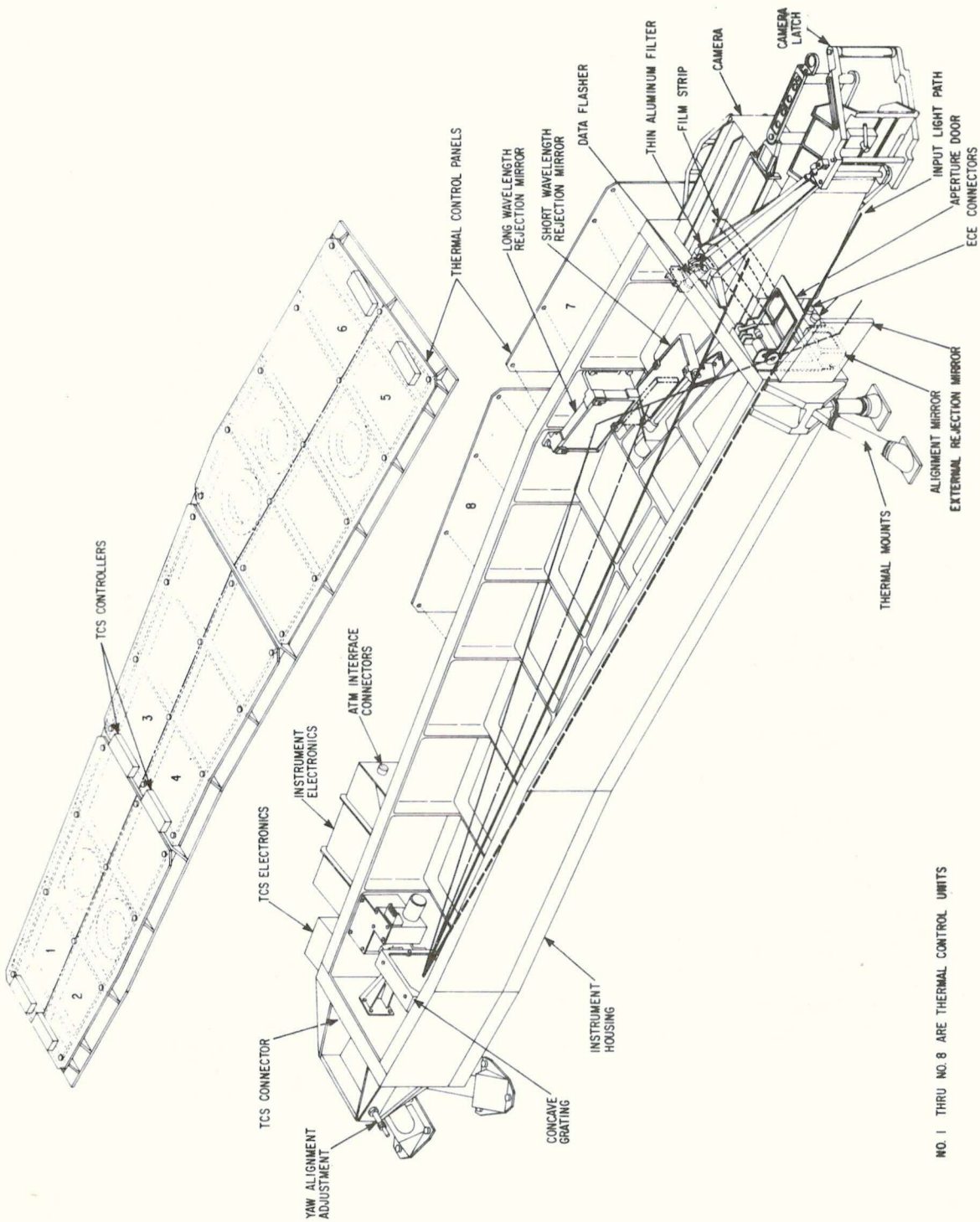

Figure 2.9.5-2 XUV Spectroheliograph Experiment S082A

S082A

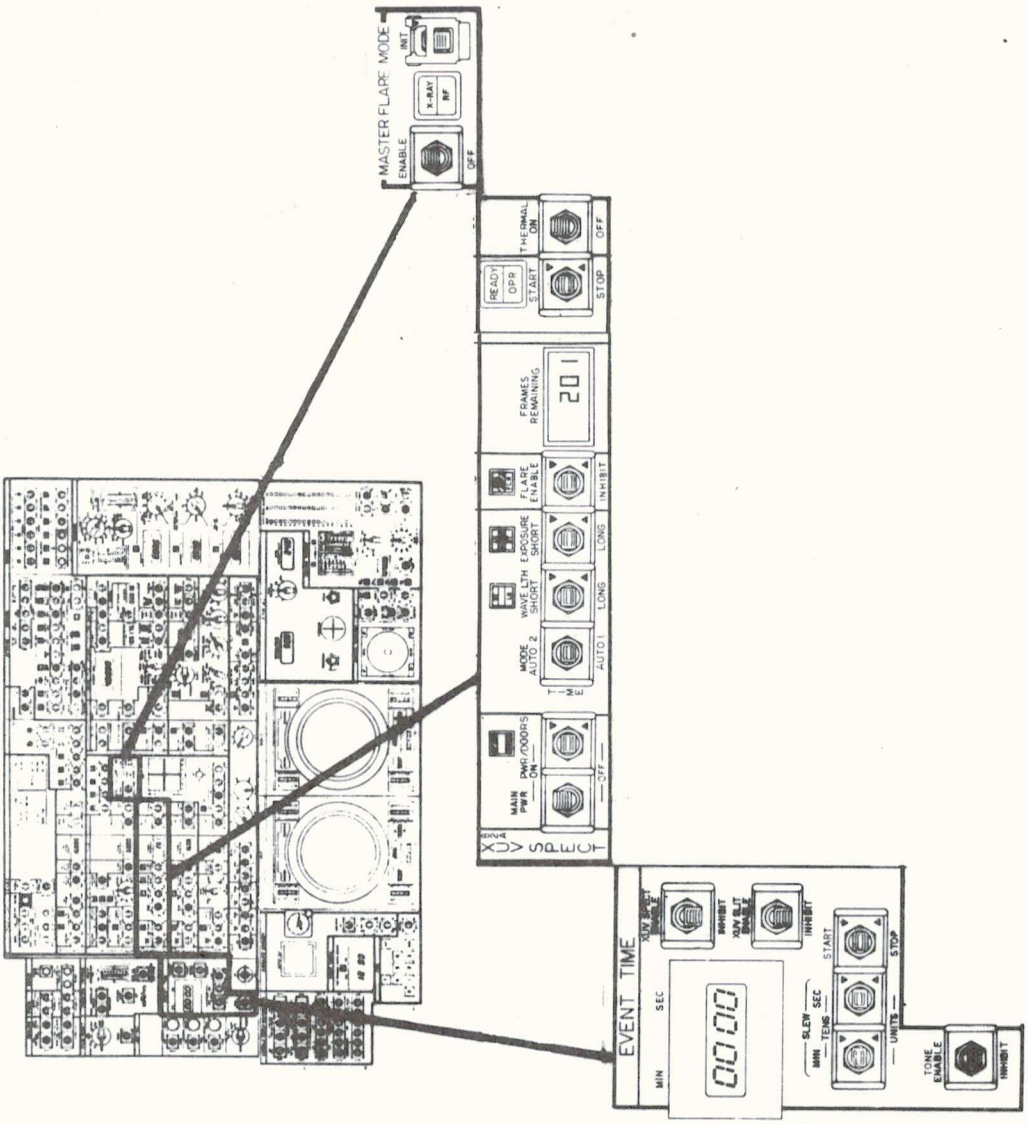

Figure 2.9.5-3 S082A Controls on ATM C&D Console

of interest, the Manual Pointing Control system for positioning the canister and experiments, the Event Timer for use during manual operation of the experiment camera, and will be used in conjunction with other ATM experiments for data comparison.

2.9.5.2.2 Power - Five separate 28-volt lines are provided to the experiment by the ATM:

a. 28 vdc Primary
b. 28 vdc Panel (Command/Indicator)
c. 28 vdc Actuator
d. 28 vdc Thermal Control System
e. 28 vdc Thermal Control System Heaters

The first three power lines supply power to the experiment when the XUV SPECT: MAIN PWR switch is placed in the ON position, the remaining two when the THERMAL switch is placed in the ON position. All five power lines and their returns are filtered at the input to the experiment. In addition, redundant ATM lines which are isolated through diodes provide short-circuit protection for the primary, actuator, TCS and TCS heater power.

2.9.5.2.3 Telemetry - The S082A telemetry requirements consist of three digital telemetry channels to continuously monitor "shutter open", "shutter closed", and "short wavelength in" signals; and three analog sub-commutators, each containing fifteen channels of housekeeping data (Table 2.9.5-IV). Additional information on these telemetry requirements are contained in the "Experiment Interface Defining Document", MSFC document 50M02462.

2.9.5.2.4 Other Experiments - Although the S082A experiment will be used in conjunction with other ATM experiments, there are no provisions for co-aligning S082A with any other ATM experiment during the mission. However, co-alignment will be performed during ground check-out. Operation of the S082A experiment will require rolling the ATM canister during times when other experiments may also be operating.

2.9.5.3 Functional Description

The field of view of S082A is such that no fine pointing to specific areas on the solar disc is required. The usual operation is in the sun centered mode as in Figure 2.9.5-7. However, at times it may be operated up to 16-21 arc minutes (based on film strip width to accomodate image displacement) off the solar center when one of the other ATM experiments is observing a specific offset feature, such as a flare. Spectroheliograms are made by opening the experiment aperture door with the XUV SPECT: PWR/DOORS switch to On, selecting a mode and operating the film camera. Solar images are focused on the film by the concave main grating in one of two wavelength bands (150 Å to 335 Å or 321Å to 625Å). The grating is shifted from one band to the other by remote command or automatically during an automatic film

S082A

sequence. See Figure 2.9.5-4.

When the main grating is commanded to the short wavelength position by momentarily placing the XUV SPECT: WAVE LTH switch to the SHORT position, the movable heat rejection mirror is automatically raised to reflect the zero-order white light back through the experiment aperture door to the fixed external heat rejection mirror. Placing the WAVE LTH switch to the LONG position shifts the grating and lowers the movable mirror allowing the internal fixed mirror to reflect the zero-order white light to the external mirror.

Exposure times may be modified with the XUV SPECT: EXPOSURE switch. Placing the momentary switch in the SHORT position divides the normal exposure time by four; moving the switch to LONG multiplies the normal time by four.

All data taking modes except the FLARE mode are initiated by placing the XUV SPECT: START switch in the START position. Any mode may be terminated at any time by positioning the same switch to STOP, by moving the MODE switch to a different position or by turning off the experiment operating power with the XUV SPECT: PWR/DOORS switch to OFF or MAIN PWR switch to OFF.

Spectroheliograms are obtained in any of four modes: a manual (TIME) mode and three automatic modes (AUTO 1, AUTO 2 and FLARE). Mode selection is made by placing the XUV SPECT: MODE switch in the desired position or with the FLARE ENABLE switch.

2.9.5.3.1 AUTO 2 Mode - The AUTO 2 mode provides an automatic sequence of six predetermined exposures (three in each wavelength). The grating position is automatically changed after each exposure. The first exposure may be made at either wavelength. All exposure times within a sequence may be prescaled up or down by a common factor with the EXPOSURE switch. AUTO 2 mode exposure times are fixed as listed in Table 2.9.5-I. This mode is used when it is desired to study features of interest in emissions covering the entire spectral range of the experiment.

2.9.5.3.2 TIME MODE - In the TIME mode, individual spectroheliograms may be taken with manually controlled exposure times. The camera shutter is opened to begin the exposure and closed at the desired termination time. For automatic timing the panel event timer may be operated to terminate the exposure at the completion of the pre-set elapsed time. This mode is used when none of the automatic sequences fit the observation situation, or when the remaining quantity of unexposed film is limited.

2.9.5.3.3 AUTO 1 Mode - The AUTO 1 mode provides an automatic sequence of three exposures of predetermined length. The exposure

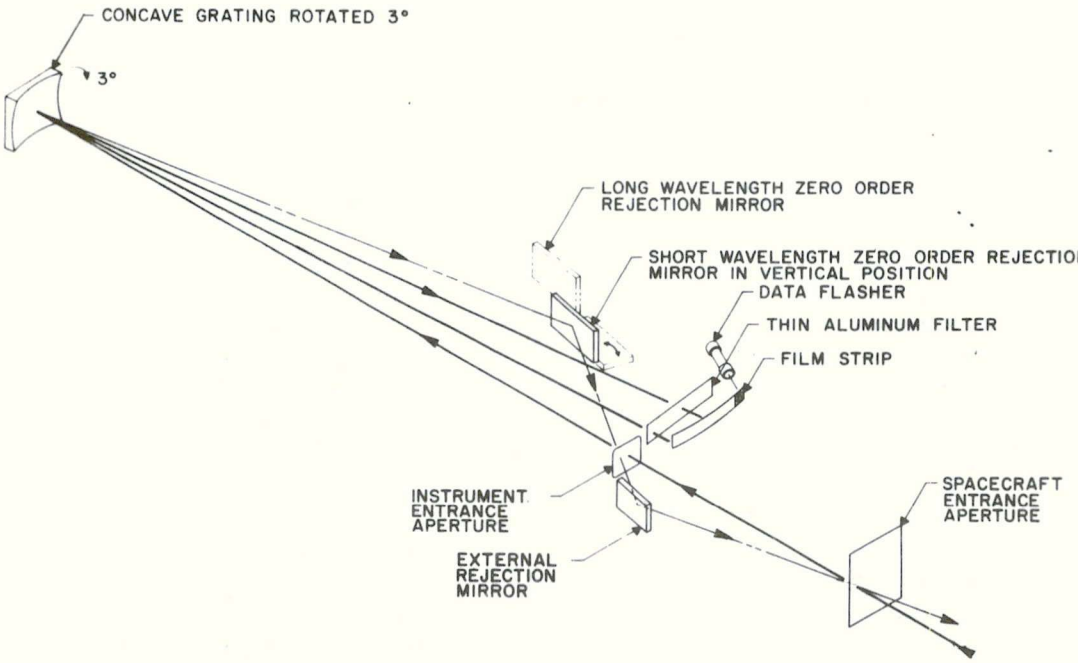

Short Wavelength Configuration

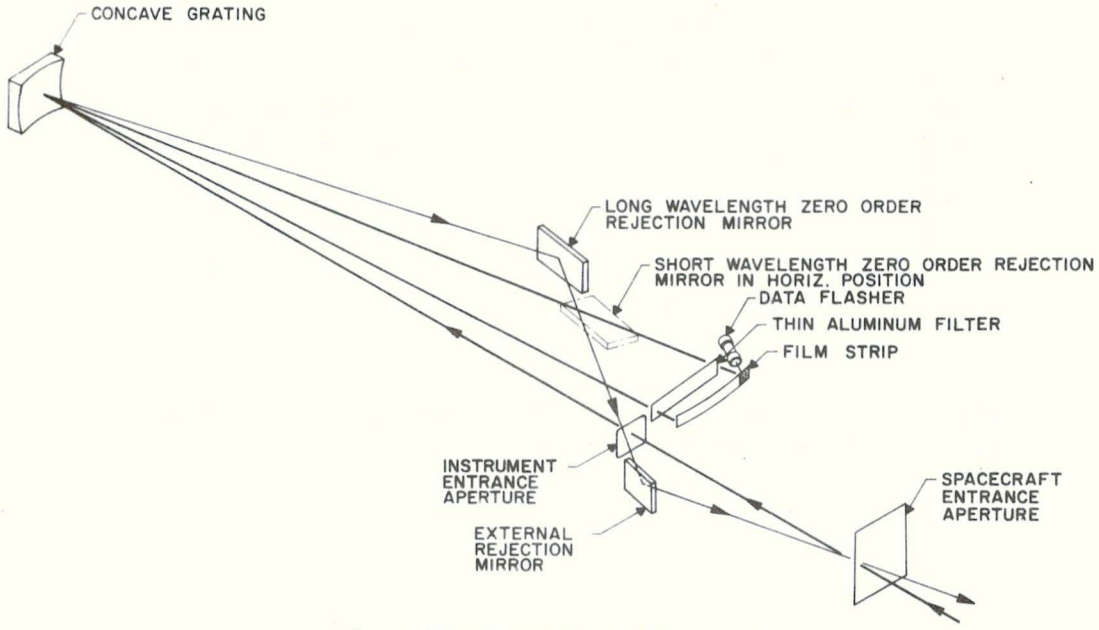

Long Wavelength Configuration

Figure 2.9.5-4 S082A Optical Schematic

S082A

Table 2.9.5-I

Auto 2 Mode Six Exposure Sequence

NORMAL EXPOSURES

10 Seconds SW		or	20 Seconds LW
20 Seconds LW			10 Seconds SW
40 Seconds SW			80 Seconds LW
80 Seconds LW			40 Seconds SW
160 Seconds SW			320 Seconds LW
320 Seconds LW			160 Seconds SW

(10.7 minutes) *

SHORT PRESCALED EXPOSURES (x/4)

2.5 Seconds SW		or	5 Seconds LW
5 Seconds LW			2.5 Seconds SW
10 Seconds SW			20 Seconds LW
20 Seconds LW			10 Seconds SW
40 Seconds SW			80 Seconds LW
80 Seconds LW			40 Seconds SW

(2.8 minutes) *

LONG PRESCALED EXPOSURES (4x)

40 Seconds SW		or	80 Seconds LW
80 Seconds LW			40 Seconds SW
160 Seconds SW			320 Seconds LW
320 Seconds LW			160 Seconds SW
640 Seconds SW			1280 Seconds LW
1280 Seconds LW			640 Seconds SW

(42.2 minutes) *

* indicates total time required for complete sequence including shutter, camera and grating mechanism drive times.

Table 2.9.5-II

AUTO 1 Mode Three Exposure Sequence

NORMAL EXPOSURES (x)

Short Wavelength Grating Position	Long Wavelength Grating Position
10 Seconds	20 Seconds
40 Seconds	80 Seconds
160 Seconds	320 Seconds

(3.6 minutes)*

SHORT PRESCALED EXPOSURES (x/4)

Short Wavelength Grating Position	Long Wavelength Grating Position
2.5 Seconds	5 Seconds
10 Seconds	20 Seconds
40 Seconds	80 Seconds

(1.0 minutes) *

LONG PRESCALED EXPOSURES (4x)

Short Wavelength Grating Position	Long Wavelength Grating Position
40 Seconds	80 Seconds
160 Seconds	320 Seconds
640 Seconds	1280 Seconds

(14.1 minutes) *

* indicates total time required for complete short wavelength sequence including shutter, camera and grating mechanism drive time. Long wavelength sequences times are twice the short wavelength times.

S082A

TABLE 2.9.5-III Flare Mode Twenty-four Exposure Sequence

(19.2 minutes) *

Exposure Number	Wave-length	Exposure Length (Sec)	Exposure Number	Wave-length	Exposure Length (Sec)
1	Short	2.5	13	Long	10
2	"	10	14	"	40
3	"	40	15	"	160
4	Long	5.0	16	Short	2.5
5	"	20	17	"	10
6	"	80	18	"	40
7	Short	2.5	19	"	10
8	"	10	20	"	40
9	"	40	21	"	160
10	"	10	22	Long	10
11	"	40	23	"	40
12	"	160	24	"	160

* indicates total time required for complete sequence including shutter, camera and grating mechanism drive times

times may be increased, as a group to 4 times normal, or decreased to ¼ of normal times. An AUTO 1 mode may be completed in either the short or long wave-length grating position, but the desired wave-length must be selected before beginning the sequence. The AUTO 1 mode exposure times are fixed as listed in Table 2.9.5-II. This mode is used when it is desired to study features of interest in emissions covered wholly by one position of the grating.

2.9.5.3.4 FLARE Mode - The FLARE mode provides an automatic series of 24 exposures, 15 at the short wavelength and 9 at the long wavelength, as listed in Table 2.9.5-III. The FLARE mode may be entered from any power-on condition of the experiment. If it is entered during another mode, that mode is immediately terminated to allow the FLARE mode to begin.

To enter the FLARE mode, the XUV SPECT: FLARE switch must be momentarily placed in the ENABLE position and then the MASTER FLARE MODE INITIATE switch must be put in the INITIATE position. This mode is used to observe the birth and initial stages of major solar flares.

2.9.5.4 Major Component Functional Description

2.9.5.4.1 Experiment Housing - The case and cover make up the basic structure of the experiment housing and provide a single, rigid, light-tight unit after assembly. (See Figure 2.9.5-2)

The case consists of a series of welded panels with integral ribs and stiffeners. The panels are made from 6061-T651 aluminum alloy, welded per MIL-W-45205. The case has openings for the camera mounting plate and the entrance aperture door and provides mounting points for attachment of the thermal mounting legs.

The cover is machined from a single 6061-T651 aluminum alloy plate. All stiffeners and ribs are an integral part of the cover. Five 4.2 inch-diameter holes are located on the cover for access to the inside of the experiment during optical alignment. Two of the five access hole covers include case vents. The case vents are basically a woven metal fiber with a nominal porosity of 75 microns.

Thermal emissivity of the unit is controlled by a black anodize finish used on both interior and exterior surfaces. The unit provides machined mounting pads and surfaces for mounting experiment components and the film-strip camera. It also provides externally attached housings to contain the power supplies and electronics used in the experiment.

The experiment housing also has two contamination monitors located below the camera. Each monitor contains a mirror and an aluminum filter. One monitor is intended for use in evaluating optics de-

S082A

gradation due to short-term contamination, the second for long term.

A nitrogen purge fitting is mounted adjacent to the contamination monitors. It allows connection of a nitrogen supply for a small positive pressure in the experiment during storage and test.

2.9.5.4.1.1 Thermal Mounting Legs - The experiment is supported on six titanium legs equipped with ball joints to compensate for temperature variations. Three of the legs are contained in a tripod mount at the rear of the experiment. A bipod mount and a single (monopod) leg support the front (sun) end.

The tripod mount includes a pitch and yaw adjustment mechanism to allow fine adjustment of these experiment axes when aligning the experiment on the ATM Spar. A reference alignment mirror is provided on the front face of the experiment, just below the experiment aperture door, to facilitate alignment on the spar.

2.9.5.4.1.2 Experiment Aperture Door - The aperture door is located at the sun end of the experiment, in the upper corner adjacent to the camera, and prevents the entry of light and contaminant particles to the optical system when the experiment is not in use. The aperture door (Figure 2.9.5-5) is a machined magnesium part with a flange-like projection on the housing when the door is closed, thus creating a seal against light or particle entry. The radius of action of the door is from closed to 90 degrees away (horizontal) at fully open. The door is held in the fully open position by a spring-loaded detent which locks the door open until actuated to the closed position.

The mechanism for opening and closing the door consists of a stepper motor with a splined shaft which meshes with a gear pinned to the shaft about which the door rotates. At the end of this shaft, opposite the motor and gear, is a 90-degree cam segment that drives the door by engaging a 180-degree semicircular projection from the door.

When the motor is energized, it drives the gear and shaft through 90 degrees before the cam segment engages the projection on the door. During this 90 degrees of free travel, the spring-loaded latch is lifted clear of the notch it rests in when locked allowing the door to swing open. After opening to the 90-degree, fully-open position, the latch rides down into a similar notch in the door, locking it in the open position. The basic operating sequence is the same for closing; i.e., during the first 90 degrees of gear rotation, the door is unlocked; during the next 90 degrees of rotation the door moves through 90 degrees and is locked as it comes to rest. Time required to open or close the door is approximately 2 seconds.

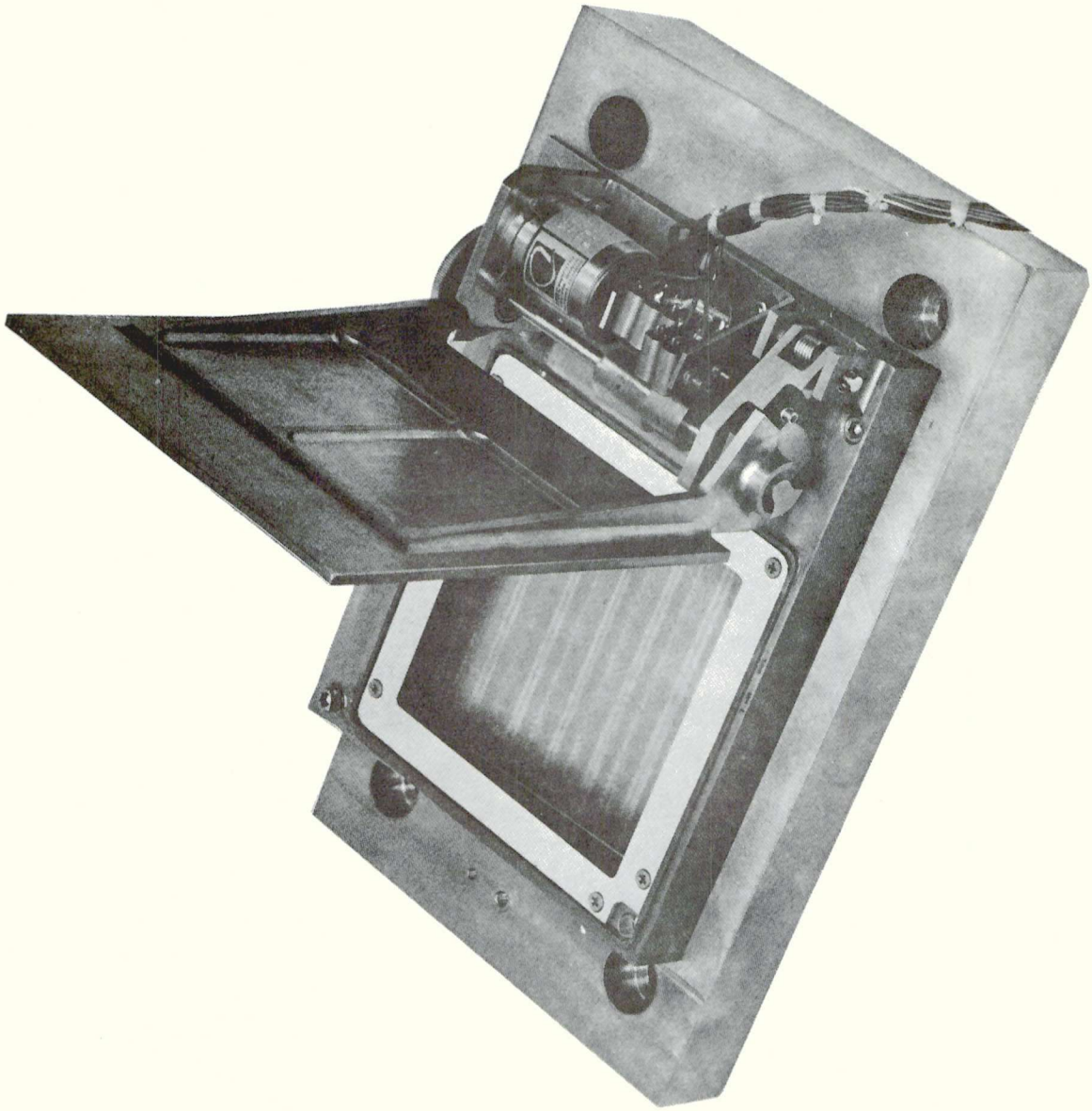

Figure 2.9.5-5 S082A Experiment Aperture Door

The motor rotates 90 degrees per step and at a rate of 10 steps per second. The motor shaft spline has 13 teeth which mesh with a 156-tooth gear, for a ratio of 1 to 12. A description of the S082A heat shield door is contained in Section 2.1.

2.9.5.4.1.3 Camera Mounting Plate - The Spectroheliograph camera mounting plate is attached to the case at the front (camera) end of the experiment. It provides a guide for positioning the camera in the correct attitude and alignment for operation; an aperture for light from the main grating to the camera; an aperture and enclosure for light from the data flasher; an electrical connector for the camera power; and a door to seal the experiment when the camera is not installed.

The camera mounting plate has four stop pads for positively locating the camera. The pads are adjustable in order to establish a plane against which the front face of camera rests. Two of the pads have guide holes that receive guide pins on the camera face for correct alignment of the camera with the mounting plate. One of the guide holes is slotted to allow a dimensional tolerance between the camera guide pins.

Two spring-loaded plungers in the camera mounting plate allow for opening and closing the shutter door. When the camera is mated against the face of the mounting plate, it forces the plungers inward and causes the door to open smoothly, uncovering the camera apertures. When the camera is removed, the springs push the plungers back to their original position, thus closing the door. The mounting plate has a flange-like projection around its perimeter which mates with a matching indentation on the camera face to seal out light and dust particles when the camera is installed. A connector located in the lower left corner of the mounting plate provides the electrical interface with the camera. When the camera is installed and locked, its connector mates with the mounting plate connector and makes the camera operable.

2.9.5.4.1.4 Camera Latch and Guide Rail - The camera latch and guide rail mechanism consists of a large welded guide rail, a lever-operated latching mechanism and movable handle mounted at the sun end of the experiment (Figure 2.9.6-6). The design of the latch and guide rail mechanism allows installation and removal of a camera from the experiment by an astronaut during extra vehicular activity (EVA), while dressed in a pressure suit and using gloved hands. Camera installation and removal is accomplished through the door on

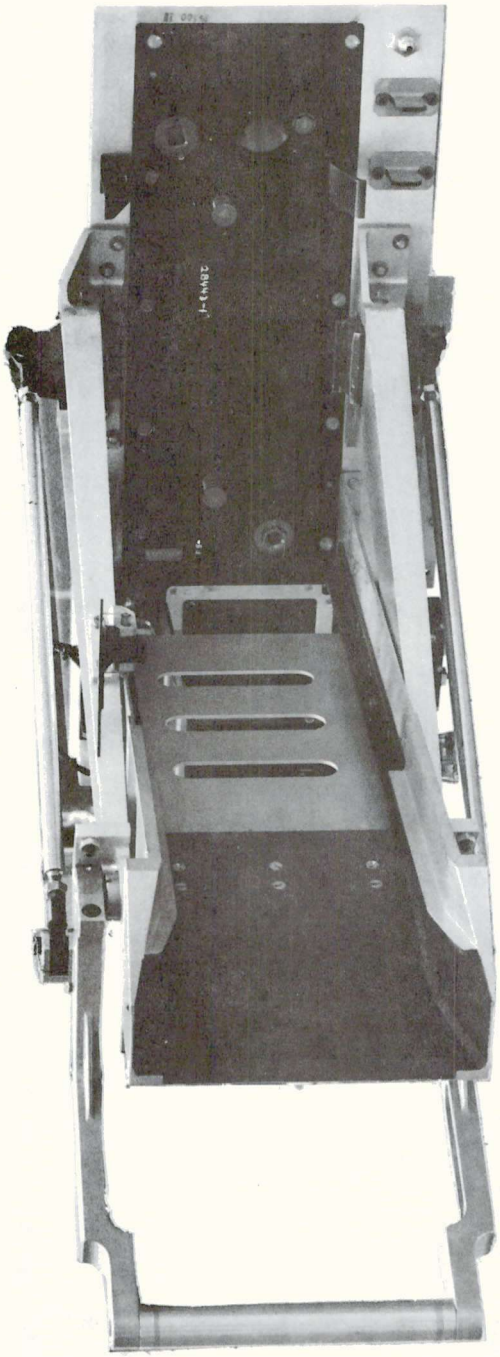

Figure 2.9.5-6 S082A Camera Latch and Guide Rail Assembly

the sun end of the ATM canister. MSFC document 50M02462 defines the interface requirements and limitations. The mouth of the guide rail is flared to guide the camera during insertion, even if grossly misaligned. The guiding surfaces of the rails and chute are finished with a Teflon-impregnated hard anodize to decrease friction and wear.

Camera latching is achieved by two lugs that engage projecting ribs on the top and bottom of the camera, near its face, and force the camera into position on the camera mounting plate. The lugs lock the camera by means of the large handle, which functions as an over-center lever actuated approximately 16 inches behind the lugs.

The guide rail is a sheet-metal and welded-plate structure. The guide rail is provided with detents which hold the camera within range of the lugs until the handle is closed to complete the latching operation. When inserted in the guide rails, the detents also hold the camera in positions where the astronaut is required to release the camera to perform other insertion functions. An axial force on the camera of 12-16 pounds (approximately) is required to overcome the detent positions.

In the unlatched position, the camera latch lever is also restrained by a detent. The detent provides a retaining force of 10 to 15 inch pounds measured about the latch handle pivot. A launch lock is provided on the guide rail to lock the handle in the closed position during launch only. The launch lock turns to drive a pinion that meshes with a pin on its end. When the handle is properly positioned, the pin engages a hole in the handle, thereby locking it in place. During the first EVA the launch lock is disengaged and left in a stowed position.

Located on a mounting bracket on the top arm of the guide rail is a flag indicator assembly. This unit indicates when the camera has mated properly with the experiment and is ready for use. With the camera removed, the flag is held in a horizontal plane by a torsion spring. When the camera is fully installed, a projecting rib on its top rear surface engages a lug on the flag and drives it downward 90 degrees to a vertical position. If the camera is not properly mated with the experiment, the flag will not rotate fully to the vertical position.

2.9.5.4.2 Optical System

2.9.5.4.2.1 Main Grating - The principal elements of the optical system (Figure 2.9.5-4) are a two-position concave grating and a film-strip camera. The grating has a four-meter radius and is ruled 3600 lines per millimeter over a twelve square centimeter area. It receives light directly from the sun and forms a spectrum of solar images at a focal length of two meters on film in the camera.

The wavelength range is covered in two sections, 150 Å to 335 Å and 321 Å to 625 Å, each photographed separately as determined by the grating position.

The grating is held in focus and alignment by spring-loaded adjusting screws within a frame structure. The adjusting screws are backed up with positive stops to prevent grating displacement or damage during handling and launch. The frame is supported by flexible pivots on one edge which provide the hinge line about which the grating is moved from short to long wavelength positions. A cam follower is mounted to the frame side opposite the hinge line, and is engaged with a barrel cam which provides the mechanism of position change as well as position locking in either of the two grating positions. The actuating barrel cam is driven by a bi-directional four-phase, 90-degree, stepper motor driven at 10 pps through a gear reduction of 33 to 1. The actuating time from locked position to locked position is 1.5 seconds. In the short wavelength position, three micro switches are actuated to indicate grating position for analog telemetry, digital telemetry, and logic signals. In the long wavelength position, two switches are actuated to provide analog telemetry and logic signals.

Distribution of the solar images on the film strip is illustrated in Figure 2.9.5-7. The film strip is curved in the camera to fit the focal curve of the grating. Figure 2.9.5-8 is typical of S082A data.

2.9.5.4.2.2 Filter - The thin aluminum filter is physically located in the camera, and is positioned immediately in front of the film. The filter consists of a thin film (1000 Å) of pure aluminum deposited on a fine wire matrix. It is supported in a rigid frame to prevent distortion and is mounted immediately behind the shutter aperture. The filter and grating combination allow only the desired wavelength band between 150 and 625 Å to expose the film.

2.9.5.4.2.3 Heat Rejection Mirrors - Two zero order rejection mirrors are mounted inside the experiment housing. These correspond

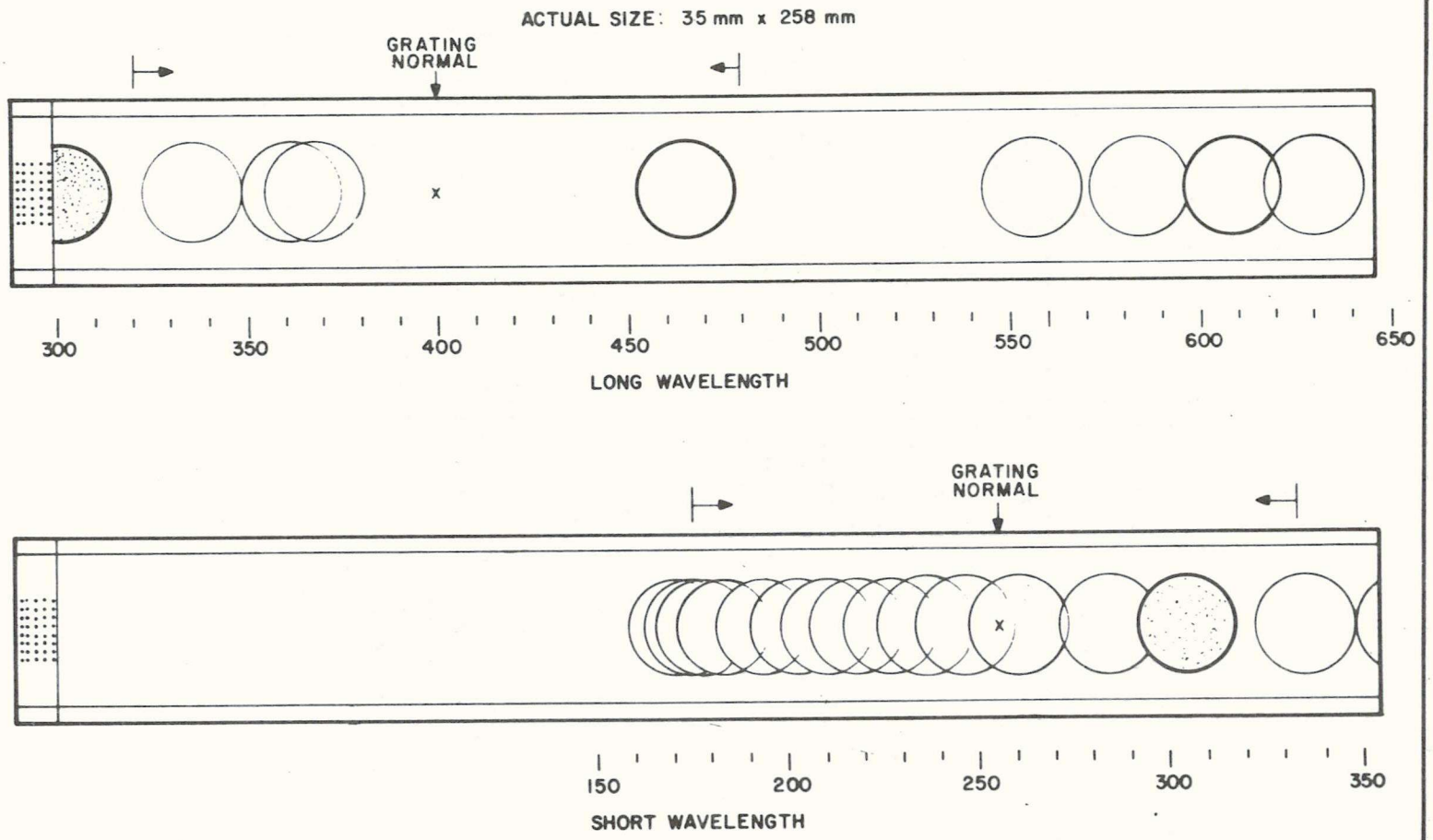

Figure 2.9.5-7 S082A Data Images on Film Strip

He^{+} 304 Å

Figure 2.9.5-8 Typical S082A Spectroheliograph Data

Photograph taken by the S082A rocket prototype instrument on November 4, 1969 during a Class IB solar flare. This is a magnified section of the original 20 mm wide film strip.

to the two grating positions and reject zero-order white light from the main grating. The rejected light is reflected to a third mirror, located externally at the experiment aperture, which dumps the unwanted light overboard. When the grating is in the long wavelength position, the short wavelength rejection mirror is folded down so as not to interfere with the light path.

2.9.5.4.2.4 Reference Alignment Mirror - The reference alignment mirror is an adjustable Pyrex mirror mounted at the front of the experiment housing adjacent to the aperture door. The mirror itself is held within an aluminum case assembly which mounts to the front of the experiment housing. The front of the mirror is retained at three points by adjusting screws; adjustable spring-loaded plungers are provided in back of the mirror in direct opposition to the adjusting screws. The mirror edges are captured by two spring-loaded plungers and two opposing nylon pads. This gives the mirror the required adjustability. All spring plungers have rigid tips which, in combination with the nylon pads, retain the mirror on all six sides to protect it from damage.

2.9.5.4.2.5 Data Flasher - The data flasher is located in the upper corner of the experiment housing, immediately adjacent to the camera mounting plate door. It consists of a light emitting diode array and a lens tube.

The diode array is mounted on an adjustable bracket that permits positioning and coarse alignment. The lens tube is mounted in a fine threaded hole located on the camera mounting plate.

When assembled, the diode array fits into the rear of the lens tube, which functions as a shroud to prevent light from falling on the solar image segment of the film strip. Final focusing adjustment is achieved by screwing the threaded lens tube in or out of the camera mounting plate. The lens focuses the light from the diode array onto the end of the film strip.

The data flasher projects digitally encoded time data onto the film for exposures of 0.25 second or longer. The coded time data is generated by the diode array. The first five columns record exposure start time (in terms of ATM mission time), and the last three columns record the exposure end time. It should be noted that bit 25 is the least significant (1/4 second) and bit 1 is the most significant.

2.9.5.4.2.6 Camera - The camera housing (Figure 2.9.5-9) provides a light-tight aluminum alloy box for holding the film strips in two stacks. The film strips are 35mm x 258 mm UV-sensitive film held in stainless steel holders. The end-clips on the film holders are electrically conductive and are grounded to prevent arcing from the film.

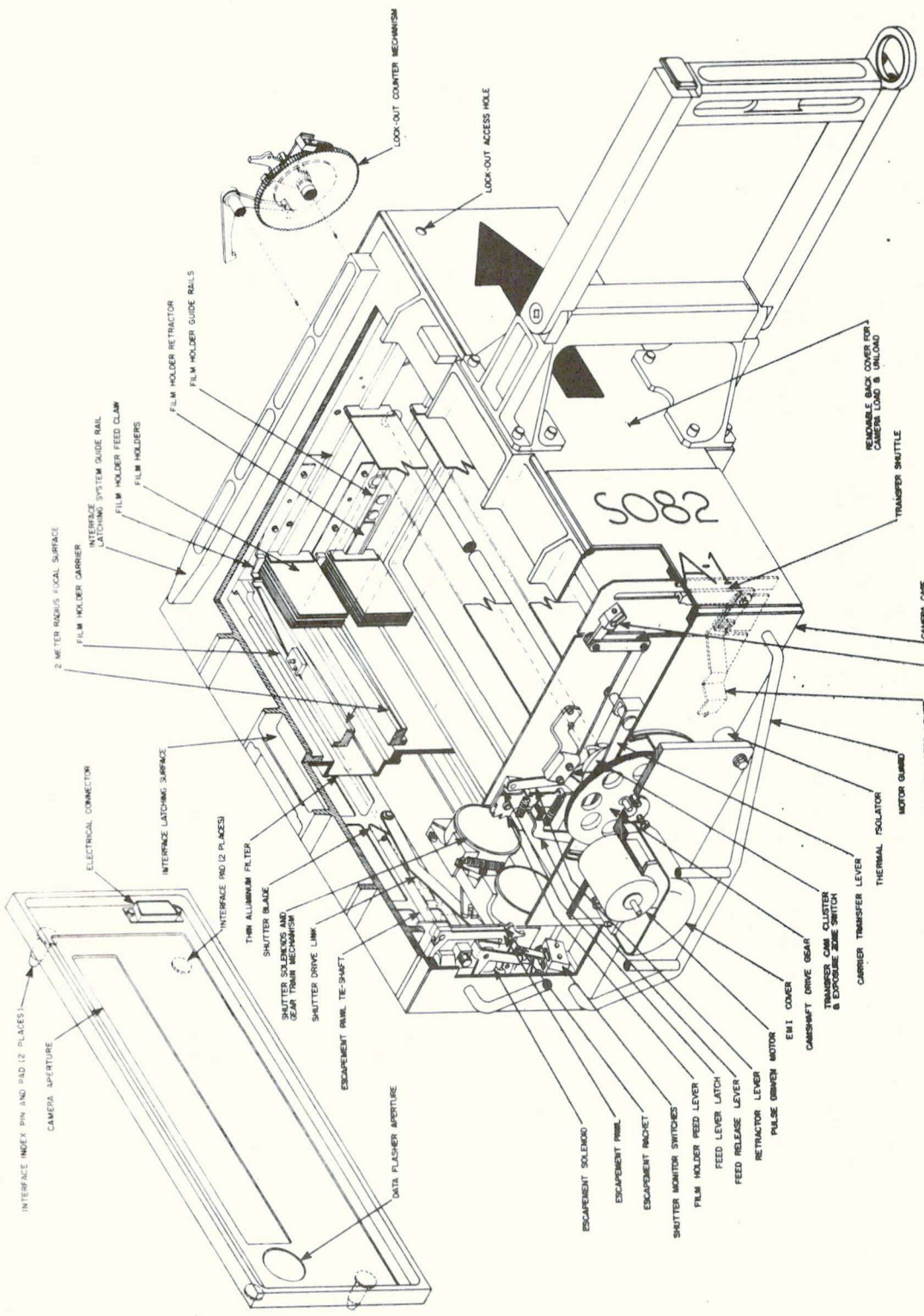

Figure 2.9.5-9 S082A Film Strip Camera

12 AUGUST 1970

S082A

Guide rails and latching lugs are incorporated at the top and bottom plates of the housing for guiding the camera into position and engaging the camera latching mechanism during installation in the experiment.

The folding camera handle is extended and locked for inserting the camera in the experiment when it is mounted in the ATM. It remains extended during launch and flight. This facilitates insertion and removal of the camera, especially when done by an astronaut during EVA. The handle is folded during camera storage in the canister.

The camera handle is aluminum alloy with hardened steel inserts for the detent positions. Detenting is accomplished by a spring-loaded tapered rod end falling into a matching tapered hole.

The camera face contains the rectangular aperture for admitting spectra from the main grating and the circular aperture for time data from the diode array. An electrical connector for camera power and signal circuits is mounted in one corner and mates with a corresponding connector on the camera mounting plate. The camera face is also equipped with two guide pins and two alignment pads that provide precise alignment of the camera position after insertion and locking.

Shutter Assembly - The camera shutter assembly (Figure 2.9.5-10) is mounted just behind and attached to the camera faceplate. The shutter blade is attached to a lever driven by an oscillating cam. The cam, in turn, is rotated through an arc in either direction by one of the levers on the shafts of the rotary solenoids.

Two microswitches are installed adjacent to the pivot end of the shutter lever and provide signals to indicate shutter position. The shutter closed switch also provides a signal to the experiment logic for enabling power to the film changing mechanism stepper motor.

Film Changing Mechanism - The camera's changing mechanism consists of several timed, cam-actuated mechanisms for feeding and retracting successive film strips for exposure. It provides the means for removing an exposed film strip from the film carrier and placing it in the retraction stack, while simultaneously removing a new film strip from the retraction stack and placing it in the feed stack.

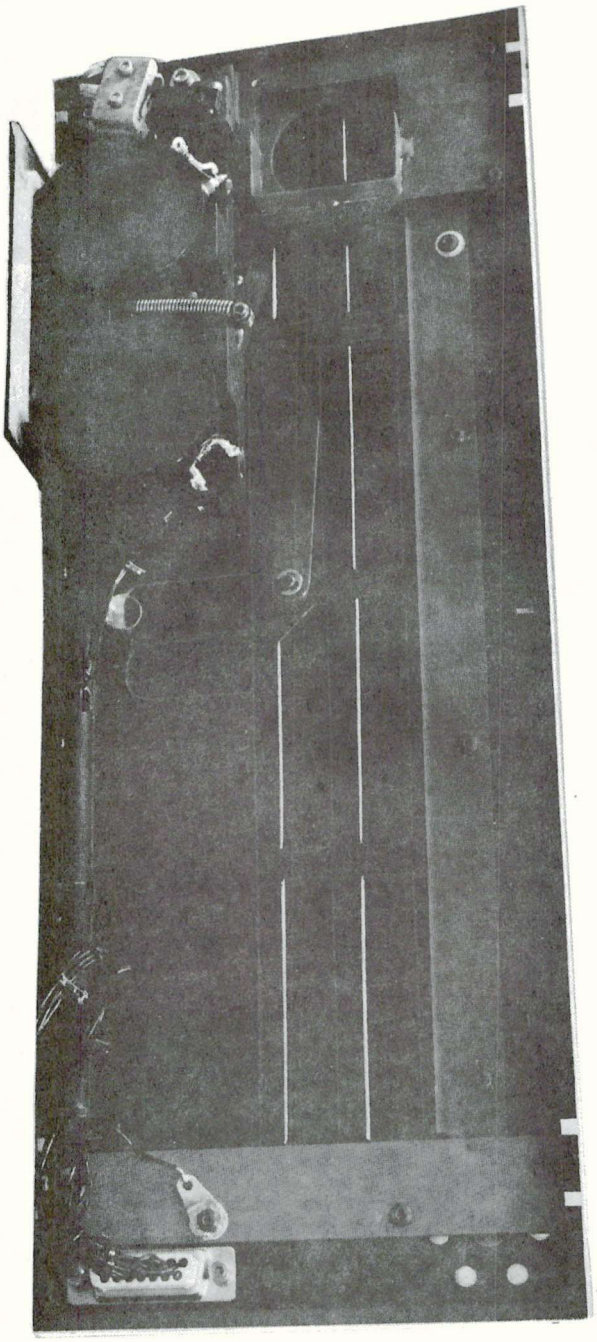

Figure 2.9.5-10 S082A Shutter Assembly

S082A

The operation of the film changing mechanism is shown by the numbered events in the diagram in Figure 2.9.5-11. Starting with the initial conditions that the shutter is closed and the film strip is in position and ready for exposure, the following operating sequence occurs:

(1) Shutter opens and film strip is exposed.

(2) Shutter closes after exposure duration commanded by manual operation or by selected automatic operating mode logic.

(3) Stepper motor is turned on and escapement solenoids are actuated. Carrier pawl is released and carrier transfers exposed film strip and film holder to the retraction stack. Simultaneously, the empty film shuttle at rear moves to the retraction stack.

(4) Film holder is released from carrier by the finger that actuates the spring release cam on the carrier.

(5) Film holder is retracted onto retraction stack guide rails by retractor hooks; film stack moves rearward and one film holder is loaded onto rear film shuttle (5A). Simultaneously, feed stack is moved forward, creating space at rear of the stack for a film holder (5B).

(6) Film carrier at front returns empty to feed stack; simultaneously, shuttle at rear transports one film holder to feed stack.

(7) Transfer bail forces film holder from shuttle onto feed stack guide rails and film stack moves forward (7A). Claws release first film holder in feed stack, move behind it and drive it onto carrier. Carrier curves the film holder to fit experiment focal length and holds it in position for the next exposure cycle (7B).

The film changing mechanism is driven by a 600 pps stepper motor and reducing-gear drive train. Symmetrical cam clusters are provided on each side to drive the various mechanisms. A lockout exposure counter is also provided which counts the number of film strips exposed and locks the film changing mechanism to prevent double exposures.

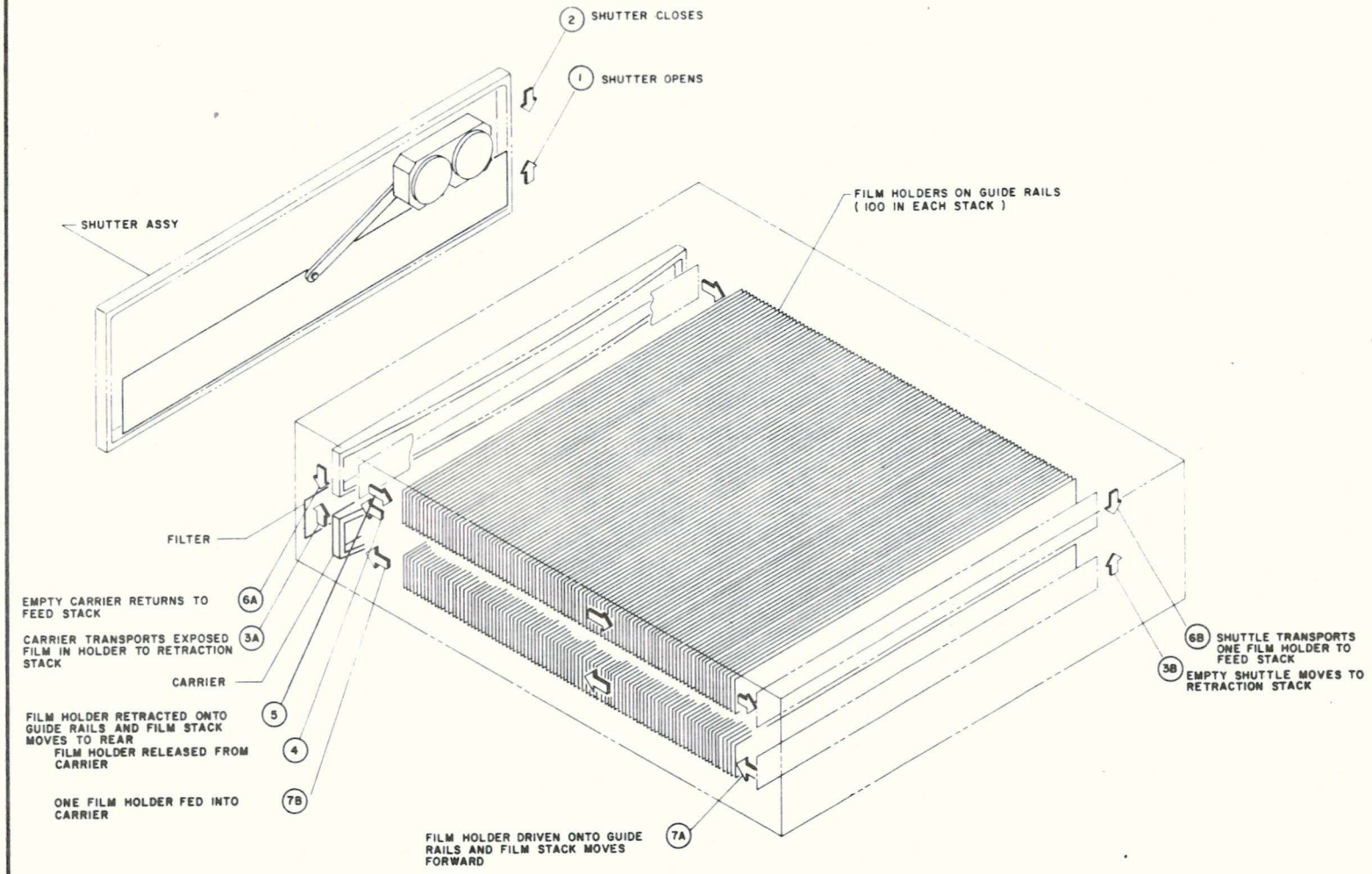

Figure 2.9.5-11 S082A Camera, Film Changing Sequence

2.9.5.4.3 Electronics - The experiment electronics consists of five basic interrelated subsystems as follows:

a. Power ON/OFF circuitry and the associated power supplies

b. Mechanism drivers and the associated logic circuitry

c. Mode of operation and exposure time selection circuitry

d. Diode array circuitry

e. Telemetry circuitry includes temperature sensing

The electronics provide the following:

a. Actuator power for the aperture door, film camera, and movable grating and heat rejection mirror

b. Required circuitry to respond to the various input commands

c. Time computer to control automatic film exposure times and sequences

d. Various isolated power supplies

e. Indications to identify position of the various mechanisms, and the response to various commands

f. Experiment temperature monitors

g. Data Flasher Drive

All functionally different circuits are isolated from each other by approximately 1 megohm to prevent interaction, and to eliminate ground loops. Isolation transformers are used extensively for coupling between various separated circuits to maintain power and return isolation.

The experiment electronics are contained in one large housing mounted on the right-hand (from sun end) side panel near the tripod mount. The TCS electronics are contained in two smaller, separate housings mounted in the same area and one small housing on each panel.

2.9.5.4.3.1 Power ON/OFF Circuitry (figure 2.9.5-12) When the MAIN PWR switch is placed in the ON position, two latching relays are set which apply two redundant ATM power buses to the 20-volt switching regulator. The 20-volt output of the regulator drives two isolated dc to dc converters. One converter is wired directly to the regulator, the other is wired through a relay to the regulator.

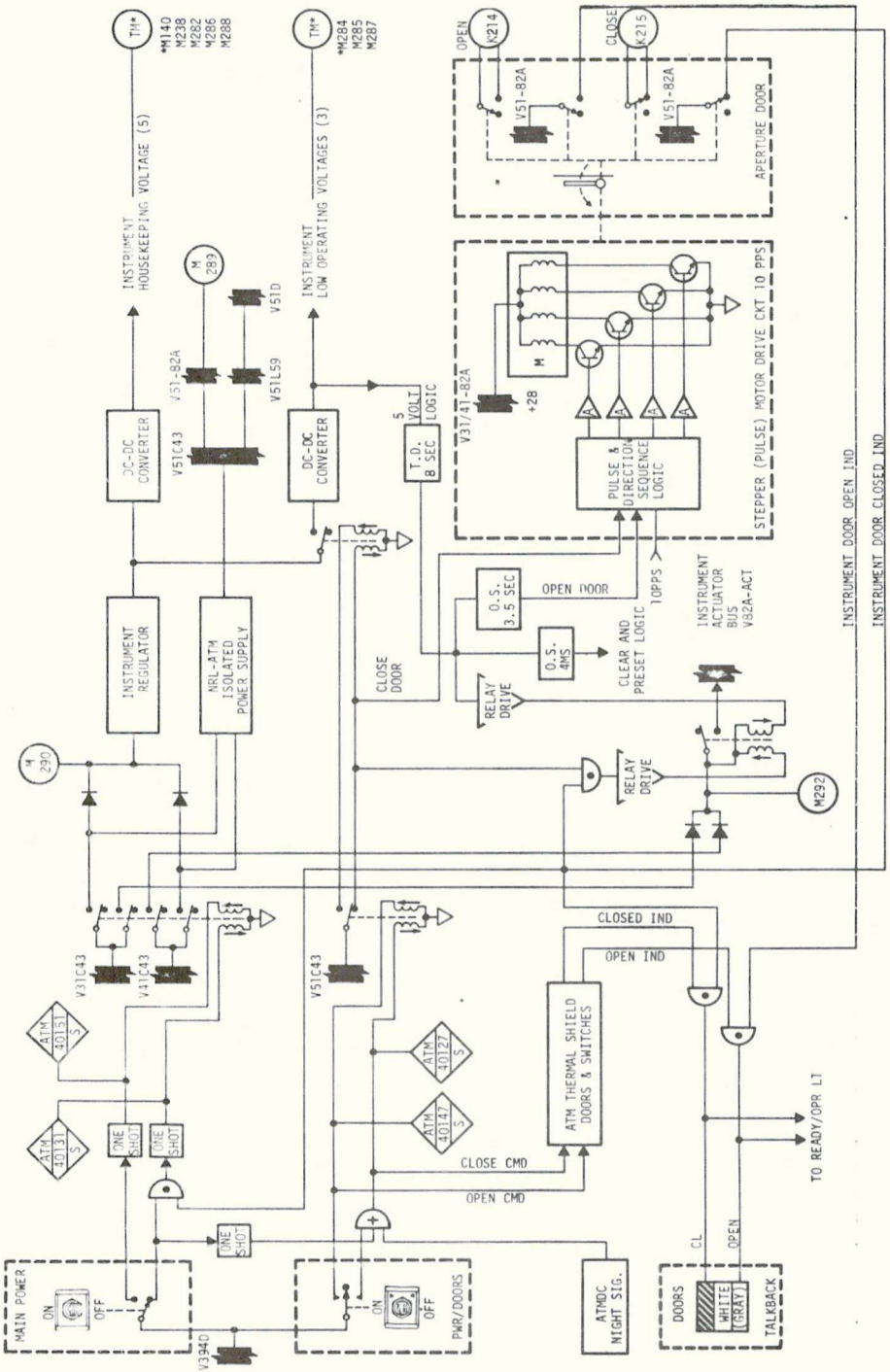

Figure 2.9.5-12 SO82A Power On/Off Circuitry

The directly-wired converter provides the following continuous outputs:

(1) +5-volt sync output supplies the telemetry circuits, which include the telemetry buffers, analog commutator, and analog amplifiers.

(2) ±15-volt analog output supplies the circuitry associated with the analog commutator, and the ±10 vdc regulators that supply the experiment temperature monitor circuits.

The 20-volt output from the regulator is wired to the second converter through a latching relay which is energized when the PWR/DOORS switch is placed in the ON position. This converter provides the following outputs when experiment MAIN PWR is ON.

(1) +5 vdc logic supplies the bulk of the experiment control logic, which includes the sequencer/programmer, mode selector logic and actuator logic.

(2) +5 vdc digital supplies the circuits associated with digital telemetry buffers.

(3) +5 vdc time supplies the circuitry associated with the diode array.

A second latching relay is energized approximately eight seconds after the PWR/DOORS switch is placed in the ON position. With this relay energized, actuator power is applied to all actuator drive circuits, including the aperture door, heat rejection mirror, main grating, film transport and shutter pawl. The aperture door open command is also generated at this time.

When the PWR/DOORS switch is placed in the OFF position, the aperture door receives a Close command. When the door is closed, the motor ON/OFF logic receives a signal from a position switch enabling it to energize a relay removing 28-volt actuator power from the experiment.

The 28-volt panel (Command/Indicator) isolated power is wired directly to the following circuits:

(1) The 28-volt oneshots, relay drivers and command buffers located in the power supply turn-on circuitry

(2) All of the panel drivers used to feed the ATM control console.

2.9.5.4.3.2 Mechanism Drivers - Aperture Door - By placing the PWR/DOOR switch in the ON position, the 28-volt command is applied to the Aperture Open command buffer. The negative edge of the command buffer output triggers a 60-ms one-shot, applying a pulse to the relay driver circuit for a latching relay as explained in the previous section.

With 5-volt logic applied to the preset integrator, integration takes place for approximately eight seconds, after which a negative-going output fires a 4-ms oneshot, providing a negative pulse to the aperture door logic. The aperture door opens and will remain open until commanded to close.

The aperture door circuitry consists of four driver circuits to drive the four-phase stepper motor, and the associated logic to convert the 10-pps input clock to a four-phase output. The four-phase output can be reversed to change the direction of the motor for opening or closing the door. The time duration the motor runs is 3.5 seconds, although the door will open and close in approximately 2 seconds.

Located on the door are two microswitches that are actuated to provide indicator signals to the ATM control console and telemetry after the door opens. Three microswitches are actuated when the door closes. These provide indicator signals to the control console and telemetry, and actuate the Power Off circuitry.

By placing the PWR/DOORS switch in the OFF position, the 28-volt command is applied to the aperture closed command buffer. The negative edge of the command buffer output triggers a 4-ms oneshot which activates the aperture door logic and drivers closing the door. The power off signal from the microswitch triggers a oneshot whose output unlatches a relay, removing the 20-volt power from the second converter. This results in unlatching a second relay, removing the 28-volt actuator power, thus putting the experiment in a Standby condition.

The heat shield door may be operated alone when power has been removed from S082A. With the instrument thus disabled, the heat shield door will respond to the PWR/DOORS switch or to the S082 DOORS switch at the center work station.

Mirror/Grating (Figure 2.9.5-13) - If the mirror and grating are in the long wavelength position and the WAVE LTH switch is put in the SHORT position while not in an operating mode, both the mirror and grating will move to the short wavelength position. When the grating reaches this position, a switch closes, providing a signal to stop the motors of both mirror and grating. The same occurs

S082A

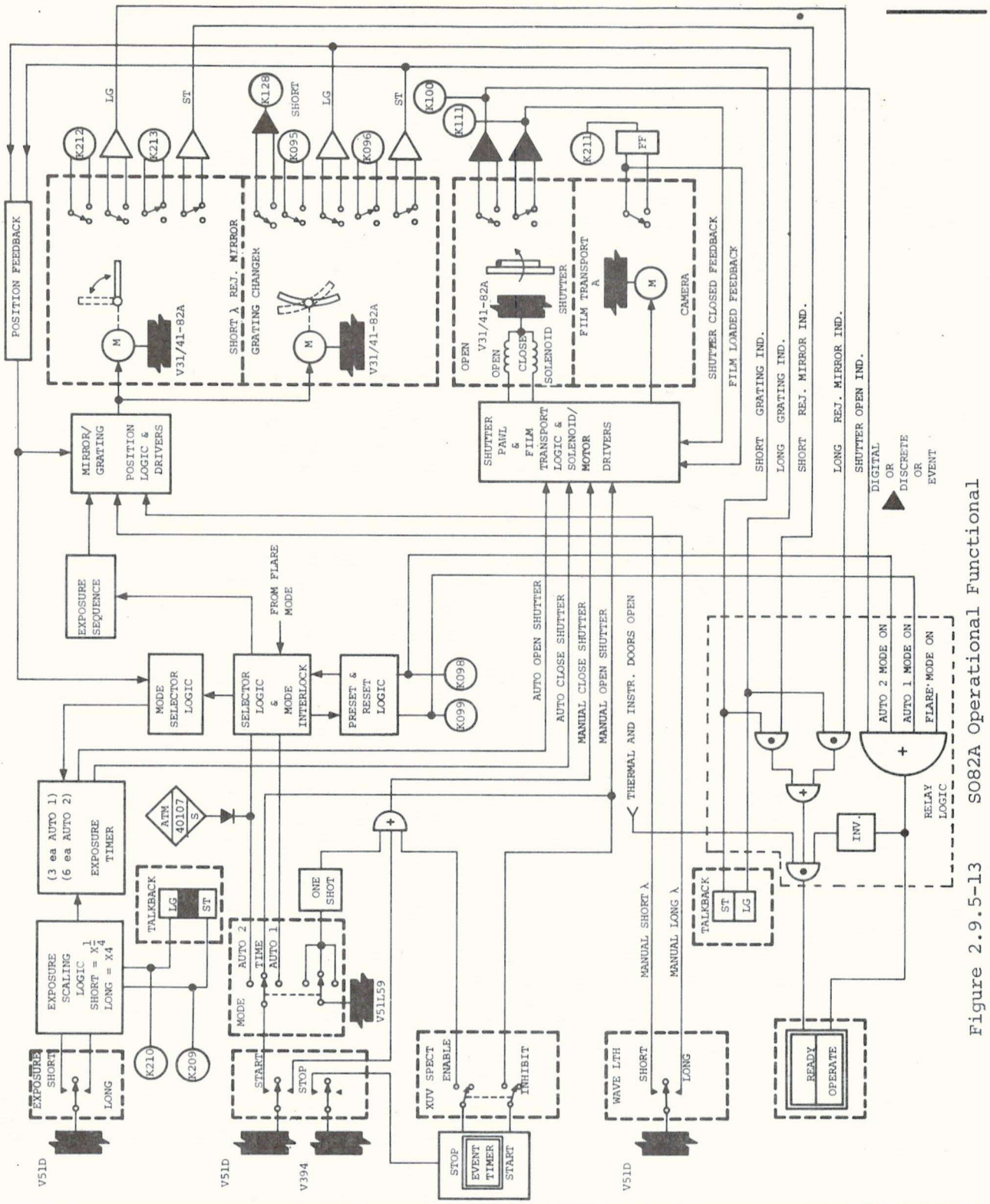

Figure 2.9.5-13 SO82A Operational Functional

when the mirror and grating are commanded from short to long wavelength.

Manual wavelength commands cannot be given during any of the three automatic modes. This is due to the mode interlock signal which inhibits any manual command signals from entering the mirror/grating position logic.

When the mirror/grating position logic receives a short or long wavelength command pulse, it gates it to a oneshot which sets up the mirror/grating logic and drivers to drive the motors to the position selected.

The mirror and grating motors are driven simultaneously to the selected position. Upon arrival, a microswitch is closed by the grating, providing a Stop signal. The mirror and grating are now in position, and telemetry and C&D Console indications are provided.

Operation in an automatic operating mode is the same as above except that, instead of a manual command selecting a position, the output from the position switch buffers determine the next position. The mirror/grating position logic is activated in sequence by either the AUTO 2 Mode logic or the Flare Mode logic, depending on the mode selected.

Camera Electronics - By momentarily placing the START/STOP switch in the START position, a shutter open command pulse is applied to the shutter open/close logic. A pulse drives the open shutter solenoid driver, actuating the solenoid and opening the shutter. The shutter will stay open until commanded to close. In the event a manual Start command is given during an automatic mode, it will be inhibited by the mode interlock.

By momentarily placing the START/STOP switch in the STOP position, a shutter close command pulse is first applied to the Preset and Reset logic,providing those functions, and then to the shutter open/close logic. A pulse drives the shutter close solenoid driver, thus actuating the solenoid and closing the shutter.

The pulse also provides the Shutter Closure Reset pulse. Among other functions it generates a Film Advance pulse which triggers the Film Transport two-second oneshot, gating on the film transport logic and drivers, which drives the motor and causes the film transport mechanism to cycle. A pulse also triggers the pawl release circuits, thus actuating the pawl release solenoids and releasing the film carrier.

When the film transport mechanism completes its cycle by loading a new film holder, it actuates a microswitch which triggers a Stop oneshot. This pulse stops the Film Transport two-second oneshot

S082A

stopping the motor. At this time, the FRAMES REMAINING indicator decreases by one count. The time for one complete cycle is nominally 1.6 seconds.

The Shutter Closure Reset pulse will only generate a Film Advance pulse when the shutter is commanded (automatically or manually) closed with the shutter in the open position. If the shutter is already closed, a Close command will not generate a pulse.

2.9.5.4.3.3 Mode of Operation and Exposure Times - When the mode selector switch is moved from one position to another, the control console circuitry provides a close shutter command pulse.

The close shutter command pulse initiates the following functions:

(1) Closes the shutter (if open)

(2) Generates the Shutter Closure Reset, and Mode Reset.

If the mirror and grating are in long wavelength position, the exposure times are doubled by gating in an additional flip-flop to the exposure timer counter. The normal exposure times may be modified by giving a Short or Long Exposure command. The Short Exposure command divides the normal time by four and the Long Exposure command multiplies the normal time by four.

With the grating and mirror in the selected wavelength position and the exposure switch in the selected position, the experiment is ready to receive a Start command.

By executing the Start command, a pulse is sent to the Auto 1 Mode or AUTO 2 Mode selector logic which generates the following functions.

(1) Mode interlock

(2) Panel and TM indication

(3) Initiates selected mode

The following events take place upon actuation of the MASTER FLARE MODE INIT switch after the FLARE switch has been put in the ENABLE position. (figure 2.9.5-14)

(1) When the Flare Mode Enable command is given, it enables the Flare Mode on flip-flop to receive a Flare On command.

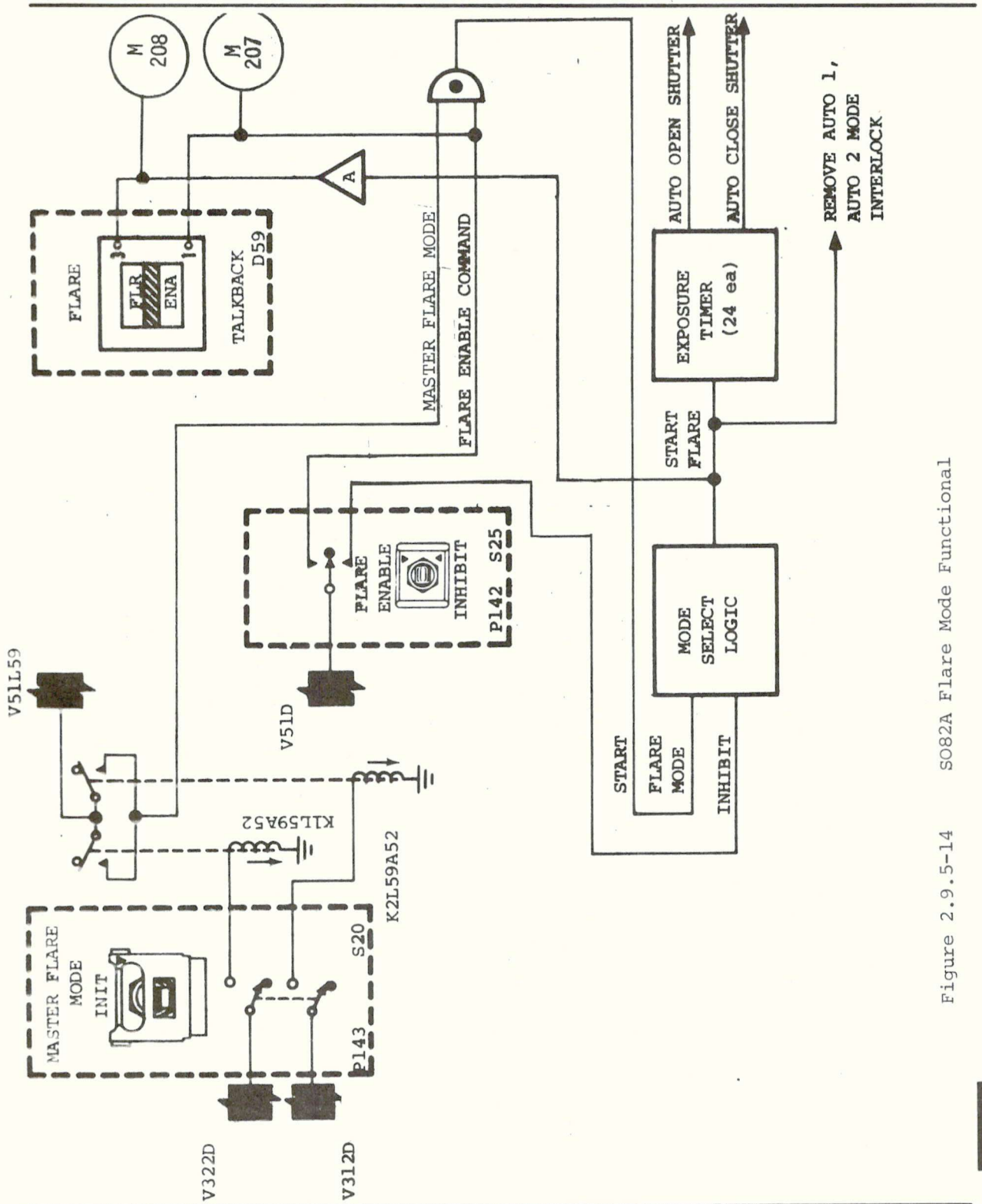

Figure 2.9.5-14 S082A Flare Mode Functional

S082A

(2) The Flare Mode Shutter Reset command is generated. This closes the shutter (if open), and generates the Shutter Closure Reset and Mode Reset pulses.

(3) The Mode Reset pulse will reset the long and short exposure command logic to the normal position, since the flare mode operaties in normal-exposure position only.

(4) A Short Wavelength command pulse is generated, commanding the mirror and grating to move to the short wavelength position.

(5) The exposure timer counter logic receives the Flare On signal which inhibits the exposure time from doubling when the grating and mirror are in the long wavelength position.

(6) After all of the above events take place, the shutter is automatically opened, starting the first exposure.

2.9.5.4.3.4 Diode Array - The diode array consists of a five-column, five-row matrix and a three-column, five-row matrix of gallium-arsenide light-emitting diodes arranged as shown in Figure 2.9.5-15. The figure also identifies the functions of the matrixes and the coded data carried by the individual bits.

The diodes in the start matrix display time in days, hours, minutes and seconds coincident with shutter opening (Start). The stop matrix displays time in hours, minutes, and seconds 20 ms prior to shutter closing (Stop). This data is recorded on one end of the film strip during an exposure, thus providing time of day and the exposure time for each picture.

2.9.5.4.3.5 Telemetry System (figure 2.9.5-16) - The telemetry system consists of three fifteen-channel analog sub-commutators and three digital channels. The output of each subcommutator is assigned to one ATM telemetry channel. Table 2.9.5-IV lists the input data assignments for each channel.

Each of the three subcommutators consists of 15 analog switches, which are gated on in sequence at the rate of one pulse per second (pps). As each analog switch is gated on, it gates its input data to an analog amplifier. The analog amplifiers for channels 1 and 2 are voltage followers. The amplifiers have a gain of one and provide isolation between the experiment and the ATM recorder.

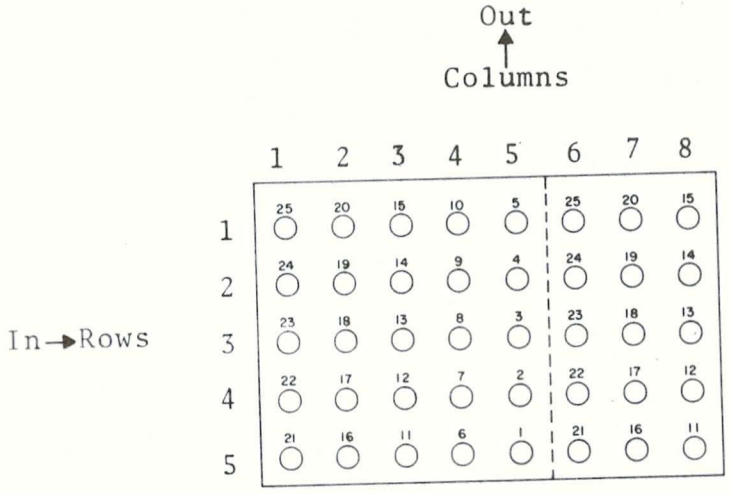

Bit	Time
1	32 Days
2	16 Days
3	8 Days
4	4 Days
5	2 Days
6	1 Day
7	16 Hours
8	8 Hours
9	4 Hours
10	2 Hours
11	1 Hour
12	32 Minutes
13	16 Minutes
14	8 Minutes
15	4 Minutes
16	2 Minutes
17	1 Minute
18	32 Seconds
19	16 Seconds
20	8 Seconds
21	4 Seconds
22	2 Seconds
23	1 Second
24	.50 Second
25	.25 Second

S082A

Figure 2.9.5-15 S082A Diode Array

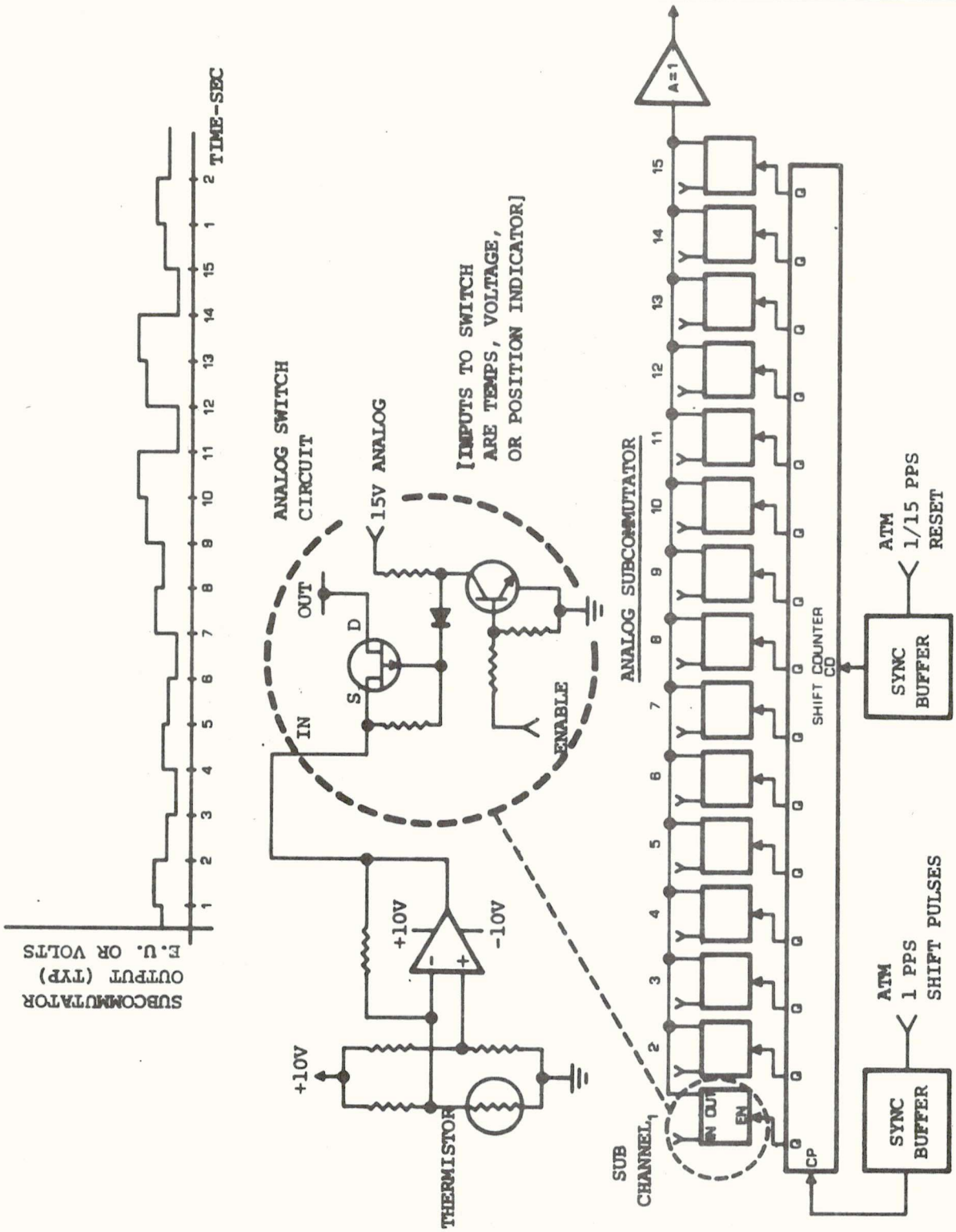

Figure 2.9.5-16 S082 ANALOG TELEMETRY CIRCUITRY DIAGRAM (TYPICAL)

Table 2.9.5 -IV

S082A ANALOG (HOUSEKEEPING) TELEMETRY DATA

	CHANNEL 1		CHANNEL 2		CHANNEL 3
1	T-REAR CENTER, BASE C090-82A	1	AUTO 1 MODE ON K099-82A	1	VOLTAGE, LOGIC M284-82A
2	T-CENTER, BASE C091-82A	2	AUTO 2 MODE ON K098-82A	2	VOLTAGE, DIGITAL TM M285-82A
3	T-FRONT CENTER, BASE C092-82A	3	FLARE MODE ENABLE ON K207-82A	3	VOLTAGE, ANALOG TM M286-82A
4	T-REAR CENTER, RIGHT SIDE C095-82B	4	FLARE MODE ON K208-82A	4	VOLTAGE, TIME WORD M287-82A
5	T-CENTER, LEFT SIDE C096-82B	5	SHORT EXPOSURE IN K209-82A	5	VOLTAGE, SYNC M288-82A
6	T-FRONT CENTER, RIGHT SIDE C197-82B	6	LONG EXPOSURE IN K210-82A	6	VOLTAGE, PANEL M289-82A
7	UNDEFINED	7	FILM TRANSPORT MONITOR K211-82A	7	VOLTAGE, PRIMARY M290-82A
8	UNDEFINED	8	SHORT WAVELENGTH GRATING K095-82A	8	VOLTAGE, ACTUATOR M292-82A
9	T-GRATING, LOWER EDGE C200-82A	9	LONG WAVELENGTH GRATING POSITION K096-82A	9	INSTRUMENT APERTURE CLOSED K215-82A
10	T-FRONT CENTER, LID TO BASE C201-82A	10	LONG WAVELENGTH REJECTION POSITION K212-82A	10	T-ELECTRONICS C257-82A
11	T-CENTER LID TO BASE C202-82A	11	SHORT WAVELENGTH REJECTION POSITION K213-82A	11	UNUSED
12	T-REAR CENTER, LID TO BASE C203-82A	12	VOLTAGE, ANALOG GROUND M140-82A	12	UNUSED
13	T-FRONT CENTER, SIDE TO SIDE C204-82A	13	V-TEMPERATURE CIRCUITRY (+ 10 V) M282-82A	13	INSTRUMENT APERTURE DOOR OPEN INHIBIT K221-82A
14	T-CENTER, SIDE TO SIDE C205-82A	14	V-TEMPERATURE,CIRCUITRY (- 10 V) M283-82A	14	UNUSED
15	T-REAR CENTER, SIDE TO SIDE C206-82A	15	INSTRUMENT APERTURE OPEN K214-82A	15	UNUSED

The analog amplifier for channel 3, which provides real-time data, consists of sampling each of the eight voltages along with other points. Since the telemetry system operates on analog power, the other seven voltages must be isolated from it by one megohm. All three channesl are down-linked in real time and recorded on board for dumping over selected ground stations.

Between each of the seven power lines and its input to an analog switch is a 0.5 megohm resistor. The input resistor of the first amplifier also is 0.5 megohm, thus providing one megohm input resistance to the amplifier. Since the amplifier feedback resistor is 0.5 megohm, the gain of the first amplifier is one-half. The second amplifier has a gain of one. Thus the output data will read approximately 2.5 volts when a 5-volt line is sampled.

The analog switches are gated in sequence by a 15-stage shift counter clocked by the 1-pps input from the ATM. The shift counter is reset following the fifteenth clock pulse by the 1/15th pps signal provided by the ATM.

2.9.5.4.3.6 Temperature Monitor System (figure 2.9.5-17) - The temperature monitor system consists of 16 temperature monitor circuits and two voltage regulators providing +10v and -10v regulated supply voltages to the experiment temperature monitor circuits. The outputs of 15 of the temperature monitors go to the telemetry subcommutator Channel 1; the sixteenth goes to Channel 3.

Three types of temperature monitor circuits are used:

(1) The fine absolute monitor has a temperature range of 50 to 80°F and an output voltage that varies from 0 to 5 volts. Similar monitors located in the experiment electronics box have an increased range of 65 to 95°F.

(2) The coarse absolute monitor has a temperature range of 50 to 110°F and an ouptut that varies from 0 to 5 volts.

(3) The differential temperature monitor measures the difference between two temperatures. The maximum differential temperature is 5°F, which is taken over a temperature range of 50°F to 80°F. Output voltage is 2.5 volts when temperature differential is 0°, 0 volts when differential is -5°F, and 5 volts when temperature if 5°F.

Differential temperature is measured at three places between the cover and floor, and between the side walls at three places. Adjacent to one of the differential sensors in each pair is a fine absolute temperature sensor. This permits monitoring of both the differential and the absolute temperature.

A fine temperature sensor is located in the electronics box. A coarse temperature monitor is located on the short-wavelength heat rejection mirror; the other two are not used, and have a resistor in place of the thermistor.

2.9.5.4.4 Thermal Control System - Heater Panels - The purpose of the thermal control system (TCS) heater panels is to modulate heat flow from the experiment through the heater panels to the wall of the ATM canister. Controlling the heat flow in this manner isolates the experiment from environmental temperature variations, thus stabilizing its temperature.

The heater panels are thermostatically controlled using thermistors connected in a bridge circuit whose output is sensed by an amplifier. The bridge amplifier provides an analog voltage of 0 to 5 volts, corresponding to a temperature range of 70 to 76°F. The amplifier output goes to a level detector and comparator switch. The comparator output drives a current amplifier to switch the heater elements. Heater power is 28-volt DC provided separately from the ATM. A 10-volt DC power supply, regulated to ±1 percent, is provided for the amplifiers as part of the TCS. See figure 2.9.5-17.

Using this system, if heat from the experiment is maximum, the heat required from the heater panels is very small; the heating period is short and the cooling period long. Conversely, when the experiment is at low power and low heat flow, the heater panels operate longer and, when the heater power is turned off, the cooling period is shorter.

An overtemperature sensing and control circuit is also provided for each heater panel. It has its own thermistor and electronics, completely redundant to the primary temperature sensing and control circuitry. The overtemperature control is designed to insure against a failure of the primary controller in the ON condition. The overtemperature circuitry uses a separate thermistor in a bridge circuit whose output is fed directly into a differential amplifier and comparator. The output is a digital logic level indicating a go/no-go state. If an overtemperature condition occurs, the output opens a relay that disables the power supply to the heaters.

S082A

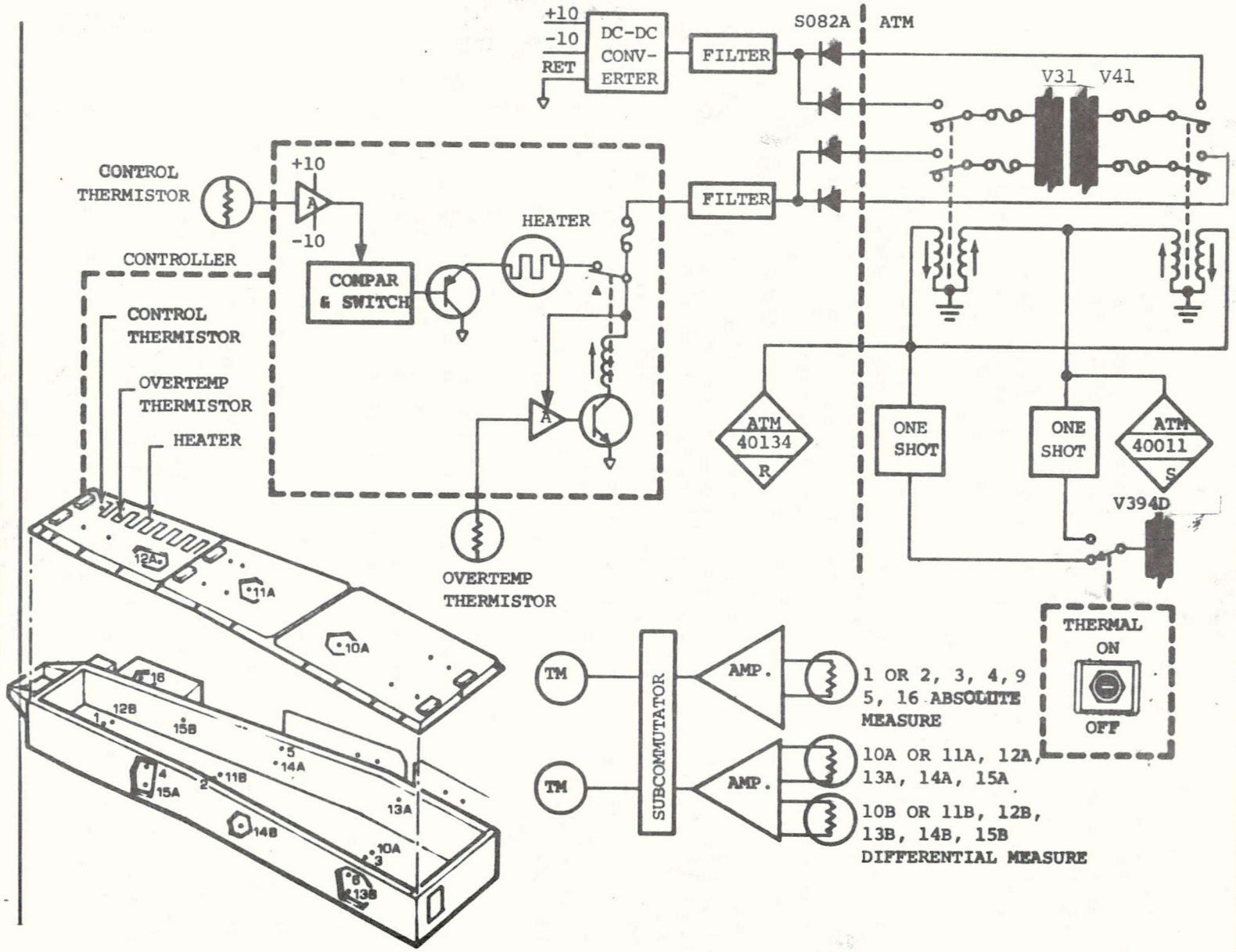

Figure 2.9.5-17 S082A Thermal Control Subsystem

The heater panels used on the experiment are 3/16-inch-thick aluminum honeycomb substrate panels on which full-coverage heaters are mounted. The panels are mounted to the experiment on thermally-insulating standoffs so that heat transfer is primarily radiant. The locations of the heater panels on the experiment are shown in Figure 2.9.5- 18.

The heaters are adhesive-bonded to the inboard surface (facing the experiment) of the honeycomb substrate. The outboard surface facing the ATM has strips of clear plastic tape that are thermally reflective and assist in controlling heat flow.

The controllers are mounted immediately adjacent to the heater panels they regulate and are wired directly to them. Each of the heater panels on the top of the experiment has two independent controllers that divide the panels into left and right (viewed from sun end) heating zones.

On the sun-end top heater panel four separate heater assemblies are provided, two in parallel for each heating zone and controller. The middle and rear panels have two heater assemblies each connected to a separate controller. The two side heater panels each uses a single heater assembly and controller.

The heater elements in each heater assembly consist of strips of 0.001-inch-thick Inconel sandwiched between two layers of 0.002-inch-thick Kapton plastic sheets.

The controller for each of the eight heating zones thus provided is connected to two thermistors, one for primary temperature sensing and one for overtemperature. The thermistors are installed underneath the heaters at the outboard face of the honeycomb. The thermistors used in the TCS are not used for temperature signals to the telemetry system. A separate set of thermistors is provided for temperature monitoring telemetry signals and is discussed in subsection 2.9.5.6.3.6..

Insulation Panels - The insulation panels consist of ten layers of accordion-folded, aluminized Mylar enclosed by thin, perforated sheets of Lexan plastic. The panels provide a heat-reflecting barrier that minimizes heat flow from the experiment to the ATM. The locations of the insulating panels on the experiment are shown in Figure 2.9.5-18.

S082A

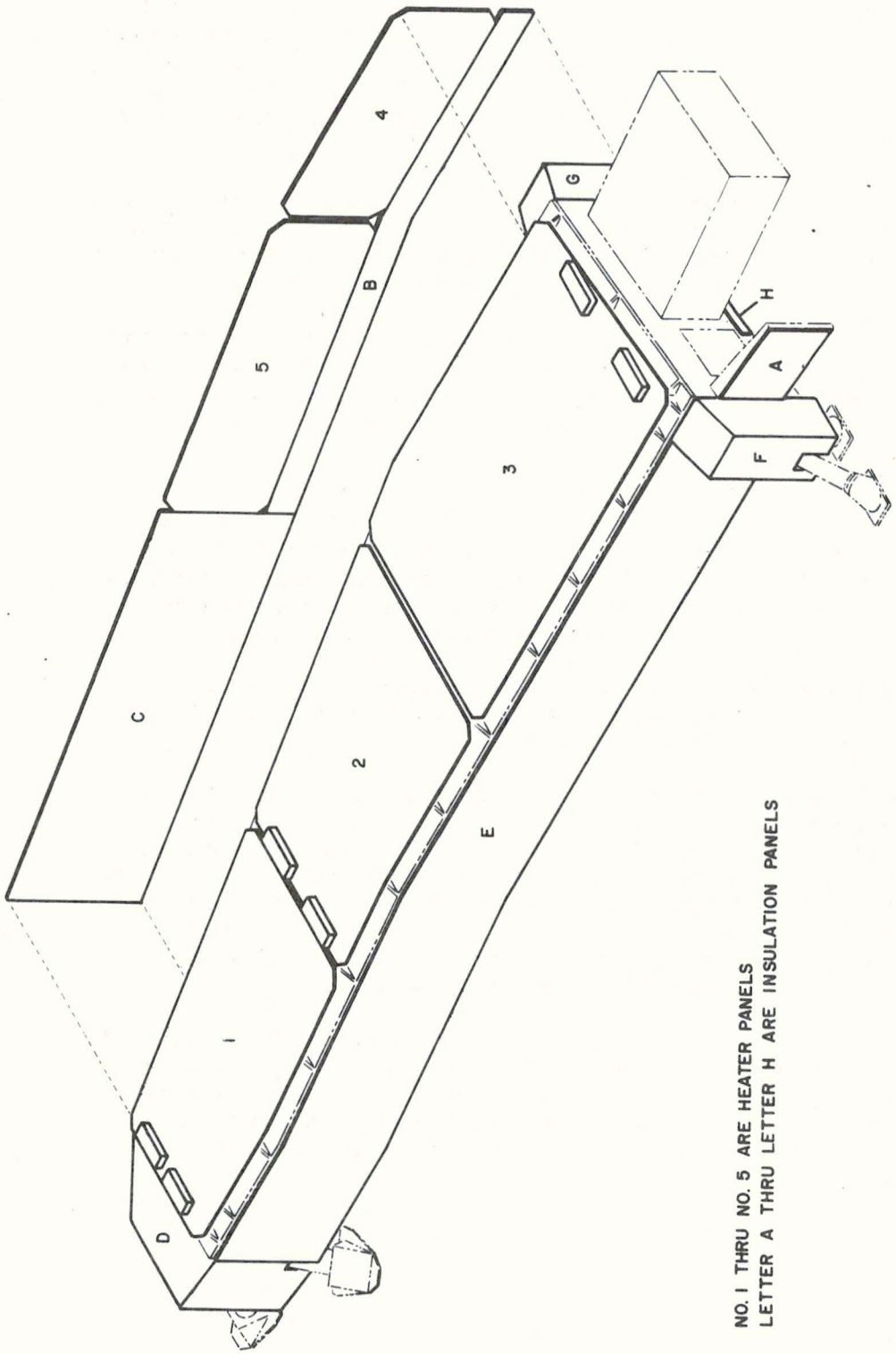

Figure 2.9.5-18 S082A Heater Panel Location

2.9.5.5 Performance and Design Data - The performance and design data contained in this section were obtained from the Naval Research Laboratory "Preliminary Astronaut Operations Requirements Document for the Coronal XUV Spectroheliograph Experiment SO82A-Apollo Telescope Mount Mission A" dated 25 July 1968. Engineering data were obtained from the Ball Brothers Research Corporation documents CP 25905 "Design and Performance Specification XUV Coronal Spectroheliograph Instrument 1-A, ATM-A Experiment SO82A", and 620-53 "Description and Operating Instructions NRL/ATM XUV Coronal Spectroheliograph ATM Experiment SO82A". A summary of the scientific and engineering parameters are contained in Tables 2.9.5-V and 2.9.5-VI respectively.

Pointing requirements for the SO82A experiment are included as a part of the "Preliminary SO82A Observing Program for each Camera" which is Appendix 1 of the Naval Research Laboratory document named above. Environmental requirmenets are also included in that document and are basically the same as for all other AMT experiments.

2.9.5.6 Operational Limitations and Restrictions - The experiment TCS should be enabled approximately 3 hours before experiment operation to achieve thermal stability and minimize data degradation, assuming a normal launch profile. In the event of abnormal conditions, temperature stability may be verified by MSFN.

The aperture doors should be opened only when the ATM is pointed toward some point on the sun or near the limb. If the doors are opened when the experiment is pointing more than 24 arc minutes off the sun, the solar heat will not be properly rejected, thermal distortion will result, and the experiment could be out of alignment for the rest of the orbit. Permanent damage to the camera aluminum filter could also result if the camera shutter is open.

Before beginning an exposure, an ATM roll position must be achieved which will avoid overlapping images of different active regions along the dispersion axis of the film. The dispersion axis is always vertical, as viewed by the astronaut on the video monitors. Thus, the ATM canister should be rolled to place active regions viewed with the XUV Monitor or H-alpha so they are not in line with each other vertically. Similarly, a single active region should be positioned away from the vertical axis on the monitor. The region will then be separated among the different wavelength images along the dispersion axis on the film.

Table 2.9.5-V Scientific Parameters

SPECTRAL RANGE:	150 Å - 335Å; 321Å - 625Å
SOLAR IMAGE DIAMETER:	18.6 mm
DISPERSION ALONG SOLAR DIAMETER:	24Å
RESOLUTION	
SPECTRAL:	0.13Å for feature 10 arc seconds in size
SPATIAL:	~5 arc seconds (depends on λ and thermal control)
GRATING	
LINE DENSITY:	3600 lines/mm
WIDTH OF RULED AREA:	120 mm
FOCAL LENGTH:	2.0 m
SPECTRAL ORDER:	1st
REQUIRED ATM POINTING STABILITY:	±2.5 arc sec. - pitch, yaw ±7.5 arc min. - roll

Table 2.9.5-VI Engineering Specifications

WEIGHT (TOTAL):	298.8 lb
MAXIMUM ENVELOPE DIMENSIONS (INCLUDING MOUNTING LEGS):	122.6 x 32.5 x 16.5 inches
MAX AVG OPERATING PWR AT MAX DUTY CYCLE (90 MIN ORBIT):	7 WATTS (INSTRUMENT) 20 WATTS (INSTRUMENT THERMAL CONTROL SYS)
CAMERA	
FILM STRIPS PER CAMERA (1 EXPOSURE PER STRIP):	200 - 35 mm x 258 mm EACH
ALUMINUM FILTER PER CAMERA:	1 - 9.6" x 1.3"
WEIGHT (DOES NOT INCLUDE 21.5 lb STORAGE CANISTER):	≤32-34 lb
QUANTITY:	4

Exposures must not be made when the line of sight passes within 75 miles of the Earth's surface. To preclude this possibility, the aperture door is closed automatically (PWR/DOORS closed command) by the ATM computer prior to occulation.

The optical surfaces of the experiment can be easily damaged. Hence, it is extremely important that the experiment and heat-shield aperture doors be closed except during operation of the experiment. This is particularly true during the night-time portion of the orbit, during waste dumps, and during rocket firings. No contingency measures exist for actively cleaning optical surfaces, so all measures must be taken to ensure that they are not degraded.

2.9.6 SPECTROGRAPH AND XUV MONITOR (S082B)

2.9.6.1 - Introduction

The U. S. Naval Research Laboratory's Spectrograph and XUV Monitor experiment designated S082B is two different but rigidly attached telescopes. The larger of these telescopes is called a Spectrograph although it contains both an imaging system and a spectrograph. The smaller telescope is called an Extreme Ultraviolet (XUV) Monitor. The Principal Investigator for this experiment is Dr. Richard Tousey.

2.9.6.1.1 Design Objectives - The Spectrograph will be used to photographically record line spectra of small selected areas on and off the solar disc and across the limb in two wavelength bands; 970 to 1970Å or 1940 to 3940Å. The XUV Monitor will be used for observing a video image of the full solar disc in the wavelength band from 170 to 550Å, and to point the Spectrograph to solar features of interest.

2.9.6.1.2 Experiment Description - The S082B experiment consists of (1) the main experiment housing that is made up of two attached aluminum cases and two removable covers (2) the Spectrograph optical subsystem and (3) a Pointing Reference Subsystem (PRS) both enclosed by the main case and cover (4) a removable film-strip camera and (5) the XUV Monitor, enclosed by the secondary case and cover. The experiment weighs 424 lbs. and is approximately 120 x 34 x 18.5 inches in length, width and height respectively. (See Figure 2.9.6-1).

2.9.6.2 - Subsystem Interfaces

The experiment will be mounted on the ATM spar as shown in Figure 2.9.6-2. It will be pointed in conjunction with the ATM and remotely operated by an astronaut or by ground command.

2.9.6.2.1 Controls and Displays - All the controls necessary to operate the experiment are located on the ATM Control and Display (C&D) Console. Some commands may also be sent via RF telemetry from the ground, thus providing redundancy and for un-attended operation. The C&D Console is located in the Skylab Multiple Docking Adapator (MDA). See Figure 2.9.6-3 and Section 3.0 for C&D Console switch nomenclature, position and function. In addition, the S082B experiment will require the use of the H-Alpha telescope to locate solar features of interest, the Manual Pointing Control system for positioning the canister and experiments, the Event Timer for use during manual operation of the Spectrograph camera, and will be used in conjunction with other ATM experiments for data comparison.

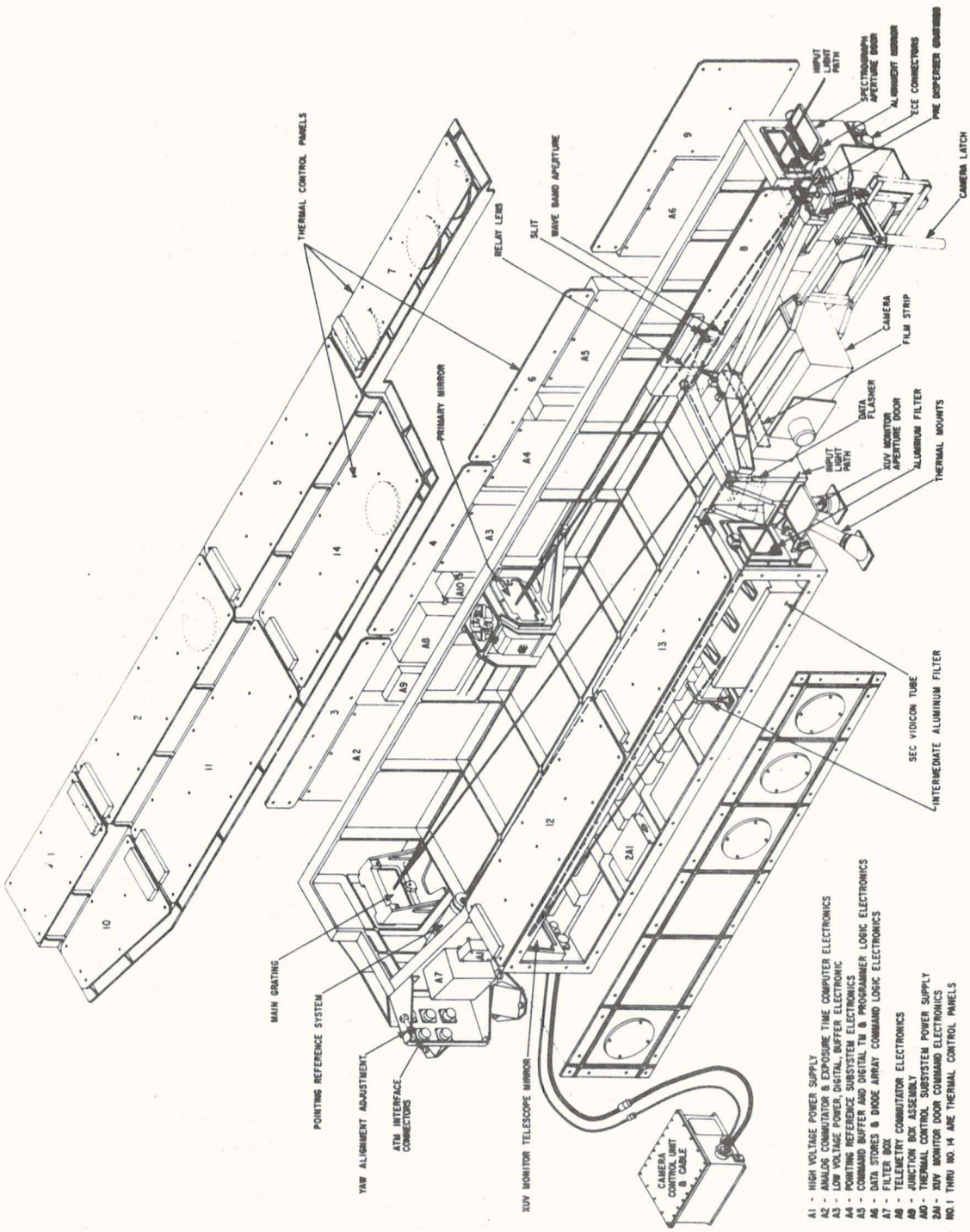

Figure 2.9.6-1 Spectograph and XUV Monitor Experiment S082B

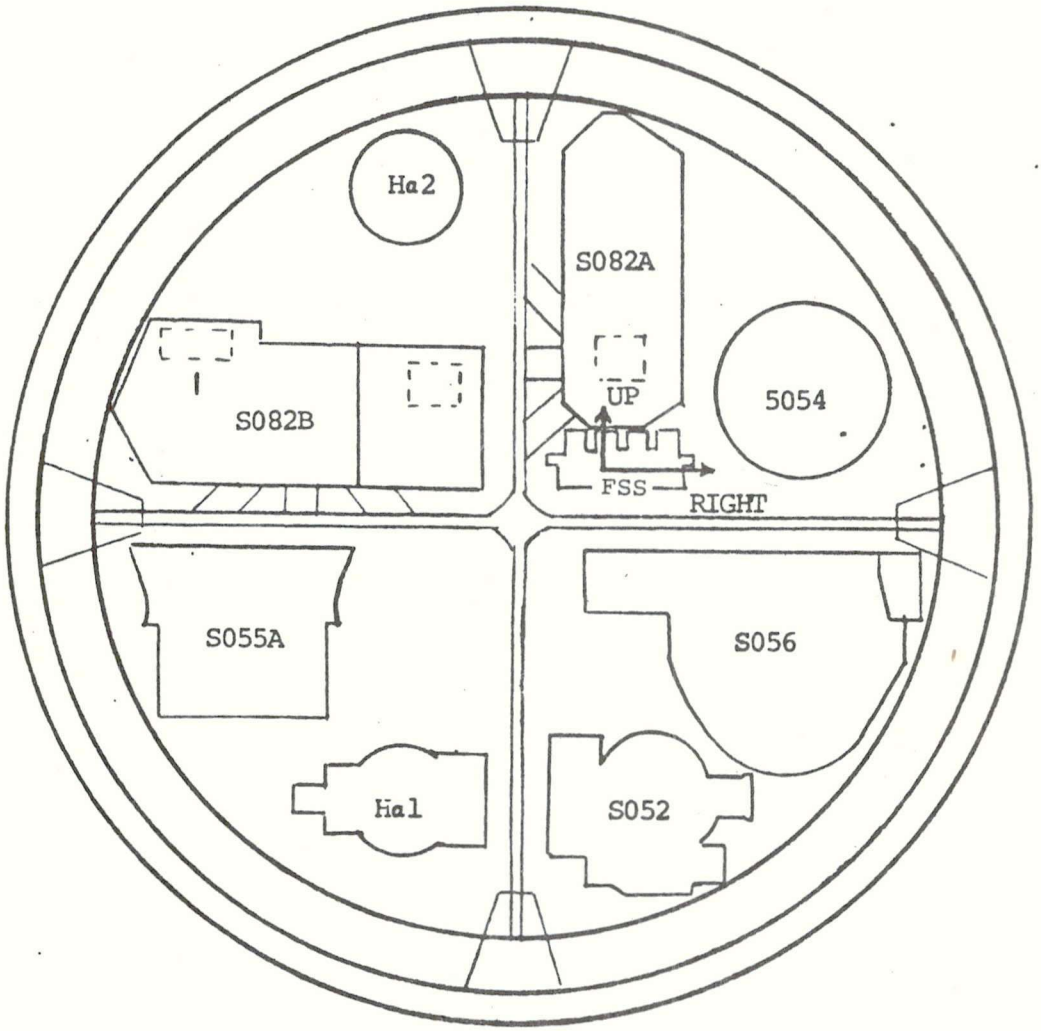

ATM CANISTER
VIEW TOWARD SUN

Figure 2.9.6-2 S082B Mounted In ATM Canister

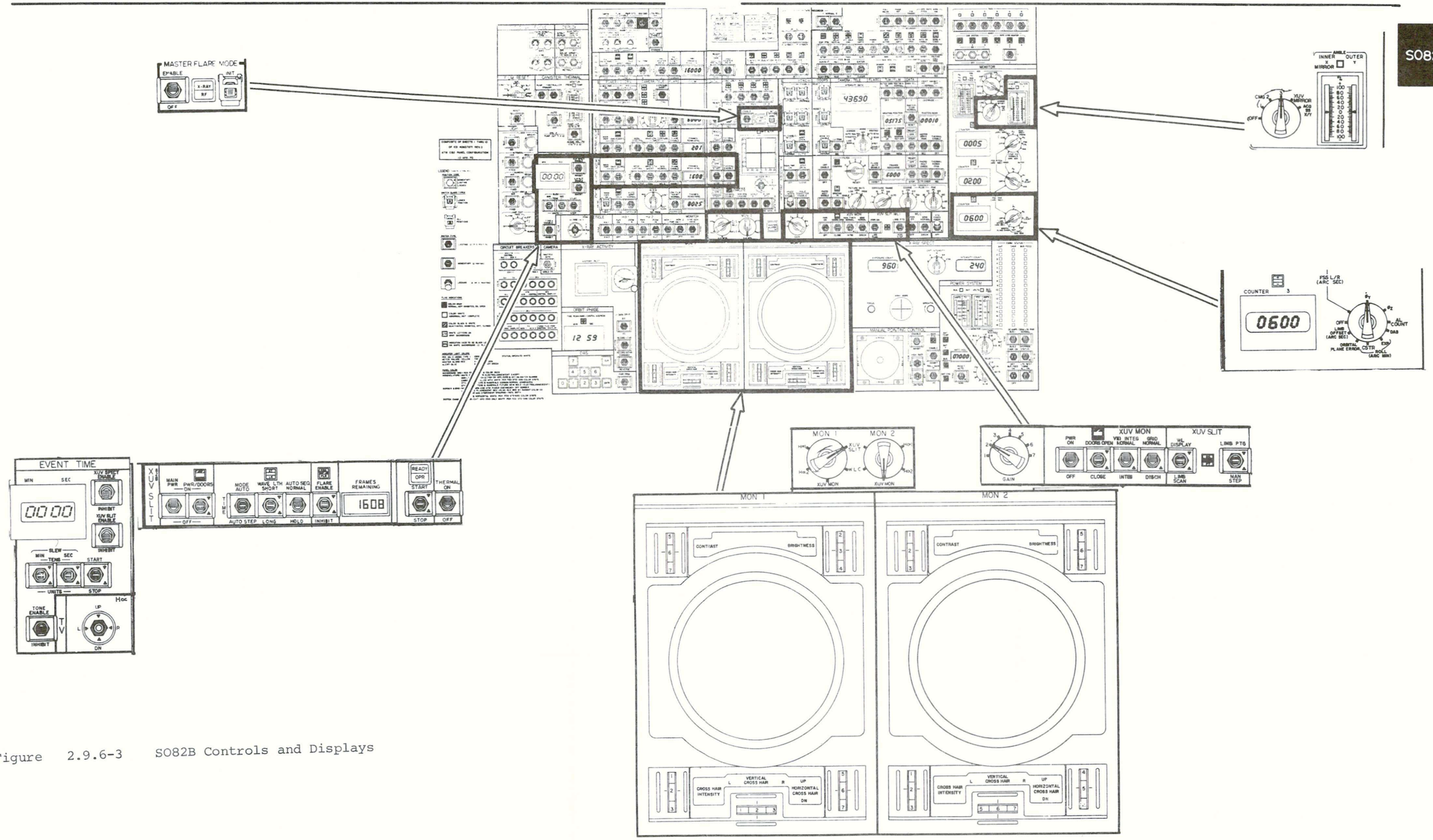

Figure 2.9.6-3 S082B Controls and Displays

2.9.6.2.2 Power - Five separate 28-volt sources are supplied to the experiment by the ATM:

a. 28-vdc Primary
b. 28-vdc Panel (Command/Indicator)
c. 28-vdc Actuator
d. 28-vdc TCS
e. 28-vdc TCS Heaters

The first three lines supply power to the experiment when the MAIN PWR switch is placed in the ON position; the remaining two lines supply power when the THERMAL switch is placed in the ON position. All five lines and their returns are filtered at the input to the experiment. In addition, redundant ATM lines, which are isolated through diodes, provide short-circuit protection for the primary, actuator, TCS, and TCS heater power. See figure 2.9.6-4.

2.9.6.2.3 Telemetry - The SO82B telemetry requirements consist of digital telemetry bits to monitor various state, mode and experiment condition points to provide experiment "quick-look" data, and six analog telemetry subcommutators and one single channel to provide Spectrograph and XUV monitor data. Two of the six 15-channel subcommutators comprise the TCS telemetry system for monitoring experiment heater panel and reference temperatures. Information on these telemetry requirements are contained in the "Experiment Interface Defining Document", MSFC Document 50M02462.

2.9.6.2.4 Other Experiments - The SO82B experiment is designed to photograph extremely small areas on the disc or near the solar limb and must therefore be pointed with great accuracy. In order to accomplish this, the SO82B experiment must be co-aligned with the ATM FSS. Inasmuch as the H-alpha telescope and the XUV monitor act as eyes for the spectrograph experiment, the alignment between the three must be accurately known. Data comparison between SO82B and SO55A is a prime scientific objective, therefore, co-alignment between the two experiments is also very important.

2.9.6.3 Functional Description

The spectrograph provides four modes of operation (TIME, AUTO, AUTO STEP, FLARE) for taking spectrograms, any one of which may be selected by the astronaut for the solar phenomena existing at a given time. Selection of either of two wavelength bands (LONG or SHORT) is controlled by the astronaut, using the ATM C&D Console. The PRS positions the solar image for the Spectrograph in each of

S082B

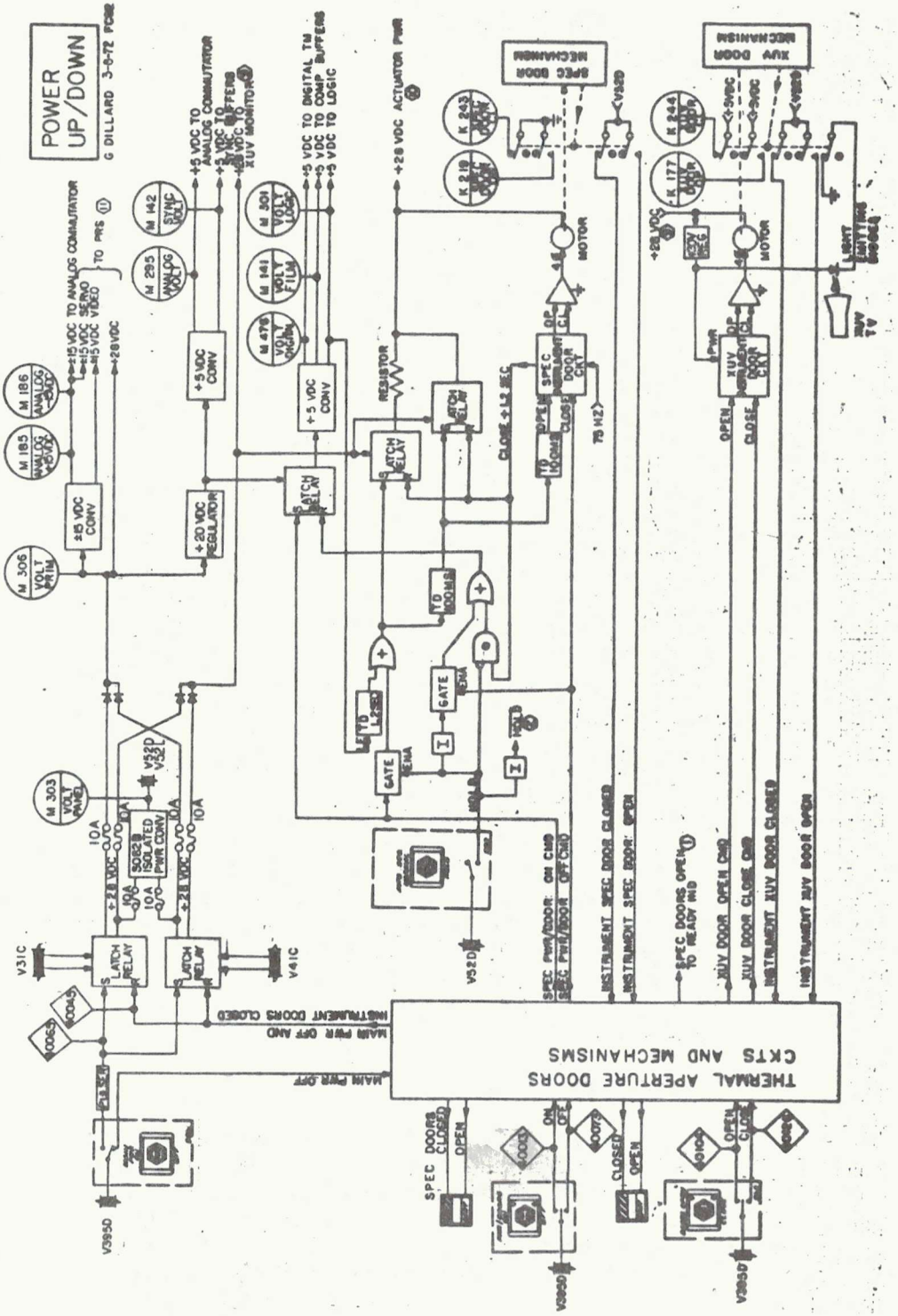

Figure 2.9.6-4 S082B Power Distribution

three pointing states. (WL DISPLAY, LIMB SCAN and LIMB PTG.) The PRS and the XUV Monitor are also controlled from the ATM C&D Console. A detailed description of these features is presented in Section 2.9.6.4.

The experiment is powered by five separate 28 vdc lines provided by the ATM. The Spectrograph electronics control the application of power for operation of the experiment aperture doors, the predisperser gratings, the film-strip camera, the exposure time computer, PRS, a telemetry subsystem, and a temperature monitoring subsystem. Power and sweep signals to the XUV Monitor camera electronics are provided separately by the ATM.

The Thermal Control Subsystem (TCS) operates independently of other experiment electronics to maintain the experiment case at pre-determined alignment temperatures. Fourteen independently controlled heater panels cycle on and off automatically as necessary to maintain the proper average temperature for each panel. Thermistors are mounted under each panel, on the experiment case, to serve as reference temperature sensors to allow precise control of case temperature.

2.9.6.3.1 Spectrograph - Data is obtained when the sun shield and internal aperture doors are opened by placing the PWR/DOORS switch in the ON position and operating the film strip camera with the START/STOP switch. When both doors have been opened, a concave mirror focuses the solar image on a slit plate. The slit allows a portion of the solar image approximately 2 arc seconds by 60 arc seconds to be photographed. A predisperser grating, a waveband aperture, and the main grating function together to resolve the light passing through the slit into spectral lines, which are focused onto the film strip by the main grating as in Figure 2.9.6-5. The predisperser grating may be changed by remote command with the WAVE LTH switch or automatically during an exposure sequence to select either of two wavelength bands (970 to 1970Å or 1940 to 3940Å) to be photographed.

The experiment functions in four operating modes, selectable with the MODE switch, in which spectrograms are made: the TIME mode, and three automatic modes - the AUTO, FLARE and AUTO STEP modes (see Tables 2.9.6-I through 2.9.6-III). An additional HOLD condition stops and retains automatic mode logic for later resumption.

S082B

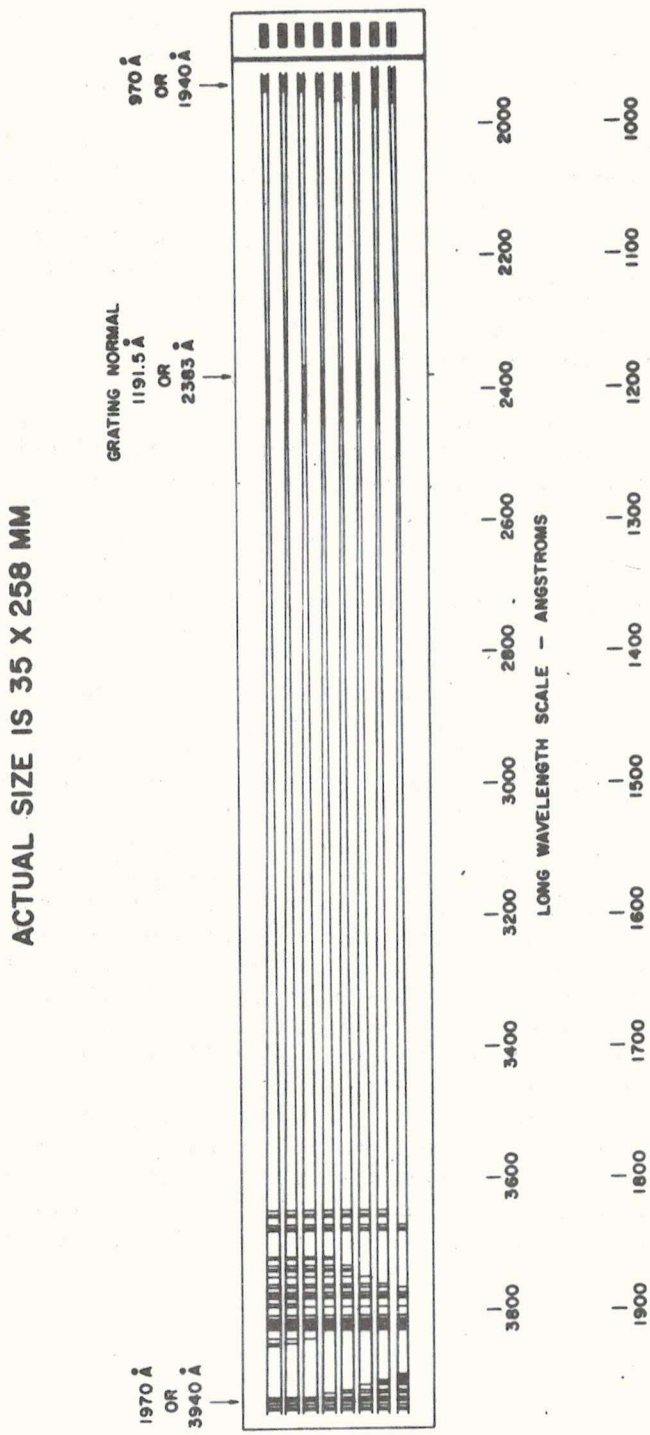

Figure 2.9.6-5 S082B Film Format

Table 2.9.6-I

AUTO Mode Exposure Times and Sequence

	Exposure No. (Duration in Seconds)							
	1	2	3	4	5	6	7	8
Zone 1 (a)								
Long Wavelength	0.312		1.25		5.0		20	
Short Wavelength		2.5		10		40		160
Zone 2 (b)								
Long Wavelength	2.5		10		40		160	
Short Wavelength		10		40		160		640
Zone 3 (b)								
Long Wavelength	4		16		64		256	
Short Wavelength		16		64		256		1024

(a) - Used in WL DISPLAY, LIMB SCAN or LIMB PTG. states, or with PRS off. Exposure 2 will be taken before exposure 1 (and 4 before 3, etc.) if the short wavelength grating is in position when the AUTO mode is initiated.

(b) - Used in LIMB SCAN or LIMB PTG states.

S082B

Table 2.9.6-II
AUTO STEP Mode Exposure
(Limb Pointing State Only)

Auto Mode Set No.	Exposure Location (Arc Seconds from Limb)	Zone	Remarks
1	-12	1	On Disc
2	- 4	1	On Disc
3	- 2	1	On Disc
4	0	1	On Limb
5	+ 2	2	Off Limb
6	+ 4	2	Off Limb
7	+ 6	2	Off Limb
8	+ 8	2	Off Limb
9	+12	3	Off Limb
10	+20	3	Off Limb

Table 2.9.6-III

Flare Mode Exposure Time and Sequence

Set No.		Exposure No. (Duration in Seconds)			
Short Wavelength	Long Wavelength	1	2	3	4
1		0.312	1.25	5.0	20
2		0.312	1.25	5.0	20
	3	0.156	0.625	2.5	10
4		0.312	1.25	5.0	20
5		0.312	1.25	5.0	20
	6	0.156	0.625	2.5	10
7		1.25	5.0	20	80
	8	0.156	0.625	2.5	0
		--- Wait 120 Seconds ---			
9		1.25	5.0	20	80
	10	0.156	0.625	2.5	10
		--- Wait 120 Seconds ---			
11		1.25	5.0	20	80
	12	0.156	0.625	2.5	10

S082B

2.9.6.3.1.1 Auto Mode- The Auto Mode is normally used for monitoring features of interest which are characterized by slow temporal variations. It is preprogrammed so that the two wavelength bands are photographed alternately as one and then the other of the two predisperser gratings is brought into position. The two wavelength bands are photographed with different exposure times for a total of eight exposures.

In the limb scanning and limb pointing states, exposure times are automatically prescaled in the AUTO mode, depending on where the experiment is pointing:

a. On the disc or within 1 arc second off the limb (zone 1 - also used if PRS is off or in the white light display state)

b. +2 to +9 arc seconds off the limb (zone 2)

c. +10 arc seconds or greater off the limb (zone 3)

2.9.6.3.1.2 TIME Mode - The experiment, when commanded, is capable of taking manual exposures with the PRS off or in any of the three states. The TIME mode is used when the automatic modes do not fit the situation, or when the remaining unexposed film is limited.

2.9.6.3.1.3 AUTO STEP Mode - The AUTO STEP mode is used only in the limb pointing state to record temperature inversion phenomena in the vicinity of the limb. The experiment will automatically point to ten different positions in the vicinity of the limb and take eight exposures (one AUTO mode) at each position. Exposure times are prescaled according to the zone. See figure 2.9.6-6.

2.9.6.3.1.4 FLARE Mode - The FLARE mode is preprogrammed so that the experiment will take a series of 48 exposures, with two waiting periods, to record the birth and initial stages of a flare. The PRS is turned off automatically when a FLARE mode is begun, but after the mode begins the PRS may be reactivated, if desired, to any state.

2.9.6.3.1.5 Automatic Sequence Hold - HOLD is a non-operational condition that is entered by placing the AUTO SEQ switch to the HOLD position. When HOLD is activated, any automatic mode in progress is stopped and held for later resumption. HOLD must be activated at some time during the AUTO STEP mode in order to retain the automatic mode logic while on the night side of an orbit. If HOLD is not activated prior to closing the spectrograph aperture door, automatic mode logic circuits will be cleared.

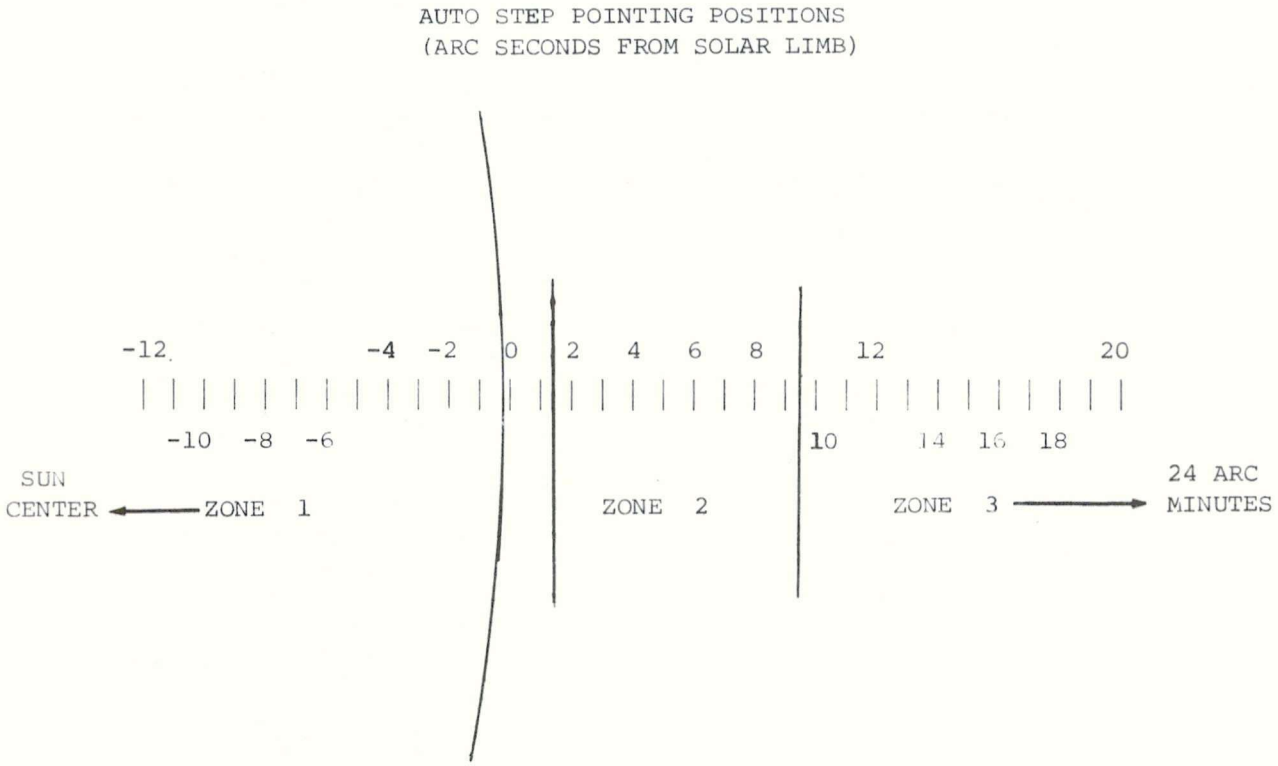

Zone 1	Sun center to +1 arc seconds from limb
Zone 2	+2 to +9 arc seconds from limb
Zone 3	+10 arc seconds to 24 arc minutes from limb

Figure 2.9.6-6 S082B Zones and Pointing Positions

S082B

2.9.6.3.2 Pointing Reference System - The Pointing Reference System (PRS) consists basically of an optical system (a separate subsystem distinct from the spectrograph optics), an image dissector tube (IDT) video camera and electronics to provide control of experiment pointing.

The optical system employs the image of the sun formed at the spectrograph entrance slit by the primary mirror. It consists of a neutral density filter, a relay lens and two folding mirrors. The mirrors transmit the sun image along a folded optical path to the IDT camera.

The camera and electronics generate either a standard TV image of the area of the sun presented to the slit or an electrical signal representing the distance between the solar limb and the PRS fiducial marks. The TV image is displayed on a monitor and the limb offset on a digital indicator in the ATM Control and Display Console. The electronics also contain the logic for controlling the PRS in any of the operating states selected by the astronaut from the ATM Control and Display Console.

To facilitate obtaining exposures in the area of the solar limb, the spectrograph incorporates the active PRS. Performance of the PRS is different in each of the three pointing states: white light display (WL DISPLAY) limb scanning (LIMB SCAN) and limb pointing (LIMB PTG).

2.9.6.3.2.1 White Light Display State - The white light display state is used when spectrograms of specific features are desired. It is normally the first state actuated with the XUV SLIT WL DISPLAY switch to WL DISPLAY when the experiment is turned on. It can also be entered from either of the other two pointing states. The white light display state shows the astronaut where the experiment is pointing on a white-light image of a 3 arc minute segment on or near the solar disc (Figure 2.9.6-7) via closed circuit TV. This state is also used to point the experiment to the limb before activating the limb scanning state.

2.9.6.3.2.2 Limb Scanning and Limb Pointing States - The limb scanning state is used primarily as a transition to the limb pointing state. The limb pointing state, entered only from limb scanning, is used mainly when it is desired to record the changes in radiation across the limb and out into the corona. In the limb scanning state, the astronaut actively controls experiment pointing by means of the ATM pointing control system (PCS). In the limb pointing state, pointing is automatically held within ± 1 arc second of a selected point along a solar radial line by means of the PRS which controls the primary mirror of the spectrograph. The selected point may be moved by +2 arc seconds by placing the XUV SLIT LIMB PTG switch in the MAN STEP position.

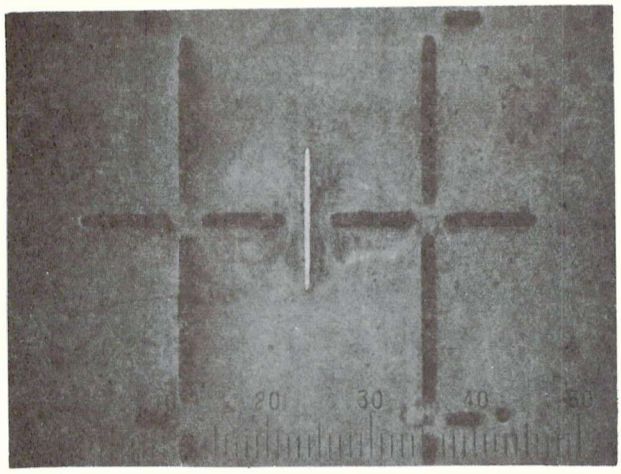

Microscopic View of Slit Plate

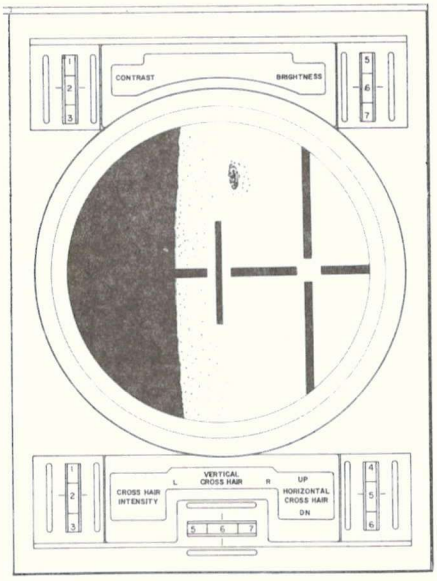

Artists Concept of TV Display

Figure 2.9.7-7 S082B Slit, Fiducial Marks and White Light Display

S082B

These two states give a control console digital readout in arc seconds of the distance between the experiment's slit and the solar limb. Before these states are activated, the experiment is pointed in the WL DISPLAY state to the solar limb, preferably within a few arc seconds. It must be pointed within ±40 arc seconds, because if this distance were much greater the limb would not fall inside the fiducial mark and the PRS could not detect the distance. When the solar limb is too far on either side of the slit for the PRS to properly compute limb offset, the digital indication will be +48 or -52 arc seconds, depending upon whether the experiment is pointed off or on the disc. When the limb scanning or limb pointing state is activated, the video display of the white light display state is disabled.

2.9.6.3.3 XUV Monitor - The XUV Monitor operates independently of the spectrograph to provide a real-time image of the solar disc in the XUV waveband between 170 and 550Å. The monitor consists of a mirror, three thin aluminum filters and a low-light level (LLL) TV camera and has a separate independently-operated aperture door that admits light to its compartment.

The mirror is of Cervit material, has a concave reflecting surface coated with platinum, and is rigidly mounted to the rear wall of the XUV Monitor case.

The filters are aluminum films approximately 1000Å thick. One filter is located inside the aperture door, one in front of the camera, and one is deposited on the faceplate of the camera.

The XUV Monitor camera system is GFE. The camera contains a secondary electron conduction (SEC) vidicon with a thin layer of conversion material deposited on the faceplate, under the aluminum filter film. The conversion material converts the filtered XUV wavelengths to visible light in the 4000 to 4500Å range which the camera transmits to the ATM Control and Display Console and to the telemetry system for subsequent transmission to a ground station. The camera is mounted at the sun end of the XUV monitor case.

2.9.6.4 Major Component/Functional Description

2.9.6.4.1 Spectograph Optical System - It is convenient to think of the spectograph primary optical system as composed of two major parts: the telescope, which forms a white-light image of the sun on the slit plate; and the spectrograph proper, which disperses the light entering the slit into spectral lines on the film. (See Figure 2.9.6-8)

Principal elements of the telescope are the primary mirror and the slit plate. Full sunlight enters the experiment through the 2.13 x 4.75 inch aperture and is focused by the primary mirror to form an image of the sun 9.3 millimeters in diameter at the plane of the slit plate.

2.9.6.4.1.1 Primary Mirror - The primary mirror is a 3.38 x 6.00 inch off-axis section of a paraboloid with a 1-meter focal length. The mirror is made of Cervit material to minimize thermal distortion. It is coated with aluminum that is overcoated with magnesium fluoride for maximum reflectivity at the shorter wavelengths.

The primary mirror is rigidly held in focus and alignment by adjustment screws within an Invar alloy frame structure. The frame structure is installed between and attached to flexible pivots that allow the mirror and frame assembly to pivot about an axis parallel to the long axis of the experiment slit. A torque motor controlled by the PRS is attached to the lower flex pivot and provides the force to deflect the pivot flexures up to 35 arc seconds either side of center. The whole assembly is housed in a rigid structural support that is bolted and pinned to the main experiment case wall.

2.9.6.4.1.2 Slit - The slit is 10 microns wide by 300 microns long corresponding to 2 arc seconds by 60 arc seconds of the solar image. Allowing for the slight image degradation inherent in the mirror and for imperfect focus retention, the spatial resolution of the solar image area selected by the slit is expected to be approximately 3 to 4 arc seconds in the yaw direction and 60 arc seconds in the pitch direction. The specific area of the solar image admitted through the slit for spectral analysis will be determined by the ATM pointing direction, and, when in the limb pointing state, the amount of mirror offset.

The slit plate assembly consists of a primary structural support attached to the main case wall that supports and positions the slit plate, a heat-rejection mirror, slot plate, and the pointing reference system (PRS) neutral-density filter, relay

S082B

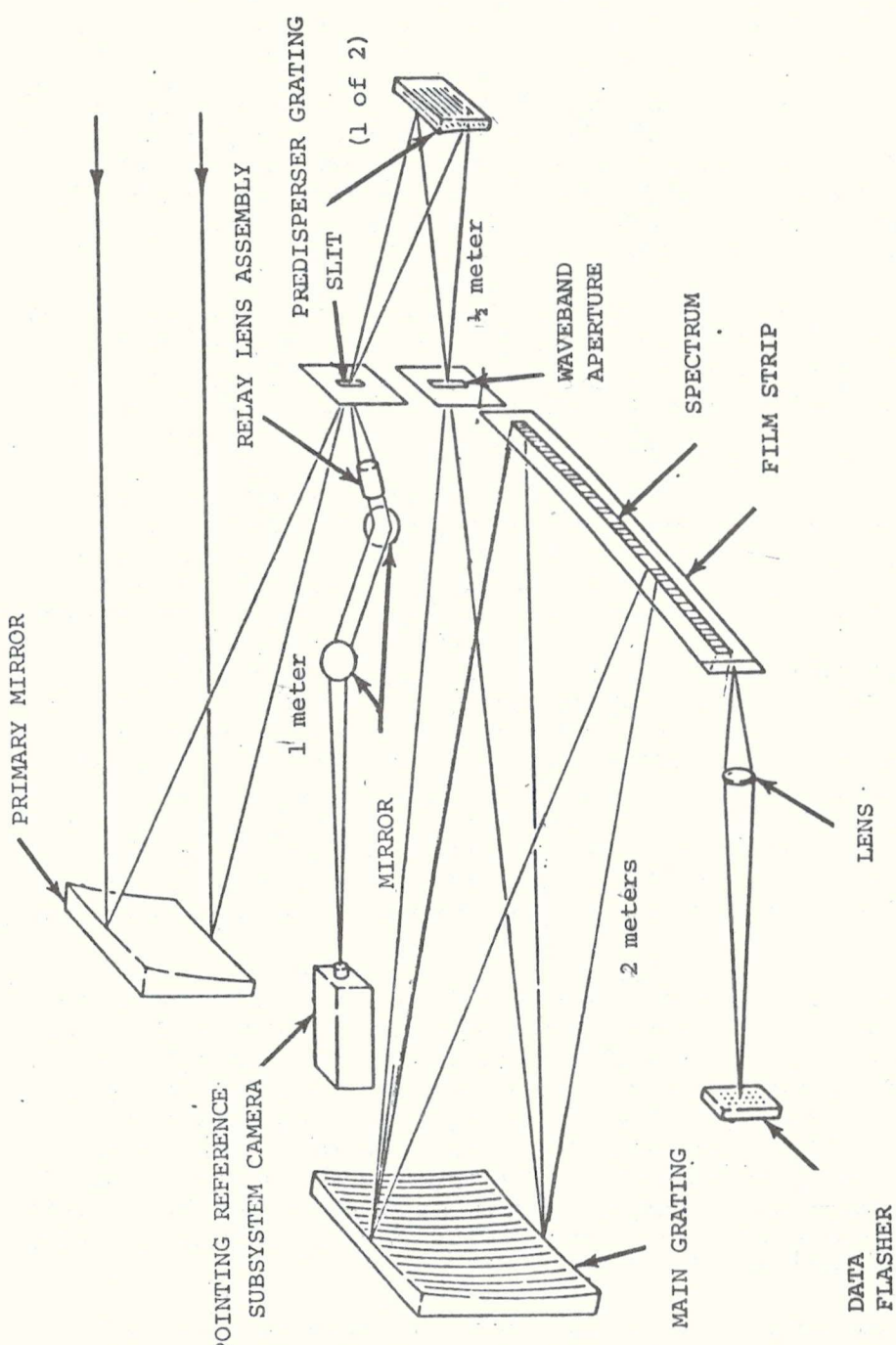

Figure 2.9.6-8 Spectrograph Optical System Schematic

lens, and first folding mirror.

The slit plate contains both the 10 x 300 micron slit and the PRS fiducial markings (Figure 2.9.6-7) . Physically, the slit plate assembly consists of a front and a back plate, each approximately 1/8 x 5/8 x 1 1/4 inches in size, with the slit plate sandwiched between. The slit plate itself is a very thin copper sheet containing the slit, with one surface nickel plated and etched to provide the PRS fiducial lines. The front plate incorporates a 0.100 inch diameter hole through which the slit and fiducial marks are viewed. The rear plate has an 0.06 inch diameter orifice to prevent restriction of the light passing through the slit. The slit plate is held in the structural support assembly by means of adjustment screws.

The heat-rejection mirror in the slit-plate assembly consists of a 1 inch diameter aluminized surface over electroless-nickel-plated aluminum alloy, and acts to reflect the white light and solar energy not directed to the slit plate back to the primary mirror and subsequently overboard through the entrance aperture. The rejection mirror is approximately centered around the slit and is rigidly attached to the slit support structure, but thermally isolated from the structure by ten sheets of Mylar-aluminum laminate.

Principal elements of the spectrograph proper are the slit, two predisperser gratings (used one at a time), a waveband aperture, a main grating and a film camera. Light from the selected area of the solar image enters through the slit and is first dispersed vertically by the selected predisperser grating across the waveband aperture that passes the desired wavelengths (970 to 1970Å or 1940 to 3940Å) to the main grating. The main grating disperses the light horizontally to form spectral images on the film.

2.9.6.4.1.3 Predisperser - The predisperser gratings are used to obtain the two spectral ranges. They are held in a drum type mechanism that rotates the long or the short-wave length grating into position as required. The gratings are concave, with a 50-centimeter radius. They are aluminum replicas coated with aluminum and magnesium fluoride for maximum efficiency at the desired wavelengths. The ruled area of each grating is 36 X 40 millimeters on a 50 x 50 millimeter glass blank. The grating grooves are oriented horizontally to provide vertical dispersion.

The long-wavelength predisperser grating is ruled with 150 grooves per millimeter average spacing that provide the dispersion necessary to pass slit images in wavelengths from 1940 to 3940Å through the waveband aperture. The short-wavelength grating is ruled with 300 grooves per millimeter average spacing, passing 970 to 1970Å slit images through the waveband aperture.

S082B

The predisperser gratings are mounted 180 degrees apart in a 4 inch diameter drum. Both gratings are held in focus and alignment within the drum by three pads on the grating faces opposed behind the gratings by adjustment screws and stationary positive stops to limit displacement or damage during handling and launch. The gratings are positioned in roll along one edge by similar adjustment screws. The third axis is free to float between stationary positive stops.

The drum is supported within a case between two antifriction bearings, and is held from rotating by a solenoid-actuated spring-loaded detent in either of the two positions required to insert the long or short-wavelength grating into the optical system. The mode of operation is identical in shifting from either of the two wavelength positions to the other, for the drum is rotated unidirectionally. The sequence of operation following a command to change grating is as follows:

a. The detent solenoid and motor are energized simultaneously.

b. The solenoid disengages the drum position detent, and the drum is rotated through a 10:1 gear ratio by the motor. The motor is a three-phase 15-degree stepper motor driven at 75 pps.

c. After 180 milliseconds the detent solenoid is deenergized and the detent allowed to ride the drum for the remainder of rotation until the 180-degree position detent is reached at which time the detent acts as both a stop and a positioning device. Position switches are cam-activated by the drum at the two grating positions to shut off the motor drive, give wavelength position indication to C&D Console, and supply a digital telemetry signal. Total time for actuation is 1.6 seconds.

The predisperser case in which the drum is supported is bolted and pinned directly to the experiment case wall.

2.9.6.4.1.4 Waveband Aperture - The waveband aperture is a slot 16.10 millimeters high by 1.27 millimeters wide located on the optical path between the predisperser and the main grating. The aperture passes wavelengths of 970 to 1970Å when the short-wavelength predisperser grating is in use; 1940 to 3940Å when the long wavelength predisperser is in use. Light at other wavelengths is prevented from reaching the main grating.

2.9.6.4.1.5 Main Grating - The main grating is a 2 meter radius concave grating with 600 grooves per millimeter ruled in a 76 x 152 millimeter area on an 85 x 160 millimeter glass blank. It is held in focus and alignment by adjusting screws within a frame structure. The adjusting screws are backed up with positive stops to prevent grating displacement or damage during handling and launch. The frame is rigidly attached to the main experiment case wall.

Like the predisperser gratings, the main grating is also an aluminum replica coated with aluminum and magnesium fluoride for maximum efficiency. The grooves are oriented vertically to disperse the vertical slit images horizontally across the film. The combination of vertical dispersion by the predisperser and horizontal dispersion by the main grating results in a tilted spectrum at the film plane. The film camera is tilted accordingly, in its mounting to the experiment, so that the spectrum runs straight across the film. This camera tilt angle is 3 degrees 2 minutes.

The film is curved in the camera to fit the Rowland circle where the slit images formed by the main grating are in sharpest focus. Characteristically, slit images on the Rowland circle are lengthened considerably by the astigmatism of the concave grating. When a relatively short slit is used, as in the S082B experiment, this ordinarily results in reduced image intensity. However, this effect is corrected to a large extent by ruling the predisperser grating in ten panels, each with a slightly different grating constant (number of grooves per millimeter). This compresses the astigmatically lengthened line images, resulting in greater image intensity.

The main grating is mounted in a fixed position such that 1940 to 3940Å images in the first order are dispersed 240 millimeters across the film when the long-wavelength predisperser grating is in use. When the short-wavelength predisperser grating is in use, 970 to 1970Å images in the second order of the main grating are dispersed across the same 240 mm of the film. If it were not for the filtering action of the predisperser grating and waveband aperture, the 1940 to 3940Å first-order and 970 to 1970Å second-order main-grating images would overlap. In the long-wavelength range, the dispersion is 8.3Å per millimeter, providing a spectral resolution of approximately 0.12Å. In the short-wavelength range, dispersion of 4.2Å per millimeter provides spectral resolution of approximately 0.06Å.

The film is moved in steps between exposures so that eight spectral images are recorded on each film strip. The developed images will appear on the film somewhat as illustrated in Figure 2.9.6-5 .

2.9.6.4.1.6 Light Baffles and Shields - Another critical factor

in the design and construction of this experiment, from the optical point of view, is the requirement for light shielding. The energy level of the UV radiation to be recorded on the film is approximately one millionth of the intensity of the visible sunlight that enters the experiment and is focused onto the slit plate by the primary mirror. For this reason, shielding is provided to prevent any scattered light in the telescope compartment from entering the spectrograph compartments. Likewise, shielding separates the main-grating compartment from the predisperser-grating compartment, because the scattered-light level in the predisperser compartment is expected to be considerably higher than would be tolerable in the main-grating compartment. Scattered light is also minimized by placement of light baffles alongside the light paths at critical points and by a light trap at the white-light zero-order image from the predisperser grating.

2.9.6.4.1.7 Heat-Rejection Mirrors - Three heat-rejection mirror surfaces are used on the experiment. Their function is to reflect unwanted solar radiation out the front of the experiment, thereby heat-shielding apertures to prevent unnecessary heating and reducing the potential sources of light scattering. The first heat-rejection mirror surface surrounds the experiment entrance aperture, the second frames the primary mirror, and the third surrounds the slit plate. Each is shaped, according to its location, to direct the unwanted sunlight out through the front aperture.

2.9.6.4.1.8 Data Flasher - The data flasher is located in the lower corner of the experiment housing, immediately adjacent to the camera mounting plate door. It consists of a light-emitting photoconductive diode array and a lens tube that records time and spacecraft attitude information on the film each time an exposure is made.

The diode array is mounted on an adjustable bracket that permits positioning and coarse alignment. The lens tube is mounted in a fine threaded hole located on the camera mounting plate. Final focusing adjustment is achieved by screwing the threaded lens tube in or out of the camera mounting plate. The lens focuses the light from the diode array onto the end of the film strip.

2.9.6.4.1.9 Alignment Reference Mirror - The alignment reference mirror is an adjustable Pyrex mirror. The front of the mirror is retained at three points by adjusting screws provided in back of the mirror.

The purpose of the mirror is to provide a convenient reference to assist in aligning the experiment in pitch and yaw during installation on the ATM assembly. The mirror is oriented so that a line normal to its surface is parallel to the optical axis (line of sight) of the telescope.

2.9.6.4.2 Spectrograph Electronics - The S082B Spectrograph electronics are mounted on the experiment case in individual boxes as shown in figure 2.9.6-1. The electronics control the application of power to the experiment to operate the experiment aperture doors, the predisperser grating drive, the film strip camera drive, the internal logic circuits and the data flasher.

2.9.6.4.2.1 Power - The Spectrograph is powered by the ATM as discussed in section 2.9.6.2.2 and represented in figure 2.9.6-4. The first three of the five power inputs will be discussed in this section, the remaining two will be contained in the TCS section 2.9.6.4.7.

Primary Power - The 28-volt primary power is wired directly to a 20-volt switching regulator and a dc-to-dc converter ($\pm$ 15 volts). The 20-volt output of the regulator drives two separate dc-to-dc converters. One converter is wired directly to the regulator; the other is wired through a latching relay to the regulator.

The converter that is wired to the 28 volt primary power provides the $\pm$ 15-volt power to the analog telemetry circuits. The dc-to-dc converter that is directly wired to the 20-volt regulator drives the following two supplies:

a. + 5-volt ASAP, which supplies power to the buffer circuits that interface the ATM sync signals.

b. +5-volt Analog, which supplies power to the analog telemetry circuits.

The converter that is driven through the latching relay by the 20-volt regulator is energized after the POWER/DOORS ON command is executed. This converter then supplies the following outputs:

a. +5-volt Logic, that provides power to the control logic functions and to the PRS.

S082B

b. +5-volt Digital, that provides power to the digital telemetry circuits.

c. +5-volt Computer, that provides power to the circuits that interface the ATM attitude and time data inputs for the diode array.

The relay is deenergized by placing the PWR/DOORS switch in the OFF position which leaves only the analog telemetry operational.

Command/Indicator Power - The 28-volt panel power is wired directly to the command buffer and panel driver circuits that interface the commands from the ATM and the indicators to the ATM.

Actuator Power - The 28-volt actuator power is wired directly to the XUV monitor door control electronics, the main experiment power turn-on control electronics, and two latching relays. Approximately 1/3 seconds after the PWR/DOORS switch is placed in the ON position, the first relay is energized. Thirty milliseconds later the second relay is energized to provide non-current limited power to the actuator driver circuits, including the spectrograph aperture door, predisperser, camera film, transport, camera shutter, camera escapement pawls, and the diode array.

Placing the PWR/DOORS switch in the OFF position keys the aperture door close logic, triggers the master reset, closes the shutter (and cycles the film) if it is in the open position, and returns all relays to the open-circuit position.

The low-voltage squelch circuits will sense any rapid drop in the 28-volt actuator power. If the voltage applied to the experiment falls below 21.5 volts, the squelch circuits will open all relays and remove the experiment from an operate to a standby condition. To restart the experiment, place the PWR/DOORS switch in the OFF position, wait ten seconds, then place the switch in the ON position.

2.9.6.4.2 Mechanism Drivers - Spectrograph Aperture Door - By placing the PWR/DOORS switch in the ON position, a 28-volt continuous command is applied to the aperture door open command buffer. The output of the command buffer sets up the power up logic that triggers the motor drive one-shot. The one-shot enables the aperture door phase sequence logic for 1.2 seconds to provide motor drive. The door typically operates to the full open position in 0.9 seconds.

The aperture door circuitry consists of four driver circuits to drive the four-phase stepper motor and the associated logic to convert the 75-pps input clock to the 37.5-pps motor drive rate, time sequenced into four phases. The motor drive sequence logic inverts phases 2 and 4 to reverse the motor direction when the PWR/DOORS switch is placed in the OFF position.

Four microswitches are located on the door: two are actuated at the door-open position and two at the door-closed position, to provide indicator signals to the ATM control panel and telemetry.

Predisperser - The predisperser may be commanded manually to alternate positions from short to long wavelength or from long to short wavelength when the experiment is not operating in a film-taking mode. It should also be noted that the predisperser logic will not accept a command to move the predisperser to the position that it occupies at the time of the command.

Located in the predisperser is a solenoid pawl that locks the drum in position, a three-phase stepper motor, and two mocroswitches for logic feedback to indicate the predisperser position.

The predisperser motor drive logic is controlled by a 2.0 second negative-going one-shot that will be terminated before its full period if the predisperser arrives at its next position in less than 2.0 seconds. Typical position shift drives are 1.6 seconds. If the predisperser should fail to arrive home within 1.6 seconds (position switch does not close), the drive will shut down and the experiment logic will be enabled to take the next exposure.

In an automatic mode, the predisperser will be commanded to shift at the termination of the exposure. If not in a mode, the predisperser may be commanded manually. The motor drive logic sequences the 75-pps signal into three consecutive phases that enable the three drive phases. Simultaneously with the motor drive start, the solenoid locking pawl is disengaged by actuating the solenoid for 180 milliseconds.

When the position switch (for the commanded position) is actuated, the motor drive will terminate.

Spectrograph Camera - The spectrograph film camera contains two shutter solenoids, two escapement solenoids, a three-phase stepper motor, and four position switches. The motor is driven by 600 pps, which is phase-sequenced for a one-third duty cycle per driver for a maximum possible total drive time of 2.2 seconds. The shutter solenoid drives are of 60 milliseconds duration and the escapement solenoid drives are of 30 milliseconds duration. The switches provide a return path to the experiment logic when appropriate by way of buffer circuits

commonly known as switch drivers.

Film Magazine Operation - Operation of the film magazine is divided into two basic steps (refer to Figure 2.9.6-12).

Step 1, Shutter Open--The shutter-open solenoid drives open the shutter and is relaxed after 60 milliseconds. The opening of the shutter allows the shutter-closed switch to open and close the shutter-open switch as it approaches the open position. With film loaded in the magazine, the experiment would now be making an exposure. After some exposure time period, a SHUTTER CLOSE command is executed.

Step 2, Shutter Close--Execution of the SHUTTER CLOSE command initiates the following operations: The shutter-close solenoid closes the shutter and is relaxed after 60 milliseconds; this releases the shutter-open switch and actuates the shutter-closed switch to provide experiment feedback. Two other operations are performed simultaneously with the trailing edge of the shutter-close solenoid pulse; (1) the two escapement solenoids are actuated to mechanically release the transport and (2) the motor is driven to advance the transport to its next position.

XUV monitor Aperture Door - The XUV monitor door command electronics functions to accept the ATM commands which control the XUV monitor aperture door position, to monitor the aperture door status and provide telemetry and panel indicator outputs, and to provide internal video checkout lamps.

Basic circuitry consists of a door-open command buffer, a door-close command buffer, several flip-flops, a 3-second one-shot, a 10-pps clock-frequency generator, a 20-volt dc regulator, four actuator drivers and three light-emitting diodes.

The aperture door unit contains a four-phase stepper motor and five switches that provide the telemetry and panel-driver indications.

Power to the electronics is provided by the ATM 28-volt actuator power by turning on the facility power. The 28-volts is regulated down to 20 volts by a series pass type regulator. The 20-volts dc powers all circuits but the actuator drivers, which are powered by the raw 28-volts.

With power applied to the system and the aperture doors closed, three gallium arsenide diodes which are mounted in front of the XUV monitor TV camera will be in the ON condition, i.e., emitting light. The return side of the diodes is wired through a switch on the aperture door such that while the door is open, the lights are off.

To open the aperture doors, place the XUV MON DOORS OPEN switch to the DOORS OPEN position. This will initiate a command to the experiment and start the 3-second one-shot, which will trigger the motor drive logic. A 10-pps signal from the clock generator is then phase sequenced by a four-phase sequencer into consecutive 100-millisecond pulses to the various motor windings for 3 seconds. As the aperture door leaves the closed position, the switch that enables the light-emitting diodes breaks contact and extinguishes the diodes. Placing the XUV MON DOORS OPEN switch to the CLOSE position reverses the drive sequence on phases 2 and 4 to drive the door closed. As the door arrives at the closed position, the light-emitting diodes are again enabled. The aperture door status switches utilize the primary experiment (XUV spectrograph) telemetry outputs for monitoring.

2.9.6.4.2.3 Modes of Operation(see figure 2.9.6-9) - TIME Mode - In the TIME mode, the predisperser position may be selected manually when the spectrograph film camera shutter is closed. If the shutter is closed and the predisperser or camera motor is not operating, the shutter may be manually commanded open and will stay open until manually commanded closed or until a command change in the experiment condition, such as entering HOLD, closing the spectrograph aperture door or moving the MODE switch.

Predisperser positions may be selected by placing the WAVE LTH switch in the desired position. Switch feedback from the predisperser will lock out the command if the predisperser already occupies the position to which it is commanded. Automatic-mode latches lock out the manual commands and enable predisperser steering to occur automatically from the proper mode logic when the experiment is in an automatic mode.

Manual shutter opening is achieved by placing the MODE switch in the TIME position and the START/STOP switch in the START position. Iff the shutter is already open, the command is locked out by the shutter-closed switch feedback from the film magazine. Other lockouts are provided by the various mode latches to prevent manual shutter opening while in an automatic mode.

By placing the START/STOP switch in the STOP position, the shutter close pulse is generated. A lockout from the shutter-open switch is the XUV film magazine prevents the shutter-close pulse from issuing a drive command if the shutter is already closed. Simultaneously with the shutter close pulse, the master reset pulse is generated, which acts as mode clear in the event that the experiment is in an automatic mode.

AUTO Mode - The AUTO mode takes eight exposures of various programmed durations depending on the predisperser position, experiment state, pointing conditions and exposure number. By placing the MODE switch in the AUTO position and the START/STOP switch in

S082B

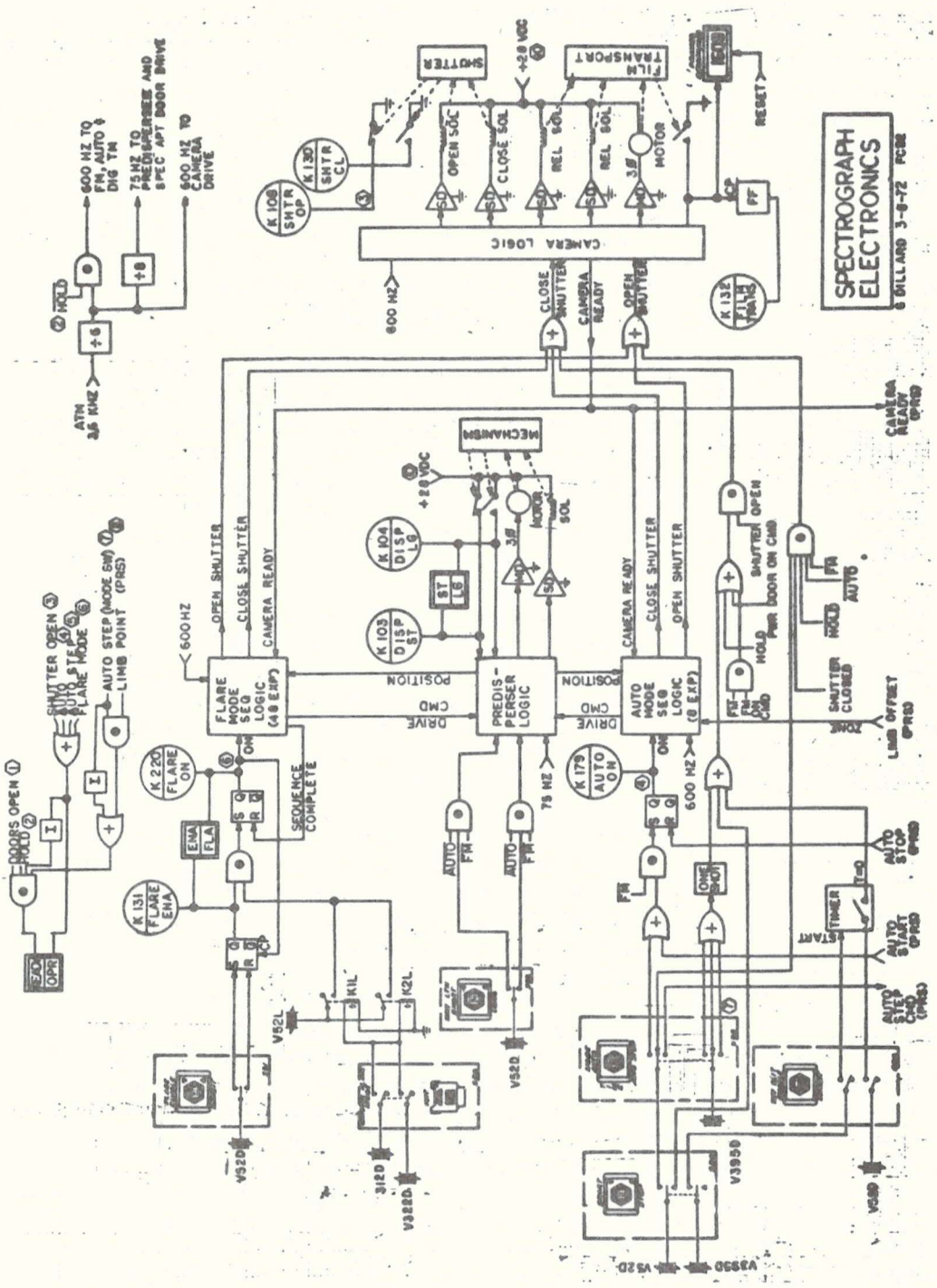

Figure 2.9.6-0 S082B Spectrograph Electronics Functional

the START position the AUTO mode can be entered.

A flip-flop, direct-set from the command buffer output, is used as a lockout for manual commands and interference from other commands except as noted. The output enters the exposure time computer logic as an enable input for the shutter-open pulse, which is generated by the start pulse to the predisperser logic. The shutter open pulse also triggers the open-shutter one-shot, which clears the computer and starts the clocking. When the computer shift register fills the appropriate line, a shutter-close pulse is generated, which terminates the exposure, starts the camera motor drive, shifts the predisperser, advances the AUTO mode ÷ 8 counter, and advances the frequency prescalar logic. After the completion of the spectrograph camera motor drive and the predisperser drive, the camera-ready latch allows the regeneration of the shutter-open pulse to repeat the cycle with a new exposure time. When the AUTO mode ÷ 8 counter has filled, the output is gated back to the AUTO mode latch flip-flop as a clear signal to terminate the mode. The master reset also is gated back through the same path to act as a "clear mode" command. The start pulse to the AUTO mode exposure counter (÷ 8 counter) is brought from the 12-microsecond one-shot to act as a counter-clear signal from the AUTO mode turn-on flip-flop.

AUTO STEP Mode - Basically the AUTO STEP mode consists of ten complete AUTO modes, one each at ten different pointed positions. The AUTO mode logic is utilized for exposure duration, camera, and predisperser control. An additional command logic system is required however, to accomplish automatic pointing control of the PRS.

The AUTO STEP mode may be entered by placing the MODE switch in the AUTO STEP position while the experiment is in the limb pointing state and switching the START/STOP switch to START. The output of the command buffer is inverted and then interlocked by mode and state information. If all other modes are off, the shutter closed, and the experiment is in the limb pointing state, then a 12-microsecond one-shot is fired which sets the automatic step latch flip-flop, clears the update computer, triggers the initial PRS update gate and update clock inputs, sets the update-down/start-mode flip-flop output, and provides a delayed AUTO mode turn-on which sets the AUTO mode latch.

The automatic step latch acts as a command lockout and also prevents the AUTO mode from terminating itself after eight exposures.

The completion of the 80th exposure clears the automatic step latch and the auto latch to terminate the mode. The mode may be cleared at any time by a manual shutter-close command, which triggers the master reset pulse. Other mode terminations are

provided by the aperture doors close command and the FLARE mode initiate command.

SC828

Manual Offset Stepping - When the experiment is not in an automatic mode and is in the limb pointing state, manual offset stepping of the PRS subsystem in 2 arc second steps to the plus direction may be accomplished by placing the LIMB PTG switch to the MAN STEP position. The PRS computer update loop, which controls the pointing update in the automatic offset mode, is utilized for the manual stepping. Two arc second stepping is achieved by the input command clearing the computer to initial conditions and setting the stepping command flip-flop, which is then cleared after one update gate pulse. The input command also fills the 10-bit counter, which clears the auto mode and automatic step mode latches to ensure a cleared experiment mode condition after each manual step command.

FLARE mode - The FLARE mode logic controls the predisperser programming, exposure durations, and the 120 second wait periods when activated.

FLARE Mode initiate commands can be accepted in four possible conditions:

(1) Experiment not enabled, not in a FLARE mode - A gate is triggered from the command buffer output, which fires the master reset one-shot to clear the experiment of any existing mode.

(2) FLARE Mode enabled but experiment not in a FLARE mode - Again the experiment is cleared of any existing mode but accepts the FLARE MODE INITIATE command and direct-sets the FLARE mode turn-on flip-flop.

(3) FLARE mode not enabled but experiment in a FLARE mode condition - The FLARE mode latch is a logic "0" to disable the gate; therefore the master reset one-shot is not fired; no experiment change is noted because the gate that passes the command is locked out by the unarmed flip-flop.

(4) FLARE mode enabled and the experiment in the FLARE mode condition - Results are the same as in (3) above, but the command is blocked by a gate lockout of the flare mode latch. Therefore no change in mode operation occurs.

Execution of the FLARE mode initiate command with the experiment enabled then triggers the start gate immediately if the predisperser is in the short wavelength position, is delayed by 200 milliseconds if the predisperser is in the long-wavelength position, and, if the predisperser is driving, 200 milliseconds after the

end of the drive. The 200-millisecond delay provides for recovery time of the predisperser drive one-shot in the event the predisperser was shifting positions at the time of the initiate command.

HOLD - Placing the AUTO SEQ switch in the HOLD position will stop all automatic modes and clear all states of the experiment. Several different functions are wired to the output of the command buffer to accomplish the HOLD condition:

(1) The manual shutter close command logic has an input from HOLD that forces the shutter closed, if open.

(2) All shutter-open command logic is blocked, i.e., the FLARE mode shutter open, AUTO mode shutter open, AUTO STEP mode shutter open, and manual shutter open gates are disabled.

(3) In the event the shutter is open and an automatic mode is controlling the exposure duration, the appropriate exposure timing logic is cleared; i.e., the exposure in process is terminated to await the start of the next exposure when HOLD is removed.

(4) The 600-pps signal that clocks all exposure time computers is gated out to prevent the computers from being advanced after they have been cleared.

(5) The power up/power down circuitry locks out the PWR/DOORS OFF command at the RCD gate, which prevents the low-voltage squelch circuit from tripping the +5-volt converter relay to the open condition in the event that the PWR/DOORS OFF command is issued during a HOLD condition. This will allow the aperture door to close and will turn off the 28-volt mechanical power within the experiment, but all +5 volt dc converters will remain on. The release of the HOLD command while the aperture door is closed will trigger the other RCD gate and disable a relay, which will shut down the three 5-volt dc converters tied to this relay. Execution of the PWR/DOORS ON command latches relays in the on position to provide 28-volt actuator power and turns on the aperture door open motor drive logic.

2.9.6.4.2.4 Data Flasher - The data flasher contains 192 light-emitting diffused silicon planar diodes, arranged in a 6-column, 32 row matrix. These diodes emit light to produce a "dot" pattern, which is focused on the film by means of a lens.

S082B

Light emission from any selected diode in the array is obtained by operating the diode in the reverse-bias mode. The normal mode of operation of the array is column sequential: one column (32 anodes) at a time is activated, and simultaneously any combination of the 32 rows (or cathodes) is driven by independent negative current-regulated pulses.

2.9.6.4.3 Spectrograph Camera - Cameras will be exchanged by EVA. The EVA camera work station is located at the solar end of the ATM. The astronaut will remove the new camera from its canister in zero pressure environment at the work station. He will place the retrieved camera in the canister and seal it before leaving the work station so that the canister remains evacuated. All 1608 exposures should be made before a camera is retrieved by EVA. The cameras should be handled as gently as possible during EVA's . Before EVA, it must be ensured that the experiment aperture doors are closed. After EVA, the FRAMES REMAINING indicator should be reset to "1608". If the thermal control system is deactivated prior to EVA, it is estimated that it will take several hours to achieve thermal stability after it is turned on again.

The camera housing (Figure 2.9.6-10) provides a light-tight aluminum-alloy box for holding film strips in two stacks. The film strips are 35 x 258 mm UV-sensitive film held in stainless steel holders. The end clips on the film holders are electrically conductive and are grounded to prevent arcing from exposing the film.

Guide rails and latching lugs are incorporated at the top and bottom plates of the housing for guiding the camera into position and engaging the camera latching mechanism during installation in the experiment.

The folding camera handle is extended and locked for inserting the camera in the experiment when it is mounted in the ATM. It remains extended during launch and flight. This facilitates insertion and removal of the camera, especially when done by an astronaut during EVA. The handle is folded during storage in the canister.

The camera handle is aluminum alloy with hardened steel inserts for the detent positions. Detenting is accomplished by a spring loaded tapered rod end falling into a matching tapered hole. The camera that is launched with the experiment has two self-retracting pins located on the top and bottom rails of the handle to attach it to the camera latching handle for support during vibration testing and launch.

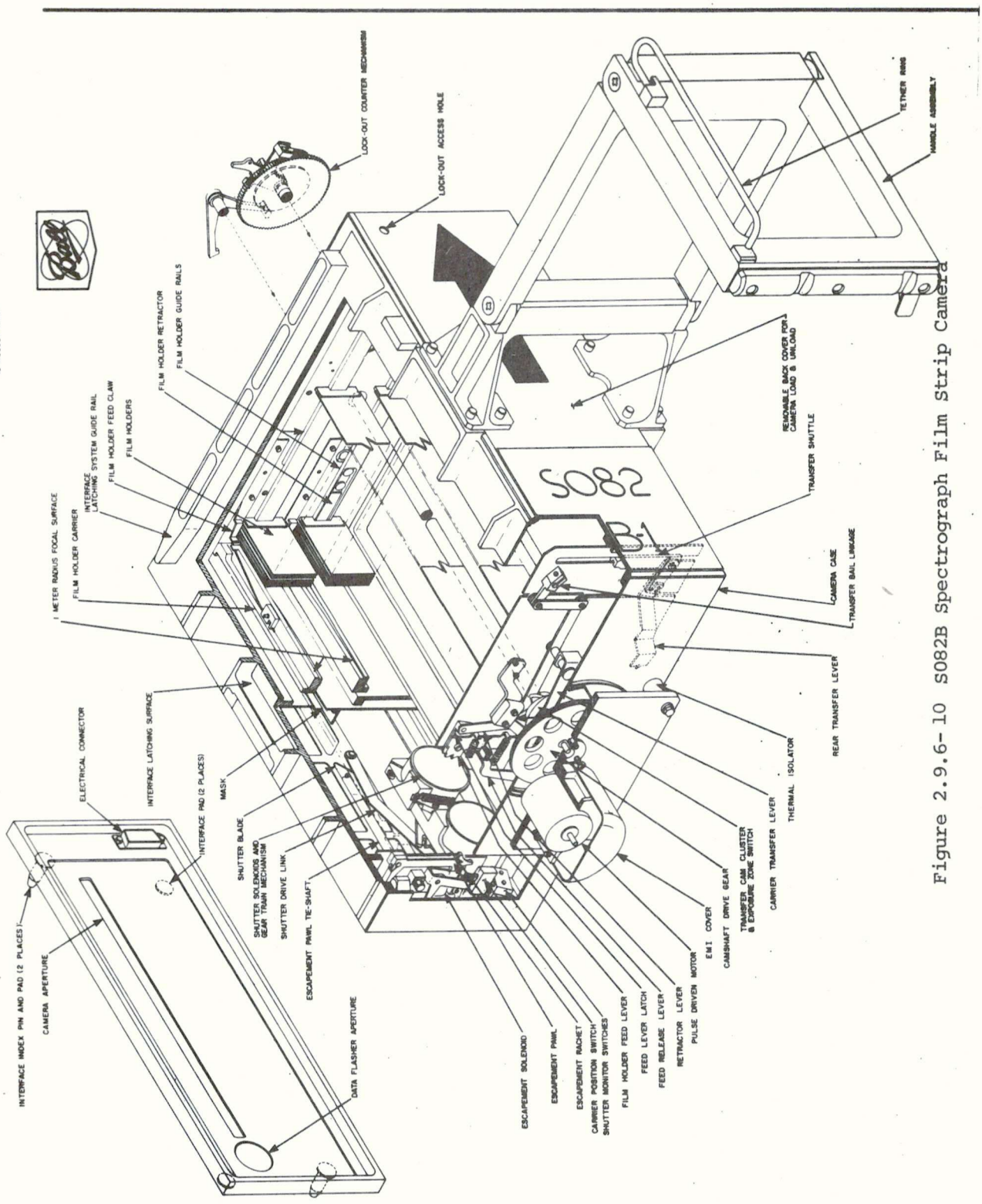

Figure 2.9.6-10 S082B Spectrograph Film Strip Camera

S082B

The camera face contains the rectangular aperture for admitting UV radiation from the main grating and the circular aperture for time and other data from the data flasher. An electrical connector for camera power and signal circuits is mounted in one corner and mates with a corresponding connector on the camera mounting plate. The camera face is also equipped with two guide pins and two alignment pads that provide precise alignment of the camera position after insertion and locking.

2.9.6.4.3.1 Shutter Assembly - The shutter assembly is mounted just behind and attached to the camera face plate. The shutter blade is attached to a lever driven by an oscillating cam. The cam, in turn, is rotated through an arc in either direction by one of the levers on the shafts of the rotary solenoids.

Two microswitches are installed adjacent to the pivot end of the shutter lever and provide signals to indicate shutter position. The shutter closed switch also provides a signal to the experiment logic which is used to begin the film-changing cycle.

2.9.6.4.3.2 Film-Changing Mechanism - The film-changing mechanism consists of several timed, cam-actuated mechanisms for feeding, positioning and retracting successive film strips for exposure. It provides the means for removing an exposed film strip from the film carrier and placing it in the retraction stack, while simultaneously removing a new film strip from the retraction stack and placing it in the feed stack. A solenoid-driven escapement mechanism is also provided so that eight full-width spectrograms are obtained on each film strip.

The operation of the film-changing mechanism is shown by the numbered events in the diagram in Figure 2.9.6-11. Starting with the initial conditions that the shutter is closed and the film strip is in position and ready for exposure, the following operating sequence occurs:

1. Shutter opens and film strip is exposed.

2. Shutter closes after exposure duration commanded by manual operation or by selected automatic operating mode logic.

3. Ratchet and pawl escapements at each end of film carrier are actuated by the escapement solenoids and position film carrier for seven more exposures.

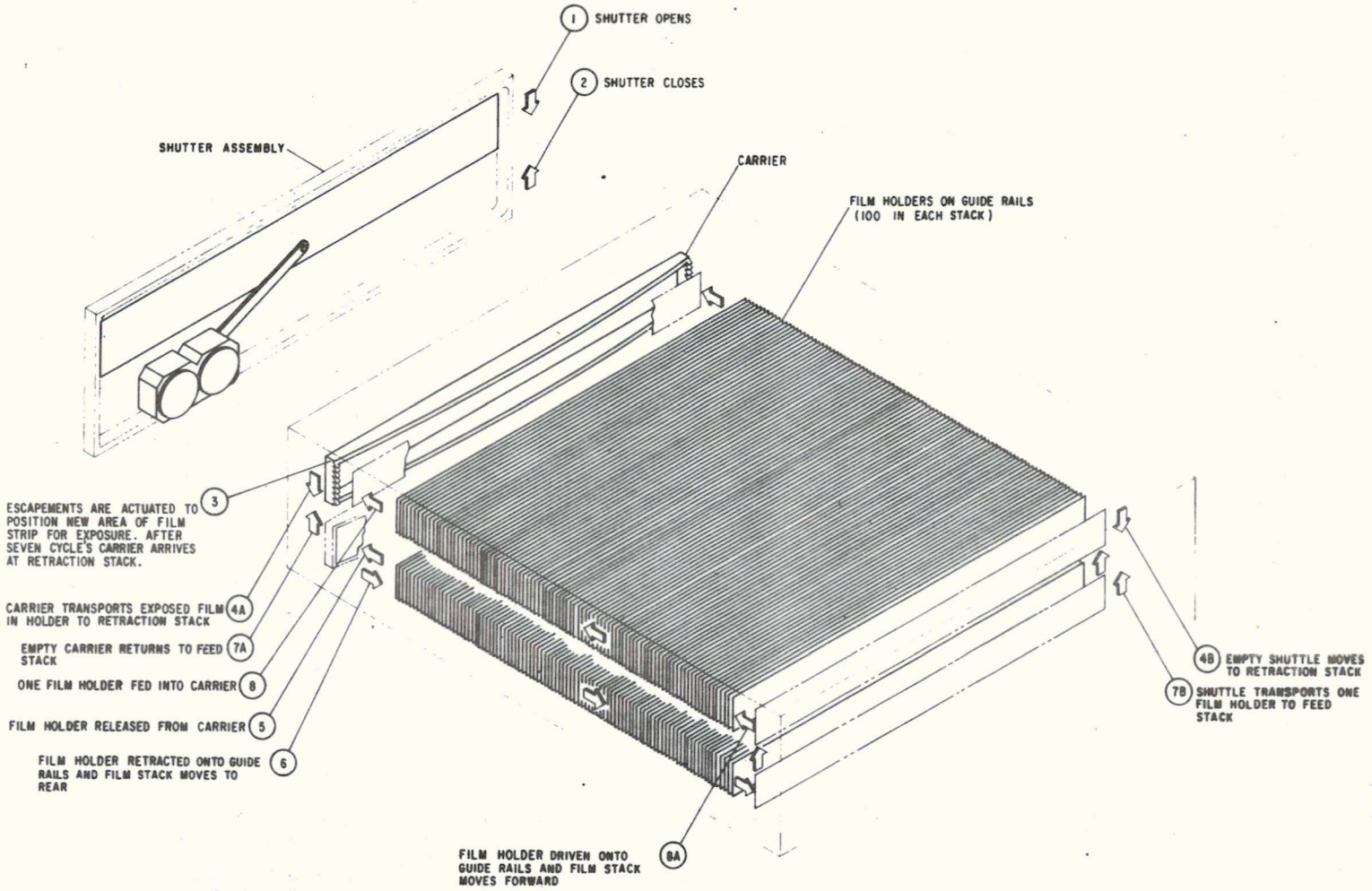

Figure 2.9.6-11 S082B Camera Film Changing Mechanism

4. After the eighth exposure, stepper motor is turned on and escapement solenoids are actuated. Carrier pawl is released and carrier transfers exposed film strip and its holder to the retraction stack. Simultaneously, the empty film shuttle at the rear moves to the retraction stack.

5. Film holder is released from carrier by the finger that actuates the spring release cam on the carrier.

6. Film holder is retracted onto retraction-stack guide rails by retractor hooks; film stack moves rearward and one film holder is loaded onto rear film shuttle. Simultaneously, feed stack is moved forward, creating space at the rear of the stack for a film holder.

7. Film carrier at front returns empty to feed stack simultaneously, shuttle at rear transports one film holder to the feed stack (7B).

8. Transfer bail forces film holder from shuttle onto feed stack guide rails and film stack moves forward. Claws release first film holder in feed stack, move behind it, and drive it onto carrier. Carrier curves the film holder to fit the experiment focal length and holds it in position for the next series of exposures.

The film changing mechanism is driven by a pulse-driven stepper motor and reducing gear drive train. Symmetrical cam clusters are provided on each side to drive the various mechanisms. A lockout exposure counter is also provided which counts the number of film strips exposed and locks the film-changing mechanism to prevent double exposures.

2.9.6.4.4 Pointing Reference Subsystem - The pointing reference subsystem (PRS) operates in conjunction with the spectrograph telescope to generate a standard TV picture of the sun's limb, provide a digital indication of the angular distance between the limb and the spectrograph slit, and control the distance between the limb and the slit. Operation of the PRS is controlled electronically, and is discussed in Section 2.9.6.4.4.2.

The great virtue of the PRS is that the real position of the spectrograph slit relative to the solar image is reproduced in the video image with essentially no alignment error. For this reason, any experiment pointing and inflight alignment accomplished with the PRS will be quite accurate.

2.9.6.4.4.1 PRS Optics - The PRS has its own optical subsystem, shown in Figure 2.9.6-12. The function of this optical subsystem is to re-image the slit plate, including slit, fiducial lines and solar image, onto the face plate of the image dissector tube (IDT). The optics of this system includes a relay lens assembly, two folding mirrors and a neutral-density filter. The slit plate has a polished optical surface broken by the spectrograph slit and the darkened fiducial lines.

The solar reflection off the slit plate passes through a neutral-density filter and a relay lens assembly, and is reflected by two folding mirrors to the IDT. The neutral-density filter, relay lens assembly, and first folding mirror are all mounted to the slit assembly structure.

The relay lens is positioned so that it will re-image a small area of the slit plate corresponding to 3 arc minutes of the solar image (0.034 inches across) onto the IDT with a magnification of 15.2. The purpose of the folding mirrors is to provide a suitable light path to the IDT located in the rear of the experiment case. The neutral-density filter, with a light transmission of approximately 1%, reduces the light intensity from the solar image to an acceptable level for the IDT. The neutral-density filter is mounted immediately in front of the relay lens. It is mechanically removable from the light path for test purposes on the ground. When it is removed, PRS operation can be tested with a light source considerably less intense than the sun.

Neutral Density Filter - The 0.90 inch diameter neutral-density filter is made from fused silica with an inconel coating to decrease the solar reflection intensity to be compatible with the IDT. For ground-test purposes, the filter is mounted in a sliding plate in which a duplicate glass blank without filter coating is mounted. The slide plate is coupled through a bell-crank system to a cable on the exterior of the experiment. When the cable is manually pulled, the blank glass is positioned in the optical path and the PRS can be tested with an artificial light source. The light source used should fill the entrance aperture area with a maximum divergence of 32 arc minutes. The energy density must

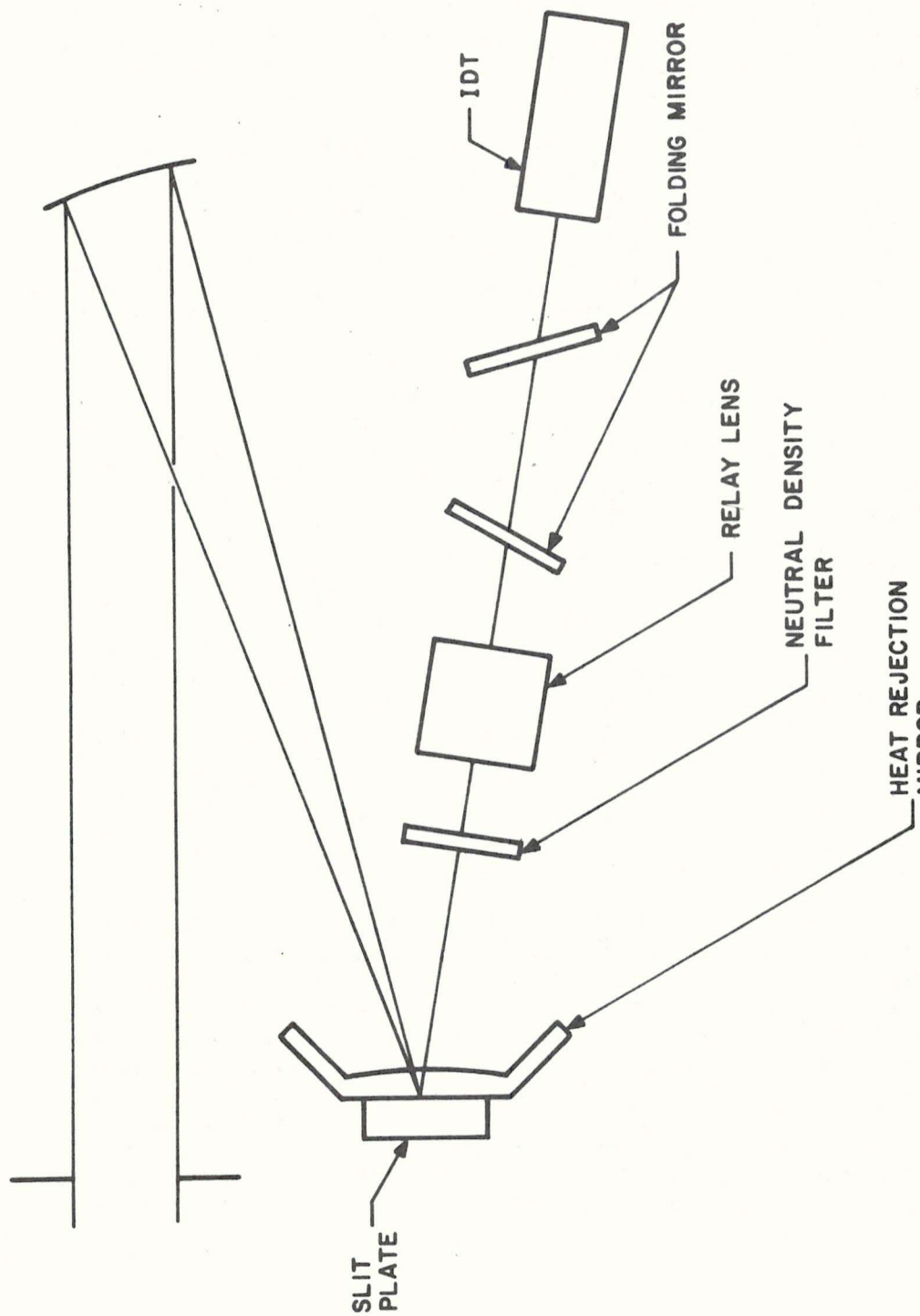

Figure 2.9.6-12. Pointing Reference Subsystem Optical Schematic

be limited to 0.00028 watt per square centimeter between the wavelengths of 4900 and 6300 Å. If higher energy densities are used with the clear neutral-density filter in position, damage to the IDT may result.

The manual pull handle is located at the sun end of the experiment adjacent to the aperture on the outboard side. The cable is housed in a protective tube, and the pull handle is secured to the experiment with a cap screw. To operate the device the cap screw is removed to free the handle. The handle, when pulled, has a stroke of approximately one inch. By rotating the handle, causing it to lie coaxially with the cable, the handle will act as a stop to hold the filters in the test position without further attention. The filter slide plate is spring-returned to normal position when the handle is released.

Relay Lens Assembly - The relay lens assembly, consisting of four lenses, is approximately 1 1/4 inches in diameter by 1 inch in length, and rigidly mounted to the slit-plate support structure. The lens-assembly barrel is threaded and locked by a split clamp after focal-length adjustment with the video camera tube is made.

Folding Mirrors - Two folding mirrors are used to physically route the slit-plate image to the IDT (see Figure 2.9.6-12). Both mirrors are 1 1/4 inch diameter cervit with aluminized reflective surfaces. The first folding mirror is rigidly attached to the slit-plate support structure and the second mirror is mounted on the experiment case wall directly across the case from the slit assembly. The second mirror is bonded to a metal tripod configuration, and adjustment screws drive the three tripod legs to achieve alignment of the mirror between the first mirror and the IDT.

2.9.6.4.4.2 PRS Electronics - The pointing reference subsystem has three basic functions:

a. To generate a standard TV signal of the sun's limb. (Figure 2.9.6-7)

b. To provide a digital readout (in arc seconds) of the distance between the limb and the spectrograph slit.

c. To control the distance between the limb and the spectrograph slit.

Figure 2.9.6-13 shows a functional schematic of the PRS.

S082B

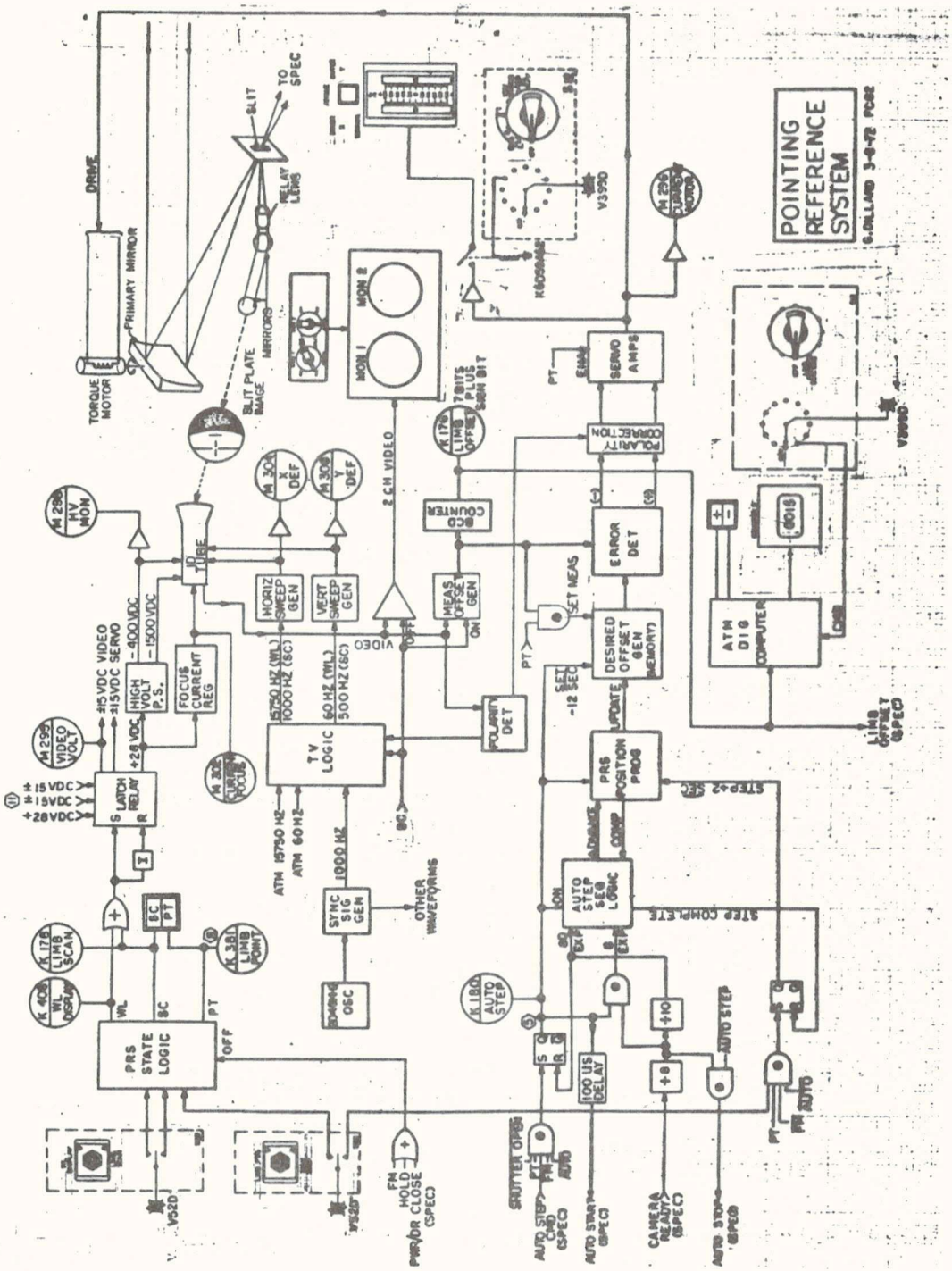

Figure 2.9.6-13 S082B Pointing Reference Subsystem Electronics

The three basic functions are achieved as described in the following paragraphs.

The sun disc illuminates the primary mirror, which is mounted on a flexure driven by a torque motor. The image is then focused on the experiment slit plate, where a pair of fiducial (reference) marks are inscribed at equal distances on either side of the slit and parallel to it. When the experiment is pointed near the limb, one of the fiducial marks will fall on the solar image; the other will be invisible against the dark background. The image of the solar limb, fiducial marks, and spectrograph slit is then focused through a relay lens and two folding mirrors to the face of an image dissector tube (IDT). The video and sweep electronics scans the image in the horizontal direction (perpendicular to the fiducial marks) and the vertical direction to form a video signal of the image.

In the **WL DISPLAY** state, the IDT is scanned to produce a standard TV picture of the fiducial marks, slit, and solar limb or an area of the disk. The video signal is then amplified by the video electronics to drive two 75-ohm coaxial cables to the C&D Console.

In the limb scanning state and limb pointing state the IDT is scanned using a 1-kHz sawtooth in the horizontal scan and a 500-Hz square wave in the vertical. Thus the image on the photocathode is scanned alternately above and below the slit, yielding an electrical signal representing the distance from the fiducial mark to the sun's limb. This signal is shaped and processed by the video electronics into two pulses indicating the fiducial mark and the limb (conditioned video). These two pulses are then used by the logic electronics to generate a readout of the slit position with respect to the limb in the limb scanning and limb pointing states.

To control the distance between the slit and the limb, the existing conditioned-video pulse width is memorized by the electronics when the limb pointing command is given. Each new conditioned-video pulse received by the logic is then compared with the stored video, and the difference generates an error signal. This error is amplified and filtered by servo electronics to drive the primary-mirror torque motor assembly to maintain the limb offset at a constant value.

S082B

2.9.6.4.5 XUV Monitor - The S082B XUV monitor is a separate system, distinct from the spectrograph. Its purpose is to produce a real-time TV picture of the sun extending beyond the limb into the corona in the 170 to 550Å band with 10 to 20 seconds resolution. The XUV monitor thus shows the sun's actual emission pattern in the emissions to be studied by the S082 and S055A experiments, and makes it possible to point the S082B at XUV features of interest that are not visible in H-alpha or white light.

The XUV monitor provides the first opportunity to conduct simultaneous real-time observation of flares and other solar phenomena in both the low and the high solar atmosphere, comparing form, dynamics, motion, evolution, etc.

By telemetry and reconstruction of one or more pictures per orbit, PIs can advise and collaborate with astronauts. The recorded XUV pictures will also be a valuable supplement to the photographic results of S082B.

2.9.6.4.5.1 XUV Monitor Optical System - the optical system of the XUV monitor (Figure 2.9.6-14) is completely separate from the spectrograph optics. Principal elements of the system are the telescope mirror, three thin aluminum filters and the conversion layer on the face of the low-light level video camera.

The telescope mirror is a 4.50 x 4.50 inch off axis paraboloid section with a 1-meter focal length. The mirror is made of low expansion Cervit material with a platinum surface coating for higher reflectivity at the extremely short wavelengths. The mirror forms a 9.3 millimeter diameter image of the sun on the face plate of the video camera, which has a total field of view of nearly twice that size. The optical axis of the XUV monitor telescope is aligned parallel to the optical axis of the spectrograph telescope so that the XUV monitor may be used as a sighting telescope to point the spectrograph slit to a solar feature that appears only in the XUV wavelengths.

The mirror is rigidly bonded at three edges to three titanium spring fingers. The fingers are in turn bolted to a spherically surfaced plate. The spherical surface segment and its mating seat are used for fine alignment. The whole mirror and frame assembly is pinned and bolted to the rear wall of the XUV monitor case after alignment.

The thin aluminum filters are aluminum films approximately 1000Å thick. They are relatively transparent to XUV wavelengths between 170 and approximately 550Å, with a rather sharp cutoff at the lower end and a gradual rolloff at the upper end of this band.

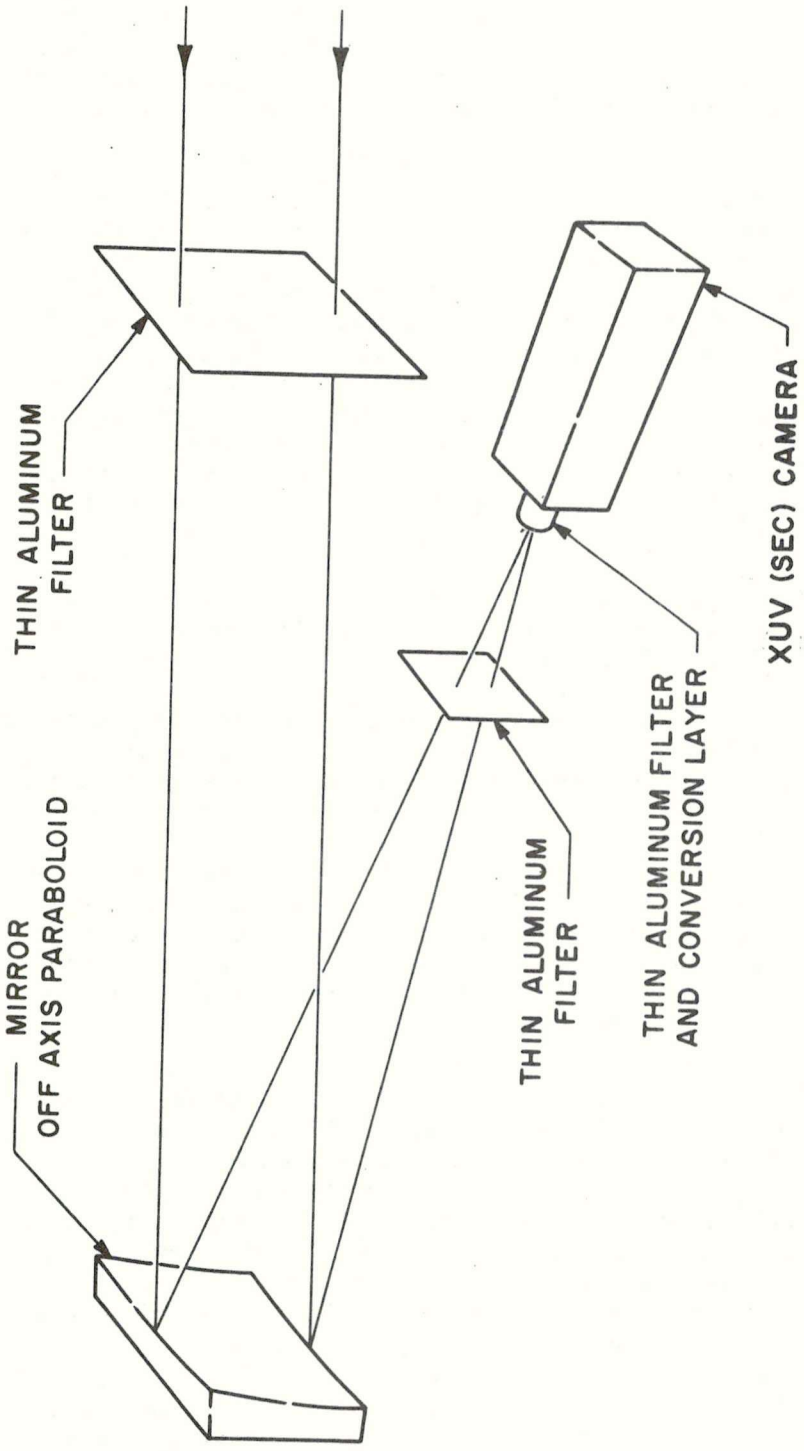

Figure 2.9.6-14 S082B XUV Monitor Optical Schematic

They are opaque to longer wavelengths, so that the solar image reaching the conversion layer on the camera tube is confined to this wavelength band. The conversion layer is a fluorescent material that converts the extremely short-wavelength energy into visible and near-visible wavelengths to which the low-light-level camera is sensitive.

One thin aluminum filter is deposited directly on the conversion layer on the camera faceplate. The other two are between the camera tube and the mirror and just inside the front aperture. The latter two are supported on fine-mesh screens that in turn are attached to more substantial mounting frames. The first of these filters, in its supporting frame, is mounted on vibration-isolation pads in the aperture door frame, and is removable for inspection and/or replacement. The second or intermediate filter is mounted approximately 4 inches from the low light level camera face on vibration-isolation pads in a bearing-supported light baffle and frame mechanism. The bearing mount allows manual removal of the filter from the optical path during ground testing.

Three filters are used, placed as they are in different positions in the light path, because the thin aluminum films cannot be produced and preserved completely free from pinholes.

The low-light-level TV camera is mounted to the inner wall of the XUV monitor case. The mounting-bolt holes are slotted in the case to allow fore-and-aft movement of the camera for focus adjustment.

2.9.6.4.5.2 XUV Conversion Layer - The XUV conversion layer is shown in Figure 2.9.6-15). The conversion material is a thin layer of quarterphenyl deposited onto the faceplate of the XUV TV camera. A thin aluminum filter is deposited onto the quarterphenyl conversion layer is very low and thus requires a very sensitive TV camera.

2.9.6.4.5.3 TV Camera - The XUV TV camera uses an SEC (secondary electron conduction) camera tube as the image sensor. The sensitivity of this camera extends down to approximately 10^{-5} foot candles illumination, which is compatible with the illumination output of the XUV conversion layer. However, the camera is subject to damage if high illumination levels above 10^{-2} foot candles are encountered. Either the photocathode or the SEC target can be damaged. Drawing excessive currents from the photocathode due to high illumination will burn the photocathode and cause permanent dark areas in the displayed image. Drawing extreme currents from the photocathode (viewing the sun in white light) will physically damage the SEC target by removing the target material from the

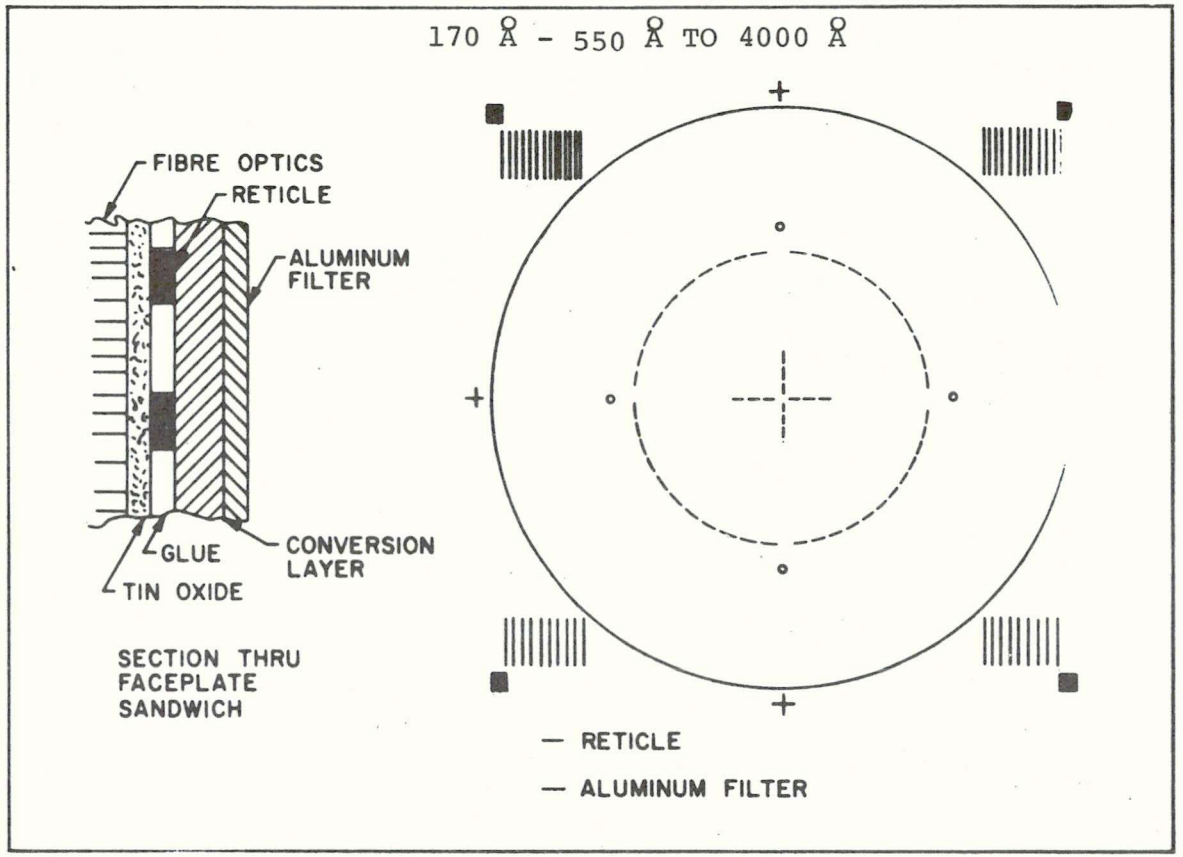

Figure 2.9.6-15 S082B XUV Monitor Conversion Layer and Faceplate Reticle

S082B

aluminum signal plate. A saturated bright signal will then appear in the viewed image wherever the target material is gone. This type of damage to the target should not occur unless the aluminum filters in the optical path are damaged.

Fixed Reticle - A fixed reticle (Figure 2.9.6-15) is deposited on the face plate of the SEC tube for boresight alignment and test purposes. The center circle is slightly smaller than the solar disk diameter and will appear as a dark ring in the displayed image. Boresight alignment is accomplished by positioning the experiment so that the reticle circle is concentric with the solar disk as viewed on the display monitor.

The corners of the reticle, which are masked off by the round monitor bezel in the spacecraft display monitor, are visible on the ground displays and are used to verify that the low light level TV camera has not degraded. Each square area provides a black-signal reference and each bar group provides the amplitude response for the respective corner.

2.9.6.4.5.4 XUV Monitor Electronics - This separate circuitry (Figure 2.9.6-16) functions to accept the ATM commands which control the XUV monitor aperture door position, to monitor the aperture door status and provide telemetry and panel indicator outputs, and to provide internal video checkout lamps.

Basic circuitry consists of a door-open command buffer, a door-close command buffer, several flip-flops, a 3-second one-shot a 10-pps clock-frequency generator, a 20-volt dc retulator, four actuator drivers and three light-emitting diodes.

Power to the electronics is provided by the ATM 28-volt actuator power by rugning on the facility power. The 28-volts is regulated down to 20 volts by a series pass type regulator. The 20 volts dc powers all circuits but the actuator drivers, which are powered by the raw 28-volts.

With power applied to the system and the aperture doors closed, three gallium arsenide diodes which are mounted in front of the XUV monitor TV camera will be in the ON condition, i.e., emitting light. The return side of the diodes is wired through a switch on the aperture door such that while the door is open, the lights are off. To open the aperture doors, place the XUV MONITOR APERTURE DOOR switch to the OPEN position. This will initiate a command to the instrument and start the 3-second one-shot, which will trigger the motor drive logic. A 10-pps signal from the clock generator is then phase sequenced by a four-phase sequencer into consecutive 100-millisecond pulses to the various motor windings for 3 seconds. As the

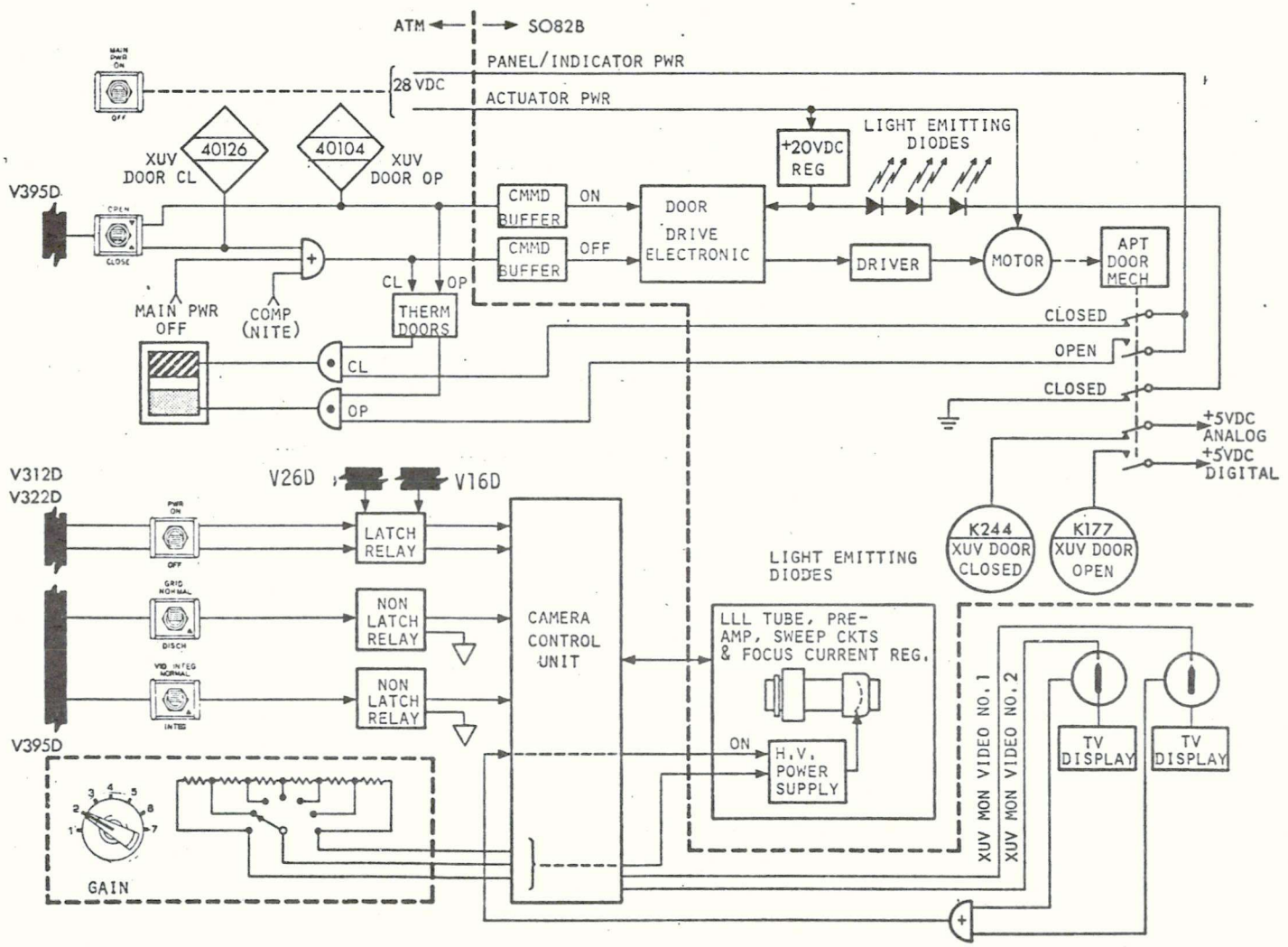

Figure 2.9.6-16 XUV Monitor Electronics Functional

S082B

aperture door leaves the closed position, the switch that enables the light-emitting diodes breaks contact and extinguishes the diodes. Placing the XUV monitor aperture DOOR switch to the CLOSE position reverses the drive sequence on phases 2 and 4 to drive the door-closed. As the door arrives at the closed position, the light-emitting diodes are again enabled. The aperture door status switches utilize the Spectrograph telemetry outputs for monitoring.

The XUV Monitor TV camera has two separate controls for adjusting its sensitivity. The gain control decreases the camera sensitivity by decreasing the high voltage applied to the image section. The integration control increases the camera sensitivity by increasing the integration time to more than one normal frame.

Gain Control- The sensitivity of the XUV TV camera can be reduced by adjusting the high voltage applied to the image section of the SEC-tube from 7.5 to 3 kV. Controlling the high voltage is accomplished by varying the low-voltage input to the high-voltage power supply. The gain control is a seven-position switch that divides the camera sensitivity range into approximately seven equal increments: position 7 provides maximum sensitivity; position 1 provides minimum sensitivity. This control makes it possible to reduce the camera sensitivity in the event that excessive input illumination to the camera faceplate is experienced.

Integration Control - The integration control makes it possible to increase the camera sensitivity. The camera target sweep is gated off for a period of time determined by the switch position and is then turned on when the switch is released. The camera output is the first single frame of information, which flashes onto the display monitor. This control will be used in the event that the illumination input to the camera faceplate is insufficient to provide a usable picture for display. Repeated actuation of the integration switch will allow visual examination of the image.

2.9.6.4.6 Telemetry Subsystem- Analog telemetry is provided for experiment and TCS temperatures, power supply voltages, and torque motor current monitors. Telemetry is also provided for digital measurements including operation (indicator) status and limb offset.

2.9.6.4.6.1 Functional Analog Telemetry - The functional analog telemetry system consists of four 15 channel analog subcommutators and one uncommutated channel. The output of each of the four subcommutator channels is assigned to one ATM telemetry channel. Table 2.9.6-IV lists the data assignments for each channel. Figure 2.9.6-17 shows a typical analog channel.

Each of the four subcommutators consists of 15 analog switches

Table 2.9.6-IV

SO82B Spectrograph Analog Telemetry Channels

	CHANNEL 1		CHANNEL 2
1	T-SLIT PLATE, TOP C084-82B	1	T-FRONT CENTER, LID TO BASE C093-82B
2	T-PRIMARY MIRROR MOUNT C085-82B	2	T-REAR CENTER, LID TO BASE C094-82B
3	UNDEFINED	3	T-REAR PLANE, LID TO BASE C207-82B
4	T-SLIT PLATE BOTTOM C087-82B	4	T-FRONT PLANE, SIDE TO SIDE C208-82B
5	UNDEFINED	5	T-SLIT PLATE TOP C084-82B
6	T-FRONT PLANE, LID TO BASE C089-82B	6	T-PRIMARY MIRROR MOUNT C085-82B
7	V-COMPUTER M141-82B	7	C-TORQUE MOTOR M296-82B
8	V-SYNC M142-82B	8	T-FRONT PLANE BASE C209-82B
9	V-ANALOG TM (+15 Vdc) M185-82B	9	T-FRONT CENTER BASE C210-82B
10	V-ANALOG TM (-15 Vdc) M186-82B	10	IDT TEST LIGHT ON K456-82B
11	V-TEMP CIRCUITRY M293-82B	11	V-HIGH MONITOR M298-82B
12	V-DIGITAL TM M476-82B	12	V-VIDEO SUPPLY (± 15 Vdc) M299-82B
13	V-ANALOG TM M295-82B	13	UNDEFINED
14	T-ELECTRONICS C221-82B	14	LIMB POINTING ON K381-82B
15	C-TORQUE MOTOR M296-82B	15	UNDEFINED

S082B

Table 2.9.6-IV (contd)

	CHANNEL 3		CHANNEL 4
1	T-REAR CENTER BASE C212-82B	1	C- TORQUE MOTOR M296-82B
2	T-REAR PLANE BASE C213-82B	2	T-XUV MONITOR CENTER C219-82B
3	T-FRONT PLANE LEFT SIDE C214-82B	3	T-XUV MONITOR REAR C220-82B
4	T-FRONT CENTER LEFT SIDE C215-82B	4	UNDEFINED
5	T-FRONT CENTER SIDE TO SIDE C216-82B	5	T-REAR CENTER SIDE TO SIDE C222-82B
6	T-XUV MONITOR FRONT C217-82B	6	T-REAR CENTER LEFT SIDE C224-82B
7	V, LOGIC M301-82B	7	T-REAR PLANE, LEFT SIDE C225-82B
8	T-ELECTRONICS (PRS) C218-82B	8	V-PANEL M303-82B
9	C-FOCUS (PRS) M302-82B	9	V-X DEFLECTION (PRS) M304-82B
10	T-SLIT PLATE TOP C084-82B	10	V, Y DEFLECTION (PRS) M305-82B
11	T-PRIMARY MIRROR MOUNT C085-82B	11	V-PRIMARY M306-82B
12	C-TORQUE MOTOR M296-82B	12	V-ACTUATOR M307-82B
13	EXP INSTRUMENT APERTURE DOOR OPEN INHIBIT K222-82B	13	FLARE MODE ON K220-82B
14	INSTRUMENT APERTURE DOOR CLOSED K243-82B	14	T-SLIT PLATE TOP C084-82B
15	XUV MONITOR APERTURE DOOR CLOSED K244-82B	15	T-PRIMARY MIRROR MOUNT C085-82B

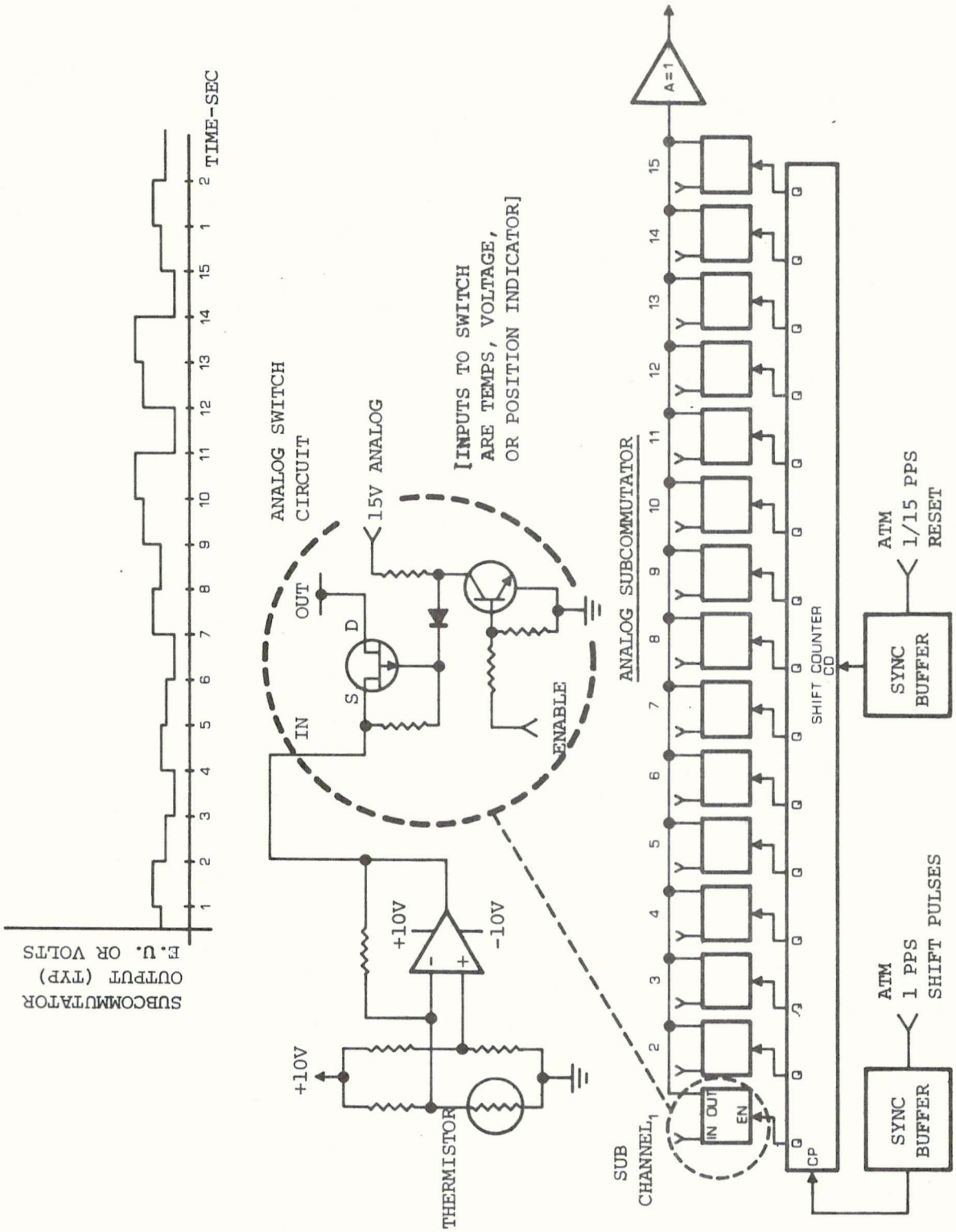

Figure 2.9.6-17 SO82 ANALOG TELEMETRY CIRCUITRY DIAGRAM (TYPICAL)

S082B

which are gated on in sequence simultaneously at the rate of 1 pps. As each analog switch is gated on, information is presented to a voltage-follower type operational amplifier. The operational amplifier acts as a buffer between the experiment and the ATM recorder. Each of the four subcommutator channels is recorded.

The analog switches are gated in sequence by a 15-stage shift register clocked by the ATM 1-pps sync signal. The shift register is reset by the ATM 1-pps sync signal. The shift register is reset by the ATM 1/15 pps sync signal. Analog telemetry is available and operating with the instrument in standby(facility power ON). An ECE-inhibit step circuit provides manual stop and advance operation of the subcommutators for ground checkout procedures only.

The uncommutated channel is an unrecorded, full-time torque-motor current monitor and consists of one analog switch input to an operational amplifier.

2.9.6.4.6.2 TCS Analog Telemetry - The TCS telemetry system consists of two 15-channel analog subcommutators. The output of each subcommutator is assigned to one ATM telemetry channel. Table 2.9.6-V lists the input data assignments for both channels.

Each of the two subcommutators consists of 15 analog switches, which are gated on in sequence at the rate of 1 pps. As each analog switch is gated on, the input data is gated to an analog amplifier. The analog amplifiers are strapped as voltage followers and provide data buffering to the ATM.

The analog switches are gated on in sequence by a 15-stage shift register clocked by the ATM 1-pps sync signal. The shift register is reset following the 15th clock pulse by the 1/15-pps sync signal from the ATM.

Power is provided by a dc-to-dc converter in the form of +6.7 vdc and +10 vdc.

2.9.6.4.6.3 Digital Telemetry - Various state, mode and experiment condition points (Table 2.9.6-VI) are monitored by buffer circuits to provide experiment "quick look" data. The buffers are gated by the 600-pps internal experiment sync signal and therefore are not present in the HOLD condition except for the limb offset bits.

During normal operation the photon coupled isolator circuit acts as an integrator to remove the 600-pps gating frequency and presents a logic "0" or "1" to the ATM interface. Each of the digital telemetry bits has its own output to the ATM.

Table 2.9.6-V

SQ& B TCS Analog Telemetry Channels

	CHANNEL 5		CHANNEL 6
1	T-INSTRUMENT REF NO. 1 C405-82B	1	T-INSTRUMENT REF NO 7 C418-82B
2	T-HEATER PANEL NO 1 C406-82B	2	T-HEATER PANEL NO 7 C419-82B
3	T-INSTRUMENT REF NO 2 C407-82B	3	T-INSTRUMENT REF NO 9 C420-82B
4	T-HEATER PANEL NO 3 C408-82B	4	T-HEATER PANEL NO 10 C421-82B
5	T-INSTRUMENT REF NO 3 C409-82B	5	T-HEATER REF NO 10 C422-82B
6	T-HEATER PANEL NO 2 C410-82B	6	T-HEATER PANEL NO 9 C423-82B
7	T-INSTRUMENT REF NO 4 C411-82B	7	T-HEATER PANEL NO 8 C424-82B
8	T-HEATER PANEL NO 4 C412-82B	8	T-INSTRUMENT REF NO 14 C425-82B
9	T-INSTRUMENT REF NO 5 C413-82B	9	T-HEATER PANEL NO 14 C426-82B
10	T-HEATER PANEL NO. 5 C414-82B	10	T-HEATER PANEL NO 11 C427-82B
11	V-TCS (+10 VOLTS) M451-82B	11	T-INSTRUMENT REF NO 11 C428-82B
12	V-TCS (-10 VOLTS) M452-82B	12	T-HEATER PANEL NO 12 C429-82B
13	T-INSTRUMENT REF NO 6 C415-82B	13	T-INSTRUMENT REF NO 12 C430-82B
14	T-HEATER PANEL NO 6 C416-82B	14	T-HEATER PANEL NO 13 C431-82B
15	T-INSTRUMENT REF NO 8 C417-82B	15	T-INSTRUMENT REF NO 13 C432-82B

S082B

Table 2.9.6-VI

DIGITAL TELEMETRY INFORMATION

Limb Offset Bit 1
Limb Offset Bit 2
Limb Offset Bit 3
Limb Offset Bit 4
Limb Offset Bit 5
Limb Offset Bit 6
Limb Offset Bit 7
Limb Offset Sign Bit

White Light Display
Shutter Open
Shutter Closed
Predisperser--Short Wavelength In
Predisperser--Long Wavelength In
Limb Scanning On
Flare Mode Enable
Film Transport Monitor
XUV Monitor Aperture Door Open
Hold
AUTO Mode On
AUTO STEP Mode On
Experiment Aperture Door Open

The eight limb offset bits are gated by 50-pps signal that is present whenever the PRS is ON.

2.9.6.4.6.4 Temperature monitor System - The temperature monitor system consists of 26 temperature monitor circuits and one voltage regulator which provides +2 volt regulated power to the sensing elements and their respective bridge circuits. The outputs of the monitor circuits go to the various analog switch inputs of the four recorded analog telemetry channels. Three types of monitor circuits are used. They are basically identical, with the exception of the of the resistors used, minor differences in the bridges, and in their gain functions.

(1) The fine absolute monitor circuit has a temperature range of 50 to 80 degrees F with an output of 0 to 5 volts dc.

(2) The coarse absolute temperature monitor has a temperature range of 50 to 110 degrees F and an output that varies from 0 to 5 volts dc.

(3) The differential temperature monitor measures the difference between two temperatures. The maximum differential temperature is 5 degrees, which is taken over a base temperature range of 50 to 80 degrees F. Output voltage is +2.5 volts dc when the temperature differential is 0 degrees, +5 volts dc when the differential temperature is +5 degrees, and 0 volts dc when the differential temperature is -5 degrees.

The temperature sensors are thermistors with a nominal resistance of 15k ohms and are located throughout the experiment as shown in Table 2.9.6-VII.

2.9.6.4.7. Thermal Control System - The thermal control system (TCS) consists of an active heating system and a passive insulation system for controlling and stabilizing experiment temperature (see Figure 2.9.6-18).

The active heating system provides 14 independent honeycomb panels with strip heaters. Each heater panel is equipped with its own independent temperature-sensing thermistors, controller circuitry, and they provide outputs for two analog telemetry monitoring subchannels. Nine of the heater panels are mounted on the top surface of the experiment. The remaining five are installed on the side walls.

S0828

Table 2.9.6-VII
Thermistor Locations and Subcommutator Positions

Thermistor	Type*	Location	Analog Callout
RT 1	A_c	Slit plate	(1--1), (2--5) (3--10), (4--14)
2	A_c	Primary mirror mount	(1--2), (2--6) (3--11), (4--15)
**3	A_c	Shutter solenoid (camera)	(1--3)
4	A_c	Bottom plate	(1--4)
**5	A_c	Camera motor	(1--5)
6	D	Front plane, lid to base	(1--6)
7	D	Front center, lid to base	(1--15)
8	D	Rear center, lid to base	(2--2)
9	D	Rear plane, lid to base	(2--3)
10	D	Front plane, side to side	(2--4)
11	A_f	Front plane, base	(2--8)
12	A_f	Front center, base	(2--9)
13	A_f	Rear center, base	(3--1)
14	A_f	Rear plane, base	(3--2)
15	A_f	Front plane, left side	(3--3)
16	A_f	Front center, left side	(3--4)
17	D	Front center, side to side	(3--5)
18	A_f	XUV monitor, front	(3--6)
19	A_f	XUV monitor, center	(4--2)
20	A_f	XUV monitor, rear	(4--3)
21	D	Rear center, side to side	(4--4)
22	D	Rear plane, side to side	(4--5)
23	A_f	Rear center, left side	(4--6)
24	A_f	Rear plane, left side	(4--7)
25	A_c	1A2, inside wall	(1--14)
26	A_c	1A4, inside wall to HVPS	(3--8)

* A_c = coarse absolute, A_f = fine absolute, D = differential

** Not used.

*** Differential units have A sensors on cover plate and sun side, B sensors on bottom (spar side) and inboard.

The passive insulation system consists of 15 insulation panels, that in general, are mounted at locations not covered by the heater panels. The insulation panels consist of multiple layers of aluminized Mylar enclosed in thin plastic cover sheets. Where appropriate, the insulation panels are formed to fit irregular surfaces.

Heater Panels - The purpose of the thermal control system heater panels is to modulate heat flow from the experiment through the heater panels to the wall of the ATM canister. Controlling the heat flow in this manner isolates the experiment from environmental temperature variations, thus stabilizing its temperature.

The heater panels are thermostatically controlled using thermistors connected in bridge circuits. There are two temperature-control bridge-circuit amplifiers per controller, one for experiment-case sending and one for panel sensing. The experiment amplifier provides an analog voltage of 0 to 5 volts, corresponding to a temperature range of 65 to 80°F. These amplifier outputs are summed and provided to a level detector and comparator switch. The comparator output drives a current current amplifier to switch the heater elements. Heater power is 28-vdc provided separately from the ATM. A 10-vdc power supply, regulated to ±1 percent, is provided for the amplifiers as part of the TCS. See figure 2.9.6-18.

Using this system, if heat from the experiment is maximum, the heat required from the heater panels is very small; the heating period is short and the cooling period long. Conversely, when the experiment is at low power and low heat flow, the heater panels operate longer and, when the heater power is turned off, the cooling period is shorter.

An overtemperature sensing and control circuit is also provided for each heater panel. It has its own thermistor and electronics, completely redundant to the primary temperature sensing and control circuitry. The overtemperature control is designed to ensure against a failure of the primary controller in the ON condition. The overtemperature circuitry uses a separate thermistor in a bridge circuit whose output is fed directly into a differential amplifier and comparator. The output is a digital logic level indicating a go/no-go state. If an overtemperature condition occurs, the output opens a relay that disables the power supply to the heaters.

The heater panels used on the experiment are 3/16-inch-thick aluminum honeycomb substrate on which full-coverage heaters are mounted. The panels are mounted to the experiment on thermally insulating standoffs so that heat transfer is primarily radiant. The locations of the heater panels and monitor points shown in Figure 2.9.6-19.

Figure 2.9.6-18 S082B Thermal Control Subsystem

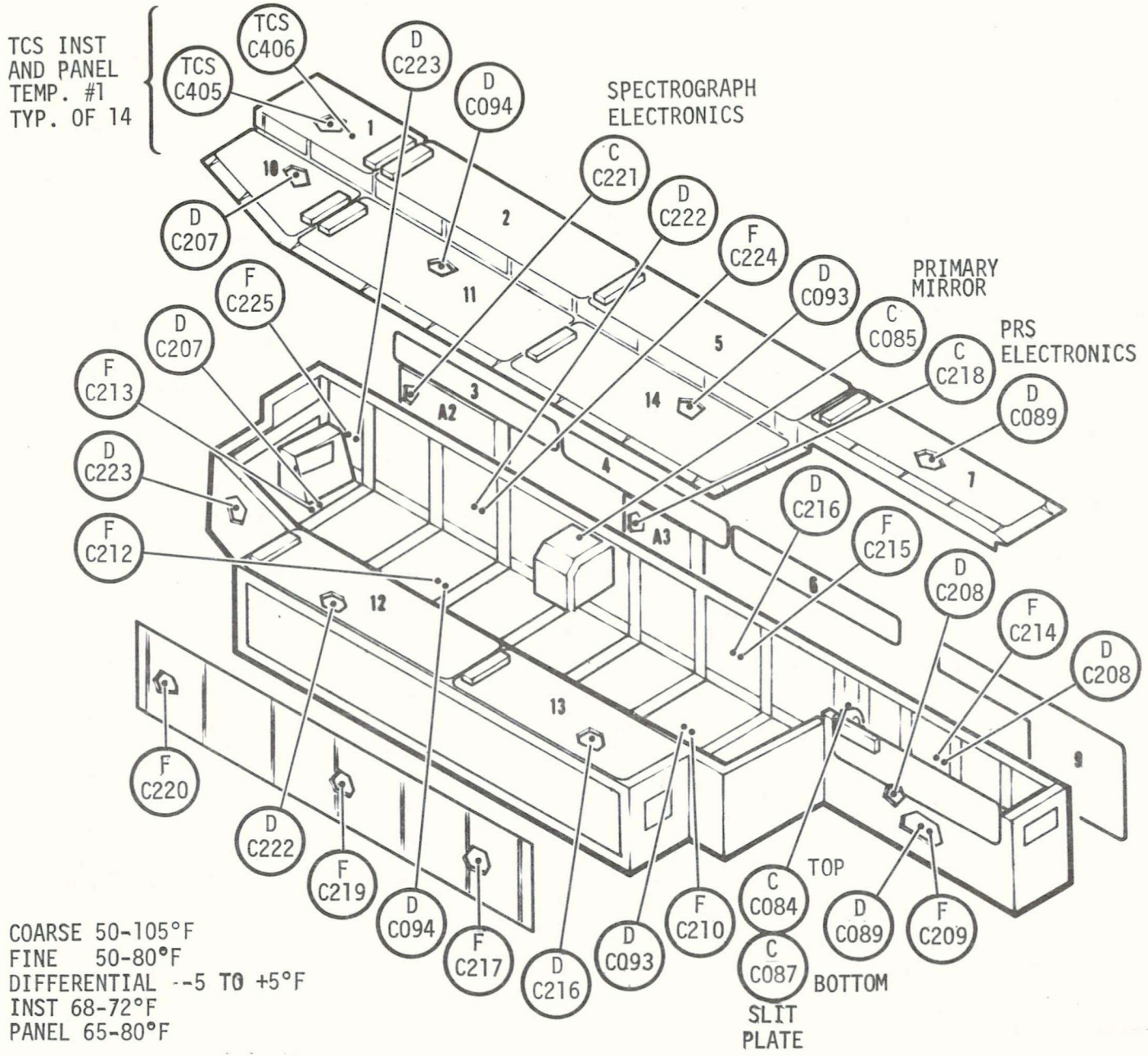

Figure 2.9.6-19 TCS and Temperature Telemetry Points

The heaters are adhesive-bonded to the inboard surface (facing the experiment) of the honeycomb substrate. The outboard surface facing the ATM strips of clear plastic tape that are thermally reflective and assist in controlling heat flow.

The controllers are mounted immediately adjacent to the heater panels they regulate and are wired directly to them. Six of the heater panels on the top center of the experiment each have two separate heater assemblies connected in parallel to a single panel controller. The remaining panels each use a single heater assembly and controller.

The heater elements in each heater assembly consist of strips of 0.001-inch-thick Inconel sandwiched between two layers of 0.002-inch-thick Kapton plastic sheets.

The controller for each of the 14 heating zones thus provided is connected to three thermistors, two for primary temperature sensing and one for overtemperature. Two thermistors (panel and overtemperature) are installed in a cavity on the outboard face of the honeycomb and in contact with the inboard face of the honeycomb. One thermistor (experiment sensing) is mounted in a slot milled into the case or case cover (under the associated panel). The temperature-sensing thermistors used in the TCS are monitored by the telemetry system at the amplifier outputs. (A separate set of thermistors is also provided for temperature-monitoring telemetry signals and is discussed in the temperature monitor system section.

Insulation Panels - The insulation panels consist of ten layers of accordion-folded, aluminized Mylar enclosed by thin, perforated sheets of Lexan plastic. The panels provide a heat-reflecting barrier that minimizes heat flow from the experiment to the ATM.

The SO82B TCS is expected to initially stabilize and then maintain the experiment housing at 70 $\pm$ 2.5°F. Temperature differentials should be limited to $\pm$1.3°F lid to base and $\pm$ 2.5°F side to side to avoid data degradation.

2.9.6.4.8 Experiment Housing - The main experiment case and the XUV monitor case are identical in material and fabrication technique. The XUV monitor case, being the smaller of the two, is attached to the side of the main case by threaded fasteners, (See Figure 2.9.6-1).

The cases consist of a series of welded aluminum alloy panels with integral ribs and stiffeners. The main case has openings for the camera mounting plate and the entrance aperture door and provides mounting points for attachment of the thermal mounting legs. The XUV monitor case provides the XUV monitor entrance aperture.

The covers are machined from single aluminum alloy plates. All stiffeners and ribs are an integral part of the covers. Eight 4.2-inch diameter holes are located in the main experiment to provide access during optical alignment. Three of the access hole covers include case vents consisting of a woven metal fabric having a nominal porosity of 75 microns.

Thermal emissivity of the unit is controlled by a black anodize finish used on both interior and exterior surfaces. The unit provides machined mounting pads and surfaces for mounting experiment components and the filmstrip camera.

The main experiment housing is internally divided by thin-gauge aluminum sheets into three distinct compartments to isolate white-light regions of the experiment from the XUV regions.

Contamination monitors are provided to monitor optical contamination during experiment ground tests. They are located in the three main experiment compartments as well as the XUV monitor. Two monitors are used per compartment: those in the three main experiment compartments contain mirrors; those in the XUV monitor contain both a mirror and an aluminum filter. In each of the compartments, one monitor is intended for use in evaluating optics degradation due to short-term contamination, the other for long term.

2.9.6.4.8.1 Thermal Mounting Legs - The experiment has six legs which allow mounting on a single surface of the ATM spar. The front (sun) end has three legs: two are in a bipod mount, and the third is a single vertical leg. The remaining three legs form a tripod mount at the rear of the experiment.

The single vertical leg, or unipod, is typical of the other two leg structures. The tube is thermally resistive titanium alloy, with a ball at each end supported in a socket with an 80 percent contact area. The balls are hardened, polished steel spheres that have been gold plated and dry lubricated to allow motion resulting from temperature variations.

The bipod mount is similar to the unipod, except that the bipod has only one ball joint at its apex and one at each of the feet. The tripod has the same tubular legs but differs in the ball joint, as described below, and it has welded, fixed feet.

2.9.6.4.8.2 Pitch and Yaw Adjustment - The tripod legs are welded to a common support housing at their apex. This support contains the ball joint in a piston that is part of the pitch and yaw adjustment mechanism. The ball is mounted on the pitch-adjusting screw and installed in the socket in the piston. The pitch-adjusting screw is a differential screw and provides +10 arc minutes adjustment in the pitch direction.

The yaw-motion adjustment is provided by attaching the piston to the cross-slide mechanism. The cross slide is driven by a differential screw across a vee slide attached to the experiment and provides +10 arc minutes adjustment in the yaw direction. After alignment is achieved, the inner four bolts are tightened to lock the slide are then tightened and safety-wired into position. Both sets of threads in the pitch and yaw adjustments are lubricated with a bonded polyimide resin lubricant to prevent thread galling.

2.9.6.4.8.3 Experiment Aperture Doors - Both aperture doors Spectrograph and XUV Monitor are coated at the sun end of the experiment and prevent entry of light and contamination particles to the optical systems when the experiment is not in use. The doors are machined parts with flange-like projections around their perimeters, which overlap similar projections on the housings when the doors are closed, thus creating a simplified labyrinth seal against light or particle entry. The radius of action of both doors is from closed to 90 degrees away (along the light path) at fully open. The doors are held in the fully open position by spring-loaded detents that lock the doors open until actuated to the closed position.

Because of optical considerations, the two doors differ in physical size and arrangement; however their principle of design and operation is identical. The mechanism for opening and closing the door consists of a stepper motor with a splined shaft that meshes with a gear pinned to the shaft about which the door rotates. At the end of this shaft, opposite the motor and gear, is a 90-degree cam segment that drives the door by engaging a 180-degree semicircular projection from the door.

When the motor is energized, it drives the gear and shaft through 90 degrees before the cam segment engages the projection on the door. During this 90 degrees of free travel, the spring-loaded latch is lifted clear of the notch it rests in when locked, allowing the door to swing open. After opening to the 90-degree, fully open position, the latch rides down into a similar notch in

the door, locking it in the open position. The basic operating sequence is the same for closing: during the first 90 degrees of gear rotation, the door is unlocked; during the next 90 degrees of rotation the door moves through 90 degrees and is locked as it comes to rest.

The XUV monitor door differs from the Spectrograph door in that its base frame also incorporates mounting provisions, including vibration isolation mounts, for a thin aluminum filter. The total door assembly (door, base, motor and mechanism, and filter) is attached to the front of the XUV monitor case with four cap screws installed in a "buttonhole" arrangement. The total assembly can be removed by loosening the four screws, decoupling the electrical connector, sliding the assembly sideways, and withdrawing the assembly from the experiment. This provision has been made so that the thin aluminum filter can be inspected or replaced after experiment installation.

2.9.6.4.8.4 Camera Mounting Plate - The camera mounting plate is attached to the case at the front (camera) end of the experiment. It provides a guide for positioning the camera in the correct attitude and alignment for operation; an aperture for light from the main grating to the camera; an aperture and enclosure for light from the data flasher; an electrical connector for the camera power; and a door to seal the experiment when the camera is not installed.

The camera mounting plate has four stop pads for positively locating the camera. The pads are adjustable in order to establish a plane against which the front face of the camera rests. Two of the pads have guide holes that receive guide pins on the camera face for correct alignment of the camera with the mounting plate. One of the guide holes is slotted to allow a dimensional tolerance between the camera guide pins.

Two spring-loaded plungers in the camera mounting plate allow for opening and closing the shutter door. When the camera is mated against the face of the mounting plate, it forces the plungers inward and causes the door to open smoothly, uncovering the camera apertures. When the camera is removed, the springs push the plungers back to their original position, thus closing the door. The mounting plate has a flangelike projection around its perimeter, that mates with a matching indentation on the camera face to seal out light and dust particles when the camera is installed. A connector located in the lower left corner of the mounting plate provides the electrical interface with the camera. When the camera is installed and locked, its connector mates with the mounting-plate connector and makes the camera operable.

A cylindrical shroud is provided around the data-flasher aperture into which the data-flasher lens tube is threaded. The shroud

has internal threads, and the end that mates with the lens tube has four longitudinal slots that allow a degree of flexure in the threaded segments. After mating the lens tube and adjusting the lens for correct focus, a collar is screwed down sufficiently to lock the lens tube in position by clamping pressure on the threads.

2.9.6.4.8.5 Camera Latch and Guide Rail - The camera latch and guide-rail mechanism (Figure 2.9.6-20 consists of a large welded guide rail, a lever-operated latching mechanism, and a movable handle mounted on the sun end of the experiment. The design of the latch and guide-rail mechanism allows installation and removal of a camera from the experiment by an astronaut using one gloved hand during extravehicular activity (EVA), while dressed in a pressure suit. Camera installation and removal is accomplished through the door on the sun end of the ATM canister. MSFC document 50M02462 defines the interface requirements and limitations. The mouth of the guide rail is flared to guide the camera during insertion, even if grossly misaligned. The guiding surfaces of the rails and chute are finished with a bonded polyimide resin lubricant to decrease friction and wear.

Camera latching is achieved by two lugs that engage projecting ribs on the top and bottom of the camera, near its face, and force the camera into position on the camera mounting plate. The lugs lock the camera by means of the large handle that actuates an over-center lever.

The guide rail is a sheet-metal and welded-plate structure provided with detents that hold the camera within range of the lugs until the handle is closed to complete the latching operation. When the camera is inserted in the guide rails, the detents also hold it in position when the astronaut is required to release the camera to perform other insertion functions. An axial force on the camera of 12 pounds (approximately) is required to overcome the detent positions.

In the unlatched position, the camera latch lever is also restrained by a detent. The detent provides a retaining force of 10 to 15 inch pounds measured about the latch-handle pivot. A launch lock is provided on the guide rail to lock the handle in the closed position during launch only. The launch lock is deactivated by a pull ring which unlocks the latch handle when pulled. When the pull ring is released, a detent locks it in a disabled position, and during subsequent EVAs the pull ring is ignored.

Located on a mounting bracket on the top arm of the guide rail is a mechanical flag indicator assembly. This unit indicates when the camera has mated properly with the experiment and is ready for use. With the camera removed, the flag is held in a horizontal plane by a torsion spring. When the camera is fully installed, a projecting rib engages a lug on the flag and rotates it upward

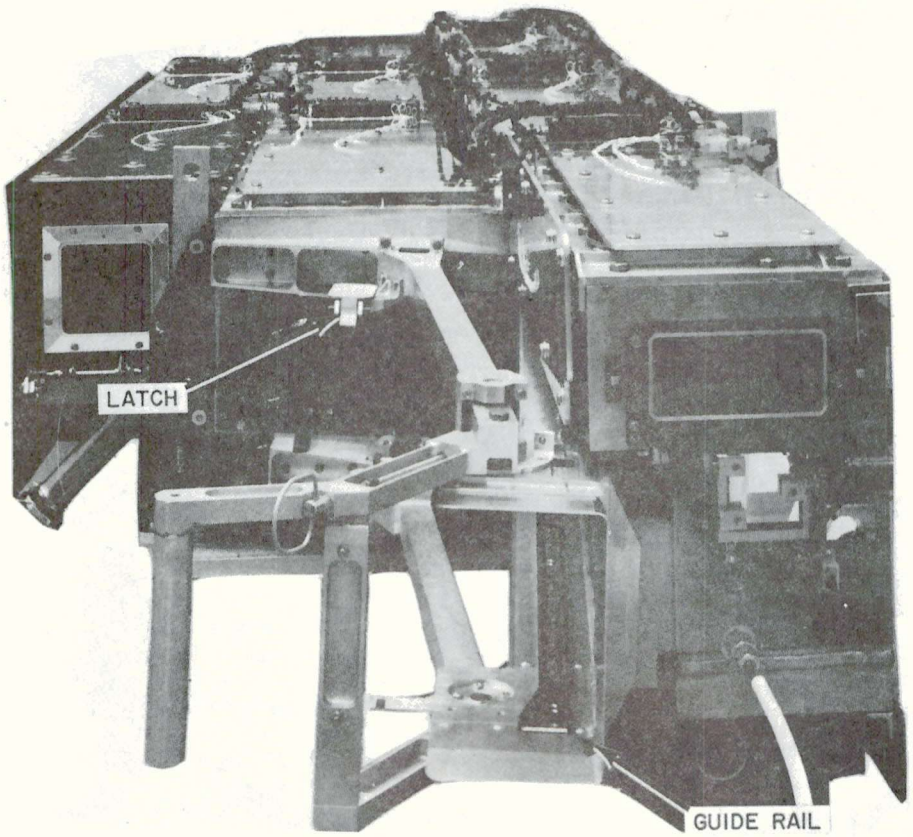

Figure 2.9.6-20 SO82B Camera Latch and Guide Rail Assembly

S082B

2.9.6.5 Performance and Design Data

The performance and design data contained in this section were obtained from the Naval Research Laboratory "Astronaut Operations Requirements Document for the Chromospheric XUV Spectrograph and XUV Monitor Experiment S082B - Apollo Telescope Mount A", dated 26 June 1969. Engineering data were obtained from the Ball Brothers Research Corporation documents CP 2100 "Design and Performance Specification XUV Spectrograph Instrument 1-B, ATM-A Experiment S082B" and 620-54 "Description and Operating Instructions NRL/ATM XUV Spectrograph ATM Experiment S082B". A summary of the scientific and engineering parameters are contained in Tables 2.9.6-VIII and 2.9.6-IX respectively.

Pointing requirements for the S082B experiment are included as a part of the "Preliminary Observing Program - S082B Spectrograph" which is Appendix 1 of the Naval Research Laboratory document named above. Environmental requirements are also included in that document and are basically the same as for all other ATM experiments.

2.9.5.6 Operational Limitations and Restrictions

The experiment TCS should be enabled approximately 12 hours before experiment operation to achieve thermal stability and minimize data degradation, assuming a normal launch profile. In the event of abnormal conditions, temperature stability may be verified by MSFN.

The aperture doors should be opened only when the ATM is pointed toward some point on the sun or near the limb. If the doors are opened when the experiment is pointing more than 24 arc minutes off the sun, the solar heat will not be properly rejected, thermal distortion will result, and the experiment could be out of alignment for the rest of the orbit.

Exposures must not be made when the line of sight passes within 75 miles of the Earth's surface. To preclude this possibility, the aperture door is closed automatically (PWR/DOORS closed command) by the ATM computer prior to occulation.

The optical surfaces of the experiment can be easily damaged. Hence, it is extremely important that the experiment and heat-shield aperture doors be closed except during operation of the experiment. This is particularly true during the night-time portion of the orbit, during waste dumps, and during rocket firings. No contingency measures exist for actively cleaning optical surfaces so all measures must be taken to ensure that they are not degraded.

Table 2.9.6-VIII

SCIENTIFIC PARAMETERS

~~SPECTROGRAPH~~	
Spectral Range:	970 to 1970Å (2nd Order of Main Grating)
	1940 to 3940Å (1st Order of Main Grating)
Resolution:	
Spectral	0.08Å (2nd Order of Main Grating)
	0.16Å (1st Order of Main Grating)
Spatial	-3 arc seconds
Dispersion:	8.3Å/mm (1st Order)
	4.2Å/mm (2nd Order)
Slit Size:	10 x 300μ (2 x 60 arc seconds of Solar Area)
Predisperser Gratings:	
Short Wavelength	150 lines/mm; 36 mm wide; 50 cm radius
Long Wavelength	300 lines/mm; 36 mm wide; 50 cm radius
Main Grating:	600 lines/mm; 152 mm wide; 200 cm radius
XUV MONITOR	
Spectral Range:	170 to 550Å (integrated picture)
Spatial Resolution:	10 to 20 arc seconds
Television System:	
Display Field of View	60 arc minutes
Scan Rate	525 raster lines/picture; 30 picture/second
Ground Transmission	At least 1 picture/orbit
Gain Adjustment	7-step attenuation
Intensity Integration	Manual control of integration time by beam

S082B

Table 2.9.6-IX

ENGINEERING SPECIFICATIONS

Weight (total)	424 pounds
Maximum Envelope Dimensions (including mounting legs)	120 x 34 x 18.5 inches
Maximum Average Operating Power 90-minute orbit)	18 watts (instrument) 22.5 watts (XUV monitor) 32 watts (thermal control system)
Cameras:	
Film Strips per Camera (8 exposures per strip)	200 (35 x 258 mm each)
Weight (does not include 21.5-lb storage canister)	$\leq$34 pounds
Number	4

2.9.7 Hydrogen Alpha 1 (Hα1) Telescope

2.9.7.1 Introduction - Since hydrogen is the most abundant element on the sun, much of the radiation from the sun is characteristic of hydrogen. Spectral analysis reveals lines at the discrete wavelengths of the Balmer Series (electron transitions between the second orbit and higher orbits of the hydrogen atom). The light arising from the transitions between the second and third electron orbits is particularly strong and provides a great deal of information about events on the sun. This 6562.8Å Hydrogen Alpha (Hα) light is in the red region of the visible spectrum (Figure 2.9.7-1) and near the peak of the solar radiation curve.

The sun's chromosphere is the location of the features seen when looking through a narrowband Hα filter. The inset (Figure 2.9.7-1) shows how the light from various features varies relative to the continuum (the curve in the 6563 Å region as it would be without the Hα line). Features with emissions below the continuum appear dark, while those above are light, when observed against the overall Fraunhoffer level of the solar disc. (Figure 2.9.7-2). The contrast between these features has been used by solar astronomers for many years in their studies. Since Hα light is not greatly attenuated by the earth's atmosphere (cf. x-rays or UV) it is possible to view the sun in Hα from earth.

This background of experience has provided the ATM experiments with a datum. The ATM Hα1 telescope has been included on the cluster to identify features on the sun which can be examined with the other (e.g. x-ray, UV) instruments. The camera included in the telescope will record where the other instruments were pointing throughout the mission. Significant sources of emission can then be correlated with the features recognized in the Hα photographs. Crossed reticle lines will indicate the exact position of the field of one of the instruments with narrow fields of view. S055A, for example, will be coaligned with the Hα1. The crewman observing the Hα1 image on the C&D TV monitor will be able to point the S055A instrument accurately at a feature of interest using the cluster manual pointing control (MPC).

Since the telescope will be above the atmosphere, the shimmer which limits the resolution of terrestrial Hα telescopes will be absent and it is hoped that the returned film may be of interest in its own right, with details which could not have been resolved from the ground.

Contrary to general practice, the ATM Hα1 telescope (Figure 2.9.7-3) has a reflective Cassagrainian main optics. The length constraints prevented the use of refractive optics of the same focal length. The f/28 folded path has an entrance aperture of 6.5 in diameter.

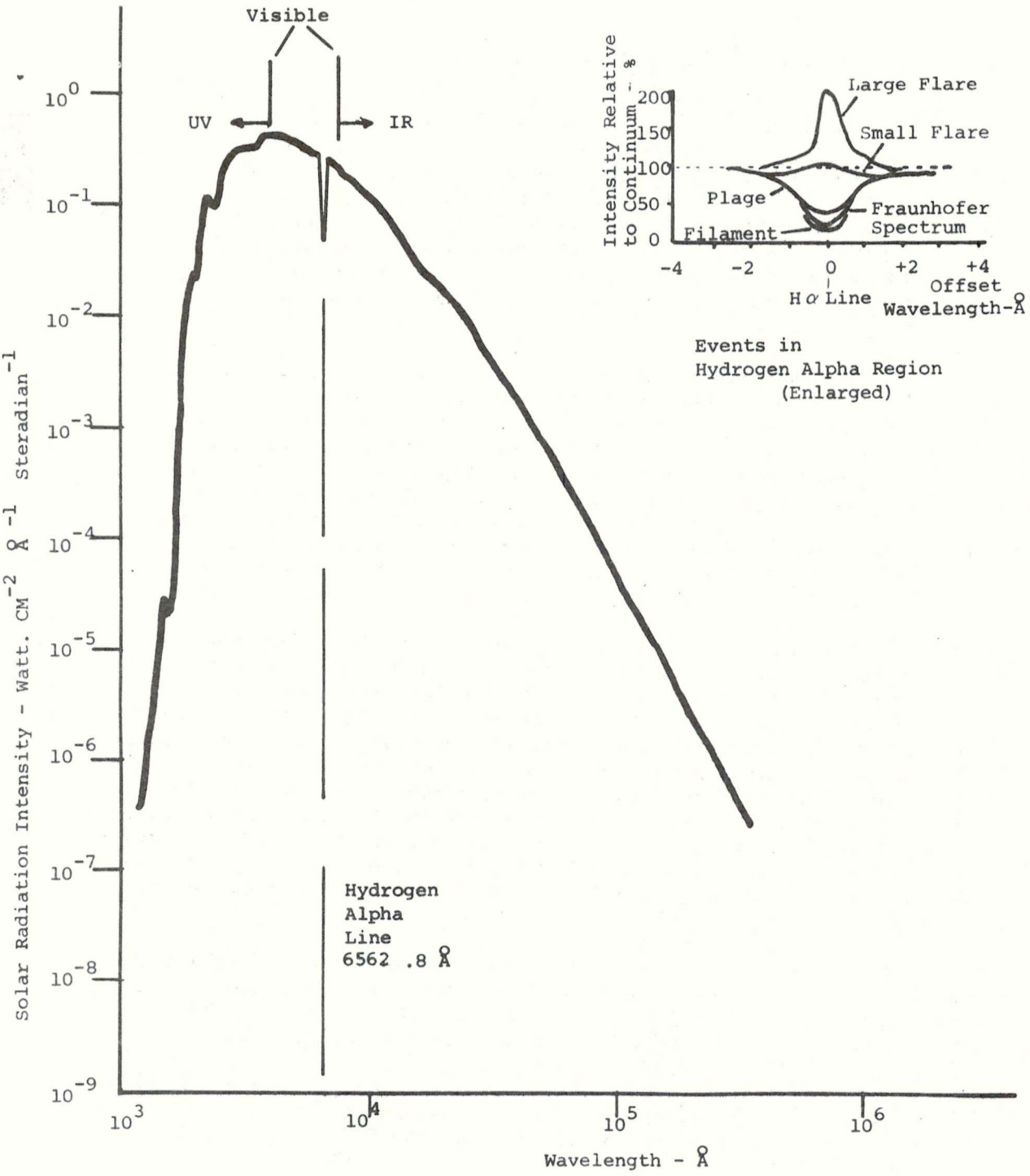

Figure 2.9.7-1 Solar Spectrum

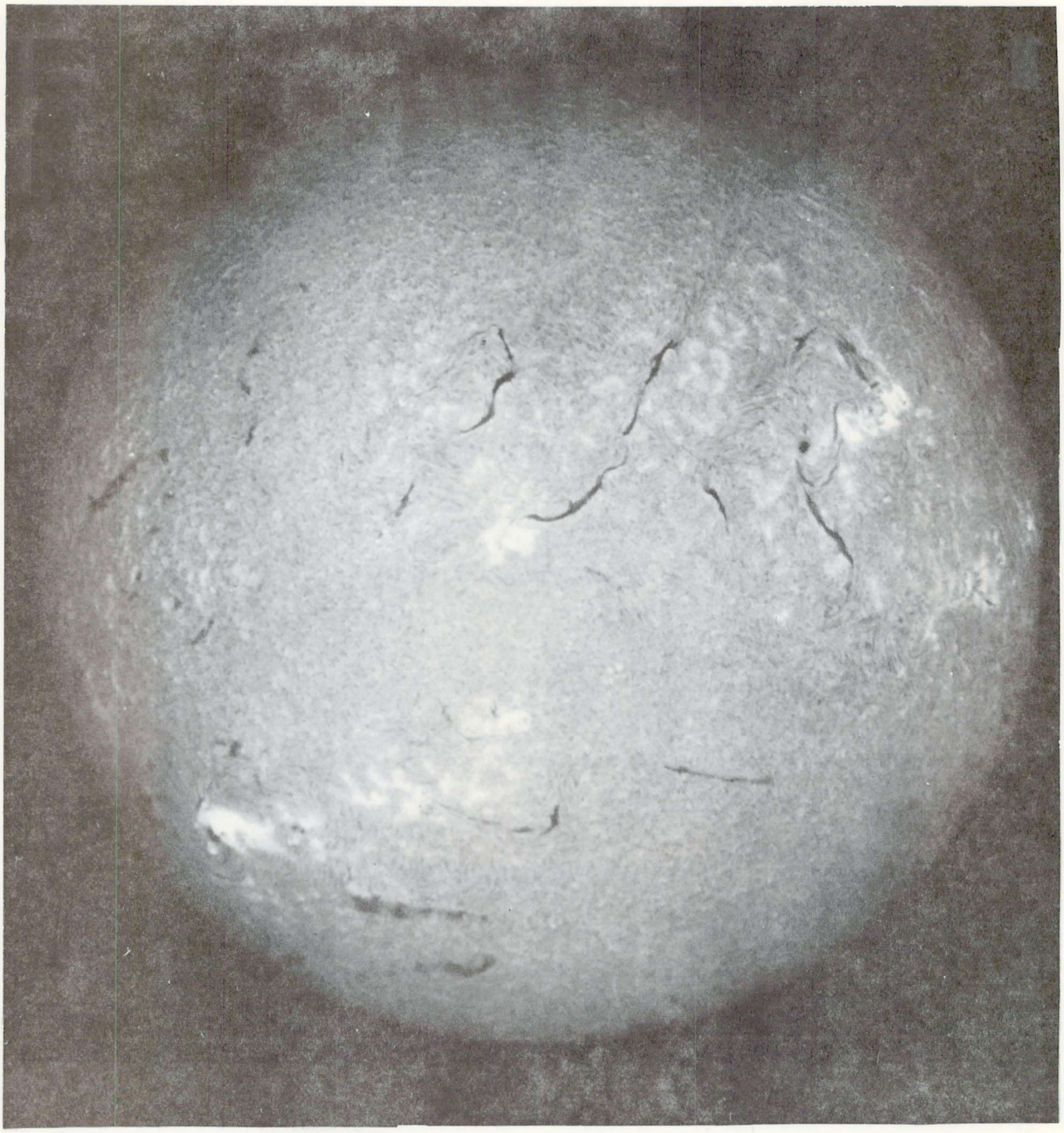

Figure 2.9.7-2 The Sun in H-Alpha

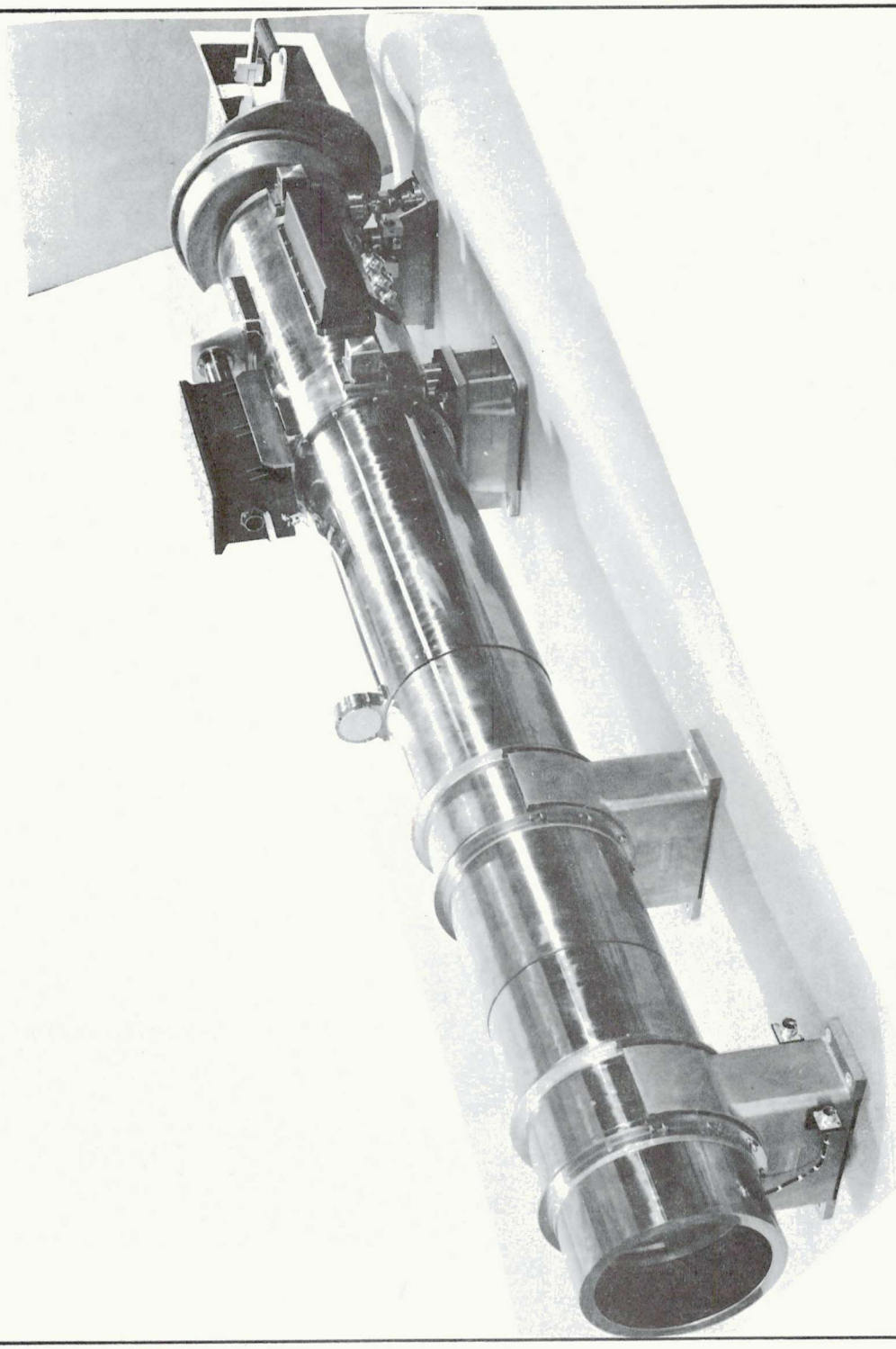

Figure 2.9.7-3 ATM Hydrogen Alpha 1 Telescope

2.9.7.2 Subsystem Interfaces

2.9.7.2.1 Association with other instruments - The Hα1 telescope has been associated with the S055A experiment (as a fine pointing aid) and the instruments are mounted in the same quadrant of the spar. The S055A experiment will need the record of fine pointing contained in the Hα1 film images of the reticles crossing at the center of the S055A field. S082B pointing can be derived from its calibrated offset from S055A. Other experiments need a knowledge of the general direction of ATM pointing.

S055A will be pointed by an astronaut laying the Hα1 reticles, viewed on the C&D Console Monitor, on a solar feature. The Hα1 telescope axis, defined by the intersection of the reticle lines, will be aligned with the S055A axis early in the mission.

2.9.7.2.2 Data

2.9.7.2.2.1 Film - The film for the Hα1 camera will be in the camera at launch and will be retrieved by a crew member during EVA at the end of SL2 mission. The camera is reached from the center workstation by rotating the canister until the Hα1 door appears. After the door has been opened the magazine can be released by squeezing a trigger in the handle and lifting the magazine out. With other experiment magazines, Hα1 will be transferred to the MDA by the FTB or the backup clothesline.

The magazine will be returned to earth in CSM locker A8. Magazines for later missions will be stored in MDA locker M124 until required for use. One will be loaded at the start of SL3 and this will be renewed during that flight. Both magazines will return in A8 in the CSM at the end of SL3.

The remaining magazine will be loaded at the start of SL4 and returned in CSM A8.

2.9.7.2.2.2 Telemetry - Temperature monitoring includes a triple redundant measurement of the Fabry-Perot (FP) filter cell, and single channels for the film door, optics, and electrical components.

Electrical monitoring includes bus voltages and TV parameters.

Events recorded are camera shutter and thermal shield door actuation, and time and pointing data.

A complete list of telemetry channels is given in Table 2.9.7-II.

Table 2.9.7-I Index of Interface Control Documents and Drawings

Number	Title	Date or Revision	Baseline Date	Experiment Effectivity	Vehicle Effectivity	Flight or GSE
MSFC 50M02463	ATM Experiment Interface Defining Document	B & EO-s 12-15	12-10-69	1 & 2	ATM A	Flight
MSFC 10M03736	Alignment Control Drawing	B	8-30-68	1 & 2	ATM A	Flight
MSFC 10M03786	ATM Alignment Parameters	G	1-9-69	1 & 2	ATM A	Flight
MSFC 40M51196	Checkout Facilities Cable Interconnect Diagram for ECE			1 & 2	ATM A	GSE
MSFC 40M35588	Electrical Interface Control Document	2-21-69	3-20-69	1 & 2	ATM A	Flight
MSFC 50M16189	Interface Control Document, Vidicon Camera	A & EO-1	10-3-69	2	ATM A	Flight
MSFC 50M13089	Interface Control Document Mechanical, H-Alpha Film Camera	J	5-11-70	1	ATM A	Flight
MSFC SK10-7328	ATM Experiment Package Subassembly	P	9-18-69	1 & 2	ATM A	Flight
PE 647-0003	Outline and Installation Diagram HCO H-Alpha (Hα 1)	F	5-13-70	1	ATM A	Flight
PE 647-0004	Outline and Installation Diagram ATM H-Alpha (Hα 2)	D	5-13-70	2	ATM A	Flight

NOTE: SK10-7328 will be superseded by 10M24002

MEASUREMENT NUMBER	NAME	MEASUREMENT RANGE	LIMITS	DISPLAY	SAMPLE RATE
C 300-704	TEMP, DOOR	+4 - +27°C	TBD	DTV, RT, PB	4 SPS
C 367-701	TEMP, HEAT REJECTION WINDOW	-8 - +57°C		DTV, RT, PB	4
C 378-701	TEMP, ZOOM DRIVE MOTOR	-8 - +57°C		DTV, RT, PB	4
C 380-701	TEMP, PRIMARY MIRROR CELL	-8 - +57°C		DTV, RT, PB	4
C 381-701	TEMP, ELECTRONICS BOX	-8 - +57°C			
C 379-701	TEMP, FILTER #1	+21 - +49°C		DTV, RT, PB	4
C 382-701	TEMP, FILTER #2	+21 - +49°C		DTV, RT, PB	4
C 383-701	TEMP, FILTER #3	+21 - +49°C		DTV, RT, PB	4
C 371-701	TEMP, VIDICON	-40 - +90°C		DTV, RT, PB	4
K 201-701	TELESCOPE PWR ON/OFF	0/1	NA	DTV, RT, PB	4
K 042-701	HCO H-ALPHA TLSC, DAY-NIGHT BY-PASS	0/1	NA	DTV, RT, PB	4
K 295-703	THERMAL SHIELD APRT DOOR OPEN	0/1	NA	DTV, RT, PB, ASAP	12,1
K 295-703	THERMAL SHIELD APRT DOOR CLOSED	0/1	NA	DTV, RT, PB, ASAP	12, 1
K 409-701	CAMERA SHUTTER ACTUATION	0/1	NA	DTV,RT,PB,ASAP	12, 1
M 019-702	VOLTAGE, LOAD BUS #1	+24 - +32V	TBD	DTV, RT, PB	4
M 419-704	VOLTAGE, 450V VIDICON SUPPLY	0 - 600 V		DTV, RT, PB	4
M 421-704	CURRENT INPUT VIDICON	0 - 1 A		DTV, RT, PB	4
M 423-704	VOLTAGE, VIDICON AGC	0 - 10 V		DTV, RT, PB	4
M 425-704	VOLTAGE, VIDICON BLANK & SWEEP	0 - 20 V		DTV, RT, PB	4
M 417-704	CURRENT, VIDICON FILAMENT	0 - 300 ma		DTV, RT, PB	4
K 122-702	MISSION ELAPSED TIME -STD FORMAT				
K 382-702	ATM COMP, WORD - STD FORMAT				
M 020-702	VOLTAGE, LOAD BUS #2	+24 - +32V	TBD	DTV, RT, PB	4

TABLE 2.9.7-II

2.9.7.2.2.3 Television - A vidicon TV camera records the solar image. The TV can be viewed on either monitor of the C&D Console. If selected for a monitor, the image may be transmitted to MSFN via the CSM link for viewing on the ground.

2.9.7.2.3 Mechanical - The Hα1 telescope is firmly and permanently mounted to the ATM spar at integration. Alignment with the FSS and experiments will be as specified in 10M03786 G. Hα1 will be aligned ±10 arc sec with the FSS prior to launch. The mounting feet of the main telescope structure provide kinematic (3 point) adjustment of the pointing direction. There is no adjustment for roll.

The fully open thermal shield door will not restrict the telescope aperture.

2.9.7.2.4 Thermal - The telescope does not need an active overall temperature control system. Plating the tube with gold (of emissivity 0.05), making the surfaces of heat sources (such as the vidicon and electronics) black and inserting insulating sections in the feet allows the telescope to operate in the environment of the spar, the canister wall, S055A, etc. Any temperature or temperature gradient changes will be insufficient to cause the telescope to depart from its specified performance.

A temperature controller for the FP filter is internal to the instrument and is not directly an interface.

2.9.7.2.5 Electrical - All power is derived from the ATM main buses V11 and V21. The C&D Hα1 bus is V392. Lighting power for the C&D Console is taken from the ILCA. All telemetry power is taken from V81, the 5Vdc instrumentation bus. (Figure 2.9.7.4)

Outputs from the instrument include the telemetry, TV and indicator signals.

Table 2.9.7-III summarizes the electrical interfaces of the Hα1 telescope.

2.9.7.3 Functional Description - The Hα1 telescope components are shown in Figure 2.9.7-5. The principal elements include the cassegrain telescope optics, zoom and movable reticle subsystems, and TV and film cameras.

Figure 2.9.7-6 is an optical schematic diagram. The optical train shown consists of heat rejection windows, paraboloidal primary and hyperboloidal secondary mirrors (the cassegrain elements), refractive correctors and a Fabry-Perot filter. A beamsplitter transmits 10% of the incident light to a fixed relay lens assembly and the film camera

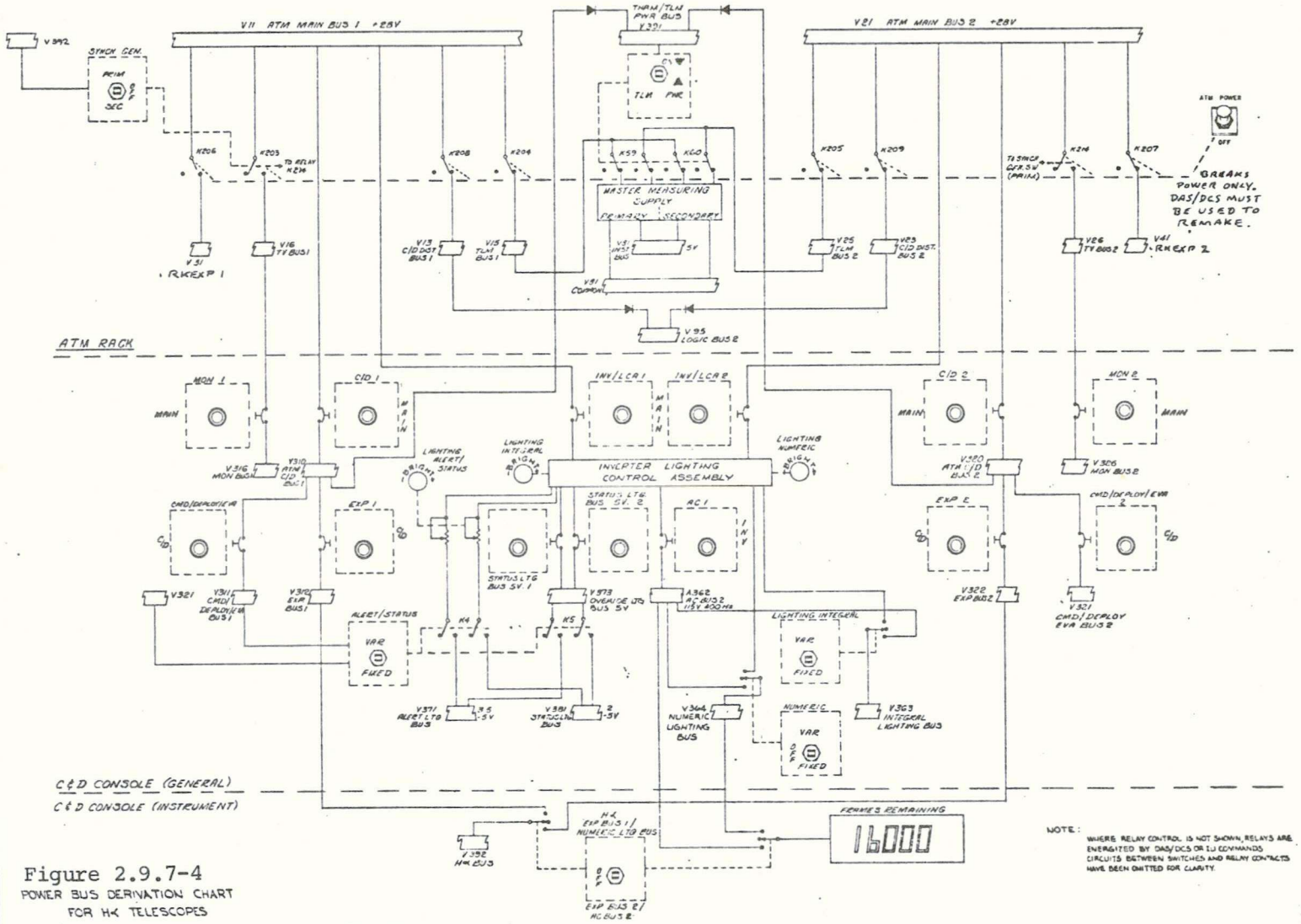

Figure 2.9.7-4
POWER BUS DERIVATION CHART FOR HK TELESCOPES

THIS PAGE HAS BEEN LEFT BLANK INTENTIONALLY

Hα1 TELESCOPE - SUMMARY OF CONTROLS, POWER LINES AND INSTRUMENTATION

Function	Supply Bus 7D	Control Bus 7D	C & D Control	DAS/DCS Command/Octal	Indicator	T/M	Circuit Breaker
Hα1 Fabry-Perot TCS	31/41	392	Hα1 HEATER PRIM	371/40074	Part of READY/OPR chain	C379-701 C382-701 C383-701 Triple redundant temperature	C/D MAIN EXP
			Hα1 HEATER OFF	373/40043			
			Hα1 HEATER SEC	372/40003			
Hα1 Zoom	312/ 322		ZOOM IN (OUT)		TV picture	C378-701 Motor temp	C/D MAIN EXP
Hα1 Reticles	392		RETICLE Hα1		TV picture		C/D MAIN EXP
			Hα RC (UP,DN, L, R)				
Hα1 TV	16/26	312/ 322	TV Hα1 PWR ON		TV picture	C371-701 Vidicon Temp. M417-704 Vidicon Filament Current M419-704 450V Supply M423-704 Vidicon AGC M425-704 Voltage Blank & Sweep M421-704 Cur, I/P Vidicon	C/D MAIN EXP

TABLE 2.9.7-III

Hα1 TELESCOPE - SUMMARY OF CONTROLS, POWER LINES AND INSTRUMENTATION (continued)

Function	Supply Bus 7D	Control Bus 7D	C & D Control	DAS/DCS Command/Octal	Indicator	T/M	Circuit Breaker
Hα1 Film Camera	31/41	312/ 322	Hα1 CAMR PWR ON (OFF) Hα1 FR/MIN (1,2,4) Hα1 AUTO (OFF,MAN) FILM RESET Hα		READY/OPR Hα1 FRAMES REMAINING	K409-701 Hα1 Camera Shutter Open (ASAP)	C/D MAIN EXP
Hα1 Thermal Shield Door	11/21	312/ 322	Hα1 DOOR OPEN		tb OPEN-gray OPER-white CLSD-bp Also part of READY/OPR chain	K295-703 Hα1 Aprt Doors Open K246-703 Hα1 Aprt Doors Closed	C/D MAIN EXP
		392	Hα1 NIGHT INTLK NORMAL (OVERRIDE)		K042-701 HCO H-Alpha Day/Night Bypass		
		95	EVA AUTO DOOR ENABLE (INHIBIT, STORAGE)				
		95	AUTO DOOR ENABLE	450/ 40105			
		95	AUTO DOOR INHIBIT	451/ 40025			

TABLE 2.9.7-III (cont)

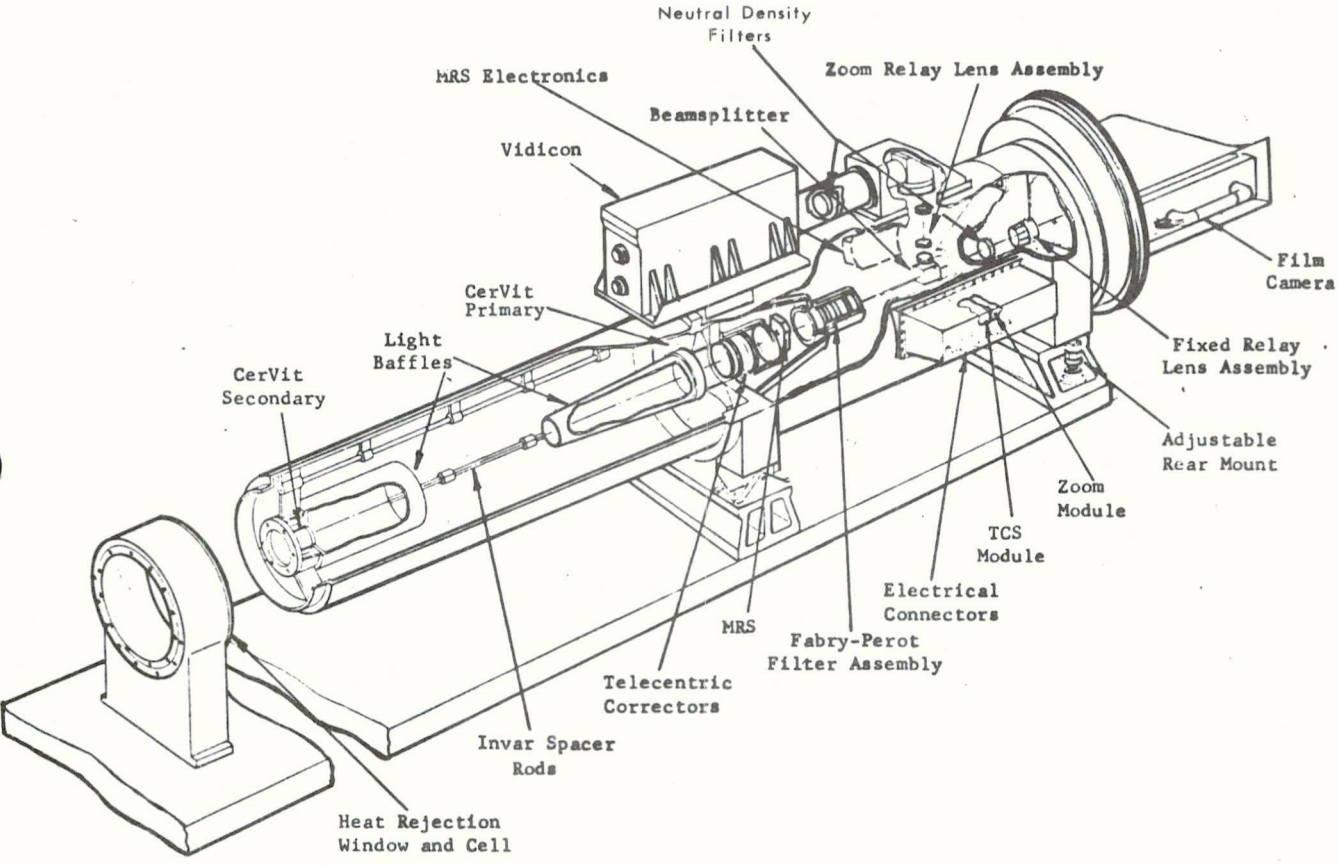

Figure 2.9.7-5 ATM HYDROGEN ALPHA 1 TELESCOPE

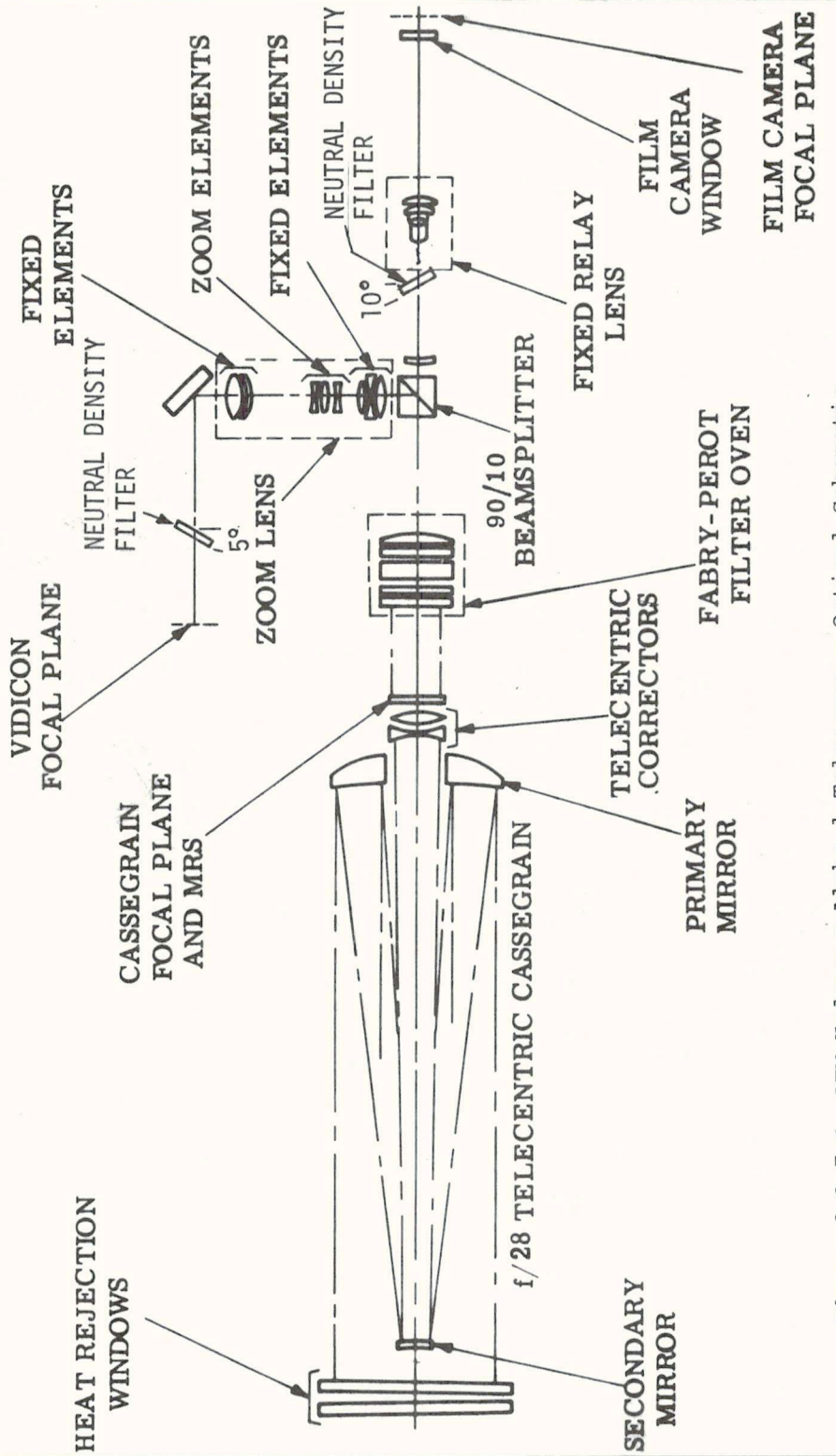

Figure 2.9.7-6 ATM Hydrogen Alpha 1 Telescope - Optical Schematic

while the remainder is taken via a zoom lens assembly and a fixed 45° mirror to a vidicon camera. Fixed neutral density filters and light baffles prevent stray light from impairing the final image.

In the film camera the solar disc is automatically imaged on 35mm film, together with a time record, 1,2, or 4 times per minute. Alternatively a manual mode permits exposure rates up to 10 per minute. Four film magazines each of 16,000 frames will be taken on the mission. The first will be in the camera at launch and will be removed during an EVA maneuver and returned to ground in the CM. Two magazines will be used during SL3 mission and one during SL4.

Solar events, as they occur, will be viewed on a TV monitor at the C&D Console. The Hα1 vidicon TV picture can be switched to the monitor, where the astronaut can use the reticle images for aligning the S055A instrument with a feature or he can observe events on the solar disc. The picture being viewed is available for transmission to ground via the CSM link.

Electronic packages mounted to the telescope tube, contain the Fabry-Perot filter dual temperature controllers, and the zoom and reticle drive controllers. Telemetry signals for housekeeping purposes are routed through the electronic packages to the Instrument and Communications Subsystem (I&C) for transmission via the MSFN link.

An active temperature control system maintains a constant temperature for the Fabry-Perot filter

2.9.7.4 Major Components/Functional Description

2.9.7.4.1 Heat Rejection Window - The heat rejection window is the first optical element encountered by the radiation after passing through the open thermal shield door. The window is shown on the extreme left of Figure 2.9.7-5. To minimize the possibility of distortion, it is essential that heating caused by solar radiation is reduced to a minimum. The main function of the heat rejection window is to reflect this heating radiation. The coatings on the window elements transmit a 300Å band around 6563Å and reflect outside that band. The transmission at the peak is greater than 50% of the incident energy, and the integrity of the wavefront is preserved.

2.9.7.4.2 Cassegrain Telescope Optics - A requirement on the telescope is that it should provide a diffraction limited solar image at the relay optics for subsequent recording or monitoring. As shown in Figure 2.9.7-6, the telescope has a telecentric cassegrain arrangement consisting of a parabolodial cervit primary mirror, a hyperbolodial cervit secondary mirror and two refractive telecentric corrector elements. The telescope forms an aberration-corrected image co-incident with the mechanical reticle system (MRS) plane. The reflective coatings

on the cervit elements have very high reflectance (VHR) characteristics to maximize optical efficiency. The use of cervit for the mirrors and invar for the spacers ensures maximum figure stability for the expected thermal gradients on the structure of the telescope.

Internal surfaces outside the light path have been painted matt-black to minimize image deterioration due to stray light.

2.9.7.4.3 Movable Reticle System (MRS) - Positional reference is provided at the film camera focal plane by a series of fixed fiducial marks spaced at 45° around the edge of the field of view, and by a coplanar pair of orthogonal cross hairs - the Movable Reticle System (MRS), (Figure 2.9.7-7). The reticle lines can be moved individually in directions perpendicular to their length through ± 3½ arc min. At the MRS zero positions the cross hairs coincide with two pairs of fiducial marks.

The reticle lines are formed by stretched 0.0005 inch wires positioned at the cassegrain focal plane. The equivalent angular width of each reticle line is 1/2 arc sec. Each wire is driven by a dc stepper motor through a 90:1 gear train and a lead screw at a rate equivalent to 5 arc sec/sec. The stepper motor is controlled by an electronic module consisting of a clock and steering logic. (Figure 2.9.7-8) The direction of travel is chosen by a switch on the C&D Console. Mechanical stops limit the travel and the motor windings are rated to permit continuous stall operation. However, to prevent excessive thermal effects on the alignment of the MRS to the ATM experiments, the operating time should be limited. In any 24 hr. period, the accumulated reticle operation is limited to 5 min. actual drive in one orbit plus 72 secs drive in each of the remaining orbits.

The field of view of the TV camera is less than that of the film camera and will not permit the viewing of the fiducial marks. The reticle is visible at all positions while the telescope is in the zoom full-out condition. When the zoom is full-in, the reticle can be up to 1 1/4 arc minute out of the field of view. (Figures 2.9.7-9 and 2.9.7-10) (Note: The image on the film is not affected by the position of the zoom).

2.9.7.4.4 Fabry-Perot Filter System - The wavelength defining element is a solid-spaced Fabry-Perot filter, together with a blocking filter. The filters are mounted in a cell which is maintained at a constant temperature (above the ambient) to keep the telescope tuned to the Hα radiation.

The Fabry-Perot filter consists of a 125 micron x 3 inch diameter fused silica spacer which has a reflective layer deposited on each face. It is characteristic of such etalon filters that transmission peaks occur at evenly spaced wavelengths (Figure 2.9.7-11a . To select the desired peak, a second filter (the blocking filter) which has a lower selectivity, rejects radiation at the other wavelengths (Figure 2.9.7-11b). The result is a highly selective filter with peak transmission greater

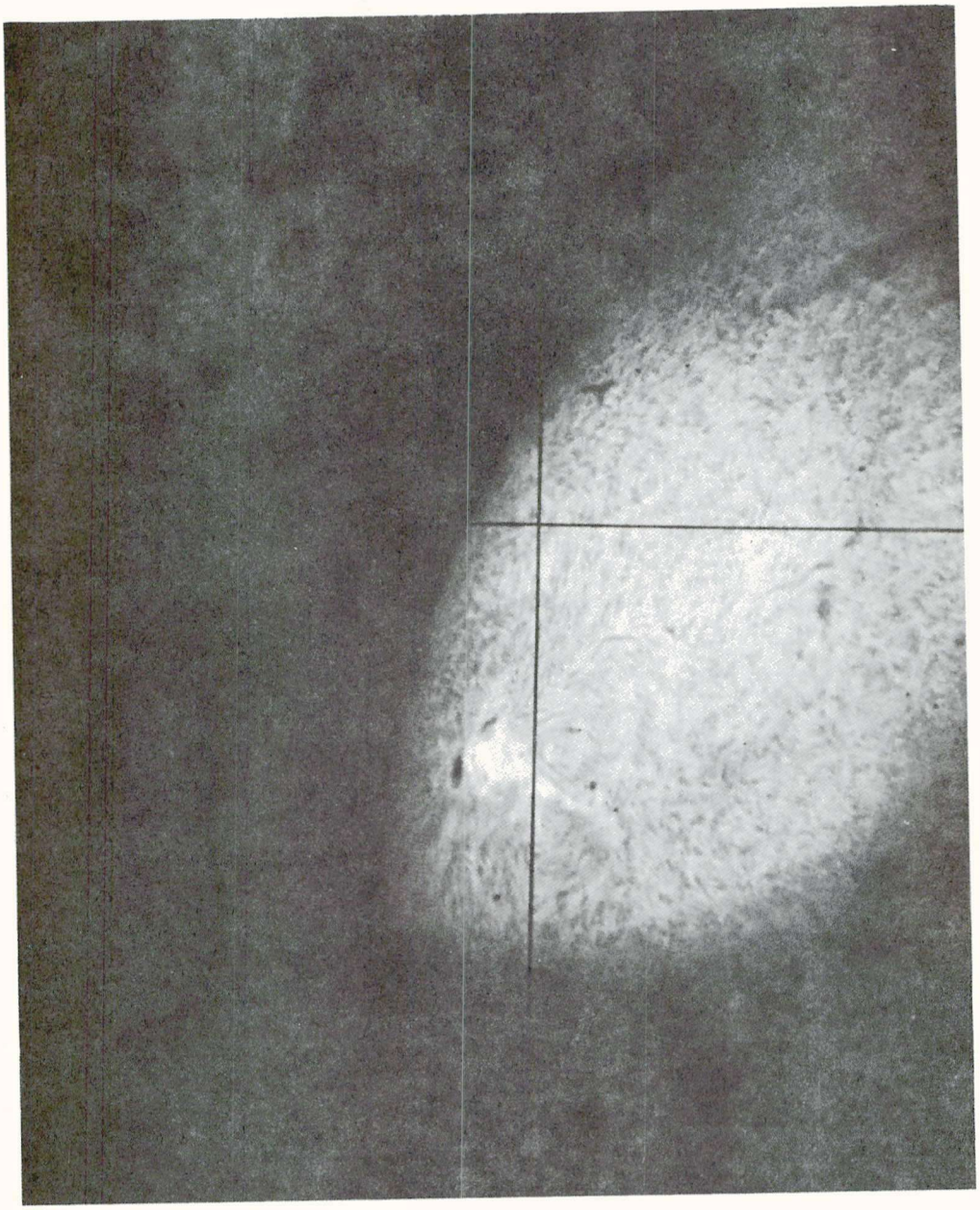

Figure 2.9.7-7 Reticles against solar disc at vidicon focal plane, with zoom full-in (5x)

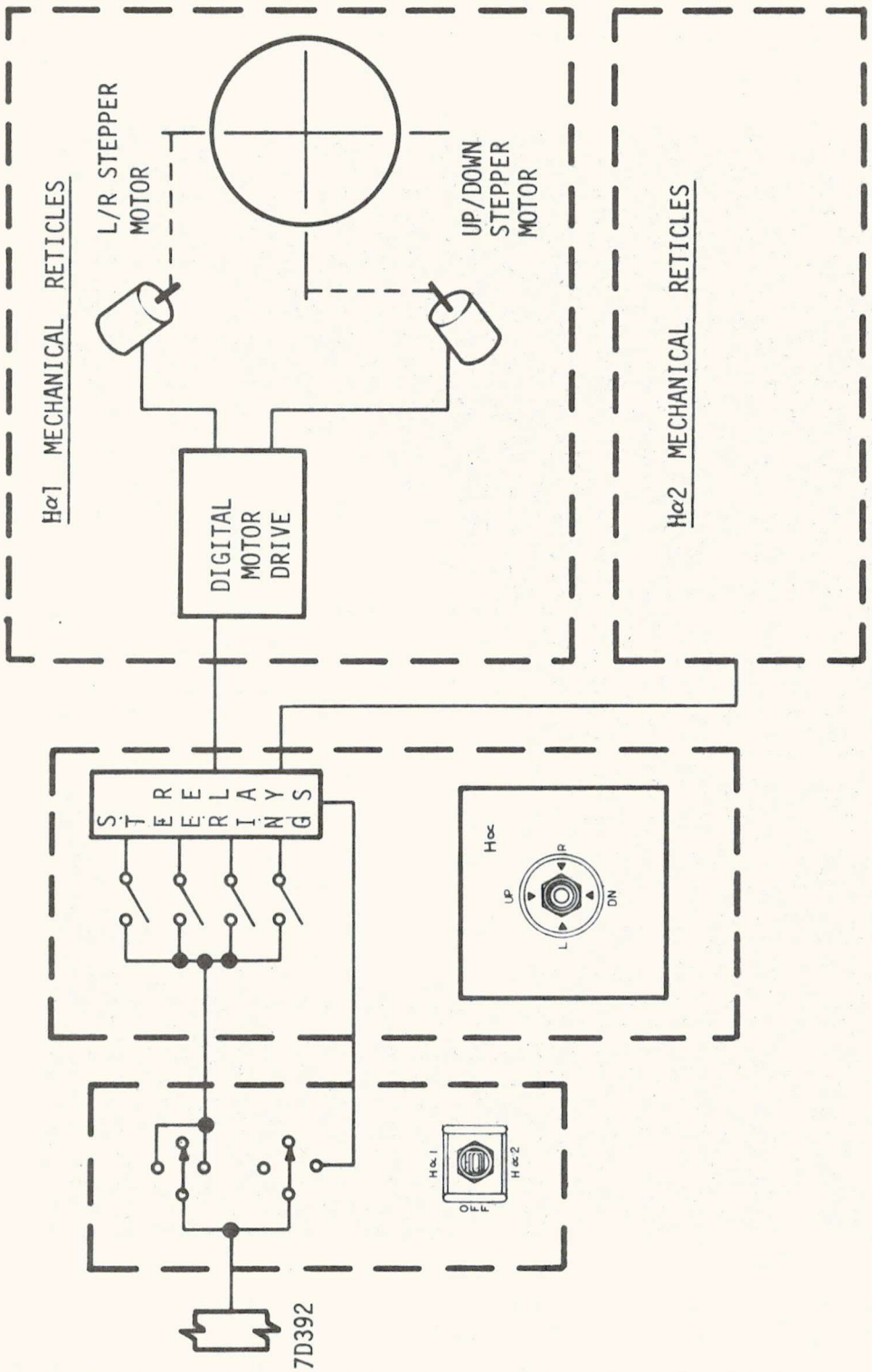

Figure 2.9.7-8 ATM HαTELESCOPES MECHANICAL RETICLE CONTROLS.

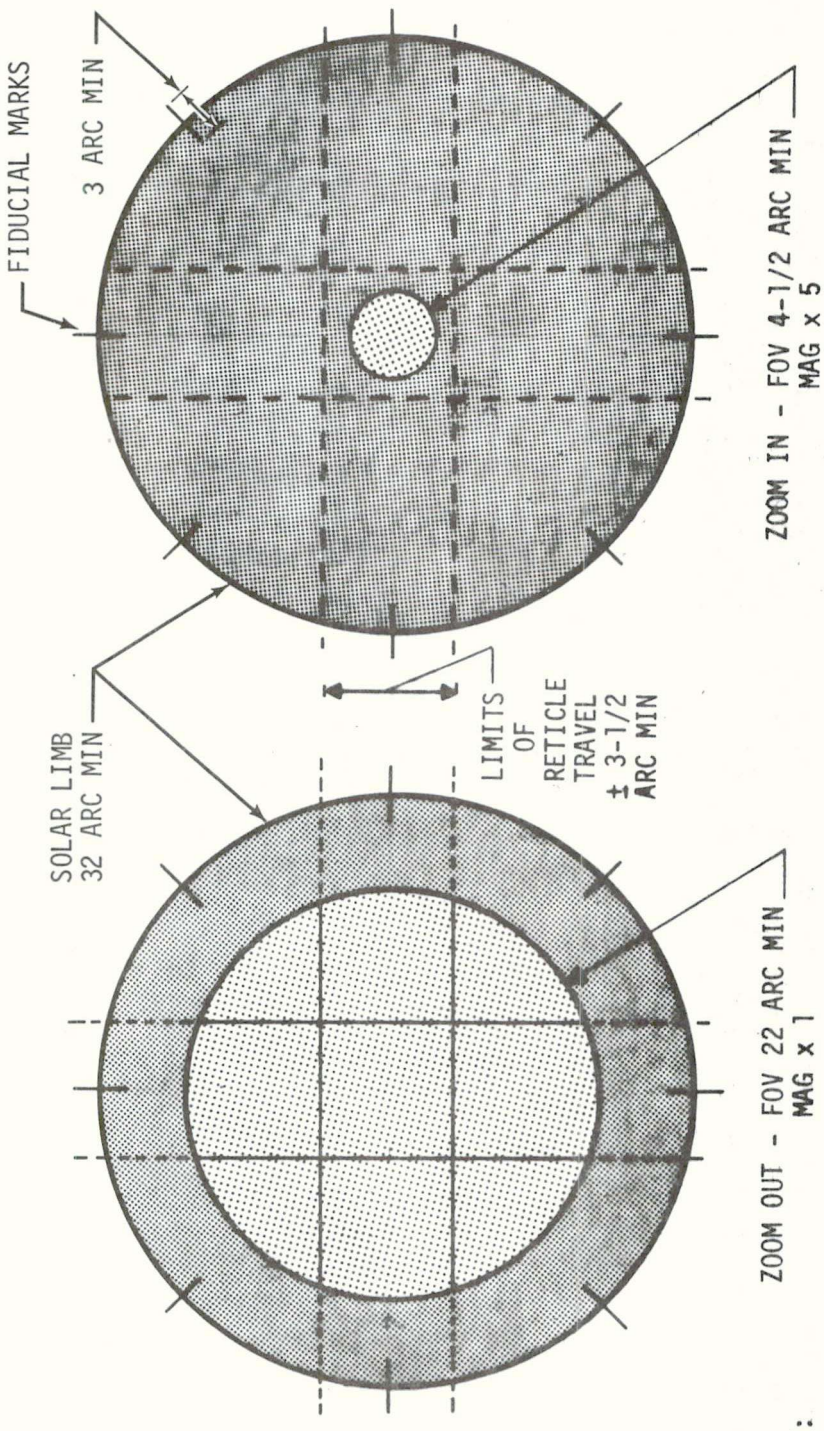

NOTE:
THE RETICLES AND FIDUCIALS ARE IN THE CASSEGRAIN FOCAL PLANE AND APPEAR TO AN OBSERVER TO BE ON THE SUN'S SURFACE. THE MARKS ARE ONLY VISIBLE AGAINST THE DISC. THE FIDUCIALS ARE CONCENTRIC WITH THE FIELD OF VIEW AND CANNOT BE SEEN IF THE FIELD IS LESS THAN 29 ARC MIN.

Figure 2.9.7-9 ATM Hα1 TELESCOPE TV FIELDS OF VIEW - SUN CENTRED

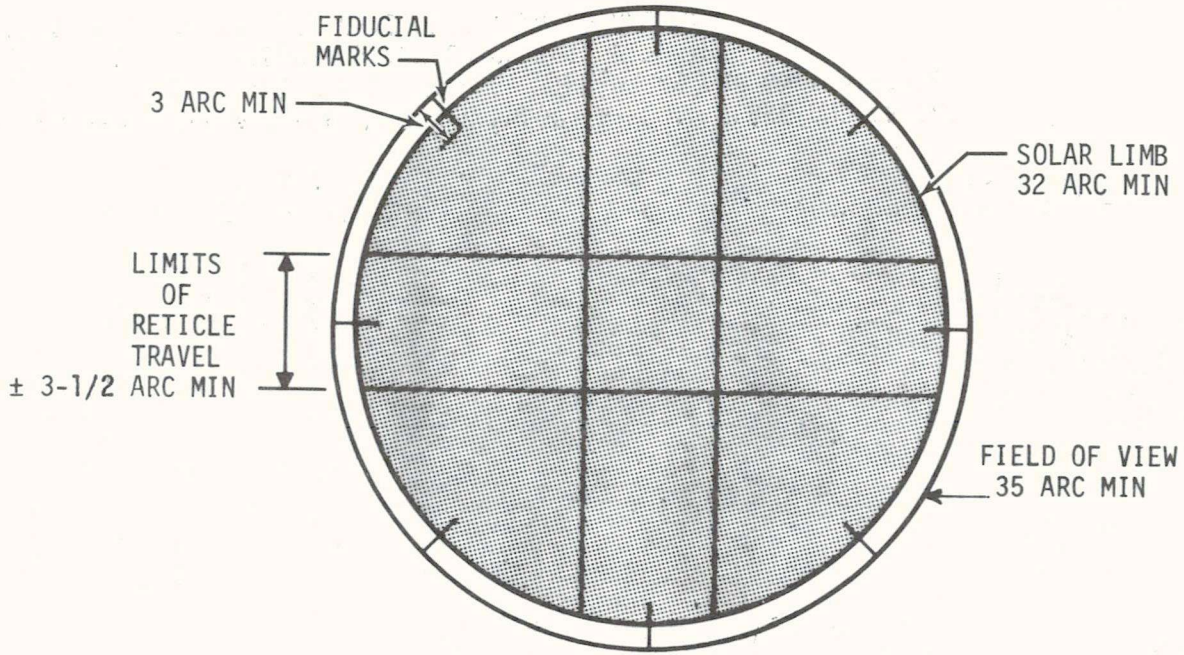

NOTE: THE MARKS ARE ONLY VISIBLE AGAINST THE DISC.

THE CAMERA FIELD OF VIEW IS NOT AFFECTED BY THE ZOOM POSITION

Figure 2.9.7-10 ATM Hα1 TELESCOPE FILM CAMERA FIELD OF VIEW - SUN CENTRED

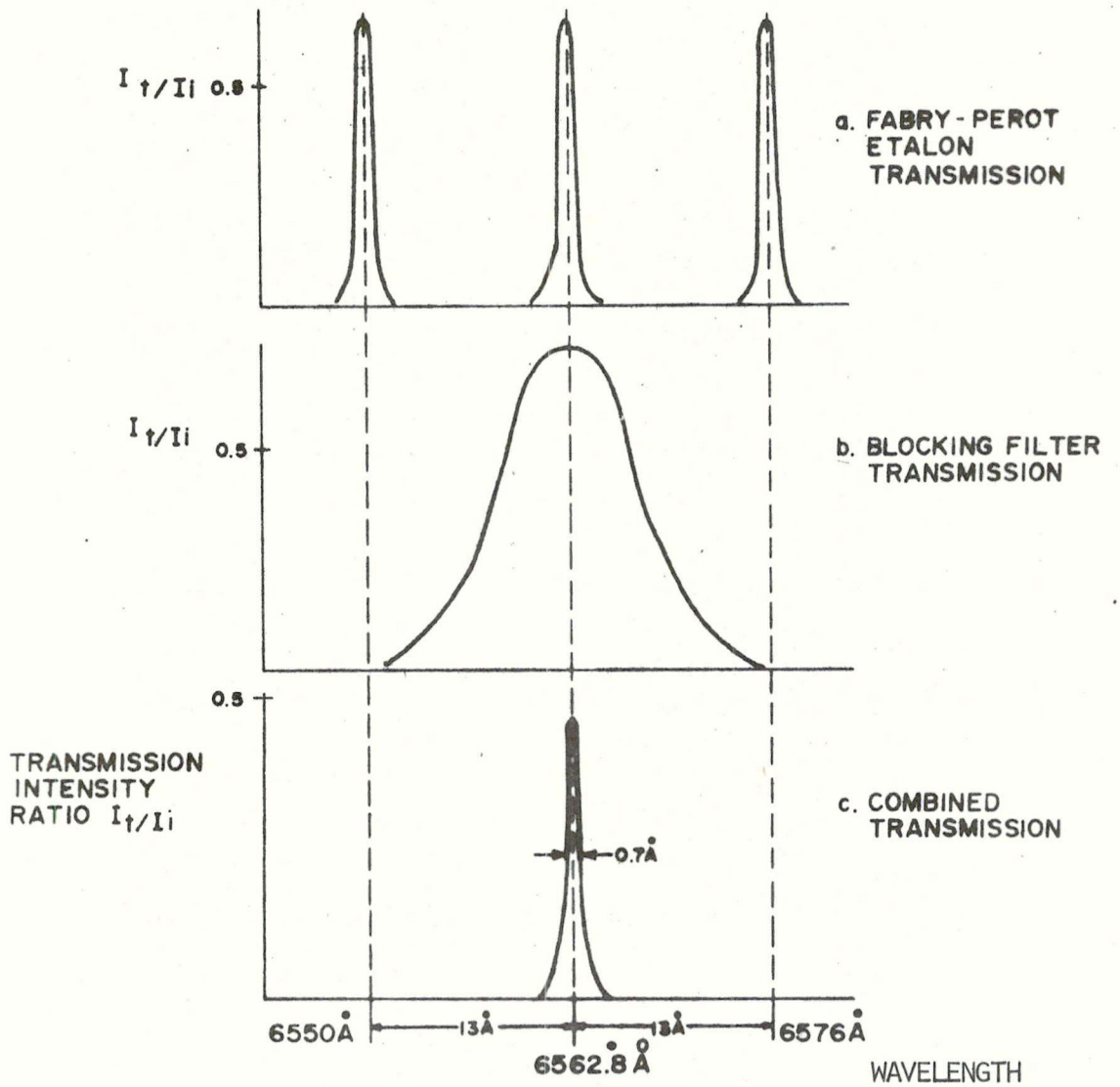

Figure 2.9.7-11 OPTICAL FILTER CHARACTERISTICS

than 20% and a half-power bandwidth of 0.7Å (Figure 2.9.7-11c).

The filters are supported on fused silica substrates mounted in an aluminum cell.

The temperature is kept constant by means of an electrical heater and controller. Figure 2.9.7-12. A thermistor embedded in the cell wall senses the temperature and causes the controller to supply current to the heater blanket when the temperature drops below the pre-determined level. The current is switched off when the temperature rises above the level. The temperature is kept constant within ±0.5°F by this means. An identical temperature control system is available, in standby, in the event of a failure of the primary unit. Three other thermistors monitor the cell temperature for telemetry.

2.9.7.4.5 - Transfer Optics - The light which leaves the filter cell is divided by a prismatic beam splitter between the TV and the film cameras. Of the light leaving the prism, 90% is taken via a zoom relay lens assembly and a fixed reflector to a vidicon focal plane. The remaining 10% is relayed by a fixed lens assembly to a film camera focal plane. Neutral density filters ahead of the vidicon and the film camera relay lens prevent image impairment from stray light. The main beam is attenuated by 50% at the vidicon filter.

The zoom assembly consists of fixed elements, and two sets of moving elements. The moving elements are in independent tubes which are driven by accurately machined cam slots at nonlinear rates. Drive for the cams is derived from a stepper motor via a gear train. The motor electronics unit is similar to that of the MRS. (Figure 2.9.7-13). Mechanical over-drive stops are fitted and the motor windings are rated for continuous stall. The field of view and magnification can be linearly adjusted over a 5:1 range in 8 secs.

2.9.7.4.6 Film Camera - The H-alpha solar image is recorded at a regular rate during a measurement period. The record is stored on Kodak 35mm SO-101 film (SO-392 on 0.0025 inch mylar base) in a special purpose camera. The film is carried in 16000 frame magazines. One magazine will be in the camera at launch. Three others will be carried in the MDA and will be used to recharge the camera for subsequent missions. The magazine is N_2 filled at a controlled pressure (5 psid, determined by a relief valve), and a controlled humidity (using an internal salt pad). The film transport mechanism is contained in the magazine, the drive shaft mates through a multi-jaw coupling with the motor shaft in the camera housing when the magazine is fully inserted in the receptacle. A white flag moves in front of the magazine indicating that it is secure. (Figure 2.9.7-15). The magazine is held in the camera by a catch which is released for removal by depressing a lever on the magazine handle. The magazine for the H-alpha 1 telescope is identical in size and shape

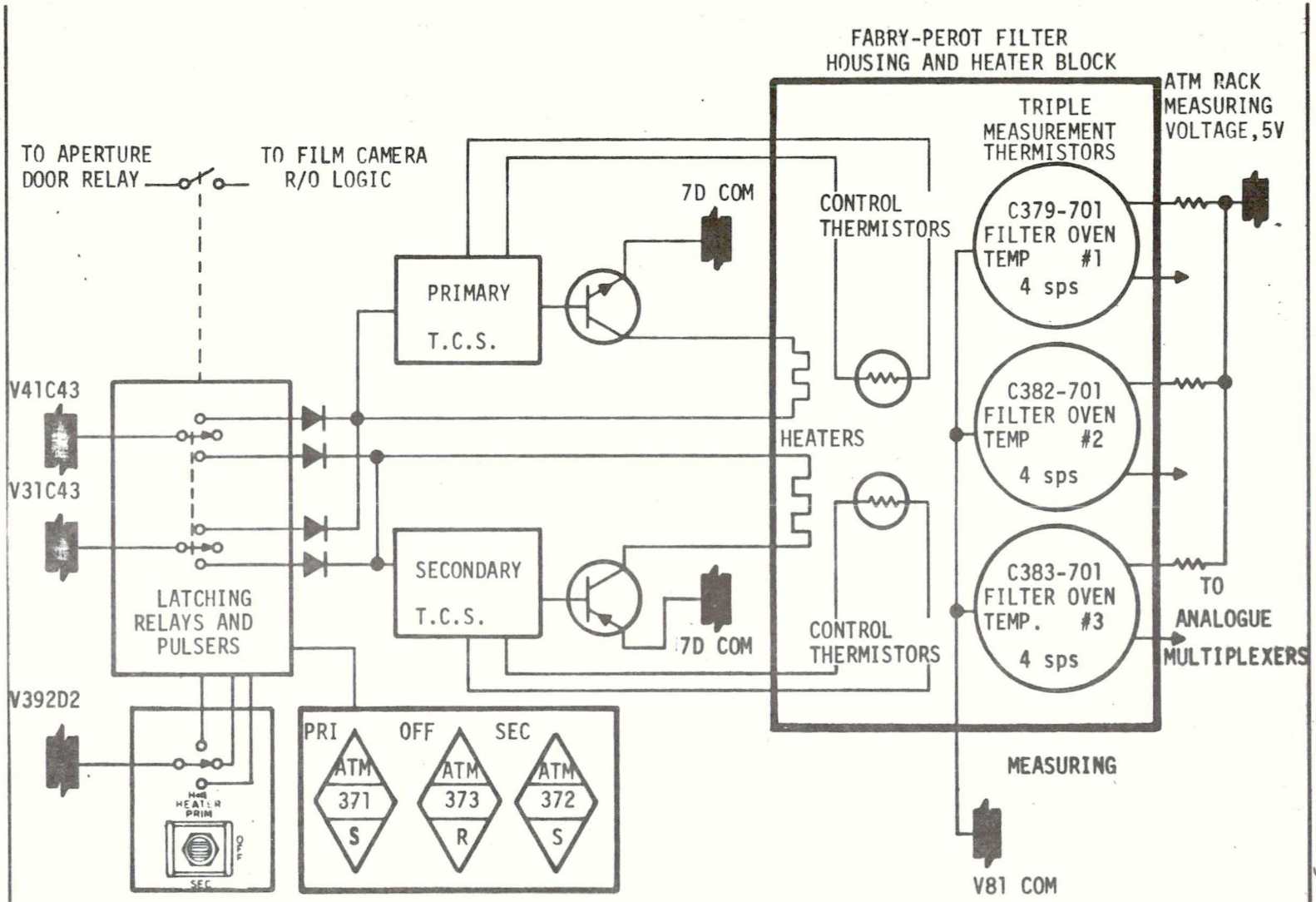

Figure 2.9.7-12
ATM Hα TELESCOPE FILTER HEATER CONTROLS AND INSTRUMENTATION

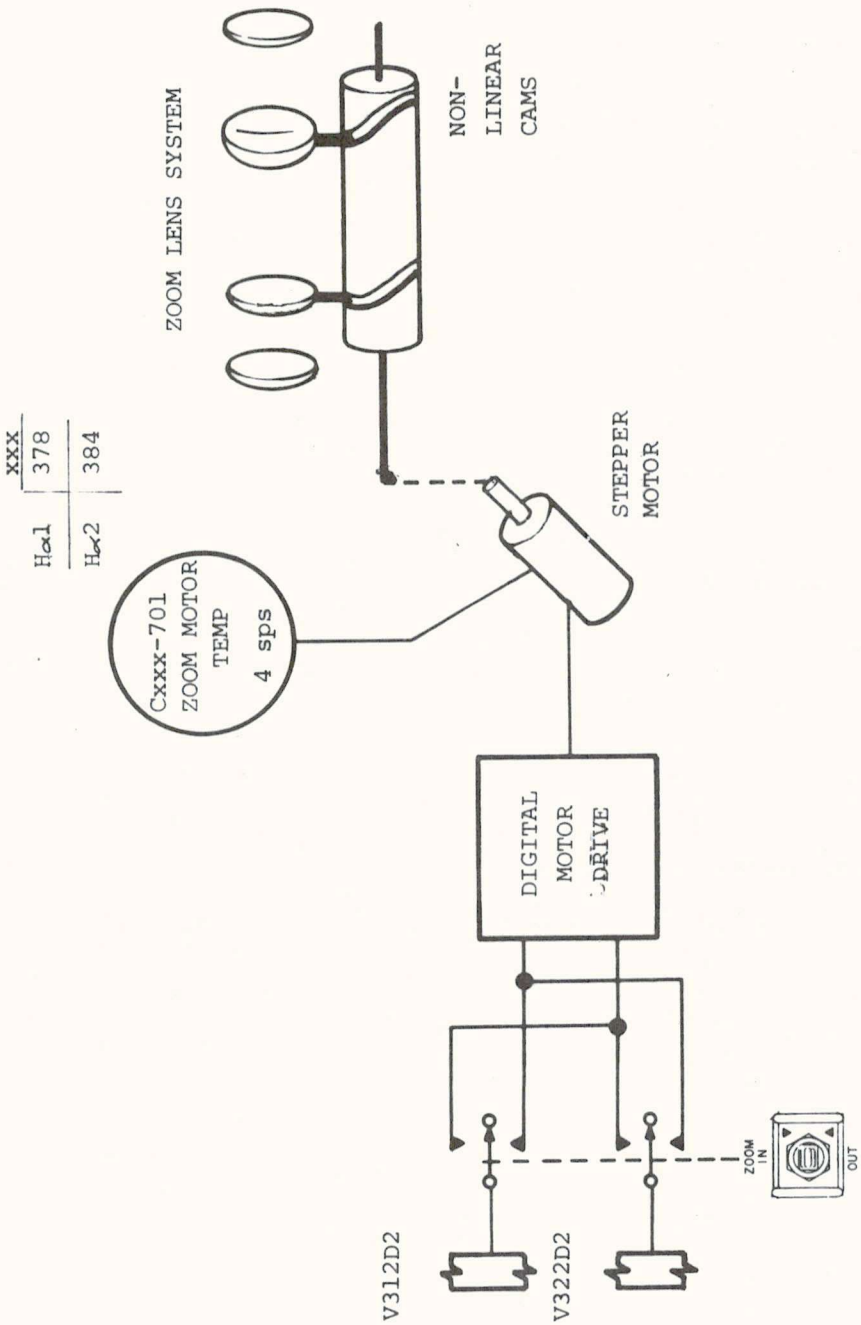

Figure 2.9.7-13 ATM Hα TELESCOPES ZOOM CONTROL (Typical for Hα1 and Hα2)

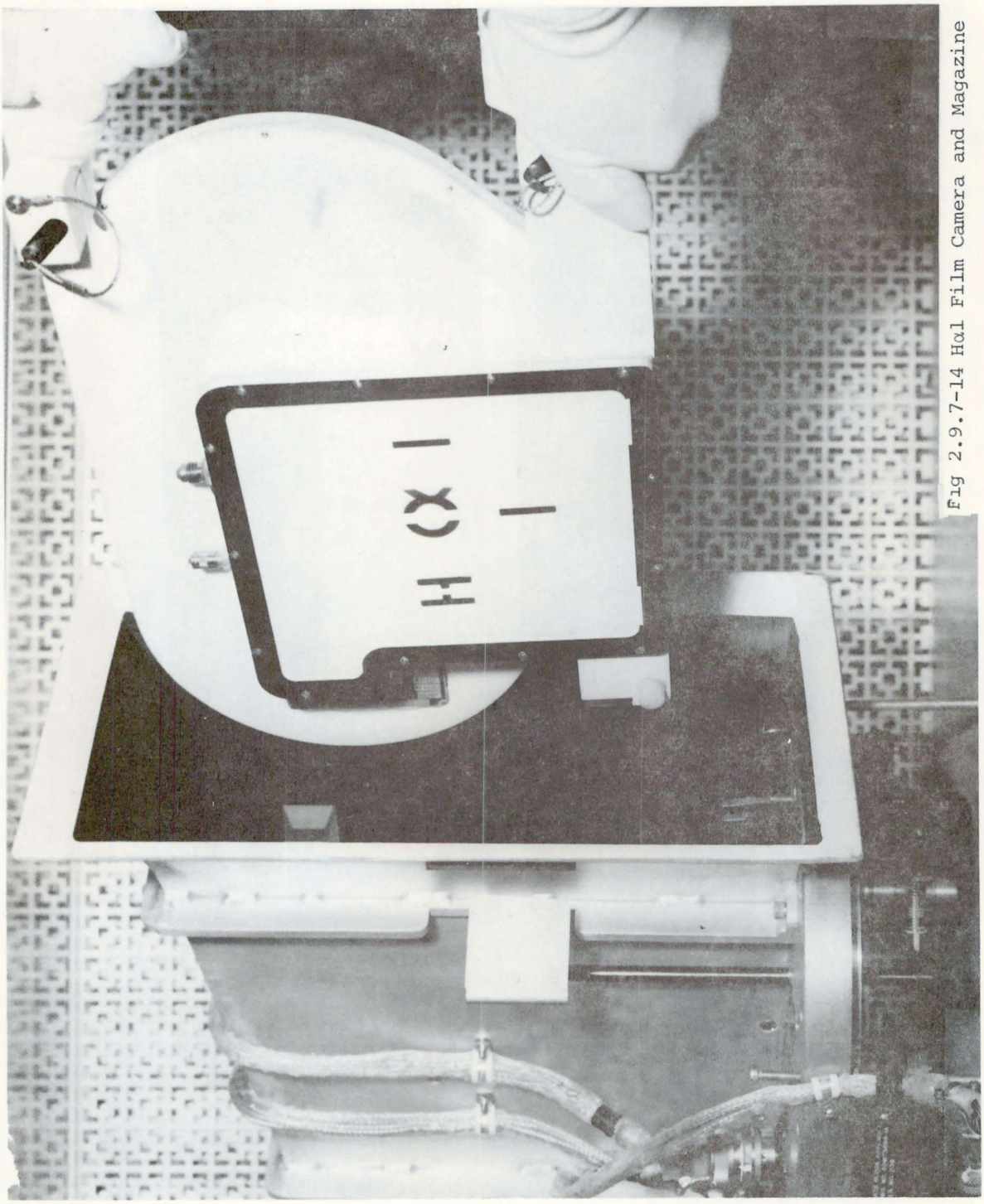

Fig 2.9.7-14 Hα1 Film Camera and Magazine

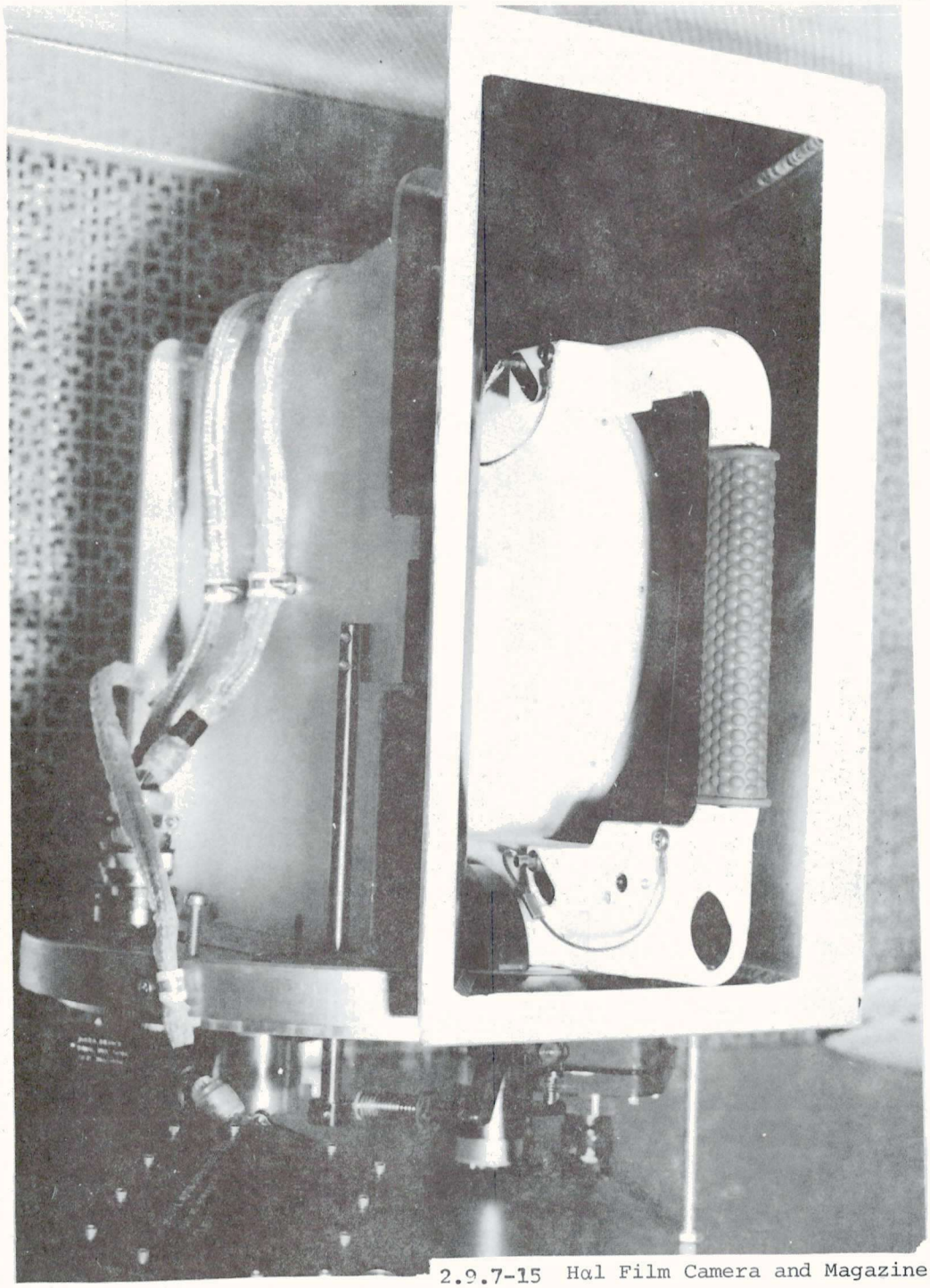

2.9.7-15 Hα1 Film Camera and Magazine

with the S056 magazine. However, for a number of reasons, both records would be lost if the magazines were interchanged. The magazines are prominently labelled to guard against such an event.

A small magnet rotated by the film transport indicates film consumption at the C&D Console. The frames remaining count down when a reed switch in the camera housing is actuated by the magnet and sends a pulse through the camera logic. Sealed windows in the magazine faceplate transmit the image and a binary-coded time signal to be recorded side by side on the film.

The drive stepper motor advances the film four sprocket holes for each frame. The camera logic (Figure 2.9.7-16), which includes the motor drive, takes its timing from the ATM clock. Frame advance follows each exposure. The exposure is made by an aperture wheel driven by another stepper motor. Exposure time is fixed at $\frac{1}{125}$ sec and the gathered radiation is determined by the telescope aperture. However, the film rate may be 1, 2 or 4 frames/minute, as selected by the astronaut on the C&D Console. It is possible for the astronaut to trigger an exposure sequence manually, but the logic limits the maximum manual exposure rate to 10 frames/minute. Lights on the C&D Console indicate when the camera is ready to begin an exposure sequence and when it is operating. A counter displays the number of unexposed frames remaining in the current magazine. The counter must be reset at the Console each time a magazine is changed.

2.9.7.4.7 Television Camera - A vidicon camera head is mounted on the telescope. The video signal is taken to a camera control unit and video switch which are mounted at the MDA end of the ATM spar, outside of the canister. The astronaut at the C&D Console may switch on the camera and select the Hα1 picture to view on either, or both, of the monitors. Figure 2.9.7-17). For the Hα1 picture to be relayed to the ground, it must be selected for one of those monitors. Synch signals, from one of two redundant synch generators and common to all ATM TV cameras, are not superimposed on the video signals (except that to the ground) but are taken to each module by separate cables.

Most TV parameters are fixed before launch. The astronaut can adjust brightness and contrast on the C&D Console. A pair of perpendicular electronic cross-hairs is available on the monitor. Each line can be moved across the picture as desired. The cross-hairs are distinguishable from the reticle lines since the latter are black and the former light. The cross-hair intensity is adjustable.

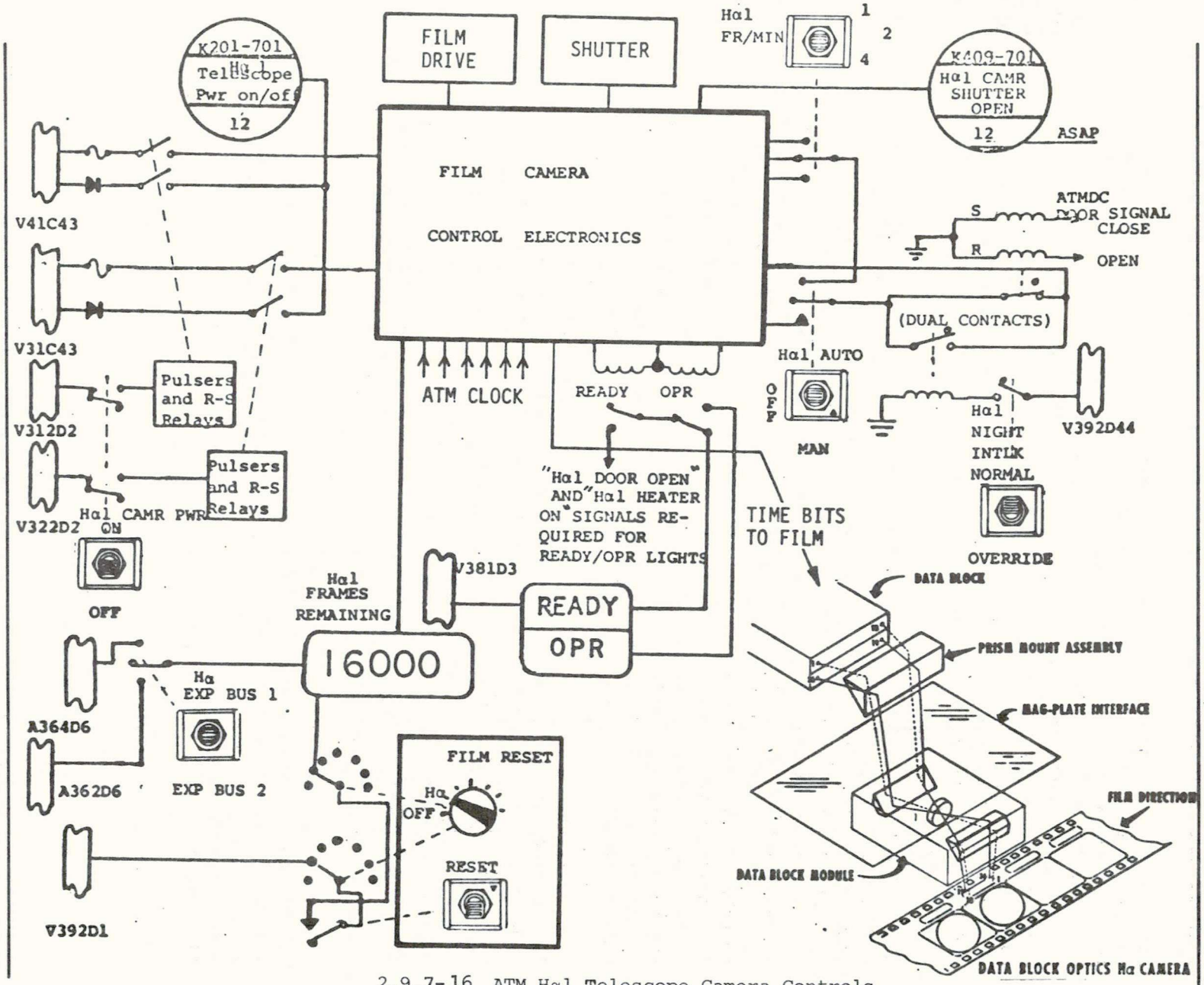

2.9.7-16 ATM Hα1 Telescope Camera Controls

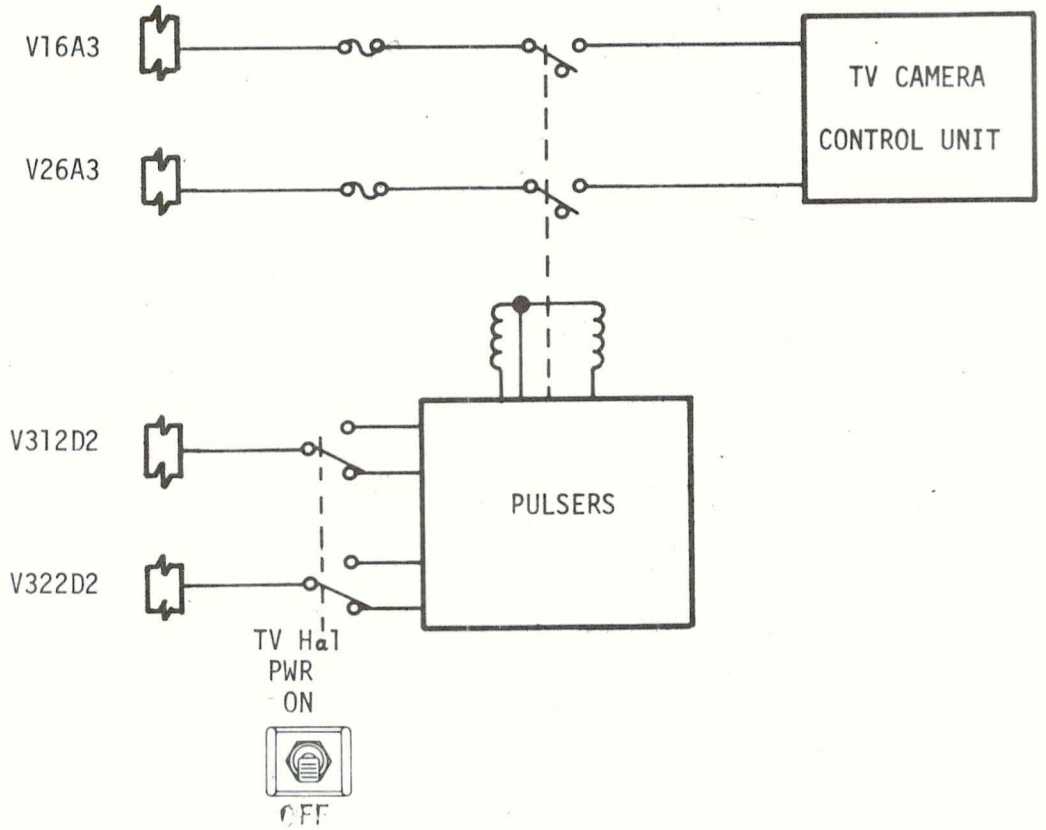

Figure 2.9.7-17 HαTELESCOPES TV POWER CONTROL (TYPICAL FOR Hα1 AND Hα2)

2.9.7.5 Performance and Design Data

Table 2.9.7-IV

Wavelength selection

Primary - temperature controlled Fabry-Perot etalon and blocking filter
- central wavelength 6562.8±.1Å
- spectral resolution (half-power bandwidth) etalon 0.7Å±.1Å, blocker 7Å
- peak transmission >20%
- side-band rejection density 4.0 from 4000Å to 8000Å
- filter coating sensitivity etalon 44°F/Å, blocker 10°F/Å
- temperature adjustment range 70°F to 120°F
- filter clear aperture 2.0 inch
- controller stability ±0.5°F

Secondary - heat rejection window
- transmission at 6563 Å >50%
- bandwidth 300Å
- reflectivity outside passband 0.99 (4100Å to far infrared)

Cassegrain telescope
clear aperture 6.55 inch dia.
central obscuration 3 inch dia.
deviation from telecentricity < 30 arc minutes at edge of field.

Beam splitter
90% of incident light to vidicon
10% of incident light to film camera

Fixed relay
resolution at film focal plane 1 arc second across 35 arc minutes

Zoom lens
zoom ratio 5:1
at maximum zoom; FOV 4.5 arc min
resolution 1.5 arc sec
at minimum zoom; FOV 22.0 arc min
resolution 5.0 arc sec
time for complete zoom 8 secs (2,-0)

Mechanical reticle system
adjustment range >±3½ arc min (pitch and yaw)
setting accuracy 0.5 arc seconds
stability ±2.5 arc seconds for 15 hours
±0.5 arc seconds for 15 minutes
mutual perpendicularity within ±5 arc min
translation across 7 arc min ∿ 80 secs(~5 arc sec/sec)
fiducial marks at ± 0.0005 inch of MRS zeros and 45° to the zeros.

Vidicon
EIA standard 525 line/frame; 2:1 interlace
resolution 600TV lines at picture center
sensitivity: for maximum performance 1 foot candle
for adequate performance 0.1 foot candle
video bandwidth ±1.0 dB to 7 MHZ
-3 dB at 8 MHZ
format size (camera tube) 0.44 inch x 0.44 inch
monitor face circular, 6 inch dia.

Film camera
exposure rates auto 1, 2, or 4 frames/min
man 10 frames/min max
film Kodak SO-101 (thin base SO-392) 35mm Solar Flare Patrol Film
magazine capacity 16,000 frames (1000 ft)
format size 0.7 inch x 0.7 inch

Weights 192 lbs - complete instrument
15.7 lbs - film magazine (return weights)

Size 104 inch long x 10 inch dia
20 inch high (includes feet and vidicon)

Operating temperature $70^{\circ} \pm 5^{\circ}$F

Pre-launch pitch - yaw alignment ±10 arc secs from FSS axis

Power requirements 28 Vdc (+2.5, -2.0), 153.5 watts max
13.5 watts standby

5 Vdc (±0.02), 75 mW (ATM measuring voltage supply)

2.9.7.6 Operational Limitations and Restrictions

OPERATING LIMITS & CONSTRAINTS

Operating Limits
Temperature 70 $\pm 5^{\circ}$F
Pointing UP/DN, L/R $\pm$ 22 arc min off solar line of sight
ROLL - No restriction

Fabry-Perot filter at set temp. - 2 hrs after switch-on
Hα1 reticles dedicated to S055A - The crossing of the lines will indicate the center of the raster field.

Marks

Zoom Out (full)	Reticles always in FOV Fiducials not in FOV
Zoom In (full)	Reticles can be out of FOV Fiducials not in FOV

(Marks can only be seen against solar background)

In any 24 hr. period, the accumulated reticle operation is limited to 5 min. actual drive in one orbit plus 72 secs drive in each of the remaining orbits.

Hα1 film magazine - 16000 frames

2.9.8 Hydrogen Alpha 2 (Hα2) Telescope

2.9.8.1 Introduction - The Hα2 instrument (Figure 2.9.8-1) is basically the same as the Hα1 telescope. Since it was intended as a back-up to Hα1 in its pointing role it has identical fore-optics. The absence of a film camera is the main difference between the two instruments. Hα2 has no permanent record capability. The vidicon has been moved to take the place of the film camera physically and the optical layout has been modified accordingly for the new arrangement. Since there is no requirement to retrieve a magazine at the CWS door, the telescope has been made shorter than Hα1.

2.9.8.2 Subsystem Interface

2.9.8.2.1 Association with other instruments - In addition to acting as a back-up for Hα1, Hα2 has the primary task of being the precision sighting device for S082B. Both instruments are mounted in the same quadrant of the spar.

The point of aim of the center of the S082B slit on the sun's surface will be marked by the crossing of the MRS lines viewed on the TV monitor. The reticles will be aligned with the slit early in the mission.

2.9.8.2.2 Data

2.9.8.2.2.1 Telemetry - Temperature monitoring includes a triple redundant measurement of the Fabry-Perot (FP) filter cell, and single channels for the optics, and electrical components

Electrical monitoring includes several TV parameters.
Events recorded are the thermal shield door actuations.

A complete list of telemetry channels is given in Table 2.9.8-II.

2.9.8.2.2.2 Television - A vidicon TV camera records the solar image. The TV can be viewed on either monitor of the C&D Console. If selected for a monitor the image may be transmitted to MSFN via the CSM link for viewing on the ground.

2.9.8.2.3 Mechanical - The Hα2 telescope is firmly and permanently mounted to the ATM spar at integration. Alignment with the FSS and experiments will be specified in 10M03786G. Hα2 will be aligned ± 10 arc sec with the FSS prior to launch. The mounting feet of the main telescope structure provide kinematic (3 point) adjustment of the pointing direction. There is no adjustment for roll.

The fully open thermal shield door will not restrict the telescope aperture.

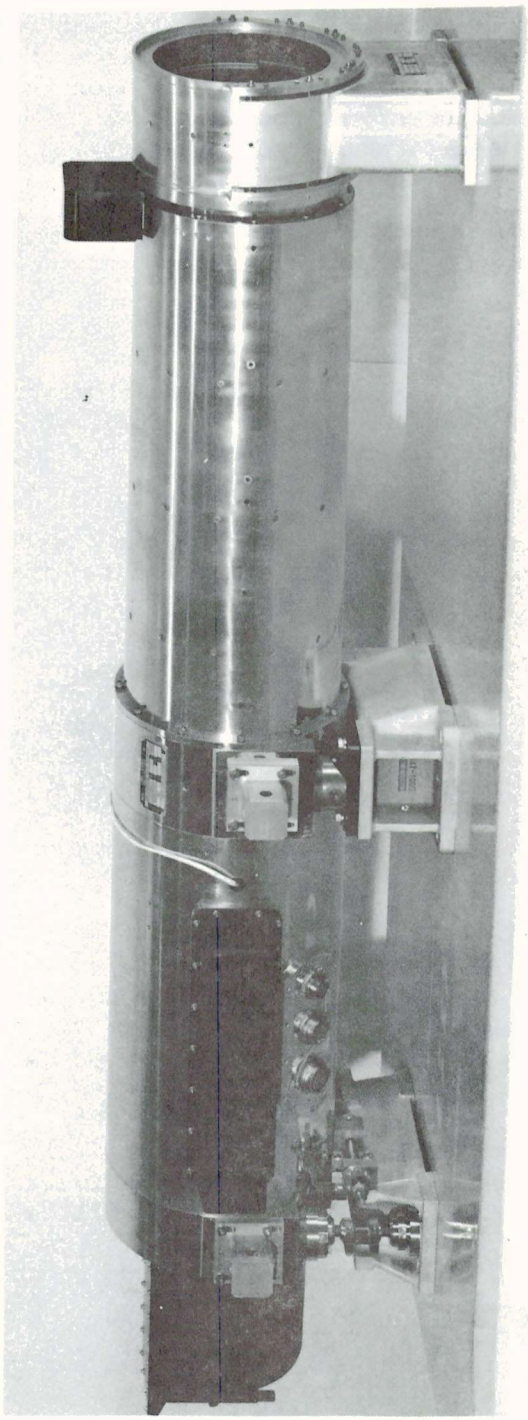

Figure 2.9.8-1 ATM Hydrogen Alpha 2 Telescope

Table 2.9.8-I Index of Interface Control Documents and Drawings

Number	Title	Date or Revision	Baseline Date	Experiment Effectivity	Vehicle Effectivity	Flight or GSE
MSFC 50M02463	ATM Experiment Interface Defining Document	B & EO-s 12-15	12-10-69	1 & 2	ATM A	Flight
MSFC 10M03736	Alignment Control Drawing	B	8-30-68	1 & 2	ATM A	Flight
MSFC 10M03786	ATM Alignment Parameters	G	1-9-69	1 & 2	ATM A	Flight
MSFC 40M51196	Checkout Facilities Cable Interconnect Diagram for ECE			1 & 2	ATM A	GSE
MSFC 40M35588	Electrical Interface Control Document	2-21-69	3-20-69	1 & 2	ATM A	Flight
MSFC 50M16189	Interface Control Document, Vidicon Camera	A & E01	10-3-69	2	ATM A	Flight
MSFC SK10-7328	ATM Experiment Package Subassembly	P	9-18-69	1 & 2	ATM A	Flight
PE 647-0003	Outline and Installation Diagram HCO H-Alpha (Hα 1)	F	5-13-70	1	ATM A	Flight
PE 647-0004	Outline and Installation Diagram ATM H-Alpha (Hα 2)	D	5-13-70	2	ATM A	Flight

NOTE: SK10-7328 will be superseded by 10M24002

MEASUREMENT NUMBER	NAME	MEASUREMENT RANGE	LIMITS	DISPLAY	SAMPLE RATE
C 196-701	TEMP, HEAT REJECTION WINDOW	-8 -+57°C	TBD	DTV,RT,PB	4 SPS
C 384-701	TEMP, ZOOM DRIVE MOTOR	-8 -+57°C		DTV,RT,PB	4
C 386-701	TEMP, PRIMARY MIRROR CELL	-8 -+57°C		DTV,RT,PB	4
C 387-701	TEMP, ELECTRONICS BOX	-8 -+57°C		DTV,RT,PB	4
C 385-701	TEMP, FILTER NO 1	+21 -+49°C		DTV,RT,PB	4
C 388-701	TEMP, FILTER NO 2	+21 -+49°C		DTV,RT,PB	4
C 389-701	TEMP, FILTER NO 3	+21 -+49°C		DTV,RT,PB	4
C 373-701	TEMP, VIDICON	-40 -+90°C		DTV,RT,PB	4
K 289-703	THERMAL SHIELD APRT DOOR OPEN	0/1	NA	DTV,RT,PB	12
K 290-703	THERMAL SHIELD APRT DOOR CLOSED	0/1	NA	DTV,RT,PB	12
M 464-704	VOLTAGE, 450V, VIDICON SUPPLY	0 600V	TBD	DTV,RT,PB	4
M 429-704	CURRENT VIDICON INPUT	0 -1A		DTV,RT,PB	4
M 428-704	VOLTAGE, VIDICON AGC	0 -10V		DTV,RT,PB	4
M 427-704	VOLTAGE VIDICON BLANK & SWEEP	0 -20V		DTV,RT,PB	4
M 458-704	CURRENT VIDICON FILAMENT	0 -300 ma		DTV,RT,PB	4
K 122-702	MISSION ELAPSED TIME - STD FORMAT				

TABLE 2.9.8- II

2.9.8.2.4 Thermal - The telescope does not need an active overall temperature control system. Plating the tube with gold (of emissivity 0.05), making the surfaces of heat sources (such as the vidicon and electronics) black and inserting insulating sections in the feet, allows the telescope to operate in the environment of the spar, the canister wall, SO82B, etc.. Any temperature or temperature gradient changes will be insufficient to cause the telescope to depart from its specified performance.

A temperature controller for the FP filter is internal to the instrument and is not directly an interface.

Hα2

2.9.8.2.5 Electrical - All power is derived from the ATM main buses V11 and V21. The C&D Hα2 bus is V392. Lighting power for the C&D Console is taken from the ILCA. All telemetry power is taken from V81, the 5Vdc instrumentation bus.

Outputs from the instrument include the telemetry, TV and indicator signals.

Table 2.9.8-III summarizes the electrical interfaces of the Hα2 telescope.

2.9.8.3 Functional Description - The Hα2 telescope components are shown in Figure 2.9.8-2. The principal elements include the cassegrain telescope optics, zoom and movable reticle subsystems, and the TV camera.

Figure 2.9.8-3 is an optical schematic diagram. The optical train shown consists of heat rejection windows, paraboloidal primary and hyperboloidal secondary mirrors (the cassegrain elements) refractive correctors and a Fabry-Perot filter. The light passes through a zoom lens assembly to a vidicon camera. A fixed neutral density filter and light baffles prevent stray light from impairing the final image.

Solar events, as they occur, will be viewed on a TV monitor at the C&D Console. The Hα2 vidicon TV picture can be switched to the monitor, where the astronaut can use the reticle images for aligning the SO82B instrument with a feature or he can observe events on the solar disc. The picture being viewed is available for transmission to ground via the CSM link.

Electronic packages mounted to the telescope tube, contain the Fabry-Perot filter dual temperature controllers, and the zoom and reticle drive controllers. Telemetry signals for housekeeping purposes are routed through the electronic packages to the Instrument and Communications Subsystem (I & C) for transmission via the MSFN link.

An active temperature control system maintains a constant temperature for the Fabry-Perot filter.

Hα2 TELESCOPE - SUMMARY OF CONTROLS, POWER LINES, AND INSTRUMENTATION

Function	Supply Bus 7D	Control Bus 7D	C & D Control	DAS/DCS Command/Octal	Indicator	T/M	Circuit Breaker
Hα2 Fabry-Perot TCS	31/41	392	Hα2 HEATER PRIM Hα2 HEATER OFF Hα2 HEATER SEC			C385-701 C388-701 C389-701 TRIPLE REDUNDANT TEMPERATURE	C/D MAIN EXP
Hα2 Zoom	312/ 322		ZOOM IN (OUT)		TV picture	C384-701 MOTOR TEMP	C/D MAIN EXP
Hα2 Reticles	392		RETICLE Hα2		TV picture		C/D MAIN EXP
Hα2 TV	16/26	312/ 322	TV Hα2 PWR ON (OFF)		TV picture	C373-701 VIDICON TEMP M427-701 VOLTAGE BLANK & SWEEP M428-704 VIDICON AGC M429-704 CUR;I/P VIDICON	

TABLE 2.9.8-III

Hα2 TELESCOPE-SUMMARY OF CONTROLS, POWER LINES, AND INSTRUMENTATION (cont)

Function	Supply Bus 7D	Control Bus 7D	C&D Control	DAS/DCS Command/Octal	Indicator	TM	Circuit Breaker
Hα2 Thermal Shield	11/21	312/ 322	Hα2 DOOR		tb OPEN-gray OPER-white CLSD-bp	K289-703 Hα2 Aprt Doors Open K290-703 Hα2 Aprt Doors Closed	C/D MAIN EXP

TABLE 2.9.8-III (cont)

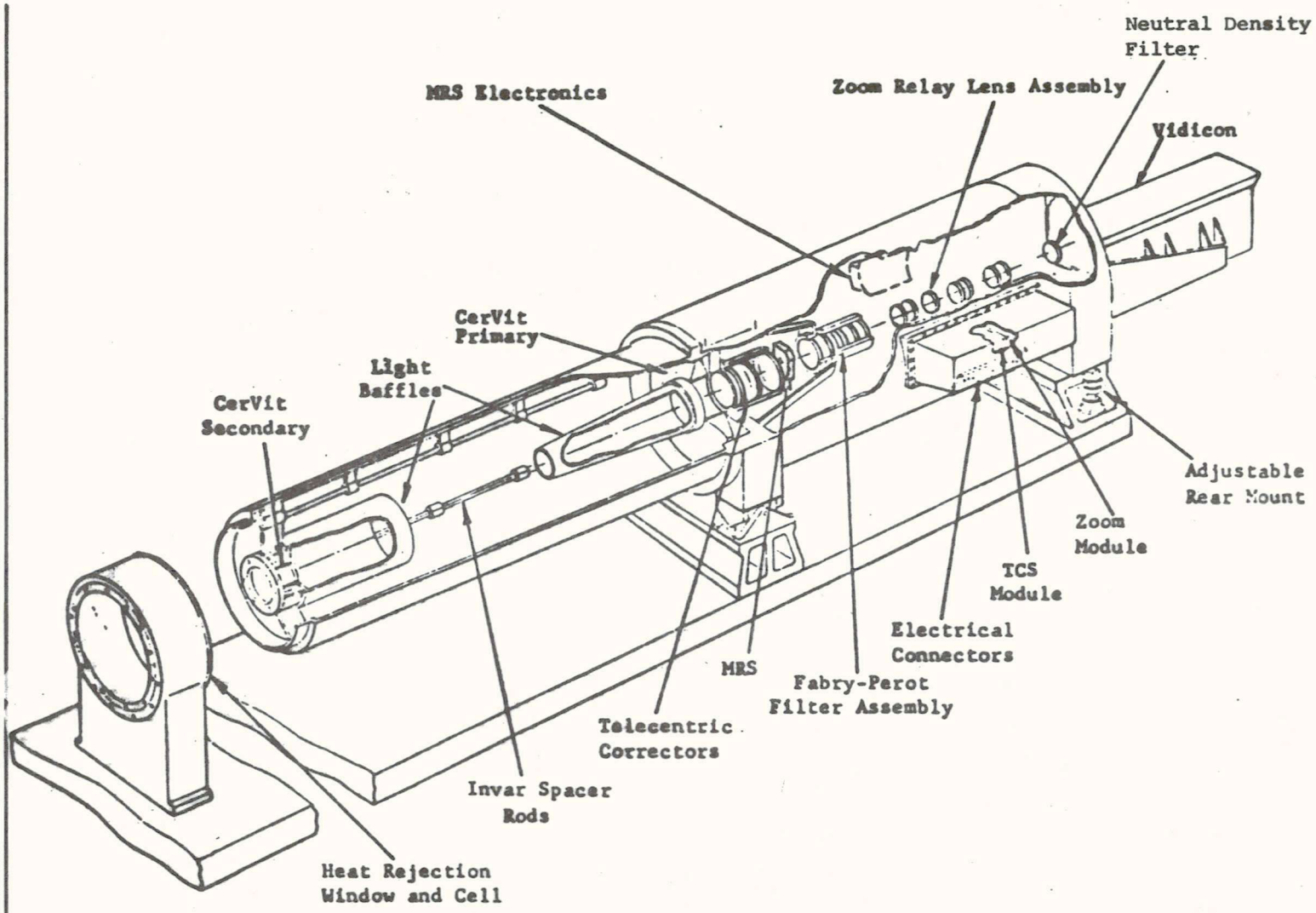

Figure 2.9.8-2 ATM HYDROGEN ALPHA 2 TELESCOPE

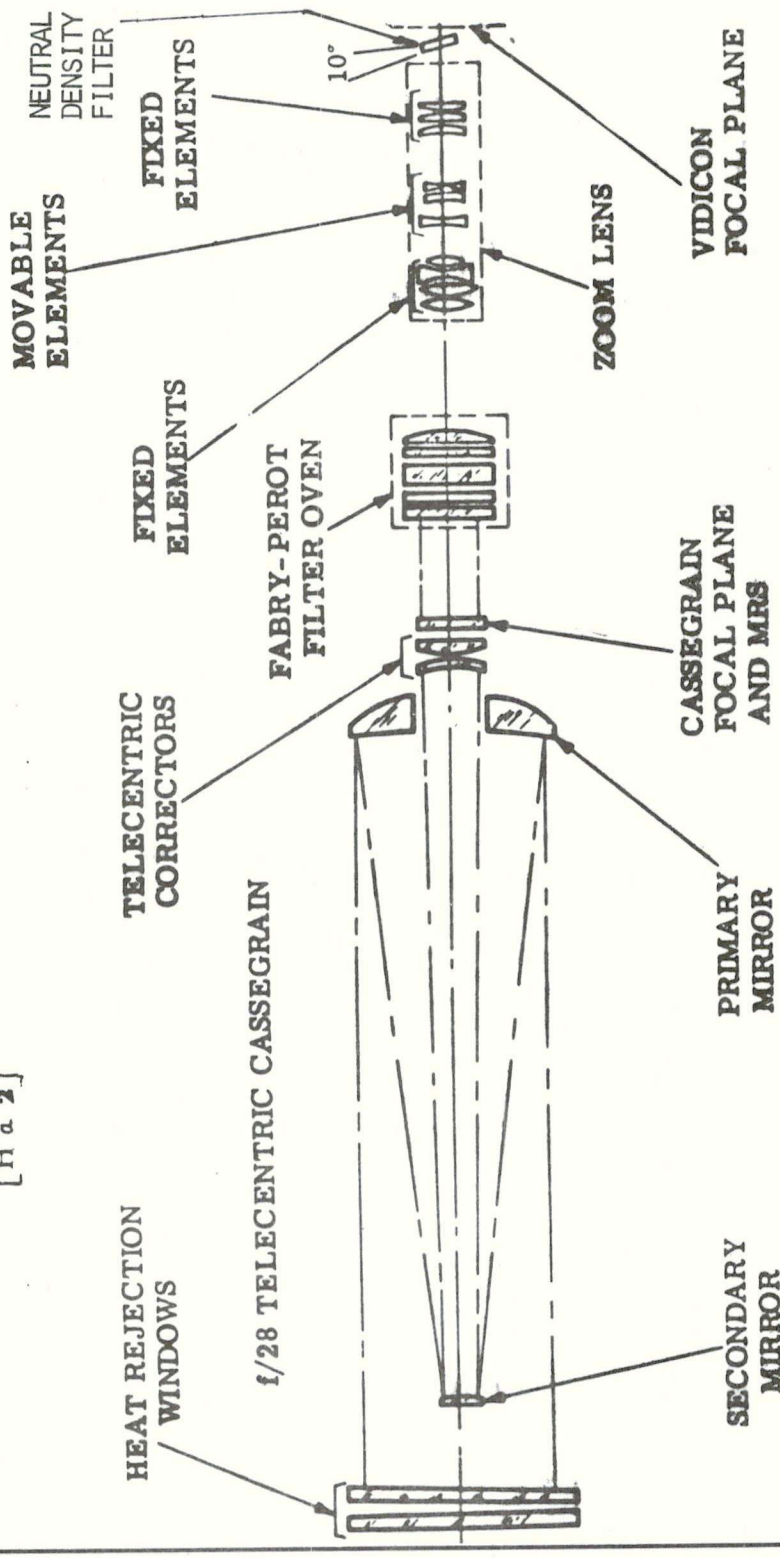

Figure 2.9.8-3 ATM-HYDROGEN ALPHA TELESCOPE – OPTICAL SCHEMATIC
[H α 2]

2.9.8.4 Major Components/Functional Description

2.9.8.4.1 Heat Rejection Window - The heat rejection window is the first optical element encountered by the radiation after passing through the open thermal shield door. The window is shown on the extreme left of Figure 2.9.8-2. To minimize the possibility of distortion, it is essential that heating caused by solar radiation is reduced to a minimum. The main function of the heat rejection window is to reflect this heating radiation. The coatings on the window elements transmit a 300Å band around 6563Å and reflect outside that band. The transmission at the peak is greater than 50% of the incident energy, and the integrity of the wavefront is preserved.

2.9.8.4.2 Cassegrain Telescope Optics - A requirement on the telescope is that it should provide a diffraction limited solar image at the relay optics for subsequent recording or monitoring. As shown in Figure 2.9.8-2, the telescope has a telecentric cassegrain arrangement consisting of a paraboloidal cervit primary mirror, a hyperboloidal cervit secondary mirror and two refractive telecentric corrector elements. The telescope forms an aberration-corrected image co-incident with the mechanical reticle system (MRS) plane. The reflective coatings on the cervit elements have very high reflectance (VHR) characteristics to maximize optical efficiency. The use of cervit for the mirrors and invar for the spacers ensures maximum figure stability for the expected thermal gradients on the structure of the telescope.

Internal surfaces outside the light path have been painted matt-black to minimize image deterioration due to stray light.

2.9.8.4.3 Movable Reticle System (MRS) - Positional reference is provided at the TV camera focal plane by a series of fixed fiducial marks spaced at 45° around the edge of the field of view (visible at zoom full-out) and by a coplanar pair of orthogonal cross hairs - the Movable Reticle System (MRS), (Figure 2.9.8-4). The reticle lines can be moved individually in directions perpendicular to their length through ±3½ arc min. At the MRS zero positions the cross hairs coincide with two pairs of fiducial marks.

The reticle lines are formed by stretched 0.0005 inch wires positioned at the cassegrain focal plane. The equivalent angular width of each reticle line is ½ arc sec. Each wire is driven by a dc stepper motor through a 90:1 gear train and a lead screw at a rate equivalent to 5 arc sec/sec. The stepper motor is controlled by an electronic module consisting of a clock and steering logic. (Figure 2.9.8-5). The direction of travel is chosen by a switch on the C&D Console; mechanical stops limit the travel and the motor windings are rated to permit continuous stall operation. However, to prevent excessive thermal effects on the alignment of the MRS to the ATM experiments, the operating

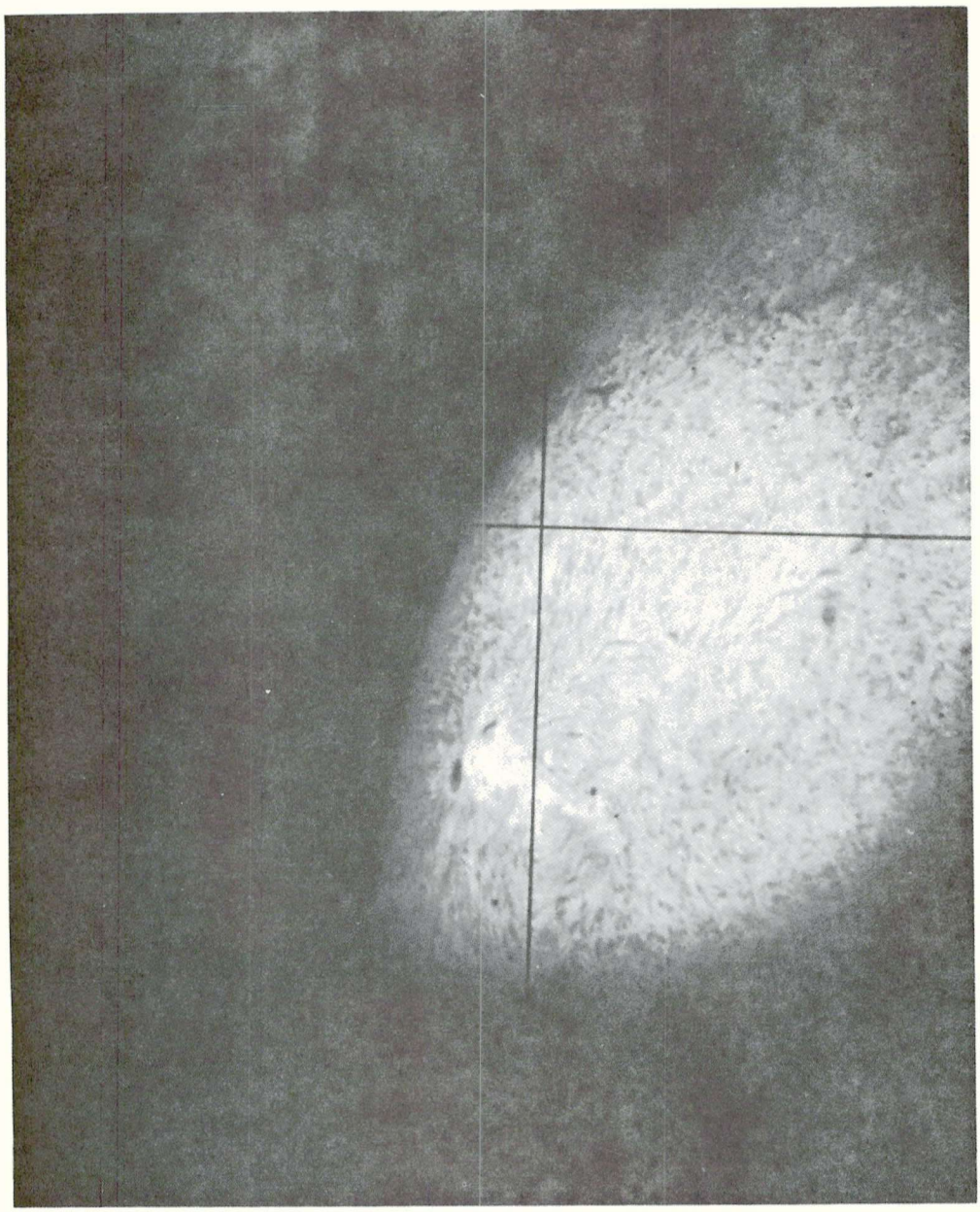

Figure 2.9.8-4 Reticles against solar disc at vidicon focal plane, with zoom full-in (5x)

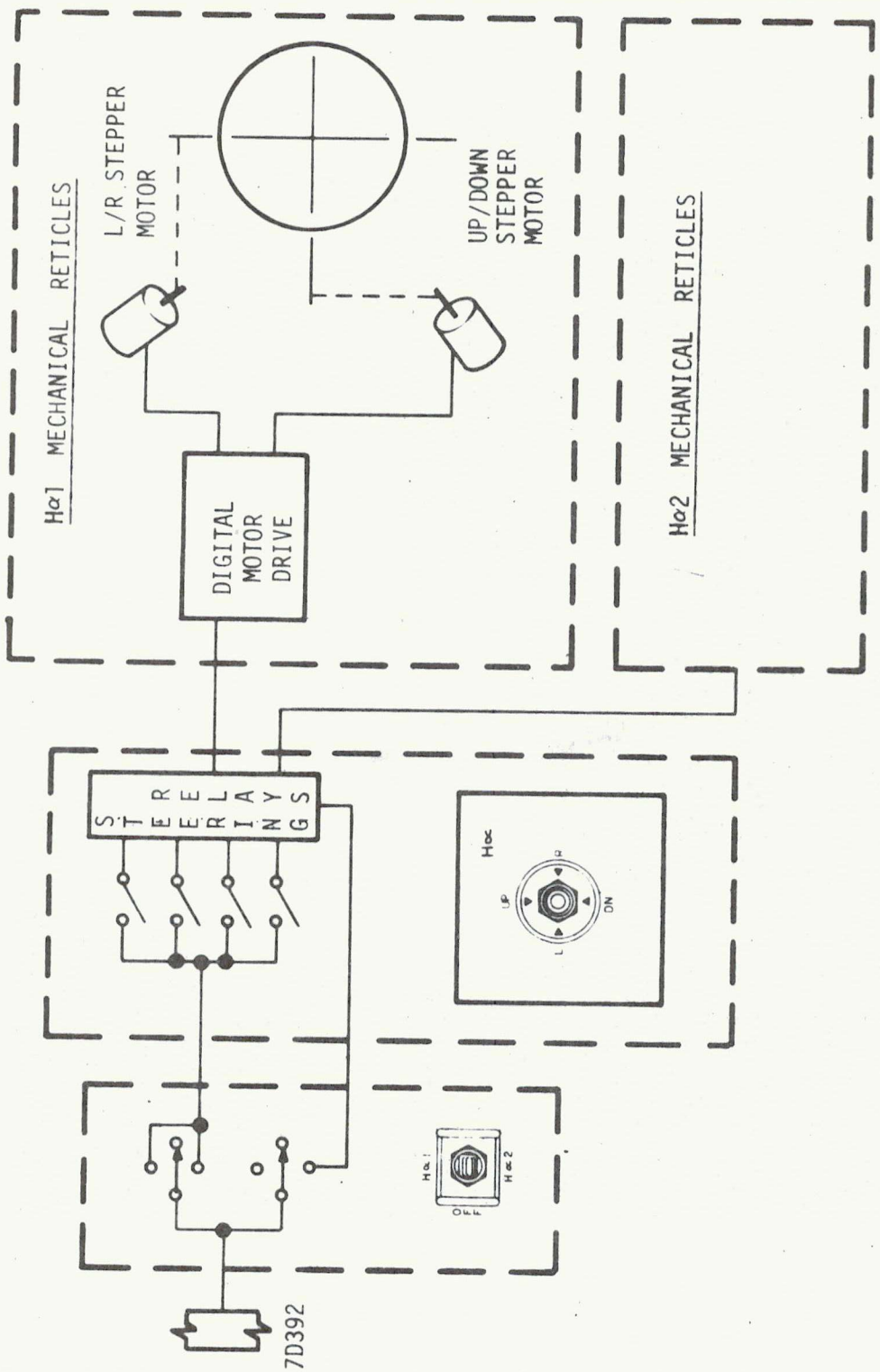

Figure 2.9.8-5 ATM HαTELESCOPES MECHANICAL RETICLE CONTROLS.

time should be limited. In any 24 hr. period, the accumulated reticle operation is limited to 5 min. actual drive in one orbit plus 72 secs drive in each of the remaining orbits.

The zoom-out field of view of the TV camera is the same as that of the Hα1 film camera (35 arc min) and will permit the viewing of the fiducial marks. The reticle is visible at all positions while the telescope is in the zoom full-out condition. When the zoom is full-in the reticle can be up to 15 arc secs out of the field of view. (Figure 2.9.8-6)

Hα2

2.9.8.4.4 Fabry-Perot Filter System - The wavelength defining element is a solid-spaced Fabry-Perot filter, together with a blocking filter. The filters are mounted in a cell which is maintained at a constant temperature (above the ambient) to keep the telescope tuned to the Hα radiation.

The Fabry-Perot filter consists of a 125 micron x 3 inch diameter fused silica spacer which has a reflective layer deposited on each face. It is characteristic of such etalon filters that transmission peaks occur at evenly spaced wavelengths, (Figure 2.9.8-7a). To select the desired peak, a second filter (the blocking filter) which has a lower selectivity, rejects radiation at the other wavelengths, (Figure 2.9.8-7b). The result is a highly selective filter with peak transmission greater than 20% and a half-power bandwidth of 0.7Å (Figure 2.9.8-7c).

The filters are supported on fused silica substrates mounted in an aluminum cell.

The temperature is kept constant by means of an electrical heater and controller. Figure 2.9.8-8. A thermistor embedded in the cell wall senses the temperature and causes the controller to supply current to the heater blanket when the temperature drops below the pre-determined level. The current is switched off when the temperature rises above the level. The temperature is kept constant within ±0.5°F by this means. An identical temperature control system is available, in standby, in the event of a failure of the primary unit. Three other thermistors monitor the cell temperature for telemetry.

2.9.8.4.5 Transfer Optics - The light which leaves the filter cell is taken via a zoom relay lens assembly to a vidicon focal plane. A neutral density filter ahead of the vidicon prevents image impairment from stray light. The main beam is attenuated by 50% at the filter

The zoom assembly consists of fixed elements, and two sets of moving elements. The moving elements are in independent tubes which are driven by accurately machined cam slots at nonlinear rates. Drive for the cams is

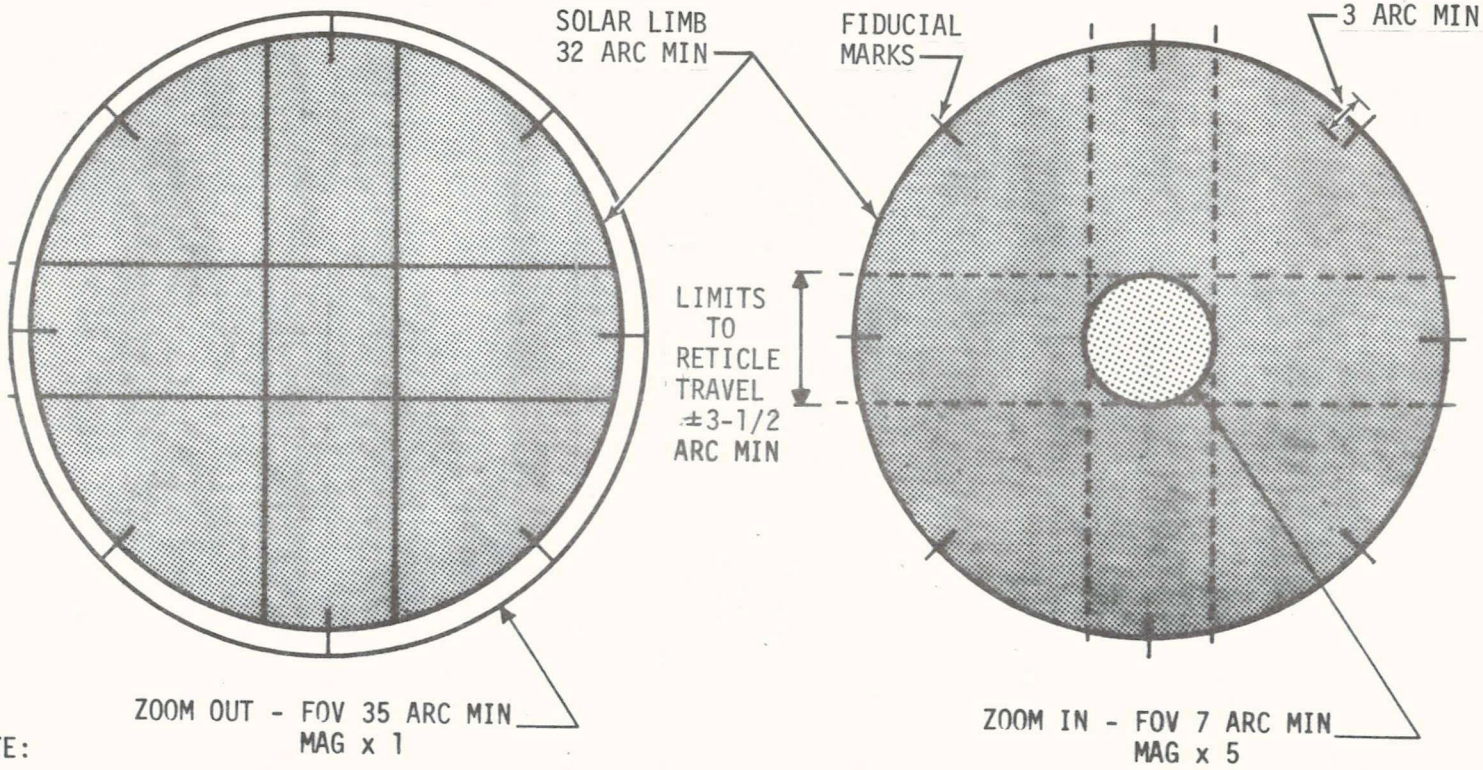

NOTE:

THE RETICLES AND FIDUCIALS ARE AT THE CASSEGRAIN FOCAL PLANE AND APPEAR TO AN OBSERVER TO BE ON THE SUN'S SURFACE. THE MARKS ARE ONLY VISIBLE AGAINST THE DISC. THE FIDUCIALS ARE CONCENTRIC WITH THE FIELD OF VIEW AND CANNOT BE SEEN IF THE FIELD IS LESS THAN 29 ARC. MIN.

ATM Hα2 TELESCOPE TV FIELDS OF VIEW - SUN CENTRED

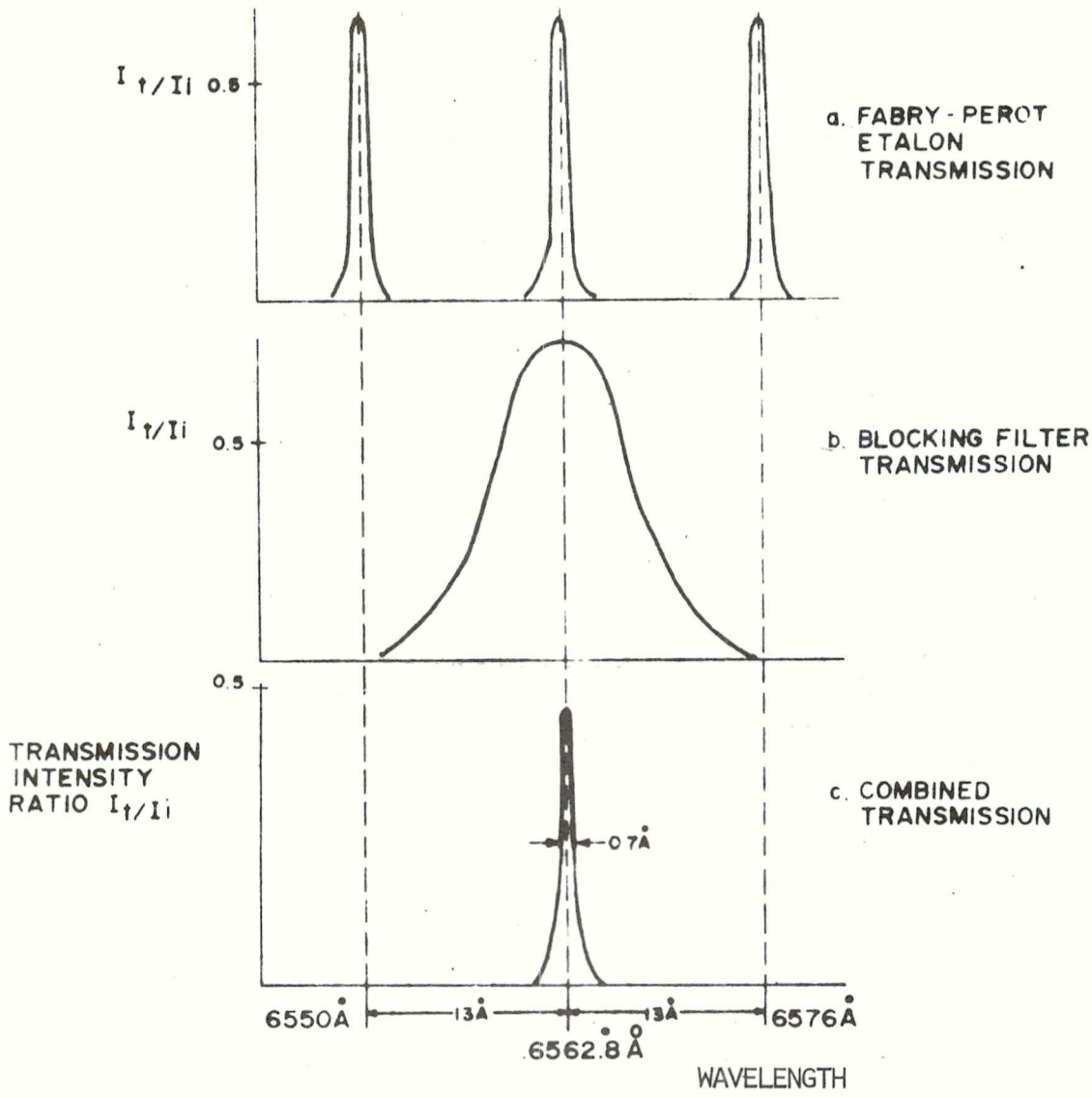

Figure 2.9.8-7 OPTICAL FILTER CHARACTERISTICS

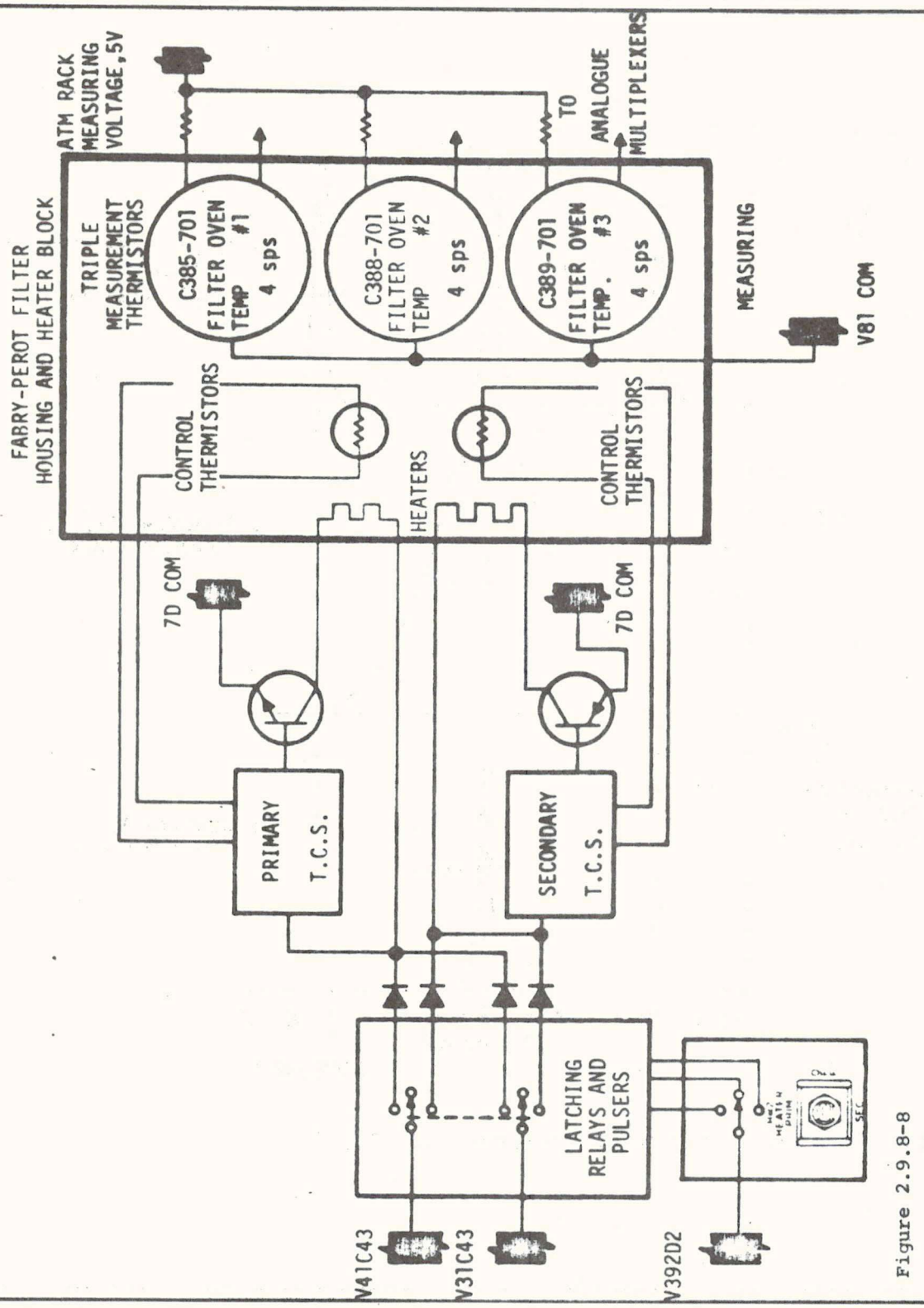

Figure 2.9.8-8

ATM Hα2TELESCOPE FILTER HEATER CONTROLS AND INSTRUMENTATION

derived from a stepper motor via a gear train. The motor electronics unit is similar to that of the MRS. (Figure 2.9.8-9). Mechanical over-drive stops are fitted and the motor windings are rated for continuous stall. The field of view and magnification can be linearly adjusted over a 5:1 range in 8 secs.

2.9.8.4.6 Television Camera - A vidicon camera head is mounted on the telescope. The video signal is taken to a camera control unit and video switch which are mounted at the MDA end of the ATM spar, outside of the canister. The astronaut at the C&D Console may switch on the camera and select the Hα2 picture to view on either, or both, of the monitors. (Figure 2.9.8-10). For the Hα2 picture to be relayed to the ground, it must be selected for one of those monitors. Synch signals, from one of two redundant synch generators and common to all ATM TV cameras, are not sumperimposed on the video signals (except that to the ground) but are taken to each module by separate cables.

Hα2

Most TV parameters are fixed before launch. The astronaut can adjust brightness and contrast on the C&D Console. A pair of perpendicular electronic cross-hairs is available on the monitor. Each line can be moved across the picture as desired. The cross-hairs are distinguishable from the reticle lines since the latter are black and the former light. The cross-hair intensity is adjustable.

2.9.8.5 Peformance and Design Data

Table 2.9.8-IV

Wavelength selection

Primary
- temperature controlled Fabry-Perot etalon and blocking filter
- central wavelength 6562.8 ±0.1Å
- spectral resolution (half-power bandwidth) etalon 0.7Å±0.1Å, blocker 7Å
- peak transmission >20%
- side-band rejection > density 4.0 from 4000Å to 8000Å
- filter coating sensitivity: etalon 44°F/Å, blocker 10°F/Å
- temperature adjustment range 70°F to 120°F
- filter clear aperture 2.5 inch
- controller stability ±0.5°F

Secondary
- heat rejection window
- transmission at 6563 Å >50%
- bandwidth 300Å
- reflectivity outside passband 0.99 (4100 Å to far infrared)

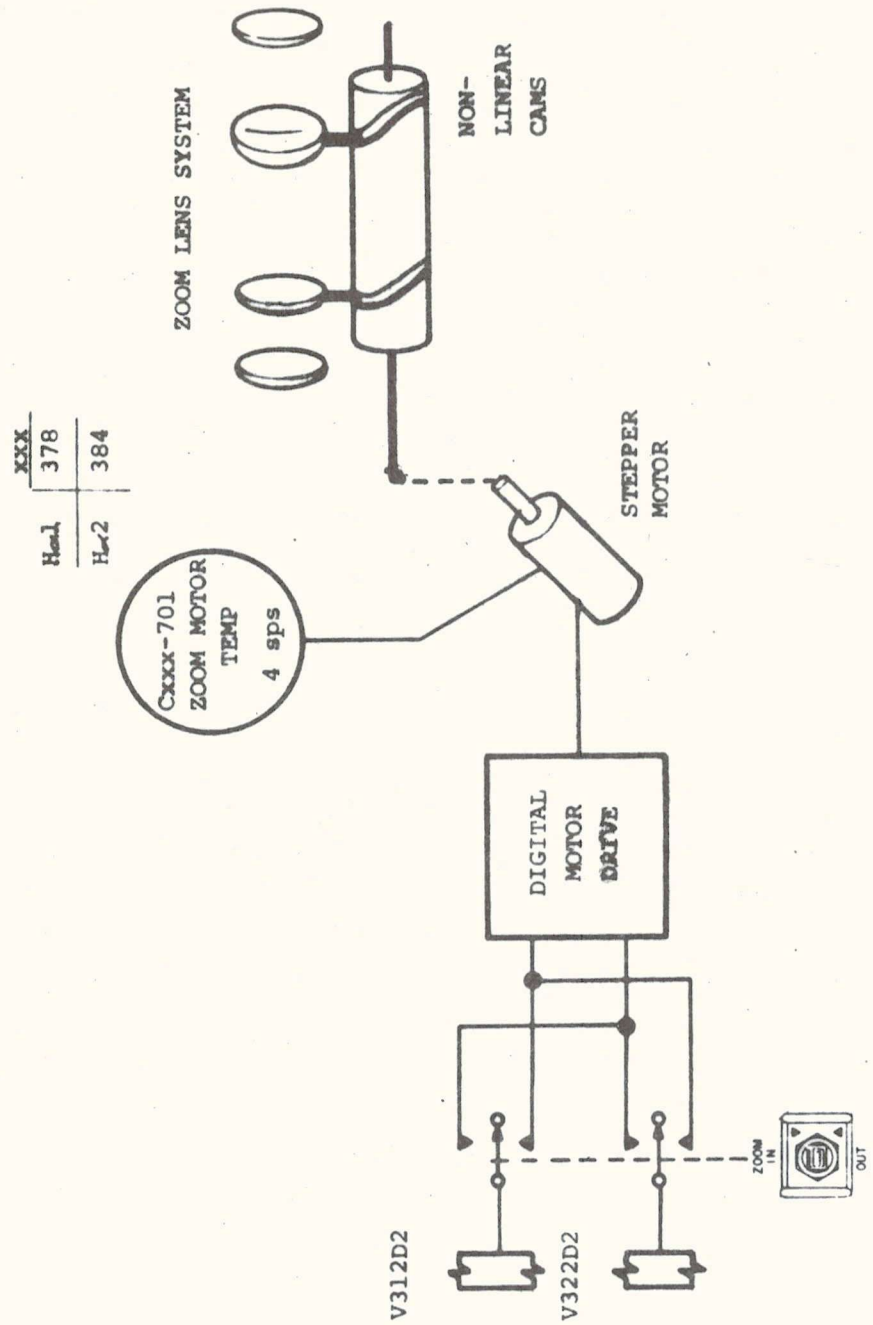

Figure 2.9.8-9 ATM Hα TELESCOPES ZOOM CONTROL (Typical for Hα1 and Hα2)

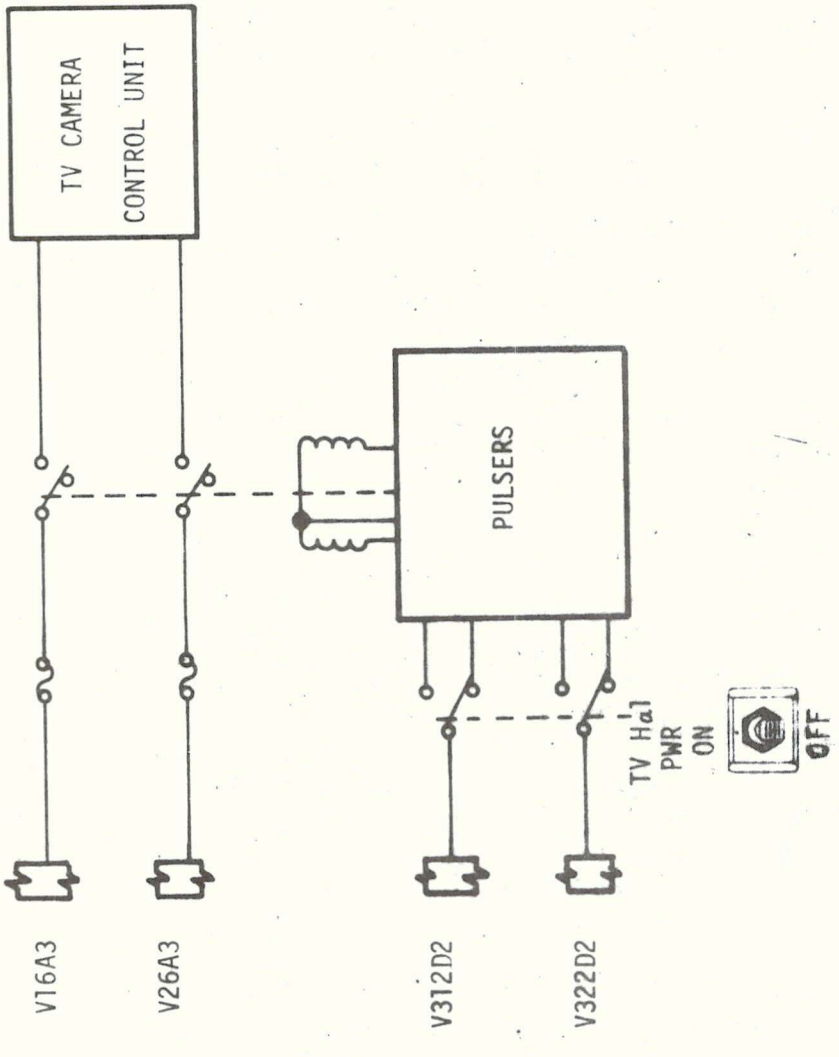

Figure 2.9.8-10 HαTELESCOPES TV POWER CONTROL (TYPICAL FOR Hal AND Hα2)

Cassegrain telescope
clear aperture 6.55 inch dia.
central obscuration 3 inch dia.
deviation from telecentricity < 30 arc minutes at edge of field

Zoom lens
zoom ratio 5:1
at maximum zoom; FOV 7.0 arc min
resolution 1.5 arc secs
at minimum zoom; FOV 35.0 arc min
resolution 5.0 arc secs
time for complete zoom 8 secs (+ 2, -0)

Mechanical reticle system

adjustment range >±3½ arc min (pitch and yaw)
setting accuracy 0.5 arc seconds
stability ±2.5 arc seconds for 15 hours
±0.5 arc seconds for 15 minutes
mutual perpendicularity within ± 5 arc min
translation across 7 arc min ∿ 80 secs (∿5 arc sec/sec)
fiducial marks at ± 0.0005 inch of MRS zeros and 45° to the zeros

Vidicon
EIA standard 525 line/frame; 2:1 interlace
resolution 600 TV lines at picture center
for maximum performance 1 foot candle
for adequate performance 0.1 foot candle
video bandwidth ± 1.0 dB to 7 MHZ
- 3 dB at 8 MHZ
format size (camera tube) 0.44 inch x 0.44 inch
monitor face circular, 6 inch dia.

Weights 120 lbs - complete instrument

Size 63 inch long x 10 inch dia
14½ inch high (includes feet and vidicon)

Operating temperature 70° ± 5°F

Pre-launch pitch - yaw alignment ±10 arc secs from FSS axis

Power requirements 28 Vdc (+2.5, - 2.0) 153.5 watts max
13.5 watts standby

5 Vdc (±0.02), 75 mW (ATM measuring voltage supply)

2.9.8.6 Operational Limitations and Restrictions

Operating Limits
Temperature 70 ± 5°F
Pointing UP/DN, L/R ± 22 arc min off solar line of sight
ROLL - No restriction

Fabry-PEROT filter at set temp. - 2 hrs. after switch-on
Hα2 reticle dedicated to S082B. The crossing of the lines will indicate the center of the S082B slit field.

Hα2

Marks

Zoom Out (full)	Reticles always in FOV Fiducials in FOV
Zoom In (full)	Reticles can be out of FOV Fiducials not in FOV

(Marks can only be seen against solar background)

In any 24 hr. period, the accumulated reticle operation is limited to 5 min. actual drive in one orbit plus 72 secs drive in each of the remaining orbits.

3.0 CONTROLS AND DISPLAYS

3.1 Introduction

This section contains detailed description of ATM controls and displays located on panels 130, 160, 121, 128 and 129. A cross-reference index of all ATM controls and displays is provided in Table 3.0-II. Each control and display is listed alphabetically within its associated ATM subsystem. The table also includes the control designation and the page number for each ATM control and display component.

Figures 3.0-3, 3.0-4, 3.0-5 and 3.0-6, located at the end of this section, illustrate the ATM control and display panel configurations, areas and functional designators.

Control and display components are itemized by panels and ATM subsystem grouping as they appear on the ATM control and display panels. Columar headings for the tabular presentation, and the description of the entries made under each are as follows:

a. System - Notes the ATM subsystem associated with the specific control or display component.

b. Name and Position - Notes the nomenclature of the component and its positions exactly as placarded on the panel. In the absence of placards, a functional name is assigned and control positions described.

c. Function - Provides a brief functional description of the control or display component.

d. Circuit Breaker - Identifies the nomenclature and location of the circuit breaker(s) that protect, control and distribute the electrical power to that specific control or display component.

e. Power Source - Identifies the voltage level and nomenclature of the immediate bus or source that supplies power to the control or display component.

f. Remarks - Provides additional functional information and explanatory remarks.

Figures 3.0-1 and 3.0-2 illustrate functional schematics of the ATM Controls and Displays Console (panel 130) power bus distribution and interfaces. ATM power buses shown are limited to those which originate in the ATM C&D console (panel 130) and in the Inverter-Lighting Control Assembly (I-LCA). Table 3.0-I contains a listing of the ATM power buses which are controlled, distributed and required by the ATM C&D console for its normal operation. These power buses are designated within the grouping of 310D thru 399D inclusive and listed by nomenclature, number and functional description.

TABLE 3.0-I

ATM C&D/I-LCA POWER BUSES

NOMENCLATURE	NUMBER	DESCRIPTION
VC/D 1	310D	C&D Bus 1
VC/D 2	320D	C&D Bus 2
VCDE 1	311D	CMD/Deploy/EVA Bus 1
VCDE 2	321D	CMD/Deploy/EVA Bus 2
VEXP 1	312D	C&D Experiment Bus 1
VEXP 2	322D	C&D Experiment Bus 2
VACS 1	313D	ACS Bus 1
VACS 2	323D	ACS Bus 2
VACS 3	399D	ACS Bus 3
VMON 1	316D	Monitor Bus 1
VMON 2	326D	Monitor Bus 2
VPWRD	390D	Power Display Bus
VTTP	391D	Thermal/Telemetry/Power Bus
VHα	392D	H-Alpha Bus
VSO56	393D	X-Ray Tele Bus
VSO82A	394D	XUV Spect Bus
VSO82B	395D	XUV Slit Bus
VSO52	396D	WLC Bus
VSO55	397D	Scan Spect Bus
VSO54	398D	X-Ray Spect Bus

TABLE 3.0-I (Cont'd)

ATM C&D/I-LCA POWER BUSES

NOMENCLATURE	NUMBER	DESCRIPTION
VALERT	371D	Alert Lighting Bus
VTACS ST	372D	TACS/CBRM Status Lighting Bus
VSTBU	373D	Alert/Status Lighting Backup Bus
VCBRM ST	374D	CBRM Status Lighting Sub-Bus
VSTATUS	381D	Status Lighting Bus
VATM AC 1	361D	ATM AC Bus 1
VATM AC 2	362D	ATM AC Bus 2
VINTG	363D	Integral Lighting Bus
VNUM	364D	Numeric Lighting Bus

3.2 Inverter-Lighting Control Assembly (I-LCA)

3.2.1 The I-LCA provides regulated and unregulated electrical power, both alternating current (ac) and direct current (dc), to the ATM Controls and Displays Console. These various types of power are required for the operation of the console display components and the electroluminescent lighting of the console nomenclature and display components.

3.2.2 The I-LCA is located externally on the forward conical section of the MDA and mounted on the L-band antenna truss. Electrical input power is provided to the unit by the ATM power busses with input and output circuit breakers located on the ATM controls and displays panel. The two 90-watt heaters located internal to the I-LCA are provided input power from the AM power busses and its associated circuit breakers are located on the STS controls and displays (panel 202).

3.2.3 The following paragraphs describe the I-LCA electrical power outputs and a general functional description:

a. Fixed AC power output - 115 vac, single phase, 400 H_z, 30-watts maximum, provides input power to X-RAY SPECT CRT electronic assembly, MONITOR COUNTERS 1,2,3, SCAN SPECT INTENSITY DATA indicator, DAS indicator and EVENT TIME indicator.

b. Fixed AC power output - 115 vac, single phase, 400 H_z, 85-watts maximum, provides backup input power to components itemized in sections a,c and d.

c. Variable AC power output - 40 to 130 vac, single phase, 400 H_z, 43-watts maximum, provides input power for variable integral electroluminescent lighting of the ATM controls and displays console panels and display components which employ integral lighting such as analog vertical meters, status talkbacks, cross-pointer meter and history plotter.

d. Variable AC power output - 40 to 130 vac, single phase, 400 H_z, 12-watts maximum, provides input power for variable numeric electroluminescent lighting of the ATM controls and displays console components which employ numeric lighting such as MONITOR COUNTERS 1,2,3, pulse counters, DAS indicator, X-RAY SPECT indicators, SCAN SPECT INTENSITY DATA indicator, EVENT TIME indicator and cross-pointer indicator.

e. Fixed Regulated DC Power Output - 5 vdc, 25-watts maximum, provides fixed input power for the lighting of the TACS and CBRM status lights.

f. Fixed Unregulated DC Power Output - 5.0 to 5.5 vdc, 60-watts maximum, provides fixed and unregulated backup input power for the lighting of all display components itemized in sections e, g and h.

g. Variable DC Power Output - 3.5 to 5.0 vdc, 25-watts maximum, provides variable input power for the lighting of the ALERT lights.

h. Variable DC Power Output - 2.0 to 5.0 vdc, 10-watts maximum, provides variable input power for the lighting of the ATM controls and display console status lights such as READY/OPERATE, X-RAY/RF, and indicator power failure lights.

Figure 3.0-2 illustrates the functional block diagram of the I-LCA and its electrical interface with the ATM Controls and Displays console.

C&D

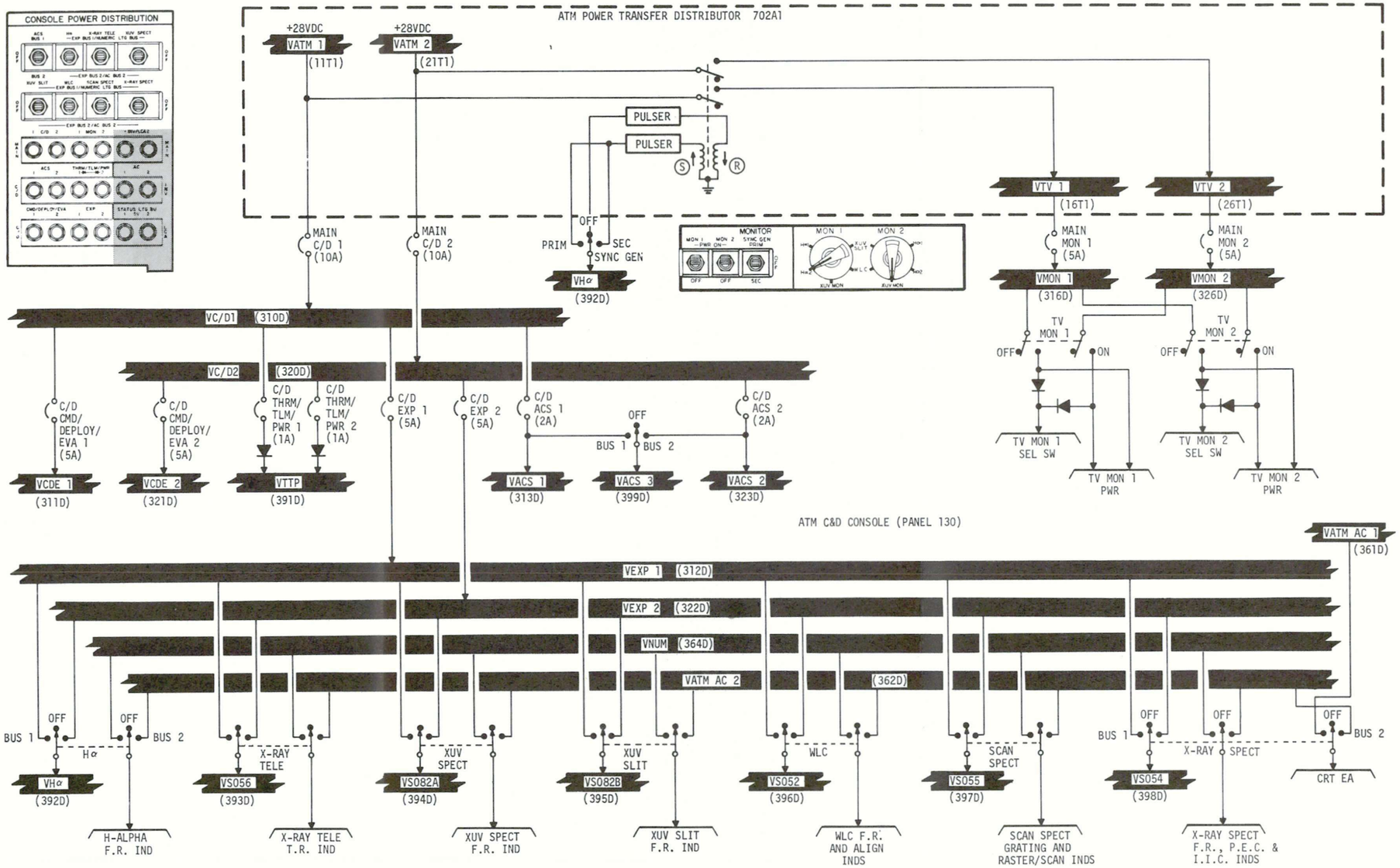

Figure 3.0-1 ATM C&D Console Power Distribution (Sheet 1)

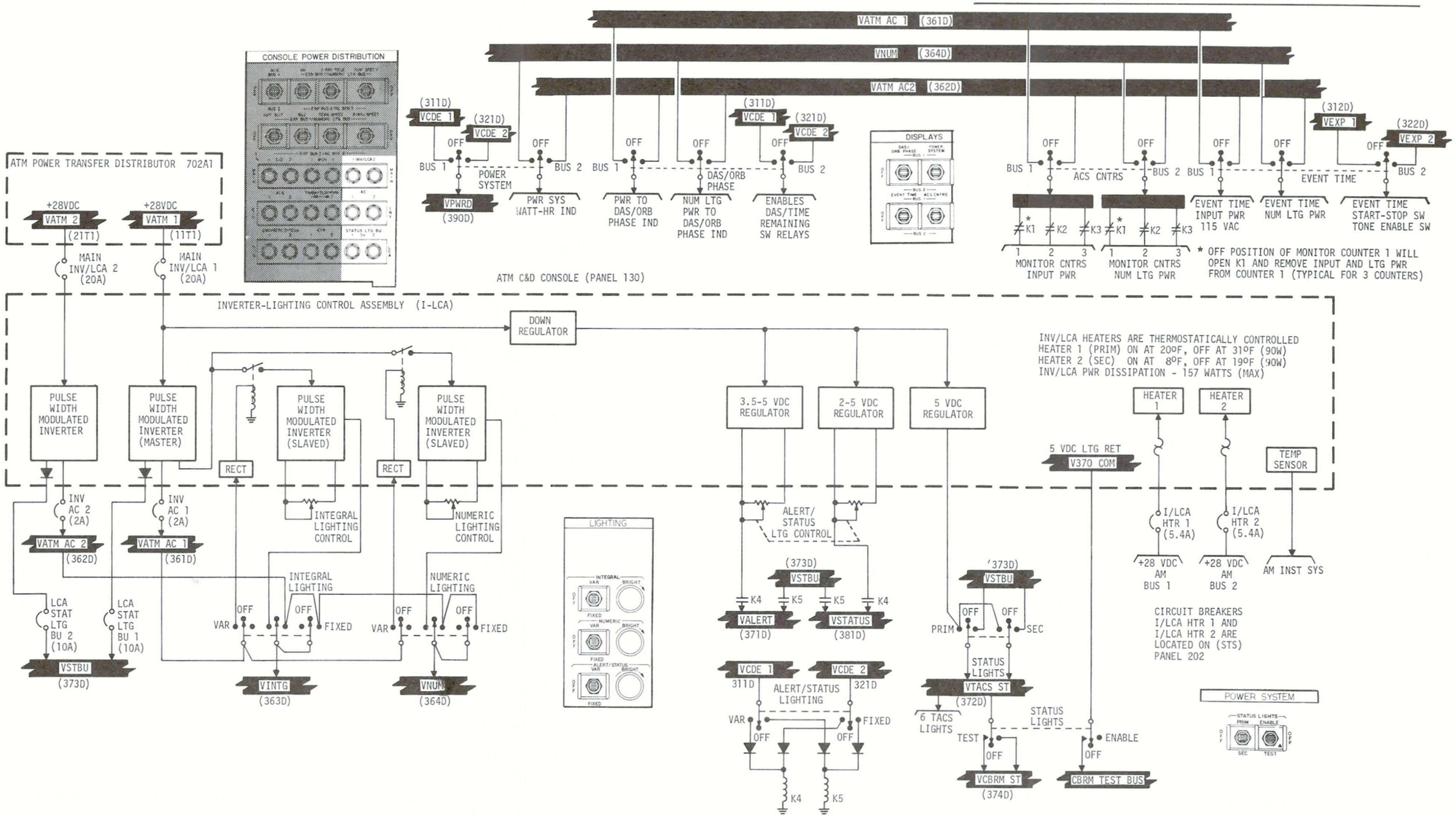

Figure 3.0-2 ATM C&D Console Power Distribution (Sheet 2)

Table 3.0-II ATM Controls and Displays Subsystem Index (Sheet 1 of 12 sheets)

NAME AND CONTROL DESIGNATION	PANEL NO.	PAGE NO.
DISPLAYS		
ACS CNTRS switch	130	3-27
DAS/ORB PHASE switch	130	3-25
EVENT TIME switch	130	3-26
POWER SYSTEM switch	130	3-26
DEPLOY		
SCAN SPECT MIRROR switch	130	3-29
SOLAR ARRAY 1/3 switch	130	3-29
SOLAR ARRAY 2/4 switch	130	3-29
FILM RESET		
FILM RESET selector switch	130	3-30
FILM RESET switch	130	3-30
CANISTER THERMAL		
CONTROLLER switch	130	3-31
HTR PWR switch	130	3-32
MONITOR indicator	130	3-31
MONITOR indicator pwr fail lt	130	3-31
MONITOR switch	130	3-32
PUMP switch	130	3-31
LIGHTING		
ALERT/STATUS control	130	3-34
ALERT/STATUS switch	130	3-34
INTEGRAL control	130	3-33
INTEGRAL switch	130	3-33
LAMP TEST selector switch	130	3-34
NUMERIC control	130	3-33
NUMERIC switch	130	3-33

Table 3.0-II ATM Controls and Displays Subsystem Index (Sheet 2 of 12 sheets)

NAME AND CONTROL DESIGNATION	PANEL NO.	PAGE NO.
EVENT TIME		
EVENT TIME indicator	130	3-36
SLEW MIN switch	130	3-36
SLEW SEC switch	130	3-37
START/STOP switch	130	3-37
TONE switch	130	3-37
XUV SLIT switch	130	3-36
XUV SPECT switch	130	3-36
CONSOLE POWER DISTRIBUTION		
ACS switch	130	3-38
C/D ACS 1 circuit breaker	130	3-43
C/D ACS 2 circuit breaker	130	3-43
C/D CMD/DEPLOY/EVA 1 circuit breaker	130	3-44
C/D CMD/DEPLOY/EVA 2 circuit breaker	130	3-44
C/D EXP 1 circuit breaker	130	3-45
C/D EXP 2 circuit breaker	130	3-45
C/D THRM/TLM/PWR 1 circuit breaker	130	3-43
C/D THRM/TLM/PWR 2 circuit breaker	130	3-43
Hα switch	130	3-38
INV AC 1 circuit breaker	130	3-44
INV AC 2 circuit breaker	130	3-44
LCA STATUS LTG BU 1 circuit breaker	130	3-45
LCA STATUS LTG BU 2 circuit breaker	130	3-45
MAIN C/D 1 circuit breaker	130	3-42
MAIN C/D 2 circuit breaker	130	3-42
MAIN INV/LCA 1 circuit breaker	130	3-42
MAIN INV/LCA 2 circuit breaker	130	3-43
MAIN MON 1 circuit breaker	130	3-42
MAIN MON 2 circuit breaker	130	3-42
SCAN SPECT switch	130	3-41
WLC switch	130	3-40
X-RAY SPECT switch	130	3-41
X-RAY TELE switch	130	3-38
XUV SLIT switch	130	3-40
XUV SPECT switch	130	3-39
ORBIT PHASE		
TIME REMAINING/DIGITAL ADDRESS ind	130	3-47
TIME REMAINING/DIGITAL ADDRESS tb	130	3-47

C&D

Table 3.0-II ATM Controls and Displays Subsystem Index (Sheet 3 of 12)

NAME AND CONTROL DESIGNATION	PANEL NO.	PAGE NO.
DAS		
KEY CLR pushbutton switch	130	3-48
KEY ENTR pushbutton switch	130	3-48
KEY 0 to 7 pushbutton switches (8)	130	3-48
PWR switch	130	3-48
GROUND/DAS		
ACS switch	130	3-51
CMPTR switch	130	3-50
CSTR THRM switch	130	3-51
EXP/TV switch	130	3-51
GRD CMD switch	130	3-51
PWR SYS switch	130	3-50
TLM switch	130	3-50
EVA		
AUTO DOOR switch	130	3-52
ROLL switch	130	3-52
ALERT		
ACS light	130	3-54
AL COUNT light	130	3-53
BAT CHG light	130	3-53
BE COUNT light	130	3-53
BRG TEMP 1,2,3 lights (3)	130	3-54
CMG MALF light	130	3-54
CMPTR REJ light	130	3-54
DOOR OPEN light	130	3-53
PWR SYS light	130	3-53
SCAN SPECT light	130	3-53
X-REA HV light	130	3-53
TELEMETRY		
TAPE RECORDER 1 OFF switch	130	3-59
TAPE RECORDER 1 RECORD switch	130	3-58
TAPE RECORDER 1 talkback	130	3-58
TAPE RECORDER 2 OFF switch	130	3-59
TAPE RECORDER 2 RECORD switch	130	3-58

Table 3.0-II ATM Controls and Displays Subsystem Index (Sheet 4 of 12)

NAME AND CONTROL DESIGNATION	PANEL NO.	PAGE NO.
TAPE RECORDER 2 talkback	130	3-59
TLM PWR switch	130	3-55
TLM PWR talkback	130	3-55
TRANSMITTER 1 INPUT switch	130	3-55
TRANSMITTER 1 INPUT talkback	130	3-55
TRANSMITTER 1 OUTPUT switch	130	3-56
TRANSMITTER 1 OUTPUT talkback	130	3-57
TRANSMITTER 2 INPUT switch	130	3-56
TRANSMITTER 2 INPUT talkback	130	3-56
TRANSMITTER 2 OUTPUT switch	130	3-57
TRANSMITTER 2 OUTPUT talkback	130	3-57
ATTITUDE CONTROL SYSTEM		
CMPTR switch	130	3-70
CMPTR talkback	130	3-70
CMG SYSTEM 1,2,3 switches (3)	130	3-73
CMG SYSTEM 1,2,3 talkbacks (3)	130	3-74
EPC RATE GYRO UP/DN switch	130	3-61
EPC RATE GYRO L/R switch	130	3-62
EPC ROLL RSLVR switch	130	3-60
EPC 800 H_Z switch	130	3-60
EPEA switch	130	3-71
FSS switch	130	3-61
FSS BIAS Hαl switch	130	3-68
FSS BIAS IN switch	130	3-69
FSS BIAS MARK switch	130	3-69
FSS BIAS XUV SLIT switch	130	3-68
FSS DOOR switch	130	3-66
FSS DOOR talkback	130	3-67
MODE ATT HOLD switch	130	3-63
MODE ATT HOLD talkback	130	3-64
MODE EXP PTG switch	130	3-62
MODE EXP PTG talkback	130	3-62
MODE SOLAR INERTIAL switch	130	3-63
MODE SOLAR INERTIAL talkback	130	3-63
MOMENTUM DUMP AUTO GG switch	130	3-67
MOMENTUM DUMP AUTO GG talkback	130	3-67
MOMENTUM DUMP CAGE switch	130	3-67
MOMENTUM DUMP CAGE talkback	130	3-68
RATE GYRO MONITOR X switch	130	3-74
RATE GYRO MONITOR X talkback	130	3-75

C&D

Table 3.0-II ATM Controls and Displays Subsystem Index (Sheet 5 of 12)

NAME AND CONTROL DESIGNATION	PANEL NO.	PAGE NO.
RATE GYRO MONITOR Y switch	130	3-74
RATE GYRO MONITOR Y talkback	130	3-75
RATE GYRO MONITOR Z switch	130	3-74
RATE GYRO MONITOR Z talkback	130	3-75
SR/SS switch	130	3-64
SR/SS talkback	130	3-64
STAR TRACK ACQ switch	130	3-65
STAR TRACK ACQ talkback	130	3-65
STAR TRACK POWER switch	130	3-65
STAR TRACK SHUTTER switch	130	3-66
STAR TRACK SHUTTER talkback	130	3-66
SUN ACQ SENSOR talkback	130	3-69
SUN ACQ SUN PRESENT talkback	130	3-70
TACS 1,2,3,4,5,6 lights (6)	130	3-72
TACS 1,2,3,4,5,6 switches (6)	130	3-72
MONITOR		
ACS indicator	130	3-77
ACS indicator pwr fail light	130	3-77
ACS selector switch	130	3-76
ANGLE indicator	130	3-77
ANGLE indicator pwr fail light	130	3-77
ANGLE selector switch	130	3-77
COUNTER 1 indicator	130	3-79
COUNTER 1 selector switch	130	3-78
COUNTER 1 talkback	130	3-82
COUNTER 2 indicator	130	3-80
COUNTER 2 selector switch	130	3-79
COUNTER 2 talkback	130	3-82
COUNTER 3 indicator	130	3-81
COUNTER 3 selector switch	130	3-80
COUNTER 3 talkback	130	3-82
MANUAL POINTING CONTROL		
MAN PTG ENABLE switch	130	3-84
MAN PTG talkback	130	3-84
MPC lever	130	3-83
ROLL ENABLE switch	130	3-83
ROLL GAIN switch	130	3-84
ROLL HIGH RATE switch	130	3-83
ROLL LOW RATE switch	130	3-84

Table 3.0-II ATM Controls and Displays Subsystem Index (Sheet 6 of 12)

NAME AND CONTROL DESIGNATION	PANEL NO.	PAGE NO.
POWER SYSTEM		
BAT CHG talkback	130	3-86
BAT TEMP talkback	130	3-85
BAT VOLTS talkback	130	3-85
CBRM ALL ON switch	130	3-91
CBRM SELECT selector switch	130	3-89
CBRM STATUS BAT 1 thru 18 lights (18)	130	3-88
CBRM STATUS CHGR 1 thru 18 lights (18)	130	3-88
CBRM STATUS REG 1 thru 18 lights (18)	130	3-88
CHGR switch	130	3-90
Power Monitor selector switch	130	3-89
REG switch	130	3-91
REG/BAT indicator	130	3-88
REG/BAT indicator pwr fail light	130	3-87
REG/BUS/BAT indicator	130	3-87
REG/BUS/BAT indicator pwr fail light	130	3-87
REG VOLTS talkback	130	3-86
SELECT switch	130	3-91
STATUS LIGHTS ENABLE switch	130	3-90
STATUS LIGHTS PRIM switch	130	3-89
WATT-HOUR indicator	130	3-88
WATT-HOUR RESET switch	130	3-88
H-ALPHA		
Hα1 AUTO switch	130	3-94
Hα1 CAMR PWR switch	130	3-92
Hα1 DOOR switch	130	3-92
Hα1 DOOR talkback	130	3-92
Hα1 FR/MIN switch	130	3-93
Hα1 FRAMES REMAINING indicator	130	3-94
Hα1 HEATER switch	130	3-93
Hα1 NIGHT INTLK switch	130	3-94
Hα1 READY/OPR lights	130	3-94
Hα2 DOOR switch	130	3-92
Hα2 DOOR talkback	130	3-93
Hα2 HEATER switch	130	3-95

C&D

Table 3.0-II ATM Controls and Displays Subsystem Index (Sheet 7 of 12)

NAME AND CONTROL DESIGNATION	PANEL NO.	PAGE NO.
X-RAY TELE		
AL APRT POS AUTO switch	130	3-99
AL APRT POS INCR switch	130	3-99
AL APRT POS 1/2 talkback	130	3-99
AL APRT POS 3/4 talkback	130	3-99
BE APRT POS AUTO switch	130	3-97
BE APRT POS INCR switch	130	3-98
BE APRT POS 1/2 talkback	130	3-98
BE APRT POS 3/4 talkback	130	3-98
CAMERA AIRLOCK switch	130	3-100
CAMR PWR switch	130	3-100
CAMR/TELE selector switch	130	3-101
DOOR switch	130	3-97
DOOR talkback	130	3-97
EXPOSURE switch	130	3-103
FILTER 1/2 talkback	130	3-103
FILTER 3/4 talkback	130	3-103
FILTER 5/6 talkback	130	3-103
FLARE switch	130	3-103
FRAMES REMAINING indicator	130	3-103
HV PWR AL switch	130	3-96
HV PWR BE switch	130	3-96
READY/OPR lights	130	3-104
START/STOP switch	130	3-104
THERMAL switch	130	3-104
X-REA PWR switch	130	3-96
X-RAY/RF ACTIVITY		
CLOCK indicator	130	3-106
DATA DRIVE BE switch	130	3-105
DATA DRIVE FORWARD switch	130	3-105
DATA DRIVE RECORD switch	130	3-105
HISTORY PLOT indicator	130	3-106

Table 3.0-II ATM Controls and Displays Subsystem Index (Sheet 8 of 12)

NAME AND CONTROL DESIGNATION	PANEL NO.	PAGE NO.
XUV SPECT		
EXPOSURE switch	130	3-109
EXPOSURE talkback	130	3-110
FLARE switch	130	3-110
FLARE talkback	130	3-110
FRAMES REMAINING indicator	130	3-111
MAIN PWR switch	130	3-107
MODE switch	130	3-108
PWR/DOORS switch	130	3-107
PWR/DOORS talkback	130	3-107
READY/OPR lights	130	3-111
START/STOP switch	130	3-111
THERMAL switch	130	3-111
WAVE LTH switch	130	3-108
WAVE LTH talkback	130	3-109
XUV SLIT		
AUTO SEQ switch	130	3-114
FLARE switch	130	3-114
FLARE talkback	130	3-115
FRAMES REMAINING indicator	130	3-115
MAIN PWR switch	130	3-112
MODE switch	130	3-113
PWR/DOORS switch	130	3-112
PWR/DOORS talkback	130	3-112
READY/OPR lights	130	3-116
START/STOP switch	130	3-115
THERMAL switch	130	3-116
WAVE LTH switch	130	3-113
WAVE LTH talkback	130	3-114
WLC		
ALIGN switch	130	3-121
AUTO DOOR switch	130	3-118
DOOR switch	130	3-117
DOOR talkback	130	3-117
FRAMES REMAINING indicator	130	3-119
LOW FILM INHIBIT switch	130	3-119
MAIN PWR switch	130	3-117

C&D

Table 3.0-II ATM Controls and Displays Subsystem Index (Sheet 9 of 12)

NAME AND CONTROL DESIGNATION	PANEL NO.	PAGE NO.
MIR POS switch	130	3-121
MODC switch	130	3-122
MODE selector switch	130	3-118
READY/OPR lights	130	3-120
SCALE switch	130	3-121
SEQUENCE COMPLETE talkback	130	3-120
START/STOP switch	130	3-120
THERMAL switch	130	3-120
WLC ALIGN indicator	130	3-122
WLC ALIGN indicator pwr fail light	130	3-122
SCAN SPECT		
DET ELECT TEST switch	130	3-127
DET SEL switch	130	3-127
DOOR switch	130	3-125
DOOR talkback	130	3-125
EXP NIGHT INTLK switch	130	3-127
GRATING MOTOR DRIVE switch	130	3-131
GRATING POSITION indicator	130	3-128
GRATING REF switch	130	3-130
HV 1 ENABLE/RESET switch	130	3-125
HV 2 ENABLE/RESET switch	130	3-124
HV 3 ENABLE/RESET switch	130	3-124
HV 4 ENABLE/RESET switch	130	3-124
HV 5 ENABLE/RESET switch	130	3-123
HV 6 ENABLE/RESET switch	130	3-123
HV 7 ENABLE/RESET switch	130	3-123
HV/DOOR INTLK switch	130	3-127
INTENSITY DATA indicator	130	3-126
INTENSITY DATA switch	130	3-126
LINE SEL switch	130	3-129
MAIN HV switch	130	3-126
MAIN PWR switch	130	3-126
MIR LIMIT talkback	130	3-130
MODE selector switch	130	3-128
O-ORDER talkback	130	3-130
RASTER/SCAN COUNTER indicator	130	3-128
RASTER/SCAN RESET switch	130	3-128
READY/OPR lights	130	3-131
START/STOP switch	130	3-130
THERMAL switch	130	3-131

Table 3.0-II ATM Controls and Displays Subsystem Index (Sheet 10 of 12)

NAME AND CONTROL DESIGNATION	PANEL NO.	PAGE NO.
X-RAY SPECT		
BRIGHTNESS control	130	3-139
DOOR switch	130	3-132
DOOR talkback	130	3-132
EXPOSURE RANGE selector switch	130	3-137
FILTER CONFIRM talkback	130	3-134
FILTER selector switch	130	3-133
MODE FLARE switch	130	3-134
FLARE THRESHOLD COARSE selector switch	130	3-138
FLARE THRESHOLD FINE selector switch	130	3-138
FOCUS control	130	3-139
FRAMES REMAINING indicator	130	3-134
GRATING switch	130	3-136
GRATING talkback	130	3-136
IMAGE DISSECTOR switch	130	3-133
IMAGE INTENSITY COUNT indicator	130	3-138
IMAGE THRESHOLD selector switch	130	3-138
MAIN PWR switch	130	3-132
PICTURE RATE selector switch	130	3-136
PHOTO MULT ENABLE switch	130	3-133
PHOTOMULTIPLIER EXPOSURE COUNT ind	130	3-138
PHOTO MULT TEST switch	130	3-135
READY/OPR lights	130	3-135
START/STOP switch	130	3-134
THERMAL switch	130	3-135
X-RAY IMAGE monitor	130	3-138
X-RAY IMAGE switch	130	3-133
MASTER FLARE MODE		
TONE ENBL switch	130	3-140
INIT switch	130	3-140
X-RAY/RF lights	130	3-140
EVENT TIME TONE VOL ADJ control	130	3-140
FLARE ALERT TONE VOL ADJ control	130	3-140

C&D

Table 3.0-II ATM Controls and Displays Subsystem Index (Sheet 11 of 12)

NAME AND CONTROL DESIGNATION	PANEL NO.	PAGE NO.
TV		
Hα1 PWR switch	130	3-141
Hα1 ZOOM switch	130	3-141
Hα2 PWR switch	130	3-142
Hα2 ZOOM switch	130	3-142
Hα RC switch	130	3-141
Hα RETICLE switch	130	3-141
MON 1 PWR switch	130	3-142
MON 1 BRIGHTNESS thumbwheel	130	3-147
MON 1 CONTRAST thumbwheel	130	3-147
MON 1 CROSS HAIR INTENSITY thumbwheel	130	3-147
MON 1 HORIZONTAL CROSS HAIR thumbwheel	130	3-147
MON 1 monitor	130	3-147
MON 1 VERTICAL CROSS HAIR thumbwheel	130	3-147
MON 1 selector switch	130	3-143
MON 2 PWR switch	130	3-142
MON 2 BRIGHTNESS thumbwheel	130	3-148
MON 2 CONTRAST thumbwheel	130	3-148
MON 2 CROSS HAIR INTENSITY thumbwheel	130	3-148
MON 2 HORIZONTAL CROSS HAIR thumbwheel	130	3-148
MON 2 monitor	130	3-147
MON 2 VERTICAL CROSS HAIR thumbwheel	130	3-148
MON 2 selector switch	130	3-143
SYNC GEN switch	130	3-143
WLC GRID switch	130	3-147
WLC PWR switch	130	3-146
XUV MON DOOR switch	130	3-144
XUV MON DOOR talkback	130	3-144
XUV MON GAIN selector switch	130	3-143
XUV MON GRID switch	130	3-145
XUV MON PWR switch	130	3-143
XUV MON VID INTEG switch	130	3-144
XUV SLIT LIMB PTG switch	130	3-146
XUV SLIT LIMB PTG talkback	130	3-146
XUV SLIT WL DISPLAY switch	130	3-145
ATM		
ATM POWER switch	130	3-148

Table 3.0-II ATM Controls and Displays Subsystem Index (Sheet 12 of 12)

NAME AND CONTROL DESIGNATION	PANEL NO.	PAGE NO.
DAS BACKUP		
CLEAR switch	121	3-150
DATA TRANS switch	121	3-149
DIGIT 1 selector switch	121	3-149
DIGIT 2 selector switch	121	3-149
DIGIT 3 selector switch	121	3-149
DIGIT 4 selector switch	121	3-149
DIGIT 5 selector switch	121	3-149
ENTER switch	121	3-149
CANISTER CONTROL		
CANISTER ROTATION control	160	3-152
S082 DOORS switch	160	3-151
POWER PRIM circuit breaker switch	160	3-151
POWER SEC circuit breaker switch	160	3-151
ROLL switch	160	3-151
S082 DOORS A light	160	3-152
S082 DOORS B light	160	3-152
RADIO NOISE BURST MONITOR		
CAL NOISE SOURCE selector switch	128/129	3-153
ENABLE light	128/129	3-154
ONTIME push-button indicator	128/129	3-154
ORBIT PERIOD push-button indicator	128/129	3-154
POWER switch	128/129	3-155
REF BAL control	128/129	3-153
SOLAR RADIO NOISE BURST MONITOR indicator	128/129	3-153
START switch	128/129	3-154
SWITCHING MODE selector switch	128/129	3-153
SYSTEM GAIN control	128/129	3-153
THRESHOLD control	128/129	3-154

C&D

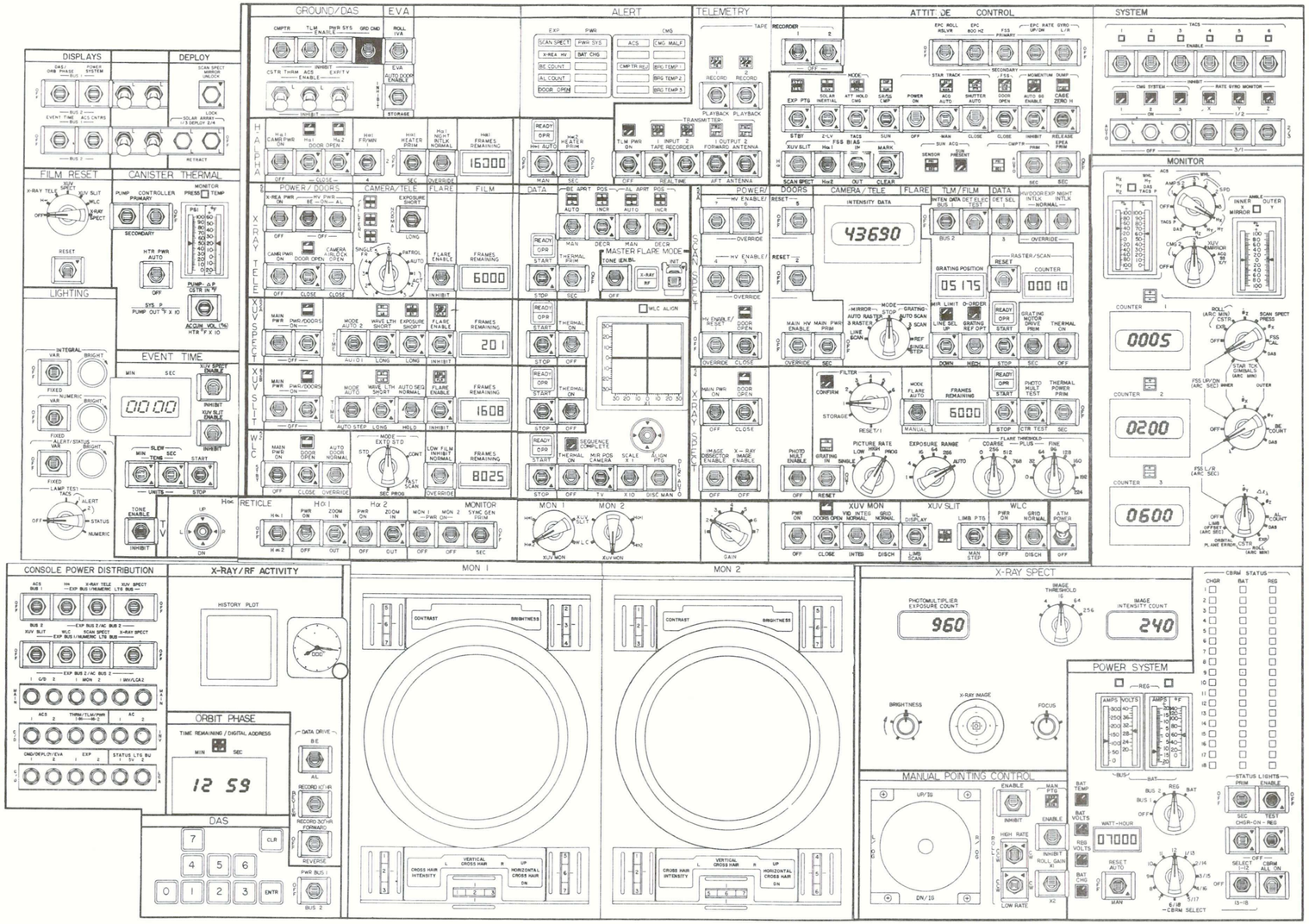

COMPOSITE OF SHEETS 1 THRU 10
OF ICD 40M37871 REV L
ATM C&D PANEL CONFIGURATION

LEGEND: (SHEETS 2 THRU 10)

POSITION CODE

- MOMENTARY
- LASTING (LOCKING SWITCH ONLY)
- SYMBOL A & L NOT TO BE INCLUDED ON PANEL

FLAG INDICATIONS

- COLOR-GRAY: NORMAL, NOT-INHIBITED, ON, OPEN
- COLOR-WHITE: ABNORMAL, NOT COMPLETE
- COLOR BLACK & WHITE: DEACTIVATED, INHIBITED, OFF, CLOSED
- LTR: WHITE LETTERS ON GRAY BACKGROUND
- OPN: INDICATION (ACS) TO BE BLACK LETTERS ON WHITE BACKGROUND (2 PLACES)

INDICATOR LIGHT COLORS

PER MIL-C-25050, TYPE I — CBRM-YELLOW — STATUS, OPERATE-WHITE
METER FAILURE-YELLOW — TACS-GREEN
X-RAY/RF-GREEN
ALERT-BLUE — STATUS, READY-GREEN

PANEL COLOR

BACKGROUND-GREY PER FED-STD-595 COLOR 36231
NOMENCLATURE-WHITE COLOR 37875 ELECTROLUMINESCENT EXCEPT MON1, MON2, ON PANELS 7&8, AND UP/IG, DN/IG, R/OG, L/OG ON MPC ARE ENGRAVED AND FILLED WITH WHITE PER FED-STD-595 COLOR 37875
STYLE OF LETTERS & NUMERALS GORDON NORMAL (ENGRAVED)
STYLE OF LETTERS & NUMERALS FUTURA DEMI BOLD (ELECTROLUMINESCENT)
BORDER & GRID-ATM POWER OFF BORDER LINES TO BE FLUORESCENT RED, VELVA-GLO RED BY RADIANT COLOR CO.
EXPERIMENT AND COMPONENT GROUPING LINES, BOTH VERTICAL & HORIZONTAL WHITE PER FED-STD-595 COLOR 37875
SWITCH CHANNEL GROUND/DAS GRD CMD ONLY WHITE PER FED-STD-595 COLOR 37875.

Figure 3.0-3 ATM C&D Console Configuration (Panel 130)

C&D

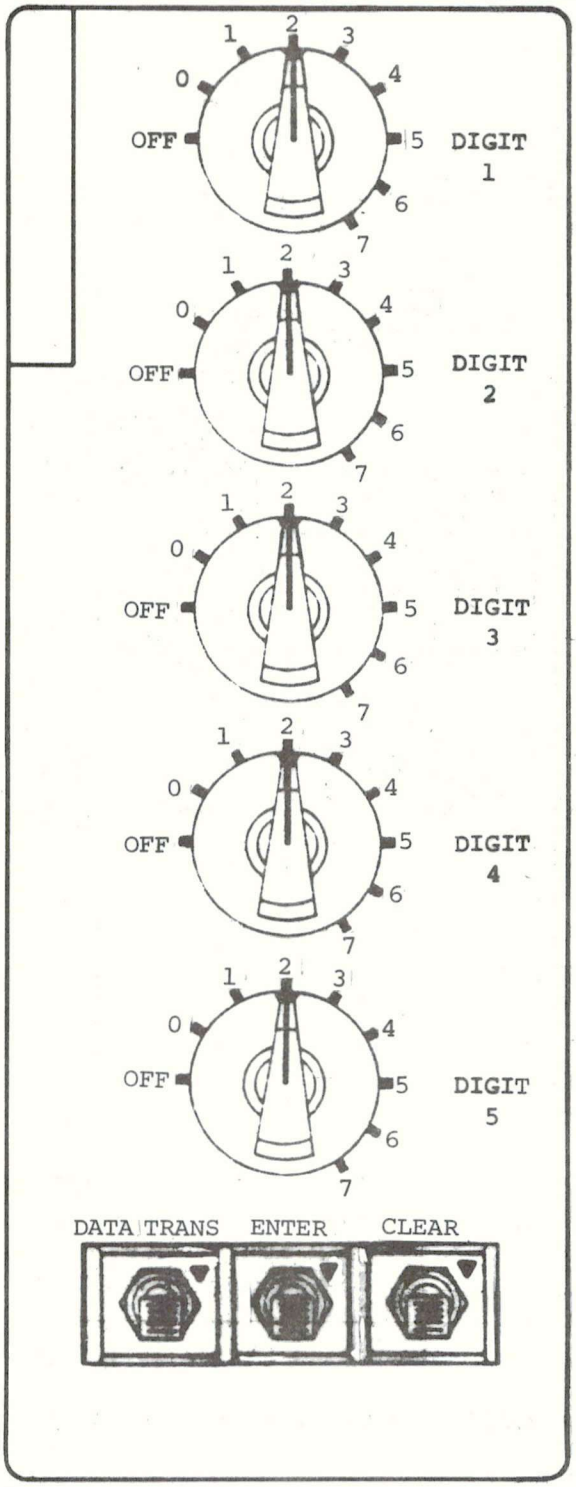

Figure 3.0-4 ATM DAS Backup (Panel 121)

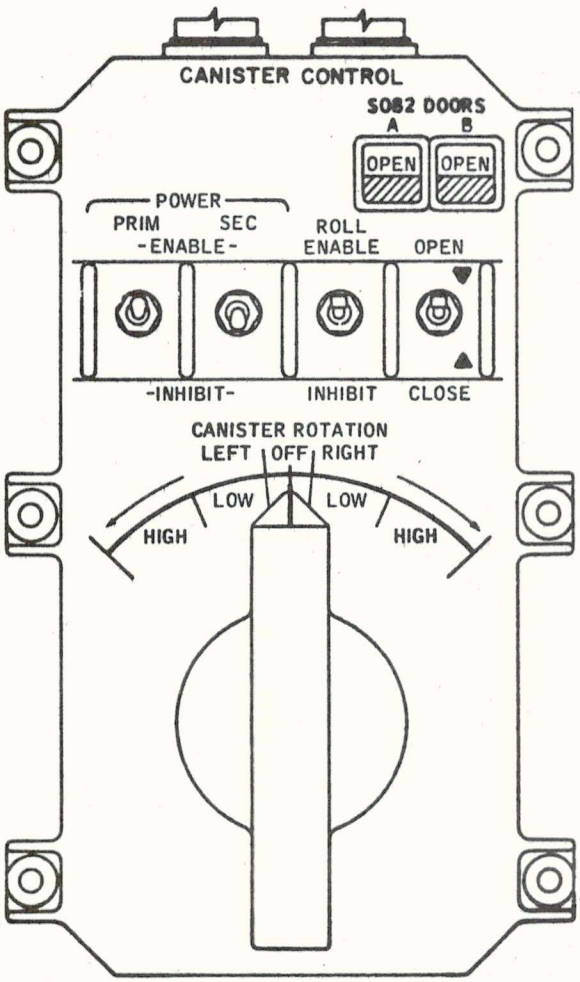

Figure 3.0-5 ATM Canister Control (Panel 160)

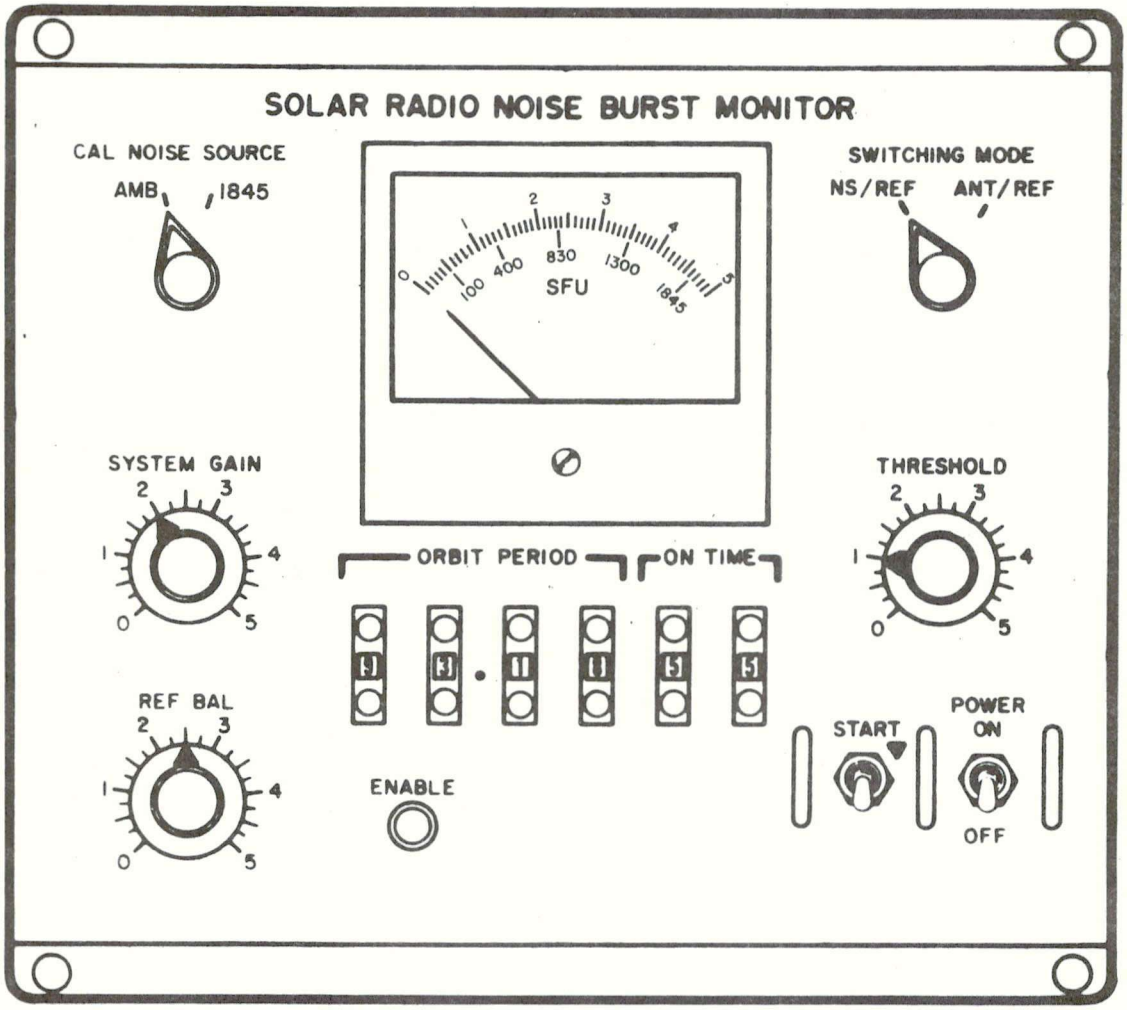

Figure 3.0-6 ATM Solar Radio Noise Burst Monitor
(Panels 128 & 129)

ATM CONTROLS AND DISPLAYS (PANEL 130)

SYSTEM	NAME AND POSITION	FUNCTION	CIRCUIT BREAKER	POWER SOURCE	REMARKS
DISPLAYS	DAS/ORB PHASE switch				
	BUS 1	Provides 115 vac, 400 Hz, ATM AC BUS 1, input power to ORBIT PHASE, TIME REMAINING/ DIGITAL ADDRESS indicator.	INV AC 1	115 vac, 400 Hz VATM AC 1 (361D)	
		Provides 40-130 vac, 400 Hz, Numeric Lighting Bus, VNUM, power to ORBIT PHASE, TIME REMAINING/DIGITAL ADDRESS indicator when LIGHTING, NUMERIC switch is in VAR position.	MAIN INV/ LCA 1	28 vdc VATM 1 (11T1)	With LIGHTING, NUMERIC switch in FIXED position, Numeric Lighting Bus, VNUM, power is fixed at 115 vac, 400 Hz.
		Provides 28 vdc power to ORBIT PHASE, TIME REMAINING/DIGITAL ADDRESS indicator relays which switch ORBIT PHASE, TIME REMAINING or DIGITAL ADDRESS verify data lines into the ORBIT PHASE indicator.	C/D CMD/ DEPLOY/ EVA 1	28 vdc VCDE 1 (311D)	
	OFF	Removes all power from ORBIT PHASE, TIME REMAINING/DIGITAL ADDRESS indicator and data lines switching relays.			
	BUS 2	Provides 115 vac, 400 Hz, ATM AC BUS 2, input power to ORBIT PHASE, TIME REMAINING/ DIGITAL ADDRESS indicator.	INV AC 2	115 vac, 400 Hz VATM AC 2 (362D)	
		Provides 115 vac, 400 Hz, ATM AC BUS 2, power to ORBIT PHASE, TIME REMAINING/ DIGITAL ADDRESS indicator for fixed numeric lighting.	INV AC 2	115 vac, 400 Hz VATM AC 2 (362D)	
		Provides 28 vdc power to ORBIT PHASE, TIME REMAINING/DIGITAL ADDRESS indicator relays which switch ORBIT PHASE,TIME REMAINING or DIGITAL ADDRESS verify data lines into ORBIT PHASE indicator.	C/D CMD/ DEPLOY/ EVA 2	28 vdc VCDE 2 (321D)	

ATM CONTROLS AND DISPLAYS (PANEL 130)

SYSTEM	NAME AND POSITION	FUNCTION	CIRCUIT BREAKER	POWER SOURCE	REMARKS
DISPLAYS	POWER SYSTEM switch BUS 1	Provides 28 vdc, CMD/Deploy/EVA Bus 1, power to the Power Display Bus, VPWRD, which provides input power to the POWER SYSTEM, REG/BUS/BAT, REG/BAT, and WATT-HOUR indicators, and BAT TEMP, BAT VOLTS, REG VOLTS and BAT CHG talkbacks.	C/D CMD/ DEPLOY/ EVA 1	28 vdc VCDE 1 (311D)	POWER SYSTEM monitor sel switch in OFF position will remove input power, VPWRD, from POWER SYSTEM, REG/BUS/BAT and REG/BAT indicators.
		Provides 40-130 vac, 400 Hz, Numeric Lighting Bus, VNUM, power to POWER SYSTEM, WATT-HOUR indicator when LIGHTING, NUMERIC switch is in VAR position.	MAIN INV/ LCA 1	28 vdc VATM 1 (11T1)	With LIGHTING, NUMERIC switch in FIXED position, Numeric Lighting Bus, VNUM, power is fixed at 115 vac, 400 Hz.
	OFF	Removes all power from POWER SYSTEM panel indicators and talkbacks.			
	BUS 2	Provides 28 vdc, CMD/Deploy/EVA Bus 2, power to the Power Display Bus, VPWRD, which provides input power to the POWER SYSTEM, REG/BUS/BAT, REG/BAT, and WATT-HOUR indicators, and BAT TEMP, BAT VOLTS, REG VOLTS and BAT CHG talkbacks.	C/D CMD/ DEPLOY/ EVA 2	28 vdc VCDE 2 (321D)	POWER SYSTEM monitor sel switch in OFF position will remove input power, VPWRD, from POWER SYSTEM, REG/BUS/BAT and REG/BAT indicators.
		Provides 115 vac, 400 Hz, ATM AC Bus 2, power to POWER SYSTEM, WATT-HOUR indicator for fixed numeric lighting.	INV AC 2	115 vac, 400 Hz VATM AC 2 (362D)	
	EVENT TIME switch BUS 1	Provides 115 vac, 400 Hz, ATM AC Bus 1, input power to EVENT TIMER indicator.	INV AC 1	115 vac, 400 Hz VATM AC 1 (361D)	
		Provides 40-130 vac, 400 Hz, Numeric Lighting Bus, VNUM, power to EVENT TIME indicator when LIGHTING, NUMERIC switch is in VAR position.	MAIN INV/ LCA 1	28 vdc VATM 1 (11T1)	With LIGHTING, NUMERIC switch in FIXED position, Numeric Lighting Bus, VNUM, power is fixed at 115 vac, 400 Hz.
		Provides 28 vdc, C and D Experiment Bus 1, power to enable the operation of the EVENT TIME circuitry and TONE generator.	C/D EXP 1	28 vdc VEXP 1 (312D)	
	OFF	Removes all power from EVENT TIME indicator and inhibits EVENT TIME TONE signal.			

ATM CONTROLS AND DISPLAYS (PANEL 130)

SYSTEM	NAME AND POSITION	FUNCTION	CIRCUIT BREAKER	POWER SOURCE	REMARKS
DISPLAYS	BUS 2	Provides 115 vac, 400 Hz, ATM AC Bus 2, power to EVENT TIME indicator for input power and fixed numeric lighting.	INV AC 2	115 vac, 400 Hz VATM AC 2 (362D)	
		Provides 28 vdc, C and D Experiment Bus 2, power to enable the operation of the EVENT TIME circuitry and TONE generator.	C/D EXP 2	28 vdc VEXP 2 (322D)	
	ACS CNTRS switch BUS 1	Provides 115 vac, 400 Hz, ATM AC Bus 1, input power to ACS MONITOR COUNTERS 1, 2, and 3 indicators.	INV AC 1	115 vac, 400 Hz VATM AC 1 (361D)	MONITOR COUNTERS 1, 2, or 3, selector switches in OFF position will remove input power and numeric lighting power from its respective COUNTER.
		Provides 40-130 vac, 400 Hz, Numeric Lighting Bus, VNUM, power to ACS MONITOR COUNTERS 1,2 and 3, indicators when LIGHTING, NUMERIC switch is in VAR position.	MAIN INV/ LCA 1	28 vdc VATM 1 (11T1)	
	OFF	Removes all power from ACS MONITOR COUNTER 1,2, and 3 indicators.			
	BUS 2	Provides 115 vac, 400 Hz, ATM AC Bus 2, power to ACS MONITOR COUNTERS 1, 2, and 3 indicators for input power and fixed numeric lighting.	INV AC 2	115 vac, 400 Hz VATM AC 2 (362D)	

ATM CONTROLS AND DISPLAYS (PANEL 130)

SYSTEM	NAME AND POSITION	FUNCTION	CIRCUIT BREAKER	POWER SOURCE	REMARKS
		(This page left blank intentionally)			

ATM CONTROLS AND DISPLAYS (PANEL 130)

SYSTEM	NAME AND POSITION	FUNCTION	CIRCUIT BREAKER	POWER SOURCE	REMARKS
DEPLOY	SCAN SPECT MIRROR switch				
	UNLOCK	Provides a command to unlock the SCAN SPECT primary mirror. Allows the mirror to be positioned as desired by use of the LINE SEL switch.	C/D CMD/ DEPLOY/EVA 1,2	28 vdc VCDE 1,2 (311D,321D)	Both DEPLOY and LOCK positions are wired redundant.
	center	No function and not wired.			Switch is spring loaded to center position which is locked.
	LOCK	Provides a command to lock the SCAN SPECT primary mirror.			
	SOLAR ARRAY 1/3 switch				
	DEPLOY	Provides a command to activate drive motors which deploy solar arrays 1 and 3, and one of the two deployable ATM antennae. This antenna is located on array 1.	C/D CMD/ DEPLOY/EVA 1,2	28 vdc VCDE 1,2 (311D,321D)	Both DEPLOY and RETRACT positions are wired redundant.
	OFF	Removes power from the solar arrays 1 and 3 drive motors.			Switch in OFF position is locked and not wired.
	RETRACT	Provides a command to activate drive motors which retract solar arrays 1 and 3.			Solar array will not retract if solar wings are fully deployed and locked.
	SOLAR ARRAY 2/4 switch				
	DEPLOY	Provides a command to activate drive motors which deploy solar arrays 2 and 4, and one of the two deployable ATM antennae. This antenna is located on array 4.	C/D CMD/ DEPLOY/EVA 1,2	28 vdc VCDE 1,2 (311D,321D)	Both DEPLOY and RETRACT positions are wired redundant.
	OFF	Removes power from the solar arrays 2 and 4 drive motors.			Switch in OFF position is locked and not wired.
	RETRACT	Provides a command to activate drive motors which retract solar arrays 2 and 4.			Solar array will not retract if solar wings are fully deployed and locked.

SYSTEM	NAME AND POSITION	FUNCTION	CIRCUIT BREAKER	POWER SOURCE	REMARKS
FILM RESET	FILM RESET selector switch	Selects and enables a specific experiment FRAMES REMAINING indicator to be reset.	C/D EXP 1,2	28 vdc VEXP 1,2 (312D,322D)	Each experiment FRAMES REMAINING indicator will reset only when: respective experiment CONSOLE POWER DISTRIBUTION switch is in EXP BUS 1 or EXP BUS 2 position; and when FILM RESET switch is held in RESET position.
	OFF	No function.			
	Hα1	Enables the Hα1 FRAMES REMAINING indicator to accept a RESET signal and reset to 16000 indication.		28 vdc VHα (392D)	
	X-RAY TELE	Enables the X-RAY TELE FRAMES REMAINING indicator to accept RESET signal and reset to 6000 indication.		28 vdc VS056 (393D)	
	XUV SPECT	Enables the XUV SPECT FRAMES REMAINING indicator to accept a RESET signal and reset to 201 indication.		28 vdc VS082A (394D)	
	XUV SLIT	Enables the XUV SLIT FRAMES REMAINING indicator to accept a RESET signal and reset to 1608 indication.		28 vdc VS082B (395D)	
	WLC	Enables the WLC FRAMES REMAINING indicator to accept a RESET signal and reset to 8025 indication.		28 vdc VS052 (396D)	
	X-RAY SPECT	Enables the X-RAY SPECT FRAMES REMAINING indicator to accept a RESET signal and reset to 6000 indication.		28 vdc VS054 (398D)	
	FILM RESET switch RESET	When held in the RESET position, provides a command to the selected FRAMES REMAINING indicator to reset counter indication. This is performed when a new film canister has been installed. No electrical signal is supplied to the experiment.	C/D EXP 1, 2	28 vdc VEXP 1,2 (312D,322D)	Switch position RESET is momentary.
	down	No function and not wired.			

ATM CONTROLS AND DISPLAYS (PANEL 130)

SYSTEM	NAME AND POSITION	FUNCTION	CIRCUIT BREAKER	POWER SOURCE	REMARKS
CANISTER THERMAL	PUMP switch PRIMARY	Provides a command which applies 28 vdc, Thermal Bus 1 and Bus 2, input power to primary pump inverter.	C/D THRM/ TLM/PWR 1,2	28 vdc VTTP (391D)	
	OFF	Provides a command to remove 28 vdc, Thermal Bus 1 and Bus 2, input power from primary and secondary pump inverters.			
	SECONDARY	Provides a command which applies 28 vdc, Thermal Bus 1 and Bus 2, input power to secondary pump inverter.			
	CONTROLLER switch PRIMARY	Provides a command to activate the primary controller. This controller will actuate the solenoid FPSV's to select the flow path for the primary MFCV and the primary heater.	C/D THRM/ TLM/PWR 1,2	28 vdc VTTP (391D)	
	OFF	Provides a command to deactivate the primary and secondary controllers.			
	SECONDARY	Provides a command to activate the secondary controller. This controller will actuate the selenoid FPSV's to select the flow path for the secondary MFCV and the secondary heater.			
	MONITOR ind pwr fail lt	Provides a visual indication that the MONITOR indicator has lost internal operational power.	MAIN INV/ LCA 1,2	2-5 vdc VSTATUS (381D)	MONITOR indicator has internal operational power when light is off.
	MONITOR indicator PRESS	Displays system pressures in psi and accumulator volume, in percent, as selected by MONITOR switch.	C/D THRM/ TLM/PWR 1,2	28 vdc VTTP (391D)	
	TEMP	Displays system temperatures as selected by MONITOR switch.			

ATM CONTROLS AND DISPLAYS (PANEL 130)

SYSTEM	NAME AND POSITION	FUNCTION	CIRCUIT BREAKER	POWER SOURCE	REMARKS
CANISTER THERMAL	HTR PWR switch AUTO	Provides a command to enable the primary or secondary controller to automatically control the selected heater.	C/D THRM/ TLM/PWR 1,2	28 vdc VTTP (391D)	
	OFF	Provides a command to remove primary and secondary heater power.			
	MONITOR switch PUMP ΔP / CSTR IN °F	Provides a command to display pump differential pressure (psi) and canister inlet temperature (°F) on MONITOR meter.	C/D THRM/ TLM/PWR 1,2	28 vdc VTTP (391D)	
	SYS P / PUMP OUT °FX10	Provides a command to display canister thermal system pressure (psi) at the accumulator and pump outlet temperature (°FX10) on MONITOR meter.			
	ACCUM VOL (%) / HTR °FX10	Provides a command to display accumulator volume (%) and heater surface temperature (°FX10) on MONITOR meter.			Accumulator volume of 379 cu-in is equivalent to 100 % volume on MONITOR indicator.

ATM CONTROLS AND DISPLAYS (PANEL 130)

SYSTEM	NAME AND POSITION	FUNCTION	CIRCUIT BREAKER	POWER SOURCE	REMARKS
LIGHTING	INTEGRAL switch VAR	Provides 40-130 vac, 400 Hz, power from INV/LCA to Integral Lighting Bus, VINTG, for EL intensity control of indicators, talkbacks, DAS pushbutton switches and panel nomenclature.	INV AC 1	115 vac, 400 Hz VATM AC 1 (361D)	
	OFF	Removes VAR and FIXED Integral Lighting power from the ATM C&D console.			
	FIXED	Provides 115 vac, 400 Hz, ATM AC Bus 2, power to Integral Lighting Bus, VINTG, for backup EL intensity of indicators, talkbacks, DAS pushbutton switches and panel nomenclature.	INV AC 2	115 vac, 400 Hz VATM AC 2 (362D)	
	INTEGRAL control CW	With INTEGRAL switch in VAR position, provides variation of supply voltage to Integral Lighting Bus, VINTG, in the ATM C&D console from 40 to 130 vac, 400 Hz.	INV AC 1	115 vac, 400 Hz VATM AC 1 (361D)	
	NUMERIC switch VAR	Provides 40-130 vac, 400 Hz, power from INV/LCA to Numeric Lighting Bus, VNUM, for numeric lighting intensity control of digital displays.	INV AC 1	115 vac, 400 Hz VATM AC 1 (361D)	
	OFF	Removes VAR and FIXED Numeric Lighting power from the ATM C&D console.			
	FIXED	Provides 115 vac, 400 Hz, ATM AC 2, power to Numeric Lighting Bus, VNUM, for backup numeric lighting intensity of digital displays.	INV AC 2	115 vac, 400 Hz VATM AC 2 (362D)	
	NUMERIC control CW	With NUMERIC switch in VAR position, provides variation of supply voltage to Numeric Lighting Bus, VNUM, in the ATM C&D console from 40 to 130 vac, 400 Hz.	INV AC 1	115 vac, 400 Hz VATM AC 1 (361D)	

C&D

ATM CONTROLS AND DISPLAYS (PANEL 130)

SYSTEM	NAME AND POSITION	FUNCTION	CIRCUIT BREAKER	POWER SOURCE	REMARKS
LIGHTING	ALERT/STATUS switch VAR	Energizes relay K4 in ATM C&D console which provides variable 3.5 to 5 vdc and variable 2 to 5 vdc supply voltage power from INV/LCA to ATM C&D console busses, VALERT and VSTATUS respectively, for lighting intensity control of ALERT and STATUS lights.	MAIN INV/ LCA 1	28 vdc VATM 1 (11T1)	This switch position does not provide variable lighting intensity control to CBRM STATUS lights.
	OFF	Removed VAR and FIXED ALERT and STATUS LIGHTING power from ATM C&D console.			This switch position does not remove lighting power to CBRM STATUS lights.
	FIXED	Energizes relay K5 in ATM C&D console which provides 5 vdc unregulated power, Bus VSTBU, to busses VALERT and VSTATUS for backup lighting control of ALERT and STATUS lights.	LCA STATUS LTG BU 1, 2	5 vdc (unreg) VSTBU (373D)	This switch position does not provide 5 vdc unregulated power, Bus VSTBU, to CBRM STATUS lights.
	ALERT/STATUS control CW	With ALERT/STATUS switch in VAR position, provides variation of supply voltage to Alert Lighting Bus and Status Lighting Bus in the ATM C&D console from 3.5 to 5 vdc and 2 to 5 vdc respectively.	MAIN INV/ LCA 1	28 vdc VATM 1 (11T1)	
	LAMP TEST selector switch OFF	Allows normal operation of C&D INTEGRAL, NUMERIC, ALERT and STATUS lighting systems.	NA	NA	This switch does not control lighting of CBRM STATUS lights.
	TACS	Provides a command in the ATM C&D console to light the TACS status lights.	MAIN INV/ LCA 1	5 vdc VTACS ST (372D)	Six TACS lights will be green.
	ALERT 1	Provides a command in the ATM C&D console to light the left double bank of ALERT lights.	MAIN INV/ LCA 1	3.5-5 vdc VALERT (371D)	Ten ALERT lights will be blue (left double bank).
	ALERT 2	Provides a command in the ATM C&D console to light the right double bank of ALERT lights.	MAIN INV/ LCA 1	3.5-5 vdc VALERT (371D)	Ten ALERT lights will be blue (right double bank).

ATM CONTROLS AND DISPLAYS (PANEL 130)

SYSTEM	NAME AND POSITION	FUNCTION	CIRCUIT BREAKER	POWER SOURCE	REMARKS
LIGHTING	STATUS	Provides a command in the ATM C&D console to light with a test circuit, all indicator power failure lights, all READY/OPR lights, and the X-RAY/RF lights.	MAIN INV/ LCA 1	2-5 vdc VSTATUS (381D)	Six indicator power failure lights will be yellow. Seven READY lights will be green. Seven OPR lights will be white. X-RAY and RF lights will be green.
	NUMERIC	Provides ATM Digital Computer a command to generate data bits which result in all numeral 8's being displayed on MONITOR COUNTERS 1,2,3 and ORBIT PHASE, TIME REMAINING/DIGITAL ADDRESS indicator (excluding center numeral).	C/D ACS 1,2	28 vdc VACS 3 (399D)	MONITOR COUNTER 1 selector switch cannot be in OFF or SCAN SPECT PRESS positions. MONITOR COUNTER 2 selector switch cannot be in OFF or BE COUNT positions. MONITOR COUNTER 3 selector switch cannot be in OFF or AL COUNT positions. DISPLAYS DAS/ORB PHASE and ACS CNTRS switches cannot be in OFF position.

ATM CONTROLS AND DISPLAYS (PANEL 130)

SYSTEM	NAME AND POSITION	FUNCTION	CIRCUIT BREAKER	POWER SOURCE	REMARKS
EVENT TIME	MIN-SEC indicator	Displays the time remaining for a particular event in minutes and seconds.	MAIN INV/ LCA 1,2	115 vac, 400 Hz VATM AC 1,2 (361D,362D)	
	XUV SPECT switch ENABLE	Allows the EVENT TIME to control exposure time during a MAN sequence. Experiment START command will open the SHUTTER and start EVENT TIME counting sequence. EVENT TIME command will close shutter.	C/D EXP 1,2	28 vdc VS082A (394D)	
	INHIBIT	Prevents the EVENT TIME from controlling exposure times during a MAN sequence. Experiment START command will open the shutter and it will remain open until receipt of an experiment STOP command.			
	XUV SLIT switch ENABLE	Allows the EVENT TIME to control exposure time during a MAN sequence. Experiment START command will open the shutter and start EVENT TIME counting sequence. EVENT TIME command will close shutter.	C/D EXP 1,2	28 vdc VS082B (395D)	
	INHIBIT	Prevents the EVENT TIME from controlling exposure times during a MAN sequence. Experiment START command will open the shutter and it will remain open until receipt of an experiment STOP command.			
	SLEW MIN switch TENS	Provides a command to slew the TENS digit of the EVENT TIME MIN display.	MAIN INV/ LCA 1,2	115 vac, 400 Hz VATM AC 1,2 (361D,362D)	
	center	No function and not wired.			Switch is spring loaded to center position.
	UNITS	Provides a command to slew the UNITS digit of the EVENT TIME MIN display.			

ATM CONTROLS AND DISPLAYS (PANEL 130)

SYSTEM	NAME AND POSITION	FUNCTION	CIRCUIT BREAKER	POWER SOURCE	REMARKS
EVENT TIME	SLEW SEC switch TENS	Provides a command to slew the TENS digit of the EVENT TIME SEC display.	MAIN INV/ LCA 1,2	115 vac, 400 Hz VATM AC 1,2 (361D,362D)	
	center	No function and not wired.			Switch is spring loaded to center position.
	UNITS	Provides a command to slew the UNITS digit of the EVENT TIME SEC display.			
	START/STOP switch START	Provides a command to start the EVENT TIME.	C/D EXP 1,2	28 vdc VEXP 1,2 (312D,322D)	
	center	No function and not wired.			Switch is spring loaded to center position.
	STOP	Provides a command to stop the EVENT TIME.			
	TONE switch ENABLE	Provides a command to activate the EVENT TIME alarm when the MIN and SEC count has reached zero.	C/D EXP 1,2	28 vdc VEXP 1,2 (312D,322D)	
	INHIBIT	Removes the EVENT TIME alarm activation signal thereby deactivating the audio alarm.			Inhibit position of switch is not wired.

ATM CONTROLS AND DISPLAYS (PANEL 130)

SYSTEM	NAME AND POSITION	FUNCTION	CIRCUIT BREAKER	POWER SOURCE	REMARKS
CONSOLE POWER DISTRIBUTION	ACS switch BUS 1	Provides C/D ACS Bus 1, VACS 1, power to ACS Bus 3, VACS 3, which is used for non-redundant ACS commands.	C/D ACS 1	28 vdc VACS 1 (313D)	
	OFF	Removes C/D ACS Bus 1, VACS 1, and C/D ACS Bus 2, VACS 2, power from ACS Bus 3, VACS 3.			
	BUS 2	Provides C/D ACS Bus 2, VACS 2, power to ACS Bus 3, VACS 3, which is used for non-redundant ACS commands.	C/D ACS 2	28 vdc VACS 2 (323D)	
	Hα switch EXP BUS 1/ NUMERIC LTG BUS	Provides C/D Experiment Bus 1, VEXP 1, power to H-Alpha Bus, VHα , for Hα1 and Hα2 commands and input power to Hα1 FRAMES REMAINING indicator.	C/D EXP 1	28 vdc VEXP 1 (312D)	
		Provides Numeric Lighting Bus, VNUM, power to Hα1 FRAMES REMAINING indicator.	INV AC 1	115 vac, 400 Hz VATM AC 1 (361D)	
	OFF	Removes all power from H-Alpha Bus, VHα, and Hα1 FRAMES REMAINING indicator.			
	EXP BUS 2/ AC BUS 2	Provides C/D Experiment Bus 2, VEXP 2, power to H-Alpha Bus, VHα, for Hα1 and Hα2 commands and input power to Hα1 FRAMES REMAINING indicator.	C/D EXP 2	28 vdc VEXP 2 (322D)	
		Provides 115 vac, 400 Hz, ATM AC Bus 2, VATM AC 2, power to Hα1 FRAMES REMAINING indicator for fixed numeric lighting.	INV AC 2	115 vac, 400 Hz VATM AC 2 (362D)	
	X-RAY TELE switch EXP BUS 1/ NUMERIC LTG BUS	Provides C/D Experiment Bus 1, VEXP 1, power to X-Ray Tele Bus, VS056, for X-RAY TELE commands, input power to X-RAY/RF ACTIVITY HISTORY PLOT recorder and X-RAY TELE FRAMES REMAINING indicator.	C/D EXP 1	28 vdc VEXP 1 (312D)	

ATM CONTROLS AND DISPLAYS (PANEL 130)

SYSTEM	NAME AND POSITION	FUNCTION	CIRCUIT BREAKER	POWER SOURCE	REMARKS
CONSOLE POWER DISTRIBUTION		Provides Numeric Lighting Bus, VNUM, power to X-RAY TELE FRAMES REMAINING indicator.	INV AC 1	115 vac, 400 Hz VATM AC 1 (361D)	
	OFF	Removes all power from X-Ray Tele Bus, VS056, and X-RAY TELE FRAMES REMAINING indicator.			
	EXP BUS 2/ AC BUS 2	Provides C/D Experiment Bus 2, VEXP 2, power to X-Ray Tele Bus, VS056, for X-RAY TELE commands, input power to X-RAY/RF ACTIVITY HISTORY PLOT recorder and X-RAY TELE FRAMES REMAINING indicator.	C/D EXP 2	28 vdc VEXP 2 (322D)	
		Provides 115 vac, 400 Hz, ATM AC Bus 2, VATM AC 2, power to X-RAY TELE FRAMES REMAINING indicator for fixed numeric lighting.	INV AC 2	115 vac, 400 Hz VATM AC 2 (362D)	
	XUV SPECT switch EXP BUS 1/ NUMERIC LTG BUS	Provides C/D Experiment Bus 1, VEXP 1, power to XUV Spect Bus, VS082A, for XUV SPECT commands and input power to XUV SPECT FRAMES REMAINING indicator.	C/D EXP 1	28 vdc VEXP 1 (312D)	
		Provides Numeric Lighting Bus, VNUM, power to XUV SPECT FRAMES REMAINING indicator.	INV AC 1	115 vac, 400 Hz VATM AC 1 (361D)	
	OFF	Removes all power from XUV Spect Bus, VS082A, and XUV SPECT FRAMES REMAINING indicator.			
	EXP BUS 2/ AC BUS 2	Provides C/D Experiment Bus 2, VEXP 2, power to XUV Spect Bus, VS082A, for XUV SPECT commands and input power to XUV SPECT FRAMES REMAINING indicator.	C/D EXP 2	28 vdc VEXP 2 (322D)	
		Provides 115 vac, 400 Hz, ATM AC Bus 2, VATM AC 2, power to XUV SPECT FRAMES REMAINING indicator for fixed numeric lighting.	INV AC 2	115 vac, 400 Hz VATM AC 2 (362D)	

C&D

ATM CONTROLS AND DISPLAYS (PANEL 130)

SYSTEM	NAME AND POSITION	FUNCTION	CIRCUIT BREAKER	POWER SOURCE	REMARKS
CONSOLE POWER DISTRIBUTION	XUV SLIT switch EXP BUS 1/ NUMERIC LTG BUS	Provides C/D Experiment Bus 1, VEXP 1, power to XUV Slit Bus, VS082B, for XUV SLIT commands and input power to XUV SLIT FRAMES REMAINING indicator.	C/D EXP 1	28 vdc VEXP 1 (312D)	
		Provides Numeric Lighting Bus, VNUM, power to XUV SLIT FRAMES REMAINING indicator.	INV AC 1	115 vac, 400 Hz VATM AC 1 (361D)	
	OFF	Removes all power from XUV Slit Bus, VS082B, and XUV SLIT FRAMES REMAINING indicator.			
	EXP BUS 2/ AC BUS 2	Provides C/D Experiment Bus 2, VEXP 2, power to XUV Slit Bus, VS082B, for XUV SLIT commands and input power to XUV SLIT FRAMES REMAINING indicator.	C/D EXP 2	28 vdc VEXP 2 (322D)	
		Provides 115 vac, 400 Hz, ATM AC Bus 2, VATM AC 2, power to XUV SLIT FRAMES REMAINING indicator for fixed numeric lighting.	INV AC 2	115 vac, 400 Hz VATM AC 2 (362D)	
	WLC switch EXP BUS 1/ NUMERIC LTG BUS	Provides C/D Experiment Bus 1, VEXP 1, power to WLC Bus, VS052, for WLC commands and input power to WLC FRAMES REMAINING and WLC ALIGN indicators.	C/D EXP 1	28 vdc VEXP 1 (312D)	
		Provides Numeric Lighting Bus, VNUM, power to WLC FRAMES REMAINING and WLC ALIGN indicators.	INV AC 1	115 vac, 400 Hz VATM AC 1 (361D)	
	OFF	Removes all power from WLC Bus, VS052, WLC FRAMES REMAINING and WLC ALIGN indicators.			
	EXP BUS 2/ AC BUS 2	Provides C/D Experiment Bus 2, VEXP 2, power to WLC Bus, VS052, for WLC commands, WLC FRAMES REMAINING and WLC ALIGN indicators.	C/D EXP 2	28 vdc VEXP 2 (322D)	
		Provides 115 vac, 400 Hz, ATM AC Bus 2, VATM AC 2, power to WLC FRAMES REMAINING and WLC ALIGN indicators for fixed numeric lighting.	INV AC 2	115 vac, 400 Hz VATM AC 2 (362D)	

ATM CONTROLS AND DISPLAYS (PANEL 130)

SYSTEM	NAME AND POSITION	FUNCTION	CIRCUIT BREAKER	POWER SOURCE	REMARKS
CONSOLE POWER DISTRIBUTION	SCAN SPECT switch EXP BUS 1/ NUMERIC LTG BUS	Provides C/D Experiment Bus 1, VEXP 1, power to Scan Spect Bus, VS055, for SCAN SPECT commands, GRATING POSITION and RASTER/SCAN COUNTER indicators.	C/D EXP 1	28 vdc VEXP 1 (312D)	SCAN SPECT INTENSITY DATA indicator input power and numeric lighting power is provided by SCAN SPECT INTEN DATA switch independent of SCAN SPECT switch on CONSOLE POWER DISTRIBUTION panel.
		Provides Numeric Lighting Bus, VNUM, power to SCAN SPECT GRATING POSITION and RASTER/SCAN COUNTER indicators.	INV AC 1	115 vac, 400 Hz VATM AC 1 (361D)	
	OFF	Removes all power from Scan Spect Bus, VS055, GRATING POSITION and RASTER/SCAN indicators.			
	EXP BUS 2/ AC BUS 2	Provides C/D Experiment Bus 2, VEXP 2, power to Scan Spect Bus, VS055, for SCAN SPECT commands, GRATING POSITION and RASTER/SCAN COUNTER indicators.	C/D EXP 2	28 vdc VEXP 2 (322D)	
		Provides 115 vac, 400 Hz, ATM AC Bus 2, VATM AC 2, power to SCAN SPECT GRATING POSITION and RASTER/SCAN COUNTER indicators for fixed numeric lighting.	INV AC 2	115 vac, 400 Hz VATM AC 2 (362D)	
	X-RAY SPECT switch EXP BUS 1/ NUMERIC LTG BUS	Provides C/D Experiment Bus 1, VEXP 1, power to X-Ray Spec Bus, VS054, for X-RAY SPECT commands and X-RAY SPECT FRAMES REMAINING indicator.	C/D EXP 1	28 vdc VEXP 1 (312D)	PHOTOMULTIPLIER EXPOSURE COUNT and IMAGE INTENSITY COUNT indicators and X-RAY IMAGE monitor are provided input power and numeric lighting power when X-RAY SPECT MAIN PWR switch is in the ON position.
		Provides Numeric Lighting Bus, VNUM, power to X-RAY SPECT FRAMES REMAINING indicator and 115 vac, 400 Hz, ATM AC Bus 1, VATM AC 1, power to X-RAY IMAGE monitor.	INV AC 1	115 vac, 400 Hz VATM AC 1 (361D)	
	OFF	Removes all power from X-Ray Spec Bus, VS054, FRAMES REMAINING indicator and X-RAY IMAGE monitor.			
	EXP BUS 2/ AC BUS 2	Provides C/D Experiment Bus 2, VEXP 2, power to X-Ray Spec Bus, VS054, for X-RAY SPECT commands and X-RAY SPECT FRAMES REMAINING indicator.	C/D EXP 2	28 vdc VEXP 2 (322D)	
		Provides 115 vac, 400 Hz, ATM AC Bus 2, VATM AC 2, power to X-RAY SPECT FRAMES REMAINING indicator and X-RAY IMAGE monitor.	INV AC 2	115 vac, 400 Hz VATM AC 2 (362D)	

ATM CONTROLS AND DISPLAYS (PANEL 130)

SYSTEM	NAME AND POSITION	FUNCTION	CIRCUIT BREAKER	POWER SOURCE	REMARKS
CONSOLE POWER DISTRIBUTION	MAIN C/D 1 circuit breaker closed open	Protects and applies ATM Main Bus 1, VATM 1, power to C and D Bus 1, VC/D 1. Removes ATM Main Bus 1, VATM 1, power from C and D Bus 1, VC/D 1.	MAIN C/D 1 (10 amps)	28 vdc VATM 1 (11T1)	
	MAIN C/D 2 circuit breaker closed open	Protects and applies ATM Main Bus 2, VATM 2, power to C and D Bus 2, VC/D 2. Removes ATM Main Bus 2, VATM 2, power from C and D Bus 2, VC/D 2.	MAIN C/D 2 (10 amps)	28 vdc VATM 2 (21T1)	
	MAIN MON 1 circuit breaker closed open	Protects and applies TV Bus 1, VTV 1, power to Monitor Bus 1, VMON 1. Removes TV Bus 1, VTV 1, power from Monitor Bus 1, VMON 1.	MAIN MON 1 (5 amps)	28 vdc VTV 1 (16T1)	TV SYNC GEN switch must be in PRIM or SEC position for TV Bus 1, VTV 1, to have 28 vdc power.
	MAIN MON 2 circuit breaker closed open	Protects and applies TV Bus 2, VTV 2, power to Monitor Bus 2, VMON 2. Removes TV Bus 2, VTV 2, power from Monitor Bus 2, VMON 2.	MAIN MON 2 (5 amps)	28 vdc VTV 2 (26T1)	TV SYNC GEN switch must be in PRIM or SEC position for TV Bus 2, VTV 2, to have 28 vdc power.
	MAIN INV/LCA 1 circuit breaker closed open	Protects and applies ATM Main Bus 1, VATM 1, power to INV/LCA. Removes ATM Main Bus 1, VATM 1, power from the INV/LCA.	MAIN INV/ LCA 1 (20 amps)	28 vdc VATM 1 (11T1)	

ATM CONTROLS AND DISPLAYS (PANEL 130)

SYSTEM	NAME AND POSITION	FUNCTION	CIRCUIT BREAKER	POWER SOURCE	REMARKS
CONSOLE POWER DISTRIBUTION	MAIN INV/LCA 2 circuit breaker closed open	Protects and applies ATM Main Bus 2, VATM 2, power to INV/LCA. Removes ATM Main Bus 2, VATM 2, power from the INV/LCA.	MAIN INV/ LCA 2 (20 amps)	28 vdc VATM 2 (21T1)	
	C/D ACS 1 circuit breaker closed open	Protects and applies C and D Bus 1, VC/D 1, power to ACS Bus 1, VACS 1. Removes C and D Bus 1, VC/D 1, power from ACS Bus 1, VACS 1.	C/D ACS 1 (2 amps)	28 vdc VC/D 1 (310D)	
	C/D ACS 2 circuit breaker closed open	Protects and applies C and D Bus 2, VC/D 2, power to ACS Bus 2, VACS 2. Removes C and D Bus 2, VC/D 2, power from ACS Bus 2, VACS 2.	C/D ACS 2 (2 amps)	28 vdc VC/D 2 (320D)	
	C/D THRM/TLM/PWR 1 circuit breaker closed open	Protects and applies C and D Bus 1, VC/D 1, power to Thermal/Telemetry/Power Bus, VTTP. Removes C and D Bus 1, VC/D 1, power from Thermal/Telemetry/Power Bus, VTTP.	C/D THRM/ TLM/PWR 1 (1 amp)	28 vdc VC/D 1 (310D)	
	C/D THRM/TLM/PWR 2 circuit breaker closed open	Protects and applies C and D Bus 2, VC/D 2, power to Thermal/Telemetry/Power Bus, VTTP. Removes C and D Bus 2, VC/D 2, power from Thermal/Telemetry/Power Bus, VTTP.	C/D THRM/ TLM/PWR 2 (1 amp)	28 vdc VC/D 2 (320D)	

SYSTEM	NAME AND POSITION	FUNCTION	CIRCUIT BREAKER	POWER SOURCE	REMARKS
CONSOLE POWER DISTRIBUTION	INV AC 1 circuit breaker closed open	Protects and applies 115 vac, 400 Hz, input power from INV/LCA to AC Bus 1, VATM AC 1. Removes 115 vac, 400 Hz, input power from AC Bus 1, VATM AC 1.	INV AC 1 (2 amps)	28 vdc VATM 1 (11T1)	
	INV AC 2 circuit breaker closed open	Protects and applies 115 vac, 400 Hz, input power from INV/LCA to AC Bus 2, VATM AC 2. Removes 115 vac, 400 Hz, input power from AC Bus 2, VATM AC 2.	INV AC 2 (2 amps)	28 vdc VATM 2 (21T1)	
	C/D CMD/DEPLOY/ EVA 1 circuit breaker closed open	Protects and applies C and D Bus 1, VC/D 1, power to CMD/Deploy/EVA Bus 1, VCDE 1. Removes C and D Bus 1, VC/D 1, power from CMD/Deploy/EVA Bus 1, VCDE 1.	C/D CMD/ DEPLOY/ EVA 1 (5 amps)	28 vdc VC/D 1 (310D)	
	C/D CMD/DEPLOY/ EVA 2 circuit breaker closed open	Protects and applies C and D Bus 2, VC/D 2, power to CMD/Deploy/EVA Bus 2, VCDE 2. Removes C and D Bus 2, VC/D 2, power from CMD/Deploy/EVA Bus 2, VCDE 2.	C/D CMD/ DEPLOY/ EVA 2 (5 amps)	28 vdc VC/D 2 (320D)	

ATM CONTROLS AND DISPLAYS (PANEL 130)

SYSTEM	NAME AND POSITION	FUNCTION	CIRCUIT BREAKER	POWER SOURCE	REMARKS
CONSOLE POWER DISTRIBUTION	C/D EXP 1 circuit breaker closed open	Protects and applies C and D Bus 1, VC/D 1, power to C and D Experiment Bus 1, VEXP 1. Removes C and D Bus 1, VC/D 1, power from C and D Experiment Bus 1, VEXP 1.	C/D EXP 1 (5 amps)	28 vdc VC/D 1 (310D)	
	C/D EXP 2 circuit breaker closed open	Protects and applies C and D Bus 2, VC/D 2, power to C and D Experiment Bus 2, VEXP 2. Removes C and D Bus 2, VC/D 2, power from C and D Experiment Bus 2, VEXP 2.	C/D EXP 2 (5 amps)	28 vdc VC/D 2 (320D)	
	LCA STATUS LTG BU 1 circuit breaker closed open	Protects and applies 5 vdc unregulated power from INV/LCA to ATM C&D Status Lighting Backup Bus, VSTBU. Removes 5 vdc unregulated power from ATM C&D Status Lighting Backup Bus, VSTBU.	LCA STATUS LTG BU 1 (10 amps)	28 vdc VATM 1 (11T1)	LCA STATUS LTG BU 1 and BU 2 circuit breakers would have to be opened to remove all 5 vdc power from ATM C&D Status Lighting Backup Bus, VSTBU.
	LCA STATUS LTG BU 2 circuit breaker closed open	Protects and applies 5 vdc unregulated power from INV/LCA to ATM C&D Status Lighting Backup Bus, VSTBU. Removes 5 vdc unregulated power from ATM C&D Status Lighting Backup Bus, VSTBU.	LCA STATUS LTG BU 2 (10 amps)	28 vdc VATM 2 (21T1)	LCA STATUS LTG BU 1 and 2 circuit breakers would have to be opened to remove all 5 vdc power from ATM C&D Status Lighting Backup Bus, VSTBU.

ATM CONTROLS AND DISPLAYS (PANEL 130)

SYSTEM	NAME AND POSITION	FUNCTION	CIRCUIT BREAKER	POWER SOURCE	REMARKS
		(This page left blank intentionally)			

ATM CONTROLS AND DISPLAYS (PANEL 130)

SYSTEM	NAME AND POSITION	FUNCTION	CIRCUIT BREAKER	POWER SOURCE	REMARKS
ORBIT PHASE	TIME REMAINING/ DIGITAL ADDRESS indicator	Displays, in minutes and seconds, the amount of day or night orbit time remaining. Operates when commanded by DAS, as a digital verification readout from the addressed switch selector or ATMDC.	INV AC 1,2	115 vac 400 H_z VATM AC 1 VATM AC 2 (361D,362D)	
	TIME REMAINING/ DIGITAL ADDRESS talkback DAY gray NT	Provides a visual indication that the ATM is in the day phase of the orbit. Absence of both signals. Provides a visual indication that the ATM is in the night phase of the orbit.	Fused	28 vdc VAPCS 1 VAPCS 2	

SYSTEM	NAME AND POSITION	FUNCTION	CIRCUIT BREAKER	POWER SOURCE	REMARKS
DAS	PWR switch BUS 1	Applies 28 vdc, CMD/Deploy/EVA BUS 1, VCDE 1, input power to the DAS electronics assembly.	C/D CMD/ DEPLOY/ EVA 1	28 vdc VCDE 1 (311D)	BUS 1 and BUS 2 positions are wired redundantly.
	OFF	Removes 28 vdc, CMD/Deploy/EVA BUS 1 and BUS 2, VCDE 1 and VCDE 2, input power from the DAS electronics assembly.			OFF position not wired.
	BUS 2	Applies 28 vdc, CMD/Deploy/EVA BUS 2, VCDE 2, input power to the DAS electronics assembly.	C/D CMD/ DEPLOY/ EVA 2	28 vdc VCDE 2 (321D)	
	KEY pushbutton switches 0 thru 7, CLR and ENTR	The DAS keyboard consists of 10 push-buttons, eight of which are numbered 0 thru 7; the other two being CLR and ENTR pushbuttons. When a five digit octal command is keyed into the keyboard, the binary equivalent of its octal code is sent out to one of the five assemblies associated with the DAS, 4 switch selectors and the ATMDC. The first octal bit, which represents the enable bit for one of the above units, will inhibit the Orbit Phase Time Remaining clock inputs to the TIME REMAINING/DIGITAL ADDRESS indicator and lock out ground commands by removing input power from the command receivers and de-coders. The indicator will display all zeros. The following four octal digits represent the twelve command system infor-mation bits. When the enable and informat-ion bits are received, the selected unit will send the octal code back to the TIME REMAINING/DIGITAL ADDRESS indicator for visual display and verification. If the correct command has been sent and received, the crewman may then press the ENTR button and the command will be executed. Ground commands will also be enabled at this time by applying input power to the command receivers and decoders.	C/D CMD/ DEPLOY/ EVA 1, 2	28 vdc VCDE 1,2 (311D,321D)	

ATM CONTROLS AND DISPLAYS (PANEL 130)

SYSTEM	NAME AND POSITION	FUNCTION	CIRCUIT BREAKER	POWER SOURCE	REMARKS
DAS		The middle digit of the TIME REMAINING/ DIGITAL ADDRESS indicator will flash continuously after the ENTR command until the CLR Key is depressed. CLR command must be sent before another DAS code can be initiated. If the octal code displayed appears incorrect, crewman will push the CLR button to reset the system and then re-enter the correct octal code or its complement. When CLR button is pushed, the DAS will automatically reset itself and the Orbit Phase Time Remaining will appear on the TIME REMAINING/DIGITAL ADDRESS indicator and ground command will be enabled.			

C&D

ATM CONTROLS AND DISPLAYS (PANEL 130)

SYSTEM	NAME AND POSITION	FUNCTION	CIRCUIT BREAKER	POWER SOURCE	REMARKS
GROUND/DAS	CMPTR switch ENABLE	Removes INHIBIT command and enables the ATMDC to receive DAS or DCS commands.			ENABLE position of switch is not wired.
	INHIBIT	Provides a command to inhibit the ATMDC from receiving DAS or DCS commands.	C/D CMD/ DEPLOY/ EVA 1,2	28 vdc VCDE 1,2 (311D,321D)	INHIBIT position of switch is wired redundantly.
	TLM switch ENABLE	Removes INHIBIT command and applies input power to TELEMETRY Switch Selector 2 in order to receive DAS or DCS commands.			ENABLE position of switch is not wired.
	INHIBIT	Provides a command to remove input power from TELEMETRY Switch Selector 2 in order to inhibit DAS or DCS commands.	C/D CMD/ DEPLOY/ EVA 1, 2	28 vdc VCDE 1, 2 (311D,321D)	INHIBIT position of switch is wired redundantly.
	PWR SYS switch ENABLE	Provides a command to energize relays associated with Switch Selector 1 to enable DAS and DCS commands to the ATM Power System.	C/D CMD/ DEPLOY/ EVA 1, 2	28 vdc VCDE 1, 2 (311D,321D)	Both positions of switch are wired redundantly.
	INHIBIT	Provides a command to de-energize relays associated with Switch Selector 1 to inhibit DAS and DCS commands to the ATM Power System.			

ATM CONTROLS AND DISPLAYS (PANEL 130)

SYSTEM	NAME AND POSITION	FUNCTION	CIRCUIT BREAKER	POWER SOURCE	REMARKS
GROUND/DAS	GRD CMD switch ENABLE	Removes INHIBIT command and applies input power to Command Receivers and Command Decoders thereby allowing DAS and DCS command of any ATM GROUND/DAS enabled systems.			ENABLE position of switch is not wired.
	INHIBIT	Provides a command to remove input power from Command Receivers and Command Decoders thereby inhibiting DAS and DCS command of all ATM systems.	C/D CMD/ DEPLOY/ EVA 1, 2	28 vdc VCDE 1, 2 (311D,321D)	INHIBIT position of switch is wired redundantly.
	CSTR THRM switch ENABLE	Provides a command to energize relays associated with Switch Selector 1 to enable DAS and DCS command to the ATM CANISTER THERMAL system.	C/D CMD/ DEPLOY/ EVA 1, 2	28 vdc VCDE 1, 2 (311D,321D)	Both positions of switch are wired redundantly.
	INHIBIT	Provides a command to de-energize relays associated with Switch Selector 1 to inhibit DAS and DCS commands to the ATM CANISTER THERMAL system.			INHIBIT position of switch is locked.
	ACS switch ENABLE	Removes INHIBIT command and applies input power to ACS and CMG systems Switch Selector 3 in order to receive DAS and DCS commands.			ENABLE position of switch is not wired.
	INHIBIT	Provides a command to remove input power from ACS and CMG systems Switch Selector 3 in order to inhibit DAS and DCS commands.	C/D CMD/ DEPLOY/ EVA 1, 2	28 vdc VCDE 1, 2 (311D,321D)	INHIBIT position of switch is wired redundantly and locked.
	EXP/TV switch ENABLE	Removes INHIBIT command and applies input power to EXP and TV systems Switch Selector 4 in order to receive DAS and DCS commands.			ENABLE position of switch is not wired.
	INHIBIT	Provide a command to remove input power from EXP and TV systems Switch Selector 4 in order to inhibit DAS and DCS commands.	C/D CMD/ DEPLOY/ EVA 1, 2	28 vdc VCDE 1, 2 (311D,321D)	INHIBIT position of switch is wired redundantly and locked.

ATM CONTROLS AND DISPLAYS (PANEL 130)

SYSTEM	NAME AND POSITION	FUNCTION	CIRCUIT BREAKER	POWER SOURCE	REMARKS
EVA	ROLL switch IVA	Removes EVA command.			IVA position of switch not wired.
	EVA	Provides a command to apply input power to the Rotation Control Panel 121 at the center ATM work station.	C/D CMD/ DEPLOY/ EVA 1, 2	28 vdc VCDE 1, 2 (311D,321D)	EVA position of switch wired redundantly.
	AUTO DOOR switch ENABLE	Provides a command to allow the automatic opening and closing of the thermal shield doors by the ATMDC.	C/D CMD/ DEPLOY/ EVA 1, 2	28 vdc VCDE 1, 2 (311D,321D)	All positions of switch wired redundantly.
	INHIBIT	Provides a command to inhibit the automatic opening and closing of the thermal shield doors by the ATMDC.			
	STORAGE	Provides a command which permits DCS to enable or inhibit ATMDC AUTO DOOR functions.			Hα1, Hα2 and X-RAY TELE thermal shield doors are not operated during storage.

SYSTEM	NAME AND POSITION	FUNCTION	CIRCUIT BREAKER	POWER SOURCE	REMARKS
ALERT	SCAN SPECT light	Provides a visual indication of SCAN SPECT high voltage failure of one of more of the seven High Voltage power supplies.	MAIN INV/ LCA 1	3.5-5 vdc VALERT (371D)	
	X-REA HV light	Provides a visual indication of X-REA AL or BE high voltage failure.	MAIN INV/ LCA 1	3.5-5 vdc VALERT (371D)	
	BE COUNT light	Provides a visual indication that X-REA BE COUNT has exceeded 2048 counts/second.	MAIN INV/ LCA 1	3.5-5 vdc VALERT (371D)	
	AL COUNT light	Provides a visual indication that X-REA AL COUNT has exceeded 2048 counts/second.	MAIN INV/ LCA 1	3.5-5 vdc VALERT (371D)	
	DOOR OPEN light	Provides a visual indication that one or more experiment thermal shield doors are open after the automatic ATMDC door close command.	MAIN INV/ LCA 1	3.5-5 vdc VALERT (371D)	
	PWR SYS light	Provides a visual indication of the following condition/s existing in any one or more of 18 CBRM's in the ATM POWER SYSTEM: (a) Battery temp high (b) Battery voltage high or low (c) Regulator voltage high or low	MAIN INV/ LCA 1	3.5-5 vdc VALERT (371D)	
	BAT CHG light	Provides a visual indication that one or more of the 18 CBRM batteries is not charged.	MAIN INV/ LCA 1	3.5-5 vdc VALERT (371D)	

SYSTEM	NAME AND POSITION	FUNCTION	CIRCUIT BREAKER	POWER SOURCE	REMARKS
ALERT	ACS light	Provides a visual indication that one or more of the following conditions have occurred: (1) Rate gyro failure in any axis as determined by redundancy management. (2) ACQ SS failure in either axis as determined by redundancy management. (3) ACQ SS sun presence failure. (4) Star Tracker failure to acquire star in 25 seconds. (5) Computer restart (6) Insufficient maneuver time requested.	MAIN INV/ LCA 1	3.5-5 vdc VALERT (371D)	
	CMPTR REJ light	Provides a visual indication that the ATMDC has rejected a given input command.	MAIN INV/ LCA 1	3.5-5 vdc VALERT (371D)	
	CMG MALF light	Provides a visual indication when one or more of the following conditions have occurred: (1) CMG servo power off. (2) CMG resolver excitation failure. (3) Activation of CMG automatic reset.	MAIN INV LCA 1	3.5-5 vdc VALERT (371D)	
	BRG TEMP 1 light	Provides a visual indication that CMG 1 bearing temperature has exceeded 160°F.	MAIN INV/ LCA 1	3.5-5 vdc VALERT (371D)	
	BRG TEMP 2 light	Provides a visual indication that CMG 2 bearing temperature has exceeded 160°F.	MAIN INV/ LCA 1	3.5-5 vdc VALERT (371D)	
	BRG TEMP 3 light	Provides a visual indication that CMG 3 bearing temperature has exceeded 160°F.	MAIN INV/ LCA 1	3.5-5 vdc VALERT (371D)	

ATM CONTROLS AND DISPLAYS (PANEL 130)

SYSTEM	NAME AND POSITION	FUNCTION	CIRCUIT BREAKER	POWER SOURCE	REMARKS
TELEMETRY	TLM PWR switch ON	Provides a command to apply input power to all TELEMETRY system components.	C/D THRM/ TLM/PWR 1,2	28 vdc VTTP (391D)	Switch is spring loaded to center position.
	center	No function.			
	OFF	Provides a command to remove input power from all TELEMETRY system components.			
	TLM PWR talkback gray	Provides a visual indication that the telemetry system has been activated.	Fused	28 vdc VTMLOG 1, VTMLOG 2 (981M49, 982M49)	
	bp	Absence of signal. Provides a visual indication that the telemetry system has been deactivated.			
	TRANSMITTER 1 INPUT switch TAPE RECORDER	Provides a command to connect either tape recorder output to TRANSMITTER 1.	C/D THRM/ TLM/PWR 1,2	28 vdc VTTP (391D)	Switch is spring loaded to center position.
	center	No function.			
	REAL TIME	Provides a command to connect real time data output to TRANSMITTER 1.			
	TRANSMITTER 1 INPUT talkback RCD	Provides a visual indication that a tape recorder output has been connected to TRANSMITTER 1.	Fused	28 vdc VRKEXP 1, VRKEXP 2 (31C43, 41C43)	
	bp	Absence of signal. Provides a visual indication that TRANSMITTER 1 is not connected to any input data.			
	RT	Provides a visual indication that real time data output has been connected to TRANSMITTER 1.			

SYSTEM	NAME AND POSITION	FUNCTION	CIRCUIT BREAKER	POWER SOURCE	REMARKS
TELEMETRY	TRANSMITTER 2 INPUT switch TAPE RECORDER	Provides a command to connect either tape recorder output to TRANSMITTER 2.	C/D THRM/ TLM/PWR 1,2	28 vdc VTTP (391D)	Switch is spring loaded to center position.
	center	No function.			
	REAL TIME	Provides a command to connect real time data output to TRANSMITTER 2.			
	TRANSMITTER 2 INPUT talkback RCD	Provides a visual indication that a tape recorder output has been connected to TRANSMITTER 2.	Fused	28 vdc VRKEXP 1, VRKEXP 2 (31C43, 41C43)	
	bp	Absence of signal. Provides a visual indication that TRANSMITTER 2 is not connected to any input data.			
	RT	Provides a visual indication that real time data output has been connected to TRANSMITTER 2.			
	TRANSMITTER 1 OUTPUT switch FORWARD ANTENNA	Provides a command to connect TRANSMITTER 1 output to the forward antenna.	C/D THRM/ TLM/PWR 1,2	28 vdc VTTP (391D)	Switch is spring loaded to center position.
	center	No function.			
	AFT ANTENNA	Provides a command to connect TRANSMITTER 1 output to the aft antenna.			

ATM CONTROLS AND DISPLAYS (PANEL 130)

SYSTEM	NAME AND POSITION	FUNCTION	CIRCUIT BREAKER	POWER SOURCE	REMARKS
TELEMETRY	TRANSMITTER 1 OUTPUT talkback FWD	Provides a visual indication that TRANSMITTER 1 output is connected to the forward antenna.	Fused	28 vdc VTMLOG 2 (982M49)	
	white	Absence of signal. Provides a visual indication that TRANSMITTER 1 output is not connected to either antenna.			
	AFT	Provides a visual indication that TRANSMITTER 1 output is connected to the aft antenna.			
	TRANSMITTER 2 OUTPUT switch FORWARD ANTENNA	Provides a command to connect TRANSMITTER 2 output to the forward antenna.	C/D THRM/ TLM/PWR 1,2	28 vdc VTTP (391D)	Switch is spring loaded to center position.
	center	No function.			
	AFT ANTENNA	Provides a command to connect TRANSMITTER 2 output to the aft antenna.			
	TRANSMITTER 2 OUTPUT talkback FWD	Provides a visual indication that TRANSMITTER 2 output is connected to the forward antenna.	Fused	28 vdc VTMLOG 2 (982M49)	
	white	Absence of signal. Provides a visual indication that TRANSMITTER 2 output is not connected to either antenna.			
	AFT	Provides a visual indication that TRANSMITTER 2 output is connected to the aft antenna.			

ATM CONTROLS AND DISPLAYS (PANEL 130)

SYSTEM	NAME AND POSITION	FUNCTION	CIRCUIT BREAKER	POWER SOURCE	REMARKS
TELEMETRY	TAPE RECORDER 1 RECORD switch RECORD	Provides a command to apply input power to TAPE RECORDER 1 and select RECORD mode of operation.	C/D THRM/ TLM/PWR 1,2	28 vdc VTTP (391D)	Switch is spring loaded to center position.
	center	No function.			
	PLAYBACK	Provides a command to apply input power to TAPE RECORDER 1 and select PLAYBACK mode of operation.			
	TAPE RECORDER 1 talkback RCD	Provides a visual indication that TAPE RECORDER 1 has been activated and is operating in RECORD mode.	Fused	28 vdc VTMLOG 2 (982M25)	
	bp	Absence of signal. Provides a visual indication that TAPE RECORDER 1 is deactivated.			
	PB	Provides a visual indication that TAPE RECORDER 1 has been activated and is operating in PLAYBACK mode.			
	TAPE RECORDER 2 RECORD switch RECORD	Provides a command to apply input power to TAPE RECORDER 2 and select RECORD mode of operation.	C/D THRM/ TLM/PWR 1,2	28 vdc VTTP (391D)	Switch is spring loaded to center position.
	center	No function.			
	PLAYBACK	Provides a command to apply input power to TAPE RECORDER 2 and select PLAYBACK mode of operation.			

ATM CONTROLS AND DISPLAYS (PANEL 130)

SYSTEM	NAME AND POSITION	FUNCTION	CIRCUIT BREAKER	POWER SOURCE	REMARKS
TELEMETRY	TAPE RECORDER 2 talkback RCD	Provides a visual indication that TAPE RECORDER 2 has been activated and is operating in RECORD mode.	Fused	28 vdc VTMLOG 2 (982M25)	
	bp	Absence of signal. Provides a visual indication that TAPE RECORDER 2 is deactivated.			
	PB	Provides a visual indication that TAPE RECORDER 2 has been activated and is operating in PLAYBACK mode.			
	TAPE RECORDER 1 OFF switch up	No function. Allows normal operation of TAPE RECORDER 1.			Switch is not wired in the up position and spring loaded to the up position.
	OFF	Provides a command to deactivate TAPE RECORDER 1.	C/D THRM/ TLM/PWR 1,2	28 vdc VTTP (391D)	
	TAPE RECORDER 2 OFF switch up	No function. Allows normal operation of TAPE RECORDER 2.			Switch is not wired in the up position and spring loaded to the up position.
	OFF	Provides a command to deactivate TAPE RECORDER 2.	C/D THRM/ TLM/PWR 1,2	28 vdc VTTP (391D)	

C&D

ATM CONTROLS AND DISPLAYS (PANEL 130)

SYSTEM	NAME AND POSITION	FUNCTION	CIRCUIT BREAKER	POWER SOURCE	REMARKS
ACS	EPC ROLL RSLVR switch PRIMARY	Provides a command to: (a) apply 10 vac, 800 H_z, input power to the primary EPC roll resolvers and connect the resolver outputs to the ATMDC. (b) remove 10 vac, 800 H_z, input power from the secondary EPC roll resolvers and disconnect the resolver outputs from the ATMDC.	C/D ACS 1,2	28 vdc VACS 3 (399D)	This switch does not have an OFF position.
	SECONDARY	Provides a command to: (a) apply 10 vac, 800 H_z, input power to the secondary EPC roll resolvers and connect the resolver outputs to the ATMDC. (b) remove 10 vac, 800 H_z, input power from the primary EPC roll resolvers and disconnect the resolver outputs from the ATMDC.			
	EPC 800 H_z switch PRIMARY	Provides a command to: (a) connect CMGIA NO. 1, 28 vac, 800 H_z, input power and the primary 800 H_z transformer (28 vac to 10 vac) to power buses 7B1 and 7B2. (b) disconnect CMGIA NO. 2 and the secondary 800 H_z transformer from power buses 7B1 and 7B2.	C/D ACS 1,2	28 vdc VACS 3 (399D)	
	OFF	Provides a command to disconnect CMGIA NO. 1 and CMGIA NO. 2 from power buses 7B1 and 7B2.			
	SECONDARY	Provides a command to: (a) connect CMGIA NO. 2, 28 vac, 800 H_z, input power and the secondary 800 H_z transformer (28 vac to 10 vac) to power buses 7B1 and 7B2. (b) disconnect CMGIA NO. 1 and the primary 800 H_z transformer from power buses 7B1 and 7B2.			

ATM CONTROLS AND DISPLAYS (PANEL 130)

SYSTEM	NAME AND POSITION	FUNCTION	CIRCUIT BREAKER	POWER SOURCE	REMARKS
ACS	FSS switch PRIMARY	Provides a command to: (a) apply 28 vdc input power buses, V12C42 and V22C42, to the FSS subsystems. (b) enable the primary and inhibit the secondary FSS power supplies. (c) connect the primary and disconnect the secondary FSS outputs into the EPEA.	C/D ACS 1,2	28 vdc VACS 3 (399D)	FSS switch functions have DAS/DCS backup commands.
	OFF	Provides a command to remove 28 vdc input power buses, V12C42 and V22C42, from the FSS subsystems.			
	SECONDARY	Provides a command to: (a) apply 28 vdc input power buses, V12C42 and V22C42, to the FSS subsystems. (b) enable the secondary and inhibit the primary FSS power supplies. (c) connect the secondary and disconnect the primary FSS outputs into the EPEA.			
	EPC RATE GYRO UP/DN switch PRIMARY	Provides a command to: (a) apply 28 vdc input power buses, V12C42 and V22C42 to the primary UP/DN rate gyro. (b) connect the primary and disconnect the secondary UP/DN rate gyro outputs into the EPEA.	C/D ACS 1,2	28 vdc VACS 3 (399D)	EPC RATE GYRO UP/DN switch functions have DAS/DCS backup commands.
	OFF	Provides a command to remove 28 vdc input power buses, V12C42 and V22C42, from the primary and secondary UP/DN rate gyros.			
	SECONDARY	Provides a command to: (a) apply 28 vdc input power buses, V12C42 and V22C42, to the secondary UP/DN rate gyro. (b) connect the secondary and disconnect the primary UP/DN rate gyro outputs into the EPEA.			

C&D

ATM CONTROLS AND DISPLAYS (PANEL 130)

SYSTEM	NAME AND POSITION	FUNCTION	CIRCUIT BREAKER	POWER SOURCE	REMARKS
ACS	EPC RATE GYRO L/R switch PRIMARY	Provides a command to: (a) apply 28 vdc input power buses, V12C42 and V22C42, to the primary L/R rate gyro. (b) connect the primary and disconnect the secondary L/R rate gyro outputs into the EPEA.	C/D ACS 1,2	28 vdc VACS 3 (399D)	EPC RATE GYRO L/R switch functions have DAS/DCS backup commands.
	OFF	Provides a command to remove 28 vdc input power buses, V12C42 and V22C42 from the primary and secondary L/R rate gyros.			
	SECONDARY	Provides a command to: (a) apply 28 vdc input power buses, V12C42 and V22C42, to the secondary L/R rate gyro. (b) connect the secondary and disconnect the primary L/R rate gyro outputs into the EPEA.			
	MODE EXP PTG switch EXP PTG	Provides a command to the ATMDC requesting the EXPERIMENT POINTING mode.	C/D ACS 1,2	28 vdc VACS 1, 2 (313D,323D)	Switch positions are wired redundantly. Switch functions have DAS/DCS backup commands. Switch is spring loaded to center position.
	center	No function and not wired.			
	STBY	Provides a command to the ATMDC requesting the STANDBY (coast) mode. All ATMDC control commands to the CMGs or TACS will be ramped to zero.			
	MODE EXP PTG talkback STY	Provides a visual indication that the ACS is operating in the STANDBY mode.	Fused	28 vdc VAPCS 1, 2 (12P2,22P2)	
	gray	Absence of both signals. Normal for any two of the three MODE talkbacks.			
	EXP	Provides a visual indication that the last MODE command requested of the ATMDC was EXPERIMENT POINTING.			

ATM CONTROLS AND DISPLAYS (PANEL 130)

SYSTEM	NAME AND POSITION	FUNCTION	CIRCUIT BREAKER	POWER SOURCE	REMARKS
ACS	MODE SOLAR INERTIAL switch SOLAR INERTIAL	Provides a command to the ATMDC requesting SOLAR INERTIAL mode. The vehicle will go to and maintain SOLAR INERTIAL attitude under the control of the ATMDC.	C/D ACS 1,2	28 vdc VACS 1,2 (313D,323D)	Switch positions are wired redundantly. Switch functions have DAS/DCS backup commands. Switch is spring loaded to center position.
	center	No function and not wired.			
	Z-LV	Provides a command to the ATMDC requesting the Z AXIS LOCAL VERTICAL mode. The vehicle will go to and maintain the Z-LV attitude under the control of the ATMDC.			
	MODE SOLAR INERTIAL talkback SI	Provides a visual indication that the last MODE command requested of the ATMDC was SOLAR INERTIAL.	Fused	28 vdc VAPCS 1,2 (12P2,22P2)	
	gray	Absence of both signals. Normal for any two of the three MODE talkbacks.			
	ZLV	Provides a visual indication that the last MODE command requested of the ATMDC was Z AXIS LOCAL VERTICAL.			
	MODE ATT HOLD switch CMG	Provides a command to the ATMDC requesting the ATTITUDE HOLD CMG mode. The vehicle will remain inertially fixed under the control of the ATMDC.	C/D ACS 1,2	28 vdc VACS 1,2 (313D,323D)	Switch positions are wired redundantly. Switch functions have DAS/DCS backup commands. Switch is spring loaded to center position.
	center	No function and not wired.			
	TACS	Provides a command to the ATMDC requesting the ATTITUDE HOLD TACS (only) mode. The vehicle will remain inertially fixed under the control of the ATMDC.			

ATM CONTROLS AND DISPLAYS (PANEL 130)

SYSTEM	NAME AND POSITION	FUNCTION	CIRCUIT BREAKER	POWER SOURCE	REMARKS
ACS	MODE ATT HOLD talkback CMG	Provides a visual indication that the last MODE command requested of the ATMDC was ATTITUDE HOLD CMG.	Fused	28 vdc VAPCS 1, 2 (12P2,22P2)	
	gray	Absence of both signals. Normal for any two of the three MODE talkbacks.			
	TAC	Provides a visual indication that the last MODE command requested of the ATMDC was ATTITUDE HOLD TACS			
	SR/SS switch CMP	Provides a command to use effective sunrise and effective sunset to calculate TIME REMAINING and to drive DAY-NIGHT talkback.	C/D ACS 1,2	28 vdc VACS 3 (399D)	Switch is spring loaded to center position. Switch functions have DAS/DCS backup commands.
	SUN	Provides a command to use actual sunrise and sunset to calculate TIME REMAINING and to drive DAY-NIGHT talkback.			
	SR/SS talkback CMP	Provides a visual indication that the ATMDC is using effective sunrise and effective sunset to calculate TIME REMAINING and to drive DAY-NIGHT talkback.	Fused	28 vdc VAPCS 1,2 (12P2,22P2)	
	white	Absence of both signals.			
	SUN	Provides a visual indication that the ATMDC is using actual sunrise and sunset to calculate TIME REMAINING and to drive DAY-NIGHT talkback.			

ATM CONTROLS AND DISPLAYS (PANEL 130)

SYSTEM	NAME AND POSITION	FUNCTION	CIRCUIT BREAKER	POWER SOURCE	REMARKS
ACS	STAR TRACK POWER switch ON	Provides a command to: (a) apply 28 vdc input power buses, V12C42 and V22C42, to the Star Tracker system. (b) connect the Star Tracker to CMGIA NO. 1 or CMGIA NO. 3 depending on which CMGIA was commanded (via DAS/DCS) to be the source of 130 vac, 455 H_z power.	C/D ACS 1,2	28 vdc VACS 3 (399D)	Switch functions have DAS/DCS backup commands. The POWER ON command will initialize the inner and outer gimbals to a reference zero degrees position.
	OFF	Provides a command to: (a) remove 28 vdc input power buses, V12C42 and V22C42, from the Star Tracker system. (b) disconnect the Star Tracker from CMGIA No. 1 or CMGIA NO. 3, 130 vac, 455 H_z power source.			
	STAR TRACK ACQ switch AUTO	Provides a command to open the shutter and to initiate an automatic search pattern to acquire a star.	C/D ACS 1,2	28 vdc VACS 3 (399D)	The search pattern is preprogrammed within the Star Tracker electronics. When a star is acquired, the Star Tracker will track the star. AUTO command is required before ATMDC control of the Star Tracker becomes functional. Switch is spring loaded to center position.
	center	No function and not wired.			
	MAN	Provides a command to open the shutter and to enable the Star Tracker to receive manual positioning rate commands from the MPC which drive the inner and outer gimbals. The ATMDC cannot control the Star Tracker in the MAN mode.			
	STAR TRACK ACQ talkback AUT	Provides a visual indication that the Star Tracker is either searching for or is tracking a reference star.	Fused	28 vdc VAPCS 1,2 (12P2,22P2)	
	bp	Absence of both signals. Provides a visual indication that the Star Tracker gimbals are being held at their last tracking position.			

SYSTEM	NAME AND POSITION	FUNCTION	CIRCUIT BREAKER	POWER SOURCE	REMARKS
ACS	MAN	Provides a visual indication that the Star Tracker has been enabled to receive manual gimbal position rate commands from the Manual Pointing Controller.			
	STAR TRACK SHUTTER switch AUTO CLOSE	 No function and not wired. Provides a command to close the shutter and hold the Star Tracker gimbals in their last tracking position. ACQ AUTO or MAN commands are required to open the shutter and unlock the gimbals.	 C/D ACS 1,2	 28 vdc VACS 3 (399D)	Switch is spring loaded to AUTO position.
	STAR TRACK SHUTTER talkback bp OPN STR	 Provides a visual indication that the shutter is closed. Absence of both signals. Provides a visual indication that the shutter is open and the star has not been acquired. Provides a visual indication that the star has been acquired and the Star Tracker is tracking the star.	 Fused	 28 vdc VAPCS 1,2 (12P2,22P2)	ATMDC functions depend on whether Star Tracker control by the ATMDC is enabled or inhibited. Normally the ATMDC will allow 25 seconds of search time to acquire the star before it commands the shutter to close and the gimbals to hold.
	FSS DOOR switch OPEN center CLOSE	 Provides a command to open the Fine Sun Sensor door. No function and not wired. Provides a command to close the Fine Sun Sensor door.	 C/D ACS 1,2	 28 vdc VACS 3 (399D)	Switch is spring loaded to center position. Switch functions have DAS/DCS backup commands.

ATM CONTROLS AND DISPLAYS (PANEL 130)

SYSTEM	NAME AND POSITION	FUNCTION	CIRCUIT BREAKER	POWER SOURCE	REMARKS
ACS	FSS DOOR talkback bp OPN SUN	Provides a visual indication that the Fine Sun Sensor door is closed. Absence of both signals. Provides a visual indication that the Fine Sun Sensor door is open and the sun has not been acquired. Provides a visual indication that the Fine Sun Sensor has acquired the sun.	Fused	28 vdc VAPCS 1,2 (12P2,22P2)	Both the UP/DN and the L/R Fine Sun Sensors must be within two degrees of sun center to generate sun presence signals.
	MOMENTUM DUMP AUTO GG switch ENABLE center INHIBIT	Provides a command to the ATMDC requesting automatic CMG desaturation to be initiated with the detection of a timing discrete from the timing and navigation scheme. No function and not wired. Provides a command to inhibit automatic CMG desaturation.	C/D ACS 1,2	28 vdc VACS 3 (399D)	Switch is spring loaded to center position. Switch functions have DAS/DCS backup commands.
	MOMENTUM DUMP AUTO GG talkback ACT gray bp	Provides a visual indication that CMG desaturation maneuvers are in progress. Absence of both signals. Provides a visual indication that CMG desaturation scheme has been enabled but is not active. Provides a visual indication that the CMG desaturation scheme has been inhibited.	Fused	28 vdc VAPCS 1,2 (12P2,22P2)	
	MOMENTUM DUMP CAGE switch ZERO H center RELEASE	Provides a command to electrically cage the 3 CMGs in a zero momentum configuration. No function and not wired. Provides a command to release the 3 CMGs from a zero momentum configuration.	C/D ACS 1,2	28 vdc VACS 3 (399D)	Switch is spring loaded to center position. Switch functions have DAS/DCS backup commands.

C&D

SYSTEM	NAME AND POSITION	FUNCTION	CIRCUIT BREAKER	POWER SOURCE	REMARKS
ACS	MOMENTUM DUMP CAGE talkback gray wht CGE	Provides a visual indication that the 3 CMGs are not caged in a zero momentum configuration. Absence of both signals. Provides a visual indication that the ATMDC has received a CAGE command.	Fused	28 vdc VAPCS 1,2 (12P2,22P2)	
	FSS BIAS XUV SLIT switch XUV SLIT Hα SCAN SPECT	Provides the ATMDC with an address which selects XUV SLIT experiment to be calibrated and displayed. Applies Bus VACS 3 power to FSS BIAS Hα1 switch. Provides the ATMDC with an address which selects SCAN SPECT experiment to be calibrated and displayed.	C/D ACS 1,2	28 vdc VACS 3 (399D)	
	FSS BIAS Hα1 switch Hα1 Hα2	With FSS BIAS XUV SLIT switch in Hα position, provides the ATMDC with an address which selects Hα1 experiment to be calibrated and displayed. With FSS BIAS XUV SLIT switch in Hα position, provides the ATMDC with an address which selects Hα2 experiment to be calibrated and displayed.	C/D ACS 1,2	28 vdc VACS 3 (399D)	

ATM CONTROLS AND DISPLAYS (PANEL 130)

SYSTEM	NAME AND POSITION	FUNCTION	CIRCUIT BREAKER	POWER SOURCE	REMARKS
ACS	FSS BIAS IN switch IN	Provides the ATMDC with an address to add the selected experiment FSS BIAS angle stored to the FSS wedge angle and display the sum on MONITOR COUNTERS 1,2, and 3.	C/D ACS 1,2	28 vdc VACS 3 (399D)	
	OUT	Removes FSS BIAS IN address from ATMDC.			OUT position of switch not wired
	FSS BIAS MARK switch MARK	Provides the ATMDC with an address to store the FSS wedge angle to be used for FSS BIAS computation.	C/D ACS 1,2	28 vdc VACS 3 (399D)	Switch is spring loaded to center position.
	center	No function and not wired.			
	CLEAR	Provides the ATMDC with an address to reset all stored FSS BIAS angles to zero for a selected experiment and set up a subroutine for entering new FSS angle coordinates.			
	SUN ACQ SENSOR talkback PRI	Provides a visual indication that the PRIMARY ACQ SS is being used to update the strapdown computation about X_V and Y_V axes during SOLAR INERTIAL (day) or EXPERIMENT POINTING modes.	Fused	28 vdc VAPCS 1,2 (12P2,22P2)	
	gray	Absence of both signals. Provides a visual indication that both PRIMARY and SECONDARY ACQ SS outputs are being averaged and used for strapdown computation.			
	SEC	Provides a visual indication that the SECONDARY ACQ SS is being used to update the strapdown computation about X_V and Y_V axes during SOLAR INERTIAL (day) or EXPERIMENT POINTING modes.			

ATM CONTROLS AND DISPLAYS (PANEL 130)

SYSTEM	NAME AND POSITION	FUNCTION	CIRCUIT BREAKER	POWER SOURCE	REMARKS
ACS	SUN ACQ SUN PRESENT talkback gray	Provides a visual indication that the ACQ SS has the sun within its target sensor field of view.	Fused	28 vdc VAPCS 1,2 (12P2,22P2)	Indications hold for any of the following conditions: (a) both PRIMARY and SECONDARY ACQ SS outputs being averaged. (b) only PRIMARY or only SECONDARY ACQ SS being used.
	bp	Absence of signal. Provides a visual indication that the sun is outside the ACQ SS target sensor field of view.			
	CMPTR talkback PRI	Provides a visual indication that the PRIMARY ATMDC is active.	Fused	28 vdc VAPCS 1,2 (12P2,22P2)	
	white	Absence of both signals. This indication is normal for a period of 500 milliseconds when ATMDC switchover is in progress.			
	SEC	Provides a visual indication that the SECONDARY ATMDC is active.			
	CMPTR switch PRIM	Provides a command to: (a) Start a 300 millisecond timer. (b) Connect input power buses, V12P2 and V22P2, to the PRIMARY ATMDC at the end of the 300 millisecond period. (c) disconnect input power buses, V12P2 and V22P2, from the SECONDARY ATMDC. (d) inhibit automatic computer switchover function. (e) connect PRIMARY ATMDC display outputs and disconnect SECONDARY ATMDC display outputs to the ATM C&D panel. (f) connect PRIMARY ATMDC MPC substitute lines and disconnect SECONDARY ATMDC MPC substitute lines to the EPEA.	C/D ACS 1,2	28 vdc VACS 3 (399D)	Switch functions have DAS/DCS backup commands.
	AUTO	Provides a command to enable the automatic ATMDC switchover function.			

ATM CONTROLS AND DISPLAYS (PANEL 130)

SYSTEM	NAME AND POSITION	FUNCTION	CIRCUIT BREAKER	POWER SOURCE	REMARKS
	SEC	Provides a command to: (a) start a 300 millisecond timer. (b) connect input power buses, V12P2 and V22P2, to the SECONDARY ATMDC at the end of the 300 millisecond period. (c) disconnect input power buses, V12P2 and V22P2, from the PRIMARY ATMDC. (d) inhibit automatic computer switchover function. (e) connect SECONDARY ATMDC displays outputs and disconnect PRIMARY ATMDC display outputs to the ATM C&D panel. (f) connect SECONDARY ATMDC MPC substitute lines and disconnect PRIMARY ATMDC MPC substitute lines to the EPEA.			
	EPEA switch PRIM	Provides a command to: (a) connect input power buses, V12P2 and V22P2, to the EPEA. (b) connect input power to the PRIMARY EPEA circuits and disconnect input power from the SECONDARY EPEA circuits. (c) switch all EPEA input/output lines from the SECONDARY to the PRIMARY EPEA circuits. (d) switch all EPEA TM inputs from the SECONDARY to the PRIMARY EPEA channels.	C/D ACS 1,2	28 vdc VACS 3 (399D)	Switch functions have DAS/DCS backup commands.
	OFF	Provides a command to remove input power buses, V12P2 and V22P2, from the EPEA.			
	SEC	Provides a command to: (a) connect input power buses, V12P2 and V22P2, to the EPEA. (b) connect input power to the SECONDARY EPEA circuits and disconnect input power from the PRIMARY EPEA circuits. (c) switch all EPEA input/output lines from the PRIMARY to the SECONDARY EPEA circuits. (d) switch all EPEA TM inputs from the PRIMARY to the SECONDARY EPEA channels.			

C&D

SYSTEM	NAME AND POSITION	FUNCTION	CIRCUIT BREAKER	POWER SOURCE	REMARKS
ACS	TACS 1 switch				
	ENABLE	Removes the INHIBIT command thereby allowing THRUSTER 1 of the Thruster Attitude Control System to fire on command.			ENABLE position is not wired.
	INHIBIT	Provides a command to inhibit firing of THRUSTER 1 by removing 28 vdc, AM BUS 1 and AM BUS 2, power from TACS BUS 1-1 and TACS BUS 1-2 respectively.	STS panel MANUAL CONTROL INHIBIT 1,2	28 vdc AM BUS 1 AM BUS 2	INHIBIT position is wired redundantly.
	TACS 2 switch				
	ENABLE	Removes the INHIBIT command thereby allowing THRUSTER 2 of the Thruster Attitude Control System to fire on command.			ENABLE position is not wired.
	INHIBIT	Provides a command to inhibit firing of THRUSTER 2 by removing 28 vdc, AM BUS 1 and AM BUS 2, power from TACS BUS 2-1 and TACS BUS 2-2 respectively.	STS panel MANUAL CONTROL INHIBIT 1,2	28 vdc AM BUS 1 AM BUS 2	INHIBIT position is wired redundantly.
	TACS 3 switch				
	ENABLE	Removes the INHIBIT command thereby allowing THRUSTER 3 of the Thruster Attitude Control System to fire on command.			ENABLE position is not wired.
	INHIBIT	Provides a command to inhibit firing of THRUSTER 3 by removing 28 vdc, AM BUS 1 and AM BUS 2, power from TACS BUS 3-1 and TACS BUS 3-2 respectively.	STS panel MANUAL CONTROL INHIBIT 1,2	28 vdc AM BUS 1 AM BUS 2	INHIBIT position is wired redundantly.
	TACS 4 switch				
	ENABLE	Removes the INHIBIT command thereby allowing THRUSTER 4 of the Thruster Attitude Control System to fire on command.			ENABLE position is not wired.
	INHIBIT	Provides a command to inhibit firing of THRUSTER 4 by removing 28 vdc, AM BUS 1 and AM BUS 2, power from TACS BUS 4-1 and TACS BUS 4-2 respectively.	STS panel MANUAL CONTROL INHIBIT 1,2	28 vdc AM BUS 1 AM BUS 2	INHIBIT position is wired redundantly.

ATM CONTROLS AND DISPLAYS (PANEL 130)

SYSTEM	NAME AND POSITION	FUNCTION	CIRCUIT BREAKER	POWER SOURCE	REMARKS
ACS	TACS 5 switch ENABLE	Removes the INHIBIT command thereby allowing THRUSTER 5 of the Thruster Attitude Control System to fire on command.			ENABLE position is not wired.
	INHIBIT	Provides a command to inhibit firing of THRUSTER 5 by removing 28 vdc, AM BUS 1 and AM BUS 2, power from TACS BUS 5-1 and TACS BUS 5-2 respectively.	STS panel MANUAL CONTROL INHIBIT 1,2	28 vdc AM BUS 1 AM BUS 2	INHIBIT position is wired redundantly.
	TACS 6 switch ENABLE	Removes the INHIBIT command thereby allowing THRUSTER 6 of the Thruster Attitude Control System to fire on command.			ENABLE position is not wired.
	INHIBIT	Provides a command to inhibit firing of THRUSTER 6 by removing 28 vdc, AM BUS 1 and AM BUS 2, power from TACS BUS 6-1 and TACS BUS 6-2 respectively.	STS panel MANUAL CONTROL INHIBIT 1,2	28 vdc AM BUS 1 AM BUS 2	INHIBIT position is wired redundantly.
	TACS 1 thru 6 lights (6)	Provides a visual indication that the associated THRUSTER is firing.	MAIN INV/ LCA 1,2	5 vdc VTACS ST (372D)	TACS lights are green.
	CMG SYSTEM 1,2,3 switches (3) ON	Provides a command to: (a) connect CMGIA to input APCS power buses V12P2 and V22P2. (b) enable CMG wheel power, CMG electronic assembly servo amps, and the CMG bearing thermal control system. (c) remove CMG whell brake and inhibit CMG automatic shutdown logic.	C/D ACS 1,2	28 vdc VACS 3 (399D)	Switch functions have DAS/DCS backup commands.
	AUTO	Enables CMG automatic shutdown logic. A CMG will shutdown when a bearing temperature is equal to or exceeds 200 degs F and enables the ATMDC to remove CMG servo amp power resulting from redundancy management.			AUTO position is not wired.

ATM CONTROLS AND DISPLAYS (PANEL 130)

SYSTEM	NAME AND POSITION	FUNCTION	CIRCUIT BREAKER	POWER SOURCE	REMARKS
ACS	OFF	Provides a command to: (a) disconnect CMGIA from input APCS power buses V12P2 and V22P2. (b) inhibit CMG wheel power and CMG electronic assembly servo amp. (c) apply CMG wheel brake and inhibit CMG automatic shutdown logic.			
	CMG SYSTEM 1,2,3 talkbacks (3) gray	Provides a visual indication that the CMG wheel power and its associated servo amp have been enabled.	Fused	28 vdc VCMG 1A3 VCMG 2A3 VCMG 3A3	
	bp	Absence of signal. Provides a visual indication that the CMG wheel power and/or servo amp have been inhibited.			
	RATE GYRO MONITOR X, Y, Z switches (3) 1/2	Provides a command to display the control status of the No. 1 and No. 2 rate gyros of the X, Y, and Z axis on the appropriate RATE GYRO MONITOR X, Y, or Z talkback.	C/D ACS 1,2	28 vdc VACS 3 (399D)	
	2/3	Allows the control status of the No. 2 and No. 3 rate gyros of the X, Y, and Z axis to be displayed on the appropriate RATE GYRO MONITOR X, Y, or Z talkback.			2/3 position is not wired.
	3/1	Provides a command to display the control status of the No. 3 and No. 1 rate gyros of the X, Y, and Z axis on the appropriate RATE GYRO MONITOR X, Y, or Z talkback.			

ATM CONTROLS AND DISPLAYS (PANEL 130)

SYSTEM	NAME AND POSITION	FUNCTION	CIRCUIT BREAKER	POWER SOURCE	REMARKS
ACS	RATE GYRO MONITOR X,Y,Z talkbacks (3) gray	Provides a visual indication that both of the X, Y, or Z axis selected rate gyros are operational and in control. Gyro outputs are averaged.	Fused	28 vdc VAPCS 1,2 (12P2,22P2)	
	bp	Absence of both signals. Indicates that the X, Y, or Z axis selected pair of rate gyro outputs are not being averaged.			Another pair of rate gyros may be operational and in control.
	SGL	Provides a visual indication that one of the X, Y, or Z axis selected rate gyros is operating and in control. The first number of the associated X, Y, or Z RATE GYRO MONITOR switch position indicates which rate gyro is in control.			

C&D

SYSTEM	NAME AND POSITION	FUNCTION	CIRCUIT BREAKER	POWER SOURCE	REMARKS
MONITOR	ACS selector switch OFF	Removes input power, VACS 3, from the ACS indicator.	C/D ACS 1,2	28 vdc VACS 3 (399D)	ACS indicator pwr fail lgt will go on for this position.
	WHL AMPS 1, 2, or 3	Provides a command to display the wheel current of CMG 1, 2 or 3 (100% = 3 amps)			
	WHL SPD 1, 2, or 3	Provides a command to display the wheel speed of CMG 1, 2 or 3 (100% = 10,000 rpm)			
	H_X, H_T	Provides a command to display the component and projection of H_T along the X_V axis and the total momentum stored by the CMG system. (H_X, H_T, 100% = 9300 nms)			
	H_Y, H_T	Provides a command to display the component and projection of H_T along the Y_V axis and the total momentum stored by the CMG system. (H_Y, H_T, 100% = 9300 nms)			
	H_Z, H_T	Provides a command to displat the component and projection of H_T along the Z_V axis and the total momentum stored by the CMG system. (H_Z, H_T, 100% = 9300 nms)			
	DAS	Provides a command to display one of the following parameters when commanded by DAS: 1. CMG 1 bearing 1 temperature (100% = 212° F) 2. CMG 1 bearing 2 temperature (100% = 212° F) 3. CMG 2 bearing 1 temperature (100% = 212° F) 4. CMG 2 bearing 2 temperature (100% = 212° F) 5. CMG 3 bearing 1 temperature (100% = 212° F) 6. CMG 3 bearing 2 temperature (100% = 212° F)			
	TACS P	Provides a command to display the pressure of the TACS propellant (100% = 3100 psia)			

ATM CONTROLS AND DISPLAYS (PANEL 130)

SYSTEM	NAME AND POSITION	FUNCTION	CIRCUIT BREAKER	POWER SOURCE	REMARKS
MONITOR	ACS indicator	Displays the parameters selected by the ACS selector switch in percentage.	C/D ACS 1,2	28 vdc VACS 3 (399D)	Indicator will not have input power when ACS selector switch is in OFF position or if CONSOLE POWER DISTRIBUTION ACS switch is in OFF position.
	ACS indicator pwr fail light	Provides a visual indication that the ACS indicator has lost internal operational power or that power has been removed.	MAIN INV/ LCA 1,2	2-5 vdc VSTATUS (381D)	ACS indicator has internal operational power when light if off.
	ANGLE selector switch OFF	Removes input power, VACS 3, from the ANGLE indicator.	C/D ACS 1,2	28 vdc VACS 3 (399D)	ANGLE indicator pwr fail lgt will go on for this position.
	CMG 1,2 or 3	Provides a command to display the inner and outer gimbal angles of the selected CMG. (Inner 0% = 0°, ±100% = 90°; Outer 0% = 0°, -100% = -135°, 100% = 225°.)			
	XUV MIRROR	Provides a command to display the XUV SLIT experiment mirror offset angle (0% = 0 arc-sec, ±35% = ±24.5 arc-sec, ±100% = ± 70 arc-sec)			
	ACQ SS X/Y	Provides a command to display attitude error outputs from the acquisition sun sensor (±100% = ±5°).			
	ANGLE indicator	Displays the parameters selected by the ANGLE selector switch in percentage.	C/D ACS 1,2	28 vdc VACS 3 (399D)	Indicator will not have input power when ANGLE selector switch is in OFF position or if CONSOLE POWER distribution ACS switch is in OFF position.
	ANGLE indicator pwr fail light	Provides a visual indication that the ANGLE indicator has lost internal operational power or that power has been removed.	MAIN INV/ LCA 1,2	2-5 vdc VSTATUS (381D)	Angle indicator has internal operational power when light is off.

C&D

ATM CONTROLS AND DISPLAYS (PANEL 130)

SYSTEM	NAME AND POSITION	FUNCTION	CIRCUIT BREAKER	POWER SOURCE	REMARKS
MONITOR	COUNTER 1 selector switch				
	OFF	Removes input and NUMERIC LTG power from COUNTER 1.	C/D ACS 1,2	28 vdc VACS 3 (399D)	
	ROLL EXP	Provides a command to display, in arc-min, the experiment roll angle, γ_{RR}, which is the angle between solar north and the FSS "up" projections as seen in the plane of the solar disc.		28 vdc VACS 1 (313D)	
	ROLL CSTR	Provides a command to display, in arc min, the roll position of the experiment canister relative to the ATM rack.		28 vdc VACS 1 (313D)	
	$\dot{\phi}_Z$	Provides a command to display, in deg X 10^{-4}/sec, the attitude rate about the Z_V axis.		28 vdc VACS 3 (399D)	
	SCAN SPECT PRESS	Allows SCAN SPECT experiment pressure to be displayed.		28 vdc VACS 3 (399D)	
	ϕ_X	Provides a command to display, in deg X 10^{-1}, the position of the cluster about the X axis with respect to the desired reference; i.e. solar inertial or Z local vertical.		28 vdc VACS 3 (399D)	
	FSS CAL	Provides a command to display the following codes during FSS bias operations: Code Displayed — Status Indicated 0001 — Subroutine ready for first up/down point 0002 — Subroutine ready for second up/down point 0003 — Subroutine ready for first left/right point 0004 — Subroutine ready for second left/right point		28 vdc VACS 3 (399D)	
	DAS	Provides a command to display, when commanded by the DAS, one of the ATMDC generated functions.		28 vdc VACS 1,2 (313D,323D)	

ATM CONTROLS AND DISPLAYS (PANEL 130)

SYSTEM	NAME AND POSITION	FUNCTION	CIRCUIT BREAKER	POWER SOURCE	REMARKS
MONITOR	STAR TCK GIMBALS OUTER	Provides a command to display, in arc-min, the star tracker outer gimbal angle.		28 vdc VACS 2 (323D)	
	STAR TCK GIMBALS INNER	Provides a command to display, in arc-min, the star tracker inner gimbal angle.		28 vdc VACS 2 (323D)	
	FSS UP/DN	Provides a command to display, in arc-sec, the fine sun sensor up/down wedge angle with the FSS BIAS IN switch in the OUT position or wedge angle $\pm$ selected bias value stored in ATMDC with the FSS BIAS IN switch in the IN position.		28 vdc VACS 2 (323D)	
	COUNTER 1 indicator	Displays parameters which are selected by the COUNTER 1 selector switch.	INV AC 1,2	115 vac 400 H_z VATM AC 1,2 (361D,362D)	Indicator will not have input power when COUNTER 1 selector switch is in OFF position or when DISPLAYS ACS CNTRS switch is in OFF position.
	COUNTER 2 selector switch				
	OFF	Removes input and NUMERIC LTG power from COUNTER 2.	C/D ACS 1,2	28 vdc VACS 3 (399D)	
	FSS UP/DN	Provides a command to display, in arc-sec, the fine sun sensor up/dn wedge angle with the FSS BIAS IN switch in the OUT position or wedge angle $\pm$ selected bias value stored in computer with the FSS BIAS IN switch in the IN position.		28 vdc VACS 1 (313D)	
	STAR TCK GIMBALS INNER	Provides a command to display, in arc-min, the star tracker inner gimbal angle.		28 vdc VACS 1 (313D)	
	$\dot{\phi}_x$	Provides a command to display, in deg X 10^{-4}/sec, the attitude rate about the X_V axis.		28 vdc VACS 3 (399D)	
	STAR TCK GIMBALS OUTER	Provides a command to display, in arc-min, the star tracker outer gimbal angle.		28 vdc VACS 1 (313D)	

ATM CONTROLS AND DISPLAYS (PANEL 130)

SYSTEM	NAME AND POSITION	FUNCTION	CIRCUIT BREAKER	POWER SOURCE	REMARKS
MONITOR	øy	Provides a command to display, in deg X 10^{-1}, the position of the cluster about the Y_V axis with respect to the desired reference, i.e. solar inertial or Z local vertical.		28 vdc VACS 3 (399D)	
	BE COUNT	Allows the beryllium counting rate of the proportional counter in the X-RAY TELE experiment to be displayed.		28 vdc VACS 3 (399D)	
	DAS	Provides a command to display, when commanded by the DAS, one of the ATMDC generated functions.		28 vdc VACS 1,3 (313D,399D)	
	λ	Provides a command to display, in 10^{-1} degrees, the earth referenced longitude of the ascending node.		28 vdc VACS 3 (399D)	
	FSS L/R	Provides a command to display, in arc-sec, the left/right fine sun sensor wedge angle with the FSS BIAS IN switch in the OUT position or wedge angle ± selected bias value stored in the ATMDC with the FSS BIAS IN switch in the IN position.		28 vdc VACS 1 (313D)	
	COUNTER 2 indicator	Displays parameters which are selected by the COUNTER 2 selector switch.	INV AC 1,2	115 vac 400 HZ VATM AC 1,2 (361D,362D)	Indicator will not have input power when COUNTER 2 selector switch is in OFF position or when DISPLAYS ACS CNTRS switch is in OFF position.
	COUNTER 3 selector switch				
	OFF	Removes input and NUMERIC LTG power from COUNTER 3.	C/D ACS 1,2	28 vdc VACS 3 (399D)	
	FSS L/R	Provides a command to display, in arc-sec, the left/right fine sun sensor wedge angle with the FSS BIAS IN switch in the OUT position or wedge angle ± selected bias value stored in ATMDC with the FSS BIAS IN switch in the IN position.		28 vdc VACS 2 (323D)	

ATM CONTROLS AND DISPLAYS (PANEL 130)

SYSTEM	NAME AND POSITION	FUNCTION	CIRCUIT BREAKER	POWER SOURCE	REMARKS
MONITOR	$\dot{\phi}_y$	Provides a command to display, in deg X 10^{-4}/sec, the attidude rate about the Y_V axis.		28 vdc VACS 3 (399D)	
	$\Delta t\lambda$	Provides a command to display the time, in minutes and seconds, from ascending node longitude crossing.		28 vdc VACS 3 (399D)	
	ϕ_z	Provides a command to display, in deg X 10^{-1}, the position of the cluster about the Z_V axis with respect to the desired reference, i.e. solar inertial or Z local vertical.		28 vdc VACS 3 (399D)	
	AL COUNT	Allows the aluminum counting rate of the proportional counter in the X-RAY TELE experiment to be displayed.		28 vdc VACS 3 (399D)	
	DAS	Provides a command to display, when commanded by the DAS, one of the ATMDC generated functions.		28 vdc VACS 1,3 (313D,399D)	
	ROLL EXP	Provides a command to display, in arc-min, the experiment roll angle, γ_{RR}, which is the angle between solar north and the FSS "up" projections as seen in the plane of the solar disc.		28 vdc VACS 2 (323D)	
	ROLL CSTR	Provides a command to display, in arc-min, the roll position of the experiment package relative to the rack.		28 vdc VACS 2 (323D)	
	ORBITAL PLANE ERROR	Provides a command to display the angular difference between the vehicle X-axis and the orbital plane.		28 vdc VACS 3 (399D)	
	LIMB OFFSET	Provides a command to display, in arc-sec, the angular displacement XUV SLIT experiment from the sun's limb.		28 vdc VACS 3 (399D)	
	COUNTER 3 indicator	Displays parameters which are selected by the COUNTER 3 selector switch.	INV AC 1, 2	115 vac 400 HZ VATM AC 1,2 (361D,362D)	Indicator will not have input when COUNTER 3 selector switch is in OFF position or when DISPLAYS ACS CNTRS switch is in OFF position.

ATM CONTROLS AND DISPLAYS (PANEL 130)

SYSTEM	NAME AND POSITION	FUNCTION	CIRCUIT BREAKER	POWER SOURCE	REMARKS
MONITOR	COUNTER 1,2 & 3 talkbacks (3) + white -	Provides a visual indication that a positive quantity is being displayed on the associated COUNTER. Absence of both signals. Provides a visual indication that a negative quantity is being displayed on the associated COUNTER.	Fused	28 vdc VAPCS 1,2 (12P2,22P2)	

ATM CONTROLS AND DISPLAYS (PANEL 130)

SYSTEM	NAME AND POSITION	FUNCTION	CIRCUIT BREAKER	POWER SOURCE	REMARKS
MANUAL POINTING CONTROL	MPC UP/IG, DN/IG	With MAN PTG ENABLE switch in the ENABLE position, provides variable rate commands to: (a) EPEA for spar/canister up/down positioning when the Experiment Pointing Control System is active; or (2) STAR TRACKER for inner gimbal positioning in STAR TRACKER ACQ MAN mode.	Fused	28 vac 800 H_z 7B1 7B2	The source for the 28 vac, 800 H_z MPC power, buses 7B1 and 7B2, is from CMGIA No. 1 or CMGIA No. 2 depending on the position of the EPC 800 H_z switch. The MPC is replaceable in flight with a spare unit.
	L/OG, R/OG	With MAN PTG ENABLE switch in the ENABLE position, provides variable rate commands to: (a) EPEA for spar/canister left/right positioning when the Experiment Pointing Control System is active; or (2) STAR TRACKER for outer gimbal positioning in STAR TRACKER ACQ MAN mode.			
	ROLL ENABLE switch ENABLE	Provides a command to disengage the spar/canister roll brake and enable the roll control loops in the EPEA.	C/D ACS 1,2	28 vdc VACS 1,2 (313D,323D)	ENABLE position is wired redundantly.
	INHIBIT	Removes the ENABLE command thereby engaging the spar/canister roll brake and disabling the roll control loops in the EPEA.			INHIBIT position is not wired.
	ROLL HIGH RATE switch CCW	Provides a command to the EPEA to drive the ATM spar/canister CCW in roll at 7.0 or 3.5°/sec.	C/D ACS 1,2	28 vdc VACS 1,2 (313D,323D)	Switch is spring loaded to the center position. CCW and CW positions are wired redundantly. Roll rates of 7.0 and 3.5°/sec depend upon the position of the ROLL GAIN X1-X2 switch.
	center	No function and not wired.			
	CW	Provides a command to the EPEA to drive the ATM spar/canister CW in roll at 7.0 or 3.5°/sec.			

ATM CONTROLS AND DISPLAYS (PANEL 130)

SYSTEM	NAME AND POSITION	FUNCTION	CIRCUIT BREAKER	POWER SOURCE	REMARKS
MANUAL POINTING CONTROL	ROLL LOW RATE switch CCW	Provides a command to the EPEA to drive the ATM spar/canister CCW in roll at 0.7 or 0.35°/sec.	C/D ACS 1,2	28 vdc VACS 1,2 (313D,323D)	Switch is spring loaded to the center position. CCW and CW positions are wired redundantly. Roll rates of 0.7 or 0.35°/sec depend upon the position of the ROLL GAIN X1-X2 switch.
	center	No function and not wired.			
	CW	Provides a command to the EPEA to drive the ATM spar/canister CW in roll at 0.7 or 0.35°/sec.			
	ROLL GAIN switch X1	Provides a command to the EPEA roll control circuitry to enable ATM spar/canister roll rates of 3.5°/sec (high) and 0.35°/sec (low).	C/D ACS 1,2	28 vdc VACS 1,2 (313D,323D)	Both positions of switch are wired redundantly. Actual roll rates and directions of the ATM spar/canister depend on the ROLL HIGH RATE and the ROLL LOW RATE switch positions.
	X2	Provides a command to the EPEA roll control circuitry to enable ATM spar/canister roll rates of 7.0°/sec (high) and 0.7°/sec (low).			
	MAN PTG switch ENABLE	Provides a command to enable the MPC control loops in the EPEA.	C/D ACS 1,2	28 vdc VACS 1,2 (313D,323D)	ENABLE position is wired redundantly. INHIBIT position is not wired.
	INHIBIT	Removes ENABLE command and disables the MPC control loops in the EPEA.			
	MAN PTG talkback EXP	Provides a visual indication that the MPC commands are connected to the FSS wedge drive motors for position control of the ATM spar/canister.	Fused	28 vdc VAPCS 1,2 (12P2,22P2)	
	bp	Absence of signals. Indicates that the MPC is inhibited from controlling the ATM spar/canister or the Star Tracker gimbals.			
	STR	Provides a visual indication that the MPC commands are connected to the Star Tracker gimbals for position control of the Star Tracker gimbals.			

ATM CONTROLS AND DISPLAYS (PANEL 130)

SYSTEM	NAME AND POSITION	FUNCTION	CIRCUIT BREAKER	POWER SOURCE	REMARKS
POWER SYSTEM	BAT TEMP talkback bp	With POWER SYSTEM Power Monitor sel switch in OFF,BUS 1 or BUS 2 position, talkback provides a visual indication that one or more CBRM battery temperatures are above 95°F (35°C). With POWER SYSTEM Monitor sel switch in REG or BAT position and CBRM SELECT switch in 1-12 or 13-18 position, talkback provides a visual indication of one individual CBRM battery temperature status as selected by CBRM SELECT sel switch.	C/D CMD/ DEPLOY/ EVA 1,2	28 vdc VPWRD (390D)	DISPLAYS, POWER SYSTEM switch must be in BUS 1 or BUS 2 position to apply 28 vdc power to Bus VPWRD, which in turn applies monitor power to the POWER SYSTEM Power Monitor sel switch and to the POWER SYSTEM SELECT switch.
	gray	Absence of signal. With POWER SYSTEM Power Monitor sel switch in OFF, BUS 1 or BUS 2 position, talkback provides a visual indication that all CBRM battery temperatures are below 95°F (35°C). With POWER SYSTEM Power Monitor sel switch in REG or BAT position and SELECT switch in 1-12 or 13-18 position, talkback provides a visual indication of one individual CBRM battery temperature status as selected by CBRM SELECT sel switch.			
	BAT VOLTS talkback bp	With POWER SYSTEM Power Monitor sel switch in OFF, BUS 1 or BUS 2 position, talkback provides a visual indication that one or more CBRM battery voltages are less than 27.5 vdc or greater than a value between 34.2 and 37.0 vdc (depending on temperature). With POWER SYSTEM Power Monitor sel switch in REG or BAT position and SELECT switch in 1-12 or 13-18 position, talkback provides a visual indication of one individual CBRM battery voltage status as selected by CBRM SELECT sel switch.	C/D CMD/ DEPLOY/ EVA 1,2	28 vdc VPWRD (390D)	DISPLAYS, POWER SYSTEM switch must be in BUS 1 or BUS 2 position to apply 28 vdc power to Bus VPWRD, which in turn applies monitor power to the POWER SYSTEM Power Monitor sel switch and to the POWER SYSTEM SELECT switch.
	gray	Absence of signal. With POWER SYSTEM Power Monitor sel switch in OFF, BUS 1 or BUS 2 position, talkback provides a visual indication that all CBRM battery voltages are greater than 27.5 vdc and less than a value between 32.4 and 37.0 vdc. With POWER SYSTEM Power Monitor sel switch in REG or BAT position, and SELECT switch in			

SYSTEM	NAME AND POSITION	FUNCTION	CIRCUIT BREAKER	POWER SOURCE	REMARKS
POWER SYSTEM		1-12 or 13-18 position, talkback provides a visual indication of one individual CBRM battery voltage status as selected by CBRM SELECT sel switch.			
	REG VOLTS talkback bp	With POWER SYSTEM Power Monitor sel switch in OFF, BUS 1 or BUS 2 position, talkback provides a visual indication that one or more CBRM regulator voltages are below 20 vdc or above 31.8 vdc or internal reference voltage is out of tolerance. With POWER SYSTEM Power Monitor sel switch in REG or BAT position and SELECT switch in 1-12 or 13-18 position, talkback provides a visual indication of one individual CBRM regulator voltage status as selected by CBRM SELECT sel switch.	C/D CMD/ DEPLOY/ EVA 1,2	28 vdc VPWRD (390D)	DISPLAYS, POWER SYSTEM switch must be in BUS 1 or BUS 2 position to apply 28 vdc power to Bus VPWRD, which in turn applies monitor power to the POWER SYSTEM Power Monitor sel switch and to the POWER SYSTEM SELECT switch. If bp indication is received as a result of REG VOLTS greater than 31.8 vdc, the REG will be off and REG status light will be on. If bp indication is received as a result of internal reference voltage being out of tolerance, the entire CBRM will be off and CBRM STATUS CHGR,BAT and REG lights will be on.
	gray	Absence of signal. With POWER SYSTEM Power Monitor sel switch in OFF, BUS 1 or BUS 2 position, talkback provides a visual indication that all CBRM regulator voltages are above 20 vdc and below 31.8 vdc and that internal reference voltage is in tolerance. With POWER SYSTEM Power Monitor sel switch in REG or BAT position, talkback provides a visual indication of one individual CBRM regulator voltage status as selected by CBRM SELECT sel switch.			
	BAT CHG talkback bp	With POWER SYSTEM Power Monitor sel switch in OFF, BUS 1 or BUS 2 position, talkback provides a visual indication that one or more CBRM batteries are not fully charged (solar array voltage less than battery voltage during night orbit and battery third electrode signal not present). With POWER SYSTEM Power Monitor sel switch in REG or BAT position and SELECT switch in 1-12 or 13-18 position, talkback provides a visual indication of one individual CBRM battery charge status as selected by CBRM SELECT sel switch.	C/D CMD/ DEPLOY/ EVA 1,2	28 vdc VPWRD (390D)	DISPLAYS, POWER SYSTEM switch must be in BUS 1 or BUS 2 position to apply 28 vdc power to Bus VPWRD, which in turn applies monitor power to the POWER SYSTEM Power Monitor sel switch and to the POWER SYSTEM SELECT switch.

ATM CONTROLS AND DISPLAYS (PANEL 130)

SYSTEM	NAME AND POSITION	FUNCTION	CIRCUIT BREAKER	POWER SOURCE	REMARKS
POWER SYSTEM	gray	Absence of signal. With Power System Monitor selector switch in OFF, BUS 1 or BUS 2 position, talkback provides a visual indication that all CBRM batteries are fully charged. With Power System Monitor selector switch in REG or BAT position and SELECT switch in 1-12 or 13-18 position, talkback provides a visual indication of one individual CBRM battery charge status as selected by CBRM SELECT selector switch.			
	REG/BUS/BAT ind pwr fail lgt	Provides a visual indication that the dual scale vertical meter has lost internal operational power or that power has been removed.	MAIN INV/ LCA 1,2	2-5 vdc VSTATUS (381D)	Dual scale vertical meter has input power when light is off.
	REG/BUS/BAT indicator AMPS	Provides a visual indication of ATM LOAD BUS No. 1 or ATM LOAD BUS No. 2 current when Power System Monitor selector switch is in BUS 1 or BUS 2 position respectively.	C/D CMD/ DEPLOY/ EVA 1,2	28 vdc VPWRD (390D)	DISPLAYS, POWER SYSTEM switch must be in BUS 1 or BUS 2 position to apply 28 vdc power to BUS VPWRD.
	VOLTS	Provides a visual indication of ATM LOAD BUS No. 1, ATM LOAD BUS No. 2, CBRM BAT or CBRM REG voltage as selected by Power System Monitor selector switch. The individual CBRM BAT or CBRM REG voltage being indicated is selected by CBRM SELECT switches.			
	REG/BAT ind pwr fail light	Provides a visual indication that the dual scale vertical meter has lost internal operational power or that power has been removed.	MAIN INV/ LCA 1,2	2-5 vdc VSTATUS (381D)	Dual scale vertical meter has input power when light is off.

SYSTEM	NAME AND POSITION	FUNCTION	CIRCUIT BREAKER	POWER SOURCE	REMARKS
POWER SYSTEM	REG/BAT indicator AMPS	Provides a visual indication of a CBRM regulator output current or a CBRM battery charge or discharge current. The individual CBRM output being indicated is selected by Power System Monitor selector switch in REG or BAT positions and CBRM SELECT switches.	C/D CMD/ DEPLOY/ EVA 1,2	28 vdc VPWRD (390D)	DISPLAYS, POWER SYSTEM switch must be in BUS 1 or BUS 2 position to apply 28 vdc power to BUS VPWRD.
	°F	Provides a visual indication of an individual CBRM battery temperature as selected by CBRM SELECT switches and Power System Monitor selector switch in BAT position.			
	CBRM STATUS CHGR 1-18 lights	Provides a visual indication that an individual CBRM charger has been turned off by manual or automatic function.	MAIN INV/ LCA 1,2	5 vdc VTACS ST (372D)	
	CBRM STATUS BAT 1-18 lights	Provides a visual indication that an individual CBRM battery contactor has been opened thereby disconnecting battery from charger and regulator. This indication will occur with a manual or automatic function.	MAIN INV/ LCA 1,2	5 vdc VTACS ST (372D)	
	CBRM STATUS REG 1-18 lights	Provides a visual indication that an individual CBRM regulator has been turned off by manual or automatic function.	MAIN INV/ LCA 1,2	5 vdc VTACS ST (372D)	
	WATT-HR indicator	Provides a visual indication of total power in watt-hours provided by the ATM power system.	C/D CMD/ DEPLOY/ EVA 1,2	28 vdc VPWRD (390D)	DISPLAYS, POWER SYSTEM switch must be in BUS 1 or BUS 2 position to apply 28 vdc power to BUS VPWRD.
	WATT-HR RESET switch AUTO	Enables an ATMDC automatic signal to reset the WATT-HR indicator to 00000. Signal is generated at orbit time effective sunset.	C/D CMD/ DEPLOY/ EVA 1,2	28 vdc VPWRD (390D)	DISPLAYS, POWER SYSTEM switch must be in BUS 1 or BUS 2 position to apply 28 vdc power to BUS VPWRD.
	OFF	No RESET function. WATT-HR indicator will continue to display total watt-hours from the last reset command.			
	MAN	Provides a manual command to reset the WATT-HR indicator.			MAN position of switch is momentary.

ATM CONTROLS AND DISPLAYS (PANEL 130)

SYSTEM	NAME AND POSITION	FUNCTION	CIRCUIT BREAKER	POWER SOURCE	REMARKS
POWER SYSTEM	Power Monitor sel OFF	Removes input power, BUS VPWRD, from REG/BUS/BAT and REG/BAT indicators.	Fused	28 vdc VATM 1,2 (11T1,21T1)	DISPLAYS, POWER SYSTEM switch must be in BUS 1 or BUS 2 position to apply 28 vdc power to BUS VPWRD.
	BUS 1	Provides a signal to display ATM LOAD BUS No. 1, 11T1, AMPS and VOLTS on REG/BUS/BAT indicator.			
	BUS 2	Provides a signal to display ATM LOAD BUS No. 2, 21T1, AMPS and VOLTS on REG/BUS/BAT indicator.			
	REG	Provides a signal to display CBRM regulator VOLTS on REG/BUS/BAT indicator and CBRM regulator AMPS on REG/BAT indicator of an individual CBRM as selected by CBRM SELECT switches.			
	BAT	Provides a signal to display CBRM battery VOLTS on REG/BUS/BAT indicator and CBRM battery AMPS and temperature (°F) on REG/BAT indicator of an individual CBRM as selected by CBRM SELECT switches.			
	CBRM SELECT sel 1-18	Selects one of the 18 CBRMs as determined by its selected position and the group selection of the CBRM SELECT switch. The selected CBRM parameters and status will be displayed on REG/BUS/BAT and REG/BAT indicators and four talkbacks when Power System Monitor selector switch is in REG or BAT position. The selected CBRM can be commanded by the REG and CHGR switches.	C/D THRM/ TLM/PWR 1,2 C/D CMD/ DEPLOY/ EVA 1,2	28 vdc VTTP (391D) 28 vdc VPWRD (390D)	DISPLAYS, POWER SYSTEM switch must be in BUS 1 or BUS 2 position to apply 28 vdc power to BUS VPWRD.
	STATUS LIGHTS PRIM switch PRIM	Provides regulated 5 vdc input power from INV/LCA to ATM C&D Console 5 vdc Lighting Bus, VTACS ST, which supplies power to 54 CBRM STATUS lights and 6 TACS lights.	MAIN INV/ LCA 1,2	5 vdc VTACS ST (372D)	

ATM CONTROLS AND DISPLAYS (PANEL 130)

SYSTEM	NAME AND POSITION	FUNCTION	CIRCUIT BREAKER	POWER SOURCE	REMARKS
POWER SYSTEM	OFF	Removes all input power, primary or secondary, from 5 vdc Lighting Bus, VTACS ST.			
	SEC	Provides unregulated 5 vdc power from BUS VSTBU to 5 vdc Lighting Bus, VTACS ST, which supplies power to 54 CBRM STATUS lights and 6 TACS lights.	INV/LCA STATUS LTG BU 1,2	5 vdc VSTBU (373D)	
	STATUS LIGHTS ENABLE switch ENABLE	Provides PRIM or SEC Lighting Bus, VTACS ST, power to 5 vdc CBRM Lighting Bus, VCBRM ST, which supplies power to 54 CBRM STATUS lights.	MAIN INV/ LCA 1,2	5 vdc VTACS ST (372D)	
	OFF	Removes 5 vdc Lighting Bus, VTACS ST, power from 5 vdc CBRM Lighting Bus, VCBRM ST, and from 54 CBRM STATUS lights.			
	TEST	Provides Lighting Bus, VTACS ST, power to 5 vdc CBRM Lighting Bus, VCBRM ST, and 5 vdc Lighting Return Bus to 54 CBRM STATUS lights. All 54 CBRM STATUS lights will light.			TEST position of switch is momentary.
	CHGR switch ON	Provides a command to activate an individual CBRM charger as selected by CBRM SELECT switches. Command will also close selected CBRM input contactor and battery contactor if they are not already closed.	C/D THRM/ TLM/PWR 1,2	28 vdc VTTP (391D)	Switch is spring loaded to center position.
	center	No function and not wired.			
	OFF	Provides a command to deactivate an individual CBRM charger as selected by CBRM SELECT switches. Command will also open selected CBRM input contactor and battery contactor if regulator is off.			

ATM CONTROLS AND DISPLAYS (PANEL 130)

SYSTEM	NAME AND POSITION	FUNCTION	CIRCUIT BREAKER	POWER SOURCE	REMARKS
POWER SYSTEM	REG switch ON	Provides a command to activate an individual CBRM regulator as selected by CBRM SELECT switches. Command will also close selected CBRM input contactor if it is not already closed.	C/D THRM/ TLM/PWR 1,2	28 vdc VTTP (391D)	Switch is spring loaded to center position.
	center	No function and not wired.			
	OFF	Provides a command to deactivate an individual CBRM regulator as selected by CBRM SELECT switches. Command will also open selected CBRM input contactor and battery contactor if charger is off.			
	SELECT switch 1-12	Enables the CBRM SELECT selector switch to select an individual CBRM within the group 1 thru 12 for commands and display indications.	C/D THRM/ TLM/PWR 1,2	28 vdc VTTP (391D)	
	OFF	Removes power from all positions of CBRM SELECT selector switch, thereby disabling all individual CBRM commands and display indications. BAT TEMP, BAT VOLTS, REG VOLTS and BAT CHG talkbacks will indicate for one or more CBRM parameter status.	C/D CMD/ DEPLOY/ EVA 1,2	28 vdc VPWRD (390D)	This position is not wired.
	13-18	Enables the CBRM SELECT selector switch to select an individual CBRM within the group 13 thru 18 for commands and display indications.			
	CBRM ALL ON switch ALL ON	Provides a command to activate all 18 CBRMs in the ATM POWER SYSTEM. CBRM charger and regulator are activated and CBRM input contactor and battery contactor are closed	Fused	30 vdc individual CBRM BAT	ALL ON position of switch is momentary and wired redundantly.
	down	No function and not wired.			

ATM CONTROLS AND DISPLAYS (PANEL 130)

SYSTEM	NAME AND POSITION	FUNCTION	CIRCUIT BREAKER	POWER SOURCE	REMARKS
H-ALPHA	Hα1 CAMR PWR switch ON	Provides a command to apply input power, VRKEXP 1 and VRKEXP 2, to the Hα1 film camera electronics.	C/D EXP 1,2	28 vdc VEXP 1,2 (312D,322D)	ON and OFF switch positions are wired redundantly.
	OFF	Provides a command to remove input power, VRKEXP 1 and VRKEXP 2, from the Hα1 film camera electronics.			
	Hα1 DOOR switch OPEN	Provides a command to open the Hα1 thermal shield door.	C/D EXP 1,2	28 vdc VEXP 1,2 (312D,322D)	Switch is spring loaded to center position. OPEN and CLOSE switch positions are wired redundantly.
	center	No function and not wired.			
	CLOSE	Provides a command to close the Hα1 thermal shield door.			
	Hα1 DOOR talkback bp	Provides a visual indication that the Hα1 thermal shield door is closed when activated by door limit switch signals.	Fused	28 vdc VATM 1,2 (11C22, 21C22)	
	white	Absence of both signals. Indicates that Hα1 thermal shield door is between the closed and opened positions.			
	gray	Provides a visual indication that the Hα1 thermal shield door is open when activated by door limit switch signal.			
	Hα2 DOOR switch OPEN	Provides a command to open the Hα2 thermal shield door.	C/D EXP 1,2	28 vdc VEXP 1,2 (312D,322D)	Switch is spring loaded to center position. OPEN and CLOSE switch positions are wired redundantly.
	center	No function and not wired.			
	CLOSE	Provides a command to close the Hα2 thermal shield door.			

ATM CONTROLS AND DISPLAYS (PANEL 130)

SYSTEM	NAME AND POSITION	FUNCTION	CIRCUIT BREAKER	POWER SOURCE	REMARKS
H-ALPHA	Hα2 DOOR talkback bp	Provides a visual indication that the Hα2 thermal shield door is closed when activated by door limit switch signal.	Fused	28 vdc VATM 1,2 (11C22, 21C22)	
	white	Absence of both signals. Indicates that Hα2 thermal shield door is between the closed and opened positions.			
	gray	Provides a visual indication that the Hα2 thermal shield door is open when activated by door limit switch signal.			
	Hα1 FR/MIN switch 1	Selects a camera rate of 1 frame per minute.	Fused	Hα1 isolated 5 vdc return	
	2	Selects a camera rate of 2 frames per minute.			With Hα1 AUTO switch in AUTO position, actuation of Hα1 FR/MIN switch during any operational sequence will complete that exposure and then start at the newly selected rate.
	4	Selects a camera rate of 4 frames per minute.			
	Hα1 HEATER switch PRIM	Provides a command to apply input power, VRKEXP 1 and VRKEXP 2, to the primary Hα1 filter heater controller.	C/D EXP 1,2	28 vdc VHα (392D)	
	OFF	Provides a command to remove input power from the primary and secondary Hα1 filter heater controllers.			
	SEC	Provides a command to apply input power, VRKEXP 1 and VRKEXP 2, to the secondary Hα1 filter heater controller.			

ATM CONTROLS AND DISPLAYS (PANEL 130)

SYSTEM	NAME AND POSITION	FUNCTION	CIRCUIT BREAKER	POWER SOURCE	REMARKS
H-ALPHA	Hα1 NIGHT INTLK switch NORMAL	Allows automatic shutdown of the Hα1 film camera upon receipt of a night signal (electronics stay energized, but no pictures are taken).	C/D EXP 1,2	28 vdc VHα (392D)	NORMAL position of switch is not wired.
	OVERRIDE	Provides a command to inhibit the automatic shutdown of the Hα1 film camera upon receipt of a night signal or permit the camera to be operated before effective sunrise (ESR).			This position allows film to be exposed with Hα1 thermal shield door closed and exposures will be indicated only by the FRAMES REMAINING indicator.
	Hα1 FRAMES REMAINING indicator	Displays the number of unexposed frames remaining in the Hα1 camera. Counter is reset to 16000 indication by use of the FILM RESET switches.	C/D EXP 1,2	28 vdc VHα (392D)	CONSOLE POWER DISTRIBUTION, Hα switch must be in BUS 1 or BUS 2 position to apply input power and NUMERIC LTG power to FRAMES REMAINING indicator.
	Hα1 AUTO switch AUTO	Provides a command to place the Hα1 camera in the automatic mode of operation.	Fused	Hα1 isolated 5 vdc return	AUTO command is routed thru all selected camera rate positions of the FR/MIN switch.
	OFF	Removes AUTO or MAN commands from the Hα1 camera. This position is not wired.			
	MAN	Provides a command to expose a single film frame each time the switch is depressed.			MAN position is momentary. If switch is maintained, exposures continue at 10 frames/minute.
	READY/OPR lights READY	Provides a visual indication that the Hα1 camera is ready for operation.	MAIN INV/ LCA 1,2	2-5 vdc VSTATUS (381D)	READY light will be on when: (a) Hα1 CAMR PWR-ON; (b) DOOR tb - gray; (c) Hα1 HEATER - ON; and (d) Hα1 AUTO - OFF.
	OPR	Provides a visual indication that the Hα1 camera is in operation.			

ATM CONTROLS AND DISPLAYS (PANEL 130)

SYSTEM	NAME AND POSITION	FUNCTION	CIRCUIT BREAKER	POWER SOURCE	REMARKS
H-ALPHA	Hα2 HEATER switch PRIM	Provides a command to apply input power, VRKEXP 1 and VRKEXP 2, to the primary Hα2 filter heater controller.	C/D EXP 1,2	28 vdc VHα (392D)	
	OFF	Provides a command to remove input power from the primary and secondary Hα2 filter heater controllers.			
	SEC	Provides a command to apply input power, VRKEXP 1 and VRKEXP 2, to the secondary Hα2 filter heater controller.			

SYSTEM	NAME AND POSITION	FUNCTION	CIRCUIT BREAKER	POWER SOURCE	REMARKS
X-RAY TELE	X-REA PWR switch ON	Provides a command to apply input power, VRKEXP 1 and VRKEXP 2, to the X-REA system. The AL and BE high voltage supplies are activated when or if the corresponding HV PWR switches are ON. If one or both HV PWR switches are OFF, a calibration signal is applied to the appropriate system as a calibration check.	C/D EXP 1,2	28 vdc VEXP 1,2 (312D,322D)	ON and OFF positions are wired redundantly.
	OFF	Provides a command to remove input power, VRKEXP 1 and VRKEXP 2, from the X-REA system and the AL and BE high voltage supplies.			
	HV PWR BE switch ON	Provides a command to apply input power, VXREA, to the beryllium high voltage power supply if the X-REA PWR is ON.	C/D EXP 1,2	28 vdc VS056 (393D)	
	OFF	Provides a command to remove input power, VXREA, from the aluminum high voltage supply.			OFF command will also disable a BE COUNT ALERT indication.
	HV PWR AL switch ON	Provides a command to apply input power, VXREA, to the aluminum high voltage power supply if the X-REA PWR is ON.	C/D EXP 1,2	28 vdc VS056 (393D)	
	OFF	Provides a command to remove input power, VXREA, from the aluminum high voltage supply.			OFF command will also disable an AL COUNT ALERT indication.

ATM CONTROLS AND DISPLAYS (PANEL 130)

SYSTEM	NAME AND POSITION	FUNCTION	CIRCUIT BREAKER	POWER SOURCE	REMARKS
X-RAY TELE	DOOR switch OPEN center CLOSE	Provides a command to open the X-RAY TELE thermal shield door. No function and not wired. Provides a command to close the X-RAY TELE thermal shield door.	C/D EXP 1,2	28 vdc VEXP 1,2 (312D,322D)	Switch is spring loaded to center position. OPEN and CLOSE switch positions are wired redundantly.
	DOOR talkback bp white gray	Provides a visual indication that the X-RAY TELE thermal shield door is closed when actuated by the door limit switch. Absence of both signals. Indicates X-RAY TELE thermal shield door is between the closed and opened positions. Provides a visual indication that the X-RAY TELE thermal shield door is open when actuated by the door limit switch.	Fused	28 vdc VRKEXP 1,2 (31C24, 41C24)	
	BE APRT POS AUTO switch AUTO MAN	Allows automatic change of the BE aperture position, as the X-ray intensity changes to maintain the counting rate of the BE proportional counter in the 32 to 2048 counts/sec range. Provides a command to disable automatic control of the BE aperture position. Enables BE APRT POS INCR switch to manually control the aperture size in front of the beryllium proportional counter window.	Fused	28 vdc X-REA isolated	AUTO position not wired.

SYSTEM	NAME AND POSITION	FUNCTION	CIRCUIT BREAKER	POWER SOURCE	REMARKS
X-RAY TELE	BE APRT POS INCR switch				
	INCR	With the BE APRT POS AUTO switch in MAN position, provides a momentary command to increase the BE aperture to the next larger size.	Fused	28 vdc X-REA isolated	Switch is spring loaded to center position.
	center	No function.			
	DECR	With the BE APRT POS AUTO switch in MAN position, provides a momentary command to decrease the BE aperture to the next smaller size.			Switch has power only when BE APRT POS AUTO switch is in MAN.
	BE APRT POS talkbacks (2)				
	gray	Absence of both signals. This configuration is considered normal for any one of the two talkbacks.	Fused	28 vdc X-REA isolated	
	1	Provides a visual indication that the first aperture position is in front of the beryllium window in the proportional counter. This aperture position (1) is the smallest available.			
	2	Provides a visual indication that the second aperture position is in front of the beryllium window in the proportional counter. This aperture position (2) is four times larger in area than aperture position 1.			
	3	Provides a visual indication that the third aperture position is in front of the beryllium window in the proportional counter. This aperture position (3) is four times larger in area than aperture position 2.			
	4	Provides a visual indication that the fourth aperture position is in front of the beryllium window in the proportional counter. This aperture position (4) is four times larger in area than aperture position 3.			

ATM CONTROLS AND DISPLAYS (PANEL 130)

SYSTEM	NAME AND POSITION	FUNCTION	CIRCUIT BREAKER	POWER SOURCE	REMARKS
X-RAY TELE	AL APRT POS AUTO switch AUTO	Allows automatic change of the AL aperture position, as the X-ray intensity changes, to maintain the counting rate of the AL proportional counter in the 32 to 2048 counts/sec range.	Fused	28 vdc X-REA isolated	AUTO position not wired.
	MAN	Provides a command to disable automatic control of the AL aperture position. Enables AL APRT POS INCR switch for manual control of the aperture size in front of the aluminum proportional counter window.			
	AL APRT POS INCR switch INCR	With the AL APRT POS AUTO switch in MAN position, provides a momentary command to increase the AL aperture to the next larger size.	Fused	28 vdc X-REA isolated	Switch is spring loaded to center position.
	center	No function.			
	DECR	With the AL APRT POS AUTO switch in MAN position, provides a momentary command to decrease the AL aperture to the next smaller size.			Switch has power only when AL APRT POS AUTO switch is in MAN.
	AL APRT POS talkbacks (2) gray	Absence of both signals. This indication is considered normal for any one of the two talkbacks.	Fused	28 vdc X-REA isolated	
	1	Provides a visual indication that the first aperture position is in front of the aluminum window in the proportional counter. This aperture position (1) is the smallest available.			

SYSTEM	NAME AND POSITION	FUNCTION	CIRCUIT BREAKER	POWER SOURCE	REMARKS
X-RAY TELE	2	Provides a visual indication that the second aperture position is in front of the aluminum window in the proportional counter. This aperture position (2) is four times larger in area than aperture position 1.			
	3	Provides a visual indication that the third aperture position is in front of the aluminum window in the proportional counter. This aperture position (3) is four times larger in area than aperture position 2.			
	4	Provides a visual indication that the fourth aperture position is in front of the aluminum window in the proportional counter. This aperture position (4) is four times larger in area than aperture position 3.			
	CAMR PWR switch ON	Provides a command to apply input power, Busses VRKEXP 1 and VRKEXP 2, to the Camera Electronics power supply.	C/D EXP 1,2	28 vdc VS056 (393D)	CAMR PWR and X-REA PWR switches are separate functions thereby permitting independent operation of each system.
	OFF	Provides a command to remove input power, Busses VRKEXP 1 and VRKEXP 2, from the Camera Electronics power supply.			
	CAMERA AIRLOCK switch OPEN	Removes close command. Allows airlock door to open.			OPEN Position not wired.
	CLOSE	Provides a command to close the airlock door.	Fused	5 vdc return X-RAY TELE isolated	

ATM CONTROLS AND DISPLAYS (PANEL 130)

SYSTEM	NAME AND POSITION	FUNCTION	CIRCUIT BREAKER	POWER SOURCE	REMARKS
X-RAY TELE	CAMERA/TELE sel switch				
	SINGLE FR 1	Provides a command to move No. 1 filter into position and select single frame camera mode. Normal exposure time for filter 1 is 90 seconds.	Fused C/D EXP 1,2	5 vdc return X-RAY TELE isolated 28 vdc VS056 (393D)	Each experiment mode starts only when selected and actuated by a momentary START command. Activation of CAMERA/TEL sel switch during any operational mode will stop the sequence and reset the experiment.
	SINGLE FR 2	Provides a command to move NO. 2 filter into position and select single frame camera mode. Normal exposure time for filter 2 is 30 seconds.			
	SINGLE FR 3	Provides a command to move No. 3 filter into position and select single frame camera mode. Normal exposure time for filter 3 is 50 seconds.			
	SINGLE FR 4	Provides a command to move No. 4 filter into position and select single frame camera mode. Normal exposure time for filter 4 is 60 seconds.			
	SINGLE FR 5	Provides a command to move No. 5 filter into position and select single frame camera mode. Normal exposure time for filter 5 is 60 seconds.			
	SINGLE FR 6	Provides a command to move No. 6 filter into position and select single frame camera mode. Normal exposure time for filter 6 is 1.0 seconds.			
	PATROL	Provides a command to select PATROL camera mode. PATROL mode consists of six exposures, one at each of the six filter positions, made in sequence. Total sequence duration is approximately 5 minutes for NORMAL exposures.			
	AUTO	Provides a command to select AUTO camera mode. AUTO mode sequentially combines the ACT 1, ACT 2, and ACT 3 modes. The total AUTO sequence extends over approximately 85 minutes.			

SYSTEM	NAME AND POSITION	FUNCTION	CIRCUIT BREAKER	POWER SOURCE	REMARKS
X-RAY TELE	ACT 1	Provides a command to select ACT 1 camera mode. This mode is intended for use during the initial stages of flare development. In order that the short time constant events may be recorded, exposures are made in rapid sequence for 5 minutes. Filter positions 1,3 and 5 are used in this mode. Normal exposure time for all three filters is 5 seconds each.			
	ACT 2	Provides a command to select ACT 2 camera mode. This mode utilizes the same filters and exposure times as the ACT 1 mode, except that the rate of exposures (one exposure at each filter position) is 3/minute. This rate is compatible with the flare event time constants expected during the flare maximum and the initial states of decay back to pre-flare flux levels. A total of 60 exposures are made over a 20 minute period. Normal exposure time for all three filters is 5 seconds each.			
	ACT 3	Provides a command to select ACT 3 camera mode. This mode uses the same filters and exposure times as the ACT 2 mode, except that the rate of data-taking is further reduced to one set of three exposures (one exposure at each filter position) per 10 minutes. Time constants expected during flare decay are of this order. A total of 18 exposures are made over a 60-minute period. Normal exposure time for all three filters is 5 seconds each.			

ATM CONTROLS AND DISPLAYS (PANEL 130)

SYSTEM	NAME AND POSITION	FUNCTION	CIRCUIT BREAKER	POWER SOURCE	REMARKS
X-RAY TELE	FILTER talkbacks (3) 1,2,3,4,5 or 6	Provides a visual indication of which filter is positioned in front of the camera. Only one of the above mentioned is present at one time, thereby indicating which of the six filters is positioned in front of the camera.	Fused	28 vdc X-RAY TELE isolated	
	gray	Absence of both signals. This indication is normal for any two of the three FILTER talkbacks.			
	EXPOSURE switch SHORT	Provides a command to divide the NORMAL exposure time by a factor of 3.2.	Fused	5 vdc return X-RAY TELE isolated	
	NORMAL	Allows normal film exposure during an operational sequence. Typical exposure times for the PATROL mode are 90, 30, 50, 60, 60 and 1.0 seconds. Exposure times for ACTIVE 1,2 and 3 modes are 5 seconds.			NORMAL position of switch not wired.
	LONG	Provides a command to multiply the NORMAL exposure time by a factor of 3.2.			
	FLARE switch ENABLE	Provides a closure to enable the experiment to accept a subsequent MASTER FLARE MODE INIT command and start the selected mode of operation.	C/D EXP 2	28 vdc VEXP 2 (322D)	Normal flare operation requires selection of AUTO mode.
	INHIBIT	Removes switch closure; inhibits experiment from accepting a MASTER FLARE MODE INIT command.			INHIBIT position of switch not wired.
	FRAMES REMAINING indicator	Displays the number of unexposed frames remaining in the camera. Counter is reset to 6000 by use of the FILM RESET switches.	C/D EXP 1,2	28 vdc VS056 (393D)	

ATM CONTROLS AND DISPLAYS (PANEL 130)

SYSTEM	NAME AND POSITION	FUNCTION	CIRCUIT BREAKER	POWER SOURCE	REMARKS
X-RAY TELE	START/STOP switch START	Provides a command to activate the camera logic and drive systems to begin preset operational sequence. In the SINGLE FR mode this switch is activated each time an exposure is desired. In all other modes, this switch is activated once to start an operational sequence.	Fused	5 vdc return X-RAY TELE isolated	Switch is spring loaded to center position.
	center	No function and not wired.			
	STOP	Provides a command to reset camera logic and drive systems to the same reference time and sequence. The switch may be used to stop any camera sequence at any time and to reset the system when neither a READY nor an OPR indication is present.			
	READY/OPR lights READY	Provides a visual indication that the experiment is ready to operate in a selected mode of operation. Will light when the following conditions are met: camera power on, door open, filter positioned, camera airlock open and exposure or automatic sequence not in process.	MAIN INV/ LCA 1,2	2-5 vdc VSTATUS (381D)	
	OPR	Provides a visual indication that the experiment is operating in a selected mode of operation after an operational mode has been initiated with a START command.			Film can be exposed with DOOR closed.
	THERMAL switch PRIM	Provides a command to apply input power, Busses VRK EXP 1 and VRK EXP 2, to the experiment primary thermal control system.	C/D EXP 1,2	28 vdc VS056 (393D)	
	OFF	Provides a command to remove input power from the experiment primary and secondary thermal control system.			
	SEC	Provides a command to apply input power, Busses VRKEXP 1 and VRKEXP 2, to the experiment secondary thermal control system.			

ATM CONTROLS AND DISPLAYS (PANEL 130)

SYSTEM	NAME AND POSITION	FUNCTION	CIRCUIT BREAKER	POWER SOURCE	REMARKS
X-RAY/RF ACTIVITY	DATA DRIVE BE switch				
	BE	Selects the output of the beryllium proportional counter integrated flux data to be displayed on the HISTORY PLOT indicator.	C/D EXP 1,2	28 vdc VS056 (393D)	
	AL	Selects the output of the aluminum proportional counter integrated flux data to be displayed on the HISTORY PLOT indicator. Also provides a signal to the HISTORY PLOT indicator to indicate a double line designating AL activity.			
	DATA DRIVE RECORD switch				
	RECORD 10" HR	Commands the chart paper to be driven at a speed of 10 inches per hour and data to be recorded.	C/D EXP 1,2	28 vdc VS056 (393D)	
	REVIEW	Allows the data plotted to be reviewed at a speed of 1800"/HR in the FORWARD or REVERSE direction.			REVIEW position is not wired.
	RECORD 30" HR	Commands the chart paper to be driven at a speed of 30 inches per hour and data to be recorded.			
	DATA DRIVE FORWARD switch				
	FORWARD	Commands the HISTORY PLOT indicator chart paper to be driven in the forward direction. Data will be recorded in this position at a speed of 10" or 30" per hour, or reviewed at a speed of 1800"/HR.	C/D EXP 1,2	28 vdc VS056 (393D)	Forward direction is left to right when facing HISTORY PLOT indicator.
	OFF	Removes input power ground from the HISTORY PLOT indicator and stops paper travel.			OFF position not wired.
	REVERSE	Commands the HISTORY PLOT indicator chart paper to be driven in the reverse direction at a speed of 1800"/HR when the above switch is in the REVIEW position. The HISTORY PLOT indicator cannot record in the reverse direction.			

ATM CONTROLS AND DISPLAYS (PANEL 130)

SYSTEM	NAME AND POSITION	FUNCTION	CIRCUIT BREAKER	POWER SOURCE	REMARKS
X-RAY RF/ ACTIVITY	HISTORY PLOT indicator	Visually plots and displays BE or AL analog signals in the range of 0 to +5 vdc which represent the integrated X-ray flux from the proportional counters. Range of count rate is from 0 to 230,400 counts/second. Also displays 6 bits of elapsed time. Data are used to determine levels and trends in solar X-ray activity during flight. RF activity from the Radio Noise Burst Monitor is also displayed on this indicator.	C/D EXP 1,2	28 vdc VS056 (393D)	A double horizontal line displayed near the bottom of the HISTORY PLOT indicator indicates AL data is being recorded. Absence of these lines indicates BE data is being recorded. RF data is recorded full time when HISTORY PLOT indicator is operational.
	CLOCK	Provides a time reference as desired. Clock is capable of being set to any desired indication.	N/A	N/A	

ATM CONTROLS AND DISPLAYS (PANEL 130)

SYSTEM	NAME AND POSITION	FUNCTION	CIRCUIT BREAKER	POWER SOURCE	REMARKS
XUV SPECT	MAIN PWR switch ON	Provides a command to apply input power, Busses VRKEXP 1 and VRKEXP 2, to the experiment.	C/D EXP 1,2	28 vdc VS082A (394D)	
	OFF	Provides a command to remove input power, Busses VRKEXP 1 and VRKEXP 2, from the experiment.			
	PWR/DOORS switch ON	Provides a command to apply operational power to the experiment and, after a short delay, open the XUV SPECT thermal shield and the experiment aperture doors.	C/D EXP 1,2	28 vdc VS082A (394D)	Switch is spring loaded to center position.
	center	No function and not wired.			
	OFF	Provides a command to terminate any sequence in progress, close the camera shutter, cycle film and close the XUV SPECT thermal shield and the experiment aperture doors and then remove operational power from the experiment.			
	PWR/DOORS talkback bp	Provides a visual indication that the XUV SPECT thermal shield and the experiment aperture doors are closed and operational power is removed.	Fused	28 vdc VC/DLOG 3 (95L59)	
	white	Absence of both signals. Indicates thermal shield and/or internal aperture doors are between the closed and opened positions.			
	gray	Provides a visual indication that the XUV SPECT thermal shield and the experiment aperture doors are open and operational power is on.			

SYSTEM	NAME AND POSITION	FUNCTION	CIRCUIT BREAKER	POWER SOURCE	REMARKS
XUV SPECT	MODE switch AUTO 2	Provides a command, when experiment START command is initiated, to begin an automatic sequence of six pictures. The sequence shall begin with an exposure at the selected wavelength band; the grating shall change, and an exposure made at the second wavelength band. The grating shall then return to the first position and the cycle repeated until six exposures have been made. Exposure times will vary in accordance with grating position, cycle and exposure factor. Total operating time will vary from 3 to 42 minutes depending on the exposure factor selected.	Fused C/D EXP 1,2	28 vdc XUV SPECT isolated V51 28 vdc VS082A (394D)	MODE switch will only have 28 vdc power when START/STOP switch is held in START position. Each experiment MODE starts only when selected and actuated by a momentary START command. Actuation of MODE selector switch during any operational mode will stop the sequence and reset the experiment.
	TIME	Provides a command, when experiment START command is initiated, to open the camera shutter and begin a single exposure at the selected grating position. Exposure time may be controlled manually (START-STOP switch) or automatically (START-STOP switch and EVENT TIME).			
	AUTO 1	Provides a command, when experiment START command is initiated, to begin an automatic sequence of three exposures. Three exposures are taken at the grating position which was selected. Total operating time will vary from 1 to 28 min depending on the exposure factor selected.			
	WAVE LTH switch SHORT	Provides a command to move the grating and the rejection mirror to the short wavelength position.	Fused	28 vdc XUV SPECT isolated V51	Switch is spring loaded to center position.
	center	No function and not wired.			
	LONG	Provides a command to move the grating and the rejection mirror to the long wavelength position.			

ATM CONTROLS AND DISPLAYS (PANEL 130)

SYSTEM	NAME AND POSITION	FUNCTION	CIRCUIT BREAKER	POWER SOURCE	REMARKS
XUV SPECT	WAVE LTH talkback ST	Provides a visual indication that the grating is in the short wavelength position.	Fused	28 vdc XUV SPECT isolated V51	
	white	Absence of both signals. Grating is somewhere between the two normal operating positions.			
	LG	Provides a visual indication that the grating is in the long wavelength position.			
	EXPOSURE switch SHORT	Provides a command to prescale the normal exposure times in either the AUTO 1 mode or the AUTO 2 mode by a common factor of one-fourth to provide shorter exposure times. After having been initiated, this command can be negated by actuating the experiment STOP command. It is automatically negated at completion of AUTO 1 or AUTO 2 mode.	Fused	28 vdc XUV SPECT isolated V51	Switch is spring loaded to center position.
	center	Allows for normal exposure times in either the AUTO 1 or the AUTO 2 mode.			Center position not wired.
	LONG	Provides a command to prescale the normal exposure times in either the AUTO 1 or the AUTO 2 mode by a common factor of four to provide longer exposure times. After having been initiated, this command can be negated by actuating the experiment STOP command. It is automatically negated at completion of a AUTO 1 or AUTO 2 mode. This command will not be accepted if a SHORT condition exists.			

SYSTEM	NAME AND POSITION	FUNCTION	CIRCUIT BREAKER	POWER SOURCE	REMARKS
XUV SPECT	EXPOSURE talkback LG	Provides a visual indication that the exposures have been prescaled to longer durations.	Fused	28 vdc XUV SPECT isolated V51	
	gray	Absence of both signals. Provides a visual indication that pictures may be taken at normal exposure times.			
	ST	Provides a visual indication that the exposures have been prescaled to shorter durations.			
	FLARE switch ENABLE	Provides a command to enable the experiment to accept and execute a subsequent MASTER FLARE MODE INIT command. The FLARE ENABLE command does not affect any mode in progress. Any auto mode in progress will stop when MASTER FLARE MODE INIT command is activated. Flare mode will then start automatically.	Fused	28 vdc XUV SPECT isolated V51	Switch is spring loaded to center position.
	center	No function and not wired.			
	INHIBIT	Provides a command to remove the FLARE ENABLE command. Any auto mode in progress will stop when MASTER FLARE MODE INIT command is activated.			
	FLARE talkback ENA	Provides a visual indication that the FLARE mode is enabled.	Fused	28 vdc XUV SPECT isolated V51	
	bp	Absence of both signals. Provides a visual indication that the FLARE ENABLE command has not been received by the experiment.			
	FLR	Provides a visual indication that the experiment is operating in the FLARE mode.			

ATM CONTROLS AND DISPLAYS (PANEL 130)

SYSTEM	NAME AND POSITION	FUNCTION	CIRCUIT BREAKER	POWER SOURCE	REMARKS
XUV SPECT	FRAMES REMAINING indicator	Displays the number of unexposed frames remaining in the camera. Counter is reset to 201 by use of the FILM RESET switches.	C/D EXP 1,2	28 vdc VS082A (394D)	On CONSOLE POWER DISTRIBUTION panel, XUV SPECT switch in OFF position will remove EXP BUS 1 or 2 power and NUMERIC LTG power from XUV SPECT FRAMES REMAINING counter.
	START/STOP switch START	Provides a command to start a selected experiment mode of operation and the EVENT TIME indicator if enabled.	Fused	28 vdc XUV SPECT isolated V51	Switch is spring loaded to center position.
	center	No function and not wired.			START command is routed thru MODE switch.
	STOP	Provides a command to stop any mode of operation.			
	READY/OPR lights READY	Provides a visual indication that the experiment is ready to operate in a selected mode of operation. Will light when the following conditions are met: Thermal heat shield and experiment aperture doors open, operational power on, grating and rejection mirror positioned (ST or LG together), main power on and no mode in progress.	MAIN INV/ LCA 1,2	2-5 vdc VSTATUS (381D)	
	OPR	Provides a visual indication that the experiment is operating in a selected mode of operation after an operational mode has been initiated with an experiment START command.			Film cannot be exposed with thermal heat shield or experiment aperture door closed.
	THERMAL switch ON	Provides a command to apply input power, Busses VRKEXP 1 and VRKEXP 2, to the experiment thermal control system.	C/D EXP 1,2	28 vdc VS082A (394D)	
	OFF	Provides a command to remove input power, Busses VRKEXP 1 and VRKEXP 2, from the experiment thermal control system.			

SYSTEM	NAME AND POSITION	FUNCTION	CIRCUIT BREAKER	POWER SOURCE	REMARKS
XUV SLIT	MAIN PWR switch ON OFF	Provides a command to apply input power, Busses VRKEXP 1 and VRKEXP 2, to the experiment. Provides a command to remove input power, Busses VRKEXP 1 and VRKEXP 2, from the experiment.	C/D EXP 1,2	28 vdc VS082B (395D)	
	PWR/DOORS switch ON center OFF	Provides a command to apply operational power to the experiment and after a short delay, open the XUV SLIT thermal shield and the experiment aperture doors. No function and not wired. Provides a command to terminate any mode in progress, close the camera shutter, cycle film, close the XUV SLIT thermal shield and the experiment aperture doors, remove operational power from the experiment and turn off the XUV SLIT power. If AUTO SEQ HOLD command is present, doors will close and operational power will remain on and mode in progress will be held for later resumption.	C/D EXP 1,2	28 vdc VS082B (395D)	Switch is spring loaded to center position.
	PWR/DOORS talkback bp white gray	Provides a visual indication that the XUV SLIT thermal shield and the experiment aperture doors are closed and operational power is removed. If AUTO SEQ HOLD command is present, indicates that the thermal heat shield and the experiment aperture doors are closed and operational power is on. Absence of both signals. Indicates thermal shield and/or internal aperture doors are between the closed and opened positions. Provides a visual indication that the XUV SLIT thermal shield and the experiment aperture doors are open and operational power is on.	Fused	28 vdc VC/DLOG 3 (95L59)	

ATM CONTROLS AND DISPLAYS (PANEL 130)

SYSTEM	NAME AND POSITION	FUNCTION	CIRCUIT BREAKER	POWER SOURCE	REMARKS
XUV SLIT	MODE switch AUTO	Provides a command, when experiment START command is initiated, to begin an automatic sequence of eight exposures. The sequence shall begin with an exposure at the selected wavelength band; the grating shall change, and an exposure made at the second wavelength band. The grating shall then return to the first position and the cycle repeated until eight exposures have been made. Exposure times will vary in accordance to grating position, cycle and limb scanning zone. Total operating time will vary from 4 to 24 minutes.	Fused C/D EXP 1,2	28 vdc XUV SLIT isolated V52 28 vdc VS082B (395D)	MODE switch will only have 28 vdc power when START/STOP switch is held in START position. Each experiment MODE starts only when selected and actuated by a momentary START command. Actuation of MODE selector switch during any operational mode will stop the sequence and reset the experiment.
	TIME	Provides a command, when experiment START command is initiated, to open the camera shutter and begin a single exposure at the selected grating position. Exposure time may be controlled manually (START-STOP switch) or automatically (START-STOP switch and EVENT TIME).			
	AUTO STEP	Provides a command, when experiment START command is initiated, to initiate a set of 10 AUTO modes to be taken at different positions near the limb. The positions are preprogrammed and offset pointing is done automatically. Exposure times vary according to position. This command can only be given when the experiment is in the LIMB PTG state.			
	WAVE LTH switch SHORT	Provides a command to move the pre-disperser grating to the short wavelength position.	Fused	28 vdc XUV SLIT isolated V52	Switch is spring loaded to center position.
	center	No function and not wired.			
	LONG	Provides a command to move the pre-disperser grating to the long wavelength position.			

C&D

SYSTEM	NAME AND POSITION	FUNCTION	CIRCUIT BREAKER	POWER SOURCE	REMARKS
XUV SLIT	WAVE LTH talkback ST	Provides a visual indication that the predisperser grating is in the short wavelength position.	Fused	28 vdc XUV SLIT isolated V52	
	white	Absence of both signals. Predisperser grating is somewhere between the two normal operating positions.			
	LG	Provides a visual indication that the predisperser grating is in the long wavelength position.			
	AUTO SEQ switch NORMAL	Allows for normal operation of the experiment. When actuated from HOLD will terminate a mode if PWR/DOORS are OFF and will resume sequence if PWR/DOORS are ON. Mode may also be terminated by activation of experiment STOP command and then AUTO SEQ NORMAL.			NORMAL position not wired.
	HOLD	Provides a command to stop and hold any automatic mode in progress. Shutter will close and XUV SLIT TV power will turn off. The aperture doors may then be closed by a PWR/DOORS OFF command, but the operational power will remain on.	Fused	28 vdc XUV SLIT isolated V52	
	FLARE switch ENABLE	Provides a command to enable the experiment to accept and execute a subsequent MASTER FLARE MODE INIT command. The FLARE ENABLE command does not affect any mode in progress. Any auto mode in progress will stop when MASTER FLARE MODE INIT command is activated. Flare sequence will then start automatically.	Fused	28 vdc XUV SLIT isolated V52	Switch is spring loaded to center position.
	center	No function and not wired.			
	INHIBIT	Provides a command to remove the FLARE ENABLE command. Any auto mode in progress will stop when MASTER FLARE MODE INIT command is activated.			

ATM CONTROLS AND DISPLAYS (PANEL 130)

SYSTEM	NAME AND POSITION	FUNCTION	CIRCUIT BREAKER	POWER SOURCE	REMARKS
XUV SLIT	FLARE talkback ENA	Provides a visual indication that the flare mode is enabled.	Fused	28 vdc XUV SLIT isolated V52	
	bp	Absence of both signals. Provides a visual indication that the FLARE ENABLE command has not been received by the instrument.			
	FLR	Provides a visual indication that the experiment is operating in the flare mode or has been placed in AUTO SEQ HOLD while operating in a flare mode.			
	FRAMES REMAINING indicator	Displays the number of unexposed frames remaining in the camera. Counter is reset to 1608 by use of the FILM RESET switches.	C/D EXP 1,2	28 vdc VS082B (395D)	On CONSOLE POWER DISTRIBUTION panel, XUV SLIT switch in OFF position will remove EXP BUS 1 or 2 power and NUMERIC LTG power from XUV SLIT FRAMES REMAINING counter.
	START/STOP switch START	Provides a command to start a selected experiment mode of operation and the EVENT TIME indicator if enabled.	Fused	28 vdc XUV SLIT isolated V52	Switch is spring loaded to center position.
	center	No function and not wired.			START command is routed thru MODE switch.
	STOP	Provides a command to stop any mode of operation.			

C&D

SYSTEM	NAME AND POSITION	FUNCTION	CIRCUIT BREAKER	POWER SOURCE	REMARKS
XUV SLIT	READY/OPR Lights READY	Provides a visual indication that the experiment is ready to operate in a selected mode of operation. Will light when the following conditions are met: Thermal heat shield and experiment aperture doors open, operational power on, SEQ switch in NORMAL, main power on and no mode in progress.	MAIN INV/ LCA 1,2	2-5 vdc VSTATUS (381D)	
	OPR	Provides a visual indication that the experiment is operating in a selected mode of operation after an operational mode has been initiated with an experiment START command. Will also remain lit when an automatic mode is in AUTO SEQ HOLD.			Film cannot be exposed with thermal heat shield or experiment aperture door closed.
	THERMAL switch ON	Provides a command to apply input power, Busses VRKEXP 1 and VRKEXP 2, to the experiment thermal control system.	C/D EXP 1,2	28 vdc VS082B (395D)	
	OFF	Provides a command to remove input power, Busses VRKEXP 1 and VRKEXP 2, from the experiment thermal control system.			

ATM CONTROLS AND DISPLAYS (PANEL 130)

SYSTEM	NAME AND POSITION	FUNCTION	CIRCUIT BREAKER	POWER SOURCE	REMARKS
WLC	MAIN PWR switch ON	Provides a command to apply input power, Busses VRKEXP 1 and VRKEXP 2, to the experiment for the PRS, film camera and electronics.	C/D EXP 1,2	28 vdc VS052 (396D)	
	STBY	Provides a command to apply input power, Busses VRKEXP 1 and VRKEXP 2, to the temperature monitor circuits in the experiment. In this position, regulated dc voltages and temperature measurements are telemetered to ground station. Also provides a command to deactivate operational power and close thermal shield door.			
	OFF	Provides a command to remove all input power, Busses VRKEXP 1 and VRKEXP 2, from the experiment.			
	DOOR switch OPEN	Provides a command to open the WLC thermal shield door and command television mirror out of the experiment optical path (same as MIRROR POS CAMERA command).	C/D EXP 1,2	28 vdc VS052 (396D)	Switch is spring loaded to center position.
	center	No function and not wired.			
	CLOSE	Provides a command to close the WLC thermal shield door.			
	DOOR talkback bp	Provides a visual indication that the WLC thermal shield door is closed when activated by door limit switch signal.	Fused	28 vdc VRKEXP 1,2 (31C23, 41C23)	
	white	Absence of both signals. Indicates thermal shield door is between the closed and opened position.			
	gray	Provides a visual indication that the WLC thermal shield door is open when activated by door limit switch signal.			

ATM CONTROLS AND DISPLAYS (PANEL 130)

SYSTEM	NAME AND POSITION	FUNCTION	CIRCUIT BREAKER	POWER SOURCE	REMARKS
WLC	AUTO DOOR switch NORMAL	Provides a command which allows automatic closing of the WLC thermal shield door when experiment pointing error signal exceeds 5 arc-minutes or when the ATMDC "night" signal is received.	C/D EXP 1,2	28 vdc VS052 (396D)	
	OVERRIDE	Provides a command to disable the automatic closing of the WLC thermal shield door and enables the camera electronics to remain activated.			This switch position disables the ATMDC "night" signal from closing the WLC thermal shield door.
	MODE sel	Selects one of five appropriate camera operational modes as follows:			For STD, EXTD STD, CONT and FAST SCAN modes, the following conditions apply: (a) Each experiment MODE starts only when selected and actuated by a momentary START command. (b) Actuation of MODE selector switch during any operational mode will stop the sequence and reset the experiment programmer. (c) If the experiment pointing error is greater than 20 arc seconds, any MODE will be inhibited from starting and stopped if in progress.
	STD	Exposure time varies sequentially from 9 to 27 to 3 seconds for each of four polarization wheel positions. Polarization wheel mechanism automatically advances one position after every three exposures until four polarization positions have been utilized. One position of the polarization wheel is clear. Camera program automatically stops after STD sequence is completed (5.5 mins) and 12 frames have been expended.	Fused	28 vdc WLC isolated V53	
	EXTD STD	Same mode sequence as STD mode except program contimues for 3 STD sequences with a total of 36 frames taken within a period of 16.2 minutes.			
	CONT	Shutter operate pulse durations are 9, 27, and 3 seconds with one frame each 27.5 seconds. Polarization wheel is commanded to the clear position and remains in that position for the duration of the mode. Camera program contimues indefinitely until a manual STOP command is given with the START/STOP switch or MODE selector is rotated on the control panel.			

ATM CONTROLS AND DISPLAYS (PANEL 130)

SYSTEM	NAME AND POSITION	FUNCTION	CIRCUIT BREAKER	POWER SOURCE	REMARKS
WLC	FAST SCAN	Shutter operate pulse durations are 27, 3, and 9 seconds. Polarization wheel is commanded to the clear position and remains in that position for the duration of the mode. Camera program automatically stops after 72 frames have been taken in a 16.2 minute period.			If less than 5% of the film remains and LOW FILM INHIBIT switch is in the NORMAL position, FAST SCAN mode will be inhibited from starting and stopped if in progress.
	SEC PROG	Selects secondary programmer to allow continued operation of experiment in event of primary programmer failure. A primary programmer reset command is sent out on either side of this switch position. Shutter operate pulse durations are 6, 18, and 2 seconds providing 3 frames every 64 seconds. Polarization wheel is commanded to the clear position and remains in that position for the duration of the mode. Camera program continues indefinitely until MODE selector switch is positioned to either side of this switch position.			
	LOW FILM INHIBIT switch NORMAL	Allows the low film signal to inhibit actuation of the FAST SCAN mode or stop operation of the FAST SCAN mode if in progress.	C/D EXP 1,2	28 vdc WLC isolated V53	
	OVERRIDE	Removes the low film inhibit signal line and allows operation of the FAST SCAN mode with 5% or less of film supply remaining.			OVERRIDE position is not wired.
	FRAMES REMAINING indicator	Displays the number of unexposed frames remaining in the camera. When the film supply has been reduced by 95%, the counter generates a signal to be applied to the experiment which inhibits or stops FAST SCAN mode. Counter is reset to 8025 by means of the FILM RESET switches.	C/D EXP 1,2	28 vdc VS052 (396D)	On CONSOLE POWER DISTRIBUTION panel, WLC switch in OFF position will remove EXP BUS 1 or EXP BUS 2 power and NUMERIC LTG power from WLC FRAMES REMAINING indicator.

ATM CONTROLS AND DISPLAYS (PANEL 130)

SYSTEM	NAME AND POSITION	FUNCTION	CIRCUIT BREAKER	POWER SOURCE	REMARKS
WLC	START/STOP switch START	Provides a command to start the experiment in a selected camera mode of operation.	Fused	28 vdc WLC isolated V53	Switch is spring loaded to center position. START command is routed thru MODE selector switch.
	center	No function and not wired.			
	STOP	Provides a command to stop the experiment in any selected camera mode of operation except SEC PROG mode.			
	READY/OPR lights READY	Provides a visual indication that the experiment is ready to operate in a selected mode of operation.	MAIN INV/ LCA 1,2	2-5 vdc VSTATUS (381D)	READY light will be on when: (a) MAIN PWR - ON; (b) DOOR - open (c) MIRROR POS switch - CAMERA; and (d) PES output less than 20 arc seconds and (e) not in a primary program camera mode. Film can be exposed with DOOR closed. OPR light will not indicate if SEC PROG mode is operating.
	OPR	Provides a visual indication that the experiment is operating in a selected mode of operation after an operational mode has been initiated with a START command and the first exposure has been completed.			
	SEQUENCE COMPLETE talkback gray	Provides a visual indication that the selected camera mode of operation has been completed.	Fused	28 vdc VAMP 1,2	Applies only to STD, EXT STD, and FAST SCAN modes.
	bp	Absence of signal. Provides a visual indication that the selected camera mode is still operating; has not been completed; or has been stopped before being allowed to complete.			
	THERMAL switch ON	Provides a command to apply input power, Busses VRKEXP 1 and VRKEXP 2, to the WLC experiment thermal control system.	C/D EXP 1,2	28 vdc VS052 (396D)	
	OFF	Provides a command to remove input power, Busses VRKEXP 1 and VRKEXP 2, from the WLC experiment thermal control system.			

ATM CONTROLS AND DISPLAYS (PANEL 130)

SYSTEM	NAME AND POSITION	FUNCTION	CIRCUIT BREAKER	POWER SOURCE	REMARKS
WLC	MIR POS switch CAMERA	Provides a command to move the television mirror out of the experiment optical path thereby enabling normal mode operation of the experiment.	C/D EXP 1,2	28 vdc VS052 (396D)	Switch is spring loaded to center position.
	center	No function and not wired.			
	TV	Provides a command to move the television mirror into the experiment optical path thereby enabling white light corona to be displayed on either TV monitor with TV MON selector switch in WLC position for either TV MON 1 or MON 2.			
	SCALE switch X1	Selects the scale factor or range of the WLC ALIGN indicator to be one. Range of the WLC ALIGN indicator in this configuration is 0 ± 30 arc seconds in experiment elevation and azimuth, and the X1 indicator will light on the WLC ALIGN indicator.	C/D EXP 1,2	28 vdc VS052 (396D)	
	X10	Selects the scale factor or range of the WLC ALIGN indicator to be 10. Range of the WLC ALIGN indicator in this configuration is 0 ± 300 arc seconds in experiment elevation and azimuth, and the X10 indicator will light on the WLC ALIGN indicator.			
	ALIGN switch PTG	Provides a command to display the experiment pointing error sensors (elevation and azimuth) outputs on the WLC ALIGN indicator.	C/D EXP 1,2	28 vdc VS052 (396D)	D4 occulting disc is sun centered automatically.
	DISC AUTO	Allows D4 occulting disc elevation and azimuth error sensor outputs to be displayed on the WLC ALIGN indicator.			DISC AUTO position is not wired. D4 occulting disc is sun centered automatically.

ATM CONTROLS AND DISPLAYS (PANEL 130)

SYSTEM	NAME AND POSITION	FUNCTION	CIRCUIT BREAKER	POWER SOURCE	REMARKS
WLC	DISC MAN	Provides a command to inhibit the D4 occulting disc automatic positioning servo system and enables the manual internal alignment elevation and azimuth command switch on the control panel. Also allows D4 occulting disc elevation and azimuth error sensor outputs to be displayed on the WLC ALIGN indicator.	Fused	28 vdc WLC isolated V53	
	MODC switch (5 positions) up down center right left	 Command an UP correction signal to the D4 occulting disc drive motor. Commands a DOWN correction signal to the D4 occulting disc drive motor. No function and not wired. Command a RIGHT correction signal to the D4 occulting disc drive motor. Commands a LEFT correction signal to the D4 occulting disc drive motor.	Fused	28 vdc WLC isolated V53	All manual ALIGN commands are backup functions to D4 auto mode and are enabled only when ALIGN switch is in DISC MAN position. Switch is spring loaded to center position.
	WLC ALIGN indicator	If ALIGN switch is in the PTG position, the WLC ALIGN indicator will display the experiment elevation and azimuth pointing error sensor outputs in arc seconds. If ALIGN switch is in the DISC AUTO or DISC MAN position, the WLC ALIGN indicator will display the experiment internal alignment elevation and azimuth error sensor signals in arc seconds.	C/D EXP 1,2	28 vdc VS052 (396D)	
	WLC ALIGN ind pwr fail light	Provides a visual indication that the WLC ALIGN indicator has experienced a power failure or that input power to the indicator has been removed.	MAIN INV/ LCA 1,2	2-5 vdc VSTATUS (381D)	

ATM CONTROLS AND DISPLAYS (PANEL 130)

SYSTEM	NAME AND POSITION	FUNCTION	CIRCUIT BREAKER	POWER SOURCE	REMARKS
SCAN SPECT	HV 7 switch ENABLE/RESET	Applies input power to No. 7 detector high voltage power supply and applies a reset pulse to the high voltage power supply No. 7 failure protection circuitry.	Fused	28 vdc SCAN SPECT CMD and HV ENA isolated	
	OFF	Removes input power and HV fail enable signal from No. 7 detector high voltage power supply.			OFF position not wired.
	OVERRIDE	Applies input power to No. 7 detector high voltage power supply bypassing the internal No. 7 high voltage power supply failure protection circuitry.		28 vdc SCAN SPECT HV ENA isolated	
	HV 6 switch ENABLE/RESET	Applies input power to No. 6 detector high voltage power supply and applies a reset pulse to the high voltage power supply No. 6 failure protection circuitry.	Fused	28 vdc SCAN SPECT CMD and HV ENA isolated	
	OFF	Removes input power and HV fail enable signal from No. 6 detector high voltage power supply.			OFF position not wired.
	OVERRIDE	Applies input power to No. 6 detector high voltage power supply bypassing the internal No. 6 high voltage power supply failure protection circuitry.		28 vdc SCAN SPECT HV ENA isolated	
	HV 5 switch ENABLE/RESET	Applies input power to No. 5 detector high voltage power supply and applies a reset pulse to the high voltage power supply No. 5 failure protection circuitry.	Fused	28 vdc SCAN SPECT CMD and HV ENA isolated	
	OFF	Removes input power and HV fail enable signal from No. 5 detector high voltage power supply.			OFF position not wired.
	OVERRIDE	Applies input power to No. 5 detector high voltage power supply bypassing the internal No. 5 high voltage power supply fialure protection circuitry.		28 vdc SCAN SPECT HV ENA isolated	

SYSTEM	NAME AND POSITION	FUNCTION	CIRCUIT BREAKER	POWER SOURCE	REMARKS
SCAN SPECT	HV 4 switch ENABLE/RESET	Applies input power to No. 4 detector high voltage power supply and applies a reset pulse to the high voltage power supply No. 4 failure protection circuitry.	Fused	28 vdc SCAN SPECT CMD and HV ENA isolated	
	OFF	Removes input power and HV fail enable signal from No. 4 detector high voltage power supply.			OFF position not wired.
	OVERRIDE	Applies input power to No. 4 detector high voltage power supply bypassing the internal No. 4 high voltage power supply failure protection circuitry.		28 vdc SCAN SPECT HV ENA isolated	
	HV 3 switch ENABLE/RESET	Applies input power to No. 3 detector high voltage power supply and applies a reset pulse to the high voltage power supply No. 3 failure protection circuitry.	Fused	28 vdc SCAN SPECT CMD and HV ENA isolated	
	OFF	Removes input power and HV fail enable signal from No. 3 detector high voltage power supply.			OFF position not wired.
	OVERRIDE	Applies input power to No. 3 detector high voltage power supply bypassing the internal No. 3 high voltage power supply failure protection circuitry.		28 vdc SCAN SPECT HV ENA isolated	
	HV 2 switch ENABLE/RESET	Applies input power to No. 2 detector high voltage power supply and applies a reset pulse to the high voltage power supply No. 2 failure protection circuitry.	Fused	28 vdc SCAN SPECT CMD and HV ENA isolated	
	OFF	Removes input power and HV fail enable signal from No. 2 detector high voltage power supply.			OFF position not wired.
	OVERRIDE	Applies input power to No. 2 detector high voltage power supply bypassing the internal No. 2 high voltage power supply failure protection circuitry.		28 vdc SCAN SPECT HV ENA isolated	

ATM CONTROLS AND DISPLAYS (PANEL 130)

SYSTEM	NAME AND POSITION	FUNCTION	CIRCUIT BREAKER	POWER SOURCE	REMARKS
SCAN SPECT	HV 1 switch ENABLE/RESET	Applies input power to No. 1 detector high voltage power supply and applies a reset pulse to the high voltage power supply No. 1 failure protection circuitry.	Fused	28 vdc SCAN SPECT CMD and HV ENA isolated	
	OFF	Removes input power and HV fail enable signal from No. 1 detector high voltage power supply.			OFF position not wired.
	OVERRIDE	Applies input power to No. 1 detector high voltage power supply bypassing the internal No. 1 high voltage power supply failure protection circuitry.		28 vdc SCAN SPECT HV ENA isolated	
	DOOR switch OPEN	Provides a command to open the SCAN SPECT thermal shield door.	C/D EXP 1,2	28 vdc VS055 (397D)	Switch is spring loaded to center position.
	center	No function and not wired.			
	CLOSE	Provides a command to close the SCAN SPECT thermal shield door.			
	DOOR talkback bp	Provides a visual indication that the SCAN SPECT thermal shield door is closed when activated by limit switch signal.	Fused	28 vdc VRKEXP 1,2 (31C22, 41C22)	
	white	Absence of both signals. Indicates door is between an opened or closed position.			
	gray	Provides a visual indication that the SCAN SPECT thermal shield door is open when activated by limit switch signal.			

C&D

SYSTEM	NAME AND POSITION	FUNCTION	CIRCUIT BREAKER	POWER SOURCE	REMARKS
SCAN SPECT	MAIN HV switch ENABLE	Energizes the main HV ENABLE bus, permitting operation of HV 1 thru HV 7 switches.	Fused	28 vdc SCAN SPECT HV supply isolated	ENABLE and OVERRIDE positions are wired redundantly.
	OFF	Removes power from main HV ENABLE bus.			
	OVERRIDE	Energizes the main HV ENABLE bus, bypassing the high voltage failure protection circuitry, and permitting operation of HV 1 thru HV 7 switches.			
	MAIN PWR switch PRIM	Provides a command to apply input power to the primary low voltage power supply.	C/D EXP 1,2	28 vdc VS055 (397D)	
	OFF	Provides a command to remove input power from the primary and secondary low voltage power supplies.			
	SEC	Provides a command to apply input power to the secondary low voltage power supply.			
	INTENSITY DATA indicator	Indicates the count rate of the selected detector circuit, No. 1 or No. 3, as selected by DET SEL switch.	INV AC 1,2	115 vac VATM AC 1,2 (361D,362D)	
	INTENSITY DATA switch BUS 1	Provides 115 vac, 400 H_z, BUS VATM AC 1, input power to the INTENSITY DATA indicator.	INV AC 1	115 vac VATM AC 1 (361D)	
		Provides 40-130 vac, 400 H_z, NUMERIC LIGHTING BUS, VNUM , power to INTENSITY DATA indicator when LIGHTING NUMERIC switch is is the VAR position.	MAIN INV/ LCA 1	28 vdc VATM 1 (11T1)	With LIGHTING NUMERIC switch in FIXED position, NUMERIC LIGHTING BUS, VNUM , power is fixed at 115 vac, 400 H_z.
	OFF	Removes all input power from the INTENSITY DATA indicator.			
	BUS 2	Provides 115 vac, 400 H_z, BUS VATM AC 2, input power to INTENSITY DATA indicator for input power and fixed numeric lighting.	INV AC 2	115 vac VATM AC 2 (362D)	

ATM CONTROLS AND DISPLAYS (PANEL 130)

SYSTEM	NAME AND POSITION	FUNCTION	CIRCUIT BREAKER	POWER SOURCE	REMARKS
SCAN SPECT	DET ELEC TEST switch TEST	Provides a command to apply a precisely calibrated test signal (repetition rate, duration, and calibration height) to all 7 detector preamplifiers for test and calibration purposes. The repetition rate for detector preamplifiers 1 or 3 are displayed on the INTENSITY DATA indicator. The readings will alternate between 43690 and 21845 with repeated test commands.	Fused	28 vdc SCAN SPECT CMD isolated	Switch is spring loaded to the down position.
	down	No function and not wired.			
	DET SEL switch 1	Allows the count rate from detector preamplifier No. 1 to be displayed on the INTENSITY DATA indicator.			Position 1 not wired.
	3	Provides a command to display the count rate from detector preamplifier No. 3 on the INTENSITY DATA indicator.	Fused	28 vdc SCAN SPECT CMD isolated	
	HV/DOOR INTLK switch NORMAL	Allows the absence of the thermal shield door "open" signal to disable the MAIN HV power.			NORMAL position not wired.
	OVERRIDE	Provides a command to prevent the absence of the thermal shield "open" signal from disabling the MAIN HV power.	C/D EXP 1,2	28 vdc VS055 (397D)	
	EXP NIGHT INTLK switch NORMAL	Allows the ATMDC AUTO DOOR night signal to disable the grating and mirror drive motors.			NORMAL position not wired.
	OVERRIDE	Provides a command to prevent the ATMDC AUTO DOOR night signal from disabling the grating and mirror drive motors.	C/D EXP 1,2	28 vdc VS055 (397D)	

ATM CONTROLS AND DISPLAYS (PANEL 130)

SYSTEM	NAME AND POSITION	FUNCTION	CIRCUIT BREAKER	POWER SOURCE	REMARKS
SCAN SPECT	GRATING POSITION indicator	Indicates the number of steps the grating has advanced from the reference position.	C/D EXP 1,2	28 vdc VS055 (397D)	
	RASTER/SCAN RESET switch RESET	Provides a command to reset the RASTER/ SCAN indicator display to 00000.	C/D EXP 1,2	28 vdc VS055 (397D)	RESET position of switch is momentary.
	down	No function and not wired.			
	RASTER/SCAN COUNTER indicator	Indicates the number of rasters the mirror has completed or the number of scans the grating has completed since the last reset command.	C/D EXP 1,2	28 vdc VS055 (397D)	
	MODE selector switch MIRROR LINE SCAN	Provides a command which enables the mirror drive to scan one line continuously when the START/STOP switch is activated to the START position.	Fused	28 vdc SCAN SPECT CMD isolated	
	MIRROR 3 RASTER	Provides a command which enables the mirror drive to perform a 60 line raster pattern (5 arc-min by 5 arc-min) 3 times and stop automatically when the START/STOP switch is activated to the START position.			
	MIRROR AUTO RASTER	Provides a command which enables the mirror drive to perform a 60 line raster pattern (5 arc-min by 5 arc-min) when the START/ STOP switch is activated to the START position.			
	STOP	Deactivates all mirror and grating modes. When this switch is placed in STOP position from a grating or mirror mode, the grating remains in its last position and the mirror automatically goes to the center of the line previously selected by the LINE SEL switch.			

ATM CONTROLS AND DISPLAYS (PANEL 130)

SYSTEM	NAME AND POSITION	FUNCTION	CIRCUIT BREAKER	POWER SOURCE	REMARKS
SCAN SPECT	GRATING AUTO SCAN	Provides a command which enables the grating drive to rotate the grating, effecting a continuous spectral scan from 300 Å to 1350 Å (with a quick retrace) when the START/STOP switch is activated to the START position.			
	GRATING 3 SCAN	Provides a command which enables the grating drive to rotate the grating, effecting a continuous spectral scan from 300 Å to 1350 Å, (with a quick ratrace) 3 times when the START/STOP switch is activated to the START position.			
	GRATING REF	Provides a command to return the grating to a reference position. The grating will start to scan when the START/STOP switch is activated to the START position and will stop automatically at the pre-selected reference.			Reference will be either OPT or MECH as selected by GRATING REF switch.
	GRATING SINGLE STEP	Provides a command to enable the grating drive to advance one step (0.2 Å) each time the START/STOP switch is activated to the START position.			Grating position is indicated in steps on the GRATING POSITION indicator.
	LINE SEL switch UP	**Provides a command to move the mirror position one line of the raster pattern toward line 1 each time the LINE SEL switch is placed in the UP position.**	Fused	28 vdc SCAN SPECT CMD isolated	Switch is spring loaded to center position
	center	No function and not wired.			
	DOWN	**Provides a command to move the mirror position one line of the raster pattern toward line 60 each time the LINE SEL switch is placed in the DOWN position.**			

SYSTEM	NAME AND POSITION	FUNCTION	CIRCUIT BREAKER	POWER SOURCE	REMARKS
SCAN SPECT	MIR LIMIT talkback bp	Provides a visual indication that the mirror is at the upper or lower limit of its raster (line 1 or line 60).	Fused	28 vdc SCAN SPECT CMD isolated	
	gray	Absence of signal. Provides a visual indication that the mirror is not at the upper or lower limit.			
	GRATING REF switch OPT	Provides a command to enable the instrument to be placed in the OPT reference position when the MODE selector switch is in GRATING REF position and the START/STOP switch is placed in START position.	Fused	28 vdc SCAN SPECT CMD isolated	GRATING POSITION indicator will count grating steps from OPT or MECH reference position as determined by GRATING REF switch position.
	MECH	Provides a command to enable the instrument to be placed in the MECH reference position when the MODE selector switch is in GRATING REF position and the START/STOP switch is placed in START position.			
	0-ORDER talkback gray	Provides a visual indication that the zero order reference detector of the instrument is illuminated by sunlight.	Fused	28 vdc SCAN SPECT CMD isolated	To obtain a gray indication; DOOR must be open, GRATING REF switch in OPT position and the instrument must be pointed at the sun.
	bp	Absence of signal. Provides a visual indication that the zero order reference detector of the instrument is not illuminated by sunlight.			
	START/STOP switch START	Provides a command to initiate operation of a selected mode or single step advance of grating in SINGLE STEP mode.	Fused	28 vdc SCAN SPECT CMD isolated	Switch is spring loaded to center position.
	center	No function and not wired.			
	STOP	Provides a command to terminate operation of any selected mode.			

ATM CONTROLS AND DISPLAYS (PANEL 130)

SYSTEM	NAME AND POSITION	FUNCTION	CIRCUIT BREAKER	POWER SOURCE	REMARKS
SCAN SPECT	READY/OPR lights READY	Provides a visual indication that the experiment is ready to operate in a selected mode. Will light when the following conditions are met: MAIN PWR - PRIM or SEC; MAIN HV - ENABLE; DOOR tb - gray; any 1 of 7 HV switches - ENABLED; and GRATING or MIRROR MODE selected.	MAIN INV/ LCA 1,2	2-5 vdc VSTATUS (381D)	
	OPR	Provides a visual indication that the experiment is operating in a selected mode which has been initiated with a START command.			
	GRATING MOTOR DRIVE switch PRIM	Permits the grating motor to be driven by the primary grating driver circuitry.	C/D EXP 1,2	28 vdc VS055 (397D)	PRIM position not wired.
	SEC	Provides a command to remove the primary grating driver from the grating motor circuit and apply the signal from the secondary grating driver.			
	THERMAL switch ON	Provides a command to apply input power to the SCAN SPECT thermal control system.	C/D EXP 1,2	28 vdc VS055 (397D)	
	OFF	Provides a command to remove input power from the SCAN SPECT thermal control system.			

ATM CONTROLS AND DISPLAYS (PANEL 130)

SYSTEM	NAME AND POSITION	FUNCTION	CIRCUIT BREAKER	POWER SOURCE	REMARKS
X-RAY SPECT	MAIN PWR switch ON	Provides a command to apply input power to TELESCOPE ASSEMBLY, MAIN ELECTRONICS ASSY, LOW VOLTAGE POWER SUPPLY, INTENSITY MODULATION ASSY, PHOTOMULTIPLIER EXPOSURE and IMAGE INTENSITY indicators and the CRT ELECTRONICS ASSY.	C/D EXP 1,2	28 vdc VS054 (398D)	
	OFF	Provide a command to remove input power from TELESCOPE ASSY, MAIN ELECTRONICS ASSY, LOW VOLTAGE POWER SUPPLY, INTENSITY MODULATION ASSY, PHOTOMULTIPLIER EXPOSURE and IMAGE INTENSITY indicators and the CRT ELECTRONICS ASSY.			
	DOOR switch OPEN	Provides a command to open the X-RAY SPECT thermal shield door.	C/D EXP 1,2	28 vdc VS054 (398D)	Switch is spring loaded to center position.
	center	No function and not wired.			
	CLOSE	Provides a command to close the X-RAY SPECT thermal shield door.			
	DOOR talkback bp	Provides a visual indication that the X-RAY SPECT thermal shield door is closed when activated by door limit switch signal.	Fused	28 vdc VRKEXP 1,2 (31C22, 41C22)	
	white	Absence of both signals. Indicates X-RAY SPECT thermal shield door is between the closed and opened positions.			
	gray	Provides a visual indication that the X-RAY SPECT thermal shield door is open when activated by door limit switch signal.			

ATM CONTROLS AND DISPLAYS (PANEL 130)

SYSTEM	NAME AND POSITION	FUNCTION	CIRCUIT BREAKER	POWER SOURCE	REMARKS
X-RAY SPECT	IMAGE DISSECTOR switch ENABLE	Provides a command to enable 28 vdc, Busses VASE 1 and 2, power to be applied to the IMAGE DISSECTOR high voltage supply.	C/D EXP 1,2	28 vdc VEXP 1,2 (312D,322D)	ENABLE and OFF positions are wired redundantly.
	OFF	Provides a command to remove 28 vdc, Busses VASE 1 and 2, power from the IMAGE DISSECTOR high voltage supply.			
	X-RAY IMAGE switch ENABLE	Enables 28 vdc, Busses VASE 1 and 2, input power to be applied to the CRT assembly high voltage supply.	Fused	28 vdc X-RAY SPECT isolated VASECD 1,2	
	OFF	Removes 28 vdc, Busses VASE 1 and 2, input power from the CRT assembly high voltage supply.			
	PHOTO MULT ENABLE switch ENABLE	Provides a command to enable 28 vdc, Busses VASE 1 and 2, input power to be applied to the PHOTO MULT high voltage supply.	C/D EXP 1,2	28 vdc VEXP 1,2 (312D,322D)	ENABLE and OFF positions are wired redundantly.
	OFF	Provides a command to remove 28 vdc, Busses VASE 1 and 2, input power from the PHOTO MULT high voltage supply.			
	FILTER selector switch 1,2,3,4,5 or 6	Provides a command to position the desired filter in front of the camera.	C/D EXP 1,2	28 vdc VS054 (398D)	
	RESET/1	Provides a command to activate the spring loaded fail safe mechanism to reset the filter wheel to position 1.			
	STORAGE	Allows DCS control of filter selection (1, 2 or 3) during unattended or unmanned X-RAY SPECT operation.			STORAGE position not wired.

ATM CONTROLS AND DISPLAYS (PANEL 130)

SYSTEM	NAME AND POSITION	FUNCTION	CIRCUIT BREAKER	POWER SOURCE	REMARKS
X-RAY SPECT	FILTER CONFIRM talkback gray	Provides a visual indication that a filter is in position.	Fused	28 vdc VAMP 1,2	
	bp	Absence of signal. Provides a visual indication that no filter is in position. Normal indication for an in-transit condition of the filter wheel.			
	MODE FLARE switch AUTO	Provides a command to enable the camera control circuitry such that a picture sequence will be initiated automatically if the X-ray activity sensed exceeds the FLARE THRESHOLD setting. Picture sequence terminates automatically if the X-ray activity sensed drops below the FLARE THRESHOLD setting.	C/D EXP 1,2	28 vdc VS054 (398D)	AUTO position also inhibits the START and STOP commands to the X-RAY SPECT experiment.
	MANUAL	Provides a command to stop a FLARE AUTO camera sequence and enable the START/STOP commands of the START/STOP switch to allow manual camera operation.			
	FRAMES REMAINING indicator	Displays the number of unexposed frames remaining in the camera. Counter is reset to 6000 by means of the FILM RESET switches.	C/D EXP 1,2	28 vdc VS054 (398D)	On CONSOLE POWER DISTRIBUTION panel, X-RAY SPECT switch in OFF position will remove EXP BUS 1 or 2 power and NUMERIC LTG power from X-RAY SPECT FRAMES REMAINING indicator.
	START/STOP switch START	Provides a command to initiate manual picture sequence independent of the X-ray activity when FLARE AUTO switch is in the INHIBIT position.	C/D EXP 1,2	28 vdc VS054 (398D)	Switch is spring loaded to center position.
	center	No function and not wired.			
	STOP	Provides a command to terminate a picture sequence when operating in the manual mode.			

ATM CONTROLS AND DISPLAYS (PANEL 130)

SYSTEM	NAME AND POSITION	FUNCTION	CIRCUIT BREAKER	POWER SOURCE	REMARKS
X-RAY SPECT	READY/OPR lights READY	Provides a visual indication that the camera is ready to operate in a selected mode of operation. Will light with the following conditions: MAIN PWR - ON, DOOR tb - gray, and PHOTO MULT - ENABLE for AUTO mode; MAIN PWR - ON, DOOR tb - gray, PHOTO MULT - OFF, FLARE AUTO - INHIBIT, and EXPOSURE RANGE - not in AUTO for MANUAL mode.	MAIN INV/ LCA 1,2	2-5 vdc VSTATUS (381D)	
	OPR	Provides a visual indication that the camera is operating and that the READY conditions have been attained.			Film can be exposed with the thermal shield door closed.
	PHOTO MULT TEST switch PHOTO MULT TEST	Provides a command to activate an internal test light to check out the PHOTOMULTIPLIER and the PHOTOMULTIPLIER EXPOSURE COUNT indicator.	C/D EXP 1,2	28 vdc VS054 (398D)	Switch is spring loaded to center position.
	center	No function and not wired.			
	CTR TEST	Provides a command to activate an internal digital test source. A readout of 128 on the IMAGE INTENSITY COUNT and the PHOTOMULTIPLIER EXPOSURE COUNT indicators and a target in the center of X-RAY IMAGE monitor with IMAGE THRESHOLD selector switch in 1 or 4 position provides verification of digital system operation.			
	THERMAL POWER switch PRIM	Provides a command to apply input power, Busses VRKEXP 1 and VRKEXP 2, to Primary Temperature Control System.	C/D EXP 1,2	28 vdc VS054 (398D)	
	OFF	Provides a command to remove input power from Primary and Secondary Temperature Control Systems.			
	SEC	Provides a command to apply input power, Busses VRKEXP 1 and VRKEXP 2, to Secondary Temperature Control System.			

SYSTEM	NAME AND POSITION	FUNCTION	CIRCUIT BREAKER	POWER SOURCE	REMARKS
X-RAY SPECT	GRATING switch IN	Provides a command to position the transmission grating in the X-ray optical path.	C/D EXP 1,2	28 vdc VS054 (398D)	
	OUT	Provides a command to move the transmission grating out of the X-ray optical path.			
	RESET	Provides a command to activate the spring loaded failsafe mechanism to reset the grating out of the X-ray optical path.			
	GRATING talkback IN	Provides a visual indication that the transmission grating is in the X-ray optical path.	Fused	28 vdc VAMP 1,2	
	white	Absence of both signals.			
	OUT	Provides a visual indication that the transmission grating is out of the X-ray optical path.			
	PICTURE RATE selector switch SINGLE	Provides a command to permit a single sequence of pictures to be taken. The number of pictures taken depends on the EXPOSURE RANGE setting. A minimum of four and a maximum of eight pictures are taken in a single sequence.	Fused	5 vdc X-RAY SPECT isolated	
	LOW	Provides a command to select picture taking with approximately 12 seconds between exposures. Otherwise operation is the same as HIGH rate.			
	HIGH	Provides a command to select picture taking at approximately 0.2 second intervals between exposures. In FLARE AUTO ENABLE this sequence is continuous until INHIBITED or by the X-ray count falling below the FLARE THRESHOLD setting. In manual operation, this sequence stops after approximately 13 minutes or when manually stopped.			

ATM CONTROLS AND DISPLAYS (PANEL 130)

SYSTEM	NAME AND POSITION	FUNCTION	CIRCUIT BREAKER	POWER SOURCE	REMARKS
X-RAY SPECT	PROG	Provides a command to select a preprogrammed picture rate for automatic picture taking. In FLARE AUTO ENABLE, a picture sequence is taken at HIGH rate for 4 minutes and then continues at LOW rate until it is INHIBITED or until X-ray count falls below the FLARE THRESHOLD setting. If the START-STOP switch is placed to the START position, a picture sequence will be taken at HIGH rate for 4 minutes and then at LOW rate for approximately 9 minutes for a total operating time of 13 minutes or until manually stopped.			
	EXPOSURE RANGE selector switch 1	Provides a command to select a sequence of four exposure times: 1/64, 1/16, 1/4 and 1 second.	Fused	5 vdc X-RAY SPECT isolated	
	4	Provides a command to select a sequence of five exposure times: 1/64, 1/16, 1/4, 1 and 4 seconds.			
	16	Provides a command to select a sequence of six exposure times: 1/64, 1/16, 1/4, 1, 4 and 16.			
	64	Provides a command to select a sequence of seven exposure times: 1/64, 1/16, 1/4, 1, 4, 16 and 64.			
	256	Provides a command to select a sequence of eight exposure times: 1/64, 1/16, 1/4, 1, 4, 16, 64 and 256 seconds.			
	AUTO	**Provides a command to allow the selection of the proper exposure sequence based on the measured X-ray activity detected by the PHOTOMULTIPLIER detector.**			

C&D

ATM CONTROLS AND DISPLAYS (PANEL 130)

SYSTEM	NAME AND POSITION	FUNCTION	CIRCUIT BREAKER	POWER SOURCE	REMARKS
X-RAY SPECT	FLARE THRESHOLD COARSE selector switch 0, 256, 512 or 768	Panel nomenclature corresponds to the minimum number of X-ray counts/sec which will trigger the X-RAY light or initiate a picture sequence if in the FLARE AUTO ENABLE. Provides a manual control of the triggering level of the X-RAY light and camera operation (additive with FLARE THRESHOLD FINE setting).	Fused	5 vdc AS&E isolated	
	FLARE THRESHOLD FINE selector switch 0, 32, 64, 96, 128, 160, 192 and 224	Additive with FLARE THRESHOLD COARSE setting for providing X-ray activity triggering for automatic picture taking.	Fused	5 vdc AS&E isolated	
	PHOTOMULTIPLIER EXPOSURE COUNT indicator	Displays the X-ray counts detected and amplified in the PHOTOMULTIPLIER detector subassembly.	Fused	5 vdc AS&E isolated	Range of indication is 0 to 960 counts/second.
	IMAGE INTENSITY COUNT indicator	Displays the X-ray counts detected in the image dissector subassembly for a one second period.	Fused	5 vdc AS&E isolated	Range of indication is 0 to 960 counts/second.
	IMAGE THRESHOLD selector switch 1, 4, 16, 64 and 256	Provides intensity modulation control of the X-RAY IMAGE monitor. Panel designations correspond to the minimum number of counts necessary per resolution element per second to produce modulation. Position is determined by observing the X-RAY IMAGE Monitor.	Fused	5 vdc AS&E isolated	
	X-RAY IMAGE monitor	Displays X-ray images and is used to align the telescope axis on the X-ray activity by centering the displayed X-ray image.	Fused	28 vdc X-RAY SPECT isolated VASECD 1,2	

ATM CONTROLS AND DISPLAYS (PANEL 130)

SYSTEM	NAME AND POSITION	FUNCTION	CIRCUIT BREAKER	POWER SOURCE	REMARKS
X-RAY SPECT	BRIGHTNESS thumbwheel	Potentiometer on the control panel is part of the CRT electronics assembly and provides control of the background brightness on the X-RAY IMAGE monitor.	Fused	28 vdc X-RAY SPECT isolated VASECD 1,2	
	FOCUS thumbwheel	Potentiometer on the control panel is part of the CRT electronics assembly and provides for maximum clarity and definition of the image on the X-RAY IMAGE monitor in conjunction with the BRIGHTNESS control.	Fused	28 vdc X-RAY SPECT isolated VASECD 1,2	

C&D

ATM CONTROLS AND DISPLAYS (PANEL 130)

SYSTEM	NAME AND POSITION	FUNCTION	CIRCUIT BREAKER	POWER SOURCE	REMARKS
MASTER FLARE MODE	TONE ENBL switch ENBL	Allows an alternating 2000-3000 H_z tone to be generated when the X-ray activity detected exceeds the FLARE THRESHOLD setting or when the RF signal is received from the Solar Radio Noise Burst Monitor system.	C/D EXP 1,2	28 vdc VS054 (398D)	These functions also apply for the FLARE ALERT tone generator in the OWS (panel 607).
	OFF	Inhibits the 2000-3000 H_z tone generator from generating a tone.			
	X-RAY/RF lights X-RAY	Provides a visual indication when a flare threshold signal has been received from the X-RAY SPECT experiment.	MAN INV/ LCA 1,2	2-5 vdc VSTATUS (381D)	
	RF	Provides a visual indication when an RF signal has been received from the Radio Noise Burst Monitor system.			
	INIT switch INIT	Provides a manual command to activate the flare mode of the X-RAY TELE, XUV SPECT, and XUV SLIT experiments.	C/D EXP 1,2	28 vdc VEXP 1,2 (312D,322D)	Each experiment must be FLARE enabled to start an automatic flare mode with an INIT command.
	down	No function and not wired.			
	TONE VOL ADJ controls EVENT TIME	Provides a control to adjust the volume of the EVENT TIME 400 H_z tone.	C/D EXP 1,2	28 vdc VS054 (398D)	
	FLARE ALERT	Provides a control to adjust the volume of the FLARE ALERT alternating 2000-3000 H_z tone.			

ATM CONTROLS AND DISPLAYS (PANEL 130)

SYSTEM	NAME AND POSITION	FUNCTION	CIRCUIT BREAKER	POWER SOURCE	REMARKS
TV	Hα RC switch up,down,center, left and right (5 positions)	Provides up, down, left and right commands to the selected Hα reticle.	C/D EXP 1,2	28 vdc VHα (392D)	Switch is spring loaded to center position. Switch has power only when Hα RETICLE switch is in the Hα1 or Hα2 position.
	Hα RETICLE switch Hα1	Enables the Hα1 reticle to receive up, down, left and right commands.			
	OFF	Removes power from the Hα RETICLE and the Hα RC switches.			OFF position not wired.
	Hα2	Provides a command to enable the Hα2 reticle to receive up, down, left and right commands.	C/D EXP 1,2	28 vdc VHα (392D)	
	Hα1 PWR switch ON	Provides a command to apply input power, Busses VTV1 and VTV 2, to the Hα1 TV camera.	C/D EXP 1,2	28 vdc VEXP 1,2 (312D,322D)	ON and OFF positions of switch are wired redundantly.
	OFF	Provides a command to remove input power, Busses VTV 1 and VTV 2, from the Hα1 TV camera.			
	Hα1 ZOOM switch IN	Provides a command to increase the focal length of the Hα1 TV camera thereby allowing the camera to zoom in on a desired feature.	C/D EXP 1,2	28 vdc VEXP 1,2 (312D,322D)	Switch is spring loaded to center position. IN and OUT positions of switch are wired redundantly.
	center	No function and not wired.			
	OUT	Provides a command to decrease the focal length of the Hα1 TV camera to zoom out from a desired feature.			

ATM CONTROLS AND DISPLAYS (PANEL 130)

SYSTEM	NAME AND POSITION	FUNCTION	CIRCUIT BREAKER	POWER SOURCE	REMARKS
TV	Hα2 PWR switch ON	Provides a command to apply input power, Busses VTV 1 and VTV 2, to the Hα2 TV camera.	C/D EXP 1,2	28 vdc VEXP 1,2 (312D,322D)	ON and OFF positions are wired redundantly.
	OFF	Provides a command to remove input power, Busses VTV 1 and VTV 2, from the Hα2 TV camera.			
	Hα2 ZOOM switch IN	Provides a command to increase the focal length of the Hα2 TV camera thereby allowing the camera to zoom in on the desired feature.	C/D EXP 1,2	28 vdc VEXP 1,2 (312D,322D)	Switch is spring loaded to center position. IN and OUT positions of switch are wired redundantly.
	center	No function and not wired.			
	OUT	Provides a command to decrease the focal length of the Hα2 TV camera thereby allowing the camera to zoom out from the desired feature.			
	MON 1 PWR switch ON	Applies input power, Busses VMON 1 and VMON 2, to MON 1 monitor and MON 1 selector switch.	MAIN MON 1,2	28 vdc VMON 1,2 (316D,326D)	Supply voltage will not be applied to this switch unless SYNC GEN switch is in PRIM or SEC positions.
	OFF	Removes input power, Busses VMON 1 and VMON 2, from MON 1 monitor and MON 1 selector switch.			OFF position not wired.
	MON 2 PWR switch ON	Applies input power, Busses VMON 1 and VMON 2, to MON 2 monitor and MON 2 selector switch.	MAIN MON 1,2	28 vdc VMON 1,2 (316D,326D)	Supply voltage will not be applied to this switch unless SYNC GEN switch is in PRIM or SEC positions.
	OFF	Removes input power, Busses VMON 1 and VMON 2, from MON 2 monitor and MON 2 selector switch.			OFF position not wired.

ATM CONTROLS AND DISPLAYS (PANEL 130)

SYSTEM	NAME AND POSITION	FUNCTION	CIRCUIT BREAKER	POWER SOURCE	REMARKS
TV	MONITOR, SYNC GEN switch PRIM	Provides a command to apply input power to the primary sync generator and energizes TV subsystem Busses VTV 1 and VTV 2.	C/D EXP 1,2	28 vdc VHα (392D)	
	OFF	Provides a command to remove input power from the primary and secondary sync generators and de-energize TV subsystem Busses VTV 1 and VTV 2.			
	SEC	Provides a command to apply input power to the secondary sync generator and energize TV subsystem Busses VTV 1 and VTV 2.			
	MON 1 selector switch XUV MON, Hα2, Hα1, XUV SLIT, WLC	Provides a command to display the selected TV camera output on TV MON 1.	MAIN MON 1,2	28 vdc VMON 1,2 (316D,326D)	
	MON 2 selector switch XUV MON, Hα2, Hα1, XUV SLIT, WLC	Provides a command to display the selected TV camera output on TV MON 2.	MAIN MON 1,2	28 vdc VMON 1,2 (316D,326D)	
	XUV MON GAIN selector switch 1,2,3,4,5,6 or 7	Provides a command to adjust the gain of the XUV monitor	Fused	8 vdc	
	XUV MON PWR switch ON	Provides a command to apply input power, Busses VTV 1 and VTV 2, to the XUV monitor camera.	C/D EXP 1,2	28 vdc VEXP 1,2 (312D,322D)	ON and OFF positions are wired redundantly.
	OFF	Provides a command to remove input power, Busses VTV 1 and VTV 2, from the XUV monitor.			

ATM CONTROLS AND DISPLAYS (PANEL 130)

SYSTEM	NAME AND POSITION	FUNCTION	CIRCUIT BREAKER	POWER SOURCE	REMARKS
TV	XUV MON DOORS switch OPEN	Provides a command to open the XUV monitor thermal shield and internal aperture doors. XUV SLIT MAIN PWR must be ON in order for the XUV MON internal aperture door to open.	C/D EXP 1,2	28 vdc VS082B (395D)	Switch is spring loaded to center position.
	center	No function.			
	CLOSE	Provides a command to close the XUV monitor thermal shield and internal aperture doors. XUV SLIT MAIN PWR must be ON in order for the XUV MON internal aperture door to close.			
	XUV MON DOORS talkback bp	Provides a visual indication that the XUV monitor thermal shield and internal aperture doors are closed.	Fused	28 vdc VC/DLOG 3 (95L59)	
	wht	Absence of both signals. Indicates thermal shield and/or internal aperture doors are between the closed and opened positions.			
	gray	Provides a visual indication that the XUV monitor thermal shield and internal aperture doors are open.			
	XUV MON VID INTEG switch NORMAL	Allows normal operation of the XUV MON TV camera.			Switch is spring loaded to NORMAL position. NORMAL position not wired.
	INTEG	Provides a command to turn off the sweep of the XUV MON TV camera and to manually control the time integration buildup of the image to provide capability of viewing darker areas of the sun on the TV monitor. When removed, integrated picture flashes on the TV monitor.	C/D EXP 1,2	28 vdc VS082B (395D)	

ATM CONTROLS AND DISPLAYS (PANEL 130)

SYSTEM	NAME AND POSITION	FUNCTION	CIRCUIT BREAKER	POWER SOURCE	REMARKS
TV	XUV MON GRID switch NORMAL	Allows normal operation of the XUV monitor.			Switch is spring loaded to NORMAL position. NORMAL position not wired.
	DISCH	Provides a command to discharge the XUV monitor grid.	C/D EXP 1,2	28 vdc VS082B (395D)	
	XUV SLIT WL DISPLAY switch WL DISPLAY	Provides a command to apply power to the XUV SLIT TV camera and generate a video white light image of the slit plate on the solar limb. Removes LIMB SCAN and LIMB PTG commands. WL DISPLAY command can be removed by any of the following commands: AUTO SEQ HOLD, XUV SLIT PWR/DOORS OFF, or MASTER FLARE MODE INIT.	Fused	28 vdc XUV SLIT isolated V52	Switch is spring loaded to center position.
	center	No function.			Center position not wired.
	LIMB SCAN	Provides a command to display the limb offset position on COUNTER 3 for precise pointing. May be activated when experiment is pointed to within 45 arc sec of the solar limb. Turns off the video image of the WL DISPLAY (boresight state). Removes LIMB PTG command. LIMB SCAN command can be removed by any of the following commands: XUV SLIT WL DISPLAY, AUTO SEQ HOLD, XUV SLIT PWR/DOORS OFF or MASTER FLARE MODE INIT.			

ATM CONTROLS AND DISPLAYS (PANEL 130)

SYSTEM	NAME AND POSITION	FUNCTION	CIRCUIT BREAKER	POWER SOURCE	REMARKS
TV	XUV SLIT LIMB PTG switch LIMB PTG	Provides a command to start the active pointing control internal to the experiment. In this mode, the position of the solar image with respect to the experiment slit is actively maintained to within one arc sec of the attitude obtained during the LIMB SCAN mode. LIMB PTG command can only be executed after a LIMB SCAN command. LIMB PTG command can be removed by any of the following commands: XUV SLIT LIMB SCAN, XUV SLIT WL DISPLAY, AUTO SEQ HOLD, XUV SLIT PWR/ DOORS OFF or MASTER FLARE MODE INIT.	Fused	28 vdc XUV SLIT isolated V52	Switch is spring loaded to center position.
	center	No function and not wired.			
	MAN STEP	Provides a command to move the mirror two arc sec in a radial direction away from sun center. May be used only in LIMB PTG mode in conjunction with the AUTO or TIME modes.			
	XUV SLIT talkback SC	Provides a visual indication that the experiment is in the limb scanning mode.	Fused	28 vdc XUV SLIT isolated V52	
	gray	Absence of both signals.			
	PT	Provides a visual indication that the experiment is in the limb pointing mode.			
	WLC PWR switch ON	Provides a command to apply input power, Busses VTV 1 and VTV 2, to the WLC TV camera.	C/D EXP 1,2	28 vdc VEXP 1,2 (312D,322D)	ON and OFF positions of switch are wired redundantly.
	OFF	Provides a command to remove input power, Busses VTV 1 and VTV 2, from the WLC TV camera.			

ATM CONTROLS AND DISPLAYS (PANEL 130)

SYSTEM	NAME AND POSITION	FUNCTION	CIRCUIT BREAKER	POWER SOURCE	REMARKS
TV	WLC GRID switch NORMAL DISCHARGE	Allows normal operation of the WLC TV camera. Provides a command to discharge the WLC TV camera grid.	C/D EXP 1,2	28 vdc VS052 (396D)	Switch is spring loaded to NORMAL position. NORMAL position not wired.
	MON 1 display	Displays selected TV camera output on MON 1.	MAIN MON 1,2	28 vdc VMON 1,2 (316D,326D)	
	MON 1 CONTRAST thumbwheel	Allows control of the contrast between the black and white areas of the picture on MON 1.	MAIN MON 1,2	28 vdc VMON 1,2 (316D,326D)	
	MON 1 BRIGHTNESS thumbwheel	Allows control of the brightness or picture intensity of the picture on MON 1.	MAIN MON 1,2	28 vdc VMON 1,2 (316D,326D)	
	MON 1 CROSS HAIR INTENSITY thumbwheel	Allows control of the intensity with which the cross hairs are imposed on MON 1.	MAIN MON 1,2	28 vdc VMON 1,2 (316D,326D)	
	MON 1 VERTICAL CROSS HAIR thumbwheel	Allows control of the position of the vertical cross hair on MON 1.	MAIN MON 1,2	28 vdc VMON 1,2 (316D,326D)	
	MON 1 HORIZONTAL CROSS HAIR thumbwheel	Allows control of the position of the horizontal corss hair on MON 1.	MAIN MON 1,2	28 vdc VMON 1,2 (316D,326D)	
	MON 2 display	Displays selected TV camera output on MON 2.	MAIN MON 1,2	28 vdc VMON 1,2 (316D,326D)	

C&D

ATM CONTROLS AND DISPLAYS (PANEL 130)

SYSTEM	NAME AND POSITION	FUNCTION	CIRCUIT BREAKER	POWER SOURCE	REMARKS
TV	MON 2 CONTRAST thumbwheel	Allows control of the contrast between the black and white areas of the picture on MON 2.	MAIN MON 1,2	28 vdc VMON 1,2 (316D,326D)	
	MON 2 BRIGHTNESS thumbwheel	Allows control of the brightness or picture intensity of the picture on MON 2.	MAIN MON 1,2	28 vdc VMON 1,2 (316D,326D)	
	MON 2 CROSS HAIR thumbwheel	Allows control of the intensity with which the cross hairs are imposed on MON 2.	MAIN MON 1,2	28 vdc VMON 1,2 (316D,326D)	
	MON 2 VERTICAL CROSS HAIR thumbwheel	Allows control of the position of the vertical cross hiar on MON 2.	MAIN MON 1,2	28 vdc VMON 1,2 (316D,326D)	
	MON 2 HORIZONTAL CROSS HAIR thumbwheel	Allows control of the position of the horizontal cross hair on MON 2.	MAIN MON 1,2	28 vdc VMON 1,2 (316D,326D)	
ATM	ATM POWER switch up OFF	No function and not wired. Provides a command to deactivate the entire ATM power system.	C/D CMD/ DEPLOY/ EVA 1,2	28 vdc VCDE 1,2 (311D,321D)	

ATM CONTROLS AND DISPLAYS (PANEL 121)

SYSTEM	NAME AND POSITION	FUNCTION	CIRCUIT BREAKER	POWER SOURCE	REMARKS
DAS BACKUP	DIGIT 1 selector switch OFF, 0 thru 7	Selects the first digit of a DAS KEY command.	C/D CMD/ DEPLOY/ EVA 1,2	28 vdc VCDE 1,2 (311D,321D)	OFF position of switch not wired.
	DIGIT 2 selector switch OFF, 0 thru 7	Selects the second digit of a DAS KEY command.	C/D CMD/ DEPLOY/ EVA 1,2	28 vdc VCDE 1,2 (311D,321D)	OFF position of switch not wired.
	DIGIT 3 selector switch OFF, 0 thru 7	Selects the third digit of a DAS KEY command.	C/D CMD/ DEPLOY/ EVA 1,2	28 vdc VCDE 1,2 (311D,321D)	OFF position of switch not wired.
	DIGIT 4 selector switch OFF, 0 thru 7	Selects the fourth digit of a DAS KEY command.	C/D CMD/ DEPLOY/ EVA 1,2	28 vdc VCDE 1,2 (311D,321D)	OFF position of switch not wired.
	DIGIT 5 selector switch OFF, 0 thru 7	Selects the fifth digit of a DAS KEY command.	C/D CMD/ DEPLOY/ EVA 1,2	28 vdc VCDE 1,2 (311D,321D)	OFF position of switch not wired.
	DATA TRANS switch DATA TRANS down	Provides a command for the enabled switch selector or ATMDC to accept the 5 digits positioned on panel as a DAS KEY command. No function and not wired.	C/D CMD/ DEPLOY/ EVA 1,2	28 vdc VCDE 1,2 (311D,321D)	Switch is spring loaded to the down position.
	ENTER switch ENTER down	Provides a command to the enabled switch selector or ATMDC to execute the DAS KEY command. No function and not wired.	C/D CMD/ DEPLOY/ EVA 1,2	28 vdc VCDE 1,2 (311D,321D)	Switch is spring loaded to the down position.

C&D

ATM CONTROLS AND DISPLAYS (PANEL 121)

SYSTEM	NAME AND POSITION	FUNCTION	CIRCUIT BREAKER	POWER SOURCE	REMARKS
DAS BACKUP	CLEAR switch CLEAR down	Provides a command to the enabled switch selector or ATMDC to clear the DAS KEY command. No function and not wired.	C/D CMD/ DEPLOY/ EVA 1,2	28 vdc VCDE 1,2 (311D,321D)	Switch is spring loaded to the down position.

ATM CONTROLS AND DISPLAYS (PANEL 160)

SYSTEM	NAME AND POSITION	FUNCTION	CIRCUIT BREAKER	POWER SOURCE	REMARKS
CANISTER CONTROL	POWER PRIM cb - switch ENABLE INHIBIT	Applies C/D CMD/DEPLOY/EVA Bus VCDE 1, 28 vdc, input power to ROTATION CONTROL panel. Removes C/D CMD/DEPLOY/EVA Bus VCDE 1, 28 vdc, input power from ROTATION CONTROL panel.	C/D CMD/ DEPLOY/ EVA 1	28 vdc VCDE 1 (311D)	
	POWER SEC cb - switch ENABLE INHIBIT	Applies C/D CMD/DEPLOY/EVA Bus VCDE 2, 28 vdc,input power to ROTATION CONTROL panel. Removes C/D CMD/DEPLOY/EVA Bus VCDE 2, 28 vdc,input power from ROTATION CONTROL panel.	C/D CMD/ DEPLOY/ EVA 2	28 vdc VCDE 2 (321D)	
	ROLL switch ENABLE INHIBIT	Provides input power, C/D CMD/DEPLOY/EVA Busses VCDE 1 and VCDE 2, to CANISTER ROTATION control handle, S082 DOORS switch and S082A and S082B DOOR lights, and removes roll brake to enable rotation control of canister. Removes input power from CANISTER ROTATION control handle, S082 DOORS switch and S082A and B DOOR lights, and applies roll brake to canister.	ROTATION CONTROL PRIM,SEC	28 vdc VCDE 1,2 (311D,321D)	
	S082 DOORS switch OPEN center CLOSE	Provides a command to open the S082A and B thermal shield doors. No function and not wired. Provides a command to close the S082A and B thermal shield doors.	ROTATION CONTROL PRIM,SEC	28 vdc VCDE 1,2 (311D,321D)	Switch is spring loaded to the center position.

ATM CONTROLS AND DISPLAYS (PANEL 160)

SYSTEM	NAME AND POSITION	FUNCTION	CIRCUIT BREAKER	POWER SOURCE	REMARKS
CANISTER CONTROL	S082 DOORS A lights OPEN	Provides a visual indication that S082A thermal shield door is open.	Fused	28 vdc VC/DLOG 3 (95L59)	
	bp	Provides a visual indication that S082A thermal shield door is closed.			
	S082 DOORS B lights OPEN	Provides a visual indication that S082B thermal shield door is open.	Fused	28 vdc VC/DLOG 3 (95L59)	
	bp	Provides a visual indication that S082B thermal shield door is closed.			
	CANISTER ROTATION control LEFT HIGH	Provides a command to rotate the ATM canister in a left direction at a rate of 7.0 or 3.5 degrees per second.	ROTATION CONTROL PRIM,SEC	28 vdc VCDE 1 (311D)	RATES obtainable with this control handle are determined by the setting of the MANUAL POINTING CONTROL ROLL GAIN switch.
	LEFT LOW	Provides a command to rotate the ATM canister in a left direction at a rate of 0.7 or 0.35 degrees per second.		28 vdc VCDE 2 (321D)	
	OFF	Remove all rotation commands from the ATM canister roll logic circuitry.			
	RIGHT LOW	Provides a command to rotate the ATM canister in a right direction at a rate of 0.7 or 0.35 degrees per second.		28 vdc VCDE 1 (311D)	
	RIGHT HIGH	Provides a command to rotate the ATM canister in a right direction at a rate of 7.0 or 3.5 degrees per second.		28 vdc VCDE 2 (321D)	

ATM CONTROLS AND DISPLAYS (PANELS 128 AND 129)

SYSTEM	NAME AND POSITION	FUNCTION	CIRCUIT BREAKER	POWER SOURCE	REMARKS
SOLAR RADIO NOISE BURST MONITOR	CAL NOISE SOURCE sel switch AMB and 1845	Provides for selected attenuation of a precisely known noise source to be injected into the monitor system. Noise levels are calibrated as AMBIENT and 1845 solar flux units.	NOISE BURST ANT PANEL 202	28 vdc VAM 2	SWITCHING MODE sel switch should be in NS/REF position for selected noise level source to be injected into the monitor system.
	SOLAR RADIO NOISE BURST MONITOR indicator	Meter provides a visual indication of measured solar flux from the ANTENNA or the noise source signal as selected by the SWITCHING MODE switch.	NOISE BURST ANT PANEL 202	28 vdc VAM 2	Meter range of 0 to 5 has a direct correspondence to the graduations of the THRESHOLD control.
	SWITCHING MODE sel switch NS/REF ANT/REF	Noise Source/Reference Mode selects the noise source as the input signal for the calibration of the monitor unit. Antenna/Reference Mode selects the Antenna as the solar flux input signal to the monitor unit.	NOISE BURST ANT PANEL 202	28 vdc VAM 2	
	SYSTEM GAIN control	Gain control provides a means of varying the gain of all input signals in the monitor system.	NOISE BURST ANT PANEL 202	28 vdc VAM 2	
	REF BAL control	Balance control provides a means of varying the gain modulation attenuation in the antenna channel as is used to equalize the amplitudes of the noise in the antenna and reference load channels.	NOISE BURST ANT PANEL 202	28 vdc VAM 2	

ATM CONTROLS AND DISPLAYS (PANELS 128 AND 129)

SYSTEM	NAME AND POSITION	FUNCTION	CIRCUIT BREAKER	POWER SOURCE	REMARKS
SOLAR RADIO NOISE BURST MONITOR	ORBIT PERIOD push-button indicator	Provides a four digit control to set the orbital period. It can be set for an ORBIT PERIOD up to a maximum of 99.99 minutes by means of spring-loaded pushbuttons shown directly above and below each digit display.	NOISE BURST ANT PANEL 202	28 vdc VAM 2	
	ON TIME push-button indicator	Provides a two digit control to set the ON TIME period. This time represents the operating time in minutes of the monitor unit per each orbit. Indicator can be set similar to ORBIT PERIOD indicator.	NOISE BURST ANT PANEL 202	28 vdc VAM 2	
	THRESHOLD control	THRESHOLD control provides a means of setting the threshold level at which the monitor unit will supply the ATM C&D panel with an RF signal.	NOISE BURST ANT PANEL 202	28 vdc VAM 2	RF signal provided to the ATM C&D panel will light the MASTER FLARE MODE "RF" light and enable an alternating 2000-3000 H_z tone to be generated.
	ENABLE light	During the period of time that the monitor unit is operating, the ENABLE light is on thereby indicating that the RF signal circuit is operational and will provide the RF signal when the noise level exceeds the THRESHOLD setting.	NOISE BURST ANT PANEL 202	28 vdc VAM 2	
	START switch down START	No function. Provides a command to start operating the monitor unit and start counting the time as set on the ON TIME indicator.	NOISE BURST ANT PANEL 202	28 vdc VAM 2	Switch is spring-loaded to the down position. The difference between the ON TIME and the ORBIT PERIOD time will determine how long the monitor unit will automatically by off.

ATM CONTROLS AND DISPLAYS (PANELS 128 AND 129)

SYSTEM	NAME AND POSITION	FUNCTION	CIRCUIT BREAKER	POWER SOURCE	REMARKS
SOLAR RADIO NOISE BURST MONITOR	POWER switch ON OFF	Supplies 28 vdc input power to the monitor system power supplies. Removes 28 vdc input power from the monitor system power supplies.	NOISE BURST ANT PANEL 202	28 vdc VAM 2	

ABBREVIATIONS

A	Ampere
A-D	Analog to Digital
AAP	Apollo Applications Program (Skylab Program)
ac	Alternating Current
AGC	Automatic Gain Control
ACTS	ATM Contingency Transfer System
AGE	Aerospace Ground Equipment
AGGD	Automatic Gravity Gradient Desaturation
AH	Ampere Hour
AIU	Auxiliary Interface Unit
AM	Airlock Module
AMO	Air Mass Zero
AMP	Amplifier
AOH	Apollo Operations Handbook
APCS	Attitude and Pointing Control System
ASA	Amplifier and Switch Assembly
ASAP	Auxiliary Storage and Playback Assembly
Acq SS, ACQ SS	Acquisition Sun Sensor
AS&E	American Science & Engineering
ASSY	Assembly
ATM	Apollo Telescope Mount
ATM/DA	Apollo Telescope Mount Deployment Assembly
ATMDC	ATM Digital Computer
Aux	Auxiliary
AVP	Address Verification Pulse
BAT	Battery
BBRC	Ball Brothers Research Corporation
BCD	Binary Coded Decimal
BKR	Breaker
BMF	Bending Mode Filters
BPS	Bits Per Second
BYP	Bypass
BTU	British Thermal Unit
BU	Backup
C	Centigrade
CAN, CSTR	Canister
CAP	Capacity
CBRM	Charger Battery Regulator Module
CC	Cubic Centimeter

ABBREVIATIONS (cont)

CCU	Crewman Communications Umbilical
C&D	Control and Display
CDF	Confined Detonating Fuse
CDR	Command Destruct Receiver
CES	Crew Equipment Subsystem
CH	Camera Head
CHG	Charge
CIU	Computer Interface Unit
CLR	Clear
CM	Command Module, Crew Man
CMD	Command
CMG	Control Moment Gyro
CMGEA	Control Moment Gyro Electrical Assembly
CMGIA	Control Moment Gyro Inverter Assembly
COMPL	Complete
CPS	Cycles Per Second
CPTL	Clock Programming and Timing Logic
CRS	Cluster Requirements Specification
CRT	Cathode Ray Tube
CS	Crew System
CSM	Command and Service Module
CUR	Current
C&W	Caution and Warning
DA	Deployment Assembly
DAS	Digital Address System
db	Decibel
dbm	Decibel(referenced to 1 milliwatt)
DBP	Descent Battery Pack
DC, dc	Direct Current
DCS	Digital Command System, Digital Control System
DDAS	Digital Data Acquisition System
DET	Detonator
Detect	Detector
^{o}C	Degrees Centigrade
^{o}F	Degrees Fahrenheit
DI	Discrete Input
DIG	Digital
DIR	Discrete Input Register
DISCH	Discharge
DMFL	Digital Multiplexing and Formatting Logic
DO	Discrete Output
DOD	Depth of Dischange
DOR	Discrete Output Register
DRO	Destructive Readout
DTV	Data Television

ABBREVIATIONS (cont)

EBW	Explosive Bridge Wire
ECE	Experiment Checkout Equipment
ECS	Environmental Control System
ED	Explosive Devices
EIDD	Experiment Interface Defining Document
ENA	Enable
ENTR	Enter
EPC	Experiment Pointing & Control
EPCS	Experiment Pointing Control System
EPEA	Experiment Pointing Electronics Assembly
EPS	Electrical Power System
ESE	Electrical Support Equipment
ESR	Effective Sunrise
ESS	Effective Sunset
ETR	Eastern Test Range
EVA	Extravehicular Activity
EVAC	Evacuation
EXP	Experiment
F	Fahrenheit
FAS	Fixed Airlock Shroud
F/F	Flip-Flop
FM	Frequency Modulation
FOV	Field of View
F-P	Fabry-Perot
FPSV	Flow Path Selector Valve
FSS	Fine Sun Sensor
FSW	Frame Sync Word
FT	Feet
FTB	Film Transfer Boom
FWD	Forward
G	Gravity
GFE	Government Furnished Equipment
GPF	Grains Per Foot
GRD	Ground
GSE	Ground Support Equipment
GSFC	Goddard Space Flight Center
HAO	High Altitude Observatory
Hα	Hydrogen-Alpha
H_2	Hydrogen
HCO	Harvard College Observatory
HR	Hour
HTR	Heater
Hz	Hertz (cycles per second)

A

ABBREVIATIONS (cont)

IAS	Internal Alignment Sensor
I&C	Instrumentation and Communications
ICC	Interstate Commerce Commission
ICD	Interface Control Document
ICS	Intercommunication System
IDT	Image Dissector Tube
IF	Intermediate Frequency
IG	Inner Gimbal
ILCA	Inverter Lighting Control Assembly
I/P	Input
IN	Inch
INT	Interrupt
INV	Inverter
I/O	Input/Output
IOC	Input/Output Control
IP&CL	Instrumentation Program and Components List
IU	Instrument Unit
IVA	Intravehicular Activity
KB	Kilobit
KBPS	Kilobits Per Second
kHz	Kilohertz
LB	Pounds
LLL	Low light Level
I-C	Inductance-Capacitance
LM	Lunar Module
LOC	Launch Operations Center
LS	Lighting System
LVDC	Launch Vehicle Digital Computer
LVDT	Linear Variable Displacement Transducer
LW	Long Wavelength
Ma	Milliampere
MAG	Magnification
MBR	Missing Bit Reset
MCC-H	Mission Control Center-Houston
MCR	Master Charge Record, Magnetic Core Register
MDA	Multiple Docking Adapter
MDF	Mild Detonating Fuse
Meas	Measurement
MFCV	Modulating Flow Control Valve
MHz	Megahertz
MIL	Military
MIN, MIN	Minutes, Arc Minutes

ABBREVIATIONS (cont)

Min	Minimum
MM	Millimeters, Memory Module
MODC	Manual Occulting Disc Controller
MOD	Model
MODS	Mission Operations Design Support
MONO	Monostable
MS, msec	Milliseconds
MSC	Manned Spacecraft Center
MSFC	Marshall Space Flight Center
mv	Millivolts
mw	Milliwatts
NAR	North American Rockwell
NASA	National Aeronautics and Space Administration
MASCOM	NASA World-Wide Communications Network
NDF	Neutral Density Filter
NDRO	Non-Destructive Readout
n mi	Nautical Mile
Ni Cd	Nickel Cadmium Battery
No.	Number
NORM	Normal
NI-CD	Nickel Cadmium
NRL	Naval Research Laboratory
NRZ-L	Non-Return to Zero-Level
NT	Night
OA	Orbital Assembly
O_2	Oxygen
O/P	Output
ORB	Orbiting
OV	Orbiting Vehicle
OWS	Orbital Workshop
P	Pressure
PAM	Pulse Amplitude Modulated
PB	Play Back
PCG	Power Conditioning Group
PCM/DDAS	Pulse Code Modulation/Digital Data Acquisition Subsystem
PCM/FM	Pulse Code Modulation/Frequency Modulation
PES	Pointing Error Sensor
PETN	Pentaerythrite Tetranitrate
PGA	Pressure Garment Assembly
PM	Pulse Modulated
PPS	Pulses Per Second

A

ABBREVIATIONS (cont)

PRIM	Primary
PRS	Pointing Reference System
PS	Payload Shroud
psia	pounds per square inch absolute
psid	pounds per square inch differential
PSID, psid	pounds per square inch gage
PSK	Phase Shift Keyed
PWA	Power
Pyro	Pyrotechnic
Q	Pitch Control Axis
RASM	Remote Analog Submultiplexer
RDM	Remote Digital Multiplexer
REC	Recorded
REG	Regulator
RF	Radio Frequency
RFI	Radio Frequency Interference
RDSM	Remote Digital Submultiplexer
RDX	Cyclotrienitlylene-trinitramine
RF	Rate Gyro
RNBM	Radio Noise Burst Monitor
RT	Real-Time, Real Time-Command
RTC	Real-Time Counter
RTCC	Real-Time Control Console
RTN	Return
S/A	Safing and Arming
SAS	Solar Array Subsystem
SCR	Signal Conditioning Rack, Silicon Controlled Rectifier
SEC	Secondary, Second
SFU	Solar Flux Units
S II	Saturn II
S IWS	Saturn I Workshop (Wet Workshop)
S IVB	Saturn IV B
SI	Solar Inertial
SL	Skylab
SPS	Samples Per Second
SM	Service Module
SMS	Structures and Mechanical Subsystem
SR	Sunrise
SS	Sunset
ST	Star Tracker
STDN	Spaceflight Tracking & Data Network

ABBRIVIATIONS (cont)

STS	Structural Transition Section
SPG	Single Point Ground
SPS	Samples Per Second
S/R	Shift Register
SW	Status Word
SWS	Saturn Workshop (Dry Workshop)
SW	Short Wavelength
SYM	Symmetrical
SYNC	Synchronization
SYS	System
TACS	Thruster Attitude Control Sub-System
TBD	To Be Determined
TBS	To Be Supplied
TCS	Thermal Control Sub-System
TCU	Thermal Control Unit
TDM	Time Division Multiplexer
TEMP	Temperature
THERM, THRM	Thermal
TLSC	Telescope
TM, TLM	Telemetry
TR	Transfer Register, Tape Recorder
TSM	Troubleshooting Mode
TV	Television
TYP	Typical
UHF	Ultra High Frequency
UV	Ultraviolet
USB	Unified S-Band
V	Volts
VA	Volt amperes, Vehicle Address
VCO	Voltage Controlled Oscillator
VDC, vdc	Volts Direct Current
VEH	Vehicle
VER	Verification
VGP	Vehicle Ground Point
VHF	Very High Frequency
VHR	Very High Reflectance
VSWR	Voltage Standing Wave Ratio

A

ABBPEVIATIONS (cont)

W	Watts
WCIU	Workshop Computer Interface Unit
WHL	Wheel
WLC	White Light Coronagraph
WDRO	Write Destructive Readout
X	Multiplied by
X-REA	X-Ray Event Analyzer
XUV	Extreme Ultraviolet
Z-LV	Z-Local Vertical

SYMBOLS

$\overset{\circ}{A}$	Angstrom Unit (1×10^{-10} meter)
β_x	EPC pitch angle
β_y	EPC yaw angle
β_z	Roll positioning mechanism position
γ_{RR}	Experiment roll reference angle
Γ_y	Yearly sun angle
$\delta_{1(1)}$	Inner gimbal angle, CMG #1
$\delta_{3(1)}$	Outer gimbal angle, CMG #1
$\delta_{1(2)}$	Inner gimbal angle, CMG #2
$\delta_{3(2)}$	Outer gimbal angle, CMG #2
$\delta_{1(3)}$	Inner gimbal angle, CMG #1
$\delta_{3(3)}$	Outer gimbal angle, CMG #3
$\dot{\delta}_{1(1)}$	Gimbal rate command to inner gimbal, CMG #1
$\dot{\delta}_{3(1)}$	Gimbal rate command to outer gimbal, CMG #1
$\dot{\delta}_{1(2)}$	Gimbal rate command to inner gimbal, CMG #2
$\dot{\delta}_{3(2)}$	Gimbal rate command to outer gimbal, CMG #2
$\dot{\delta}_{1(3)}$	Gimbal rate command to inner gimbal, CMG #3
$\dot{\delta}_{3(3)}$	Gimbal rate command to outer gimbal, CMG #3
Δt	Time interval during which vehicle maneuver should occur
$\Delta\nu_z$	Charge in ν_z calculated by desaturation scheme
$\Delta\nu_{ZE}$	Update to ν
η_x	Elevation of sun from orbital plane
η_y	Azimuth of sun in orbital plane with respect to ascending node

B

η_t	Vehicle angular position in orbit measured from orbital midnight
θ_i	Vehicle maneuver commands; i=x,y,z
θ	Eigenaxis rotation required to complete desired maneuver
$\dot{\theta}$	Vehicle maneuver rate
$\ddot{\theta}_L$	Command acceleration limit
λ_Z	Inclination of OA orbit (with respect to equatorial plane)
ν_Z	Rotation about Sun Reference Z_R AXIS TP Solar Inertial frame
ν_{ZE}	Bias term for ν_Z calculation
τ_Z	Inclination of ecliptic to solar equator
τ_o	Orbital period
τ_y	Angle between vernal equinox and intersection of ecliptic and solar equator planes
ϕ_I	Eigenaxis rotation required from solar inertial to vehicle frame
ϕ_z	Inclination of earth's equator with respect to ecliptic plane
ψ_j	TACS System command; j = x,y,z
ψ_1	Star tracker inner gimbal
ψ_3	Star tracker outer gimbal
Ω_e	Earth mean orbital rate in solar orbit
Ω_o	Orbital angular rate (corresponding to mean central angle rate)
e_{ij}	Direction cosine between the spin axis of the ith CMG and the jth SVWS axis; i,j = 1,2,3
q_i	Euler parameters which describe attitude reference with respect to solar inertial, i = 1,2,3,4

T_A	Period between crossings of the ascending node of OA orbit
t	Elapsed time from last orbital midnight
t_a	Elapsed time fron last crossing of ascending node
t_{AN}	Clock time of last crossing of ascending node
t_{GMT}	Clock time (Greenwich Mean Time)
t_d	Elapsed time from "dump" midnight
t_{DC}	Time of start of momentum dump maneuver
t_{DE}	Time of end of momentum dump maneuver
t_{ESR}	Time (from t_M) of effective sunrise
t_{ESS}	Time (from t_M) of effective sunset
t_M	Clock time of last orbital midnight
t_{PC1}	Time of change from night to day timing
t_{PC2}	Time of change from day to night timing
t_R	Time remaining in prevailing orbital phase
t_s	Time remaining until sunset or momentum desaturation period, whichever is earliest
t_x	Time since sunrise or end of momentum desaturation, whichever is latest
t_{SR}	Time (from t_M) of sunrise
t_{SRT}	Time (from t_M) of crossing of sunrise terminator
t_{SS}	Time (from t_M) of sunset
t_{SST}	Time (from t_M) of crossing of sunset terminator
%	Percent
f_c	Center frequency
ΔF, Δf	Frequency change

X-10P-Z, $+X_{OA}$	Axis in Orbital Plane
Z_{OA}	Axis Toward Sun

ALPHABETICAL INDEX

The following index consist of all subparagraphs and other critical subject matter arranged in alphabetical order with page location numbers:

TITLE	PAGE NO.
A	
Abbreviations	A-1
Accumulator (TCS)	2.3-48
Acquisition Sun Sensor	2.5-16,82
Acq SS Redundancy Management	2.5-38
Active Low Pass Filters, (S054)	2.9.2-9
Active Thermal Control System (TCS)	2.3-5
Actuator, (EPC)	2.1-29
A/D Converter and Exposure Counter, (S054)	2.9.2-9
Alert Conditions, (APCS)	2.5-50
Alert Parameters	2.6-87
AM Hardware	2.8-38
Amplifier and Switch Assembly	2.4-18
Antenna Deployment Mechanisms	2.1-10
APCS Coordinate Systems	2.5-8
Aperture Door Mechanisms	2.1-41
Aperture Door System (S055A)	2.9.3-8
ASAP Interface Unit	2.4-20
ASAP Word Selection and Format	2.4-24
Assembly Losses (Solar Array)	2.2-20
ATM Alert Overview	2.6-92
ATM Alert Parameter Information	2.6-88
ATM Alert Subsystem	2.6-86
ATM Alert Telemetry Measurement	2.6-113
ATMDC and WCIU	2.5-1,20,94,112
ATMDC Function Commands	2.5-40
ATMDC/WCIU Redundancy Management	2.5-39
ATM General Description	1.0-2

C

TITLE	PAGE NO.
A	
ATM Launch Lock Release Mechanism	2.7-11
ATM Rack Sensors	2.5-1
ATM Solar Panel Decinching Mechanism	2.7-2
Attitude and Pointing Control Subsystem (APCS)	1.0-4, 2.5-1
Attitude Hold Maneuver	2.5-36
Attitude Reference Coordinate System	2.5-3
Automatic CMG Momentum Dump Maneuver	2.5-36,66
Automatic Power Supply (CBRM)	2.2-30
Auxiliary Power Distributor	2.2-37
Auxiliary Storage and Playback Assembly	2.4-18
B	
Battery	2.2-28
Battery Characteristics	2.2-58
Battery Heater Control	2.2-59
Battery Operating Life	2.2-58
Battery Recharge Indication	2.2-59
Bibliography	D-1
C	
C&W Conditions, (APCS)	2.6-42
Camera - Hα1 Film	2.9.7-1 2.9.7-6 2.9.7-10 2.9.7-13 2.9.7-20 2.9.7-25 2.9.7-29
Camera,(S054)	2.9.2-21
Camera Control,(S054)	2.9.2-21
Camera Control Unit	2.4-40
Camera Subassembly (CA),(S054)	2.9.2-43
Canister	2.1-22
C & D	See Section 3.0, pages 3-1 thru 3-24
Canister Controls	2.5-5
Canister Pointing	2.5-74
Canister Sensors	2.5-5
Cassegrain Telescope (Hα1)	2.9.7-1 2.9.7-8 2.9.7-13

TITLE	PAGE NO.
C	
Cassegrain Telescope (Hα1)	2.9.7-28
Cassegrain Telescope (Hα2)	2.9.8-5
	2.9.8-10
	2.9.8-20
Caution and Warning Interfaces (EPS)	2.2.2.2
	2.2-1
Caution Subsystem	2.6-6
C&W Telemetry Measurements	2.6-113
C&W Parameter Information	2.6-42
Caution and Warning (C&W) Subsystem	1.0-4
	2.6-1
CDF Cartridge	2.7-46
CDF Detonating Fuse Assembly	2.7-28
CDF Manifold	2.7-33
CDF Tee	2.7-40
Center Work Station	2.8-38
Charger/Battery/Regulator Module (CBRM)	2.2-20
CBRM Alert Parameters	2.2-56
CBRM Automatic Response to Malfunctions	2.2-57
CBRM Control, Metering, Telemetry and Alert	2.2-30
CBRM Design and Performance	2.2-56
CBRM Interval Protection	2.2-59
CBRM Operating Conditions	2.2-57
CBRM Temperature Range	2.2-57
CBRM Power Transfer and Control	2.2-59
C&D Console	1.0-2
Change Information	iii
Charger	2.2-23
Charger Efficiency	2.2-58
Charger Operating Conditions	2.2-58
Cinching Subsystem (Solar Array)	2.2-20
Clothesline Backup	2.8-21
Cluster Power Operations	2.2-55
Cluster Subsystem Hardware	2.8-38
CMG	2.5-5,117
CMG & Electronics Assembly	2.5-117
CMG Inverter Assembly (CMGIA)	2.5-129
CMG Redundancy Management	2.5-37
Cold Plates (TCS)	2.3-43
Commands (S056RF)	2.9.4-7
Command Antennas	2.4-30
Comparator and One Shot,(S054)	2.9.2-11
Components, Description of X-RT (S056)	2.9.4-17
Computer Interface Unit	2.4-22

TITLE	PAGE NO.
C	
Command Decoders	2.4-35
Command Message	2.4-25
Command Receivers	2.4-30
Communications Support	2.4-41
Component Heat Dissipation (TCS)	2.3-21
Component Temperature (TCS)	2.3-25
Contamination (S052)	2.9.1-37
Controls and Displays,(S054)	2.9.2-3
Control Distributor	2.4-38
Control and Display Logic Distributor	2.2-37
Control and Display Panel (S056)	2.9.4-3
Control and Display Panel, X-REA (S056)	2.9.4-3
Control Moment Gyro (CMG)/System	2.5-67, 166
CMG Control Law	2.5-29
Counter Test,(S054)	2.9.2-20
CSM Maneuver	2.5-37
Crew Systems (CS)	1.0-4
	2.8-1
D	
DAS Operation	2.5-40
Data Conversion and Formatting	2.4-15
Data Display,(ATMDC)	2.5-43
Data Handling and Storage	2.4-42
Data Output Formats	2.4-16
DC-DC Converter Power Supply	2.4-23
DCS Operation	2.5-42
Decinching Mechanism, Solar Wing	2.1-8
Deployment Activator (Solar Array)	2.2-14
Deployment Mechanism, Solar Wing	2.1-8
Description, Major X-Rea Components (S056)	2.9.4-16
Description, X-REA Functional (S056)	2.9.4-10
Description, X-RT Functional (S056)	2.9.4-10
Design Requirements (C&W)	2.6-107
Detector Assembly (S055A)	2.9.3-13
Digital Address System	2.4-7
	2.4-38
Digital Command System/Digital Address System Interface	2.4-38
Digital Command System	2.4-4
	2.4-25

TITLE	PAGE NO.
D	
Directional Couplers	2.4-30
Discriminator,(S054)	2.9.2-11 2.9.2-47
Distribution (EPS)	2.2-36
E	
EBW Description	2.7-18
EBW Detonator	2.7-21
Ecliptic Coordinate System	2.5-12
Effective Pages	ii
Electric Actuator, Solar Wing Deployment	2.1-9
Electrical Interface Voltage Requirements	2.2.5.2 2.2-55
Electrical Network Power Design Requirements	2.2.5.1 2.2-55
Electrical Power (S056)	2.9.4-5
Electrical Power Subsystem	2.2 2.2-1
Electrical Power Subsystem (EPS)	1.0-3 2.2-1
Electronic Controller Assembly & Sensor (TCS)	2.3-56
Electronics Subsystem (S052)	2.9.1-4 2.9.1-9 2.9.1-24 2.9.1-35
Environmental Interfaces (S056)	2.9.4-8
Equatorial Coordinate System	2.5-13
Equipment Arrangement, Canister	2.1-25/26
Equipment Arrangement, Rack	2.1-5/6
EVA Light	2.8-59
EVA Missions	2.8-3
EVA Tasks	2.8-7
Experiment Canister Maneuver	2.5-36
Experiment(s) General Description	1.0-11
Experiment Package Thermal Control (TCS)	2.3-32
Experiment Pointing Control (EPC) System	2.5-70
Experiment Pointing Electronics Assembly	2.5-142
Experiment Pointing Control - Roll Positioning Mechanism (EPC-RPM)	2.5-138
Experiment Summary	1.0-17/18

TITLE	PAGE NO.
E	
Experiment Support, ATMDC	2.5-56
Explosive Devices Subsystem (EDS)	1.0-4
	2.7-1
External Occulting Discs (S052)	2.9.1-1
	2.9.1-14
	2.9.1-25
Extra Vehicular Activity (EVA) (S052)	2.9.1-9
F	
Fabry-Perot Filter (Hα1)	2.9.7-8
	2.9.7-9
	2.9.7-13
	2.9.7-14
	2.9.7-28
	2.9.7-30
Fabry-Perot Filter (Hα2)	2.9.8-1
	2.9.8-5
	2.9.8-6
	2.9.8-13
	2.9.8-17
	2.9.8-21
FAS Work Station Equipment	2.8-19
Film/Camera Disposition	2.8-26
Film/Camera Doors	2.8-38
Film Camera Subsystem (S052)	2.9.1-1
	2.9.1-3
	2.9.1-9
	2.9.1-11
	2.9.1-27
Film - Hα1	2.9.7-5
	2.9.7-20
	2.9.7-30
Film Requirements (S056)	2.9.4-9
Film Retrieval Door Mechanisms	2.1-40
Film Transfer Boom (FTB)	2.8-21
Filter Assembly (TCS)	2.3-60
Filter Wheel Drive Subassembly, S054	2.9.2-42
Filter Wheel System, (S054)	2.9.2-28
Flare Detection System, (S054)	2.9.2-9
Flow Restricting Valve (TCS)	2.3-60
Flow Path Selector Valve (TCS)	2.3-58
Fine Sun Sensor	2.5-69,138

TITLE	PAGE NO.
F	
Forward and Rear Housings, (S054)	2.9.2-46
Forward and Rear Mounts, (S054)	2.9.2-46
Functional Description (APCS)	2.5-8
Functional Description (C&W)	2.6-12
Functional Description (CS)	2.8-1
Functional Descriptions of Major Components (CS)	2.8-24
Functional Description (EDS)	2.7-2
Functional Description, (S054)	2.9.2-5
Functional Description (S055A)	2.9.3-2
G	
Gating Logic, (S054)	2.9.2-16
General Arrangement, ATM	2.1-3
General Description, ATM	1.0-2
Grating Assembly (S055A)	2.9.3-12
Grating Mechanism Assembly (GA), (S054)	2.9.2-37
Grating System, (S054)	2.9.2-26
GSE GN_2 Purge Fitting Retract Mechanism	2.1-48
H	
Hardware Listing (C&W)	2.6-13
Heater (TCS)	2.3-58
Hydrogen Alpha Radiation	2.9.7-1
Hydrogen Alpha Telescopes (Hα1 and 2)	1.0-16
	2.9.7-1
	2.9.8-1
I	
Illustrations, List of	**xix**
Image Dissector Camera	2.4-40
Image Dissector Preamplifier, (S054)	2.9.2-15
Image Dissector Subassembly (ID), (S054)	2.9.2-39
Image Dissector Test Source, (S054)	2.9.2-20
Imaging System, (S054)	2.9.2-5
	2.9.2-20
Input Data Characteristics	2.4-12
Instrumentation and Communications Subsystem (I & CS)	1.0-3
	2.4-1
Intensity Calibration (S052)	2.9.1-19
Intensity Counter and D/A Converter, (S054)	2.9.2-50

TITLE	PAGE NO.
I	
Intensity Display Counter, (S054)	2.9.2-55
Intensity Modulation Assembly, (S054)	2.9.2-47
Interfaces, Control and Display Panel (S056)	2.9.4-1
Internal Alignment Sensors (IAS) (S052)	2.9.1-1
	2.9.1-11
	2.9.1-23
	2.9.1-25
	2.9.1-27
Internal Occulting Disc (S4) (S052)	2.9.1-1
	2.9.1-11
	2.9.1-14
	2.9.1-22
	2.9.1-37
Introduction	1.0-1
Introduction, (S054)	2.9.2-1
L	
Launch Configuration	1.0-5
	1.0-7
Launch Locks	2.1-29
Limits and Restrictions, Operational (S056)	2.9.4-62
Line Scan Mode (S055A)	2.9.3-6
Linkage System (Solar Array)	2.2-20
Low Film Inhibit (S052)	2.9.1-37
Low Light Level Camera	2.4-39
M	
Magazine Guide Assembly, (S054)	2.9.2-43
Magazine Stowage (Hα1)	2.9.7-5
Main Electronics Assembly (EA), (S054)	2.9.2-46
Main Power Distributor	2.2-36
Major Component/Functional Description, (S054)	2.9.2-37
Major Components (C&W)	2.6-27
Major Components (EDS)	2.7-2
Major Subsystem Components (CS)	2.8-15
Maneuvering	2.5-34
Manual Pointing Control	2.5-148

TITLE	PAGE NO.
M	
Manual Pointing Controller	2.5-148
Measured Parameters (C&W)	2.6-41
Measuring Distributor	2.2-37
Measuring Subsystem	2.4-11
Mechanical Subsystem (S052)	2.9.1-11,32
Merory Load Unit	2.5-108
Memory Module	2.4-23
Micrometeorite Errosion (Solar Array)	2.2-20
Mirror Subassembly (MA), (S054)	2.9.2-37
Mission Description	1.0-1
	1.0-6
Mission Objectives	1.0-1
Mission Time	2.5-28
Modes of Operation (S055A)	2.9.3-4
Modulating Flow Control Valve (TCS)	2.3-54
Monitoring and Control (EPS)	2.2-40
Monitoring - Pre-SL-2 (EPS)	2.2-47
Monitoring - SL-2 (EPS)	2.2-48
Motion Picture Camera	2.8-21
MRS - see Reticles	
Multiplexing Subsystem	2.4-12
N	
Navigation and Timing	2.5-28
O	
On Board Control (EPS)	2.2-40
Operating Modes (ATMDC and WCIU)	2.5-23
Operation Modes (S052)	2.9.1-3
	2.9.1-19
	2.9.1-22
Operational Limitations and Restrictions (C&W)	2.6-83
Operational Limitations and Restrictions (CS)	2.8-87
Operational Limitations and Restrictions, (S054)	2.9.2-58
Operational Limitations (EDS)	2.7-18
Operational Limitations (S055A)	2.9.3-25
Optics Subsystem (S052)	2.9.1-9
	2.9.1-14
Orbit Configuration	1.0-8
Orbit Locks	2.1-30
Orbit Operations	1.0-5
Orbital Assembly Configuration (EPS)	2.2-1

TITLE	PAGE NO.
O	
Orbital Coordinate System	2.5-14
Orbital Factors (Solar Array)	2.2-15
Ordnance Systems	2.7-3/4
Outrigger, Rack	2.1-2
P	
Penetration Factors	2.2-20
Performance and Design Data (C&W)	2.6-102
Performance and Design Data (CS)	2.8-54
Performance and Design Data(EDS)	2.7-18
Performance and Design Data,(S054)	2.9.2-55
Performance and Design Data (TCS)	2.3-61
Performance and Design Data, X-RT (S056)	2.9.4-54
PETN	2.7-43
Photomultiplier Counter,(S054)	2.9.2-55
Photomultiplier Exposure Counter, S054	2.9.2-11
Photomultiplier (PM) System,(S054)	2.9.2-9
Photomultiplier Subassembly (PM), S054	2.9.2-34
Pin Puller	2.7-17
Pointing Error Sensor (PES) (S052)	2.9.1-1
	2.9.1-11
	2.9.1-23
	2.9.1-25
Pointing Reference Subsystem (PRS) (S052)	2.9.1-11
	2.9.1-24
	2.9.1-35
	2.9.1-36
Pointing Reference Subsystem Description (S082B)	2.9.6-15
Pointing Reference Subsystem Electronics (S082B)	2.9.6-40
Pointing Reference Subsystem Optics (S082B)	2.9.6-38
Pointing System,(S054)	2.9.2-5
	2.9.2-12
Polarization Wheel Drive (S052)	2.9.1-14
	2.9.1-23
Power,(S054)	2.9.2-5
Power Busses (Hα1)	2.9.7-8/10
Power Busses (Hα2)	2.9.8-5/7
Power Sharing (CBRM)	2.2-30
Power Supply Assembly (PS),(S054)	2.9.2-46
Power Transfer Distributor	2.2-36

TITLE	PAGE NO.
P	
Preamplifier Shaper, (S054)	2.9.2-15
Primary Mirror Assembly (S055A)	2.9.3-8
Principal Axes Coordinate System	2.5-12
Pulse Code Modulation/Digital Data Acquisition Subsystem	2.4-15
Pulse Height Analyzer, (S054)	2.9.2-11
Pump (TCS)	2.3-50
R	
Rack	2.1-1
Rack Mounted Components - Location (TCS)	2.3-10
Rack Sensors	2.5-16
Rack Sink Temperatures (TCS)	2.3-19
Rack Structure	2.1-1
Rack Thermal Control (TCS)	2.3-9
Radiator (TCS)	2.3-46
Random Reacquisition Maneuver	2.5-36
Raster Scan Modes (S055A)	2.9.3-4
Rate Gyro Redundancy Management	2.5-37
Rate Gyroscope	2.5-14, 80
Reactivation Configuration	1.0-5
Redundancy Management	2.5-37
Regulator	2.2-29
Regulator Efficiency	2.2-59
Regulator Input Voltage	2.2-59
Regulator Load Sharing	2.2-59
Regulator Output Power	2.2-59
Regulator Protection	2.2-59
Remote Analog Submultiplexer	2.4-12
Remote Digital Multiplexer	2.4-14
Reticles (Hα1)	2.9.7-1
	2.9.7-5
	2.9.7-9
	2.9.7-13
	2.9.7-14
	2.9.7-29
	2.9.7-30
Reticles (Hα2)	2.9.8-1
	2.9.8-5
	2.9.8-6
	2.9.8-10

TITLE	PAGE NO.
R	
Reticles (Hα2)	2.9.8-20 2.9.8-21
Roll Drive and Brake Assembly	2.1-29
Roll Position Indicator Assembly	2.1-30
Roll Positioning Mechanism	2.5-71
Roll Reference	2.5-14
Roll Stop Assembly	2.1-30
Rotation Control (Panel 160)	2.8-47
S	
Scattered Light (S052)	2.9.1-37
Scientific Background and Objectives	1.0-11
Shadow Effect (Solar Array)	2.2-56
Signal Conditioning Racks	2.4-11
Skylab Attitude Reference	2.5-25
Solar Array	2.1-7 2.2-7
Solar Array Deployment	2.2-1
Solar Array Deployment Subsystem	2.2-14
Solar Array Output	2.2-15
Solar Array Subsystem Capacity	2.2-56
Solar Array Temperature Profile for Sunlight Portion of Orbit	2.2-56
Solar Cell Characteristics	2.2-55
Solar Cell Modules	2.1-7
Solar Cell Module I-V Characteristics at 60°C	2.2-55
Solar Cell Panels	2.1-7
Solar Cell Temperature Coefficients at Maximum Power Point at 55°C	2.2-56
Solar Inertial Coordinate System	2.5-13
Solar Inertial Maneuver	2.5-34
Solar Panel	2.2-10
Spectral Position of Primary Detector Units with Grating at Optical Reference Position (S055A)	2.9.3-2
Spectroheliograph Telemetry (S082A)	2.9.5-34
Spectroheliograph Electronics (S082A)	2.9.5-26
Spectroheliograph Operating Modes (S082A)	2.9.5-5
Spectroheliograph Optical System (S082A)	2.9.5-16
Spectroheliograph Thermal Control (S082A)	2.9.5-40
Spectroheliograph Film Strip Camera (S082A)	2.9.5-20
Spectrograph Electronics (S082B)	2.9.6-24
Spectrograph Film Strip Camera (S082B)	2.9.6-33

TITLE	PAGE NO.
S	
Spectrograph Operating Modes (S082B)	2.9.6-8
Spectrograph Optical System (S082B)	2.9.6-18
Spectrograph Telemetry	2.9.6-49
Spectrograph Thermal Control (S082B)	2.9.6-56
Spectrometer, Optical Characteristics (S055A)	2.9.3-22
Spectrometer Pressure Gage (S055A)	2.9.3-17
Spectrometer Scanning Mechanism Characteristics (S055A)	2.9.3-23
Spectrometer Subsystem (S055A)	2.9.3-9
Status, Experiment (S056)	2.9.4-2
Storage Configuration	1.0-5
Structures and Mechanical Subsystem (SMS)	1.0-3 2.1-1
S052 White Light Coronagraph	1.0-11 2.9.1-1
S054 X-Ray Spectrographic Telescope	1.0-12 2.9.2-1
S055A Scanning Polychromator Spectroheliograph	1.0-13 2.9.3-1
S056 X-Ray Telescope	1.0-14 2.9.4-1
S082B XUV Spectrograph	1.0-15 2.9.7-1
S082 XUV Spectroheliograph	1.0-14 2.9.5-1
Spar	2.1-22
Spar-Thermal Control (TCS)	2.3-41
Spar Equipment and Experiment Arrangement	2.1-27/28
Star Tracker (ST)	2.5-16,87
Subsystem Interfaces (EPS)	2.2-1
Subsystem Interfaces (CS)	2.8-2
Subsystem Interfaces,(S054)	2.9.2-3
Sun End Work Station	2.8-20
Sun Shield	2.1-2
Sun Shield Aperture Door Mechanisms	2.1-41
Support Structure, Solar Wing	2.1-7
Switchover Control, WCIU	2.5-114
Symbols	B-1
Sync Generation	2.4-17
Sync Generator	2.4-41
System Interfaces (C&W)	2.6-1
System Interfaces (S055A)	2.9.3-1

TITLE	PAGE NO.
T	
Table of Contents	v
Tables, List of	xxxi
TACS Control Law	2.5-32
Tape Recorders	2.4-24
Telemetry, ATMDC	2.5-55
Telemetry (Hα1)	2.9.7-5
	2.9.7-7
	2.9.7-9/10
	2.9.7-13
Telemetry (Hα2)	2.9.8-1
	2.9.8-4
	2.9.8-5/7
Telemetry Measurements (S056)	2.9.4-7
Telemetry (S052)	2.9.1-4
	2.9.1-6
	2.9.1-7
	2.9.1-8
Telemetry System	2.4-3
	2.4-11
Telescope Assembly (TA),(S054)	2.9.2-34
Telescope Subsystem (S055A)	2.9.3-6
Telescope, Optical Characteristics (S055A)	2.9.3-17
Television Camera System (S052)	2.9.1-1
	2.9.1-3
	2.9.1-11
	2.9.1-29
	2.9.1-36
Television System	2.4-7
	2.4-39
Temperature Control Assembly (TC),(S054)	2.9.2-46
Temperature Control System, S054	2.9.2-9
Temperature Control System (TC),(S054)	2.9.2-30
Temperature Factors (Solar Array)	2.2-7
Temperature Monitors (S052)	2.9.1-3
Temperature Monitor System (S055A)	2.9.3-17
Thermal Control, Design and Performance Data (S056)	2.9.4-54
Thermal Control Components (S056)	2.9.4-22
Thermal Control System (S052)	2.9.1-1
	2.9.1-3
	2.9.1-11
	2.9.1-31
	2.9.1-35
Thermal Control System (S055A)	2.9.3-13

TITLE	PAGE NO.
T	
Thermal Control System (S055A)	1.0-3
	2.3-
Thermal Cycling Factor (Solar Array)	2.2-20
Thermal Shield Aperture Door (S052)	2.9.1-1
	2.9.1-23
	2.9.1-31
	2.9.1-35
Thermal Shield, Rack	2.1-2
Thruster Attitude Control System (TACS)	2.5-61,114
Time Division Multiplexer	2.4-14
Timing and Telemetry,(S054)	2.9.2-5
Time Remaining Calculation	2.5-30
T/M Synchronization and Frequency Divider Control,(S054)	2.9.2-16
Transfer Work Station	2.8-39
Translation System	2.8-47
Transmission Subsystem	2.4-25
TV Camera	2.8-47
TV Cameras	2.4-39
TV (Hα1)	2.9.7-1
	2.9.7-6
	2.9.7-8
	2.9.7-9
	2.9.7-13
	2.9.7-25
	2.9.7-29
TV (Hα2)	2.9.8-1
	2.9.8-3
	2.9.8-5
	2.9.8-6
	2.9.8-17
	2.9.8-20
	2.9.8-21
TV Monitor	2.4-41
TV Monitor Mirror Drive (M6)(S052)	2.9.1-9
	2.9.1-23
	2.9.1-29
	2.9.1-35
	2.9.1-36
U	
Ultra-Violet Degradation (Solar Array)	2.2-20
UV Scanning Polychromator Spectroheliograph (S055A)	1.0-13
	2.9.3-1

TITLE	PAGE NO.
V	
Vehicle Coordinate System	2.5-12
Vehicle Interfaces	2.2-1
Video Switch and Sync Adder	2.4-40
Vidicon Camera	2.4-39
W	
Warning Subsystem	2.6-40
Wavelength Scan Modes (S055A)	2.9.3-6
Wavelength Select Mode (S055A)	2.9.3-6
White Light Coronagraph (S052)	1.0-11
	2.9.1-1
Window - Heat Rejection, (Hα1)	2.9.7-13
	2.9.7-28
Window - Heat Rejection, (Hα2)	2.9.8-10
	2.9.8-17
Wiring Losses (Solar Array)	2.2-20
Workshop Computer Interface Unit (WCIU)	2.5-112
X	
X and Y Address Counter and Deflection Amplifier, (S054)	2.9.2-18
X-Ray Event Analyzer (X-REA) (S056)	2.9.4-1
X-Ray Image Image Monitor Assembly, (S054)	2.9.2-18
	2.9.2-50
X-Ray Spectrographic Telescope, (S054)	1.0-12
	2.9.2-1
X-Ray Telescope (S056)	1.0-14
	2.9.4-1
X-Ray Telescope (X-RT) (S056)	2.9.4-1
XUV Monitor Description (S082B)	2.9.6-17
XUV Monitor Electronics (S082B)	2.9.6-47
XUV Monitor Optical System (S082B)	2.9.6-43
XUV Spectroheliograph (S082A)	1.0-14
	2.9.5-1
XUV Spectrograph (S082B)	1.0-15
	2.9.6-1
Z	
Z-Local Vertical Maneuver	2.5-34
Zoom (Hα1)	2.9.7-9
	2.9.7-13

TITLE	PAGE NO.
Z	
Zoom (Hα1)	2.9.7-20
	2.9.7-28
	2.9.7-30
Zoom (Hα2)	2.9.8-5
	2.9.8-6
	2.9.8-13
	2.9.8-20
	2.9.8-21

C

BIBLIOGRAPHY

The following documents supplied some of the source data in support of the preparation of this SLOH/ATM Vol I:

1. AORD, ATM, I&C Subsystem, ED-2002-615, dated 6 September 1968.
2. ATM IP & CL, 50M12711.
3. ATM DCS FR Command List, 50M1640.
4. ATM Flight Control Measurement List, 50M16136.
5. TV Utilization Requirements, ED-2002-067, dated 17 December 1969.
6. ATM Telemetry System Description Document, 50M17030, dated 11 May 1970.
7. DDAS/CIU, Model 501, Specification for, 50M60273.
8. ATM ASAP Dual DC-DC Converter Specification.
9. Tape Recoder, ATM Specification for, 50M12971.
10. ASAP Memory Assembly, Specification for, 50M18172.
11. ASAP Interface Unit, Specification for, 50M13215.
12. ATM TM Amplifier and Switch Assembly Specification, 50M16993.
13. ATM Telemetry Transmitter Specification, 50M16996.
14. ATM Digital Address System Astronaut Function Code List, 40M35605, dated 31 March 1970.
15. Missions/Systems Compatibility Analysis Document, 25M00005A, dated December 1969.
16. AAP Cluster System Design Review, dated 2 December 1969 and 5 December 1969.
17. Saturn V Workshop Control Transfer from the IU to the Attitude Control System, S&E-CSE-M-69-51, dated 15 October 1969.
18. AAP Abbreviations and Acronyms, dated 15 April 1970.
19. All Volumes, Cluster Definition Document, ED-2003-985, dated January 1970.

20. Skylab Strapdown Attitude Navigation System, Technical Report by C.C. Rupp, MSFC.

21. Skylab Program Payload Integration Plan, 50M02419, dated 23 June 1970.

22. ATM CDR Task Analysis for AM/ATM Film Magazine Removal/ Replacement Mission.

23. Cluster Requirements Specification, Electrical System Design Integration Requirements, R5003M00003, Appendix "C", dated 8 August 1969.

24. ATM ICD, 40M33651A, dated 6 March 1970.

25. EPS Analysis, Cluster System Control Analysis-Performance of Parallel SVWS Power Systems, ED-2002-796-7, dated 31 December 1969.

26. APCS Definition Doeument, ED-2002-984.

27. APCS Ground Computation Requirements Report, ED-2002-1043, dated April 1970.

28. ATM Digital Computer Program Definition Document, Rev. 5 dated 4 November 1970.

29. SWS APCS Level I Functional Schematics, dated April 1970.

30. SWS APCS Level II Functional Schematics CMG/TACS, dated 8 May 1970.

31. SWS APCS Level II Functional Schematics EPCS, dated 24 April 1970.

32. EPS AAP-2/AAP-3 Missions-Power System Performance Analysis OWS-AM Power System, ED-2002-780-11, dated 29 August 1969.

33. EPS-AAP-3/AAP-4 Cluster Systems Control Analysis - Description of the ATM Power System Control, ED-2002-796-6, dated 30 May 1969.

34. AOH: Subsection 2.6 - EPS NAR, Space Division, dated 1 November 1969.

35. Apollo Telescope Mount (ATM) Power System Design Study, ED-2002-622, dated 30 September 1968.

36. Battery, Technical Manual IBM, MSFC No. 111-5-510-20, IBM No. 66-966-0014H; dated 1 October 1965.

37. Power Distributor, Technical Manual, IBM, FSD, MSFC No. 111-5-510-20, IBM No. 65-966-0014H; dated 1 October 1965.

38. S055A ATM ETDD, 50M2430, dated 24 November 1969.

39. S055A Design and Performance Specification, 29540.

40. S055A AORD, 23042.

41. Electrical Interface Control Document, 40M35589.

42. Photomultiplier Detector Unit Design and Performance Specification, 23366.

43. Photomultiplier Detector Unit Design and Performance Specification, 29543.

44. Photomultiplier Detector Unit Design and Performance Specification, 29542.

45. Auxiliary Power Distributor, Technical Manual, IBM FSD, MSFC No. 111-5-510-2, IBM No. 65-966-0013H; dated 1 October 1965.

46. Control Distributor, Technical Manual, IBM, FSD, MSFC No. 111-5-510-5, IBM No. 65-966-0016H; dated 1 October 1965.

47. Emergency Detection System Distributor, Technical Manual, IBM, FSD, dated 1 October 1965.

48. Measuring Distributor, Technical Manual, IBM, FSD, MSFC No. 115-5-510-6, IBM No. 65-966-0017H; dated 1 October 1965.

49. Saturn ID/V Instrument Unit 56 Volt Power Supply, Technical Manual, IBM, FSD, MSFC No. 115-5-510-6, IBM No. 65-966-9918H; dated 1 October 1965.

50. 5-Volt Measuring Voltage Supply, Technical Manual, IBM, FSD, MSFC No. 111-5-510-8, IBM No. 65-966-0019H; dated 1 October 1965.

51. ICD Identification Matrix Skylab Program, 10M01840, dated 11 March 1970.

52. ATMDC WCIU CEI Specification, 7916430.

53. ATMDC Source Control Drawing, 50M37938.

54. WCIU Source Control Drawing, 50M37938.

D

55. ATMDC Common Power Supply Outputs, 7919691.

56. ATMDC Isolation Power Supply Outputs, 7919691.

57. Filter, Radio Interference, 7920701.

58. ATMDC Power System Design and Performance Specification, 7920519.

59. WCIU Power System Design and Performance Specification, 7919670.

60. DC Analog Scaling, 796523.

61. AC Analog Scaling I, 7916524.

62. AC Analog Scaling 2, 7916525.

63. ADC Ramp Multiplexer, 7916526.

64. Buffer Amplifier, 7916527.

65. Analog Integrators, 7916528.

66. Comparator, 7916529.

67. Multichannel DAC, 7916515.

68. Digital To Analog Converter, 7916511.

69. DAC Buffer Amplifier, 7916512.

70. DAC Output Multiplexer, 7916513.

71. Storage and Amplifier CKT, 7916514.

72. High Level Receiver, 7919600.

73. AC MUX/Demodulator, 7919610.

74. Digital to Analog Converter, 7919618.

75. Analog to Digital Converter, 7919616.

76. Thruster Attitude Control Driver, 7919606.

77. Digital Logic Drawing Numbers, 6883547.

78. Digital Logic Drawing Numbers, 6883597.

79. Digital Logic Drawing Numbers, 6883617.

80. Digital Logic Drawing Numbers, 6883627.

81. Digital Logic Drawing Numbers, 6883637.

82. Digital Logic Drawing Numbers, 6883647.

83. Digital Logic Drawing Numbers, 6883657.

84. Digital Logic Drawing Numbers, 6883667.

85. Digital Logic Drawing Numbers, 6883677.

86. Digital Logic Drawing Numbers, 6883687.

87. Design & Performance Specification, dated 14 January 1969.

88. Abnormal Mode Analysis, ED-2002-902-7, dated 14 November 1969.

89. S056 Engineering Drawings, ED-2002-693-5, dated 14 January 1969.

90. Astronaut Operational Requirements, 50M16608, dated 15 April 1970.

91. ATM Critical Design Review, Minutes, S056 Experiment.

92. S056 EIDD, 50M02431.

93. S056 Interface Control, 50M73583.

94. S056 Telescope Family Tree, 50M16588.

95. S056 X-Ray Family Tree, 50M74308.

96. S056 Camera Family Tree, 50M16359.

97. S056 CCE Family Tree, 50M74521.

98. Experiment Checkout Equipment, 50M16612.

99. Electrical Interface Control Document, 40M35583.

100. Experiment Mounting, 50M73584.

101. Camera Outline, 50M73589.

102. ATM Experiment Package Subassembly.

D

103. Assembly, Exploded View, 50M16501.

104. X-Ray Assembly Drawing, 50M16033.

105. S056 Camera Electronics Assembly Drawing, 50M16034.

106. Camera Control Unit Assembly Drawing, 50M12730.

107. CBRM Specification, 40M26300, Rev. A dated 22 December 1969.

108. Apollo Telescope Mount Digital Computer System, Design & Performance Specification, IBM 7916430, dated 27 May 1970.

109. Design & Performance Specification, Computer Assembly for the ATMDC, IBM 69-520-0001A, dated 12 March 1969.

110. Design Perfromance Specification, 9270C.

111. EIDD, 50M02463.

112. Camera System, TV, Vidicon Specification, 50M12740.

113. TV Monitor Outline Drawing, 50M12726, dated April 1967.

114. TV System Block Diagram & Cabling, 50M12956.

115. MSFC Standard Electrical Symbols MSFC STD-353 dated 28 September 1964.

116. MSFC Standard Logic Functions Symbols and Definitions, MSFC-STD-353 dated 22 June 1970.

117. 14th Skylab Intercenter Electrical Panel Meeting, ED-2002-974-4 dated 6 November 1970.

118. Cluster Electrical Power System Computer Program and Simulation Model Criteria 40M35698-1 dated 30 April 1971.

119. Test Program Guide Lines for ATM, 50M02407.

120. Environment Design & Qual Test Criteria for ATM Components, 50M02408.

121. Preliminary ATM System Cleanliness, Specification for, 50M02412.

122. ATM Battery Operating Procedures Manual 40M21618 dated 12 June 1970.

123. Digital Logic Drawing Numbers, 6883697.

124. Digital Logic Drawing Numbers, 6883847.

125. Digital Logic Drawing Numbers, 6883917.

126. Digital Logic Drawing Numbers, 6883927.

127. Digital Logic Drawing Numbers, 6883937.

128. Digital Logic Drawing Numbers, 6883947.

129. Digital Logic Drawing Numbers, 6883977.

130. Digital Logic Drawing Numbers, 6883987.

131. Ordnance System, MSFC-SPEC-491.

132. SL-1 Ordnance System Document Skylab A, ED-2002-1163 dated 12 February 1971.

133. Electrical Power System Consumable Preliminary Flight Plan MSC-04085 dated 19 April 1970.

134. Mission Planning as Affected by the Sun by R. H. Brown dated 20 January 1969 AIAA Paper 69-129.

135. Solar Cell Dark Characteristics Study ED-2002-881-5 Rev. A dated 31 December 1970.

136. S052 DPS, CP-22876, dated 15 November 1967.

137. S052 EIDD, 50M02414, dated 14 October 1969.

138. S052 ELEC. ICD, 50M35580, dated 28 January 1969.

139. WLCE ICD, 25034, dated 26 May 1970.

140. S052 Film Camera ICD, 25032, dated 29 April 1970.

141. S052 AORD, dated September 1968.

142. Man/System Design Requirements 10M32158 Rev. B dated 30 January 1970.

143. ATM Project Quality & Reliability Assurance Plan, 50M02421.

144. ATM Material Control for Contamination Due to Outgassing, 50M02422.

145. Transient Requirements, 50M02477.

146. Component and Subsystem Thermal/Vacuum Outgassing Spec for ATM, 50M02478.

147. ATM IP&CL, 50M12711.

148. EIDD, 50M02429 for S054.

149. Aligh, Procedure for S054, AS&E, June 1969.

150. D&PS, AS&E-1600.

151. ATM Electromagnetic Compatibility Control Plan, 50M12715.

152. Parts Selection and Control Requirements for ATM, 85M02715.

153. ATM EVA CDR 6 November 1970.

154. Identification and Trace Ability Requirements and Procedures, AMD 5300.1.

155. Preliminary AORD for Coronal XUV Spectroheliograph Experiment S082A, ATM Mission A, US Naval Research Laboratory, dated 25 July 1968 and Appendices.

156. Description and Operating Instructions, NRL/ATM XUV Coronal Spectroheliograph, ATM Experiment S082A, BBRC 620-53 Rev. A dated 1 April 1971.

157. Design and Performance Spec (DPS) ATM Experiment S054, ASE-1600B, dated 15 October 1969.

158. Rack Structural Assembly, ATM, 30M14500.

159. Rack Assembly ATM, 30M14501.

160. AORD for Chromospheric XUV Spectrograph and XUV Monitor, Experiment S082B, ATM A, US NRL, dated 26 June 1969 and Appendices.

161. Description & Operating Instruction NRL/ATM XUV Chromospheric Spectrograph, ATM Experiment S082B, BBRC 620-54 dated 10 June 1970.

162. Design and Performance Specification XUV Coronal Spectroheliograph Instrument ATM Experiment S082A, BBRC CP25905 Rev. B dated 10 August 1970.

163. Design and Performance Specification XUV Spectrograph Instrument ATM Experiment S082B, BBRC CP25100 Rev. C dated 10 August 1970.

164. Experiment Interface Defining Document S082, 50M02462, Rev. E dated 30 December 1970.

165. Solar Cell Sunlight Testing ED-2002-777-5 dated 30 June 1970.

166. ATM Rack and Canister Roll-Out, 10M03909.

167. ATM Solar Array System Design Spec (Mechanical), 50M60451.

168. Design and Performance Specification UV Scanning Polychromator-Spectroheliometer S-055A, BBRC-29540.

169. AORD UV Scanning Polychromator-Spectroheliometer S-055A, BBRC 23042.

170. ATM Experiment IDD S055A Modified UV Scanning Polychromator-Spectroheliometer, 50M02430.

171. AORD S056, 50M16608.

172. DPS S056, 50M16608.

173. Minutes of Critical Design Review (CDR) (MSFC), dated 13 & 14 May 1970.

174. CBRM Assembly Acceptance Test Procedure 40M26755 dated 22 December 1969.

175. Cluster Operations Input Data, ED-2002-986, dated 16 January 1970.

176. ATM TCS System Spec, 20M42503.

177. X-Ray Telescope S056 GSFC.

178. ATM Electrical Power System AORD 40M33678 dated 15 March 1971.

179. Maintenance and Instruction Manual for Model 103 RASM, 50M66532.

180. Maintenance and Instruction Manual for Model 270 Multiplexer, 50M66506.

181. Maintenance and Instruction Manual for Model 410 Multiplexer, 50M66519.

182. Maintenance and Instruction Manual for PCM/DDAS Model 301, 50M66512.

183. ATM Equipment List, 50M72900.

184. Performance and Design Requirements ATM System General Spec, 50M02417.

185. ATM Cable Interconnection Diagram, 50M33651.

186. System Composite Mech Schematics and Index of Findings, 10M30899.

187. ATM Experiment Package Subassembly (Drawings 1-3), SK10-7328.

188. Experiment Package Assembly, ATM, 10M24002.

189. Wiring List - ATM Cables Unit 704, 40M33672.

190. Cable Harness Assembly ATM, 50M74135.

191. ATM to Gimbal System ICD Physical Requirements, 13M20734.

192. Cluster Functional Schematics, SKSE-1351.

193. Cluster Requirements Specifications, RS003M00003 W/All Appendices.

194. AORD ATM EPS, 40M33678.

195. ATM Electrical Schematics, 40M33662, dated 17 April 1970.

196. Solar Array Wing Assembly and Cable Installation, 50M7400-1.

197. Cluster Power Management Plan, ED-2002-796-5.

198. ATM Power Allocation Document, 40M33699, Rev. C dated 1970.

199. ATM/AM Electrical ICD, 40M35655.

200. ATM/ESE Electrical ICD, 40M35590.

201. EIDD for S056, 50M02431 Rev. C dated 8 December 1969.

202. ATM Function Block Diagram.

203. EPS Definition Document, ED-2002-1045-1.

204. ATM/AM Console, 40M35659-1.

205. ATM/AM ESE, 40M35659-2.

206. ATM/AM (AM, OWS, IU, ETC), 40M35659-3.

207. Batteries for Space Power Systems NASA Sp-172 of 1968.

208. Summary Report on Ni-Co Batteries for ATM By Sperry Rand dated 22 June 1970.

209. Cells, NiCad 20 Amp Hr, Matched Set Spec for 40M26310 dated 21 August 1969.

210. Nicad Battery Cell Final Acceptance & Matching Procedure 40M5190 dated 20 January 1970.

211. Skylab Program Payload Integration Technical Report Battery Survey ED-2002-1167 Rev. A dated 31 December 1970.

212. ATM Electromagnetic Compatibility Control Plan, 50M12725.

213. EIDD for Hα Telescope, 50M02463 Rev. B dated 5 October 1968.

214. Preferred Electrical Parts List for Apollo Application Program, (AAP), 85M02716.

215. ATM System Specification 50M02417 dated 31 October 1969.

216. Mission Operation Design Support Vol I ATM Systems ED-2002-537 Rev B dated 26 October 1970.

217. Mission Operations Design Support Vol II ATM Experiments ED-2002-537 Rev. A dated 29 January 1971.

218. OWS/AM, 40M35594.

219. CSM/MDA, 40M35661, dated 16 March 1970.

220. ATM Acceptance Test Plan.

221. Mission Operations Design Support Vol III OWS Experiments ED-2002-537 Rev. A dated 31 January 1971.

222. SLOH/OAM Vol I MDC E0097 Spacecraft Description revised 23 November 1970.

223. ICD ATM C&D Console Configuration, 40M37870, dated June 1969.

224. ICD ATM C&D Console Panel Configuration, 40M37871, dated 10 April 1970.

225. ICD Definition of MDA and ATM C&D Electrical Interface, 40M35601, dated April 1970.

226. Cross Reference Index to ICD 40M35601, MDA to ATM C&D Electrical Interface, ED-2002-761.

227. ATM Controls and Displays Panel Functional Description Report, ED-2002-267, Rev. H dated 13 November 1970.

228. ATM C&D Panel Astronaut Activity Sequence Flow Charts, ED-2002-377, dated 6 May 1970.

229. ATM C&D Console Electrical Schematics, 1953805.

230. Rotation Control Panel, 40M37795, dated May 1970.

231. Control End Item Specification of ATM C&D Console, CP1941000, dated February 1969.

232. EIDD for S055A, 50M02430 dated 20 October 1970.

233. Thermal Analysis Report, ED-2002-404-10.

234. ATM/C&D Panel Astronaut Activity Sequence Flow Charts, ED-20020377.

235. AM RF Command List, 50M16141.

236. ATM RF Command List, 50M16140.

237. ATM DAS Code List, 40M35604.

238. ATM IP&CL, 50M12711.

239. Cluster Requirements Spec., RS003M00003.

240. ATM Equipment List, 50M72900.

241. ICD Identification Matrix, 10M01840.

242. ATM Command Decoder, Specification for, 50M12786.

243. Directional Coupler, Model 318, Guidance and Command, ATM, Specification for, 50M60432.

244. ATM Decoder Proceurment Specification, 50M12792.

245. Data and Communications System Description, ED-2002-1041.

246. Failure Mode, Failure Effect and Criticality Analysis for the ATM Telemetry System, 50M02471.

247. Transmitter, Telemetry Solid State, Specification for, 50M16996.

248. ATM TM Amplifier and Switch Assembly (ASA) Specification for, 50M16995.

249. Tape Recorder, ATM Specification for, 50M12971.

250. Skylab Frequency Plan, 50M13120A.

251. CSM to MDA I&C Requirements, 50M13125.

252. Skylab Orbital Assembly AUDIO System Requirements, 50M13136.

253. S052 to ATM Electrical Interface, 40M35580A.

254. S054 to ATM Electrical Interface, 40M35584.

255. S085 to ATM Electrical Interface, 40M35586.

256. Hα1 & 2 to ATM Electrical Interface, 40M35588.

257. ATM ESE Carry-On Electrical Interface, 40M35590.

258. Orbital Workshop to AM Electrical Interface, 40M35594.

259. MDA/C&D Electrical Interface, 40M35601.

260. ATM/AM Electrical Interface, 40M35659.

261. Airlock to MDA Electrical Interface, 40M35662.

262. AM FAS (ATM) ESE Electrical Interface, 40M35666.

263. ATM/MDA SES Pneumatic Console, 40M68000.

264. ATM ESE/MSFC Facility AC Power, 40M68001.

265. ATM-ESE to Instrumentation Checkout Complex, 40M68004.

266. ATM ESE to Facility Electrical Grounding (MSFC), 40M68006.

267. ACE/ATM ESE (MSFC), 40M68028.

268. ACE/ATM-ESE (MSC), 40M68029.

269. ACE/Instrumentation Checkout Complex, 40M68032.

270. ATM ESE/MSC Facility AC Power, 40M68039.

271. ATM ESE to Facility Elect. Grounding (MSC), 40M68045.

272. ATM ESE Equipment Arrangement (MSC), 40M68045.

273. ATM/ESE/ASAP C/O Station at MSC, 40M68046.

274. ATM Experiment S052 Recovered Film to CSM Mechanical Requirements, 13M13501.

275. ATM Experiment S056 Recovered Film to CSM Mechanical Requirements, 13M13502.

276. ATM Experiment S054 Recovered Film to CSM Mechanical Requirements, 13M13503.

277. ATM Experiment S082A & B Recovered Film to CSM Mechanical Requirements, 13M13504.

278. ATM Experiment Hα1 Recovered Film to CSM Mechanical Requirements, 13M13506.

279. Crew Operations Requirements for Combined Mission Cluster, ED-2002-050.

280. Crew Equipment Management Plan, ED-2002-221.

281. AAP-1/AAP-2 Crew System Scheduling Criteria, ED-2002-223.

282. Crew Interfaces AAP-4 Interim Report, ED-2002-227.

283. Technical Study and Analysis Report LM/ATM Crew Stations Design Requirements, ED-2002-230.

284. Preliminary Crew/Systems Safety Plan AAP-/AAP-4, ED-2002-252.

285. Technical Study and Analysis Report Apollo Telescope Mount ATM FMEAM ED-2002-271.

286. LM/ATM Critical Event and Crew Hazard Analysis Report, ED-2002-430.

287. ATM Operations Defining Document Technical Report, ED-2002-537 Vol I.

288. ATM Operations Defining Document Technical Report, ED-2002-537 Vol II.

289. ATM Operations Defining Document Technical Report, ED-2002-537 Vol III.

290. Experiment S056 XUV & X-Ray Telescope Design Performance Spec Engineering Data, ED-2002-693-1.

291. Experiment S056 XUV & X-Ray Telescope Design Performance Spec Test Results Summary, ED-2002-693-3.

292. Experiment S056 XUV & X-Ray Telescope Design Performance Spec Checkout Equipment, ED-2002-693-4.

293. Abnormal MOde Analysis Experiment S055A-UV Scanning Polychromator Spectroheliometer Engineering Data and Analysis, ED-2002-902-3.

294. Abnormal Mode Analysis Hα1 & Hα2 Telescope Engineering Data and Analysis, ED-2002-902-4.

295. Abnormal Mode Analysis Experiment S056 X-Ray Event Analyzer Engineering Data and Analysis, ED-2002-902-5.

296. Abnormal Mode Analysis Experiment S082A and S082B X-Ray Event Analyzer Engineering Data & Analysis, ED-2002-902-6.

297. EPC Mass Motion Disturbance Analysis S054 Experiment Package Technical Report, ED-2002-992.

298. EPC Mass Motion Disturbance Analysis S055A, ED-2002-999.

299. ATM Integrated Project Schedule prepared by PM/SE-ATM dated 30 April 1971.

300. Mission Level Failure Modes and Effects Analysis (2 Volumes), ED-2002-1124.

301. ATM Battery Analysis Report, ED-2002-968-5.

302. Skylab Systems Composite Mechanical Schematics, Appendix of Finding Numbers, 10M30899 Rev. F.

303. ATM Digital Address System Astronaut Function Code List, 40M35604.

304. ICD-IU to SWS I&C Requirements, 50M13139, dated 22 July 1970.

305. ICD - Skylab Orbital Assembly TV Requirements, 50M16132, dated 24 July 1970.

306. Equipment List ATM, 50M72900 Rev. H.

307. Skylab Technical Report C&W System Integrated Problem Resolution Report, MMC, dated 20 July 1970, ED-2002-989 Rev. B.

308. Cluster C&W System Integrated Design Review Report, ED-2002-1012-2, MMC/MSFC, dated 31 August 1970.

309. C&W Adequacy Analysis Vol I ATM, ED-2002-1038 Rev A, dated 1 July 1970.

310. System Configuration Definition Document, Electrical Power System Description, ED-2002-1039.

311. System Configuration Definition Document - Environmental Control System Description, ED-2002-1040.

312. ATM EVA Rotation Control Panel - Final Production Drawings, ED-2002-1114.

313. SWS ESE to QLDS SWS to KSC Antennas, I&C Requirements, 65ICD9217.

314. SWS ESE LC-39, Equipment Arrangement, 65ICD9218.

315. Skylab (AM/MDA/ATM) Pad and VAB Mechanical Systems Requirements, 65ICD9542.

316. ATM GSE O&C Building 6ICD2135, AC Power and Grounding.

317. ATM GSE Building Facility Cables, 66ICD2136.

318. ATM ESE to ACE, I&C Requirements, 66ICD2139.

319. ATM ESE to QLDS I&C Requirements, 66ICD2140.

320. ATM ESE O&C Building Equipment Arrangement, 66ICD2143.

321. Skylab (AM/MDA/ATM) MSOB Mechanical Systems Requirements, 66ICD8042.

322. Experiment Interface Defining Document S052. ATM White Light Coronagraph. 50M02414.

323. BBRC CP 22876. White Light Coronagraph ATM EXperiment S052.

324. Apollo Applications Payload Integration Requirements. Man/System Design Requirements 10M32158 Rev B.

325. Book 1 of Electrical Power System for ATM

ED-2002-796-1	Introduction
ED-2002-796-2	Electrical Load Analysis ATM
ED-2002-796-3	Apollo Telescope Mount Power Allocation Document (40M33699)
ED-2002-796-4	Cluster Power Transfer Analysis
ED-2002-796-5	Cluster Power Management Plan

325. Book 1 of Electrical Power System for ATM (Continued)

ED-2002-796-6	Cluster System Control Analysis - Description of the ATM Power System Controls
ED-2002-796-7 thru-12	Titles undefined at this time
	Power System Performance Analysis - Preliminary ATM Power System Performance Prediction

326. Book I Electrical Power System Definition Document

40M35695-1	Cluster Electrical Power Systems Data Book
40M35695-2	Cluster Load Profile Document SL-1/SL-2
40M35695-3	Cluster Load Profile Document SL-3
40M35695-4	Cluster Load Profile Document SL-4
40M35695-5	SWS Storage Load Profile Document
40M35695-6	Cluster Power System Operations
40M35695-7	Cluster Load Assumptions Document

This document supersedes the previous document ED-2002-1045-1 Rev A, dated 30 November 1970.

327. Book II Electrical Power Systems Analysis

40M35696-1	Cluster Power System Performance Analysis
40M35696-2	Cluster Power Transfer Analysis
40M35696-3	Cluster Power System Control Analysis
40M35696-4	Cluster Electrical Load Analysis SL-1/SL-2
40M35696-5	Cluster Electrical Load Analysis SL-3
40M35696-6	Cluster Electrical Load Analysis SL-4
40M35696-7	Power System Preflight Analysis
40M35696-8	Power System Flight Analysis
40M35696-9	Power System Post-Flight Analysis

328. Design considerations for an Orbiting Solar Telescope. John D. Rehnberg, Perkin-Elmer - Advances in Optical Technology and Electro-optical Systems for Space. NYC 17 September 1969.

329. Design and Performance Spec HCO/ATM Hα Telescopes Perkin-Elmer Corp. Engineering Report 9270C. 11 December 1969.

D

330. Application of Solid Fabry-Perot Etalons as narrow band filters Perkin-Elmer Corp. Report IS 10473

331. An Improved HCO/ATM Hα Telescopes Blocking Filter Perkin-Elmer Corp. Engineering Report 9791A. 15 December 1969

332. Optical Interference Coatings - Baumeister and Pincus. Scientific American December 1970. p. 59

☆ U.S. GOVERNMENT PRINTING OFFICE: 1972—779-263/720