Space Shuttle Program
FLIGHT DATA FILE

JSC-48027

Malfunction Procedures

Mission Operations Directorate
Operations Division

Generic, Rev J
October 20, 2008

NOTE
For STS-126 and subsequent flights

National Aeronautics and
Space Administration

Lyndon B. Johnson Space Center
Houston, Texas

United Space Alliance

Verify this is the correct version for the pending operation (training, simulation or flight).
Electronic copies of FDF books are available. URL: http://mod.jsc.nasa.gov/do3/FDF/index.html

MALFUNCTION PROCEDURES	GENERIC, REV J (Oct 20, 2008)

PCN-2 (Mar 18, 2009) Sheet 1 of 1

List of Implemented Change Requests (482s):

MAL-1720

NOTE
For STS-125 and subsequent flights

Incorporate the following:

1. Replace iii thru vi
2. Replace 6-109 & 6-110

Prepared by: _____
Publication Manager

Approved by: _____
Manager, Flight Procedures

Accepted by: _____
FDF Manager

Encl: 6 pages

File this PCN immediately behind the front cover as a permanent record

MALFUNCTION PROCEDURES	**GENERIC, REV J (Oct 20, 2008)**

PCN-1 (Jan 22, 2009) Sheet 1 of 1

List of Implemented Change Requests (482s):

MULTI-1833 MAL-1704
MULTI-1834 MAL-1705

NOTE
For STS-119 and subsequent flights

Incorporate the following:

1. Replace iii thru x
2. Replace 5-65 thru 5-68, 5-97 thru 5-100
3. Replace 6-111 & 6-112
4. Replace 7-75 & 7-76
5. Replace 10-27 thru 10-34

Prepared by: _____
Publication Manager

Approved by: _____
Manager, Shuttle Procedures Management

Accepted by: _____
FDF Manager

Encl: 28 pages

File this PCN immediately behind the front cover as a permanent record

MISSION OPERATIONS DIRECTORATE

MALFUNCTION PROCEDURES

GENERIC, REVISION J
October 20, 2008

PREPARED BY:

Tanya J. Vaughan
Publication Manager

APPROVED BY:

Kimberly A. Johnson
Manager, Shuttle Procedures Management

ACCEPTED BY:

Michael T. Hurt
FDF Manager

This document is under the configuration control of the Crew Procedures Control Board (CPCB). All proposed changes must be submitted via FDF Workflow Crew Procedure Change Request (CR) to DO3/FDF Manager.

Additional distribution of this book, for official use only, may be requested in writing to DO3/PMO Administrator. The request must include justification and requester's name, organization, position, and phone number. Contractor requests are made through the NASA or DOD organization supported. Deletions, reduction in quantity, or change of address may be submitted to DO3/FDF Management Office, 281-244-1184.

Incorporates the following:		
482#:	MAL-1700	MAL-1702
	MAL-1701A	MAL-1703

AREAS OF TECHNICAL RESPONSIBILITY

Publication Manager	DO35/T. Vaughan	281-483-4180
Alternate	DO35/J. Woodard	281-483-9685
APU/HYD	DS421/J. Dake	281-483-6538
COMM	DS231/D. Branham	281-483-1187
C/W	DS431/G. Peck	281-244-7309
DPS	DS221/J. McDonald	281-483-0793
ECLS	DS441/D. Fasbender	281-483-7857
EPS	DS431/M. Friant	281-483-0682
GNC	DS621/D. Gruber	281-483-0709
MECH	DS421/J. Dake	281-483-6538
OMS/RCS	DS631/T. Campa	281-244-1002
PDRS	DX2/G. Pollock	281-483-0883

LIST OF EFFECTIVE PAGES

GENERIC	05/10/88	PCN-1	01/22/09
REV J	10/20/08	PCN-2	03/18/09

Sign Off	*	ALL/GEN J	2-7		ALL/GEN J
ii	*	ALL/GEN J	2-8		ALL/GEN J
iii	*	ALL/GEN J,2	2-9		ALL/GEN J
iv	*	ALL/GEN J,1	2-10		ALL/GEN J
v	*	ALL/GEN J,2	2-11		ALL/GEN J
vi	*	ALL/GEN J,1	2-12		ALL/GEN J
vii	*	ALL/GEN J	2-13		ALL/GEN J
viii	*	ALL/GEN J	2-14		ALL/GEN J
ix	*	ALL/GEN J,1	2-15		ALL/GEN J
x	*	ALL/GEN J	2-16		ALL/GEN J
xi		ALL/GEN J	2-17		ALL/GEN J
xii		ALL/GEN J	2-18		ALL/GEN J
xiii		ALL/GEN J	2-19		ALL/GEN J
xiv		ALL/GEN J	2-20		ALL/GEN J
xv		ALL/GEN J	2-21		ALL/GEN J
xvi		ALL/GEN J	2-22		ALL/GEN J
xvii		ALL/GEN J	2-23		ALL/GEN J
xviii		ALL/GEN J	2-24		ALL/GEN J
xix		ALL/GEN J	2-25		ALL/GEN J
xx		ALL/GEN J	2-26		ALL/GEN J
xxi		ALL/GEN J	2-27		ALL/GEN J
xxii		ALL/GEN J	2-28		ALL/GEN J
xxiii		ALL/GEN J	2-29		ALL/GEN J
xxiv		ALL/GEN J	2-30		ALL/GEN J
1-1		ALL/GEN J	2-31		ALL/GEN J
1-2		ALL/GEN J	2-32		ALL/GEN J
1-3		ALL/GEN J	2-33		ALL/GEN J
1-4		ALL/GEN J	2-34		ALL/GEN J
1-5		ALL/GEN J	2-35		ALL/GEN J
1-6		ALL/GEN J	2-36		ALL/GEN J
1-7		ALL/GEN J	2-37		ALL/GEN J
1-8		ALL/GEN J	2-38		ALL/GEN J
1-9		ALL/GEN J	2-39		ALL/GEN J
1-10		ALL/GEN J	2-40		ALL/GEN J
1-11		ALL/GEN J	2-41		ALL/GEN J
1-12		ALL/GEN J	2-42		ALL/GEN J
1-13		ALL/GEN J	2-43		ALL/GEN J
1-14		ALL/GEN J	2-44		ALL/GEN J
1-15		ALL/GEN J	2-45		ALL/GEN J
1-16		ALL/GEN J	2-46		ALL/GEN J
1-17		ALL/GEN J	2-47		ALL/GEN J
1-18		ALL/GEN J	2-48		ALL/GEN J
1-19		ALL/GEN J	2-49		ALL/GEN J
1-20		ALL/GEN J	2-50		ALL/GEN J
1-21		ALL/GEN J	2-51		ALL/GEN J
1-22		ALL/GEN J	2-52		ALL/GEN J
2-1		ALL/GEN J	2-53		ALL/GEN J
2-2		ALL/GEN J	2-54		ALL/GEN J
2-3		ALL/GEN J	2-55		ALL/GEN J
2-4		ALL/GEN J	2-56		ALL/GEN J
2-5		ALL/GEN J	2-57		ALL/GEN J
2-6		ALL/GEN J	2-58		ALL/GEN J

***** – Omit from flight book

2-59 ..... ALL/GEN J
2-60 ..... ALL/GEN J
3-1 ..... ALL/GEN J
3-2 ..... ALL/GEN J
4-1 ..... ALL/GEN J
4-2 ..... ALL/GEN J
4-3 ..... ALL/GEN J
4-4 ..... ALL/GEN J
4-5 ..... ALL/GEN J
4-6 ..... ALL/GEN J
4-7 ..... ALL/GEN J
4-8 ..... ALL/GEN J
4-9 ..... ALL/GEN J
4-10 ..... ALL/GEN J
4-11 ..... ALL/GEN J
4-12 ..... ALL/GEN J
4-13 ..... ALL/GEN J
4-14 ..... ALL/GEN J
4-15 ..... ALL/GEN J
4-16 ..... ALL/GEN J
4-17 ..... ALL/GEN J
4-18 ..... ALL/GEN J
4-19 ..... ALL/GEN J
4-20 ..... ALL/GEN J
4-21 ..... ALL/GEN J
4-22 ..... ALL/GEN J
4-23 ..... ALL/GEN J
4-24 ..... ALL/GEN J
4-25 ..... ALL/GEN J
4-26 ..... ALL/GEN J
4-27 ..... ALL/GEN J
4-28 ..... ALL/GEN J
4-29 ..... ALL/GEN J
4-30 ..... ALL/GEN J
4-31 ..... ALL/GEN J
4-32 ..... ALL/GEN J
5-1 ..... ALL/GEN J
5-2 ..... ALL/GEN J
5-3 ..... ALL/GEN J
5-4 ..... ALL/GEN J
5-5 ..... ALL/GEN J
5-6 ..... ALL/GEN J
5-7 ..... ALL/GEN J
5-8 ..... ALL/GEN J
5-9 ..... ALL/GEN J
5-10 ..... ALL/GEN J
5-11 ..... ALL/GEN J
5-12 ..... ALL/GEN J
5-13 ..... ALL/GEN J
5-14 ..... ALL/GEN J
5-15 ..... ALL/GEN J
5-16 ..... ALL/GEN J
5-17 ..... ALL/GEN J
5-18 ..... ALL/GEN J
5-19 ..... ALL/GEN J
5-20 ..... ALL/GEN J
5-21 ..... ALL/GEN J
5-22 ..... ALL/GEN J
5-23 ..... ALL/GEN J
5-24 ..... ALL/GEN J
5-25 ..... ALL/GEN J
5-26 ..... ALL/GEN J
5-27 ..... ALL/GEN J
5-28 ..... ALL/GEN J
5-29 ..... ALL/GEN J
5-30 ..... ALL/GEN J
5-31 ..... ALL/GEN J
5-32 ..... ALL/GEN J
5-33 ..... ALL/GEN J
5-34 ..... ALL/GEN J
5-35 ..... ALL/GEN J
5-36 ..... ALL/GEN J
5-37 ..... ALL/GEN J
5-38 ..... ALL/GEN J
5-39 ..... Δ ALL/GEN J
5-40 ..... ALL/GEN J
5-41 ..... ALL/GEN J
5-42 ..... ALL/GEN J
5-43 ..... ALL/GEN J
5-44 ..... ALL/GEN J
5-45 ..... ALL/GEN J
5-46 ..... ALL/GEN J
5-47 ..... ALL/GEN J
5-48 ..... ALL/GEN J
5-49 ..... ALL/GEN J
5-50 ..... ALL/GEN J
5-51 ..... ALL/GEN J
5-52 ..... ALL/GEN J
5-53 ..... ALL/GEN J
5-54 ..... ALL/GEN J
5-55 ..... ALL/GEN J
5-56 ..... ALL/GEN J
5-57 ..... ALL/GEN J
5-58 ..... ALL/GEN J
5-59 ..... ALL/GEN J
5-60 ..... ALL/GEN J
5-61 ..... ALL/GEN J
5-62 ..... ALL/GEN J
5-63 ..... ALL/GEN J
5-64 ..... ALL/GEN J
5-65 ..... ALL/GEN J,1
5-66 ..... ALL/GEN J
5-67 ..... ALL/GEN J,1
5-68 ..... ALL/GEN J
5-69 ..... ALL/GEN J
5-70 ..... ALL/GEN J
5-71 ..... ALL/GEN J
5-72 ..... ALL/GEN J
5-73 ..... ALL/GEN J
5-74 ..... ALL/GEN J
5-75 ..... ALL/GEN J
5-76 ..... ALL/GEN J
5-77 ..... ALL/GEN J
5-78 ..... ALL/GEN J
5-79 ..... ALL/GEN J
5-80 ..... ALL/GEN J
5-81 ..... ALL/GEN J
5-82 ..... ALL/GEN J
5-83 ..... ALL/GEN J
5-84 ..... ALL/GEN J
5-85 ..... ALL/GEN J
5-86 ..... ALL/GEN J
5-87 ..... ALL/GEN J
5-88 ..... ALL/GEN J

Δ – Color page for flight book only

5-89..... ALL/GEN J
5-90..... ALL/GEN J
5-91..... ALL/GEN J
5-92..... ALL/GEN J
5-93..... ALL/GEN J
5-94..... ALL/GEN J
5-95..... ALL/GEN J
5-96..... ALL/GEN J
5-97..... ALL/GEN J,1
5-98..... ALL/GEN J
5-99..... ALL/GEN J,1
5-100..... ALL/GEN J
6-1..... ALL/GEN J
6-2..... ALL/GEN J
6-3..... ALL/GEN J
6-4..... ALL/GEN J
6-5..... ALL/GEN J
6-6..... ALL/GEN J
6-7..... ALL/GEN J
6-8..... ALL/GEN J
6-9..... ALL/GEN J
6-10..... ALL/GEN J
6-11..... ALL/GEN J
6-12..... ALL/GEN J
6-13..... ALL/GEN J
6-14..... ALL/GEN J
6-15..... ALL/GEN J
6-16..... ALL/GEN J
6-17..... ALL/GEN J
6-18..... ALL/GEN J
6-19..... ALL/GEN J
6-20..... ALL/GEN J
6-21..... ALL/GEN J
6-22..... ALL/GEN J
6-23..... ALL/GEN J
6-24..... ALL/GEN J
6-25..... ALL/GEN J
6-26..... ALL/GEN J
6-27..... ALL/GEN J
6-28..... ALL/GEN J
6-29..... ALL/GEN J
6-30..... ALL/GEN J
6-31..... ALL/GEN J
6-32..... ALL/GEN J
6-33..... ALL/GEN J
6-34..... ALL/GEN J
6-35..... ALL/GEN J
6-36..... ALL/GEN J
6-37..... ALL/GEN J
6-38..... ALL/GEN J
6-39..... ALL/GEN J
6-40..... ALL/GEN J
6-41..... ALL/GEN J
6-42..... ALL/GEN J
6-43..... ALL/GEN J
6-44..... ALL/GEN J
6-45..... ALL/GEN J
6-46..... ALL/GEN J
6-47..... ALL/GEN J
6-48..... ALL/GEN J
6-49..... ALL/GEN J
6-50..... ALL/GEN J
6-51 ..... ALL/GEN J
6-52 ..... ALL/GEN J
6-53 ..... ALL/GEN J
6-54 ..... ALL/GEN J
6-55 ..... ALL/GEN J
6-56 ..... ALL/GEN J
6-57 ..... ALL/GEN J
6-58 ..... ALL/GEN J
6-59 ..... ALL/GEN J
6-60 ..... ALL/GEN J
6-61 ..... ALL/GEN J
6-62 ..... ALL/GEN J
6-63 ..... ALL/GEN J
6-64 ..... ALL/GEN J
6-65 ..... ALL/GEN J
6-66 ..... ALL/GEN J
6-67 ..... ALL/GEN J
6-68 ..... ALL/GEN J
6-69 ..... ALL/GEN J
6-70 ..... ALL/GEN J
6-71 ..... ALL/GEN J
6-72 ..... ALL/GEN J
6-73 ..... ALL/GEN J
6-74 ..... ALL/GEN J
6-75 ..... ALL/GEN J
6-76 ..... ALL/GEN J
6-77 ..... ALL/GEN J
6-78 ..... ALL/GEN J
6-79 ..... ALL/GEN J
6-80 ..... ALL/GEN J
6-81 ..... ALL/GEN J
6-82 ..... ALL/GEN J
6-83 ..... ALL/GEN J
6-84 ..... ALL/GEN J
6-85 ..... ALL/GEN J
6-86 ..... ALL/GEN J
6-87 ..... ALL/GEN J
6-88 ..... ALL/GEN J
6-89 ..... ALL/GEN J
6-90 ..... ALL/GEN J
6-91 ..... ALL/GEN J
6-92 ..... ALL/GEN J
6-93 ..... ALL/GEN J
6-94 ..... ALL/GEN J
6-95 ..... ALL/GEN J
6-96 ..... ALL/GEN J
6-97 ..... ALL/GEN J
6-98 ..... ALL/GEN J
6-99 ..... ALL/GEN J
6-100 ..... ALL/GEN J
6-101 ..... ALL/GEN J
6-102 ..... ALL/GEN J
6-103 ..... ALL/GEN J
6-104 ..... ALL/GEN J
6-105 ..... ALL/GEN J
6-106 ..... ALL/GEN J
6-107 ..... ALL/GEN J
6-108 ..... ALL/GEN J
6-109 ..... ALL/GEN J,2
6-110 ..... ALL/GEN J
6-111 ..... ALL/GEN J
6-112 ..... ALL/GEN J,1

6-113 ..... ALL/GEN J
6-114 ..... ALL/GEN J
6-115 ..... ALL/GEN J
6-116 ..... ALL/GEN J
6-117 ..... ALL/GEN J
6-118 ..... ALL/GEN J
6-119 ..... ALL/GEN J
6-120 ..... ALL/GEN J
7-1 ..... ALL/GEN J
7-2 ..... ALL/GEN J
7-3 ..... ALL/GEN J
7-4 ..... ALL/GEN J
7-5 ..... ALL/GEN J
7-6 ..... ALL/GEN J
7-7 ..... ALL/GEN J
7-8 ..... ALL/GEN J
7-9 ..... ALL/GEN J
7-10 ..... ALL/GEN J
7-11 ..... ALL/GEN J
7-12 ..... ALL/GEN J
7-13 ..... ALL/GEN J
7-14 ..... ALL/GEN J
7-15 ..... ALL/GEN J
7-16 ..... ALL/GEN J
7-17 ..... ALL/GEN J
7-18 ..... ALL/GEN J
7-19 ..... ALL/GEN J
7-20 ..... ALL/GEN J
7-21 ..... ALL/GEN J
7-22 ..... ALL/GEN J
7-23 ..... ALL/GEN J
7-24 ..... ALL/GEN J
7-25 ..... ALL/GEN J
7-26 ..... ALL/GEN J
7-27 ..... ALL/GEN J
7-28 ..... ALL/GEN J
7-29 ..... ALL/GEN J
7-30 ..... ALL/GEN J
7-31 ..... ALL/GEN J
7-32 ..... ALL/GEN J
7-33 ..... ALL/GEN J
7-34 ..... ALL/GEN J
7-35 ..... ALL/GEN J
7-36 ..... ALL/GEN J
7-37 ..... ALL/GEN J
7-38 ..... ALL/GEN J
7-39 ..... ALL/GEN J
7-40 ..... ALL/GEN J
7-41 ..... ALL/GEN J
7-42 ..... ALL/GEN J
7-43 ..... ALL/GEN J
7-44 ..... ALL/GEN J
7-45 ..... ALL/GEN J
7-46 ..... ALL/GEN J
7-47 ..... ALL/GEN J
7-48 ..... ALL/GEN J
7-49 ..... ALL/GEN J
7-50 ..... ALL/GEN J
7-51 ..... ALL/GEN J
7-52 ..... ALL/GEN J
7-53 ..... ALL/GEN J
7-54 ..... ALL/GEN J
7-55 ..... ALL/GEN J
7-56 ..... ALL/GEN J
7-57 ..... ALL/GEN J
7-58 ..... ALL/GEN J
7-59 ..... ALL/GEN J
7-60 ..... ALL/GEN J
7-61 ..... ALL/GEN J
7-62 ..... ALL/GEN J
7-63 ..... ALL/GEN J
7-64 ..... ALL/GEN J
7-65 ..... ALL/GEN J
7-66 ..... ALL/GEN J
7-67 ..... ALL/GEN J
7-68 ..... ALL/GEN J
7-69 ..... ALL/GEN J
7-70 ..... ALL/GEN J
7-71 ..... ALL/GEN J
7-72 ..... ALL/GEN J
7-73 ..... ALL/GEN J
7-74 ..... ALL/GEN J
7-75 ..... ALL/GEN J,1
7-76 ..... ALL/GEN J
7-77 ..... ALL/GEN J
7-78 ..... ALL/GEN J
7-79 ..... ALL/GEN J
7-80 ..... ALL/GEN J
7-81 ..... ALL/GEN J
7-82 ..... ALL/GEN J
7-83 ..... ALL/GEN J
7-84 ..... ALL/GEN J
7-85 ..... ALL/GEN J
7-86 ..... ALL/GEN J
7-87 ..... ALL/GEN J
7-88 ..... ALL/GEN J
7-89 ..... ALL/GEN J
7-90 ..... ALL/GEN J
7-91 ..... ALL/GEN J
7-92 ..... ALL/GEN J
7-93 ..... ALL/GEN J
7-94 ..... ALL/GEN J
7-95 ..... ALL/GEN J
7-96 ..... ALL/GEN J
7-97 ..... ALL/GEN J
7-98 ..... ALL/GEN J
7-99 ..... ALL/GEN J
7-100 ..... ALL/GEN J
7-101 ..... ALL/GEN J
7-102 ..... ALL/GEN J
7-103 ..... ALL/GEN J
7-104 ..... ALL/GEN J
7-105 ..... ALL/GEN J
7-106 ..... ALL/GEN J
7-107 ..... ALL/GEN J
7-108 ..... ALL/GEN J
7-109 ..... ALL/GEN J
7-110 ..... ALL/GEN J
7-111 ..... ALL/GEN J
7-112 ..... ALL/GEN J
7-113 ..... ALL/GEN J
7-114 ..... ALL/GEN J
7-115 ..... ALL/GEN J
7-116 ..... ALL/GEN J

7-117 ..... ALL/GEN J
7-118 ..... ALL/GEN J
7-119 ..... ALL/GEN J
7-120 ..... ALL/GEN J
7-121 ..... ALL/GEN J
7-122 ..... ALL/GEN J
7-123 ..... ALL/GEN J
7-124 ..... ALL/GEN J
7-125 ..... ALL/GEN J
7-126 ..... ALL/GEN J
7-127 ..... ALL/GEN J
7-128 ..... ALL/GEN J
7-129 ..... ALL/GEN J
7-130 ..... ALL/GEN J
7-131 ..... ALL/GEN J
7-132 ..... ALL/GEN J
7-133 ..... ALL/GEN J
7-134 ..... ALL/GEN J
7-135 ..... ALL/GEN J
7-136 ..... ALL/GEN J
7-137 ..... ALL/GEN J
7-138 ..... ALL/GEN J
7-139 ..... ALL/GEN J
7-140 ..... ALL/GEN J
7-141 ..... ALL/GEN J
7-142 ..... ALL/GEN J
7-143 ..... ALL/GEN J
7-144 ..... ALL/GEN J
7-145 ..... ALL/GEN J
7-146 ..... ALL/GEN J
7-147 ..... ALL/GEN J
7-148 ..... ALL/GEN J
7-149 ..... ALL/GEN J
7-150 ..... ALL/GEN J
7-151 ..... ALL/GEN J
7-152 ..... ALL/GEN J
7-153 ..... ALL/GEN J
7-154 ..... ALL/GEN J
7-155 ..... ALL/GEN J
7-156 ..... ALL/GEN J
7-157 ..... ALL/GEN J
7-158 ..... ALL/GEN J
7-159 ..... ALL/GEN J
7-160 ..... ALL/GEN J
7-161 ..... ALL/GEN J
7-162 ..... ALL/GEN J
7-163 ..... ALL/GEN J
7-164 ..... ALL/GEN J
7-165 ..... ALL/GEN J
7-166 ..... ALL/GEN J
7-167 ..... ALL/GEN J
7-168 ..... ALL/GEN J
7-169 ..... ALL/GEN J
7-170 ..... ALL/GEN J
7-171 ..... ALL/GEN J
7-172 ..... ALL/GEN J
7-173 ..... ALL/GEN J
7-174 ..... ALL/GEN J
7-175 ..... ALL/GEN J
7-176 ..... ALL/GEN J
7-177 ..... ALL/GEN J
7-178 ..... ALL/GEN J
7-179 ..... ALL/GEN J
7-180 ..... ALL/GEN J
7-181 ..... ALL/GEN J
7-182 ..... ALL/GEN J
7-183 ..... ALL/GEN J
7-184 ..... ALL/GEN J
7-185 ..... ALL/GEN J
7-186 ..... ALL/GEN J
7-187 ..... ALL/GEN J
7-188 ..... ALL/GEN J
7-189 ..... ALL/GEN J
7-190 ..... ALL/GEN J
7-191 ..... ALL/GEN J
7-192 ..... ALL/GEN J
7-193 ..... ALL/GEN J
7-194 ..... ALL/GEN J
7-195 ..... ALL/GEN J
7-196 ..... ALL/GEN J
7-197 ..... ALL/GEN J
7-198 ..... ALL/GEN J
7-199 ..... ALL/GEN J
7-200 ..... ALL/GEN J
7-201 ..... ALL/GEN J
7-202 ..... ALL/GEN J
7-203 ..... ALL/GEN J
7-204 ..... ALL/GEN J
7-205 ..... ALL/GEN J
7-206 ..... ALL/GEN J
7-207 ..... ALL/GEN J
7-208 ..... ALL/GEN J
7-209 ..... ALL/GEN J
7-210 ..... ALL/GEN J
7-211 ..... ALL/GEN J
7-212 ..... ALL/GEN J
7-213 ..... ALL/GEN J
7-214 ..... ALL/GEN J
7-215 ..... ALL/GEN J
7-216 ..... ALL/GEN J
7-217 ..... ALL/GEN J
7-218 ..... ALL/GEN J
7-219 ..... ALL/GEN J
7-220 ..... ALL/GEN J
7-221 ..... ALL/GEN J
7-222 ..... ALL/GEN J
7-223 ..... ALL/GEN J
7-224 ..... ALL/GEN J
7-225 ..... ALL/GEN J
7-226 ..... ALL/GEN J
7-227 ..... ALL/GEN J
7-228 ..... ALL/GEN J
7-229 ..... ALL/GEN J
7-230 ..... ALL/GEN J
7-231 ..... ALL/GEN J
7-232 ..... ALL/GEN J
7-233 ..... ALL/GEN J
7-234 ..... ALL/GEN J
7-235 ..... ALL/GEN J
7-236 ..... ALL/GEN J
7-237 ..... ALL/GEN J
7-238 ..... ALL/GEN J
7-239 ..... ALL/GEN J
7-240 ..... ALL/GEN J

7-241 ..... ALL/GEN J
7-242 ..... ALL/GEN J
7-243 ..... ALL/GEN J
7-244 ..... ALL/GEN J
7-245 ..... ALL/GEN J
7-246 ..... ALL/GEN J
7-247 ..... ALL/GEN J
7-248 ..... ALL/GEN J
7-249 ..... ALL/GEN J
7-250 ..... ALL/GEN J
7-251 ..... ALL/GEN J
7-252 ..... ALL/GEN J
7-253 ..... ALL/GEN J
7-254 ..... ALL/GEN J
7-255 ..... ALL/GEN J
7-256 ..... ALL/GEN J
7-257 ..... ALL/GEN J
7-258 ..... ALL/GEN J
7-259 ..... ALL/GEN J
7-260 ..... ALL/GEN J
7-261 ..... ALL/GEN J
7-262 ..... ALL/GEN J
7-263 ..... ALL/GEN J
7-264 ..... ALL/GEN J
7-265 ..... ALL/GEN J
7-266 ..... ALL/GEN J
7-267 ..... ALL/GEN J
7-268 ..... ALL/GEN J
7-269 ..... ALL/GEN J
7-270 ..... ALL/GEN J
7-271 ..... ALL/GEN J
7-272 ..... ALL/GEN J
7-273 ..... ALL/GEN J
7-274 ..... ALL/GEN J
7-275 ..... ALL/GEN J
7-276 ..... ALL/GEN J
7-277 ..... ALL/GEN J
7-278 ..... ALL/GEN J
7-279 ..... ALL/GEN J
7-280 ..... ALL/GEN J
7-281 ..... ALL/GEN J
7-282 ..... ALL/GEN J
7-283 ..... ALL/GEN J
7-284 ..... ALL/GEN J
7-285 ..... ALL/GEN J
7-286 ..... ALL/GEN J
7-287 ..... ALL/GEN J
7-288 ..... ALL/GEN J
7-289 ..... ALL/GEN J
7-290 ..... ALL/GEN J
7-291 ..... ALL/GEN J
7-292 ..... ALL/GEN J
7-293 ..... ALL/GEN J
7-294 ..... ALL/GEN J
7-295 ..... ALL/GEN J
7-296 ..... ALL/GEN J
7-297 ..... ALL/GEN J
7-298 ..... ALL/GEN J
7-299 ..... ALL/GEN J
7-300 ..... ALL/GEN J
7-301 ..... ALL/GEN J
7-302 ..... ALL/GEN J
7-303 ..... ALL/GEN J
7-304 ..... ALL/GEN J
7-305 ..... ALL/GEN J
7-306 ..... ALL/GEN J
7-307 ..... ALL/GEN J
7-308 ..... ALL/GEN J
7-309 ..... ALL/GEN J
7-310 ..... ALL/GEN J
7-311 ..... ALL/GEN J
7-312 ..... ALL/GEN J
7-313 ..... ALL/GEN J
7-314 ..... ALL/GEN J
8-1 ..... ALL/GEN J
8-2 ..... ALL/GEN J
8-3 ..... ALL/GEN J
8-4 ..... ALL/GEN J
8-5 ..... ALL/GEN J
8-6 ..... ALL/GEN J
8-7 ..... ALL/GEN J
8-8 ..... ALL/GEN J
8-9 ..... ALL/GEN J
8-10 ..... ALL/GEN J
8-11 ..... ALL/GEN J
8-12 ..... ALL/GEN J
8-13 ..... ALL/GEN J
8-14 ..... ALL/GEN J
9-1 ..... ALL/GEN J
9-2 ..... ALL/GEN J
9-3 ..... ALL/GEN J
9-4 ..... ALL/GEN J
9-5 ..... ALL/GEN J
9-6 ..... ALL/GEN J
9-7 ..... ALL/GEN J
9-8 ..... ALL/GEN J
9-9 ..... ALL/GEN J
9-10 ..... ALL/GEN J
9-11 ..... ALL/GEN J
9-12 ..... ALL/GEN J
9-13 ..... ALL/GEN J
9-14 ..... ALL/GEN J
9-15 ..... ALL/GEN J
9-16 ..... ALL/GEN J
9-17 ..... ALL/GEN J
9-18 ..... ALL/GEN J
9-19 ..... ALL/GEN J
9-20 ..... ALL/GEN J
9-21 ..... ALL/GEN J
9-22 ..... ALL/GEN J
9-23 ..... ALL/GEN J
9-24 ..... ALL/GEN J
9-25 ..... ALL/GEN J
9-26 ..... ALL/GEN J
9-27 ..... ALL/GEN J
9-28 ..... ALL/GEN J
9-29 ..... ALL/GEN J
9-30 ..... ALL/GEN J
9-31 ..... ALL/GEN J
9-32 ..... ALL/GEN J
9-33 ..... ALL/GEN J
9-34 ..... ALL/GEN J
9-35 ..... ALL/GEN J
9-36 ..... ALL/GEN J

9-37 ..... ALL/GEN J
9-38 ..... ALL/GEN J
9-39 ..... ALL/GEN J
9-40 ..... ALL/GEN J
9-41 ..... ALL/GEN J
9-42 ..... ALL/GEN J
9-43 ..... ALL/GEN J
9-44 ..... ALL/GEN J
9-45 ..... ALL/GEN J
9-46 ..... ALL/GEN J
9-47 ..... ALL/GEN J
9-48 ..... ALL/GEN J
9-49 ..... ALL/GEN J
9-50 ..... ALL/GEN J
9-51 ..... ALL/GEN J
9-52 ..... ALL/GEN J
9-53 ..... ALL/GEN J
9-54 ..... ALL/GEN J
9-55 ..... ALL/GEN J
9-56 ..... ALL/GEN J
9-57 ..... ALL/GEN J
9-58 ..... ALL/GEN J
9-59 ..... ALL/GEN J
9-60 ..... ALL/GEN J
10-1 ..... ALL/GEN J
10-2 ..... ALL/GEN J
10-3 ..... ALL/GEN J
10-4 ..... ALL/GEN J
10-5 ..... ALL/GEN J
10-6 ..... ALL/GEN J
10-7 ..... ALL/GEN J
10-8 ..... ALL/GEN J
10-9 ..... ALL/GEN J
10-10 ..... ALL/GEN J
10-11 ..... ALL/GEN J
10-12 ..... ALL/GEN J
10-13 ..... ALL/GEN J
10-14 ..... ALL/GEN J
10-15 ..... ALL/GEN J
10-16 ..... ALL/GEN J
10-17 ..... ALL/GEN J
10-18 ..... ALL/GEN J
10-19 ..... ALL/GEN J
10-20 ..... ALL/GEN J
10-21 ..... ALL/GEN J
10-22 ..... ALL/GEN J
10-23 ..... ALL/GEN J
10-24 ..... ALL/GEN J
10-25 ..... ALL/GEN J
10-26 ..... ALL/GEN J
10-27 ..... ALL/GEN J
10-28 ..... ALL/GEN J,1
10-29 ..... ALL/GEN J,1
10-30 ..... ALL/GEN J,1
10-31 ..... ALL/GEN J
10-32 ..... ALL/GEN J,1
10-33 ..... ALL/GEN J,1
10-34 ..... ALL/GEN J
11-1 ..... ALL/GEN J
11-2 ..... ALL/GEN J
11-3 ..... ALL/GEN J
11-4 ..... ALL/GEN J
11-5 ..... ALL/GEN J
11-6 ..... ALL/GEN J
11-7 ..... ALL/GEN J
11-8 ..... ALL/GEN J
11-9 ..... ALL/GEN J
11-10 ..... ALL/GEN J
11-11 ..... ALL/GEN J
11-12 ..... ALL/GEN J
11-13 ..... ALL/GEN J
11-14 ..... ALL/GEN J
11-15 ..... ALL/GEN J
11-16 ..... ALL/GEN J
11-17 ..... ALL/GEN J
11-18 ..... ALL/GEN J
11-19 ..... ALL/GEN J
11-20 ..... ALL/GEN J
11-21 ..... ALL/GEN J
11-22 ..... ALL/GEN J
12-1 ..... ALL/GEN J
12-2 ..... ALL/GEN J
12-3 ..... ALL/GEN J
12-4 ..... ALL/GEN J
12-5 ..... ALL/GEN J
12-6 ..... ALL/GEN J
12-7 ..... ALL/GEN J
12-8 ..... ALL/GEN J
12-9 ..... ALL/GEN J
12-10 ..... ALL/GEN J
12-11 ..... ALL/GEN J
12-12 ..... ALL/GEN J
12-13 ..... ALL/GEN J
12-14 ..... ALL/GEN J
12-15 ..... ALL/GEN J
12-16 ..... ALL/GEN J
12-17 ..... ALL/GEN J
12-18 ..... ALL/GEN J
12-19 ..... ALL/GEN J
12-20 ..... ALL/GEN J
12-21 ..... ALL/GEN J
12-22 ..... ALL/GEN J
12-23 ..... ALL/GEN J
12-24 ..... ALL/GEN J
12-25 ..... ALL/GEN J
12-26 ..... ALL/GEN J
12-27 ..... ALL/GEN J
12-28 ..... ALL/GEN J
12-29 ..... ALL/GEN J
12-30 ..... ALL/GEN J
12-31 ..... ALL/GEN J
12-32 ..... ALL/GEN J
12-33 ..... ALL/GEN J
12-34 ..... ALL/GEN J
12-35 ..... ALL/GEN J
12-36 ..... ALL/GEN J
12-37 ..... ALL/GEN J
12-38 ..... ALL/GEN J
12-39 ..... ALL/GEN J
12-40 ..... ALL/GEN J
12-41 ..... ALL/GEN J
12-42 ..... ALL/GEN J
12-43 ..... ALL/GEN J
12-44 ..... ALL/GEN J

12-45 ..... ALL/GEN J
12-46 ..... ALL/GEN J
12-47 ..... ALL/GEN J
12-48 ..... ALL/GEN J
12-49 ..... ALL/GEN J
12-50 ..... ALL/GEN J
12-51 ..... ALL/GEN J
12-52 ..... ALL/GEN J
12-53 ..... ALL/GEN J
12-54 ..... ALL/GEN J
12-55 ..... ALL/GEN J
12-56 ..... ALL/GEN J
12-57 ..... ALL/GEN J
12-58 ..... ALL/GEN J
12-59 ..... ALL/GEN J
12-60 ..... ALL/GEN J
12-61 ..... ALL/GEN J
12-62 ..... ALL/GEN J
12-63 ..... ALL/GEN J
12-64 ..... ALL/GEN J
12-65 ..... ALL/GEN J
12-66 ..... ALL/GEN J
12-67 ..... ALL/GEN J
12-68 ..... ALL/GEN J
12-69 ..... ALL/GEN J
12-70 ..... ALL/GEN J
12-71 ..... ALL/GEN J
12-72 ..... ALL/GEN J
12-73 ..... ALL/GEN J
12-74 ..... ALL/GEN J
12-75 ..... ALL/GEN J
12-76 ..... ALL/GEN J
12-77 ..... ALL/GEN J
12-78 ..... ALL/GEN J
12-79 ..... ALL/GEN J
12-80 ..... ALL/GEN J
12-81 ..... ALL/GEN J
12-82 ..... ALL/GEN J
12-83 ..... ALL/GEN J
12-84 ..... ALL/GEN J
12-85 ..... ALL/GEN J
12-86 ..... ALL/GEN J
12-87 ..... ALL/GEN J
12-88 ..... ALL/GEN J
12-89 ..... ALL/GEN J
12-90 ..... ALL/GEN J
12-91 ..... ALL/GEN J
12-92 ..... ALL/GEN J
12-93 ..... ALL/GEN J
12-94 ..... ALL/GEN J
12-95 ..... ALL/GEN J
12-96 ..... ALL/GEN J
12-97 ..... ALL/GEN J
12-98 ..... ALL/GEN J
12-99 ..... ALL/GEN J
12-100 ..... ALL/GEN J
12-101 ..... ALL/GEN J
12-102 ..... ALL/GEN J
12-103 ..... ALL/GEN J
12-104 ..... ALL/GEN J
12-105 ..... ALL/GEN J
12-106 ..... ALL/GEN J
12-107 ..... ALL/GEN J
12-108 ..... ALL/GEN J
12-109 ..... ALL/GEN J
12-110 ..... ALL/GEN J
12-111 ..... ALL/GEN J
12-112 ..... ALL/GEN J
12-113 ..... ALL/GEN J
12-114 ..... ALL/GEN J

CONTENTS PAGE

1 APU/HYD 1-1

APU/HYD SCHEMATIC 1-3

1.1 APU
- 1.1a APU FUEL QTY ↓, APU FUEL TK P ↑↓ 1-6
- 1.1b APU FUEL T: TK SURF ↓, TK HTR ↑↓, TEST LN 1(2) ↑↓, FEED LN ↑↓, PUMP IN ↑↓, PUMP DRN LN 1(2) ↑↓, PUMP OUT ↑↓, PUMP BYP LN ↑↓, GG SUPPLY LN ↑↓; H2O LN INJ ↑↓ 1-7
- 1.1c APU FUEL TK VLV T ↑↓ 1-9

1.2 HYD
- 1.2a RSVR P ↓, ACCUM P ↓ 1-10
- 1.2b HYD RSVR QTY ↑↓ 1-11

1.3 THERMAL HYD
- 1.3a HYD CIRC PUMP P ↓ 1-14

APU/HYD SSR
- APU/HYD SSR-1 CIRC PUMP PRESS XDCR FAILURE WORKAROUND 1-16
- SSR-2 SIMULTANEOUS CIRC PUMP ON/GPC OPS 1-16
- SSR-3 CIRC PUMP XDCR FAILURE WORKAROUND 1-17
- SSR-4 APU FUEL TK P XDCR FAILURE WORKAROUND 1-19
- SSR-5 LEAK (NONISOLATABLE) (CIL) 1-20
- SSR-6 FU TK SURF T XDCR FAILURE WORKAROUND 1-22

2 COMM 2-1

2.1 AUDIO
- 2.1a NO AUDIO (MULTIPLE PNL OR OTHER SUBSYSTEM) 2-4

2.2 GCIL/KU COMM
- 2.2a 'S76 GCIL FAIL' – GCIL CONFIG: PNL,
  'S76 KU-GMBL A TEMP' – KU GMBL TEMP A ↑,
  'S76 KU-GMBL B TEMP' – KU GMBL TEMP B ↑,
  'S76 KU-GYRO TEMP' – KU GYRO TEMP ↑,
  'S76 KU-XMTR TEMP' – KU PA TEMP ↑ 2-6

2.3 S-BD/UHF
- COMM S-BD PM SCHEMATIC 2-8
- UPLINK/DOWNLINK COMMUNICATIONS TABLE 2-10
- 2.3a NO S-BD COMM: TDRS 2-11
- 2.3b 'ANTENNA' 2-15
- 2.3c NO UHF VOICE (MULTI PNLS) 2-16

2.4 S62 BCE BYP
- PL COMM MALFUNCTION POINTS SCHEMATIC 2-18
- 2.4a 'S62 BCE BYP OFA' 2-19
- 2.4b OFB' 2-21
- 2.4c OA' 2-23
- 2.4d PL' 2-25
- 2.4e PDI' 2-27

2.4f 'S62 BCE BYP PSP 1(2)' 2-28
2.4g 'S62 PDI DECOM FAIL' 2-30

2.5 PSP BIT
2.5a PSP BIT AND/OR FRAME SYNC LOCK FAIL 2-32

2.6 OI DSC
2.6a OI DSC LOSS 2-34

COMM SSR
COMM SSR-1 LOSS OF ALL VOICE COMM 2-36
EXPLANATORY NOTES FOR OI MDM/DSC LOSS SSRs 2-38
COMM SSR-10 OI MDM LOST: OF1 2-39
SSR-11 OF2 2-40
SSR-12 OF3 2-41
SSR-13 OF4 2-43
SSR-14 OA1 2-44
SSR-15 OA2 2-45
SSR-16 OA3 2-46
SSR-17 OI DSC LOST: OF1 2-47
SSR-18 OF2 2-48
SSR-19 OF3 2-49
SSR-20 OF4 2-50
SSR-21 OL1 2-51
SSR-22 OL2 2-52
SSR-23 OR1 2-53
SSR-24 OR2 2-54
SSR-25 OM1 2-55
SSR-26 OM2 2-56
SSR-27 OA1 2-57
SSR-28 OA2 2-58
SSR-29 OA3 2-59
SSR-30 OM3 2-60

3 RESERVED SECTION 3-1

4 C/W 4-1

4.1 PRIMARY C/W
4.1a PRIMARY C/W 4-4
4.1b ALL ANNUN LTS ON EXCEPT BACKUP C/W ALARM 4-7
4.1c NONRESETTABLE MA LT OR TONE 4-8
4.1d PRI C/W SYS ANNUNCIATES FALSE ALARM 4-11

4.2 OTHER C/W
4.2a NONRESETTABLE BACKUP C/W ALARM LT 4-22
4.2b MA LT & C/W TONE – NO ANNUN LT 4-23
4.2c KLAXON – NO RAPID dP/dT 4-27
4.2d SIREN – NO SMOKE DETN LT 4-29
4.2e PRI C/W SYS FAILS TO ANNUNCIATE OUT-OF-LIMIT PARAM 4-30

5 DPS 5-1

COMPUTER DATA BUS NETWORK 5-3

5.1 GPC
5.1a CS SPLIT 5-5
5.1b 'BFS GPC FAIL (BITE)' (ORBIT)..... 5-10

5.2 MMU/MTU
5.2a 'I/O ERROR MMU 1(2)' 5-12
5.2b 'OFF/BUSY MMU 1(2)'..... 5-16
5.2c RESERVED..... not used
5.2d 'TIME MTU' 5-18
5.2e RESERVED..... not used
5.2f CHECKPOINT FAIL 5-20

5.3 MDM
5.3a 'I/O ERROR FF(FA)'..... 5-22
5.3b 'BCE STRG X' 5-24
5.3c 'I/O ERROR PL1(2)', 'MDM OUTPUT PL1(2)' 5-26
5.3d RESERVED..... not used
5.3e 'I/O ERROR FLEX' 5-28
5.3f 'BCE BYP FLEX' 5-30
5.3g PL1(2)' 5-32

5.4 RESERVED

5.5 PCM I/F
5.5a 'I/O ERROR PCM' (SM) 5-34
5.5b PCM' (BFS)..... 5-36
5.5c D/L' 5-37

5.6 MEDS
MEDS OVERVIEW..... 5-39
5.6a GPC 'I/O ERROR CRT 1(2,3,4)', 'BITE FAIL IDP 1(2,3,4)', 'IDP DEFAULT LOAD FAIL', 'VM LOAD IN PROGRESS' 5-40
5.6b 'CRT BITE 1(2,3,4)' 5-43
5.6c ABNORMAL RESPONSE FROM KEYBOARD INPUT..... 5-45
5.6d BIG 'X' ACROSS MDU AND/OR 'POLL FAIL' 5-47
5.6e MDU ANOMALY..... 5-50
5.6f ADC ANOMALY 5-53
5.6g MDU IS AUTONOMOUS..... 5-56

GPC FAIL RECOVERY PROCEDURES
GPC FRP-1 SINGLE GPC FAIL 5-58
FRP-2 RESERVED..... not used
FRP-3 BFS GPC FAIL RECOVERY (ENTRY)..... 5-62
FRP-4 PASS RECOVERY AFTER BFS ENGAGE (ASCENT/ORBIT/ENTRY) 5-64
FRP-5 RESERVED..... not used
FRP-6 RESERVED..... not used
FRP-7 DPS RECONFIG FOR LOSS OF AV BAY COOLING (ASCENT/ORBIT)..... 5-83

DPS SSR
DPS SSR-1 GPC HDW INITIATED MEM DUMP..... 5-90
SSR-2 S/W INITIATED MEM DUMP..... 5-91

DPS SSR-3 GNC REASSIGNMENT 5-92
SSR-4 SM REASSIGNMENT 5-93
SSR-5 FREEZE-DRY REASSIGNMENT 5-95
SSR-6 CONTINGENCY/VARIABLE S/W INITIATED MEM DUMP 5-96
SSR-7 GPC IPL MENU OPTION (PASS/BFS) 5-97
SSR-8 IPL-PASS 5-99
SSR-9 DEU IPL-PASS/BFS 5-100

6 ECLS 6-1

BFS FSM INDEX 6-3

6.1 AV BAY/CABIN AIR
6.1a 'S66 CABIN FAN' – CABIN FAN ΔP 6-4
6.1b 'S66 AV BAY 1(2,3) TEMP' – AV BAY TEMP 6-5
6.1c 'S66 AV BAY 1(2,3) FAN' – AV BAY FAN ΔP 6-6
6.1d 'S66 IMU FN SPD A(B,C)'
'S66 IMU FAN DP' – CABIN IMU 6-8

6.2 CABIN ATM
PRESSURE CONTROL SYSTEM SCHEMATIC 6-12
6.2a (see Note A) – O2(N2) FLOW ↑ 6-13
6.2b (see Note A) – CABIN PRES ↑↓ 6-15
6.2c 'S66 CABIN PPO2 A(B)' – PPO2 ↑↓ 6-21
6.2d 'S66 CAB N2 REG P 1(2)' – N2 REG P ↑↓ 6-24
6.2e 'S66 CAB O2 REG P 1(2)' – O2 REG P ↑ 6-25
6.2f RESERVED ..... not used
6.2g 'S66 CAB N2 QTY 1(2)' – N2 QTY ↓ 6-26
6.2h RESERVED ..... not used
6.2i 'S66 CAB H2O N2 P 1(2)' – H2O TK N2 P ↓ 6-27
6.2j 'S66 HUMID SEP A(B)' – HUMID SEP ↓ 6-29

6.3 RESERVED

6.4 FREON/H2O LOOP
EVAPORATORS SCHEMATIC 6-30
FREON FLOW SCHEMATIC 6-31
H2O LOOPS SCHEMATIC 6-32
6.4a (see Note A) – EVAP OUT T ↑↓ 6-33
6.4b (see Note A) – FREON FLOW LOW 6-38
6.4c RESERVED ..... not used
6.4d 'S88 FRN PL HX 1(2)' – FRN FLOW PROP VLV, PL HX FLOW ↓ 6-42
6.4e 'S88 FRN AFT CP 1(2)' – AFT COLDPLATE FLOW ↓ 6-44
6.4f 'S88 FREON QTY 1(2)' – ACCUM QTY ↓ 6-45
6.4g 'S88 EVAP HI LD TEMP' – EVAP TEMP HI LOAD INBD (OUTBD) DUCT(NOZ) ↑↓ 6-47
6.4h 'S88 EVAP TOP TEMP' – EVAP TOPPING DUCT T FWD (AFT), L(R) ↑↓ 6-48
6.4i 'S88 EVAP TOP TEMP' – EVAP TOPPING L(R) NOZ ↑↓ 6-49
6.4j 'S88 EVAP FDLN T A(B)' – EVAP FDLN TEMP FWD(MID, AFT,TOP,HI LOAD,ACCUM) ↑↓ 6-50
6.4k RESERVED ..... not used
6.4l 'S88 H2O PUMP P 1(2)'
'SM2 H2O PUMP P 1(2)' – H2O PUMP P 1(2) ↑↓ 6-51

NOTE A
The identified MAL represents a support procedure that is entered from other procedures or on MCC call

6.4m 'S88 H2O PUMP P 1(2)' – H2O PUMP ΔP 1(2) ↑↓ 6-55
6.4n 'S88 H2O LOOP 1(2) QTY' – H2O ACCUM QTY 1(2) ↑↓..... 6-58
6.4o 'S88 H2O LOOP 1(2) FLOW' – H2O ICH FLOW 1(2) ↓..... 6-60
6.4p 'S88 H2O LOOP 1(2) TEMP' – H2O ICH OUT T 1(2) ↓,
CAB HX IN T 1(2) ↓,
PUMP OUT T 1(2) ↑↓..... 6-62

6.5 SPLY H2O
SUPPLY H2O SCHEMATIC..... 6-66
SUPPLY H2O STORAGE SCHEMATIC 6-68
6.5a RESERVED..... not used
6.5b RESERVED..... not used
6.5c 'S66 SPLY H2O TEMP'
'S66 WASTE H2O PRES'
'S66 WASTE H2O TEMP' – WASTE H2O PRESS ↑↓,
SUPPLY(WASTE) H2O DMP
LN T ↑↓, SUPPLY(WASTE)
NOZ T A(B) ↑ 6-69
6.5d 'S66 SPLY H2O PRES' – H2O SPLY PRESS ↓↑ 6-71

6.6 RESERVED

6.7 EXT A/L
6.7a EXT A/L H2O LN T ↑↓ 6-72
6.7b STRUC T ↑↓..... 6-73

6.8 CO2
6.8a RESERVED..... not used
6.8b 'S66 CAB PPCO2' – PPCO2 ↑ 6-75

ECLS SSR
ECLS SSR-1 RESERVED ..... not used
SSR-2 FES CORE FLUSH PROCEDURE..... 6-76
SSR-3 RECONFIG TO ALT PCS SYS (AUTO OPS)..... 6-78
SSR-4 H2O LOOP 6-81
SSR-5 FES RESTART 6-83
SSR-6 CABIN EQUIP PWRDN 6-84
SSR-7 FLASH EVAPORATOR CHECKOUT 6-85
SSR-8 SMALL CABIN-LEAK ISOL..... 6-87
SSR-9 RAD ISOL RECOVERY 6-89
SSR-10 H2O PUMP OPS VIA GPC 6-90
SSR-11 FES FEEDLINE PURGE..... 6-91
SSR-12 AV BAY FIRE RECOVERY/RECONFIG..... 6-93
SSR-13 ON-ORBIT RAD CNTLR SWITCH..... 6-97
SSR-14 ECLS COMPUTATION INHIBIT 6-98
SSR-15 RESERVED not used
SSR-16 FREE WATER LEAKING FROM HUM SEP 6-99
SSR-17 WATER TANK REPRESS/DEPRESS 6-100
SSR-18 SMALL SUPPLY H2O LEAK ISOL 6-101
SSR-19 WASTE H2O LEAK ISOL..... 6-103
SSR-20 SMALL SUPPLY H2O LEAK ISOL – WATER TRANSFER
CONFIGURATION..... 6-105
SSR-21 MANUAL RAD BYPASS VALVE CONTROL..... 6-107

ECLS FRP
ECLS FRP-1 MANUAL CABIN ATMOSPHERE MANAGEMENT 6-108
FRP-2 POST-FIRE CABIN CLEANUP CONTINUATION..... 6-109
FRP-3 FIRE/HAZ SPILL O2 CONTROL..... 6-111
FRP-4 O2 LEAK CONTROL 6-114

ECLS FRP-5 CABIN AMMONIA CONTAMINATION CLEANUP (ISS AMMONIA LEAK) 6-117

7 EPS 7-1

BFS FSM INDEX 7-6

7.1 FC REAC/PMP/STACK T

7.1a RESERVED ..... not used
7.1b 'S69 FC STACK T 1(2,3) ↑↓' – FC STACK T 1(2,3) ↑↓ 7-8
7.1c 'S69 FC H2 PUMP 1(2,3)' – H2 PUMP ↑↓ 7-12

7.2 FC PURGE

7.2a RESERVED ..... not used
7.2b 'FC PURGE TEMP' – FC PURGE TEMP 7-14
7.2c 'FC PURGE SEQ' – FC PURGE SEQ 7-15

7.3 FUEL CELL

7.3a 'S69 FC PH 1(2,3)'
'S69 H2O LN PH' – FC/H2O LINE pH HIGH 7-16
7.3b 'S69 FC AMPS 1(2,3)'
'S67 MAIN BUS V A(B,C)'
'S69 FC VOLTS 1(2,3)' – FUEL CELL VOLTS ↑↓, FUEL CELL AMPS ↑↓, MAIN BUS V A(B,C) ↑↓ 7-18
7.3c RESERVED ..... not used
7.3d 'S69 FC EXIT T 1(2,3)' – FUEL CELL EXIT T ↑↓ 7-23
7.3e 'S69 FC COOL P 1(2,3)' – FUEL CELL COOL P ↑↓ (CIL) 7-26
7.3f 'S69 FC H2O PRI 1(2,3)' – FUEL CELL H2O LN T ↑↓ 7-31
7.3g 'S69 FC H2O RLF 1(2,3)'
'S69 FC H2O RLF LINE' – FUEL CELL H2O RLF VLV T ↑↓, FUEL CELL H2O RLF LINE T ↑↓ 7-32
7.3h RESERVED ..... not used
7.3i 'S69 FC PRG LN O2(H2)' – FUEL CELL O2(H2) PURGE LN T ↑ 7-33
7.3j 'S69 FC O2(H2) FLOW 1(2,3)' – FUEL CELL O2(H2) FLOW ↑ 7-34
7.3k 'S69 FC H2O RLF HTR' – FUEL CELL RELIEF HTR SW FAIL 7-37
7.3l 'S69 FC H2O ALT' – FUEL CELL ALT H2O RLF T ↑↓ 7-38
7.3m 'S69 DELTA AMPS 1(2,3) ↑↓' – FC DELTA AMPS ↑↓ 7-39

7.4 RESERVED

7.5 AC VOLTAGE/OVLD

7.5a 'S67 AC VOLTS 1(2,3)' – AC VOLTS 1(2,3) ↓↑ 7-42
7.5b 'S67 AC OVLD 1(2,3) ↓' – AC OVLD 1(2,3) ↓ 7-47
7.5c 'S67 AC AMPS 1(2,3)' – AC BUS CURRENT HIGH 7-51

7.6 CRYO

CRYO TABLE A – CRYO HEATER SWITCH PROCEDURAL NOMENCLATURE 7-54
7.6a RESERVED ..... not used

7.6b 'S68 O2(H2) CNTL P 1(2,3,4,5)'
'S68 O2(H2) TK P 1(2,3,4,5)' – CRYO O2(H2) PRES,TK P ↓↑ 7-55
7.6c RESERVED..... not used
7.6d 'S68 O2(H2) MANF PRESS' – O2(H2) MANF P ↓..... 7-59
7.6e RESERVED..... not used
7.6f 'S68 H2 HTR T 1(2,3,4,5)' – H2 HTR T..... 7-60
7.6g RESERVED..... not used
7.6h RESERVED..... not used
7.6i RESERVED..... not used
7.6j RESERVED..... not used
7.6k 'S68 O2 HTR TRP 1(2,3,4,5)' – O2 HTR CUR SNSR = TRIP 7-61
7.6l 'S68 O2 HTR T 1(2,3,4,5)' – O2 HTR T 7-62

7.7 SSPTS PTU (OPCU, APCU)
7.7a 'S179 OPCU 1(2) CH A(B) AMPS' – OPCU CH AMPS ↑ 7-64
7.7b 'S179 OPCU 1(2) CH A(B) VOLT' – OPCU CH OUTPUT VOLTS ↓..... 7-65
7.7c 'S179 OPCU 1(2) CH A(B) TEMP'
'S179 APCU 1(2) TEMP' – OPCU CH TEMP ↑, APCU TEMP ↑ 7-66
7.7d 'S179 OPCU 1(2) CH A(B) O OV' – OPCU CH OUT OVER VOLT (O OV) TRIP 7-67
7.7e 'S179 OPCU 1(2) CH A(B) I OC'
'S179 OPCU 1(2) CH A(B) I UV'
'S179 OPCU 1(2) CH A(B) O UV' – OPCU TRIP..... 7-69
7.7f 'SM 179 APCU 1(2) OUT VOLT' – APCU 1(2) OUT VOLTS ↑↓..... 7-70
7.7g 'SM 179 APCU 1(2) OUT AMPS'
'SM 179 APCU 1(2) IN AMPS' – APCU OUT AMPS ↑, APCU IN AMPS ↑ 7-71
7.7h 'SM 179 APCU 1(2) OUT UV'
'SM 179 APCU 1(2) OUT OV'
'SM 179 APCU 1(2) OUT OC'
'SM 179 APCU 1(2) IN UV' – APCU TRIP 7-72

EPS SSR
EPS SSR-1 FC MONITORING SYS (FCMS) OPS 7-74
SSR-2 RESERVED..... not used
SSR-3 FC SHUTDN C&W LIMIT CHANGE..... 7-76
SSR-4 FC STANDBY..... 7-80
SSR-5 RESERVED..... not used
SSR-6 FC RESTART..... 7-83
SSR-7 TWO-PHASE FAN START PROCEDURE..... 7-91
SSR-8 BUS LOADING – LRU SELECT..... 7-97
SSR-9 RESERVED..... not used
EXPLANATORY NOTES FOR BUS LOSS SSRs..... 7-98
EPS SSR-10 MNA DA1 (CIL) 7-102
SSR-11 FPC1 (CIL) 7-112
SSR-12 MPC1 7-115
SSR-13 APC1..... 7-117
SSR-14 APC4..... 7-118
SSR-15 FLC1 (CIL)..... 7-121
SSR-16 ALC1 7-122
SSR-17 FMC1..... 7-124
SSR-18 MMC1..... 7-124
SSR-19 MMC3..... 7-125
SSR-20 AMC1 7-126
SSR-21 R14..... 7-127
SSR-22 O14&A8..... 7-128
SSR-23 O14 7-129
SSR-24 R1A1 7-131
SSR-25 A6&A14 7-131

EPS	SSR-26	MNA ML86B	7-132
	SSR-27	RESERVED	not used
	SSR-28	RESERVED	not used
	SSR-29	MNA A7	7-134
	SSR-30	MNB DA2 (CIL)	7-136
	SSR-31	FPC2 (CIL)	7-145
	SSR-32	MPC2	7-149
	SSR-33	APC2	7-151
	SSR-34	APC5	7-152
	SSR-35	FLC2 (CIL)	7-155
	SSR-36	ALC2	7-156
	SSR-37	FMC2	7-158
	SSR-38	MMC1	7-158
	SSR-39	MMC2	7-159
	SSR-40	MMC3	7-160
	SSR-41	MMC4	7-160
	SSR-42	AMC2	7-161
	SSR-43	R14	7-162
	SSR-44	O15&A8	7-162
	SSR-45	O15	7-163
	SSR-46	R1A1	7-165
	SSR-47	A6&A14	7-166
	SSR-48	ML86B	7-167
	SSR-49a	RESERVED	not used
	SSR-49b	RESERVED	not used
	SSR-49c	MNB A7	7-169
	SSR-50	MNC DA3 (CIL)	7-170
	SSR-51	FPC3 (CIL)	7-178
	SSR-52	MPC3	7-181
	SSR-53	APC3	7-183
	SSR-54	APC6	7-184
	SSR-55	FLC3 (CIL)	7-187
	SSR-56	ALC3	7-188
	SSR-57	FMC3	7-190
	SSR-58	MMC2	7-190
	SSR-59	MMC4	7-191
	SSR-60	AMC3	7-192
	SSR-61	R14	7-193
	SSR-62	O16RJD	7-194
	SSR-63	O16	7-194
	SSR-64	R1A1	7-196
	SSR-65	A14	7-196
	SSR-66	ML86B	7-196
	SSR-70	ESS1BC DA1 (CIL)	7-198
	SSR-71	FP&LC1	7-200
	SSR-72	MPC1 (CIL)	7-200
	SSR-73	ML86B	7-201
	SSR-74	FD (CIL)	7-202
	SSR-75	O13&R14	7-203
	SSR-80	ESS2CA DA2 (CIL)	7-205
	SSR-81	FP&LC2	7-207
	SSR-82	MPC2 (CIL)	7-207
	SSR-83	FD (CIL)	7-208
	SSR-84	O13&R14	7-209
	SSR-85	ML86B	7-210
	SSR-90	ESS3AB DA3 (CIL)	7-211
	SSR-91	FP&LC3	7-212
	SSR-92	MPC3 (CIL)	7-213
	SSR-93	FD (CIL)	7-214

EPS SSR-94 ESS3AB O13 7-215
SSR-95 ML86B 7-215
SSR-100 CNTLAB1 7-216
SSR-101 CNTLAB2 7-220
SSR-102 CNTLAB3 7-224
SSR-103 CNTLBC1 7-227
SSR-104 CNTLBC2 7-231
SSR-105 CNTLBC3 7-236
SSR-106 CNTLCA1 7-239
SSR-107 CNTLCA2 7-243
SSR-108 CNTLCA3 7-247
SSR-109 CONTROL BUS – PANEL WIRING MATRIX 7-250
SSR-110 AC1 7-252
SSR-111 AC1 ΦA 7-256
SSR-112 ΦB 7-258
SSR-113 ΦC 7-259
SSR-114 FMC1 7-262
SSR-115 MMC1 7-262
SSR-116 MMC3 7-262
SSR-117 AMC1 7-263
SSR-120 AC2 7-263
SSR-121 AC2 ΦA 7-267
SSR-122 ΦB 7-269
SSR-123 ΦC 7-271
SSR-124 FMC2 7-273
SSR-125 MMC1 7-273
SSR-126 MMC2 7-273
SSR-127 MMC3 7-274
SSR-128 MMC4 7-274
SSR-129 AMC2 7-274
SSR-130 AC3 7-275
SSR-131 AC3 ΦA 7-278
SSR-132 ΦB 7-280
SSR-133 ΦC 7-282
SSR-134 FMC3 7-284
SSR-135 MMC2 7-284
SSR-136 MMC4 7-285
SSR-137 AMC3 7-285
SSR-140 AC1 RCS/FMC1 7-286
SSR-141 AC2 RCS/FMC2 7-286
SSR-142 AC3 RCS/FMC3 7-286
SSR-143 AC1 POD/AMC1 7-287
SSR-144 AC2 POD/AMC2 7-287
SSR-145 AC3 POD/AMC3 7-288
SSR-146 MNA/B POD/AMC1 7-288
SSR-147 MNB/C POD/AMC2 7-289
SSR-148 MNC/A POD/AMC3 7-289
SSR-150 ALTERNATE PRIMARY PAYLOAD PWR 7-290
SSR-200 AC PWR TRANSFER CABLE 7-291
SSR-201 CRYO HTR MANUAL OPS 7-303
SSR-202 PREFLIGHT TEST BUS USE 7-305
SSR-203 APCU RECOVERY 7-313
SSR-204 OPCU FAULT ISOLATOR TRIP RECOVERY 7-314

8 GNC 8-1

GNC FRP
GNC FRP-1 IMU REFERENCE RECOVERY AFTER GNC GPCs IPL'D 8-4
GNC FRP-2 RECOVERY 8-6
GNC FRP-3 IMU RECOVERY WITH AT LEAST ONE IMU AS GOOD REFERENCE 8-7

GNC SSR

GNC SSR-1 ACTIVATE IMU(s) 8-10
GNC SSR-2 MATRIX (TORQUE) ALIGN USING HUD STAR DATA 8-10
GNC SSR-3 ALIGN USING STR TRKR STAR DATA..... 8-12
GNC SSR-4 IMU DATA..... 8-12
GNC SSR-5 RESERVED..... not used
GNC SSR-6 RESERVED..... not used
GNC SSR-7 RESERVED..... not used
GNC SSR-8 POSITION OMS THROUGH CG..... 8-13
GNC SSR-9 RM DESELECTION OF FAILED OPEN THC CONTACT 8-14

9 MECH 9-1

RADIATOR POWER CONFIGURATION 9-2
PLBD POWER/MDM CONFIGURATION..... 9-3

9.1 PLB DOORS
9.1a NO MOTION/'OP/CL' NOT BLANK/'O' OR 'C'/'R' MICROSW = 1 AFTER DRIVE INITIATION 9-4
9.1b '? ' DISPLAYED IN 'OP/CL' COLUMN 9-6
9.1c PBD SEQ FAIL..... 9-7
9.1d LATCH GANG NOT 'OP' IN SINGLE MTR TIME 9-8
9.1e 'CL' IN SINGLE MTR TIME 9-10
9.1f DOOR NOT 'OP' IN SINGLE MTR TIME..... 9-12
9.1g 'CL' IN SINGLE MTR TIME..... 9-15
9.1h PBD CONFIG 9-17

9.2 RADIATOR
9.2a RAD LAT CNTL PORT(STBD) tb NOT LAT IN 60 SEC OR REL IN 30 SEC 9-18
9.2b RAD CNTL PORT(STBD) tb NOT DPY OR STO WITHIN 50 SEC AND NO MOTION 9-20

9.3 KU ANT
9.3a KU ANT tb NOT DPY IN 46 SEC 9-22
9.3b NOT STO IN 46 SEC 9-23
9.3c GIMBAL ANGLES INCORRECT AFTER 50 SEC 9-24

9.4 MEC ROEU
9.4a ROEU DEMATE – tb NOT REL, MICROSW IND NOT NOMINAL, OR SINGLE MTR DRIVE TIME..... 9-26
9.4b ROEU MATE – tb NOT LAT, IND NOT NOMINAL, OR SINGLE MTR DRIVE TIME..... 9-28
9.4c ROEU RELEASE – tb NOT REL, IND NOT NOMINAL, OR SINGLE MTR DRIVE TIME..... 9-30
9.4d ROEU LATCH – tb NOT LAT, IND NOT NOMINAL, OR SINGLE MTR DRIVE TIME..... 9-32
9.4e ROEU RELAX – tb NOT NOMINAL, IND NOT NOMINAL, OR SINGLE MTR DRIVE TIME..... 9-34
9.4f ROEU ELEC CONT – tb NOT NOMINAL OR IND NOT NOMINAL 9-36

MECH SSR

MECH SSR-1 PORT(STBD) RAD OPS..... 9-38
SSR-2 CONTINGENCY PLBD CLOSURE..... 9-39
SSR-3 SIMULTANEOUS PLBD CL..... 9-47
SSR-4 PLBD CHECKOUT AFTER MDM CHANGEOUT 9-52
SSR-5 CONTINGENCY KU-BD ANT DIRECT STOW (CIL)..... 9-53
SSR-6 PLBD CL MICROSW FAILURE WORKAROUND 9-54
SSR-7 KU-BAND ANTENNA DPY/STO MICROSW FAILURE..... 9-56
SSR-8 RAD DPY/STO MICROSW FAILURE WORKAROUND..... 9-58

10 RCS 10-1

RCS SCHEMATIC 10-3

10.1 RCS JET/DLMA/PWR
10.1a 'L(R,F) RCS (L,U,D,R,A,F) JET', 'F(L,R) RCS TK P', 'F(L,R) RCS LEAK' 10-4
10.1b 'RM DLMA MANF' 10-10
10.1c 'RCS PWR FAIL' 10-11

10.2 RCS VLV MISCOMP
10.2a RCS VLV tb – bp 10-12
10.2b tb AND sw POSITION DISAGREE 10-15

10.3 RCS PRPLT THERM/SYS
10.3a 'S89 PRPLT THRM RCS' 10-16
10.3b 'G23 RCS SYSTEM F(L,R)' 10-17

RCS SSR
RCS SSR-1 RCS MIXED XFEED MEM READ/WRITE 10-20
SSR-2 HOT FIRE RCS 10-22
SSR-3 AFT RCS MANF/LEG PRESS, READ/WRITE 10-25
SSR-4 STAGED, MANF REPRESS 10-27
SSR-5 LEAKING RCS PRPLT/He BURN 10-28

11 OMS 11-1

BFS FSM INDEX 11-2

OMS SCHEMATIC 11-3

11.1 L(R) OMS
11.1a 'L(R) OMS TK P' 11-4

11.2 OMS SW/VLV MISCOMP
11.2a OMS VLV tb – bp 11-10
11.2b tb AND sw POSITION DISAGREE 11-12

11.3 OMS PRPLT THERMAL
11.3a 'S89 PRPLT THRM OMS' – PRPLT THRM OMS 11-14
11.3b (see Note A) – THRM PRPLT 11-15
11.3c 'S89 PRPLT THRM POD' – PRPLT THRM POD 11-16

OMS SSR
OMS SSR-1 MIXED XFD: OMS PRPLT FAILURE 11-18

12 PDRS 12-1

12.1 RMS C/W
12.1a C/W LT(S) ON, BUT RMS MSTR ALARM LT/TONE OFF 12-4
12.1b MULTIPLE C/W LTS AND PDRS MSGS 12-5
12.1c C/W MCIU LT 12-6
12.1d ABE LT – S96 PDRS ABE COMM(SY, SP, EP, WP, WY, WR) 12-8
12.1e CONTR ERR LT – S96 PDRS CNTL SY(SP, EP, WP, WY, WR) OR PDRS CNTL POR 12-19

NOTE A
The identified MAL represents a support procedure that is entered from other procedures or on MCC call

12.1f C/W GPC DATA LT OR BCE BYP MCIU 12-22
12.1g CHECK CRT LT 12-24
12.1h – S96 PDRS CKCRT D 12-26
12.1i – S96 PDRS TEST SPA 12-27
12.1j – S96 PDRS CKCRT SY(SP, EP, WP, WY, WR) 12-31
12.1k – S96 PDRS CKCRT EE 12-33
12.1l – S96 PDRS CKCRT T CK 12-36
12.1m – S96 PDRS CKCRT HC 12-37
12.1n – PDRS SLIP SY(SP, EP, WP, WY, WR, ALL) 12-38
12.1o – S94 PDRS WR R 12-39
12.1p – PDRS TEST BRK(C/W, NMI, FS, LOSS) 12-40
12.1q – S96 PDRS CKCRT FS 12-42
12.1r RELEASE LT – PDRS REL 12-43
12.1s – PDRS REL (CUE CARD EXECUTED) 12-44
12.1t DERIGIDIZE LT – PDRS DERIG 12-45
12.1u – PDRS DERIG (CUE CARD EXECUTED) 12-46
12.1v PORT TEMP LT – PDRS TEMP PORT 12-47
12.1w STBD TEMP LT – PDRS TEMP STBD 12-49

12.2 RMS D&C
12.2a MSTR ALARM ON, BUT C/W LT(S) OFF 12-52
12.2b BRAKES – ON, BUT BRAKES tb – OFF 12-53
12.2c – OFF, BUT BRAKES tb – ON 12-54
12.2d SAFING – AUTO, BUT SAFING tb – bp 12-55
12.2e RESERVED ..... not used
12.2f RESERVED ..... not used
12.2g SELECTED MODE ANNUN – OFF OR ALL A8 LTS – OFF 12-57
12.2h SHLDR BRACE REL tb – bp AFTER CMD 12-59

12.3 END EFFECTOR
12.3a EE FAILS TO GRAPPLE CONSTRAINED PL IN EE MODE – AUTO 12-60
12.3b EE FAILS TO RELEASE/DERIGIDIZE CONSTRAINED PL IN EE MODE – AUTO 12-62
12.3c RESERVED ..... not used
12.3d RESERVED ..... not used
12.3e EE FAILS TO RELEASE IN EE MODE – MAN 12-67
12.3f DERIGIDIZE/EXTEND IN MANUAL 12-69
12.3g MULTIPLE EE tb ABNORMAL WHILE NO EE CMDS (EE MODE – AUTO OR MAN) 12-71
12.3h EE tb ABNORMAL WHILE EE MODE OFF 12-73
12.3i CAPTURE SEQ ABORTED (CUE CARD EXECUTED) 12-75
12.3j NO AUTO RELEASE (CUE CARD EXECUTED) 12-76
12.3k NO MANUAL RELEASE (CUE CARD EXECUTED) 12-78
12.3l DERIGID (CUE CARD EXECUTED) 12-80

12.4 RMS OPS
12.4a ARM RESPONSE ABNORMAL IN MANUAL MODES 12-82
12.4b AUTO MODES 12-84
12.4c JOINT RESPONSE ABNORMAL IN SINGLE MODE 12-86
12.4d DIRECT MODE 12-89

12.5 MPM/MRL
12.5a MPM DPY – tb NOT DPY, IND NOT NOMINAL, OR SINGLE MTR DRIVE TIME 12-92
12.5b MPM STO – tb NOT STO, IND NOT NOMINAL, OR SINGLE MTR DRIVE TIME 12-94
12.5c MRL REL – tb NOT REL, IND NOT NOMINAL, OR SINGLE MTR DRIVE TIME 12-96
12.5d MRL LAT – tb NOT LAT, IND NOT NOMINAL, OR SINGLE MTR DRIVE TIME 12-98

12.5e PORT(STBD) RMS RETEN LATCHES R-F-L tb – bp WHEN CRADLED 12-100
12.5f PORT(STBD) RMS RETEN LATCHES R-F-L tb – gray WHEN UNCRADLED 12-101

PDRS SSR
PDRS SSR-1 MPM MTR INHIBIT DISABLE 12-102
SSR-2 RESERVED..... not used
SSR-3 BACKDRIVE TECHNIQUE – JOINT FREE..... 12-103
SSR-4 RMS IFM D&C KIT 12-111

This Page Intentionally Blank

APU/HYD SCHEMATIC 1-3

1.1 APU
1.1a APU FUEL QTY ↓, APU FUEL TK P ↑↓ 1-6
1.1b APU FUEL T: TK SURF ↓, TK HTR ↑↓, TEST LN 1(2) ↑↓, FEED LN ↑↓, PUMP IN ↑↓, PUMP DRN LN 1(2) ↑↓, PUMP OUT ↑↓, PUMP BYP LN ↑↓, GG SUPPLY LN ↑↓; H2O LN INJ ↑↓ 1-7
1.1c APU FUEL TK VLV T ↑↓ 1-9

1.2 HYD
1.2a RSVR P ↓, ACCUM P ↓ 1-10
1.2b HYD RSVR QTY ↑↓ 1-11

1.3 THERMAL HYD
1.3a HYD CIRC PUMP P ↓ 1-14

APU/HYD SSR
APU/HYD SSR-1 CIRC PUMP PRESS XDCR FAILURE WORKAROUND 1-16
SSR-2 SIMULTANEOUS CIRC PUMP ON/GPC OPS 1-16
SSR-3 CIRC PUMP XDCR FAILURE WORKAROUND 1-17
SSR-4 APU FUEL TK P XDCR FAILURE WORKAROUND 1-19
SSR-5 LEAK (NONISOLATABLE) (CIL) 1-20
SSR-6 FU TK SURF T XDCR FAILURE WORKAROUND 1-22

This Page Intentionally Blank

APU/HYD

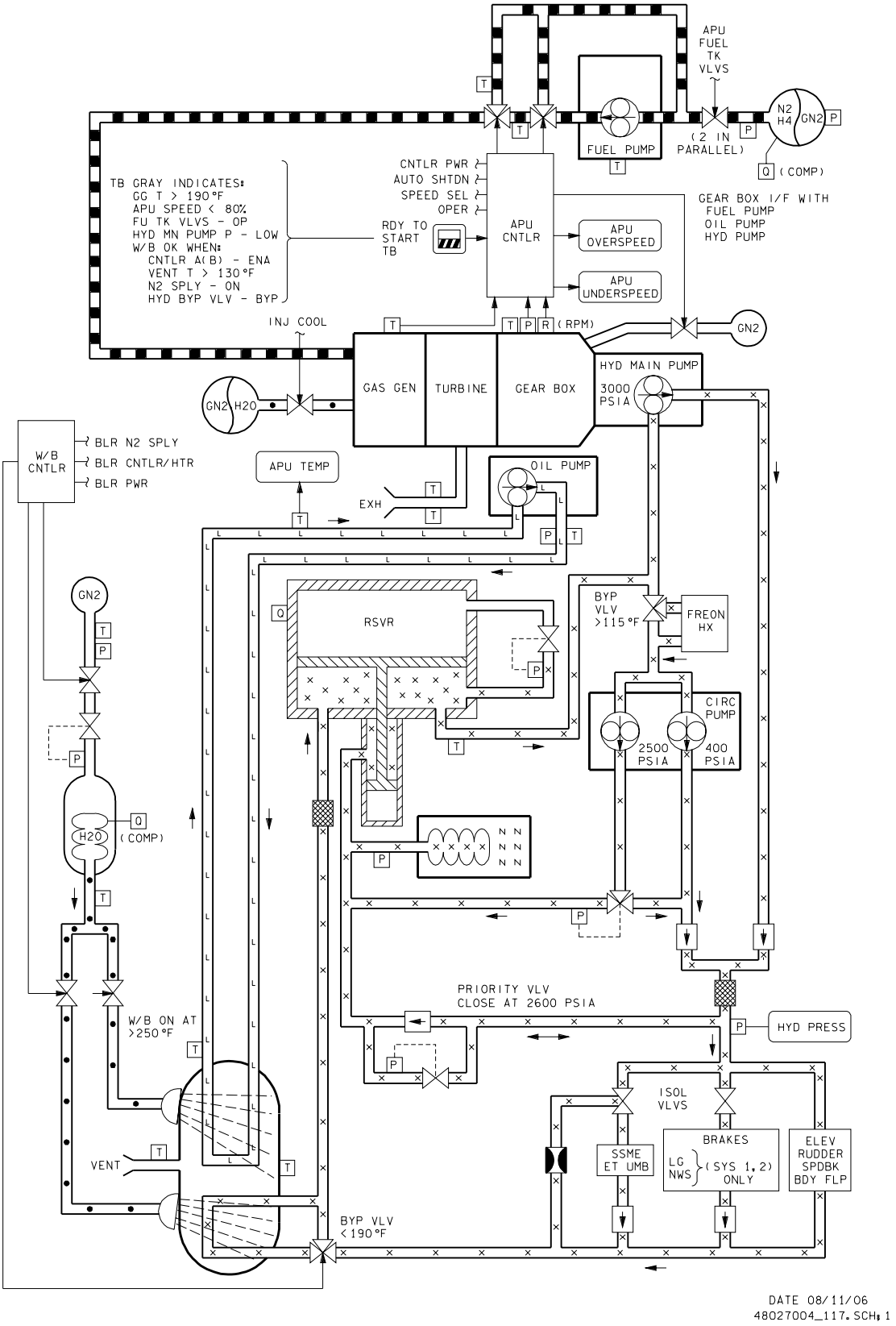
APU FUEL TK VLVS
FUEL PUMP
(2 IN PARALLEL)
N2 H4
GN2
(COMP)
TB GRAY INDICATES:
GG T > 190°F
APU SPEED < 80%
FU TK VLVS - OP
HYD MN PUMP P - LOW
W/B OK WHEN:
CNTLR A(B) - ENA
VENT T > 130°F
N2 SPLY - ON
HYD BYP VLV - BYP
CNTLR PWR
AUTO SHTDN
SPEED SEL
OPER
RDY TO START TB
APU CNTLR
APU OVERSPEED
APU UNDERSPEED
GEAR BOX I/F WITH FUEL PUMP OIL PUMP HYD PUMP
INJ COOL
(RPM)
GAS GEN
TURBINE
GEAR BOX
HYD MAIN PUMP
3000 PSIA
GN2 H2O
W/B CNTLR
BLR N2 SPLY
BLR CNTLR/HTR
BLR PWR
APU TEMP
EXH
OIL PUMP
RSVR
BYP VLV >115°F
FREON HX
CIRC PUMP
2500 PSIA
400 PSIA
H2O
PRIORITY VLV CLOSE AT 2600 PSIA
HYD PRESS
W/B ON AT >250°F
VENT
BYP VLV <190°F
ISOL VLVS
SSME ET UMB
BRAKES
LG NWS
(SYS 1, 2) ONLY
ELEV RUDDER SPDBK BDY FLP
DATE 08/11/06
48027004_117.SCH: 1

This Page Intentionally Blank

This Page Intentionally Blank

APU/HYD

1.1a APU FUEL QTY ↓ APU FUEL TK P ↑↓

SM ALERT

S86 APU FUEL 1(2,3)

If:
APU 1(2,3) FUEL QTY < 50% or
APU 1(2,3) FUEL TK P
< 100 psia
> 350 psia

BFS

SM2 APU 1(2,3)

If:
APU 1(2,3) FUEL QTY < 20%

Nominal Config:
(R2)
APU OPER 1(2,3) – OFF
APU FU TK VLV 1(2,3) – CL

1

SM 86 APU/HYD

- Match indications in chart to determine failure

APU FUEL TK P psia	APU FUEL OUT P psia	APU FUEL QTY %	FAILURE	
'↑' or 500(H)	< 300 > 150	100	XDCR SHIFT OR FAILURE (1)	→ APU/HYD SSR-4
decr	decr	decr	HYDRAZINE OR N2 LEAKING	→ APU/HYD 5 SSR-5 steps 1 to 4
0(L)	0	0	N2 LEAKED OUT	
80 ↓	0	~0	HYDRAZINE LEAKED OUT	
0(L)	< 300 > 150	0	XDCR SHIFT OR FAILURE (1)	→ APU/HYD SSR-4

(1) Puts qty computation in error. FUEL OUT P XDCR may be substituted in fuel qty calculation

APU/HYD

1.1b APU FUEL T: TK SURF ↓, TK HTR ↑↓, TEST LN 1(2) ↑↓, FEED LN ↑↓, PUMP IN ↑↓, PUMP DRN LN 1(2) ↑↓, PUMP OUT ↑↓, PUMP BYP LN ↑↓, GG SPLY LN ↑↓; H2O LN INJ ↑↓

SM ALERT

S88 APU TANK T 1(2,3)

If APU FUEL T:
TK SURF 1(2,3)
< 45 degF or
TK HTR 1(2,3)
< 45 degF
> 140 degF

S88 APU FU LN 1(2,3)

If APU FUEL T:
TEST LN 1 1(2,3)
< 45 degF
> 110 degF or
TEST LN 2 1(2,3)
< 45 degF
> 150 degF or
FEED LN 1(2,3)
< 45 degF
> 120 degF or
PUMP IN 1(2,3)
< 45 degF
> 125 degF or
PUMP DRN LN 1 1(2,3)
< 43 degF
> 95 degF or
PUMP DRN LN 2
< 43 degF 1(3)
< 48 degF 2
> 140 degF 1(3)
> 195 degF 2

S88 APU FU PMP 1(2,3)

If APU FUEL T:
PUMP OUT 1(2,3)
< 50 degF
> 210 degF or
PUMP BYP LN 1(2,3)
< 60 degF
> 200 degF or
GG SPLY LN 1(2,3)
< 60 degF
> 200 degF

S88 APU H2O T 1(2,3)

If:
H2O LN INJ
< 40 degF 1(2,3)
> 110 degF 1(3)
> 190 degF 2

Nominal Config:
(A12)
APU HTR GAS GEN/FU PUMP 1,2,3 (three) – A AUTO(B AUTO)
APU HTR TK/FU LN/H2O SYS 1A,2A,3A (three) – AUTO(OFF) 1B,2B,3B (three) – OFF (AUTO)
(R2)
APU CNTLR PWR 1,2,3 (three) – OFF

1 Deactivate all APU fuel htrs

(A12)
APU HTR TK/FU LN/H2O SYS
- 1A,2A,3A – OFF
- 1B,2B,3B – OFF

APU HTR GAS GEN/FU PUMP
- 1,2,3 – OFF

2 Reactivate unaffected htrs per previous config (Refer to SM FDA THERMAL LIMITS TABLE)

ORB PKT C/L, APU FUEL T

3 SM 88 APU/ENVIRON THERM

Param(s) off-scale high (H) or low (L) (Refer to SM FDA THERMAL LIMITS TABLE) ?

NO → 4 Param(s) high (↑) / Param(s) low (↓)

4 → 5 THERMOSTAT FAILED ON OR HTR SHORT

5 → **CAUTION**

Do not reactivate affected htr sys

YES → 6 XDCR FAILURE

6 → 8 TK SURF low (L) ? (1)

YES → APU/HYD SSR-6

NO → 11
- Continue normal ops

4 → 7
- Switch to alternate htr for affected sys (Refer to SM FDA THERMAL LIMITS TABLE)

Affected temp(s) returns within limits ?

YES → 10 HTR/ THERMOSTAT CKT FAILED OFF

NO → 12 EXTREMELY COLD ENVIRONMENT OR XDCR SHIFT

9
- √MCC for affected htr config

(1) Transducer shift or failure causes erroneous fuel qty computation. Fuel tank temperature constant will be substituted in calculation

SM FDA THERMAL LIMITS TABLE

PARAM	XDCR RANGE degF	LOW LIMIT degF	HIGH LIMIT degF	SWITCHES
FUEL T				(A12) (2)
TK SURF	0-160	45		APU HTR TK/FU
TK HTR	0-160	45	140	LN/H2O/SYS
TEST LN 1	0-250	45	110	1B(2B,3B) –
LN 2	0-250	45	150	AUTO(OFF)
FEED LN	0-250	45	120	1A(2A,3A) –
PUMP IN	0-250	45	125	OFF(AUTO)
DRN LN 1	0-250	43	95	
LN 2	0-250	43	140 (3)(4)	
H2O LN INJ	-75-300	40	110 (5)	
FUEL T				(A12) (2)
PUMP OUT	0-250	50	210	APU HTR GAS GEN/
BYP LN	0-400	60	200	FU PUMP 1(2,3) –
GG SPLY LN	0-450	60	200	B AUTO(A AUTO)

(2) If subsequent failure occurs in remaining htr ckt, consult MCC

(3) SYS 2 upper limit is 195 degF; lower limit is 48 degF

(4) Because of xdcr location, FU PUMP DRN LN T1 and T2 may not be equal. Generally, T2 will be higher than T1, which is more evident on SYS 2

(5) SYS 2 upper limit is 190 degF

1.1c APU FUEL TK VLV T ↑↓

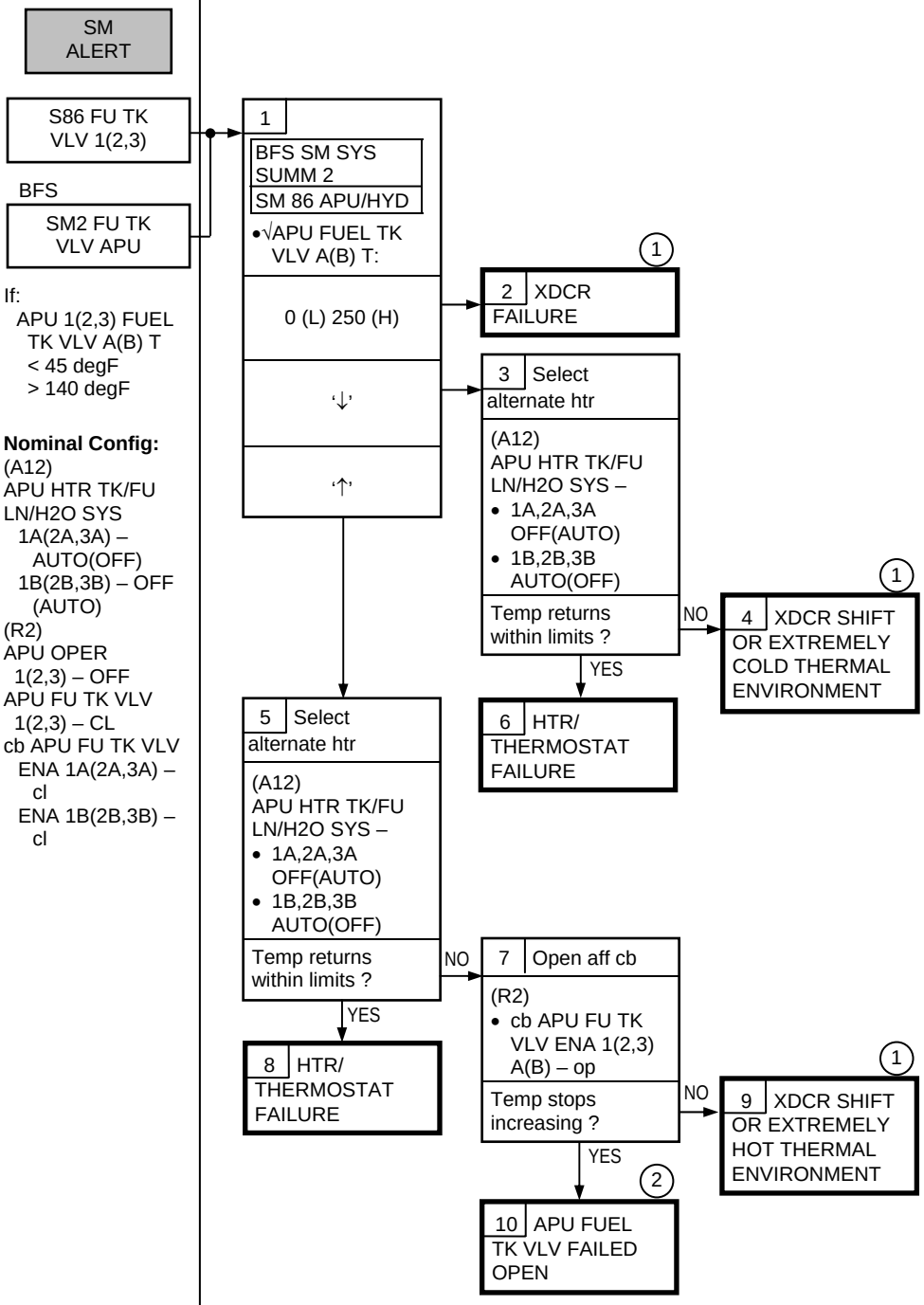

APU/HYD

1.2a RSVR P ↓, ACCUM P ↓

SM ALERT

S86 RSVR/ACC P 1(2,3)

If:
HYD 1(2,3) ACCUM 32 < P < 1930 psia
and/or
HYD 1(2,3) RSVR 2 < P < 28 psia

BFS

SM2 HYD ACCUM P 1(2,3)

If:
HYD 1(2,3) ACCUM 32 < P < 1930 psia
and/or
HYD 1(2,3) RSVR 2 < P < 28 psia

Nominal Config:
(R2)
HYD MN PUMP PRESS (three) – NORM (LO)
HYD CIRC PUMP (three) – GPC (ON,OFF)
(R4)
HYD BRAKE ISOL VLV 1,2,3 – GPC (tb-CL)
LG EXTEND ISOL VLV – GPC (tb-CL)
(A12)
HYD CIRC PUMP PWR 1 – MNA
2 – MNB
3 – MNC

ORB PKT C/L, HYD ACCUM (RSVR) PR LOW

1 2

1
(R2)
•√HYD CIRC PUMP 1(2,3) – ON

2
SM 86 APU/HYD
• Confirm HYD CIRC PUMP P
HYD B/U P > 100 psia ?
YES
NO

3 Select alternate pwr
(A12)
• HYD CIRC PUMP 1(2,3) – MNB (MNC,MNA)
• Wait 30 sec
CIRC PUMP P (HYD B/U P) > 100 psia ?
YES
NO

4
(R2)
• Aff HYD CIRC PUMP 1(2,3) – GPC
• Wait 90 sec
CIRC PUMP P (HYD B/U P) > 100 psia ?
YES
NO

5
SM 86 APU/HYD
•√HYD RSVR QTY 1(2,3) reading
HYD RSVR QTY 1(2,3) decreasing ?
YES → 1.2b 7
NO

7 Leave Pump ON

6 HYD 1(2,3) CIRC PUMP FAILURE

8 Turn off aff Circ Pump
(R2)
• HYD CIRC PUMP 1(2,3) – OFF

(1) ACCUM P is maintained automatically when Circ Pump sw is in GPC. At ACCUM P < 1960 psia or RSVR P < 32 psia, Circ Pump is commanded ON. If after 2 min ACCUM P > 1960 psia or RSVR P > 32 psia, Circ Pump is commanded OFF

(2) ACCUM P MGMT software is designed to turn on Circ Pump before pressure decay causes FDA alarm to ring, if Circ Pump sw is in GPC

APU/HYD

1.2b HYD RSVR QTY ↑↓

SM ALERT

S86 HYD RSVR Q 1(2,3)

BFS

SM2 HYD QTY 1(2,3)

If:
HYD RSVR QTY 1(2,3)
< 40% or
> 95%

Nominal Config:
(L4:O)
cb AC1 ΦB HYD QTY 1 – cl
cb AC2 ΦB HYD QTY 2 – cl
cb AC3 ΦB HYD QTY 3 – cl

APU OFF Config:
(R2)
HYD MN PUMP PRESS (three) – NORM
HYD CIRC PUMP (three) – GPC (ON)
BLR CNTLR/HTR (three) – A(B)
BLR PWR (three) – OFF
BLR N2 SPLY (three) – OFF

(R4)
HYD BK ISOL VLV (three) – GPC (tb-CL)
LG EXTD ISO VLV – GPC (tb-CL)
HYD MPS/TVC ISOL SYS (three) – GPC (tb-CL)

1 SM 86 APU/HYD
•√HYD RSVR QTY 1(2,3)
'↑' or H
'↓' or L

2 (CRT)
•√HYD RSVR QTY on other systems
Another system quantity low ?
NO → 3 QTY XDCR FAILURE
YES → 9

4 (CRT)
HYD RSVR QTY 1(2,3) = 0 (or L) ?
NO → 5 (CRT)
HYD RSVR QTY 1(2,3) decreasing ?
NO → 6 XDCR SHIFT OR THERMAL CONTRACTION MORE THAN EXPECTED
YES → 1.2a 5

7 (CRT)
•√HYD RSVR QTY on other systems
Another system quantity abnormally high or increasing ?
NO → 8 √Vlv position. Do not reconfig
(R4)
•√HYD BK ISOL VLV 1(2,3) – GPC (tb-CL)
•√HYD MPS/TVC ISOL SYS 1(2,3) – GPC (tb-CL)
If system 1 aff:
•√LG EXTD ISO VLV – GPC (tb-CL)
LG EXTD, BK, and MPS/TVC ISOL VLVS closed ?
NO → 17
YES → 18
YES → 2 → 9 LOW QTY SYSTEM LEAKING INTO HIGH QTY SYSTEM(S) → 16

10 Turn on aff circ pump
(R2)
• HYD CIRC PUMP 1(2,3) – ON
(CRT)
HYD B/U P 1(2,3) > 100 psia ?
YES → 11 QTY XDCR OR cb FAILURE → 13 (R2)
• Return circ pump to original configuration → 15 √Aff Hyd Qty cb and report status to MCC
(L4:O)
•√cb AC1(2,3) ΦB HYD QTY 1(2,3)
NO → 12 HYD FLUID DEPLETED → 14 Turn off aff circ pump
(R2)
• HYD CIRC PUMP 1(2,3) – OFF

9 → 4 → 16 Turn off circ pump in low quantity system
(R2)
• HYD CIRC PUMP 1(2,3) – OFF

(1) Normal operating qty approx 60%, but compare qty with previous reading

(2) Circ pumps or APUs must be operating in order to operate LG EXTD, BK, and MPS/TVC ISOL VLVS if reqd

(3) If BFS SYS SUMM 2, use HYD PRESS 1(2,3)

(4) May be possible to pump fluid from high to low system by pressurizing high qty system relative to low qty system

APU/HYD 1.2b (Cont)

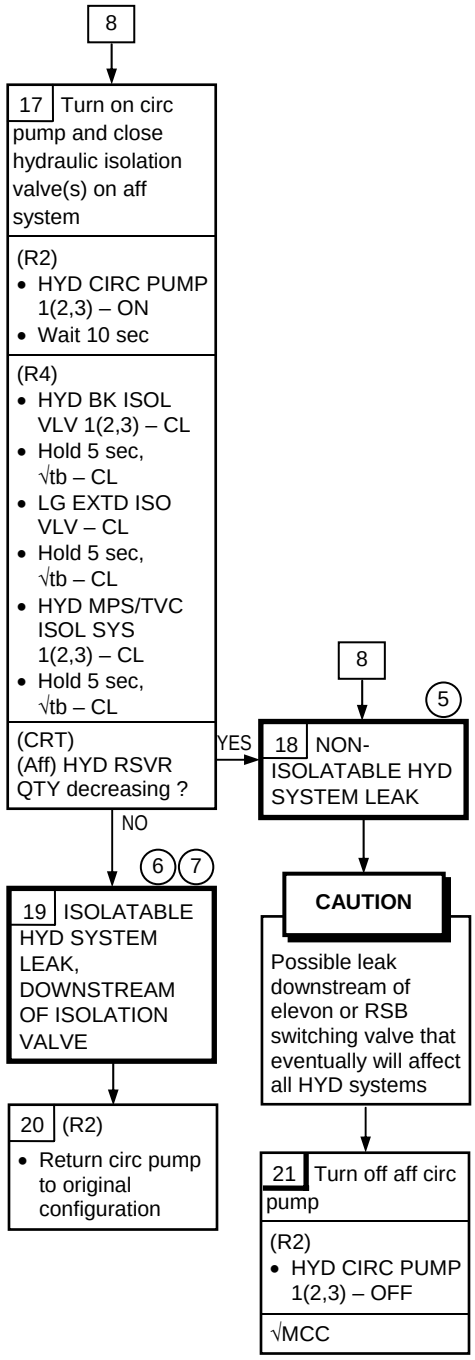

(5) Hyd system may be lost for entry depending on the size of leak. Sys should remain OFF unless another system lost

(6) Valve must be closed manually after automatic opening during entry

(7) If leak isolated by aff MPS/TVC ISOL vlv, do not open aff vlv for SSME HYD REPRESS during entry

This Page Intentionally Blank

1.3a HYD CIRC PUMP P ↓

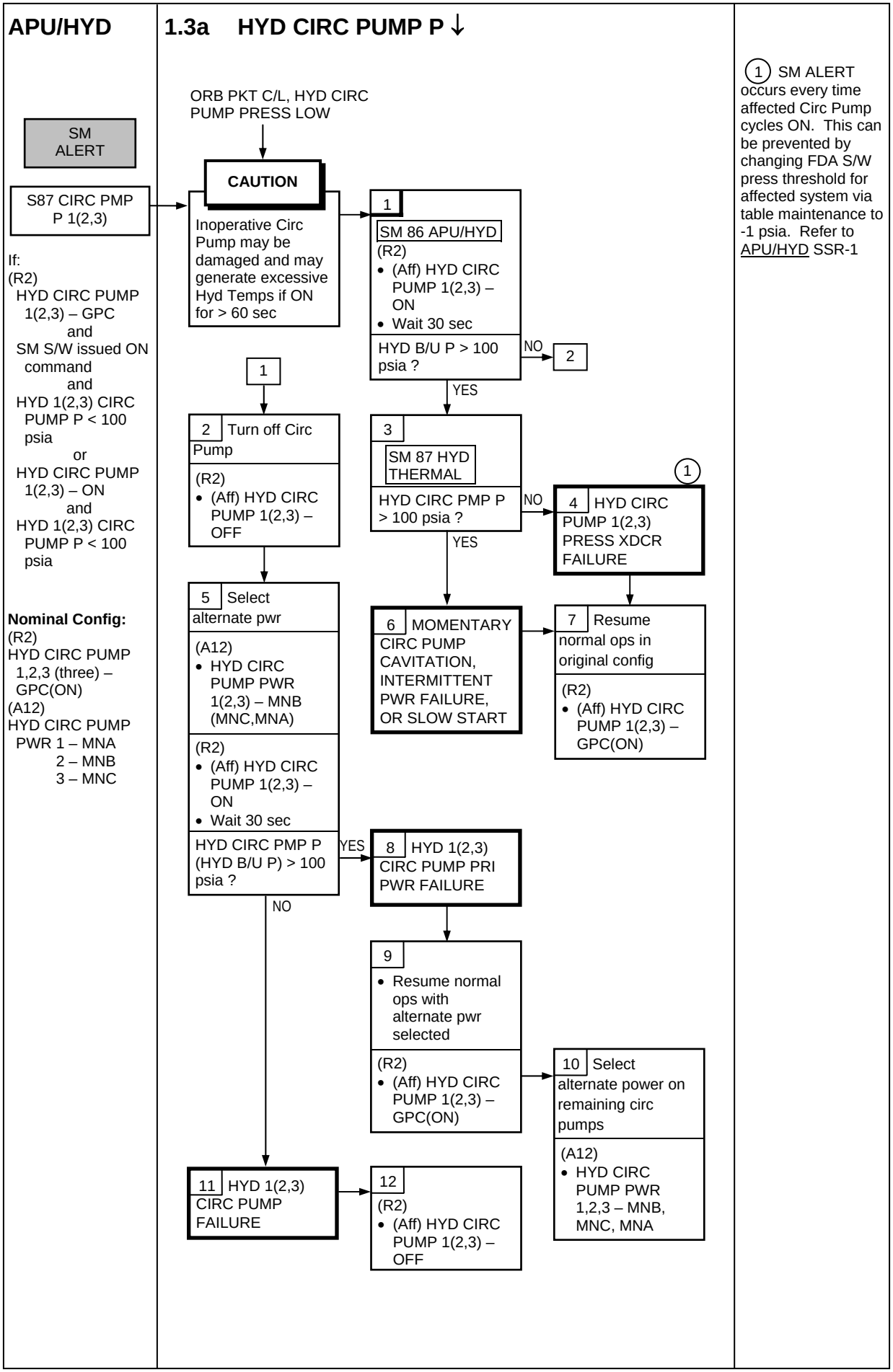

(1) SM ALERT occurs every time affected Circ Pump cycles ON. This can be prevented by changing FDA S/W press threshold for affected system via table maintenance to -1 psia. Refer to APU/HYD SSR-1

This Page Intentionally Blank

APU/HYD SSR-1
CIRC PUMP PRESS XDCR FAILURE WORKAROUND

To inhibit FDA alarm for affected Circ Pump

1. For Hyd Circ Pump 1 Press Xdcr failure:

   SM 60 SM TABLE MAINT

   ITEM 1 +0 5 8 0 1 3 7 EXEC
   If Xdcr failed '↓' (low), or DSC LOSS (L), or OI MDM failed (M), ITEM 2 -1 EXEC
   If Xdcr failed '↑' (high), ITEM 5 +8 0 1 EXEC

2. For Hyd Circ Pump 2 Press Xdcr failure:

   SM 60 SM TABLE MAINT

   ITEM 1 +0 5 8 0 2 3 7 EXEC
   If Xdcr failed '↓' (low), or DSC LOSS (L), or OI MDM failed (M), ITEM 2 -1 EXEC
   If Xdcr failed '↑' (high), ITEM 5 +8 0 1 EXEC

3. For Hyd Circ Pump 3 Press Xdcr failure:

   SM 60 SM TABLE MAINT

   ITEM 1 +0 5 8 0 3 3 7 EXEC
   If Xdcr failed '↓' (low), or DSC LOSS (L), or OI MDM failed (M), ITEM 2 -1 EXEC
   If Xdcr failed '↑' (high), ITEM 5 +8 0 1 EXEC

APU/HYD SSR-2
SIMULTANEOUS CIRC PUMP ON/GPC OPS

To allow normal GPC ops of other two Circ Pumps after failure of X Circ Pump Press Xdcr or manual ON ops of X Circ Pump

1. For Circ Pump 1, Press Xdcr failure or manual ON ops:

   SM 60 SM TABLE MAINT

   ITEM 16 +0 9 2 1 7 4 2 EXEC
   ITEM 17 +8 0 0 EXEC

2. For Circ Pump 2, Press Xdcr failure or manual ON ops:

   SM 60 SM TABLE MAINT

   ITEM 16 +0 9 2 1 8 4 2 EXEC
   ITEM 17 +8 0 0 EXEC

3. For Circ Pump 3, Press Xdcr failure or manual ON ops:

   SM 60 SM TABLE MAINT

   ITEM 16 +0 9 2 1 9 4 2 EXEC
   ITEM 17 +8 0 0 EXEC

APU/HYD SSR-3
CIRC PUMP XDCR FAILURE WORKAROUND

To allow normal GPC ops of Circ Pumps for the following failures: accumulator press/temp xdcr, reservoir press/temp xdcr, MDM, or DSC. Procedure changes corresponding upper and lower S/W limits to off-scale low, effectively removing xdcr from Circ Pump control

The accumulator pressure sensors have only lower limit of 1960 psia as shown in tables. Low limit for accumulator pressure should be changed to -110. Low limit for reservoir pressure should be changed to -2. Only one item entry is reqd for accumulator or reservoir pressure sensor failure

SM 60 SM TABLE MAINT

ITEM 16 +_ _ (A) _ _ EXEC
ITEM 17 -8 0 EXEC
ITEM 16 +_ _ (B) _ _ EXEC
ITEM 17 -8 0 EXEC

(A) Choose the appropriate lower limit parameter ID number from table
(B) Choose the appropriate upper limit parameter ID number from table

HYDRAULIC SYSTEM 1 PARAMS

Param Name			Pump SW Control Constants				FDA		MDM	DSC
			Low limit		High limit		Low limit	High limit		
			ID Number	Value	ID Number	Value	degF	degF		
LINE TEMPS										
	ELEVON	LOB1	0921728	-30 degF	0921729	-10 degF	-40	250	OF4	OM1
		ROB1	0921722	-30 degF	0921723	-10 degF	-40	250	OA2	OM2
	RD/SB	PDU1	0921738	-35 degF	0921739	-10 degF	-40	250	OA1	OA1
		FUS1	0921736	-30 degF	0921737	-10 degF	-40	250	OA2	OA2
	BDYFLP	FUS1	0921718	-30 degF	0921719	-10 degF	-40	250	OA1	OA1
HYD										
		ACCUM P1	0921740	1960 psi	NONE		1930 psi		OA1	OM3
		RSVR P1	0920142	32 psi	NONE		28 psi		OA1	OA1

HYDRAULIC SYSTEM 2 PARAMS

Param Name			Pump SW Control Constants				FDA		MDM	DSC
			Low limit		High limit		Low limit	High limit		
			ID Number	Value	ID Number	Value	degF	degF		
LINE TEMPS										
	ELEVON	LIB2	0921822	-30 degF	0921823	-10 degF	-40	250	OF4	OM2
		ROB2	0921816	-30 degF	0921817	-10 degF	-40	250	OF4	OM1
	RD/SB	PDU2	0921832	-35 degF	0921833	-10 degF	-40	250	OA1	OA1
		FUS2	0921830	-30 degF	0921831	-10 degF	-40	250	OA2	OA2
	BDYFLP	PDU2	0921814	-35 degF	0921815	-10 degF	-40	250	OA1	OA1
HYD										
		ACCUM P2	0921834	1960 psi	NONE		1930 psi		OA2	OM2
		RSVR P2	0920143	32 psi	NONE		28 psi		OA2	OA2

HYDRAULIC SYSTEM 3 PARAMS

Param Name			Pump SW Control Constants				FDA		MDM	DSC
Param Name			Low limit		High limit		Low limit	High limit		
			ID Number	Value	ID Number	Value	degF	degF		
LINE TEMPS										
	ELEVON	LOB3	0921920	-30 degF	0921921	-10 degF	-40	250	OA2	OM2
		RIB3	0921918	-30 degF	0921919	-10 degF	-40	250	OF4	OM2
	RD/SB	PDU3	0921930	-35 degF	0921931	-10 degF	-40	250	OA1	OA1
	BDYFLP	PDU3	0921914	-35 degF	0921915	-10 degF	-40	250	OA3	OA3
HYD										
		ACCUM P3	0921932	1960 psi	NONE		1930 psi		OA3	OM2
		RSVR P3	0920144	32 psi	NONE		28 psi		OA3	OA3

APU/HYD SSR-4
APU FUEL TK P XDCR FAILURE WORKAROUND

Selection of alternate xdcr for APU fuel comp

1. For APU 1 FUEL QTY:

   SM 60 SM TABLE MAINT

   ITEM 16 +0 9 2 2 1 5 0 EXEC
   ITEM 17 +0 EXEC
   ITEM 16 +0 9 2 2 1 5 2 EXEC
   ITEM 17 +1 EXEC

2. For APU 2 FUEL QTY:

   SM 60 SM TABLE MAINT

   ITEM 16 +0 9 2 2 2 5 0 EXEC
   ITEM 17 +0 EXEC
   ITEM 16 +0 9 2 2 2 5 2 EXEC
   ITEM 17 +1 EXEC

3. For APU 3 FUEL QTY:

   SM 60 SM TABLE MAINT

   ITEM 16 +0 9 2 2 3 5 0 EXEC
   ITEM 17 +0 EXEC
   ITEM 16 +0 9 2 2 3 5 2 EXEC
   ITEM 17 +1 EXEC

APU/HYD SSR-5
APU FUEL LEAK (NONISOLATABLE)

Before proceeding, √MCC

R2 1. STEAM VENT HTR ACTIVATE
BLR PWR X – ON
√CNTLR/HTR (three) – B(A)

2. GNC CONFIG
O14:F, O15:F, O16:F ASA (four) – ON
O17:A ATVC (four) – ON
C3 √FCS CH (four) – AUTO
O6 √MDM All FF and FA – ON
GNC I/O RESET
C3(A6U) √DAP: A/AUTO/VERN

3. DPS CONFIG
O14:F, O15:F √MMU 1,2 – ON

Perform G2 TO G8 TRANSITION (ORB OPS, DPS)
Use the "If FCS Checkout" steps (TFL change required)
1: GNC, FCS/DED DIS C/O

4. APU PRESTART
2: SM 86 APU/HYD
R4 √HYD BK ISOL VLV X tb – CL
√LG EXTD ISO VLV tb – CL
R2 BLR N2 SPLY X – ON
HYD CIRC PUMP X – OFF
√cb APU FU TK VLV ENA (six) – cl
√APU FU TK VLV (three) – CL
√AUTO SHTDN (three) – ENA
√SPEED SEL (three) – NORM
√OPER (three) – OFF
HYD MN PUMP PRESS X – LO
APU CNTLR PWR X – ON

Inform MCC: READY FOR APU START

Wait for MCC GO

5. APU START
R2 APU FU TK VLV X – OP
√APU/HYD RDY X tb – gray

***** If tb – bp, √MCC *****

00:00 Start Event Timer
APU OPER X – START/RUN
HYD/APU √HYD PRESS X ind – LO green
R2 √APU/HYD RDY X tb – bp

***** If APU did not start normally: *****
***** APU OPER X – OFF *****
***** FU TK VLV X – CL *****
***** √Shutdn (HYD PRESS < 200) *****
***** Report APU F7 lts *****
***** APU CNTLR PWR X – OFF *****
***** √MCC *****

HYD MN PUMP PRESS X – NORM
HYD/APU √HYD PRESS X ind – HI green

6. MPS/TVC ISOL VLV CONFIG
R4 HYD MPS/TVC ISOL VLV SYS X – OP (hold 5 sec, tb–OP)

7. AEROSURFACE DRIVE

CRT1 SURF DR START – ITEM 10 EXEC (*)

NOTE

Pos '↓' may be indicated until HYD SYS is warm

* If FCS CH failure (↓) port status, reset aff FCS CH: *

C3 * FCS CH – ORIDE *

* – AUTO *

8. SECONDARY ACTUATOR CHECK

On MCC GO:

After ≥ 30 sec of aerosurface drive:

SURF DR STOP – ITEM 11 EXEC (*)

√Surfaces not moving

NOTE

If port does not bypass during check, bypass aff port after APU shutdn:

SEC ACT BYPASS – ITEM 21 +X X EXEC

If aff port still does not bypass:

SEC ACT RESET – ITEM 22 +X X EXEC

(See DPS DICT, GNC, OPS G8 FOR ITEM ENTRY values)

CRT1 a. √POS STIM ENA, ITEM 20 – (*)

C3 b. √FCS CH 1,2,3,4 – AUTO

CRT1 c. SEC ACT CK, CH 1 – ITEM 15 EXEC (*)

d. √All CH 1 ports bypass '↓'

STOP – ITEM 19 EXEC (*)

C3 e. FCS CH 1 – ORIDE

CRT1 √All CH 1 ports reset (no ↓)

C3 FCS CH 1 – AUTO

f. Repeat steps c thru e for CH 2, 3, 4

CRT1 g. NEG STIM – ITEM 20 EXEC (no *)

h. Repeat steps b thru f

SURF DR START – ITEM 10 EXEC (*)

9. APU FUEL DEPLETION AND AERO DRIVE TERMINATION

After APU shuts down due to fuel depletion:

SURF DR STOP – ITEM 11 EXEC (*)

NOTE

'AERO DRIVE' Fault Msg may occur after APU shutdown.

* If continuous 'AERO DRIVE' Fault Msg: *

* ITEM 15 EXEC (*) *

10. APU SHUTDOWN

R2 BLR PWR X – OFF

APU OPER X – OFF

FU TK VLV X – CL

√Shutdn (HYD PRESS < 200)

APU CNTLR PWR X – OFF

BLR N2 SPLY X – OFF

11. HYD RECONFIG

HYD CIRC PUMP X – ON

Wait 10 sec

R4 HYD MPS/TVC ISOL VLV SYS X – CL (hold 5 sec, tb–CL)

R2 CIRC PUMP X – GPC

12. GNC/DPS RECONFIG

Perform G8 TO G2 TRANSITION (ORB OPS, DPS)

O14:F, O15:F, O16:F ASA (four) – OFF

O17:A ATVC (four) – OFF

APU/HYD SSR-6
APU FU TK SURF T XDCR FAILURE WORKAROUND

Inputting a temperature constant for the APU Fuel Comp

1. For APU 1 QTY:

   SM 88 APU/ENVIRON THERM

   Note: APU FUEL T 1 TK HTR

   SM 60 SM TABLE MAINT

   ITEM 16 +0 9 2 2 1 6 0 EXEC
   ITEM 17 +0 EXEC
   ITEM 16 +0 9 2 2 1 4 0 EXEC
   ITEM 17 +APU FUEL T 1 TK HTR (from SPEC 88) EXEC

2. For APU 2 QTY:

   SM 88 APU/ENVIRON THERM

   Note: APU FUEL T 2 TK HTR

   SM 60 SM TABLE MAINT

   ITEM 16 +0 9 2 2 2 6 0 EXEC
   ITEM 17 +0 EXEC
   ITEM 16 +0 9 2 2 2 4 0 EXEC
   ITEM 17 +APU FUEL T 2 TK HTR (from SPEC 88) EXEC

3. For APU 3 QTY:

   SM 88 APU/ENVIRON THERM

   Note: APU FUEL T 3 TK HTR

   SM 60 SM TABLE MAINT

   ITEM 16 +0 9 2 2 3 6 0 EXEC
   ITEM 17 +0 EXEC
   ITEM 16 +0 9 2 2 3 4 0 EXEC
   ITEM 17 +APU FUEL T 3 TK HTR (from SPEC 88) EXEC

2.1 AUDIO
2.1a NO AUDIO (MULTIPLE PNL OR OTHER SUBSYSTEM) 2-4

2.2 GCIL/KU COMM
2.2a 'S76 GCIL FAIL' – GCIL CONFIG: PNL,
'S76 KU-GMBL A TEMP' – KU GMBL TEMP A ↑,
'S76 KU-GMBL B TEMP' – KU GMBL TEMP B ↑,
'S76 KU-GYRO TEMP' – KU GYRO TEMP ↑,
'S76 KU-XMTR TEMP' – KU PA TEMP ↑ 2-6

2.3 S-BD/UHF
COMM S-BD PM SCHEMATIC 2-8
UPLINK/DOWNLINK COMMUNICATIONS TABLE 2-10
2.3a NO S-BD COMM: TDRS 2-11
2.3b 'ANTENNA' 2-15
2.3c NO UHF VOICE (MULTI PNLS) 2-16

2.4 S62 BCE BYP
PL COMM MALFUNCTION POINTS SCHEMATIC 2-18
2.4a 'S62 BCE BYP OFA' 2-19
2.4b OFB' 2-21
2.4c OA' 2-23
2.4d PL' 2-25
2.4e PDI' 2-27
2.4f PSP 1(2)' 2-28
2.4g 'S62 PDI DECOM FAIL' 2-30

2.5 PSP BIT
2.5a PSP BIT AND/OR FRAME SYNC LOCK FAIL 2-32

2.6 OI DSC
2.6a OI DSC LOSS 2-34

COMM SSR
COMM SSR-1 LOSS OF ALL VOICE COMM 2-36
EXPLANATORY NOTES FOR OI MDM/DSC LOSS SSRs 2-38
COMM SSR-10 OI MDM LOST: OF1 2-39
SSR-11 OF2 2-40
SSR-12 OF3 2-41
SSR-13 OF4 2-43
SSR-14 OA1 2-44
SSR-15 OA2 2-45
SSR-16 OA3 2-46
SSR-17 OI DSC LOST: OF1 2-47
SSR-18 OF2 2-48
SSR-19 OF3 2-49
SSR-20 OF4 2-50
SSR-21 OL1 2-51
SSR-22 OL2 2-52
SSR-23 OR1 2-53
SSR-24 OR2 2-54
SSR-25 OM1 2-55
SSR-26 OM2 2-56
SSR-27 OA1 2-57
SSR-28 OA2 2-58
SSR-29 OA3 2-59
SSR-30 OM3 2-60

The following Fault Msgs have no corresponding MAL procedures in this book:

TFL FAIL
S76 COMM CAMR OVERTEMP
PA2(1) OVERTEMP
PA2(1) OUTPUT LO
NSP 2(1) BITE
COMSEC 2(1) BITE
BCE BYP KU

This Page Intentionally Blank

COMM

2.1a NO AUDIO (MULTIPLE PNL OR OTHER SUBSYSTEM)

Loss of Audio Affecting More Than One Audio Pnl or One or More of the Following:

1) UHF Transceiver
2) NSP Audio
3) Payload Bay Outlets
4) Audio Between Orbiter and Spacelab
5) Audio Between Orbiter and Vehicle at Orbiter Docking System

Nominal Config:
(R14:A)
cb MNA AUD MS
cb MNB AUD MIDDECK SPKR – cl
cb MNC AUD AUD CTR 2 – cl
cb MNC AUD PS/AIRLK – cl
(R14:F)
cb ESS 1BC AUD L – cl
cb ESS 2CA AUD R – cl
cb ESS 2CA AUD AUD CTR 1 – cl
(C3)
AUD CTR – 1
(R10)
MS AUD PWR – AUD/TONE
(O9)
R AUD PWR – AUD/TONE

(R14:A)
cb MNA AUD MS/OS – cl
cb MNB AUD MIDDECK SPKR/CCU – cl

(1) MS or R AUDIO pnl must be pwrd (AUD or AUD TONE) to enable audio control signals to the ACCU

(2) Cycle (C3) AUD CTR sw several times to establish random audio loop config, √COMM with MCC after each cycle

(3) Further cycling could cause loss of comm

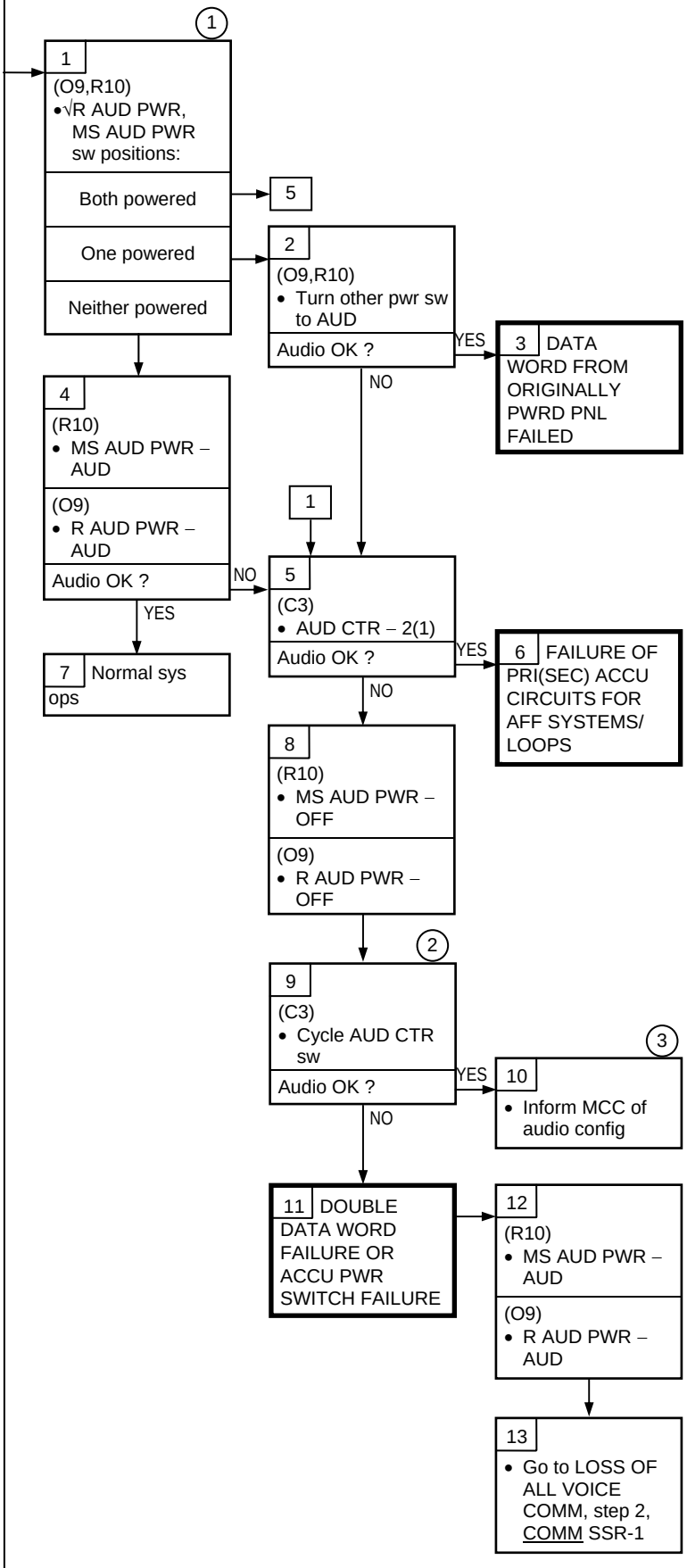

This Page Intentionally Blank

COMM

2.2a GCIL CONFIG: PNL, KU GMBL TEMP A ↑, KU GMBL TEMP B ↑, KU GYRO TEMP ↑, KU PA TEMP ↑

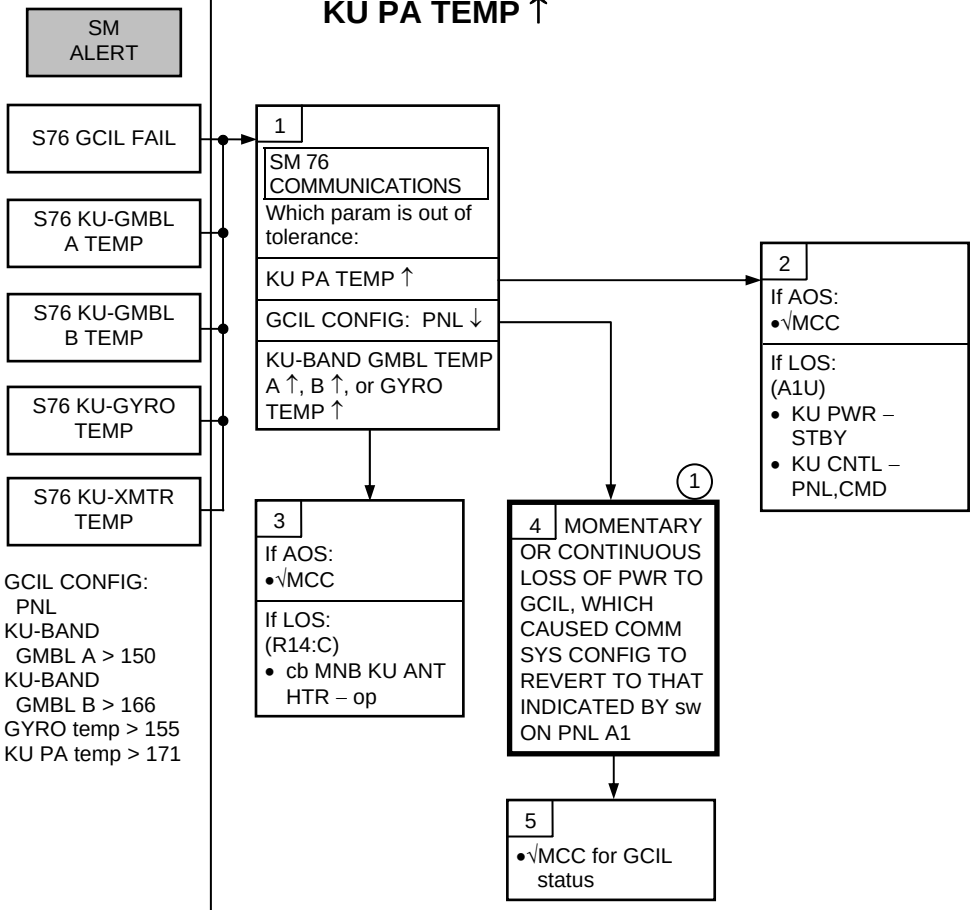

(1) Upon pwr loss, GCIL will revert to High Frequency for S-Band PM. There is no switch on panel A1L for frequency; therefore, no action should be taken. MCC will reconfig network to match orbiter frequency if previously configured for Low Frequency. Reconfiguration could take up to 10 min

This Page Intentionally Blank

SB-SYS 1 PWR: CNTLBC1 AND MNBFLC2

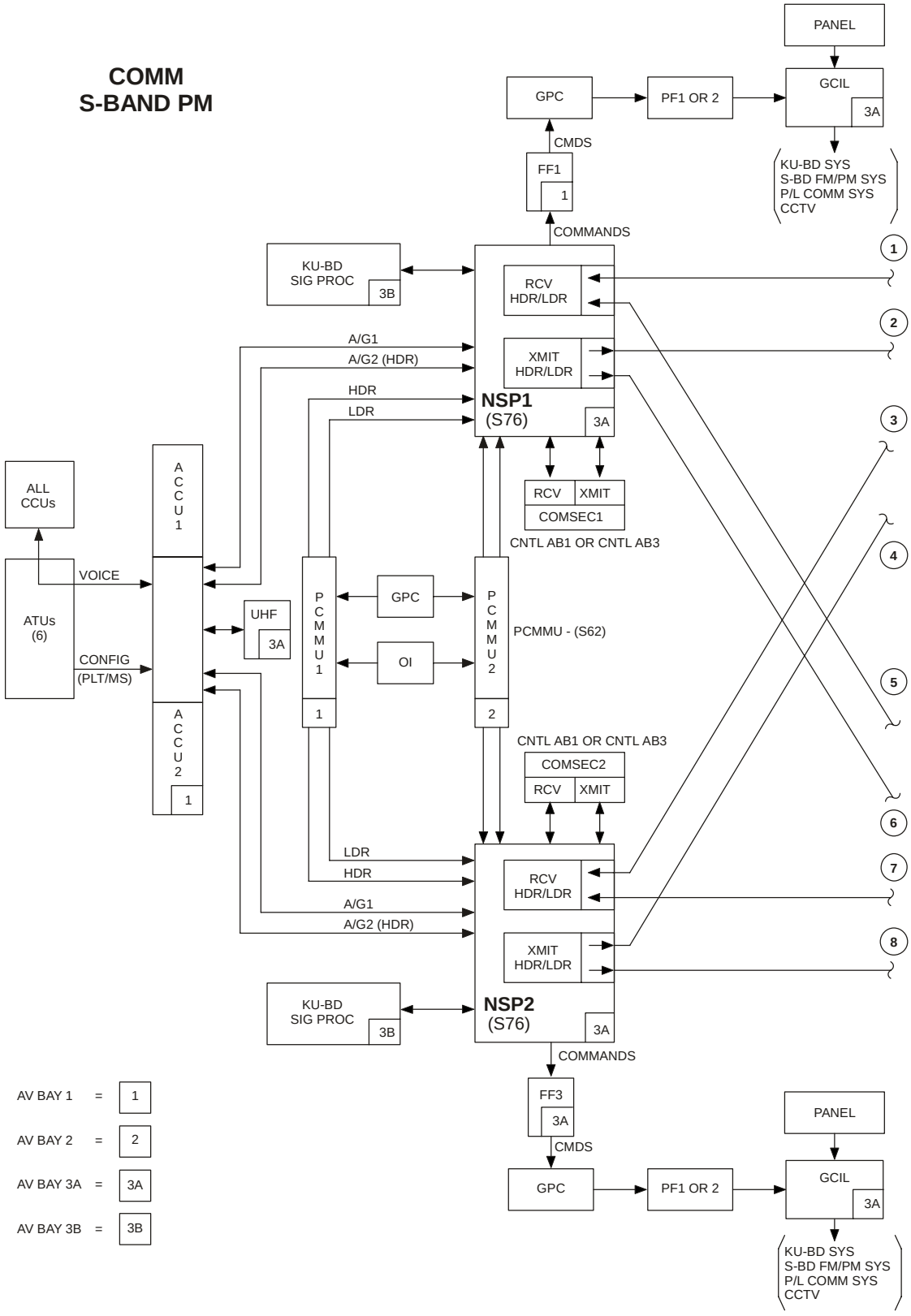

SB-SYS 2 PWR: CNTLBC2 AND MNCFLC3

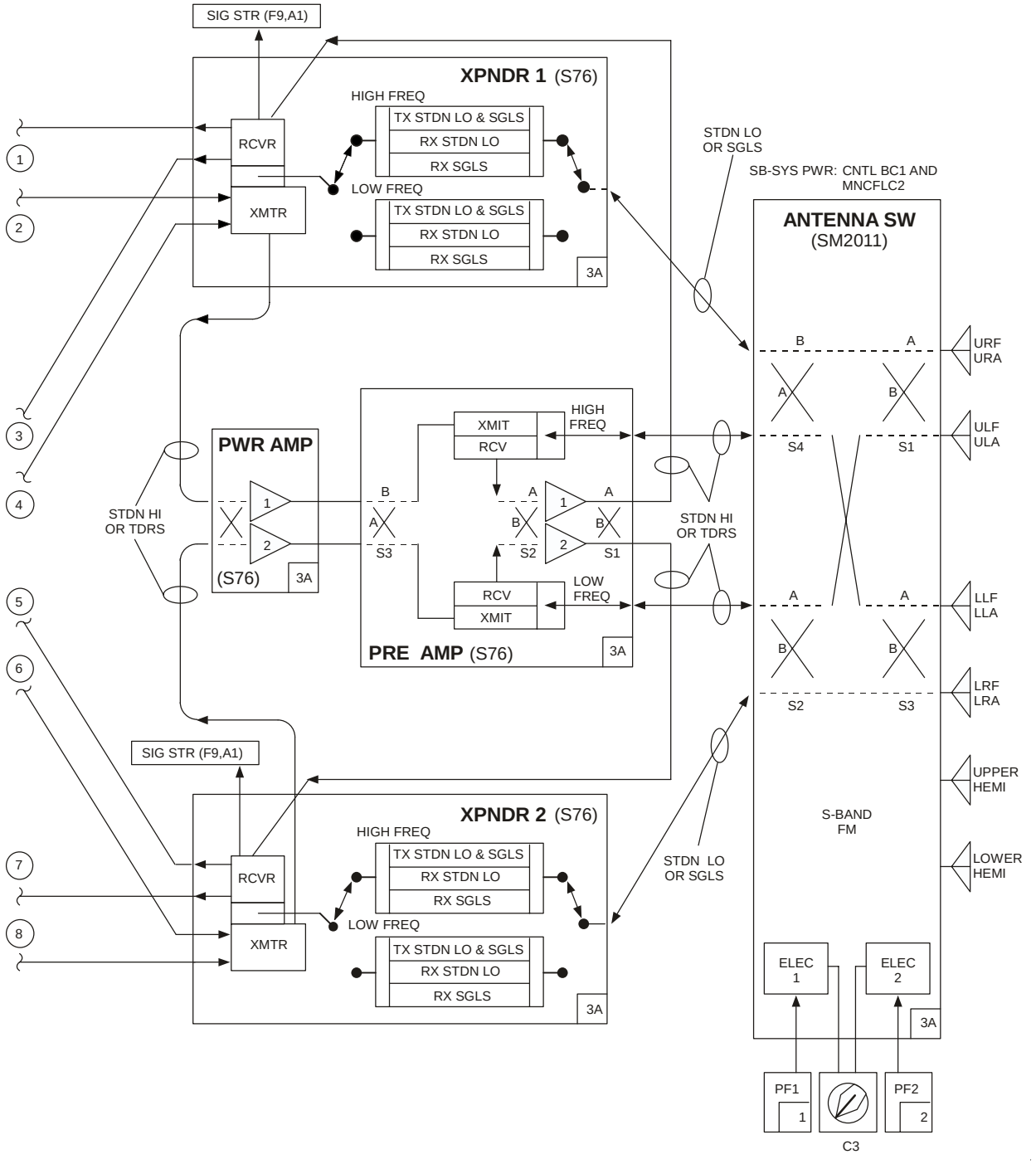

UPLINK/DOWNLINK COMMUNICATIONS TABLE

SITE ID	S-Band	UHF	TV	COMMENTS
BDA	N/A			Decommissioned
CAN	N/A			Decommissioned
CTS	SGLS			
DFR	STDN	•	•	
DGS	SGLS			
GDX	N/A			Decommissioned
GTS	SGLS			
HTS	SGLS			
JSC	STDN	•	•	Emergency Only
MAD	N/A			Decommissioned
MIL	STDN	•	•	
NHS	SGLS			
OTS	SGLS			
SAL (Northrup)	N/A	•		Salinas Peak for WSSH landing at Northrup
VTS	SGLS			
WLP	STDN	•	•	TV record/playback

All S-band sites can handle Hi/Lo Data rates, encryption/clear uplink or downlink.
Three-letter site designators may be inhibited on SM 2011 by MCC if site use was not planned. Check World Map for sites that may be inhibited.
Decommissioned sites are included here because they may appear on SM 2011 even though they no longer have orbiter support equipment.
OTS(LION) no longer has UHF equipment.
SAL (Salinas Peak) can now support UHF comm for overhead passes or entry.

COMM

2.3a NO S-BD COMM: TDRS

From ORB PKT, COMM LOST, step 12

Nominal Config:
Switches selected to
SYS 1 (pnl mode backup)
(R14:A)
cb MNA AUD MS – cl
cb MNB AUD MIDDECK SPKR – cl
cb MNC AUD AUD CTR 2 – cl
cb MNC AUD PS/AIRLK – cl
(R14:B)
cb MNA UHF – cl
cb MNC UHF – cl
(R14:F)
cb ESS 1BC AUD L – cl
cb ESS 2CA AUD R – cl
cb ESS 2CA AUD CTR 1 – cl
(R10)
MS AUD PWR – AUD/TONE
(O9)
R AUD PWR – AUD/TONE

1 Verify comm system config

SM 76 COMMUNICATIONS

•√Display

S-BAND PM	TDRS
ANT ELEC 1	ON
XPNDR 1	ON
PREAMP 1	ON
PWR AMPL 1	
OPER 1	ON
STBY 1	STBY
NSP 1	
BITE	GOOD
UL DATA SOURCE	S
DATA RATE XMIT	HI
RCV	HI
CODING XMIT	ON
RCV	ON
GCIL CONFIG	CMD

Displayed config matches A1L switches ?

NO → 7

YES

(1)

2 Check for Ku-Band coverage

(A1U)
•√SIGNAL STR sw – Ku

Meter > 1 ?

NO → 13

YES

3 Reconfigure to Ku receive

(A1L)
- NSP UPLK DATA – Ku
- •√NSP CODING XMIT – ON
- NSP CODING RCV – OFF

(C3)
•√S-BD PM CNTL – PNL

Two-way voice ?

YES → **4** POSSIBLE ANT ELEC SW, S-BD FREQ OR DUAL S-BD FAILURE

6
- Advise MCC of panel A1L and ACCU config

NO

5 DUAL NSP OR UNEXPLAINED FAILURE

21

(1) Assumes Ku-Band deployed activated and comm mode

COMM 2.3a (Cont)

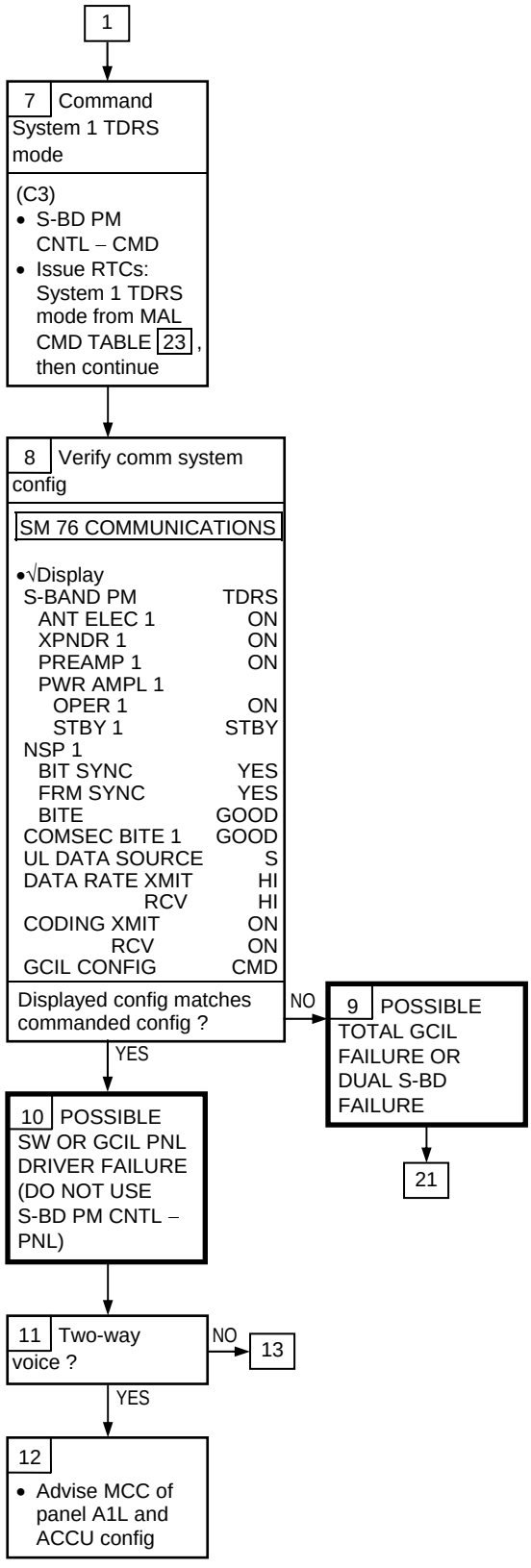

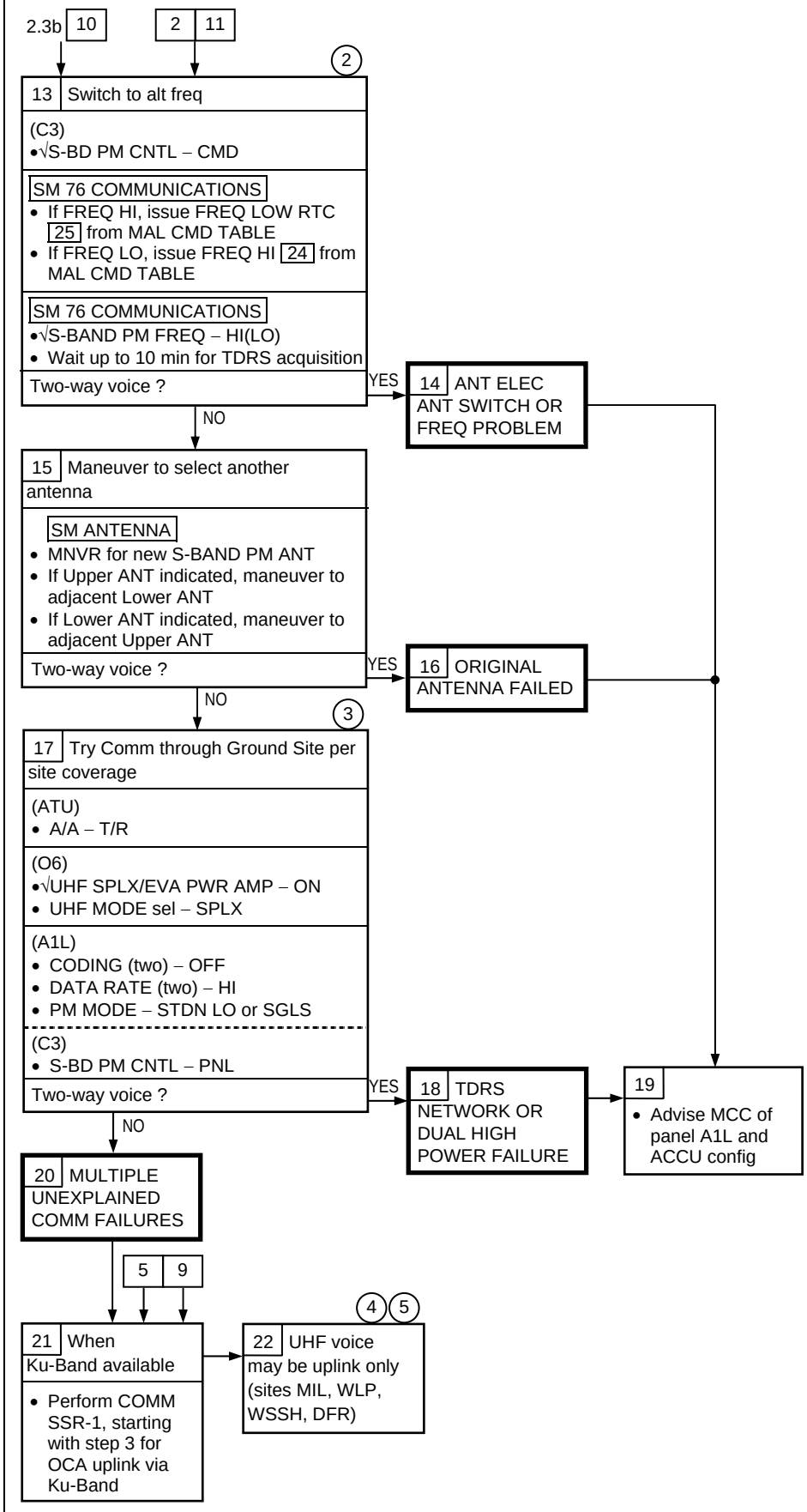

(2) Payloads may have conflict with alt freq

(3) Ground sites are generally not active during Orb phase. Minimum 2 hr to call up

(4) UHF sites may not be active. Minimum 2 hr to call up

(5) MIL - MILA MERRITT ISLAND, FL

WLP - WALLOPS ISLAND, MARYLAND

WSSH - WHITE SANDS SPACE HARBOR, NEW MEXICO

DFR - DRYDEN FLIGHT RESEARCH CENTER PALM DALE, CA

(6) The RTC (RESET PL1 or PL2) must be sent prior to any command

(7) CMD only those RTCs which do not match the expected comm config in block 1

MAL CMD TABLE

23 SYSTEM 1 TDRS MODE

SM 1 DPS UTILITY (6)(7)

Issue RTC (RESET PL1 or PL2)
- RTC – ITEM 13 +7 1 0 9 0 1 F F EXEC (PL1)
  or 7 1 0 A 0 1 F F EXEC (PL2)
- CMD – ITEM 14 EXEC

Issue RTC (PWR AMP 1 OPR ON)
- RTC – ITEM 13 +7 9 0 9 0 0 3 3 EXEC (PL1)
  or 7 9 0 A 0 0 3 3 EXEC (PL2)
- CMD – ITEM 14 EXEC
- Reissue RTC (RESET PL1 or PL2) above

Issue RTC (TDRS S-BD MODE)
- RTC – ITEM 13 +7 9 0 9 0 0 F 1 EXEC (PL1)
  or 7 9 0 A 0 0 F 1 EXEC (PL2)
- CMD – ITEM 14 EXEC
- Reissue RTC (RESET PL1 or PL2) above

Issue RTC (ANT ELEC SW1 ON)
- RTC – ITEM 13 +7 9 0 9 0 0 1 F EXEC (PL1)
  or 7 9 0 A 0 0 1 F EXEC (PL2)
- CMD – ITEM 14 EXEC
- Reissue RTC (RESET PL1 or PL2) above

Issue RTC (XPNDR 1 ON)
- RTC – ITEM 13 +7 9 0 9 0 0 3 E EXEC (PL1)
  or 7 9 0 A 0 0 3 E EXEC (PL2)
- CMD – ITEM 14 EXEC
- Reissue RTC (RESET PL1 or PL2) above

Issue RTC (PREAMP 1 ON)
- RTC – ITEM 13 +7 9 0 9 0 0 3 9 EXEC (PL1)
  or 7 9 0 A 0 0 3 9 EXEC (PL2)
- CMD – ITEM 14 EXEC
- Reissue RTC (RESET PL1 or PL2) above

Issue RTC (NSP 1 ON)
- RTC – ITEM 13 +7 9 0 9 0 0 5 0 EXEC (PL1)
  or 7 9 0 A 0 0 5 0 EXEC (PL2)
- CMD – ITEM 14 EXEC
- Reissue RTC (RESET PL1 or PL2) above

Issue RTC (DNLINK – HDR)
- RTC – ITEM 13 +7 9 0 9 0 0 5 3 EXEC (PL1)
  or 7 9 0 A 0 0 5 3 EXEC (PL2)
- CMD – ITEM 14 EXEC
- Reissue RTC (RESET PL1 or PL2) above

Issue RTC (UPLINK – HDR)
- RTC – ITEM 13 +7 9 0 9 0 0 7 EXEC (PL1)
  or 7 9 0 A 0 0 7 EXEC (PL2)
- CMD – ITEM 14 EXEC

24 FREQ HI

SM 1 DPS UTILITY

Issue RTC (RESET PL1 or PL2)
- RTC – ITEM 13 +7 1 0 9 0 1 F F EXEC (PL1)
  or 7 1 0 A 0 1 F F EXEC (PL2)
- CMD – ITEM 14 EXEC

Issue – RTC (XPNDR/PREAMP FREQ – HI)
- RTC – ITEM 13 +7 9 0 9 0 0 4 A EXEC (PL1)
  or 7 9 0 A 0 0 4 A EXEC (PL2)
- CMD – ITEM 14 EXEC

25 FREQ LOW

SM 1 DPS UTILITY

Issue RTC (RESET PL1 or PL2)
- RTC – ITEM 13 +7 1 0 9 0 1 F F EXEC (PL1)
  or 7 1 0 A 0 1 F F EXEC (PL2)
- CMD – ITEM 14 EXEC

Issue RTC (XPNDR/PREAMP FREQ – LOW)
- RTC – ITEM 13 +7 9 0 9 0 0 4 9 EXEC (PL1)
  or 7 9 0 A 0 0 4 9 EXEC (PL2)
- CMD – ITEM 14 EXEC

26 STDN LO

SM 1 DPS UTILITY

Issue RTC (RESET PL1 or PL2)
- RTC – ITEM 13 +7 1 0 9 0 1 F F EXEC (PL1)
  or 7 1 0 A 0 1 F F EXEC (PL2)
- CMD – ITEM 14 EXEC

Issue RTC (XPNDR MODE - STDN LOW)
- RTC – ITEM 13 +7 9 0 9 0 0 4 3 EXEC (PL1)
  or 7 9 0 A 0 0 4 3 EXEC (PL2)
- CMD – ITEM 14 EXEC

27 SGLS

SM 1 DPS UTILITY

Issue RTC (RESET PL1 or PL2)
- RTC – ITEM 13 +7 1 0 9 0 1 F F EXEC (PL1)
  or 7 1 0 A 0 1 F F EXEC (PL2)
- CMD – ITEM 14 EXEC

Issue RTC (XPNDR MODE – SGLS)
- RTC – ITEM 13 +7 9 0 9 0 0 4 4 EXEC (PL1)
  or 7 9 0 A 0 0 4 4 EXEC (PL2)
- CMD – ITEM 14 EXEC

COMM

2.3b ‘ANTENNA’

SM ALERT

ANTENNA

If:
- Actual selected quad antenna not the same as S/W commanded antenna, MDM OF3 or OF4 failure, antenna electronics failure, CNTL BC1 failure, PF MDM failure

Nominal Config:
(C3)
S-BD PM
- ANT – GPC
- CNTL – CMD

(A1L)
S-BD PM
- ANT SW ELEC – 1
- PRE AMP – 1
- PWR AMPL STBY – 1
- PWR AMPL OPER – 1
- XPNDR – 1

NSP PWR – 1

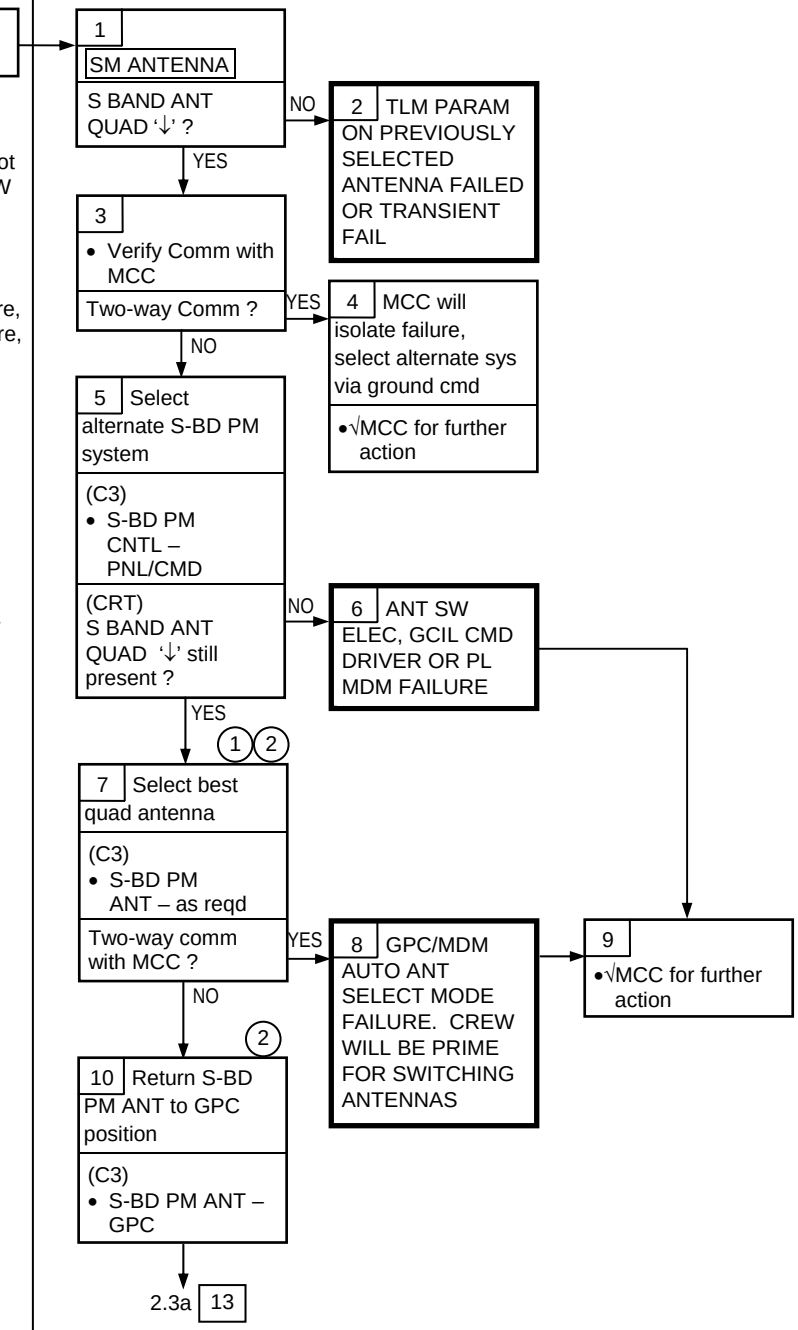

1 Switch failures may prevent certain antennas from being selected

2 Pause 2 sec between antenna selections

COMM

2.3c NO UHF VOICE (MULTI PNLS)

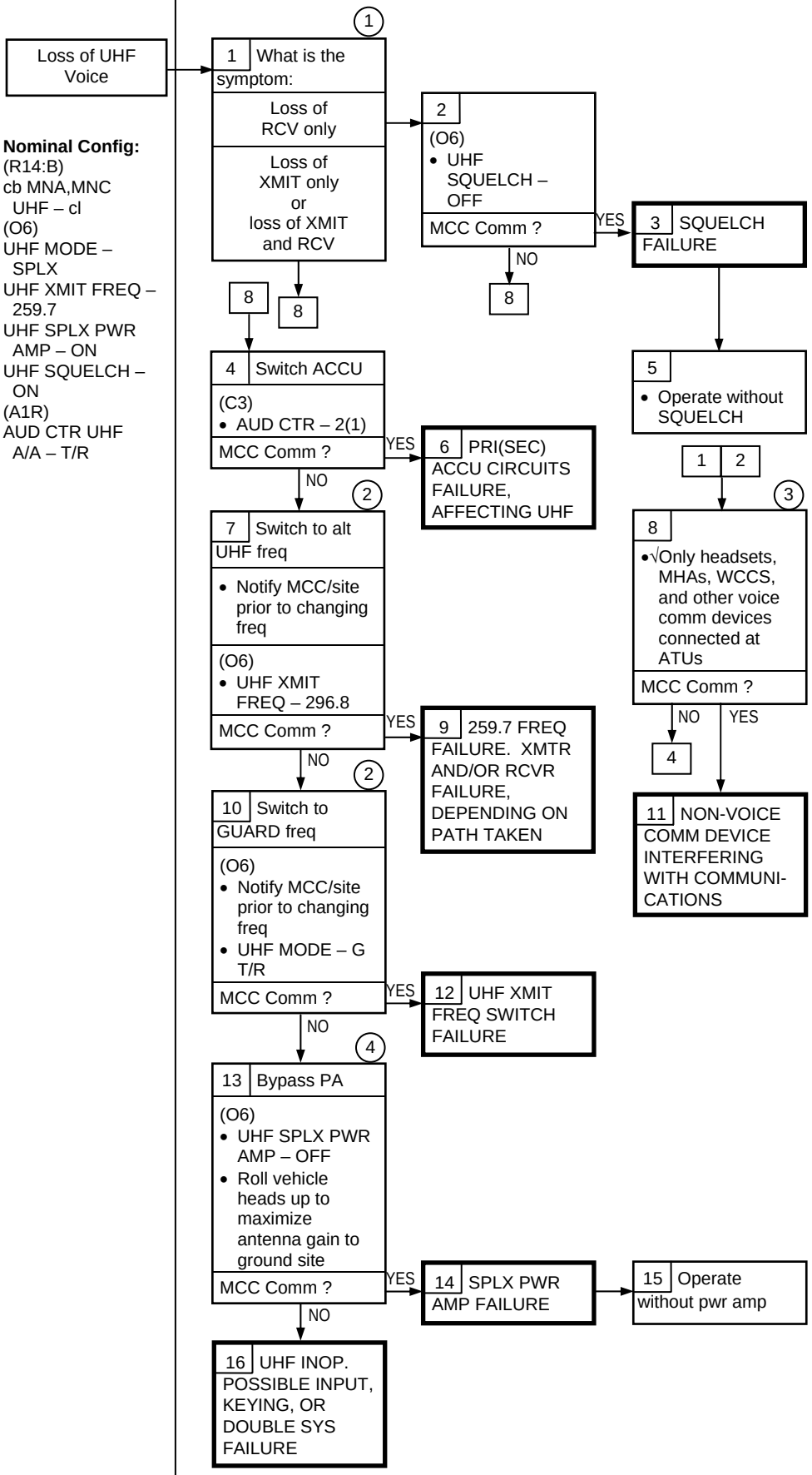

(1) XMTR range is 350 miles with PWR AMP

(2) Up to 30 sec may be reqd for MCC/site response

(3) Example: PADM provides constant UHF key if ATU configured to T/R. Loss of UHF comm would result

(4) This step will limit UHF XMIT range

This Page Intentionally Blank

PL COMM MALFUNCTION POINTS

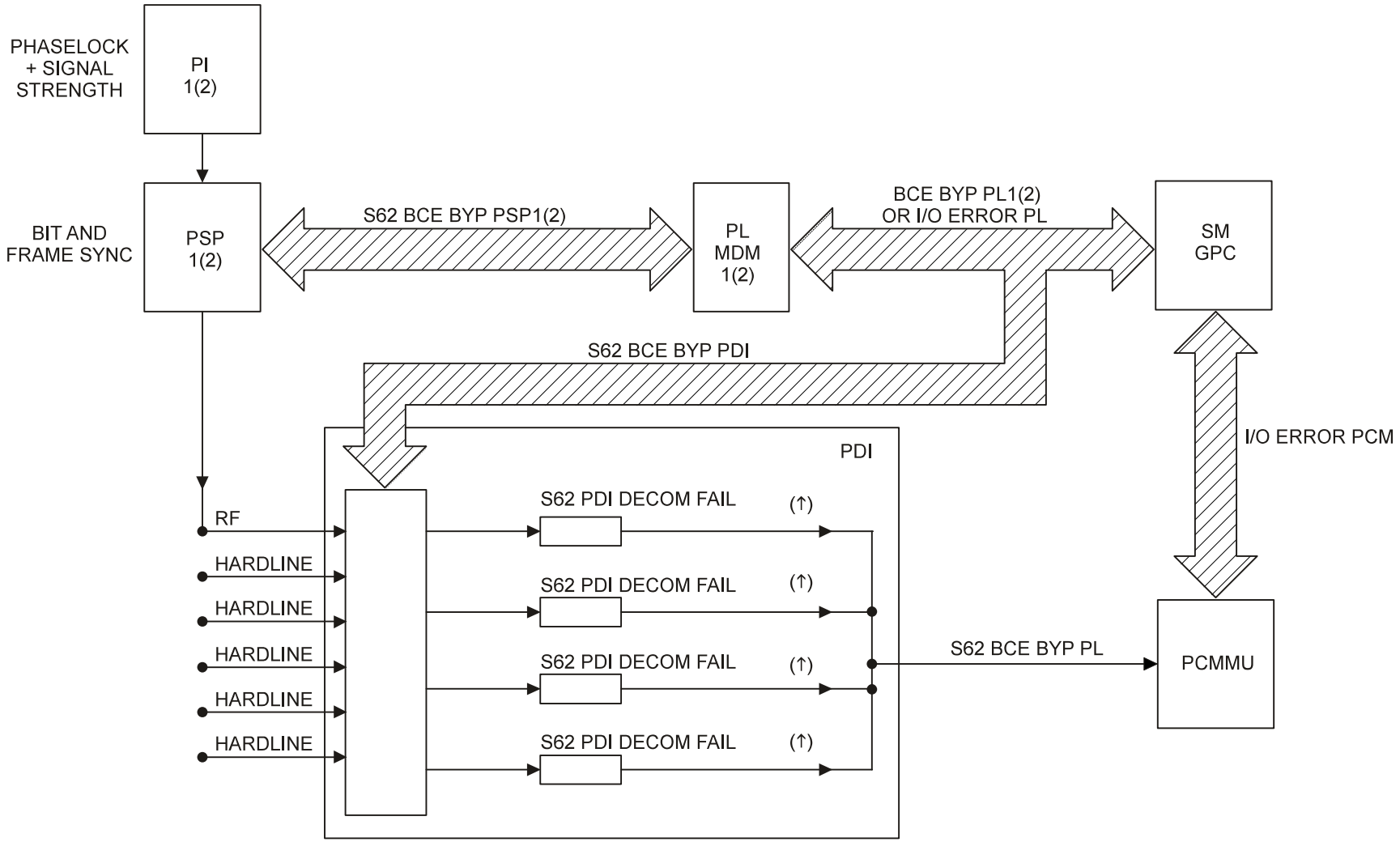

COMM

2.4a 'S62 BCE BYP OFA'

SM ALERT

S62 BCE BYP OFA

If:
OF1 or OF2 MDM failure, or Card failure in OF1 or OF2, or OF1/OF2 MDM data path PCMMU failure

Nominal Config:
(C3)
OI PCMMU PWR – 1
(O14:B,O15:B)
cb MNA,MNB OI MDM 1/2 A,B (two) – cl

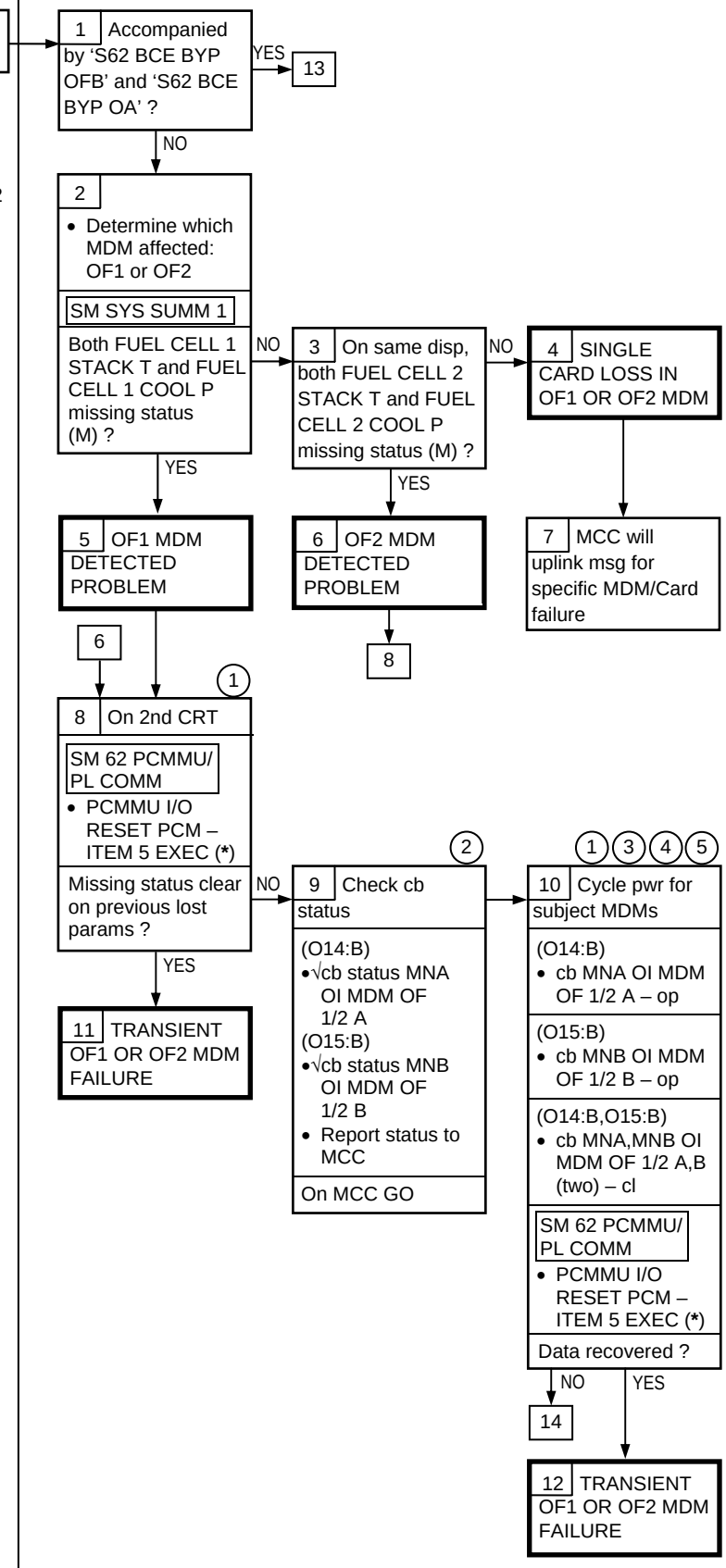

(1) I/O RESET PCM may cause additional SM alerts if continuing problems with OI MDMs or PDI

(2) Must obtain GO from MCC for cb cycle before proceeding to step 10

(3) Additional SM alerts when power is removed

(4) Do not close any cb found (reported) OPEN (tripped) without MCC consent

(5) Both cbs must be open for 3 to 5 seconds to remove power from the MDM

COMM 2.4a (Cont)

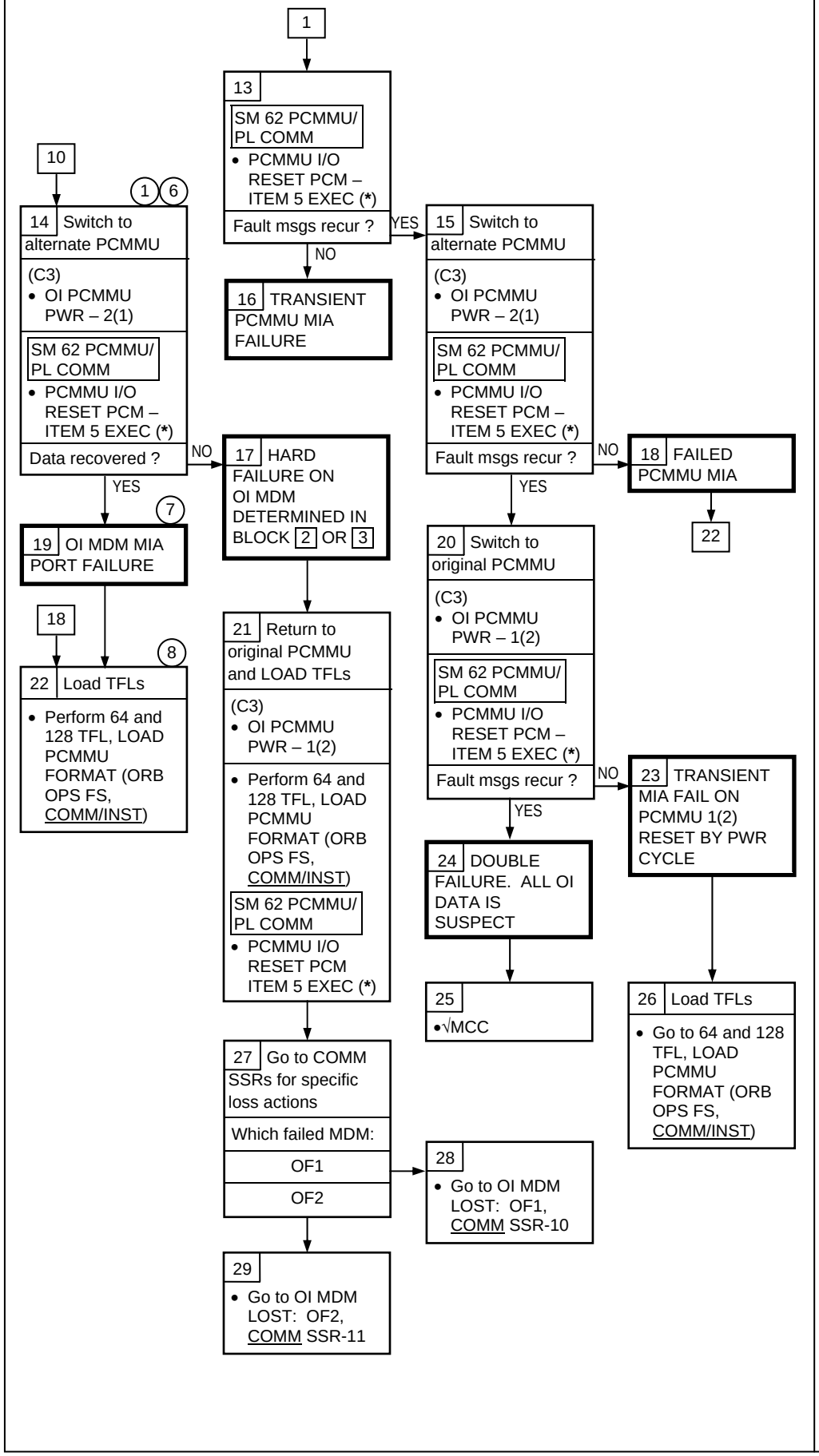

(1) I/O RESET PCM may cause additional SM alerts if continuing problems with OI MDMs or PDI

(6) Advise MCC of PCMMU switch

(7) Full data recovered by PCMMU switch. Redundant path to OF1(2) MDM lost

(8) Change WINDECOM connections (O5,MO30F) as reqd

COMM

2.4b 'S62 BCE BYP OFB'

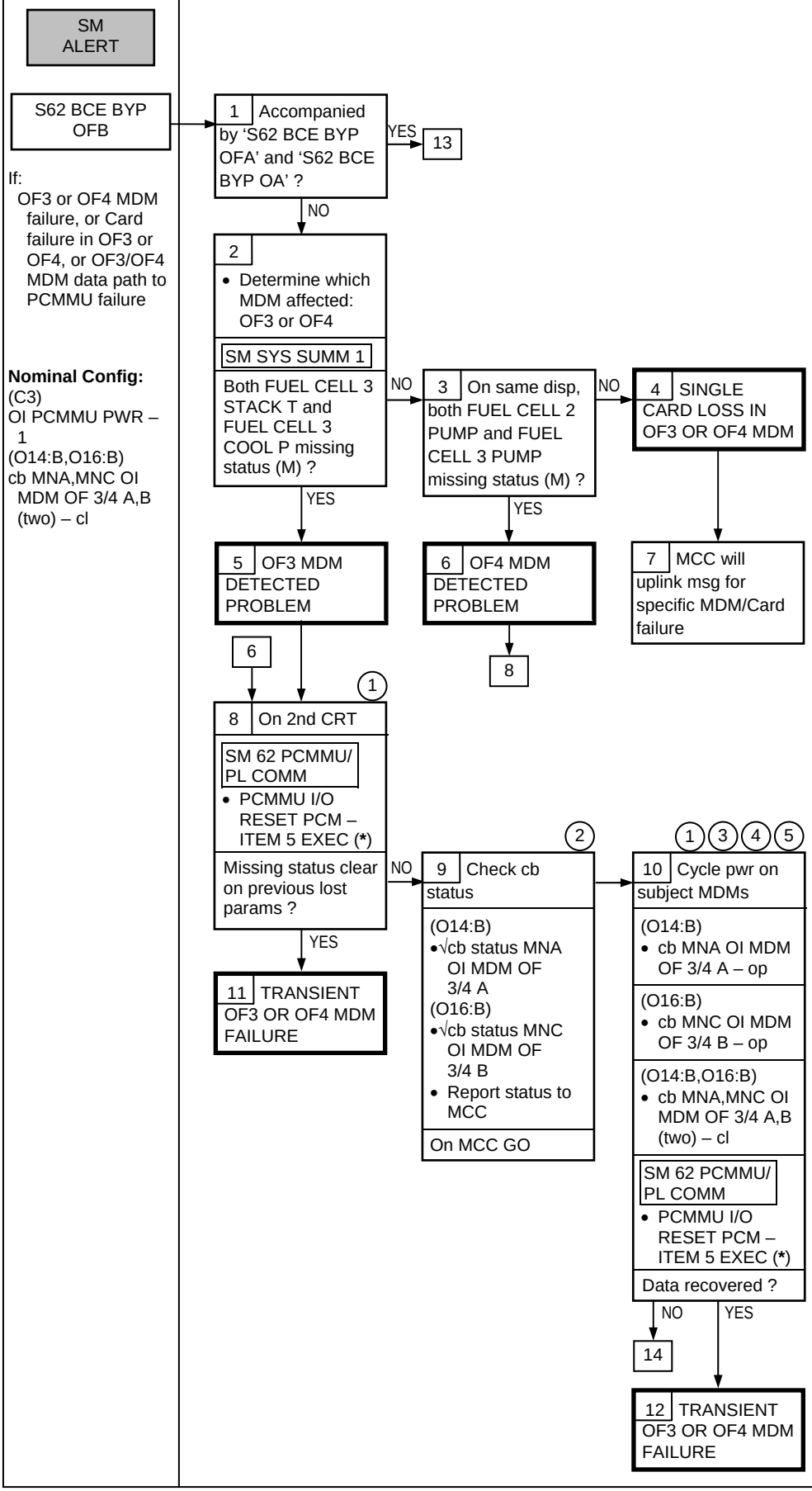

(1) I/O RESET PCM may cause additional SM alerts if continuing problems with OI MDMs or PDI

(2) Must obtain GO from MCC for cb cycle before proceeding to step 10

(3) Additional SM alerts when power is removed

(4) Do NOT close any cb found (reported) OPEN (tripped) without MCC consent

(5) Both cbs must be open for 3 to 5 seconds to remove power from the MDM

COMM 2.4b (Cont)

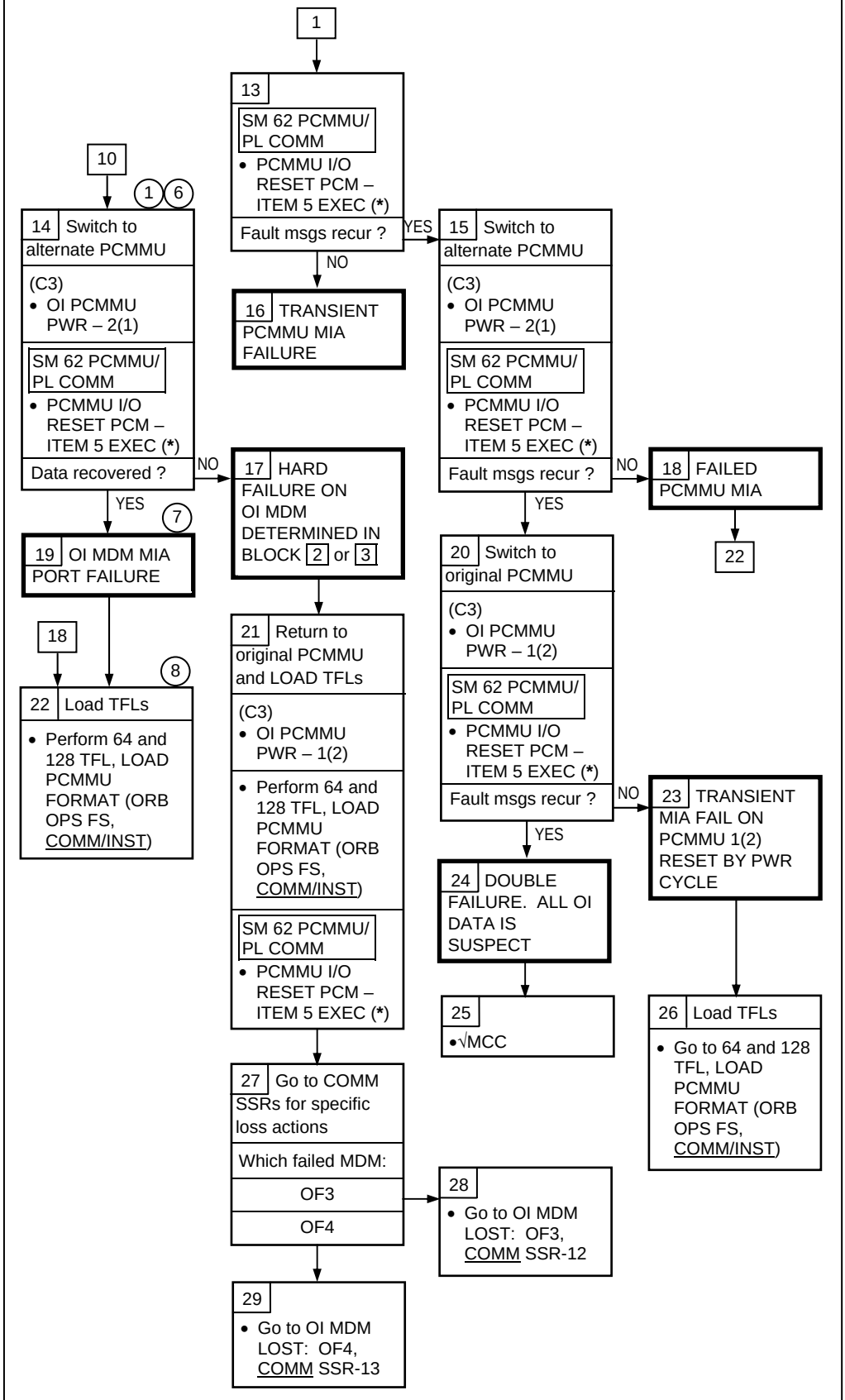

(1) I/O RESET PCM may cause additional SM alerts if continuing problems with OI MDMs or PDI

(6) Advise MCC of PCMMU switch

(7) Full data recovered by PCMMU switch. Redundant path to OF3(4) MDM lost

(8) Change WINDECOM connections (O5,MO30F) as reqd

COMM

2.4c 'S62 BCE BYP OA'

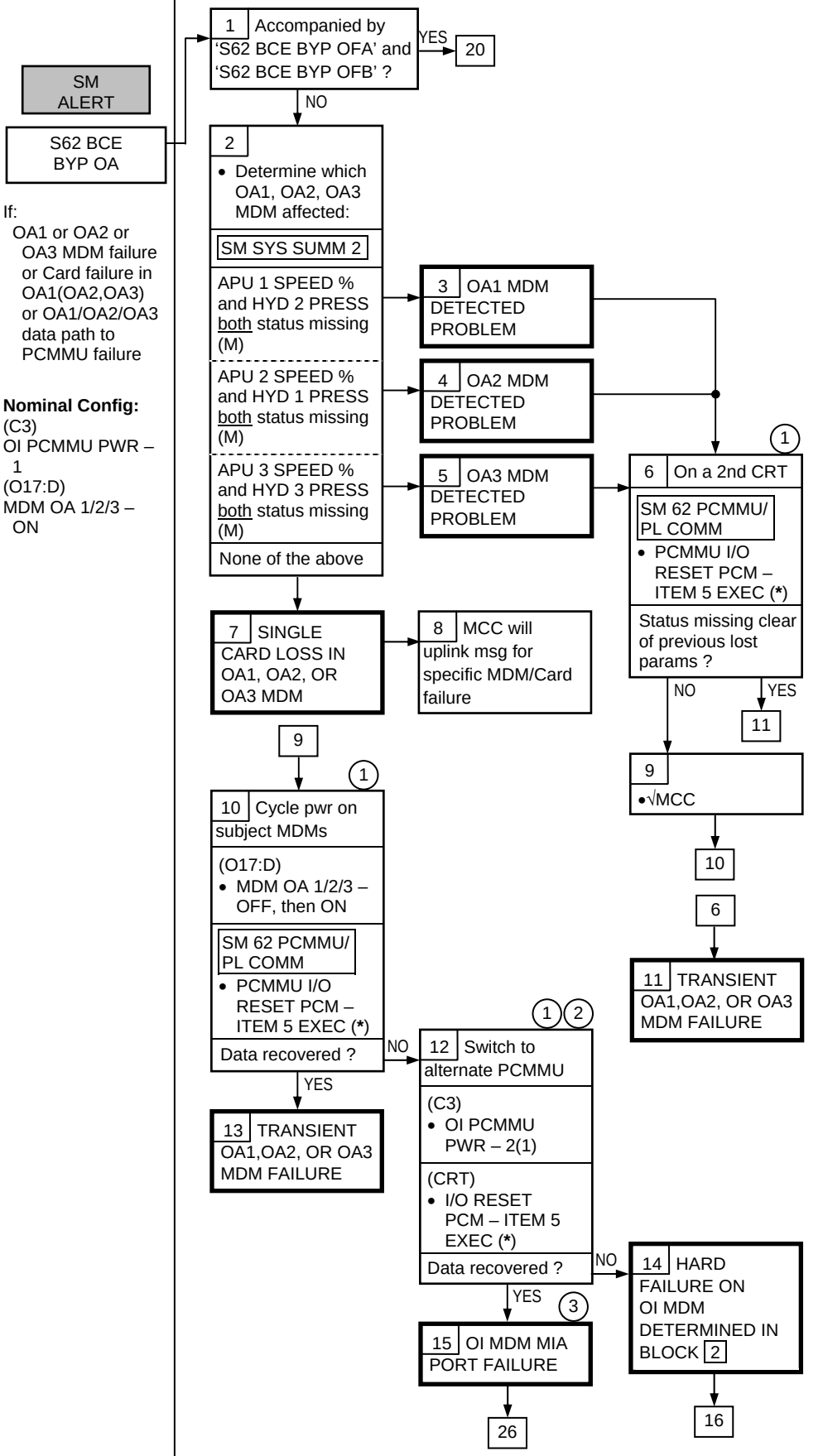

(1) I/O RESET PCM may cause additional SM alerts if previous OI failure, PDI not pwrd ON, PDI not receiving payload data which is FDAd

(2) Advise MCC of PCMMU switch

(3) Full data recovered by PCMMU switch. Redundant path to OA1(2,3) MDM lost

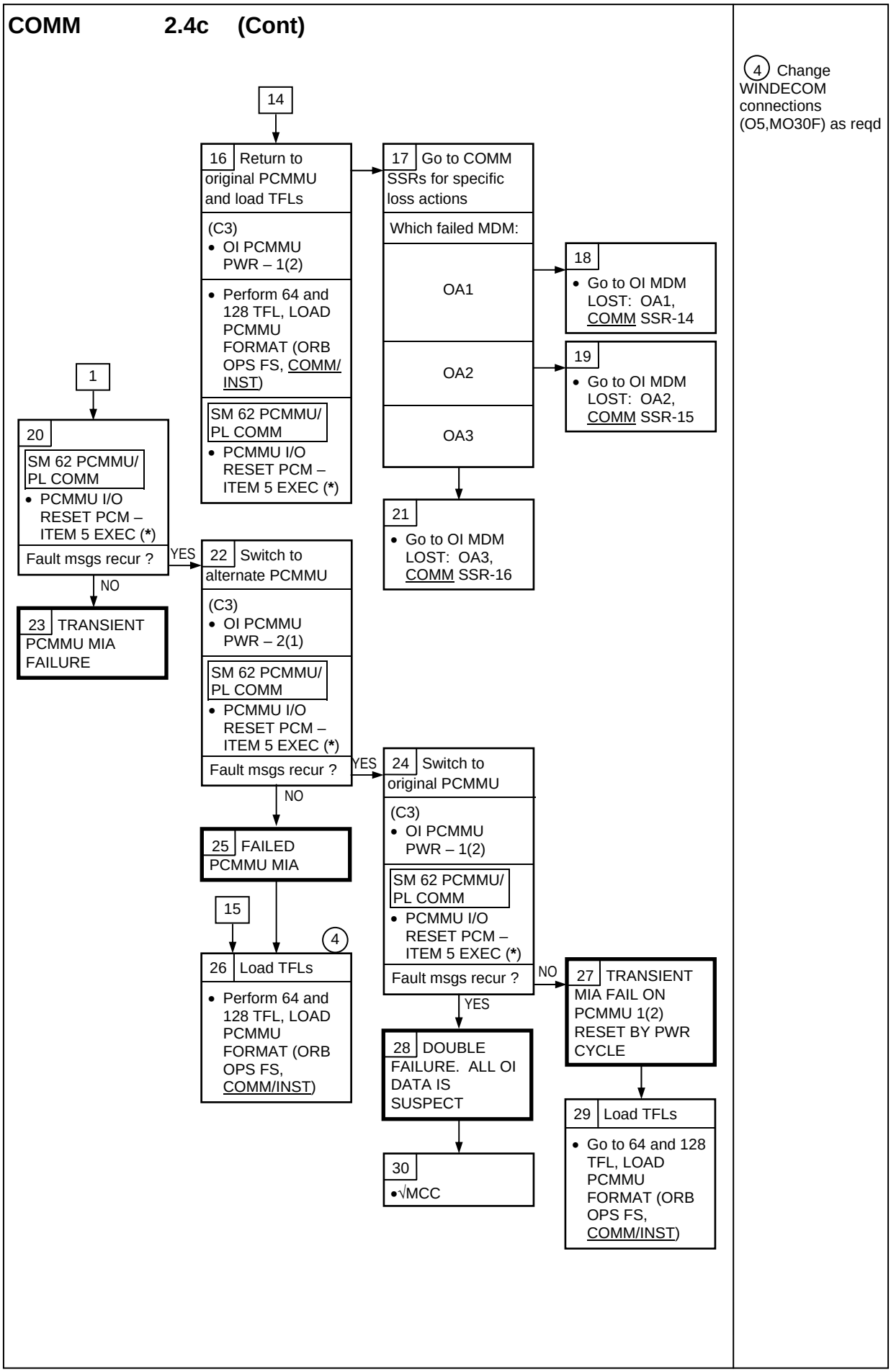
14
16 Return to original PCMMU and load TFLs
(C3)
• OI PCMMU PWR – 1(2)
• Perform 64 and 128 TFL, LOAD PCMMU FORMAT (ORB OPS FS, COMM/INST)
SM 62 PCMMU/PL COMM
• PCMMU I/O RESET PCM – ITEM 5 EXEC (*)
17 Go to COMM SSRs for specific loss actions
Which failed MDM:
OA1
OA2
OA3
18
• Go to OI MDM LOST: OA1, COMM SSR-14
19
• Go to OI MDM LOST: OA2, COMM SSR-15
21
• Go to OI MDM LOST: OA3, COMM SSR-16
1
20
SM 62 PCMMU/PL COMM
• PCMMU I/O RESET PCM – ITEM 5 EXEC (*)
Fault msgs recur ?
YES
NO
22 Switch to alternate PCMMU
(C3)
• OI PCMMU PWR – 2(1)
SM 62 PCMMU/PL COMM
• PCMMU I/O RESET PCM – ITEM 5 EXEC (*)
Fault msgs recur ?
YES
NO
23 TRANSIENT PCMMU MIA FAILURE
24 Switch to original PCMMU
(C3)
• OI PCMMU PWR – 1(2)
SM 62 PCMMU/PL COMM
• PCMMU I/O RESET PCM – ITEM 5 EXEC (*)
Fault msgs recur ?
NO
YES
25 FAILED PCMMU MIA
15
4
26 Load TFLs
• Perform 64 and 128 TFL, LOAD PCMMU FORMAT (ORB OPS FS, COMM/INST)
27 TRANSIENT MIA FAIL ON PCMMU 1(2) RESET BY PWR CYCLE
28 DOUBLE FAILURE. ALL OI DATA IS SUSPECT
29 Load TFLs
• Go to 64 and 128 TFL, LOAD PCMMU FORMAT (ORB OPS FS, COMM/INST)
30
•√MCC
4 Change WINDECOM connections (O5,MO30F) as reqd

COMM

2.4d 'S62 BCE BYP PL'

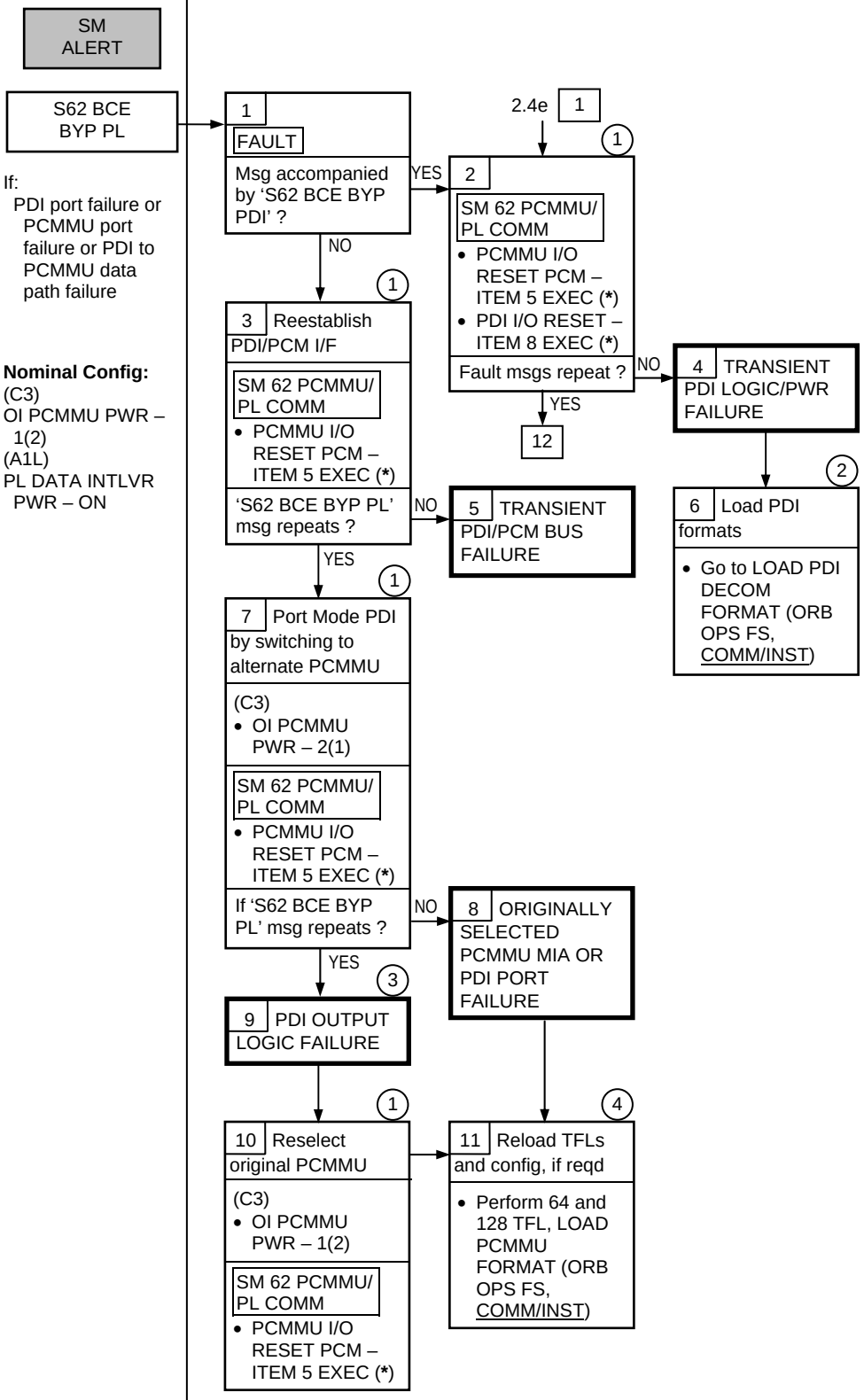

(1) I/O RESET PCM may cause additional SM alerts if previous OI failure, PDI not pwrd ON, PDI not receiving payload data which is FDAd

(2) MCC can uplink PDI loads when SM SPEC 62 is resumed

(3) IFM available whenever spare PDI is manifested

(4) Change PCDECOM connections (O5,MO30F) as reqd

COMM 2.4d (Cont)

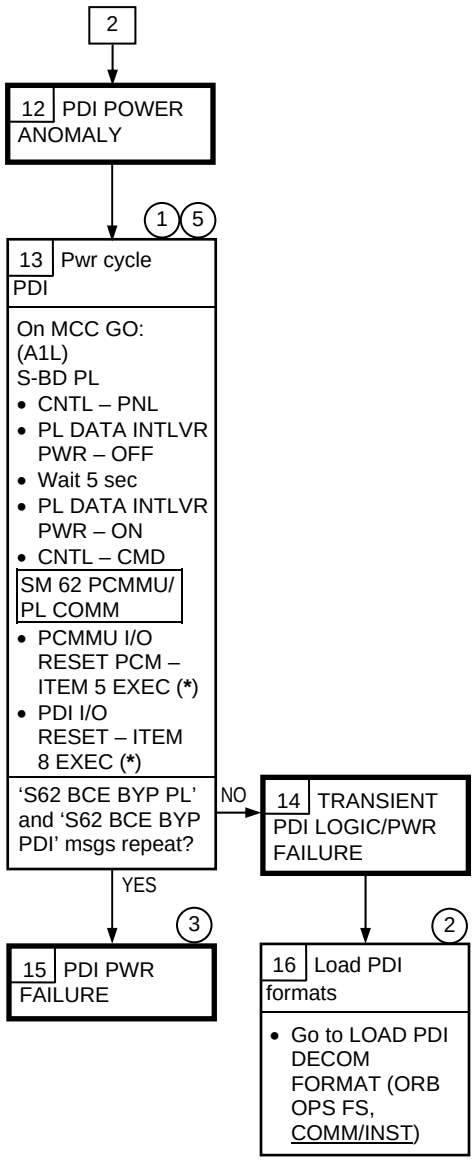

(1) I/O RESET PCM may cause additional SM alerts if previous OI failure, PDI not pwrd ON, PDI not receiving payload data which is FDAd

(2) MCC can uplink PDI loads when SM SPEC 62 is resumed

(3) IFM available whenever spare PDI is manifested

(5) MCC has insight on power going to the PDI. MCC may desire not to cycle

COMM

2.4e ‘S62 BCE BYP PDI’

SM ALERT

(1)(2) S62 BCE BYP PDI

If:
- PDI PL Bus port failure or GPC port failure or PDI to GPC data path failure

Nominal Config:
(A1L)
PL DATA INTLVR PWR – ON

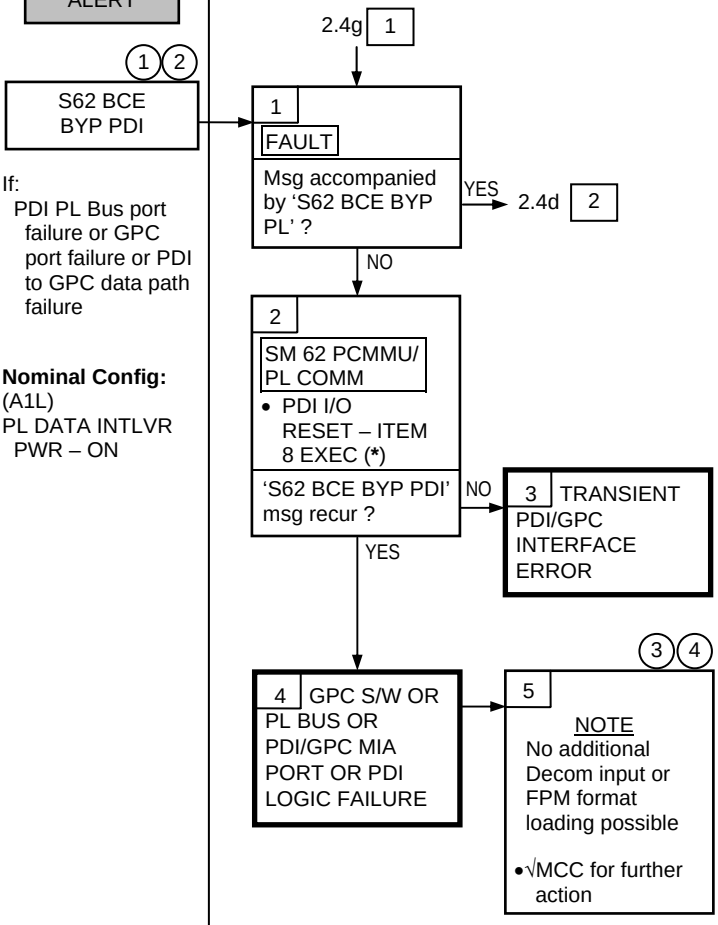

(1) May occur prior to ‘I/O ERROR PL1’ msg, which requires Mal procedure for that error condition be performed

(2) Msg will occur if SM I/O RESET accomplished and PDI pwrd off

(3) Internal PDI logic lockup may be cleared by PDI pwr cycle. However, this will cause loss of currently loaded formats. Do not cycle pwr without MCC direction

(4) May be possible to clear if GPC MIA or GPC S/W with an SM GPC switch. √MCC for further action

COMM

2.4f 'S62 BCE BYP PSP 1(2)'

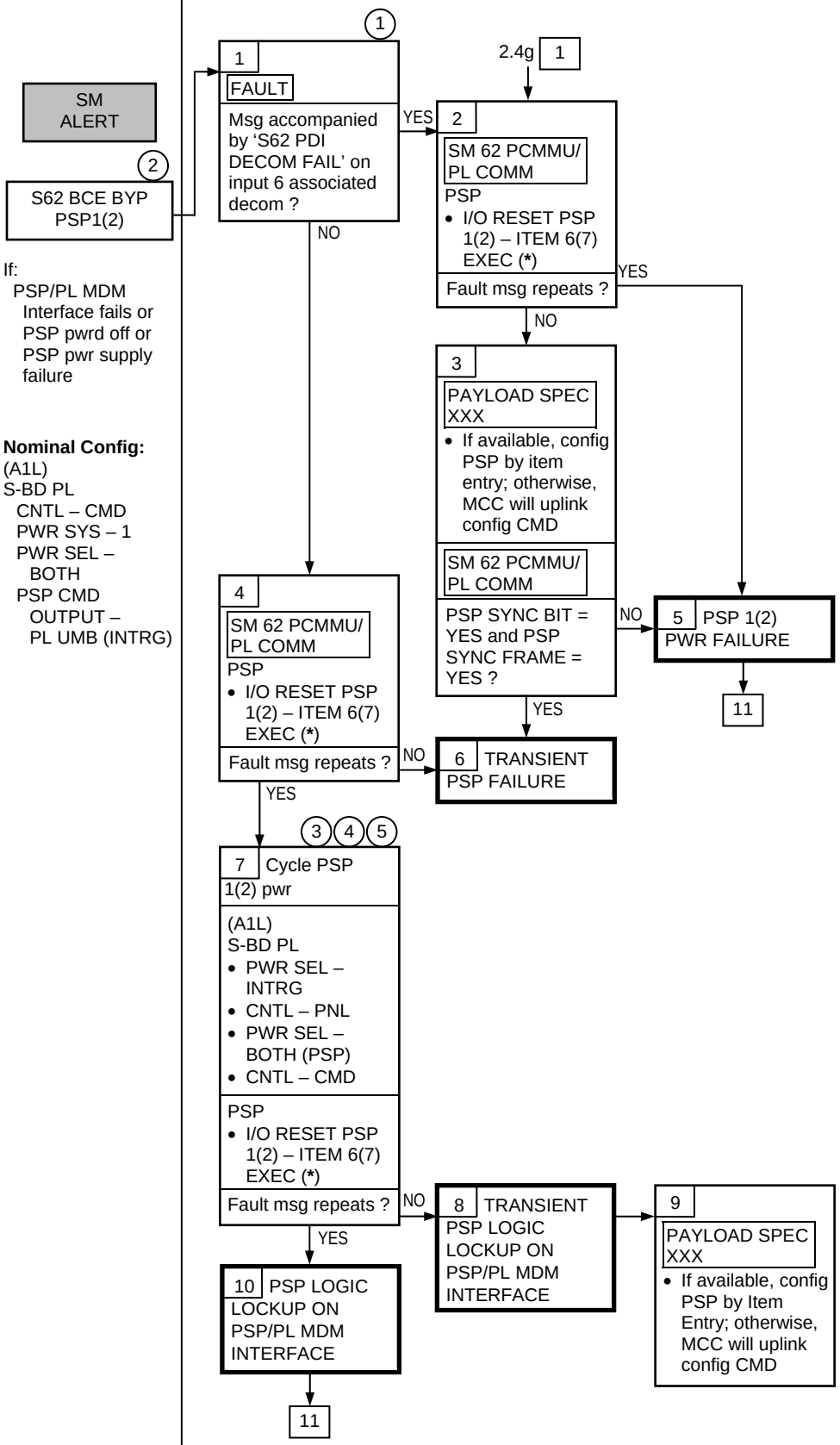

If:
PSP/PL MDM
Interface fails or
PSP pwrd off or
PSP pwr supply failure

Nominal Config:
(A1L)
S-BD PL
CNTL – CMD
PWR SYS – 1
PWR SEL – BOTH
PSP CMD
OUTPUT – PL UMB (INTRG)

(1) PDI DECOM FDA must be enabled to receive 'S62 PDI DECOM FAIL' and ↑

(2) Msg occurs if PSP pwrd off

(3) 'S62 PDI DECOM FAIL' fault msg may occur during PSP pwr cycle

(4) PSP config will be lost in next block steps

(5) S-BD PL PWR SEL sw position should reflect current operational requirements

COMM 2.4f (Cont)

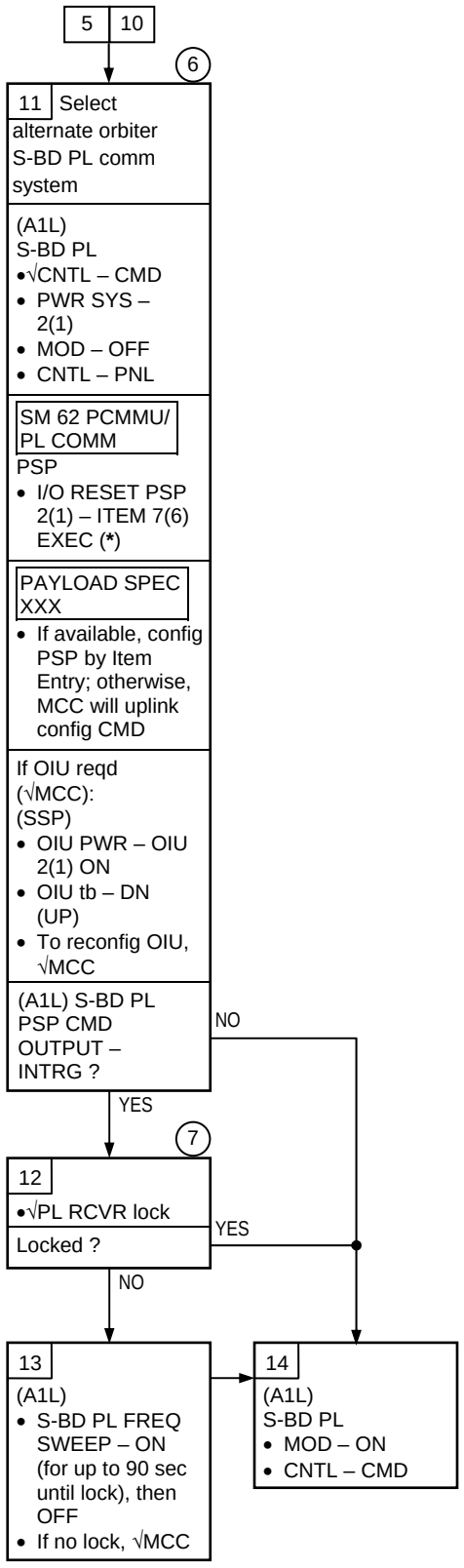

(6) Selection of alternate S-BD PL sys will cause temporary loss of RF to PL

(7) Indications of PL RCVR lock vary with flight

COMM

2.4g 'S62 PDI DECOM FAIL'

SM ALERT

S62 PDI DECOM FAIL

If:
PDI Decom fails, or PL to orbiter PI RF link fails, or PL TLM output to PDI fails, or PSP/PDI hardline failure

Nominal Config:
(A1L)
PL DATA INTLVR
PWR – ON
SM 62 PCMMU/PL COMM

DECOM FDA
ENA – ITEM 14 (15,16,17) = ENA (*)
(A1L)
S-BD PL
PWR SYS – 1
PWR SEL – BOTH
PSP CMD
OUPUT – INTRG(PL UMB)

(1)

1 On SM CRT:
FAULT
Msg accompanied by 'S62 BCE BYP PSP 1(2)' ? → 2.4f 2
Msg accompanied by 'S62 BCE BYP PDI' ? → 2.4e 1
Neither of the above

2 Determine which DECOM(s) indicate(s) fail
SM 62 PCMMU/PL COMM
PDI DECOM 1,2,3, or 4 indicates fail (↑) ?
NO → 3 TRANSIENT PDI DECOM FAIL OR MOMENTARY LOSS OF PL TLM DATA INPUT TO PDI
YES

4 Does associated DECOM have active PL ?
NO → 5 •√MCC
YES

6 Does associated DECOM have flt-specific procedures ?
YES → 7
- Go to S62 PDI DECOM FAIL, (PL OPS, PL SYS, or SODF: ASSY OPS)

NO

8 Determine if DECOM indicating fail (↑) operating on RF P/L TLM input
Failed PDI DECOM INPUT = 6 ?
NO → 9 Reload DECOM indicated as failed (↑)
- Perform LOAD PDI DECOM FORMAT (ORB OPS FS, COMM/INST)

SM 62 PCMMU/PL COMM
ITEM 11 = CPLT ?
NO → 11 PDI DECOM FAILURE → 22
YES

10 Determine if PL INTRG to PSP interface operating properly
PSP SYNC BIT and FRAME = YES ?
YES → 9
NO → 2.5a 1

10

12 DECOM still indicating fail (↑) ?
NO → 13 TRANSIENT PDI DECOM MEMORY FAILURE
YES → 14

(1) Data on display driven by failed DECOM may be static

COMM 2.4g (Cont)

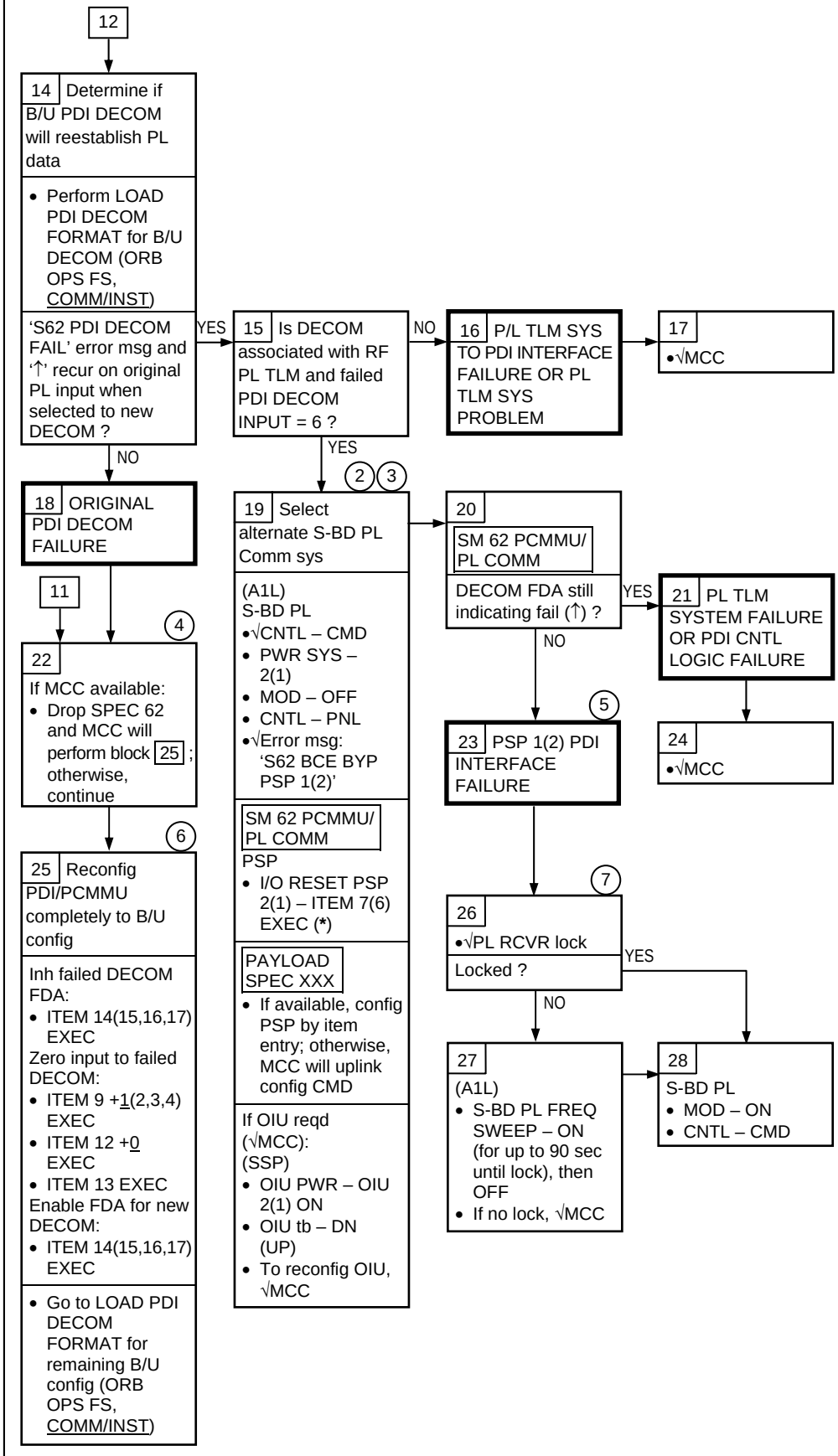

(2) Selection of alternate S-BD PL sys will cause temporary loss of RF to PL

(3) Some payloads, on a flight-specific basis, may not be supported by PL comm string 2

(4) MCC TFL/DFL loads cannot be performed with SPEC 62 active

(5) Original orbiter S-BD PL TLM sys lost

(6) B/U DECOM config requires a TFL change

(7) PL RCVR lock indications vary with flight

COMM

Unable to Obtain PSP Bit and/or Frame Sync Lock

If:
PL INTRG/PSP Interface failure or PSP Bit Frame Sync failure

Nominal Config:
(A1L)
S-BD PL
CNTL – CMD
PWR SYS – 1
PWR SEL – BOTH

2.5a PSP BIT AND/OR FRAME SYNC LOCK FAIL

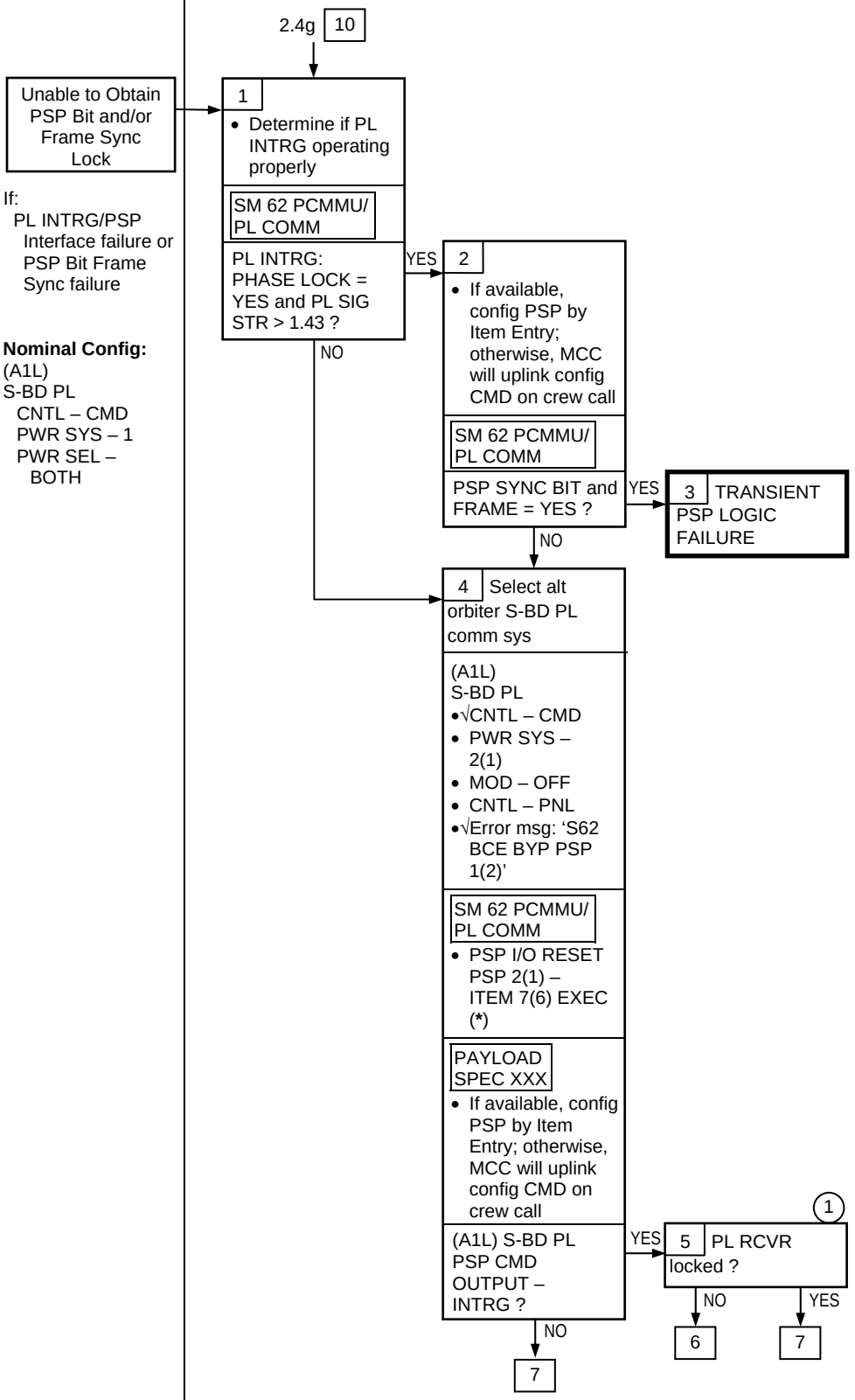

1 PL RCVR lock indications vary with flight

COMM 2.5a (Cont)

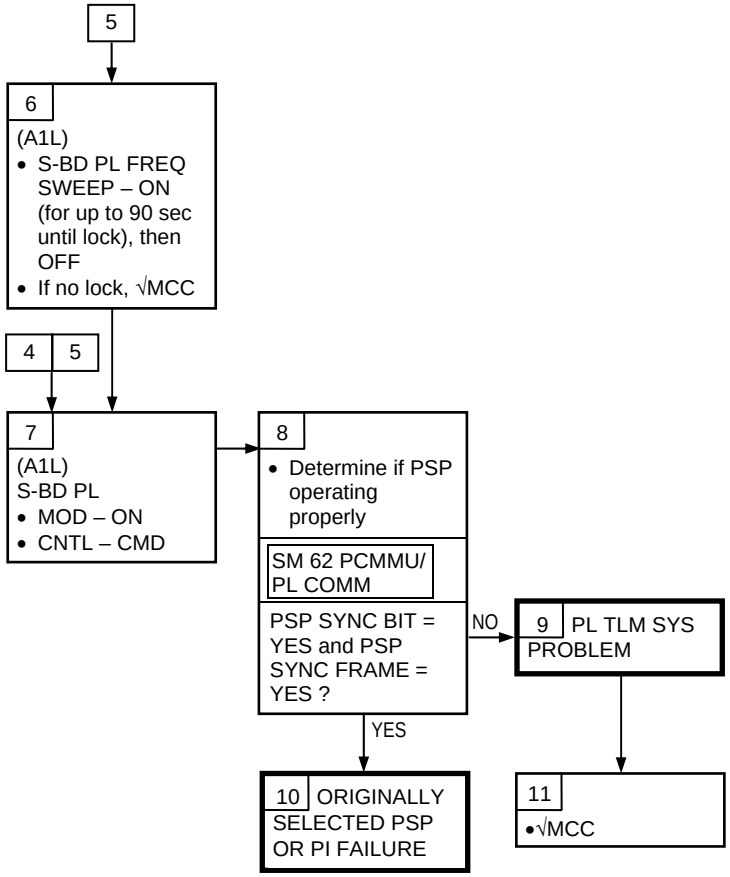

COMM

2.6a OI DSC LOSS

(1) Multiple Params Indicate Off-Scale Low (Displaying 'L')

S69 FUEL CELL
S69 FUEL CELL H2O
S86 FU TK VLV 1(2,3)
S86 RSVR/ACC P 1(2,3)
S88 APU/FU PMP 1(2,3)

Simultaneous occurrence of these fault msgs indicates DSC OM3 problem

Nominal Config:
(O14:B)
cb MNA OI SIG CONDR OF 1/4 A – cl
(O15:B)
cb MNB OI SIG CONDR OF 1/4 B – cl
(O15:B)
cb MNB OI SIG CONDR OF 2/3 A – cl
(O16:B)
cb MNC OI SIG CONDR OF 2/3 B – cl
(O14:B)
cb MNA OI SIG CONDR OM 1/2 A – cl
(O15:B)
cb MNB OI SIG CONDR OM 1/2 B – cl
(O17:C)
SIG CONDR OL 1/2 – ON OR 1/2 – ON
(O17:D)
SIG CONDR OA 1/2/3 – ON
(O15:B)
cb MNB OI SIG CONDR OM3 A – cl
(O16:B)
cb MNC OI SIG CONDR OM3 B – cl

1
- Match param indicators on displays to determine failed DSC

2
- √cb(s) for particular DSC

3
DSC FAILURE

COMM SSR-17	OF1	OR2	COMM SSR-24
COMM SSR-18	OF2	OM1	COMM SSR-25
COMM SSR-19	OF3	OM2	COMM SSR-26
COMM SSR-20	OF4	OA1	COMM SSR-27
COMM SSR-21	OL1	OA2	COMM SSR-28
COMM SSR-22	OL2	OA3	COMM SSR-29
COMM SSR-23	OR1	OM3	COMM SSR-30

(1) Loss of signal conditioning will usually (but not always) cause display of off-scale low value for that param. 'L' will be displayed adjacent to this value

```
XXXX/XXX/078          SM SYS SUMM 1   XX X  DDD/HH:MM:SS
                                             DDD/HH:MM:SS
SMOKE        1/A     2/B   DC VOLTS      1/A     2/B     3/C
CABIN        OF1           FC           OM1     OM2     OM2
L/R FD       OF3     OF2   MAIN         OM2     OM2     OM1
AV BAY 1     OF2     OF3   ESS          OM2     OM2     OM1
       2     OF1     OF3              A_______ B_______ C_____ A
       3     OF1     OF2   CNTL 1    X OF1  X OF2  X OF3X
      CABIN                     2    X OF1  X OF2  X OF3X
PRESS        OF2                3    X OF1  X OF2  X OF3X
dP/dT-EQ     OF3  ±X.XXXSAC
O2 CONC XXX.XS                 VOLT ΦA     OF1     OF2     OF3
PPO2         OF1     OF2           ΦB     OF1     OF2     OF3
FAN ΔP       OF1                   ΦC     OF1     OF2     OF3
HX OUT T     OF1           AMPS ΦA    XX.XS  XX.XS  XX.XS
O2 FLOW      OF1     OF2           ΦB    XX.XS  XX.XS  XX.XS
N2 FLOW      OF1     OF2           ΦC    XX.XS  XX.XS  XX.XS
IMU FAN   AXS BXS CXS   FUEL CELL
 ΔV FC1   FC2   FC3        AMPS         OM1     OM1     OM1
SS1 XXXS XXXS XXXS         REAC VLV     XXS     XXS     XXS
SS2 XXXS XXXS XXXS         STACK T      OM1     OM2     OM2
SS3 XXXS XXXS XXXS         EXIT  T      OM1     OM2     OM2
TOTAL AMPS XXXXS           COOL  P      OM1     OM2     OM2
        KW     XXS              PUMP     XXS     XXS     XXS
                                                          (XX)
```

```
XXXX/XXX/079  SM  SYS  SUMM  2      XXX   DDD/HH:MM:SS
                                           DDD/HH:MM:SS

        CRYO  TK   1          2        3        4        5
      H2  PRESS   XXXS     XXXS    XXXS    XXXS     XXXS
      O2  PRESS  XXXXS    XXXXS   XXXXS   XXXXS    XXXXS
        HTR  T1   OM1      OM1     OM1      OM2      OF2
             T2   OM2      OM2     OF3      OF3      OF3

  APU          1        2        3   |   HYD       1        2        3
TEMP  EGT    OA1      OA2      OA3  |PRESS     OA2      OA1      OA3
 B/U  EGT    OA2      OA3      OA1  |RSVR  T   OA1      OA2      OA3
 OIL  IN     OA1      OA2      OA3  |      P   OA1      OA2      OA3
      OUT    OA2      OA3      OA1  |   QTY    OA1      OA2      OA3
SPEED  %     OA1      OA2      OA3  |  W/B
FUEL  QTY    XXXS     XXXS     XXXS |H2O  QTY  XXXS     XXXS     XXXS
 PMP  LK  P  OM3      OM3      OM3  |BYP  VLV  XXXS     XXXS     XXXS
OIL  OUT  P  OA1      OA2      OA3  |
                                    |THERM     CNTL      1        2
 AV  BAY                            |H2O  PUMP  P       OF2      OF3
TEMP         OF2      OF3      OF1  |FREON  FLOW       OF2      OF3
FAN  ΔP    X.XXS    X.XXS    X.XXS  |EVAP  OUT  T       OA2      OA3

                                                                (XX)
```

```
XXXX/XXX/089        PRPLT  THERMAL  XX  X  DDD/HH:MM:SS
     POD              L       R                DDD/HH:MM:SS
OMS  TK        OX   OL2     OR2  |
               FU   OL1     OR1  |  OMS  CRSFD       L      R      C
ENG  I/F       OX   OL1     OR1  |XFD          OX    OA1    OA2    OA3
               FU   OL2     OR2  |     GMBL    LN    OA1    OA2
          OX  VLV   OL1     OR1  |DRN          OX    OA3    OA3
          FU  INJ   OL1     OR1  |
                                 |
WEB  KEEL      1   OL2     OR2  |
               2   OL2     OR2  |
     Y        OB   OL2     OR2  |
              UP   OL1     OR1  |
OX  DRN  PL    1   OL1     OR1  |
               2   OL1     OR1  |  FWD   RCS       FU      OX
ENG      COVER   OM1     OM2  |     LINE  T1   OF2     OF4
     SERV  PNL   OL2     OR2  |           T2   OF4     OF2
GSE  SERV  PNL   OL2     OR2  |
TEST  HE/OX    1   OL1     OR1  |  AFT  RCS        L       R
               2   OL2     OR2  |MANF  1      OX   OL1     OR1
                                 |DRN  PNL      1   OL2     OR2
                                 |              2   OL2     OR2
                                 |VERN  PNL     1   OL2     OR2
                                 |              2   OL2     OR2
                                                                (XX)
```

COMM SSR

COMM SSR-1
LOSS OF ALL VOICE COMM

1. Perform NO AUDIO, COMM, 2.1a
2. Install AUDIO CTR BYP CONNECTORS
   Perform ACCU BYPASS CONNECTOR INSTALLATION (IFM, PROCEDURES A THRU F) for CDR and PLT ATUs

If still no COMM but CMD capability confirmed (ORB PKT, COMM, COMM LOST multi panels), MCC will attempt telecon via OCA

If Ku-Band not deployed/activated:

3. Perform KU-BD ANT DEPLOY and KU-BD ACTIVATION (ORB OPS, COMM/INST):
4. Configure for OCA telecom (ORB OPS, PGSC, VIDEO CONFERENCING) in low rate

L12 PDIP KU BD RATE – LOW
A1U KU SIG PROC LDR – PL DIGITAL
HDR – TV
√KU PWR – ON
√KU MODE – COMM
√KU – GPC
KU CNTL – PNL

If no OCA capability (CMD OK) and voice still cannot be established:

5. Perform next day PLS

6. Use Scratch Pad line(s) to inform MCC of no voice and for other msgs
   (MCC monitors all Scratch Pad lines)

NOTE
For letters above F, use ROW/COLUMN combinations below; i.e., 2B = N.
Use '..' when msg requires > 1 Scratch Pad line (expect ERR)

		COLUMN					
		A	B	C	D	E	F
ROW	1	G	H	I	J	K	L
	2	M	N	O	P	Q	R
	3	S	T	U	V	W	X
	4	Y	Z				

Standard Responses
11 YES
22 NO
33 MSG RCVD – STBY
44 MSG RCVD – WILCO
55 DON'T KNOW
66 RESEND MSG
77 REFERENCE MSG
88 ? (DON'T UNDERSTAND – PLEASE CLARIFY)
99 MISSION STATUS – OK
00 MISSION STATUS – PROBLEM IDENTIFIED, PLEASE ADVISE
AA PAGE NUMBER

EX:
ITEM 01 +77 (02) +924 (03) +88
'Reference Msg 924; Don't Understand – Please Clarify'

7. MCC will acknowledge by lighting Abort light:
   ON for at least 1 min, then OFF = MSG RCVD – STBY
   ON for 10 sec, then OFF = YES
   ON for 10 sec, then OFF for 10 sec, ON for 10 sec, then OFF = NO

If still no Comm, and no CMD:

8. Minimize perturbations and deorbit
   Cease payload ops, which cause vehicle movement
   Do not perform any unnecessary attitude maneuvers, vents, dumps, or purges
   Perform reqd attitude maneuvers, vents, dumps, and purges as close to Deorbit Burn as possible
   MNVR(TRK) -ZLV, +XVV attitude until Deorbit Prep
   TG = 2, BV = 3, OM = 180

   OPS 202 PRO

   GNC XXXX MNVR YYYY

   If PEG 7 Δ Vs = 0 and TIG in future, then Deorbit to PLS at TIG in target set >>

Otherwise:

Perform GPS INCORPORATION (ORB OPS, GNC), then:

If GPS is functioning properly, Deorbit to next lighted CONUS opportunity or next CONUS if lighted doesn't exist (either current or next day PLS)

NOTE

Do not inhibit GPS for crew sleep

D/O, NOMINAL DEORBIT PREP PROCEDURES

Pen & Ink: Add "GPS INCORPORATION (EPCL, GNC)" at TIG-2:00 hr

If GPS is NOT functioning properly, Deorbit according to following priorities for altitude and available targets:

Current Altitude:

1. Deorbit within next 13 hr if Hp $\geq$120 nmi
2. Deorbit within next 9 hr if 105 $\leq$ Hp < 120 or less

Available Targets:

1. Next lighted CONUS opportunity
2. Next CONUS opportunity
3. Next lighted ELS opportunity

EXPLANATORY NOTES FOR OI MDM/DSC LOSS SSRs

NOTE

OI MDM/DSC Loss action items are based on loss of specific OI MDM or DSC. Each procedure defines crew actions reqd because of the lost measurements on failed OI MDM or DSC

For each procedure, the following assumptions/guidelines are used:

1. Only on-orbit and sleep configs are addressed. Entry changes will be uplinked with entry sw list changes

2. Only a few lost measurements have possible recoveries. Many Mal procedures will remain unusable. Actions reqd maximize capability

3. Pwr consumption is not a consideration. Loads will be balanced after the fact by MCC

4. Procedures include primary C/W inhibits (DSC only). MCC will do TMBUs to assure safe monitoring/control only, with no general TMBU of all affected measurements

5. Procedures do not represent a complete list of measurements affected. Procedures include only those measurement losses that are significant to crew and those with possible actions

6. Params affected by OI MDM loss will have 'M' displayed adjacent to them. Those params affected by DSC loss will have 'L' displayed adjacent to them (params displayed on meter will be pegged low). Do not use these data

COMM SSR-10
OI MDM LOST: OF1

	ACTIONS	MEASUREMENT LOSS	NOTES
	If on PCS SYS 1: • Perform RECONFIG TO ALT PCS SYS, ECLS SSR-3	Most PCS 1 measurements	(1) If condensation in cabin, √MCC
1	(L1) • AV BAY 3 FAN B – OFF • A – ON If on IMU FAN A: • IMU FAN B(C) – ON • A – OFF • Monitor Cabin Fan flow by feel During sleep periods: • CAB FAN A,B (two) – ON	Av Bay 3 Fan ΔP Temp (MCC has limited insight) Hum Sep A,B (two) Speed Snsr Waste Qty 1 IMU Fan ΔP A Speed Snsr Cab Fan ΔP	(2) Buses will be untied for entry. MCC will TMBU FC ΔAMPS 2 limits and notify crew. If loss of comm, reset limits to present value ± 40
	• Maintain LiOH Canister(s) changeout schedule per cue card and FLIGHT PLAN	PPCO2 (MCC cannot assess)	(3) WST TK will be dumped by time (≈2 %/min) to provide ullage to make EOM, MCC will provide the time
		FC 1 pH Snsr	(4) This action activates redundant htrs on Supply H2O Dump Line, Waste H2O Dump Line, Vacuum Vent Line
2	(R1) • MN BUS TIE B,C (two) – ON (tb-ON)	FC2 SS1 ΔV SS2 ΔV SS3 ΔV	(5) Smoke Det H/W Alarm still available
	(L1) If FLASH EVAP CNTLR PRI B enabled: • Perform FES RESTART ECLS SSR-5, using PRI A	Most FES Feedline A Htr measurements	(6) Xdcrs on disp SM 87 HYD THERMAL will show 'M' for some parameters
	(R14:C) • cb MNB KU ANT HTR – op	Ku Gyro temp monitoring	(7) Visibility into Truss Flange temps lost
3	• √MCC about performing WASTE H2O DUMP	Waste Qty 1	(8) One of two temps in each zone lost
4	(ML86B:A) • cb MNA,MNB H2O LINE HTR A, HTR B (two) – cl	Waste H2O Dump Line T	(9) Vlv position is normally closed. Position can be verified during EMU recharge
		N2 Qty (two) 1,2	(10) Freon Loop 2 Automatic Radiator Isolation capability is lost
5		Smoke Det A Concn Av Bay 2 A Concn Av Bay 3 Concn Cabin	(11) Call MCC for MMU 1 action. If MMU 1 off, ITEM 4 EXEC
6		HYD sys temps	
7 8 9	(ML86B:C) • cb MNA,MNB EXT ARLK HTR STRUC (two) – cl • cb MNA, MNB EXT ARLK HTR LINE ZN 1,2 (four) – cl	External Airlock LCG EV 1 Supply Line press External Airlock Fwd and Aft Truss Flange temps External Airlock H2O Line Zone 1 Htr A temp External Airlock H2O Line Zone 2 Htr B temp External Airlock H2O Shutoff Vlv position	
10		Freon Loop 2 Accum Qty	
11	(O15:F) • MMU 2 – ON		

COMM SSR-11
OI MDM LOST: OF2

	ACTIONS		MEASUREMENT LOSS	NOTES
	If on PCS SYS 2: • Perform RECONFIG TO ALT PCS SYS, ECLS SSR-3		Most PCS Sys 2 measurements	(1) Use interchanger flow to monitor H2O Loop 1 performance if reqd
	(L1) • AV BAY 1 FAN B – OFF • A – ON • √H2O PUMP LOOP 2 – ON • H2O PUMP LOOP 1 – OFF		Av Bay 1 Fan ΔP Temp (MCC has limited insight) 1 Most H2O Loop 1 measurements	(2) Crossover vlv needs to be checked and TKC unisolated to equalize tks to provide leak protection
	• Do not don Biomed Electrodes		ECG 1,2 Telemetry	(3) Buses will be untied for entry. MCC will TMBU FC ΔAMPS 3 limits and notify crew. If loss of comm, reset limits to present value ± 40
2	(R11L) • √PLY H2O TKC INLET, OUTLET (two) – OP (tb-OP)		Sply H2O Qty B Qty D	(4) This action activates dual htrs on Supply H2O Dump Line, Waste H2O Dump Line, Vacuum Vent Line
3	(R1) • MN BUS TIE C,A (two) – ON (tb-ON)		FC3 SS1 ΔV SS2 ΔV SS3 ΔV	(5) Smoke det H/W Alarm still available
	SM 66 ENVIRONMENT • Monitor AIRLK P and dP/dT for cabin integrity on-orbit		Cabin Press Snsr	(6) Zone 1 temps verify proper switch config
			N2 Qty 2	(7) Vestibule Temp 2 available
			FC2 pH Snsr	(8) Structural temps verify proper switch config
4	(ML86B:A) • cb MNA,MNB H2O LINE HTR A, HTR B (two) – cl		Sply H2O Dump Line T	(9) Vlvs still operational. Alternate vlvs available
		5	Smoke Det A Concn Av Bay 1 5 Smoke Det B Concn Av Bay 3 5 Smoke Det Concn Right Flt Deck	(10) Freon Loop 1 Automatic Radiator Isolation capability is lost
		6	External Airlock LCG EV 2 Supply Line press 6 External Airlock H2O Line Zone 1 MNA,B,C Htr ON status 7 Vestibule Temp 1 8 EXT A/L Struc Htr MNA,B Htr ON status 9 Vestibule Isolation Vlv 1 and Depress Vlv 1 op/cl positions	
		10	Freon Loop 1 Accum Qty	

COMM SSR-12
OI MDM LOST: OF3

	ACTIONS		MEASUREMENT LOSS	NOTES
	SM 66 ENVIRONMENT • Monitor Cabin Press for cabin leaks		Cabin dP/dT	(1) Use Interchanger flow to monitor H2O Loop 2 performance if reqd (2) Raises H2O Loop 1 Pump Out P Limit (3) Lowers H2O Loop 2 Pump Out P Limit (4) Causes loss of FC Auto purge capability (5) Avoids nuisance alarms (6) SM 76 COMM display S-BD PM mode static, SM GPC will continue selecting ANT for the mode shown (7) Force TDRS antenna pointing (8) Xdcrs on disp SM 87 HYD THERMAL will show 'M' for some parameters
	(L1)		Av Bay 2 Fan ΔP Temp (MCC has limited insight)	
	• H2O PUMP LOOP 1 – ON • H2O LOOP 1 BYP MODE – AUTO • H2O PUMP LOOP 2 – OFF • H2O LOOP 2 BYP MODE – MAN	1	Most H2O Loop 2 measurements	
2 3	(R13U) • C/W PARAM SEL tw (three) – 105 • C/W LIMIT SET VALUE tw (three) – 1.50 • C/W LIMIT SET LIMIT – LOWER • C/W LIMIT SET FUNC – SET • C/W PARAM SEL tw (three) – 115 • C/W LIMIT SET VALUE tw (three) – 0.65 • C/W LIMIT SET LIMIT – LOWER • C/W LIMIT SET FUNC – SET • C/W PARAM SEL tw – > 119			
	When reqd: • Perform FUEL CELL PURGE – MANUAL (ORB OPS, EPS) (Cue Card) (Assume SM 2 not available when using Cue Card)	4	FC Purge Line temps FC3 pH Snsr	
5	SM 60 SM TABLE MAINT Inhibit S-BD ANT QUAD Alert: • Param ID – ITEM 1 +0 9 2 1 0 4 9 EXEC • INH – ITEM 10(15) EXEC		Antenna Select feedbacks	
	(L1) If FLASH EVAP CNTLR PRI A enabled: • Perform FES RESTART, ECLS SSR-5, using PRI B		Most FES Feedline B Htr measurements	
6 7	SM ANTENNA If TDRS: • GPC OVRD – ITEM 13 EXEC (*)		S-BD mode	
			N2 Qty (two) 1,2	
		8	HYD sys temps	
	(Continued)		(Continued)	

COMM SSR-12 (Cont)
OI MDM LOST: OF3

ACTIONS	MEASUREMENT LOSS	NOTES
• Terminate all SUPPLY H2O Dump operations through dump nozzle • If Supply H2O Dump reqd, perform SUPPLY WATER DUMP USING FES (ORB OPS, ECLS)	Supply H2O Noz T A,B (two)	(9) For leak detection
• Terminate all WASTE H2O Dump operations through dump nozzle	Waste H2O Noz T A,B (two)	(10) Smoke Det H/W Alarm still available
9 (R11L) • √SPLY H2O TKC INLET, OUTLET (two) – OP (tb-OP)	Supply H2O Qty C	(11) F9 meter still available
	10 Smoke Det B Concn Av Bay 1 10 Bay 2 10 Smoke Det Concn Left Flt Deck	(12) Zone 2 temps verify proper switch config
	11 FC 1,2,3 Amps	(13) Both htrs activated since only one Vestibule temp available
(ML86B:C) • cb MNA,MNB EXT ARLK HTR VEST (two) – cl • cb MNA,MNB EXT ARLK HTR STRUC (two) – cl • cb MNA,MNB EXT ARLK HTR LINE ZN 1,2 (four) – cl	12 External Airlock H2O Line Zone 2 MNA,B,C Htr ON status 13 External Airlock Vestibule MNA,B Htr ON status 14 Vestibule Temp 2 15 External Airlock Lower Bulkhead temp External Airlock H2O Line Zone 1 and 2 LCG 2 temp External Airlock Line Zone 2 Temp A O2 Sply 16 Vestibule Isolation Vlv 2 op/cl positions	(14) Vestibule Temp 1 available (15) Both htrs activated since visibility into temps lost (16) Vlv still operational. Alternate vlvs available

COMM SSR-13
OI MDM LOST: OF4

	ACTIONS		MEASUREMENT LOSS	NOTES
	When reqd: • Perform FUEL CELL PURGE – MANUAL (ORB OPS, EPS) (Cue Card) (Assume SM 2 not available when using Cue Card)		FC Auto Purge Start discretes	(1) No SM alerts for CCTV overtemp (2) Xdcrs on disp SM 87 HYD THERM will show 'M' for some parameters (3) Inhibits FES High Load duct alerts. Pre-condition steering could cause nuisance alarms unless params are inhibited (4) May get Antenna alerts when manually operating (C3) S-BD PM ANT sw (loss of position discrete to SM) (5) Buses will be untied for entry. MCC will TMBU FC ΔAMPS 1 limits and notify crew. If loss of comm, reset limits to present value ± 40 (6) Vlv still operational. Alternate vlvs available (7) Freon Loop 1,2 Automatic Radiator Isolation capability is lost
	• During CCTV Camr ops, monitor CCTV Camr temps on Monitor	1	CCTV Camr overtemp discrete	
	• Perform CIRC PUMP XDCR FAILURE WORKAROUND, APU/HYD SSR-3, for 'M' Xdcrs on display SM 87 HYD THERMAL	2	HYD sys temps	
	If Topping Evap enabled: (L1) • TOP EVAP HTR DUCT – A/B		Fwd,Aft Topping Duct Htr measurements	
	If High Load Evap enabled: (L1) • HI LOAD DUCT HTR – A/B		Hi Load Outbd Duct Htr measurements	
3	If High Load Evap not enabled: SM 60 SM TABLE MAINT • ITEM 1 +0 6 3 1 8 2 0 • ITEM 10 EXEC • ITEM 1 +0 6 3 1 8 2 1 • ITEM 10 EXEC • ITEM 1 +0 6 3 1 8 9 0 • ITEM 10 EXEC			
		4	S-BD Quad Ant Sel 1/2 – GPC	
	(A12) • APU HTR TK/FU LINE/H2O/SYS 1A,1B, 3A,3B (four) – AUTO		APU H2O sys temps (Htr mon)	
5	(R1) • MN BUS TIE A,B (two) – ON (tb-ON)		FC1 SS1 ΔV SS2 ΔV SS3 ΔV	
		6	Vestibule Vlv 2 op/cl position	
	(L2) • FREON LOOP ISOL MODE – OFF	7	Radiator Isolation Auto Mode indication	

COMM SSR-14
OI MDM LOST: OA1

ACTIONS	MEASUREMENT LOSS	NOTES
• Perform CIRC PUMP PRESS XDCR FAILURE WORKAROUND, APU/HYD SSR-1 for Circ Pump 1 • Perform SIMULTANEOUS CIRC PUMP ON/GPC OPS, APU/HYD SSR-2 for Circ Pump 1	HYD sys 1 Circ Pump pressure	(1) GPC capability to monitor HYD Accumulator and Reservoir pressure lost for sys 1 (2) Loss of fuel injector temperature is no-go for non-critical on-orbit burns. The engine will be used for deorbit
• Perform CIRC PUMP XDCR FAILURE WORKAROUND, APU/HYD SSR-3, for 'M' xdcrs on display SM 87 HYD THERMAL	1 HYD sys temps HYD sys 1 Accumulator and Reservoir pressure	
	APU 1 Fuel Qty (MDU and CRT)	
If High Load Evap Enabled: (L1) • HI LOAD DUCT HTR – A/B	Hi Load Inbd Duct Htr measurement	
(A14) • RCS/OMS HTR OMS CRSFD LINES (two) – AUTO	Partial insight into OMS CRSFD Line Htr ops	
2 L OMS no-go for on-orbit burns	L OMS Fu Inj T	

COMM SSR-15
OI MDM LOST: OA2

	ACTIONS	MEASUREMENT LOSS	NOTES
	When reqd: • Perform FUEL CELL PURGE – MANUAL (ORB OPS, EPS) (Cue Card) (Assume SM 2 not available when using Cue Card)	1 FC Purge Line temps	(1) Causes loss of FC Auto purge capability
	• Perform CIRC PUMP PRESS XDCR FAILURE WORKAROUND, APU/HYD SSR-1 for Circ Pump 2 • Perform SIMULTANEOUS CIRC PUMP ON/GPC OPS, APU/HYD SSR-2 for Circ Pump 2	HYD sys 2 Circ Pump pressure	(2) GPC capability to monitor HYD Accumulator and Reservoir pressure lost for sys 2
	• Perform CIRC PUMP XDCR FAILURE WORKAROUND, APU/HYD SSR-3, for 'M' xdcrs on display SM 87 HYD THERMAL	HYD sys temps 2 HYD sys 2 Accumulator and Reservoir pressure	(3) Loss of fuel injector temperature is no-go for non-critical on-orbit burns. The engine will be used for deorbit
		APU 2 Fuel Qty (MDU and CRT)	
	(A14) • RCS/OMS HTR OMS CRSFD LINES (two) – AUTO	Partial insight into OMS CRSFD Line Htr ops	
3	R OMS no-go for on-orbit burns	R OMS Fu Inj T	
		N2 Qty 1 (OV105)	
		If no internal airlock, External Airlock H2O Transfer Line press	

COMM SSR-16
OI MDM LOST: OA3

ACTIONS	MEASUREMENT LOSS	NOTES
(A14) • RCS/OMS HTR OMS CRSFD LINES – A AUTO,B AUTO	OMS/RCS Htr monitoring temps	(1) GPC capability to monitor HYD Accumulator and Reservoir pressure lost for sys 3
• Perform CIRC PUMP PRESS XDCR FAILURE WORKAROUND, APU/HYD SSR-1 for Circ Pump 3 • Perform SIMULTANEOUS CIRC PUMP ON/GPC OPS, APU/HYD SSR-2 for Circ Pump 3	HYD sys 3 Circ Pump pressure	
• Perform CIRC PUMP XDCR FAILURE WORKAROUND, APU/HYD SSR-3, for 'M' xdcrs on display SM 87 HYD THERMAL	HYD sys temps 1 HYD sys 3 Accumulator and Reservoir pressure	
	APU 3 Fuel Qty (MDU and CRT)	
	N2 Qty 1 (OV105)	

COMM SSR-17
OI DSC LOST: OF1

	ACTIONS		MEASUREMENT LOSS	NOTES
	If on PCS Sys 1: • Perform RECONFIG TO ALT PCS SYS, ECLS SSR-3		Most PCS 1 measurements	(1) Turn on both Cabin Fans for sleep (2) C/W channels 14,34,54,104,114 also lost but high limit-sensed only (3) WST TK will be dumped by time (≈2%/min) to provide ullage to make EOM. MCC will provide the time (4) This action activates redundant htrs on Supply H2O Dump Line, Waste H2O Dump Line, and Vacuum Vent Line (5) Smoke Det H/W Alarm still available (6) Both htrs activated since visibility into temps lost (7) Alternate temps available in each zone (8) Use pnl F9 Meter for insight to AC volts
1	(L1) • Monitor Cabin Fan by feel • During sleep periods: CAB FAN A,B (two) – ON		Cab Fan ΔP	
2	(R13U) • C/W PARAM SEL tw (three) – 034 • C/W PARAM – INH • C/W PARAM SEL tw (three) – 074 • C/W PARAM – INH • C/W PARAM SEL tw (three) – > 119		PPO2 A Cab Fan ΔP	
	(R14:C) • cb MNB KU ANT HTR – op		Ku Gyro temp monitoring	
3	• √MCC about performing WASTE H2O DUMP		Waste Qty 1	
4	(ML86B:A) • cb MNA,MNB H2O LINE HTR A,HTR B (two) – cl		Waste H2O Dump Line T	
			Sply H2O Qty A	
		5 5 5	Smoke Det A Concn Av Bay 2 A Concn Av Bay 3 Concn Cabin	
	(ML86B:C) • cb MNA,MNB EXT ARLK HTR STRUC (two) – cl	6 7	If no internal airlock: External Airlock Fwd and Aft Truss Flange temps External Airlock H2O Line Zone 1 Htr A temp External Airlock H2O Line Zone 2 Htr B temp	
		8	AC1 volts	

COMM SSR-18
OI DSC LOST: OF2

ACTIONS	MEASUREMENT LOSS	NOTES
GNC 23 RCS RCS FWD • ITEM 1 EXEC Reprioritize jets: DES INH on F3,4 jets: • F3L ITEM 10 EXEC (*) • F4R ITEM 14 EXEC (*) • F3U ITEM 18 EXEC (*) • F3D ITEM 24 EXEC (*) • F4D ITEM 28 EXEC (*) • F3F ITEM 32 EXEC (*) • Reselect auto deselected jets (2) Increase PRI Jet Fail Limit: • ITEM 4+4 EXEC Override Manf vlv status to CL for F3,4 Manifolds: OVRD MANF VLVS • F3 ITEM 42 EXEC (CL) • F4 ITEM 43 EXEC (CL)	Jet Pc, Pc discrete, Injector temps (Jet fail-off, leak RM detection)	(1) Auto overpressure protection lost for Fwd RCS Oxidizer Dual Reg failure (2) (O3) FWD RCS OXID He TK PRESS and FWD RCS FUEL PRPLT TK P and FWD RCS FUEL PRPLT TK P ind on meter is lost. FWD RCS OXID and FUEL PRPLT QTY ind on meter is invalid (3) C/W param 24,64,84 also lost, but high limit-sensed only (4) Use pnl F9 Meter for insight to AC volts
(O8) • FWD RCS MANF ISOL 5 – CL (tb-CL), then GPC	Jet Injector temps (Jet leak RM detection)	
• Perform LOSS OF VERNIER (ORB OPS, RCS)		
GNC SYS SUMM 2 2 • Monitor FWD RCS He ΔP for leaks. If FWD RCS leak suspected, secure sys and call MCC • √MCC for sleep config	1 Fwd RCS Tk, Manf Press, Qty (Fwd leak detection)	
If on PCS SYS 2: • Perform RECONFIG TO ALT PCS SYS, ECLS SSR-3	Most PCS 2 measurements	
(R13U) 2 C/W PARAM SEL tw (three) – 004 • C/W PARAM – INH • C/W PARAM SEL tw (three) – 016 • C/W PARAM – INH • C/W PARAM SEL tw (three) – 044 • C/W PARAM – INH • C/W PARAM SEL tw (three) – 105 • C/W PARAM – INH • C/W PARAM SEL tw (three) – 106 • C/W PARAM – INH • C/W PARAM SEL tw (three) – > 119	3 Cab Press FRCS Fu Tk ULL P PPO2 B H2O Pump P1 Freon Flow 1	
	4 AC2 volts	
(Continued)	(Continued)	

COMM SSR-18 (Cont)
OI DSC LOST: OF2

ACTIONS	MEASUREMENT LOSS	NOTES
(R11L) 5 • √SPLY H2O TKC INLET, OUTLET (two) – OP (tb-OP)	Sply H2O Qty B,D	(5) Crossover vlv needs to be checked and TKC unisolated to equalize tks to provide leak protection
SM 66 ENVIRONMENT • Monitor AIRLK P and dP/dT for cabin integrity on-orbit	Cabin Press Snsr	(6) This action activates redundant htrs on Supply H2O Dump Line, Waste H2O Dump Line, Vacuum Vent Line
(ML86B:A) 6 • cb MNA,MNB H2O LINE HTR A, HTR B (two) – cl	Sply H2O Dump Line T	(7) Smoke Det H/W Alarm still available
	7 Smoke Det A Concn Av Bay 1 7 Smoke Det B Concn Av Bay 3 7 Smoke Det Concn Right Flt Deck	
	If no internal airlock, External Airlock LCG EV 2 Supply Line press	

COMM SSR-19
OI DSC LOST: OF3

ACTIONS	MEASUREMENT LOSS	NOTES
SM 66 ENVIRONMENT • Monitor CABIN PRESS for cabin leaks on-orbit	Cabin dP/dT	(1) C/W params 51,71,94 are also lost, but high limit-sensed only
(R13U) • C/W PARAM SEL tw (three) – 115 • C/W PARAM – INH • C/W PARAM SEL tw (three) – 116 • C/W PARAM – INH • C/W PARAM SEL tw (three) – > 119	1 H2O Pump P2 Freon Flow 2	(2) Smoke Det H/W Alarm still available
	2 Smoke Det B Concn Av Bay 1 2 Bay 2 2 Smoke Det Concn Left Flt Deck	(3) Fwd RCS PASS Fu qty degraded, BFS Fu qty lost
	3 Fwd RCS Fu Tk T	(4) Both htrs activated since visibility into temps lost
(ML86B:C) • cb MNA,MNB EXT ARLK HTR STRUC (two) – cl	If no internal airlock: 4 External Airlock Lower Bulkhead temp External Airlock H2O Line Zone 1,2 LCG 2 temp External Airlock H2O Line Zone 2 QD Pnl temp	(5) Crossover vlv needs to be checked and TKC unisolated to equalize tks to provide leak protection
5 (R11L) • √SPLY H2O TKC INLET, OUTLET (two) – OP (tb-OP)	Sply H2O Qty C	(6) Use pnl F9 Meter for insight to AC volts
	6 AC3 volts	(7) Use pnl A1U for S-Band PM Signal Strength
	7 Pnl F9 S-Band Signal Strength	

COMM SSR-20
OI DSC LOST: OF4

ACTIONS	MEASUREMENT LOSS	NOTES
GNC 23 RCS RCS FWD • ITEM 1 EXEC Reprioritize jets: DES INH on F1,2 JETS • F1L ITEM 8 EXEC (*) • F2R ITEM 12 EXEC (*) • F1U ITEM 16 EXEC (*) • F2U ITEM 20 EXEC (*) • F1D ITEM 22 EXEC (*) • F2D ITEM 26 EXEC (*) • F1F ITEM 30 EXEC (*) • F2F ITEM 34 EXEC (*) • Reselect auto deselected jets (2) Increase PRI Jet Fail Limit: • ITEM 4+4 EXEC Override Manf vlv status to CL for F1,2 Manifolds: OVRD MANF VLVS 1 • F1 ITEM 40 EXEC (CL) • F2 ITEM 41 EXEC (CL)	Jet Pc, Pc discrete, Injector temps (Jet fail-off, leak RM detection)	(1) Without F1F, F2F no low Z translation capability; -X only one jet (usually 2) (2) Auto overpressure protection lost for Fwd RCS Fuel Dual Reg failure (3) (O3) FWD RCS Fuel He TK P and FWD RCS OXID PRPLT TK P ind on meter is lost
GNC SYS SUMM 2 • √MCC for sleep config	2 Fwd RCS TK and Manf Press and Qty	
(R13U) 3 • C/W PARAM SEL tw (three) – 006 • C/W PARAM – INH • C/W PARAM SEL tw (three) – > 119	Fwd RCS OX Tk ULL P	
	External Airlock LCG EV 1 Supply Line press	

COMM SSR-21
OI DSC LOST: OL1

ACTIONS	MEASUREMENT LOSS	NOTES
GNC 23 RCS RCS L • ITEM 2 EXEC Reprioritize jets: DES INH on L1,2 JETS • L2L ITEM 10 EXEC (*) • L1L ITEM 14 EXEC (*) • L2U ITEM 18 EXEC (*) • L1U ITEM 20 EXEC (*) • L2D ITEM 26 EXEC (*) • L1A ITEM 32 EXEC (*) • Reselect auto deselected jets (2) Increase PRI Jet Fail Limit: • ITEM 4+3 EXEC Override Manf vlv status to CL for L1,2 Manifolds: OVRD MANF VLVS 1 • L1 ITEM 40 EXEC (CL) • L2 ITEM 41 EXEC (CL) If I'CNCT config: • ITEM 48 EXEC (INH)	Jet Pc, Pc discrete, Injector temps (Jet fail-off, leak RM detection)	(1) Prior to deorbit, override L1 Manf vlv status to op (2) Auto overpressure protection lost for L RCS Oxidizer Dual Reg failure (3) (O3) L RCS OXID He TK P, L RCS OXID PRPLT TK P, L OMS He P, and L OMS FU TK P ind on meter is lost. L RCS OXID PRPLT QTY ind on meter is invalid (4) Loss of fuel injector temp is no-go for noncritical on-orbit burns. Engine will be used for deorbit
(O7) • AFT L RCS MANF ISOL 5 – CL (tb-CL), then GPC	Jet Injector temps (Jet leak RM detection	
• Perform LOSS OF VERNIER RCS (ORB OPS, RCS)		
GNC SYS SUMM 2 • Monitor L RCS He ΔP for leaks. If L RCS leak suspected, secure sys and call MCC 3 • √MCC for sleep config	2 Left RCS Tank and Manf Press and Qty (leak detection lost)	
(R13U) 3 • C/W PARAM SEL tw (three) – 017 • C/W PARAM – INH • C/W PARAM SEL tw (three) – 036 • C/W PARAM – INH • C/W PARAM SEL tw (three) – 056 • C/W PARAM – INH • C/W PARAM SEL tw (three) – > 119	L OMS Fu Tk ULL pressure L RCS OX Tk ULL pressure L RCS leak	
4 L OMS no-go for on-orbit burns	L OMS Fu Inj T	

COMM SSR-22
OI DSC LOST: OL2

ACTIONS	MEASUREMENT LOSS	NOTES
GNC 23 RCS RCS L • ITEM 2 EXEC Reprioritize jets DES INH on L3,4 jets: • L4L ITEM 8 EXEC (*) • L3L ITEM 12 EXEC (*) • L4U ITEM 16 EXEC (*) • L4D ITEM 24 EXEC (*) • L3D ITEM 28 EXEC (*) • L3A ITEM 30 EXEC (*) • Reselect auto deselected jets (2) Increase PRI Jet Fail Limit: • ITEM 4+3 EXEC Override Manf vlv status to CL for L3,4 Manifolds: OVRD MANF VLVS 1 • L3 ITEM 42 EXEC (CL) • L4 ITEM 43 EXEC (CL) If I'CNCT config: • ITEM 48 EXEC (INH)	Jet PC, PC discrete, Injector temps (Jet fail-off, leak RM detection)	(1) Prior to deorbit, override L3 Manf vlv status to OP (2) Auto overpressure protection lost for L RCS Fuel Dual Reg failure (3) (O3) L RCS FUEL He TK P, L OMS OXID TK P, and (OMS/MPS) L OMS N2 TK P, L OMS Pc are lost. (O3) L RCS FUEL PRPLT QTY ind on meter is invalid
GNC SYS SUMM 2 3 • Monitor L RCS He ΔP for leaks. If L RCS leak suspected, secure sys and call MCC • √MCC for sleep config	2 Left RCS TK and Manf Press and Qty (leak detection lost)	
• P/I OMS Burn Monitor Cue Card to (1) Monitor GMBL Angles and BALL Vlvs for left OMS performance (2) • Perform OMS Pc LOW for L OMS '↓'	L OMS PC	
(R13U) 3 • C/W PARAM SEL tw (three) – 007 • C/W PARAM – INH • C/W PARAM SEL tw (three) – 046 • C/W PARAM – INH • C/W PARAM SEL tw (three) – 056 • C/W PARAM – INH • C/W PARAM SEL tw (three) – 027 • C/W PARAM – INH • C/W PARAM SEL tw (three) – > 119	L OMS OX Tk ULL pressures L RCS Fu Tk ULL pressures L RCS leak L OMS PC	

COMM SSR-23
OI DSC LOST: OR1

ACTIONS	MEASUREMENT LOSS	NOTES
GNC 23 RCS RCS R • ITEM 3 EXEC Reprioritize jets: DES INH on R1,2 jets • R2R ITEM 10 EXEC (*) • R1R ITEM 14 EXEC (*) • R2U ITEM 18 EXEC (*) • R1U ITEM 20 EXEC (*) • R2D ITEM 26 EXEC (*) • R1A ITEM 30 EXEC (*) • Reselect auto deselected jets (2) Increase PRI Jet Fail Limit: • ITEM 4+3 EXEC 1 Override Manf vlv status to CL for R1,2 Manifolds: OVRD MANF VLVS • R1 ITEM 40 EXEC (CL) • R2 ITEM 41 EXEC (CL) If I'CNCT config: • ITEM 48 EXEC (INH)	Jet PC, PC discrete, Injector temps (Jet fail-off, leak RM detection)	(1) Prior to deorbit, override R1 Manf vlv status to OP (2) (O3) R RCS OXID He TK P, R RCS OXID PRPLT TK P, R OMS FUEL TK P and (OMS/MPS) R OMS He P are lost. (O3) R RCS OXID PRPLT QTY ind on meter is invalid (3) Auto overpressure protection lost for R RCS Oxidizer Dual Reg failure (4) Loss of fuel injector temp is no-go for noncritical on-orbit burns. Engine will be used for deorbit
(O7) • AFT R RCS MANF ISOL 5 – CL (tb-CL), then GPC	Jet Injection temps (Jet leak RM detection)	
• Perform LOSS OF VERNIER (ORB OPS, RCS)		
GNC SYS SUMM 2 2 • Monitor R RCS He ΔP for leaks. If R RCS leak suspected, secure sys and call MCC • √MCC for sleep config	3 Right RCS Tk and Manf Press and Qty (leak detection lost)	
(R13U) 2 • C/W PARAM SEL tw (three) – 066 • C/W PARAM – INH • C/W PARAM SEL tw (three) – 047 • C/W PARAM – INH • C/W PARAM SEL tw (three) – 086 • C/W PARAM – INH • C/W PARAM SEL tw (three) – > 119	R RCS OX ULL pressure R OMS Fu Tk ULL pressure R RCS leak	
4 R OMS no-go for on-orbit burns	R OMS Fu Inj T	

COMM SSR-24
OI DSC LOST: OR2

ACTIONS	MEASUREMENT LOSS	NOTES
GNC 23 RCS RCS R • ITEM 3 EXEC Reprioritize jets: DES INH on R3,R4 JETS • R4R ITEM 8 EXEC (*) • R3R ITEM 12 EXEC (*) • R4U ITEM 16 EXEC (*) • R4D ITEM 24 EXEC (*) • R3D ITEM 28 EXEC (*) • R3A ITEM 32 EXEC (*) • Reselect auto deselected jets (2) Increase PRI Jet Fail Limit: • ITEM 4+3 EXEC Override Manf vlv status to CL for R3,4 Manifolds OVRD MANF VLVS 1 • R3 ITEM 42 EXEC (CL) • R4 ITEM 43 EXEC (CL) If I'CNCT config: • ITEM 48 EXEC (INH)	Jet Pc, Pc discrete, Injector temps (Jet fail-off, leak RM detection)	(1) Prior to deorbit, override R3 Manf vlv status to OP (2) Auto overpressure protection lost for R RCS Fuel Dual Reg failure (3) (O3) R RCS FUEL He TK P, R RCS FUEL PRPLT TK P, R OMS OXID TK P and (OMS/MPS) R OMS N2 TK P, R OMS PC are lost. (O3) R RCS FUEL PRPLT QTY ind on meter is invalid
GNC SYS SUMM 2 3 • Monitor R RCS He ΔP for leaks. If R RCS leak suspected, secure sys and call MCC • √MCC for sleep config	2 Right RCS Tank and Manf Press and Qty (leak detection lost)	
• P/I OMS Burn Monitor Cue Card to (1) Monitor GMBL Angles and BALL Vlvs for right OMS performance (2) • Perform OMS Pc LOW for R OMS '↓'	R OMS PC	
(R13U) 3 • C/W PARAM SEL tw (three) – 037 • C/W PARAM – INH • C/W PARAM SEL tw (three) – 076 • C/W PARAM – INH • C/W PARAM SEL tw (three) – 086 • C/W PARAM – INH • C/W PARAM SEL tw (three) – 057 • C/W PARAM – INH • C/W PARAM SEL tw (three) – > 119	R OMS OX Tk ULL pressure R RCS Fu ULL pressure R RCS leak R OMS PC	

COMM SSR-25
OI DSC LOST: OM1

ACTIONS	MEASUREMENT LOSS	NOTES
When reqd: • Perform FUEL CELL PURGE – MANUAL (ORB OPS, EPS) (Cue Card) (Assume SM 2 not available when using Cue Card)	1 FC Purge O2 Vent Line temp FC Purge H2 Vent Line temp 2	(1) Causes loss of FC Auto purge capability (2) C/W params 1,21,41 are lost also, but high limit-sensed only (3) Recoverable by TMBU (4) Use pnl F9 Meter for insight to FC AMPS, ESS 3AB, and FC1 volts
2 (R13U) • C/W PARAM SEL tw (three) – 062 • C/W PARAM – INH • C/W PARAM SEL tw (three) – 023 • C/W PARAM – INH • C/W PARAM SEL tw (three) – > 119	FC1 Stack temp MNC volts	
• Perform CIRC PUMP XDCR FAILURE WORKAROUND, APU/HYD SSR-3 for 'L' xdcrs on display SM 87 HYD THERMAL	HYD sys temps	
If FLASH EVAP CNTLR PRI B enabled: • Perform FES RESTART, ECLS SSR-5, using PRI A	Most FES Feedline A Htr measurements	
• Perform ECLS COMPUTATION INHIBIT, ECLS SSR-14, TABLE D for faulty parameters: 925522 SYS 1 N2 TK2 T 925524 SYS 2 N2 TK2 T 925529 SYS 1 N2 PRESS	3 N2 Qty (two) 1,2	
	4 ESS 3AB volts 4 FC1 volts 4 FC 1,2,3 AMPS	

COMM SSR-26
OI DSC LOST: OM2

ACTIONS	MEASUREMENT LOSS	NOTES
(R13U) 1 • C/W PARAM SEL tw (three) – 072 • C/W PARAM – INH • C/W PARAM SEL tw (three) – 082 • C/W PARAM – INH • C/W PARAM SEL tw (three) – 003 • C/W PARAM – INH • C/W PARAM SEL tw (three) – 013 • C/W PARAM – INH • C/W PARAM SEL tw (three) – >119	FC 2,3 Stack Temp MNA,MNB volts	(1) C/W params 11,31,61,72,82 are lost also, but high limit-sensed only (2) GPC capability to monitor HYD Accumulator pressure lost for 2,3 systems. HYD Reservoir pressure monitoring remains (3) Recoverable by TMBU (4) Use pnl F9 Meter for insight to ESS and FC volts
• Perform CIRC PUMP XDCR FAILURE WORKAROUND, APU/HYD SSR-3 for 'L' xdcrs on display SM 87 HYD THERMAL	HYD sys temps 2 HYD sys 2,3 Accumulator pressures	
If FLASH EVAP CNTLR PRI A enabled: • Perform FES RESTART, ECLS SSR-5, using PRI B	Most FES Feedline B Htr measurements	
If Topping Evap enabled: (L1) • TOP EVAP HTR DUCT – A/B	Fwd,Aft Topping Duct Htr measurements	
If High Load Evap enabled: (L1) • HI LOAD DUCT HTR – A/B	HI Load Outbd Duct Htr measurements	
• Perform ECLS COMPUTATION INHIBIT, ECLS SSR-14, TABLE D for faulty parameters: 925521 SYS 1 N2 TK1 T 925523 SYS 2 N2 TK1 T 925525 SYS 1 N2 TK3 T 925530 SYS 2 N2 PRESS	3 N2 Qty (two) 1,2	
(A12) • APU HTR TK/FU LN/H2O SYS 1A,1B,3A,3B (four) – AUTO	APU H2O sys htr monitoring temps	
(ML86B:C) If Rendezvous or Docked • cb MNA,MNB EXT ARLK HTR VEST Z1/2/3 (two) – cl	External Airlock H2O Transfer Line press Vestibule Temps 1,2	
	4 FC 2,3 volts 4 ESS 1BC, 2CA volts	

COMM SSR-27
OI DSC LOST: OA1

ACTIONS	MEASUREMENT LOSS	NOTES
GNC 23 RCS If I'CNCT config: • ITEM 48 EXEC (INH) (A14) • RCS/OMS HTR OMS CRSFD LINES (two) – A AUTO, B AUTO	OMS/RCS Htr monitoring temps	(1) C/W param 109 is also lost, but is inhibited during post insertion
• Perform CIRC PUMP XDCR FAILURE WORKAROUND, APU/HYD SSR-3 for 'L' xdcrs on display SM 87 HYD THERMAL	HYD sys temps	
• Perform CIRC PUMP PRESS XDCR FAILURE WORKAROUND, APU/HYD SSR-1 for Circ Pump 1	HYD Circ Pump 1 pressure	
	APU 1 Fuel Qty (MDU and CRT)	
1 (R13U) • C/W PARAM SEL tw (three) – 009 • C/W PARAM – INH • C/W PARAM SEL tw (three) – 039 • C/W PARAM – INH • C/W PARAM SEL tw (three) – > 119	MPS He Tk P C MPS He REG P C	
If High Load Evap enabled: (L1) • HI LOAD DUCT HTR – A/B	Hi Load Inbd Duct Htr measurement	

COMM SSR-28
OI DSC LOST: OA2

ACTIONS	MEASUREMENT LOSS	NOTES
GNC 23 RCS If I'CNCT config: • ITEM 48 EXEC (INH) (A14) • RCS/OMS HTR OMS CRSFD LINES – A AUTO, B AUTO	OMS/RCS Htr monitoring temps	(1) Causes loss of FC Auto Purge capability (2) C/W params 18,48,69 are lost also, but high limit-sensed only; C/W param 99 is also lost, but is inhibited during post insertion
When reqd: • Perform FUEL CELL PURGE – MANUAL (ORB OPS, EPS) (Cue Card) (Assume SM 2 not available when using Cue Card)	1 FC Purge H2 Vent Line temp 1	
• Perform CIRC PUMP XDCR FAILURE WORKAROUND, APU/HYD SSR-3, for 'L' xdcrs on display SM 87 HYD THERMAL	HYD sys temps	
• Perform CIRC PUMP PRESS XDCR FAILURE WORKAROUND, APU/HYD SSR-1 for Circ Pump 2	HYD Circ Pump 2 pressure	
• Perform APU FUEL TANK P XDUCER FAILURE WORKAROUND, APU/HYD SSR-4 for APU 2 • Perform APU FUEL TANK T XDUCER FAILURE WORKAROUND, APU/HYD SSR-6 for APU 2	APU 2 FUEL TK P APU 2 FUEL T TK SURF	
(R13U) 2 • C/W PARAM SEL tw (three) – 107 • C/W PARAM – INH • C/W PARAM SEL tw (three) – 019 • C/W PARAM – INH • C/W PARAM SEL tw (three) – 049 • C/W PARAM – INH • C/W PARAM SEL tw (three) – > 119	EVAP OUT T 1 MPS He Tk P L MPS He REG P L	
(O7) • AFT R RCS MANF ISOL 5 – CL (tb-CL), then GPC	Jet Injector temps (Jet leak RM detection)	
• Go to LOSS OF VERNIER (ORB OPS, RCS)		

COMM SSR-29
OI DSC LOST: OA3

ACTIONS	MEASUREMENT LOSS	NOTES
(A14) • RCS/OMS HTR OMS CRSFD LINES – A AUTO, B AUTO	OMS/RCS Htr monitoring temps	(1) C/W params 28,58,59,117 lost also, but high limit-sensed only; C/W param 119 is also lost, but is inhibited during post insertion (2) Recoverable by TMBU
• Perform CIRC PUMP PRESS XDCR FAILURE WORKAROUND, APU/HYD SSR-1 for Circ Pump 3	HYD Circ Pump 3 pressure	
(R13U) 1 • C/W PARAM SEL tw (three) – 029 • C/W PARAM – INH • C/W PARAM SEL tw (three) – 059 • C/W PARAM – INH • C/W PARAM SEL tw (three) – 117 • C/W PARAM – INH • C/W PARAM SEL tw (three) – > 119	MPS He Tk P R MPS He REG P R EVAP OUT T 2	
• Perform CIRC PUMP XDCR FAILURE WORKAROUND, APU/HYD SSR-3 for 'L' xdcrs on display SM 87 HYD THERMAL	HYD sys temps	
• Perform APU FUEL TANK P XDUCER FAILURE WORKAROUND, APU/HYD SSR-4 for APU 3 • Perform APU FUEL TANK T XDUCER FAILURE WORKAROUND, APU/HYD SSR-6 for APU 3	APU 3 FUEL TK P APU 3 FUEL T TK SURF	
• Go to ECLS COMPUTATION INHIBIT, ECLS SSR-14, TABLE D for faulty parameter: 925526 SYS 1 N2 TK4 T	2 N2 Qty 1 (OV105)	

COMM SSR-30
OI DSC LOST: OM3

ACTIONS		MEASUREMENT LOSS	NOTES
• Perform CIRC PUMP XDCR FAILURE WORKAROUND, APUY/HYD SSR-3 for ACCUM P 1 xdcr	1	HYD sys 1 Accumulator pressure	(1) GPC capability to monitor HYD Accumulator pressure lost for system 1. HYD Reservoir pressure monitoring remains

RESERVED
SECTION

3 RESERVED

This Page Intentionally Blank

4.1 PRIMARY C/W
4.1a PRIMARY C/W 4-4
4.1b ALL ANNUN LTS ON EXCEPT BACKUP C/W ALARM 4-7
4.1c NONRESETTABLE MA LT OR TONE 4-8
4.1d PRI C/W SYS ANNUNCIATES FALSE ALARM 4-11

4.2 OTHER C/W
4.2a NONRESETTABLE BACKUP C/W ALARM LT 4-22
4.2b MA LT & C/W TONE – NO ANNUN LT 4-23
4.2c KLAXON – NO RAPID dP/dT 4-27
4.2d SIREN – NO SMOKE DETN LT 4-29
4.2e PRI C/W SYS FAILS TO ANNUNCIATE OUT-OF-LIMIT PARAM 4-30

This Page Intentionally Blank

C/W

4

This Page Intentionally Blank

4.1a PRIMARY C/W

PRIMARY C/W

(F7)

Light on if:
- CWE fails self-test
- C/W Sys A(B) timing failure
- C/W Sys A(B) pwr sply failure

Nominal Config:
(O13:A)
cb ESS 1BC C/W A – cl
(O13:C)
cb ESS 2CA C/W B – cl
(C3)
C/W MODE – NORM
(R13U)
Annun ltg sys operational
Smoke detn sys operational

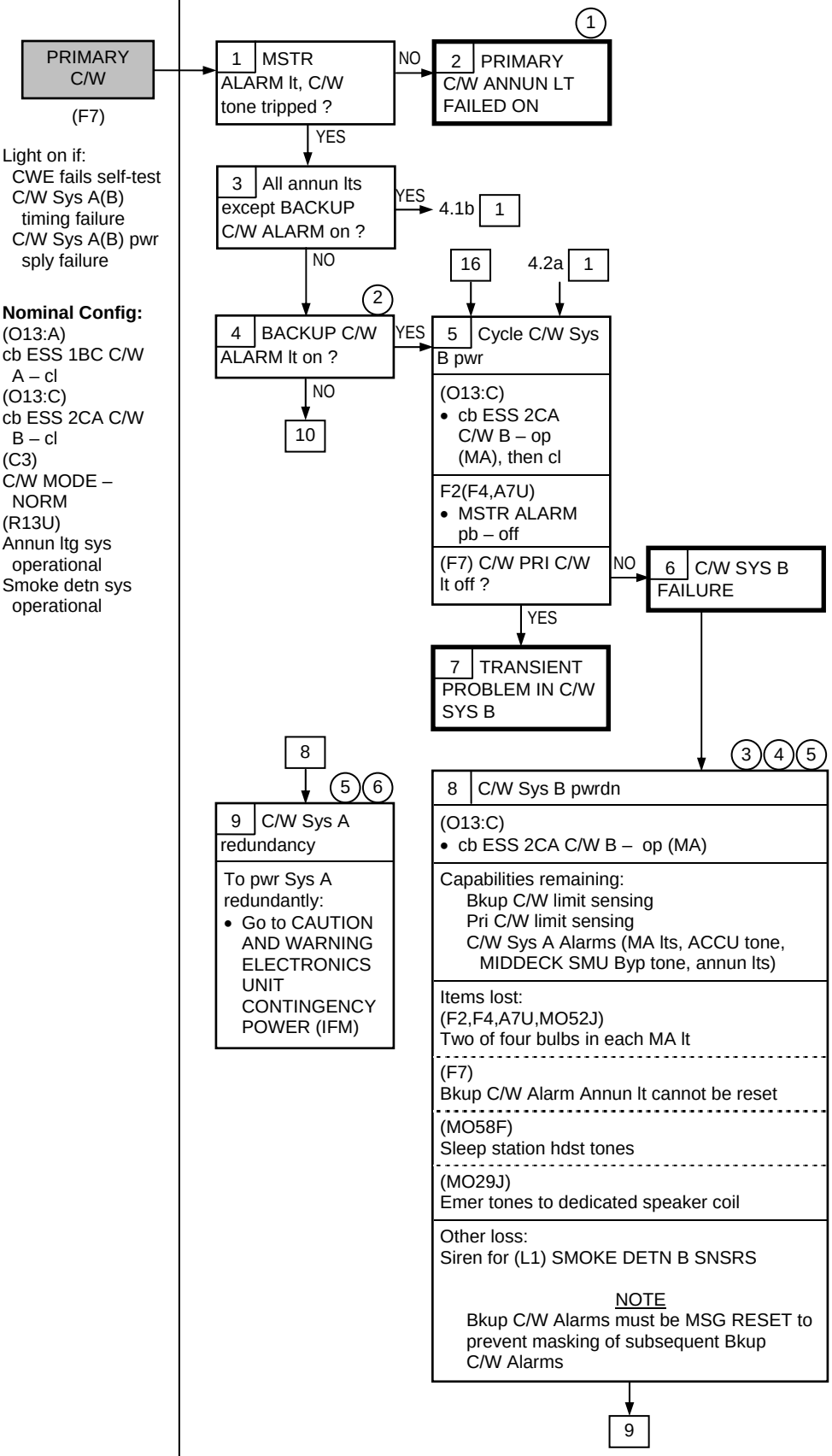

1. To extinguish PRIMARY C/W lt, remove bulbs or select (C3) C/W MODE – ACK
2. BACKUP C/W ALARM lt is not accompanied by fault msg and cannot be MSG RESET
3. All four bulbs in each MA lt will illuminate during lamp test
4. To extinguish (F7) PRIMARY C/W and BACKUP C/W ALARM lts, remove bulbs or select (C3) C/W MODE – ACK
5. Until C/W IFM cables installed, loss of ESS 1BC DA1 would not generate aural alarm so that Fuel Cell 1 could be safed. FSMs must be continually monitored
6. Redundancy can be verified by opening cb ESS 1BC C/W A (O13:A) and receiving alarm tones

C/W 4.1a (Cont)

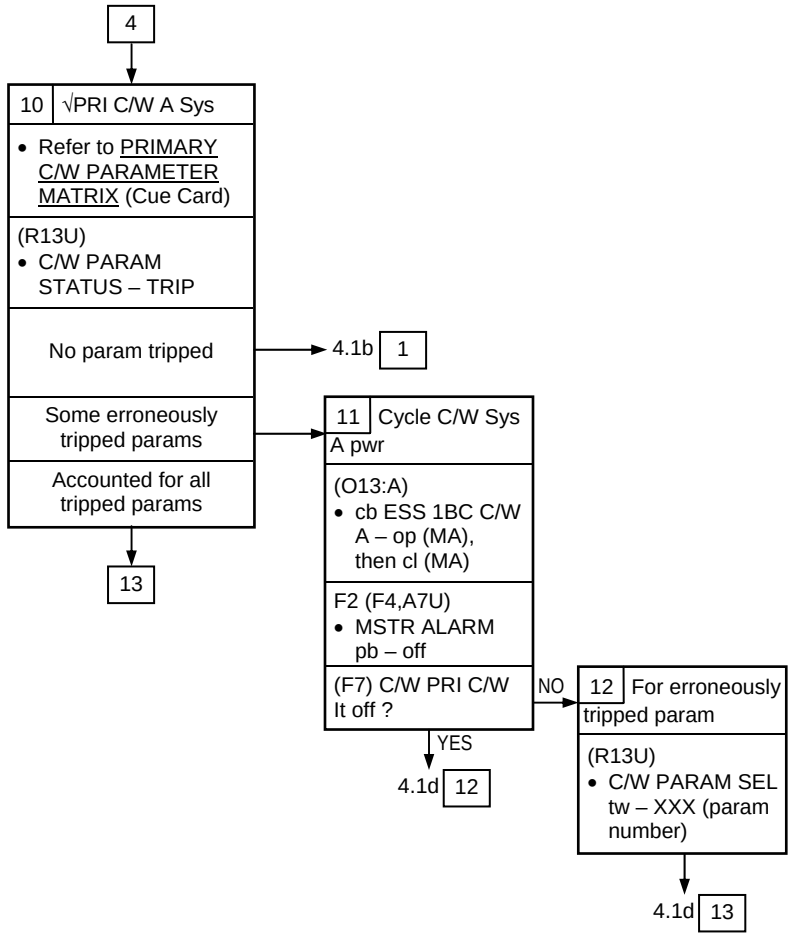
4
10 √PRI C/W A Sys
• Refer to PRIMARY C/W PARAMETER MATRIX (Cue Card)
(R13U)
• C/W PARAM STATUS – TRIP
No param tripped
4.1b 1
Some erroneously tripped params
Accounted for all tripped params
13
11 Cycle C/W Sys A pwr
(O13:A)
• cb ESS 1BC C/W A – op (MA), then cl (MA)
F2 (F4,A7U)
• MSTR ALARM pb – off
(F7) C/W PRI C/W lt off ?
NO
YES
4.1d 12
12 For erroneously tripped param
(R13U)
• C/W PARAM SEL tw – XXX (param number)
4.1d 13

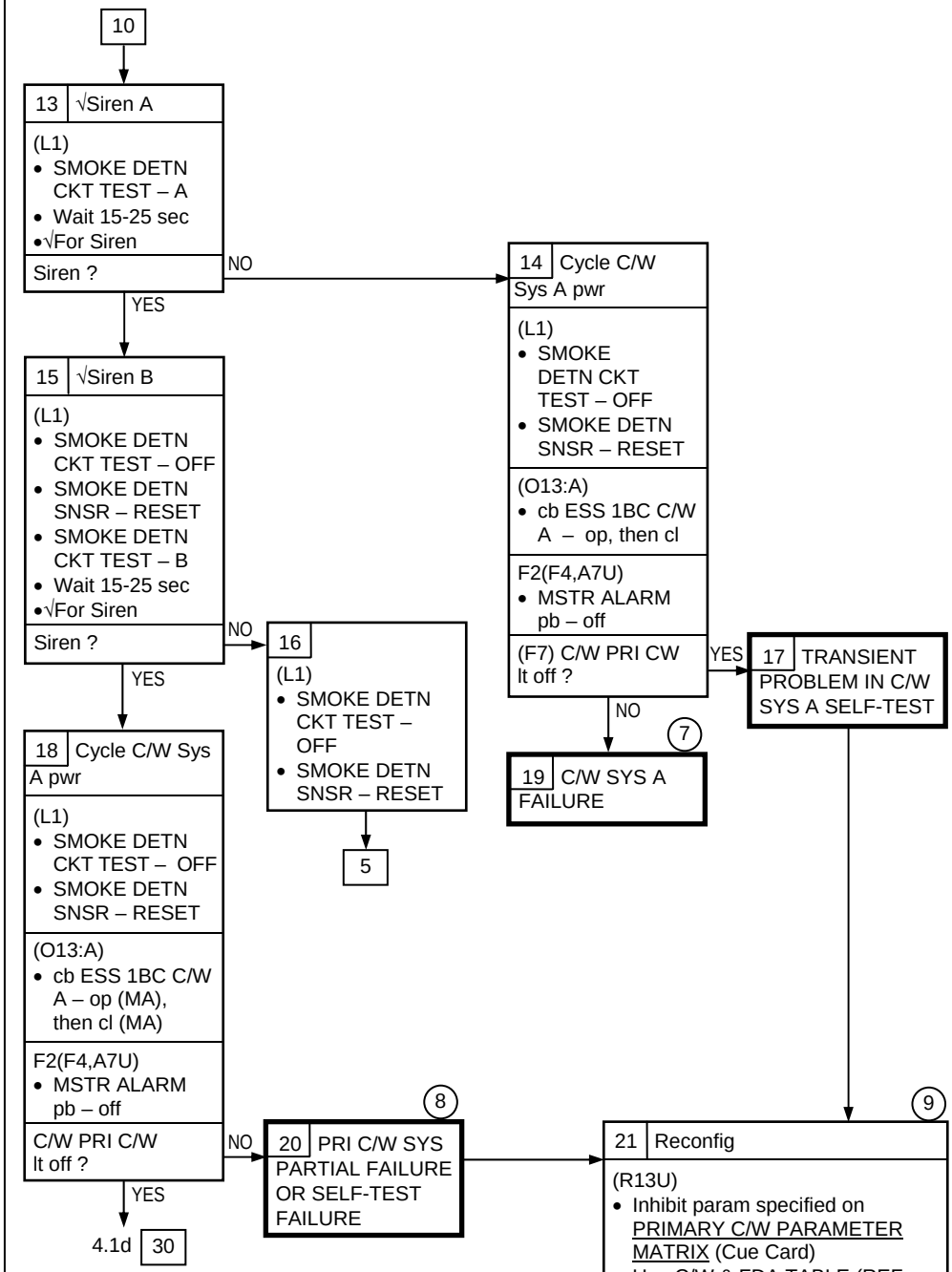

(7) For any nuisance alarms that cannot be inhibited, use 4.1b [5] to pwrdn PRI C/W or use 4.1c [28] to disable tone

(8) Notify MCC of tripped params. Param combinations will give clue to failure

(9) All primary C/W params were enabled and their limits reset to default (PROM) value when cb ESS 1BC C/W A closed

C/W

4.1b ALL ANNUN LTS ON EXCEPT BACKUP C/W ALARM

All Annun Lts On Except Backup C/W Alarm

(F7)

Caused by:
C/W Sys A pwr supply failure

Nominal Config:
(O13:A)
cb ESS 1BC C/W A – cl
(O13:C)
cb ESS 2CA C/W B – cl
(C3)
C/W MODE – NORM
(R13U)
Annun ltg sys operational
Smoke detn sys operational

4.1a 3
4.1a 10

1 Cycle C/W Sys A pwr

Expect MSTR ALARM:
(O13:A)
- cb ESS 1BC C/W A – op, then cl

F2(F4,A7U)
- MSTR ALARM pb – off

(F7)
C/W PRI C/W lt off ?

YES → **2 TRANSIENT INDUCED PWR SPLY OR TIMING FAILURE**

NO → **3 C/W SYS A PWR SPLY OR TIMING FAILURE**

4.2b 7

(1) **4 Reconfig**

(R13U)
- Inhibit param specified on PRIMARY C/W PARAMETER MATRIX (Cue Card)
- Use C/W & FDA TABLE (REF DATA, C/W) to reset param limits for:

CH	Param
004	CAB PRESS
007	OMS TK P OX-L
017	OMS TK P FU-L
037	OMS TK P OX-R
047	OMS TK P FU-R
074	CAB FAN ΔP
106	FREON FLOW 1
116	FREON FLOW 2

(R13U)
- C/W PARAM SEL tw (three) – > 119

(2)(3) **5 Sys A and PRI C/W pwrdn**

Expect MSTR ALARM:
(O13:A)
- cb ESS 1BC C/W A – op

Capabilities remaining:
Bkup C/W limit sensing
C/W Sys B Alarms (MSTR ALARM lts, ACCU, sleep station tones)

Items lost:
(F7)
All C/W annun lts

(R13U)
C/W status pnl lts, functions

(F2,F4,A7U,MO52J)
Two of four bulbs in each MA lt

(A2)
Emer tones to dedicated speaker coil

(MO42F)
Bypass tones to MIDDECK SMU

Other losses:
Pri C/W limit sensing and siren for (L1)
SMOKE DETN A SNSRS
OI TLM Of MASTER ALARM

(3)(4) **6 C/W Sys B redundancy**

To pwr Sys B redundantly:
- Go to CAUTION AND WARNING ELECTRONICS UNIT CONTINGENCY POWER (IFM)

(1) All primary C/W params were enabled and their limits reset to default (PROM) value when cb ESS 1BC C/W A closed

(2) All four bulbs in each MA lt will illuminate during lamp test

(3) Until C/W IFM cables installed, loss of ESS 2CA DA2 would not trigger aural alarm so that Fuel Cell 2 could be safed within 9 min. FSMs must be continually monitored

(4) Redundancy can be verified by opening cb ESS 2CA C/W B (O13:C) and receiving alarm tones

C/W

4.1c NONRESETTABLE MA LT OR TONE

MSTR ALARM

(Cannot be reset by depressing any MSTR ALARM pb)

Caused by:
- Lamp driver failed on
- C/W Sys A(B) MA Signal failed on
- C/W Sys A(B) EMER, C/W, or SM alarm failed on
- Constant retriggering caused by PRI C/W trig mem or self-test failure

Nominal Config:
(O13:A)
cb ESS 1BC C/W A – cl
(O13:C)
cb ESS 2CA C/W B – cl
(C3)
C/W MODE – NORM
(R13U)
Annun ltg sys operational
Smoke detn sys operational

1 Constant alarm tone ?
- NO → 2 (F2,F4,A7U, MO52J) More than one MSTR ALARM lt on ?
  - NO → 3 LAMP DRIVER FAILED ON (1)
  - YES → 4
    - (O13:C)
      - cb ESS 2CA CW B – op (MA)
    - F2(F4,A7U)
      - MSTR ALARM pb – off
    - MSTR ALARM lt off ?
      - NO → 5 C/W SYS A MASTER ALARM LT CIRCUIT FAILURE → 8 (1)
        - (O13:C)
          - cb ESS 2CA CW B – cl
      - YES → 7 C/W SYS B MSTR ALARM LT CKT FAILURE → 8 (1)
        - (O13:C)
          - cb ESS 2CA CW B – cl
- YES → 6 Tone disable
  - (O5,O9,L9,A13,R10, MO42F,MO58F)
    - AUD PWR (seven) – AUD (OFF)
  - Klaxon or Siren in MIDDECK speaker → 9 C/W SYS B EMER ALARM FAILED ON → 13
  - Klaxon or Siren in OS speaker → 10 C/W SYS A EMER ALARM FAILED ON → 11 Disconnect OS speaker (2)(3)
    - (O13:A)
      - cb ESS 1BC C/W A – op (MA)
    - Perform OS SPEAKER BOX DISCONNECT (IFM)
    - (R13U)
      - C/W TONE VOL A – ccw (using screwdriver)
    - (MO42F)
      - BYP TONE VOL – ccw (using screwdriver)
      - MIDDECK SPKR AUD TONES – ACCU
    - (O5,O9,L9,A13,R10,MO42F, MO58F)
      - AUDIO PWR (seven) – as reqd
    - (O13:A)
      - cb ESS 1BC C/W A – cl (MA)
    - F2(F4,A7U)
      - MSTR ALARM pb – off
    - → 12
  - No Klaxon or Siren → 15

(1) Illuminated MA lt bulbs are mounted in sealed assy

(2) PRI C/W limit sensing and (F7) annun will still be functional

(3) Until C/W IFM cables installed, loss of ESS 2CA DA2 would not trigger aural alarm so that Fuel Cell 2 could be safed within 9 min. FSMs must be continually monitored

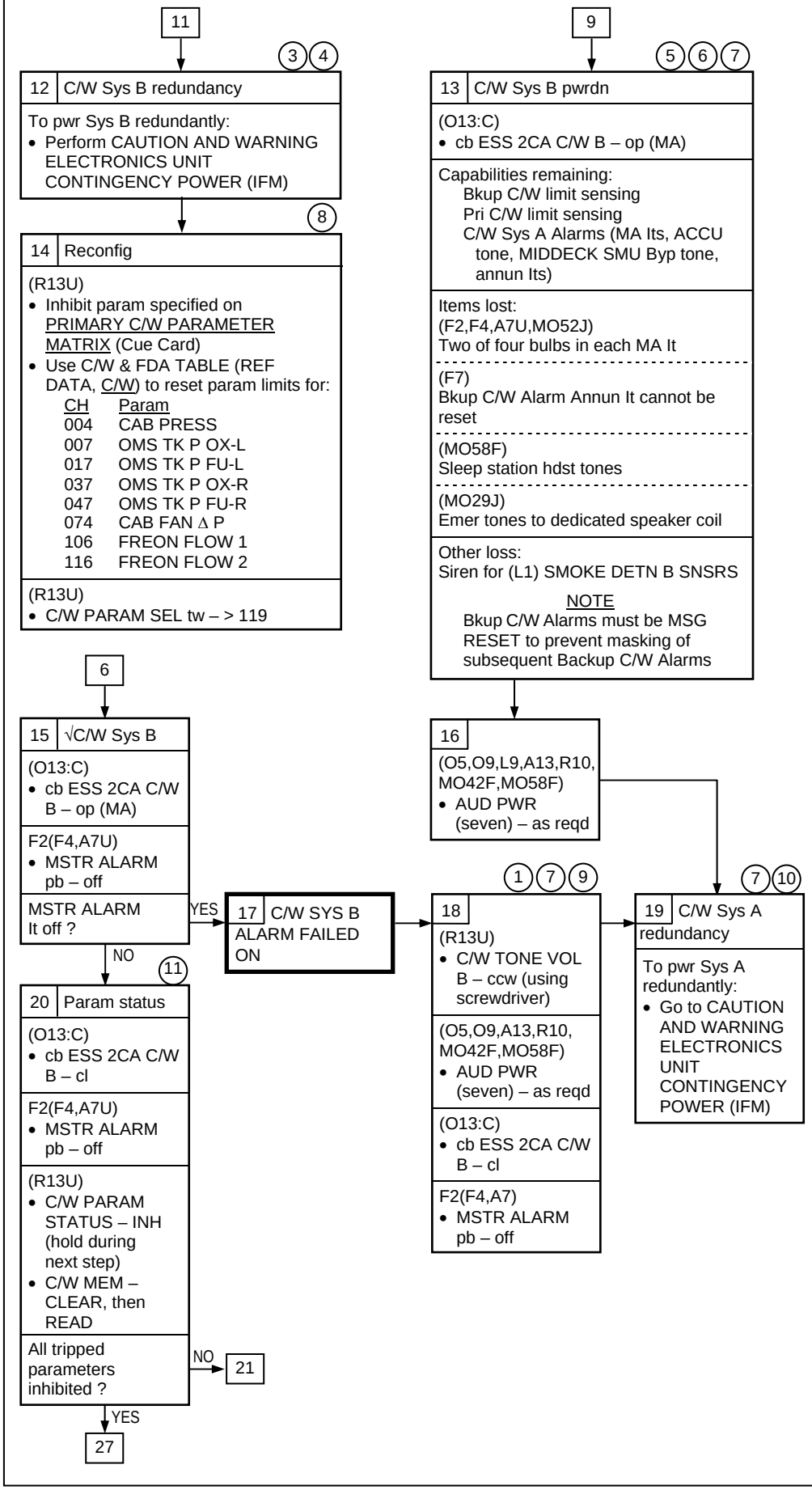

(1) Illuminated MA lt bulbs are mounted in sealed assy

(3) Until C/W IFM cables installed, loss of ESS 2CA DA2 would not trigger aural alarm so that Fuel Cell 2 could be safed within 9 min. FSMs must be continually monitored

(4) Redundancy can be verified by opening cb ESS 2CA C/W B (O13:C) and receiving alarm tones

(5) All four bulbs in each MA lt will illuminate during lamp test

(6) To extinguish (F7) PRIMARY C/W and BACKUP C/W ALARM lts, remove bulbs or select (C3) C/W MODE – ACK

(7) Until C/W IFM cables installed, loss of ESS 1BC DA1 would not generate aural alarm so that Fuel Cell 1 could be safed. FSMs must be continually monitored

(8) All primary C/W params were enabled and their limits reset to default (PROM) value when cb ESS 1BC C/W A closed

(9) Lost C/W Sys B alarm tones except for emer tones in Middeck speaker. Sleep Station Hdst has constant tone

(10) Redundancy can be verified by opening cb ESS 1BC C/W A (O13:A) and receiving alarm tones

(11) Additional lts which light during C/W MEM – READ indicate tripped params that are not inhibited

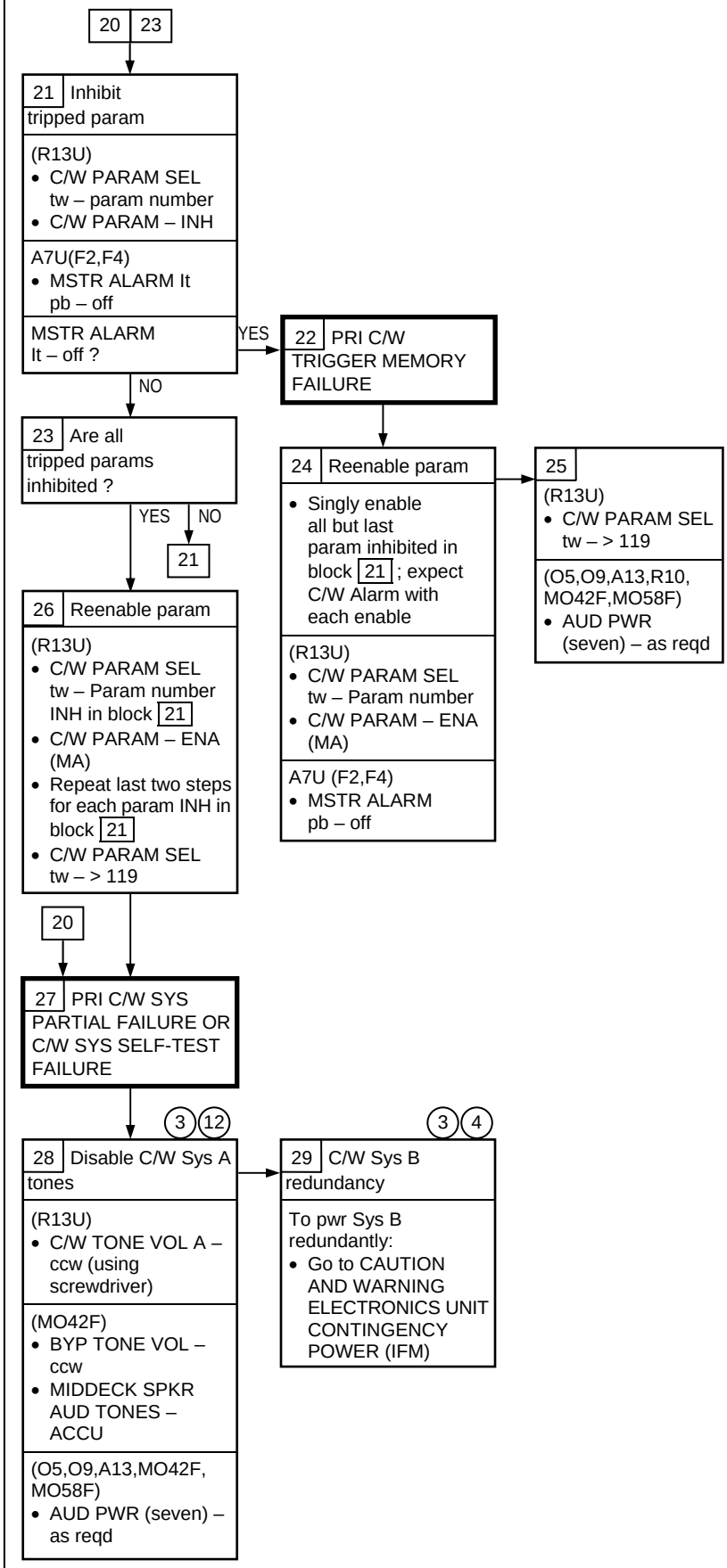

(3) Until C/W IFM cables installed, loss of ESS 2CA DA2 would not trigger aural alarm so that Fuel Cell 2 could be safed within 9 min. FSMs must be continually monitored

(4) Redundancy can be verified by opening cb ESS 2CA C/W B (O13:C) and receiving alarm tones

(12) Should still have PRI C/W limit sensing with (F7) Annun lts and emer tone alarms via OS speaker

C/W

4.1d PRI C/W SYS ANNUNCIATES FALSE ALARM

PRI C/W Sys Annunciates False Alarm

(F7)
Annun lt on but indicated sys checks normal

Caused by:
- Annun lt failed on
- PRI C/W Sys Inhibit memory failure
- Limit value failure
- Limit sense failure
- Signal Conditioner failure
- Param Select or Multiplexer failure

Nominal Config:
(O13:A)
cb ESS 1BC C/W A – cl
(O13:C)
cb ESS 2CA C/W B – cl
(C3)
C/W MODE – NORM
(R13U)
Annun ltg sys operational
Smoke detn sys operational

7.5b 8

1 (F7) BACKUP C/W ALARM lt on w/o CRT fault msg ?
YES → 4.2a 1
NO

2
- Refer to PRIMARY C/W PARAMETER MATRIX (Cue Card)

(R13U)
- C/W PARAM STATUS – TRIP

Any status lt associated with false alarm (F7) Annun lt on ?
YES → 3 Param normally inhibited ? NO → 12
NO

1

3 Param normally inhibited ?
YES

4 Inhibit param

(R13U)
- C/W PARAM SEL tw – desired param
- C/W PARAM – INH
- C/W PARAM SEL tw – > 119

(F7) C/W Annun lt off ?
NO → 6 PRI C/W INHIBIT MEMORY FAILURE (2) (3)
YES

4

7 PARAM ENABLED INADVERTENTLY

10

5
(R13U)
- C/W PARAM STATUS – INH (hold during next step)
- C/W MEM – CLEAR, then READ
- Compare INH with MEMORY (equiv to tripped) lts

All MEMORY (tripped) param INH

3

8 (F7) C/W ANNUN LT CKT FAILED ON

Any MEMORY (tripped) param not INH

10

(F7)
- √Annun lt status as each out-of-limit param is inhibited

(R13U)
- C/W PARAM SEL tw – desired param
- C/W PARAM – INH

(F7) C/W Annun lt out ?
NO → 5
YES → 9

10

9 IN ADDITION TO OTHER SYS PROBLEM, PRI C/W (F7) ANNUN LT SELECT CKT FAILURE

11 Reconfig

(R13U)
- Reenable param inhibited in block 10
- C/W PARAM SEL tw – > 119

- Notify MCC which param caused false annun

(1) Correct param inhibit status can be verified using PRIMARY C/W PARAMETER MATRIX Cue Card

(2) Depending on param value, lt may be extinguished by changing limits

(3) To disable lts, remove illuminated bulbs or select (C3) C/W MODE – ACK

(4) Prior to changing any param limit value, √param select capability with INH/ENA capability verification using procedure in block 12

C/W 4.1d (Cont)

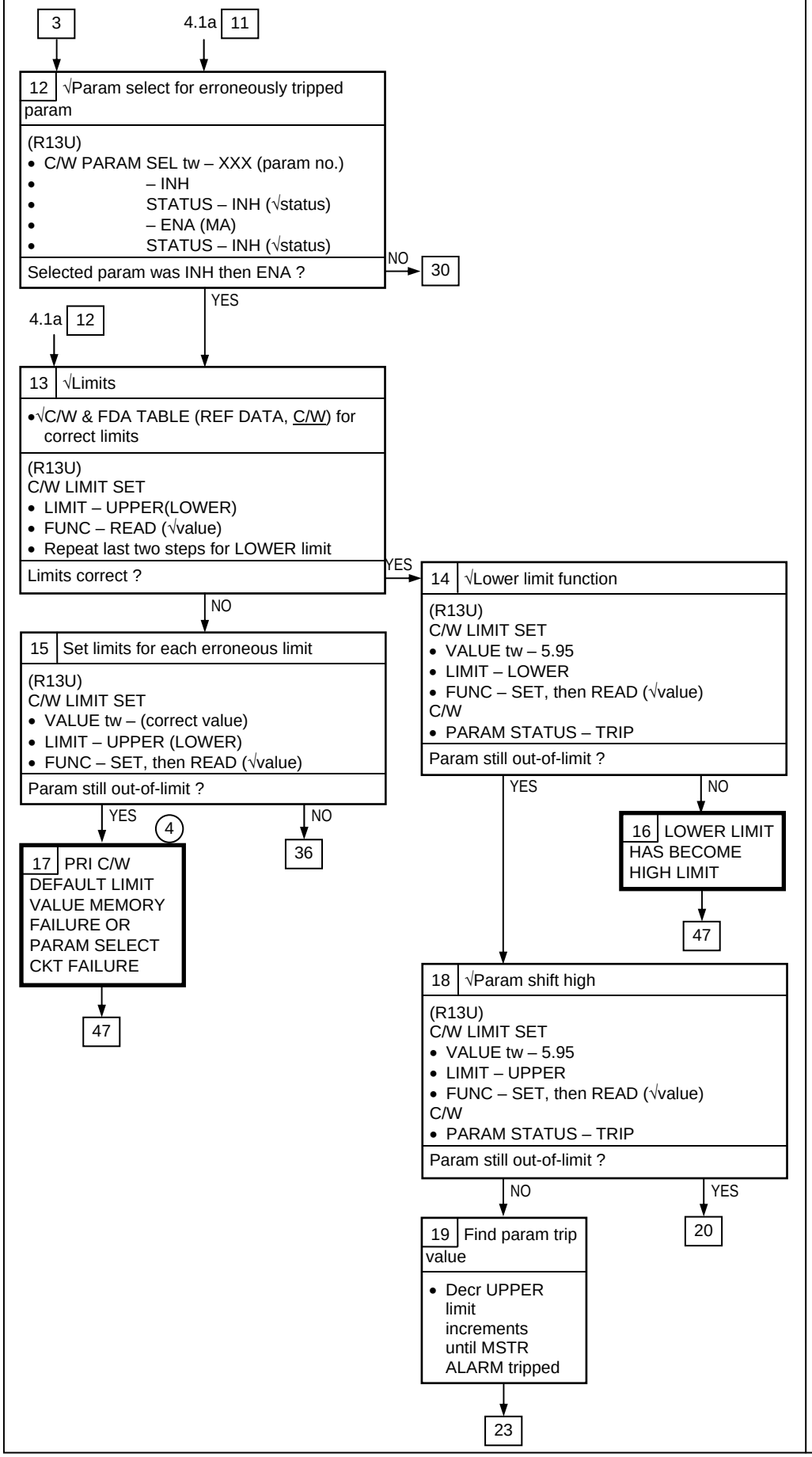
3
4.1a 11
12 √Param select for erroneously tripped param
(R13U)
• C/W PARAM SEL tw – XXX (param no.)
• – INH
• STATUS – INH (√status)
• – ENA (MA)
• STATUS – INH (√status)
Selected param was INH then ENA ?
NO
30
YES
4.1a 12
13 √Limits
•√C/W & FDA TABLE (REF DATA, C/W) for correct limits
(R13U)
C/W LIMIT SET
• LIMIT – UPPER(LOWER)
• FUNC – READ (√value)
• Repeat last two steps for LOWER limit
Limits correct ?
YES
NO
14 √Lower limit function
(R13U)
C/W LIMIT SET
• VALUE tw – 5.95
• LIMIT – LOWER
• FUNC – SET, then READ (√value)
C/W
• PARAM STATUS – TRIP
Param still out-of-limit ?
YES
NO
16 LOWER LIMIT HAS BECOME HIGH LIMIT
47
15 Set limits for each erroneous limit
(R13U)
C/W LIMIT SET
• VALUE tw – (correct value)
• LIMIT – UPPER (LOWER)
• FUNC – SET, then READ (√value)
Param still out-of-limit ?
YES
NO
4
17 PRI C/W DEFAULT LIMIT VALUE MEMORY FAILURE OR PARAM SELECT CKT FAILURE
47
36
18 √Param shift high
(R13U)
C/W LIMIT SET
• VALUE tw – 5.95
• LIMIT – UPPER
• FUNC – SET, then READ (√value)
C/W
• PARAM STATUS – TRIP
Param still out-of-limit ?
NO
YES
19 Find param trip value
• Decr UPPER limit increments until MSTR ALARM tripped
20
23
4 Prior to changing any param limit value, √param select capability with INH/ENA capability verification using procedure in block 12

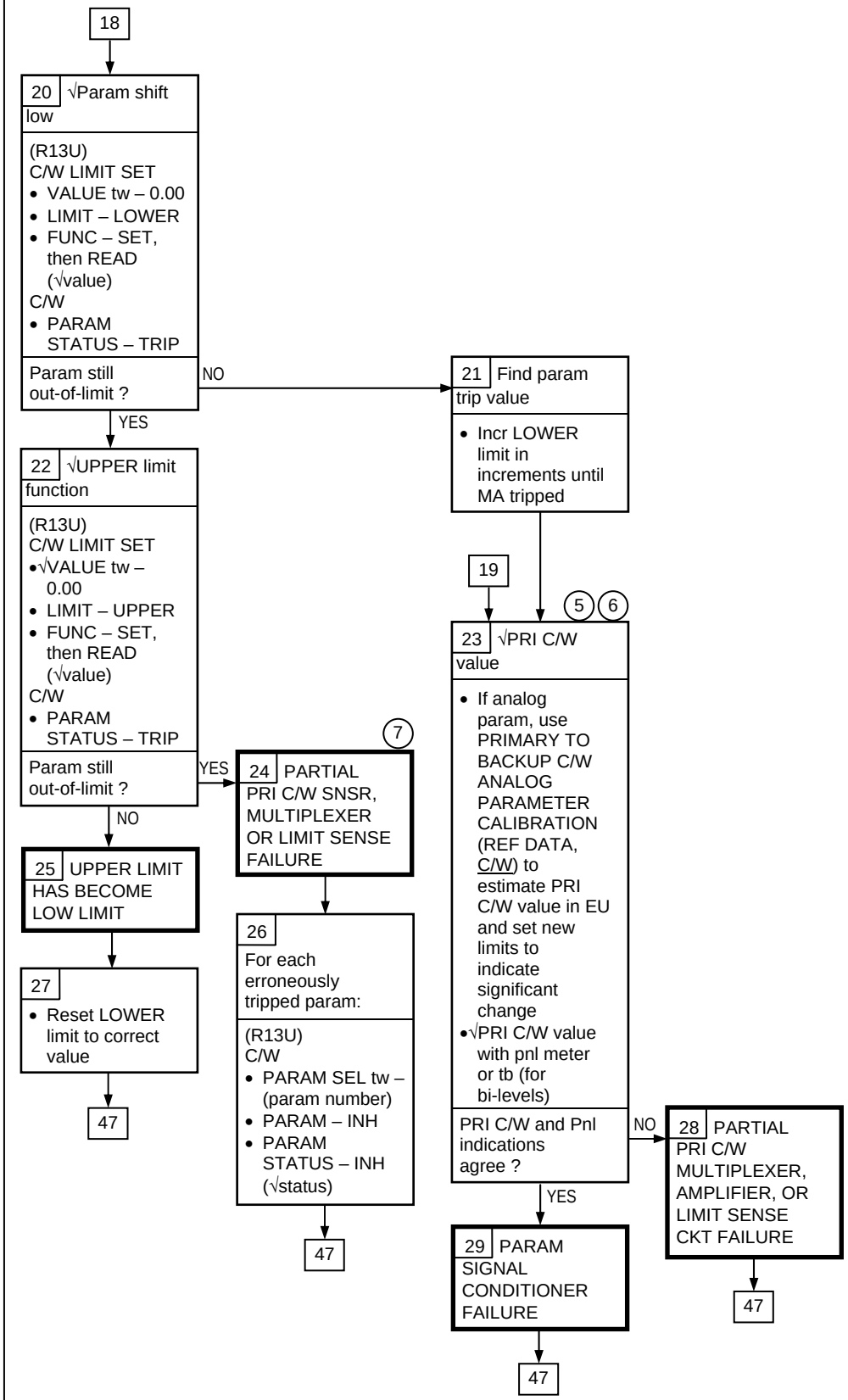

(5) Notify MCC of change in PRI C/W param and limit values

(6) Bi-level params are identified in NOTES column of C/W & FDA TABLE (REF DATA, C/W)

(7) If pnl indicator and PRIMARY C/W param values agree, snsr output failed

4.1a 18
4.2e 2
12

30 √Param Select bit failed to '1'

(R13U)
- C/W LIMIT SET VALUE tw – 0.00
- C/W PARAM SEL tw – 000
- – INH
- STATUS – INH (√status)
- – ENA
- STATUS – INH (√status)

- Determine which param INH/ENA:

000	001 002 004	008 040 080	010 020 100	015 022	None of those listed
	39	40	41	59	

8

31 PARAM SEL CKT FAILURE. LIMIT VALUE CHANGE CAPABILITY PROBABLY AFFECTED → 47

32 √Param select for bit failed to '0'

(R13U)
- C/W LIMIT SET VALUE tw – 4.75
- C/W PARAM SEL tw – 119
- – INH
- STATUS – INH (√status)
- – ENA
- STATUS – INH (√status)
- Repeat above steps using param 088 and 077
- √Param select/results combinations for failure mode

Param Select/Results

119	088	077	BCD Bit(s) Failed to 0	Param Select Changes, Notes
119	088	077	None	Transient problem
118	088	076	Units 1	Subtract 1 from XY1, XY3, XY5, XY7, XY9 *
119	088	075	Units 2	2 from XY2, XY3, XY6, XY7 *
119	088	073	Units 4	4 from XY4, XY5, XY6, XY7 *
109	088	067	Tens 1	Subtract 10 from X1Z,X3Z,X5Z,X1Z,X9Z *
119	088	057	Tens 2	20 from X2Z,X3Z,X6Z,X7Z *
119	088	037	Tens 4	40 from X4Z,X5Z,X6Z,X7Z *
111	080	077	Units 8	Subtract 8 from XY8,XY9 *
110	080	070	All Units	Only param XY0 selectable
119	008	077	Tens 8	Subtract 80 from X8Z,X9Z *
109	008	007	All Tens	Only param X0Z selectable
100	000	000	All Tens & Units	Only param 000 & 100 selectable
019	088	077	Hundreds	Only param 0YZ selectable
010	080	070	Hund & Units	Only param 0Y0 selectable
009	008	007	Hund & Tens	Only param 00Z selectable
000	000	000	All	Only param 000 selectable

NOTE

* Thumbwheel selection of identified params will result in selection of subtracted param (e.g., for Units '2' bit failed to '0', selecting 046 will result in 044)

Did one of the identified trio of Param Select/Results combinations occur ?

YES → 33
NO → 34

(8) Prior to changing param limit, √that desired param and an unused param are selectable using two INH/ENA cycles (see procedure in block 12), then √desired limit value change capability on unused param

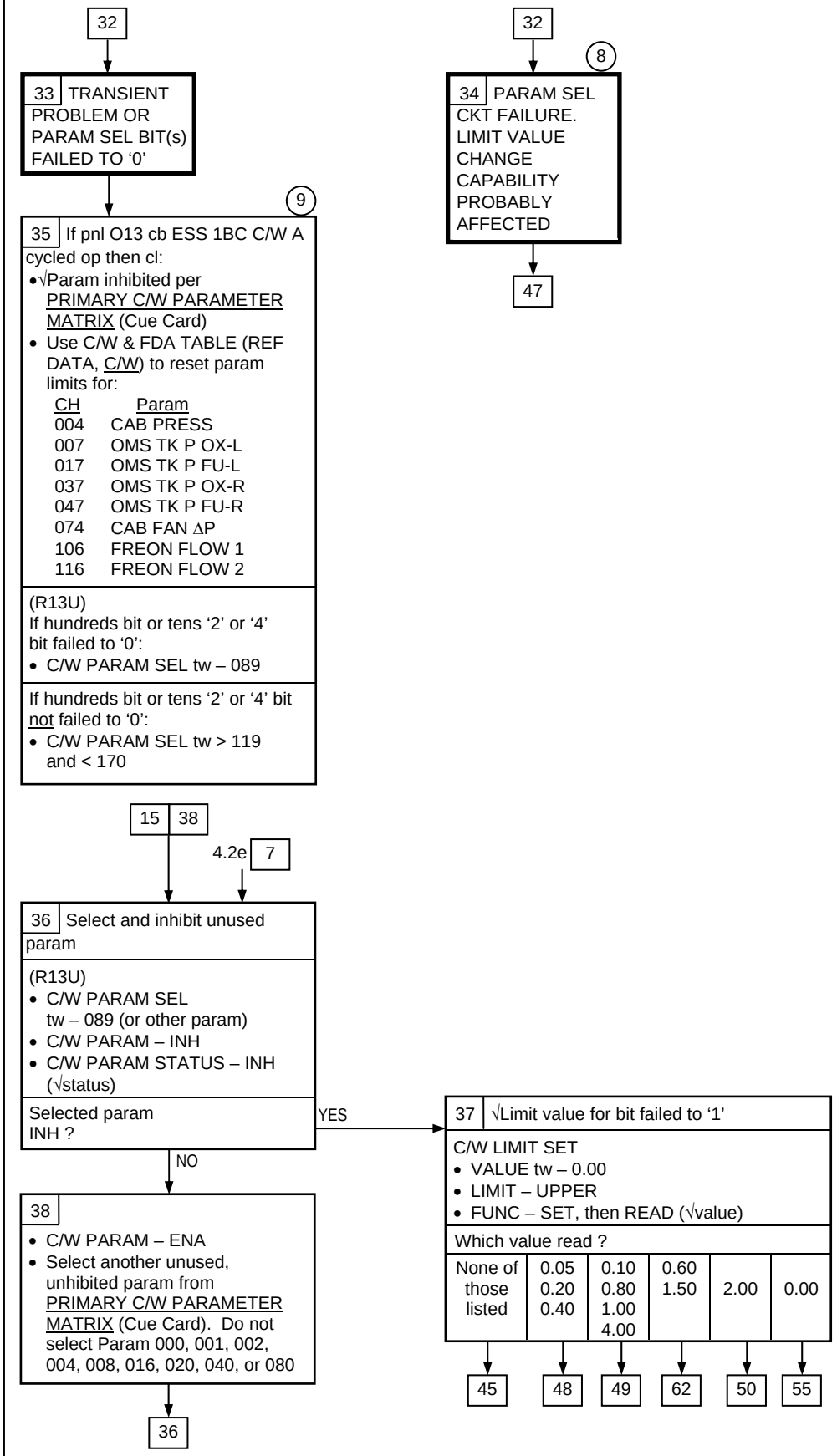

(8) Prior to changing param limit, √that desired param and an unused param are selectable using two INH/ENA cycles (see procedure in block 12), then √desired limit value change capability on unused param

(9) All primary C/W params were enabled and their limits reset to default (PROM) value when cb ESS 1BC C/W A closed

30 → 39 (R13U)
- C/W PARAM SEL tw – 078

30 → 40 (R13U)
- C/W PARAM SEL tw – 024

30 → 41 (R13U)
- C/W PARAM SEL tw – 088

42 Param sel bit failure confirmation

(R13U)
- C/W LIMIT SET VALUE tw – 3.75
- C/W PARAM – INH
- STATUS – INH (√status)
- – ENA
- STATUS – INH (√status)
- √Param select/results combinations for failure mode

Param Select/Results

First	Second	BCD Bit Failed to '1'	Param Select Changes, Notes
000/001	078/079	Units 1	Add 1 to 0,2,4,6,8 Units sel
000/002	078/080	Units 2	2 0,1,4,5,8,9 Units sel *
000/004	078/082	Units 4	4 0,1,2,3,8,9 Units sel *
000/008	024/032	Units 8	8 0,1,2,3,4,5,6,7 Units sel *
000/010	088/098	Tens 1	Add 10 to 0,2,4,6,8 Tens sel *
000/020	088/108	Tens 2	20 0,1,4,5,8,9 Tens sel *(a)
000/040	024/064	Tens 4	40 0,1,2,3,8,9 Tens sel *(a)
000/080	024/104	Tens 8	80 0,1,2,3,4,5,6,7 Tens sel *(a)
000/100	088/None	Hundreds	Only param 100 thru 119 selectable

NOTE

* Results > 10, carry to next digit (e.g., 099 + 4 = 103)
  Results > 128, subtract 128 (e.g., 94 + 40 = 134 - 128 = 006)
  Results 120 thru 127 select PRIMARY C/W self-test param. (F7) PRIMARY C/W ALARM, triggered by inhibiting or changing limit on self-test param, can only be cleared by cycling pwr using (O13) cb ESS 1BC C/W A and resetting Master Alarm
(a) Selection invalid if Hundreds selected to '1'

Did one of the identified pair of Param Select/Results combinations occur ?

YES → 43 PARAM SELECT SINGLE BIT FAILED TO '1' → 47

NO → (8) → 44 PARAM SEL CKT FAILURE. LIMIT VALUE CHANGE CAPABILITY PROBABLY AFFECTED → 47

(8) Prior to changing param limit, √that desired param and an unused param are selectable using two INH/ENA cycles (see procedure in block 12), then √desired limit value change capability on unused param

C/W 4.1d (Cont)

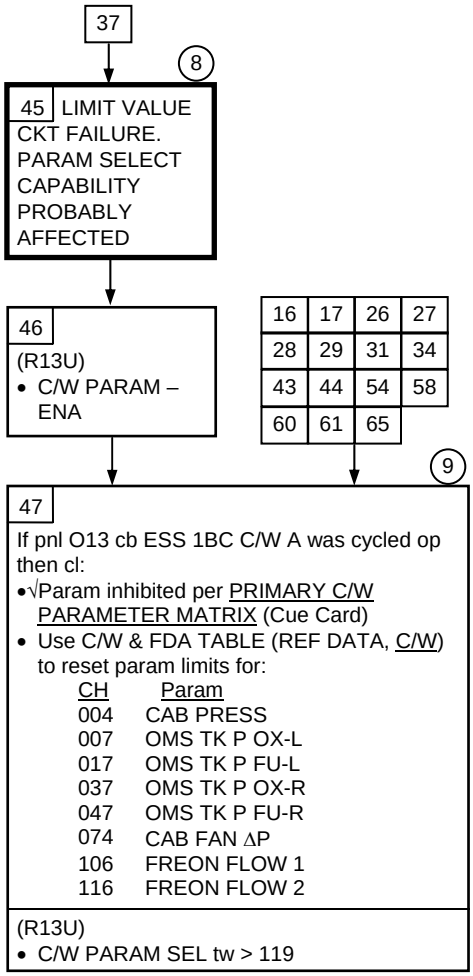

(8) Prior to changing param limit, √that desired param and an unused param are selectable using two INH/ENA cycles (see procedure in block 12), then √desired limit value change capability on unused param

(9) All primary C/W params were enabled and their limits reset to default (PROM) value when cb ESS 1BC C/W A closed

C/W 4.1d (Cont)

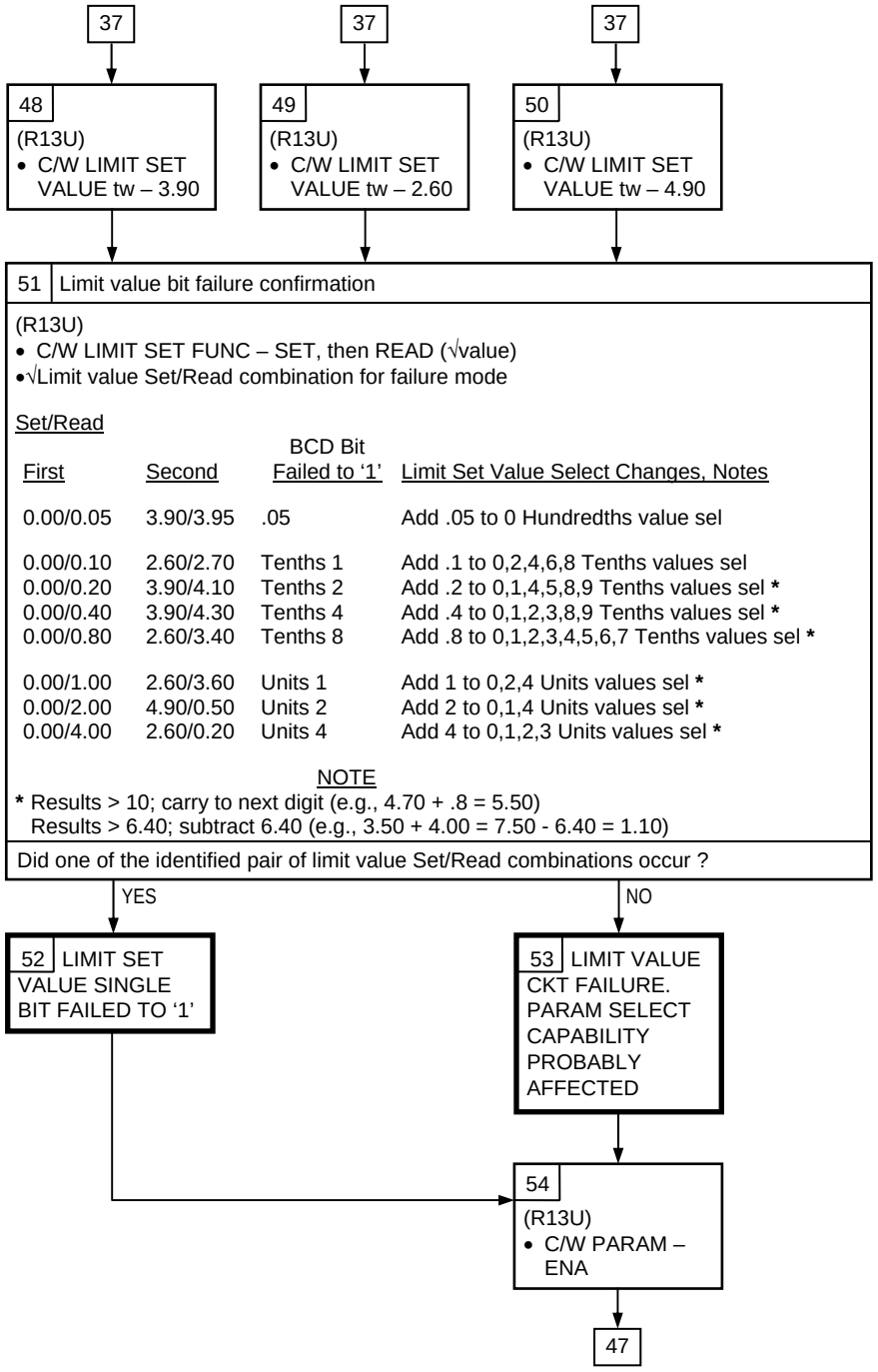
37
37
37
48
(R13U)
• C/W LIMIT SET VALUE tw – 3.90
49
(R13U)
• C/W LIMIT SET VALUE tw – 2.60
50
(R13U)
• C/W LIMIT SET VALUE tw – 4.90
51 Limit value bit failure confirmation
(R13U)
• C/W LIMIT SET FUNC – SET, then READ (√value)
•√Limit value Set/Read combination for failure mode
Set/Read
First
Second
BCD Bit Failed to '1'
Limit Set Value Select Changes, Notes
0.00/0.05 3.90/3.95 .05 Add .05 to 0 Hundredths value sel
0.00/0.10 2.60/2.70 Tenths 1 Add .1 to 0,2,4,6,8 Tenths values sel
0.00/0.20 3.90/4.10 Tenths 2 Add .2 to 0,1,4,5,8,9 Tenths values sel *
0.00/0.40 3.90/4.30 Tenths 4 Add .4 to 0,1,2,3,8,9 Tenths values sel *
0.00/0.80 2.60/3.40 Tenths 8 Add .8 to 0,1,2,3,4,5,6,7 Tenths values sel *
0.00/1.00 2.60/3.60 Units 1 Add 1 to 0,2,4 Units values sel *
0.00/2.00 4.90/0.50 Units 2 Add 2 to 0,1,4 Units values sel *
0.00/4.00 2.60/0.20 Units 4 Add 4 to 0,1,2,3 Units values sel *
NOTE
* Results > 10; carry to next digit (e.g., 4.70 + .8 = 5.50)
Results > 6.40; subtract 6.40 (e.g., 3.50 + 4.00 = 7.50 - 6.40 = 1.10)
Did one of the identified pair of limit value Set/Read combinations occur ?
YES
NO
52 LIMIT SET VALUE SINGLE BIT FAILED TO '1'
53 LIMIT VALUE CKT FAILURE. PARAM SELECT CAPABILITY PROBABLY AFFECTED
54
(R13U)
• C/W PARAM – ENA
47

C/W 4.1d (Cont)

37

55 √Limit value for bit(s) failed to '0'

(R13U)
- C/W LIMIT SET VALUE tw – 3.65
- FUNC – SET, then READ (√value)
- Repeat above steps using limit value of 5.95
- √Limit value Set/Read result combinations for failure mode

Value Results

3.65	5.95	BCD Bit(s) Failed to '0'	Limit Value Select Changes
3.65	5.95	None	Transient problem
3.60	5.90	.05	Subtract .05 from X.Y5 *
3.65	5.85	Tenths 1	Subtract .1 from X.1Z, X.3Z, X.5Z, X.7Z, X.9Z *
3.45	5.95	Tenths 2	.2 X.2Z, X.3Z, X.6Z, X.7Z *
3.25	5.95	Tenths 4	.4 X.4Z, X.5Z, X.6Z, X.7Z *
3.65	5.15	Tenths 8	.8 X.8Z, X.9Z *
3.05	5.05	All Tenths	Only X.0Z selectable
3.00	5.00	.05 & All Tenths	X.00 selectable
2.65	4.95	Units 1	Subtract 1 from 1.YZ, 3.YZ, 5.YZ *
1.65	4.95	Units 2	2 2.YZ, 3.YZ *
3.65	1.95	Units 4	4 4.YZ, 5.YZ *
0.65	0.95	All Units	Only 0.YZ selectable
0.05	0.05	Units & Tenths	Only 0.0Z selectable
0.60	0.90	Units & .05	Only 0.Y0 selectable
0.00	0.00	All	Only 0.00 selectable

NOTE

* Thumbwheel selection of identified limit value will result in selection of subtracted limit value (e.g., for Tenths '2' bit failed to '0', selecting 3.60 will result in 3.40)

Did one of the identified pair of limit value Set/Read combinations occur ?

YES

56 LIMIT SET VALUE BIT(s) FAILED TO '0'

NO

8

57 LIMIT VALUE CKT FAILURE. PARAM SELECT CAPABILITY PROBABLY AFFECTED

58

(R13U)
- C/W PARAM – ENA

47

8 Prior to changing param limit, √that desired param and an unused param are selectable using two INH/ENA cycles (see procedure in block 12), then √desired limit value change capability on unused param

C/W 4.1d (Cont)

30

59 √For Param Select tw signal short

(R13U)
- C/W LIMIT SET VALUE tw – 3.75
- PARAM SEL – 099
- – INH
- STATUS – INH (√status)
- – ENA
- STATUS – INH (√status)
- Repeat above steps using param 055
- √Param select/results combinations for failure mode

Param Sel/Results

000	099	055	tw Bit Shorted	Param Select Changes, Notes
015	099	055	Units 1	Param XY1, XY3, XY5, XY7, XY9 selectable *
015	105	065	Units 2	XY2, XY3, XY6, XY7 selectable *
015	105	055	Units 4	XY4, XY5, XY6, XY7 selectable *
015	099	065	Units 8	XY8, XY9 selectable *
022	099	055	Tens 1	Param X1Z, X3Z, X5Z, X7Z, X9Z selectable *
022	031	027	Tens 2	02Z, 03Z, 06Z, 07Z selectable *(a)
022	031	055	Tens 4	04Z, 05Z, 06Z, 07Z selectable *(a)
022	099	027	Tens 8	08Z, 09Z selectable *(a)

NOTE

* Param selections other than those indicated will cause all four bits in the failed group to become a '1'. For 'Units' failure this would add 15 to the Hundreds and Tenths selection. For 'Tens' failure this would add 150 to the Hundreds and Units selection. If > 128, subtract 128 from resulting number to find param selected

(a) Selection invalid if Hundreds selected to '1'

Did one of the identified trio of Param Sel/Results combinations occur ?

YES

60 PARAM SELECT tw SIGNAL SHORTED

47

NO

4

61 PARAM SELECT CKT FAILURE

47

(4) Prior to changing any param limit value, √param select capability with INH/ENA capability verification using procedure in block 12

37

62 √For limit value tw signal short

(R13U)
- C/W LIMIT SET VALUE tw – 3.60
- FUNC – SET, then READ (√value)
- Repeat above steps using limit value of 2.50
- √Limit value Set/Read result combinations for failure mode

Value Result

000	3.60	2.50	tw BCD Signal Shorted	Limit Value Select Changes, Notes
0.60	3.60	1.50	Units 1	Value 1.YZ, 3.YZ, 5.YZ, selectable *
0.60	3.60	2.50	Units 2	Value 2.YZ, 3.YZ selectable *
0.60	1.20	1.10	Units 4	Value 4.YZ, 5.YZ selectable *
1.50	4.50	2.50	Tenths 1	Value X.1Z, X.3Z, X.5Z, X.7Z, X.9Z selectable *
1.50	3.60	3.50	Tenths 2	Value X.2Z, X.3Z, X.6Z, X.7Z selectable *
1.50	3.60	2.50	Tenths 4	Value X.4Z, X.5Z, X.6Z, X.7Z selectable *
1.50	4.50	3.50	Tenths 8	Value X.8Z, X.9Z selectable *

NOTE

* Limit value selections other than those indicated will cause all bits in failed 'Units' or 'Tenths' group to become a '1'. For 'Units' failure this would add 7.00 to the Tenths and Hundredths selection. Subtract 6.40 from resulting number to determine the value selected (e.g., selecting 3.45 with Units '4' bit shorted would result in 7.45 - 6.40 = 1.50). For 'Tenths' failure this would add 1.50 to selected Units and Hundredths value (e.g., Selecting 3.45 with Tenths '2' bit shorted would result in 1.50 + 3.05 = 4.55). If resultant number greater than 6.40, subtract 6.40 as in 'Units' failure

Did one of identified trio of limit Value Result combinations occur ?

YES

63 LIMIT VALUE SELECT tw SIGNAL SHORTED TO STRUCTURE

NO

8

64 LIMIT VALUE CKT FAILURE PARAM SELECT CAPABILITY PROBABLY AFFECTED

65

(R13U)
- C/W PARAM – ENA

47

8 Prior to changing param limit, √that desired param and an unused param are selectable using two INH/ENA cycles (see procedure in block 12), then √desired limit value change capability on unused param

C/W

BACKUP C/W ALARM

(F7)

Light on but msg reset does not extinguish light

If:
- Annun lt driver failed on C/W Sys A(B)
- Backup C/W Alarm ckt failed on C/W Sys B pwr sply failure

Nominal Config:
(O13:A)
cb ESS 1BC C/W A – cl
(O13:C)
cb ESS 2CA C/W B – cl
(C3)
C/W MODE – NORM
(R13U)
Annun ltg sys operational
Smoke detn sys operational

4.2a NONRESETTABLE BACKUP C/W ALARM LT

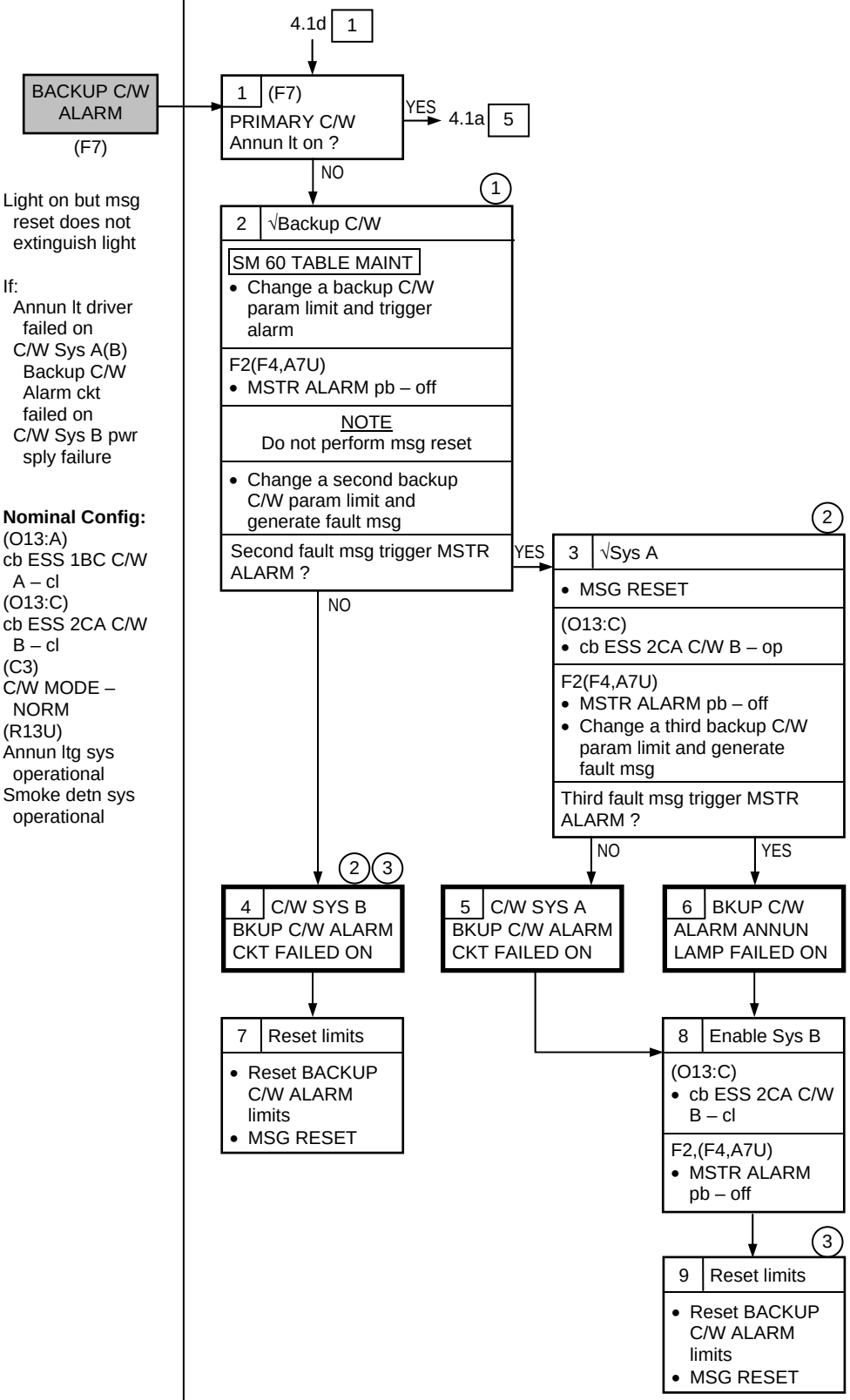

(1) Usable onorbit inactive Backup C/W Alarm params include:

APU Exhaust Gas Temp
- Sys 1 – 0460140
- Sys 2 – 0460240
- Sys 3 – 0460340

APU Lube Oil Temp
- Sys 1 – 0460150
- Sys 2 – 0460250
- Sys 3 – 0460350

(2) Backup C/W Alarms must be msg reset to prevent masking of subsequent Backup C/W Alarm

(3) To extinguish (F7) Backup C/W Alarm lt, remove bulbs or select (C3) C/W MODE – ACK

C/W

4.2b MA LT & C/W TONE – NO ANNUN LT

MSTR ALARM Lt and C/W Tone. No Annun Lt

If:
- ANNUN INTEN failure
- Annun lt failure
- Annun pnl pwr failure
- C/W mode failure to ACK
- Transient
- Bkup C/W sys Alarm with C/W Sys A input failure
- PRI C/W tone enable failure

Nominal Config:
(O13:A)
cb ESS 1BC C/W A – cl
(O13:C)
cb ESS 2CA C/W B – cl
(C3)
C/W MODE – NORM
(R13U)
Annun ltg sys operational
Smoke detn sys operational

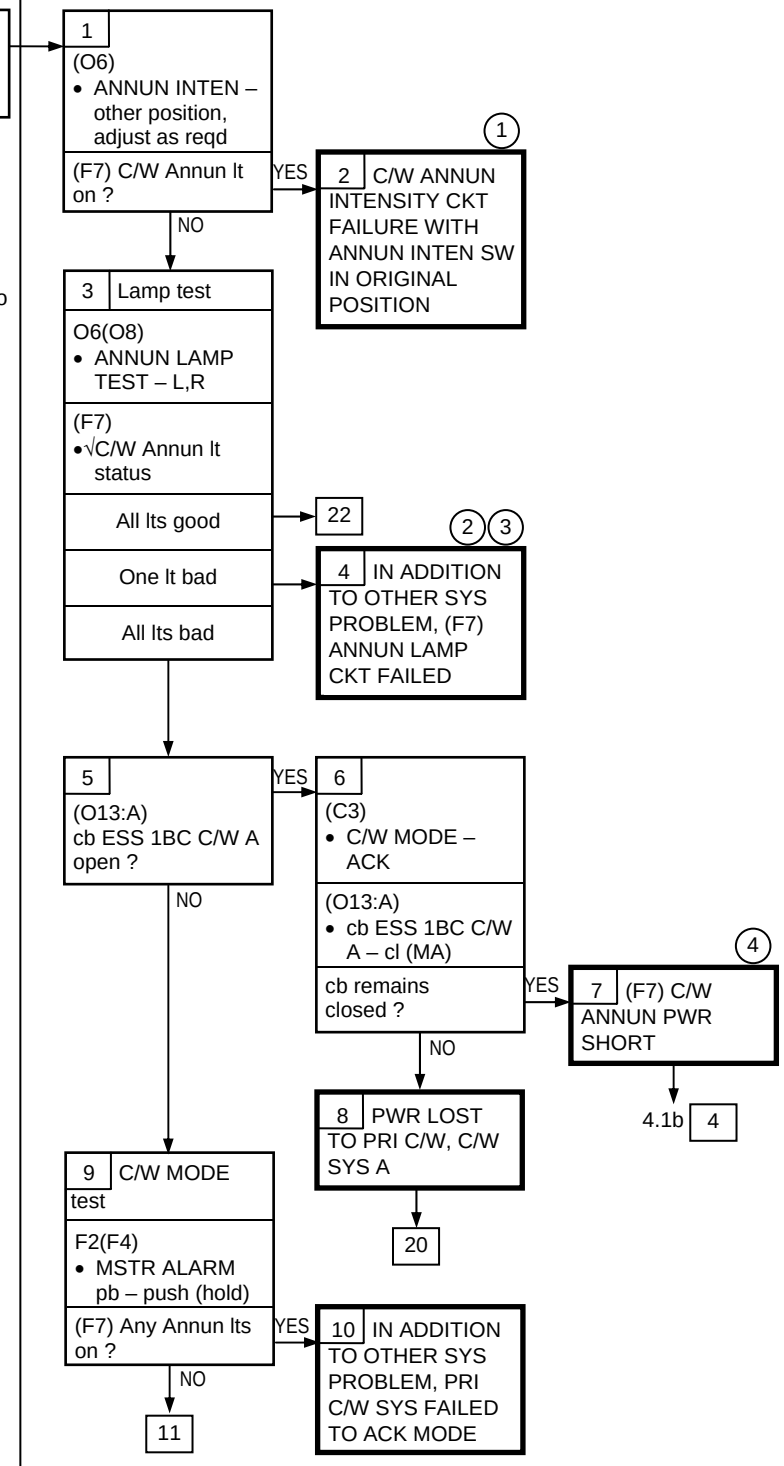

(1) ANNUN INTEN sw must be in non-failed position for normal (F7) C/W lt ops

(2) Verify lamp holder properly seated

(3) If reqd, IFM LIGHTBULB CHANGEOUT procedure may be used to swap bulbs with spare annunciator

(4) Use pnl A7U (MO52J) MSTR ALARM pb to reset alarms. If pnl F2(F4) pb must be used, pressing pb quickly may allow MA to reset without tripping cb. Pnl F7 annunciator lost

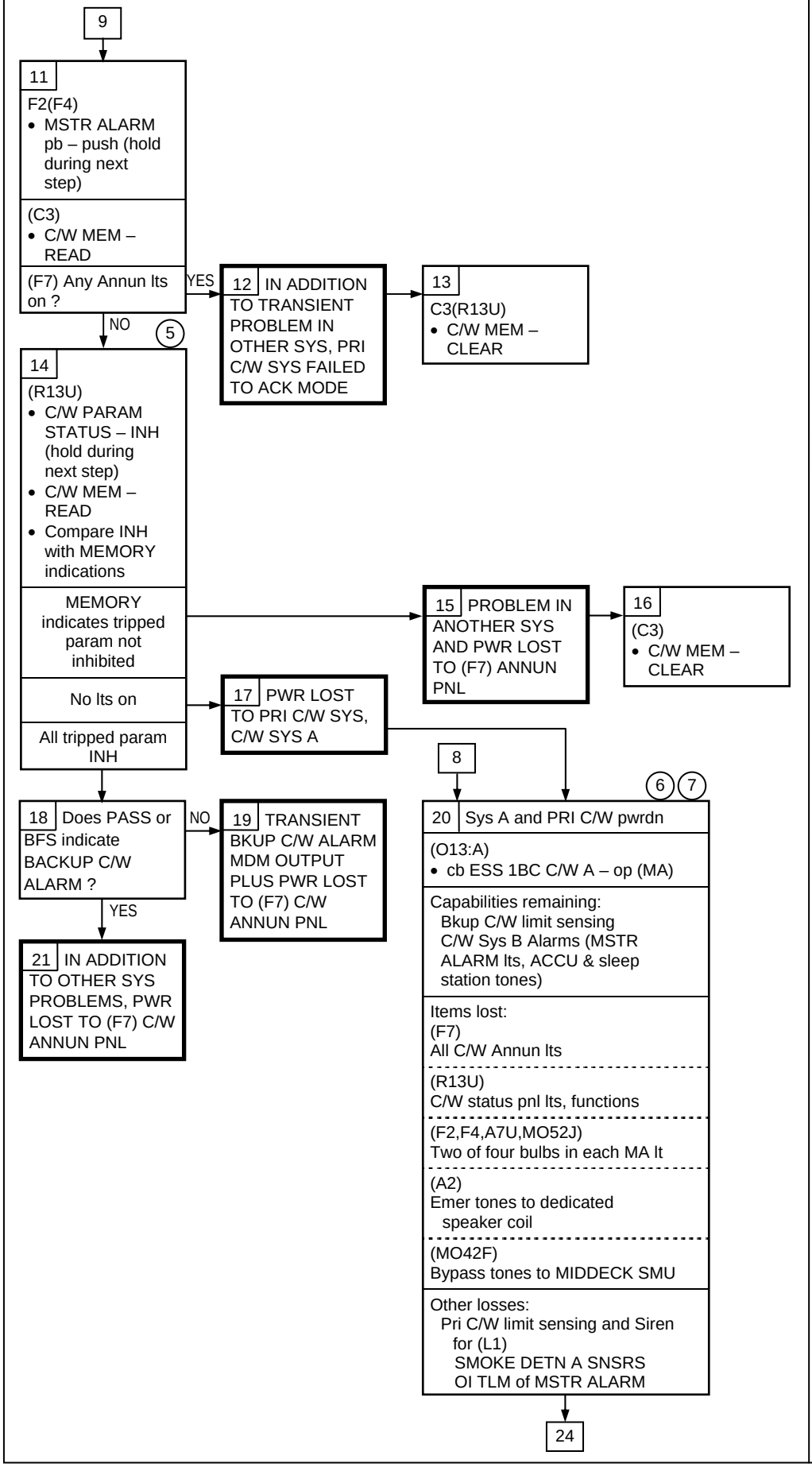

(5) Additional lts which light during C/W MEM – READ indicate tripped params that are not inhibited

(6) All four bulbs in each MA lt will illuminate during lamp test

(7) Until C/W IFM cables installed, loss of ESS 2CA DA2 would not trigger aural alarm so that Fuel Cell 2 could be safed within 9 min. FSMs must be continually monitored

C/W 4.2b (Cont)

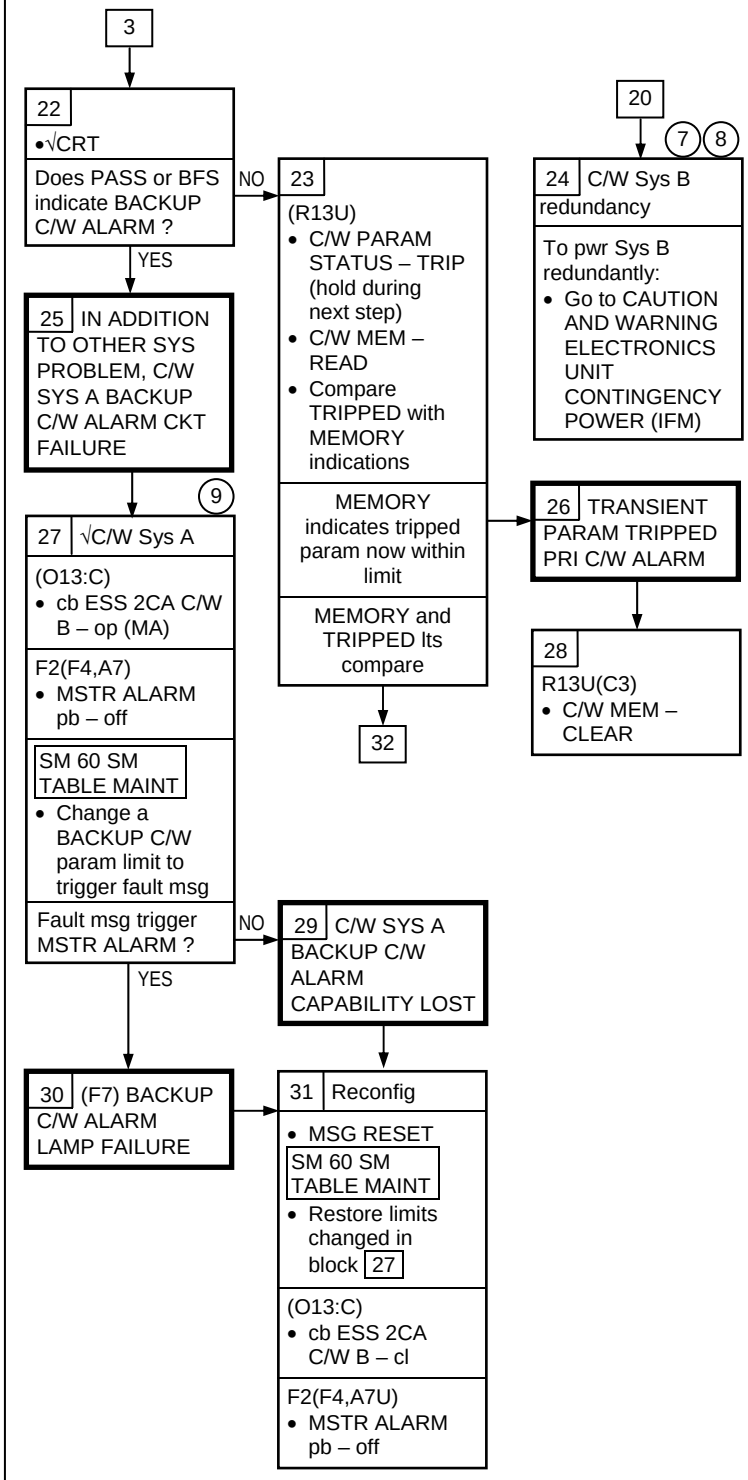

(7) Until C/W IFM cables installed, loss of ESS 2CA DA2 would not trigger aural alarm so that Fuel Cell 2 could be safed within 9 min. FSMs must be continually monitored

(8) Redundancy can be verified by opening cb ESS 2CA C/W B (O13:C) and receiving alarm tones

(9) Usable onorbit inactive BACKUP C/W ALARM params include:

APU Exhaust Gas Temp
- Sys 1 – 0460140
- Sys 2 – 0460240
- Sys 3 – 0460340

APU Lube Oil Temp
- Sys 1 – 0460150
- Sys 2 – 0460250
- Sys 3 – 0460350

C/W 4.2b (Cont)

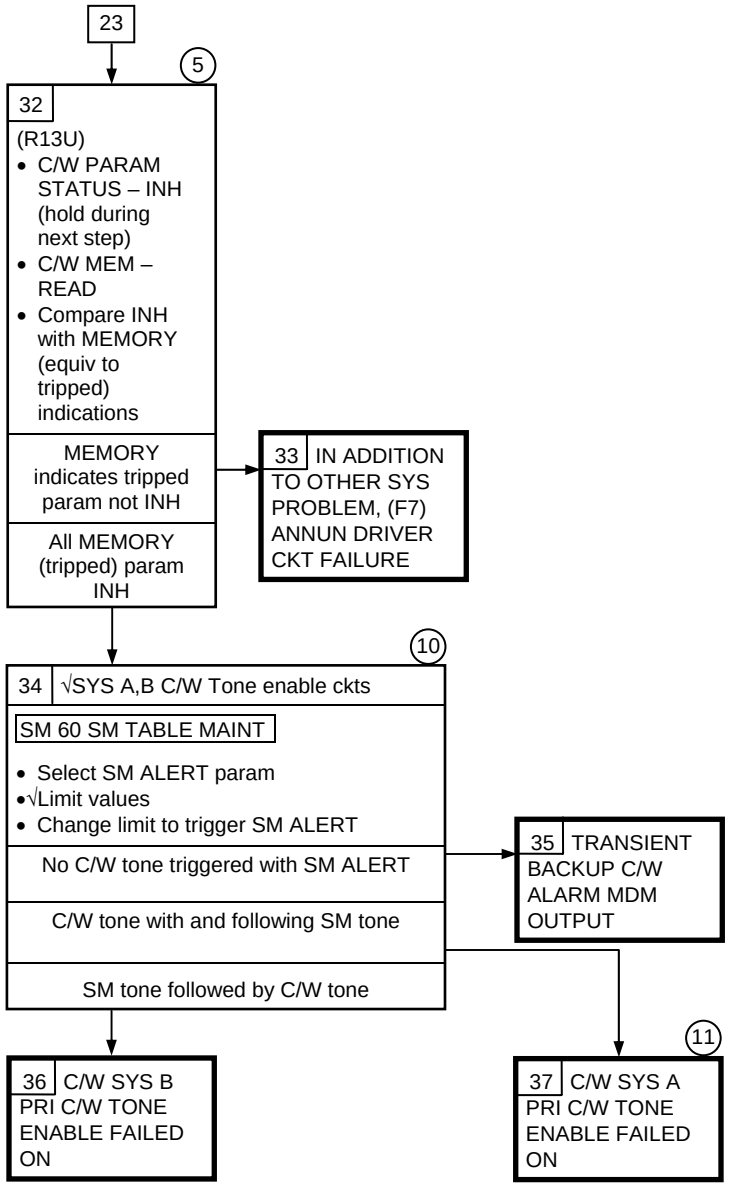

(5) Additional lts which light during C/W MEM – READ indicate tripped params that are not inhibited

(10) Usable SM ALERT params include:

FC H2O LNT
- Sys 1 – 0450412
- Sys 2 – 0450281
- Sys 3 – 0450381

FC H2O VLV T
- Sys 1 – 0450412
- Sys 2 – 0450422
- Sys 3 – 0450432

(11) SM alert tone will trigger C/W tone without MA lt. Requires MA reset. Klaxon or Siren will also trigger C/W tone

C/W

KLAXON – No Rapid dP/dT

If:
- Snsr failure
- Alarm threshold shift
- C/W SYS A(B) Klaxon tone trigger or enable ckt failure

Nominal Config:
(O13:A)
cb ESS 1BC C/W A – cl
(O13:C)
cb ESS 2CA C/W B – cl
(C3)
C/W MODE – NORM
(R13U)
Annun ltg sys operational
Smoke detn sys operational

4.2c KLAXON – NO RAPID dP/dT

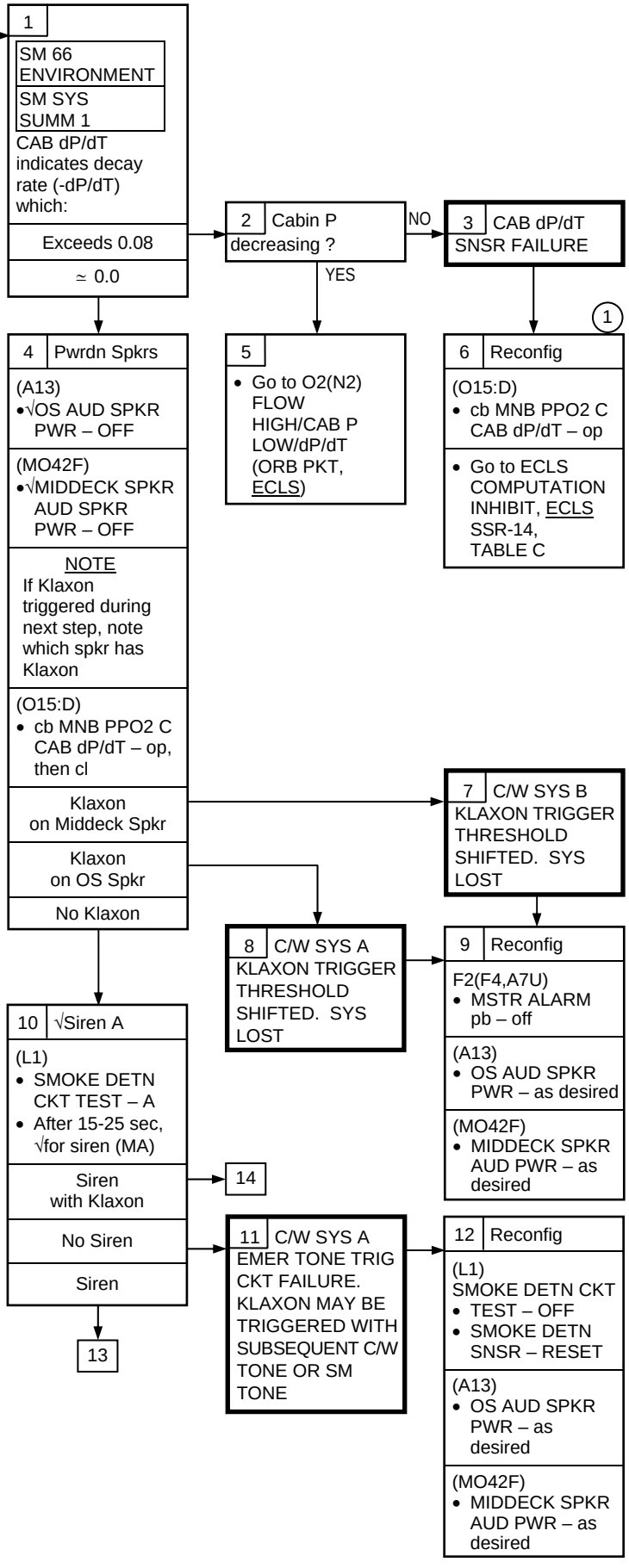

(1) Loss of pwr to cb MNB PPO2 C CAB dP/dT results in loss of dP/dT and PPO2 C sensors

C/W 4.2c (Cont)

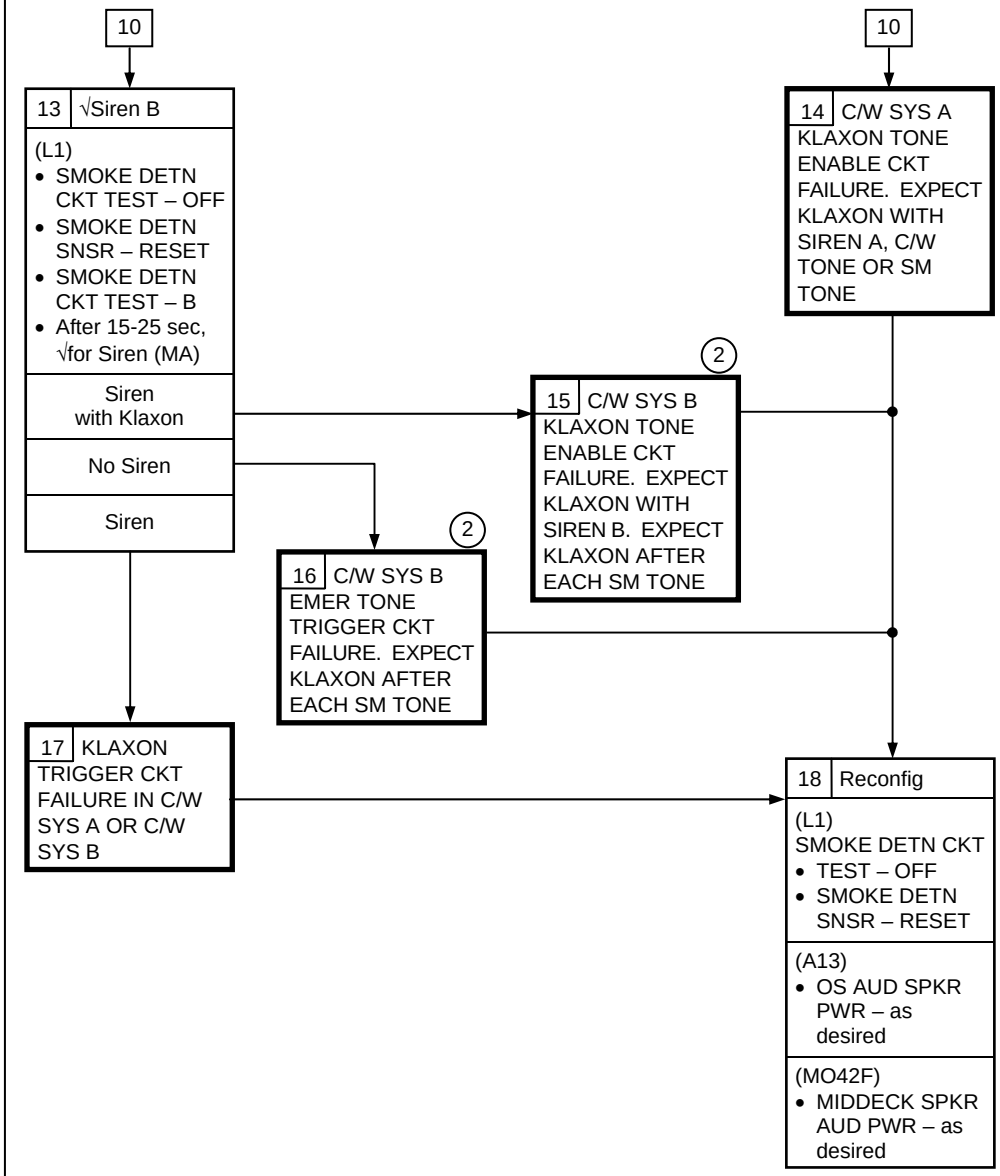

(2) ACCU VOX selects C/W Sys A over C/W Sys B tone. If C/W Sys A tone not present, expect Klaxon with C/W tone

C/W

4.2d SIREN – NO SMOKE DETN LT

SIREN – No Smoke Detn Lt

If:
- Smoke Detn lt failure
- C/W Sys A(B) Siren trigger or enable ckt failed

Nominal Config:
(O13:A)
cb ESS 1BC C/W A – cl
(O13:C)
cb ESS 2CA C/W B – cl
(C3)
C/W MODE – NORM
(R13U)
Annun ltg sys operational
Smoke detn sys operational

1 Lamp test
O6(O8)
- ANNUN LAMP TEST – L (hold)

(L1)
- √SMOKE DETN lts

One or more annun bad
All annun good

2 √Smoke Conc
SM SYS SUMM 1
Any emergency smoke param > 2.2 or increasing > .4 within 20 sec ?
YES
NO

3 Smoke Detn A test
(L1)
- SMOKE DETN SNSR – RESET
- SMOKE DETN CKT TEST – A
- Wait 15 to 25 sec
- √SMOKE DETN A lts

Less than five lts on
No Siren
Siren with five lts

6

4 Snsr reset
(L1)
- SMOKE DETN CKT TEST – OFF
- SMOKE DETN SNSR – RESET

5 IN ADDITION TO SMOKE DETN OR SMOKE PROBLEM, SMOKE DETN ANNUN CKT FAILURE

6 Smoke Detn B test
(L1)
- SMOKE DETN CKT TEST – OFF
- SMOKE DETN SNSR – RESET
- SMOKE DETN CKT TEST – B
- Wait 15 to 25 sec
- √SMOKE DETN B lts

Less than four lts on
No Siren
Siren with four lts (no payload lt)

1

7 C/W SYS A SIREN TRIGGER CKT FAILED ON

10

6
1 2

8 TRANSIENT FALSE SIREN OR C/W SYS A(B) SIREN ENABLE CKT FAILED ON

7

4

2

9 C/W SYS B SIREN TRIGGER CKT FAILED ON

10 Snsr reset
(L1)
- SMOKE DETN CKT TEST – OFF
- SMOKE DETN SNSR – RESET

8

(1) If C/W Sys A failed, Siren may occur with Klaxon, C/W tone, or SM tone

(2) If C/W Sys B failed, Siren may occur with Klaxon or after SM tone. Since ACCU VOX selects C/W Sys A over C/W Sys B tone, expect Siren with C/W tone if C/W Sys A tone not present

4.2e PRI C/W SYS FAILS TO ANNUNCIATE OUT-OF-LIMIT PARAM

PRI C/W Sys Fails to Annun Out-of-Limit Param

C/W Alarm triggered by Backup C/W Sys

If:
- Pri C/W Sys Snsr Multiplexer Limit Value Limit Sense Inhibit Memory or Param Select failure

Nominal Config:
(O13:A)
cb ESS 1BC C/W A – cl
(O13:C)
cb ESS 2CA C/W B – cl
(C3)
C/W MODE – NORM
(R13U)
Annun ltg sys operational
Smoke detn sys operational

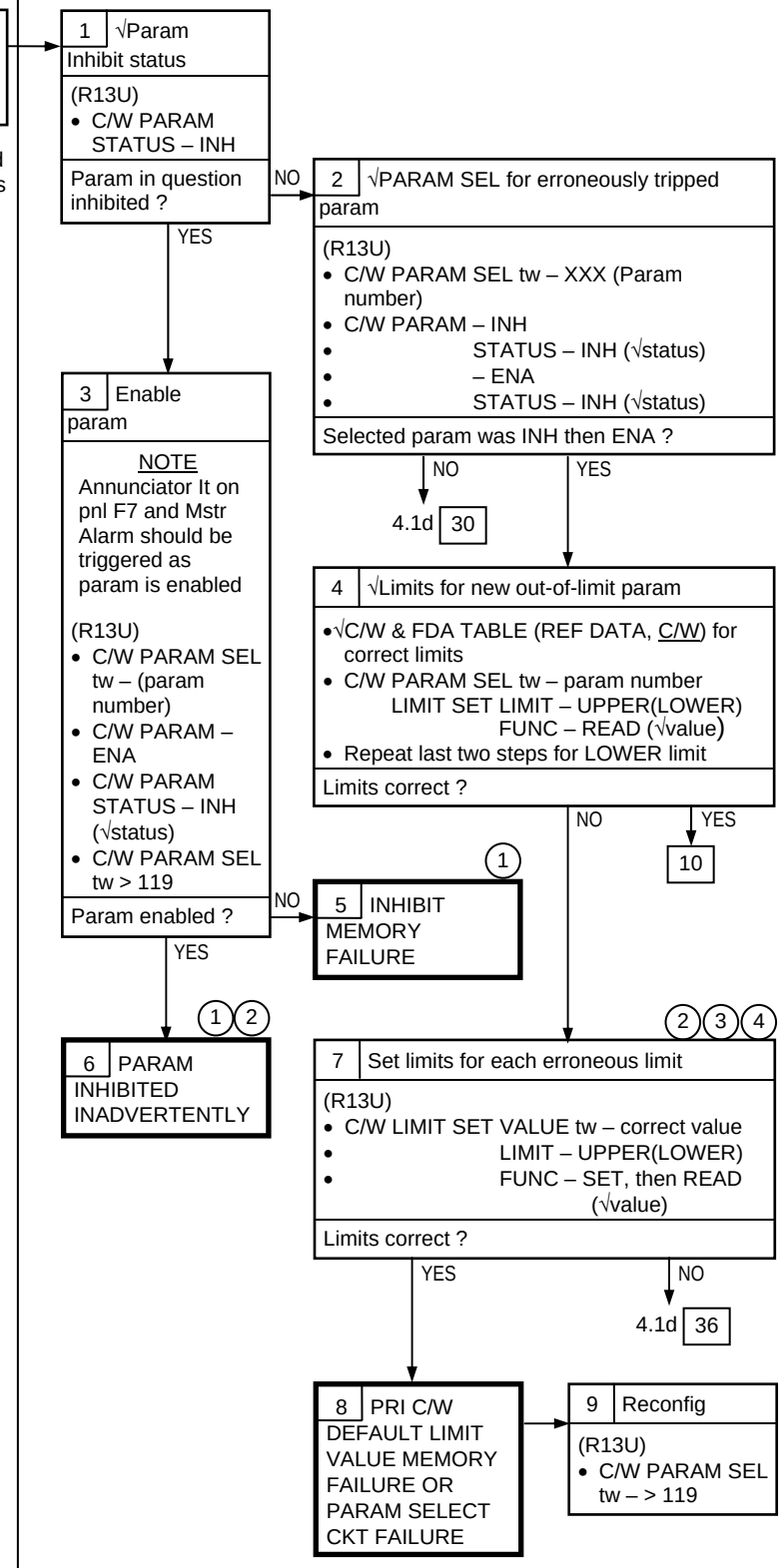

(1) Correct Param Inhibit status can be verified using PRIMARY C/W PARAMETER MATRIX (Cue Card)

(2) Prior to changing any limit value, √PARAM SEL capability with an INH/ENA capability verification using procedure in block 2

(3) If time permits, √all enabled param limits

(4) Limits entered from pnl R13 use different memory than default limits

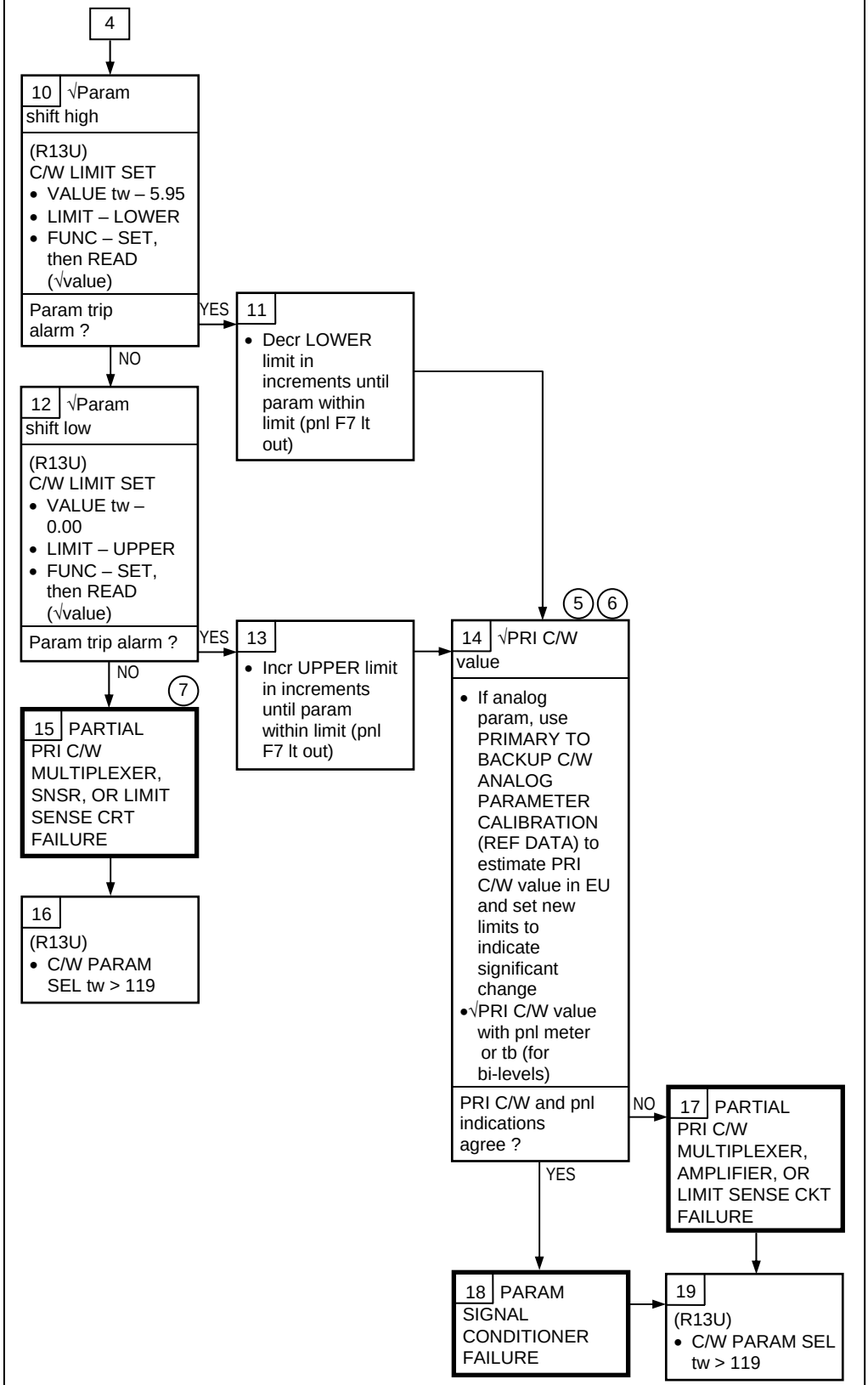

(5) Notify MCC of change in PRI C/W param and limit values

(6) Bi-level params are identified in NOTES column of C/W & FDA Table (REF DATA, C/W)

(7) If pnl indication and primary C/W param values agree, Snsr or Signal Conditioner failed

This Page Intentionally Blank

COMPUTER DATA BUS NETWORK 5-3

5.1 GPC
- 5.1a CS SPLIT 5-5
- 5.1b 'BFS GPC FAIL (BITE)' (ORBIT) 5-10

5.2 MMU/MTU
- 5.2a 'I/O ERROR MMU 1(2)' 5-12
- 5.2b 'OFF/BUSY MMU 1(2)' 5-16
- 5.2c RESERVED ..... not used
- 5.2d 'TIME MTU' 5-18
- 5.2e RESERVED ..... not used
- 5.2f CHECKPOINT FAIL 5-20

5.3 MDM
- 5.3a 'I/O ERROR FF(FA)' 5-22
- 5.3b 'BCE STRG X' 5-24
- 5.3c 'I/O ERROR PL1(2)', 'MDM OUTPUT PL1(2)' 5-26
- 5.3d RESERVED ..... not used
- 5.3e 'I/O ERROR FLEX' 5-28
- 5.3f 'BCE BYP FLEX' 5-30
- 5.3g PL1(2)' 5-32

5.4 RESERVED

5.5 PCM I/F
- 5.5a 'I/O ERROR PCM' (SM) 5-34
- 5.5b PCM' (BFS) 5-36
- 5.5c D/L' 5-37

5.6 MEDS
- MEDS OVERVIEW 5-39
- 5.6a GPC 'I/O ERROR CRT 1(2,3,4)', 'BITE FAIL IDP 1(2,3,4)', 'IDP DEFAULT LOAD FAIL', 'VM LOAD IN PROGRESS' 5-40
- 5.6b 'CRT BITE 1(2,3,4)' 5-43
- 5.6c ABNORMAL RESPONSE FROM KEYBOARD INPUT 5-45
- 5.6d BIG 'X' ACROSS MDU AND/OR 'POLL FAIL' 5-47
- 5.6e MDU ANOMALY 5-50
- 5.6f ADC ANOMALY 5-53
- 5.6g MDU IS AUTONOMOUS 5-56

GPC FAIL RECOVERY PROCEDURES
- GPC FRP-1 SINGLE GPC FAIL 5-58
- FRP-2 RESERVED ..... not used
- FRP-3 BFS GPC FAIL RECOVERY (ENTRY) 5-62
- FRP-4 PASS RECOVERY AFTER BFS ENGAGE (ASCENT/ORBIT/ENTRY) 5-64
- FRP-5 RESERVED ..... not used
- FRP-6 RESERVED ..... not used
- FRP-7 DPS RECONFIG FOR LOSS OF AV BAY COOLING (ASCENT/ORBIT) 5-83

DPS SSR

DPS SSR-1 GPC HDW INITIATED MEM DUMP 5-90
SSR-2 S/W INITIATED MEM DUMP 5-91
SSR-3 GNC REASSIGNMENT 5-92
SSR-4 SM REASSIGNMENT 5-93
SSR-5 FREEZE-DRY REASSIGNMENT 5-95
SSR-6 CONTINGENCY/VARIABLE S/W INITIATED MEM DUMP 5-96
SSR-7 GPC IPL MENU OPTION (PASS/BFS) 5-97
SSR-8 IPL-PASS 5-99
SSR-9 DEU IPL-PASS/BFS 5-100

The following Fault Msgs have no corresponding MAL procedures in this book:

GPC FSM

- BCE STRG 1(2,3,4) PASS (BFS)
- BCE BYP KU
- CM BUF BSY CRT 1(2,3,4)
- DK XMTR 1(2,3,4) (BFS)
- > 3 DEU
- GPC 5
- GPC CONF
- GPC PWR (BFS)
- ILLEGAL ENTRY
- MDM OUTPUT FF(FA)
- PASS GPC BITE
- SUMWORD ICC
- TFL FAIL (BFS)
- TFL LOAD FAIL (PASS)
- TIME TONE

MEDS FSM

- CHECKSUM FAIL IDP 1(2,3,4)
- MDU LOAD FAIL mduX
- OPERATOR REQUEST FAIL mduX
- PORT CHANGE mduX

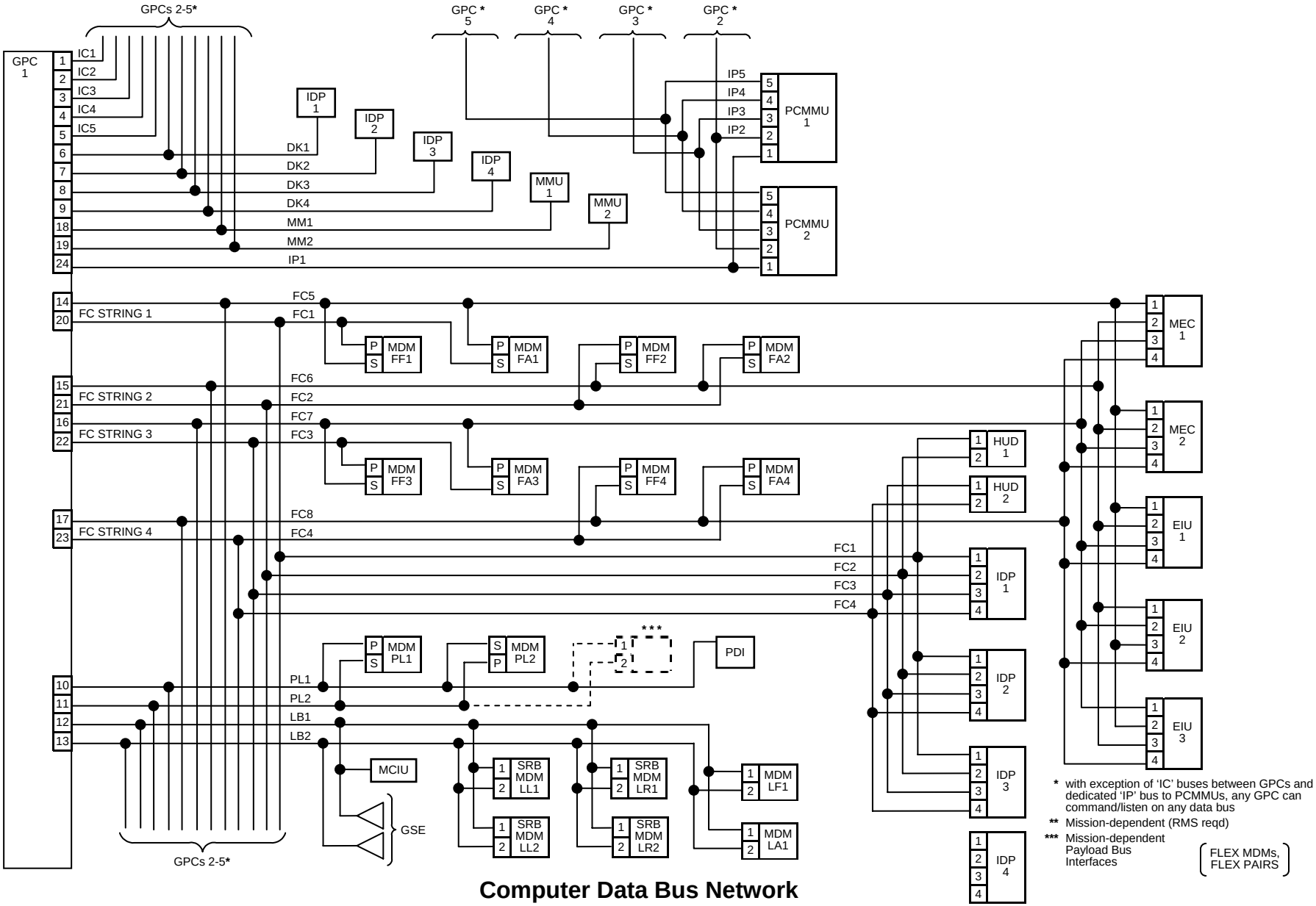

Computer Data Bus Network

This Page Intentionally Blank

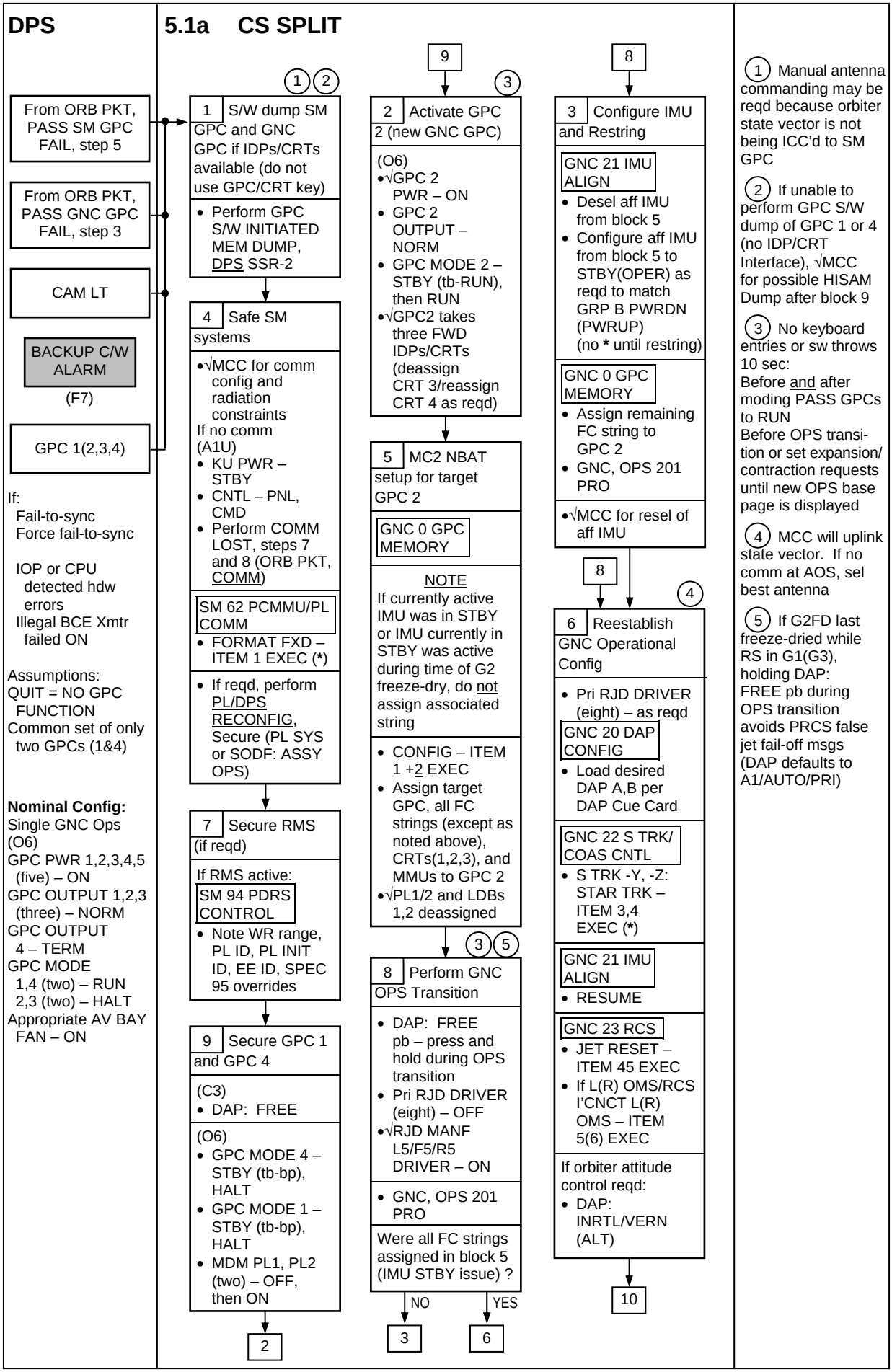
DPS
5.1a CS SPLIT
From ORB PKT, PASS SM GPC FAIL, step 5
From ORB PKT, PASS GNC GPC FAIL, step 3
CAM LT
BACKUP C/W ALARM
(F7)
GPC 1(2,3,4)
If:
Fail-to-sync
Force fail-to-sync
IOP or CPU detected hdw errors
Illegal BCE Xmtr failed ON
Assumptions:
QUIT = NO GPC FUNCTION
Common set of only two GPCs (1&4)
Nominal Config:
Single GNC Ops (O6)
GPC PWR 1,2,3,4,5 (five) – ON
GPC OUTPUT 1,2,3 (three) – NORM
GPC OUTPUT 4 – TERM
GPC MODE 1,4 (two) – RUN
2,3 (two) – HALT
Appropriate AV BAY FAN – ON
1 2
1 S/W dump SM GPC and GNC GPC if IDPs/CRTs available (do not use GPC/CRT key)
• Perform GPC S/W INITIATED MEM DUMP, DPS SSR-2
4 Safe SM systems
•√MCC for comm config and radiation constraints
If no comm (A1U)
• KU PWR – STBY
• CNTL – PNL, CMD
• Perform COMM LOST, steps 7 and 8 (ORB PKT, COMM)
SM 62 PCMMU/PL COMM
• FORMAT FXD – ITEM 1 EXEC (*)
• If reqd, perform PL/DPS RECONFIG, Secure (PL SYS or SODF: ASSY OPS)
7 Secure RMS (if reqd)
If RMS active:
SM 94 PDRS CONTROL
• Note WR range, PL ID, PL INIT ID, EE ID, SPEC 95 overrides
9 Secure GPC 1 and GPC 4
(C3)
• DAP: FREE
(O6)
• GPC MODE 4 – STBY (tb-bp), HALT
• GPC MODE 1 – STBY (tb-bp), HALT
• MDM PL1, PL2 (two) – OFF, then ON
2
9
3
2 Activate GPC 2 (new GNC GPC)
(O6)
•√GPC 2 PWR – ON
• GPC 2 OUTPUT – NORM
• GPC MODE 2 – STBY (tb-RUN), then RUN
•√GPC2 takes three FWD IDPs/CRTs (deassign CRT 3/reassign CRT 4 as reqd)
5 MC2 NBAT setup for target GPC 2
GNC 0 GPC MEMORY
NOTE
If currently active IMU was in STBY or IMU currently in STBY was active during time of G2 freeze-dry, do not assign associated string
• CONFIG – ITEM 1 +2 EXEC
• Assign target GPC, all FC strings (except as noted above), CRTs(1,2,3), and MMUs to GPC 2
•√PL1/2 and LDBs 1,2 deassigned
3 5
8 Perform GNC OPS Transition
• DAP: FREE pb – press and hold during OPS transition
• Pri RJD DRIVER (eight) – OFF
•√RJD MANF L5/F5/R5 DRIVER – ON
• GNC, OPS 201 PRO
Were all FC strings assigned in block 5 (IMU STBY issue) ?
NO
YES
3
6
8
3 Configure IMU and Restring
GNC 21 IMU ALIGN
• Desel aff IMU from block 5
• Configure aff IMU from block 5 to STBY(OPER) as reqd to match GRP B PWRDN (PWRUP) (no * until restring)
GNC 0 GPC MEMORY
• Assign remaining FC string to GPC 2
• GNC, OPS 201 PRO
•√MCC for resel of aff IMU
8
4
6 Reestablish GNC Operational Config
• Pri RJD DRIVER (eight) – as reqd
GNC 20 DAP CONFIG
• Load desired DAP A,B per DAP Cue Card
GNC 22 S TRK/ COAS CNTL
• S TRK -Y, -Z: STAR TRK – ITEM 3,4 EXEC (*)
GNC 21 IMU ALIGN
• RESUME
GNC 23 RCS
• JET RESET – ITEM 45 EXEC
• If L(R) OMS/RCS I'CNCT L(R) OMS – ITEM 5(6) EXEC
If orbiter attitude control reqd:
• DAP: INRTL/VERN (ALT)
10
1 Manual antenna commanding may be reqd because orbiter state vector is not being ICC'd to SM GPC
2 If unable to perform GPC S/W dump of GPC 1 or 4 (no IDP/CRT Interface), √MCC for possible HISAM Dump after block 9
3 No keyboard entries or sw throws 10 sec:
Before and after moding PASS GPCs to RUN
Before OPS transition or set expansion/ contraction requests until new OPS base page is displayed
4 MCC will uplink state vector. If no comm at AOS, sel best antenna
5 If G2FD last freeze-dried while RS in G1(G3), holding DAP: FREE pb during OPS transition avoids PRCS false jet fail-off msgs (DAP defaults to A1/AUTO/PRI)

DPS 5.1a (Cont)

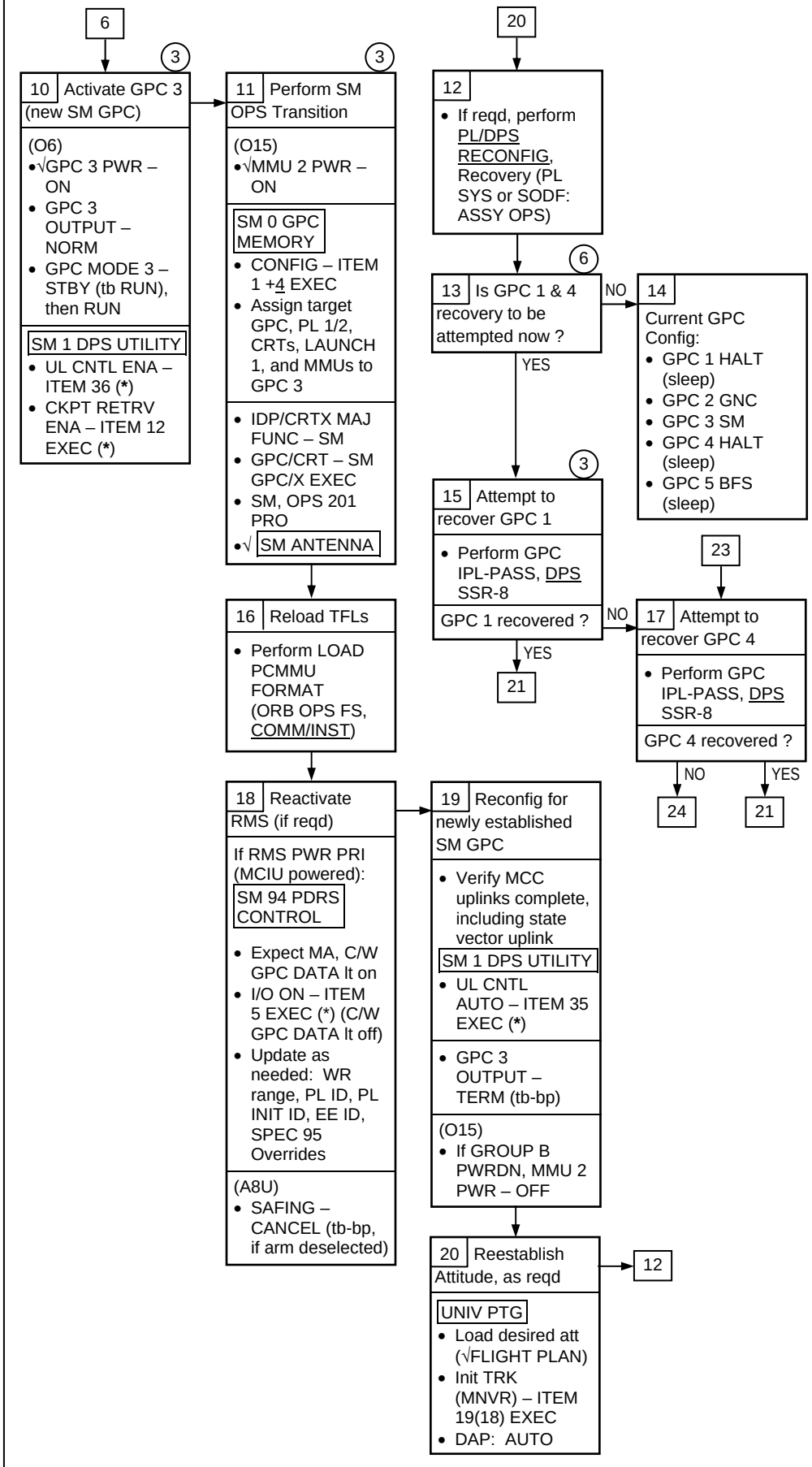

(3) No keyboard entries or sw throws 10 sec:
Before and after moding PASS GPCs to RUN
Before OPS transition or set expansion/ contraction requests until new OPS base page is displayed

(6) MCC will utilize GPC 1 and 4 dump data to help determine the cause of CS split. Data analysis may take 24 to 48 hr

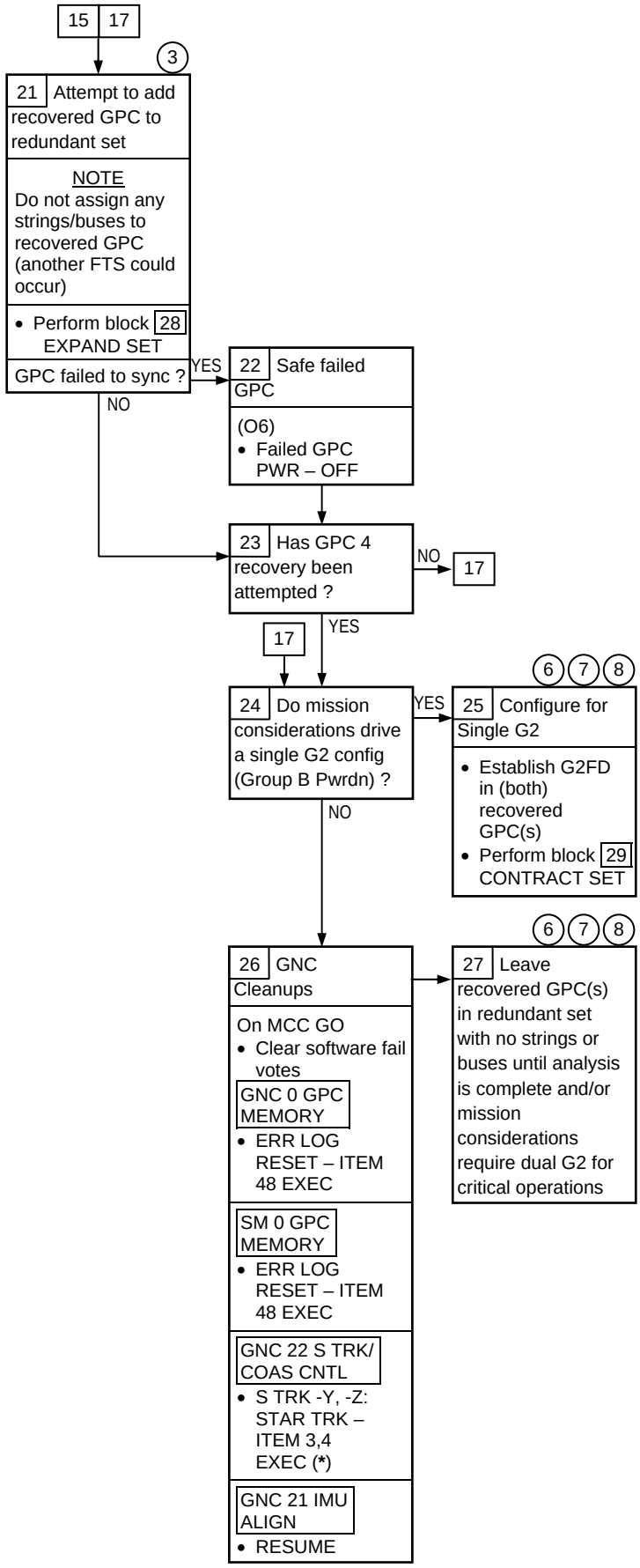

(3) No keyboard entries or sw throws 10 sec:
Before and after moding PASS GPCs to RUN
Before OPS transition or set expansion/ contraction requests until new OPS base page is displayed

(6) MCC will utilize GPC 1 and 4 dump data to help determine the cause of CS split. Data analysis may take 24 to 48 hr

(7) Upon completion of procedure, MCC may request certain IDPs/CRTs to be pwrd on 10 sec to ensure IDP/DEU EQUIV uplink I/F to both GNC and SM. If MEDS, pwr-on IDP/CRT for at least 30 sec before pwr-off

(8) Avoid using GPC-1 or GPC-4 for critical burns or PROX OPS until GPC dump analysis confirms the GPC is not considered transient

28 EXPAND SET

NOTE

No keyboard entries or sw throws 10 sec:
Before and after moding PASS GPCs to RUN
Before OPS transition or set expansion/contraction requests until new OPS base page is displayed

CONFIGURE FOR SET EXPANSION

CRT — GNC 0 GPC MEMORY

- If MM202: GNC, OPS 201 PRO
- CONFIG – ITEM 1 +2 EXEC
- Assign MC2 per table →

OPS MODE RECALL (11)

C3(A6U)
- DAP: FREE

CRT
- GNC, OPS 201 PRO
- Pause ≈ 30 sec (DAP settling), then

C3(A6U)
- DAP: as reqd

(9) (10)

If desired RS:	Dual G2 (1&2)	Dual G2 (2&4)	Triple G2 (1&2&4)
CONFIG GPC	2 12000	2 02040	2 12040
STR 1 2 3 4 PL 1/2	↑	↑	↑
CRT 1 2 3 4	DO NOT MODIFY NBAT	DO NOT MODIFY NBAT	DO NOT MODIFY NBAT
L 1 2			
MM 1 2	↓	↓	↓

(9) Whether expanding G2 set to Dual or Triple G2 config, modify only the GPC target set unless otherwise noted (don't assign strings or buses to target GPC)

(10) If GPC 1 previously recovered and added to RS, GPC 1 should remain in RS for Set Expansion (when adding GPC4)

(11) GPC downlist will default to lowest ID GPC in G2 set. MCC may request downlister change following OPS Mode Recall

29 CONTRACT SET

NOTE

No keyboard entries or sw throws 10 sec:
Before and after moding PASS GPCs to RUN
Before OPS transition or set expansion/contraction requests until new OPS base page is displayed

CONFIGURE FOR SET CONTRACTION

CRT
If MM202: GNC, OPS 201 PRO
GNC 0 GPC MEMORY
- CONFIG – ITEM 1 +2 EXEC
- Assign MC2 per table →

If	Single G2
CONFIG GPC	2 02000
STR 1	2
2	2
3	2
4	2
PL 1/2	0
CRT 1	2
2	2
3	0
4	2
L 1	2
2	0
MM 1	2
2	2

OPS MODE RECALL (11)

C3(A6U)
- DAP: FREE
- VERN(ALT)

CRT
- GNC, OPS 201 PRO
- Pause ≈ 30 sec (DAP settling), then

C3(A6U)
- DAP: as reqd

FREEZE DRY GPC

CRTX
- CRTX MAJ FUNC – PL GPC/CRT G2FD/X EXEC
  GNC 0 GPC MEMORY
- CONFIG – ITEM 45 +2 EXEC
- GPC – ITEM 46 +1(4) EXEC
- STORE – ITEM 47 EXEC
  Store complete when MC = 02 (≈ 30 sec)

- √All IDPs/CRTs deassigned from FD GPC

O6
- GPC MODE G2FD – STBY (tb-bp)
- – HALT (tb-bp)
- – STBY (tb-RUN)
- – HALT (tb-bp)

- If reqd, repeat Freeze Dry steps for 2nd GPC

CONFIG CLEANUP

GNC 22 S TRK/COAS CNTL
- S TRK -Y, -Z: STAR TRK – ITEM 3,4 EXEC (*)
  GNC 21 IMU ALIGN
- RESUME

CLEAR SOFTWARE FAIL VOTES (12)

GNC 0 GPC MEMORY
- ITEM 48 EXEC
  SM 0 GPC MEMORY
- ITEM 48 EXEC

(11) GPC downlist will default to lowest ID GPC in G2 set. MCC may request downlister change following OPS Mode Recall

(12) Crew GO for Error Log Resets without prior MCC concurrence

DPS

5.1b ‘BFS GPC FAIL (BITE)’ (ORBIT)

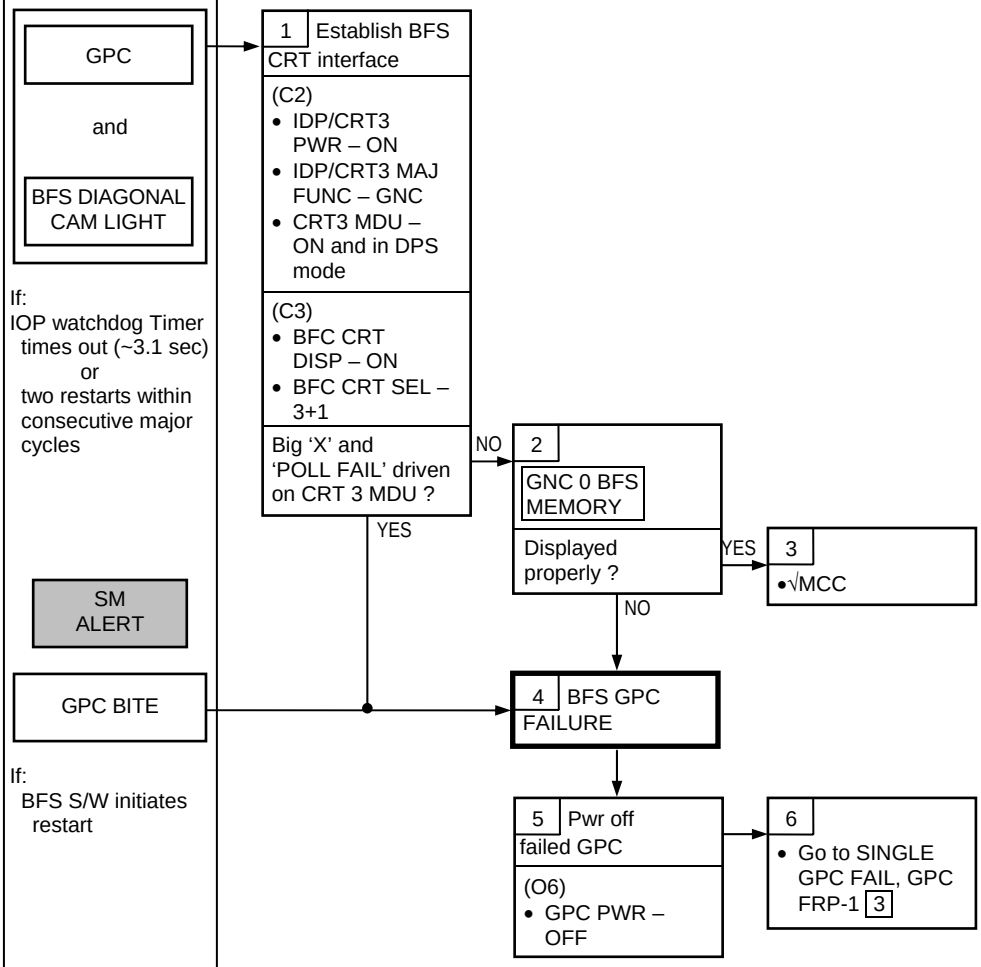

This Page Intentionally Blank

DPS

SM ALERT

I/O ERROR MMU 1(2)

If:
- CHECKSUM, I/O transient, BCE failure, MMU failure, or source GPC failure

During:
- Display roll-in, OPS transition
- SM checkpoint
- TFL/DFL
- MM patch

From ORB PKT, FD GPC ACTIVATE, step 1

Nominal Config:
(O14:F)
MMU 1 – ON
(O15:F)
MMU 2 – ON
(O6)
IPL SOURCE – OFF

5.2a 'I/O ERROR MMU 1(2)'

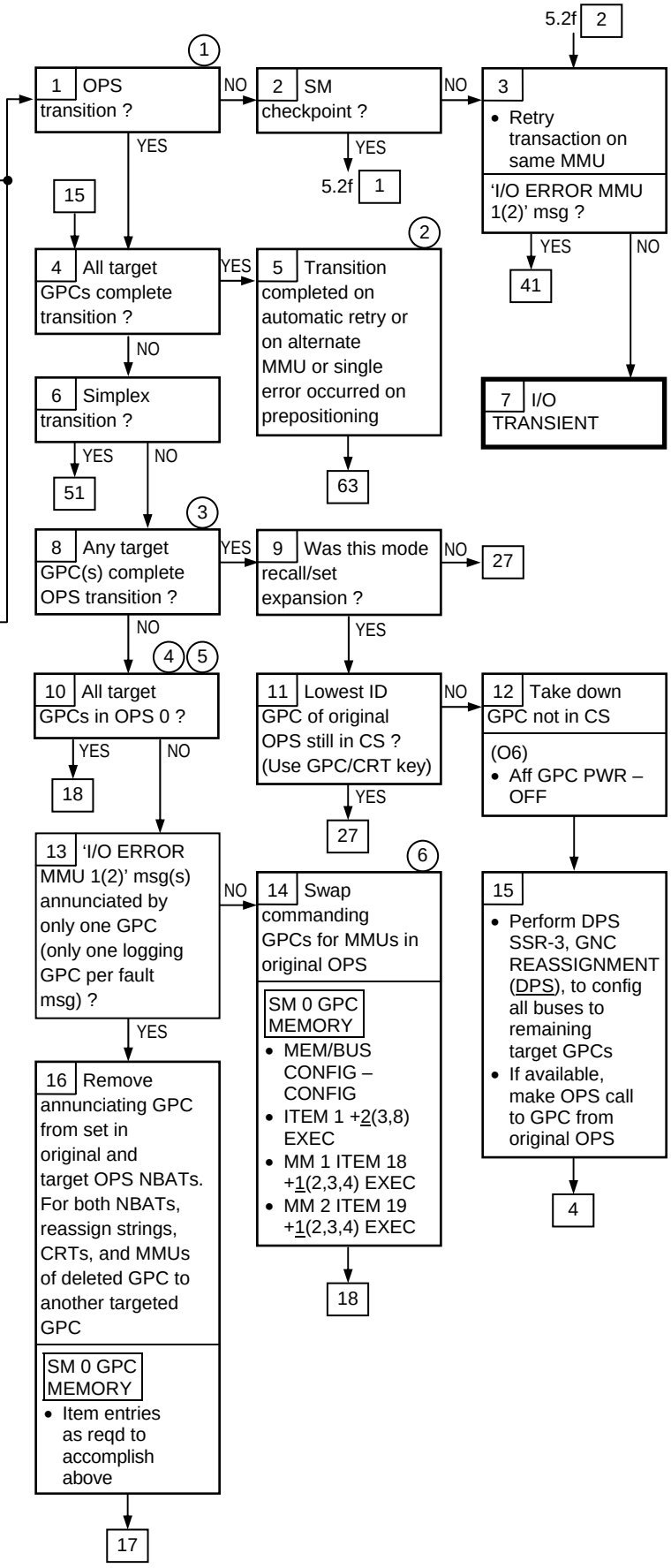

(1) Any previously failed MMU should be prime selected for GNC prior to OPS transition

(2) Health of affected MMU can be verified by GNC OPS transition (with MCC concurrence), SM roll-in request, or IMU checkpoint read

(3) RS target GPC(s) not receiving overlay will F-T-S, but remain in OPS 0 of common set. For GPCs not receiving overlay, IDPs are still assigned per new OPS NBAT. Any IDPs targeted for F-T-S GPCs distributed to lowest number GPC of new target set

(4) If GPC fail votes and fault msgs and 'OFF/BUSY MMU' msg(s) occur, then GPCs are in CS OPS 0. Transition unsuccessful because of MMU or commanding GPC Xmtr failure, and alt MMU OFF/BSY or selected for IPL. For two GPC RS, will get off-diagonal CAM lights. For three or more GPC RS, will get I-fail

(5) For all RS GPCs in OPS 0, CRT assignments are determined by target NBAT

(6) Software uses NBAT of original OPS to select GPC to command each MMU for prepositioning

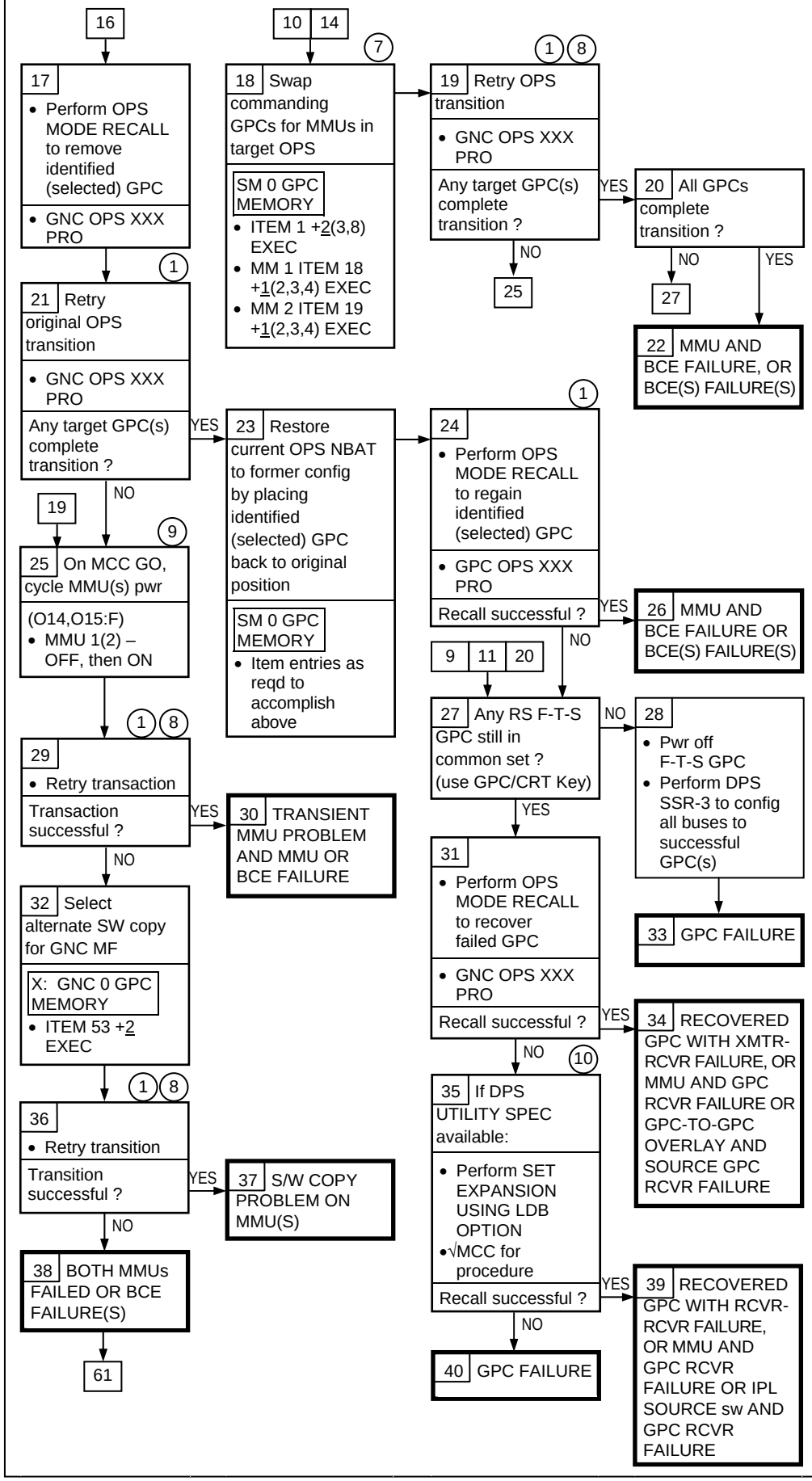

(1) Any previously failed MMU should be prime selected for GNC prior to OPS transition

(7) Software uses NBAT of target OPS to select GPC to command each MMU for the overlay reads

(8) If original transition G2/G8 and in OPS 0, transition to G2, then G8 to avoid illegal entry msg

(9) Solid State MMU power cycle shuts down the associated solid state recorders. MCC commanding may be reqd

(10) If SPEC not available, GPC may be recoverable using R/W to select LDB option

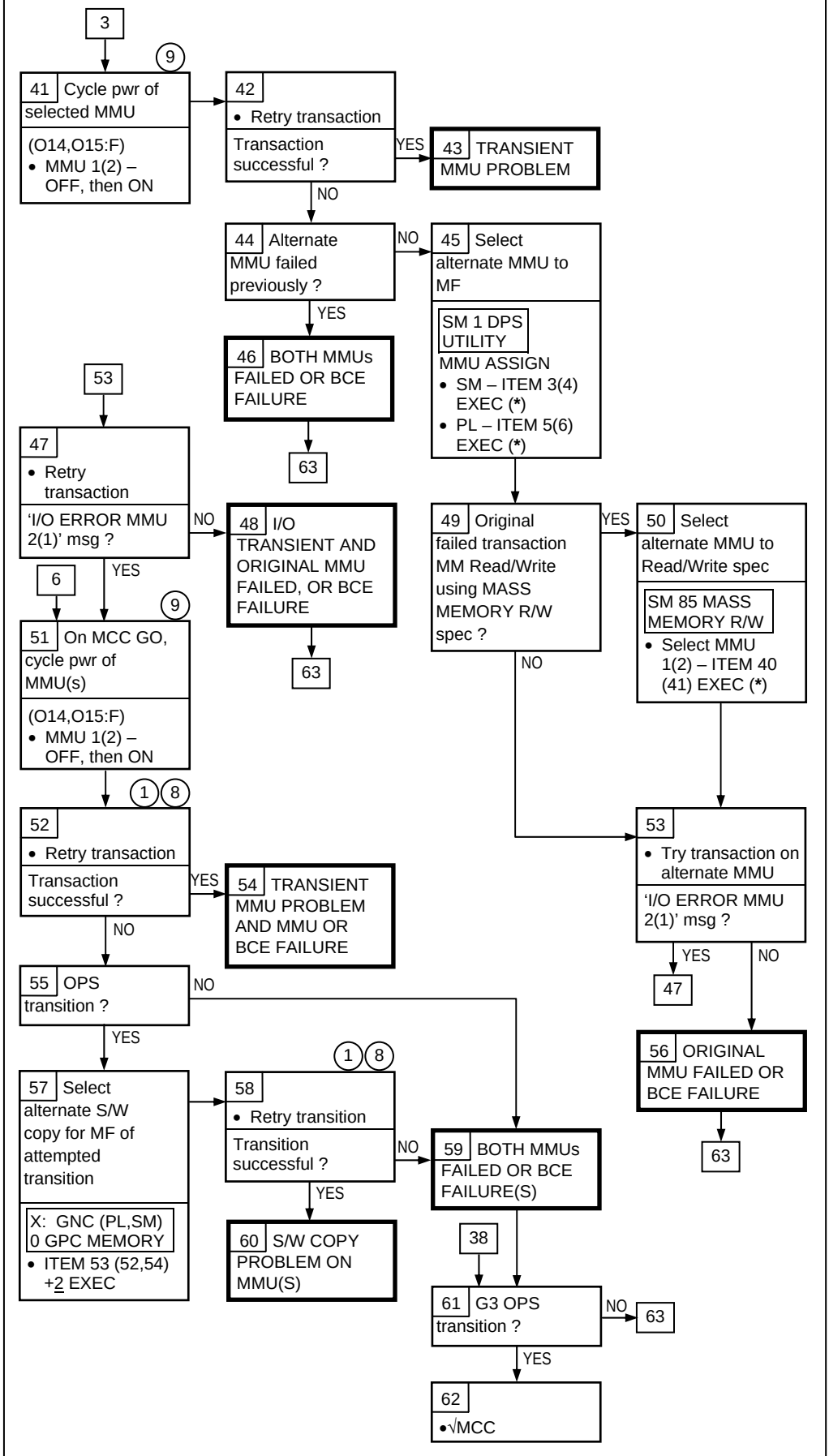

(1) Any previously failed MMU should be prime selected for GNC prior to OPS transition

(8) If original transition G2/G8 and in OPS 0, transition to G2, then G8 to avoid illegal entry msg

(9) Solid State MMU power cycle shuts down the associated solid state recorders. MCC commanding may be reqd

DPS 5.2a (Cont)

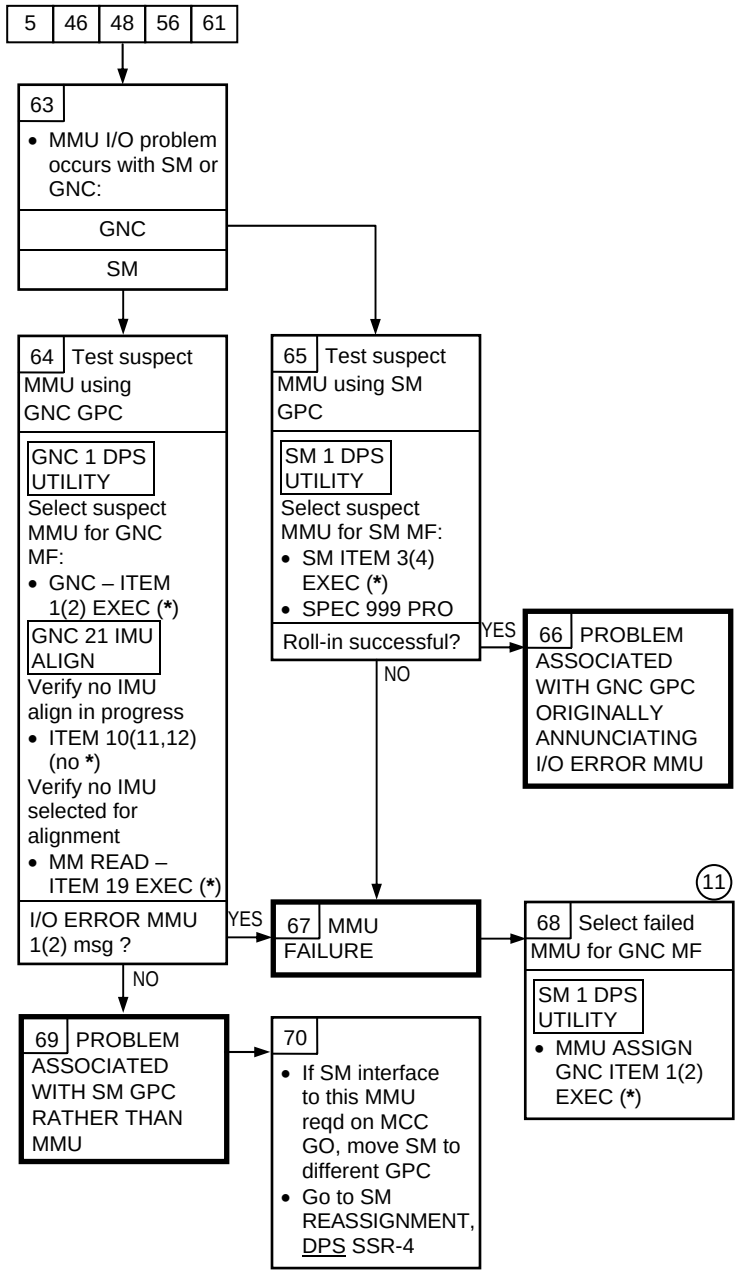

(11) Selecting failed MMU for GNC MF protects against GPC RCV failures occurring after OPS transition prepositioning

DPS

5.2b 'OFF/BUSY MMU 1(2)'

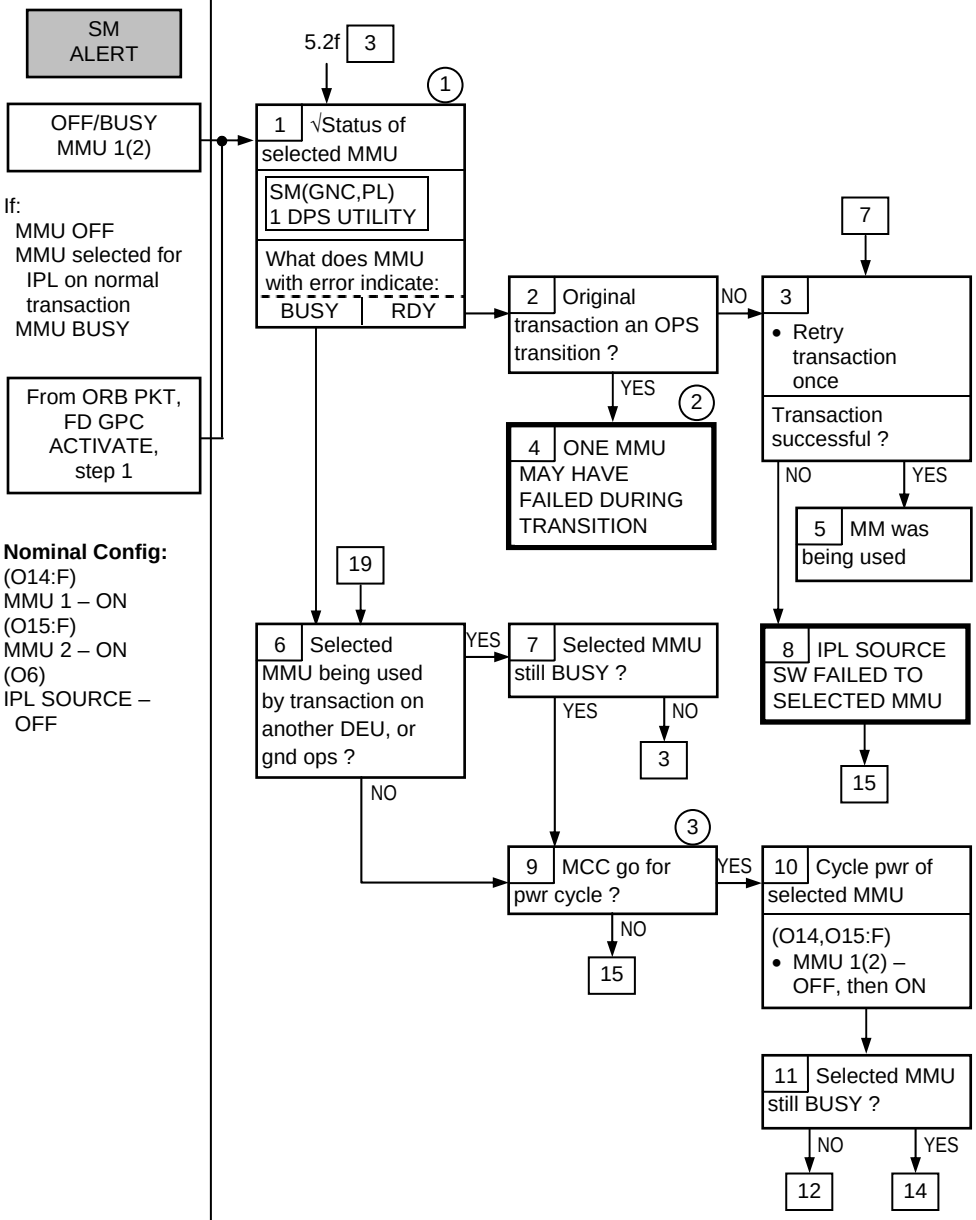

(1) If OPS XTION and GPC fail votes and msgs occur, then GPCs are in CS OPS 0 caused by MMU or commanding GPC XMTR failure, and alternate MMU off/busy or selected for IPL. For two GPC RS, will get off-diagonal CAM lights. For three or more GPC RS, will get I-fail

(2) Health of affected MMU can be verified by GNC OPS XTION (with MCC concurrence) or SM roll-in request

(3) Solid State MMU power cycle shuts down the associated solid state recorders. MCC commanding may be reqd

DPS 5.2b (Cont)

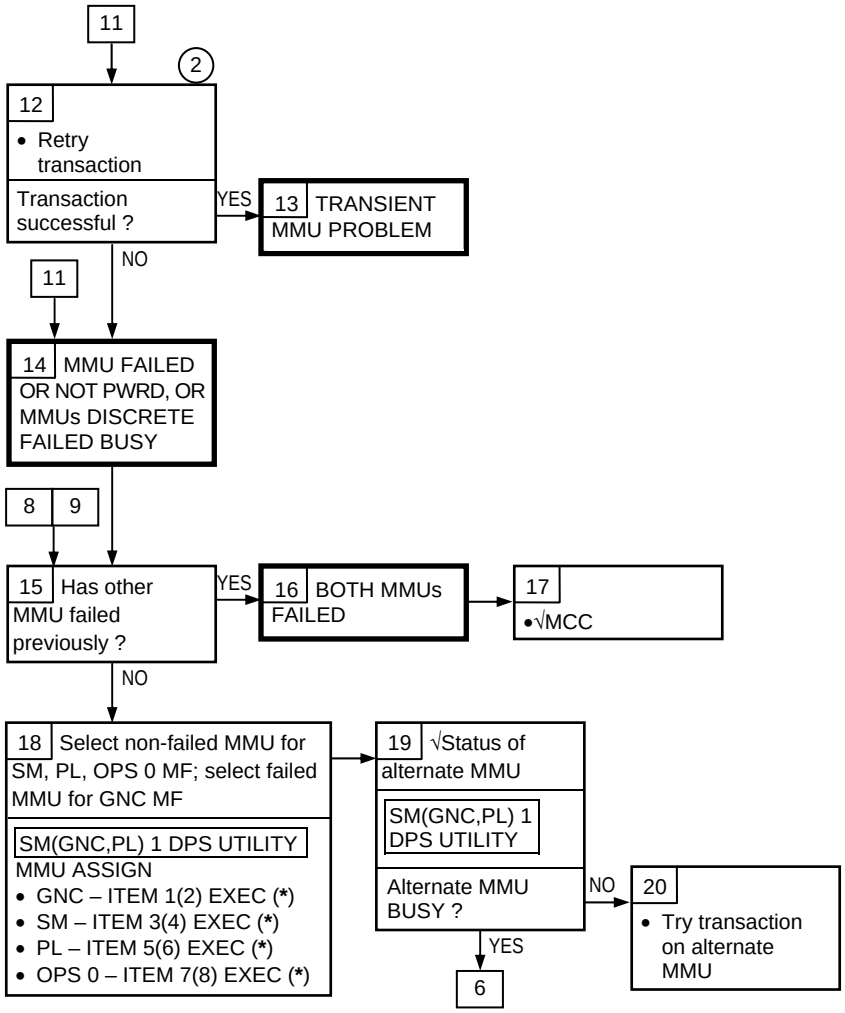

(2) Health of affected MMU can be verified by GNC OPS XTION (with MCC concurrence) or SM roll-in request

DPS

5.2d 'TIME MTU'

SM ALERT

TIME MTU

If:
GPC GMT time source change

Nominal Config:
(O6)
MTU – AUTO
(O13:A)
cb ESS 1BC MTU A – cl
(O13:C)
cb ESS 2CA MTU B – cl

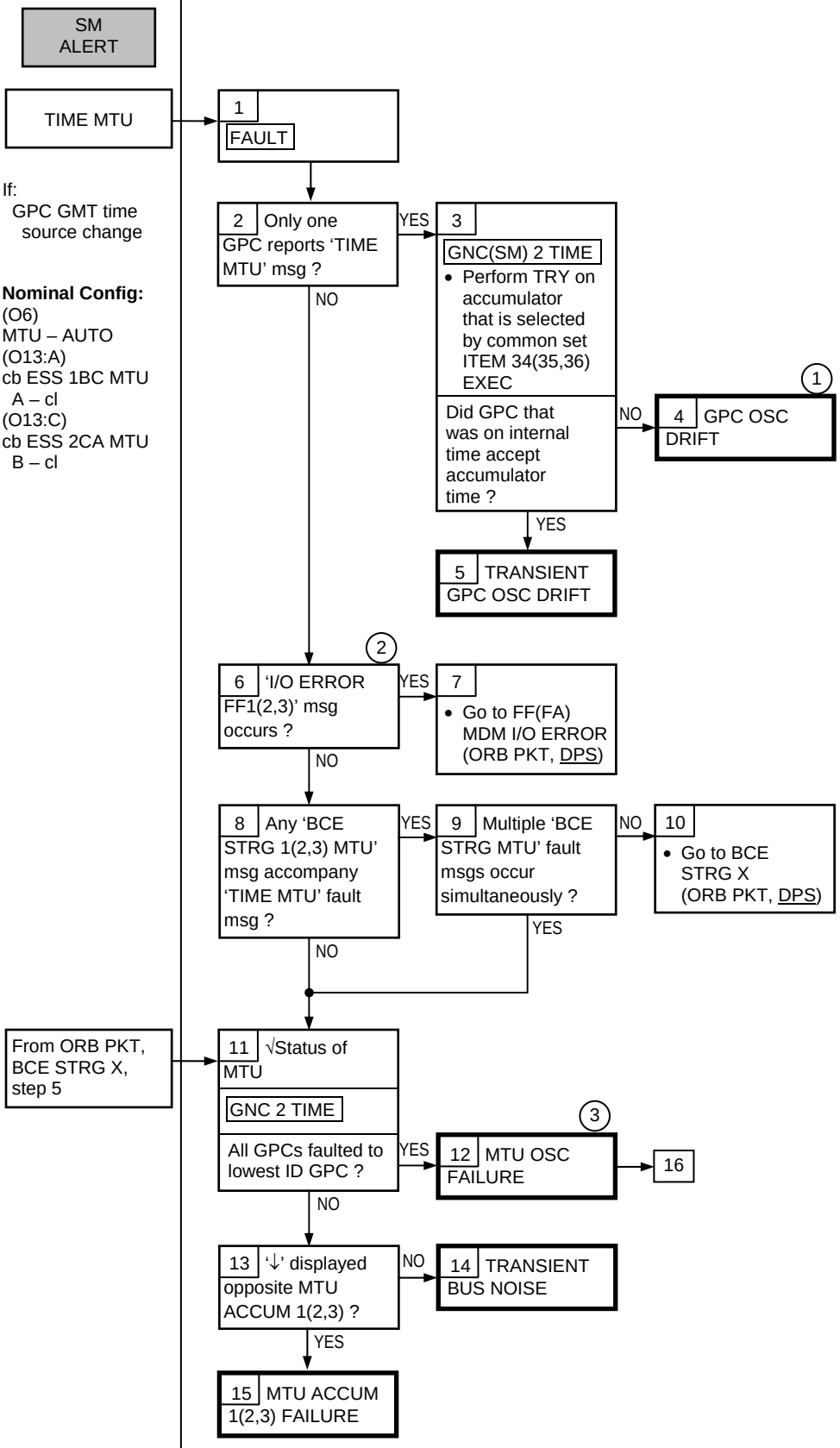

(1) If GPC is on its own internal time, loss-of-sync may occur

(2) If 'I/O ERROR' has occurred, failure caused by equipment other than MTU

(3) Electronics on OSC board have failed in portion of MTU not covered by auto switch circuitry

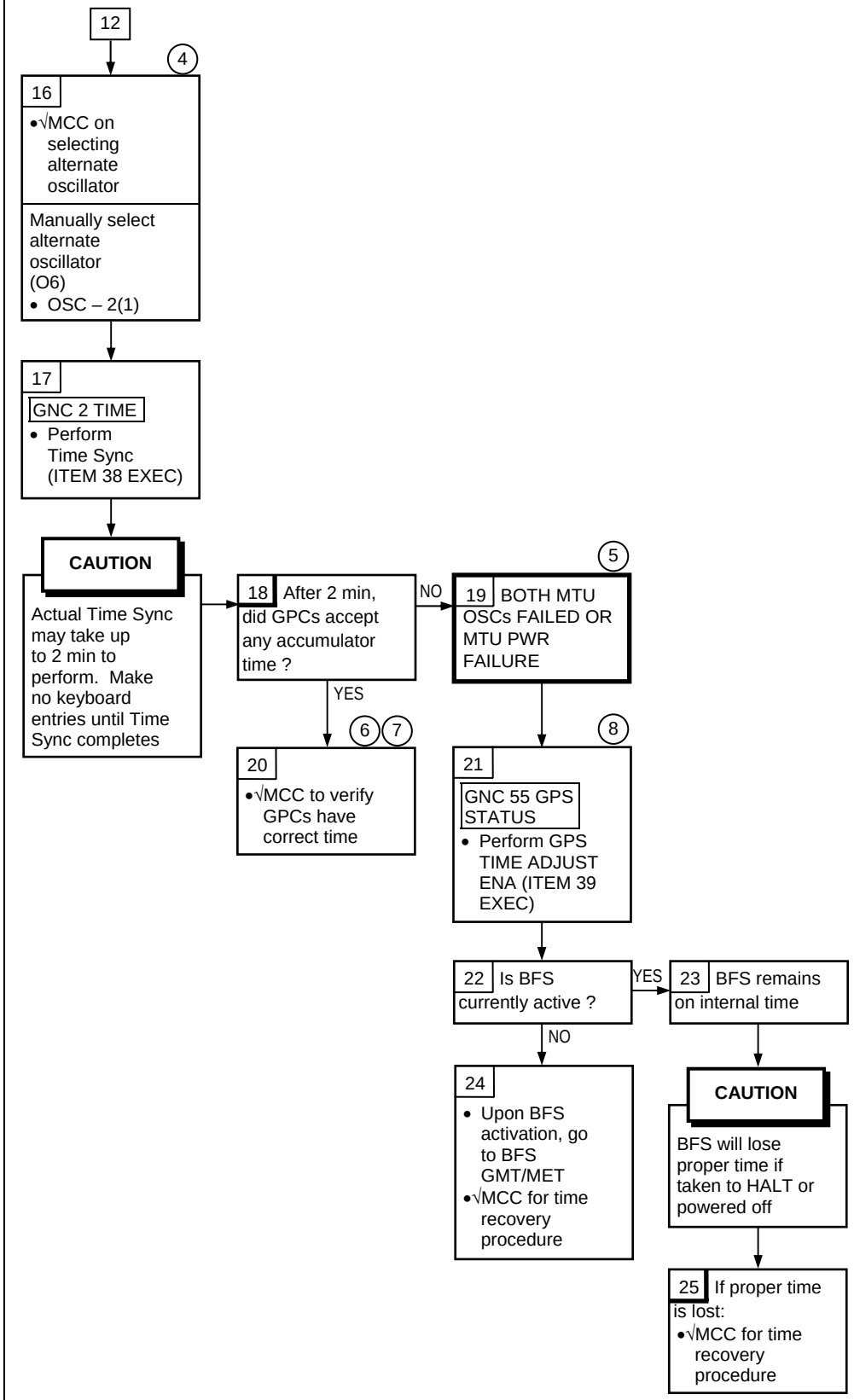

(4) Crew cannot tell which oscillator is currently selected

(5) GPCs will remain on internal time

(6) '↓' on any remaining accumulators does not indicate problem. As long as GPCs accepted some accumulator time, time will update properly

(7) MTU GMT and MET may have errors. D&C Timers are invalid until time is corrected. Action will extinguish any lt on D&C Timers and reenable MTU sync signals

(8) If GPS is currently in PVA mode (approximately 1 hr after MTU fails) then MCC will need to uplink a command to the GPS to fix aiding for entry

DPS

S60 CHECKPT FAIL

If:
- MMU OFF
- MMU BUSY
- MMU selected for IPL
- Checksum Error
- I/O Transient
- MMU write failure
- MMU failure

Nominal Config:
(O14:F)
MMU 1 – ON
(O15:F)
MMU 2 – ON
(O6)
IPL SOURCE – OFF

5.2f CHECKPOINT FAIL

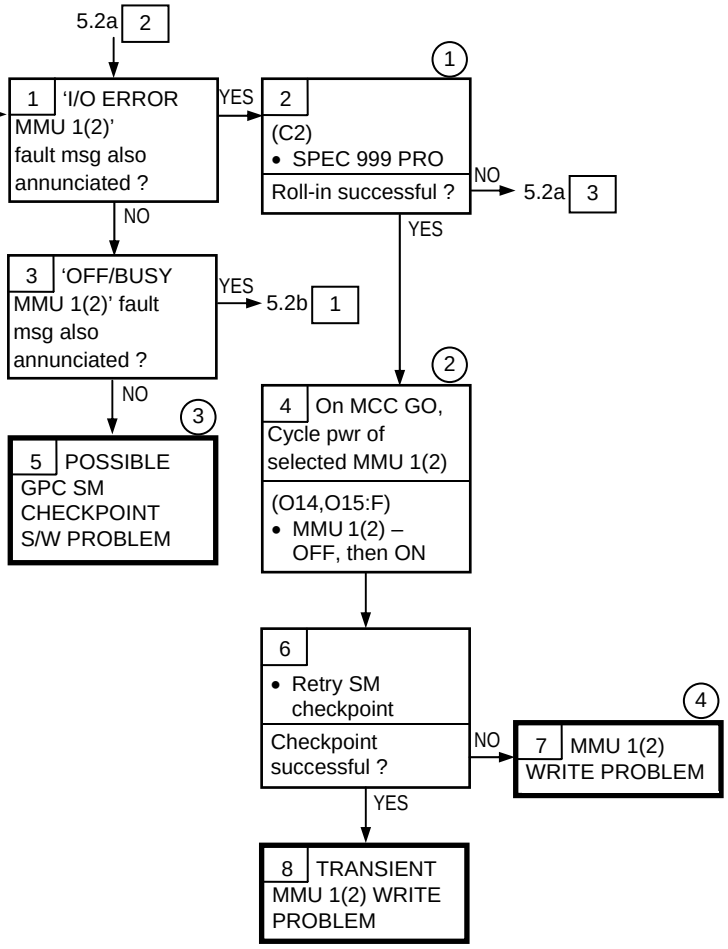

(1) SPEC 999 may be blank

(2) Solid State MMU power cycle shuts down the associated solid state recorders. MCC commanding may be reqd

(3) MMUs may be used for all other transactions. √MCC for possible S/W dump of SM GPC

(4) Affected MMU may be used for any read transaction including OPS transitions, TFL loads, and SM roll-in displays

This Page Intentionally Blank

DPS

5.3a 'I/O ERROR FF(FA)'

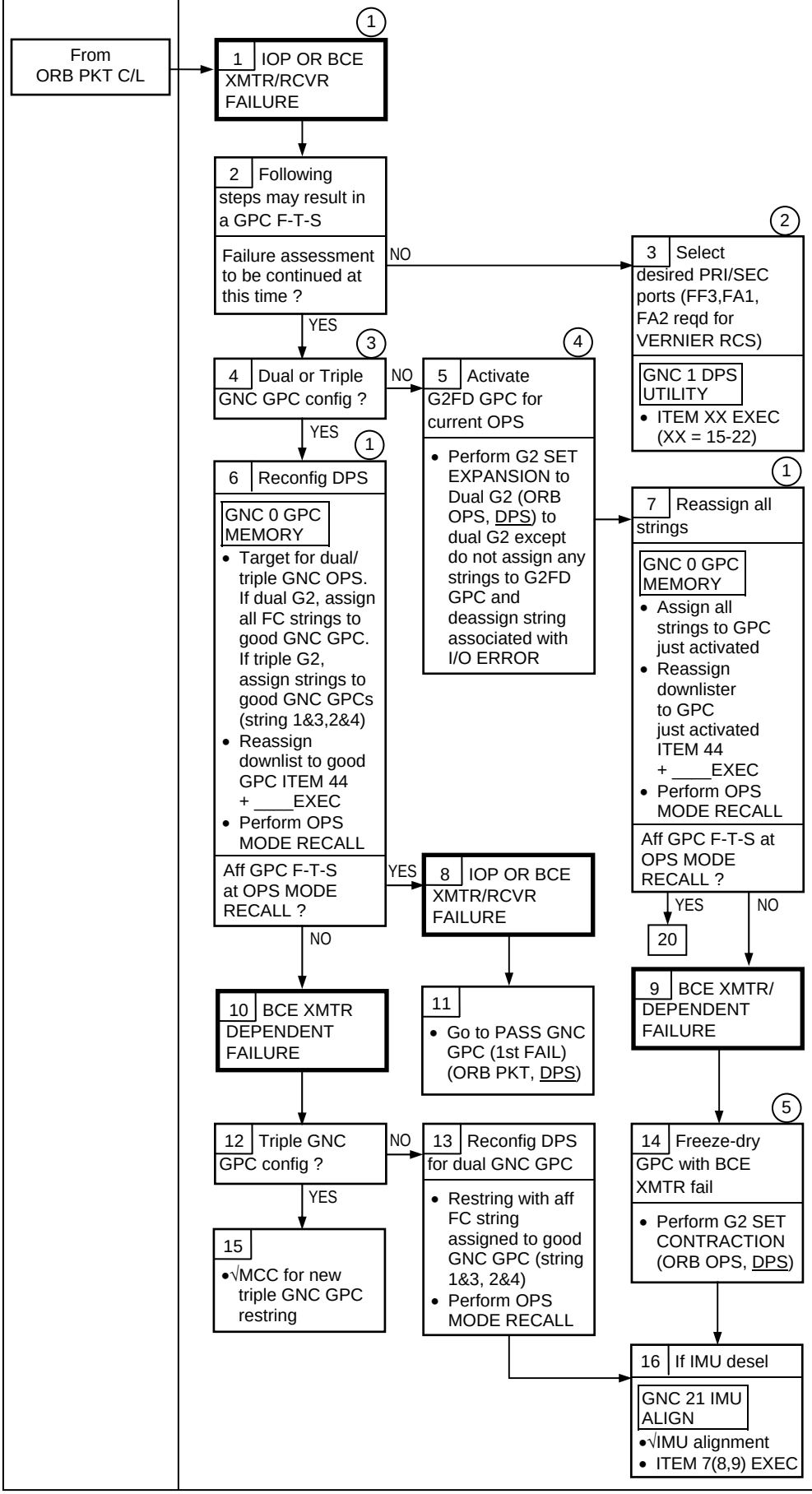

(1) Mult MDM or GPC failures indicated if 'I/O ERROR' msg reoccurs after restring with no F-T-S at blocks 6 or 7 . √MCC

(2) Go to MDM (REF) for summary of data lost on non-recovered MDM

(3) BCE XMTR/ RCVR failures cannot be differentiated from BCE XMTR only failures in single GNC GPC configs. Failure mode will affect DPS config in G3

(4) Original GPC will F-T-S before overlays can be transferred to G2FD GPC if original GPC has BCE receiver failure on Flt Critical 1,2,3 if affected string is not deassigned for set expansion. Flt Critical 4 problem is handled same as Flt Critical 1,2,3 for procedure simplicity

(5) If G8 OPS, delay G2 freeze-dry activity until after transition back to G2

DPS 5.3a (Cont)

From ORB PKT C/L, I/O ERROR FF(FA)

17 Same fault msg recur during recovery attempt ?

NO

18 MULTIPLE MDM FAILURES

19 (6)
- √MCC if any unexplained msg on string during port moding

YES

22 (2) (7) TOTAL MDM INPUT FAILURE

23 (8) (9) Pwr off MDM
(O6)
- Aff MDM FF(FA) – OFF

7

20 BCE RCVR OR XMTR/RCVR FAILURE

21 Safe F-T-S GPC
(O6)
- GPC PWR – OFF
- Reassign IDPs as reqd

24
- Time permitting, go to DPS, GPC FRP-1

25
- Pwr off reconfigure equipment specific to failed MDM

FF1	FF2	FF3	FF4
(O14:F) • RJDF 1B DRIVER	(O15:F) • RJDF 1A DRIVER	(O16:F) • RJDF 2B DRIVER	(O16:F) • RJDF 2A DRIVER
(O14:E) MNA • RADAR ALTM 1 • MLS 1 •√ADTA 1 • STAR TRKR -Z	(O15:E) MNB • RADAR ALTM 2 • MLS 2 •√ADTA 2	(O16:E) MNC • MLS 3 •√ADTA 3 (O15:E) MNB • STAR TRKR -Y	(O16:E) MNC •√ADTA 4
•√ACCEL 1	•√ACCEL 2	(O16:F) •√ACCEL 3	(O15:F) •√ACCEL 4
(O7) •√TACAN 1 (OV103,4) •√GPS 1 (OV105) •√GPS 1 PRE AMPL UPPER (OV105) •√GPS 1 PRE AMPL LOWER (OV105)	(O7) •√TACAN 2 (OV103,4) • GPS 2 (OV105) • GPS 2 PRE AMPL UPPER (OV105) • GPS 2 PRE AMPL LOWER (OV105) (A13) • GPS 2 (OV103,4) • GPS PRE AMPL UC (OV103,4) • GPS PRE AMPL LC (OV103,4)	(O7) •√TACAN 3 (OV103,4) •√GPS 3 (OV105) •√GPS 3 PRE AMPL UPPER (OV105) •√GPS 3 PRE AMPL LOWER (OV105)	

FA1	FA2	FA3	FA4
(O15:F) • RJDA 1B DRIVER	(O16:F) • RJDA 2B DRIVER	(O14:F) • RJDA 1A DRIVER	(O14:F) • RJDA 2A DRIVER
(O14:A) •√RGA 1	(O15:A) •√RGA 2	(O16:A) •√RGA 3	(O15:A) •√RGA 4
(O8) • R OMS TK ISOL A – CL (tb-CL)	(O8) • R OMS TK ISOL A – CL (tb-CL)		

26
- √MCC regarding powering off associated IMU

27
- Go to RCS RM LOSS (ORB PKT, RCS)

(2) Go to MDM (REF) for summary of data lost on non-recovered MDM

(6) Multiple MDM failures if any:
'BCE STRG'
'MDM OUTPUT' during attempt to recover 'I/O ERROR'
'I/O ERROR' during attempt to recover 'MDM OUTPUT'

(7) Outputs may be good, erroneous or non-existent. At later time, MCC may wish to perform MM202 OMS TVC chk to assess MDM's output capability

(8) If next ELEC, ECLS, APU/HYD, GNC, RCS, or DPS failure causes loss of fail-safe capability in FCS or RCS, the MDM may be repowered in order to regain any remaining output capability

(9) If failed MDM is FF1, FF2, or FF3, MDM may be candidate for MDM CHANGEOUT (IFM). √MCC

5.3b 'BCE STRG X'

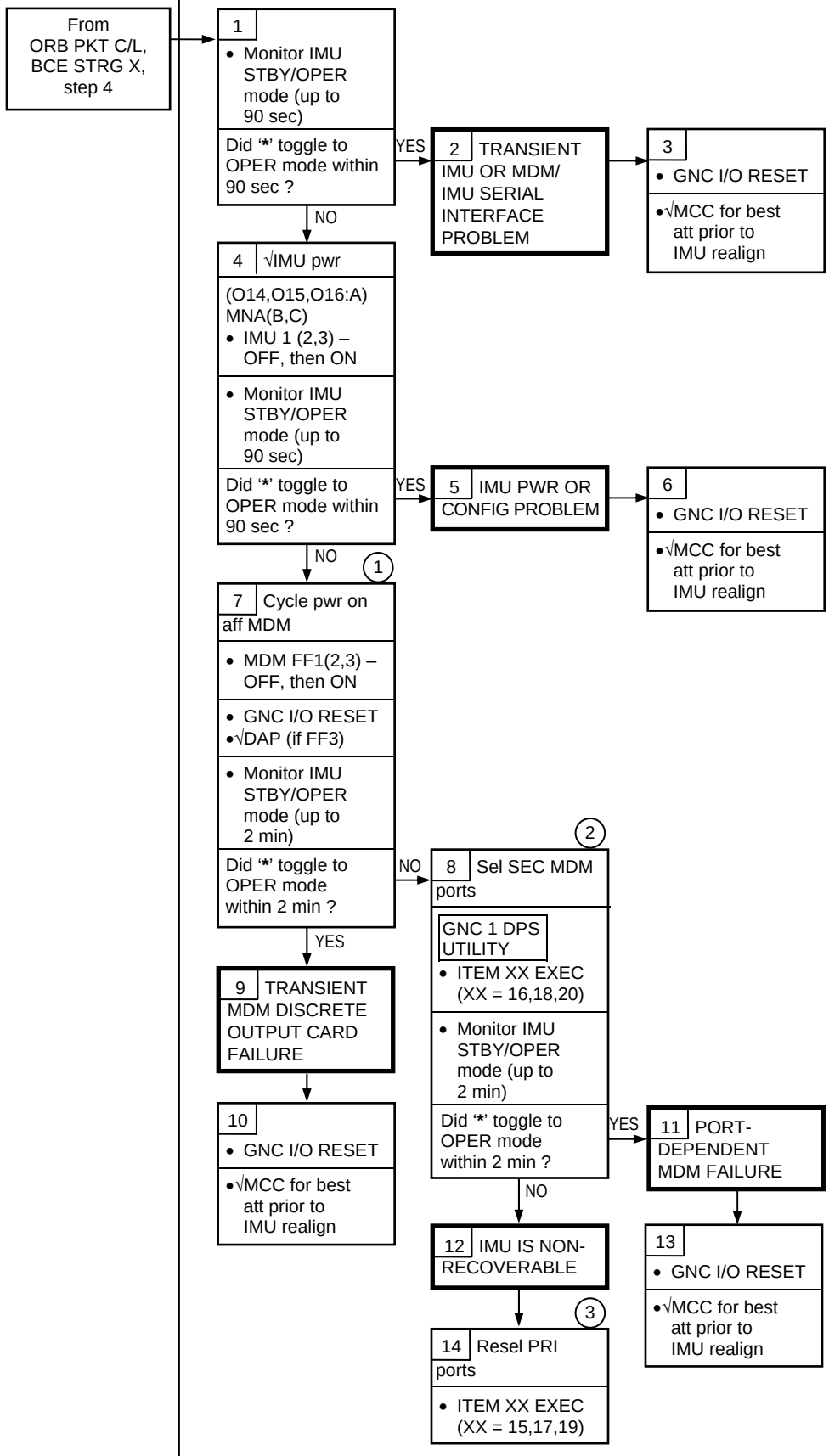

(1) If VERNIER RCS sel and FF3 pwr cycled, DAP will downmode to free drift at MDM pwr cycle. Crew action reqd to resel DAP

(2) Following MDM port moding, if either 'I/O ERROR' or 'MDM OUTPUT' fault msg occurs, mode MDM ports back to PRI and √MCC

(3) √MCC regarding powering off associated IMU

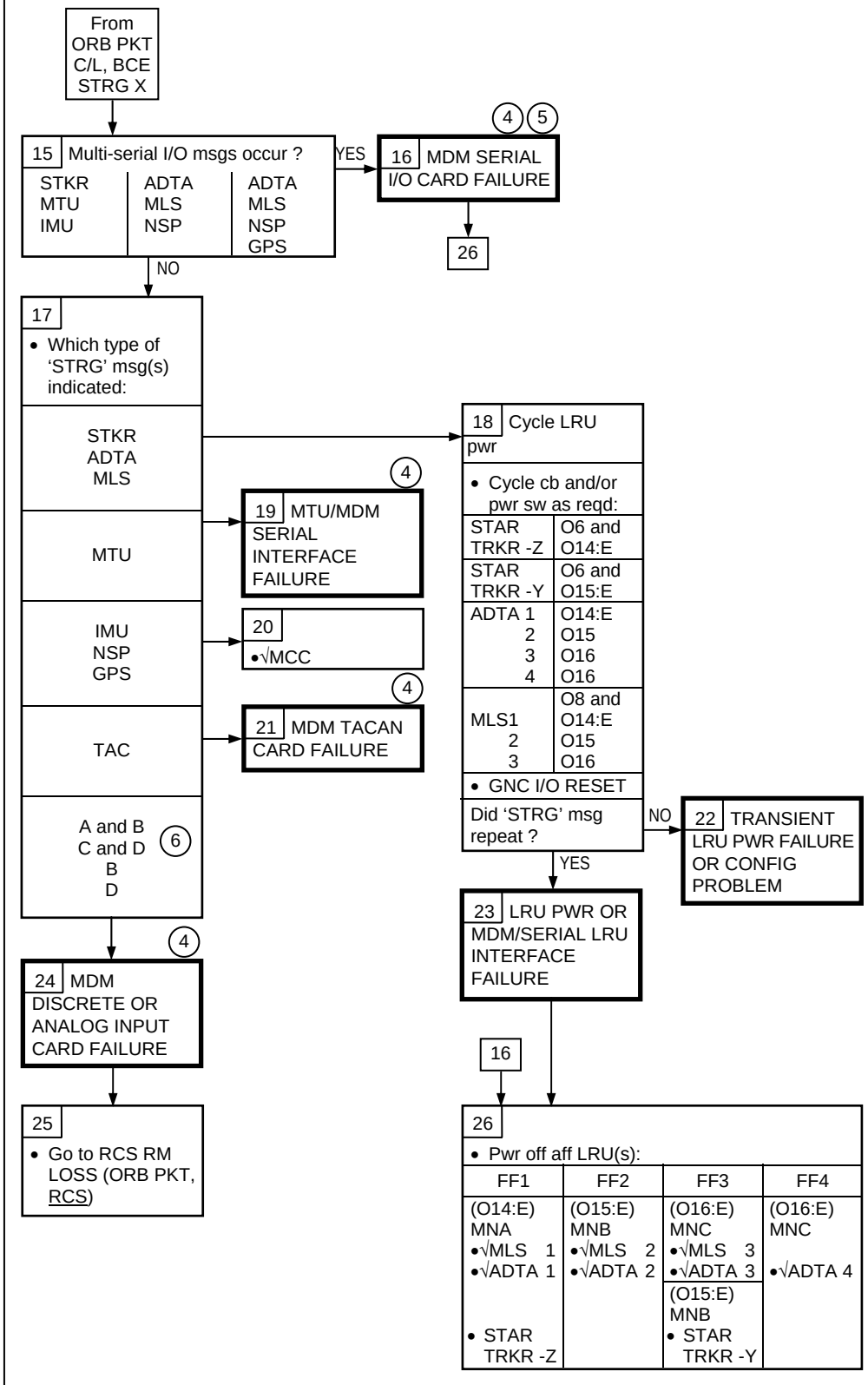

(4) Go to MDM (REF) for summary of data lost on nonrecovered MDM

(5) Total serial I/O card failures may result in single or multiple 'BCE STRG' msgs:

Card Adrs	G2	G8
03	IMU MTU STKR	IMU MTU STKR
11	NSP GPS	MLS ADTA NSP GPS

(6) 'BCE STRG A(C)' msgs will always occur in combination with 'BCE STRG B(D)' msg (MDM card failure) or in combination with 'I/O ERROR' msg or 'MDM OUTPUT' msg (IOP or total MDM failure)

DPS

5.3c 'I/O ERROR PL1(2)' 'MDM OUTPUT PL1(2)'

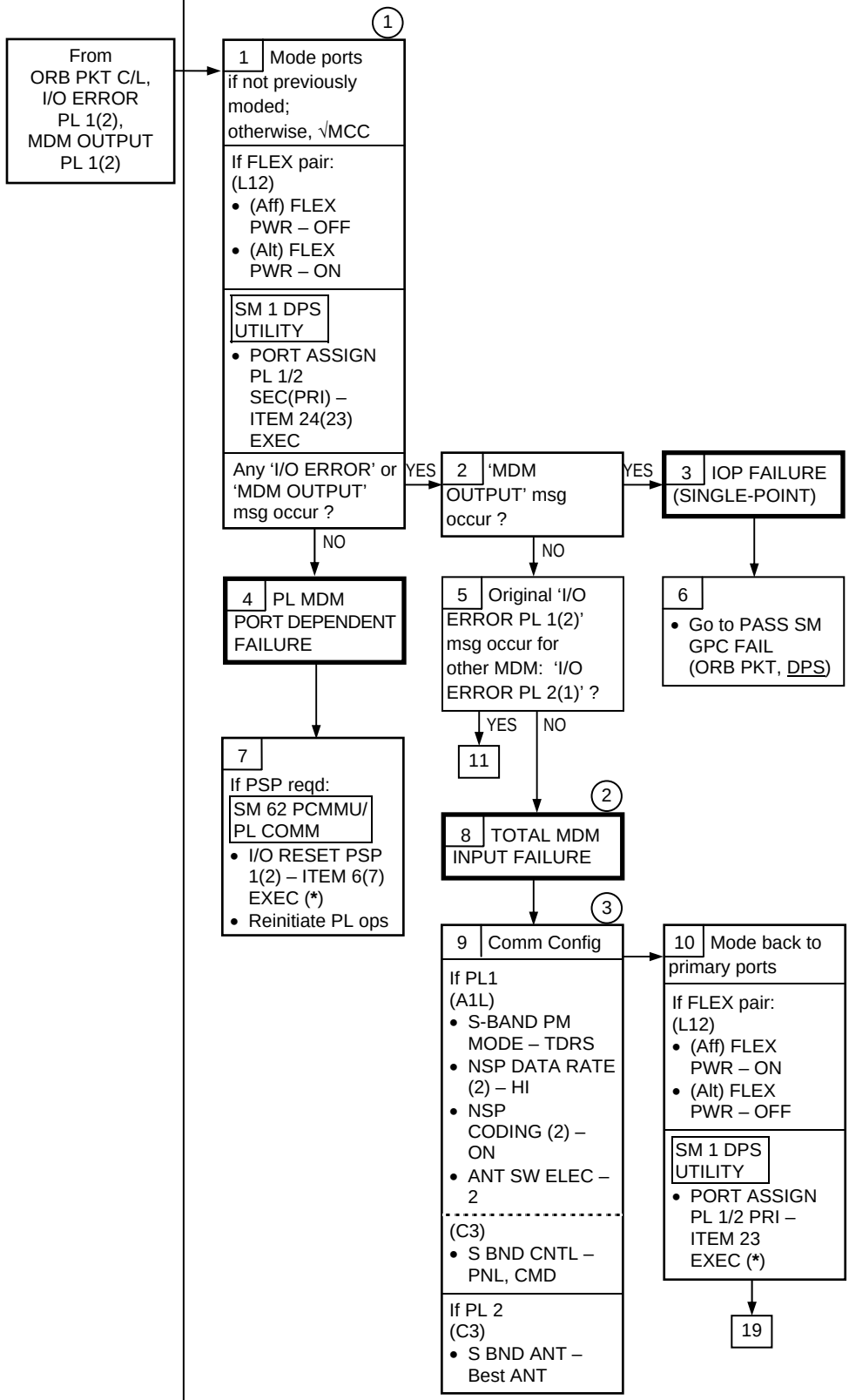

(1) Port moding and I/O RESET causes fault msgs to occur for all previously bypassed LRU(s), BTU(s), Payload Signal Processor, mission selectable processes, and mission unique processes

(2) MDM outputs may still be good. MCC will advise if MDM should be turned off. Refer to MDM (REF DATA) for summary of data

(3) 140 sec pwr-amp warmup

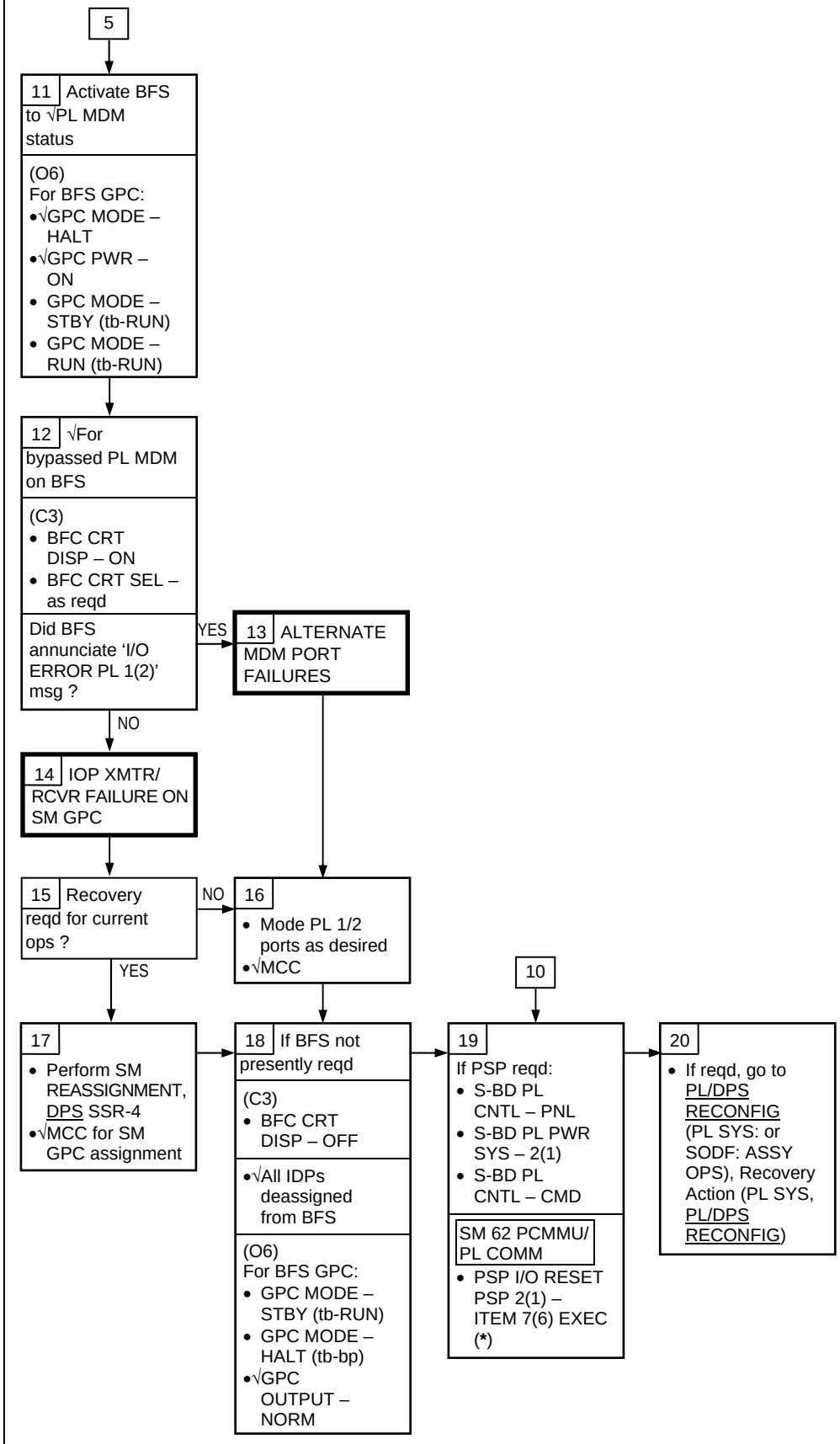
5
11 Activate BFS to √PL MDM status
(O6)
For BFS GPC:
•√GPC MODE – HALT
•√GPC PWR – ON
• GPC MODE – STBY (tb-RUN)
• GPC MODE – RUN (tb-RUN)
12 √For bypassed PL MDM on BFS
(C3)
• BFC CRT DISP – ON
• BFC CRT SEL – as reqd
Did BFS annunciate 'I/O ERROR PL 1(2)' msg ?
YES
13 ALTERNATE MDM PORT FAILURES
NO
14 IOP XMTR/ RCVR FAILURE ON SM GPC
15 Recovery reqd for current ops ?
NO
16
• Mode PL 1/2 ports as desired
•√MCC
YES
10
17
• Perform SM REASSIGNMENT, DPS SSR-4
•√MCC for SM GPC assignment
18 If BFS not presently reqd
(C3)
• BFC CRT DISP – OFF
•√All IDPs deassigned from BFS
(O6)
For BFS GPC:
• GPC MODE – STBY (tb-RUN)
• GPC MODE – HALT (tb-bp)
•√GPC OUTPUT – NORM
19
If PSP reqd:
• S-BD PL CNTL – PNL
• S-BD PL PWR SYS – 2(1)
• S-BD PL CNTL – CMD
SM 62 PCMMU/ PL COMM
• PSP I/O RESET PSP 2(1) – ITEM 7(6) EXEC (*)
20
• If reqd, go to PL/DPS RECONFIG (PL SYS: or SODF: ASSY OPS), Recovery Action (PL SYS, PL/DPS RECONFIG)

DPS

5.3e 'I/O ERROR FLEX'

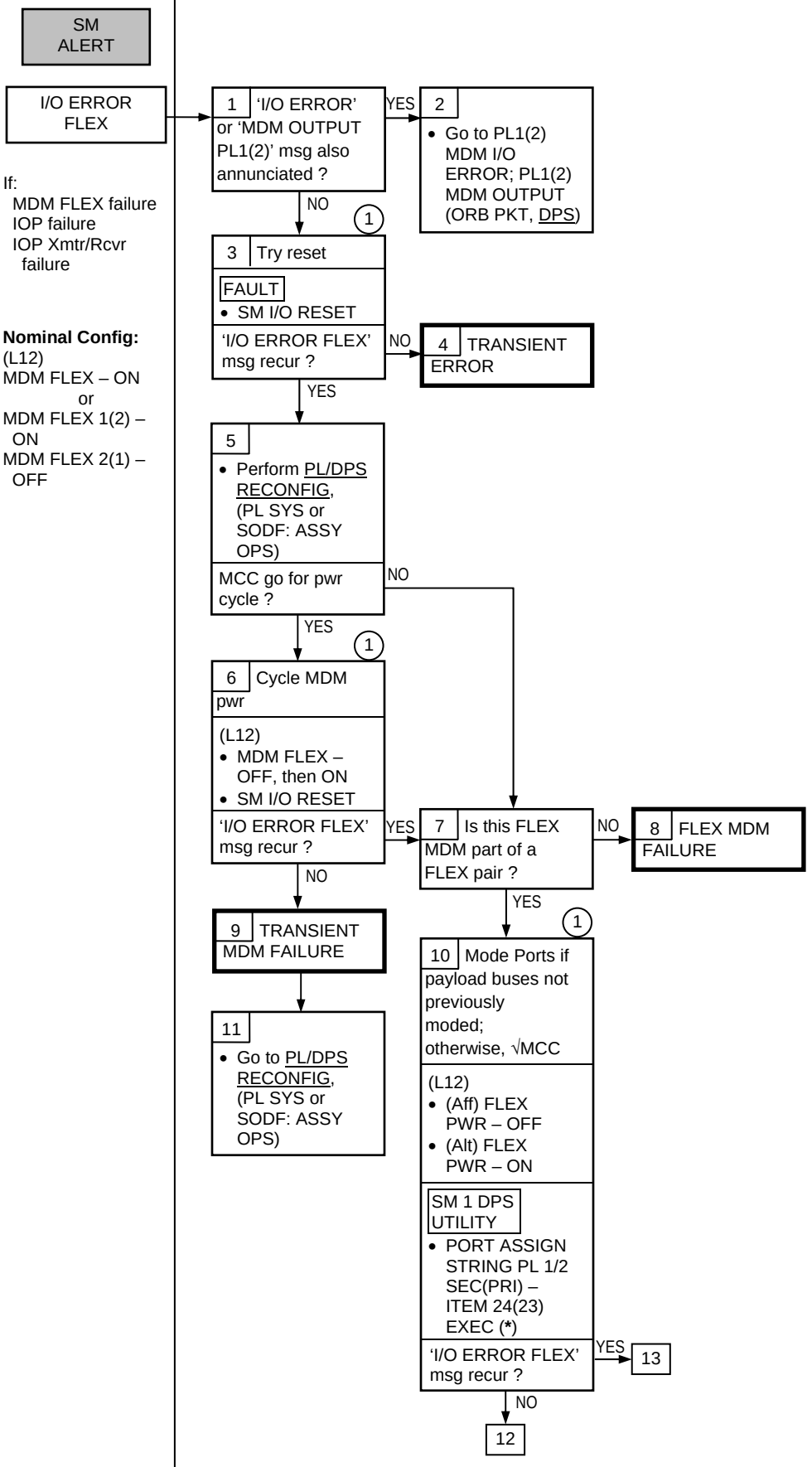

If:
- MDM FLEX failure
- IOP failure
- IOP Xmtr/Rcvr failure

Nominal Config:
(L12)
MDM FLEX – ON
or
MDM FLEX 1(2) – ON
MDM FLEX 2(1) – OFF

(1) Port moding and I/O RESET causes fault msgs to occur for all previously bypassed LRU(s), BTU(s), Payload Signal Processor, mission selectable processes, and mission unique processes

DPS 5.3e (Cont)

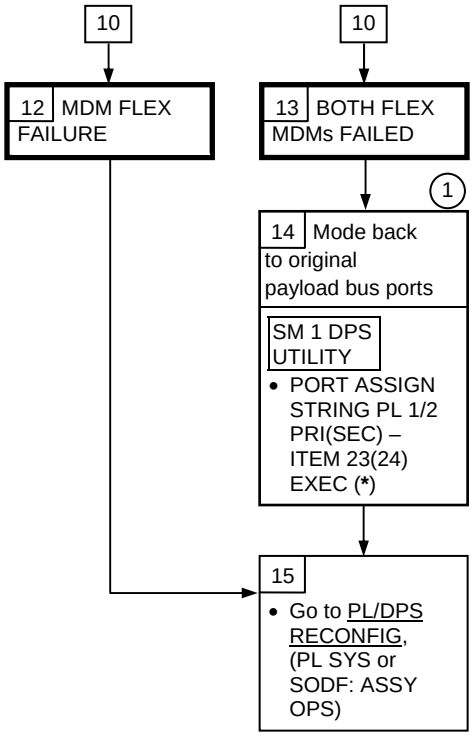

(1) Port moding and I/O RESET causes fault msgs to occur for all previously bypassed LRU(s), BTU(s), Payload Signal Processor, mission selectable processes, and mission unique processes

DPS

5.3f 'BCE BYP FLEX'

SM ALERT

BCE BYP FLEX

If:
- MDM FLEX Card failure
- MDM/LRU FLEX interface failure
- IOP failure
- IOP Xmtr/Rcvr failure

Nominal Config:
(L12)
MDM FLEX – ON
or
MDM FLEX 1(2) – ON
MDM FLEX 2(1) – OFF

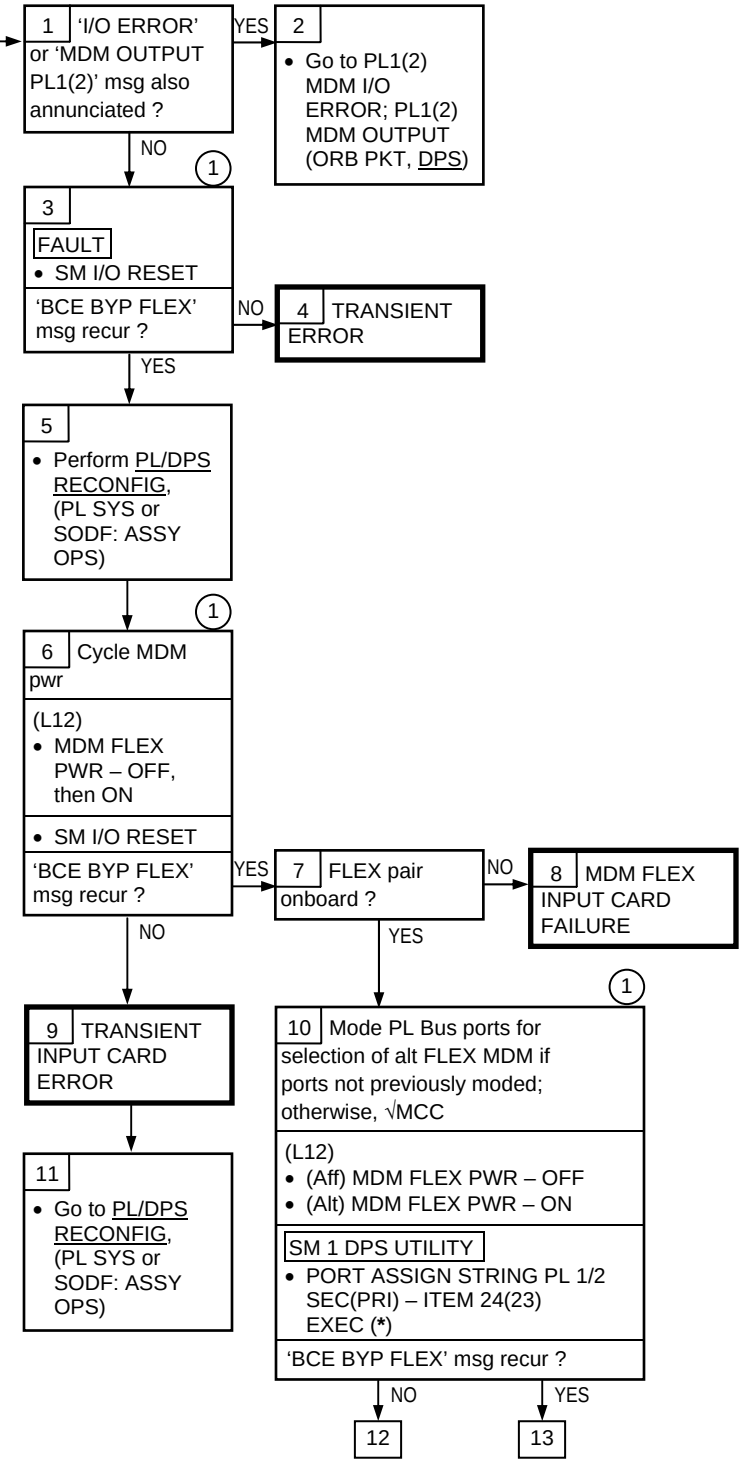

(1) Port moding or I/O RESET causes fault msgs to occur for all previously bypassed LRU(s), BTU(s), Payload Signal Processor, mission selectable processes, and mission unique processes

DPS 5.3f (Cont)

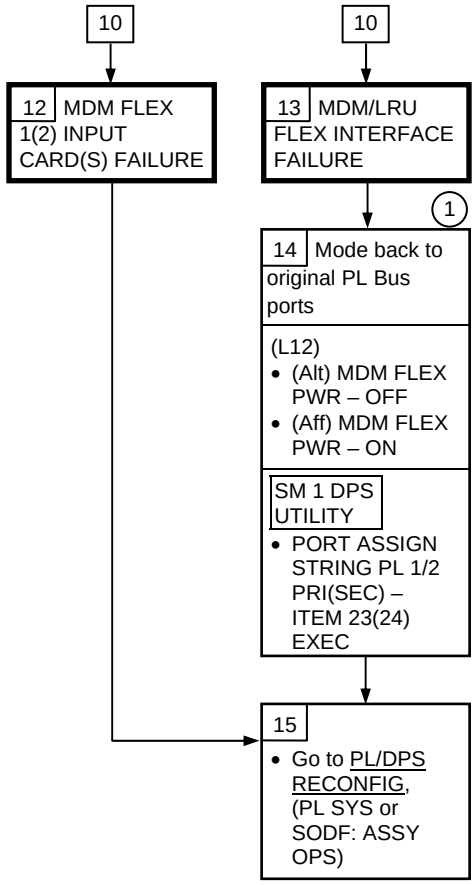

(1) Port moding or I/O RESET causes fault msgs to occur for all previously bypassed LRU(s), BTU(s), Payload Signal Processor, mission selectable processes, and mission unique processes

DPS

5.3g 'BCE BYP PL1(2)'

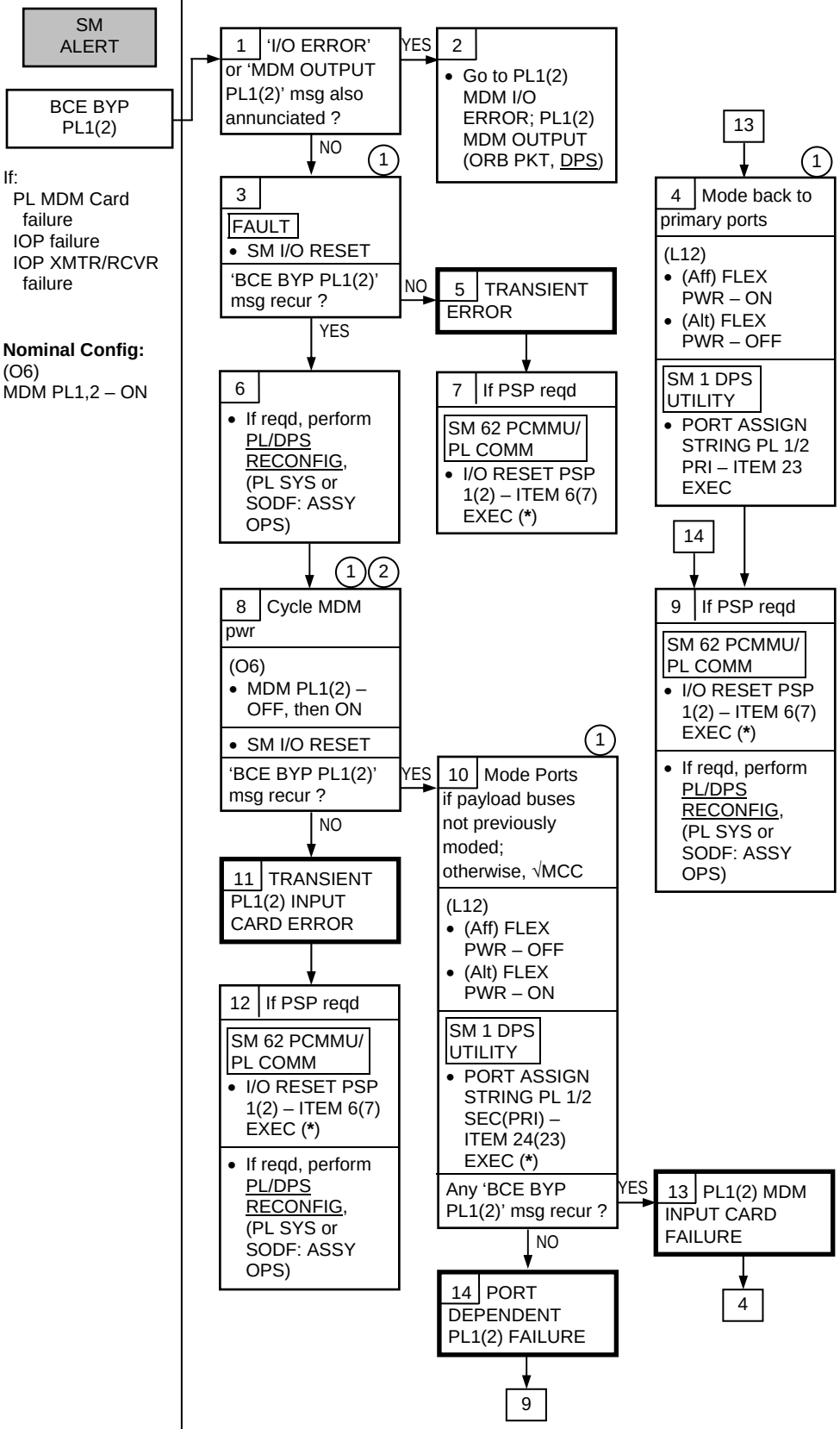

(1) Port moding and I/O RESET causes fault msgs to occur for all previously bypassed LRU(s), BTU(s), Payload Signal Processor, mission selectable processes, and mission unique processes

(2) Associated GCIL Decoder now disabled

This Page Intentionally Blank

DPS

SM ALERT

I/O ERROR PCM

If data path fail from PCMMU to GPC:
SM BCE XMTR or RCVR fail
PCMMU MIA XMTR or RCVR fail
Total PCMMU fail

Nominal Config:
(C3)
OI PCMMU
PWR – 1
FORMAT – GPC

5.5a 'I/O ERROR PCM' (SM)

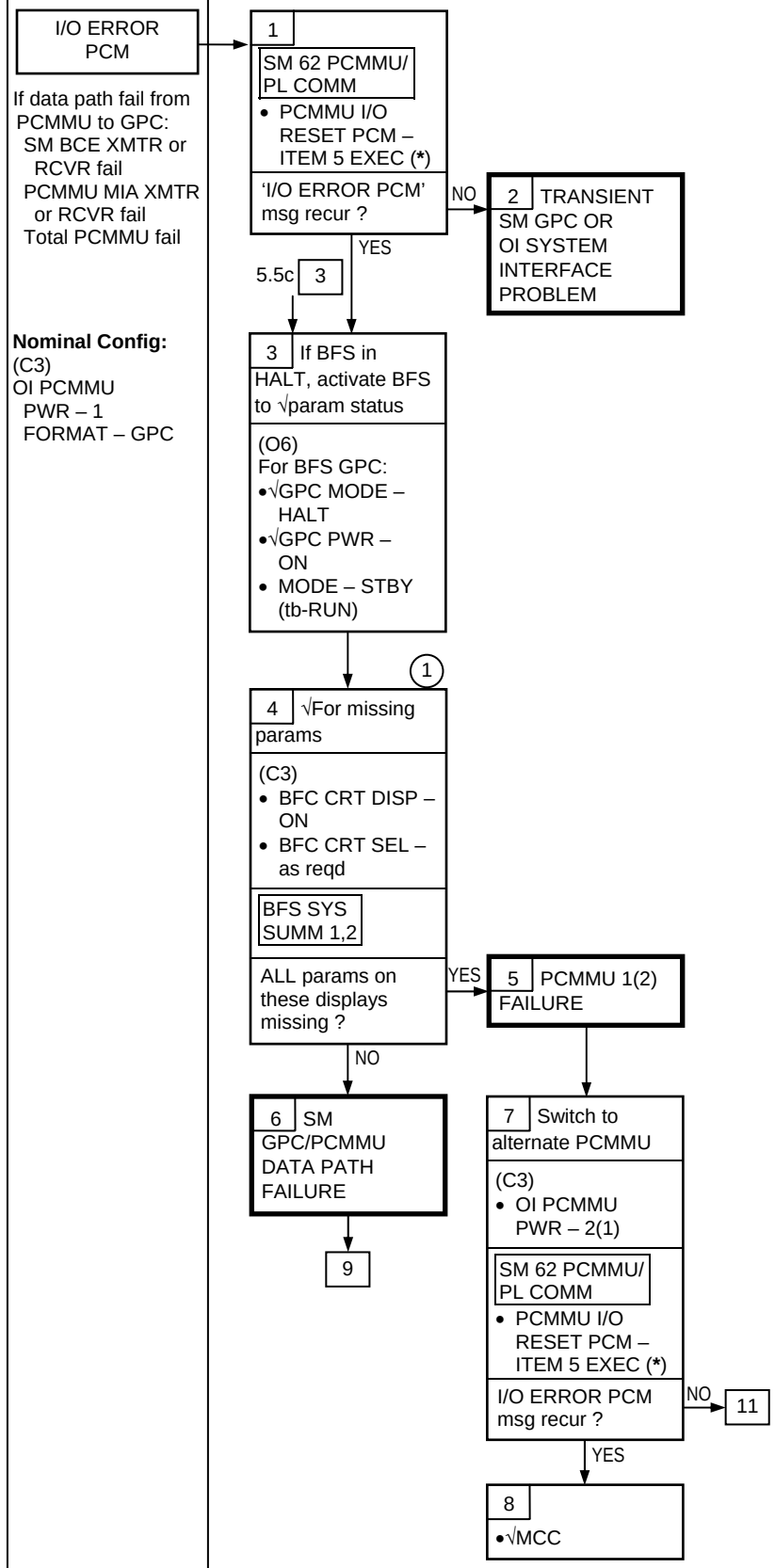

(1) Because of differences between PASS/BFS S/W implementation, ignore any BFS 'I/O ERROR PCM' fault msg

DPS 5.5a (Cont)

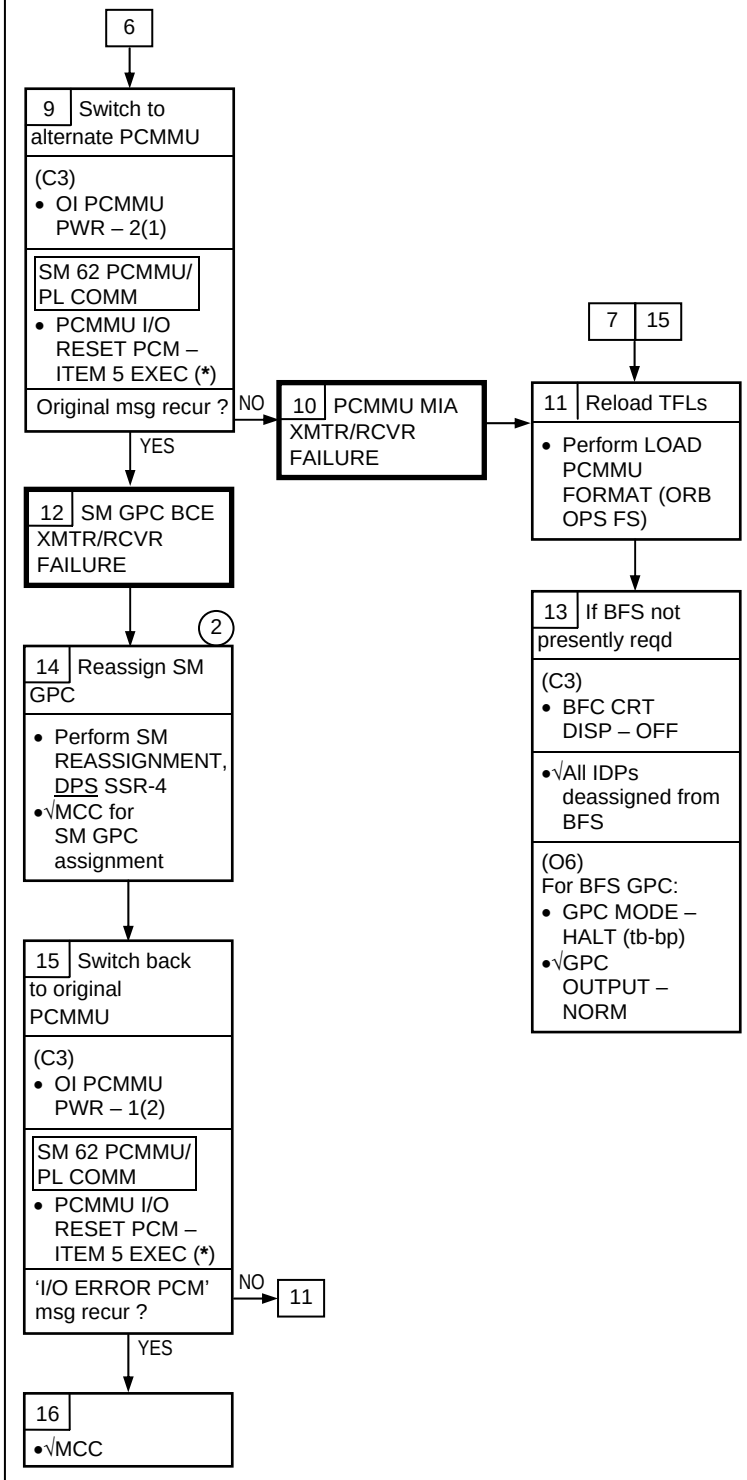

(2) BFS fault disp may be utilized for SM monitoring until PASS SM GPC reassigned

DPS

5.5b 'I/O ERROR PCM' (BFS)

SM ALERT

I/O ERROR PCM

If:
Data Path fail
from OI MDM
to PCMMU or
from PCMMU
to GPC

Nominal Config:
(C3)
OI PCMMU
PWR – 1
FORMAT – GPC
(O14,O15:B)
cb MNA,MNB OI
MDM OF 1/2 A,B
(two) – cl
(O14,O16:B)
cb MNA,MNC OI
MDM OF 3/4 A,B
(two) – cl
(O17:D)
MDM OA 1/2/3 –
ON

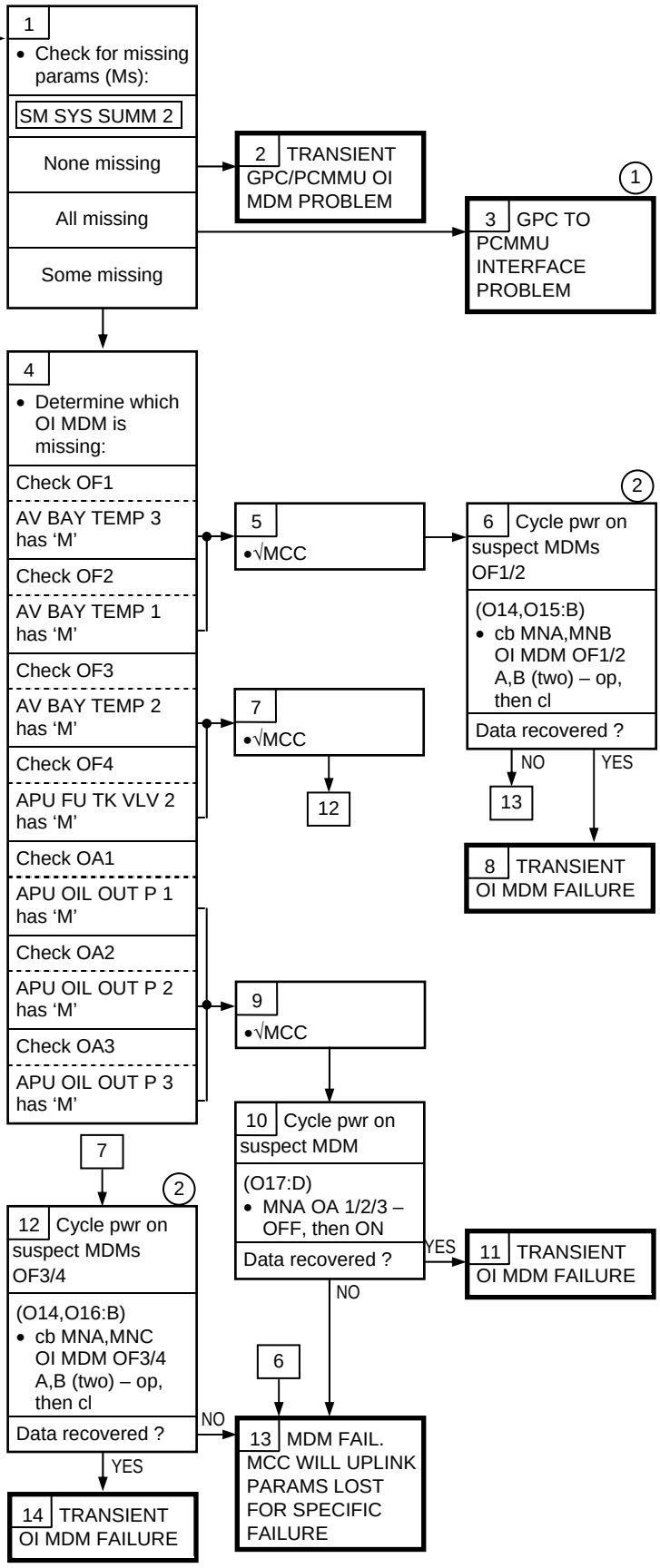

(1) √MCC regarding PCMMU switch. Selection of alternate PCMMU may preclude MCC viewing LDR telemetry

(2) Do not cycle open cb. √MCC

DPS

5.5c 'I/O ERROR D/L'

SM ALERT

I/O ERROR D/L

If:
IOP BCE xmtr fail
PCMMU fail

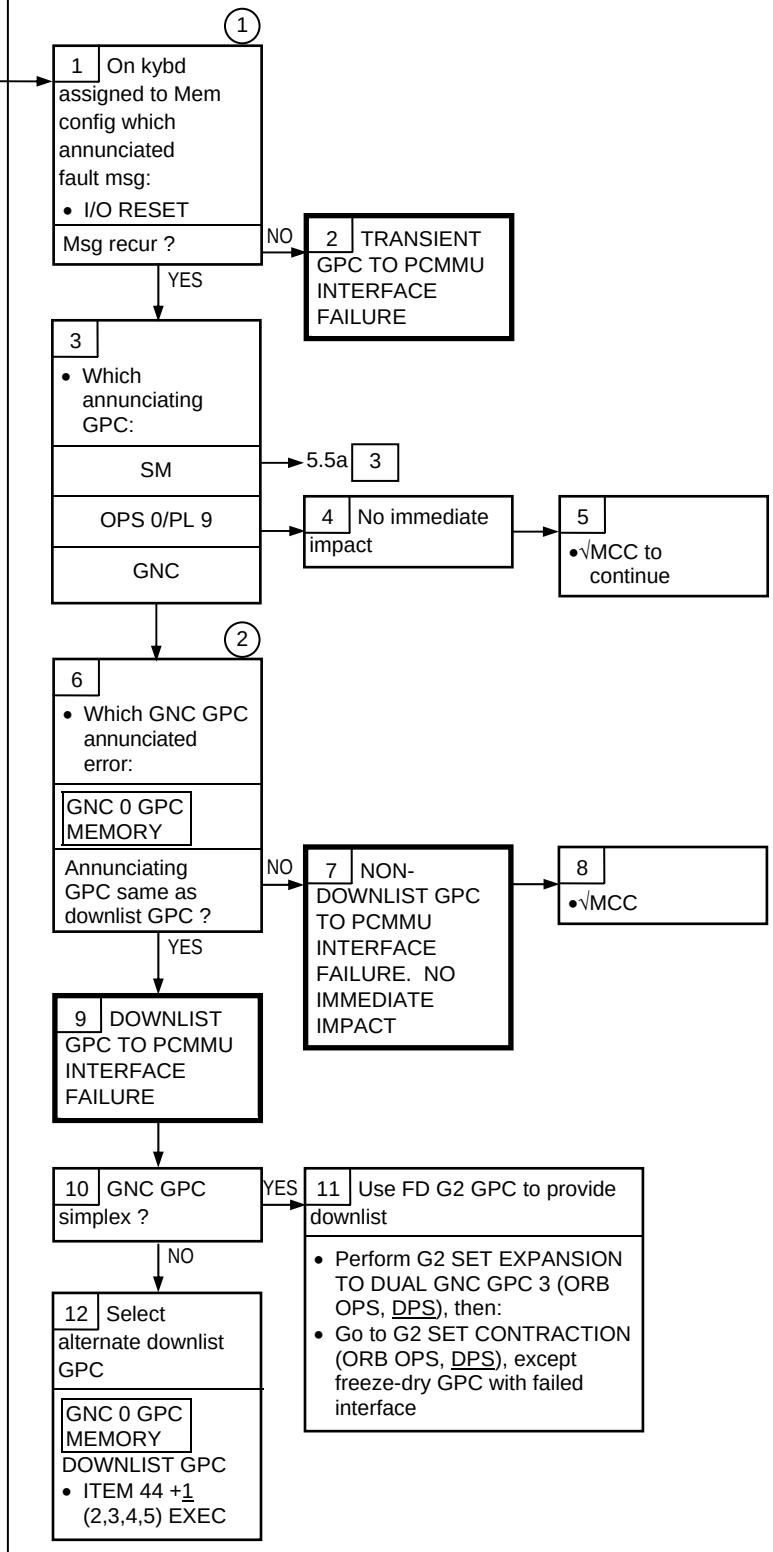

(1) I/O RESET not reqd to reestablish downlist. Action only verifies that anomaly continues

(2) All PASS GPCs output downlist. PCMMU ignores all but selected downlist GPC

This Page Intentionally Blank

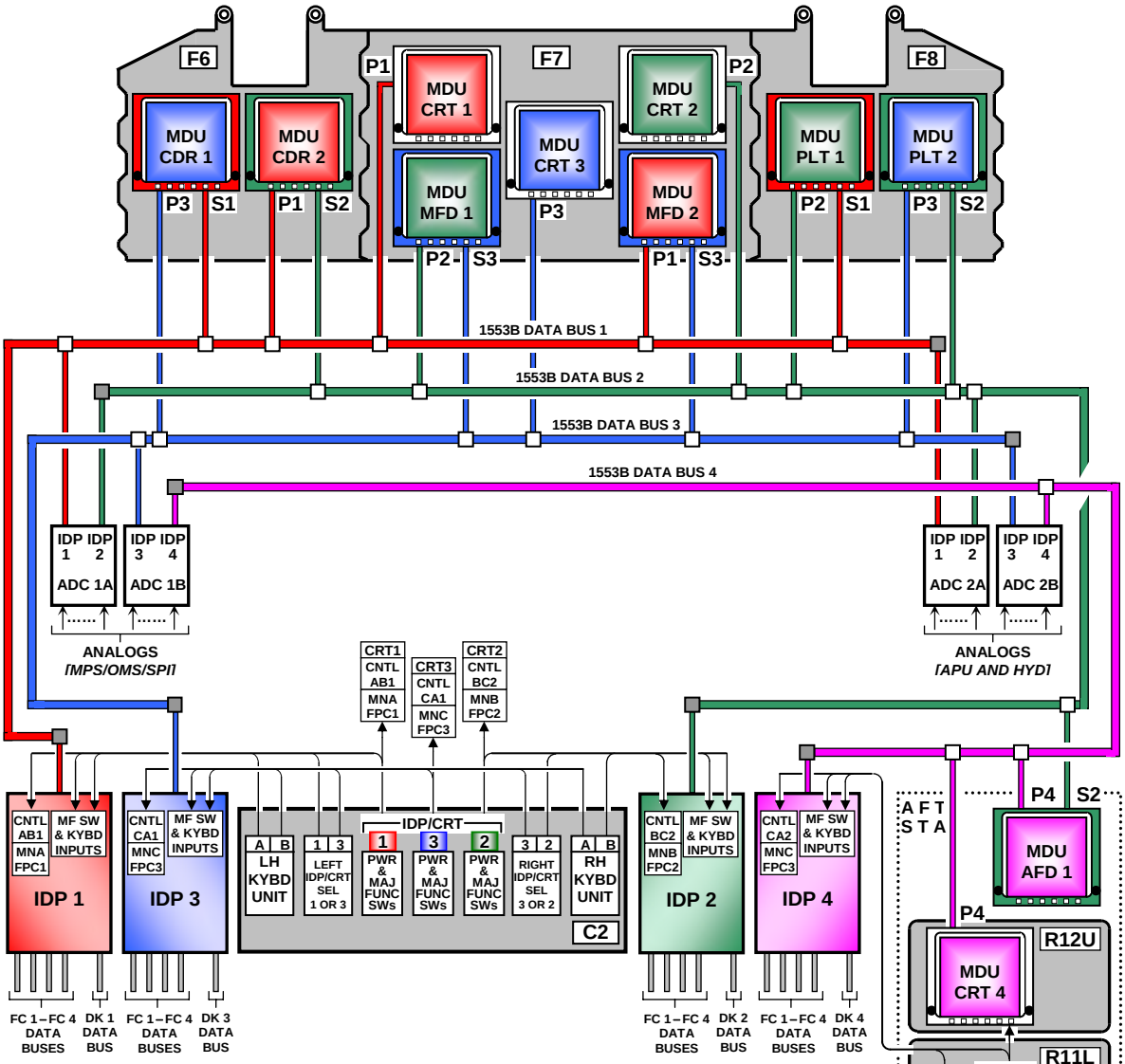

MEDS OVERVIEW

[POWER AND INTERNAL 1553B DATA BUS CONFIGURATION]

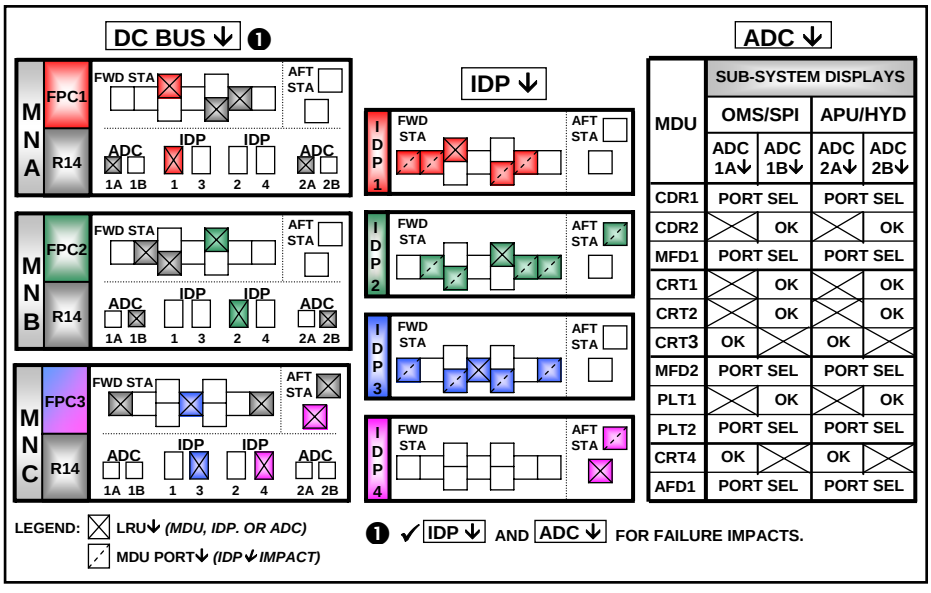

DPS

5.6a GPC 'I/O ERROR CRT 1(2,3,4)', 'BITE FAIL IDP 1(2,3,4)', 'IDP DEFAULT LOAD FAIL', 'VM LOAD IN PROGRESS'

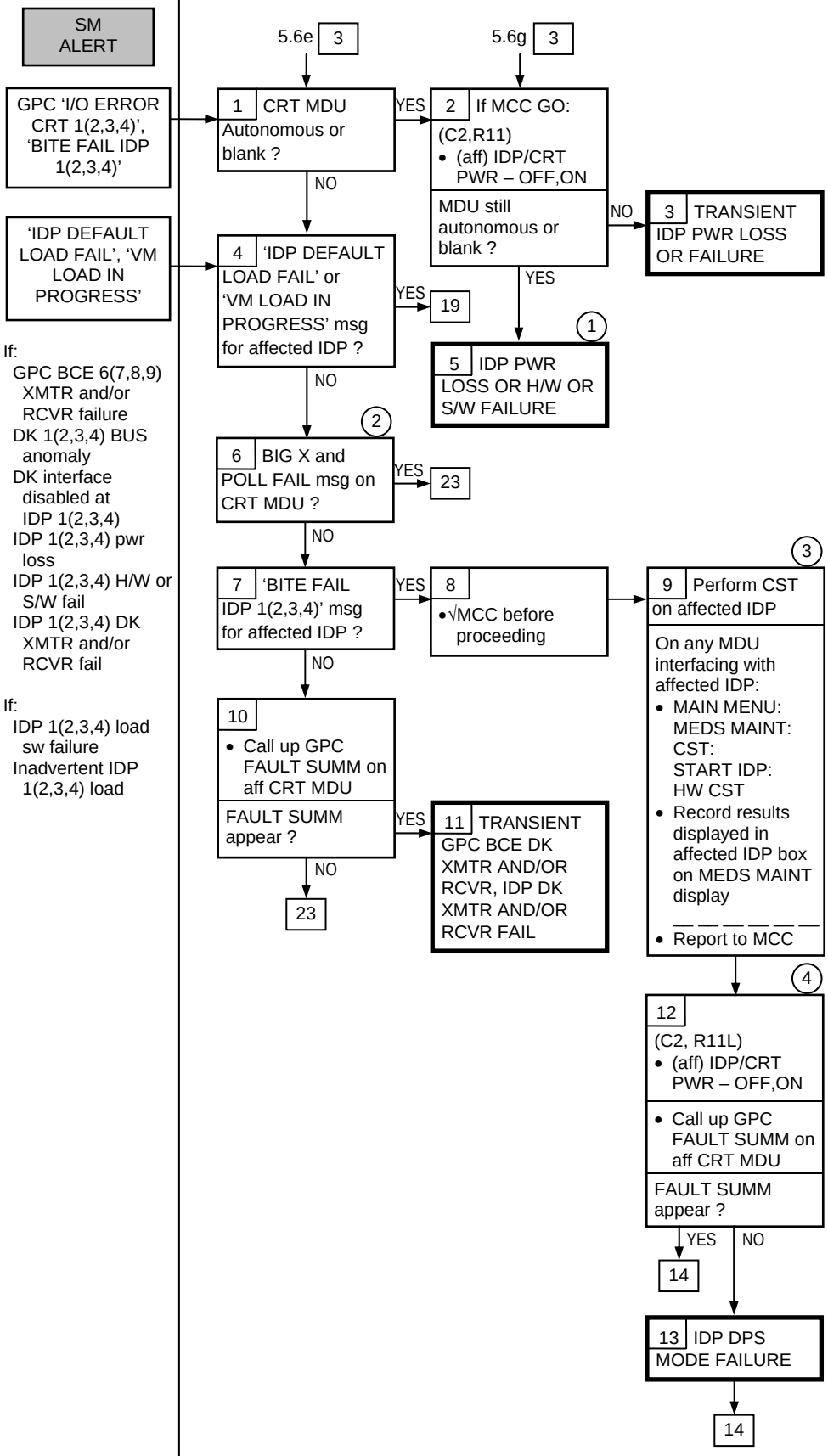

(1) √MCC for possible IFM replacement

(2) Both Big X and POLL FAIL msgs appear for complete GPC Data path failure. Appearance of only 1 msg indicates an internal GPC or IDP problem

(3) Expect GPC 'I/O ERROR CRT X' message if a GPC is commanding the affected IDP. All other MDUs communicating with the IDP running CST will be temporarily inoperable. IDP CST results will be blank while H/W CST is running. IDP H/W CST takes ~75 sec. Nominal IDP CST result is '000000'

(4) Following blocks will test IDP capabilities remaining after BITE

DPS 5.6a (Cont)

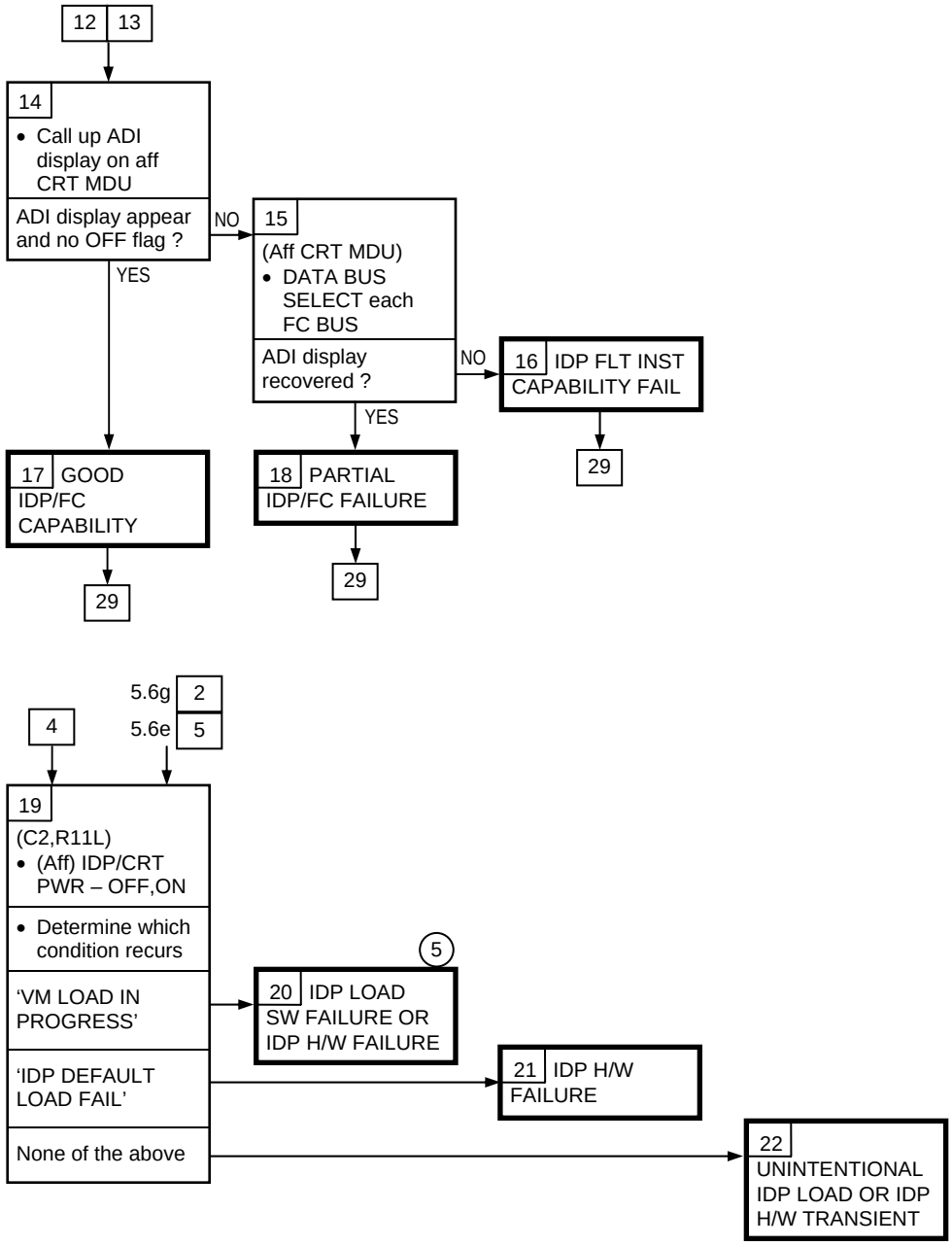

(5) IDP cannot be used in DPS mode

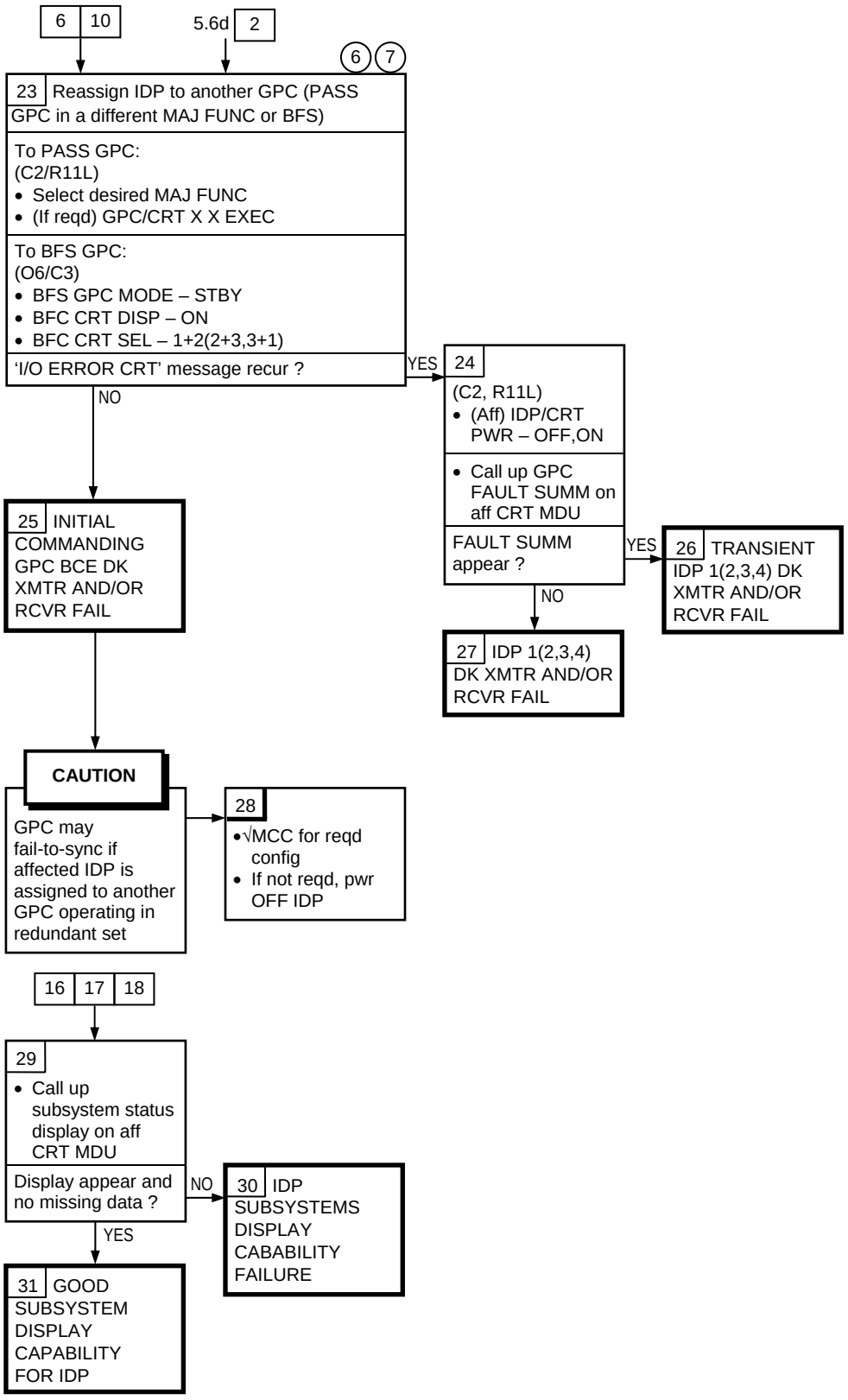

(6) Any SPEC or Roll-In DISP active or buried on IDP will be counted against two SPEC/ two Roll-In DISP limit per MAJ FUNC. SPEC/Roll-In DISP can be released via an OPS transition or an IDP Equivalent RESUME (via MCC uplink)

(7) GPC/CRT key input must be made on keyboard with active GPC interface. Always use PASS keyboard to avoid dual commanders. If assigning IDP to/from BFS, always deassign IDP first. Note that BFC CRT DISPLAY/SELECT sw will override any GPC/CRT kybd entry

DPS

5.6b 'CRT BITE 1(2,3,4)'

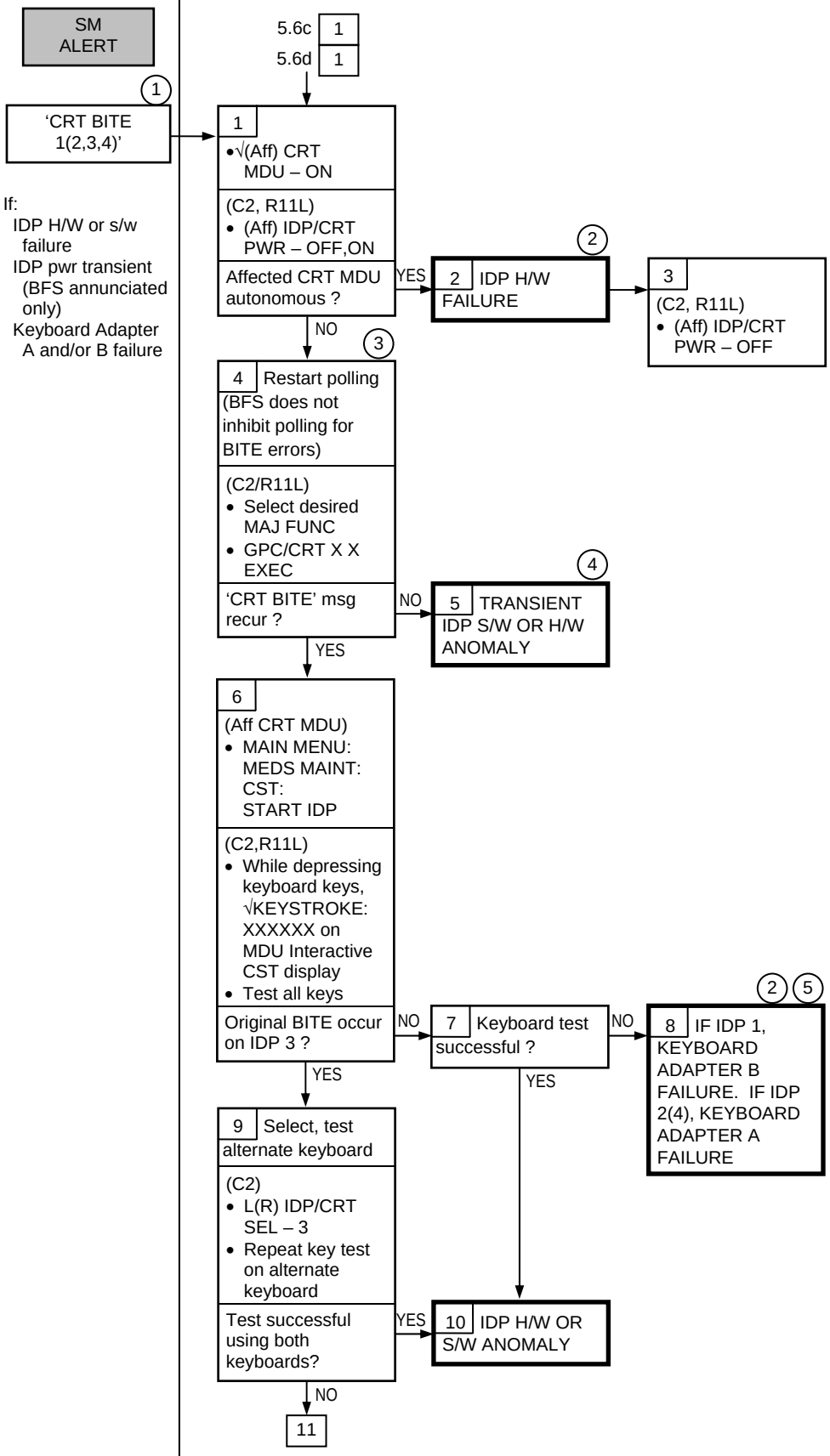

(1) 'POLL FAIL' msg should appear on affected MDU in DPS mode (PASS). BFS does not inhibit polling for BITE errors

(2) Any SPEC or Roll-In DISP active or buried on IDP will be counted against two SPEC/ two Roll-In DISP limit per MAJ FUNC. SPEC/Roll-In DISP can be released via an OPS transition or an IDP Equivalent RESUME (via MCC uplink)

(3) GPC/CRT key input must be made on keyboard with active GPC interface. Always use PASS keyboard to avoid dual commanders. If assigning IDP to/from BFS, deassign IDP first. Note that BFC CRT DISPLAY/SELECT sw will override any GPC/CRT kybd entry

(4) If error is Keyboard Adapter A(B) fail, failure may be associated with a specific key input

(5) IDP can not be used in DPS mode. May be usable in FLT INST and subsystem display modes

DPS 5.6b (Cont)

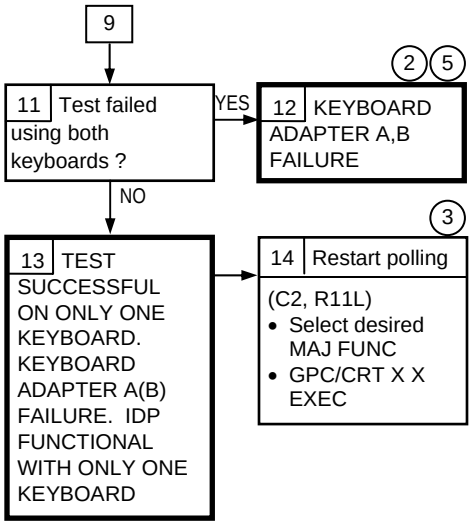

(2) Any SPEC or Roll-In DISP active or buried on IDP will be counted against two SPEC/ two Roll-In DISP limit per MAJ FUNC. SPEC/Roll-In DISP can be released via an OPS transition or an IDP Equivalent RESUME (via MCC uplink)

(3) GPC/CRT key input must be made on keyboard with active GPC interface. Always use PASS keyboard to avoid dual commanders. If assigning IDP to/from BFS, deassign IDP first. Note that BFC CRT DISPLAY/SELECT sw will override any GPC/CRT keyboard entry

(5) IDP can not be used in DPS mode. May be usable in FLT INST and subsystem display modes

DPS

5.6c ABNORMAL RESPONSE FROM KEYBOARD INPUT

(1) Abnormal Response from Keyboard Input

If:
- Keyboard failure:
  - Key jammed
  - Key failed open circuit
  - Key shorted to ground
- IDP Kybd Adapter A(B) mal
- L(R) IDP/CRT Sel switch mal

1 'CRT BITE 1(2,3,4)' msg being annunciated for this IDP ?

YES → 5.6b 1

NO

(2)

2 Test IDP/CRT sel switch and keyboard

- If fwd keyboard, PWR ON both affected IDPs
- MAIN MENU: MEDS MAINT: CST: START IDP (If fwd keyboard, call up IDP CST on both aff IDPs simo)
- If fwd keyboard, verify 'ACTIVE KYBD: X,X' does not show the same keyboard active on both IDP displays
- Monitor 'KEYSTROKE: XXXXXXXXX' while depressing individual keystrokes
- Test all keys (using both IDPs if fwd keyboard)
- Record any abnormal response

Response nominal ?

YES → 3 TRANSIENT KEY OR KEYBOARD ANOMALY

NO → 4

(1) Abnormal means keystroke does not appear on scratch pad line or wrong keystroke appears. User should always check IDP/CRT SEL sw position if applicable and repeat keystroke sequence prior to performing this procedure to eliminate user error and transients

(2) Any SPEC or Roll-In DISP active or buried on IDP will be counted against two SPEC/ two Roll-In DISP limit per MAJ FUNC. SPEC/Roll-In DISP can be released via an OPS transition or an IDP Equivalent RESUME (via MCC uplink)

DPS 5.6c (Cont)

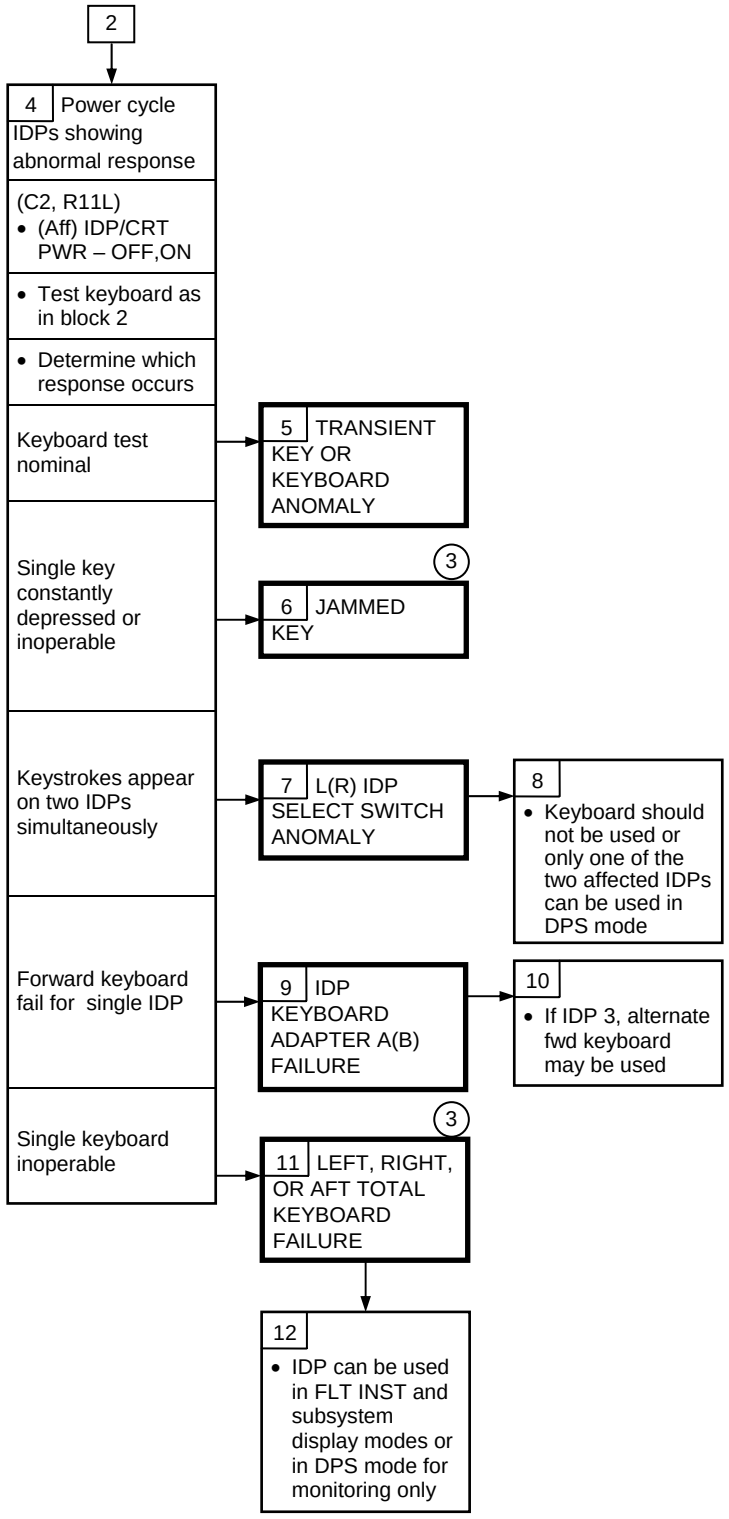

3 √MCC for possible IFM

DPS

5.6d BIG 'X' ACROSS MDU AND/OR 'POLL FAIL'

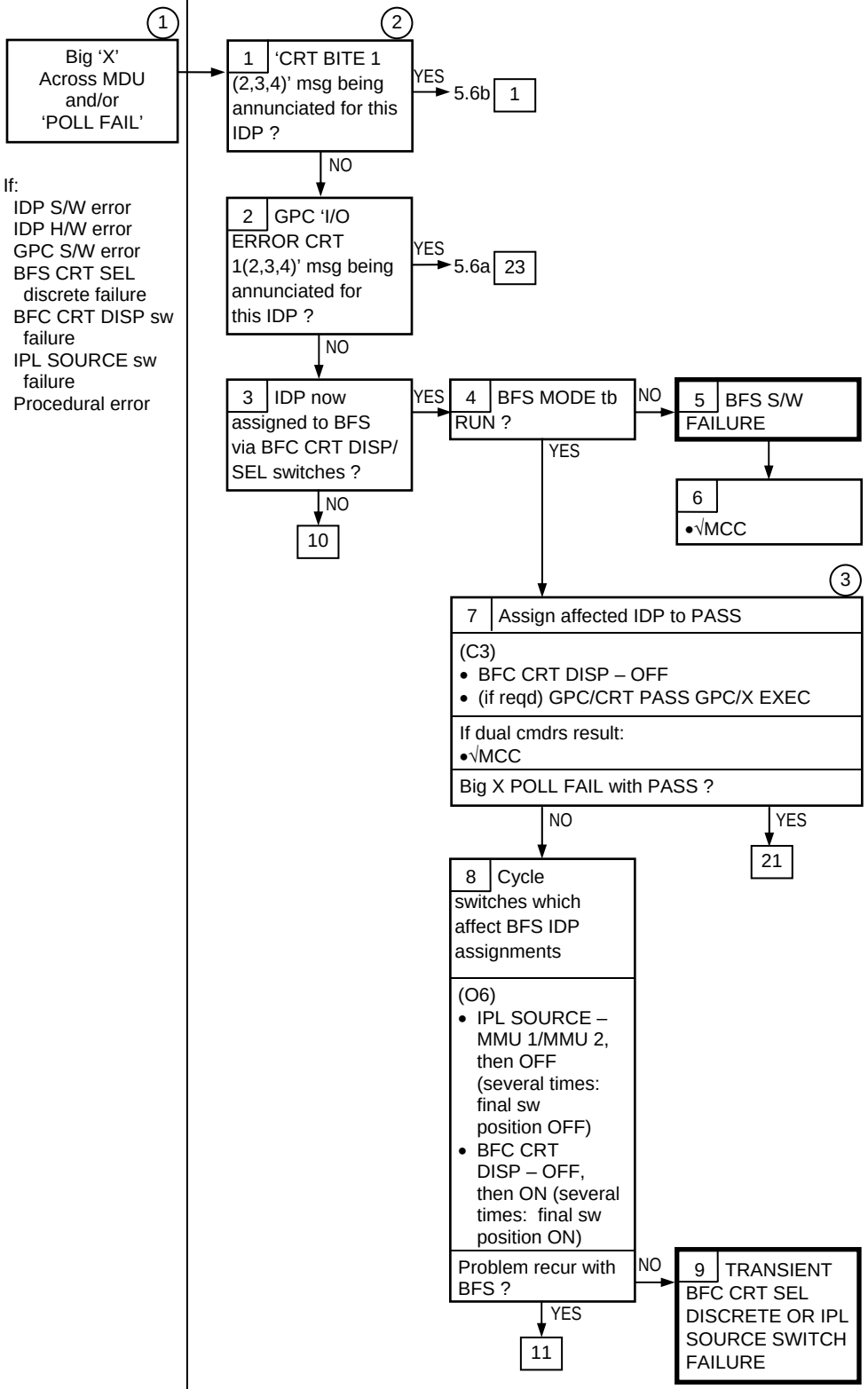

(1) Big 'X' appears when IDP does not receive display update commands for 3 sec. 'POLL FAIL' appears when IDP does not receive poll or time update commands for 3 sec

(2) User may have to establish alternate IDP interface to BFS or PASS or check with MCC as appropriate in order to observe fault msgs

(3) GPC/CRT key input must be made on keyboard with active GPC interface. Always use PASS keyboard to avoid dual commanders. If assigning IDP to/ from BFS, always deassign IDP first. BFC CRT DISPLAY/ SELECT sw will override any GPC/ CRT keyboard entry

DPS 5.6d (Cont)

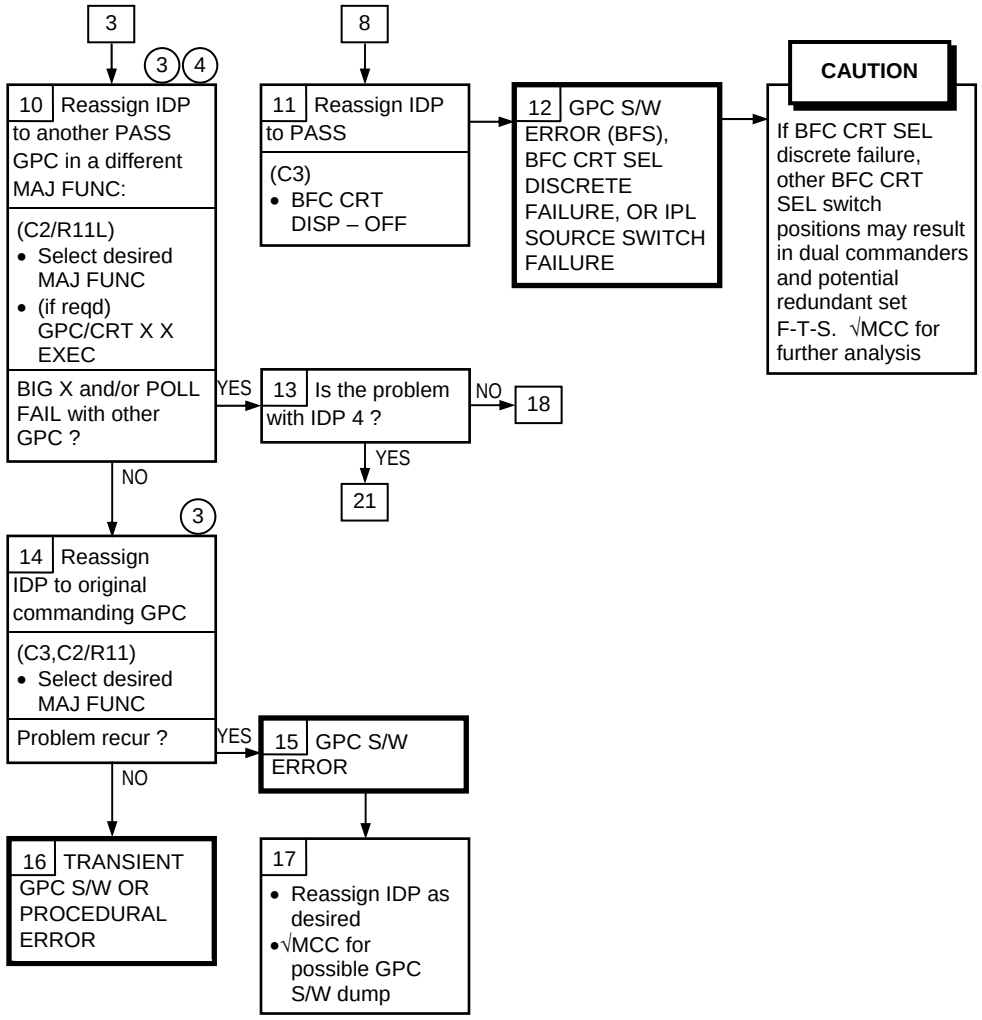

(3) GPC/CRT key input must be made on keyboard with active GPC interface. Always use PASS keyboard to avoid dual commanders. If assigning IDP to/ from BFS, always deassign CRT first. BFC CRT DISPLAY/ SELECT sw will override any GPC/ CRT keyboard entry

(4) Any SPEC or Roll-In DISP active or buried on IDP will be counted against two SPEC/ two Roll-In DISP limit per MAJ FUNC. SPEC/Roll-In DISP can be released via an OPS transition or an IDP Equivalent RESUME (via MCC uplink)

DPS 5.6d (Cont)

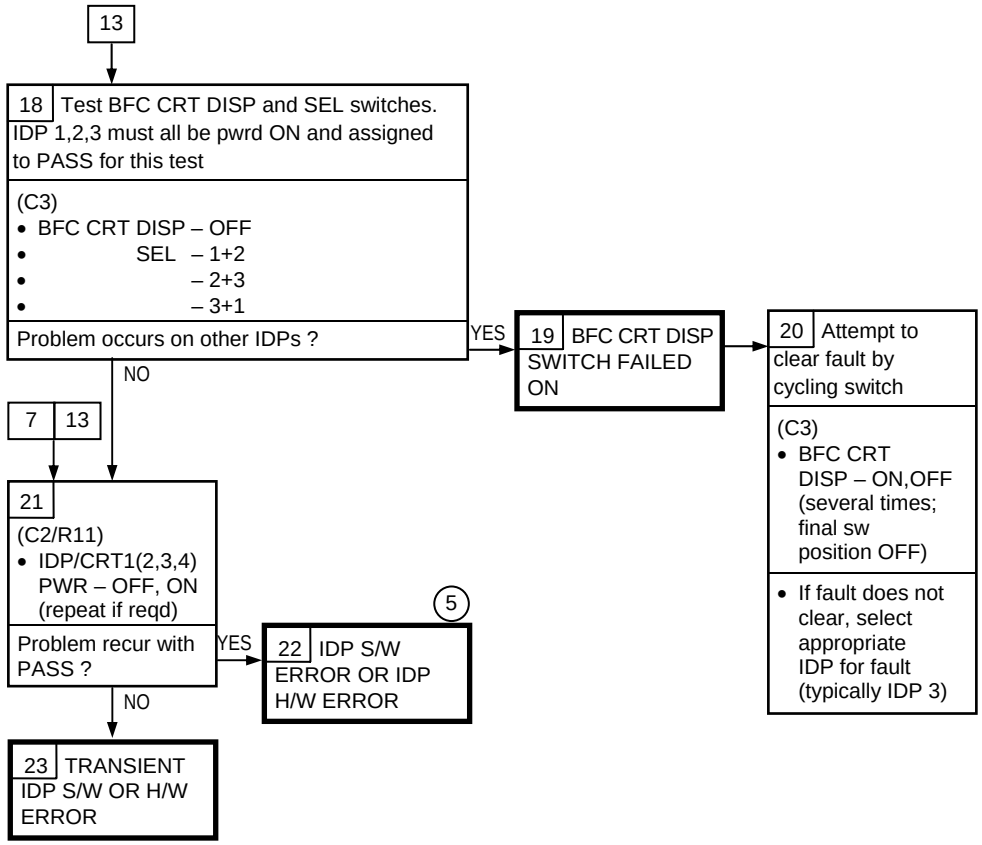

(5) IDP can not be used in DPS mode. May be usable in FLT INST and subsystem display modes

DPS

5.6e MDU ANOMALY

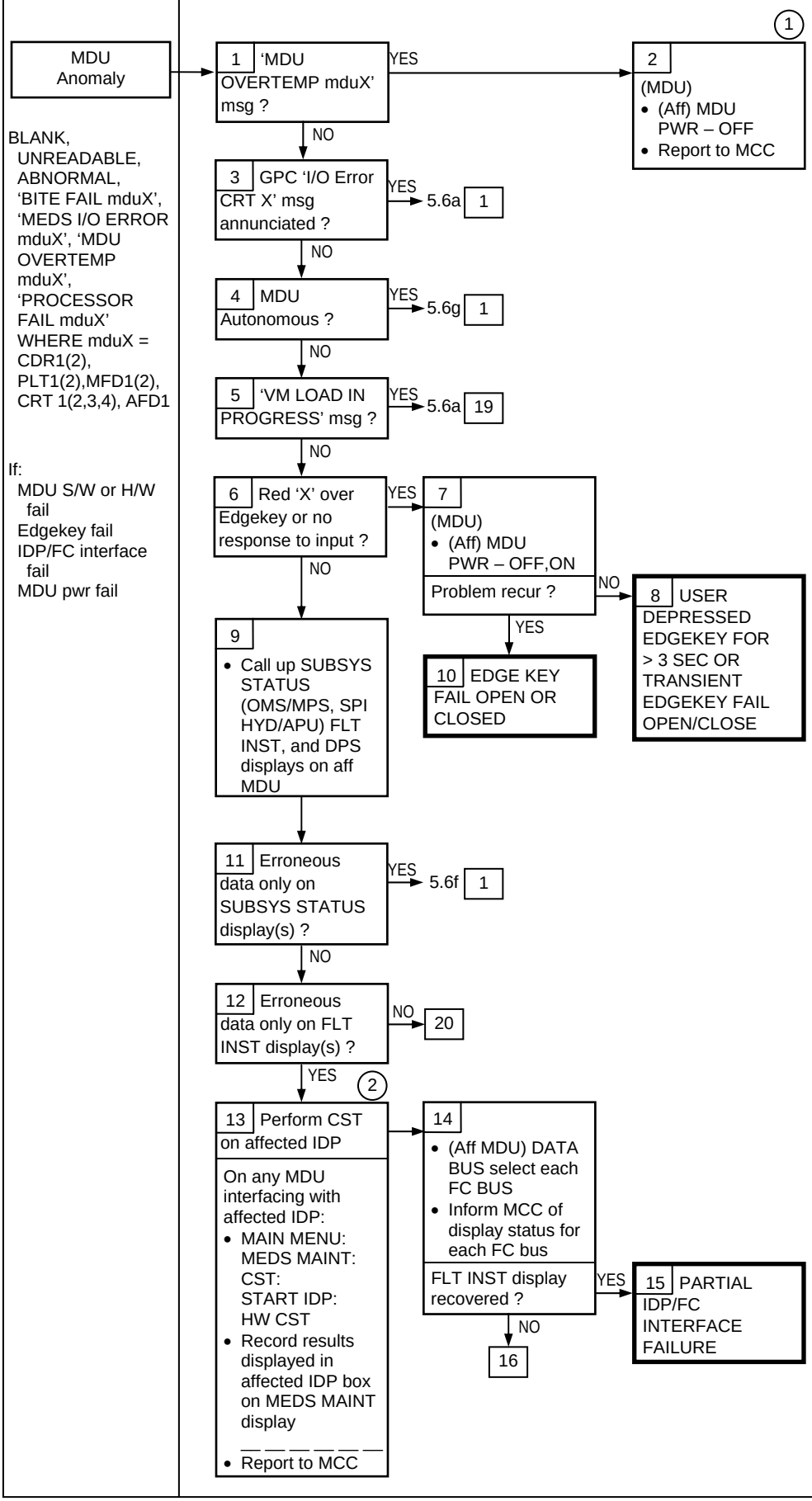

(1) Internal component has reached 212 degF. Do not repower unless asked by MCC

(2) Expect GPC 'I/O ERROR CRT X' message if GPC commanding the affected IDP. All other MDUs communicating with the IDP running CST will be temporarily inoperable. IDP CST results will be blank while H/W CST is running. IDP H/W CST takes ~75 sec. Nominal IDP CST result is '000000'

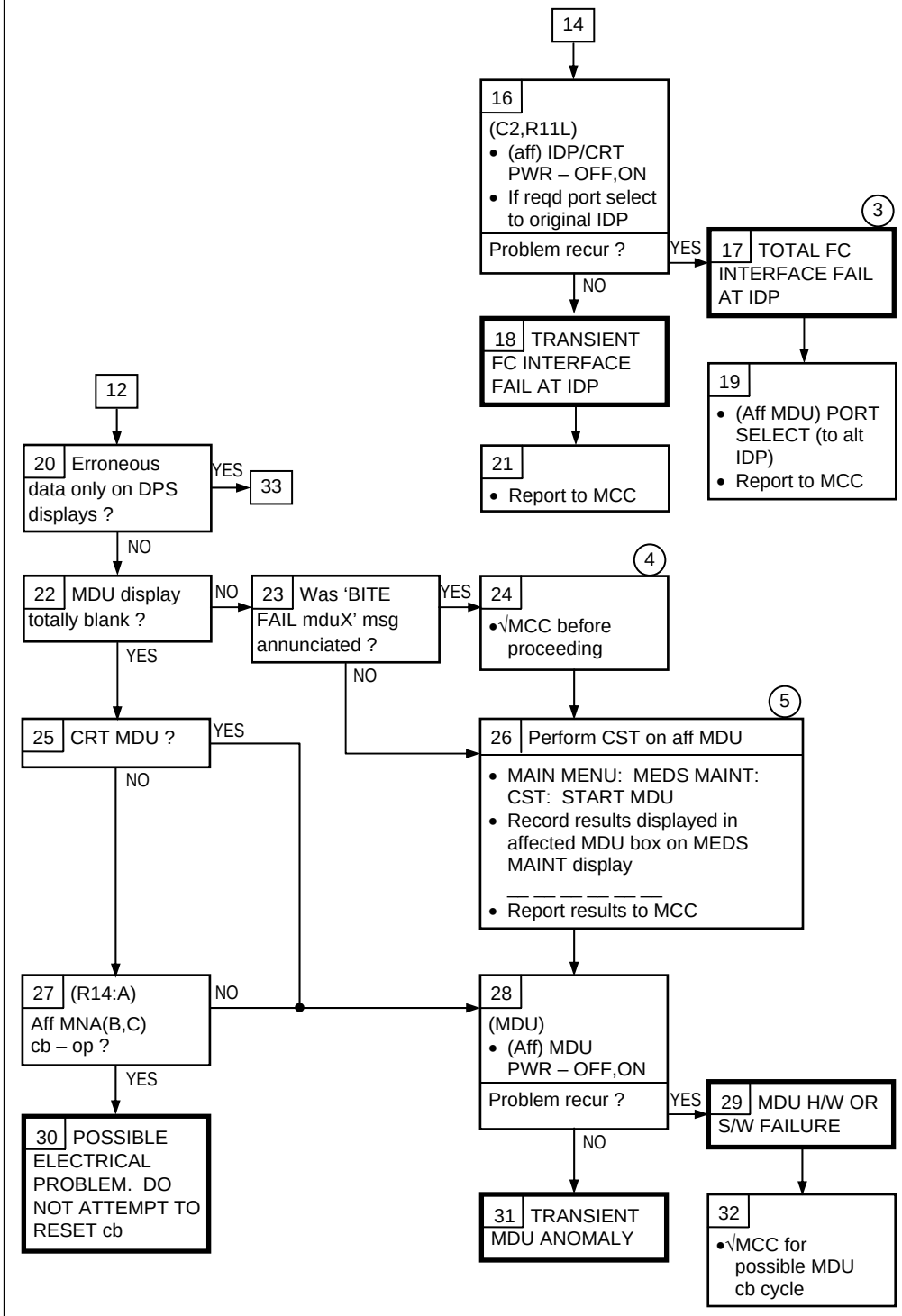

(3) IDP cannot be used in FLT INST mode. May be usable in DPS and subsystem display modes

(4) For MDU BITE caused by EEPROM failure, CST or pwr cycle should not be performed on MDU

(5) Expect 'MEDS I/O ERROR MDU X' messages. MDU CST will take ~75 sec to reach the edgekey test. IDPs will not be able to communicate with MDU while it is executing its CST. Nominal MDU CST result is '0000FF'

DPS 5.6e (Cont)

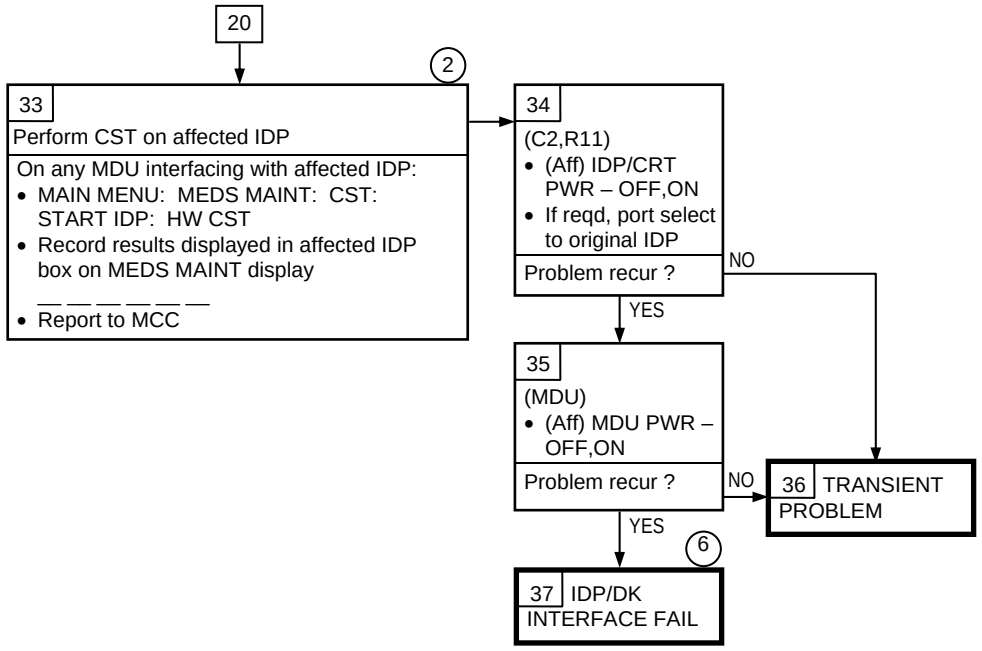

(2) Expect GPC 'I/O ERROR CRT X' message if GPC commanding the affected IDP. All other MDUs communicating with the IDP running CST will be temporarily inoperable. IDP CST results will be blank while H/W CST is running. IDP H/W CST takes ~75 sec. Nominal IDP CST result is '000000'

(6) IDP cannot be used in DPS mode. May be used in FLT INST and subsystem display modes

DPS

5.6f ADC ANOMALY

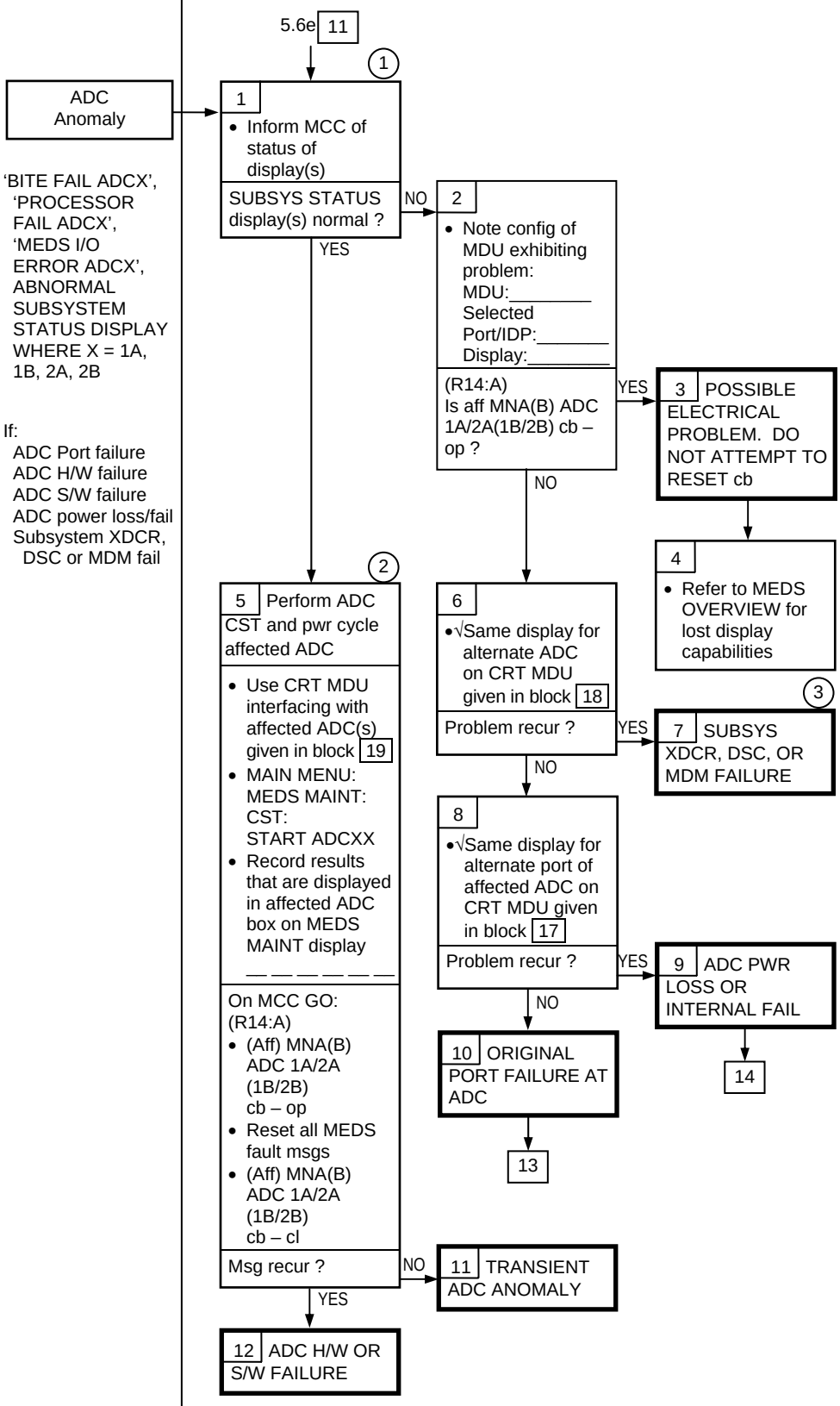

'BITE FAIL ADCX', 'PROCESSOR FAIL ADCX', 'MEDS I/O ERROR ADCX', ABNORMAL SUBSYSTEM STATUS DISPLAY WHERE X = 1A, 1B, 2A, 2B

If:
ADC Port failure
ADC H/W failure
ADC S/W failure
ADC power loss/fail
Subsystem XDCR, DSC or MDM fail

(1) If MEDS fault msg(s) annunciated, user may need to select OMS/MPS, SPI, and HYD/APU displays for annunciating IDP(s). ADC 1A and 1B provide OMS/MPS and SPI display data. ADC 2A and 2B provide HYD/APU display data. Reference MEDS overview

(2) ADC CST will be running while ADC CST result is blank. It will take 5 sec to complete CST. Nominal CST result is '000000'. Expect 'MEDS I/O ERROR ADCXX' msg

(3) √MCC for other params possibly lost on same DSC or MDM card

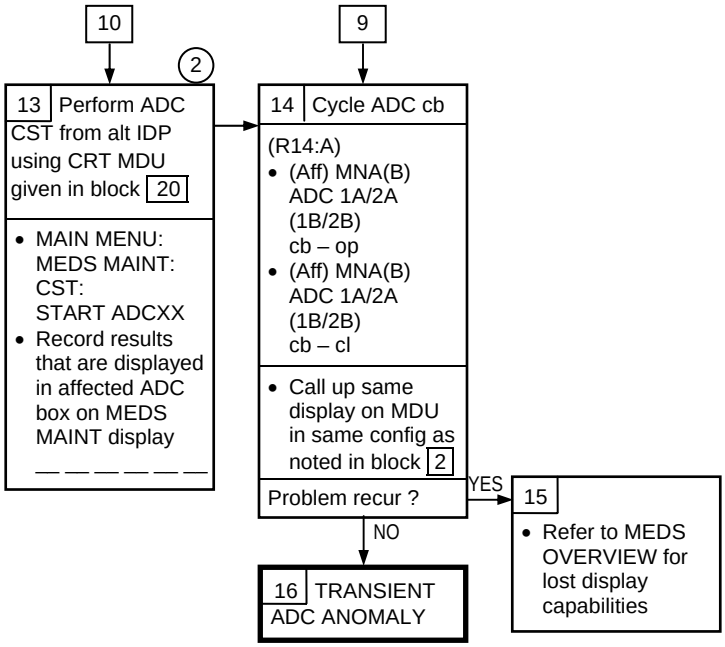

4

17 MDU with Subsys Display problem	Currently Selected Port (noted in block 2)	Use this CRT MDU
CDR1	Pri	CRT4
	Sec	CRT2
CDR2	Pri	CRT2
	Sec	CRT1
CRT1	–	CRT2
MFD1	Pri	CRT1
	Sec	CRT4
CRT3	–	CRT4
MFD2	Pri	CRT2
	Sec	CRT4
CRT2	–	CRT1
PLT1	Pri	CRT1
	Sec	CRT2
PLT2	Pri	CRT4
	Sec	CRT1
CRT4	–	CRT3
AFD1	Pri	CRT3
	Sec	CRT1

(2) ADC CST will be running while ADC CST result is blank. It will take 5 sec to complete CST. Nominal CST result is '000000'. Expect 'MEDS I/O ERROR ADCXX' msg

(4) Purpose of this chart is to select MDU that will always be connected to other IDP on ADC associated with problem. CRT MDU is chosen since it will always be connected to that IDP

(5)

18 MDU with Subsys Disp Prob (noted in block 2)	Selected Port (noted in block 2)	Use this CRT MDU
CDR1	Pri	CRT1
	Sec	CRT4
CDR2	Pri	CRT4
	Sec	CRT4
CRT1	–	CRT4
MFD1	Pri	CRT4
	Sec	CRT1
CRT3	–	CRT1
MFD2	Pri	CRT4
	Sec	CRT1
CRT2	–	CRT4
PLT1	Pri	CRT4
	Sec	CRT4
PLT2	Pri	CRT1
	Sec	CRT4
CRT4	–	CRT1
AFD1	Pri	CRT1
	Sec	CRT4

(6)

19 Perform CST for this ADC	Use this CRT MDU
ADC1A	CRT1 or CRT2
ADC1B	CRT4 or CRT3
ADC2A	CRT1 or CRT2
ADC2B	CRT4 or CRT3

(7)

20 Affected Display (noted in block 2)	Selected IDP for Affected MDU (noted in block 2)	Perform CST for this ADC	Use this CRT MDU
OMS/MPS/SPI	IDP 1	ADC 1A	CRT2
	IDP 2	ADC 1A	CRT1
	IDP 3	ADC 1B	CRT4
	IDP 4	ADC 1B	CRT3
HYD/APU	IDP 1	ADC 2A	CRT2
	IDP 2	ADC 2A	CRT1
	IDP 3	ADC 2B	CRT4
	IDP 4	ADC 2B	CRT3

(5) Purpose of this chart is to select MDU that will always be connected to an IDP on alternate ADC for affected data. CRT MDU is chosen since it will always be connected to that IDP

(6) Purpose of this chart is to determine MDU on which to perform ADC CST. CRT MDU is chosen, since it will always be connected to aff ADC

(7) Purpose of this chart is to select ADC on which to perform ADC CST and MDU driven by IDP on alternate port of ADC. CRT MDU is chosen since it will always be connected to that IDP

DPS

5.6g MDU IS AUTONOMOUS

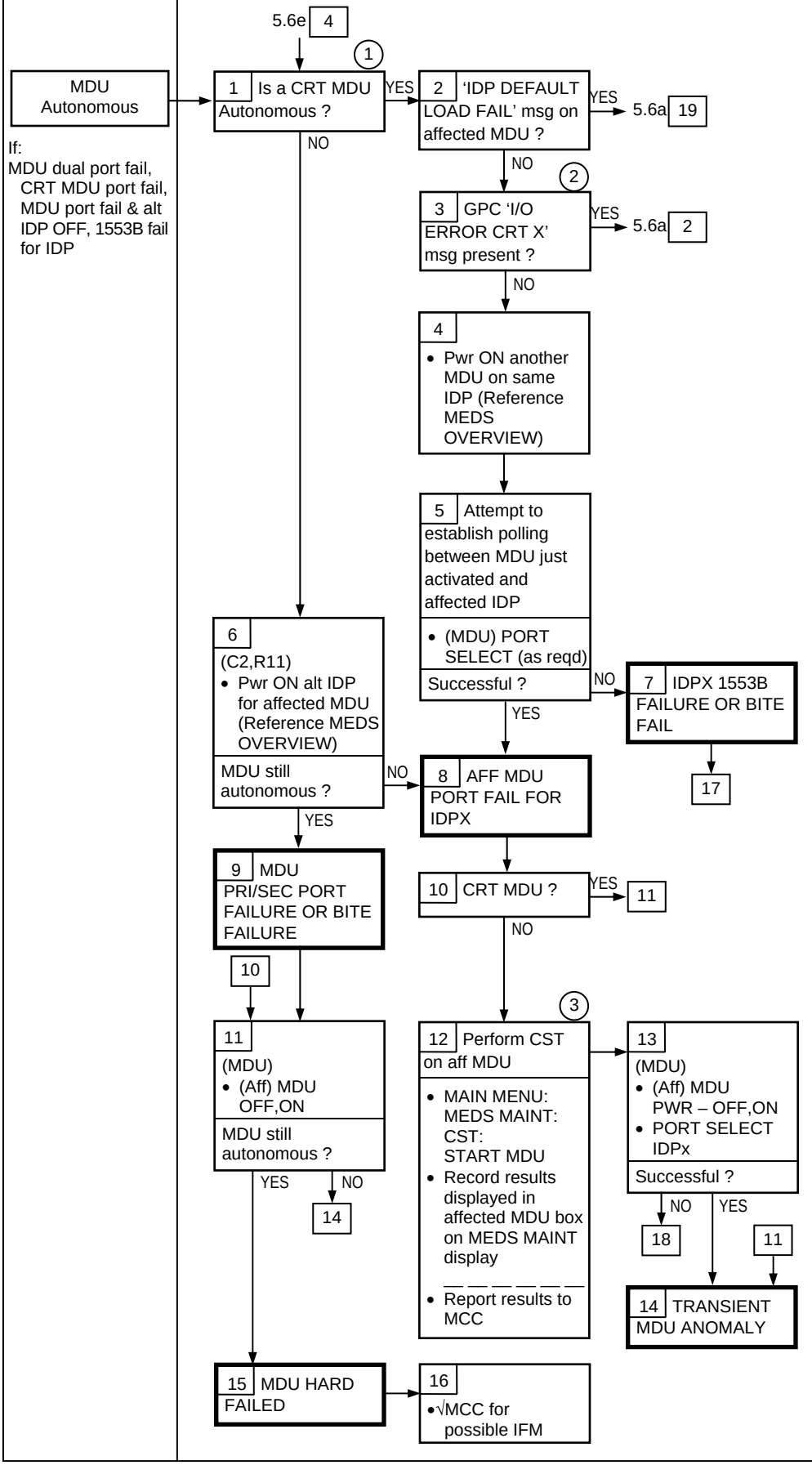

(1) If mult MDUs are autonomous, work MAL for CRT MDU

(2) User may have to establish alternate IDP interface to BFS or PASS or check with MCC as appropriate in order to observe fault msgs

(3) Expect 'MEDS I/O ERROR MDU X' messages. MDU CST will take ~75 sec to reach the edgekey test. IDPs will not be able to communicate with MDU while it is executing its CST. Nominal MDU CST result is '0000FF'

DPS 5.6g (Cont)

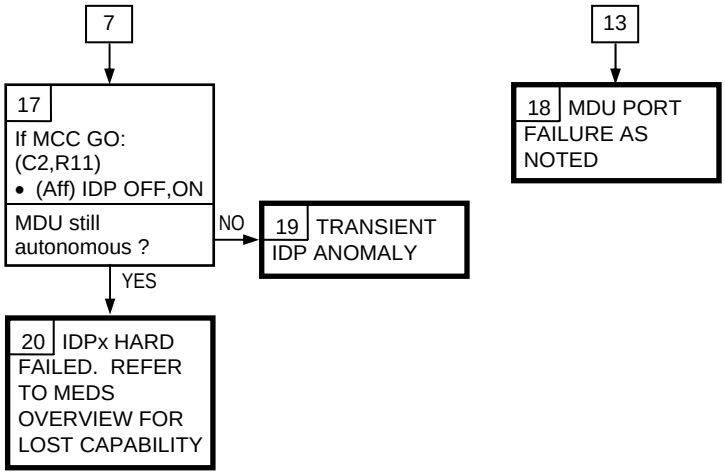
7
17
If MCC GO:
(C2,R11)
• (Aff) IDP OFF,ON
MDU still autonomous ?
NO
19 TRANSIENT IDP ANOMALY
YES
20 IDPx HARD FAILED. REFER TO MEDS OVERVIEW FOR LOST CAPABILITY
13
18 MDU PORT FAILURE AS NOTED

GPC FRP-1
SINGLE GPC FAIL

SINGLE GPC FAIL OBJECTIVE
Attempt failed GPC recovery following on-orbit DPS reconfiguration via APCL, OPCL, MAL, or PI procedure. If recovered, target the 'transient' GPC as a redundant G2, G2FD, or SM based upon operational objectives. If RNDZ, EVA, or critical burn requires Dual G2 config, recovered GPC will be made G2FD

SCOPE
Procedure designed to handle any single G2, SM, G2FD, or BFS GPC failure occurring during ascent or on-orbit prior to entry prep

ASSUMPTIONS
If multiple G2 configuration is reqd shortly following the GPC recovery attempt, such DPS reconfiguration will be performed before or after GPC recovery and is not embedded part of this FRP

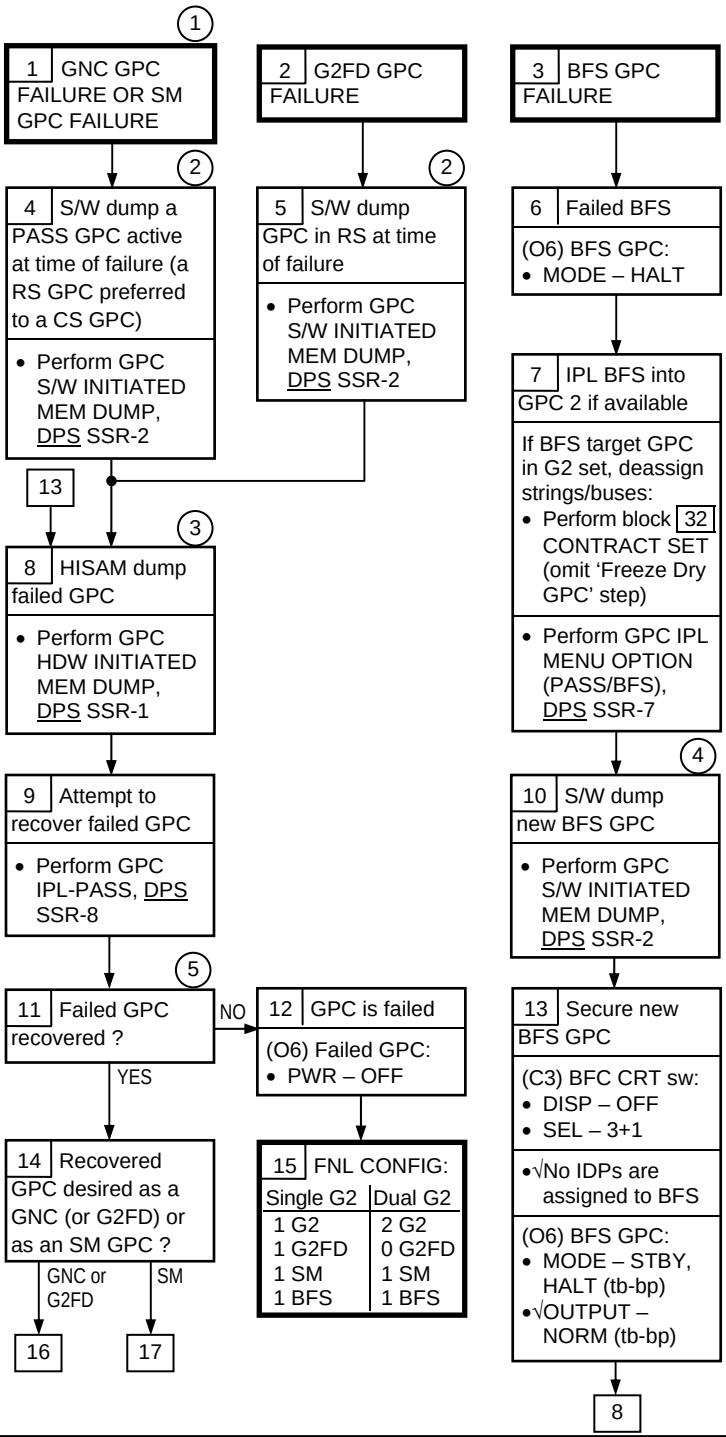

(1) If GPC FRP-1 following failure of 'GNC RECOVERY VIA G2FD' (OPCL), the following uplinks may be reqd upon a GPC recovery:
- state vector
- ADI quaternions
- IMU gyro bias
- IMU accel bias

(2) S/W dump to capture GPC Sync Trace Log. MCC analysis of both S/W and H/W dumps may provide insight to the cause of a PASS GPC failure

(3) Prior to BFS H/W dump, current TFL must be capable of supporting a BFS downlist

(4) S/W dump to verify integrity of new BFS software load

(5) If GPC is recovered, upon completion of FRP, MCC may request certain IDPs be powered on for about 30 sec to ensure MCC uplink interfaces to both GNC and SM

GPC FRP-1 (Cont)

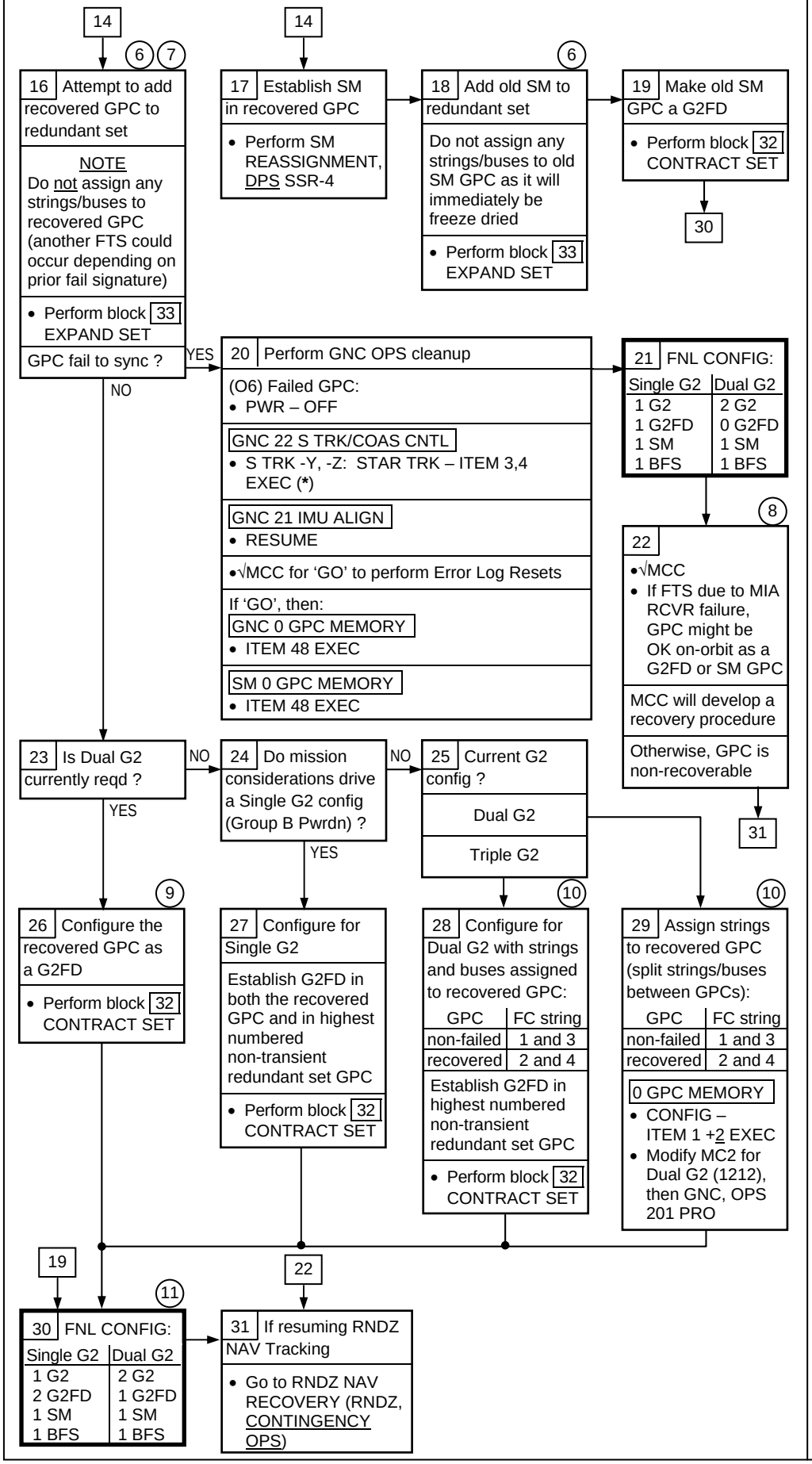

(6) This process establishes a GNC Major Function Base in the target G2. For the recovered GPC, the action verifies GPC can maintain redundant set sync

(7) Action verifies no FC MIA receiver failure exists

(8) 'Big Picture' recovery overview:

If failed GPC to be used as an SM, uplinked procedure will continue FRP after re-IPLing GPC in block 9

If failed GPC to be used as a restricted G2FD source, after re-IPLing GPC, uplinked procedure will add recovered GPC to redundant set with the affected string deassigned, collapse set with string deassigned, freeze dry GPC, and finally, reassign string and perform a GNC OPS Mode Recall

If GPC later used as G2FD source, string Dual G2 must be deassigned_before set expansion

(9) After critical mission phase is complete, if OPS considerations will permit continued use of a Dual G2 config, then establish G2FD in a redundant GPC and add recovered GPC to Dual G2 set

(10) MCC may correct NBAT if IMU config or other considerations drive alternate stringing [1221 or 1122 NBAT]

(11) Assign string 4 to recovered GPC during Entry phase (a transient GPC)

GPC FRP-1 (Cont)

ASSUMPTIONS (Block 32):
The crew will need to adjust the GPC Target Set and nominal bus assignment table (NBAT) string/bus assignments in the "Configure For Set Contraction" step below to accommodate the actual DPS configuration (√MCC if GPC target set or NBAT string/bus assignments unclear)

(12) GNC downlist will default to lowest ID GPC in G2 set. MCC may request downlister change following OPS Mode Recall

(13) Crew "GO" for Error Log resets without prior MCC concurrence

32 CONTRACT SET

NOTE
No keyboard entries or sw throws 10 sec:
Before and after moding PASS GPCs to RUN
Before OPS transition or set expansion/contraction requests until new OPS base page is displayed

- If RNDZ NAV enabled:

C3(A6U) DAP: LVLH
CRT [GNC UNIV PTG]
CNCL – ITEM 21 EXEC

- CONFIGURE FOR SET CONTRACTION

CRT If MM202: GNC, OPS 201 PRO
[GNC 0 GPC MEMORY]
CONFIG – ITEM 1 +2 EXEC
Assign MC2 per table →

If:	Single G2	Dual G2
CONFIG GPC	2 10000	2 12000
STR 1	1	1
2	1	2
3	1	1
4	1	2
PL 1/2	0	0
CRT 1	1	1
2	1	2
3	0	0
4	1	2
L 1	0	0
2	0	0
MM 1	1	1
2	1	2

- OPS MODE RECALL (12)

C3(A6U) DAP: FREE
VERN(ALT)

CRT GNC, OPS 201 PRO
Pause ~30 sec
(DAP setting), then
C3(A6U) DAP: as reqd

- FREEZE DRY GPC

CRTX MAJ FUNC – PL
GPC/CRT G2FD/X EXEC
[X PL GPC MEMORY]
CONFIG – ITEM 45 +2 EXEC
GPC – ITEM 46 +2(3) EXEC
STORE – ITEM 47 EXEC
Store complete when MC = 02 (~30 sec)
√All IDPs deassigned from FD GPC

O6 GPC MODE G2FD – STBY (tb-bp)
– HALT (tb-bp)
– STBY (tb-RUN)
– HALT (tb-bp)

- CONFIG FOR CLEANUP

[GNC 22 S TRK/COAS CNTL]
S TRK -Y, -Z: STAR TRK – ITEM 3,4 EXEC (*)
[GNC 21 IMU ALIGN]
RESUME

- CLEAR SOFTWARE FAIL VOTES (13)

[GNC 0 GPC MEMORY]
ITEM 48 EXEC
[SM 0 GPC MEMORY]
ITEM 48 EXEC

GPC FRP-1 (Cont)

ASSUMPTIONS (Block 33):
The crew will need to adjust the GPC Target Set in "Configure For Set Expansion" step below to accommodate the actual DPS configuration (√MCC if GPC target set or NBAT string/bus assignments unclear)

Procedure assumes target GPC (recovered GPC or former SM GPC) is up and in 'RUN', which is normally the case. If target GPC not in common set, perform step 2 "Config G2FD GPC(s) For Set Expansion" of G2 SET EXPANSION procedure (DPS, ORB OPS)

(14) Whether expanding G2 set to a Dual or Triple G2 config, modify only the GPC target set unless otherwise noted (don't assign strings or buses to target GPC)

(15) GPC downlist will default to lowest ID GPC in G2 set. MCC may request downlister change following OPS Mode Recall

33 **EXPAND SET**

NOTE
No keyboard entries or sw throws 10 sec:
Before and after moding PASS GPCs to RUN
Before OPS transition or set expansion/contraction requests until new OPS base page is displayed

- If RNDZ NAV enabled:

C3(A6U) DAP: LVLH
CRT GNC UNIV PTG
CNCL – ITEM 21 EXEC

- CONFIGURE FOR SET EXPANSION
If MM202: GNC, OPS 201 PRO (14)
GNC 0 GPC MEMORY
CONFIG – ITEM 1 +2 EXEC
Assign MC2 per table →

If:	Dual G2	Triple G2
CONFIG GPC	2 12000	2 12300
STR 1 2 3 4 PL 1/2	↑	↑
CRT 1 2 3 4	DON'T MODIFY NBAT	DON'T MODIFY NBAT
L 1 2	↓	↓
MM 1 2	↓	↓

- OPS MODE RECALL (15)

C3(A6U) DAP: FREE

CRT GNC, OPS 201 PRO
Pause ~30 sec
(DAP settling), then
C3(A6U) DAP: as reqd

GPC FRP-3
BFS GPC FAIL RECOVERY (ENTRY)

NOTE

Procedure assumes config shown as established by BFS GPC FAIL (ENT PKT, DPS). The following BFS uplinks may be necessary after completion of FRP:

- Guidance targets
- ADI quaternions
- IMU gyro bias
- IMU accelerometer bias
- TMBU

Procedure assumes deorbit planned. If deorbit not planned, config for ORBIT and go to SINGLE GPC FAIL, GPC FRP-1 (DPS)

NOTE

No keyboard entries or sw throws 10 sec:
Before and after moding PASS GPCs to RUN
Before OPS transition or set expansion/ contraction requests until new OPS base page is displayed

Initial Config FRP-3					
GPC OPS	1 G3	2 G3	3 G3	4 G3	5 –
POWER OUTPUT MODE	ON NORM RUN	ON NORM RUN	ON NORM RUN	ON NORM RUN	ON NORM HALT
CONFIG GPC	3 12340				
STR 1 2 3 4 PL 1/2	1 2 3 4 1				
CRT 1 2 3 4	1 2 3 0				
L 1 2	0 0				
MM 1 2	1 2				

a. Remove GPC2 from MC3

GNC 0 GPC MEMORY

- Config – ITEM 1 +3 EXEC
- Modify MC3 per table →

CONFIG GPC	3 10340
STR 1 2 3 4 PL 1/2	1 4 3 4 1
CRT 1 2 3 4	1 4 3 0
L 1 2	0 0
MM 1 2	1 3

- GNC OPS 301 PRO (√DAP)

b. Establish new BFS in GPC 2

- Perform GPC IPL – MENU OPTION (PASS/BFS) ..... DPS SSR-7
- GPC OUTPUT – BKUP
- MODE – RUN

O6

GNC 50 HORIZ SIT – √PASS R/W sel

c. Attempt recovery of failed GPC
- Perform GPC IPL-PASS..... DPS SSR-8
- If GPC recovered, perform step d

Final Config for GPC 5 Not Recovered					
GPC OPS	1 G3	2 BFS3	3 G3	4 G3	5 –
POWER	ON	ON	ON	ON	OFF
OUTPUT	NORM	BKUP	NORM	NORM	NORM
MODE	RUN	RUN	RUN	RUN	HALT

CONFIG GPC	3 10340			
STR 1	1			
2	4			
3	3			
4	4			
PL 1/2	1			
CRT 1	1			
2	4			
3	3			
4	0			
L 1	0			
2	0			
MM 1	1			
2	3			

d. GPC recovered, establish a four GPC redundant set

GNC 0 GPC MEMORY
- Config – ITEM 1 +3 EXEC
- Modify MC3 per table →
- GNC OPS 301 PRO (√DAP)
- (BFS) GNC, OPS 000 PRO
- 301 PRO

GNC 50 HORIZ SIT – √PASS R/W sel

CONFIG GPC	3 10345
STR 1	1
2	4
3	3
4	5
PL 1/2	1
CRT 1	1
2	4
3	3
4	0
L 1	0
2	0
MM 1	1
2	3

Final Config for GPC 5 Recovered					
GPC OPS	1 G3	2 BFS3	3 G3	4 G3	5 G3
POWER	ON	ON	ON	ON	ON
OUTPUT	NORM	BKUP	NORM	NORM	NORM
MODE	RUN	RUN	RUN	RUN	RUN

CONFIG GPC	3 10345			
STR 1	1			
2	4			
3	3			
4	5			
PL 1/2	1			
CRT 1	1			
2	4			
3	3			
4	0			
L 1	0			
2	0			
MM 1	1			
2	3			

GPC FRP-4
PASS RECOVERY AFTER BFS ENGAGE
(ASCENT/ORBIT/ENTRY)

NOTE

Procedure can be entered from direct Ascent/Entry engagement or from BFS ENGAGE (ORB PKT, DPS). Do not hardware dump or IPL freeze-dry GPC if activation was not attempted.
The following uplinks will be necessary during or after completion of the FRP:
- State Vector
- IMU desired REFSMMATs
- IMU gyro bias (if reqd)
- IMU accel bias (if reqd)
- ADI quaternion (orbit inertial)
- If immediate deorbit planned:
  - Guidance targets
  - Landing sites (if reqd)
  - TACAN table (if reqd)
- These additional uplinks may be required after completion of the FRP (√MCC):
  - RNP GPS uplink load
  - Reapplication of GMEMs (if reqd)

NOTE

No keyboard entries or sw throws 10 sec:
- Before and after moding PASS GPCs to RUN
- Before OPS transition or set expansion/contraction requests until new OPS base page is displayed

1. Config GPCs:

O6 a. PASS GNC GPCs MODE – HALT
b. BFS GPC MODE – RUN
c. If BFS not in 301:
C2 BFS, GNC, OPS 301 PRO
d. Ensure BFS not hard assigned to any forward IDP:
GPC/CRT 01 EXEC
GPC/CRT 02 EXEC
GPC/CRT 03 EXEC
C3 e. BFC CRT DISP – OFF (BFS will default to IDPs 1 and 2)

2. If SM GPC currently active:

NOTE

Ku-Band system may be reqd to be taken to Standby to prevent exceeding radiation constraints

a. If AOS, √MCC for comm config and radiation constraints
If no comm:
A1U KU PWR – STBY
CNTL – PNL,CMD
If no comm, go to COMM LOST (ORB PKT, COMM) steps 7 and 8

O6 b. If SM GPC OUTPUT – TERM:
SM GPC OUTPUT – NORM
F7 √FLT CNTLR PWR – ON
BFS ENGAGE pb – push (set engage discretes)
O1 c. If SM GPC self-fail CAM lt on:
If reqd, perform PL/DPS RECONFIG (PL OPS or PL SYS or SODF: ASSY OPS):
3: SM 1 DPS UTILITY
C2 CKPT RETRV ENA – ITEM 12 EXEC (no *)
O6 SM GPC MODE – STBY, then RUN
C2 SM, OPS 201 PRO
d. If SM GPC commanding IDP 4, reconfigure displays:
(1) BFC CRT DISP – ON
(2) SEL – 2+3
CRT Via IDP 1 (commanded by SM GPC):
(3) GPC/CRT 04 EXEC
(4) GPC/CRT 43 EXEC (BFS will continue to command IDP 3 until next step)
C2 (5) BFC CRT DISP – OFF
(6) Verify BFS commanding IDP 1 and 2, SM commanding IDP 3
e. Go to step 6

3. Attempt recovery of one GPC (begin with GPC 4 and proceed in descending order until a GPC is successfully IPL'd):

O15 a. √MMU 2 – ON
O6 b. IPL SOURCE – MMU 1(2)
√GPC OUTPUT 4(3,2,1) – NORM (tb-bp)
√GPC MODE 4(3,2,1) – HALT (tb-bp)
c. GPC PWR 4(3,2,1) – OFF,ON (clears engage discretes)
F7 √FLT CNTLR PWR – ON
BFS ENGAGE pb – push (resets engage discretes)
O6 d. IPL 4(3,2,1) pb – push (tb-IPL, then bp within 30 sec)

e. When tb – bp or 30 sec:
GPC MODE 4(3,2,1) – STBY (tb-RUN within 2 min)
f. When tb – RUN or 2 min, determine if IPL'd GPC can command IDP:
C2 (1) IDP/CRT 3 MAJ FUNC – PL
O6 (2) GPC MODE 4(3,2,1) – RUN (tb remains RUN)
C2 (3) √ 3: PL 0 GPC MEMORY driven by IPL'd GPC
g. If GPC cannot command IDP:
O6 GPC MODE 4(3,2,1) – HALT
If first IPL attempt:
IPL SOURCE – MMU 2(1)
Go to step 3c and proceed (one time only)
If second IPL attempt:
GPC PWR 4(3,2,1) – OFF
Go to step 3b for next highest numbered failed GPC
If no GPCs recovered, √MCC
O6 h. IPL SOURCE SW – OFF

4. For first successfully IPL'd GPC, establish SM GPC:
SM 1 DPS UTILITY
a. If checkpoint previously done, CKPT RETRV ENA – ITEM 12 EXEC (*****)
C2 b. IDP/CRT 3 MAJ FUNC – SM
c. SM 0 GPC MEMORY
CONFIG – ITEM 1 +4 EXEC
Assign SM GPC, PL 1/2, CRTs, LAUNCH 1, MMs
d. SM, OPS 201 PRO
√ 3: SM ANTENNA
e. If reqd, go to PL/OPS RECONFIG, Recovery (PL SYS or SODF: ASSY OPS)

5. Select MET as MISSION TIME:
3: SM 2 TIME
C2 MISSION TIME MET – ITEM 2 EXEC

6. Hardware dump the remaining failed GPCs during AOS (Do not dump any post-engage IPL'd GPCs):
O6 a. √GPC MODE 3(2,1) – HALT
√GPC PWR 3(2,1) – ON
GPC OUTPUT 3(2,1) – TERM
MO42F b. GPC MEM DUMP – 3(2,1)
c. SM 0 GPC MEMORY
DOWNLIST GPC – ITEM 44 +3(2,1) EXEC
O6 d. GPC MODE 3(2,1) – STBY (starts dump)
Wait: Double dump of PASS GPC complete after 4 min
GPC MODE 3(2,1) – HALT (stops dump)
GPC OUTPUT 3(2,1) – NORM
e. If another hardware dump to be performed, go to step 6a for next GPC
MO42F f. When all dumps complete, GPC MEM DUMP – OFF
SM 0 GPC MEMORY
DOWNLIST GPC – ITEM 44 +4 EXEC
g. If reqd, load post dump TFL:
Perform LOAD PCMMU FORMAT (ORB OPS FS, COMM/INST)
F7 h. √FLT CNTLR PWR – ON
BFS ENGAGE pb – push (resets engage discretes)

7. Attempt recovery of each dumped GPC one at a time beginning with GPC 1:
a. Perform IPL:
(1) 3: SM (GNC,PL) 1 DPS UTILITY
√IPL SOURCE SW MASK – ITEM 38 EXEC (no *****)
O6 (2) IPL SOURCE – MMU 1(2)
(3) √GPC OUTPUT 1(2,3) – NORM (tb-bp)
√GPC MODE 1(2,3) – HALT (tb-bp)
(4) GPC PWR 1(2,3) – OFF,ON (clears engage discretes)
F7 √FLT CNTLR PWR – ON
BFS ENGAGE pb – push (resets engage discretes)
O6 (5) IPL 1(2,3) pb – push (tb-IPL, then bp within 30 sec)
(6) When tb – bp or 30 sec:
GPC MODE 1(2,3) – STBY (tb-RUN within 2 min)
(7) When tb – RUN or 2 min, determine if IPL'd GPC can command IDP:
C2 (a) IDP/CRT 3 MAJ FUNC – PL
O6 (b) GPC MODE 1(2,3) – RUN (tb remains RUN)
(c) On PASS IDP, GPC/CRT IPL'd GPC/3 EXEC
C2 (d) √ 3: PL 0 GPC MEMORY driven by IPL'd GPC
(8) If GPC cannot command IDP (IDP 3 'Big X'):
O6 (a) GPC MODE 1(2,3) – HALT
(b) Reconfig IDPs to make GPC 4 command IDP 3:
C2 IDP/CRT 3 MAJ FUNC – SM
BFC/CRT DISP – ON
SEL – 2+3
On IDP 1 – GPC/CRT SM GPC/3 EXEC (BFS will retain IDP 3 until next step)
BFC/CRT DISP – OFF
√SM GPC commanding IDP 3

(c) If first IPL attempt:
O6 IPL SOURCE – MMU 2(1)
Go to step 7a(4) and proceed (one time only)
If second IPL attempt:
GPC PWR 1(2,3) – OFF
Go to step 7a(3) for next highest numbered failed GPC
(9) If there are any dumped GPCs remaining to be IPL'd, go to step 7a(3) for next highest numbered failed GPC
O6 (10) IPL SOURCE – OFF
(11) 3: SM (GNC,PL) 1 DPS UTILITY
IPL SOURCE SW MASK – ITEM 38 EXEC (*)

b. Configure GPCs (Final Configuration Tables based on GPCs recovered on 5-76 through 5-82):
If only 1 PASS GPC active, go to step 8
If two, three, or four PASS GPCs active, go to step 9

8. If one PASS GPC active, config for ENTRY:
a. Perform LOAD PCMMU FORMAT (ENTRY) (ORB OPS FS, COMM/INST)
C3 OI PCMMU FORMAT – GPC
b. Reassign SM GPC to GNC Major Function:
O6 (1) √Target GPC OUTPUT – NORM
(2) If reqd, perform PL/DPS RECONFIG, secure (PL SYS or SODF: ASSY OPS)
(3) SM, OPS 000 PRO
C2 (4) IDP/CRT 3 MAJ FUNC – GNC
3: GNC 0 GPC MEMORY
CONFIG – ITEM 1 +3 EXEC
Assign PASS GPC all FC strings, PL 1/2, CRT, and MMs
(5) Configure for G3 Transition:
O14, √RGAs 1,2,3,4 – ON
O15, √RJDA/RJDF (all) – ON
O16 √cb ADTA (four) – cl
O8 MLS (three) – ON
(6) GNC, OPS 301 PRO:
C3 √ 3: GNC DEORB MNVR COAST
(7) If reqd, perform PL/DPS RECONFIG, Recovery (PL SYS or SODF: ASSY OPS)
c. Go to step 10, PASS IMU attitude reference recovery

9. If two, three, or four PASS GPCs active:
C3 a. OI PCMMU FORMAT – FXD
b. Establish G3 config in lowest number GPC(s):
C2 (1) IDP/CRT 3 MAJ FUNC – GNC
GPC/CRT Target GNC GPC/3 EXEC
3: GNC 0 GPC MEMORY
CONFIG – ITEM 1 +3 EXEC
Assign desired GPC(s), FC strings, CRTs, and MMs per appropriate table:

If two GPCs recovered:

CONFIG GPC	3 10000 (1,2 / 1,3 / 1,4)	3 02000 (2,3 / 2,4)	3 00300 (3,4)
STR 1	1	2	3
2	1	2	3
3	1	2	3
4	1	2	3
PL 1/2	0	0	0
CRT 1	1	2	3
2	1	2	3
3	1	2	3
4	0	0	0
L 1	0	0	0
2	0	0	0
MM 1	1	2	3
2	1	2	3

If three GPCs recovered:

CONFIG GPC	3 12000 (1,2,3 / 1,2,4)	3 10300 (1,3,4)	3 02300 (2,3,4)
STR 1	1	1	3
2	2	3	2
3	1	1	3
4	2	3	2
PL 1/2	0	0	0
CRT 1	1	1	2
2	2	3	3
3	1	1	2
4	0	0	0
L 1	0	0	0
2	0	0	0
MM 1	1	1	2
2	2	3	3

If four GPCs recovered:

CONFIG GPC	3 12300
STR 1	1
2	2
3	3
4	3
PL 1/2	0
CRT 1	1
2	2
3	3
4	0
L 1	0
2	0
MM 1	1
2	2

(2) Configure for G3 Transition:
O14, √RGAs 1,2,3,4 – ON
O15, √RJDA/RJDF (all) – ON
O16 √cb ADTA (four) – cl
O8 MLS (three) – ON
(3) GNC, OPS 301 PRO:
C3 √ 3: GNC DEORB MNVR COAST
(4) Configure for GNC Downlist
3: GNC 0 GPC MEMORY
DOWNLIST GPC – ITEM 44 +X EXEC (lowest ID GNC GPC)

10. PASS IMU attitude reference recovery:
O14:E, a. Ensure good Star Tracker config:
O15:E √cb MNA,B STAR TRKR -Z,-Y (two) – cl
O6 √S TRK PWR (two) – ON
3: GNC 21 IMU ALIGN
b. Mode IMUs 1,2,3 to OPERATE:
IMU OPER 1,2,3 – ITEM 4,5,6 EXEC
(* will not appear until DISENGAGE step)

If extended loss of comm (ZOE not included) or no uplink CMD capability, recover IMU attitude reference utilizing HUD and MATRIX alignment:

c. Deselect two IMUs leaving one IMU selected:
IMU DES 1(2,3) – ITEM 7(8,9) EXEC (*)
d. Maneuver to attitude for subsequent HUD alignment,
STAR PAIRS PAD (ORB OPS FS, PTG)

NOTE
Establish an inertial attitude which will simplify a manual maneuver to second star

e. Perform BFS disengagement (if comm, wait for MCC GO):
C2 (1) Configure displays for disengage:
(a) BFC CRT DISP – ON
SEL – 1+2 (BFS commanding IDPs 1 and 2)
√PASS GNC GPC commanding IDP 3
(b) Deassign IDP 2 from PASS
Via IDP 3, GPC/CRT 02 EXEC (BFS still commanding IDP 2)

NOTE
BFS DISENGAGE can be verified by Big X/POLL FAIL on IDP 2, BFS GPC OUTPUT tb – bp (pnl O6), and BFC lt flashing (pnl F2/F4)

(2) Perform BFS disengage:
On MCC GO:
F6 BFC – DISENGAGE

Verify BFS disengage:
√BFS commanding IDP 1 only
√BFS GPC OUTPUT tb – bp
√BFC Light flashing or OFF

* If BFS still engaged: *
C3 * BFS, OPS 000 PRO *
O6 * GPC 5 OUTPUT – NORM *
* – B/U *
* Verify BFS disengage *
* BFS, OPS 301 PRO *

C3 (3) Post disengage reconfig:
DAP: INRTL
C2 BFS – I/O RESET
Reassign IDP 2 – GPC/CRT PASS GPC X/2 EXEC
BFC CRT SEL – 3+1 (PASS commanding IDPs 1 and 2, BFS commanding IDP 3)
F6/F8 ADI ATT (two) – REF
ATT REF pb – push

~

NOTE

'↓' will remain for accumulators not selected by GPC driving SPEC.
If TRY is not successful ('↓' by MTU ACCUM 1 time), continue with procedures and √MCC

Acquire MTU time
If SM GPC available:
SM 2 TIME
MTU ACCUM 1 TRY – ITEM 34 EXEC

NOTE

'IMU BITE/T' may be annunciated until MMREAD is performed to restore IMU gyro delta bias terms

f. Mass Memory Read of IMU calibration data:
GNC 21 IMU ALIGN
Select all IMUs for MASS MEMORY READ:
IMU 1,2,3 – ITEM 10,11,12 EXEC (*****)
Initiate MM READ:
MM READ – ITEM 19 EXEC (*****)
When MM READ complete:
√MM READ – ITEM 19 (no *****)

g. Perform MATRIX (TORQUE) ALIGN USING HUD STAR DATA, GNC SSR-2 (GNC)

h. Reselect all deselected IMUs
GNC 21 IMU ALIGN
IMU DES – ITEM 7(8,9) EXEC (no *****)

i. Go to step 11

If good comm and uplink CMD capability, recover IMU attitude reference utilizing Matrix Alignment using IMU data:

NOTE

The following steps assume recovery of 'operational' IMUs only.
Operational IMUs are IMUs in OPER and not previously caged

j. Deselect two IMUs leaving best IMU selected:
√MCC for best IMU
IMU DES 1(2,3) – ITEM 7(8,9) EXEC (*****)

k. Disengagement of BFS:
(1) Configure displays for disengage
C2 (a) BFC CRT DISP – ON
SEL – 1+2 (BFS commanding IDPs 1 and 2)
√PASS GNC GPC commanding IDP 3
(b) Deassign IDP 2 from PASS
Via IDP 3, GPC/CRT 02 EXEC (BFS still commanding IDP 2)

NOTE

BFS DISENGAGE can be verified by Big X/POLL FAIL on IDP 2, BFS GPC OUTPUT tb – bp (pnl O6), and BFC lt flashing (pnl F2/F4)

(2) Perform BFS disengage:
On MCC GO:
F6 BFC – DISENGAGE

Verify BFS disengage:
√BFS commanding IDP 1 only
√BFS GPC OUTPUT tb – bp
√BFC Light flashing or OFF

* If BFS still engaged: *
C3 * BFS, OPS 000 PRO *
O6 * GPC 5 OUTPUT – NORM *
* – B/U *
* Verify BFS disengage *
* BFS, OPS 301 PRO *

(3) Post disengage reconfig:

C3
DAP: INRTL
BFS – I/O RESET
Reassign IDP 2 – GPC/CRT PASS GPC X/2 EXEC
BFC CRT SEL – 3+1 (PASS commanding IDPs 1 and 2, BFS commanging IDP 3)

NOTE

'↓' will remain for accumulators not selected by GPC driving SPEC. If TRY is not successful ('↓' by MTU ACCUM 1 time), continue with procedures and √MCC

Acquire MTU time
If SM GPC available:
SM 2 TIME
MTU ACCUM 1 TRY – ITEM 34 EXEC

NOTE

'IMU BITE/T' may be annunciated until MMREAD is performed to restore IMU gyro delta bias terms

l. Mass Memory Read of IMU calibration data:
GNC 21 IMU ALIGN
Select all IMUs for MASS MEMORY READ:
IMU 1,2,3 – ITEM 10,11,12 EXEC (*****)
Initiate MM READ:
MM READ – ITEM 19 EXEC (*****)
When MM READ complete:
√MM READ – ITEM 19 (no *****)

m. Confirm with MCC that REFSMMAT uplink has been performed. Do not proceed without confirmation

n. Recover IMU attitude reference of one of the deselected operational IMUs, utilizing Matrix Alignment, aligning the IMU to itself:

CAUTION
Each IMU being recovered must be individually matrix aligned to itself in order to incorporate the uplinked REFSMMATs

GNC 21 IMU ALIGN
Utilize as reference one of the operational IMUs currently deselected:
REF IMU – ITEM 14 +___ EXEC
TYPE – ITEM 15 EXEC (MATRIX)
Align Reference IMU to itself:
ALIGN IMU 1(2,3) – ITEM 10(11,12) EXEC (*****)
EXEC – ITEM 16 EXEC (*****)

√MCC to repeat step 10n with other deselected operational IMU

o. Configure DAP:

C3
√DAP: INRTL
DAP ROT: PULSE/PULSE/PULSE

p. Deselect currently selected IMU (no selected IMUs):
IMU DES – ITEM 7(8,9) EXEC (*****)

q. Reselect IMU(s) aligned in step 10n:
IMU DES – ITEM 7(8,9) EXEC (no *****)

r. Configure DAP:
√DAP: INRTL
DAP ROT: DISC/DISC/DISC

s. √MCC to repeat step 10n with remaining IMU

t. When Matrix Align(s) using IMU data complete, reselect all recovered IMUs:
IMU DES – ITEM 7(8,9) EXEC (no *****)

u. Mnvr to acquire stars using AUTO DAP for STRK align. Only Stars 11-60 are available in OPS 3: choose appropriate star pair from pad STAR PAIRS PAD (ORB OPS FS, PTG)

v. If STAR TRKRs powered on in step 10a, configure STAR TRKRs and open doors:
GNC I/O RESET
GNC 22 S TRK/COAS CNTL
O6 S TRK DR CNTL SYS (two) – OP (start timer)
√POS tb (two) – bp
When both tb – OP (8-24 sec), or either tb – bp for > 24 sec:
CNTL SYS (two) – OFF
If tb – bp > 8 sec, notify MCC
CRT STAR TRK – ITEM 3,4 EXEC (*)

w. Perform IMU ALIGN – S TRK (ORB OPS, GNC)

11. If only one PASS GPC active, acquire MTU time in G2 and then go back to Entry config:
a. Configure for G2:
(1) √G2 NBAT (all FC strings, PL 1/2, CRT, and MMs assigned to target GPC)
(2) GNC, OPS 201 PRO
√GNC UNIV PTG

NOTE
'↓' will remain for accumulators not selected by GPC driving SPEC.
If TRY is not successful ('↓' by MTU ACCUM 1 time), continue with procedures and √MCC

b. Acquire MTU time:
GNC 2 TIME
MTU ACCUM 1 TRY – ITEM 34 EXEC

c. Configure for G3:
GNC, OPS 301 PRO
BFS, GNC, OPS 000 PRO
BFS, GNC, OPS 301 PRO

d. Entry Config Established:
(1) Reference Final Configuration Table Set I, 5-76
(2) As time permits, work GPC FRP-1 to Re-IPL the BFS into GPC 5 >>

12. If two PASS GPCs active and Entry Config Desired:
a. Perform SM CHECKPOINT INITIATE (ORB OPS, DPS)
b. Perform LOAD PCMMU FORMAT (ENTRY) (ORB OPS FS, COMM/INST)
C3 OI PCMMU FORMAT – GPC
c. Configure GPCs for GNC OPS 3:
(1) √SM GPC OUTPUT – NORM
(2) If reqd, perform PL/DPS RECONFIG, Secure (PL SYS or SODF: ASSY OPS)
(3) SM OPS 000 PRO
C2 (4) IDP/CRT X MAJ FUNC – GNC
GNC 0 GPC MEMORY
CONFIG – ITEM 1 +3 EXEC
Assign desired GPCs, strings,CRTs, and MMs per appropriate NBAT table

Recovered PASS GPCs

	1,2	1,3	1,4	2,3	2,4	3,4
CONFIG GPC	3 12000	3 10300	3 10040	3 02300	3 02040	3 00340
STR 1	1	3	1	3	2	3
2	2	1	4	2	4	4
3	1	3	1	3	2	3
4	2	1	4	2	4	4
PL 1/2	1	1	1	2	2	3
CRT 1	1	1	1	2	2	3
2	2	3	4	3	4	4
3	1	1	1	2	2	3
4	0	0	0	0	0	0
L 1	0	0	0	0	0	0
2	0	0	0	0	0	0
MM 1	1	1	1	2	2	3
2	2	3	4	3	4	4

C2 (5) IDP/CRT MAJ FUNC – GNC
(6) GNC, OPS 301 PRO
√ GNC DEORB MNVR COAST
(7) BFS, GNC, OPS 000 PRO
BFS, GNC, OPS 301 PRO

d. Entry config established:
(1) Reference Final Configuration Table Set II A on 5-77 and 5-78
(2) As time permits, work GPC FRP-1 to re-IPL BFS into GPC 5 >>

If orbit configuration desired for two, three, or four PASS GPCs active:

13. Secure BFS:

C3 √BFC CRT DISP – ON
SEL – 3+1
C2 BFS, GNC, OPS 000 PRO
C3 BFC CRT DISP – OFF
√All CRTs deassigned from BFS
O6 BFS GPC MODE – STBY,HALT (tb-bp)
OUTPUT – NORM

14. If two PASS GPCs active:

a. Config GNC GPC for OPS 2:
C2 (1) IDP/CRT X MAJ FUNC – GNC
GNC 0 GPC MEMORY
CONFIG – ITEM 1 +2 EXEC
Assign desired GPC all FC strings, CRTs, and MMs
(2) GNC, OPS 201 PRO
√ GNC UNIV PTG
(3) √Appropriate DAP mode selected
C3 b. OI PCMMU FORMAT – GPC:
Perform LOAD PCMMU FORMAT (ORBIT) (ORB OPS FS, COMM/INST)
c. SM (GNC,PL) 1 DPS UTILITY
UL CNTL AUTO – ITEM 35 EXEC (*)
d. If required, perform LOAD PDI DECOM FORMAT (ORB OPS FS, COMM/INST)
C2 e. Configure IDPs:
GPC/CRT 03 EXEC
GPC/CRT X/4 EXEC
Configure MDUs as desired
IDP/CRT 3 PWR – OFF
O6 f. SM GPC OUTPUT – TERM
g. Configure for Orbit:
O14, O15, O16 RGAs 1,2,3,4 – OFF
RJDA/RJDF (all) – As reqd
cb ADTA (four) – op
O8 MLS (three) – OFF
h. Orbit config established:
(1) Reference Final Configuration Table Set II B, 5-79 and 5-80
(2) As time permits, work GPC FRP-1 to re-IPL the BFS into GPC 5 >>

15. If three PASS GPCs active:

a. Config GNC GPCs for OPS 2:
C2 (1) IDP/CRT X MAJ FUNC – GNC
GNC 0 GPC MEMORY
CONFIG – ITEM 1 +2 EXEC

(2) Assign desired GPCs all FC strings, CRTs, and MMs per appropriate table

Recovered PASS GPCs

	1,2,3 1,2,4	1,3,4	2,3,4
CONFIG GPC	2 12000	2 10300	2 02300
STR 1	1	1	2
2	2	3	3
3	1	1	2
4	2	3	3
PL 1/2	0	0	0
CRT 1	1	1	2
2	2	3	3
3	0	0	0
4	2	3	3
L 1	0	0	0
2	0	0	0
MM 1	1	1	2
2	2	3	3

(3) GNC, OPS 201 PRO
√ GNC UNIV PTG

C3(A6U) (4) DAP: as reqd

C3 b. OI PCMMU FORMAT – GPC:
Perform LOAD PCMMU FORMAT (ORBIT) (ORB OPS FS, COMM/INST)

c. SM (GNC,PL) 1 DPS UTILITY
UL CNTL AUTO – ITEM 35 EXEC (*)

d. If reqd, perform LOAD PDI DECOM FORMAT (ORB OPS FS, COMM/INST)

e. Configure IDPs:

C2 GPC/CRT 03 EXEC
GPC/CRT X/4 EXEC
Configure MDUs as desired
IDP/CRT 3 PWR – OFF

O6 f. SM GPC OUTPUT – TERM

g. Configure for Orbit:

O14, O15, O16 RGAs 1,2,3,4 – OFF
RJDA/RJDF (all) – As reqd
cb ADTA (four) – op

O8 MLS (three) – OFF

h. If Orbit config desired, establish single G2:

C2,R11L (1) IDP/CRT X MAJ FUNC – GNC
GNC 0 GPC MEMORY
CONFIG – ITEM 1 +2 EXEC
Assign desired GPC(s), all FC strings, CRTs, and MMs per table

Recovered PASS GPCs

	1,2,3 1,2,4 1,3,4	2,3,4
CONFIG GPC	2 10000	2 02000
STR 1	1	2
2	1	2
3	1	2
4	1	2
PL 1/2	0	0
CRT 1	1	2
2	1	2
3	0	0
4	1	2
L 1	0	0
2	0	0
MM 1	1	2
2	1	2

C2,R11L (2) GNC, OPS 201 PRO
√ GNC UNIV PTG
C3(A6U) (3) DAP: as reqd
C2 (4) Configure OPS 0 GPC as G3FD (√SPEC 6):
IDP/CRT X MAJ FUNC – PL
GPC/CRT target GPC/X EXEC
PL 0 GPC MEMORY
CONFIG – ITEM 45 +3 EXEC
GPC – ITEM 46 +X EXEC (X = target GPC)
STORE – ITEM 47 EXEC
Store complete when MC = 03
(5) Config G3 NBAT for FD GPC per table

Recovered PASS GPCs

	1,2,3 1,2,4	1,3,4 2,3,4
CONFIG GPC	3 02000	3 00300
STR 1	2	3
2	2	3
3	2	3
4	2	3
PL 1/2	0	0
CRT 1	2	3
2	2	3
3	2	3
4	0	0
L 1	0	0
2	0	0
MM 1	2	3
2	2	3

C2, R11L (6) √All IDPs deassigned from FD GPC
O6 (FD GPC) GPC MODE – STBY (tb-bp)
– HALT
– STBY (tb-RUN)
– HALT (tb-bp)

i. Final Orbit config established:
(1) Reference Final Configuration Table Set III, 5-81
(2) As time permits work GPC FRP-1 to re-IPL the BFS into GPC 5 >>

16. If four PASS GPCs active:
a. Config GNC GPCs for OPS 2:
C2,R11L (1) IDP/CRT X MAJ FUNC – GNC
GNC 0 GPC MEMORY
√CONFIG – ITEM 1 +2 EXEC
Assign desired GPC(s) all FC strings, CRTs, and MMs per table

CONFIG GPC	2 12000
STR 1	1
2	2
3	1
4	2
PL 1/2	0
CRT 1	1
2	2
3	0
4	2
L 1	0
2	0
MM 1	1
2	2

(2) GNC, OPS 201 PRO
√ GNC UNIV PTG
C3(A6U) (3) DAP: as reqd

GPC FRP-4 (Cont)

C3 b. OI PCMMU FORMAT – GPC:
Perform LOAD PCMMU FORMAT (ORBIT) (ORB OPS FS, COMM/INST)

c. SM (GNC,PL) 1 DPS UTILITY
UL CNTL AUTO – ITEM 35 EXEC (*)

d. If required, perform LOAD PDI DECOM FORMAT (ORB OPS FS, COMM/INST)

e. Configure IDPs:

C2 GPC/CRT 03 EXEC
GPC/CRT X/4 EXEC
Configure MDUs as desired
IDP/CRT 3 PWR – OFF

O6 f. SM GPC OUTPUT – TERM

g. Configure for Orbit:

O14, O15, O16 RGAs 1,2,3,4 – OFF
RJDA/RJDF (all) – as reqd
cb ADTA (four) – op

O8 MLS (three) – OFF

h. Config GPC3 as G3 FD:

C2 (1) IDP/CRT X MAJ FUNC – PL
GPC/CRT 3/X EXEC

(2) PL 0 GPC MEMORY
CONFIG – ITEM 45 +3 EXEC
GPC – ITEM 46 +3 EXEC
STORE – ITEM 47 EXEC
Store complete when MC = 03

(3) Config G3 NBAT for FD GPC per table

Recovered PASS GPCs

	1,2,3,4
CONFIG GPC	3 00300
STR 1	3
2	3
3	3
4	3
PL 1/2	0
CRT 1	3
2	3
3	3
4	0
L 1	0
2	0
MM 1	3
2	3

O6 (4) √All IDPs deassigned from GPC 3
GPC 3 MODE – STBY (tb-bp)
– HALT
– STBY (tb-RUN)
– HALT (tb-bp)

i. If single GNC GPC config desired:

C2,R11 (1) √IDP/CRT X MAJ FUNC – GNC
GNC 0 GPC MEMORY
CONFIG – ITEM 1 +2 EXEC
Assign GPC 1, all FC strings, CRTs, and MMs per table

C3(A6U) (2) DAP: FREE
VERN(ALT)
GNC, OPS 201 PRO
√GNC UNIV PTG

(3) Pause ~30 sec (DAP settling)

C3(A6U) DAP: as reqd

	1,2,3,4
CONFIG GPC	2 10000
STR 1	1
2	1
3	1
4	1
PL 1/2	0
CRT 1	1
2	1
3	0
4	1
L 1	0
2	0
MM 1	1
2	1

C2

(4) Config GPC 2 as G2 FD:
IDP/CRT X MAJ FUNC – PL
GPC/CRT 2/X EXEC
PL 0 GPC MEMORY
CONFIG – ITEM 45 +2 EXEC
GPC – ITEM 46 +2 EXEC
STORE – ITEM 47 EXEC
Store complete when MC = 02

(5) √All IDPs deassigned from GPC 2:
GPC 2 MODE – STBY (tb-bp)
– HALT
– STBY (tb-RUN)
– HALT (tb-bp)

j. Orbit config established:
(1) Reference Final Configuration Table Set IV A & B, 5-82
(2) As time permits work GPC FRP-1 to re-IPL BFS into GPC 5 >>

GPC FRP-4 (Cont)

Final Configuration Tables

I. Single PASS GPC

Final configuration for GPC 1 recovered					
GPC OPS	1 G3	2 –	3 –	4 –	5 BFS3
POWER OUTPUT MODE	ON NORM RUN	OFF NORM HALT	OFF NORM HALT	OFF NORM HALT	ON BKUP RUN
CONFIG GPC	3 10000				
STR 1 2 3 4 PL 1/2	1 1 1 1 1				
CRT 1 2 3 4	1 1 1 0				
L 1 2	0 0				
MM 1 2	1 1				

Final configuration for GPC 2 recovered					
GPC OPS	1 –	2 G3	3 –	4 –	5 BFS3
POWER OUTPUT MODE	OFF NORM HALT	ON NORM RUN	OFF NORM HALT	OFF NORM HALT	ON BKUP RUN
CONFIG GPC		3 02000			
STR 1 2 3 4 PL 1/2		2 2 2 2 2			
CRT 1 2 3 4		2 2 2 0			
L 1 2		0 0			
MM 1 2		2 2			

Final configuration for GPC 3 recovered					
GPC OPS	1 –	2 –	3 G3	4 –	5 BFS3
POWER OUTPUT MODE	OFF NORM HALT	OFF NORM HALT	ON NORM RUN	OFF NORM HALT	ON BKUP RUN
CONFIG GPC			3 00300		
STR 1 2 3 4 PL 1/2			3 3 3 3 3		
CRT 1 2 3 4			3 3 3 0		
L 1 2			0 0		
MM 1 2			3 3		

Final configuration for GPC 4 recovered					
GPC OPS	1 –	2 –	3 –	4 G3	5 BFS3
POWER OUTPUT MODE	OFF NORM HALT	OFF NORM HALT	OFF NORM HALT	ON NORM RUN	ON BKUP RUN
CONFIG GPC				3 00040	
STR 1 2 3 4 PL 1/2				4 4 4 4 4	
CRT 1 2 3 4				4 4 4 0	
L 1 2				0 0	
MM 1 2				4 4	

Final Configuration Tables (Cont)

II. Two PASS GPCs

A. Entry Config

Final configuration for GPCs 1,2 recovered					
GPC OPS	1 G3	2 G3	3 –	4 –	5 BFS3
POWER OUTPUT MODE	ON NORM RUN	ON NORM RUN	OFF NORM HALT	OFF NORM HALT	ON BKUP RUN
CONFIG GPC	3 12000				
STR 1 2 3 4 PL 1/2	1 2 1 2 1				
CRT 1 2 3 4	1 2 1 0				
L 1 2	0 0				
MM 1 2	1 2				

Final configuration for GPCs 1,3 recovered					
GPC OPS	1 G3	2 –	3 G3	4 –	5 BFS3
POWER OUTPUT MODE	ON NORM RUN	OFF NORM HALT	ON NORM RUN	OFF NORM HALT	ON BKUP RUN
CONFIG GPC	3 10300				
STR 1 2 3 4 PL 1/2	1 3 1 3 1				
CRT 1 2 3 4	1 3 1 0				
L 1 2	0 0				
MM 1 2	1 3				

Final configuration for GPCs 1,4 recovered					
GPC OPS	1 G3	2 –	3 –	4 G3	5 BFS3
POWER OUTPUT MODE	ON NORM RUN	OFF NORM HALT	OFF NORM HALT	ON NORM RUN	ON BKUP RUN
CONFIG GPC	3 10040				
STR 1 2 3 4 PL 1/2	1 4 1 4 1				
CRT 1 2 3 4	1 4 1 0				
L 1 2	0 0				
MM 1 2	1 4				

Final configuration for GPCs 2,3 recovered					
GPC OPS	1 –	2 G3	3 G3	4 –	5 BFS3
POWER OUTPUT MODE	OFF NORM HALT	ON NORM RUN	ON NORM RUN	OFF NORM HALT	ON BKUP RUN
CONFIG GPC		3 02300			
STR 1 2 3 4 PL 1/2		3 2 3 2 3			
CRT 1 2 3 4		2 3 2 0			
L 1 2		0 0			
MM 1 2		2 3			

GPC FRP-4 (Cont)

Final Configuration Tables (Cont)

A. Entry Config (Cont)

Final configuration for GPCs 2,4 recovered					
GPC OPS	1 –	2 G3	3 –	4 G3	5 BFS3
POWER OUTPUT MODE	OFF NORM HALT	ON NORM RUN	OFF NORM HALT	ON NORM RUN	ON BKUP RUN
CONFIG GPC		3 02040			
STR 1 2 3 4 PL 1/2		2 4 2 4 2			
CRT 1 2 3 4		2 4 2 0			
L 1 2		0 0			
MM 1 2		2 4			

Final configuration for GPCs 3,4 recovered					
GPC OPS	1 –	2 –	3 G3	4 G3	5 BFS3
POWER OUTPUT MODE	OFF NORM HALT	OFF NORM HALT	ON NORM RUN	ON NORM RUN	ON BKUP RUN
CONFIG GPC			3 00340		
STR 1 2 3 4 PL 1/2			3 4 3 4 3		
CRT 1 2 3 4			3 4 3 0		
L 1 2			0 0		
MM 1 2			3 4		

GPC FRP-4 (Cont)

Final Configuration Tables (Cont)

B. Orbit Config

Final configuration for GPCs 1,2 recovered					
GPC OPS	1 G2	2 SM	3 –	4 –	5 BFS
POWER OUTPUT MODE	ON NORM RUN	ON TERM RUN	OFF NORM HALT	OFF NORM HALT	ON NORM HALT
CONFIG GPC	2 10000	4 02000			
STR 1	1	0			
2	1	0			
3	1	0			
4	1	0			
PL 1/2	0	2			
CRT 1	1	2			
2	1	2			
3	0	0			
4	1	2			
L 1	0	2			
2	0	0			
MM 1	1	2			
2	1	2			

Final configuration for GPCs 1,3 recovered					
GPC OPS	1 G2	2 –	3 SM	4 –	5 BFS
POWER OUTPUT MODE	ON NORM RUN	OFF NORM HALT	ON TERM RUN	OFF NORM HALT	ON NORM HALT
CONFIG GPC	2 10000		4 00300		
STR 1	1		0		
2	1		0		
3	1		0		
4	1		0		
PL 1/2	1		3		
CRT 1	1		3		
2	1		3		
3	0		0		
4	1		3		
L 1	0		3		
2	0		0		
MM 1	1		3		
2	1		3		

Final configuration for GPCs 2,3 recovered					
GPC OPS	1 –	2 G2	3 SM	4 –	5 BFS
POWER OUTPUT MODE	OFF NORM HALT	ON NORM RUN	ON TERM RUN	OFF NORM HALT	ON NORM HALT
CONFIG GPC		2 02000	4 00300		
STR 1		2	0		
2		2	0		
3		2	0		
4		2	0		
PL 1/2		0	3		
CRT 1		2	3		
2		2	3		
3		0	0		
4		2	3		
L 1		0	3		
2		0	0		
MM 1		2	3		
2		2	3		

Final configuration for GPCs 1,4 recovered					
GPC OPS	1 G2	2 –	3 –	4 SM	5 BFS
POWER OUTPUT MODE	ON NORM RUN	OFF NORM HALT	OFF NORM HALT	ON TERM RUN	ON NORM HALT
CONFIG GPC	2 10000			4 00040	
STR 1	1			0	
2	1			0	
3	1			0	
4	1			0	
PL 1/2	0			4	
CRT 1	1			4	
2	1			4	
3	0			0	
4	1			4	
L 1	0			4	
2	0			0	
MM 1	1			4	
2	1			4	

GPC FRP-4 (Cont)

Final Configuration Tables (Cont)

B. Orbit Config (Cont)

Final configuration for GPCs 2,4 recovered					
GPC OPS	1 –	2 G2	3 –	4 SM	5 BFS
POWER OUTPUT MODE	OFF NORM HALT	ON NORM RUN	OFF NORM HALT	ON TERM RUN	ON NORM HALT
CONFIG GPC		2 02000		4 00040	
STR 1 2 3 4 PL 1/2		2 2 2 2 0		0 0 0 0 4	
CRT 1 2 3 4		2 2 0 2		4 4 0 4	
L 1 2		0 0		4 0	
MM 1 2		2 2		4 4	

Final configuration for GPCs 3,4 recovered					
GPC OPS	1 –	2 –	3 G2	4 SM	5 BFS
POWER OUTPUT MODE	OFF NORM HALT	OFF NORM HALT	ON NORM RUN	ON TERM RUN	ON NORM HALT
CONFIG GPC			2 00300	4 00040	
STR 1 2 3 4 PL 1/2			3 3 3 3 0	0 0 0 0 4	
CRT 1 2 3 4			3 3 0 3	4 4 0 4	
L 1 2			0 0	4 0	
MM 1 2			3 3	4 4	

GPC FRP-4 (Cont)

Final Configuration Tables (Cont)

III. Three PASS GPCs

Final configuration for GPCs 1,2,3 recovered					
GPC OPS	1 G2	2 G3FD	3 SM	4 –	5 BFS
POWER OUTPUT MODE	ON NORM RUN	ON NORM HALT	ON TERM RUN	OFF NORM HALT	ON NORM HALT
CONFIG GPC	2 10000	3(FD) 02000	4 00300		
STR 1	1	2	0		
2	1	2	0		
3	1	2	0		
4	1	2	0		
PL 1/2	0	0	3		
CRT 1	1	2	3		
2	1	2	3		
3	0	2	0		
4	1	0	3		
L 1	0	0	3		
2	0	0	0		
MM 1	1	2	3		
2	1	2	3		

Final configuration for GPCs 1,2,4 recovered					
GPC OPS	1 G2	2 G3FD	3 –	4 SM	5 BFS
POWER OUTPUT MODE	ON NORM RUN	ON NORM HALT	OFF NORM HALT	ON TERM RUN	ON NORM HALT
CONFIG GPC	2 10000	3(FD) 02000		4 00040	
STR 1	1	2		0	
2	1	2		0	
3	1	2		0	
4	1	2		0	
PL 1/2	0	0		4	
CRT 1	1	2		4	
2	1	2		4	
3	0	2		0	
4	1	0		4	
L 1	0	0		4	
2	0	0		0	
MM 1	1	2		4	
2	1	2		4	

Final configuration for GPCs 1,3,4 recovered					
GPC OPS	1 G2	2 –	3 G3FD	4 SM	5 BFS
POWER OUTPUT MODE	ON NORM RUN	OFF NORM HALT	ON NORM HALT	ON TERM RUN	ON NORM HALT
CONFIG GPC	2 10000		3(FD) 00300	4 00040	
STR 1	1		3	0	
2	1		3	0	
3	1		3	0	
4	1		3	0	
PL 1/2	0		0	4	
CRT 1	1		3	4	
2	1		3	4	
3	0		3	0	
4	1		0	4	
L 1	0		0	4	
2	0		0	0	
MM 1	1		3	4	
2	1		3	4	

Final configuration for GPCs 2,3,4 recovered					
GPC OPS	1 –	2 G2	3 G3FD	4 SM	5 BFS
POWER OUTPUT MODE	OFF NORM HALT	ON NORM RUN	ON NORM HALT	ON TERM RUN	ON NORM HALT
CONFIG GPC		2 02000	3(FD) 00300	4 00040	
STR 1		2	3	0	
2		2	3	0	
3		2	3	0	
4		2	3	0	
PL 1/2		0	0	4	
CRT 1		2	3	4	
2		2	3	4	
3		0	3	0	
4		2	0	4	
L 1		0	0	4	
2		0	0	0	
MM 1		2	3	4	
2		2	3	4	

GPC FRP-4 (Cont)

Final Configuration Tables (Cont)

IV. Four PASS GPCs

A. Dual G2 Config

Final configuration for GPCs 1,2,3,4 recovered					
GPC OPS	1 G2	2 G2	3 G3FD	4 SM	5 BFS
POWER OUTPUT MODE	ON NORM RUN	ON NORM RUN	ON NORM HALT	ON TERM RUN	ON NORM HALT
CONFIG GPC	2 12000		3(FD) 00300	4 00040	
STR 1 2 3 4 PL 1/2	1 2 1 2 0		3 3 3 3 0	0 0 0 0 4	
CRT 1 2 3 4	1 2 0 2		3 3 3 0	4 4 0 4	
L 1 2	0 0		0 0	4 0	
MM 1 2	1 2		3 3	4 4	

B. Single G2 Config

Final configuration for GPCs 1,2,3,4 recovered					
GPC OPS	1 G2	2 G2FD	3 G3FD	4 SM	5 BFS
POWER OUTPUT MODE	ON NORM RUN	ON NORM HALT	ON NORM HALT	ON TERM RUN	ON NORM HALT
CONFIG GPC	2 10000		3(FD) 00300	4 00040	
STR 1 2 3 4 PL 1/2	1 1 1 1 0		3 3 3 3 0	0 0 0 0 4	
CRT 1 2 3 4	1 1 0 1		3 3 3 0	4 4 0 4	
L 1 2	0 0		0 0	4 0	
MM 1 2	1 1		3 3	4 4	

GPC FRP-7
DPS RECONFIG FOR LOSS OF AV BAY COOLING (ASCENT/ORBIT)

NOTE

Procedure is designed to protect GPCs from overheating by moving G2, SM, BFS functions into cooled Av Bay GPCs (if not already there). G3FD and G2FD functions are placed into uncooled Av Bay GPCs and halted. If BFS is moved, new BFS GPC will be dumped to provide good BFS for Entry.

For Ascent, this FRP assumes LOSS OF AV BAY 1(2,3) COOLING/AV BAY 1(2,3) FIRE procedure (ASC PKT, PWRDN) has been accomplished

If Orbit Config is G8 (FCS C/O), substitute for G2 where appropriate. If Orbit Config is G3, go to LOSS OF AV BAY 1(2,3) COOLING (ENT PKT, PWRDN) >>

	Perform steps
ASCENT (G1)	a-h
ORBIT (G2,G8/S2)	i-q

ASCENT

Initial ASCENT Config – Av Bay 1					
GPC OPS	1 –	2 G1	3 G1	4 –	5 BFS
POWER OUTPUT MODE	ON NORM HALT	ON NORM RUN	ON NORM RUN	ON NORM HALT	ON BKUP RUN
CONFIG GPC	1 12340				
STR 1 2 3 4 PL 1/2	3 2 3 2 2				
CRT 1 2 3 4	2 2 3 0				
L 1 2	1 2				
MM 1 2	2 3				

Initial ASCENT Config – Av Bay 2					
GPC OPS	1 G1	2 –	3 G1	4 G1	5 BFS
POWER OUTPUT MODE	ON NORM RUN	ON NORM HALT	ON NORM RUN	ON NORM RUN	ON NORM HALT
CONFIG GPC	1 12340				
STR 1 2 3 4 PL 1/2	1 4 3 4 1				
CRT 1 2 3 4	1 4 3 0				
L 1 2	1 2				
MM 1 2	1 3				

Initial ASCENT Config – Av Bay 3					
GPC OPS	1 G1	2 G1	3 –	4 G1	5 BFS
POWER OUTPUT MODE	ON NORM RUN	ON NORM RUN	ON NORM HALT	ON NORM RUN	ON BKUP RUN
CONFIG GPC	1 12340				
STR 1 2 3 4 PL 1/2	1 2 4 2 1				
CRT 1 2 3 4	1 2 4 0				
L 1 2	1 2				
MM 1 2	1 2				

NOTE

No keyboard entries or sw throws 10 sec:
Before and after moding PASS GPCs to RUN
Before OPS transition or set expansion/contraction requests until new OPS base page is displayed

a. Establish G2 freeze-dry GPC (Av Bay 1 – GPC 1; Av Bay 2 – GPC 2; Av Bay 3 – GPC 3)
- Perform FREEZE-DRY REASSIGNMENT..... DPS SSR-5

b. Secure BFS (Av Bay 1,3 only)

C2 • BFS GNC,OPS 000 PRO
C3 • BFC CRT DISP – OFF
•√All IDPs deassigned from BFS
O6 • GPC MODE 5 – STBY,HALT (tb-bp)
• OUTPUT 5 – NORM

c. Transition to GNC OPS 2

C2 GNC OPS 0 GPC MEMORY
- CONFIG ITEM 1+2 EXEC
- Modify MC 2 per table →
- GNC, OPS 201 PRO

GNC UNIV PTG

Av Bay

	1	2	3
CONFIG GPC	2 02000	2 10000	2 12000
STR 1	2	1	1
2	2	1	2
3	2	1	1
4	2	1	2
PL 1/2	0	0	0
CRT 1	2	1	1
2	2	1	2
3	0	0	0
4	2	1	2
L 1	0	0	0
2	0	0	0
MM 1	2	1	1
2	2	1	2

d. Transition to OPS 2
- Perform SM REASSIGNMENT..... DPS SSR-4 →

Av Bay

	1	2,3
CONFIG GPC	4 00300	4 00040
STR 1	0	0
2	0	0
3	0	0
4	0	0
PL 1/2	3	4
CRT 1	3	4
2	3	4
3	0	0
4	3	4
L 1	3	4
2	0	0
MM 1	3	4
2	3	4

e. If Av Bay 2, reassign BFS to GPC 3:
- Perform GPC IPL MENU OPTION (PASS/BFS) ..... DPS SSR-7

Dump newly IPL'd BFS:
- Perform GPC S/W INITIATED MEM DUMP GPC (3) (Target)..... DPS SSR-2

C3 • BFC CRT DISP – OFF
•√All IDPs deassigned from BFS
O6 • GPC MODE 3 – STBY,HALT (tb-bp)
• √OUTPUT 3 – NORM

Re-IPL GPC 5:
- Perform GPC IPL – PASS ..... DPS SSR-8

O6 • GPC MODE 5 – STBY (tb-bp),HALT
• – STBY (tb-RUN)
• – HALT (tb-bp)

f. Perform LOAD PCMMU FORMAT (ORB OPS FS, COMM/INST)

g. Config LRU switches:

	Av Bay 1	Av Bay 2	Av Bay 3
O14:A :E	BRAKES MNA – OFF cb MNA ADTA 1 – op	BRAKES MNB – OFF cb MNB ADTA 2 – op	cb ESS 1BC C/W A – op
O16:A :E	BRAKES MNC – OFF cb MNC ADTA 3 – op	BRAKES MNC – OFF cb MNC ADTA 4 – op	
O7	TACAN 1 MODE – OFF (OV103,4) GPS 1 – OFF (OV105) GPS 1 PRE AMPL UPPER – OFF (OV105) GPS 1 PRE AMPL LOWER – OFF (OV105)	TACAN 2 MODE – OFF (OV103,4)	
O8 L4:P	MLS 1 – OFF cb AC3 ΦA LG SNSR 1 – op	MLS 2,3 (two) – OFF cb AC2 ΦA LG SNSR 2 – op	
O13:A O7			cb ESS 1BC C/W A – op TACAN 3 MODE – OFF (OV103,4) GPS 3 – OFF (OV105) GPS 3 PRE AMPL UPPER – OFF (OV105) GPS 3 PRE AMPL LOWER – OFF (OV105)

h. Config IDPs:
- GPC/CRT 03 EXEC
- GPC/CRT SM GPC/4 EXEC

C2
- IDP/CRT3 PWR – OFF
- MDU PWR – OFF (as desired)

At deorbit prep, perform LOSS OF AV BAY AIR COOLING (DEORBIT PREP, CONTINGENCY DELTA)
Final Config matrices at end of FRP

ORBIT

i. Orbit procedure assumes nominal ORBIT DPS config. If Orbit Config is G3 of less than 2 hr from deorbit burn, go to LOSS OF AV BAY 1(2,3) COOLING (ENT PKT, PWRDN) >>

If Av Bay 3:
- If triple G2, perform FREEZE-DRY REASSIGNMENT (Target GPC 3) ..... DPS SSR-5
- Go to step p

If Av Bay 1 and config is single G2:
- Expand set to include GPC 2 (in cooled Av Bay)
- Perform GNC REASSIGNMENT ..... DPS SSR-3 →

CONFIG GPC	2 12000
STR 1 2 3 4 PL 1/2	1 2 1 2 0
CRT 1 2 3 4	1 2 0 2
L 1 2	0 0
MM 1 2	1 2

j. Single G2 GPC ops
- Perform GNC REASSIGNMENT ..... DPS SSR-3 →

	Av Bay 1	Av Bay 2
CONFIG GPC	2 02000	2 10000
STR 1 2 3 4 PL 1/2	2 2 2 2 0	1 1 1 1 0
CRT 1 2 3 4	2 2 0 2	1 1 0 1
L 1 2	0 0	0 0
MM 1 2	2 2	1 1

If Av Bay 1, use BFS for systems monitoring:
- Perform SM CHECKPOINT INITIATE (ORB OPS, DPS)
- If reqd, perform PL/DPS RECONFIG, (PL SYS or SODF: ASSY OPS)

If RMS active:

SM 94 PDRS CONTROL

- Note WR range, PL ID, PL INIT ID, EE ID, SPEC 95 overrides

O6
- SM GPC MODE – STBY (tb-bp), RUN (tb-RUN)
- GPC OUTPUT 4 – NORM

C2
- IDP/CRT3 PWR – ON
- MDU PWR – ON (as desired)

C3
- BFC CRT SEL – 3+1
- DISP – ON
- √BFS GPC PWR – ON
- MODE – RUN (during LOS for C/W tones)
- – STBY (during AOS for gnd comm mgmt)
- If no comm at next AOS, select best antenna

k. If time insufficient for complete reconfig:

Av Bay 1	Av Bay 2
GPC 1,4 MODE – STBY (tb-bp),HALT	GPC 2 MODE – STBY (tb-bp),HALT
– STBY (tb-RUN)	– STBY (tb-RUN)
– HALT (tb-bp)	– HALT (tb-bp)
	√5 MODE – HALT (tb-bp)

- Perform step p, and √MCC

l. Establish freeze-dry GPC (Av Bay 1 – GPC 1; Av Bay 2 – GPC 2)
- Perform FREEZE-DRY REASSIGNMENT ..... DPS SSR-5

m. Reassign GPC 3

If Av Bay 1, reassign SM to GPC 3:
- Perform SM REASSIGNMENT ..... DPS SSR-4 →

C2
- IDP/CRT3 PWR – OFF
- MDU PWR OFF as desired

C3
- BFC CRT DISP – OFF
- √All IDPs deassigned from BFS

O6
- BFS GPC MODE – STBY,HALT (tb-bp)
- √BFS GPC OUTPUT – NORM

If Av Bay 2, reassign BFS to GPC3:
- Perform GPC IPL MENU OPTION (PASS/BFS) ..... DPS SSR-7

CONFIG	4
GPC	00300
STR 1	0
2	0
3	0
4	0
PL 1/2	3
CRT 1	3
2	3
3	0
4	3
L 1	3
2	0
MM 1	3
2	3

GPC FRP-7 (Cont)

n. If time permits or multiple G2FD GPC:

- If Av Bay 2 perform GPC IPL – PASS (target GPC 5)..... DPS SSR-8

GNC OPS 0 GPC MEMORY

- CONFIG ITEM 1+2 EXEC
- Modify MC 2 per table →
- GNC, OPS 201 PRO

GNC UNIV PTG

- Perform FREEZE-DRY REASSIGNMENT (Av Bay 1 – GPC 4; Av Bay 2 – GPC 5) ..... DPS SSR-5

	Av Bay 1	Av Bay 2
CONFIG GPC	2 02040	2 10005
STR 1	2	1
2	2	1
3	2	1
4	2	1
PL 1/2	0	0
CRT 1	2	1
2	2	1
3	0	0
4	2	1
L 1	0	0
2	0	0
MM 1	2	1
2	2	1

o. If single G2FD config desired, halt GPCs in failed Av Bay

	Av Bay 1	Av Bay 2
O6	√GPC 1 MODE – HALT 4 MODE – STBY (tb-bp), HALT – STBY (tb-RUN) – HALT (tb-bp)	√GPC 2 MODE – HALT 5 MODE – STBY (tb-bp), HALT

p. Config LRU switches:

	Av Bay 1 Perform PL PWRDN, then: (OV105)	Av Bay 2 Perform PL PWRDN, then: (OV105)	Av Bay 3
O14:A	√BRAKES MNA – OFF	O15:A √BRAKES MNB – OFF	O13:A cb ESS 1BC C/W A – op
:E	√cb MNA ADTA 1 – op	:E √cb MNB ADTA 2 – op	O7 √TACAN 3 MODE – OFF (OV103,4)
O16:A	√BRAKES MNC – OFF	O16:A √BRAKES MNC – OFF	√GPS 3 – OFF (OV105)
:E	√cb MNC ADTA 3 – op	:E √cb MNC ADTA 4 – op	√GPS 3 PRE AMPL UPPER – OFF (OV105)
O7	√TACAN 1 MODE – OFF (OV103,4)	O7 √TACAN 2 MODE – OFF (OV103,4)	√GPS 3 PRE AMPL LOWER – OFF (OV105)
	√GPS 1 – OFF (OV105)		
	√GPS 1 PRE AMPL UPPER – OFF (OV105)		
	√GPS 1 PRE AMPL LOWER – OFF (OV105)		
O8	√MLS 1 – OFF	O8 √MLS 2,3 (two) – OFF	
L4:P	√cb AC3 ΦA LG SNSR 1 – op	L4:P √cb AC2 ΦA LG SNSR 2 – op	

GPC FRP-7 (Cont)

q. If Av Bay 2, S/W dump newly IPL'd BFS GPC:
- Perform GPC S/W INITIATED MEM DUMP
  (Target GPC3) ..... DPS SSR-2

C3
- BFC CRT DISP – OFF
- √All IDPs deassigned from BFS

O6
- GPC MODE 3 – STBY,HALT (tb-bp)
- √OUTPUT 3 – NORM

At deorbit prep, go to LOSS OF AV BAY AIR COOLING (DEORB PREP, CONTINGENCY DELTAS)

FINAL CONFIG
(Ascent and Orbit with single G2FD GPC)

Av Bay 1					
GPC OPS	1 G2FD	2 G2	3 SM	4 –	5 BFS
POWER OUTPUT MODE	ON NORM HALT	ON NORM RUN	ON TERM RUN	ON NORM HALT	ON NORM HALT
CONFIG GPC	2 02000	4 00300			
STR 1	2	0			
2	2	0			
3	2	0			
4	2	0			
PL 1/2	0	3			
CRT 1	2	3			
2	2	3			
3	0	0			
4	2	3			
L 1	0	3			
2	0	0			
MM 1	2	3			
2	2	3			

Av Bay 2					
GPC OPS	1 G2	2 G2FD	3 BFS	4 SM	5 *
POWER OUTPUT MODE	ON NORM RUN	ON NORM HALT	ON NORM HALT	ON TERM RUN	ON NORM HALT
CONFIG GPC	2 10000	4 00040			
STR 1	1	0			
2	1	0			
3	1	0			
4	1	0			
PL 1/2	0	4			
CRT 1	1	4			
2	1	4			
3	0	0			
4	1	4			
L 1	0	4			
2	0	0			
MM 1	1	4			
2	1	4			

Av Bay 3					
GPC OPS	1 G2	2 G2	3 G2FD	4 SM	5 BFS
POWER OUTPUT MODE	ON NORM RUN	ON NORM RUN	ON NORM HALT	ON TERM RUN	ON NORM HALT
CONFIG GPC	2 12000	4 00040			
STR 1	1	0			
2	2	0			
3	1	0			
4	2	0			
PL 1/2	0	4			
CRT 1	1	4			
2	2	4			
3	0	0			
4	2	4			
L 1	0	4			
2	0	0			
MM 1	1	4			
2	2	4			

* BFS for orbit:
PASS OPS 0 for Ascent

GPC FRP-7 (Cont)

FINAL CONFIG
(Orbit with multiple G2FD GPCs)

Av Bay 1					
GPC OPS	1 G2FD	2 G2	3 SM	4 G2FD	5 BFS
POWER OUTPUT MODE	ON NORM HALT	ON NORM RUN	ON TERM RUN	ON NORM HALT	ON NORM HALT
CONFIG GPC	2 02000	4 00300			
STR 1	2	0			
2	2	0			
3	2	0			
4	2	0			
PL 1/2	0	3			
CRT 1	2	3			
2	2	3			
3	0	0			
4	2	3			
L 1	0	3			
2	0	0			
MM 1	2	3			
2	2	3			

Av Bay 2					
GPC OPS	1 G2	2 G2FD	3 BFS	4 SM	5 G2FD
POWER OUTPUT MODE	ON NORM RUN	ON NORM HALT	ON NORM HALT	ON TERM RUN	ON NORM HALT
CONFIG GPC	2 10000	4 00040			
STR 1	1	0			
2	1	0			
3	1	0			
4	1	0			
PL 1/2	0	4			
CRT 1	1	4			
2	1	4			
3	0	0			
4	1	4			
L 1	0	4			
2	0	0			
MM 1	1	4			
2	1	4			

Av Bay 3					
GPC OPS	1 G2	2 G2FD	3 G2FD	4 SM	5 BFS
POWER OUTPUT MODE	ON NORM RUN	ON NORM HALT	ON NORM HALT	ON TERM RUN	ON NORM HALT
CONFIG GPC	2 10000	4 00040			
STR 1	1	0			
2	1	0			
3	1	0			
4	1	0			
PL 1/2	0	4			
CRT 1	1	4			
2	1	4			
3	0	0			
4	1	4			
L 1	0	4			
2	0	0			
MM 1	1	4			
2	1	4			

DPS SSR-1
GPC HDW INITIATED MEM DUMP

NOTE
Perform during AOS

O6 1. √GPC MODE 1(2,3,4,5) – HALT
PWR 1(2,3,4,5) – ON
OUTPUT 1(2,3,4,5) – TERM

MO42F GPC MEM DUMP – 1(2,3,4,5)
Perform next step at noted dump time

2. SM 62 PCMMU/PL COMM
If reqd, load dump TFL: LOAD PCMMU FORMAT (ORB OPS FS, COMM/INST)

3. If PASS:
Select failed GPC X as downlister (avoids downlist contention)
SM(GNC) 0 GPC MEMORY
DOWNLIST GPC – ITEM 44 +X EXEC

O6 4. GPC MODE 1(2,3,4,5) – STBY (starts dump)
Wait: Double dump of PASS GPC complete after 4 min; single dump of BFS complete after 8 min

O6 GPC MODE 1(2,3,4,5) – HALT (stops dump)
OUTPUT 1(2,3,4,5) – NORM

5. If PASS:
Select lowest ID GNC GPC X as downlister
SM(GNC) 0 GPC MEMORY
DOWNLIST GPC – ITEM 44 +X EXEC

MO42F 6. GPC MEM DUMP – OFF

7. SM 62 PCMMU/PL COMM
If reqd, load post dump TFL:
LOAD PCMMU FORMAT (ORB OPS FS, COMM/INST)

DPS SSR-2
GPC S/W INITIATED MEM DUMP

NOTE

Perform AOS. This procedure will generate a complete GPC Software Memory Dump in all in-flight OPS. Single item entry dumps must be performed in a HDR TFL

1. SM 62 PCMMU/PL COMM
   If reqd, load dump TFL: LOAD PCMMU FORMAT (ORB OPS FS, COMM/INST)

2. If PASS:
   a. If GNC, SM, or PL9 Memory Dump:
      On display assigned to GPC to be dumped,
      GNC(SM,PL) 0 GPC MEMORY
      If a specific GNC GPC to be dumped,
      √DOWNLIST GPC – ITEM 44 +X EXEC

      DUMP START/STOP – ITEM 43 EXEC
      Item 40 (up), 41 (down) entries begin counting
      Dump complete when ITEMs 40,41 blank

   b. If an OPS 0 GPC Memory Dump:
      If target OPS 0 GPC MODE – HALT:
      √Appropriate AV Bay Fan – ON
      √Target GPC PWR – ON
      Target GPC MODE – STBY (tb-RUN)
      – RUN (OUTPUT tb-gray)
      Assign desired IDP/CRT to OPS 0 GPC: GPC/CRT XX EXEC
      PL 0 GPC MEMORY
      DOWNLIST GPC – ITEM 44 +X EXEC
      DUMP START/STOP – ITEM 43 EXEC
      Item 40 (up), 41 (down) entries begin counting
      Dump complete when ITEMs 40,41 blank

      DOWNLIST GPC – ITEM 44 +X EXEC (lowest ID GNC GPC)

MF/OPS	GNC(OPS 0)	SM	PL9
DUMP TIME	2.2	5.7	MAX = 9.7

3. If BFS:
   GNC 0 BFS MEMORY
   DUMP START/STOP – ITEM 24 EXEC
   Item 21 (up), 22 (down) entries begin counting
   Dump complete when ITEMs 21,22 blank (after 8 min)

4. SM 62 PCMMU/PL COMM
   If reqd, load post-dump TFL:
   LOAD PCMMU FORMAT (ORB OPS FS, COMM/INST)

DPS SSR-3
GNC REASSIGNMENT

NOTE

No keyboard entries or sw throws 10 sec:
Before and after moding PASS GPCs to RUN
Before OPS transition or set expansion/contraction requests until new OPS base page is displayed

1. If target GPC MODE – HALT:

L1 √Appropriate AV BAY FAN – ON
O6 √Target GPC PWR – ON
MODE – STBY (tb-RUN), RUN

2. √Target GPC OUTPUT – NORM

3. If SM GPC being deleted:
If reqd, perform PL/DPS RECONFIG, Secure (PL SYS or SODF: ASSY OPS), then:
Perform SM CHECKPOINT INITIATE (ORB OPS, DPS), then:
SM(GNC) 1 DPS UTILITY
UL CNTL
ENA – ITEM 36 EXEC (*)

NOTE

Ku-Band system may be reqd to be taken to Standby to prevent exceeding radiation constraints

4. If AOS:
√MCC for comm config and radiation constraints
If no comm:

A1U KU PWR – STBY
CNTL – PNL,CMD
Go to COMM LOST (ORB PKT, COMM) steps 7 and 8

5. √All GPCs being added to current redundant set in OPS 0.
If new GPC is in simplex ops (SM or PL), select OPS 0 via OPS 000 PRO

C2,R11L 6. IDP/CRT1(2,3,4) MAJ FUNC – GNC
GNC 0 GPC MEMORY
CONFIG – ITEM 1 +X EXEC
X = 1 if G1, 2 if G2, 8 if G8, 3 if G3
Assign desired GPC(s), strings, PL 1/2 (if no SM GPC active), CRTs, and MMs
If SM GPC active, deassign PL 1/2

7. If G3:

O14, RGAs 1,2,3,4 – ON
O15, √RJDA/RJDF (all) – ON
O16 cb ADTA (four) – cl
O8 MLS (three) – ON

C2,R11L 8. Using display assigned to a current redundant set GNC GPC,
IDP/CRT MAJ FUNC – GNC
C3 √BFC CRT DISP – OFF

9. GNC, OPS X X X PRO (√DAP)
XXX = 106 if G1, 201 if G2, 301 if G3, 801 if G8
√ GNC (Major Mode Display)

10. If PASS and BFS in G1(G3) and BFS not engaged, BFS I/O RESET

11. √Appropriate DAP mode selected

12. GNC 0 GPC MEMORY
DOWNLIST GPC – ITEM 44 +X EXEC
X = GNC GPC

13. Go to PL/DPS RECONFIG, Recovery (PL SYS or SODF: ASSY OPS)

DPS SSR-4
SM REASSIGNMENT

NOTE
No keyboard entries or sw throws 10 sec:
Before and after moding PASS GPCs to RUN
Before OPS transition or set expansion/contraction requests until new OPS base page is displayed

A1U 1. KU PWR – STBY
CNTL – PNL,CMD
If no comm, go to COMM LOST (ORB PKT, COMM) steps 7 and 8

2. If target GPC MODE – HALT:
L1 √Appropriate AV BAY FAN – ON
O6 √Target GPC PWR – ON
MODE – STBY (tb-RUN), RUN

3. √Target GPC OUTPUT – NORM

4. If target GPC not in OPS 0:
GNC 0 GPC MEMORY
CONFIG – ITEM 1 +X EXEC
X = 2 if G2, 8 if G8, 3 if G3
Reassign target GPC strings, CRTs, MMs
Do not reconfig target set
√PL 1/2 deassigned from G2/G3/G8
GNC, OPS X X X PRO
DOWNLIST GPC – ITEM 44 +X EXEC
X = nontargeted GNC GPC
O6 GPC MODE (tgt) – STBY (tb-bp)
– RUN (tb-RUN)

5. If SM GPC currently active:
If reqd, perform PL/DPS RECONFIG, Secure (PL SYS or SODF: ASSY OPS), then:
If RMS active:
SM 94 PDRS CONTROL
Note WR range, PL ID, PL INIT ID, EE ID, SPEC 95 Overrides
Perform SM CHECKPOINT INITIATE (ORB OPS, DPS), then:
O6 SM GPC OUTPUT – NORM
MODE – STBY (tb-bp), RUN (tb-RUN)

6. SM(GNC) 1 DPS UTILITY
UL CNTL
ENA – ITEM 36 EXEC (*)
If checkpoint previously done, CKPT RETRV ENA – ITEM 12 EXEC (*)

C2 7. Desired IDP/CRT MAJ FUNC – SM
R11L If desired IDP not currently assigned to target GPC, GPC/CRT target GPC/desired IDP EXEC

8. SM 0 GPC MEMORY
CONFIG – ITEM 1 +4(5) EXEC
Assign desired GPC, PL 1/2, CRTs, LAUNCH 1, MMs

C2 9. SM, OPS 201(401) PRO
√ SM ANTENNA

10. If SM-reassign performed to troubleshoot SM GPC/LRU interface:
If original error recurs, problem at LRU:
Reconfig to prior DPS config
√MCC for possible IFM
If error does not recur, problem at old SM GPC:
Perform DPS FRP-1, then:

11. Reload TFLs, LOAD PCMMU FORMAT (ORB OPS FS, COMM/INST)

12. If RMS PWR – PRI (MCIU powered):
SM 94 PDRS CONTROL (MA, C/W GPC DATA lt on)
I/O ON – ITEM 5 EXEC (*) (C/W GPC DATA lt off)
Update as needed:
WR range, PL ID, PL INIT ID, EE ID, SPEC 95 Overrides
SAFING – CANCEL (tb-bp if arm deselected)

DPS SSR-4 (Cont)

13. If permanent SM GPC being established:
    If BFS not engaged:
O6 Target SM GPC OUTPUT – TERM

    SM(GNC) 1 DPS UTILITY
    UL CNTL
    AUTO – ITEM 35 EXEC (*)
    If reqd, go to PL/DPS RECONFIG, Recovery (PL SYS or SODF: ASSY OPS)

14. Clear software fail votes On MCC GO:
    GNC 0 GPC MEMORY
    I/O ERR LOG RESET
    ITEM 48 EXEC
    SM 0 GPC MEMORY
    I/O ERR LOG RESET
    ITEM 48 EXEC

DPS SSR-5
FREEZE-DRY REASSIGNMENT

NOTE

No keyboard entries or sw throws 10 sec:
Before and after moding PASS GPCs to RUN
Before OPS transition or set expansion/contraction requests until new OPS base page is displayed

O6 1. √Target FD GPC PWR – ON, OUTPUT – NORM, and MODE – RUN

2. If target GPC not in OPS 0:
   Reassign target GPC strings (if reqd):
   GNC 0 GPC MEMORY
   CONFIG – ITEM 1 +X EXEC (X = 1 if G1; 2 if G2; 8 if G8)
   Reassign strings, CRTS, and MMs
   GNC, OPS X X X PRO
   (Tgt) GPC MODE – STBY (tb-bp)
   – RUN (tb-RUN)

C2 3. If IDP not assigned to target GPC:
   Desired IDP/CRT MAJ FUNC – PL
   GPC/CRT target GPC/desired IDP EXEC

4. PL 0 GPC MEMORY
   DOWNLIST GPC – ITEM 44 +X EXEC (X = active GNC GPC)
   STORE MC:
   CONFIG – ITEM 45 +2(3) EXEC
   GPC – ITEM 46 +X EXEC (X = target GPC)
   STORE – ITEM 47 EXEC
   Store complete when MC = 2(3)

5. If G3FD, config NBAT for FD GPC:
   CONFIG – ITEM 1 +3 EXEC
   Assign FD GPC, all strings, CRTs 1,2,3, and MMs

O6 6. (FD GPC) GPC MODE – STBY (tb-bp), HALT
   – STBY (tb-RUN)
   – HALT (tb-bp)

DPS SSR-6
CONTINGENCY/VARIABLE S/W INITIATED MEM DUMP

NOTE
Perform AOS

1. SM 62 PCMMU/PL COMM
   If reqd, load TFL: LOAD PCMMU FORMAT (ORB OPS FS, COMM/INST)

2. If PASS:
   a. On display assigned to GPC to be dumped:
      SM(GNC) 0 GPC MEMORY
      If GNC GPC to be dumped, √DOWNLIST GPC – ITEM 44 +X EXEC

   b. If OPS 0 GPC to be dumped:
      OPS 0 ENA – ITEM 49 EXEC (*) (TFL 163)
      If target OPS 0 GPC MODE – HALT:
        √Appropriate AV Bay Fan – ON
        √Target GPC PWR – ON
          Target GPC MODE – STBY (tb-RUN),RUN
      Assign desired IDP/CRT to OPS 0 GPC: GPC/CRT XX EXEC

   c. MEMORY DUMP (setup):
      If partial dump required: √MCC for input values in setup
      If complete dump required:
        START ID – ITEM 40 +0 0 0 0 0 EXEC
        NUMBER WDS – ITEM 41 +3 2 7 6 7 9 EXEC
        WDS/FRAME – ITEM 42 +X X X EXEC
          (128 If G1/G3, 112 if G2/G8, 48 if SM, 32 if OPS 0/PL9)

   d. MEMORY DUMP (start):
      GNC(SM,PL) 0 GPC MEMORY
      DUMP START/STOP – ITEM 43 EXEC
      Item 40 (up), 41 (down) entries begin counting
      Dump complete when ITEMs 40,41 blank
      Dump time (in min):

MF/OPS	GNC	SM	OPS 0 (PL9)
DUMP TIME	2.2	5.7	9.7

      If GNC GPC or OPS 0 GPC was dumped:
        √DOWNLIST GPC – ITEM 44 +X EXEC (lowest ID GNC GPC)
      If OPS 0/PL9 GPC was dumped:
        OPS 0 ENA – ITEM 49 EXEC (no *)

   e. Perform step 4

3. If BFS:
   a. MEMORY DUMP (setup):
      If partial dump required: √MCC for input values in setup
      If complete dump required:
        GNC 0 BFS MEMORY
        START ID – ITEM 21 +0 0 0 0 0 EXEC
        NUMBER WDS – ITEM 22 +2 6 2 1 4 4 EXEC
        WDS/FRAME – ITEM 23 +3 2 EXEC

   b. MEMORY DUMP (start):
      GNC 0 BFS MEMORY
      DUMP START/STOP – ITEM 24 EXEC
      Item 21 (up), 22 (down) entries begin counting
      Dump complete when ITEMs 21,22 blank (after 8 min)

4. SM 62 PCMMU/PL COMM
   If reqd, load post-dump TFL: LOAD PCMMU FORMAT (ORB OPS FS, COMM/INST)

DPS SSR-7
GPC IPL MENU OPTION (PASS/BFS)

NOTE

No keyboard entries or sw throws 10 sec:
Before and after moding PASS GPCs to RUN
Before OPS transition or set expansion/contraction requests until new OPS base page is displayed

NOTE

√MCC for reapplication of GMEMs as reqd

1. SM 1 DPS UTILITY
   IPL SOURCE SW MASK – ITEM 38 EXEC (no *)

C2 2. IDP/CRT 3(1,2) PWR – ON
C3 BFC CRT DISP – ON
SEL – 3+1(1+2, 2+3) (Expect big 'X', POLL FAIL on MDU in DPS mode)

O6 3. IPL SOURCE – MMU 1(2)
GPC MODE 1(2,3,4,5) – HALT (tb-bp)
OUTPUT 1(2,3,4,5) – NORM (tb-bp)

4. GPC PWR 1(2,3,4,5) – OFF,ON

If BFS engaged:
O14:E, O15:E √cb DDU L (two) – cl

F7 FLT CNTLR PWR – ON
BFS ENGAGE pb – push
FLT CNTLR PWR – OFF
O14:E, O15:E cb DDU L (two) – as reqd

If off-diagonal CAM lts on, execute error log reset:
GNC 0 GPC MEMORY
ERR LOG RESET – ITEM 48 EXEC
Repeat for SM, PL, OPS 0 as applicable

5. IPL 1(2,3,4,5) pb – push (tb-IPL, then bp within 2 min)

6. When tb – bp or 2 min:
O6 IDP LOAD 3(1,2) – LOAD
GPC MODE 1(2,3,4,5) – STBY (Solid State MMU: tb remains bp, no CAM diagonal or Master Alarm expected)

7. If GPC IPL MENU does NOT appear in 2 min:
GPC MODE 1(2,3,4,5) – HALT
If first attempt:
IPL SOURCE – MMU 2(1)
Go to step 4 and proceed (one time only)

8. If GPC IPL MENU appears:
√ID of GPC is correct
Record MSGS STILL IN LIST _____
Record ERROR/MSG CODEs in space provided below, pressing MSG RESET to cycle through list until MSGS STILL IN LIST = 0

Nominal Codes

1. ERROR/MSG CODE_____ √132 (GPCIPL XX.XX.XX.XX.XX LOADED)
2. ERROR/MSG CODE_____ √137 (DCP XX.XX.XX.XX.XX LOADED)
3. ERROR/MSG CODE_____
4. ERROR/MSG CODE_____
5. ERROR/MSG CODE_____

NOTE

If ERROR/MSG CODEs 097 (no IDP poll response) and/or 112 (IDP BITE error) are received in addition to the two nominal codes, ignore and continue. For any other codes, STOP. √MCC

9. If PASS IPL desired:
   a. Load desired copy of PASS software from MM ITEM 1(3,5) EXEC (*) (MODE tb-RUN within 2 min) (Expect big 'X,' POLL FAIL on MDU in DPS mode)
   O6 b. When tb – RUN or 2 min:
   GPC MODE 1(2,3,4,5) – RUN
   √OUTPUT 1(2,3,4,5) – NORM (tb-gray)
   C2,R11 Desired IDP/CRT MAJ FUNC – PL
   BFC CRT DISP – OFF
   GPC/CRT IPL'd GPC/desired IDP EXEC
   c. If PL 0 GPC MEMORY does NOT appear in 2 min:
   GPC MODE 1(2,3,4,5) – HALT
   If first attempt:
   C3 BFC CRT DISP – ON
   O6 IPL SOURCE – MMU 2(1)
   Go to step 4 and proceed (one time only)
   If second attempt:
   GPC PWR 1(2,3,4,5) – OFF

d. IPL SOURCE – OFF

e. Go to step 11

10. If BFS IPL desired:

a. If orbit config:
On MCC GO, select PCMMU format

C3 √OI PCMMU FORMAT – GPC
[X: SM 62 PCMMU/PL COMM]
PCMMU FMT SEL FXD – ITEM 1 EXEC (**)

b. Load desired copy of BFS software from MM:
ITEM 2(4) EXEC (**)

c. If 'BSL XX.XX.X.XX.XX LOADED' does not appear within 2 min:
GPC MODE 1(2,3,4,5) – HALT
If first attempt:
IPL SOURCE – MMU 2(1)
Go to step 4 and proceed (one time only)

d. If 'BSL XX.X.XX.XX LOADED' appears (within 2 min),
MSG RESET pb – push (repeat until 'MSGS STILL IN LIST' = 0)

e. Expect 'KSC XX.XX.X.XX.XX LOADED SET MMU SEL SW TO OFF'
If 'KSC X.XX.X.XX.XX LOADED' appears,
continue with procedure and notify MCC when convenient

O6 f. IPL SOURCE – OFF
MSG RESET pb – push (repeat until 'MSGS STILL IN LIST' = 0)

g. √IDP/CRT MAJ FUNC – GNC
If [GNC 0 BFS MEMORY] does not appear within 2 min:
O6 GPC MODE 1(2,3,4,5) – HALT
If first attempt:
IPL SOURCE – MMU 2(1)
Go to step 4 and proceed (one time only)
If second attempt:
GPC PWR 1(2,3,4,5) – OFF

h. If entry config:
BFS/GNC, OPS 301 PRO

i. If orbit config, verify BFS will track PASS strings:
When time permits, on MCC GO:
O14,O15 All RGAs – ON
O16 cb ADTA (four) – cl
O8 MLS (three) – ON
O14,O15,O16 √Primary RJD LOGIC,DRIVER (sixteen) – ON
All strings, CRTs, MMs, assigned to current GNC GPCs in MC3
PASS, GNC OPS 301 PRO
BFS, GNC, OPS 301 PRO
BFS, GNC, OPS 000 PRO
PASS, GNC, OPS 201 PRO
O14,O15 All RGAs – OFF
O16 cb ADTA (four) – op
O8 MLS (three) – OFF
[GNC 22 S TRK/COAS CNTL]
S TRK -Y,-Z: STAR TRK – ITEM 3,4 EXEC (**)
[GNC 21 IMU ALIGN] ; RESUME
Reconfig DAP and attitude per FLIGHT PLAN
If Group B(C) PWRDN:
√DAP: VERN
O14,O15,O16 Primary RJD LOGIC,DRIVER (sixteen) – OFF
O14 RJDA 1A L2/R2 MANF DRIVER – ON

j. Select program PCMMU FORMAT:
C3 √OI PCMMU FORMAT – GPC
[X: SM 62 PCMMU/PL COMM]
PCMMU FMT PGM – ITEM 2 EXEC
Power off IDP/CRTs as reqd

11. [SM 1 DPS UTILITY]
IPL SOURCE SELECT SW MASK – ITEM 38 EXEC (**)

NOTE

No keyboard entries or sw throws 10 sec:
Before and after moding PASS GPCs to RUN
Before OPS transition or set expansion/contraction requests until new OPS base page is displayed

NOTE

√MCC for reapplication of GMEMs as reqd

1. SM 1 DPS UTILITY
   IPL SOURCE SW MASK – ITEM 38 EXEC (no *****)

C3 2. BFC CRT DISP – OFF (BFS will default to IDPs 1,2 if engaged)

O6 3. IPL SOURCE – MMU 1(2)
   GPC OUTPUT 1(2,3,4,5) – NORM (tb-bp)
   MODE 1(2,3,4,5) – HALT (tb-bp)

4. GPC PWR 1(2,3,4,5) – OFF,ON
   If BFS engaged:
O14:E, O15:E √cb DDU L (two) – cl

F7 FLT CNTLR PWR – ON
BFS ENGAGE pb – push
FLT CNTLR PWR – OFF
O14:E, O15:E cb DDU L (two) – as reqd

If off-diagonal CAM lts on, execute error log reset:
GNC 0 GPC MEMORY
ERR LOG RESET – ITEM 48 EXEC
Repeat for SM, PL, OPS 0 as applicable

5. IPL 1(2,3,4,5) pb – push (tb-IPL, then bp within 2 min)

6. When tb – bp or 2 min:
   GPC MODE 1(2,3,4,5) – STBY (Solid State MMU: tb RUN within 2 min, no CAM or Master Alarm expected)

7. When tb – RUN or 2 min, determine if IPL'd GPC can command IDP:

If BFS not engaged:

O6 a. GPC MODE1(2,3,4,5) – RUN (tb remains RUN)
√OUTPUT 1(2,3,4,5) – NORM (tb-gray)

C2, R11 b. Desired IDP/CRT MAJ FUNC – PL

c. GPC/CRT IPL'd GPC/desired IDP EXEC

d. √ PL 0 GPC MEMORY driven by IPL'd GPC

If BFS engaged:

C3 a. BFC CRT DISP – ON
SEL – 3+1

b. If BFS commanding IDP2,
BFS – GPC/CRT 02 EXEC

C2 c. IDP/CRT2 MAJ FUNC – PL

O6 d. GPC MODE 1(2,3,4,5) – RUN (tb remains RUN)
OUTPUT 1(2,3,4,5) – NORM (tb-bp)

e. If another PASS GPC active, using IDP2
GPC/CRT IPL'd GPC/2 EXEC
√ 2: PL 0 GPC MEMORY driven by IPL'd GPC

8. If GPC CANNOT command IDP:
O6 GPC MODE 1(2,3,4,5) – HALT
If first IPL attempt:
C3 IPL SOURCE – MMU 2(1)
BFS CRT DISP – OFF
Go to step 4 and proceed (one time only)
If second IPL attempt:
GPC PWR 1(2,3,4,5) – OFF

O6 9. IPL SOURCE – OFF

10. SM 1 DPS UTILITY
    IPL SOURCE SW MASK – ITEM 38 EXEC (*****)

DPS SSR-9
DEU IPL-PASS/BFS

NOTE

Procedure assumes active PASS kybd available, functional PASS GPC in SM OPS 2/4 POST IPL OPS 0, PL9, or functional BFS GPC. If loading from BFS, note that PASS critical formats are not used by BFS. DEU has full capability and CRT can be assigned to PASS via PASS GPC/CRT kybd entry if desired and used to support all displays except the following:

FAULT	GNC SYS SUMM 1	OVERRIDE
HORIZ SIT	ENTRY TRAJ 1(2,3,4,5)	RCS
VERT SIT 1(2)	GPC MEMORY	
XXXXX MNVR YYYYY	S TRK/COAS CNTL	
XXXXXX TRAJ	IMU ALIGN	

The SM common buffer is utilized during SM 2/4 DEU IPL. Other operations which contend for the buffer are TFL loads, SM checkpoint/restore, orbiter mass memory read/write SPEC operations, and crew text uplinks (TUMMS)

C2/R11L 1. √CRT1(2,3,4) PWR – ON

CRT1(2,3,4) MAJ FUNC – SM (use PL if loading from PL9, Post IPL OPS 0, or BFS GPC)

C3 2. √DEU not assigned to BFS via BFC CRT DISP/SEL switches
On active PASS kybd,
C2/R11L GPC/CRT 0/1(2,3,4) EXEC
O6 DEU 1(2,3,4) LOAD – LOAD (repeat if reqd)
√DEU LOAD msg appears on CRT

IF NO RESPONSE
C2/R11L CRT1(2,3,4) PWR – OFF, then ON
O6 DEU 1(2,3,4) LOAD – LOAD (repeat if reqd)

3. When DEU LOAD msg appears on CRT, on active PASS/BFS kybd:
C2/R11L GPC/CRT SM OPS 2/4 (PL9, POST IPL OPS 0, BFS) GPC/1(2,3,4) EXEC

If 'CM BUF BSY CRT X' msg annunciated, wait for contending operation to complete, then retry DEU IPL:
Go back to step 2 and proceed

4. √'IPL COMPLETE' msg followed by active display on CRT (ANTENNA for SM OPS 2/4, GPC MEMORY for POST IPL OPS 0, MASS MEMORY R/W for PL9, or blank display with active time fields for BFS)

IF NO RESPONSE OR 'IPL INCOMPLETE' MSG APPEARS ON CRT
C2/R11L CRT1(2,3,4) PWR – OFF, then ON
O6 DEU 1(2,3,4) LOAD – LOAD (repeat if reqd)

5. When active display appears,
C2/R11L CRT1(2,3,4) MAJ FUNC – GNC (SM,PL) (as desired)
If loading from BFS, CRT can be assigned to PASS via PASS GPC/CRT kybd entry if desired. However, displays noted above will not be supported

BFS FSM INDEX 6-3

6.1 AV BAY/CABIN AIR
6.1a 'S66 CABIN FAN' – CABIN FAN ΔP 6-4
6.1b 'S66 AV BAY 1(2,3) TEMP' – AV BAY TEMP 6-5
6.1c 'S66 AV BAY 1(2,3) FAN' – AV BAY FAN ΔP 6-6
6.1d 'S66 IMU FN SPD A(B,C)'
'S66 IMU FAN DP' – CABIN IMU 6-8

6.2 CABIN ATM
PRESSURE CONTROL SYSTEM SCHEMATIC 6-12
6.2a (see Note A) – O2(N2) FLOW ↑ 6-13
6.2b (see Note A) – CABIN PRES ↑↓ 6-15
6.2c 'S66 CABIN PPO2 A(B)' – PPO2 ↑↓ 6-21
6.2d 'S66 CAB N2 REG P 1(2)' – N2 REG P ↑↓ 6-24
6.2e 'S66 CAB O2 REG P 1(2)' – O2 REG P ↑ 6-25
6.2f RESERVED ..... not used
6.2g 'S66 CAB N2 QTY 1(2)' – N2 QTY ↓ 6-26
6.2h RESERVED ..... not used
6.2i 'S66 CAB H2O N2 P 1(2)' – H2O TK N2 P ↓ 6-27
6.2j 'S66 HUMID SEP A(B)' – HUMID SEP ↓ 6-29

6.3 RESERVED

6.4 FREON/H2O LOOP
EVAPORATORS SCHEMATIC 6-30
FREON FLOW SCHEMATIC 6-31
H2O LOOPS SCHEMATIC 6-32
6.4a (see Note A) – EVAP OUT T ↑↓ 6-33
6.4b (see Note A) – FREON FLOW LOW 6-38
6.4c RESERVED ..... not used
6.4d 'S88 FRN PL HX 1(2)' – FRN FLOW PROP VLV, PL HX FLOW ↓ 6-42
6.4e 'S88 FRN AFT CP 1(2)' – AFT COLDPLATE FLOW ↓ 6-44
6.4f 'S88 FREON QTY 1(2)' – ACCUM QTY ↓ 6-45
6.4g 'S88 EVAP HI LD TEMP' – EVAP TEMP HI LOAD INBD (OUTBD) DUCT(NOZ) ↑↓ 6-47
6.4h 'S88 EVAP TOP TEMP' – EVAP TOPPING DUCT T FWD (AFT), L(R) ↑↓ 6-48
6.4i 'S88 EVAP TOP TEMP' – EVAP TOPPING L(R) NOZ ↑↓ 6-49
6.4j 'S88 EVAP FDLN T A(B)' – EVAP FDLN TEMP FWD(MID, AFT,TOP,HI LOAD,ACCUM) ↑↓ 6-50
6.4k RESERVED ..... not used
6.4l 'S88 H2O PUMP P 1(2)'
'SM2 H2O PUMP P 1(2)' – H2O PUMP P 1(2) ↑↓ 6-51
6.4m 'S88 H2O PUMP P 1(2)' – H2O PUMP ΔP 1(2) ↑↓ 6-55
6.4n 'S88 H2O LOOP 1(2) QTY' – H2O ACCUM QTY 1(2) ↑↓ 6-58
6.4o 'S88 H2O LOOP 1(2) FLOW' – H2O ICH FLOW 1(2) ↓ 6-60
6.4p 'S88 H2O LOOP 1(2) TEMP' – H2O ICH OUT T 1(2) ↓, CAB HX IN T 1(2) ↓, PUMP OUT T 1(2) ↑↓ 6-62

NOTE A
The identified MAL represents a support procedure that is entered from other procedures or on MCC call

6.5 SPLY H2O
SUPPLY H2O SCHEMATIC 6-66
SUPPLY H2O STORAGE SCHEMATIC 6-68
6.5a RESERVED ..... not used
6.5b RESERVED ..... not used
6.5c 'S66 SPLY H2O TEMP'
'S66 WASTE H2O PRES'
'S66 WASTE H2O TEMP' – WASTE H2O PRESS ↑↓, SUPPLY(WASTE) H2O DMP LN T ↑↓, SUPPLY(WASTE) NOZ T A(B) ↑ 6-69
6.5d 'S66 SPLY H2O PRES' – H2O SPLY PRESS ↓↑ 6-71

6.6 RESERVED

6.7 EXT A/L
6.7a EXT A/L H2O LN T ↑↓ 6-72
6.7b STRUC T ↑↓ 6-73

6.8 CO2
6.8a RESERVED ..... not used
6.8b 'S66 CAB PPCO2' – PPCO2 ↑ 6-75

ECLS SSR
ECLS SSR-1 RESERVED ..... not used
SSR-2 FES CORE FLUSH PROCEDURE 6-76
SSR-3 RECONFIG TO ALT PCS SYS (AUTO OPS) 6-78
SSR-4 H2O LOOP 6-81
SSR-5 FES RESTART 6-83
SSR-6 CABIN EQUIP PWRDN 6-84
SSR-7 FLASH EVAPORATOR CHECKOUT 6-85
SSR-8 SMALL CABIN-LEAK ISOL 6-87
SSR-9 RAD ISOL RECOVERY 6-89
SSR-10 H2O PUMP OPS VIA GPC 6-90
SSR-11 FES FEEDLINE PURGE 6-91
SSR-12 AV BAY FIRE RECOVERY/RECONFIG 6-93
SSR-13 ON-ORBIT RAD CNTLR SWITCH 6-97
SSR-14 ECLS COMPUTATION INHIBIT 6-98
SSR-15 RESERVED ..... not used
SSR-16 FREE WATER LEAKING FROM HUM SEP 6-99
SSR-17 WATER TANK REPRESS/DEPRESS 6-100
SSR-18 SMALL SUPPLY H2O LEAK ISOL 6-101
SSR-19 WASTE H2O LEAK ISOL 6-103
SSR-20 SMALL SUPPLY H2O LEAK ISOL – WATER TRANSFER CONFIGURATION 6-105
SSR-21 MANUAL RAD BYPASS VALVE CONTROL 6-107

ECLS FRP
ECLS FRP-1 MANUAL CABIN ATMOSPHERE MANAGEMENT 6-108
FRP-2 POST-FIRE CABIN CLEANUP CONTINUATION 6-109
FRP-3 FIRE/HAZ SPILL O2 CONTROL 6-111
FRP-4 O2 LEAK CONTROL 6-114
FRP-5 CABIN AMMONIA CONTAMINATION CLEANUP (ISS AMMONIA LEAK) 6-117

The following Fault Msgs have no corresponding MAL procedures in this book:

'S66 CAB HX OUT TEMP'
'S78 CABIN O2 CONC'
'SM1 SMOKE CAB L FD'
'SM1 SMOKE CAB R FD'
'SM1 SMOKE CAB HX'
'SM1 SMOKE BAY 1(2,3) A(B)'
'S66 VAC VNT N2 TEMP'
'S66 CAB AIRLK PRESS'
'177 EXT A/L PRESS'
'177 A/L VEST DP'
'177 AL H2O LCG P1(2)'
'177 AL H2O XFER P'

BFS FSM INDEX

6.1 AV BAY/CABIN AIR

6.1a	'SM1 CABIN FAN'	– CABIN FAN ΔP	6-4
6.1b	'SM2 AV BAY TEMP'	– AV BAY TEMP	6-5
6.1c	'SM2 AV BAY FAN'	– AV BAY FAN ΔP	6-6
6.1d	'SM1 CABIN IMU'	– CABIN IMU	6-8

6.2 CABIN ATM

6.2c	'SM1 CABIN PPO2'	– PPO2 ↑↓	6-21

6.4 FREON/H2O LOOP

6.4f	'SM0 THRM FRN'	– ACCUM QTY ↓	6-45
6.4g	'SM0 THRM EVAP'	– EVAP TEMP HI LOAD INBD (OUTBD) DUCT(NOZ) ↑↓	6-47
6.4h		– EVAP TOPPING DUCT T FWD(AFT), L(R) ↑↓	6-48
6.4i		– EVAP TOPPING L(R) NOZ ↑↓	6-49
6.4j		– EVAP FDLN TEMP FWD(MID,AFT, TOP,HI LOAD,ACCUM) ↑↓	6-50

The following Fault Msgs have no corresponding MAL procedures in this book:

SM1 CABIN HX T
SM2 TEMP

ECLS

AV BAY/ CABIN AIR
(F7)

BACKUP C/W ALARM
(F7)

S66 CABIN FAN

BFS
SM1 CABIN FAN

If:
CABIN FAN ΔP
< 4.2 or > 6.8
(< 2.8 or > 4.88 if 10.2 ops)

Nominal Config:
(L4:K)
cb AC1 ΦB CAB AIR S/C – cl
cb AC2 CAB FAN B (three) – cl
cb AC3 CAB FAN A (three) – cl
(L4:L)
cb AC1 ΦA CAB T CNTLR 1 – cl
cb AC2 ΦA CAB T CNTLR 2 – cl
(L1)
CAB FAN A(B) – ON
CAB TEMP CNTLR – 1(2)
CAB TEMP – as reqd

6.1a CABIN FAN ΔP

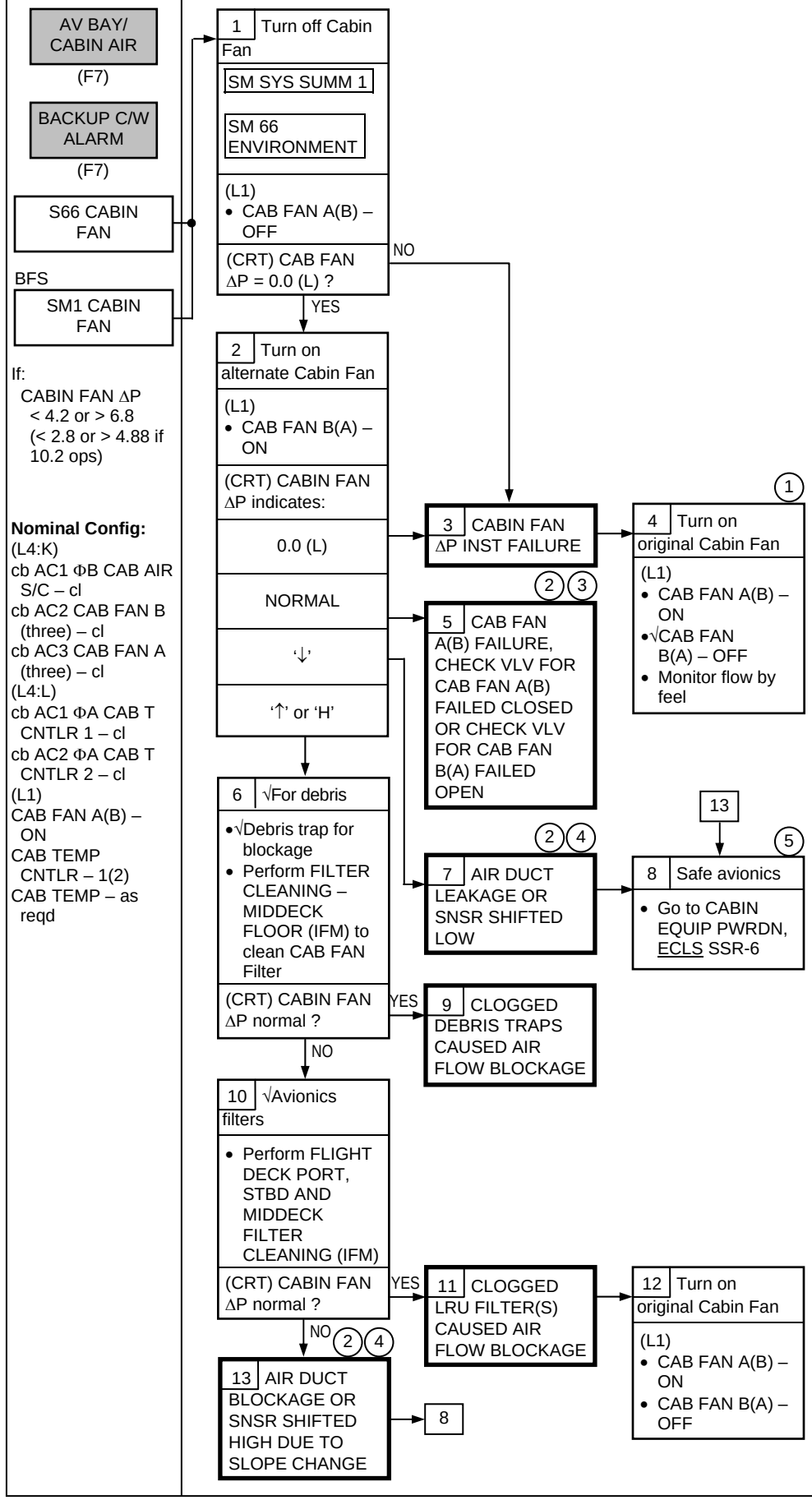

(1) Turn on both Cabin Fans for sleep

(2) √MCC to determine exact failure

(3) If check vlv is failed open, fan currently selected is the only operational fan available

(4) May be possible to find duct leakage or blockage by checking airflow at all inlets and outlets

(5) This step prevents overtemping avionics while MCC is evaluating failure

ECLS

AV BAY/ CABIN AIR

(F7)

BACKUP C/W ALARM

(F7)

S66 AV BAY 1(2,3) TEMP

BFS

SM2 AV BAY TEMP

If:
AV BAY 1(2,3) TEMP > 130 degF

Nominal Config:
(L4:G)
cb AC1 ΦA,ΦB,ΦC AV BAY 1 FAN A (three) – cl
cb AC2 ΦA,ΦB,ΦC AV BAY 1 FAN B (three) – cl
cb AC3 ΦA,ΦB,ΦC AV BAY 3 FAN A (three) – cl
(L4:H)
cb AC1 ΦA,ΦB,ΦC AV BAY 3 FAN B (three) – cl
cb AC2 ΦA,ΦB,ΦC AV BAY 2 FAN A (three) – cl
cb AC3 ΦA,ΦB,ΦC AV BAY 2 FAN B (three) – cl
(L4:L)
cb AC1 ΦB AV BAY 2 S/C – cl
cb AC2 ΦB AV BAY 3 S/C – cl
cb AC3 ΦB AV BAY 1 S/C – cl
(L1)
AV BAY
1 FAN B(A) – ON
2 FAN A(B) – ON
3 FAN B(A) – ON

H2O LOOP
Nominal Config:
Refer to 6.4l

6.1b AV BAY TEMP

(1)

1
SM SYS SUMM 2
SM 66 ENVIRONMENT
Temps high and increasing in more than one bay ?
YES → 6.4p 23
NO

2 (CRT) AV BAY 1(2,3) FAN ΔP normal ?
NO → 6.1c 5
YES

3 √Air cooling
(L1)
- AV BAY 1(2,3) FANS A,B (two) – ON

(CRT) AV BAY 1(2,3) TEMP decr ?
YES → (2) 4 DEGRADED AIR COOLING OR TEMP XDCR FAILURE
NO

5 √H2O cooling
(L1)
- Switch H2O Loops
- Wait 5 min

(CRT) AV BAY 1(2,3) TEMP decr ?
YES → 7 DEGRADED H2O LOOP
NO

8 TEMP XDCR FAILURE

10 Reconfig
(L1)
- Reconfig AV BAY 1(2,3) FANS to original config
- Reconfig H2O Loops to original config

9 Reconfig
- Go to ECLS SSR-4 4, RECONFIG TO ALT H2O LOOP

6 Safe avionics
If MCC not available and AV BAY TEMP ≥ 130 or on MCC GO:
- Perform DPS RECONFIG FOR LOSS OF AV BAY COOLING (ASCENT/ ORBIT), GPC FRP-7 (DPS)

11 Reconfig
(L1)
On MCC GO:
- Reconfig AV BAY 1(2,3) FANS to original config

(1) Temps can be read from meter on pnl O1

(2) √MCC to determine exact failure

ECLS

SM ALERT

S66 AV BAY 1(2,3) FAN

BFS

SM2 AV BAY TEMP

If:
AV BAY 1(2,3) FAN
ΔP < 2.5 or > 4.3
(3.3 if 10.2 ops)

If Upgraded AV BAY FAN:
ΔP < 4.5 or > 7.8
(5.9 if 10.2 ops)

Nominal Config:
(L4:G)
cb AC1 AV BAY 1 FAN A (three) – cl
cb AC2 AV BAY 1 FAN B (three) – cl
cb AC3 AV BAY 3 FAN A (three) – cl
(L4:H)
cb AC1 AV BAY 3 FAN B (three) – cl
cb AC2 AV BAY 2 FAN A (three) – cl
cb AC3 AV BAY 2 FAN B (three) – cl
(L4:L)
cb AC1 ΦB AV BAY 2 S/C – cl
cb AC2 ΦB AV BAY 3 S/C – cl
cb AC3 ΦB AV BAY 1 S/C – cl
(L1)
AV BAY 1 FAN B(A) – ON
AV BAY 2 FAN A(B) – ON
AV BAY 3 FAN B(A) – ON

6.1c AV BAY FAN ΔP

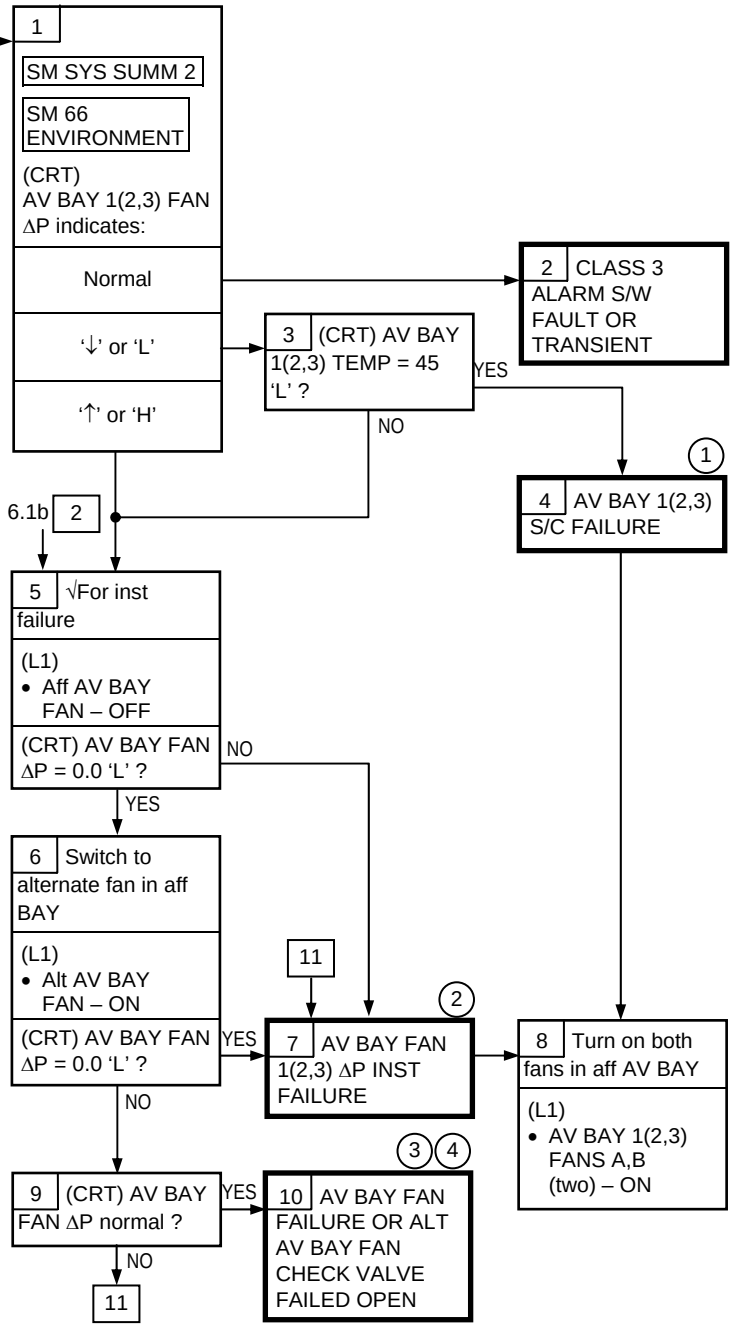

(1) If AV BAY 1(2,3) S/C cb is open, √MCC before attempting to reset cb

(2) With loss of ΔP, monitor AV BAY TEMP. If > 130 degF, there is AV BAY cooling problem. If AV BAY TEMP ~H2O LP PUMP OUT T, this is indication of fan failure or duct leakage between fan and HX

(3) √MCC to determine exact failure

(4) If check valve failed open, fan currently selected for that AV BAY is the only operational fan available

ECLS 6.1c (Cont)

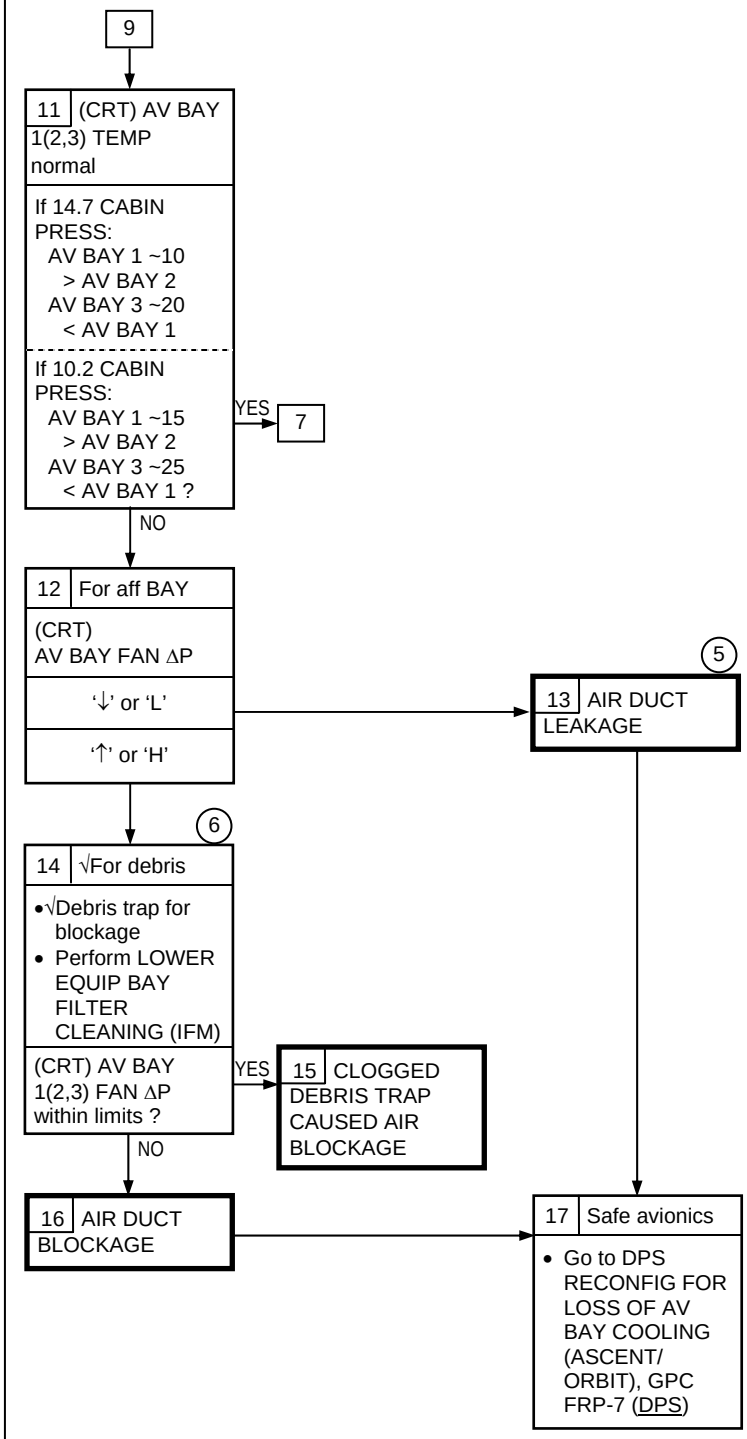

(5) √MCC about checking AV BAY duct integrity after completing next step

(6) √MCC about performing pwrdn of affected bay before performing AV BAY filter cleaning

ECLS

6.1d CABIN IMU

SM ALERT

S66 IMU FN SPD A(B,C)

IMU FAN Underspeed

S66 IMU FAN DP

BFS

SM1 CABIN IMU

IMU FAN ΔP < 3.7 (3.0 if 10.2 ops) or > 4.95 (3.8 if 10.2 ops)

Nominal Config:
(O14:B)
cb MNA OI H2O BYP LOOP 1 SNSR – cl
(L4:I)
cb AC1 IMU FAN A (three) – cl
cb AC2 IMU FAN B (three) – cl
cb AC3 IMU FAN C (three) – cl
(L4:J)
cb AC3 ΦB SIG CONDR IMU FAN – cl
(L1)
IMU FAN B(C,A) – ON

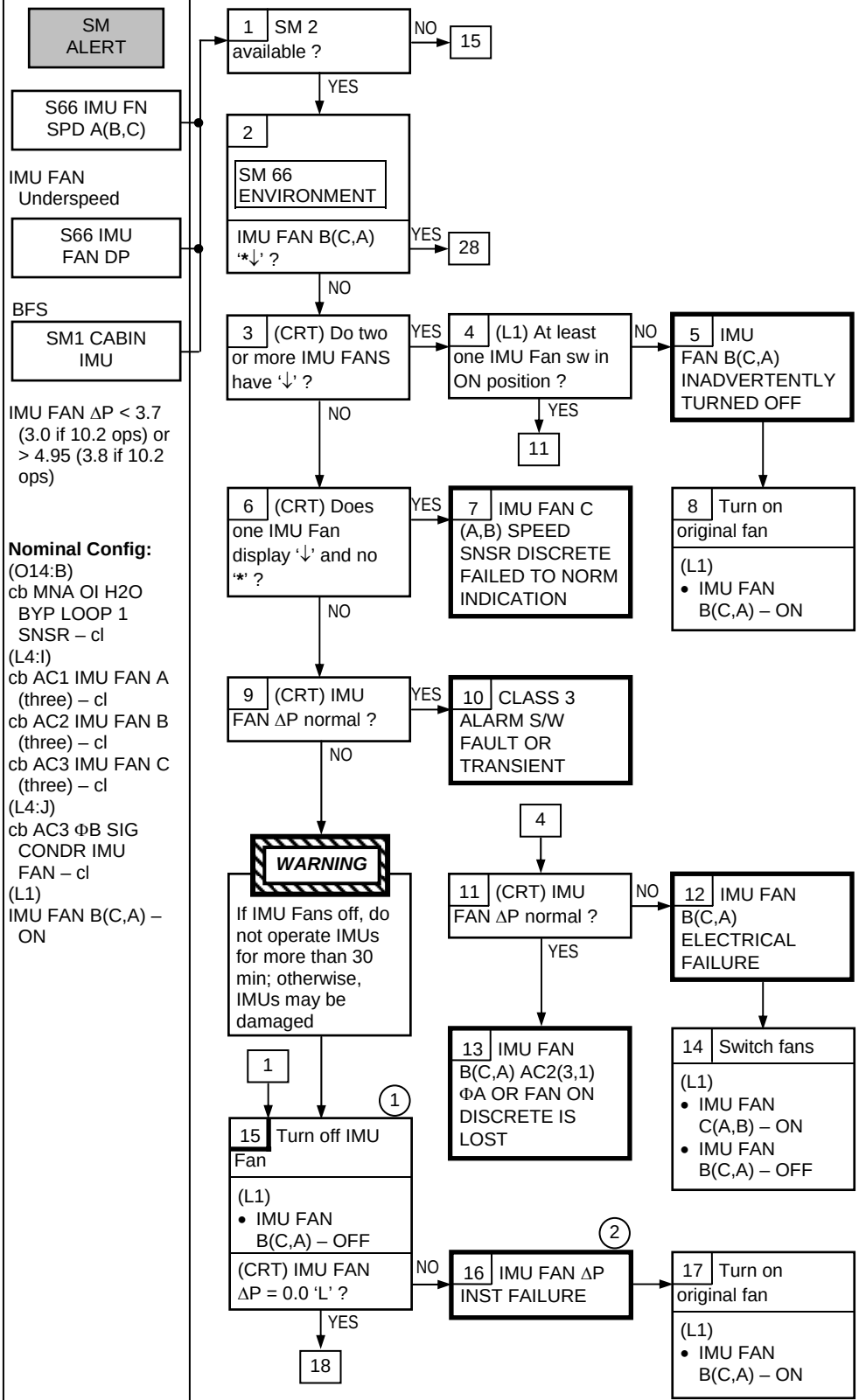

(1) If SM 2 not available, use BFS SYS SUMM 1 to monitor IMU FAN ΔP

(2) Monitor Speed Snsr '↓' for fan failure if IMU ΔP is lost

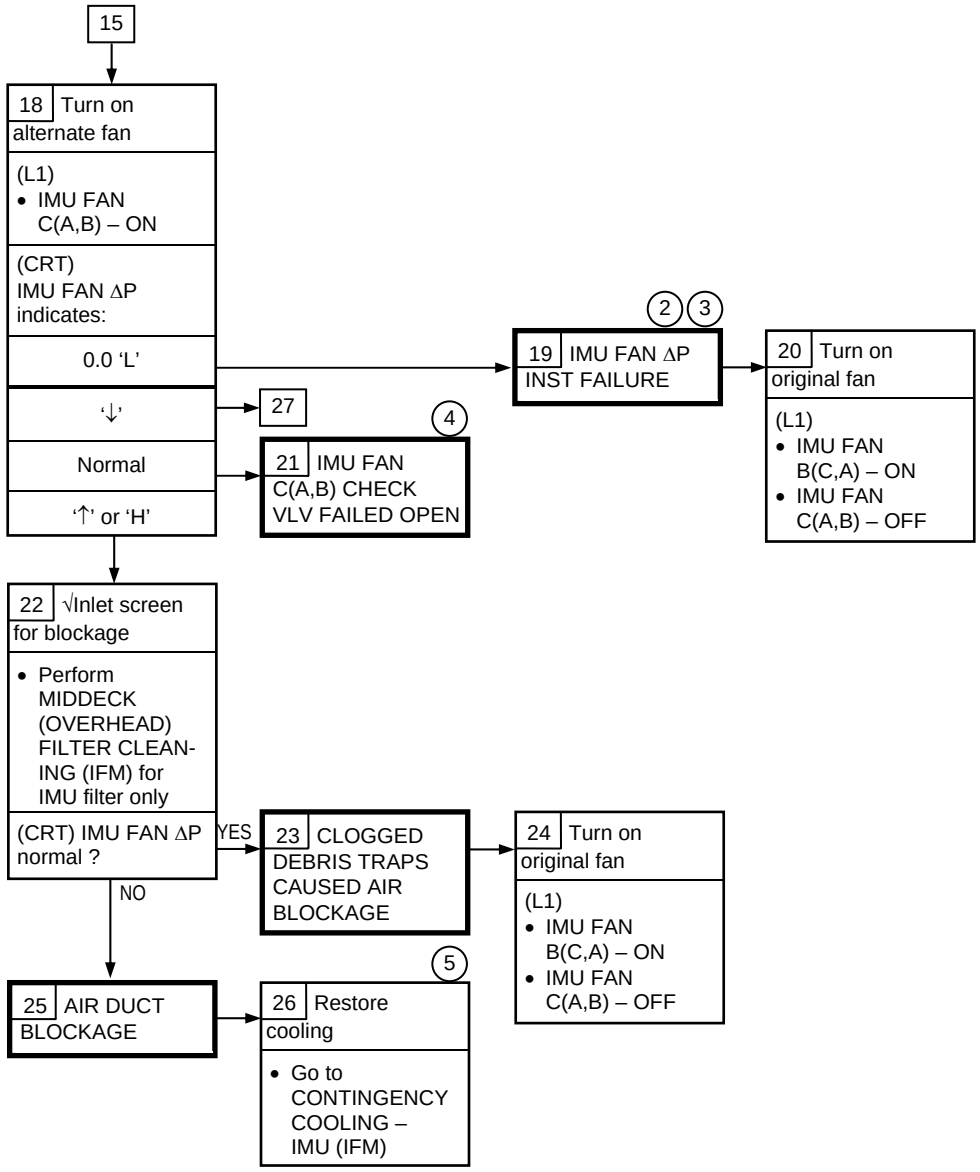

(2) Monitor Speed Snsr '↓' for fan failure if IMU ΔP is lost

(3) If cb MNA OI H2O BYP LOOP 1 SNSR – op, √MCC before attempting to reset cb

(4) Fan currently selected is the only operational fan available

(5) √MCC for proper IMU config and ops

ECLS 6.1d (Cont)

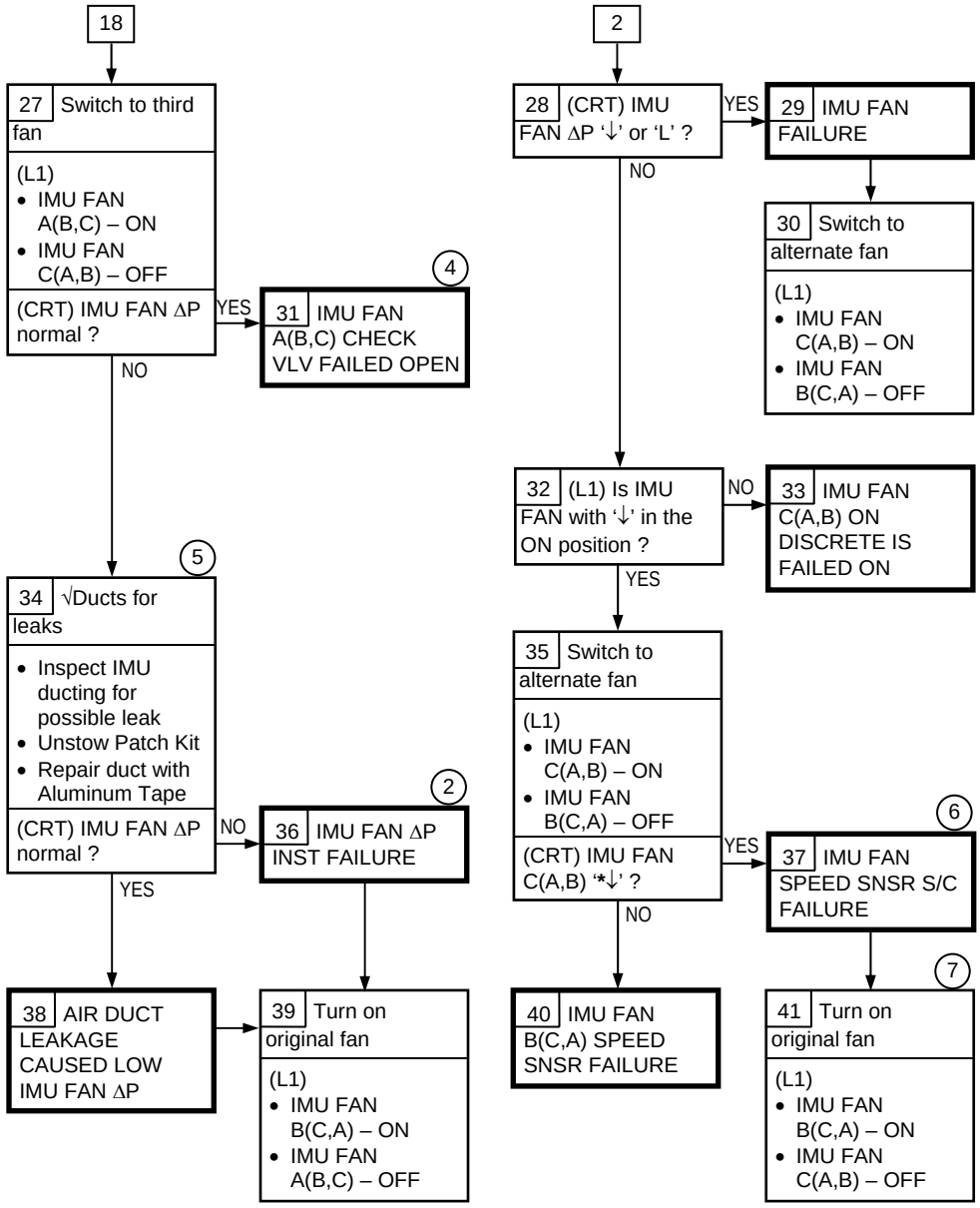

(2) Monitor Speed Snsr '↓' for fan failure if IMU ΔP is lost

(4) Fan currently selected is the only operational fan available

(5) √MCC for proper IMU config and ops

(6) If (pnl L4) cb AC3 ΦB SIG CONDR IMU FAN – op, √MCC before attempting to reset

(7) Second 'S66 CABIN IMU' msg will be generated. This is expected as Speed Snsr S/C failure will affect each IMU Fan

This Page Intentionally Blank

PRESSURE CONTROL SYSTEM
ORBIT

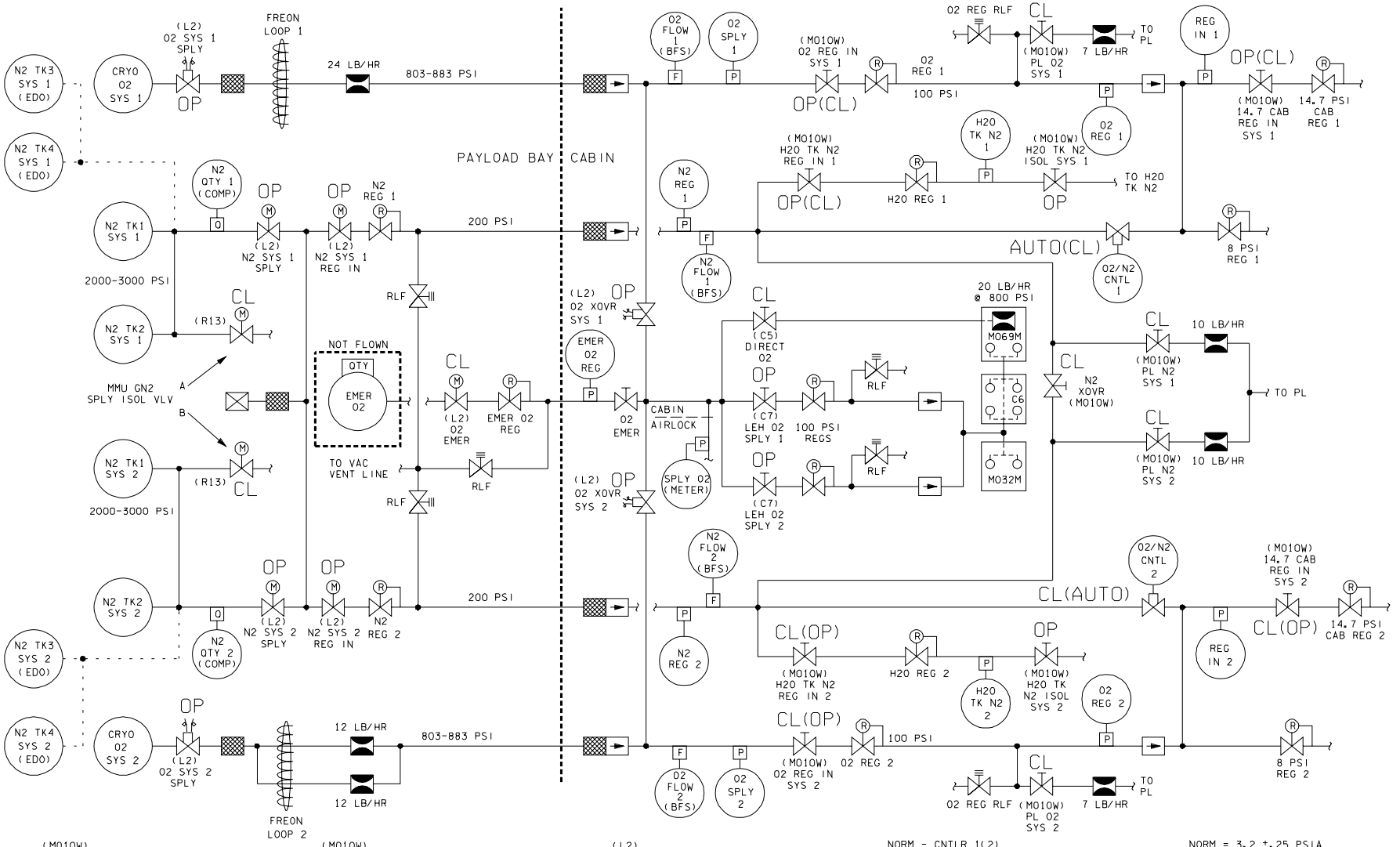

ECLS

From ORB PKT, O2(N2) FLOW HIGH/CAB P LOW/dP/dT

O2(N2) FLOW > 4.9 lb/hr

Nominal Config:
(ORBIT)
(O15:D) (2)
cb MNB
PPO2 C CAB dP/dT – cl
(O14:D,O15:D)
cb MNA,MNB
N2 SPLY 1,2 – cl
O2/N2 CNTLR 1,2 – cl
O2 XOVR 1,2 – cl
N2 REG INLET 1,2 – cl
CAB VENT – op (O14 only)
CAB VENT ISOL – op (O14 only)
CAB RELIEF A – cl (O15 only)
(O16:D)
cb MNC
H2O ALT PRESS – cl
O2 EMER – op
CAB RELIEF B – cl
(ML86B:D)
cb MNA,MNB MMU GN2 SPLY ISOL VLV A,B – op (if flown, – cl)
(C5)
DIRECT O2 vlv – CL
(C6)
LEH O2 1,2,3,4 vlv (four) – CL
(C7)
LEH O2 SPLY vlv (two) – OP
(L1)
H2O ALT PRESS – CL
(L2)
CAB RELIEF A,B – ENA (tb-ENA)
CAB VENT ISOL – CL (tb-bp)
CAB VENT – CL (tb-bp)
O2 SYS 1,2 SPLY – OP (tb-OP)
O2 EMER – CL (tb-bp)
N2 SYS 1,2 SPLY – OP (tb-OP)
N2 SYS 1,2 REG INLET – OP (tb-OP)
O2 XOVR SYS 1,2 – OP
O2/N2 CNTLR VLV
SYS 1(2) – AUTO
SYS 2(1) – CL
If 10.2 psi ops,
SYS 1 – OP
SYS 2 – CL

(Cont in notes column)

6.2a O2(N2) FLOW ↑

1 SM SYS SUMM 1
SM 66 ENVIRONMENT
CABIN P < 13.8 (10.0) psi ?
YES → 6.2b 6
NO

2 LEAK IN PL O2 SYS 1(2). PL O2 SPLY NO LONGER AVAILABLE

3 If spacelab flown and ASCS in control:
- Go to CONFIGURE FOR ORBITER PCS (SLM OPS, ECLSS)

4 (CRT) CABIN P incr ?
NO → 18
YES

5 10.2 psi ops ?
YES → 6 Remain in current PCS Config
- √MCC for P&I changes to repress procedure

NO → 16

6.2b 34

7 Which flow high or produced alarm ?
O2
N2

CAUTION
Procedure should be expedited to prevent exceeding 25.0% O2 for 14.7 psi ops or 28.5% for 10.2 psi ops

8 (MO10W)
- √PL O2 SYS 1(2) vlv – CL

(CRT) O2 FLOW 1(2) decr ?
NO
YES → 2

9 (L2)
- O2/N2 CNTLR VLV SYS 1(2) – CL

N2 FLOW 1(2) decr ?
NO → 35
YES

10 (MO10W)
- O2 REG INLET SYS 1(2) vlv – CL

O2 FLOW 1(2) decr ?
NO → 11 LEAK IN O2 SYS 1(2) MANIFOLD BETWEEN O2 REG INLET VLV AND O2 FLOW DUCER
YES → 13 O2 REG 1(2) SHIFTED HIGH OR LEAKING, OR REG RLF VLV LEAK, OR LINE LEAK DOWNSTREAM OF O2 REGULATOR → 5

15 (L2)
- O2 SYS 1(2) SPLY – CL (tb-CL)
- O2 XOVR SYS 1(2) – CL

5

12 LEAK IN O2/N2 SYS 1(2) COMMON MANIFOLD

14 Isolate leak
(MO10W)
- O2 REG INLET SYS 1(2) vlv – CL

5

16 Reconfig
- Go to RECONFIG TO ALT PCS SYS, ELCS SSR-3

(1) Use numbers in parenthesis for 10.2 psi cabin ops

(2) PCS activated MET 3:00. Systems switched at mid flight

Nominal Config:
(ORBIT Cont)
PPO2 SNSR/VLV – NORM
(R13L)
MMU GN2 SPLY ISOL VLV A,B – CL (tb-CL)
(MO10W)
14.7 CAB REG
INLET SYS 1 (SYS 2) – OP
INLET SYS 2 (SYS 1) – CL
If 10.2 psi ops, 14.7 CABIN REG INLET SYS 1,2 – CL
O2 REG INLET SYS 1 (SYS 2) – OP(CL)
PL O2 SYS 1,SYS 2 vlv – CL
PL N2 SYS 1,SYS 2 vlv – CL
O2 EMER vlv – CL
H2O TK N2 REG INLET SYS 1(SYS 2) vlv – OP(CL)
H2O TK N2 ISOL SYS 1, SYS 2 – OP
N2 XOVR vlv – CL
PPO2 CNTLR SYS 1, SYS 2 – NORM
(ML31C)
VAC VENT ISOL VLV BUS SEL – MNA
VAC VENT ISOL VLV CNTL – OP (tb-OP)
(Middeck FLR)
EMU O2 ISOL VLV – CL
CAB PURGE VLV – CL
CAB PURGE ISOL VLV – CL
(WCS)
VAC VLV – OP

SPACEHAB (If flown)
Nominal Config:
SM 215 SH ECS
PPRV ISOL VLV 1,2 (two) OP – *
(SSP)
CAB DEPRESS VLV ARM tb – bp
NOT CLOSED tb – bp
(FWD BKHD)
CAB DEPRESS VLV – cl
NPRV covers (two) – cl
(OVERHEAD)
EXP VENT vlv – cl (if flown)
NPRV covers (two) – cl (if flown)

ECLS 6.2a (Cont)

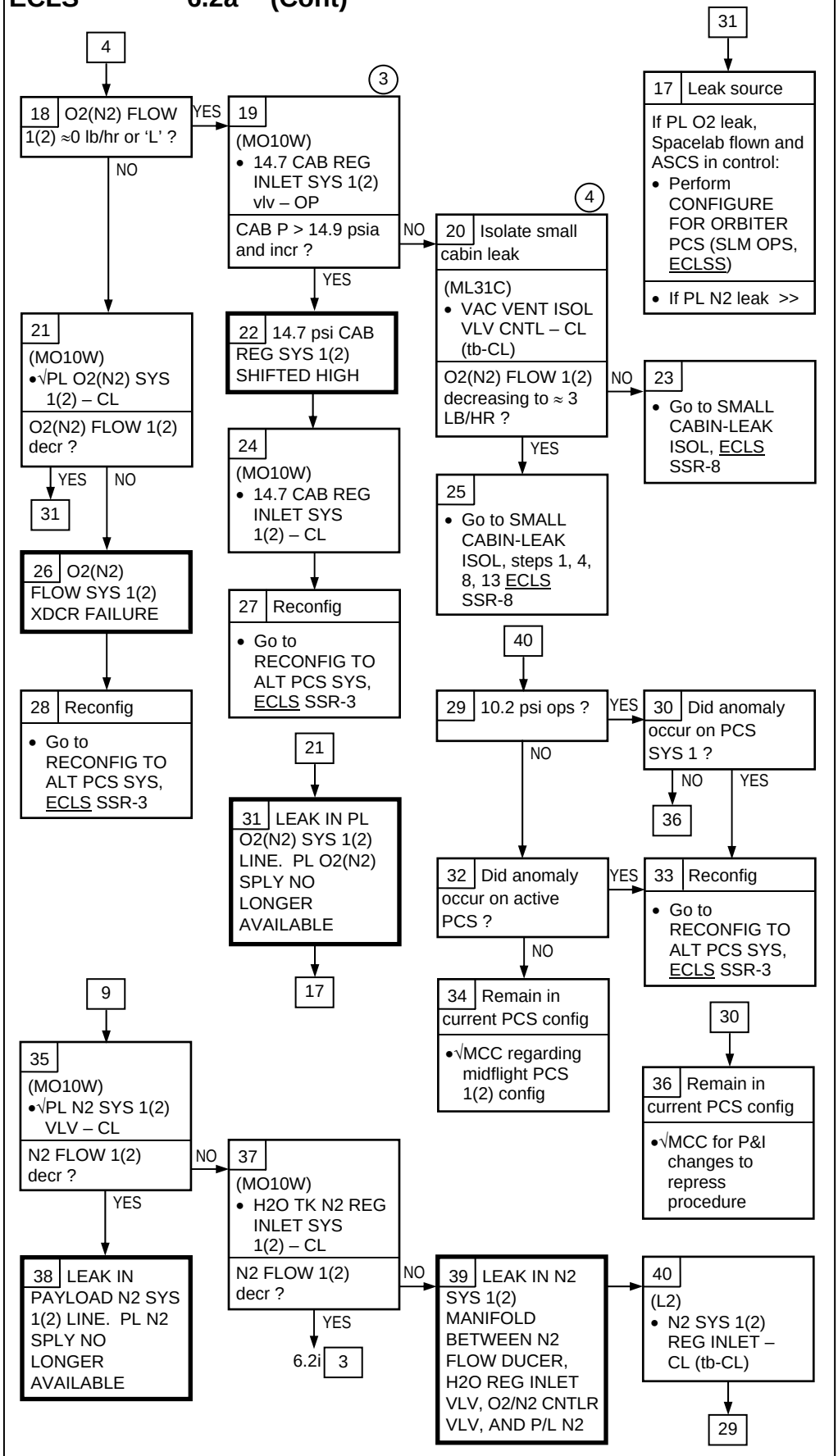

(3) May take several min to see change in cabin pressure

(4) Vacuum vent isolation vlv orifice flows approx 3.0 ± 0.25 lb/hr when closed. If leak rate is less than 3.25 lb/hr, then leak could still be in vacuum vent line

ECLS

CABIN ATM
(F7)

BACKUP C/W ALARM
(F7)

S66 CABIN PRES

(BFS)
SM1 CABIN PRES

CABIN PRES (3)
< 13.8 (10.0) psia
> 15.2 (10.6) psia

Nominal Config:
(ORBIT)
Refer to 6.2a

6.2b CABIN PRES ↑↓

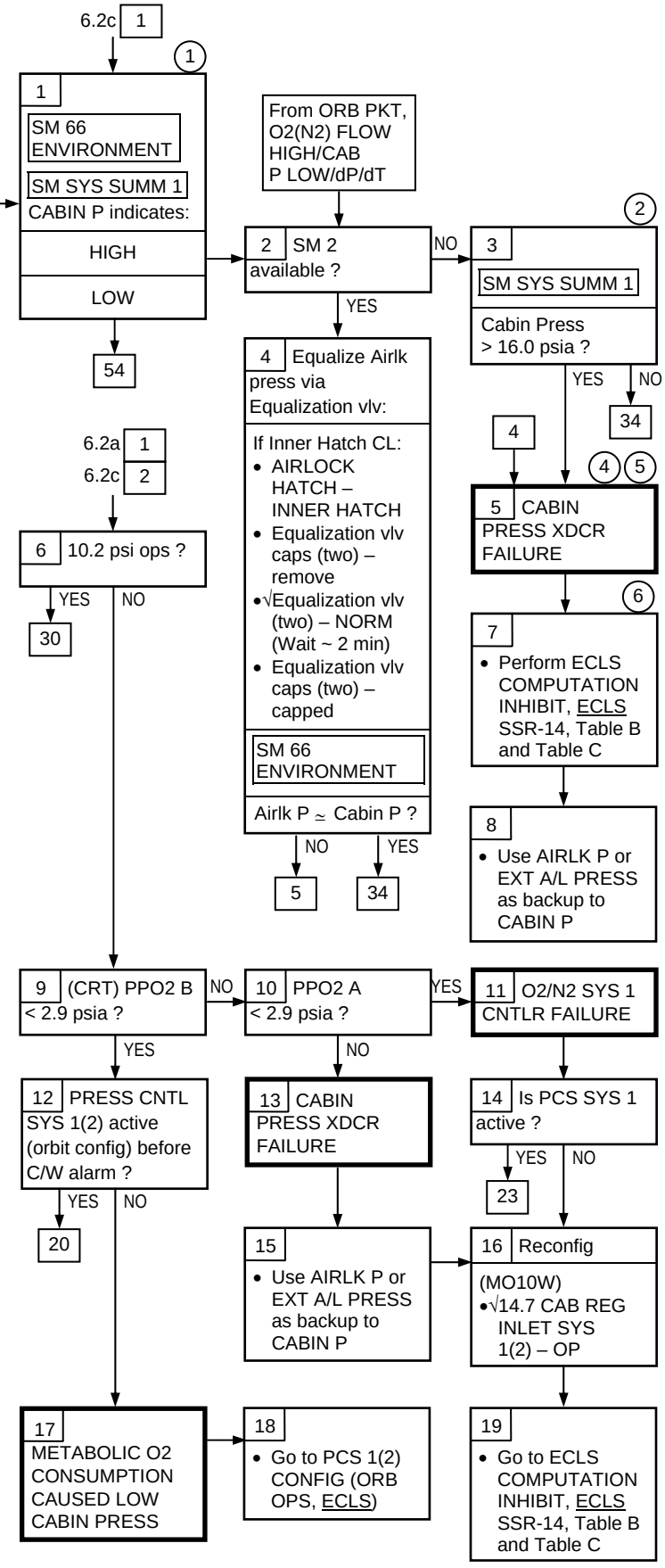

(1) This procedure should only be entered directly for CAB P ↑

(2) Cabin Press Relief vlvs crack at 15.5 psid. Full flow at 16.0 psid

(3) Use number in parenthesis for 10.2 psia cabin ops

(4) √MCC to determine exact failure. Suspect snsr yielding alarm

(5) Unless failure is linear shift of Xdcr reading, loss of cabin pressure Xdcr causes loss of BFS BU dP/dT software computation

(6) This step is accomplished after SM 2 becomes available

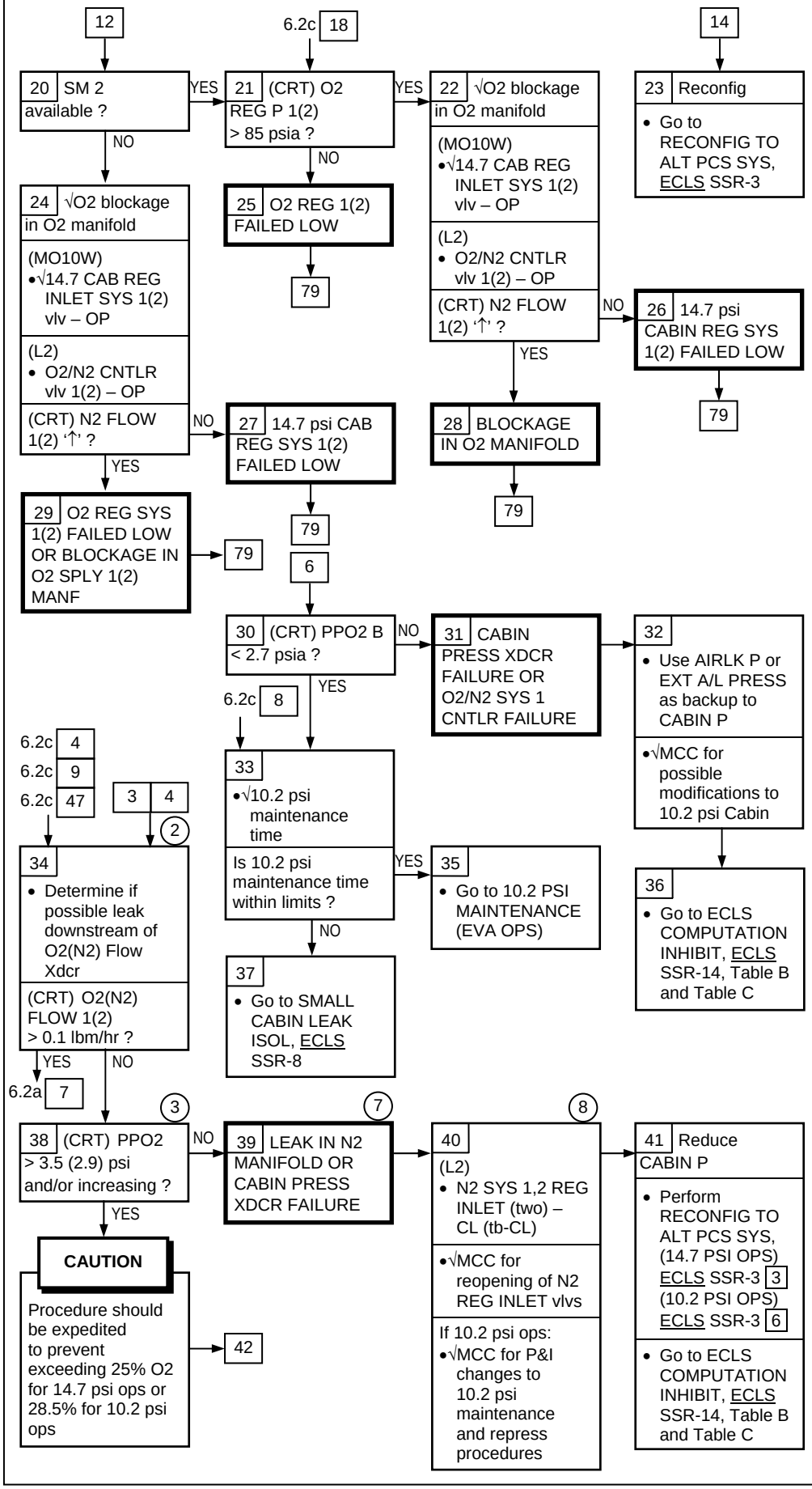

(2) Cabin Press Relief vlvs crack at 15.5 psid. Full flow at 16.0 psid

(3) Use number in parenthesis for 10.2 psia cabin ops

(7) If Airlk P equaled Cabin P in block 4, then failure is leak in N2 Manf. If Airlk P unavailable (no SM 2), N2 Manf leak must be assumed until confirmed by MCC

(8) If N2 needed, opening N2 SYS 1,2 REG INLET could feed possible leak into cabin

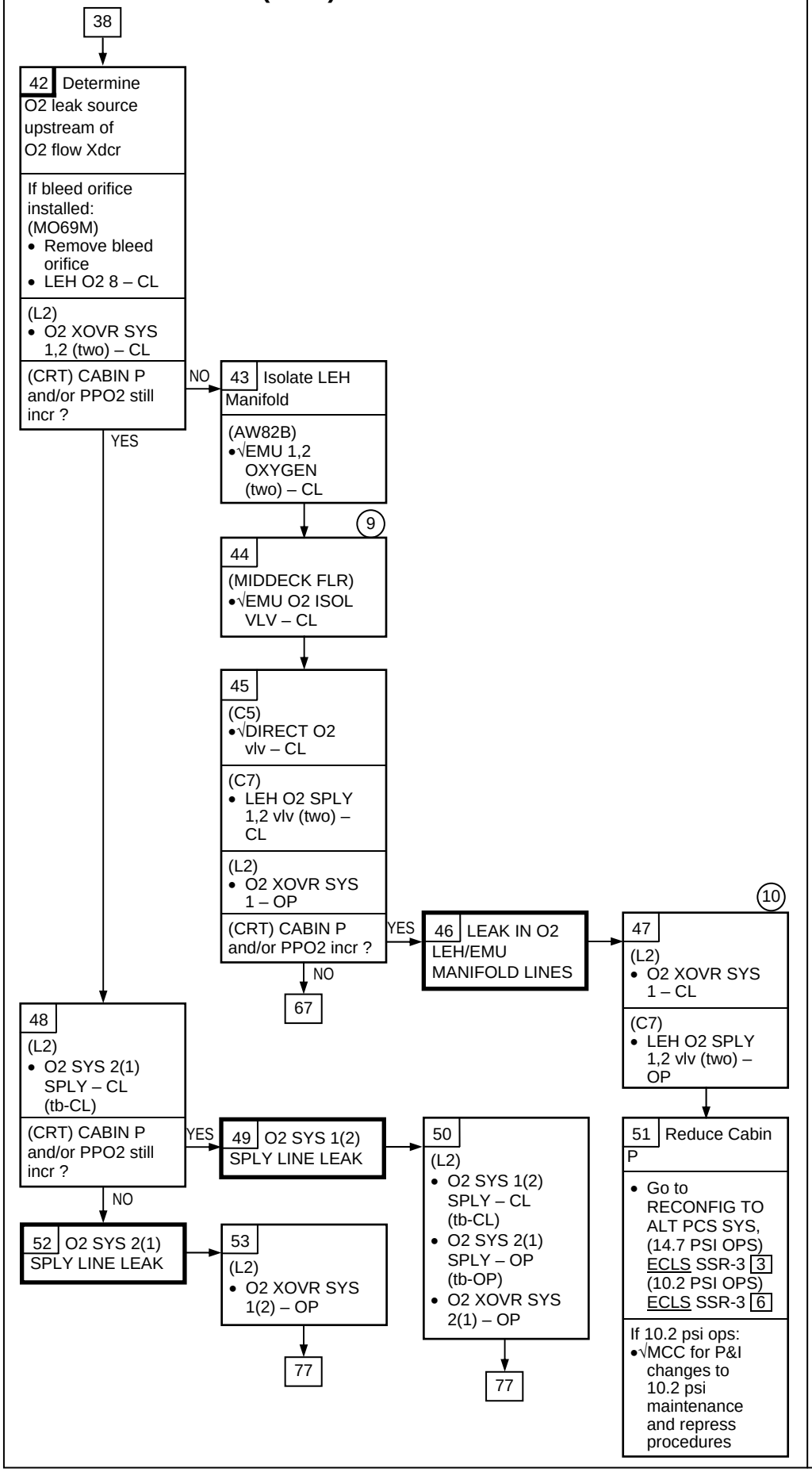

(9) Vlv normally closed except from pre-EVA PREP/ POST-EVA PREP

(10) O2 XOVR vlvs must be reopened to supply oxygen to LEH O2 vlvs, EMU O2 vlvs, or DIRECT O2 vlv. √MCC before taking this action

ECLS 6.2b (Cont)

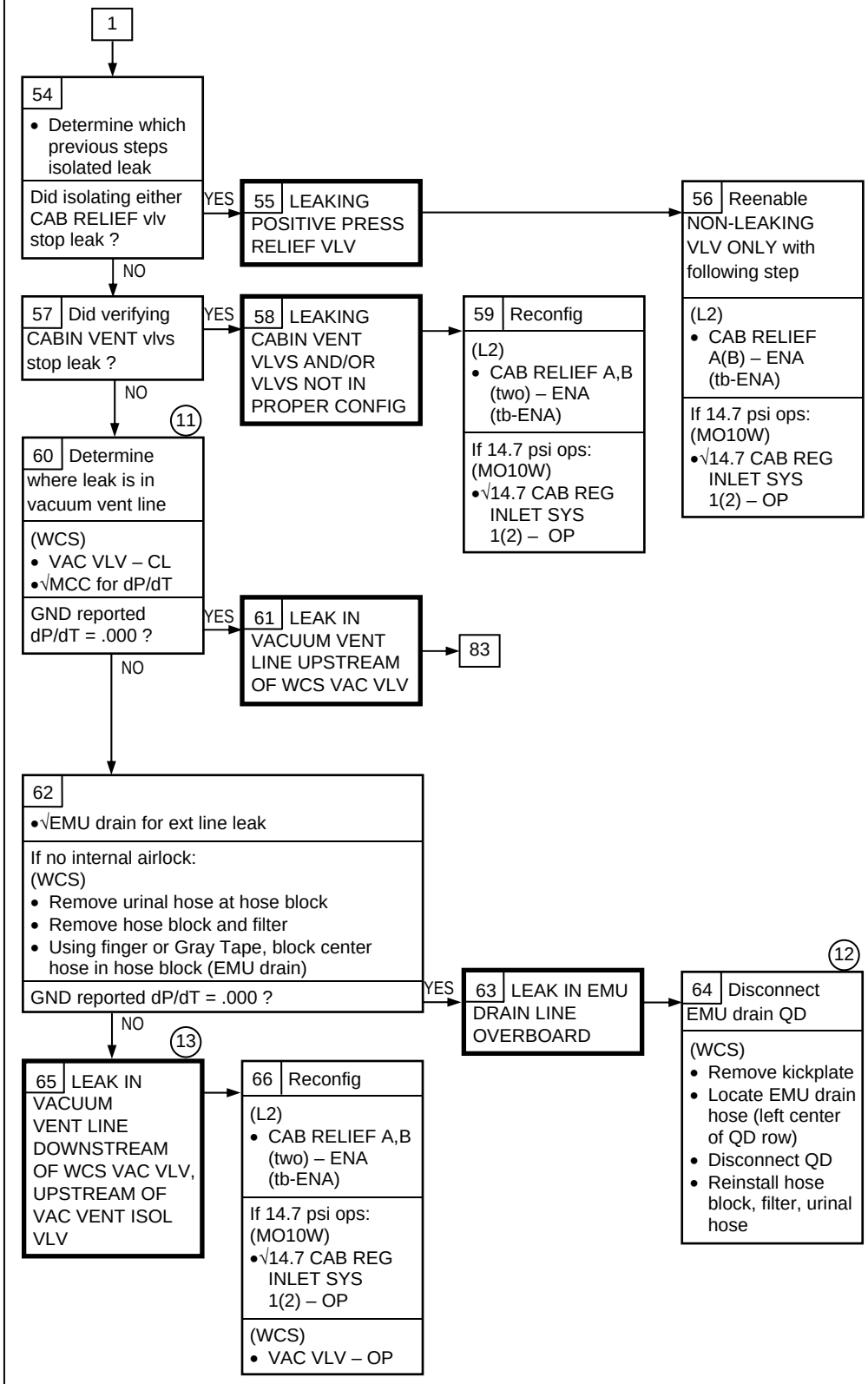

(11) MCC is reqd to determine if leak is isolated. Leak rate thru VAC Vent Isol vlv ~3 lb/hr (dP/dT = -0.004)

(12) EMU drain is lost

(13) By isolating cabin leak with VAC VENT ISOL VLV CNTL, hydrogen entrapment in vacuum vent line could create hazardous condition. √MCC for impacts of leaving this vlv closed

ECLS 6.2b (Cont)

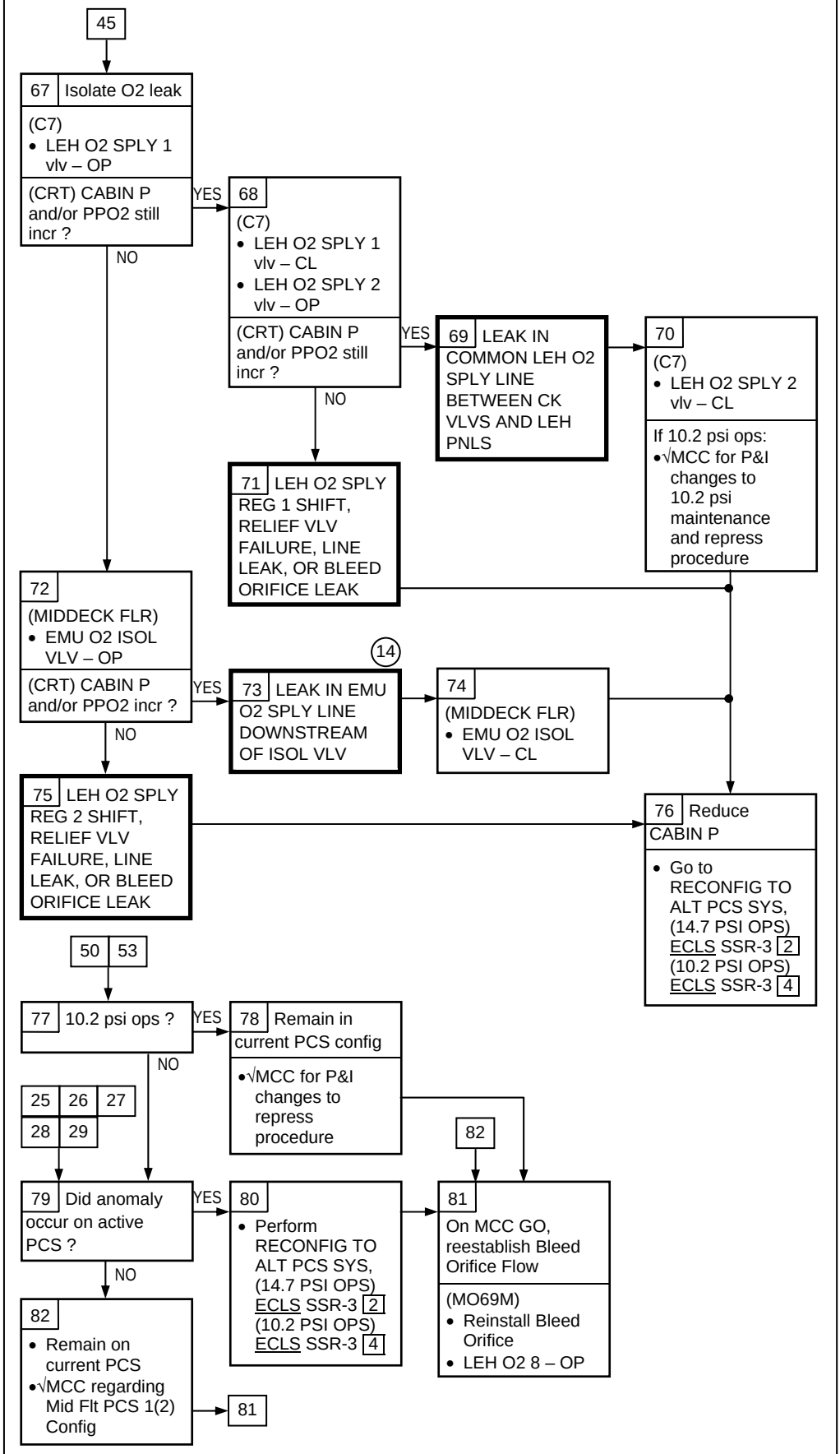

(14) Possible loss of O2 Supply to EMUs or O2 transfer to ISS

ECLS 6.2b (Cont)

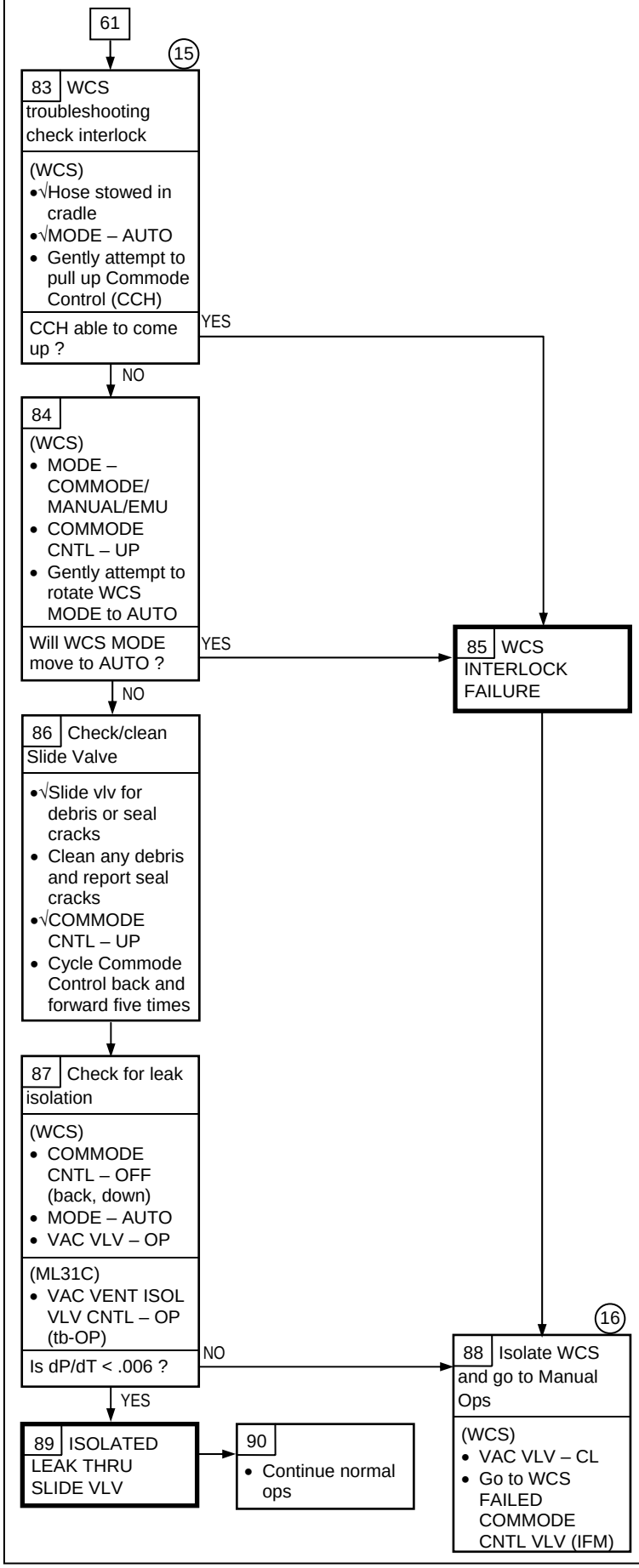

15 CCH has range of travel in which path to vacuum and cabin can be open simultaneously. Slow or incomplete extension of CCH may therefore result in cabin leak

16 Maintaining VAC VLV – CL to EOM may cause odor buildup due to inability to vent wet trash overboard

ECLS

CABIN ATM
(F7)

BACKUP C/W ALARM
(F7)

S66 CABIN PPO2 A(B)

(BFS)
SM1 CABIN PPO2

PPO2 A(B) (2)
< 2.70 (2.55) psia
> 3.60 (2.90) psia

Nominal Config:
(ORBIT)
Refer to 6.2a

6.2c PPO2 ↑↓

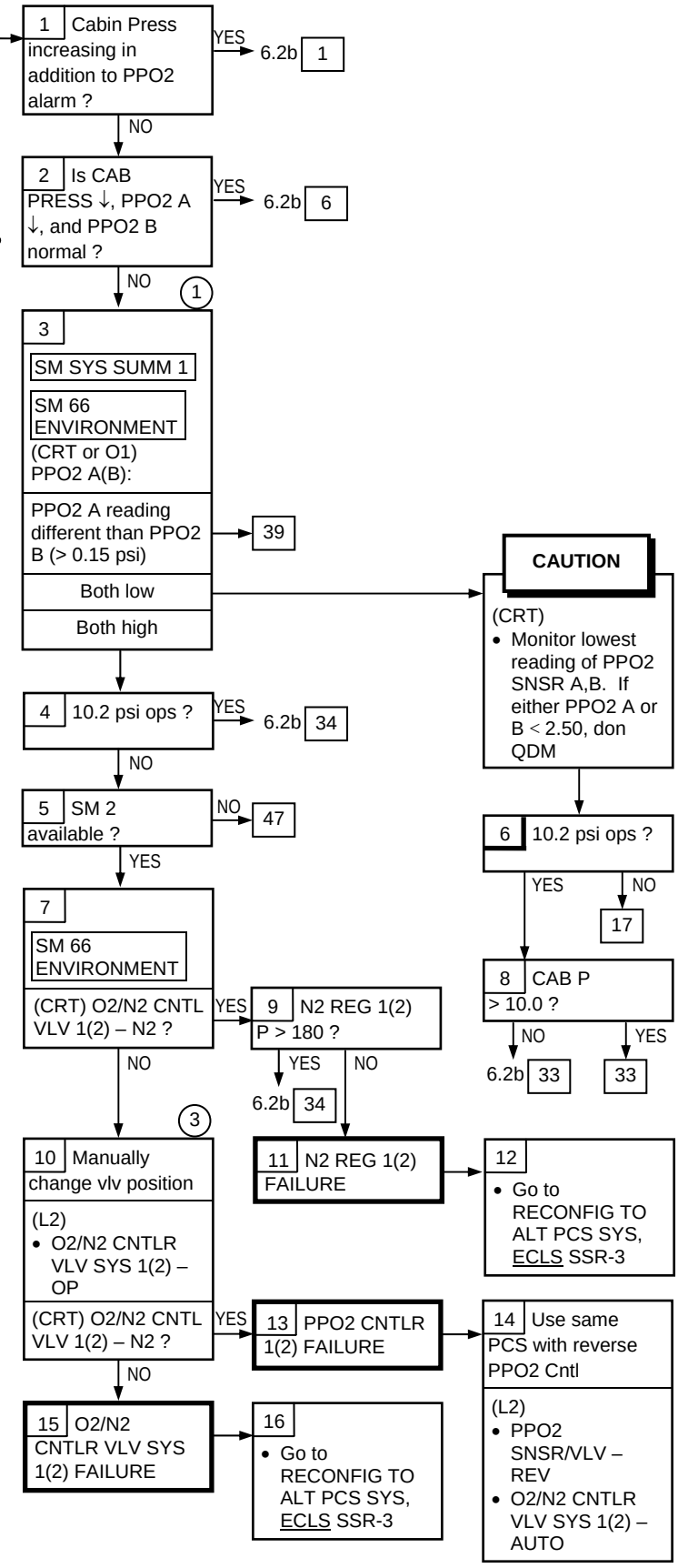

(1) If prior to performing on-orbit PCS config, low PPO2 could be caused by PCS 14.7 CABIN REGS – CL. After PCS config for Orbit Ops only one system active with PPO2 A tied to PCS 1 and PPO2 B tied to PCS 2. For 10.2 psi ops SYS 1 nominally configured to flow N2 and SYS 2 O2, with both 14.7 CAB REGS – CL

(2) Use number in parenthesis for 10.2 psia cabin ops

(3) O2/N2 CNTLR VLV flows N2 in OP position, and O2 in CL position

ECLS 6.2c (Cont)

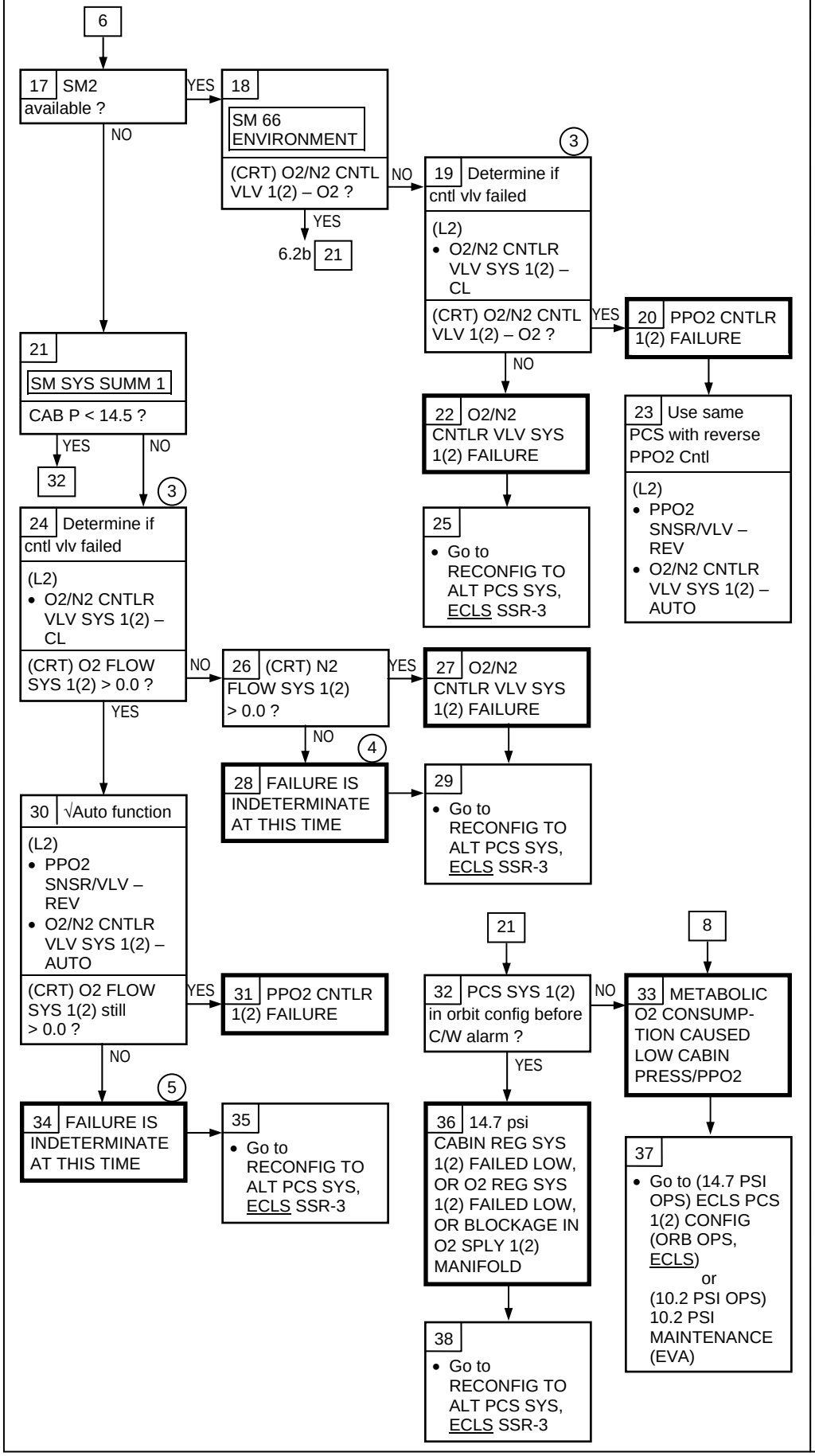

(3) O2/N2 CNTLR VLV flows N2 in OP position, and O2 in CL position

(4) Cabin P is within no flow region on cabin regulator. √MCC for further troubleshooting of that system

(5) Either Cabin P is within no flow region on cabin regulator or lost AUTO function on O2/N2 CNTL VLV. √MCC for further troubleshooting of that system

ECLS 6.2c (Cont)

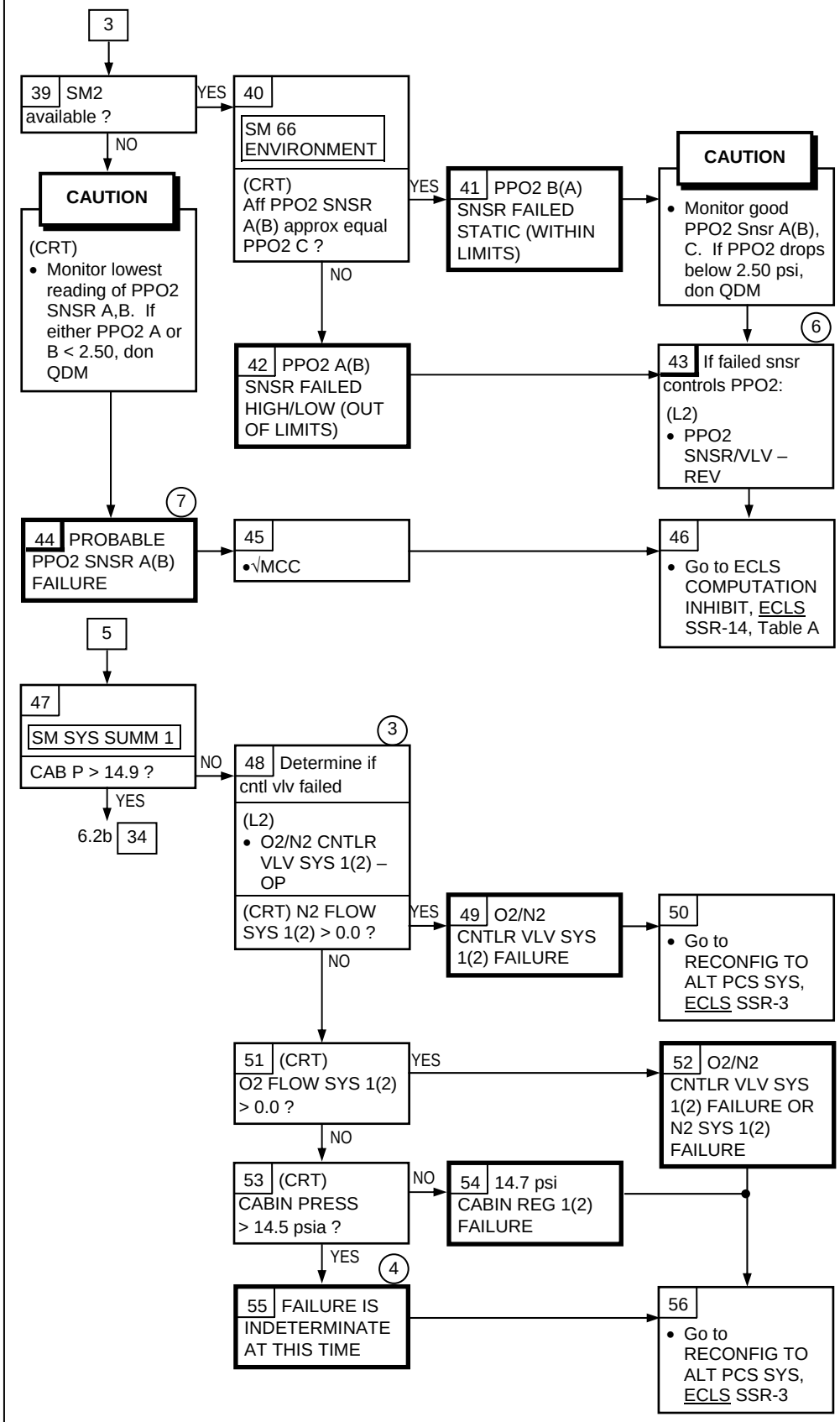

(3) O2/N2 CNTLR VLV flows N2 in OP position, and O2 in CL position

(4) Cabin P is within no flow region on cabin regulator. √MCC for further troubleshooting of that system

(6) Monitor systems performance on Reverse snsr. If 10.2 psi operations, performance of snsr cannot be determined until cabin repressed and initiation of Auto PCS control. If Reverse snsr does not control PPO2 properly, √MCC regarding Manual Cabin ATM Management

(7) Only MCC can determine exact failure. Suspect snsr yielding alarm. MCC will determine whether to go to REVERSE on PPO2 SNSR/VLV

ECLS

6.2d N2 REG P ↑↓

SM ALERT

S66 CAB N2 REG P 1(2)

N2 REG P 1(2)
> 260 psia
< 150 psia

Nominal Config:
(ORBIT)
Refer to 6.2a

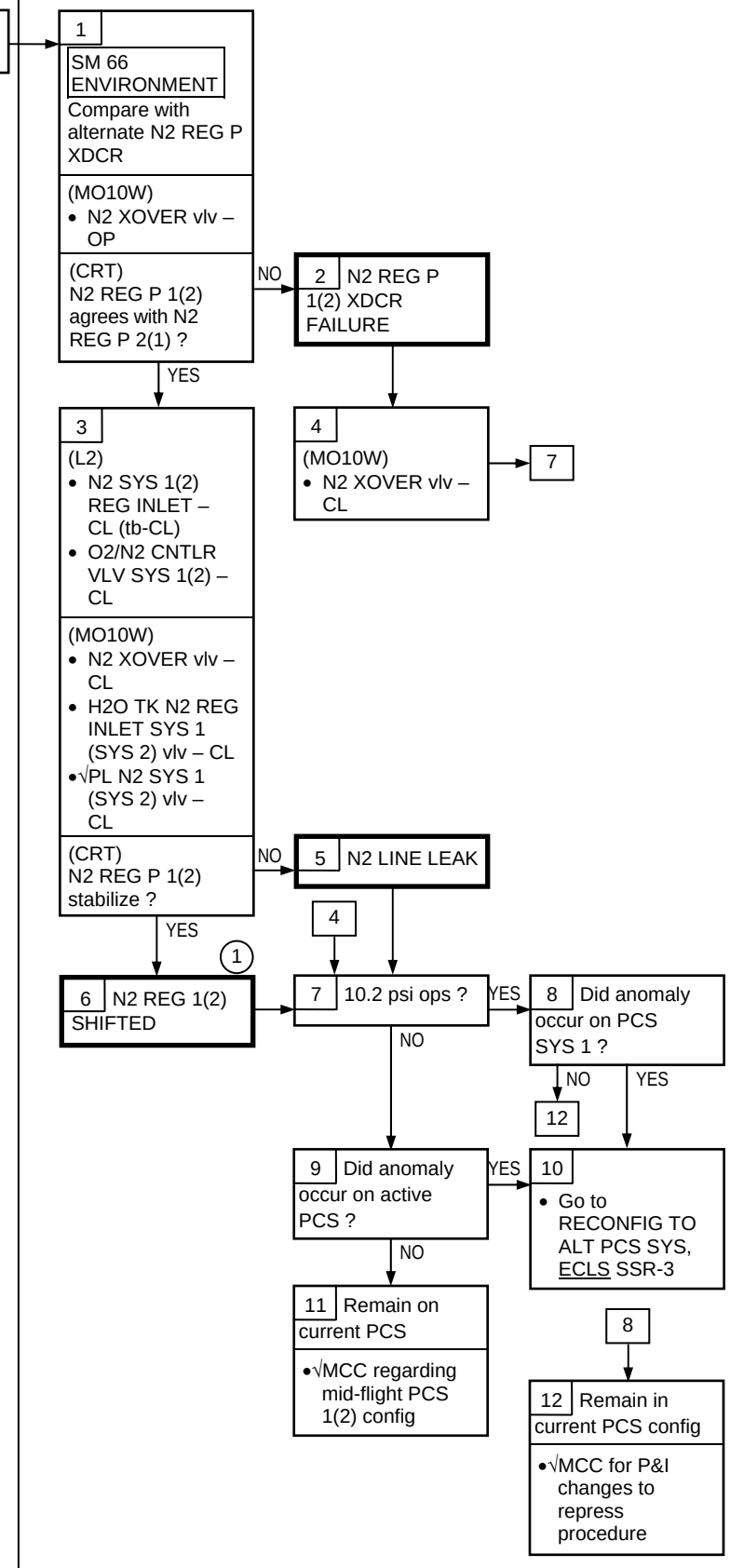

(1) If PL N2 line in use, √MCC for further isolation

ECLS

6.2e O2 REG P ↑

SM ALERT

S66 CAB O2 REG P 1(2)

O2 REG P 1(2) > 145 psia

Nominal Config:
(ORBIT)
Refer to 6.2a

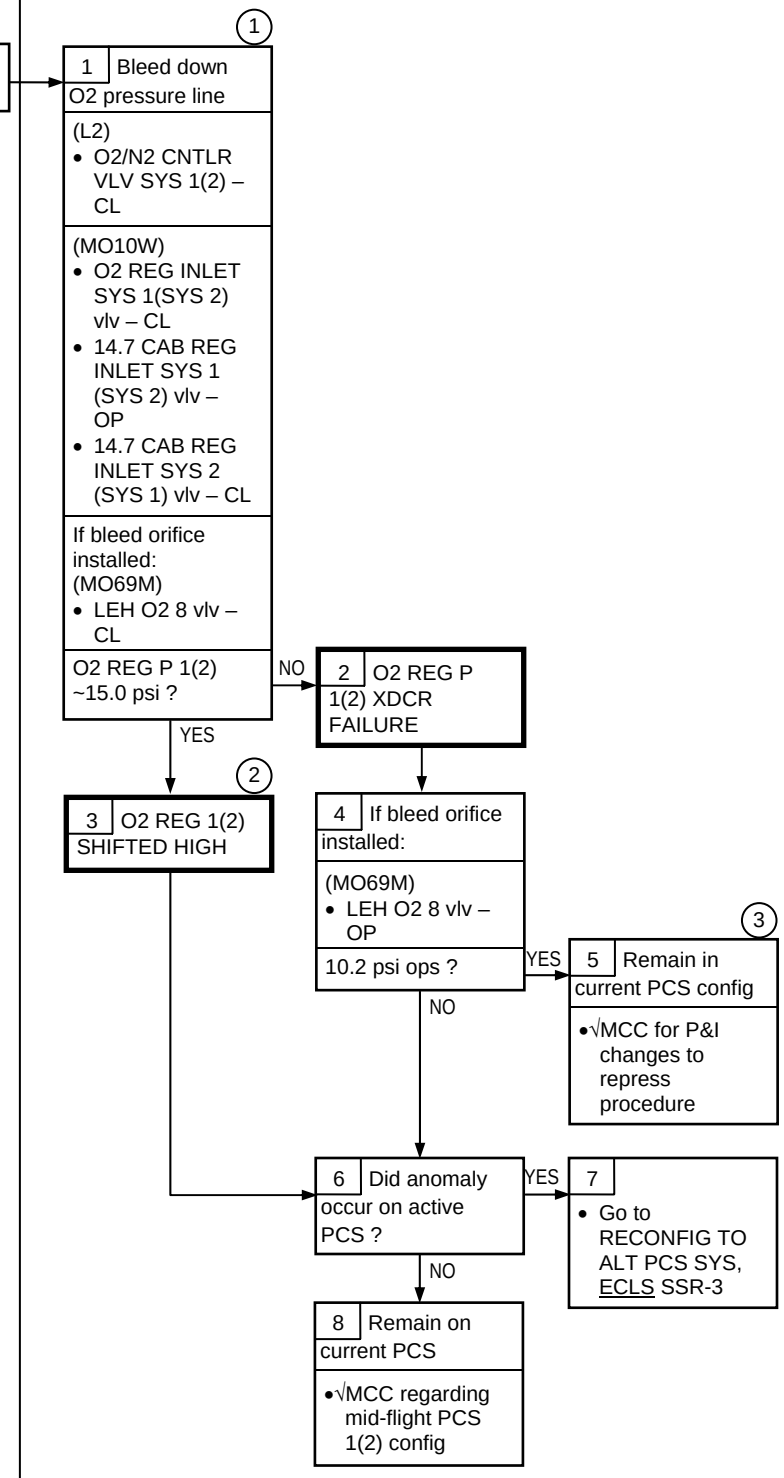

(1) Cabin press must drop low enough to open 14.7 psia CABIN REG and bleed O2 Line

(2) High O2 REG P could possibly be caused by spec leakage through regulator

(3) For 10.2 psi ops, O2 will be supplied as reqd, via the direct O2 vlv

ECLS

SM ALERT

S66 CAB N2 QTY 1(2)

(4)
N2 QTY SYS 1(2)
< 100 (two tk sys)
< 150 (three tk sys)
< 200 (four tk sys)

Nominal Config:
(ORBIT)
Refer to 6.2a

6.2g N2 QTY ↓

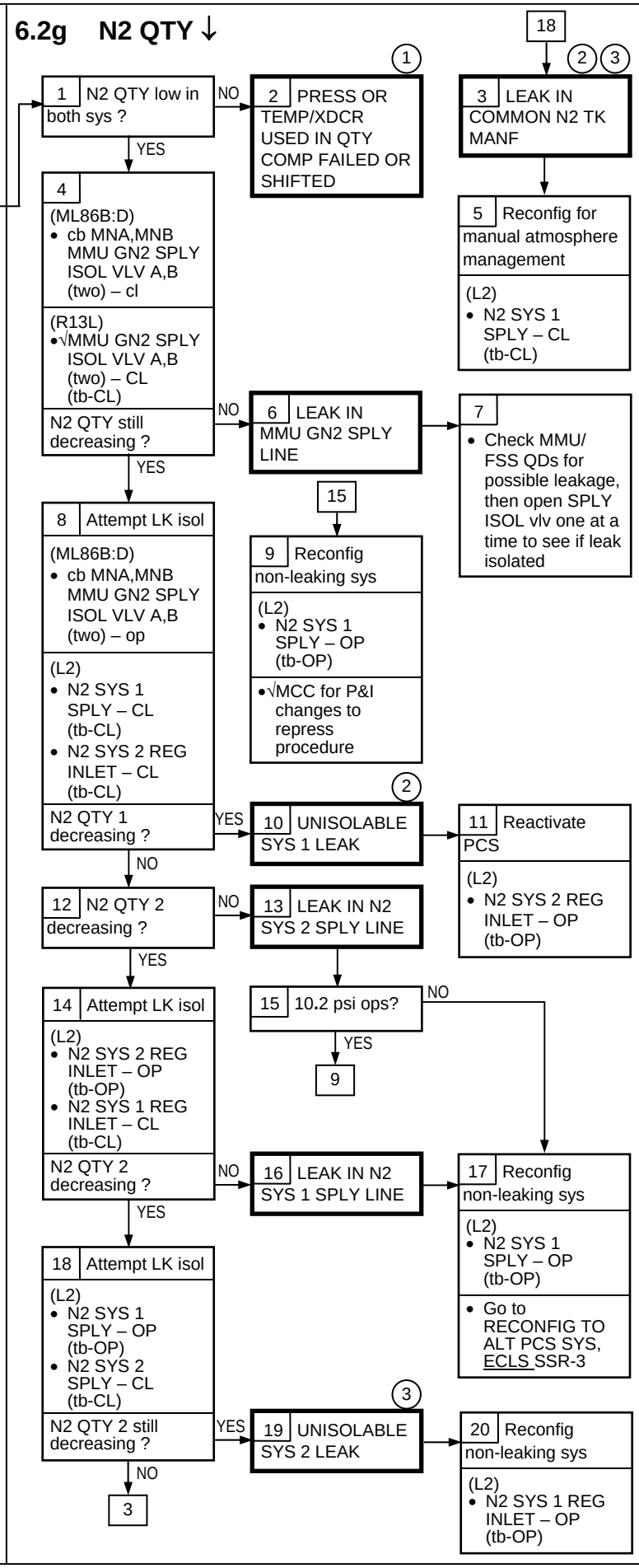

(1) √MCC to determine exact failure

(2) Flight length will depend on remaining quantity

(3) √MCC. If cabin press decreases because of N2 TK isolation, cabin repress may be attempted. Isolate tks after each repress attempt

(4) Up to four tks per sys are possible. I-load value is 100 but limit is TMBUd at OPS 2 depending on number of tks flown

ECLS

6.2i H2O TK N2 P ↓

SM ALERT

S66 CAB H2O N2 P 1(2)

H2O TK N2 P 1(2) < 13.0 psig

Nominal Config:
(ORBIT)
Refer to 6.2a

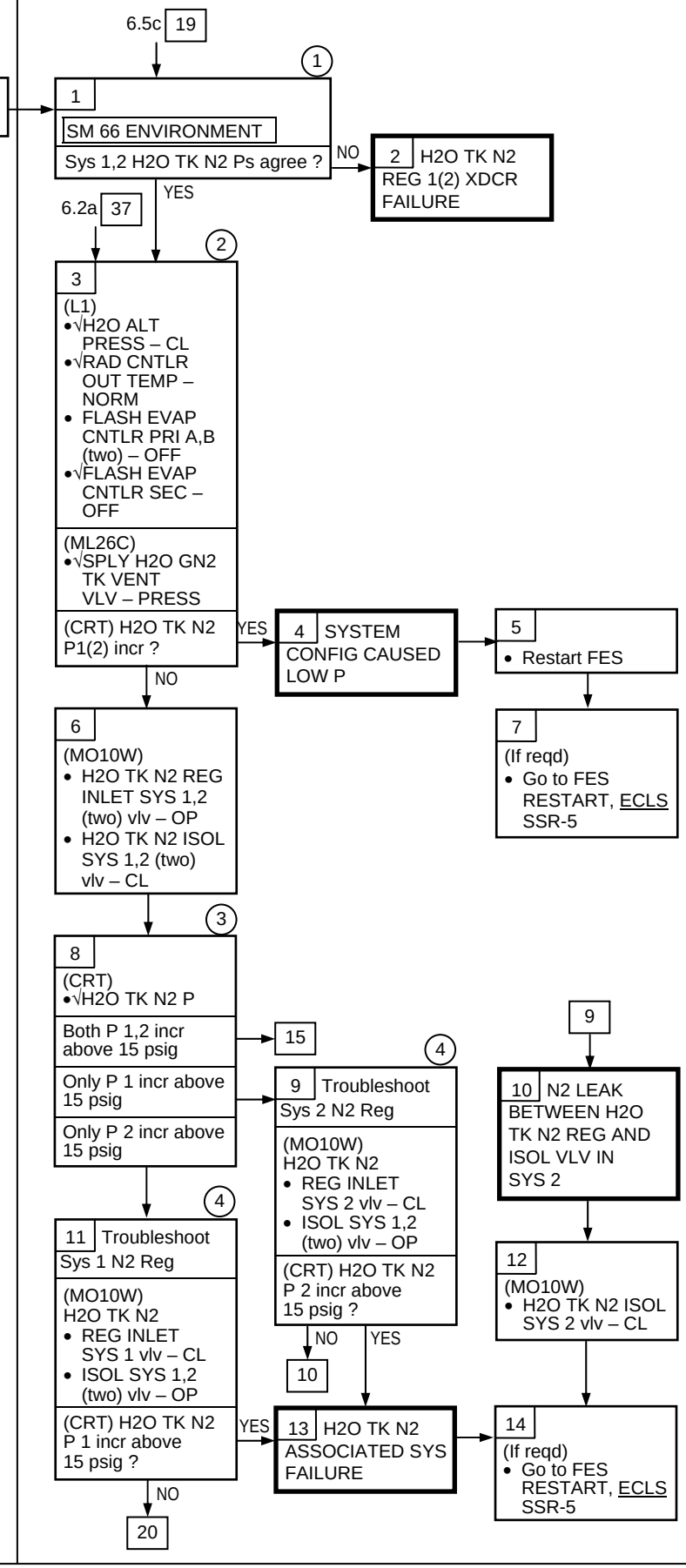

1 CRT label 'H2O TK N2 P' is really H2O REG 1(2) P not actual 'TK N2 PRESS'

2 Repressurization of SPLY H2O TK may cause Flash Evap shutdn if FLASH EVAP CNTLR not turned off

3 S66 H2O SUPPLY PRESS (psia) or H2O WASTE PRESS (psig) can be used as backup to H2O TK N2 P

4 Repressurization may require up to 15 min

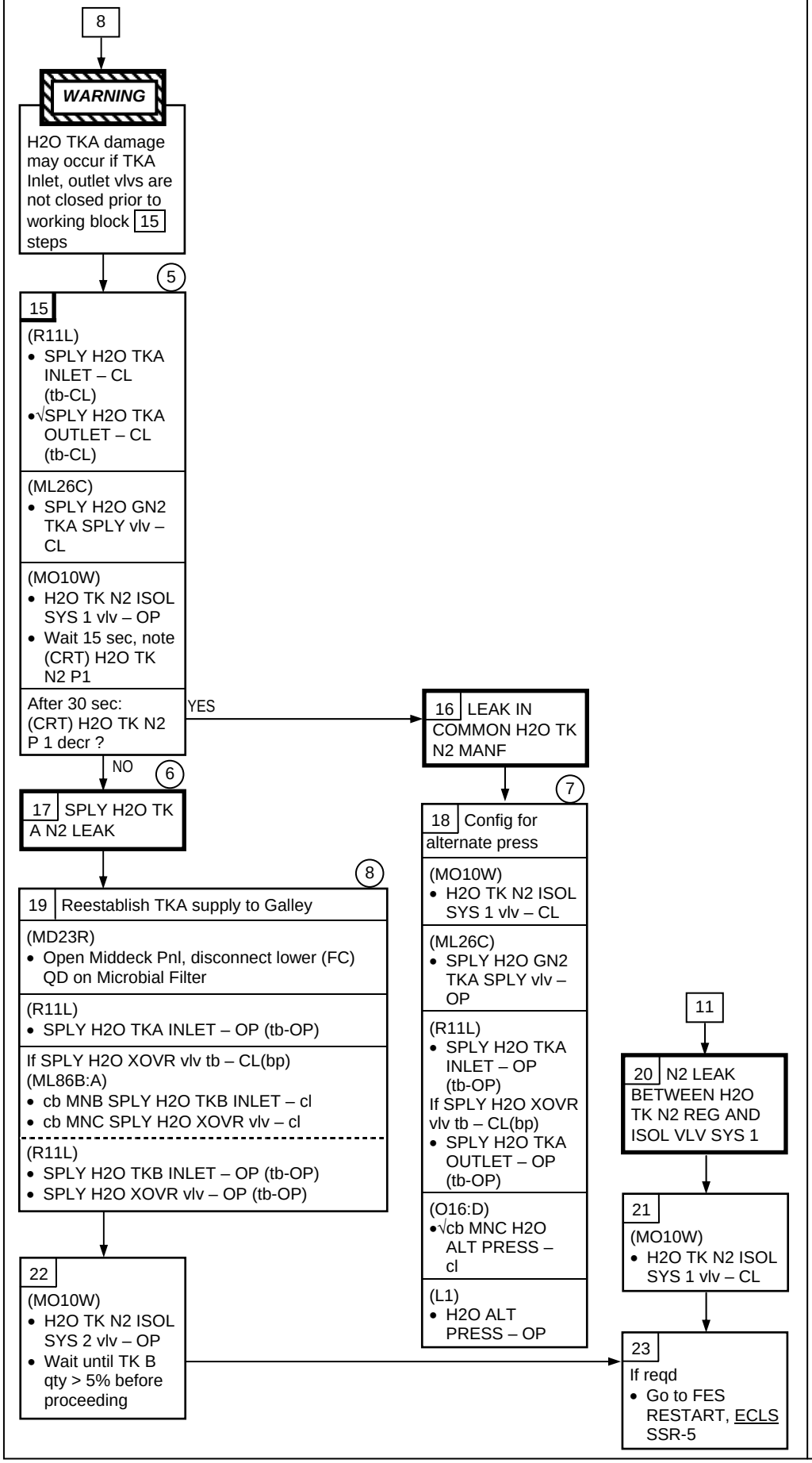

(5) Repressurization of H2O tanks (except TK A) will cause H2O TK N2 P1 to decrease initially. If no leak in the common manifold is present, the H2O TK N2 P1 will increase until it stabilizes at 15.5 to 17.0 psig

(6) SPLY H2O dumps may need to be scheduled more frequently depending upon FLASH EVAP usage

(7) SPLY H2O pressure to the galley will be affected. This may cause Galley RHS to dispense less than dialed quantity and PHS H2O pressure may be insufficient for use. If SPLY H2O TKA is isolated, SPLY H2O to galley will only be available at FCP rate

(8) Allows utilization of TKA H2O. Only TKs B,C,D will fill FCP H2O. To fill TKA, QD must be remated

ECLS

6.2j HUMID SEP ↓

SM ALERT

S66 HUMID SEP A(B)

HUMIDITY SEP A(B) underspeed

Nominal Config:
(L4:J)
cb AC1 HUM SEP A (three) – cl
cb AC2 HUM SEP B (three) – cl
cb AC3 ΦA SIG CONDR HUM SEP – cl
(L1)
HUM SEP B(A) – ON

1 SM 66 ENVIRONMENT
HUMID SEP B(A) '*↓' ?
NO → 2 (CRT) Does HUMID SEP A and/or B have '↓' ?
NO → 3 CLASS 3 ALARM S/W FAULT OR TRANSIENT
YES → 4 (CRT) WST Qty 1 decreasing ?
YES → 7
- Go to H2O TK QTY LOW AND DECR (ORB PKT, ECLS)

NO → 11 (1)
YES → 5 √sw position
(L1) HUM SEP B(A) – ON ?
NO → 6 HUMIDITY SEP B(A) INADVERTENTLY TURNED OFF
→ 8 Turn on original SEP
(L1)
- HUM SEP B(A) – ON

YES → 9 (CRT) Does HUMID SEP A,B (two) have '↓' ?
YES → 10 HUMIDITY SEP B(A) FAILED DUE TO ELECTRICAL FAILURE
→ 16
NO → 12 (CRT) Does HUMID SEP A(B) have '↓' and HUMID SEP B(A) have '*' ?
YES → 13 HUMIDITY SEP A(B) SPEED SNSR DISCRETE FAILED TO NORM INDICATION
→ 10
NO → 15 HUMIDITY SEP B(A) AC2(1) ΦA OR FAN ON DISCRETE LOST
→ 16 Switch to alternate HUM SEP
(L1) HUM SEP
- A(B) – ON
- B(A) – OFF

→ 11
→ 18 HUMIDITY SEP A(B) ON DISCRETE IS FAILED ON

4 → 11 (L1) Is HUM SEP with '*↓' in ON position ?
NO → 18
YES → 14 Switch to alternate SEP
(L1) HUM SEP
- A(B) – ON
- B(A) – OFF

(CRT) HUMIDITY SEP A(B) '*↓' ?
NO → (2) 17 HUMIDITY SEP B(A) OR SPEED SNSR B(A) FAILURE
YES → 19 HUMIDITY SEP SNSR SIG CONDITIONER FAILED
→ (3) 20
- Monitor for visible condensation in cabin as indication of SEP failure

(1) Failed open ck vlvs downstream of each HUM SEP could allow WST TK to flood HUM SEP

(2) √MCC to determine exact failure

(3) MCC has only indication of relative humidity

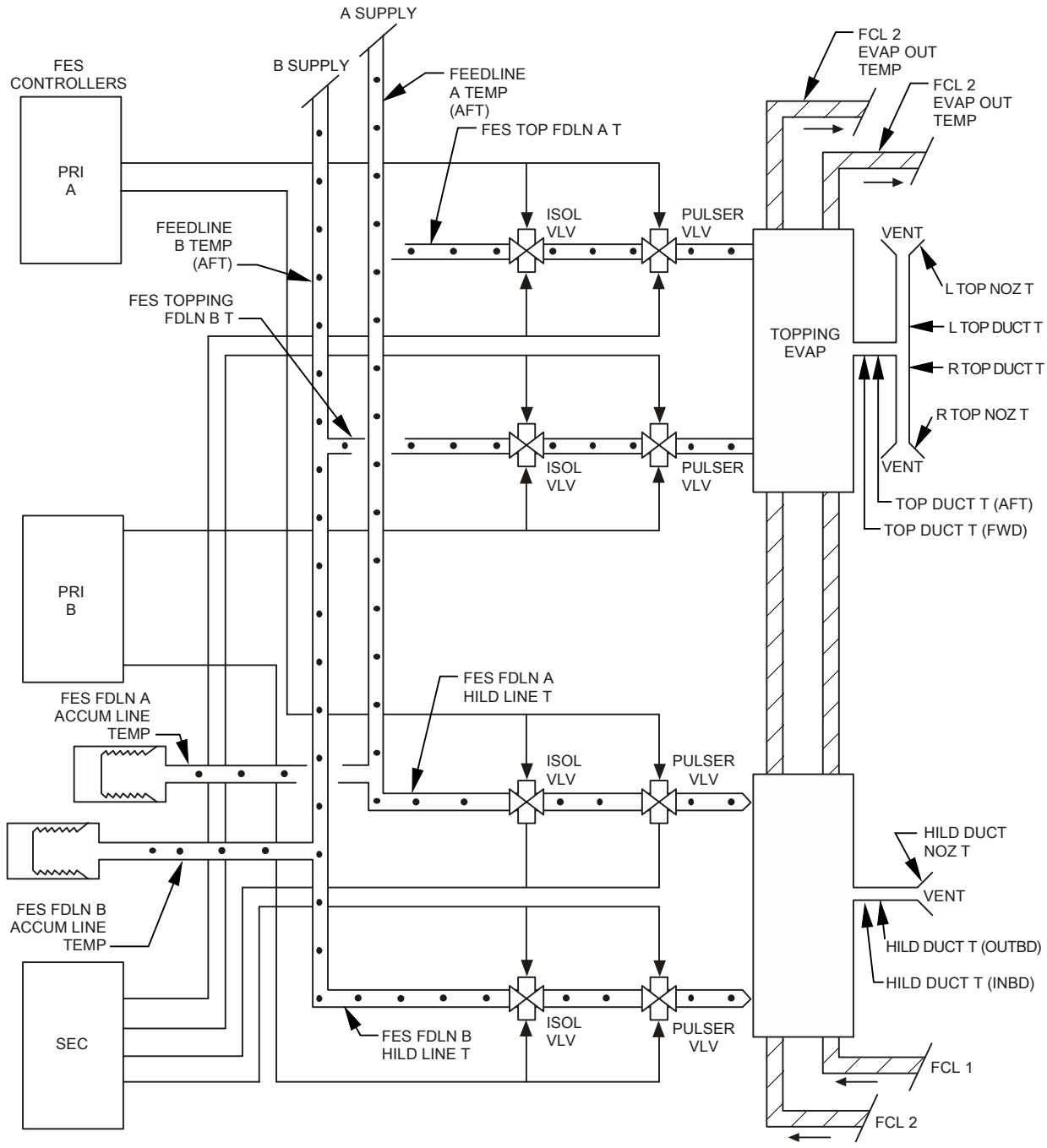

EVAPORATORS

FREON/H2O LOOP

6.4

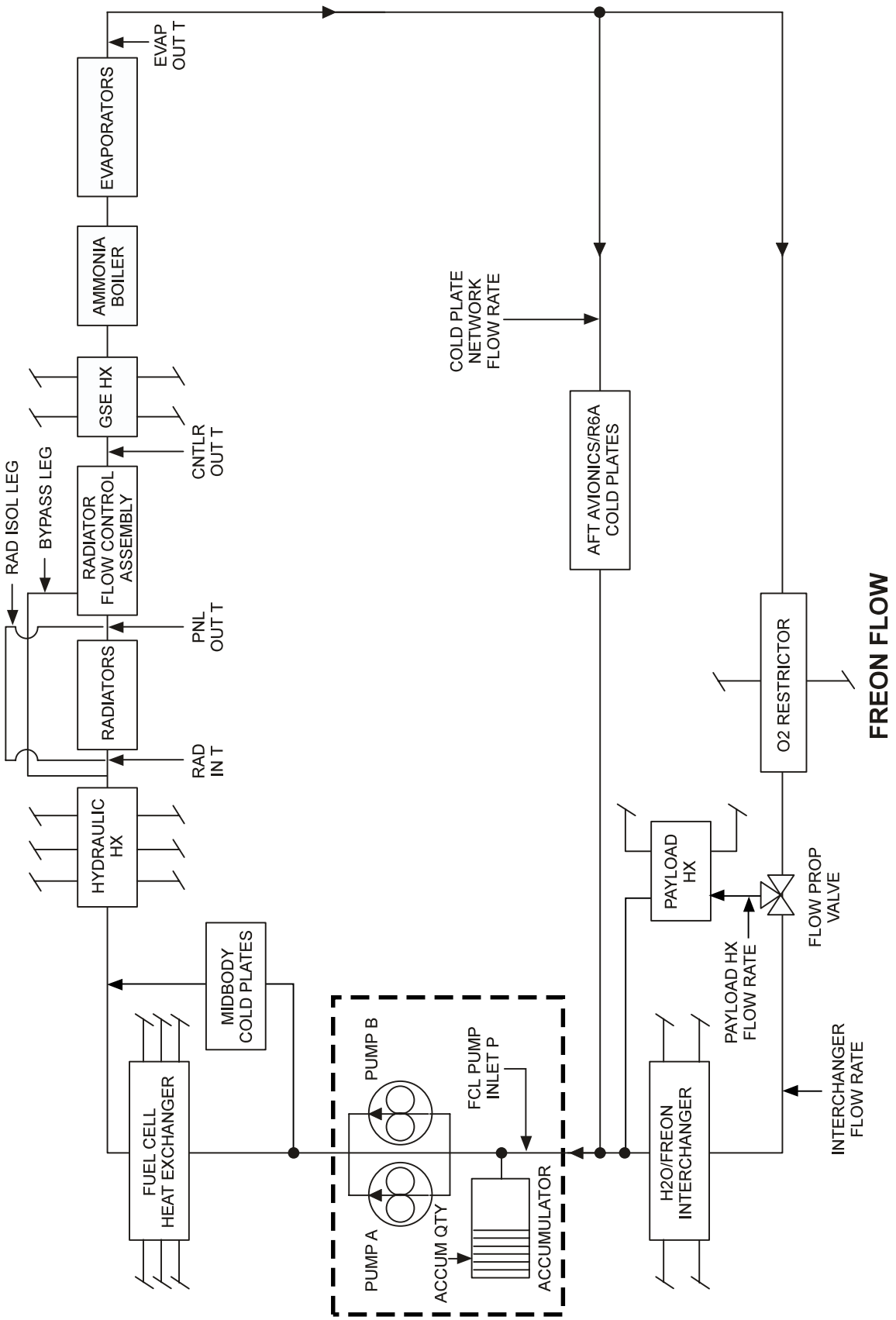
EVAP OUT T
EVAPORATORS
AMMONIA BOILER
GSE HX
CNTLR OUT T
RADIATOR FLOW CONTROL ASSEMBLY
RAD ISOL LEG
BYPASS LEG
PNL OUT T
RADIATORS
RAD IN T
HYDRAULIC HX
MIDBODY COLD PLATES
FUEL CELL HEAT EXCHANGER
PUMP B
PUMP A
FCL PUMP INLET P
ACCUM QTY
ACCUMULATOR
COLD PLATE NETWORK FLOW RATE
AFT AVIONICS/R6A COLD PLATES
PAYLOAD HX
PAYLOAD HX FLOW RATE
FLOW PROP VALVE
O2 RESTRICTOR
H2O/FREON INTERCHANGER
INTERCHANGER FLOW RATE
FREON FLOW

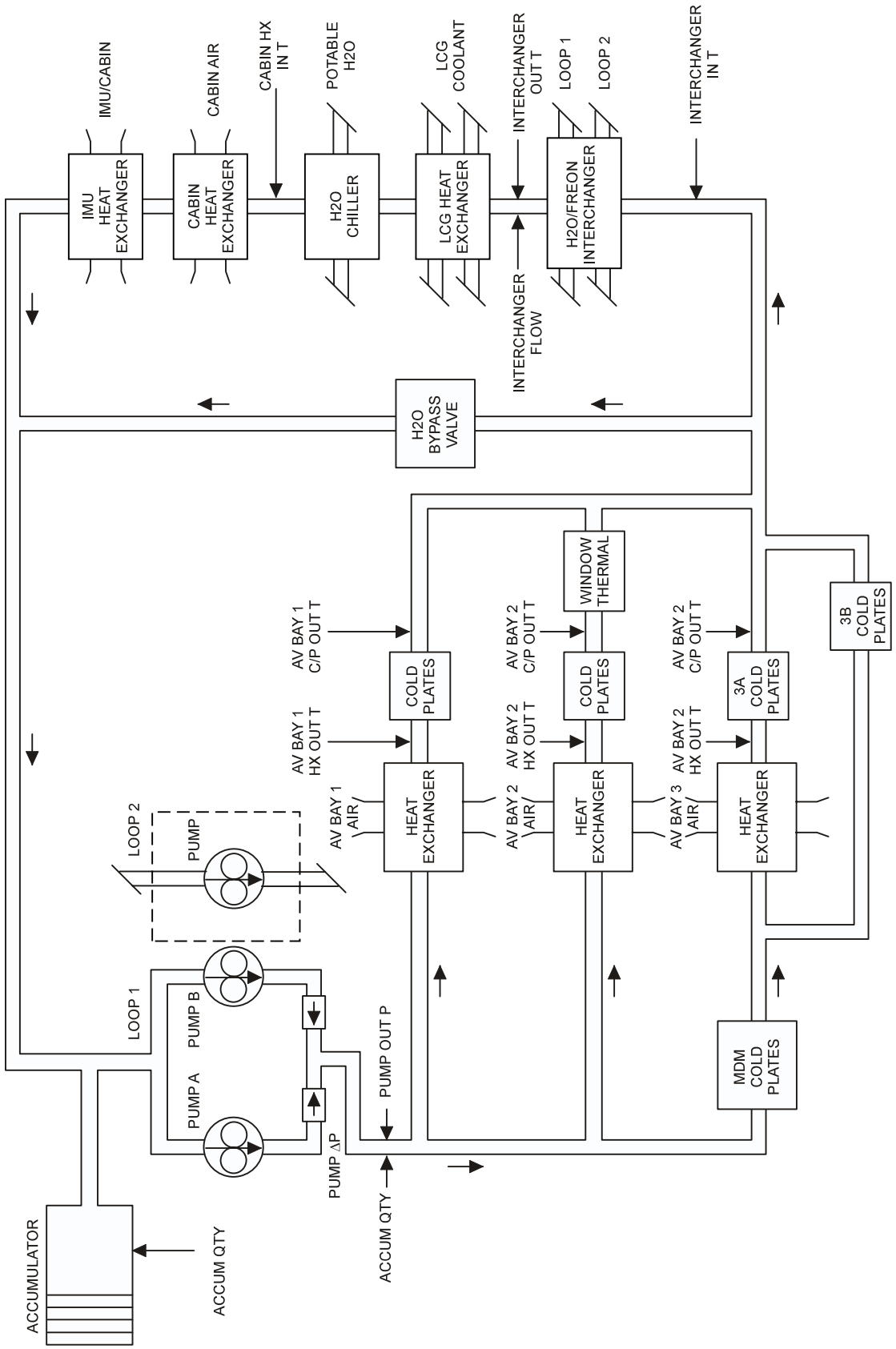
IMU/CABIN
CABIN AIR
CABIN HX IN T
POTABLE H2O
LCG COOLANT
INTERCHANGER OUT T
LOOP 1
LOOP 2
INTERCHANGER IN T
IMU HEAT EXCHANGER
CABIN HEAT EXCHANGER
H2O CHILLER
LCG HEAT EXCHANGER
H2O/FREON INTERCHANGER
INTERCHANGER FLOW
H2O BYPASS VALVE
AV BAY 1 C/P OUT T
AV BAY 2 C/P OUT T
AV BAY 2 C/P OUT T
WINDOW THERMAL
3B COLD PLATES
COLD PLATES
COLD PLATES
3A COLD PLATES
AV BAY 1 HX OUT T
AV BAY 2 HX OUT T
AV BAY 2 HX OUT T
AV BAY 1 AIR
AV BAY 2 AIR
AV BAY 3 AIR
HEAT EXCHANGER
HEAT EXCHANGER
HEAT EXCHANGER
LOOP 2
PUMP
LOOP 1
PUMP B
PUMP A
PUMP OUT P
PUMP ΔP
ACCUM QTY
ACCUMULATOR
ACCUM QTY
MDM COLD PLATES

H2O LOOPS

ECLS

6.4a EVAP OUT T ↑↓

From ORB PKT, EVAP OUT T HIGH

Nominal Config:
(L4:M,N)
cb AC1,2,3 ΦA,ΦB,ΦC FREON LOOP 1,2 PUMP A,B (twelve) – cl
cb AC2,3 ΦB FREON SIG CONDR (two) – cl
cb AC2,3 ΦA FREON FLOW PROP 1,2 (two) – cl
(L4:N)
cb AC2 ΦC RAD ISOL A – cl
cb AC3 ΦC RAD ISOL B – cl
(L4:P)
cb AC1 ΦA RAD CNTLR 1B – cl
cb AC1 ΦB RAD CNTLR 2B – cl
cb AC2 ΦB RAD CNTLR 1A – cl
cb AC3 ΦB RAD CNTLR 2A – cl
(O14:C)
cb MNA RAD ISOL CONTR – cl
(O14:D)
cb MNA FREON RAD CNTL 1,2 (two) – cl
(O15:D)
cb MNB FREON RAD CNTL 1,2 (two) – cl
(O17:C)
SIG CONDR
FREON A – AC2
B – AC3
(L1)
FREON PUMP LOOP 1,2 (two) – B(A)
RAD CNTLR
OUT TEMP – NORM
LOOP 1,2 (two) – AUTO A(B)
BYP VLV
MAN SEL 1,2 (two) – ctr
MODE 1,2 (two) – AUTO
NH3 CNTLR A,B – OFF
FLASH EVAP CNTLR
PRI A(B) – ON
B(A) – OFF
SEC – A(B) SPLY OFF

(Cont in notes column)

(1)

1 SM 88 APU/ ENVIRON THERM

Average FREON LOOP RAD OUT T > 65 degF ?

NO → 19

YES

2

•√FREON LOOP1,2 RAD BYP VLV tb status

One or both BYP → 26

One or both bp → 3 FREON LOOP 1(2) RAD BYP VLV FAILED IN INTERMEDIATE POSITION → 25

Both RAD

(2)

4 SM 88 APU/ ENVIRON THERM

FREON ISOL 1(2) = ISOL → 5 (CRT) FREON LOOP 1(2) ACCUM QTY:

≤ -5 or ≥ 12% → 6 INADVERTENT RAD ISOL DUE TO INSTRUMENTATION OR LOGIC FAILURE

> -5 and < 12% → 8 FREON LOOP 1(2) LEAK → 6.4f 11

FREON ISOL 1,2 ≠ ISOL

7 FES in use ?

YES → 31

NO → 10

6 → 9 Reestablish radiator flow

- Go to RADIATOR ISOL RECOVERY, ECLS SSR-9

(1) If OPS 2 not available, use EVAP OUT T

(2) If OPS 2 not available, continue with block 7

Nominal Config:
(Cont):
(L1)
HI LOAD
EVAP – OFF
DUCT HTR – OFF
TOP EVAP HTR
DUCT – A(B)
NOZ L,R – A(B)
AUTO
FLOW PROP VLV
LOOP 1,2 – ICH

If payloads in use or crew comfort:
FLOW PROP VLV
LOOP 1,2 – PL
(L2)
FLASH EVAP FDLN HTR A,B SPLY – 1(2)
FREON ISOL
MODE – AUTO
LOOP 1 – ctr
LOOP 2 – ctr

If RAD not in use:
(L1)
HI LOAD EVAP – ENA
HI LOAD EVA – DUCT HTR – A(B)

ECLS 6.4a (Cont)

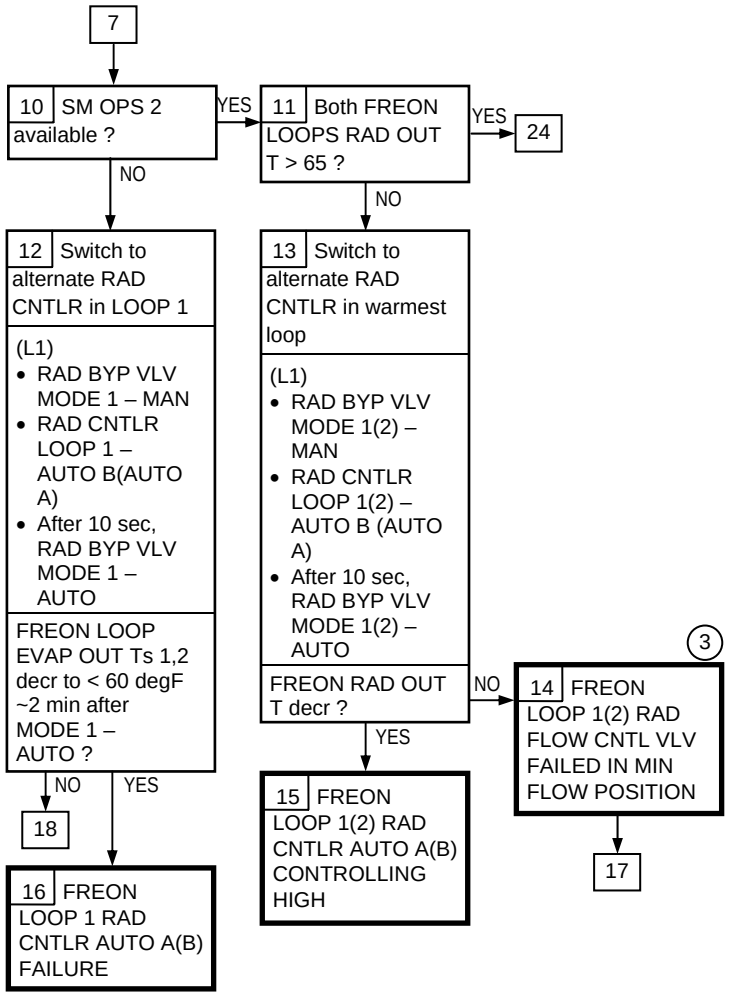

(3) Loss of RFCA – Next PLS depending on H2O quantities

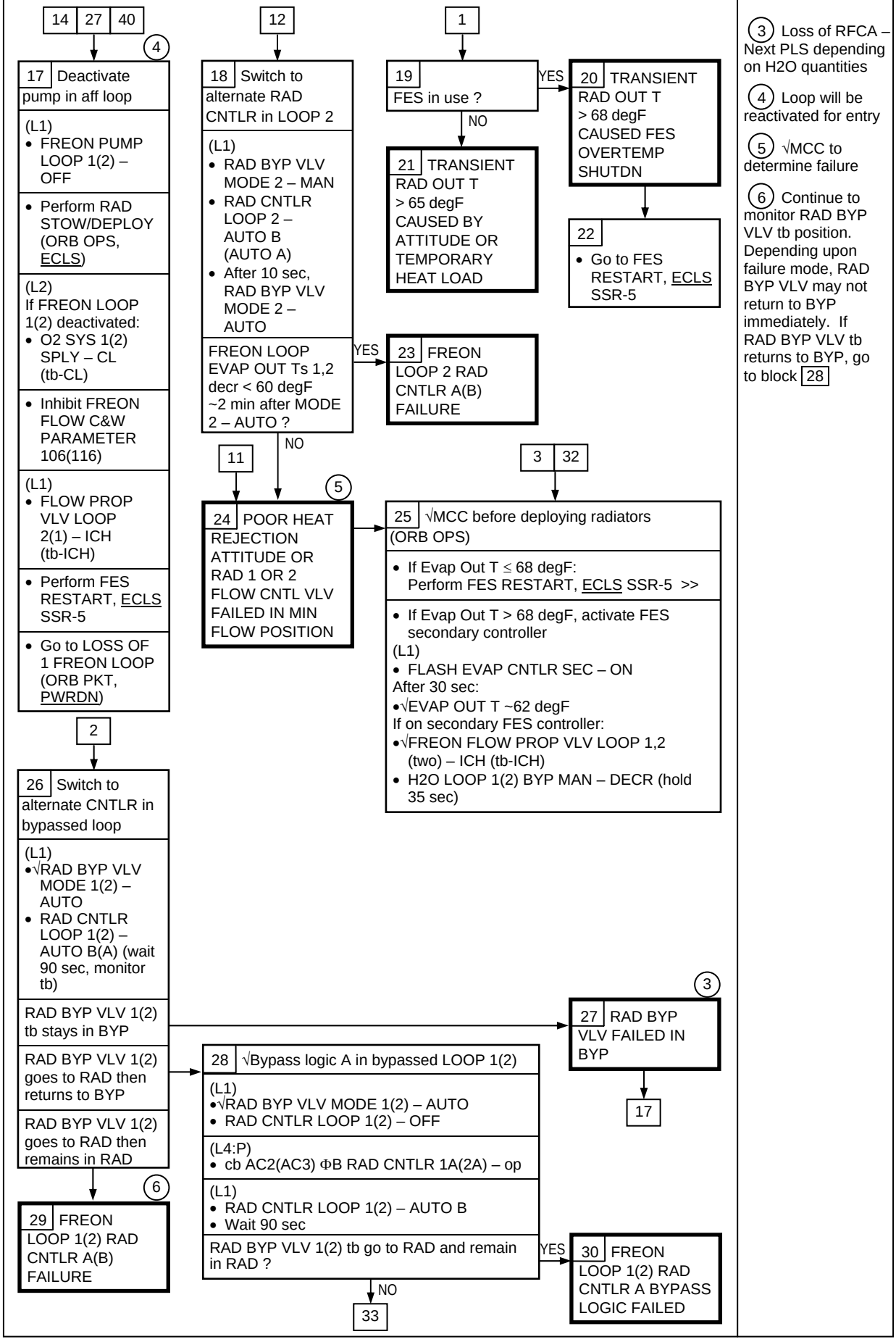
14 27 40
4
17 Deactivate pump in aff loop
(L1)
• FREON PUMP LOOP 1(2) – OFF
• Perform RAD STOW/DEPLOY (ORB OPS, ECLS)
(L2)
If FREON LOOP 1(2) deactivated:
• O2 SYS 1(2) SPLY – CL (tb-CL)
• Inhibit FREON FLOW C&W PARAMETER 106(116)
(L1)
• FLOW PROP VLV LOOP 2(1) – ICH (tb-ICH)
• Perform FES RESTART, ECLS SSR-5
• Go to LOSS OF 1 FREON LOOP (ORB PKT, PWRDN)
2
26 Switch to alternate CNTLR in bypassed loop
(L1)
•√RAD BYP VLV MODE 1(2) – AUTO
• RAD CNTLR LOOP 1(2) – AUTO B(A) (wait 90 sec, monitor tb)
RAD BYP VLV 1(2) tb stays in BYP
RAD BYP VLV 1(2) goes to RAD then returns to BYP
RAD BYP VLV 1(2) goes to RAD then remains in RAD
6
29 FREON LOOP 1(2) RAD CNTLR A(B) FAILURE
12
18 Switch to alternate RAD CNTLR in LOOP 2
(L1)
• RAD BYP VLV MODE 2 – MAN
• RAD CNTLR LOOP 2 – AUTO B (AUTO A)
• After 10 sec, RAD BYP VLV MODE 2 – AUTO
FREON LOOP EVAP OUT Ts 1,2 decr < 60 degF ~2 min after MODE 2 – AUTO ?
YES
23 FREON LOOP 2 RAD CNTLR A(B) FAILURE
NO
11
5
24 POOR HEAT REJECTION ATTITUDE OR RAD 1 OR 2 FLOW CNTL VLV FAILED IN MIN FLOW POSITION
1
19 FES in use ?
YES
20 TRANSIENT RAD OUT T > 68 degF CAUSED FES OVERTEMP SHUTDN
22
• Go to FES RESTART, ECLS SSR-5
NO
21 TRANSIENT RAD OUT T > 65 degF CAUSED BY ATTITUDE OR TEMPORARY HEAT LOAD
3 32
25 √MCC before deploying radiators (ORB OPS)
• If Evap Out T ≤ 68 degF: Perform FES RESTART, ECLS SSR-5 >>
• If Evap Out T > 68 degF, activate FES secondary controller
(L1)
• FLASH EVAP CNTLR SEC – ON
After 30 sec:
•√EVAP OUT T ~62 degF
If on secondary FES controller:
•√FREON FLOW PROP VLV LOOP 1,2 (two) – ICH (tb-ICH)
• H2O LOOP 1(2) BYP MAN – DECR (hold 35 sec)
28 √Bypass logic A in bypassed LOOP 1(2)
(L1)
•√RAD BYP VLV MODE 1(2) – AUTO
• RAD CNTLR LOOP 1(2) – OFF
(L4:P)
• cb AC2(AC3) ΦB RAD CNTLR 1A(2A) – op
(L1)
• RAD CNTLR LOOP 1(2) – AUTO B
• Wait 90 sec
RAD BYP VLV 1(2) tb go to RAD and remain in RAD ?
YES
30 FREON LOOP 1(2) RAD CNTLR A BYPASS LOGIC FAILED
NO
33
3
27 RAD BYP VLV FAILED IN BYP
17
3 Loss of RFCA – Next PLS depending on H2O quantities
4 Loop will be reactivated for entry
5 √MCC to determine failure
6 Continue to monitor RAD BYP VLV tb position. Depending upon failure mode, RAD BYP VLV may not return to BYP immediately. If RAD BYP VLV tb returns to BYP, go to block 28

ECLS 6.4a (Cont)

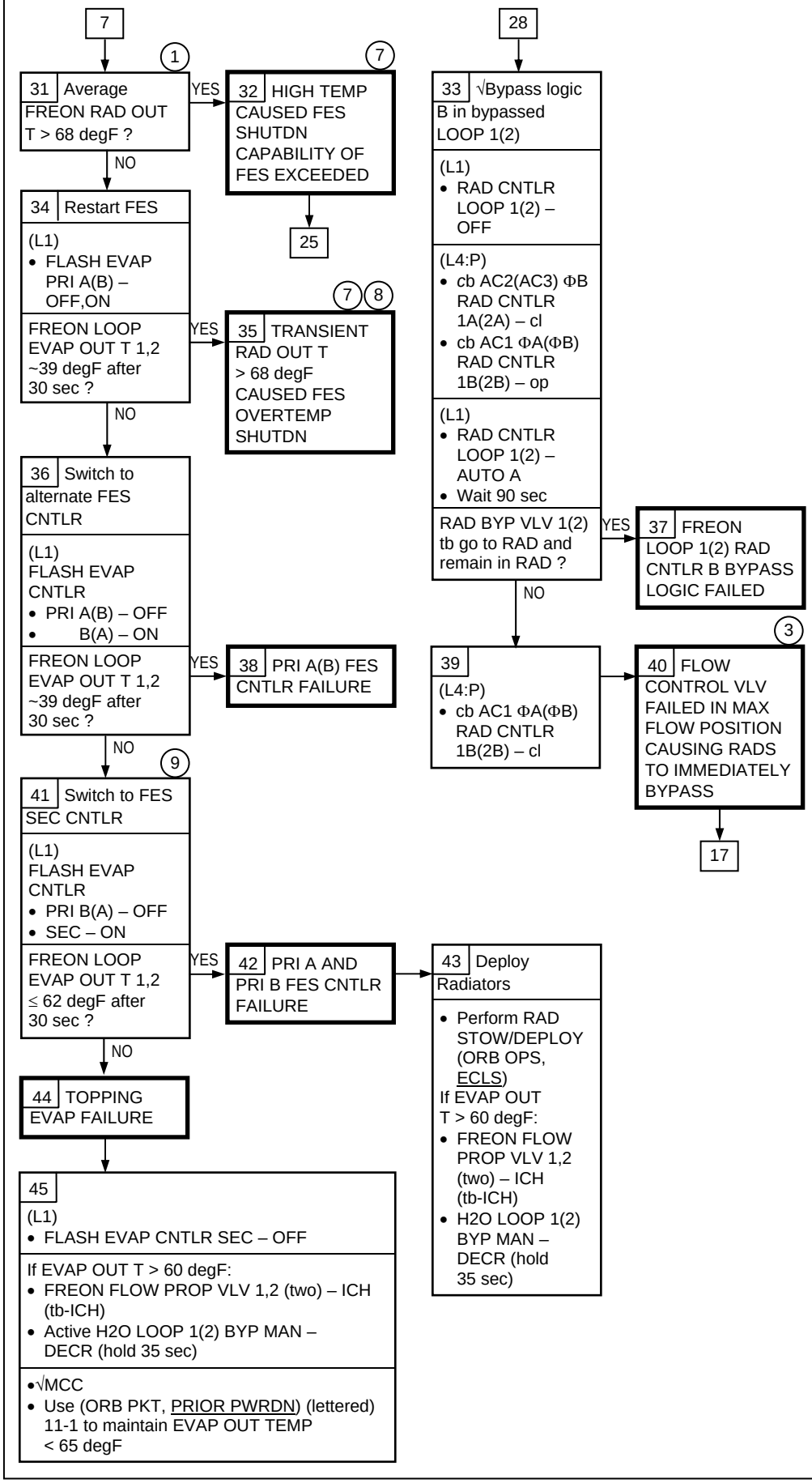

(1) If OPS 2 not available, use EVAP OUT T

(3) Loss of RFCA – Next PLS depending on H2O quantities

(7) If RAD OUT T > 65 degF not explainable by attitude, troubleshoot radiators. Go to block 13

(8) Expect same transient on next daylight pass if same attitude

(9) SEC CNTLR controls at 62 degF. If EVAP OUT T < 62 degF, SEC CNTLR operation cannot be verified. Further troubleshooting reqd to determine complete failure

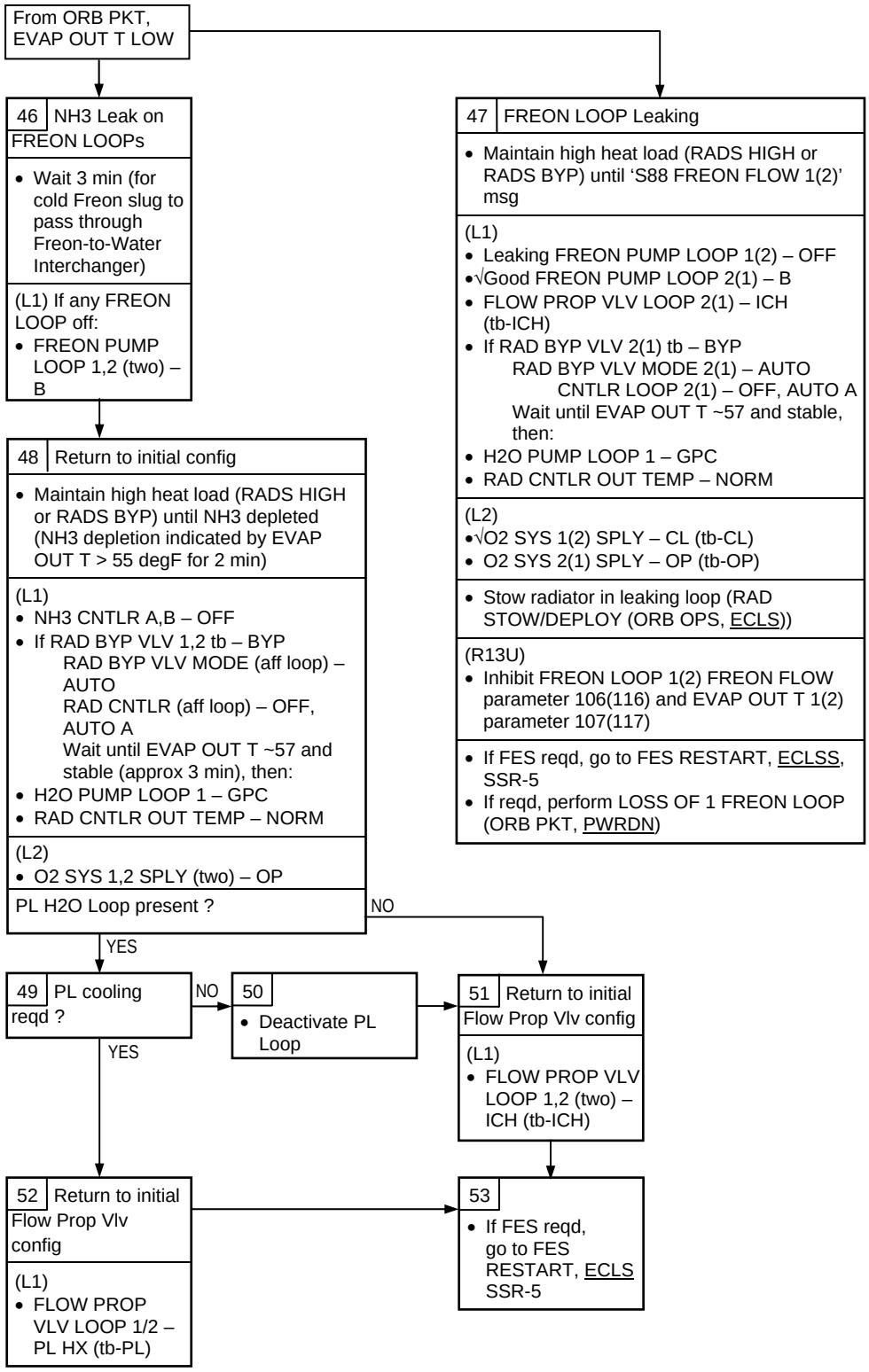
From ORB PKT, EVAP OUT T LOW
46 NH3 Leak on FREON LOOPs
• Wait 3 min (for cold Freon slug to pass through Freon-to-Water Interchanger)
(L1) If any FREON LOOP off:
• FREON PUMP LOOP 1,2 (two) – B
48 Return to initial config
• Maintain high heat load (RADS HIGH or RADS BYP) until NH3 depleted (NH3 depletion indicated by EVAP OUT T > 55 degF for 2 min)
(L1)
• NH3 CNTLR A,B – OFF
• If RAD BYP VLV 1,2 tb – BYP
RAD BYP VLV MODE (aff loop) – AUTO
RAD CNTLR (aff loop) – OFF, AUTO A
Wait until EVAP OUT T ~57 and stable (approx 3 min), then:
• H2O PUMP LOOP 1 – GPC
• RAD CNTLR OUT TEMP – NORM
(L2)
• O2 SYS 1,2 SPLY (two) – OP
PL H2O Loop present ?
NO
YES
49 PL cooling reqd ?
NO
50
• Deactivate PL Loop
YES
51 Return to initial Flow Prop Vlv config
(L1)
• FLOW PROP VLV LOOP 1,2 (two) – ICH (tb-ICH)
52 Return to initial Flow Prop Vlv config
(L1)
• FLOW PROP VLV LOOP 1/2 – PL HX (tb-PL)
53
• If FES reqd, go to FES RESTART, ECLS SSR-5
47 FREON LOOP Leaking
• Maintain high heat load (RADS HIGH or RADS BYP) until 'S88 FREON FLOW 1(2)' msg
(L1)
• Leaking FREON PUMP LOOP 1(2) – OFF
•√Good FREON PUMP LOOP 2(1) – B
• FLOW PROP VLV LOOP 2(1) – ICH (tb-ICH)
• If RAD BYP VLV 2(1) tb – BYP
RAD BYP VLV MODE 2(1) – AUTO
CNTLR LOOP 2(1) – OFF, AUTO A
Wait until EVAP OUT T ~57 and stable, then:
• H2O PUMP LOOP 1 – GPC
• RAD CNTLR OUT TEMP – NORM
(L2)
•√O2 SYS 1(2) SPLY – CL (tb-CL)
• O2 SYS 2(1) SPLY – OP (tb-OP)
• Stow radiator in leaking loop (RAD STOW/DEPLOY (ORB OPS, ECLS))
(R13U)
• Inhibit FREON LOOP 1(2) FREON FLOW parameter 106(116) and EVAP OUT T 1(2) parameter 107(117)
• If FES reqd, go to FES RESTART, ECLSS, SSR-5
• If reqd, perform LOSS OF 1 FREON LOOP (ORB PKT, PWRDN)

6.4b FREON FLOW LOW

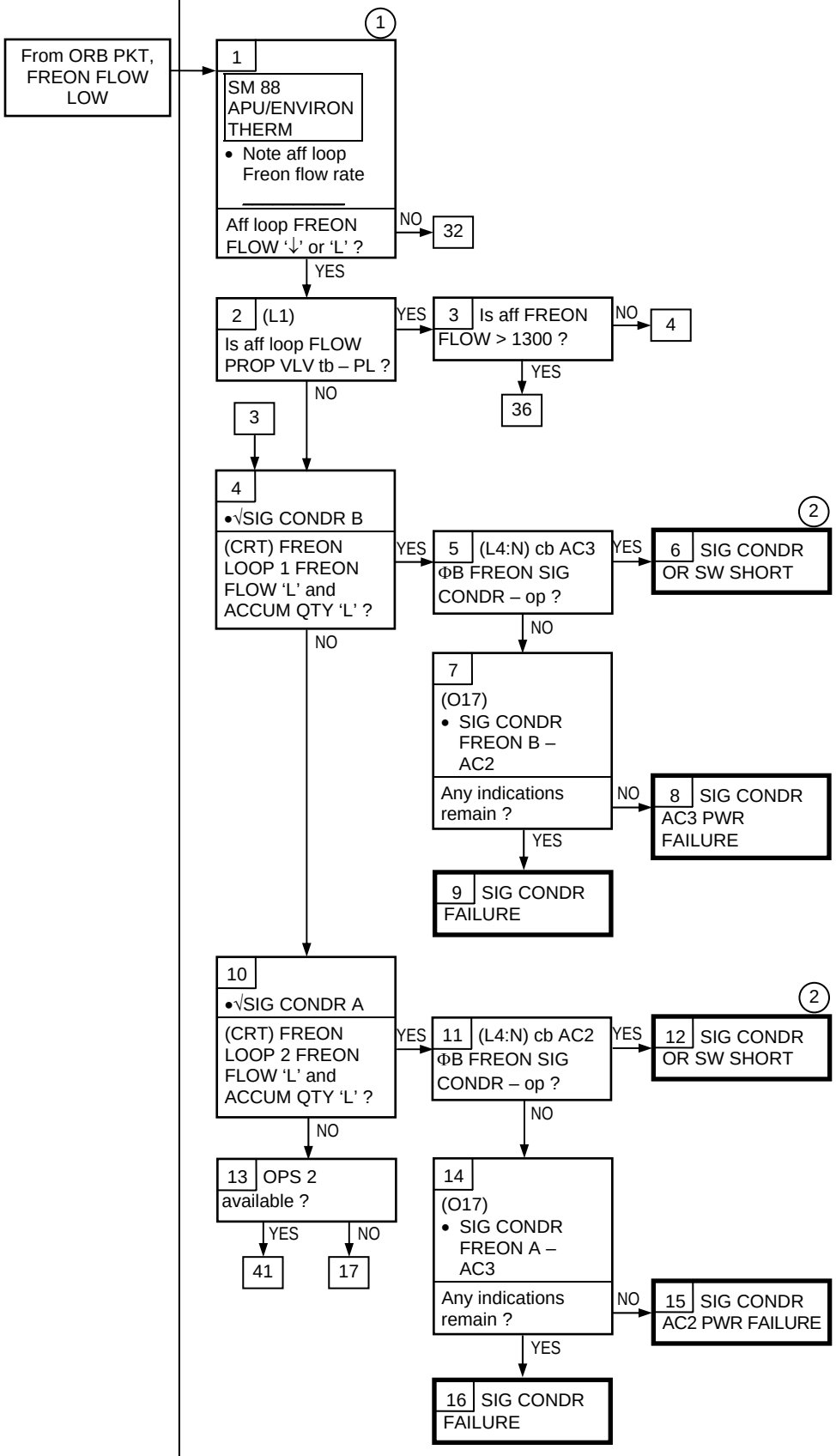

(1) FREON FLOW meter on pnl O1 may be used as alternate

(2) Do not operate FREON SIG CONDR sw(s) on pnl O17 before √MCC

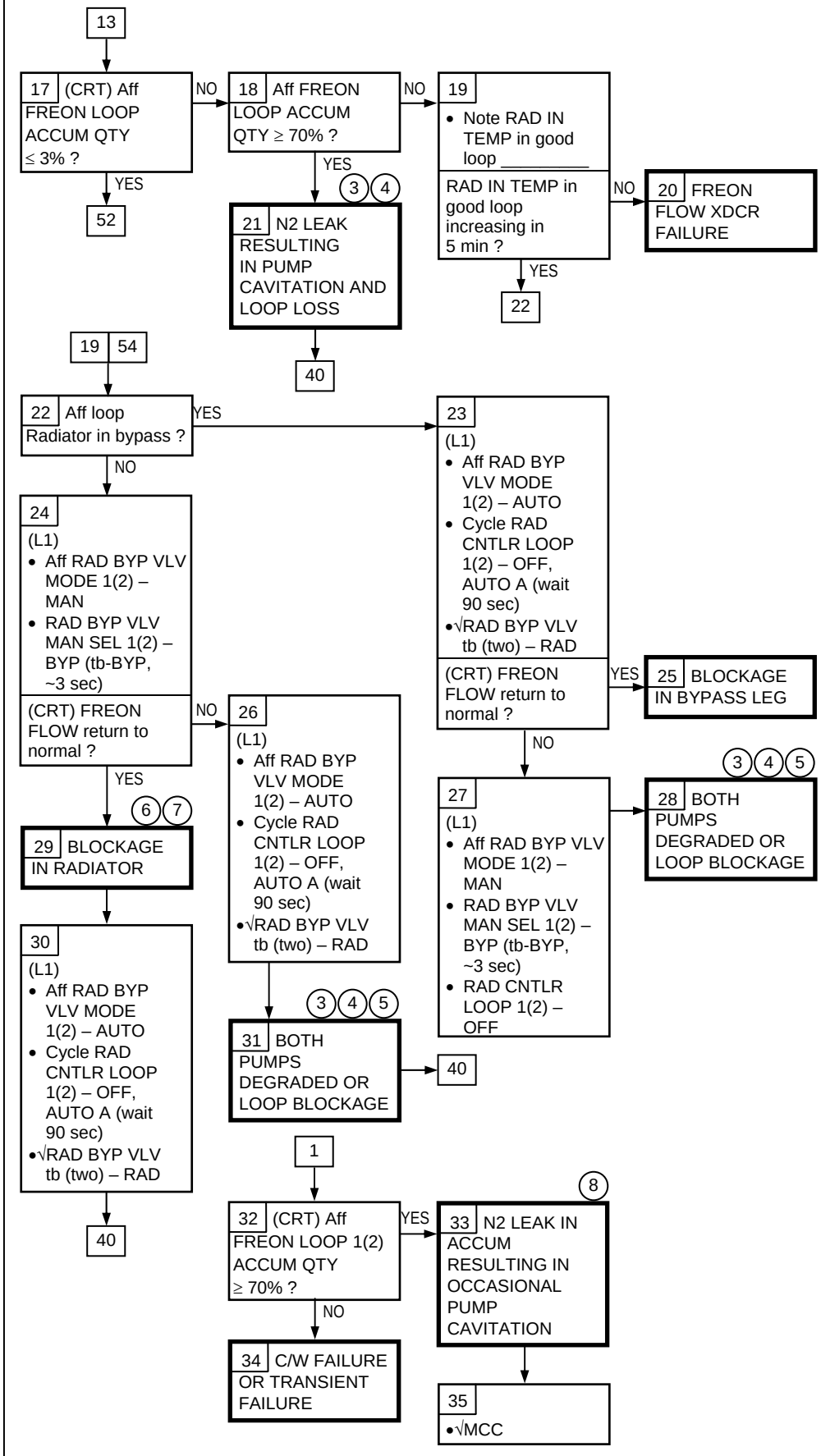

(3) Pwrdn of some equipment may be reqd depending on heat load

(4) Loss of Freon Loop next PLS entry

(5) √MCC to determine failure

(6) With blockage in radiator, RADS may be manually bypassed to incr loop's flow in the event of loss of other FCL

(7) If blockage in radiator deactivates Freon Loop, RADS may be manually bypassed and reactivated for entry

(8) If cavitation occurs frequently, loop is lost

ECLS 6.4b (Cont)

3

36

•√Correct Freon Flow 1(2) SM ALERT limit set selection by SM preconditioning

SM 60 SM TABLE MAINT

If LOOP 1:

• ITEM 1 +0 6 3 1 1 0 0 EXEC

If LOOP 2:

• ITEM 1 +0 6 3 1 3 0 0 EXEC

Limit set 1 (low: 1950; high: - -)

Limit set 2 (low: 1300; high: - -)

38 C/W FAILURE OR TRANSIENT FAILURE

37 SELECTED SM ALERT LIMIT SET IS NOT CONSISTENT WITH VALVE STATUS. SM ALERT IN LIMIT SET 1 WHEN FLOW PROP VLV IS IN PL

21 30
31 52
53 55

8 9

40 (CRT) If aff FREON LOOP FLOW < 750 lb/hr (OSL) or MCC call

Deactivate pump in aff loop:
(L1)
• FREON PUMP LOOP 1(2) – OFF

Stow radiator in aff loop:
• Perform PORT(STBD) RAD OPS, MECH SSR-1

(L2)
• O2 SYS 1(2) SPLY – CL (tb-CL)

(L1)
• FLOW PROP VLV LOOP 2(1) – ICH (tb-ICH)

(R13U)
• Inhibit FREON LOOP 1(2) FREON FLOW parameter 106 (116)

• Go to LOSS OF 1 FREON LOOP (ORB PKT, PWRDN)

10

39

• Reset SM ALERT limits on aff loop

SM 60 SM TABLE MAINT

LOOP 1	LOOP 2
FREON FLOW • ITEM 1 +0 6 3 1 1 0 0 EXEC • ITEM 2 +1 3 0 0 EXEC PL HX FLOW • ITEM 1 +0 6 3 1 1 0 3 EXEC • ITEM 2 +5 0 0 EXEC	FREON FLOW • ITEM 1 +0 6 3 1 3 0 0 EXEC • ITEM 2 +1 3 0 0 EXEC PL HX FLOW • ITEM 1 +0 6 3 1 3 0 3 EXEC • ITEM 2 +5 0 0 EXEC

(8) If cavitation occurs frequently, loop is lost

(9) FCL1 – PORT
FCL2 – STBD

(10) Crew may opt to have MCC manage software limits via TMBU

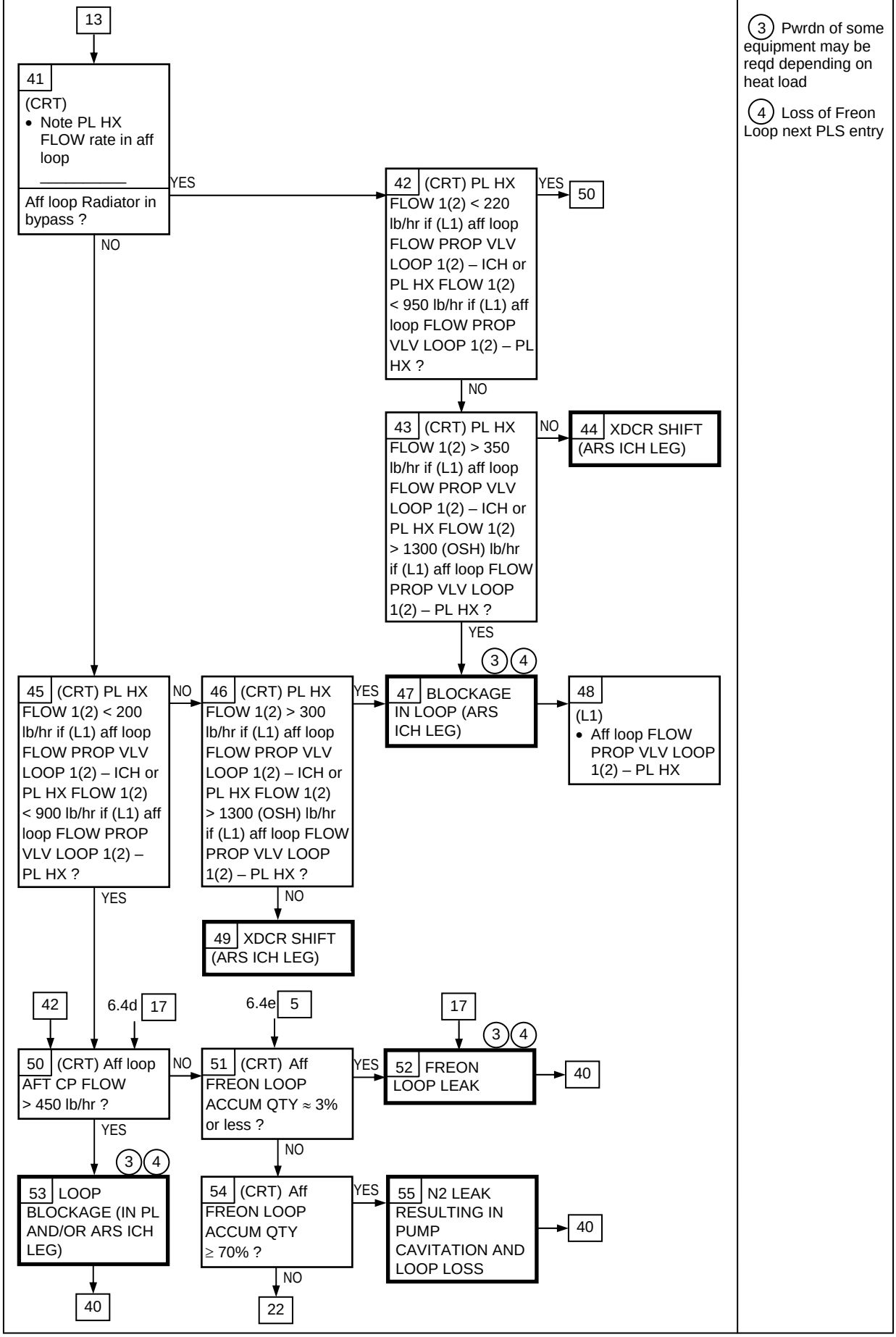

(3) Pwrdn of some equipment may be reqd depending on heat load

(4) Loss of Freon Loop next PLS entry

ECLS

6.4d FRN FLOW PROP VLV PL HX FLOW ↓

SM ALERT

S88 FRN PL HX 1(2)

If:
(L1)
FLOW PROP VLV LOOP 1(2) – PL HX
PL HX FLOW < 500 lb/hr

With FLOW PROP VLV – ICH
PL HX FLOW is TMBU – OSL

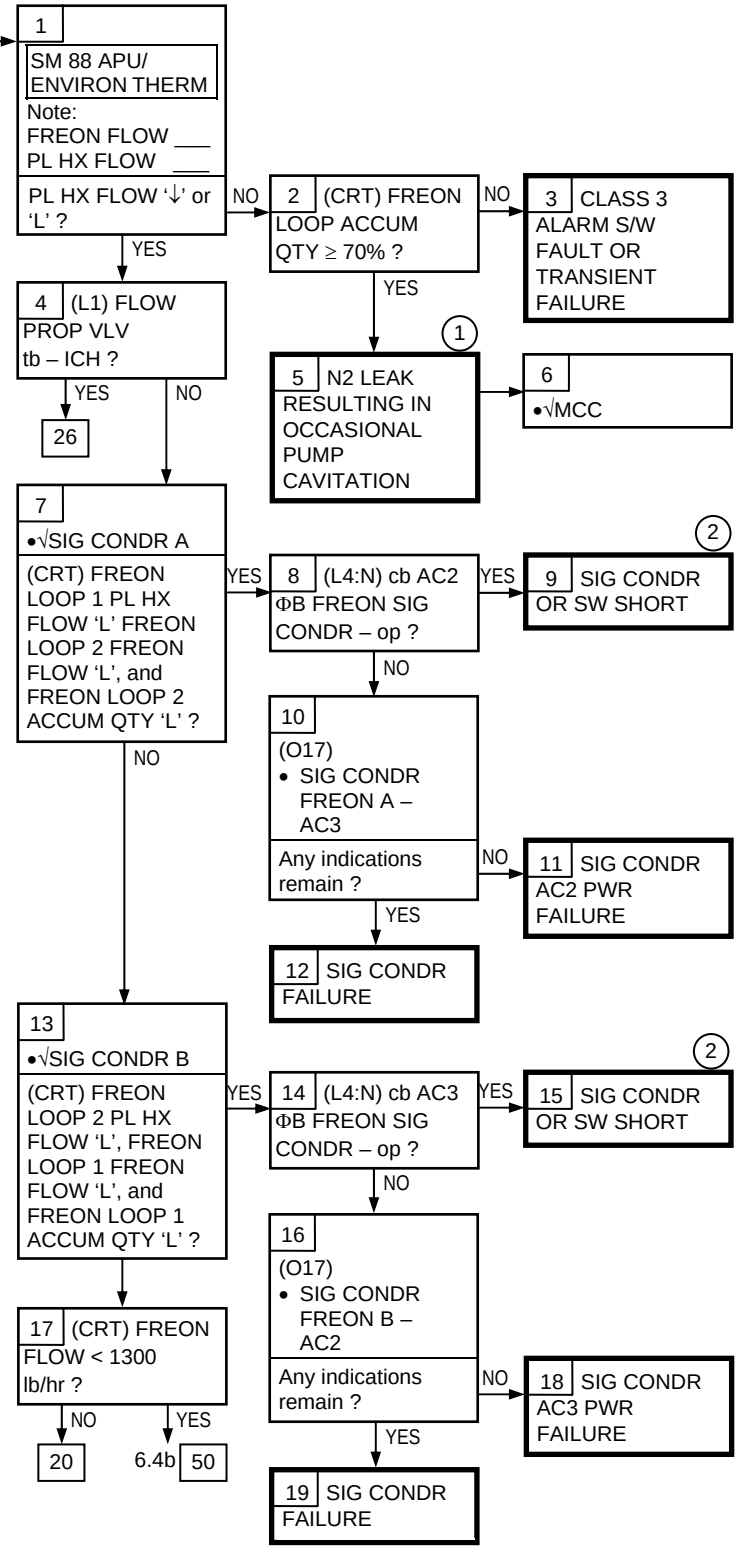

(1) N2 leak across FCL accum bellows can cause cavitations of pump. Frequent cavitation = loop loss

(2) √MCC. With Sig Condr or sw short, do not operate FREON SIG CONDR sw(s) on pnl O17

ECLS 6.4d (Cont)

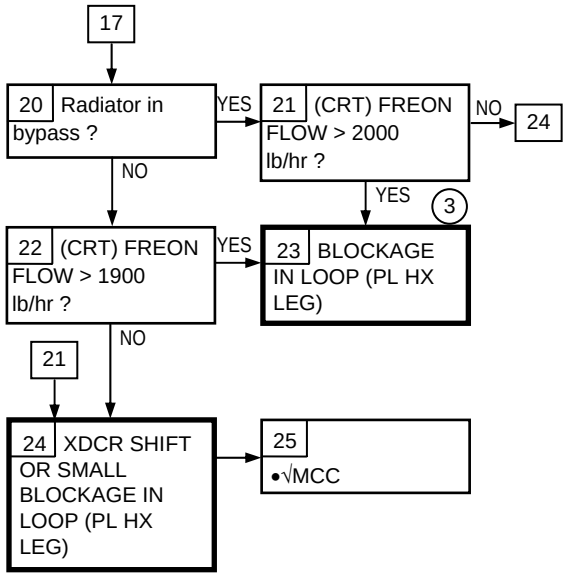

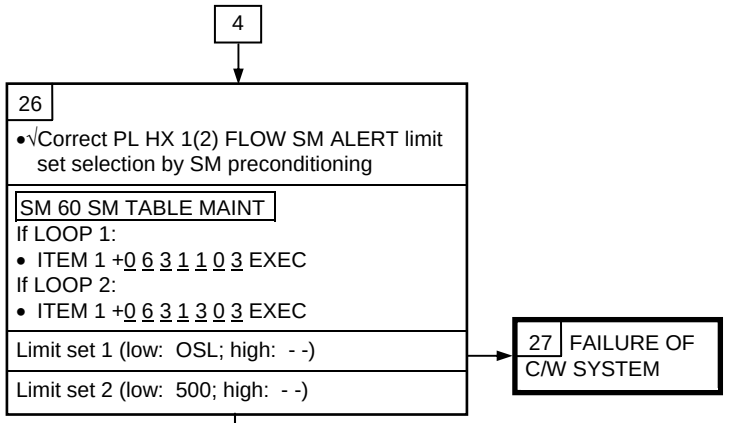

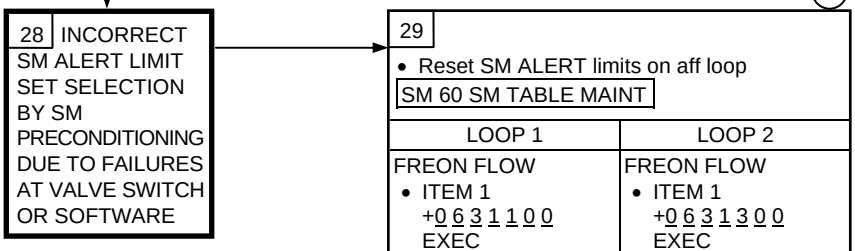

(3) Pwrdn of some equipment may be reqd depending on heat load and amount of blockage

(4) Crew may opt to have MCC manage software limits via TMBU

ECLS

6.4e AFT COLDPLATE FLOW ↓

SM ALERT

S88 FRN AFT CP 1(2)

AFT CP FLOW < 200 lb/hr

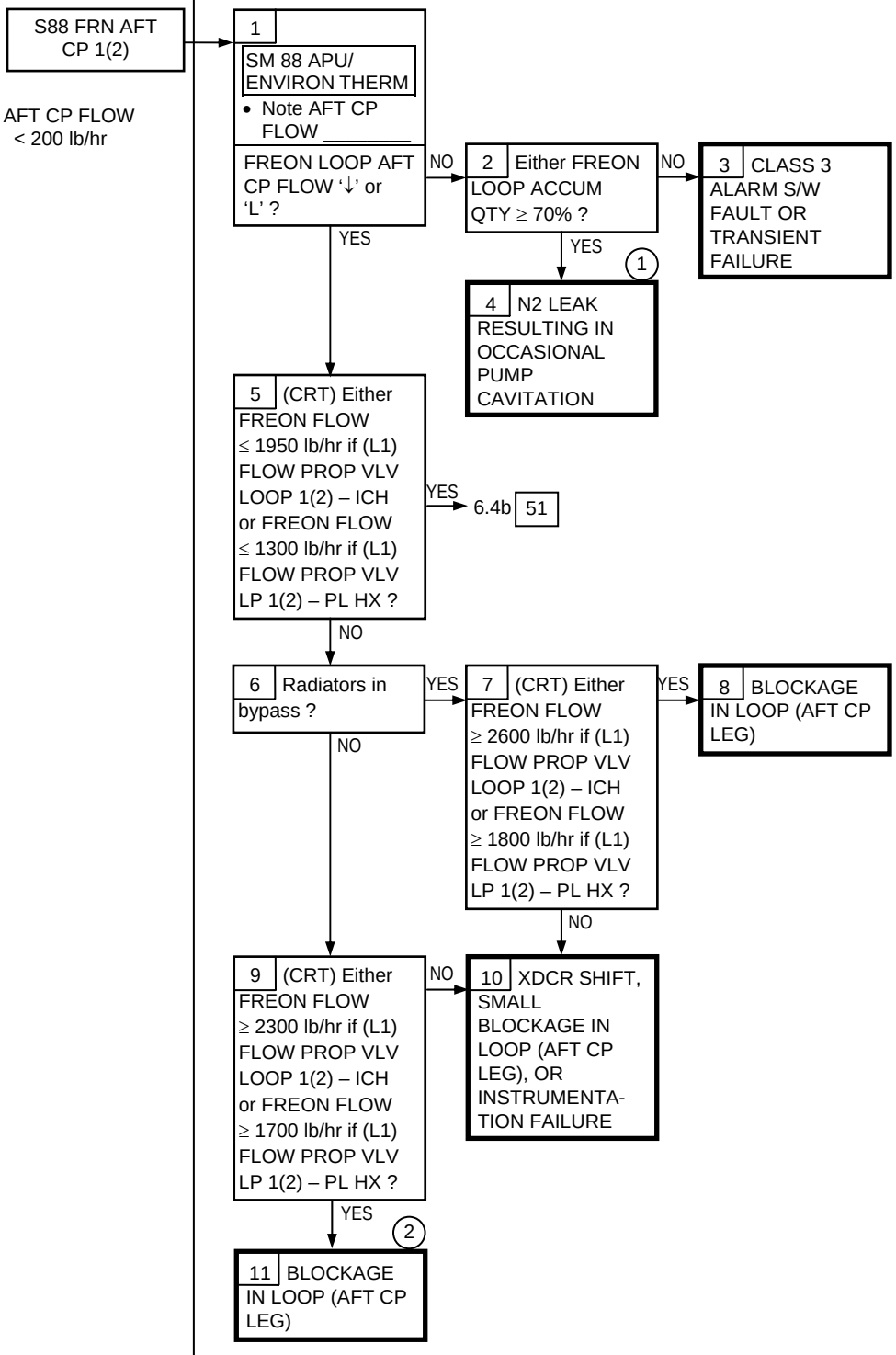

(1) N2 leak across FCL ACCUM bellows. Frequent cavitation = loop lost

(2) Loss of FCL definition next PLS entry

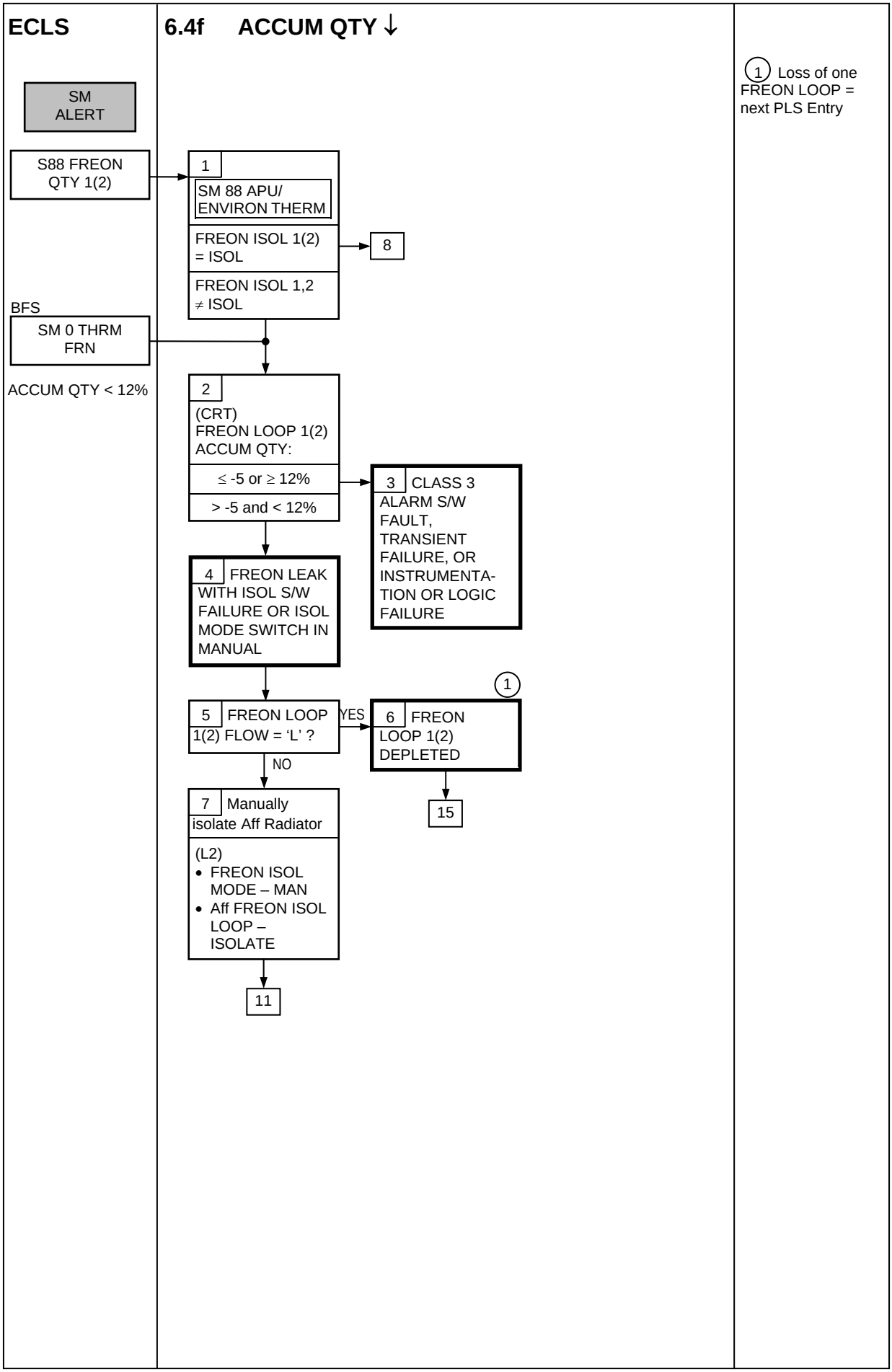
ECLS
6.4f ACCUM QTY ↓
SM ALERT
S88 FREON QTY 1(2)
BFS
SM 0 THRM FRN
ACCUM QTY < 12%
1
SM 88 APU/ ENVIRON THERM
FREON ISOL 1(2) = ISOL
8
FREON ISOL 1,2 ≠ ISOL
2
(CRT) FREON LOOP 1(2) ACCUM QTY:
≤ -5 or ≥ 12%
> -5 and < 12%
3 CLASS 3 ALARM S/W FAULT, TRANSIENT FAILURE, OR INSTRUMENTA-TION OR LOGIC FAILURE
4 FREON LEAK WITH ISOL S/W FAILURE OR ISOL MODE SWITCH IN MANUAL
5 FREON LOOP 1(2) FLOW = 'L' ?
YES
6 FREON LOOP 1(2) DEPLETED
15
NO
7 Manually isolate Aff Radiator
(L2)
• FREON ISOL MODE – MAN
• Aff FREON ISOL LOOP – ISOLATE
11
1 Loss of one FREON LOOP = next PLS Entry

ECLS 6.4f (Cont)

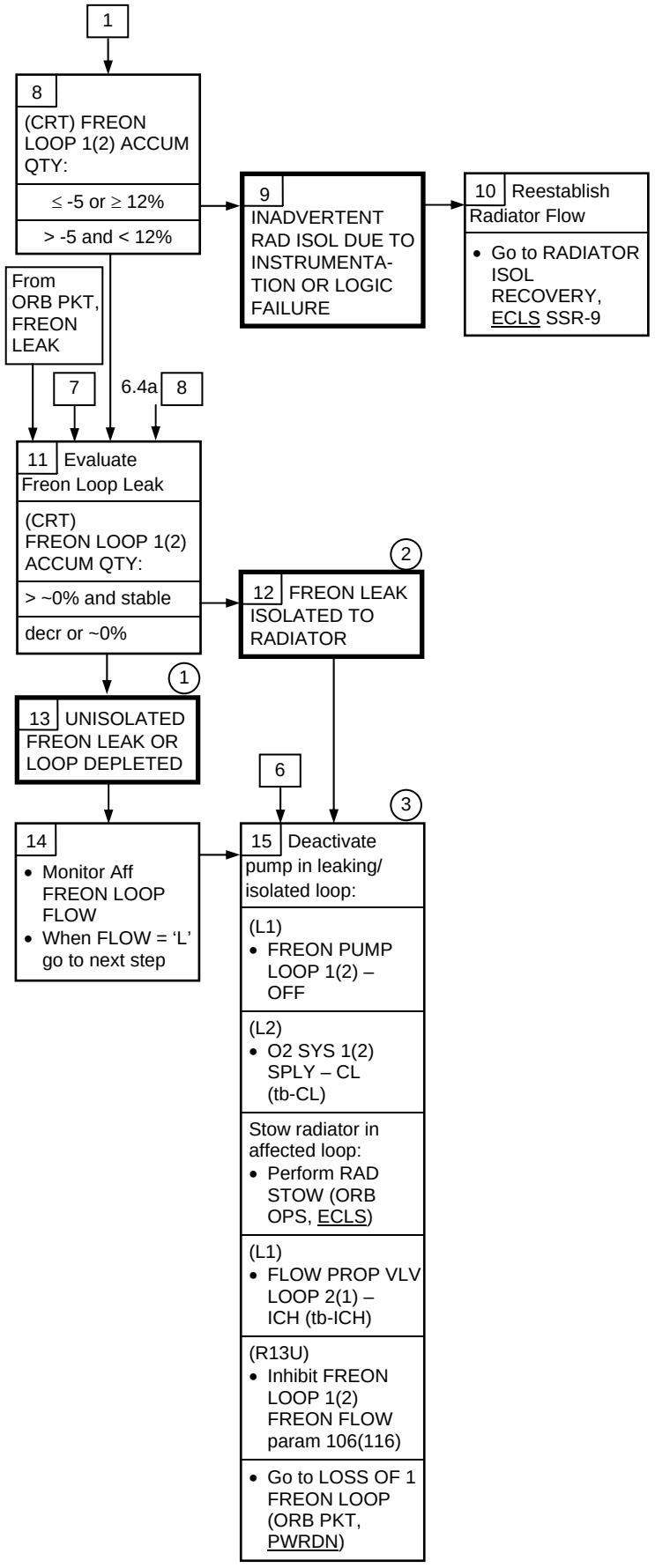

(1) Loss of one FREON LOOP = next PLS Entry

(2) Leak isolated = Next PLS Entry, depending on Supply H2O quantities and management. Loss of RAD cooling in Aff FREON LOOP

(3) FCL1 = PORT
FCL2 = STBD

ECLS

6.4g EVAP TEMP HI LOAD INBD (OUTBD) DUCT(NOZ) ↑↓

SM ALERT

S88 EVAP HI LD TEMP

BFS

SM 0 THRM EVAP

If:

HI LOAD

	degF
INBD	> 375
INBD	< 150
OUTBD	> 330
OUTBD	< 150
NOZ	> 350
NOZ	< 100

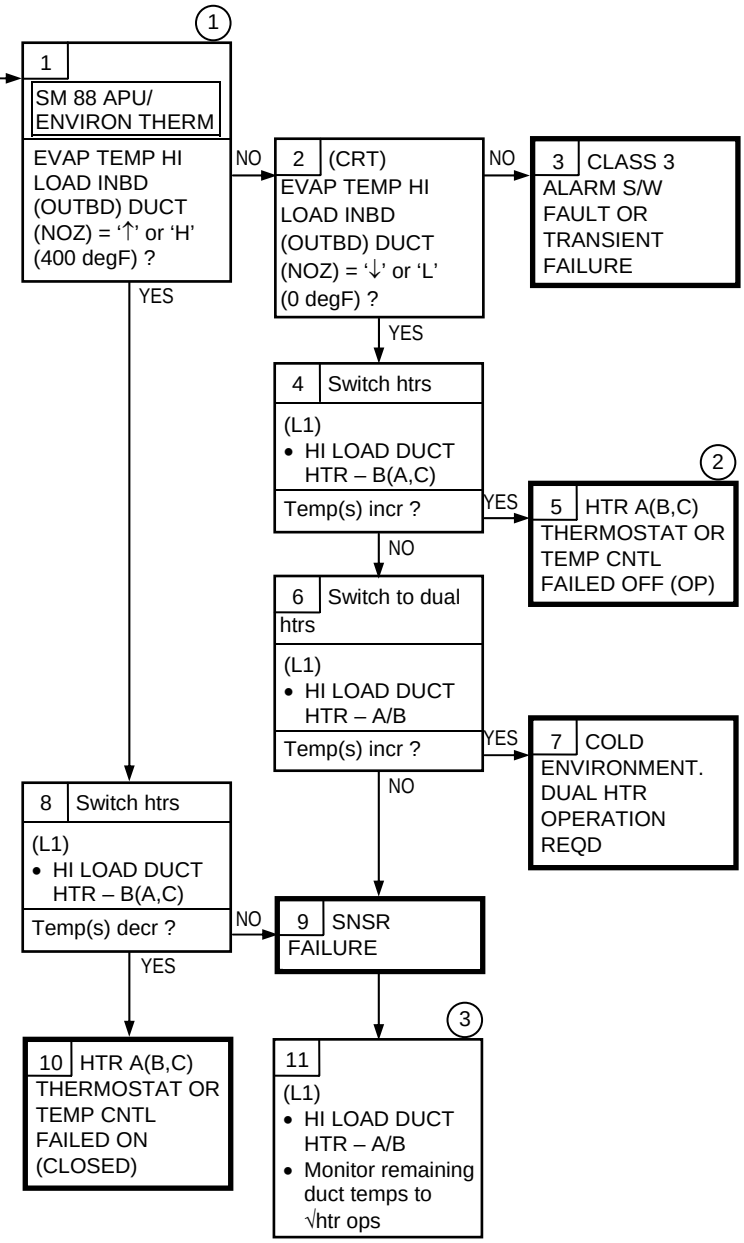

(1) Upon initial activation of heaters, FDA limits are not enabled until following time has elapsed:

INBD T	25 min
OUTBD T	16 min
NOZ T	40 min

(2) If noz htr failed, HI LOAD EVAP still operational. If inbd/outbd duct htr failed, HI LOAD EVAP lost

(3) Loss of insight requires dual htr ops when htrs are activated

ECLS

6.4h EVAP TOPPING DUCT T FWD(AFT), L(R) ↑↓

SM ALERT

S88 EVAP TOP TEMP

BFS

SM 0 THRM EVAP

If:

S88/BFS SM 0

	degF
FWD	> 330
FWD	< 100
AFT	> 330
AFT	< 100

S88 ONLY

	degF
L	> 245
L	< 50
R	> 245
R	< 50

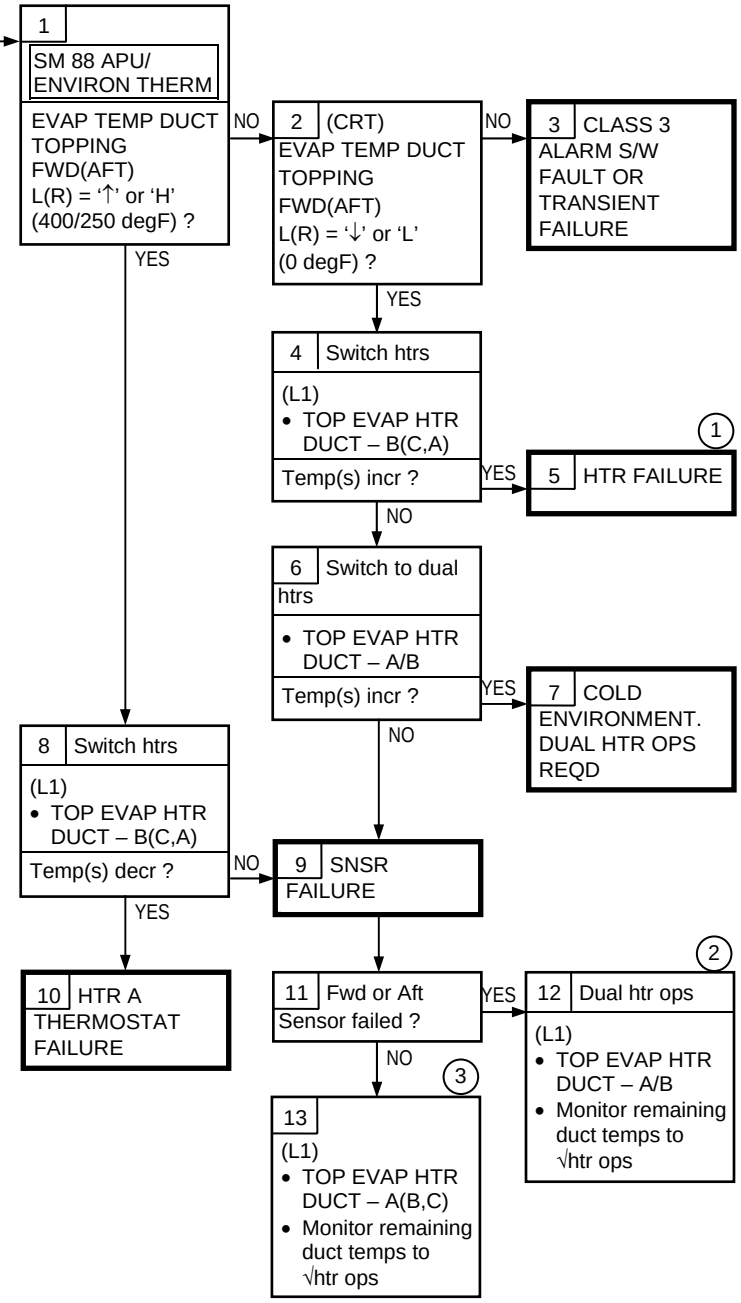

(1) Topping FES still operational if left, right htrs failed. Loss of fwd or aft htr could result in duct freezing and eventual loss of topping FES

(2) If instr loss is on either fwd or aft duct, then dual htr ops is reqd as these htrs are considered mandatory

(3) If instr loss is on either left or right duct, then only single htr ops is reqd

ECLS

6.4i EVAP TOPPING L(R) NOZ ↑↓

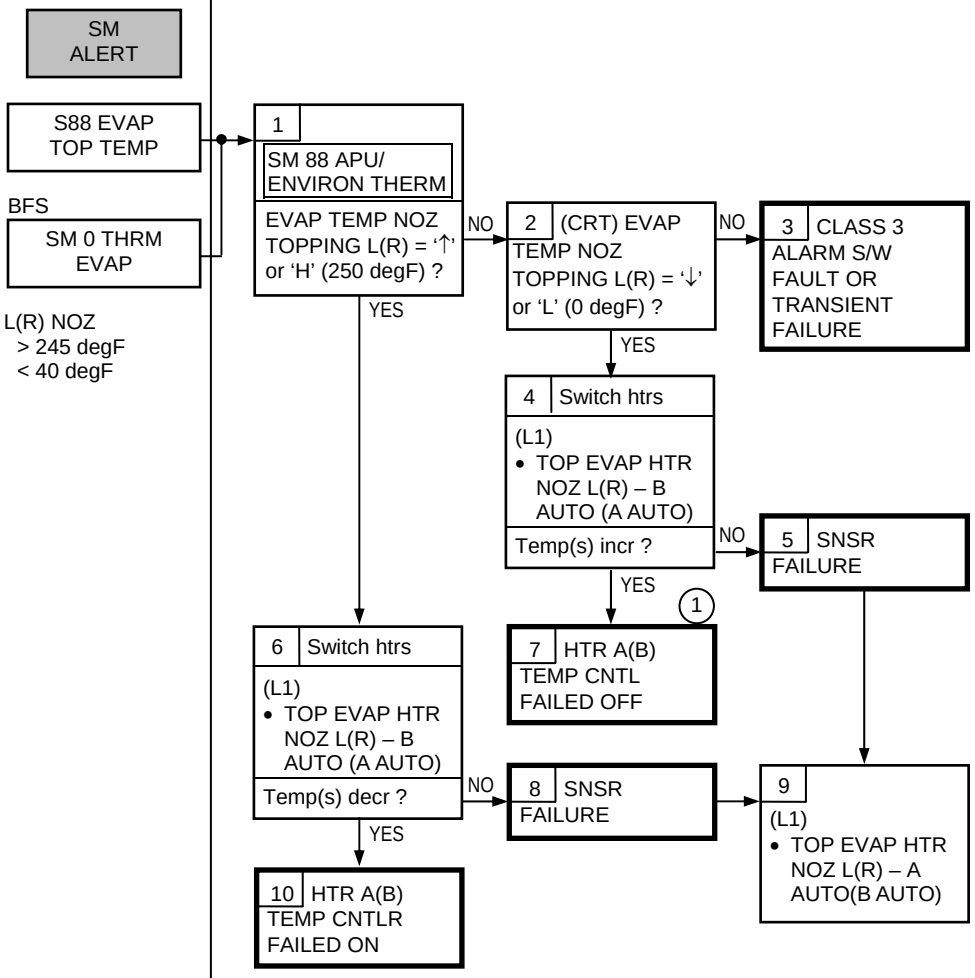

(1) Topping FES still operational with Noz Htr failed off as long as fwd and aft duct htrs are operational

ECLS

6.4j EVAP FDLN TEMP FWD (MID,AFT,TOP,HI LOAD,ACCUM) ↑↓

SM ALERT

S88 EVAP FDLN T A(B)

BFS

SM 0 THRM EVAP

If:

S88/BFS SM 0

	degF
FWD A(B)	> 140
FWD A(B)	< 50
MID 1 A(B)	> 140
MID 1 A(B)	< 50
MID 2 A(B)	> 140
MID 2 A(B)	< 50
AFT A(B)	> 140
AFT A(B)	< 50

S88 only

	degF
TOPPING A(B)	> 140 < 50
HI LOAD A(B)	OSH < 50
ACCUM A(B)	> 140 < 50

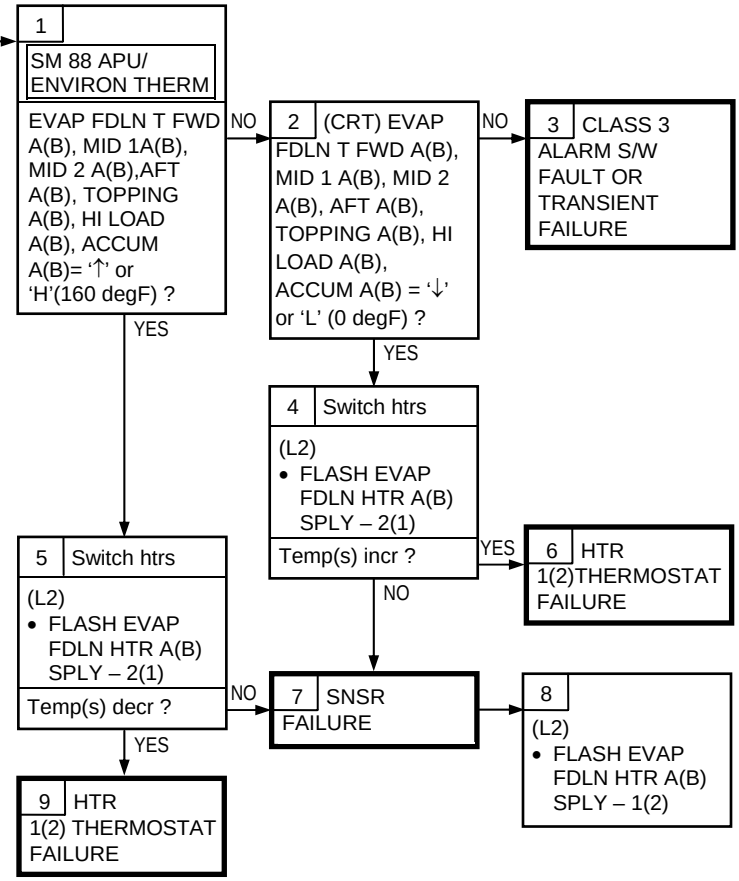

ECLS

H2O LOOP

(F7)

Light on if:
H2O LOOP 1(2) PUMP OUT P
< 19.5(45) psia
> 79.5(81) psia

BACKUP C/W ALARM

(F7)

S88 H2O PUMP P 1(2)

SM2 H2O PUMP P 1(2)

Light on if:
H2O LOOP 1(2) PUMP OUT P
< 19.5(45) psia
> 79.5(81) psia

SM ALERT

S88 H2O PUMP P 1(2)

Light on if:
H2O LOOP 1(2) PUMP OUT P
< 50 psia (4)
> 75 psia
or
< 20 psia (6)
(inactive loop)
or, light on if:
H2O LOOP 1(2) PUMP ΔP
< 33 psid (4)
> 46 psid
or
> 5 psid (6)
(inactive loop)

Nominal Config:
(L4:F)
H2O LOOP PUMP cb AC1 ΦA,ΦB,ΦC 1A/2 – op
cb AC2 ΦA,ΦB,ΦC 1B – cl
cb AC3 ΦA,ΦB,ΦC 2 – cl
(L4:L)
cb AC3 ΦA H2O CNTLR 1 – cl
(L4:K)
cb AC1 ΦA H2O CNTLR 2 – cl
(O14:B)
cb MNA OI H2O BYP LOOP 1 SNSR – cl
(O15:B)
cb MNB OI H2O BYP LOOP 2 SNSR – cl

(Cont in notes column)

6.4l H2O PUMP P 1(2) ↑↓

(1)

1 SM 88 APU/ ENVIRON THERM

H2O LOOP 1(2) PUMP OUT P:

- Normal
- 'H' → 4 PUMP OUT P XDCR SHIFT → 16
- 'L' → 5 H2O LOOP 1(2) PUMP OUT T 'L' and PUMP ΔP 'L' and ACCUM QTY 'L' ?
  - YES → 6 H2O LOOP 1(2) BYP CNTLR FAILED OR CNTLR PWR LOST (2) → 49
  - NO → 7 H2O LOOP 1(2) ACCUM QTY '↓' ?
    - NO → 8 INST FAILURE → 16
    - YES → 33
- '↑' or '↓' → 2 C/W OR SM FAILURE OR TRANSIENT → 3 •√MCC

9 H2O LOOP 1(2) ACCUM QTY:

- '↓' or 'L' → 10 •√Status of alt loop; H2O LOOP 2(1) ACCUM QTY > 70% ? (3)
  - YES → 32
  - NO → 33
- '↑' → 11 FREON/H2O LEAKAGE AT INTERCHANGER (5) → 49
- Normal

12 Aff LOOP PUMP sw position:

- GPC (OFF) → 40
- ON

42

13 H2O LOOP 1(2) PUMP ΔP:

- Normal → 14 PUMP OUT P XDCR SHIFT OR ACCUM GN2 LEAK (7)(8)(9) → 15 (L1) • Install sw guard (stowed in IFM toolkit) over aff H2O PUMP LOOP 1(2) sw
- '↓' or 'L' → 18
- '↑' → 19

(1) Meter on pnl O1 is alternate readout source

(2) √MCC about reset cb

(3) Normal accum quantities are about 45, 55 for H2O LOOP 1, H2O LOOP 2, respectively

(4) Preconditioning will select this limit set if (L1) H2O PUMP LOOP 1(2) – ON, or H2O PUMP LOOP 1(2) – GPC and GPC – ON signal present

(5) Possible next PLS. √MCC

(6) Preconditioning will select this limit set if (L1) H2O PUMP LOOP 1(2) – OFF, or H2O PUMP LOOP 1(2) – GPC without presence of GPC – ON signal

(7) For GN2 leak from accum, PUMP OUT P will reach cabin press in the inactive loop and cabin press plus PUMP ΔP for active loop

(8) If repeated occurrence (same loop), √MCC for possibilities of ruptured bellows causing GN2 precharge and H2O to mix, or stuck bellows

(9) Do not deactivate loop with potential GN2 LK. Loop may not restart

Nominal Config:
(Cont)
(L4:L)
cb AC2 ΦA CAB T CNTLR 1 – cl
cb AC1 ΦA CAB T CNTLR 2 – cl
(L1)
H2O PUMP LOOP 2(1) – ON
1(2) – GPC
1 – B(A)
H2O LOOP 1 BYP MODE – MAN
H2O LOOP 2 BYP MODE – AUTO

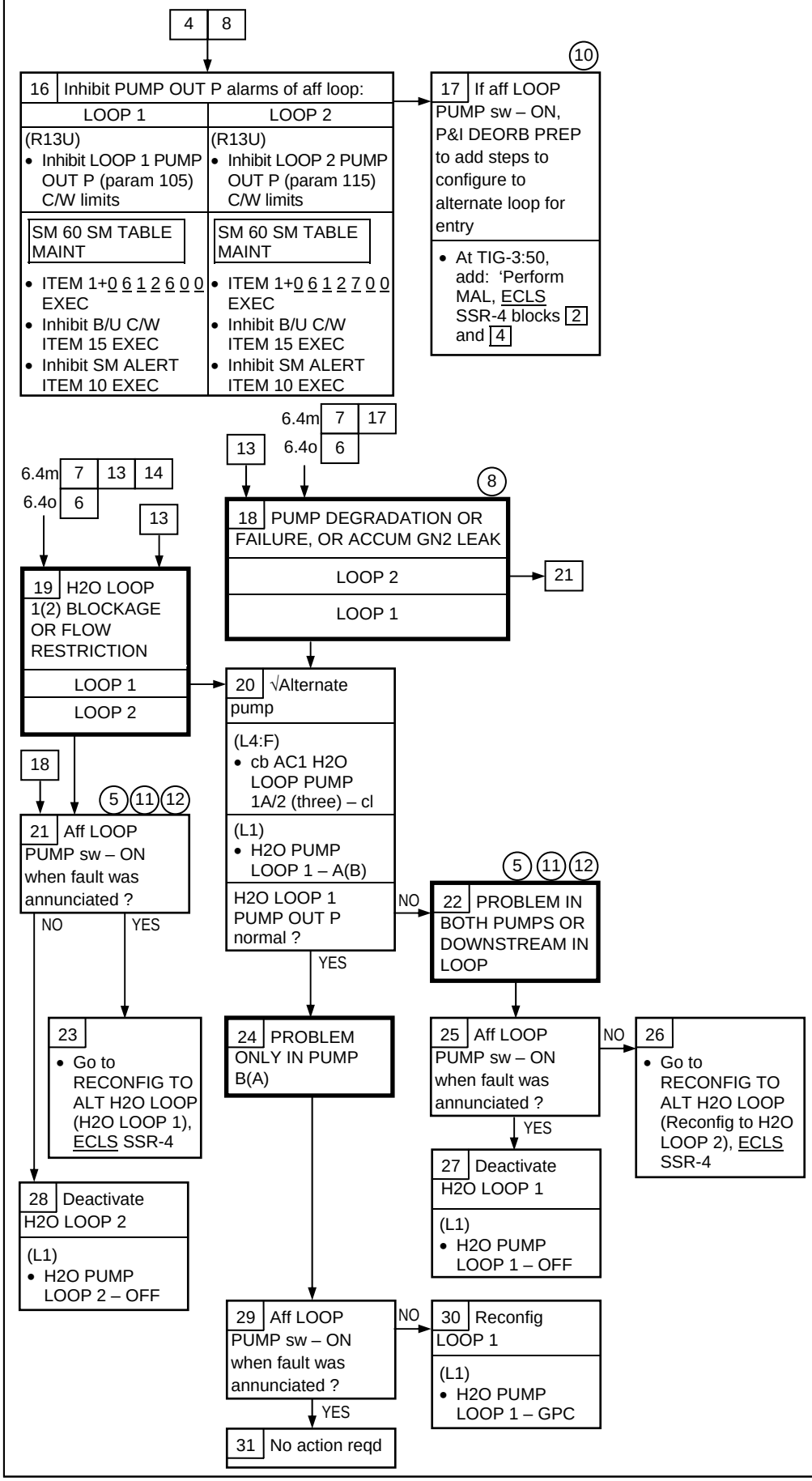

(5) Possible next PLS. √MCC

(8) If repeated occurrence (same loop), √MCC for possibilities of ruptured bellows causing GN2 precharge and H2O to mix, or stuck bellows

(10) Only PUMP OUT P is available on board while in BFS

(11) If both loops are failed:
(L1)
H2O PUMP LOOP 1,2 – OFF, then go to LOSS OF 2 H2O LOOPS (ORB PKT, PWRDN)

(12) As pumps utilize H2O flow for active cooling, extreme or total blockage will result in overheating and failure of the pump within min

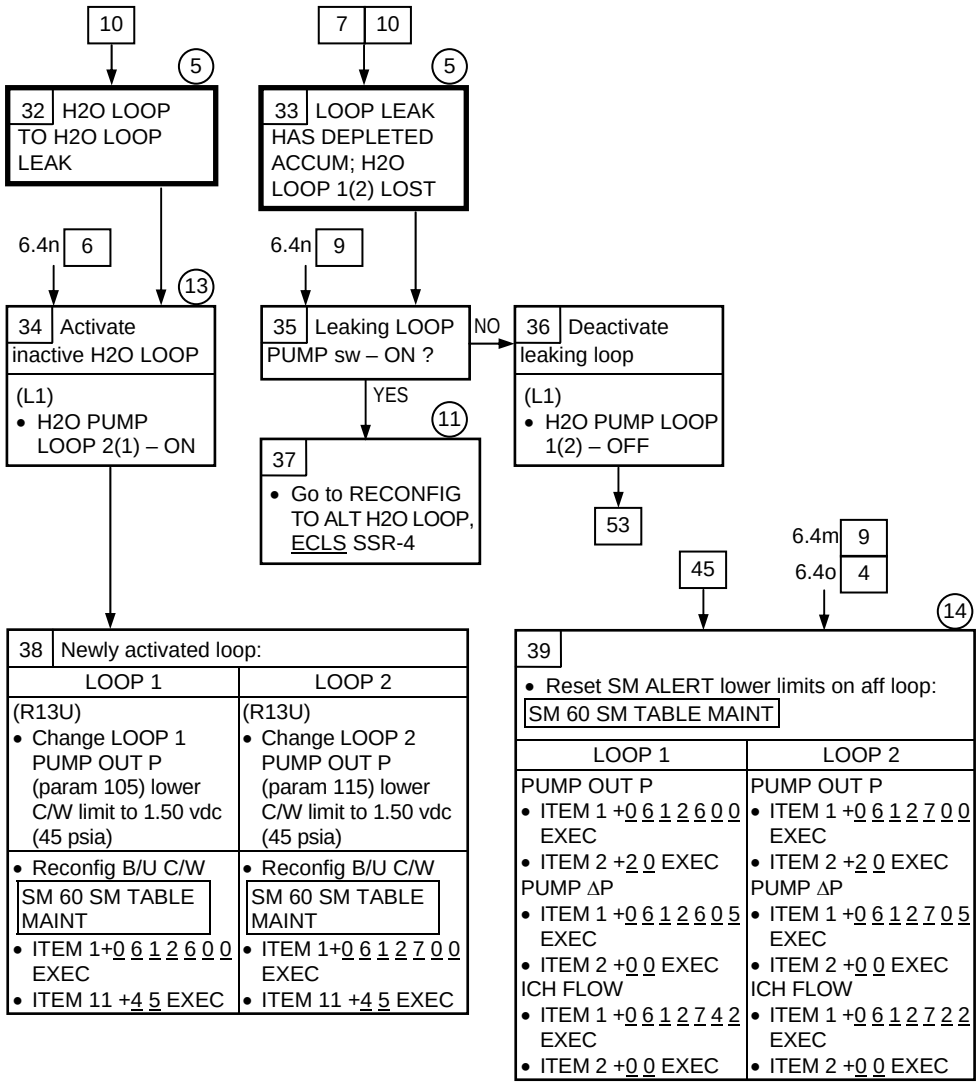

(5) Possible next PLS. √MCC

(7) For GN2 leak from accum, PUMP OUT P will reach cabin press in the inactive loop and cabin press plus PUMP ΔP for active loop

(11) If both loops are failed:
(L1)
H2O PUMP LOOP 1,2 – OFF, then go to LOSS OF 2 H2O LOOPS (ORB PKT, PWRDN)

(13) Operation of both H2O loops will prevent loss of H2O to alt loop

(14) Crew may opt to have MCC manage software limits via TMBU

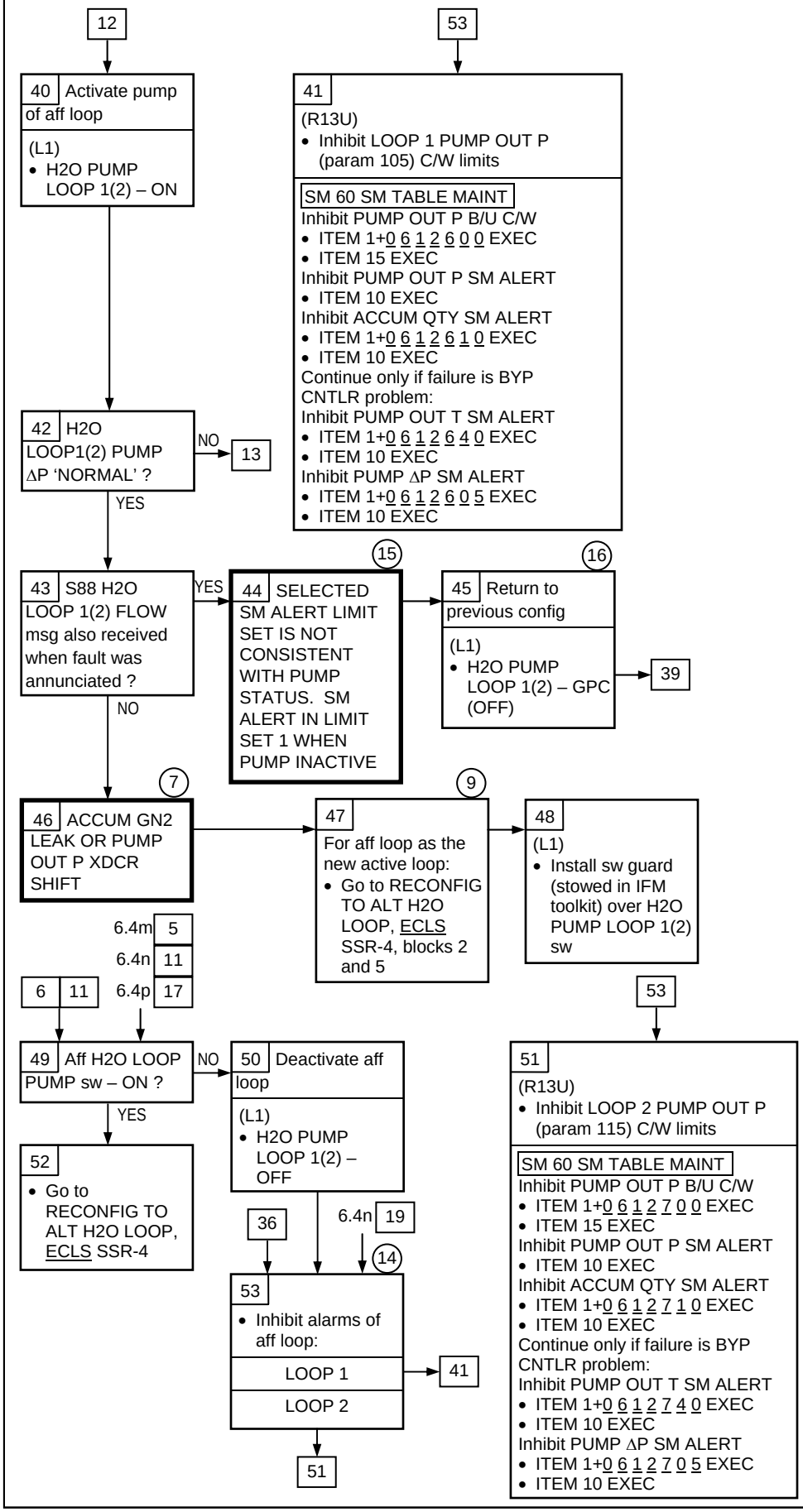

(7) For GN2 leak from accum, PUMP OUT P will reach cabin press in the inactive loop and cabin press plus PUMP ΔP for active loop

(9) Do not deactivate loop with potential GN2 LK. Loop may not restart

(14) Crew may opt to have MCC manage software limits via TMBU

(15) Pump function sw ON position still available with full cooling capability

(16) Possible causes:
PL-MDM failure or pump switch GPC position failure resulting in pump not receiving GPC PUMP – ON cmd; or SM preconditioning failure (pump switch contact or software) causing selection of incorrect SM ALERT limits

ECLS

6.4m H2O PUMP ΔP 1(2) ↑↓

SM ALERT

S88 H2O PUMP P 1(2)

Light on if:
H2O LOOP 1(2) PUMP ΔP
< 33 psid
> 46 psid (1)
or
> 5 psid (2)
(inactive loop)
or, light on if:
H2O LOOP 1(2) PUMP OUT P
< 50 psia
> 75 psia (1)
or
< 20 psia (2)
(inactive loop)

Nominal Config:
Refer to 6.4l

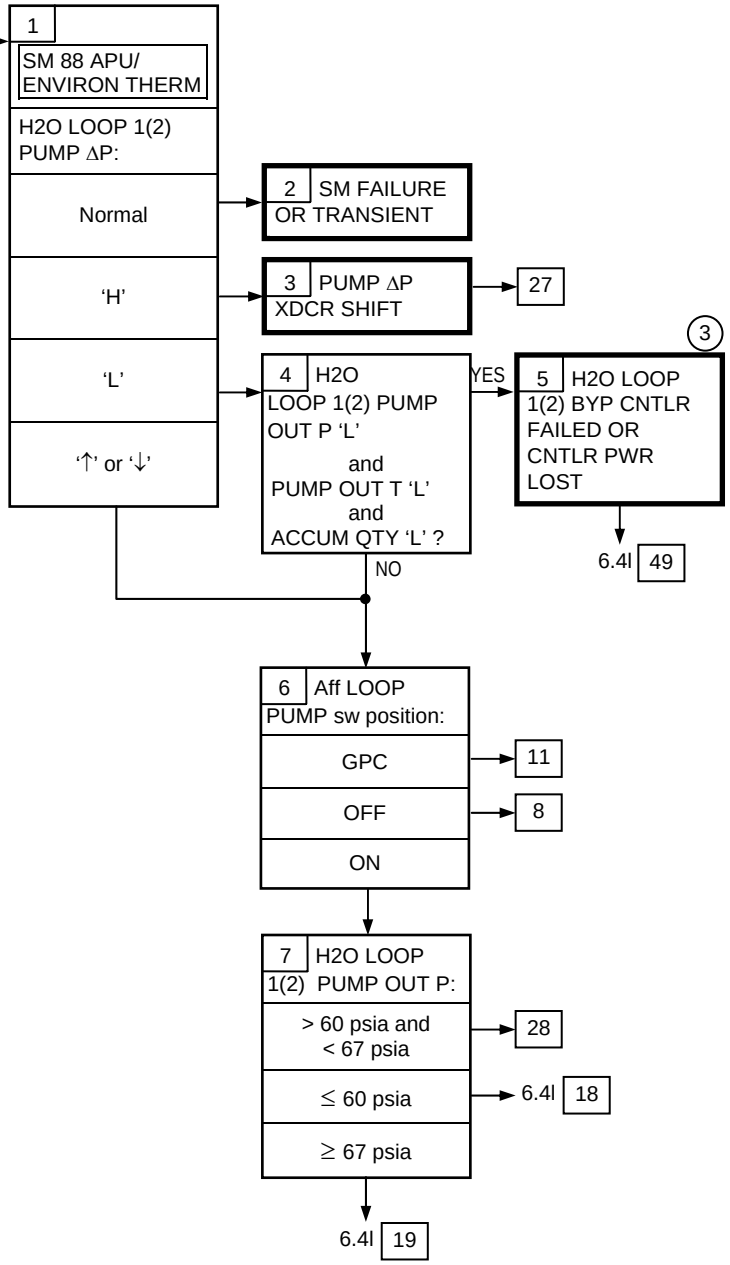

(1) Preconditioning will select this limit set if (L1) H2O PUMP LOOP 1(2) – ON, or H2O PUMP LOOP 1(2) – GPC and GPC – ON signal present

(2) Preconditioning will select this limit set if (L1) H2O PUMP LOOP 1(2) – OFF, or H2O PUMP LOOP 1(2) – GPC without presence of GPC – ON signal

(3) √MCC about reset cb

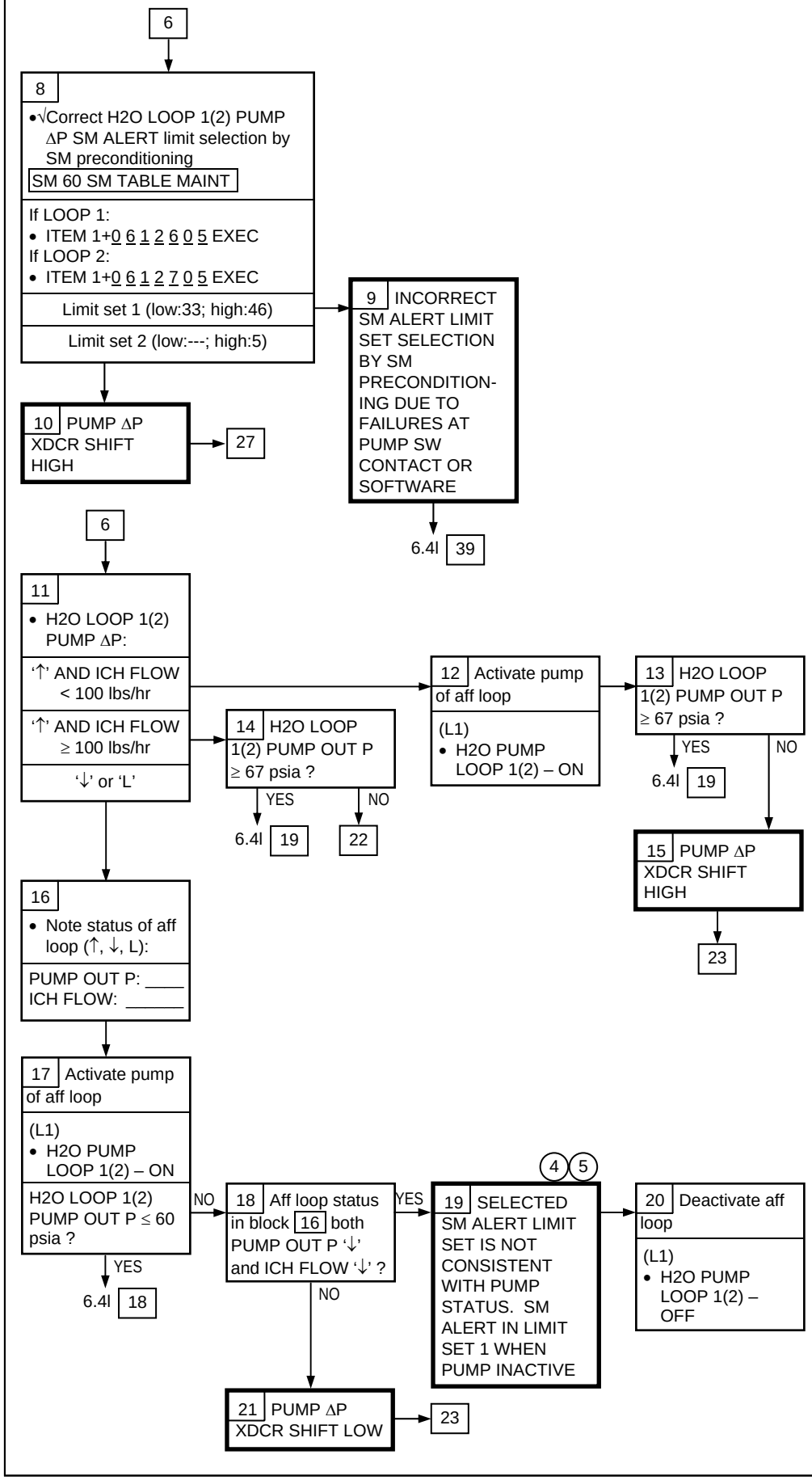

(4) Possible causes: PL-MDM failure or pump switch GPC position failure resulting in pump not receiving GPC PUMP – ON CMD; or SM preconditioning failure (pump switch contact or software) causing selection of incorrect SM ALERT limits

(5) Pump function sw ON position still available with full cooling capability

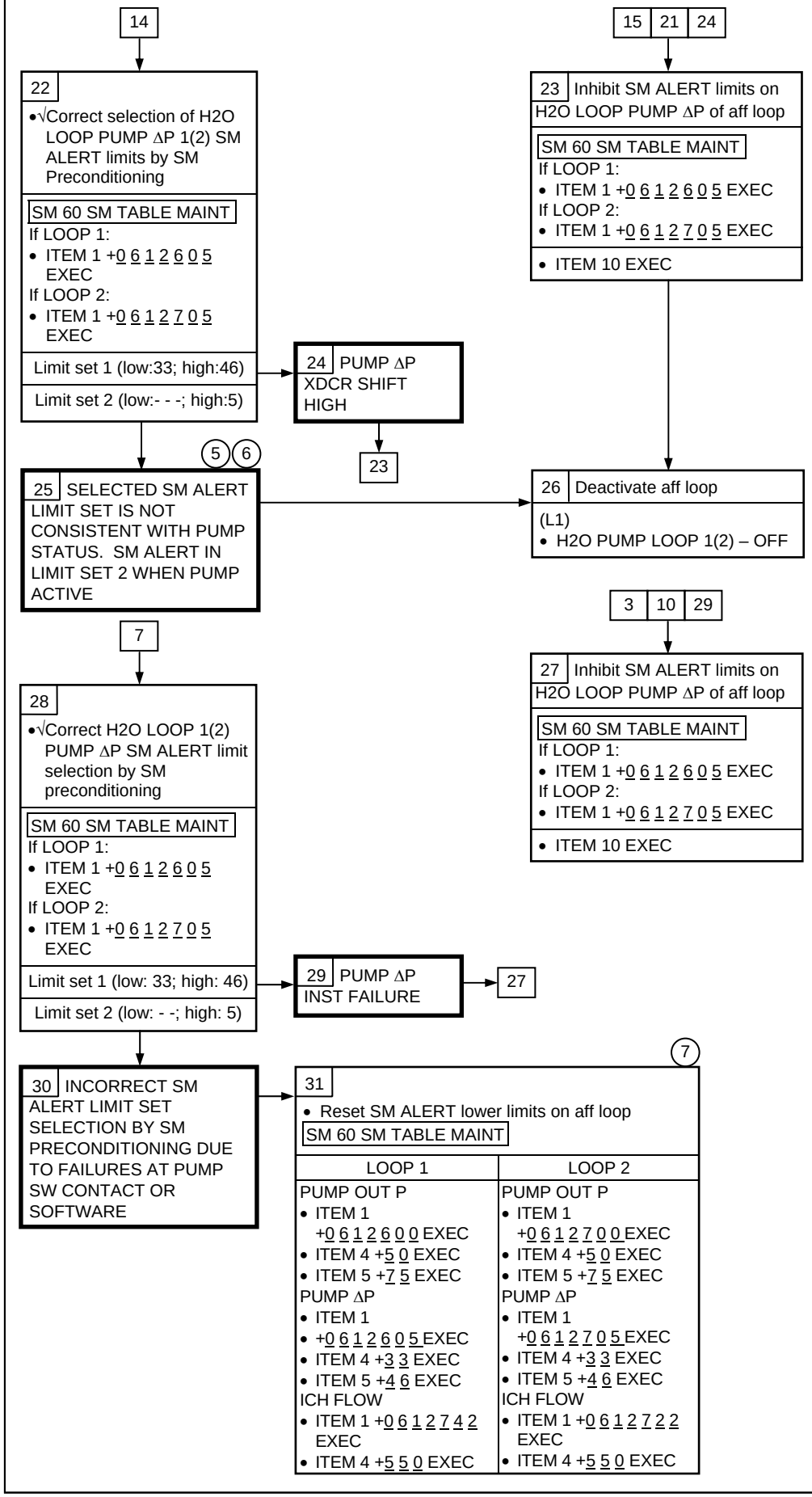

(5) Pump function sw ON position still available with full cooling capability

(6) Possible causes: PL-MDM failure causing pump failed on at GPC PUMP – ON cmd termination; or SM preconditioning failure (pump switch contact or software) causing selection of incorrect SM ALERT limits

(7) Crew may opt to have MCC manage software limit via TMBU

ECLS

6.4n H2O ACCUM QTY 1(2) ↑↓

SM ALERT

S88 H2O LOOP 1(2) QTY

H2O LOOP 1(2) ACCUM QTY
< 20%
> 80%

Nominal Config:
Refer to 6.4l

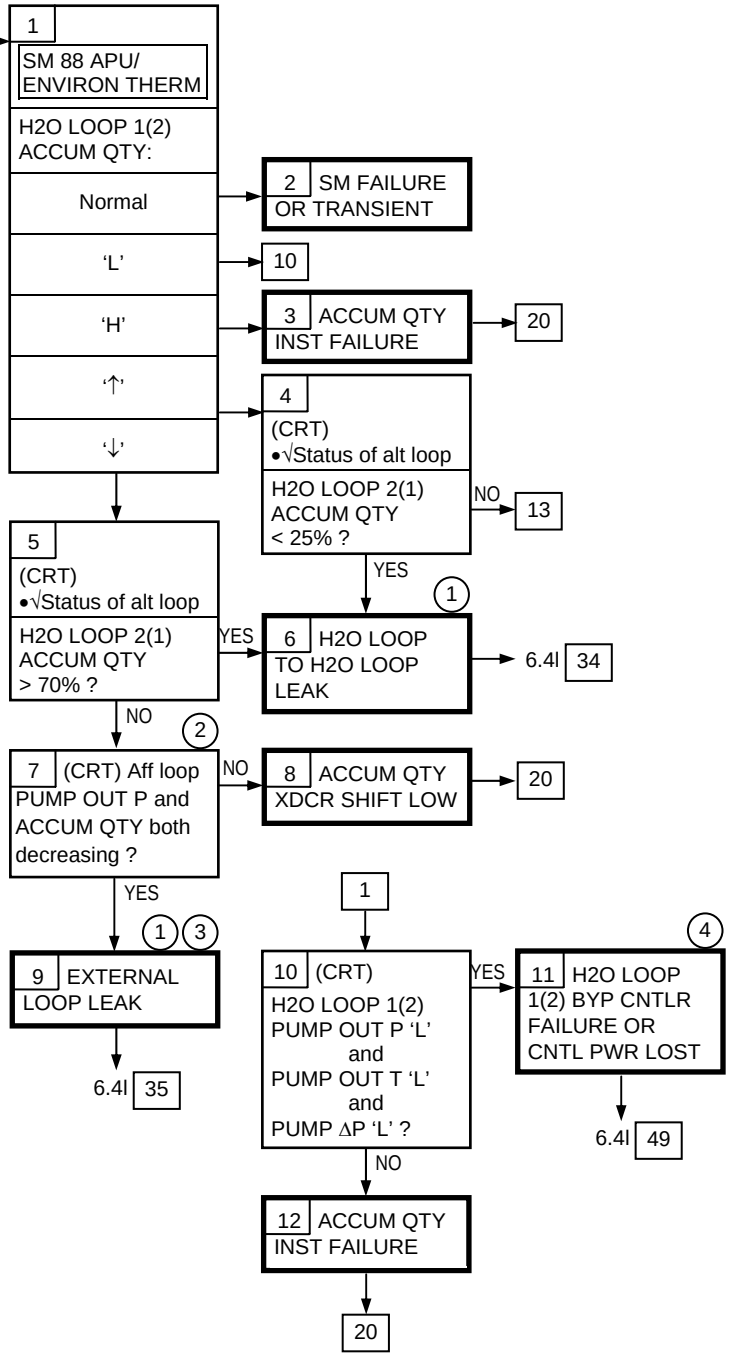

(1) Possible next PLS. √MCC

(2) For normal water loop charge, ~ one psia change in PUMP OUT P is observed for every 10 % change in ACCUM QTY

(3) If both loops failed:
(L1)
H2O PUMP LOOP1,2 – OFF, then go to LOSS OF 2 H2O LOOPS (ORB PKT, PWRDN)

(4) √MCC about reset cb
LOOP 1:
(L4) cb AC3 ΦA H2O CNTLR 1
LOOP 2:
(L4) cb AC1 ΦA H2O CNTLR 2

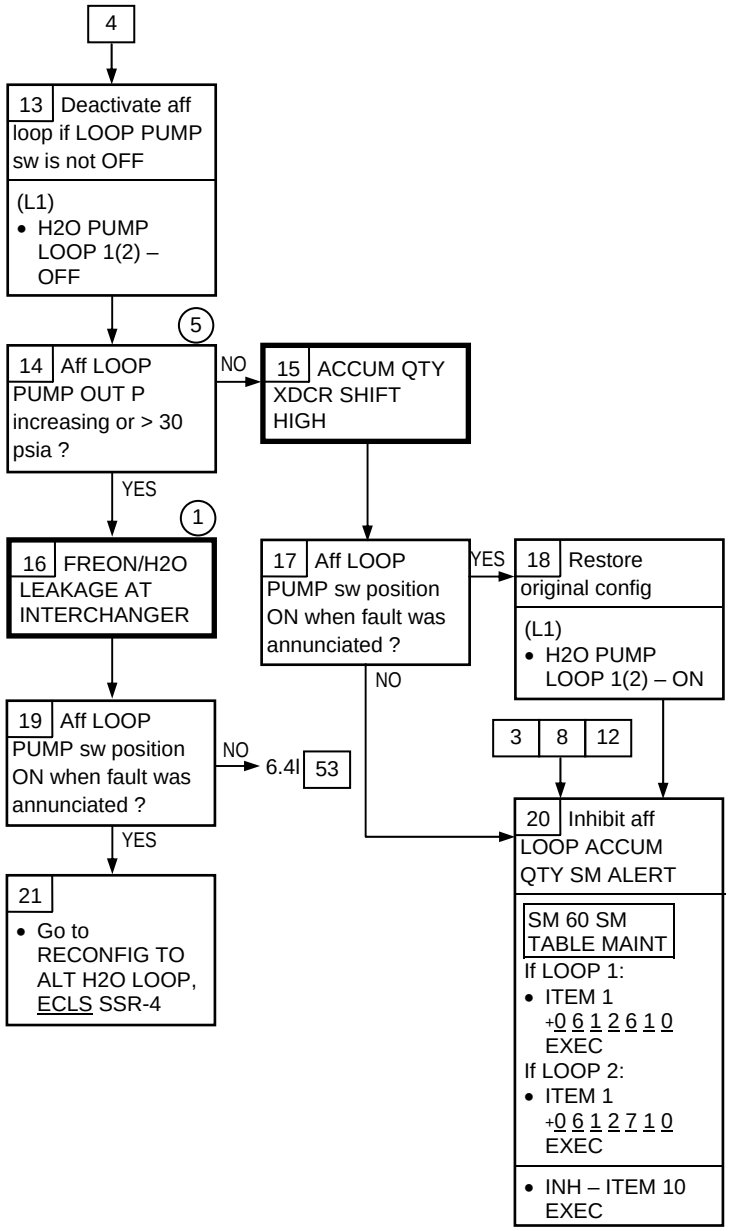

(1) Possible next PLS. √MCC

(5) For normal water loop charge, PUMP OUT P if inactive loop approaches 30 psia as ACCUM QTY approaches 100 pct in FCL/H2O interloop leakage failure. This PUMP OUT P will eventually reach equilibrium with FCL pressure at interchanger, which is greater than 60 psi normally

ECLS

6.4o H2O ICH FLOW 1(2) ↓

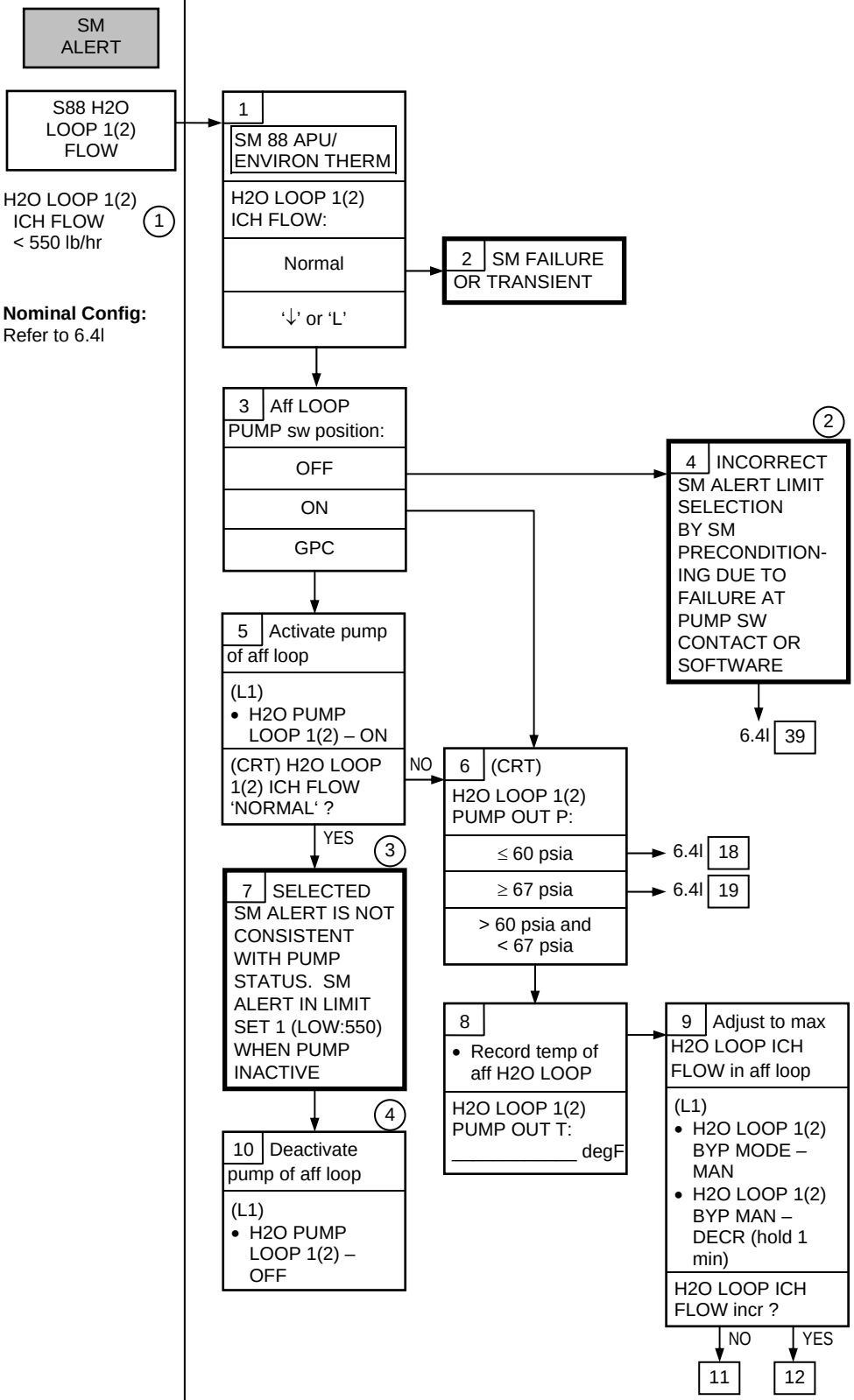

(1) Preconditioning will select this limit set if H2O PUMP LOOP 1(2) – ON; or H2O PUMP LOOP 1(2) – GPC and GPC – ON signal present

(2) Off-scale values are selected for FDA limits by SM preconditioning if H2O PUMP LOOP 1(2) – OFF; or H2O PUMP LOOP 1(2) – GPC without presence of GPC – ON signal

(3) Possible causes: PL-MDM failure or pump switch GPC failure resulting in pump not receiving GPC PUMP – ON cmd; or SM precondition ing failure (pump switch contact or software) causing selection of incorrect SM ALERT limits

(4) Pump function sw ON position still available

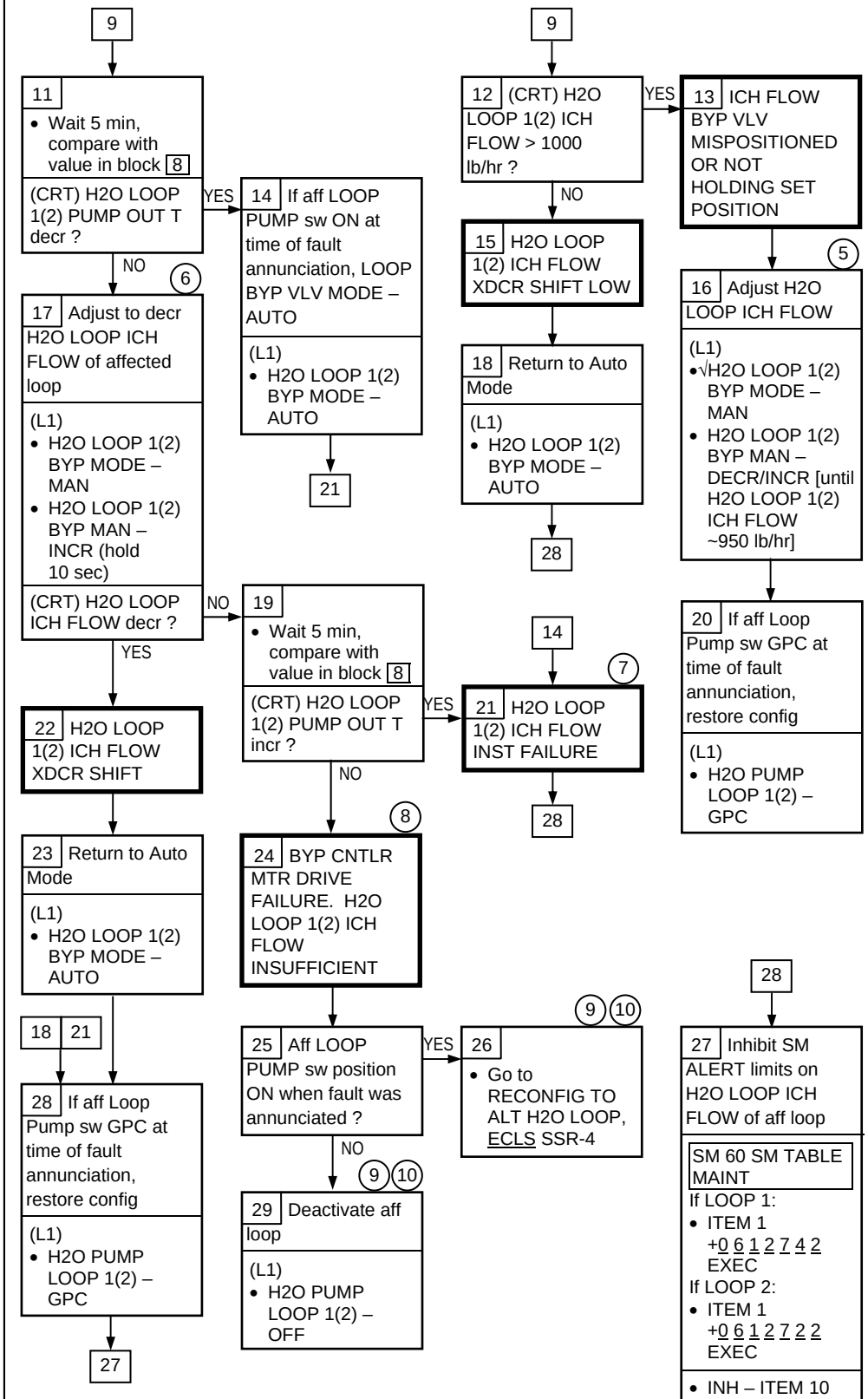

(5) If problem recurs, reconfig to alternate H2O LOOP, ECLS SSR-4

(6) ICH FLOW BYP VLV may be at full ICH flow position when fault annunciated

(7) H2O LOOP 1: ECLSS SC11, MDM OF1
H2O LOOP 2: ECLSS SC12, MDM OF2

(8) Manual override adjustment may still be available. √MCC for possible IFM

(9) Possible next PL. √MCC

(10) If BYP vlv drive control on both loops failed, activate both H2O LOOPS

ECLS

6.4p H2O ICH OUT T 1(2) ↓ CAB HX IN T 1(2) ↓ PUMP OUT T 1(2) ↑↓

SM ALERT

S88 H2O LOOP 1(2) TEMP

H2O LOOP 1(2) ICH OUT T < 35 degF
H2O LOOP 1(2) CAB HX IN T < 34 degF
H2O LOOP 1(2) PUMP OUT T
< 45 degF
> 90 deg F

Nominal Config:
Refer to 6.4l

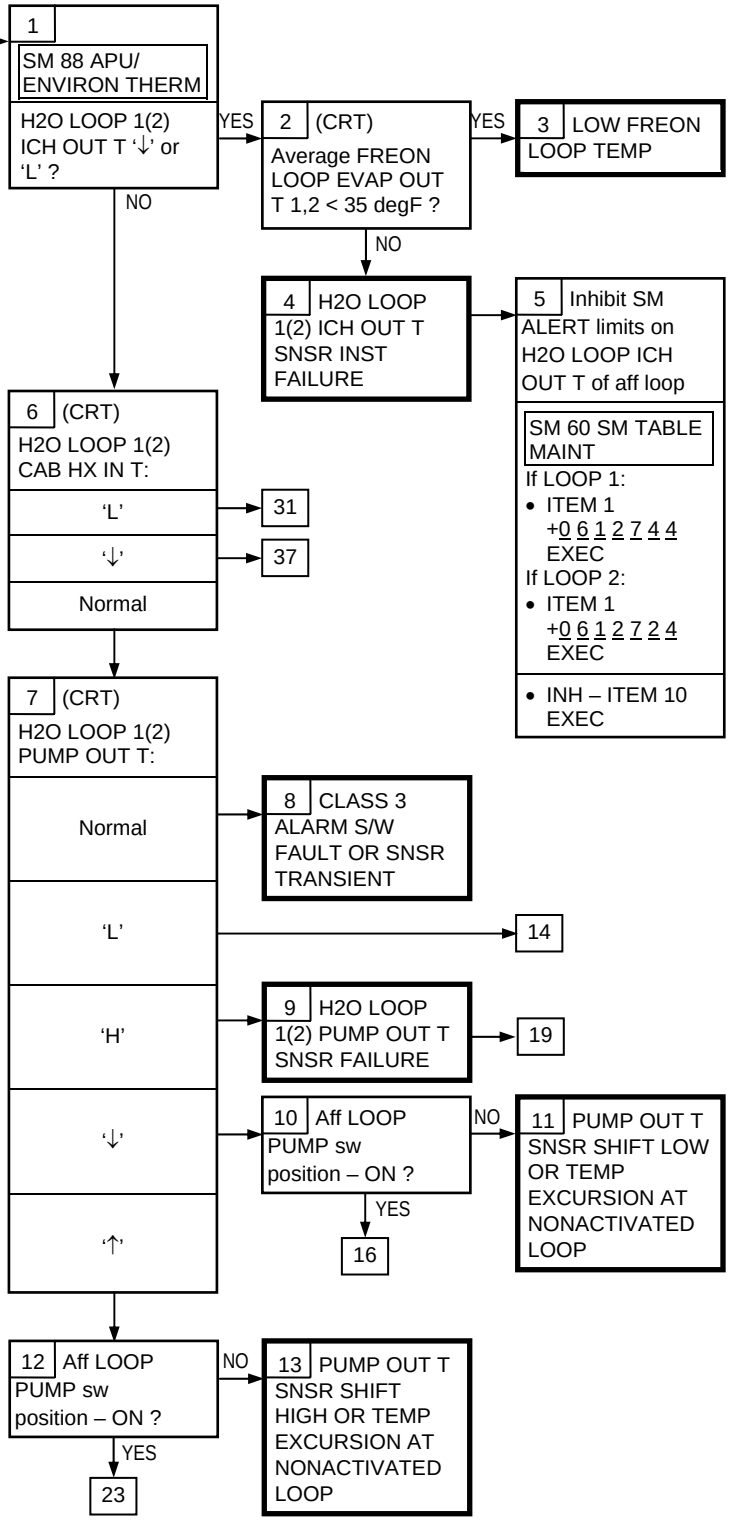

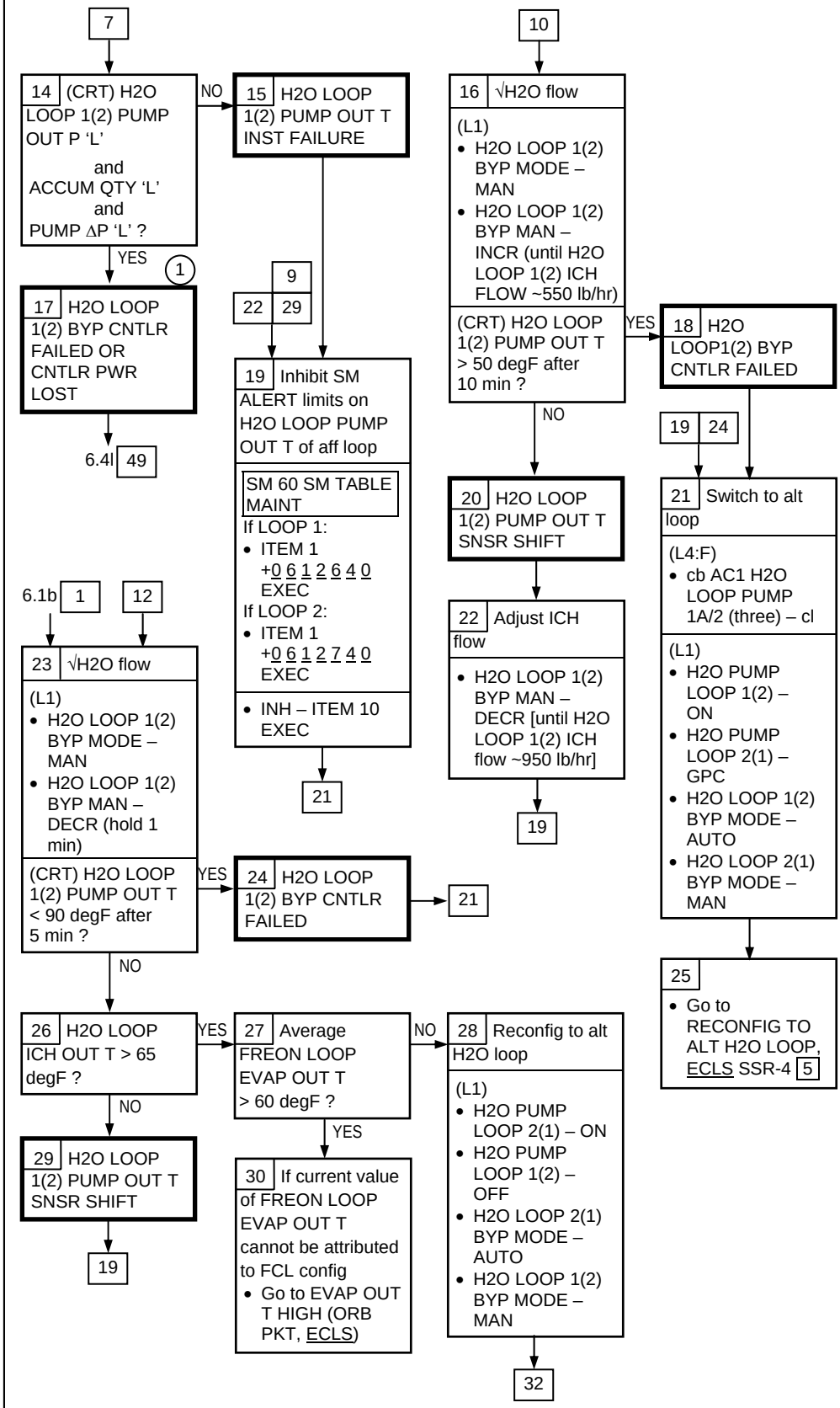

(1) √MCC to reset cb (pnl L4)
LOOP 1:
cb AC3 ΦA H2O CNTLR 1
LOOP 2:
cb AC1 ΦA H2O CNTLR 2

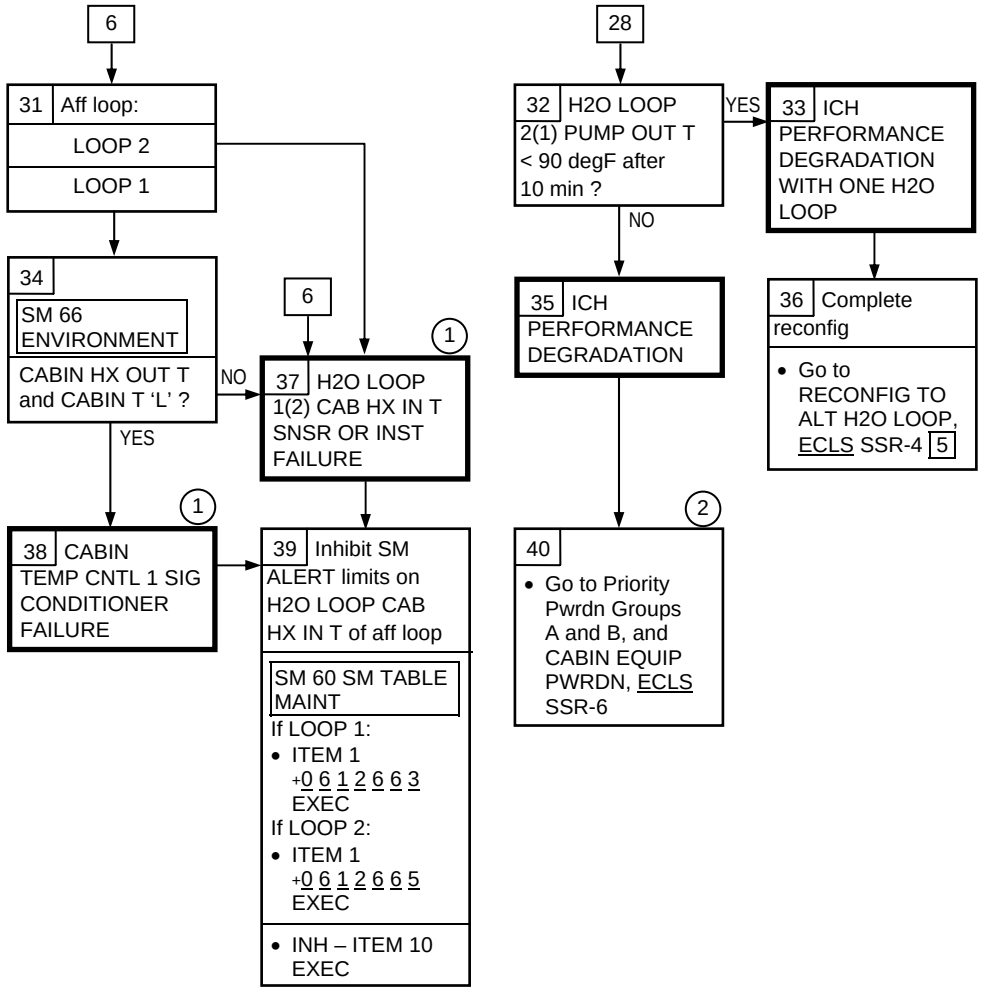

(1) √MCC to reset
LOOP 1:
(L4:L) cb AC2 ΦA CAB T CNTLR 1
LOOP 2:
(L4:L) cb AC1 ΦA CAB T CNTLR 2

(2) √MCC for further pwrdn reqd and H2O loop flowrate management

This Page Intentionally Blank

SUPPLY H2O

SM 66 ENVIRONMENT

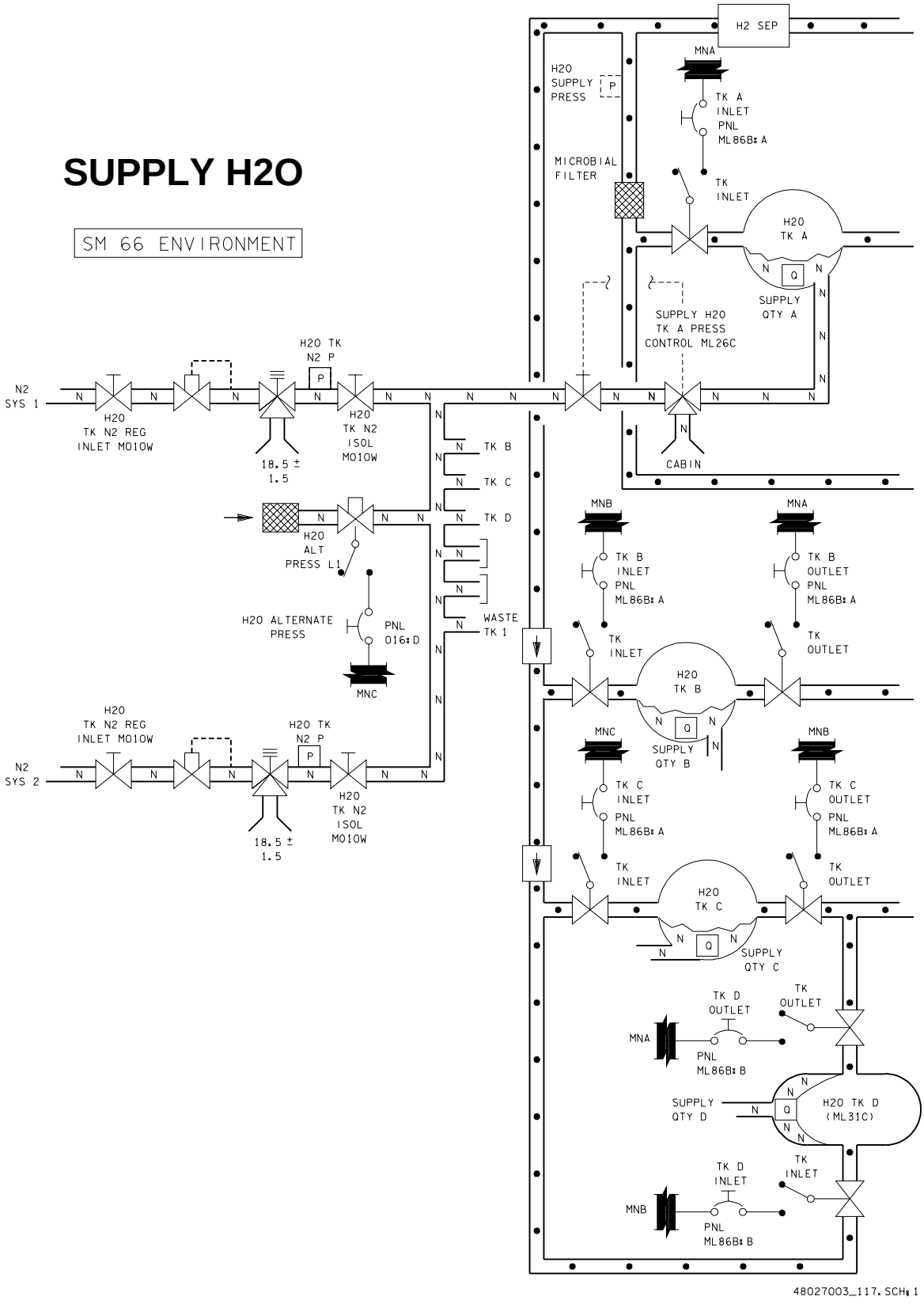

SUPPLY H2O

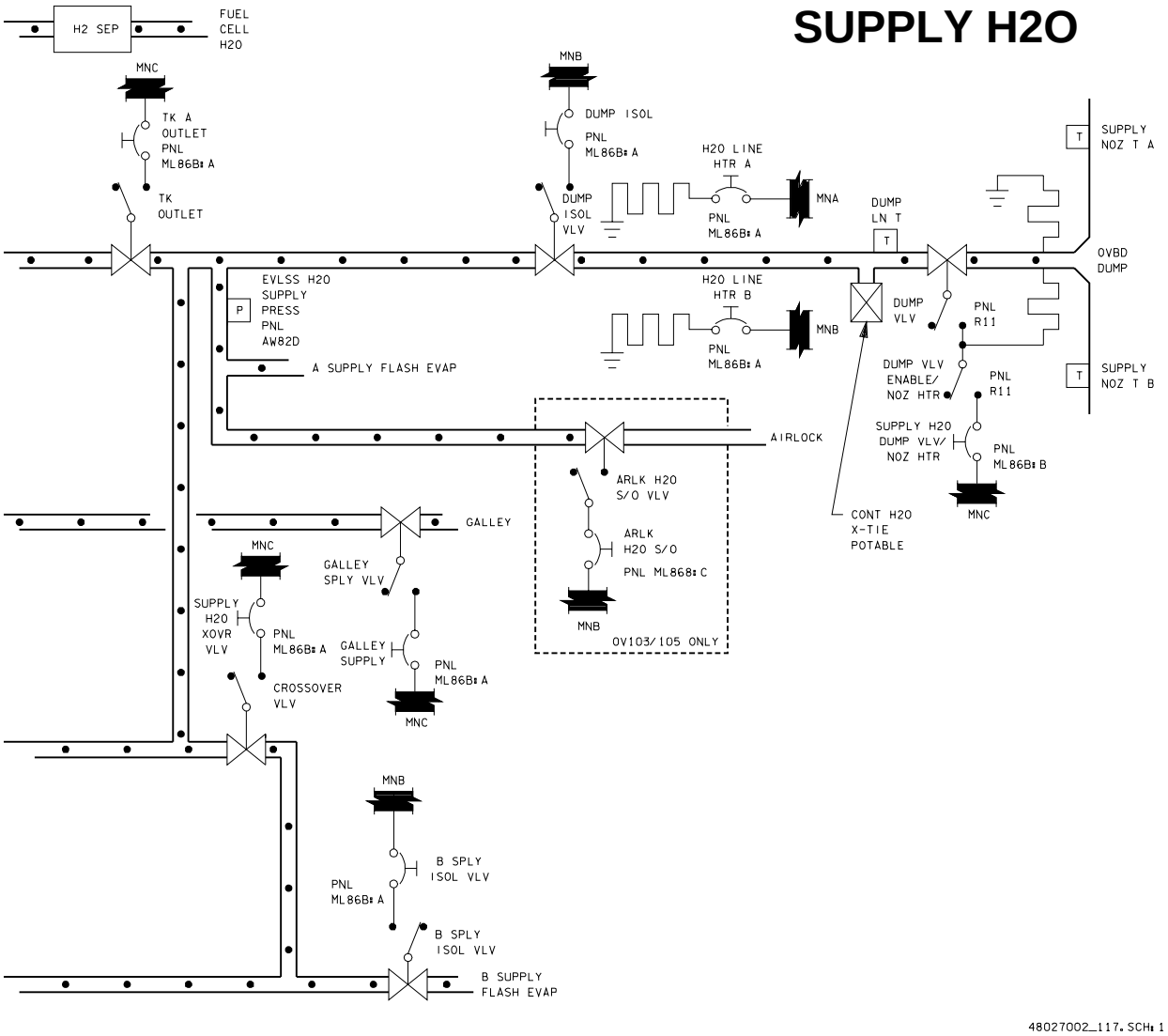

48027002_117.SCH: 1

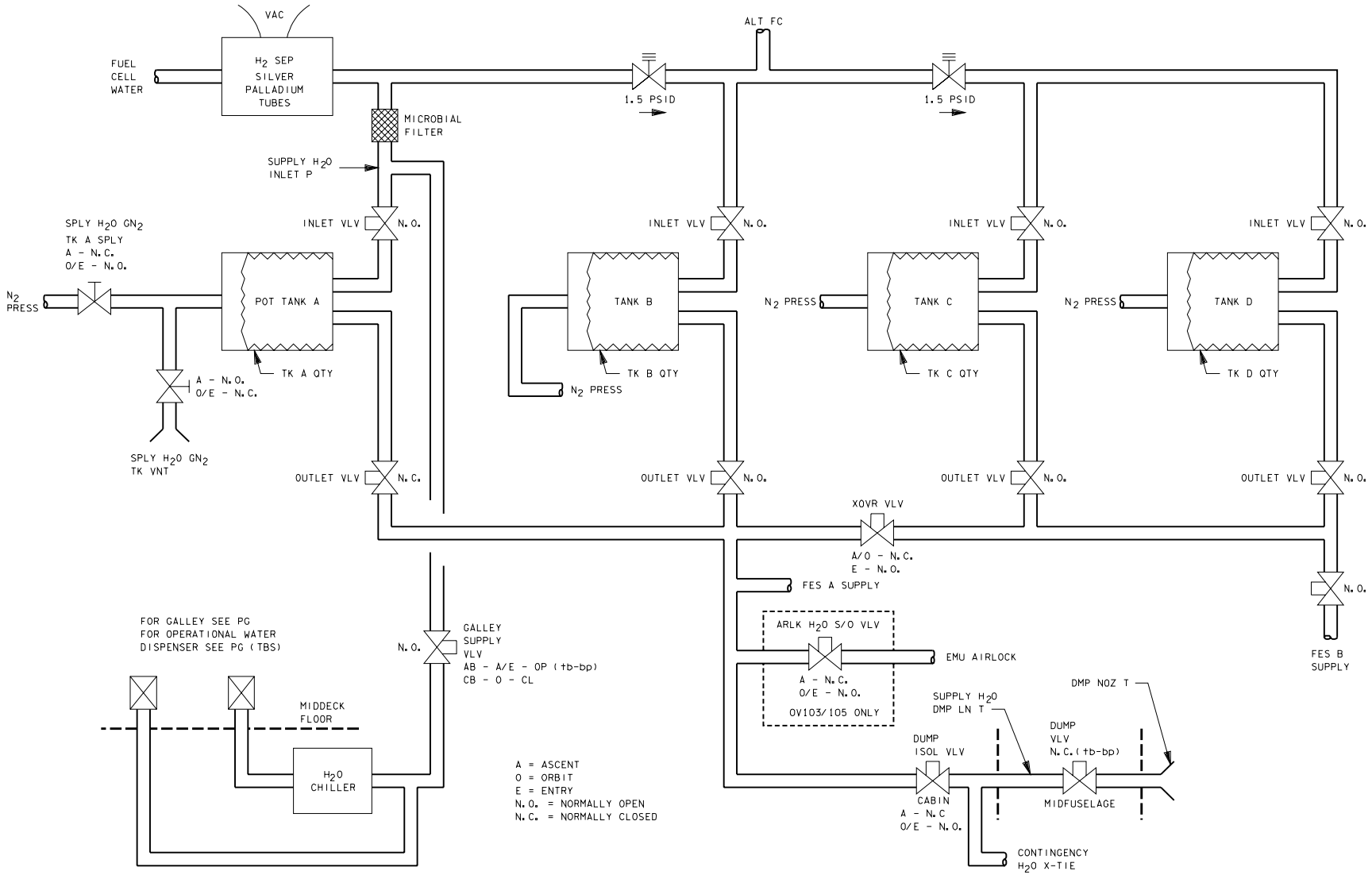

SUPPLY H2O STORAGE

ECLS

6.5c WASTE H2O PRESS ↑↓, SUPPLY(WASTE) H2O DMP LN T ↑↓, SUPPLY(WASTE) NOZ T A(B) ↑

SM ALERT

S66 SPLY H2O TEMP

If:
SUPPLY H2O DMP LN T < 45 or > 125 degF
SUPPLY H2O NOZ T A(B) > 250 degF

1 SM 66 ENVIRONMENT
- SUPPLY H2O DMP LN T ↑ → 12
- SUPPLY H2O DMP LN T ↓ → 13
- SUPPLY H2O NOZ T A(B) ↑ → 8

S66 WASTE H2O PRESS

If:
WASTE H2O PRESS < 13 or > 22 psig

(1)

2 SM 66 ENVIRONMENT
- WASTE H2O PRESS ↑ → 3 (CRT) WASTE H2O QTY 1 ≥ 95 ?
  - NO → 18
  - YES → 4 WASTE TANK IS FULL
- WASTE H2O PRESS ↓ → **CAUTION** Waste tk bellows may be damaged because of high Delta P → 5 Safe system (ML31C)
  - WASTE H2O DUMP ISOL VLV – CL (tb-CL)

19

4 WASTE TANK IS FULL → 7 Dump TK
- Perform WASTE WATER DUMP (ORB OPS, ECLS)
- Dump until WASTE H2O QTY 1 ~10

S66 WASTE H2O TEMP

If:
WASTE H2O DMP LN T < 45 or > 125 degF
WASTE H2O NOZ T A(B) > 250 degF

6 SM 66 ENVIRONMENT
- WASTE H2O DMP LN T ↑ → 12
- WASTE H2O DMP LN T ↓ → 13
- WASTE H2O NOZ T A(B) ↑

1

8
- •√Htr failure
- (CRT) SUPPLY(WASTE) H2O NOZ T A(B) ≈ NOZ B(A) ?
  - NO → 9 NOZ TEMP XDCR FAILED OR SHIFTED
  - YES → 10 SUPPLY (WASTE) H2O NOZ HTR FAILED ON → 11

Nominal Config:
(Cont)
(ML86B:A)
cb MNA SPLY H2O TKA INLET – cl
cb MNA SPLY H2O TKB OUTLET – cl
cb MNA H2O LINE HTR A – op(cl)
cb MNA WASTE H2O DUMP VLV/NOZ HTR – cl
cb MNB SPLY H2O TKB INLET – cl
cb MNB SPLY H2O TKC OUTLET – cl
cb MNB SPLY H2O DUMP ISOL – cl
cb MNB SPLY H2O B SPLY ISOL VLV – cl
cb MNB H2O LINE HTR B – op(cl)
cb MNC SPLY H2O TKA OUTLET – cl
cb MNC SPLY H2O TKC INLET – cl
cb MNC SPLY H2O DUMP VLV/NOZ HTR – cl
cb MNC SPLY H2O XOVR VLV – cl
cb MNC SPLY H2O GALLEY SPLY – cl

(Cont in notes column)

Nominal Config:
(Cont)
DUMP VLV – CL (tb-bp)*
DUMP VLV ENA/ NOZ HTR – OFF
VAC VENT NOZ HTR – ON
ISOL VLV CNTL – OP (tb-OP)
ISOL VLV BUS SEL – MNA
SPLY H2O TKD INLET – OP (tb-OP)
OUTLET – OP (tb-OP)

*Talkback will be bp when DUMP VLV ENA/NOZ HTR – OFF

(1) CRT label 'WASTE H2O PRESS' is same as 'WASTE LIQUID PRESSURE' on SSSH 6.5

Nominal Config:
(Cont)
(ML86B:B)
cb MNA WASTE H2O TK1 VLV – cl
cb MNA WASTE H2O DUMP ISOL – cl
cb MNA VAC VENT ISOL VLV – cl
cb MNB WASTE H2O TK1 DRAIN – cl
cb MNB VAC VENT NOZ HTR – cl
cb MNB VAC VENT ISOL VLV – cl
cb MNA SPLY H2O TKD OUTLET – cl
cb MNB SPLY H2O TKD INLET – cl
(O16:D)
cb MNC H2O ALT PRESS – cl
(ML26C)
SPLY H2O GN2 TKA SPLY vlv – OP
SPLY H2O GN2 TK VENT vlv – PRESS
(R11L)
SPLY H2O TKA INLET – OP (tb-OP)
SPLY H2O TKA OUTLET – CL (tb-CL)
TKB,C INLET, OUTLET – OP (tb-OP)
XOVR VLV – CL (tb-CL)
DUMP ISOL VLV – OP (tb-OP)
DUMP VLV – CL (tb-bp)*
DUMP VLV ENA/ NOZ HTR – OFF
GALLEY SPLY VLV – OP (tb-OP)
B SPLY ISOL VLV – OP (tb-OP)
(ML31C)
WASTE H2O TK1 DRAIN VLV – CL (tb-CL)**
TK1 VLV – OP (tb-OP)
DUMP ISOL VLV – OP (tb-OP)

**WASTE H2O TK1 DRAIN VLV – OP (tb-OP) when condensate collect not set-up

(Cont in left column)

ECLS 6.5c (Cont)

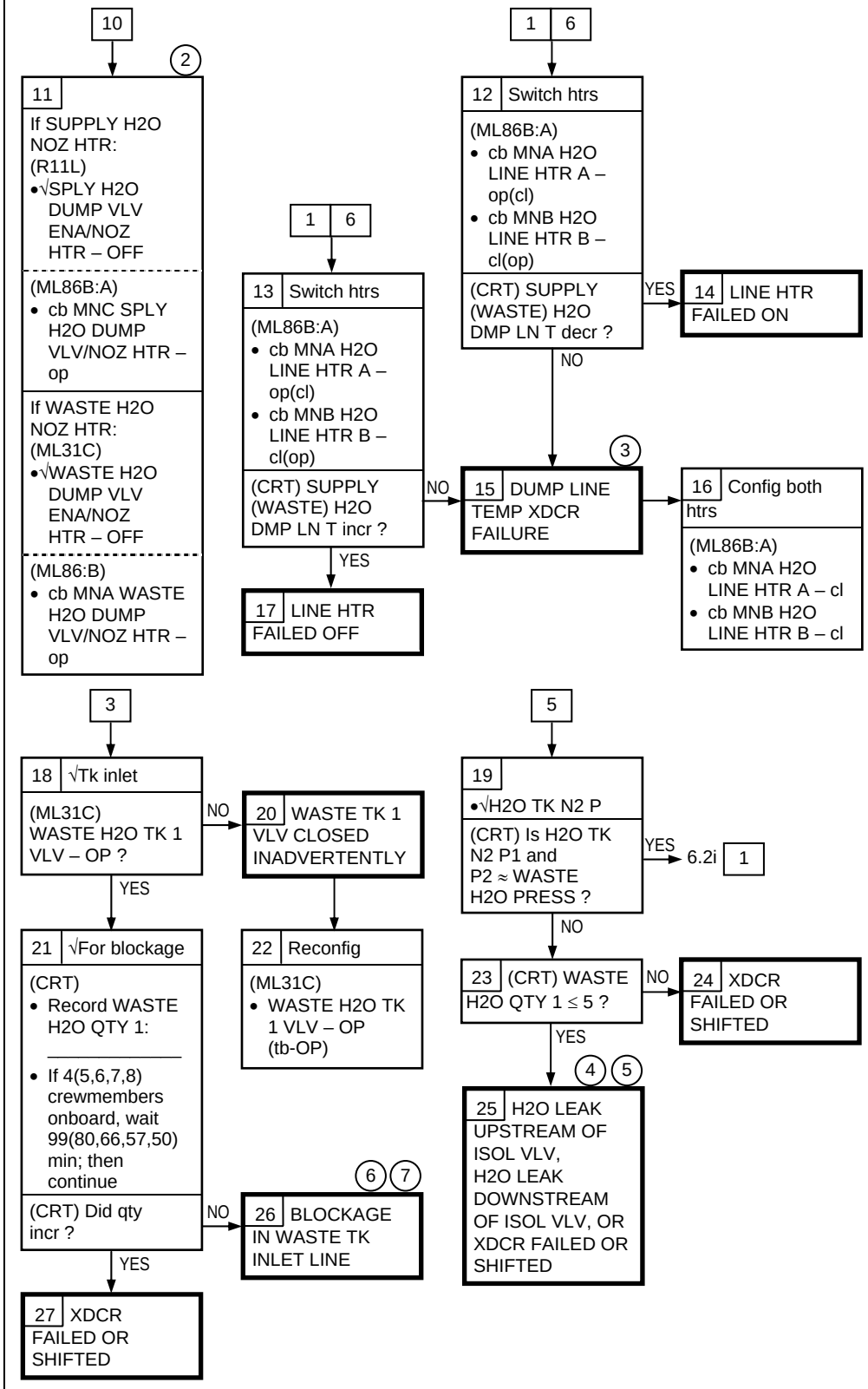

(2) Dump system is not lost. MCC will update ORB OPS DUMP procedure

(3) If temperature xdcr is OSH, √MCC before doing next step

(4) √MCC about looking for H2O below middeck floor

(5) MCC may be able to determine exact failure

(6) √MCC on how to store condensate from humidity separator

(7) √MCC about attempting waste water dump to remove object blocking waste tank inlet

ECLS

SM ALERT

S66 SPLY H2O PRES

If SUPPLY H2O PRESS > 40.0 psia

6.5d H2O SPLY PRESS ↓↑

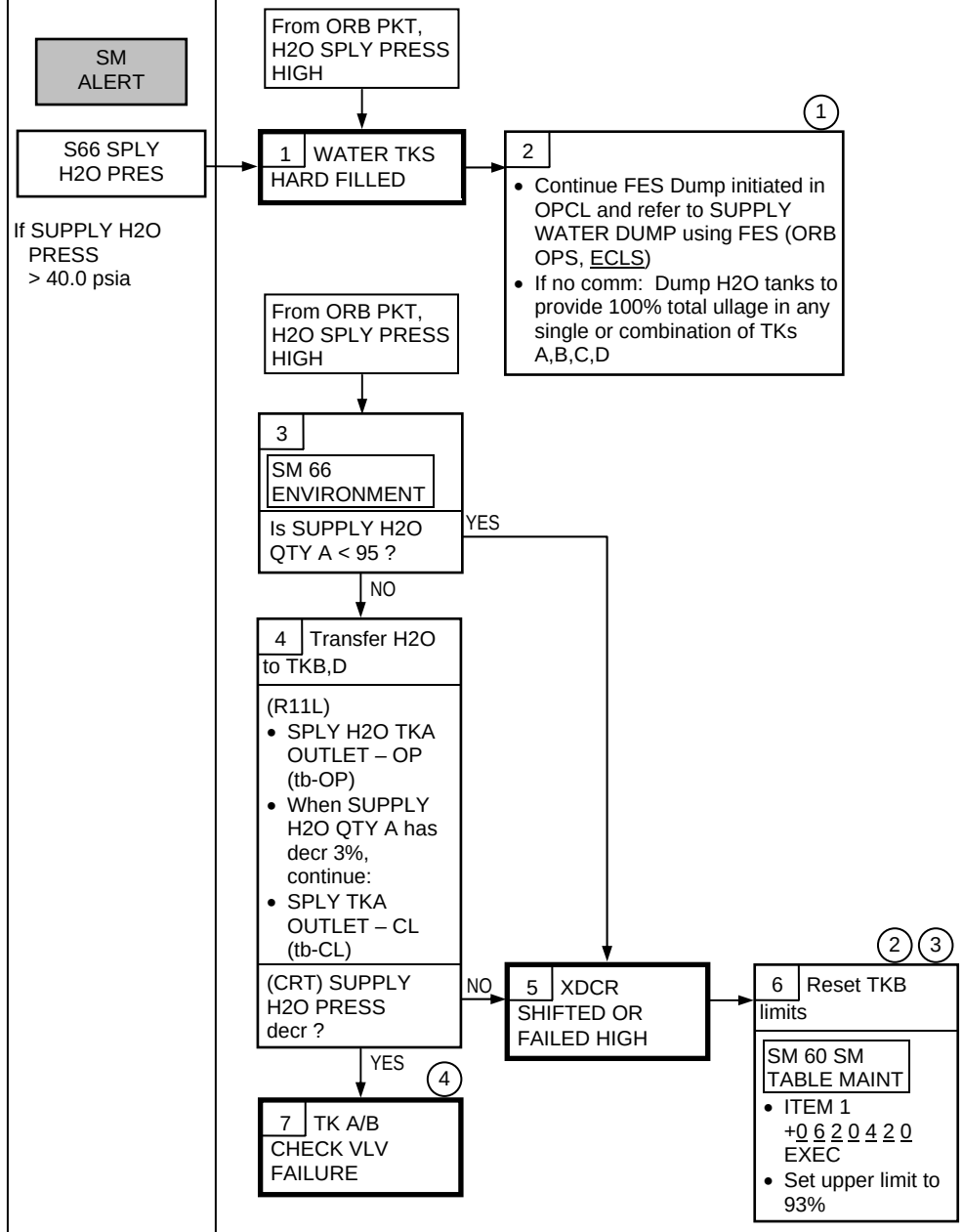

1 If Comm, √MCC for exact qty to dump

2 Reset TKC limit to detect next worst case failure (blockage at TKB inlet)

3 Crew may opt to have MCC make S/W limit change via TMBU

4 Alternate FC relief path will be operating when TKA is ≥ 95

ECLS

6.7a EXT A/L H2O LN T ↑↓

177 A/L H2O LN T1(2)

H2O LINE TEMP:
- H2O SPLY T ZN1 < 42
- H2O SPLY T ZN1 > 130
- LCG2 SPLY T ZN1 < 50
- LCG2 SPLY T ZN1 > 130
- QD PNL T ZN2 < 42
- H2O SPLY T ZN2 < 42
- H2O SPLY T ZN2 > 130

Nominal Config:
(ML86B:C)
- cb MNA EXT ARLK HTR LINE ZN 1 – cl(op)
- cb MNA EXT ARLK HTR LINE ZN 2 – cl(op)
- cb MNB EXT ARLK HTR LINE ZN 1 – op(cl)
- cb MNB EXT ARLK HTR LINE ZN 2 – op(cl)
- cb MNC EXT ARLK HTR LINE ZN 1 – op(cl)
- cb MNC EXT ARLK HTR LINE ZN 2 – op(cl)

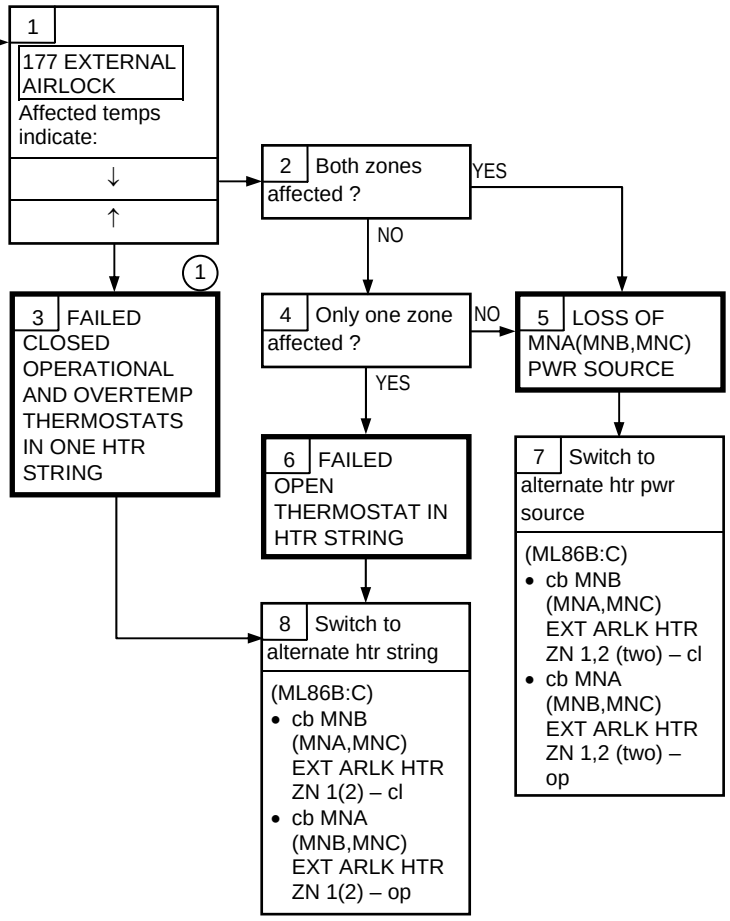

(1) If both zone temps are indicating high, √MCC. Possible external heat load due to attitude is causing high temps

ECLS

6.7b EXT A/L STRUC T ↑↓

177 A/L STRUC T

INTERNAL TEMP:
- UPR (LWR) BKHD T < 40
- UPR (LWR BKHD T > 113

EXTERNAL TEMP:
- AFT STRUC T < 40
- AFT STRUC T > 113

Nominal Config:
(ML86B:C)
- cb MNA EXT ARLK HTR STRUC – cl(op)
- cb MNB EXT ARLK HTR STRUC – op(cl)

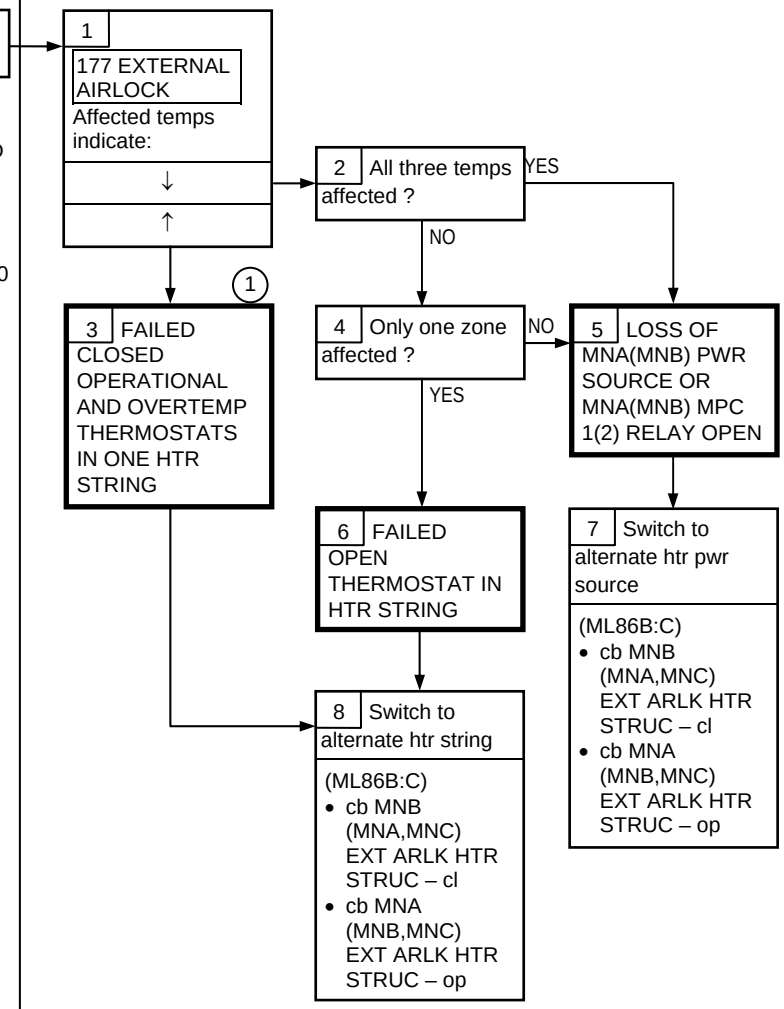

(1) If two or more temps are indicating high, √MCC. Possible external heat load due to attitude is causing high temps

CO2

6.8

6.8a RESERVED

CO2

6.8

ECLS

6.8b PPCO2 ↑

SM ALERT

S66 CAB PPCO2

If:
Orbiter CO2 partial press > 7.6mm Hg

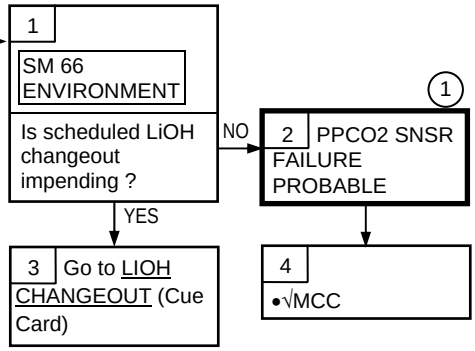

(1) Only MCC can determine exact failure. Suspect snsr yielding alarm

ECLS SSR-2
FES CORE FLUSH PROCEDURE

NOTE

This procedure is used to deice or to remove contamination from topping or hi load FES core by flowing warm Freon through core. Bypassed radiators and the Secondary FES Controller are used for the flush. A successful flush will be indicated by EVAP OUT temps stable at ~62 degF when FLASH EVAP CNTLR SEC is activated. Secondary cue is a very rapid decrease in duct temps, followed by rapid increase

SM 88 APU/ENVIRON THERM

TOPPING CORE FLUSH (RADS ACTIVATED)

L1 1. √FLASH EVAP CNTLR (three) – OFF
2. TOP EVAP HTR DUCT – A/B
3. √NOZ (two) – A AUTO(B AUTO)

CRT Proceed when TOP FWD(AFT) temps > 120 degF

4. RAD BYP VLV MODE (two) – MAN
5. CNTLR LOOP (two) – OFF, AUTO A
6. After 80 sec, RAD CNTLR LOOP (two) – OFF

CRT Proceed when EVAP OUT T > 90 degF for 2 min

L1 7. FLASH EVAP CNTLR SEC – ON (wait 30 sec)
8. – OFF (wait 30 sec)
9. Repeat steps 7 and 8 three times, then:
FLASH EVAP CNTLR SEC – ON

CRT 10. Proceed on MCC call, or if no comm, wait minimum 7 min, then proceed when EVAP OUT T ~62 degF and TOP FWD(AFT) > 120 degF

* If TOP FWD(AFT) < 40 degF, then *
* immediately perform steps 11,12,13,14 *

L1 11. FLASH EVAP CNTLR SEC – OFF
12. RAD CNTLR LOOP (two) – AUTO A
13. After 10 sec, RAD BYP VLV MODE 1,2 (two) – AUTO
RAD CNTLR OUT TEMP – HI
14. After 5 min, RAD CNTLR OUT TEMP – NORM

If successful flush:
15. After 30 min, TOP EVAP HTR DUCT – A(B)

If FES reqd, go to FES RESTART, ECLS SSR-5

HI LOAD CORE FLUSH (RADS ACTIVATED)

L1 1. √FLASH EVAP CNTLR (three) – OFF
2. HI LOAD DUCT HTR – A/B

CRT Proceed when HI LOAD INBD(OUTBD) Ts > 170 degF

L1 3. HI LOAD EVAP – ENA
4. RAD BYP VLV MODE (two) – MAN
5. CNTLR LOOP (two) – OFF, AUTO A
6. After 80 sec, RAD CNTLR LOOP (two) – OFF

CRT Proceed when EVAP OUT T > 90 degF for 2 min

L1 7. FLASH EVAP CNTLR SEC – ON (wait 30 sec)
8. – OFF (wait 30 sec)
9. Repeat steps 7 and 8 three times, then:
FLASH EVAP CNTLR SEC – ON

CRT 10. Proceed on MCC call, or if no comm, wait minimum 7 min, then proceed when EVAP OUT T ~62 degF and HI LOAD INBD(OUTBD) > 170 degF

* If HI LOAD INBD(OUTBD) < 40 degF, then *
* immediately perform steps 11,12,13,14 *

L1 11. FLASH EVAP CNTLR SEC – OFF
12. RAD CNTLR LOOP (two) – AUTO A
13. After 10 sec, RAD BYP VLV MODE 1,2 (two) – AUTO
RAD CNTLR OUT TEMP – HI
14. After 5 min, RAD CNTLR OUT TEMP – NORM

If successful flush:
15. HI LOAD EVAP – OFF
16. After 30 min, HI LOAD EVAP DUCT HTR – OFF

If FES reqd, go to FES RESTART, ECLS SSR-5

ECLS SSR-2 (Cont)

SM 0 THERMAL

TOPPING CORE FLUSH (RADS NOT ACTIVATED)

L1 1. TOP EVAP HTR DUCT – A/B
CRT Proceed when TOPPING DUCT temps within limits (no ↓; if PASS SM 88 available, TOP FWD(AFT) > 120 degF)
L1 2. FLASH EVAP CNTLR SEC – OFF
3. HI LOAD EVAP – OFF
O1 Proceed when EVAP OUT T > 90 degF for 2 min
L1 4. FLASH EVAP CNTLR SEC – ON (wait 30 sec)
5. – OFF (wait 30 sec)
6. Repeat steps 4 and 5 three times, then:
FLASH EVAP CNTLR SEC – ON
CRT 7. Proceed on MCC call, or, if no comm, wait minimum 7 min, then proceed when EVAP OUT T ~62 degF and TOP FWD(AFT) > 120 degF

***** If TOP FWD(AFT) < 40 degF, then *****
***** immediately perform steps 12,13,14,15 *****

L1 8. FLASH EVAP CNTLR SEC – OFF
9. HI LOAD EVAP – ENA
10. FLASH EVAP CNTLR PRI B – ON (wait 2 min)
O1 If EVAP OUT T ~39 degF (Topper recovered):
L1 11. TOP EVAP HTR DUCT – A(B) >>
12. FLASH EVAP CNTLR (three) – OFF (Topper not recovered)
13. HI LOAD EVAP – ENA
14. FLASH EVAP CNTLR SEC – ON
15. √TOP EVAP HTR DUCT – A(B)

HI LOAD CORE FLUSH (RADS NOT ACTIVATED)

L1 1. HI LOAD EVAP DUCT HTR – A/B
CRT Proceed when HI LOAD DUCT temps within limits (no ↓; if PASS SM 88 available, when HI LOAD INBD(OUTBD) > 170 degF)
L1 2. FLASH EVAP CNTLR SEC – OFF
3. HI LOAD EVAP – ON
4. FLASH EVAP CNTLR SEC – ON (wait 30 sec)
5. – OFF (wait 30 sec)
6. Repeat steps 4 and 5 three times, then:
FLASH EVAP CNTLR SEC – ON
CRT 7. Proceed on MCC call, or, if no comm, wait minimum 7 min, then proceed when EVAP OUT T ~62 degF and HI LOAD INBD(OUTBD) > 170 degF

***** If HI LOAD INBD (OUTBD) < 40 degF, then *****
***** immediately perform steps 12,13,14,15 *****

L1 8. FLASH EVAP CNTLR SEC – OFF
9. HI LOAD EVAP – ENA
10. FLASH EVAP CNTLR PRI B – ON (wait 2 min)
O1 If EVAP OUT T ~39 degF (HI LOAD recovered):
L1 11. HI LOAD EVAP DUCT HTR – A >>
12. FLASH EVAP CNTLR (three) – OFF (HI LOAD not recovered)
13. HI LOAD EVAP – OFF
14. FLASH EVAP CNTLR SEC – ON
15. √HI LOAD EVAP DUCT HTR – A(B)

ECLS

ECLS SSR-3
RECONFIG TO ALT PCS SYS (AUTO OPS)

Loss of PCS Sys
1(2) O2 or N2

1 10.2 psi ops ? YES → 4

NO

6.2b 78 82

(1)

2

SM 66 ENVIRONMENT
- Reconfig to alternate system

(L2)
ATM PRESS CONTROL
- O2/N2 CNTLR VLV SYS 1(2) – CL
- 2(1) – AUTO

(O1)
- O2/N2 FLOW SEL – SYS 2(1) O2
- PPO2 SEL – SNSR B(A)

(MO10W)
- 14.7 PSI CABIN REG INLET SYS 2(1) – OP
- 1(2) – CL
- H2O TK N2 REG INLET SYS 2(1) – OP
- 1(2) – CL
- O2 REG INLET SYS 2(SYS 1) – OP
- 1(SYS 2) – CL

(CRT)
- √N2 REG P 2(1) 185-240 psia
- √O2 REG P 2(1) 90-125 psia

If Cabin Press ≤ 15.2 psia >>

3

(1) Use this procedure for complete reconfig of Auto PCS or to depress cabin back to normal pressure after N2 or O2 leak occurred inside cabin. Some sws may be in desired position

ECLS SSR-3 (Cont)

6.2b | 41 | 51 | 2

3

SM 66 ENVIRONMENT

If Cabin Press > 15.2 psia

(MO13Q)
- MIDDECK FLOODS AIRLK 2 – ON/OFF

(Inner Hatch)
- Equalization vlv caps (two) – remove, stow
- Equalization vlv (two) – OFF
- Open, stow HATCH
- Rotate vent duct into airlock

(O15:D)
- cb MNB PPO2 C CAB dP/dT – op

(AW82B)
- AIRLK DEPRESS vlv cap – vent, remove

- Depress Cabin to ops level

(AW82B)
- AIRLK DEPRESS vlv – 5
  - * If 'S66 CABIN PPO2 A(B)' *
  - * AIRLK DEPRESS vlv – CL *
  - * (C5) *
  - * DIRECT O2 vlv – OP *
  - * When PPO2 = 3.45, *
  - * DIRECT O2 vlv – CL *
  - * Continue to depress Cabin and *
  - * add O2 as reqd *
- When 'S66 CAB O2(N2) FLO 1(2)'
  - If PPO2 > 3.6, continue depress until PPO2 < 3.6 psia
  - If PPO2 < 2.9, continue depress until CABIN PRESS = 14.5 psi
    AIRLK DEPRESS vlv – CL
    Allow CABIN PRESS and PPO2 to incr (~15 min). Repeat depress to CABIN PRESS = 14.5 until PPO2 > 2.9 psia

5 Reconfig from Cabin Depress

(AW82B)
- AIRLK DEPRESS vlv – CL, capped

(O15:D)
- cb MNB PPO2 C CAB dP/dT – cl

(Inner Hatch)
- If reqd, rotate vent duct and stow on AIRLK wall
- If reqd, close HATCH
- EQUAL vlv – norm and capped

(MO13Q)
- MIDDECK FLOODS AIRLK 2 – OFF/ON

6.2b | 78 | 82 | 1

(2)

4 10.2 psi reconfig

(L2)
ATM PRESS CONTROL
- O2/N2 CNTLR VLV SYS 1 – CL (O2)
- 2 – OP (N2)

(MO10W)
- H2O TK N2 REG INLET SYS 1 – CL
- 2 – OP

(CRT)
- √N2 REG P 2(1) 185-240 psia
- √O2 REG P 2(1) 90-110 psia
- P&I change to Cabin Maintenance: Change 'SYS 1' to 'SYS 2'
- √MCC for P&I changes to repress procedure

If Cabin Press ≤ 10.6 psia >>

6

(2) Swap PCS feeding nitrogen. Oxygen fed via Direct O2

ECLS SSR-3 (Cont)

6.2b | 41 | 51 | 4

6

SM 66 ENVIRONMENT

If Cabin Press > 10.6 psi

(O15:D)
- cb MNB PPO2 C CAB dP/dT – op

(AW82B)
- AIRLK DEPRESS vlv cap – vent, remove

- Depress Cabin to ops level

(AW82B)
- AIRLK DEPRESS VLV – 5

```
* If 'S66 CABIN PPO2' AIRLK          *
*   DEPRESS vlv – CL                 *
* (MO10W)                            *
* 14.7 REG INLET SYS 2 – OP or       *
*   open 14.7 REG INLET configured   *
*   for O2 when PPO2 = 2.8           *
*   14.7 REG INLET SYS 2 – CL        *
* Continue to depress                *
*   Cabin and add O2 as reqd         *
```

If PPO2 > 2.8, continue depress until PPO2 ≤ 2.8 and Cabin P = 10.2 < X < 10.4

If PPO2 < 2.55
- AIRLOCK DEPRESS vlv – CL
- Open 14.7 psi CABIN REG INLET which is configured to flow O2 to allow cabin press and PPO2 to incr until PPO2 = 2.8. Repeat depress until Cabin P = 10.2 < X < 10.4 and PPO2 > 2.55

7 Reconfig from cabin depress

(AW82B)
- AIRLK DEPRESS vlv – CL

(O15:D)
- cb MNB PPO2 C CAB dP/dT – cl

- Go to 10.2 PSI MAINTENANCE (EVA) for subsequent cabin adjustments

ECLS SSR-4
RECONFIG TO ALT H2O LOOP

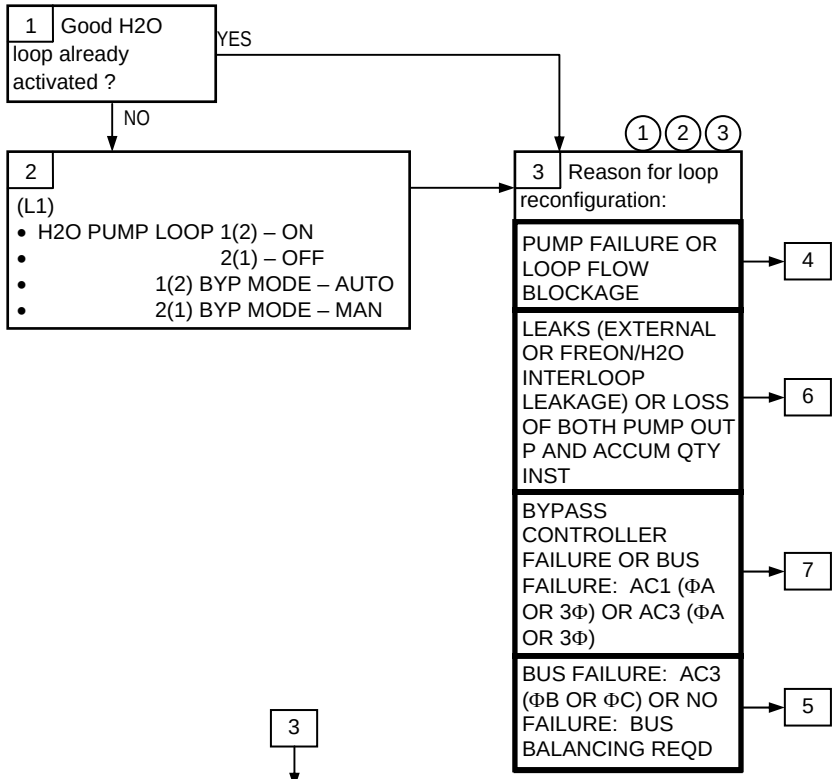

3

4 New active loop:	
LOOP 1	LOOP 2
(R13U) • Inhibit LOOP 2 PUMP OUT P (param 115) • Change LOOP 1 PUMP OUT P (param 105) lower C/W to 1.50 vdc (45 psia)	(R13U) • Inhibit LOOP 1 PUMP OUT P (param 105) • Change LOOP 2 PUMP OUT P (param 115) lower C/W to 1.50 vdc (45 psia)
Reconfig B/U C/W SM 60 SM TABLE MAINT • ITEM 1 +0 6 1 2 7 0 0 EXEC • ITEM 15 EXEC • ITEM 1 +0 6 1 2 6 0 0 EXEC • ITEM 11 +4 5 EXEC	Reconfig B/U C/W SM 60 SM TABLE MAINT • ITEM 1 +0 6 1 2 6 0 0 EXEC • ITEM 15 EXEC • ITEM 1 +0 6 1 2 7 0 0 EXEC • ITEM 11 +4 5 EXEC

6.4p 25
6.4p 36

3

5 New active loop:	
LOOP 1	LOOP 2
(R13U) • Change LOOP 1 PUMP OUT P (param 105) lower C/W limit to 1.50 vdc (45 psia) and LOOP 2 (param 115) to 0.65 vdc (19.5 psia)	(R13U) • Change LOOP 2 PUMP OUT P (param 115) lower C/W limit to 1.50 vdc (45 psia) and LOOP 1 (param 105) to 0.65 vdc (19.5 psia)
Reconfig B/U C/W SM 60 SM TABLE MAINT • ITEM 1 +0 6 1 2 6 0 0 EXEC • ITEM 11 +4 5 EXEC • ITEM 1 +0 6 1 2 7 0 0 EXEC • ITEM 11 +1 9.5 EXEC	Reconfig B/U C/W SM 60 SM TABLE MAINT • ITEM 1 +0 6 1 2 7 0 0 EXEC • ITEM 11 +4 5 EXEC • ITEM 1 +0 6 1 2 6 0 0 EXEC • ITEM 11 +1 9.5 EXEC

(1) Procedure assumes initial C/W and B/U C/W for PUMP OUT P set at 19.5 for inactive loop and 45 for active loop

(2) Loss of bypass controller results in loss of all instrumentation in affected loop except flow and some temperatures

(3) With loss of PUMP OUT P and ACCUM QTY instrumentation, Freon/H2O interloop leakage is not detectable. Affected loop should not be used unless reqd

ECLS SSR-4 (Cont)

3

6	New active loop:	
	LOOP 1	LOOP 2
	(R13U) • Inhibit LOOP 2 PUMP OUT P (param 115) • Change LOOP 1 PUMP OUT P (param 105) lower C/W to 1.50 vdc (45 psia)	(R13U) • Inhibit LOOP 1 PUMP OUT P (param 105) • Change LOOP 2 PUMP OUT P (param 115) lower C/W to 1.50 vdc (45 psia)
	Reconfig B/U C/W SM 60 SM TABLE MAINT • ITEM 1 +0 6 1 2 6 0 0 EXEC • ITEM 11 +4 5 EXEC • ITEM 1 +0 6 1 2 7 0 0 EXEC • ITEM 15 EXEC	Reconfig B/U C/W SM 60 SM TABLE MAINT • ITEM 1 +0 6 1 2 7 0 0 EXEC • ITEM 11 +4 5 EXEC • ITEM 1 +0 6 1 2 6 0 0 EXEC • ITEM 15 EXEC
	Inhibit LOOP 2 SM ALERTS • ITEM 10 EXEC • ITEM 1 +0 6 1 2 7 1 0 EXEC • ITEM 10 EXEC	Inhibit LOOP 1 SM ALERTS • ITEM 10 EXEC • ITEM 1 +0 6 1 2 6 1 0 EXEC • ITEM 10 EXEC

3

7	New active loop:	
	LOOP 1	LOOP 2
	(R13U) • Inhibit LOOP 2 PUMP OUT P (param 115) • Change LOOP 1 PUMP OUT P (param 105) lower C/W to 1.50 vdc (45 psia)	(R13U) • Inhibit LOOP 1 PUMP OUT P (param 105) • Change LOOP 2 PUMP OUT P (param 115) lower C/W to 1.50 vdc (45 psia)
	Reconfig B/U C/W SM 60 SM TABLE MAINT • ITEM 1 +0 6 1 2 6 0 0 EXEC • ITEM 11 +4 5 EXEC • ITEM 1 +0 6 1 2 7 0 0 EXEC • ITEM 15 EXEC	Reconfig B/U C/W SM 60 SM TABLE MAINT • ITEM 1 +0 6 1 2 7 0 0 EXEC • ITEM 11 +4 5 EXEC • ITEM 1 +0 6 1 2 6 0 0 EXEC • ITEM 15 EXEC
	Inhibit LOOP 2 SM ALERTS • ITEM 10 EXEC • ITEM 1 +0 6 1 2 7 1 0 EXEC • ITEM 10 EXEC • ITEM 1 +0 6 1 2 7 4 0 EXEC • ITEM 10 EXEC • ITEM 1 +0 6 1 2 7 0 5 EXEC • ITEM 10 EXEC	Inhibit LOOP 1 SM ALERTS • ITEM 10 EXEC • ITEM 1 +0 6 1 2 6 1 0 EXEC • ITEM 10 EXEC • ITEM 1 +0 6 1 2 6 4 0 EXEC • ITEM 10 EXEC • ITEM 1 +0 6 1 2 6 0 5 EXEC • ITEM 10 EXEC

ECLS SSR-5
FES RESTART

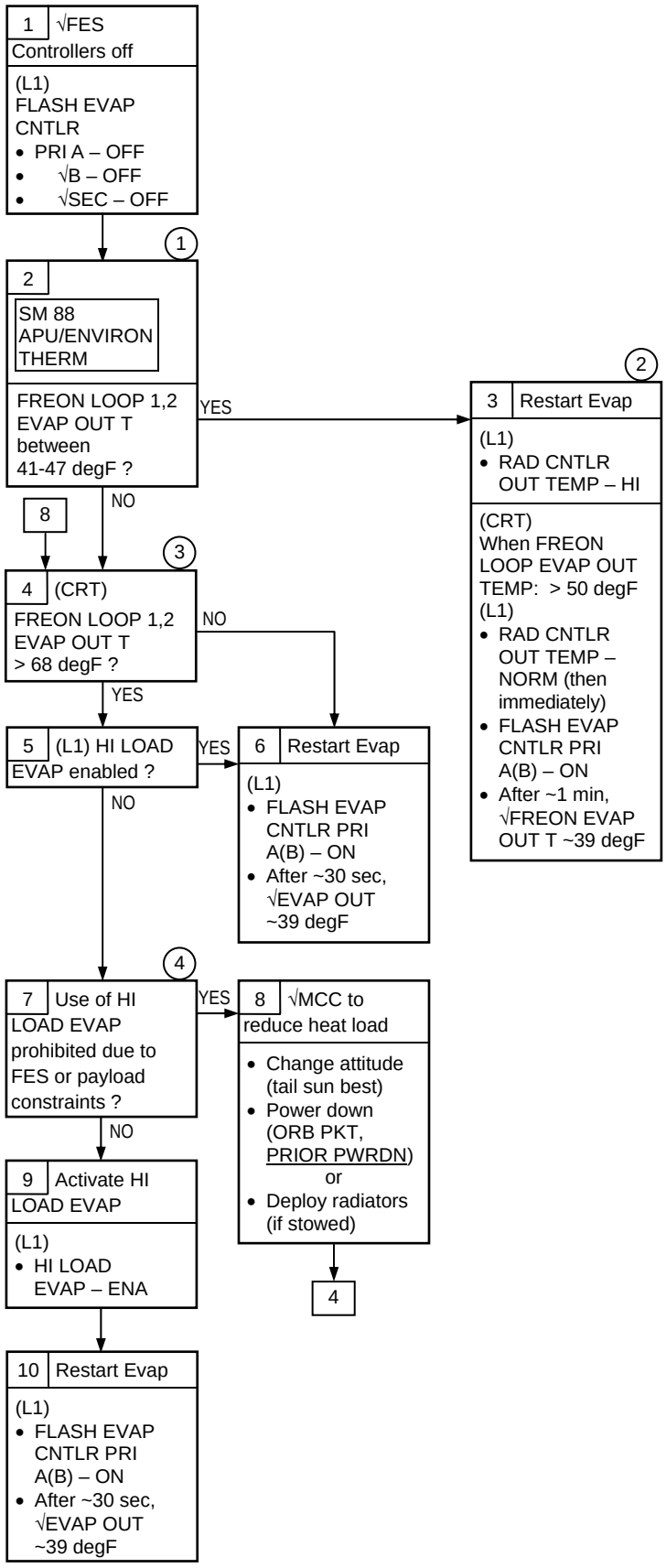

(1) Prior flight experience has demonstrated that FES shutdns are most likely in this temp range

(2) To ensure positive FES restart, RADs are placed in HIGH to impose a load on FES

(3) TOPPING EVAP will overtemp shutdn when inlet temp exceeds ~68 degF and HI LOAD not activated

(4) Heat load beyond capability of topping evap

ECLS SSR-6
CABIN EQUIP PWRDN

	Use one IDP/CRT with one MDU
F6/F8/A6U	FLT CNTLR PWR (three) – OFF
O14:E	√cb MNA DDU L,AFT (two) – op
O15:E	√cb MNB DDU L,R (two) – op
O16:E	√cb MNC DDU R,AFT (two) – op
L1	CAB TEMP – COOL(as reqd, WARM)
	Minimize ltg
W1-10	Install Window Shades (ten)
O19	TV PWR – OFF
A3	MON 1,2 – OFF
R11	VTR PWR – OFF
MO39M	MIDDECK COMM CCU PWR – OFF
MO42F	SPKR AUD SPKR PWR – OFF
	PWR – OFF
MO58F	MIDDECK CCU AUD PWR – OFF
GALLEY	DC PWR BUS A – OFF
	B – OFF
MA73C:G	cb AC3 GALLEY FAN (three) – op
	or
	Food Warmer – OFF, √light – off
	All middeck lts – off

ECLS SSR-7
FLASH EVAPORATOR CHECKOUT

NOTE
Procedure used to check all components

PRETEST SETUP

a. √Rad flow, PLBD opened
L1 b. FLASH EVAP TOP DUCT HTR – A(B)
NOZ (two) – AUTO A(B)

If HI LOAD EVAP to be activated:
FLASH EVAP HI LOAD DUCT HTR – A(B)
Wait ~45 min before activating HI LOAD

L2 c. FLASH EVAP FDLN HTR A SPLY – 1(2)
B SPLY – 1(2)

R11L d. √SPLY H2O TKB OUTLET – OP (tb-OP)
√B SPLY ISOL VLV – OP (tb-OP)
ML31C √TKD OUTLET – OP (tb-OP)

COMPONENT CHECKOUT SM 88 APU/ENVIRON THERM

a. PRIMARY CNTLR A,B and TOPPING FES CHECKOUT
Perform FES RESTART, ECLS SSR-5

b. SECONDARY CNTLR and TOPPING FES CHECKOUT

NOTE
This procedure √ SEC CNTLR ops starting from standby mode. To check cntlr startup under load conditions, interchange steps 2 and 3 but pause between steps to allow EVAP OUT T to incr > 62 degF (approx 1 min)

L1 1. √HI LOAD EVAP – OFF
2. FLASH EVAP CNTLR PRI A,B – OFF
SEC – ON
3. RAD BYP VLV LOOP 1,2 MODE (two) – MAN
MAN SEL (two) – BYP until tb – BYP
CRT 4. After 2 min, √EVAP OUT T ~62 degF
L1 5. RAD BYP VLV LOOP 1,2 MODE (two) – AUTO
CNTLR LOOP 1,2 (two) – OFF, AUTO A(AUTO B)
After 90 sec, √tb – RAD (two)
6. Perform FES RESTART, ECLS SSR-5

c. SECONDARY CNTLR, HI LOAD FES, FEEDWATER A CHECKOUT

L1 1. HI LOAD EVAP – ENA
FLASH EVAP CNTLR SEC – A SPLY
2. PRI A,B – OFF
SEC – ON
3. RAD BYP VLV LOOP 1,2 MODE (two) – MAN
MAN SEL (two) – BYP until tb – BYP
CRT 4. After 2 min, √EVAP OUT T ~62 degF
L1 5. RAD BYP VLV LOOP 1,2 MODE (two) – AUTO
CNTLR LOOP 1,2 (two) – OFF, then AUTO A(AUTO B)
After 90 sec, √tb – RAD (two)
6. Perform FES RESTART, ECLS SSR-5
7. HI LOAD EVAP – OFF
After 30 min,
8. FLASH EVAP HI LOAD DUCT HTR – OFF

d. SECONDARY CONTROLLER, HI LOAD FES, FEEDWATER B CHECKOUT

L1 1. HI LOAD EVAP – ENA
FLASH EVAP CNTLR SEC – B SPLY
2. PRI A,B – OFF
SEC – ON
3. RAD BYP VLV LOOP 1,2 MODE (two) – MAN
MAN SEL (two) – BYP until tb – BYP
CRT 4. After 2 min, √EVAP OUT T ~62 degF
L1 5. RAD BYP VLV LOOP 1,2 MODE (two) – AUTO
CNTLR LOOP 1,2 (two) – OFF, then AUTO A(AUTO B)
After 90 sec, √tb – RAD (two)
6. Perform FES RESTART, ECLS SSR-5
7. HI LOAD EVAP – OFF
After 30 min,
8. FLASH EVAP HI LOAD DUCT HTR – OFF
9. CNTLR SEC – A SPLY

e. PRIMARY CNTLR A,B, TOPPING and HI LOAD EVAP, A and B SPLY CHECKOUT

L1 1. HI LOAD EVAP – ENA
FLASH EVAP CNTLR SEC – A SPLY(B SPLY)
2. PRI A – OFF
B – OFF
SEC – OFF
3. RAD BYP VLV LOOP 1,2 MODE (two) – MAN
MAN SEL (two) – BYP until tb – BYP
CRT 4. When EVAP OUT T > 47 degF, FLASH EVAP CNTLR PRI A – ON
5. After 60 sec, √EVAP OUT T ~39 degF ± 1 degF
L1 6. FLASH EVAP CNTLR PRI A – OFF
B – ON
CRT After 60 sec, √EVAP OUT T ~39 degF ± 1 degF
L1 7. RAD BYP VLV LOOP 1,2 MODE (two) – AUTO
CNTLR LOOP 1,2 (two) – OFF, AUTO A(AUTO B)
After 90 sec, √tb (two) – RAD
8. After 2 min, HI LOAD EVAP – OFF

f. PRIMARY CNTLR A,B, TOPPING, STARTUP FROM STBY CHECKOUT

1. Perform FES RESTART, ECLS SSR-5, using A CNTLR
CRT 2. √RAD OUT T ~39 degF (FES to STBY)
Pwrdn and/or change attitude if necessary
L1 3. RAD CNTLR OUT T – HIGH
CRT 4. After 2 min, √EVAP OUT T ~39 degF ± 1 degF
L1 5. FLASH EVAP CNTLR PRI A – OFF
B – ON
CRT 6. After 60 sec, √EVAP OUT T ~39 degF ± 1 degF
L1 7. RAD CNTLR OUT T – NORM, then immediately
8. FLASH EVAP CNTLR PRI B – OFF, ON
9. √RAD OUT T ~39 degF ± 1 degF
10. CNTLR OUT T – HIGH
11. After 2 min, √EVAP OUT T ~39 degF ± 1 degF
12. RAD CNTLR OUT T – NORM
13. FLASH EVAP CNTLR PRI B – OFF

ECLS SSR-8
SMALL CABIN-LEAK ISOL

NOTE

This procedure should only be performed On MCC call. MCC will call with specific steps to be performed. Steps may be sequentially performed in groups to expedite leak isolation. MCC will determine when leak has been isolated using cabin pressure decay

SM 66 ENVIRONMENT OR SM SYS SUMM 1

LEAK ISOLATION STEPS

If spacelab module, go to ECLS SSR-1 (SLM MAL, ECLS) >>

1. If manual cabin pressure control or 10.2 psi ops, go to step 3

MO10W 2. 14.7 CAB REG INLET SYS 1,SYS 2 vlv (two) – CL

WCS 3. √COMMODE CNTL – DN/OFF (N/A if EDO WCS)

WCS/ EDO WCS 4. VAC VLV – CL

Below SIDE HATCH 5. NEG PRESS RELIEF vlv covers (two) – cl (push firmly)

L2 6. CAB RELIEF A – CL (tb-CL)

7. CAB RELIEF B – CL (tb-CL)

8. If flown, deactivate CO2 RMVL SYS:

MO51F CO2 RMVL SYS CNTLR 1(2) MODE – STBY (hold 3 sec)
Wait 6 sec
√CO2 RMVL SYS CNTLR 1(2) OPER lt – off
√FAIL lt – on

CRT √VAC PRESS < 5.0
Record VAC PRESS _____

NOTE

Suspect possible duct leakage if VAC PRESS > 5.0 H or increases after next step

MD52M On MCC GO, replace LiOH canister in POS A

MIDDECK FLR 9. √CAB PURGE VLV – CL
√ISOL VLV – CL

EXT A/L 10. EXT A/L DEPRESS vlv – CL
NEG PRESS RELIEF vlv covers (two) – CL (push firmly)

ML31C 11. VAC VENT ISOL VLV CNTL – CL (tb-CL)

WCS 12. CRADLE – AUTO INHIBIT
Remove urinal hose (at hose block), hose block, and filter
Place Gray Tape over center tube (EMU drain)

If SH HATCH open:

13. Perform SH CABIN LEAK ISOLATION (Cue Card)

MIDDECK 14. A/L HATCH – CL (per decal)
Equal vlv (two) – OFF

LEAK DETECTION AND SEALING

15. Go to LEAK DETECTION – ULTRASONIC (IFM, PROCEDURES G thru L)

If reqd (On MCC Go):

16. Go to LEAK SEALING – VACUUM (IFM, PROCEDURES G thru L)

RECOVERY STEPS (On MCC call)

L2 17. CAB RELIEF A – ENA (tb-ENA)

18. CAB RELIEF B – ENA (tb-ENA)

ECLS SSR-8 (Cont)

ML31C 19. VAC VENT ISOL VLV CNTL – OP (tb-OP)
If flown, reactivate CO2 RMVL SYS:
MO51F CO2 RMVL SYS MNA(MNC) – OFF
AC1(AC3) – OFF (hold 3 sec)
√CNTLR 1(2) FAIL lt – off
AC1(AC3) – ON (hold 3 sec)
MNA(MNC) – ON
CNTLR 1(2) MODE – OPER (hold 3 sec)
Wait 6 sec
√CO2 RMVL SYS CNTLR 1(2) OPER lt – on

WCS/ 20. VAC VLV – OP
EDO
WCS

PCS CONFIG (On MCC GO)
21. √MCC for PCS config and TIG time (if necessary)

ECLS SSR-9
RAD ISOL RECOVERY

NOTE

Procedure reestablishes radiator flow after inadvertent isolation due to instrumentation or Freon isolation logic failure. Expect possible 'S88 EVAP OUT T 1(2)' msg

SM 88 APU/ENVIRON THERM

L1 1. FLASH EVAP CNTLR PRI A,B,SEC (three) – OFF

If Freon Loop 1 aff:

2. RAD BYP VLV MODE 1 – MAN
   CNTLR LOOP 1 – OFF, then
   AUTO A(AUTO B)
3. After 10 sec, RAD BYP VLV MODE 1 – AUTO
4. RAD CNTLR OUT TEMP – HI

L2 5. FREON ISOL MODE – MAN
   LOOP 1 – RADIATOR (hold 5 sec)

If Freon Loop 2 aff:

L1 6. RAD BYP VLV MODE 2 – MAN
   CNTLR LOOP 2 – OFF, then
   AUTO A(AUTO B)
7. After 10 sec, RAD BYP VLV MODE 2 – AUTO
8. RAD CNTLR OUT TEMP – HI

L2 9. FREON ISOL MODE – MAN
   LOOP 2 – RADIATOR (hold 5 sec)

L1 10. After 5 min, RAD OUT TEMP – NORM

If FES reqd, go to FES RESTART, ECLS SSR-5

ECLS SSR-10
H2O PUMP OPS VIA GPC

NOTE

Provides continuous GPC commanding of the H2O loop pumps

1. Reset pump cycling constants (if comm available. MCC can TMBU if desired)
   SM 60 SM TABLE MAINT
   ITEM 16 +9 2 0 6 4 1 EXEC
   17 +9 9 9 9 9 9 EXEC
   16 +9 2 0 6 4 0 EXEC
   17 +1 EXEC

2. If reqd, perform PL/DPS RECONFIG (PL SYS: or SODF: ASSY OPS), Secure (PL SYS)

3. Perform SM CHECKPOINT INITIATE (ORB OPS, DPS)

If WCL 1 for continuous ops:
- If Pump A reqd:
  - L4:F L1 4. cb AC1 H2O LOOP PUMP 1 A/2 (three) – cl
  - L4:F L1 5. H2O PUMP LOOP 1 – A
- If Pump B reqd:
  - 6. √H2O PUMP LOOP 1 – B
  - 7. H2O PUMP LOOP 1 – GPC
    LOOP 1 BYP MODE – AUTO
    2 BYP MODE – MAN
  - O1 8. H2O PUMP OUT PRESS – 1

If WCL 2 for continuous ops:

L4:F 9. cb AC1 H2O LOOP PUMP 1 A/2 (three) – cl

L1 10. H2O PUMP LOOP 2 – GPC
√LOOP 2 BYP MODE – AUTO
√1 BYP MODE – MAN

O1 11. √H2O PUMP OUT PRESS – 2

NOTE

Ops transition in steps 14 and 15 causes MCIU to lose I/O with the GPC. Coordinate ops transition with PDRS to avoid impacts to ongoing PDRS operations. Nominal PDRS ops are recovered in step 17, if required

12. SM OPS 000 PRO

13. SM OPS 201 PRO

S88 APU/ENVIRON THERM

If H2O LOOP PUMP OUT P 1(2): 61-69

L1 14. H2O PUMP LOOP 2(1) – OFF

If reqd:

15. S94 PDRS CONTROL
    I/O ON – ITEM 5 EXEC(**)
    SAFING – CANCEL

16. SM(GNC,PL) 1 DPS UTILITY
    CKPT RETRV ENA – ITEM 12 EXEC (**)
    UL CNTL AUTO – ITEM 35 EXEC (**)

17. If reqd, perform PL/DPS RECONFIG, (PL SYS: or SODF: ASSY OPS)

18. C/W update (if comm available, MCC can TMBU software limits if desired)

Loop 1 active	Loop 2 active
(R13U) • Change Loop 1 PUMP OUT P (param 105) lower C/W limit to 1.50 vdc (45 psia) and Loop 2 (param 115) to 0.65 vdc (19.5 psia)	(R13U) • Change Loop 2 PUMP OUT P (param 115) lower C/W limit to 1.50 vdc (45 psia) and Loop 1 (param 105) to 0.65 vdc (19.5 psia)
Reconfig B/U C/W SM 60 SM TABLE MAINT	Reconfig B/U C/W SM 60 SM TABLE MAINT
• ITEM 1 +0 6 1 2 6 0 0 EXEC • ITEM 11 +4 5 EXEC • ITEM 1 +0 6 1 2 7 0 0 EXEC • ITEM 11 +1 9 . 5 EXEC	• ITEM 1 + 0 6 1 2 7 0 0 EXEC • ITEM 11 +4 5 EXEC • ITEM 1 + 0 6 1 2 6 0 0 EXEC • ITEM 11 + 1 9 . 5 EXEC

ECLS SSR-11
FES FEEDLINE PURGE

NOTE

Procedure provides evacuation of H2O from FES Feedlines in the event of dual htr failures or htr deactivation during major pwrdn. If purge of both feedlines is to be performed or if SPLY H2O dump reqd, perform dump before performing this procedure to provide ullage

L1 1. FLASH EVAP CNTLR PRI A,B,SEC (three) – OFF

NOTE

Have towel ready for possible release of water when mating/demating any connections

WCS Outbd Wall 2. Unstow and install SPLY H2O Dumpline Purge Device into CONT H2O X-TIE POT QD (lower QD with blue Velcro and "POTABLE" label)

ML86B:A 3. cb MNC SPLY H2O XOVR VLV – cl

If only B FDLN requires purging:

NOTE

After evacuation of B FDLN, SPLY H2O can be managed in normal fashion by using Nozzle dumps and/or Supply Water dumps with FES PRI A

ML31C 4. SPLY H2O TKD OUTLET – CL (tb-CL)

R11L 5. TKA,TKB,TKC OUTLET – CL (tb-CL)
√B SPLY ISOL VLV – OP
XOVR VLV – OP (tb-OP)
√DUMP ISOL VLV – OP (tb-OP)

L1 6. RAD CNTLR OUT TEMP – HI

O1 7. When EVAP OUT T > 50 degF,
FLASH EVAP CNTLR PRI B – ON

8. When FES shuts down and EVAP OUT T again > 50 degF,
FLASH EVAP CNTLR PRI B – OFF, ON

9. Repeat step 8 until EVAP OUT T remains at ~57 degF,
then FLASH EVAP CNTLR PRI B – OFF

R11L 10. SPLY H2O B SPLY ISOL VLV – CL

L2 11. FLASH EVAP FDLN HTR B SPLY – OFF

L1 12. √CNTLR SEC – A SPLY

13. FDA RESET

If comm, MCC will TMBU limits as reqd

If no comm, change limits via table

SM 60 TABLE MAINT

PARAMETER NAME	PARA ID	SM ALERT	
		LOW	HIGH
EVAP TEMP FDLN T FWD (B)	0631871	-10	
EVAP TEMP FDLN T MID 1 (B)	0631873	-10	
EVAP TEMP FDLN T MID 2 (B)	0631875	-10	
EVAP TEMP FDLN T AFT (B)	0631877	-10	
EVAP TEMP FDLN T TOPPING (B)	0631893	-10	
EVAP TEMP FDLN T ACCUM (B)	0631894	-10	
EVAP TEMP FDLN T HI LOAD (B)	0631896	-10	

Continue with procedure in step 27

If only A FDLN requires purging:

NOTE

After evacuation of A FDLN, SPLY H2O can be managed using Nozzle dumps and/or Supply Water dumps with FES PRI B

R11L 14. SPLY H2O TKA,TKB OUTLET – CL (tb-CL)
√XOVR VLV – CL (tb-CL)
√DUMP ISOL VLV – OP (tb-OP)

~

L1 15. RAD CNTLR OUT TEMP – HI
O1 16. When EVAP OUT T > 50 degF,
FLASH EVAP CNTLR PRI A – ON
17. When FES shuts down and EVAP OUT T again > 50 degF,
FLASH EVAP CNTLR PRI A – OFF, ON
18. Repeat step 17 until EVAP OUT T remains at ~57 degF,
then FLASH EVAP CNTLR PRI A – OFF
L2 19. FLASH EVAP FDLN HTR A SPLY – OFF
L1 20. CNTLR SEC – B SPLY

21. FDA RESET
If comm, MCC will TMBU limits as reqd
If no comm, change limits via table

SM 60 TABLE MAINT

PARAMETER NAME	PARA ID	SM ALERT	
		LOW	HIGH
EVAP TEMP FDLN T FWD (A)	0631870	-10	
EVAP TEMP FDLN T MID 1 (A)	0631872	-10	
EVAP TEMP FDLN T MID 2 (A)	0631874	-10	
EVAP TEMP FDLN T AFT (A)	0631876	-10	
EVAP TEMP FDLN T TOPPING (A)	0631891	-10	
EVAP TEMP FDLN T ACCUM (A)	0631892	-10	
EVAP TEMP FDLN T HI LOAD (A)	0631895	-10	

Continue with procedure in step 27

If both A,B FDLNs require purging:

NOTE
SPLY H2O can be managed by normal means after lines are refilled. Lines should be reevacuated after completion of dump

22. Perform steps 4 thru 9, then:
L1 FLASH EVAP CNTLR PRI A – ON
23. Perform steps 17 and 18, then:
L2 24. FLASH EVAP FDLN HTR A,B SPLY (two) – OFF
L1 25. TOP EVAP HTR DUCT – OFF
NOZ L,R (two) – OFF

26. FDA RESET
If comm, MCC will TMBU limits as reqd
If no comm, change limits via table

SM 60 TABLE MAINT

PARAMETER NAME	PARA ID	SM ALERT	
		LOW	HIGH
EVAP TEMP TOPPING AFT	0631802	-10	
EVAP TEMP TOPPING FWD	0631801	-10	
EVAP TEMP TOPPING L DUCT	0631800	-10	
EVAP TEMP TOPPING L NOZ	0631878	-10	
EVAP TEMP TOPPING R DUCT	0631810	-10	
EVAP TEMP TOPPING R NOZ	0631879	-10	

Also update limits per steps 13 and 21

Continue with procedure in step 27

POST-PURGE RECONFIGURATION
27. RAD CNTLR OUT TEMP – NORM
WCS Outbd Wall 28. Remove, stow SPLY H2O Dumpline Purge Device from CONT H2O X-TIE POT QD
29. √MCC for Supply Water Tank Config
30. √MCC for FES Config

ECLS SSR-12
AV BAY FIRE RECOVERY/RECONFIG

NOTES

1. This procedure is used to restore a single fault tolerance condition to orbiter after ORB PKT, PWRDN, AV BAY FIRE has been performed. It may be necessary to repower equipment in affected Av Bay to restore Single Fault Tolerance (SFT)

2. The following Reference Table identifies location of equipment to ensure SFT for entry:

Essential Equipment	Av Bay 1	Av Bay 2	Av Bay 3A	Av Bay 3B
ANTISKID	X	X		
AUD CTR	1,2			
BRAKES	X	X		
COMM			X	
C/W			X	
OI MDM	OF1	OF2	OF3	
OI DSC	OF1	OF2	OF3	
PL MDM	PL1	PL2		
Minimum Equip reqd for SFT	**Av Bay 1**	**Av Bay 2**	**Av Bay 3A**	**Av Bay 3B**
3 of 4 FF MDMs	FF1	FF2,FF4	FF3	
3 of 4 ADTAs	1,3	2,4		
3 of 4 AAs	1,4	2,3		
2 of 3 MLSs	1	2,3		
2 of 3 TACANs (OV103,4)	1	2	3	
2 of 3 GPSs (OV105)	1		3	2
2 of 3 FMCAs	1	2	3	
3 of 5 GPCs	1,4	2,5	3	

3. Perform with MCC coverage, if possible
4. Recovery steps A,B, and C are reqd to provide valid smoke concentrations
5. Perform recovery steps D thru M if smoke conc stable or decreasing
6. FRCS dump will be 2 jet dump only
7. If recovery of the associated AC Bus, FF MDM, or FMCA is unsuccessful, √MCC for vent door config. Certain failure combinations will cause multiple vent doors to remain open during entry

> CAUTION
> Do NOT close any cb(s) found open at time of fire that is normally closed. Unpower recovered component if smoke concentration increases during recovery

A. OI MDM RECOVERY (IF REQD)

If Av Bay 1 or 2 affected:

O14:B 1. cb MNA OI MDM OF 1/2 A – cl

If cb not reset then:

O15:B 2. cb MNB OI MDM OF 1/2 B – cl

If Av Bay 3A affected:

O14:B 3. cb MNA OI MDM OF 3/4 A – cl

If cb not reset then:

O16:B 4. cb MNC OI MDM OF 3/4 B – cl

SM 62 PCMMU/PL COMM

5. PCMMU I/O RESET PCM – ITEM 5 EXEC (*****)

B. OI DSC RECOVERY (IF REQD)

If Av Bay 1 affected:

O14:B 1. cb MNA OI SIG CONDR OF 1/4 A – cl

If cb not reset, then:

O15:B 2. cb MNB OI SIG CONDR OF 1/4 B – cl

If Av Bay 2 or 3A affected:

O15:B 3. cb MNB OI SIG CONDR OF 2/3 A – cl

If cb not reset, then:

O16:B 4. cb MNC OI SIG CONDR OF 2/3 B – cl

C. AV BAY FAN RECONFIG

> CAUTION
> With Av Bay Fan activation, a momentary rise in smoke concentration may result. If smoke concentration continues to increase for > 1 min, unpower affected bay

ECLS SSR-12 (Cont)

If Av Bay 1 affected:

L4:G 1. cb AC2 ΦA,ΦB,ΦC AV BAY 1 FAN B (three) – cl
SM 67 ELECTRIC
Note AC2 AMPS

L1 2. AV BAY 1 FAN B – ON
If AC AMPS not incr 0.5-0.9 amps/Φ or
AV BAY 1 FAN ΔP < 2.5 or > 4.3 (3.3 for 10.2 ops)
3. AV BAY 1 FAN B – OFF
If MCC not available, unpower Av Bay 1 >>

If Av Bay 2 affected:

L4:H 4. cb AC3 ΦA,ΦB,ΦC AV BAY 2 FAN B (three) – cl
SM 67 ELECTRIC
Note AC3 AMPS

L1 5. AV BAY 2 FAN B – ON
If AC AMPS not incr 0.5-0.9 amps/Φ or
AV BAY 2 FAN ΔP < 2.5 or > 4.3 (3.3 for 10.2 ops)
6. AV BAY 2 FAN B – OFF
If MCC not available, unpower Av Bay 2 >>

If Av Bay 3A affected:

L4:H 7. cb AC1 ΦA,ΦB,ΦC AV BAY 3 FAN B (three) – cl
SM 67 ELECTRIC
Note AC1 AMPS

L1 8. AV BAY 3 FAN B – ON
If AC AMPS not incr 0.5-0.9 amps/Φ or
AV BAY 3 FAN ΔP < 2.5 or > 4.3 (3.3 for 10.2 ops)
9. AV BAY 3 FAN B – OFF
If MCC not available, unpower Av Bay 3 >>

D. COMM RECOVERY (FOR AV BAY 1 ONLY) (IF REQD)

C3 1. AUD CTR – 1
If Voice comm not restored:
2. AUD CTR – 2
If Voice comm still not restored:
3. AUD CTR – OFF
4. Perform COMM SSR-1

E. COMM RECOVERY (FOR AV BAY 3A ONLY) (IF REQD)

If no comm:

A1L 1. NSP DATA RATE XMIT – HI
RCV – HI
UPLK DATA – S-BD
CODING XMIT – ON
RCV – ON
PWR – 1
ENCRYPTION PWR – ON
MODE – SEL
SEL – BYP
S-BD PM ANT SW ELEC – 1
PRE-AMP – 1
PWR AMPL STBY – 1
OPER – 1
XPNDR – 1

C3 2. S-BD PM CNTL – PNL

If comm not restored:
3. Perform COMM, 2.3a, then:

F. IMU FAN RECONFIG

SM 66 ENVIRONMENT

If Av Bay 1 affected:

L1 1. IMU FAN C(B) – OFF

CRT If IMU FAN ΔP < 3.7 or > 4.95

L1 2. IMU FAN C(B) – ON
B(C) – OFF

CRT 3. √IMU FAN ΔP OK

If Av Bay 2 affected:

L1 4. IMU FAN A(C) – OFF

CRT If IMU FAN ΔP < 3.7 or > 4.95

L1 5. IMU FAN A(C) – ON
C(A) – OFF

CRT 6. √IMU FAN ΔP ok

If Av Bay 3A affected:

L1 7. IMU FAN A(B) – OFF

CRT If IMU FAN ΔP < 3.7 or > 4.95

L1 8. IMU FAN A(B) – ON
B(A) – OFF

CRT 9. √IMU FAN ΔP OK

G. CAUTION AND WARNING RECOVERY (For AV BAY 3A only)

O13:C 1. cb ESS 2CA C/W B – cl (MA)

F2(F4,A7) 2. MSTR ALARM pb – off

O13:A 3. cb ESS 1BC C/W A – cl (MA)

F2(F4,A7) 4. MSTR ALARM pb – off

NOTE

C/W parameters must be reset to nominal on-orbit config since temporary loss of pwr has set hardware C/W parameters to their default values

R13U 5. Inhibit parameters specified for on-orbit ops on PRIMARY C/W PARAMETER MATRIX Cue Card

6. Use C/W & FDA TABLE (REF DATA) to reset limits for:

CH	Param
004	CAB PRESS
007	OMS TK P OX – L
017	OMS TK P FU – L
037	OMS TK P OX – R
047	OMS TK P FU – R
074	CAB FAN Delta P

7. C/W MEM – CLEAR

8. C/W PARAM SEL tw (three) – >119

H. AC BUS RECOVERY

Only perform on MCC GO or if critical need

1. Isolate 3Φ bus per table

NOTE

3Φ AC UTIL PWR cbs are located on pnl L4:B →

(L4,MA73C)
cb – open all (3Φ,ΦA, ΦB,ΦC) on aff AC bus

Number of cb to open:

BUS		L4	MA73C
AC1	3Φ	1	5
	ΦA	16	5
	ΦB	16	4
	ΦC	13	5
AC2	3Φ	0	9
	ΦA	15	5
	ΦB	16	4
	ΦC	14	5
AC3	3Φ	1	7
	ΦA	15	3
	ΦB	16	3
	ΦC	13	3

SM 67 ELECTRIC

O13:A(C,E) 2. cb ESS 1BC (2CA,3AB) AC1(AC2,AC3) SNSR – cl

NOTE

Expect S67 AC VOLTS msg and F7 AC VOLTAGE lt

R1 3. Aff AC BUS SNSR – AUTO TRIP

CAUTION
Following steps should be reviewed carefully prior to their execution since affected AC system may be tied into a short

Repower ΦA:

4. cb aff AC CONTR ΦA – cl
   Aff INV PWR – ON
   INV/AC BUS – ON

CRT √Aff AC VOLTS > 110 and < 120
√Aff AC AMPS < 1

If AC VOLTS, AMPS limits exceeded or F7 AC OVLD lt received:

5. Aff INV/AC BUS – OFF (tb-OFF)
   INV PWR – OFF (tb-OFF)
6. cb aff AC CONTR ΦA – op
7. Repeat steps 4 thru 6 for ΦB, then ΦC

If no phases recovered:

O13:A(C,E) 8. cb ESS 1BC(2CA,3AB) AC1(AC2,AC3) SNSR – op

If only 1 or 2 Φs recovered:

9. Inhibit aff AC VOLTAGE C/W Channel: 033 (043,053)

If any phase recovered:

10. Aff AC BUS SNSR – OFF (1 sec)
    – AUTO TRIP
11. √MCC for equipment recovery

I. GPC RECOVERY

NOTE
Three of five GPCs reqd for single fault tolerance

If requirement not met:
Perform GNC REASSIGNMENT, DPS SSR-3
If first GPC recovery fails, then try other GPC, if available

J. FF MDM

NOTE
Three of four FF MDMs reqd for single fault tolerance. MDM FF2 reqd for FRCS dump

If requirements not met, reactivate MDM(s) in affected bay:

O6 MDM FF1(FF2,FF3,FF4) – ON
CRT GNC I/O RESET

K. PL MDM RECOVERY

O6 MDM PL1(PL2) – ON
CRT SM I/O RESET

L. ADTA, AA, MLS, TACAN, GPS

NOTE
Three of four ADTAs reqd for single fault tolerance.
Three of four AAs reqd for single fault tolerance.
Two of three MLSs reqd for single fault tolerance.
Two of three TACANs reqd for single fault tolerance (OV103,4).
Two of three GPSs reqd for single fault tolerance (OV105)

If requirement not met:
Perform FCS CHECKOUT, DISPLAY/DPS CONFIG and ON-ORBIT FCS CHECKOUT, PART 2 (ORB OPS, GNC) to verify equipment function in the affected Av Bay for single fault tolerance (as a minimum)

NOTE
Following FCS CHECKOUT, recovered equipment may be unpowered until deorb prep

M. FMCA

NOTE
Two of three FMCAs reqd for single fault tolerance

If requirement not met (confirmed by MCC):

MA73C:A MCA LOGIC MNA(MNB,MNC) FWD 1(2,3) – ON

ECLS SSR-13
ON-ORBIT RAD CNTLR SWITCH

NOTE

Procedure switches Radiator Controllers in affected Freon Coolant Loop Radiator. 10-sec pause is necessary to prevent movement of bypass vlv, thus eliminating possibility of bypass vlv failing in bypass. Expect possible 'S88 EVAP OUT T 1(2)' msg

L1 FLASH EVAP CNTLR PRI A,B,SEC (three) – OFF

If Freon Loop 1 aff:

- RAD BYP VLV MODE 1 – MAN
  - CNTLR LOOP 1 – AUTO B(AUTO A)
- After 10 sec, RAD BYP VLV MODE 1 – AUTO

If Freon Loop 2 aff:

- RAD BYP VLV MODE 2 – MAN
  - CNTLR LOOP 2 – AUTO B(AUTO A)
- After 10 sec, RAD BYP VLV MODE 2 – AUTO

If FES reqd, wait 4 min, then:

O1 If FREON EVAP OUT TEMP > 41 and ≤ 47 degF:

L1 RAD CNTLR OUT TEMP – HI

O1 When FREON EVAP OUT TEMP > 50 degF:

L1 RAD CNTLR OUT TEMP – NORM, then immediately, FLASH EVAP CNTLR PRI A(B) – ON

O1 If FREON EVAP OUT TEMP ≤ 41 or > 47 degF:

L1 FLASH EVAP CNTLR PRI A(B) – ON

ECLS SSR-14
ECLS COMPUTATION INHIBIT

TABLE A

REMOVAL OF FAILED/DEGRADED PPO2 SNSR FROM O2 CONCENTRATION COMPUTATION

SM 60 SM TABLE MAINT

If PPO2 SNSR A failed/degraded	If PPO2 SNSR B failed/degraded	If PPO2 SNSR C failed/degraded
CONSTANT ID – ITEM 16 +9 2 2 1 3 1 EXEC √Update of CONSTANT ID CONSTANT VALUE – ITEM 17 +0 EXEC √Update of CONSTANT VALUE	CONSTANT ID – ITEM 16 +9 2 2 1 3 2 EXEC √Update of CONSTANT ID CONSTANT VALUE – ITEM 17 +0 EXEC √Update of CONSTANT VALUE	CONSTANT ID – ITEM 16 +9 2 2 1 3 3 EXEC √Update of CONSTANT ID CONSTANT VALUE – ITEM 17 +0 EXEC √Update of CONSTANT VALUE
• Notify MCC of disabled constant		

TABLE B

O2 CONCENTRATION COMPUTATION INHIBIT

SM 60 SM TABLE MAINT

PARAM ID – ITEM 1 +9 2 2 1 0 4 EXEC √Update of PARAM ID INH – ITEM 10 EXEC
• Notify MCC of inhibited parameter

TABLE C

EQUIVALENT dP/dT COMPUTATION INHIBIT

SM 60 SM TABLE MAINT

PARAM ID – ITEM 1 +9 2 4 9 3 5 EXEC √Update of PARAM ID INH – ITEM 10 EXEC
• Notify MCC of inhibited parameter

TABLE D

REMOVAL OF FAILED/DEGRADED N2 TANK TEMP/PRESSURE FROM N2 QTY COMPS

Normally all temperature and pressure transducer flags are set to 1. If transducer fails, disable failed transducer's flag. For example, if SYS 1 N2 TANK 1 TEMP has failed, disable its flag, then the comp uses TK 2 TEMP in lieu of TANK 1 TEMP in the quantity computation. √MCC for multiple failures

SM 60 SM TABLE MAINT

Update CONSTANT ID:

ITEM 16 +__ __ __ __ __ __ __ EXEC (ID numbers below)
ITEM 17 +__ EXEC (1 = transducer is OK, 0 = transducer is faulty)

CONSTANT ID	NAME	CONSTANT ID	NAME
925521	SYS 1 N2 TANK 1 TEMP FLAG	925526	SYS 1 N2 TANK 4 TEMP FLAG
925522	SYS 1 N2 TANK 2 TEMP FLAG	925527	SYS 2 N2 TANK 3 TEMP FLAG
925523	SYS 2 N2 TANK 1 TEMP FLAG	925528	SYS 2 N2 TANK 4 TEMP FLAG
925524	SYS 2 N2 TANK 2 TEMP FLAG	925529	SYS 1 N2 PRESS FLAG
925525	SYS 1 N2 TANK 3 TEMP FLAG	925530	SYS 2 N2 PRESS FLAG

TABLE E

N2 TANK CONFIG

The following table is used to enable/disable N2 tank depending on whether or not it is flown. √MCC to verify vehicle config shown below. '*' designates flight-specific tanks

SM 60 SM TABLE MAINT

Update CONSTANT ID:

ITEM 16 +__ __ __ __ __ __ __ EXEC (ID numbers below)
ITEM 17 +__ EXEC (1 = tank active, 0 = tank inactive)

CONSTANT ID	NAME	VEHICLE CONFIG (ITEM 17)
925531	SYS 1 N2 TANK 1 FLAG	*
925532	SYS 1 N2 TANK 2 FLAG	*
925533	SYS 1 N2 TANK 3 FLAG	1
925534	SYS 1 N2 TANK 4 FLAG	1
925535	SYS 2 N2 TANK 1 FLAG	1
925536	SYS 2 N2 TANK 2 FLAG	1
925537	SYS 2 N2 TANK 3 FLAG	*
925538	SYS 2 N2 TANK 4 FLAG	*

ECLS SSR-16
FREE WATER LEAKING FROM HUM SEP

> CAUTION
> Leave one Humidity Sep running continuously. Deactivating both Humidity Separators simultaneously could cause further flooding of Humidity Sep and damage Humidity Sep when restarted

L1 1. HUM SEP A(B) – ON
B(A) – OFF
2. Perform LIOH STOWAGE VOLUME REMOVAL (IFM)
3. Clean up free water in Lower Equipment Bay
If practical, contact MCC prior to performing FREE FLUID DISPOSAL (IFM), for possible waste water dump;
Otherwise, use towels to soak up water
For remainder of flight, check pre/post-sleep daily for free water in Lower Equipment Bay
Report to MCC
4. If second HUM SEP LEAKS WATER, perform the following steps:
If any step stops water from leaking, >>
5. HUM SEP A,B (two) – ON
Monitor HUM SEP operation by checking for water around outlet screen. If over 15 min,
Report to MCC
6. Depress H2O TKs:
√Best HUM SEP – ON
Other HUM SEP – OFF
FLASH EVAP CNTLR PRI A(B) – OFF
MO10W H2O TK N2 ISOL SYS 1,SYS 2 vlv (two) – CL
ML26C SPLY H2O GN2 TK VENT vlv – VENT
√TKA SPLY vlv – OP
Expect audible vent and 'S66 WASTE H2O PRES' alert for Waste Press '↓' (See SSR-17 for H2O dumps)
7. Go to HUM SEP AIR OUTLET H2O ABSORPTION (IFM)

ECLS SSR-17
WATER TANK REPRESS/DEPRESS

NOTE

This SSR may be reqd for water dumps in the event water tanks are depressed for humidity separator problems. Repressing water tanks for supply or waste water dumps decreases amount of time reqd for dump

1. Start repress ~30 min prior to water dump

ML26C 2. SPLY H2O GN2 TK VENT vlv – PRESS
√TKA SPLY vlv – OP

MO10W 3. H2O TK N2 REG INLET SYS 1,SYS 2 vlv (two) – OP
ISOL SYS 1,SYS 2 vlv (two) – OP
Expect 'S66 CAB H2O N2 P1,P2' msgs for H2O TK N2 P '↓'

4. Perform SUPPLY(WASTE) WATER DUMP (ORB OPS, ECLS)
Depress Tanks

5. H2O TK N2 ISOL SYS 1,SYS 2 vlv (two) – CL

ML26C 6. SPLY H2O GN2 TK VENT vlv – VENT
√TKA SPLY vlv – OP
Expect audible vent and 'S66 WASTE H2O PRES' alert for Waste Press '↓'

7. Visually inspect Lower Equipment Bay for free water
Report to MCC

ECLS SSR-18
SMALL SUPPLY H2O LEAK ISOL

NOTE

This procedure assumes that MCC is available for assistance and would inform crew of tank C leak (which is normally isolated) or dump line leak at nozzle. This procedure also assumes that tanks B, D are tied together and that tank C is isolated. Also note that Supply H2O tanks remain pressurized during troubleshooting

SM 66 ENVIRONMENT

L1 1. FLASH EVAP CNTLR PRI A,B – OFF
R11L SPLY H2O XOVR vlv – CL (tb-CL)
B SPLY ISOL VLV – CL (tb-CL)
MCC,CRT If no TK QTY decr or incr at a reduced rate:
Perform steps 8, 10 >>
R11L SPLY H2O DUMP ISOL VLV – CL (tb-CL)
MCC,CRT If no SPLY H2O TK QTY decr or incr at a reduced rate:
Perform steps 8-11 >>
SPLY H2O DUMP ISOL VLV – OP (tb-OP)

SM 177 EXTERNAL AIRLOCK

MO13Q ARLK H2O S/O VLV – CL (tb-CL)
If H2O XFER P decr or ~0:
Perform steps 8,9,10,12 >>
MO13Q ARLK H2O S/O VLV – OP (tb-OP)

CRT 2. If SPLY H2O TK QTY D decr:
ML31C | SPLY H2O TK D INLET, OUTLET (two) – CL (tb-CL)
CRT | If SPLY H2O TK QTY D decr:
| | Perform step 6
| | Perform SUPPLY/WASTE WATER DUMP (ORB OPS, ECLS) for TK D on MCC call
ML31C | | SPLY H2O TK D INLET, OUTLET (two) – CL (tb-CL)
| | Perform steps 7-11 >>
MCC,CRT | If SPLY H2O TK QTY B decr or incr at a reduced rate:
| Perform steps 6, 8, 9, 11 >>
MCC,CRT | If no SPLY H2O TK QTY decr or incr a reduced rate:
Perform steps 9-11 >>
CRT 3. If SPLY H2O TK QTY A > 90% (on MCC call):
R11L SPLY H2O TK A OUTLET – OP (tb-OP)
√B OUTLET – OP (tb-OP)
CRT When SPLY H2O TK QTY A < 80% or MCC call:
R11L SPLY H2O TK A OUTLET – CL (tb-CL)
Go to step 4 or 5 based on H2O tank qty observation

CRT 4. If SPLY H2O TK QTY B decr:
R11L | SPLY H2O TK B INLET,OUTLET (two) – CL (tb-CL)
CRT | If SPLY H2O TK QTY B decr:
| | Perform step 6
| | Perform SUPPLY/WASTE WATER DUMP (ORB OPS, ECLS) for TK B on MCC call
R11L | | SPLY H2O TK B INLET,OUTLET (two) – CL (tb-CL)
| | Perform steps 7-11 >>
AW82B | If PRESS H2O decr or ~0:
Perform steps 9-11 using FES CNTRL PRI B on MCC call
R11L SPLY H2O TK B INLET – OP (tb-OP) >>
Perform steps 6, 8, 9, 11 (leak at tank B inlet manifold)
SPLY H2O TK B OUTLET – OP (tb-OP) >>
MCC,CRT 5. If SPLY H2O TK QTY A decr or incr at reduced rate:
R11L SPLY H2O GALLEY SPLY VLV – CL (tb-CL)
MCC,CRT If SPLY H2O TK QTY A decr or incr at reduced rate:
R11L SPLY H2O TK A INLET – CL (tb-CL)
MD23R Open middeck pnl and disconnect lower (FC) QD on microbial filter
CRT If SPLY H2O TK QTY A decr:
| Perform step 6
| Perform SUPPLY/WASTE WATER DUMP (ORB OPS, ECLS) for TK A on MCC call
| SPLY H2O TK A INLET, OUTLET (two) – CL (tb-CL)
| Perform steps 7-11 >>
CRT If SUPPLY H2O PRESS ~15:
Perform steps 8-11
√MCC to restore Galley ops >>
MD23R Open middeck pnl and reconnect lower (FC) QD on microbial filter
R11L SPLY H2O GALLEY SPLY VLV – OP (tb-OP)
MD80R Open middeck pnl and inspect for free H2O
Perform steps 6, 8, 9, 11 on MCC call
Perform steps 8-11 on MCC call
√MCC to restore Galley ops >>

ECLS SSR-18 (Cont)

MO10W 6. H2O TK N2 ISOL SYS 1,SYS 2 vlv – CL
ML26C SPLY H2O GN2 TANK A SPLY – OP
VENT – VENT
Expect audible vent and 'S66 WASTE H2O PRES' alert for Waste Pres '↓'

ML26C 7. SPLY H2O GN2 TANK A SPLY – OP
VENT – PRESS
MO10W H2O TK N2 ISOL SYS 1,SYS 2 vlv – OP
Expect 'S66 CAB H2O N2 P1, P2' msgs for H2O TK N2 P '↓'

R11L 8. SPLY H2O XOVR vlv – OP (tb-OP)
9. B SPLY ISOL VLV – OP (tb-OP)
10. Perform TOPPING FES STARTUP (ORB OPS, ECLS)
11. Visually inspect LEB and perform FREE FLUID DISPOSAL (IFM) as reqd
12. Visually inspect Middeck floor (water line close out area) and Ext A/L
Go to FREE FLUID DISPOSAL (IFM) as reqd

ECLSS SSR-19
SMALL WASTE H2O LEAK ISOL

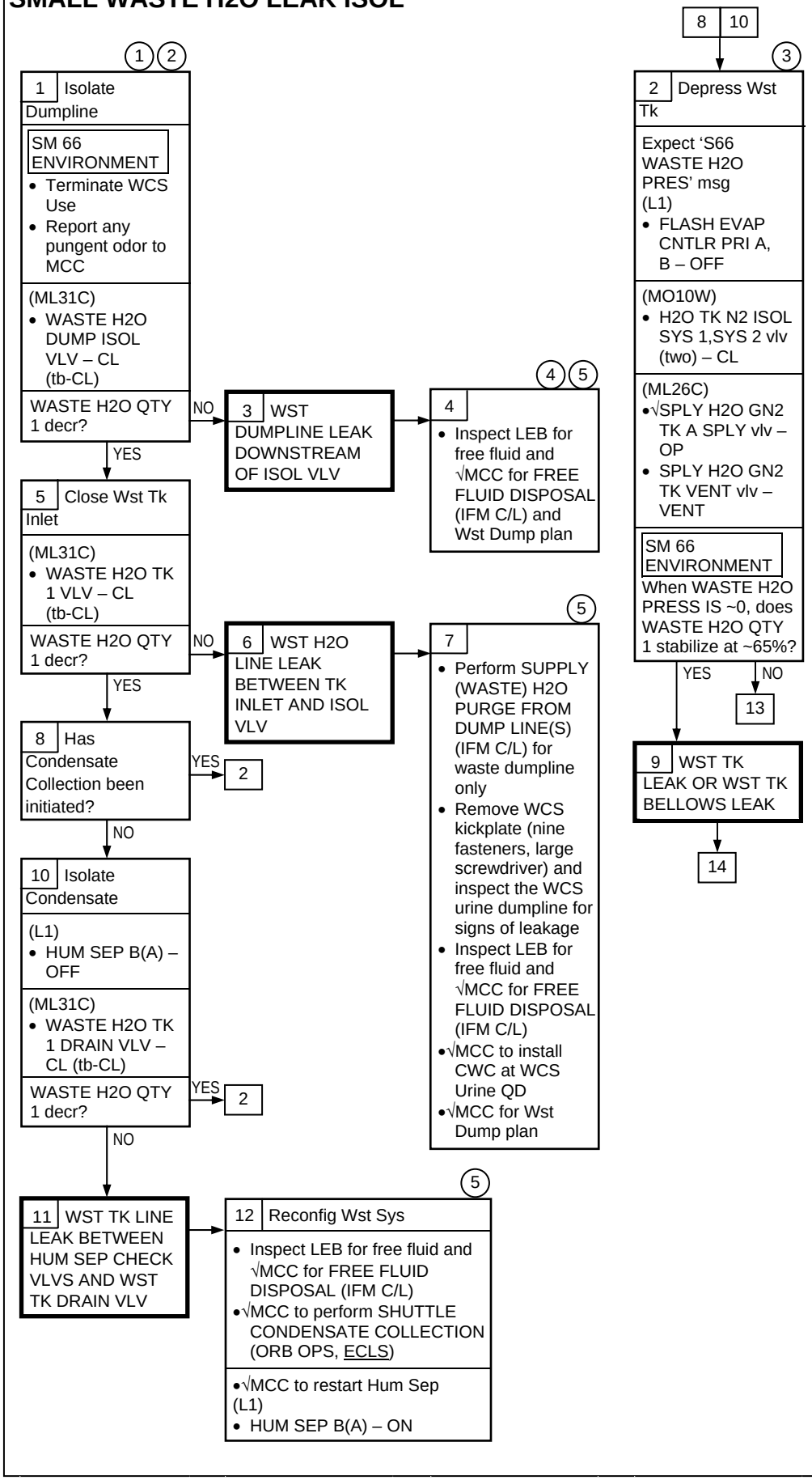

(1) This procedure assumes that MCC is available for assistance

(2) This procedure has the waste tank pressurized for a portion of the troubleshooting

(3) If the WASTE TANK QTY is less than 65% at the time of tank depress, S66 WASTE H2O QTY 1 can be expected to rise to stabilize at ~ 65% for a tank or bellows leak

(4) Reference LiOH STOWAGE VOLUME REMOVAL (IFM C/L) to gain access to LEB

(5) Prior to performing LEB inspection or any waste water IFM, don goggles and gloves

ECLSS SSR-19 (Cont)
SMALL WASTE H2O LEAK ISOL

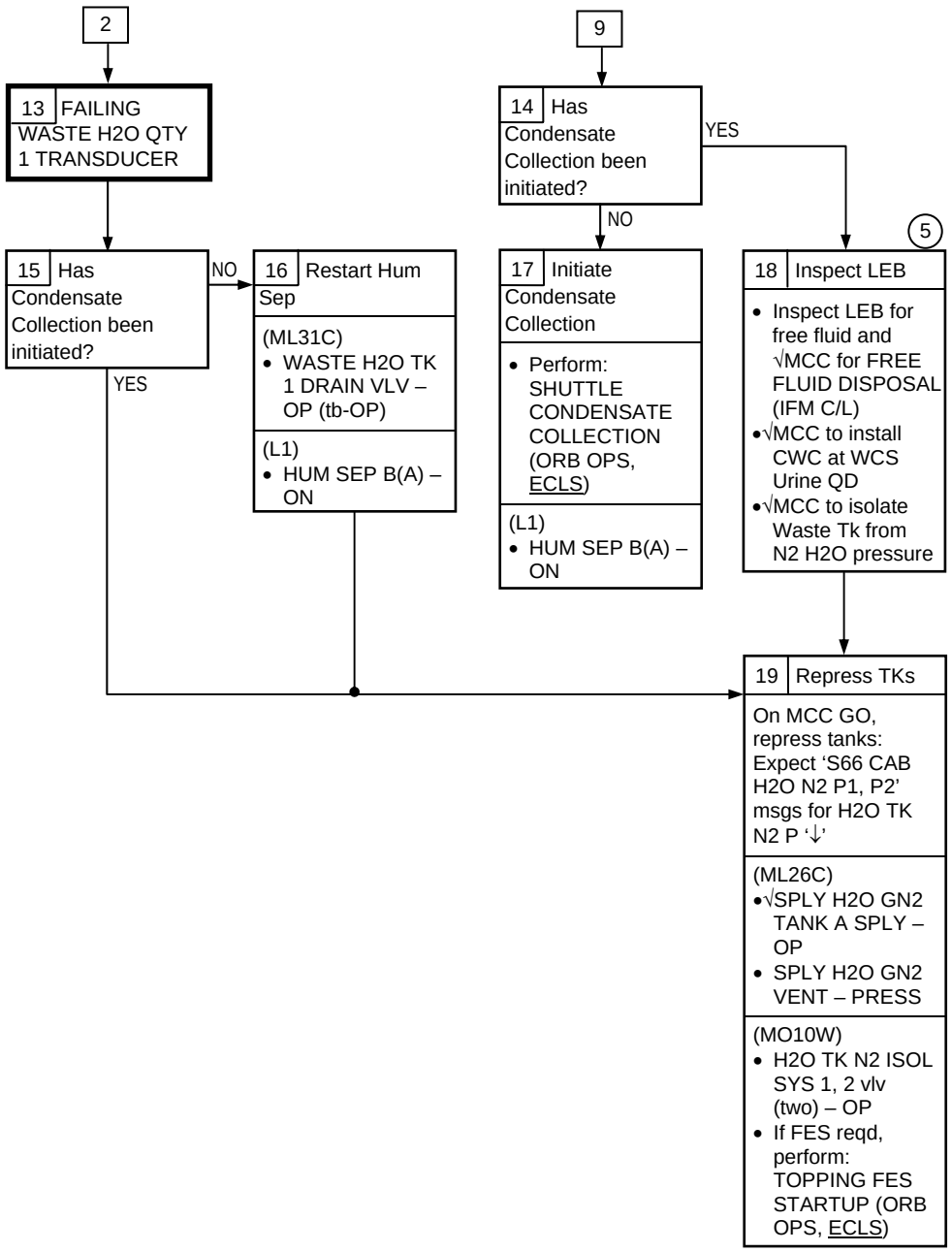

(5) Prior to performing LEB inspection or any waste water IFM, don goggles and gloves

ECLS SSR-20
SMALL SUPPLY H2O LEAK ISOL – WATER TRANSFER CONFIGURATION

NOTE

This procedure assumes that the Supply Water System is in a Water Transfer Configuration and MCC is available for assistance. Also note that Supply H2O tanks require pressurization during troubleshooting. Suspend galley use until procedure is complete or On MCC GO

SM 66 ENVIRONMENT

L1 FLASH EVAP CNTLR PRI A,B (two) – OFF

A. DETERMINE A/B OR C/D LEAK

MCC/CRT If SPLY H2O QTY C,D decr or filling at a decr rate:
If SPLY H2O QTY A,B > 90%, provide ullage in TKs A,B (On MCC GO):
1. Perform steps 4-5 of CWC FILL using SHUTTLE/ISS H2O CONTAINER FILL (ORB OPS, ECLS); no samples or additives required

When SPLY H2O QTY A < 80% or on MCC GO:
2. Perform step 9 of CWC FILL using SHUTTLE/ISS H2O CONTAINER FILL (ORB OPS, ECLS), then:
3. If SPLY H2O QTY C,D still decr or filling at a decr rate, continue procedure at step 31; otherwise, continue with step B

B. DETERMINE IF EXTERNAL AIRLOCK FLOWN

SM 177 EXTERNAL AIRLOCK

MO13Q 4. ARLK H2O S/O VLV – CL (tb-CL)
MCC/CRT If H2O XFER P decr or ~0 (leak in External Airlock H2O Transfer Line):
5. Visually inspect middeck floor (water line closeout area) and Ext A/L
6. Perform step 54 using FES PRI B On MCC GO >>

SM 66 ENVIRONMENT

C. LEAK DETERMINATION A/B SIDE

MCC/CRT If SPLY H2O QTY A,B decr or filling at a decr rate:
R11L 7. SPLY H2O GALLEY SPLY VLV – CL (tb-CL)
MCC/CRT If SPLY H2O QTY A,B incr at nominal rate (leak in Galley):
8. Perform steps 53-54 using FES PRI B On MCC GO
9. √MCC to restore Galley ops >>
R11L 10. SPLY H2O DUMP ISOL vlv – CL (tb-CL)

MCC/CRT If SPLY H2O QTY A,B incr at nominal rate (leak in Supply H2O Dump Line):
11. Perform steps 52-55 using FES PRI B On MCC GO >>
R11L 12. SPLY H2O TKA INLET – CL (tb-CL)
13. TKA,B OUTLET (two) – CL (tb-CL)

MCC/CRT If SPLY H2O QTY A decr (leak in TK A):
ML86B:A 14. cb MNB SPLY H2O TK B INLET – cl
R11L 15. SPLY H2O TKB INLET – OP (tb-OP)
16. Perform SUPPLY/WASTE WATER DUMP (ORB OPS, ECLS) for TK A on MCC GO; dump TK A to ~0%, then:
17. √MCC to restore Galley ops
18. Perform steps 51-55 using FES PRI B On MCC GO >>

MCC/CRT If SPLY H2O QTY B decr (leak in TK B):
R11L 19. SPLY H2O TKA INLET – OP (tb-OP)
20. Perform SUPPLY/WASTE WATER DUMP (ORB OPS, ECLS) for TK B on MCC GO; dump TK B to ~0%, then:
21. Perform steps 51-55 using FES PRI B On MCC GO >>

MCC/CRT If SPLY H2O QTY C,D not filling or filling at a decr rate (leak in Inlet Manifold or Galley Supply Line):
22. Open LEB access pnl on middeck floor and disconnect lower (FC) QD from Microbial Filter (IFM, IFM PROCEDURES, GALLEY, FAILED SUPPLY LINE, BYPASS, step 1)

If SPLY H2O QTY C,D filling at a nominal rate (leak in Galley Supply Line):
23. √MCC to restore Galley ops
24. Perform steps 51, 53-55 >>
If SPLY H2O QTY C,D still not filling or filling at a decr rate (leak in A/B Inlet Manifold; depress H2O Tanks):
25. Open LEB access pnl on middeck floor and reconnect lower (FC) QD from Microbial Filter
26. Perform steps 48-53, 55 >>

If SPLY H2O QTY A,B not decr (leak in TK A/B Outlet Manifold):
ML86B:A 27. cb MNB SPLY H2O TK B INLET – cl
R11L 28. SPLY H2O TKA,B INLET (two) – OP (tb-OP)
29. Open LEB access pnl on middeck floor and reconnect lower (FC) QD to Microbial Filter
30. Perform steps 54-55 using FES PRI B On MCC GO >>

Cont next page

D. LEAK DETERMINATION C/D SIDE

MCC/CRT If SPLY H2O QTY C,D decr:
R11L 31. SPLY H2O B SPLY ISOL VLV – CL (tb-CL)

MCC/CRT If SPLY H2O QTY C,D const (leak in FES Feedline B):
32. Perform step 54 using FES PRI A On MCC GO >>
R11L 33. SPLY H2O TKC INLET,OUTLET (two) – CL (tb-CL)
ML31C 34. TKD INLET,OUTLET (two) – CL (tb-CL)

MCC/CRT If SPLY H2O QTY C decr (leak in TK C):
R11L 35. SPLY H2O B SPLY ISOL VLV – OP (tb-OP)
ML31C 36. TKD INLET – OP (tb-OP)
37. Perform SUPPLY/WASTE WATER DUMP (ORB OPS, ECLS) for TK C On MCC GO; dump TK C to ~0% >>

MCC/CRT If SPLY H2O QTY D decr (leak in TK D):
R11L 38. SPLY H2O B SPLY ISOL VLV – OP (tb-OP)
39. TKC INLET – OP (tb-OP)
40. Perform SUPPLY/WASTE WATER DUMP (ORB OPS, ECLS) for TK D On MCC GO; dump TK D to ~0% >>

MCC/CRT If SPLY H2O QTY A,B,C,D filling at a nominal rate (leak in TK C/D Outlet Manifold):
R11L 41. SPLY H2O TKC INLET – OP (tb–OP)
ML31C 42. TKD INLET – OP (tb–OP)
43. Perform steps 54-55 using FES PRI A On MCC GO >>

MCC/CRT If SPLY H2O QTY A,B decr or filling at a decr rate (leak in TK C/D Inlet Manifold; depress H2O Tanks):
R11L 44. SPLY H2O TKC OUTLET – OP (tb-OP)
45. B SPLY ISOL VLV – OP (tb-OP)
ML31C 46. TKD OUTLET – OP (tb-OP)
47. Perform steps 48-51, 55 >>

E. CLEAN UP STEPS

MO10W 48. H2O TK N2 ISOL SYS 1,2 vlv (two) – CL
ML26C 49. √SPLY H2O GN2 TK A SPLY vlv – OP

NOTE
Expect audible vent and 'S66 WASTE H2O PRES' alert for WASTE H2O PRESS ↓

50. SPLY H2O GN2 TK VENT vlv – VENT
R11L 51. DUMP ISOL – OP (tb-OP)
52. GALLEY SPLY VLV – OP (tb-OP)
MO13Q 53. ARLK H2O S/O VLV – OP (tb-OP)
54. If FES reqd, perform TOPPING FES STARTUP (ORB OPS, ECLS), then:
55. Visually inspect LEB and perform FREE FLUID DISPOSAL (IFM, PROCEDURES S THRU Z), as reqd

ECLS SSR-21
MANUAL RAD BYPASS VALVE CONTROL

NOTE

This procedure shall not be attempted without MCC monitoring and assistance. This procedure provides a method of reestablishing or maintaining radiator flow by adjusting the position of the radiator bypass valve. Expect possible 'S88 EVAP OUT T 1(2)' or 'S88 FREON RAD T 1(2)' msgs

SM 88 APU/ENVIRON THERM

L1 1. Aff RAD CNTLR LOOP – OFF
2. H2O PUMP LOOP 1,2 (two) – ON
3. LOOP 1,2 BYP MODE (two) – MAN
4. MAN (two) – DECR (hold 30 sec)
5. FLOW PROP VLV LOOP 1,2 (two) – PL HX (tb-PL)
6. RAD CNTLR OUT TEMP – HI
7. FLASH EVAP CNTLR PRI A,B,SEC (three) – OFF
8. Aff RAD BYP VLV MODE – MAN

If Freon Loop 1 affected:

L4:P 9. cb AC2 ΦB RAD CNTLR 1A – op

If Freon Loop 2 affected:

10. cb AC3 ΦB RAD CNTLR 2A – op

CRT 11. Adjust aff RAD OUT T to ~40°F by performing momentary (< 1 sec) switch movements:

L1 Aff RAD BYP VLV MAN SEL – RAD FLOW (if too hot), and/or
– BYP (if too cold)

On MCC GO:

12. FLASH EVAP CNTLR PRI B(A) – ON

If 'S88 FREON RAD T 1(2)' msg received during next orbital cycle:

13. Aff RAD BYP VLV MAN SEL – BYP (momentary) as necessary to ensure aff RAD OUT T stays ≥ 40°F

On MCC GO:

14. H2O PUMP LOOP 1 – GPC
15. LOOP 2 BYP MODE – AUTO
16. RAD CNTLR OUT TEMP – NORM
17. FLOW PROP VLV LOOP 1,2 (two) – ICH (tb-ICH)

If Freon Loop 1 affected:

L4:P 18. cb AC2 ΦB RAD CNTLR 1A – cl

If Freon Loop 2 affected:

19. cb AC3 ΦB RAD CNTLR 2A – cl

ECLS FRP-1
MANUAL CABIN ATMOSPHERE MANAGEMENT

NOTE

This procedure assumes Cabin P < 14.7 psi and is structured to flow N2 from PCS 1 and flow O2 from PCS 2, with metabolic makeup from Bleed Orifice

If SETUP completed, go to CABIN REPRESS

SETUP

L2 O2/N2 CNTLR VLV SYS 1 – OP
2 – CL

C7 √LEH O2 SPLY vlv (two) – OP

MO10W 14.7 CAB REG INLET SYS 1,SYS 2 vlv (two) – CL
O2 REG INLET SYS 1,SYS 2 vlv (two) – OP

MA9L Unstow O2 Bleed Orifice Assembly

MO69M √LEH O2 8 vlv – CL
Insert O2 Bleed Orifice Assembly into LEH O2 8 QD
LEH O2 8 vlv – OP

CABIN REPRESS

SET C&W LIMITS

PARAMETER NAME	C/W CH	H/W C/W HI V	ENA/ INH	PARA ID	B/U C/W HI EU
PPO2 A	34	3.40		0612511	3.40
PPO2 B	44	3.40		0612513	3.40

NOTE

Expect possible 'S66 CAB O2 FLO 2' C&W alarm during execution of next step

MO10W 14.7 CAB REG INLET SYS 2 vlv – OP

* If C&W alarm: *
* CABIN ATM and/or B/U 'S66 CABIN PPO2 A(B)' *
* *
* NOTE *
* Expect possible 'S66 CAB N2 FLO 1' C&W alarm *
* during execution of next step *
* *
* 14.7 CAB REG INLET SYS 2 vlv – CL *
* 1 vlv – OP *
* *
* When N2 FLOW SYS 1 < 1.0 or CABIN PRESS > 14.7, *
* 14.7 CAB REG INLET SYS 1 vlv – CL *

When O2 FLOW SYS 2 < 1.0 or CABIN PRESS > 14.7,
14.7 CAB REG INLET SYS 2 vlv – CL

If prior to sleep:
14.7 CAB REG INLET vlv (two) – CL

RESET C&W LIMITS

PARAMETER NAME	C/W CH	H/W C/W HI V	ENA/ INH	PARA ID	B/U C/W HI EU
PPO2 A	34	3.60		0612511	3.60
PPO2 B	44	3.60		0612513	3.60

Pen and Ink PRE-SLEEP ACTIVITY (ORB OPS, CREW SYS) to perform this procedure each sleep period if necessary

ECLS FRP-2
POST-FIRE CABIN CLEANUP CONTINUATION

SM SYS SUMM 1

NOTE
This procedure is applicable to both avionics bay fires and cabin fires

1. Every 15 min perform the following:
   a. Record MET and CSA-CP scan location (general)
      LOCATION: _____
   b. Record contaminant levels from CSA-CP and CABIN O2 CONC from SYS SUMM 1
   c. Report values to MCC
   d. If HCN > 2.1 ppm replace one LiOH canister

SM SYS SUMM 1

CRT, CSA-CP

	Time (MET)	CABIN O2 CONC	HCN	HCL	CO
1	: :				
2	: :				
3	: :				
4	: :				
5	: :				
6	: :				
7	: :				
8	: :				

If HCN > 2.1, HCL > 1.0, or CO > 18 ppm for any CSA-CP reading:

2. If ATCO canister not yet installed, CO > 18 and HCL < 5 ppm:
   Install ATCO (in place of one LiOH canister)

L1 3. √CAB TEMP CNTLR – OFF
MD44F √Pin Cab temp cntl act link – FULL COOL
ML86B:B 4. √cb MNA,MNB WCS CNTLR (two) – cl
MA73C:E √AC1,2 WSC FAN SEP 1,2 (six) – cl
WCS If Av Bay 1 Fire:
5. √HOSE BLOCK to SEP 2
6. √FAN SEP SEL sw – 2
7. √MODE – COMMODE/MANUAL/EMU
8. √COMMODE CNTL – PULL UP
– √PUSH FWD

9. Continue to monitor the cabin atmosphere per step 1

10. When CO < 18 ppm, replace ATCO canister (if installed) with a LiOH canister

> WARNING
> If any crewmember exhibits adverse symptoms when visors are raised, lower all visors. Symptoms could include the following:
> Irritation of the eyes, nose, throat
> Cough, difficulty breathing
> Headache, nausea

11. Doff visors/QDMs and changeout LiOH canister(s) per preflight schedule on MCC call

* If loss of communications, visors/QDMs down and continue *
* LiOH changeouts until all the following criteria are met: *
* No visible indication of smoke in cabin *
* Cabin smoke detector readings are < 1.2 *
* No symptoms of smoke inhalation *
* HCN < 4.0 (2.1) ppm, HCL < 2.0 (1.0) ppm, *
* CO < 20 (18) ppm if at 14.7 (8.0) psia *

12. If symptoms experienced prior to donning QDM/visor, QDM/visor may be doffed only if all crewmembers are symptom free for > 10 min

CRT 13. If QDM/visor flow must continue and/or CABIN O2 CONC ≥ 25.9%, perform FIRE/HAZ SPILL O2 CONTROL, ECLS FRP-3

ECLS FRP-2 (Cont)

ON MCC CALL BACKOUT STEPS:

WCS 14. COMMODE CNTL – OFF (BACK/DN)
MD44F 15. Pin Cab temp cntl act link – PRI(SEC)
L1 16. CAB TEMP CNTLR – 1(2)
17. SMOKE DETN SNSR – RESET
18. Report used LiOH cans to MCC

When Av Bay has been purged for 7 hr:

19. Disconnect Y/Y Hose from Vacuum Vent QD
20. Remove Free Fluid Nozzle from Av Bay fire port
21. Disconnect Free Fluid Nozzle from Y/Y hose
22. Stow in Cont Hose & Cable Kit:
    Free Fluid Nozzle
    20-ft Y/Y Hose
    Gray Tape

ECLS FRP-3
FIRE/HAZ SPILL O2 CONTROL

SM SYS SUMM 1
SM 66 ENVIRONMENT

NOTE

For Av Bay fires, ensure avionics bay purge initiated before start of cabin depress

TMAX DETERMINATION

1. Determine TMAX from Tables 1 and 2

If ASC, use the following for N2 Qty:

4 N2 tanks: 260 lbs N2
5 N2 tanks: 325 lbs N2
6 N2 tanks: 390 lbs N2

a. Time to 8 psi _____hr
(from Table 1 right)
b. Time of purge at 8 +_____hr
(from Table 2 below)
- 1:00 hr
c. Latest TIG:
TMAX =_____hr

TABLE 1.- TIME to 8 PSI (in HH:MM)

	Time to 8 psi in hrs	
	From 14.7 psi	From 10.2
5 crew	03:06	01:24
6 crew	02:32	01:09
7 crew	02:07	00:58
8 crew	01:49	00:51

TABLE 2.- TIME of PURGE at 8 PSIA (in HH:MM)

N2 Quantity (lbm)	Time of Purge (HH:MM)			
	5 crew	6 crew	7 crew	8 crew
100	06:38	05:28	04:38	04:01
120	08:06	06:41	05:41	04:56
140	09:34	07:55	06:55	05:51
160	11:18	09:22	07:58	06:56
180	12:46	10:36	09:01	07:51
200	14:15	11:49	10:04	08:46
220	15:59	13:17	11:19	09:51
240	17:27	14:30	12:22	10:47
260	18:55	15:43	13:25	11:42
280	20:23	16:57	14:39	12:37
300	22:07	18:24	15:42	13:42
320	23:35	19:38	16:45	14:37
340	25:04	20:51	17:48	15:32
360	26:32	22:04	19:03	16:37
380	28:16	23:32	20:06	17:32
400	29:44	24:45	21:09	18:27

NOTE

When TIG < 3 hours, install ATCO if not already performed

CABIN DEPRESS AND PURGE SETUP

MO69M 2. Remove O2 BLEED ORIFICE, if installed
MO10W 3. 14.7 CAB REG INLET SYS 1,SYS 2 vlv (two) – CL
4. O2 REG INLET SYS 1 vlv – OP
2 vlv – CL

START CABIN DEPRESS TO 8 PSI

> WARNING
> If SYS SUMM 1 O2 CONC ≥ 40% during cabin depress or 8 psia purge, increase the AIRLK DEPRESS vlv position so the EQ dP/dT is equal to the next larger crew size in table 3 below and recalculate TMAX per step 1

AW82B 5. AIRLK DEPRESS vlv cap – vent, remove, stow
6. Throttle AIRLK DEPRESS vlv until desired EQ dP/dT is established as follows per Table 3 below; tape in place (dP/dT sensor response lags approx 1 min)

NOTE
The 5 position on the ARLK DEPRESS vlv will produce a dP/dT of -0.286 psia/min at 14.7 psia and -0.198 psia/min at 10.2 psia

TABLE 3.- EQ dP/dT

	Starting from 14.7 psi	Starting from 10.2 psi
5 crew	-0.050	-0.047
6 crew	-0.062	-0.058
7 crew	-0.074	-0.070
8 crew	-0.087	-0.082

7. When Cab Press < 10.0 psia and if prior to OPS 3:
Perform LOSS OF CAB PRESS PWRDN (ORB PKT, PWRDN)

O2 MANAGEMENT DURING 8 PSIA PURGE

When Cab Press = 8 psia:
AW82B 8. AIRLK DEPRESS vlv – CL, reinstall cap
MDDK Floor Near Ladder 9. CAB PURGE vlv – dial to number of crew on QDMs/visors
ISOL VLV – 0
L2 10. O2 XOVR SYS 1 vlv – CL
2 vlv – OP
11. O2/N2 CNTLR VLV SYS 1 – OP (N2)
2 – CL (O2)

NOTE
Maintain PPO2 between 2.8 and 3.05 psia for the duration of purge

When PPO2 ≥ 3.05:
12. O2/N2 CNTLR VLV SYS 1 – OP (N2)
When PPO2 ≤ 2.8:
13. O2/N2 CNTLR VLV SYS 1 – CL (O2)
Continue O2 mgmt per steps 12 and 13

NOTE
~82 lbm N2 reqd to repress from 8 psia to 14.7 psia

TERMINATE 8 PSIA PURGE AND INITIATE CABIN REPRESS

√MCC to terminate 8 psia purge and repress
L2 14. O2/N2 CNTLR VLV SYS 1 – AUTO
2 – OP (N2)
MDDK Floor Near Ladder 15. CAB PURGE vlv – CL
ISOL VLV – CL
MO10W 16. 14.7 CABIN REG INLET SYS 1,SYS 2 (two) – OP
17. If avionics bay purge setup, √MCC to terminate AV Bay purge
Disconnect, stow IFM hoses and free fluid nozzle

ON MCC Go:
18. Perform backout of LOSS OF CAB PRESS PWRDN (ORB PKT, PWRDN), then:
19. Perform PCS 1(2) CONFIG (ORB OPS, ECLS) >>

ECLS FRP-3 (Cont)

PREPARE FOR ENTRY AND CABIN REPRESS

Post D/O Burn √MCC for Purge Termination and Cabin Repress

At D/O Burn + 20 min:

MDDK Floor Near Ladder 20. CAB PURGE ISOL VLV – CL

ML31C 21. VAC VENT ISOL VLV CNTL – CL (tb-CL)

At D/O Burn + 25 min:

L2 22. O2/N2 CNTLR VLV SYS 1,SYS 2 (two) – OP (N2)

23. O2 XOVR VLV SYS 1,SYS 2 (two) – OP

MO10W 24. 14.7 CAB REG INLET SYS 1,SYS 2 (two) – OP

ECLS FRP-4
O2 LEAK CONTROL

SM SYS SUMM 1
SM 66 ENVIRONMENT

TMAX DETERMINATION

1. Determine TMAX from Tables 1 and 2

If ASC, use the following for N2 Qty:

- 4 N2 tanks: 260 lbs N2
- 5 N2 tanks: 325 lbs N2
- 6 N2 tanks: 390 lbs N2

2. Calculate total time:
   a. O2 Leak Size: =_____lb/hr (from MCC)
   b. Time to 8 psi _____hr (from Table 1 right)
   c. Time of purge: +_____hr (from Table 2 below)
   - 1:00 hr
   d. Latest TIG: TMAX =_____hr

TABLE 1.- TIME to 8 PSIA (in HH:MM)

	Time to 8 psi in hrs	
O2 Leak Rate	From 14.7 psi	From 10.2 psi
3 lbm/hr	12:12	06:00
6 lbm/hr	05:52	02:55
9 lbm/hr	03:42	01:50
12 lbm/hr	02:52	01:23
15 lbm/hr	02:16	01:07
18 lbm/hr	01:52	00:57
21 lbm/hr	01:34	00:49
24 lbm/hr	01:20	00:43

TABLE 2.- TIME of PURGE at 8 PSIA (in HH:MM)

N2 Quantity (lbm)	Time of Purge (HH:MM)							
	3 lb/hr	6 lb/hr	9 lb/hr	12 lb/hr	15 lb/hr	18 lb/hr	21 lb/hr	24 lb/hr
100	12:22	05:51	03:51	02:47	02:11	01:47	01:28	01:14
120	17:19	08:11	05:24	03:55	03:04	02:30	02:04	01:44
140	22:16	10:31	06:56	05:02	03:56	03:12	02:40	02:14
160	27:13	12:52	08:29	06:09	04:49	03:55	03:15	02:50
180	32:10	15:12	10:01	07:16	05:42	04:38	03:51	03:20
200	37:08	17:33	11:34	08:23	06:34	05:21	04:33	03:50
220	42:05	19:53	13:06	09:30	07:27	06:04	05:09	04:25
240	47:02	22:14	14:39	10:38	08:20	06:47	05:44	04:55
260	51:59	24:34	16:12	11:45	09:12	07:30	06:20	05:25
280	56:56	26:54	17:44	12:52	10:05	08:13	06:55	05:55
300	61:53	29:15	19:17	13:59	10:58	08:55	07:37	06:30
320	66:50	31:35	20:49	15:06	11:50	09:38	08:13	07:00
340	71:47	33:56	22:22	16:14	12:43	10:21	08:49	07:30
360	76:44	36:16	23:54	17:21	13:36	11:04	09:24	08:00
380	81:41	38:37	25:27	18:28	14:28	11:47	10:00	08:36
400	86:38	40:57	27:00	19:35	15:21	12:30	10:35	09:06

DEPRESS AND PURGE SETUP

MO10W 3. 14.7 CAB REG INLET SYS 1,SYS 2 vlv (two) – CL
4. O2 REG INLET SYS 1 vlv – OP
2 vlv – CL

START DEPRESS TO 8 PSI

AW82B 5. AIRLK DEPRESS vlv cap – vent, remove, stow
6. Throttle AIRLK DEPRESS vlv until desired EQ dP/dT is established as follows per table 3; tape in place (dP/dT sensor response lags approx 1 min)

NOTE

The 5 position on the ARLK DEPRESS vlv will produce a dP/dT of -0.286 psia/min at 14.7 psia and -0.198 psia/min at 10.2 psia

TABLE 3.- EQ dP/dT

O2 Leak	EQ dP/dT	
	From 14.7 psi	From 10.2 psi
3 lbm/hr	-0.014	-0.012
6 lbm/hr	-0.029	-0.025
9 lbm/hr	-0.046	-0.040
12 lbm/hr	-0.059	-0.051
15 lbm/hr	-0.076	-0.065
18 lbm/hr	-0.093	-0.078
21 lbm/hr	-0.110	-0.094
24 lbm/hr	-0.130	-0.108

WARNING

If SYS SUMM 1 O2 CONC ≥ 40%, increase the ARLK DEPRESS vlv position so the EQ dP/dT is equal to the next larger leak rate in table 3 above and recalculate TMAX per step 2

If prior to OPS 3, when Cab Press < 10.0 psia:

7. CM1 perform LOSS OF CAB PRESS PWRDN (ORB PKT, PWRDN), then:
CM2 continue with procedure

O2 MANAGEMENT DURING 8 PSIA PURGE

When Cab press = 8 psia:

8. O2/N2 CNTLR VLV SYS 1 – OP (N2)
2 – CL (O2)

NOTE

Maintain PPO2 between 2.8 and 3.05 psia for the duration of purge

When PPO2 ≥ 3.05:

9. O2/N2 CNTLR VLV SYS 1 – OP (N2)

When PPO2 ≤ 2.8:

10. O2/N2 CNTLR VLV SYS 1 – CL (O2)

Continue O2 mgmt per steps 9 and 10

NOTE

~82 lbm N2 reqd to repress from 8 psia to 14.7 psia

TERMINATE 8 PSIA PURGE AND REPRESS

L2 √MCC to terminate 8 psia purge and repress

11. O2/N2 CNTLR VLV SYS 1 – AUTO
2 – OP(N2)

AW82B 12. AIRLK DEPRESS vlv – CL, reinstall cap
MO10W 13. 14.7 CABIN REG INLET SYS 1,SYS 2 (two) – OP

On MCC GO:

14. Perform backout of LOSS OF CAB PRESS PWRDN (ORB PKT, PWRDN), then:
15. Go to PCS 1(2) CONFIG (ORB OPS, ECLS)

ECLS FRP-4 (Cont)

PREPARE FOR ENTRY AND REPRESS

NOTE

When closing the Inner Hatch for Entry, take both Inner Hatch Equalization Valves to EMER with the caps removed to support the 8 psia purge during Entry

For O2 Leak ≤ 15 lb/hr, Post D/O Burn MCC for Cabin Repress

AW82B At D/O Burn + 5 min:

16. AIRLK DEPRESS vlv – CL, reinstall cap

L2 At D/O Burn + 10 min:

17. O2/N2 CNTLR VLV SYS 1,SYS 2 (two) – OP (N2)

MO10W

18. O2 XOVR VLV SYS 1,SYS 2 (two) – OP
19. 14.7 CAB REG INLET SYS 1,SYS 2 (two) – OP

ECLS FRP-5
CABIN AMMONIA CONTAMINATION CLEANUP (ISS AMMONIA LEAK)

NOTE

This proc is to be performed simo by two crewmembers

CM1 — INITIATE CABIN AIR SCRUBBING

WCS
1. MODE – COMMODE/MANUAL/EMU
2. COMMODE CNTL – PULL UP (wait 15 sec)
   – PUSH FWD

L1
3. H2O PUMP LOOP 1 – ON
4. LOOP 2 BYPASS MODE – MAN
5. 1,2 BYP MAN (two) – DECR (hold 30 sec each)
6. CAB TEMP CNTLR – OFF

MD44F
Pin Cab temp cntl act link – FULL COOL

LiOH Box
7. Install ATCO and one fresh LiOH canister

L1
8. CAB FAN A, B (two) – ON

EXT A/L
9. Connect external A/L halo inlet flex duct to halo inlet with T-handle clamp
10. As required, all crewmembers change into long pants and long sleeve shirts and don gloves

SM SYS SUMM 1

When 'S78 CABIN O2 CONC'

CRT
11. If QDM flow must continue and S78 CABIN O2 CONC ≥ 25.9%, perform FIRE/HAZ SPILL O2 CONTROL, ECLS FRP-3

CM2 — AMMONIA DETECTION KIT PREPARATION

12. Unstow AMMONIA DETECTION KIT
13. Remove both Draeger pumps and perform leak test using unbroken HI-Range Draeger tube in pump inlet. On both pumps, ensure the bellows do not expand and flow indicator remains black with inlet ports blocked (~1 min)
14. Reset stroke counter on both pumps
15. Stow one pump back inside kit. This pump will be used to verify doffing criteria sample at the end of the procedure

WARNING

Moisture droplets will produce a false low ppm if ingested into sample. Ensure Sample area is free from moisture droplets

HI-RANGE (0.5a) DRAEGER TUBE SAMPLING

16. Obtain HI-Range (0.5a) Draeger tube. Inspect to ensure tube has not reacted (yellow with no dark blue)
17. Break both ends of glass Draeger tube (inside silicone tubing) using the end fittings for leverage
18. Insert Draeger tube into Draeger pump inlet with arrow pointing toward pump
19. Compress Draeger pump fully, release. Indicator will change from black to clear to indicate end of stroke (~6 sec)
20. Repeat for a maximum of 10 strokes or until tube saturated; record results below and report to MCC

NOTE

Pump counter should be used as a backup only

Draeger Tube will change from yellow to dark blue in presence of Ammonia

Used tubes should be placed in dry trash

21. Repeat Draeger tube sampling every 30 min or on MCC call

Sample #	1	2	3	4	5	6	7	8	9	10
MET	: :	: :	: :	: :	: :	: :	: :	: :	: :	: :
Reading after 10 strokes										
or										
Stroke # when tube saturated										

22. When tube reads ≤ 0.5 (500 ppm) after 10 strokes, immediately obtain another HI-Range sample to verify result
23. If second reading > 0.5 (500 ppm), repeat step 21
24. If second reading ≤ 0.5 (500 ppm), continue to step 25

MED-RANGE (5a) DRAEGER TUBE SAMPLING

25. Wait 30 min from last HI-Range reading, then continue
26. Obtain MED-Range (5a) Draeger tube. Inspect to ensure tube has not reacted (yellow with no dark blue)
27. Break both ends of glass Draeger tube (inside silicone tubing) using the end fittings for leverage
28. Insert Draeger tube into Draeger pump inlet with arrow pointing toward pump
29. Compress Draeger pump fully, release. Indicator will change from black to clear to indicate end of stroke (~6 sec)
30. Repeat for maximum of 10 strokes or until tube saturated; record results below and report to MCC
31. Repeat Draeger tube sampling every 30 min or on MCC call

Sample #	1	2	3	4	5	6	7	8	9	10
MET	: :	: :	: :	: :	: :	: :	: :	: :	: :	: :
PPM after 10 strokes										
or										
Stroke # when tube saturated										
Sample #	11	12	13	14	15	16	17	18	19	20
MET	: :	: :	: :	: :	: :	: :	: :	: :	: :	: :
PPM after 10 strokes										
or										
Stroke # when tube saturated										

32. When ppm ≤ 20 after 10 strokes, immediately obtain another MED-Range sample to verify result
33. If second reading > 20, repeat step 31
34. If second reading ≤ 20, continue to step 35

NOTE

LO-Range Draeger tubes are calibrated for 5 strokes

LO-RANGE (2a) DRAEGER TUBE SAMPLING

35. Wait 15 min from last MED-Range reading, then continue
36. Obtain LO-Range (2a) Draeger tube. Inspect to ensure tube has not reacted (yellow with no dark blue)
37. Break both ends of glass Draeger tube (inside silicone tubing) using the end fittings for leverage
38. Insert Draeger tube into Draeger pump inlet with arrow pointing toward pump
39. Compress Draeger pump fully, release. Indicator will change from black to clear to indicate end of stroke (~6 sec)
40. Repeat for a maximum of 5 strokes or until tube saturated; record results below and report to MCC
41. Repeat Draeger tube sampling every 30 min or on MCC call

Sample #	1	2	3	4	5	6	7	8	9	10
MET	: :	: :	: :	: :	: :	: :	: :	: :	: :	: :
PPM after 5 strokes										
or										
Stroke # when tube saturated										

42. When ppm ≤ 10 after 5 strokes, immediately obtain another LO-Range sample to verify result
43. If ppm > 10, repeat step 41
44. When ppm ≤ 10 and on MCC GO, continue to step 45

NOTE

~82 lbm N2 reqd to repress from 8 psia to 14.7 psia

TERMINATE O2 CONTROL AND REPRESS

Exit ECLS FRP-3; terminate O2 control and repress using the following:

AW82B 45. √AIRLK DEPRESS vlv – CL, √cap installed

L2 46. O2/N2 CNTLR VLV SYS 1 – AUTO
2 – OP (N2)

MDDK 47. CAB PURGE vlv – 0
Floor ISOL VLV – CL
Near
Ladder

MO10W 48. 14.7 CABIN REG INLET SYS 1, 2 (two) – OP

SM 66 ENVIRONMENT

CRT When CABIN PRESS > 14 psi

49. Obtain alternate Draeger pump and LO-Range (2a) Draeger tube from kit. Inspect to ensure tube has not reacted (yellow with no dark blue)
50. Break both ends of glass Draeger tube (inside silicone tubing) using the end fittings for leverage
51. Insert Draeger tube into Draeger pump inlet with arrow pointing toward pump
52. Compress Draeger pump fully, release. Indicator will change from black to clear to indicate end of stroke (~6 sec)
53. Repeat for a maximum of 5 strokes or until tube saturated; record results below and report to MCC

Sample #	1	2	3	4	5	6	7	8
MET	: :	: :	: :	: :	: :	: :	: :	: :
PPM after 5 strokes								
or								
Stroke # when tube saturated								

54. If ppm > 10, repeat steps 49-53 in 15 min or MCC call

WARNING

If any crewmember exhibits adverse symptoms when QDMs doffed, have affected crewmember don QDM immediately. Symptoms could include irritation of the eyes, nose, throat, skin

Anytime emergency exposure: 100ppm
1 hour exposure: 30ppm
24 hour exposure: 20ppm
7 day exposure: 10ppm

55. If ppm ≤ 10, doff QDMs per CDR directed sequence

ON MCC CALL CABIN AIR SCRUBBING BACKOUT STEPS

WCS 56. COMMODE CNTL – PULL BACK
– PUSH DOWN

MD44F 57. Pin Cab temp cntl act link – PRI(SEC)

L1 58. CAB TEMP CNTLR – 1(2)
SEL – as reqd

59. H2O PUMP LOOP 1 – GPC

60. H2O LOOP 2 BYPASS MODE – AUTO

LiOH Box 61. Replace ATCO with a fresh LiOH canister

L1 62. √CAB FAN A – ON
B – OFF

This Page Intentionally Blank

BFS FSM INDEX 7-6

7.1 FC REAC/PMP/STACK T
7.1a RESERVED..... not used
7.1b 'S69 FC STACK T 1(2,3) ↑↓' – FC STACK T 1(2,3) ↑↓ 7-8
7.1c 'S69 FC H2 PUMP 1(2,3)' – H2 PUMP ↑↓..... 7-12

7.2 FC PURGE
7.2a RESERVED..... not used
7.2b 'FC PURGE TEMP' – FC PURGE TEMP 7-14
7.2c 'FC PURGE SEQ' – FC PURGE SEQ..... 7-15

7.3 FUEL CELL
7.3a 'S69 FC PH 1(2,3)'
'S69 H2O LN PH' – FC/H2O LINE pH HIGH 7-16
7.3b 'S69 FC AMPS 1(2,3)'
'S67 MAIN BUS V A(B,C)'
'S69 FC VOLTS 1(2,3)' – FUEL CELL VOLTS ↑↓, FUEL CELL AMPS ↑↓, MAIN BUS V A(B,C) ↑↓ 7-18
7.3c RESERVED..... not used
7.3d 'S69 FC EXIT T 1(2,3)' – FUEL CELL EXIT T ↑↓ 7-23
7.3e 'S69 FC COOL P 1(2,3)' – FUEL CELL COOL P ↑↓ (CIL)..... 7-26
7.3f 'S69 FC H2O PRI 1(2,3)' – FUEL CELL H2O LN T ↑↓ 7-31
7.3g 'S69 FC H2O RLF 1(2,3)'
'S69 FC H2O RLF LINE' – FUEL CELL H2O RLF VLV T ↑↓, FUEL CELL H2O RLF LINE T ↑↓..... 7-32
7.3h RESERVED..... not used
7.3i 'S69 FC PRG LN O2(H2)' – FUEL CELL O2(H2) PURGE LN T ↑ 7-33
7.3j 'S69 FC O2(H2) FLOW 1(2,3)' – FUEL CELL O2(H2) FLOW ↑ 7-34
7.3k 'S69 FC H2O RLF HTR' – FUEL CELL RELIEF HTR SW FAIL..... 7-37
7.3l 'S69 FC H2O ALT' – FUEL CELL ALT H2O RLF T ↑↓..... 7-38
7.3m 'S69 DELTA AMPS 1(2,3) ↑↓' – FC DELTA AMPS ↑↓..... 7-39

7.4 RESERVED

7.5 AC VOLTAGE/OVLD
7.5a 'S67 AC VOLTS 1(2,3)' – AC VOLTS 1(2,3) ↓↑ 7-42
7.5b 'S67 AC OVLD 1(2,3) ↓' – AC OVLD 1(2,3) ↓..... 7-47
7.5c 'S67 AC AMPS 1(2,3)' – AC BUS CURRENT HIGH..... 7-51

7.6 CRYO
CRYO TABLE A – CRYO HEATER SWITCH PROCEDURAL NOMENCLATURE..... 7-54
7.6a RESERVED..... not used
7.6b 'S68 O2(H2) CNTL P 1(2,3,4,5)'
'S68 O2(H2) TK P 1(2,3,4,5)' – CRYO O2(H2) PRES,TK P ↓↑ 7-55
7.6c RESERVED..... not used
7.6d 'S68 O2(H2) MANF PRESS' – O2(H2) MANF P ↓..... 7-59
7.6e RESERVED..... not used
7.6f 'S68 H2 HTR T 1(2,3,4,5)' – H2 HTR T..... 7-60
7.6g RESERVED..... not used
7.6h RESERVED..... not used

7.6i RESERVED..... not used
7.6j RESERVED..... not used
7.6k 'S68 O2 HTR TRP 1(2,3,4,5)' – O2 HTR CUR SNSR = TRIP 7-61
7.6l 'S68 O2 HTR T 1(2,3,4,5)' – O2 HTR T 7-62

7.7 SSPTS PTU (OPCU, APCU)
7.7a 'S179 OPCU 1(2) CH A(B) AMPS' – OPCU CH AMPS ↑ 7-64
7.7b 'S179 OPCU 1(2) CH A(B) VOLT' – OPCU CH OUTPUT VOLTS ↓..... 7-65
7.7c 'S179 OPCU 1(2) CH A(B) TEMP'
'S179 APCU 1(2) TEMP' – OPCU CH TEMP ↑, APCU TEMP ↑ 7-66
7.7d 'S179 OPCU 1(2) CH A(B) O OV' – OPCU CH OUT OVER VOLT (O OV) TRIP 7-67
7.7e 'S179 OPCU 1(2) CH A(B) I OC'
'S179 OPCU 1(2) CH A(B) I UV'
'S179 OPCU 1(2) CH A(B) O UV' – OPCU TRIP 7-69
7.7f 'SM 179 APCU 1(2) OUT VOLT' – APCU 1(2) OUT VOLTS ↑↓..... 7-70
7.7g 'SM 179 APCU 1(2) OUT AMPS'
'SM 179 APCU 1(2) IN AMPS' – APCU OUT AMPS ↑, APCU IN AMPS ↑ 7-71
7.7h 'SM 179 APCU 1(2) OUT UV'
'SM 179 APCU 1(2) OUT OV'
'SM 179 APCU 1(2) OUT OC'
'SM 179 APCU 1(2) IN UV' – APCU TRIP 7-72

EPS SSR
EPS SSR-1 FC MONITORING SYS (FCMS) OPS 7-74
SSR-2 RESERVED..... not used
SSR-3 FC SHUTDN C&W LIMIT CHANGE..... 7-76
SSR-4 FC STANDBY..... 7-80
SSR-5 RESERVED..... not used
SSR-6 FC RESTART..... 7-83
SSR-7 TWO-PHASE FAN START PROCEDURE..... 7-91
SSR-8 BUS LOADING – LRU SELECT..... 7-97
SSR-9 RESERVED..... not used

The following msgs have support procedures in the ORB PKT, but not in this book:
'S69 FC REAC 1(2,3)↓'
'S69 FC PUMP 1(2,3)↓'
'S69 FC DELTA V 1(2,3)'
'S69 FC H2O RLF NOZ'
'S67 ESS BUS V 1BC(2CA,3AB)'
'S67 CNTL BUS V'
'S67 CNTL RPC'

The following msgs have no support procedures in this book or in ORB PKT C/L:
'S67 APC/ALC A(B,C)'
'S67 FPC/FLC 1(2,3)'
'S67 MPC 1(2,3)'
'S68 O2(H2) MANF VLV'
'S69 FC READY 1(2,3)'
'FC PURGE 1(2,3)'

EXPLANATORY NOTES FOR BUS LOSS SSRs 7-98
EPS SSR-10 MNA DA1 (CIL) 7-102
SSR-11 FPC1 (CIL) 7-112
SSR-12 MPC1 7-115
SSR-13 APC1 7-117
SSR-14 APC4 7-118
SSR-15 FLC1 (CIL) 7-121
SSR-16 ALC1 7-122
SSR-17 FMC1 7-124
SSR-18 MMC1 7-124
SSR-19 MMC3 7-125
SSR-20 AMC1 7-126
SSR-21 R14 7-127
SSR-22 O14&A8 7-128
SSR-23 O14 7-129
SSR-24 R1A1 7-131
SSR-25 A6&A14 7-131
SSR-26 ML86B 7-132
SSR-27 RESERVED ..... not used
SSR-28 RESERVED ..... not used
SSR-29 MNA A7 7-134
SSR-30 MNB DA2 (CIL) 7-136
SSR-31 FPC2 (CIL) 7-145
SSR-32 MPC2 7-149
SSR-33 APC2 7-151
SSR-34 APC5 7-152
SSR-35 FLC2 (CIL) 7-155
SSR-36 ALC2 7-156
SSR-37 FMC2 7-158
SSR-38 MMC1 7-158
SSR-39 MMC2 7-159
SSR-40 MMC3 7-160
SSR-41 MMC4 7-160
SSR-42 AMC2 7-161
SSR-43 R14 7-162
SSR-44 O15&A8 7-162
SSR-45 O15 7-163
SSR-46 R1A1 7-165
SSR-47 A6&A14 7-166
SSR-48 ML86B 7-167
SSR-49a RESERVED ..... not used
SSR-49b RESERVED ..... not used
SSR-49c MNB A7 7-169
SSR-50 MNC DA3 (CIL) 7-170
SSR-51 FPC3 (CIL) 7-178
SSR-52 MPC3 7-181
SSR-53 APC3 7-183
SSR-54 APC6 7-184
SSR-55 FLC3 (CIL) 7-187
SSR-56 ALC3 7-188
SSR-57 FMC3 7-190
SSR-58 MMC2 7-190
SSR-59 MMC4 7-191
SSR-60 AMC3 7-192
SSR-61 R14 7-193
SSR-62 O16RJD 7-194
SSR-63 O16 7-194
SSR-64 R1A1 7-196

EPS SSR-65 MNC A14 7-196
SSR-66 ML86B 7-196
SSR-70 ESS1BC DA1 (CIL) 7-198
SSR-71 FP&LC1 7-200
SSR-72 MPC1 (CIL) 7-200
SSR-73 ML86B 7-201
SSR-74 FD (CIL) 7-202
SSR-75 O13&R14 7-203
SSR-80 ESS2CA DA2 (CIL) 7-205
SSR-81 FP&LC2 7-207
SSR-82 MPC2 (CIL) 7-207
SSR-83 FD (CIL) 7-208
SSR-84 O13&R14 7-209
SSR-85 ML86B 7-210
SSR-90 ESS3AB DA3 (CIL) 7-211
SSR-91 FP&LC3 7-212
SSR-92 MPC3 (CIL) 7-213
SSR-93 FD (CIL) 7-214
SSR-94 O13 7-215
SSR-95 ML86B 7-215
SSR-100 CNTLAB1 7-216
SSR-101 CNTLAB2 7-220
SSR-102 CNTLAB3 7-224
SSR-103 CNTLBC1 7-227
SSR-104 CNTLBC2 7-231
SSR-105 CNTLBC3 7-236
SSR-106 CNTLCA1 7-239
SSR-107 CNTLCA2 7-243
SSR-108 CNTLCA3 7-247
SSR-109 CONTROL BUS – PANEL WIRING MATRIX 7-250
SSR-110 AC1 7-252
SSR-111 AC1 ΦA 7-256
SSR-112 ΦB 7-258
SSR-113 ΦC 7-259
SSR-114 FMC1 7-262
SSR-115 MMC1 7-262
SSR-116 MMC3 7-262
SSR-117 AMC1 7-263
SSR-120 AC2 7-263
SSR-121 AC2 ΦA 7-267
SSR-122 ΦB 7-269
SSR-123 ΦC 7-271
SSR-124 FMC2 7-273
SSR-125 MMC1 7-273
SSR-126 MMC2 7-273
SSR-127 MMC3 7-274
SSR-128 MMC4 7-274
SSR-129 AMC2 7-274
SSR-130 AC3 7-275
SSR-131 AC3 ΦA 7-278
SSR-132 ΦB 7-280
SSR-133 ΦC 7-282
SSR-134 FMC3 7-284
SSR-135 MMC2 7-284
SSR-136 MMC4 7-285
SSR-137 AMC3 7-285
SSR-140 AC1 RCS/FMC1 7-286
SSR-141 AC2 RCS/FMC2 7-286

EPS	SSR-142	AC3 RCS/FMC3	7-286
	SSR-143	AC1 POD/AMC1	7-287
	SSR-144	AC2 POD/AMC2	7-287
	SSR-145	AC3 POD/AMC3	7-288
	SSR-146	MNA/B POD/AMC1	7-288
	SSR-147	MNB/C POD/AMC2	7-289
	SSR-148	MNC/A POD/AMC3	7-289
	SSR-150	ALTERNATE PRIMARY PAYLOAD PWR	7-290
	SSR-200	AC PWR TRANSFER CABLE	7-291
	SSR-201	CRYO HTR MANUAL OPS	7-303
	SSR-202	PREFLIGHT TEST BUS USE	7-305
	SSR-203	APCU RECOVERY	7-313
	SSR-204	OPCU FAULT ISOLATOR TRIP RECOVERY	7-314

BFS FSM INDEX

7.1	FC REAC/PMP/STACK T		
7.1b	'SM1 FC STACK T 1(2,3) ↑↓'	– FC STACK T 1(2,3) ↑↓	7-8
7.3	FUEL CELL		
7.3b	'SM1 MAIN BUS V A(B,C)' 'SM1 DC VOLT FC1(2,3)' 'SM1 FC AMPS 1(2,3)'	– FUEL CELL VOLTS ↑↓, FUEL CELL AMPS ↑↓, MAIN BUS V A(B,C) ↑↓	7-18
7.3d	'SM1 FC EXIT T 1(2,3)'	– FUEL CELL EXIT T ↑↓	7-23
7.3e	'SM1 FC COOL P 1(2,3)'	– FUEL CELL COOL P ↑↓.....	7-26
7.5	AC VOLTAGE/OVLD		
7.5a	'SM1 AC VOLTS 1(2,3)'	– AC VOLTS 1(2,3) ↓↑	7-42
7.5b	'SM1 AC OVLD 1(2,3)'	– AC OVLD 1(2,3) ↓.....	7-47
7.6	CRYO		
7.6b	'SM2 CRYO O2(H2) PRES'	– CRYO O2(H2) PRES,TK P ↓↑.....	7-55
7.6d	'SM2 CRYO O2(H2) MANF'	– O2(H2) MANF P ↓	7-59
7.6l	'SM2 CRYO O2 HTR'	– O2 HTR T.....	7-62

This Page Intentionally Blank

EPS

7.1b FC STACK T 1(2,3) ↑↓

FUEL CELL STACK TEMP
(F7)

BACKUP C/W ALARM
(F7)

S69 FC STACK T 1(2,3) ↑↓

BFS
SM1 FC STACK T 1(2,3)

If FC operating and:
STACK T > 243.7 or < 172.5 degF
If FC shutdn and:
STACK T > 243.7 or < 50.8

S69 FC STACK T 1(2,3)

BFS
SM1 FC STACK T 1(2,3)

If:
FC LOAD (FC VOLTS X AMPS)/ STACK T

kW	STACK TEMP
< 3.5	< 180 or > 212
> 3.5	< 190 or > 222
> 7.5	< 198 or > 238
FC SHTD	< 50.8 or > 212

Nominal Config:
(L4:C)
cb AC1 ΦA,ΦB,ΦC FC1 PUMPS (three) – cl
cb AC2 ΦA,ΦB,ΦC FC2 PUMPS (three) – cl
cb AC3 ΦA,ΦB,ΦC FC3 PUMPS (three) – cl
(O14)
FC1 CNTLR – ON
(O15)
FC2 CNTLR – ON
(O16)
FC3 CNTLR – ON
(Cont in notes column)

1 Is FC shutdn ? YES → 49
NO ↓

2
SM 69 FUEL CELLS
SM SYS SUMM 1
(O2)
FC STACK TEMP ind:

- Off-scale LOW or HIGH → 3 STACK T SNSR FAILURE (FC OK)
- > 172 degF and < 243 degF → 4 CRT msg has '*' in text ? NO → 25; YES → 6 B/U C/W FAILURE OR TRANSIENT
- < 172 degF → ***WARNING*** Ops < 172 degF may result in FC damage → 5 • Perform BUS TIE (Cue Card) → 8 (R11U) •√FC STARTUP HTR – ENA → (1)(2) 9 (CRT) • Observe amps of aff FC and tied FC; (R1) • FC1(FC2,FC3) – START (hold 5 sec); (CRT) Aff FC AMPS decr and tied FC AMPS incr ? NO → 16; YES → 12 FC THERMAL CONTROL AND SUSTAINER HTR FAILED OFF → (1)(3) 13 (R1) • Maintain FC START sw in START → 14 • Restore nominal bus-tie config
- > 243 degF → ***WARNING*** Ops at > 243 degF may result in catastrophic FC failure → 7 (CRT) Any other FCs with COOL T > 140 degF ? NO → 11; YES → 10 POSSIBLE FREON LOOP PROBLEM

7 → 11 • Perform BUS TIE (Cue Card) → 15

(1) Confirming cue of STARTUP HTR activity is READY FOR LOAD tb – bp whenever htr cycles ON

(2) FC STARTUP HTR amps do not flow thru affected FC ammeter. Increased load will drop FC volts and shared load will be shifted to other FC

(3) FC STARTUP HTR may be used to cntl STACK T to acceptable temp by holding or maintaining FC START sw in START

Nominal Config:
(Cont)
(R11U)
FC STARTUP HTR 1,2,3 (three) – ENA
If FC operating:
(R1)
FC RDY (three) tb – gray
FC1(2,3) COOL PUMP ΔP tb (three) – gray
If FC shutdn:
Aff FC RDY tb – bp
Aff FC COOL PUMP ΔP tb – bp

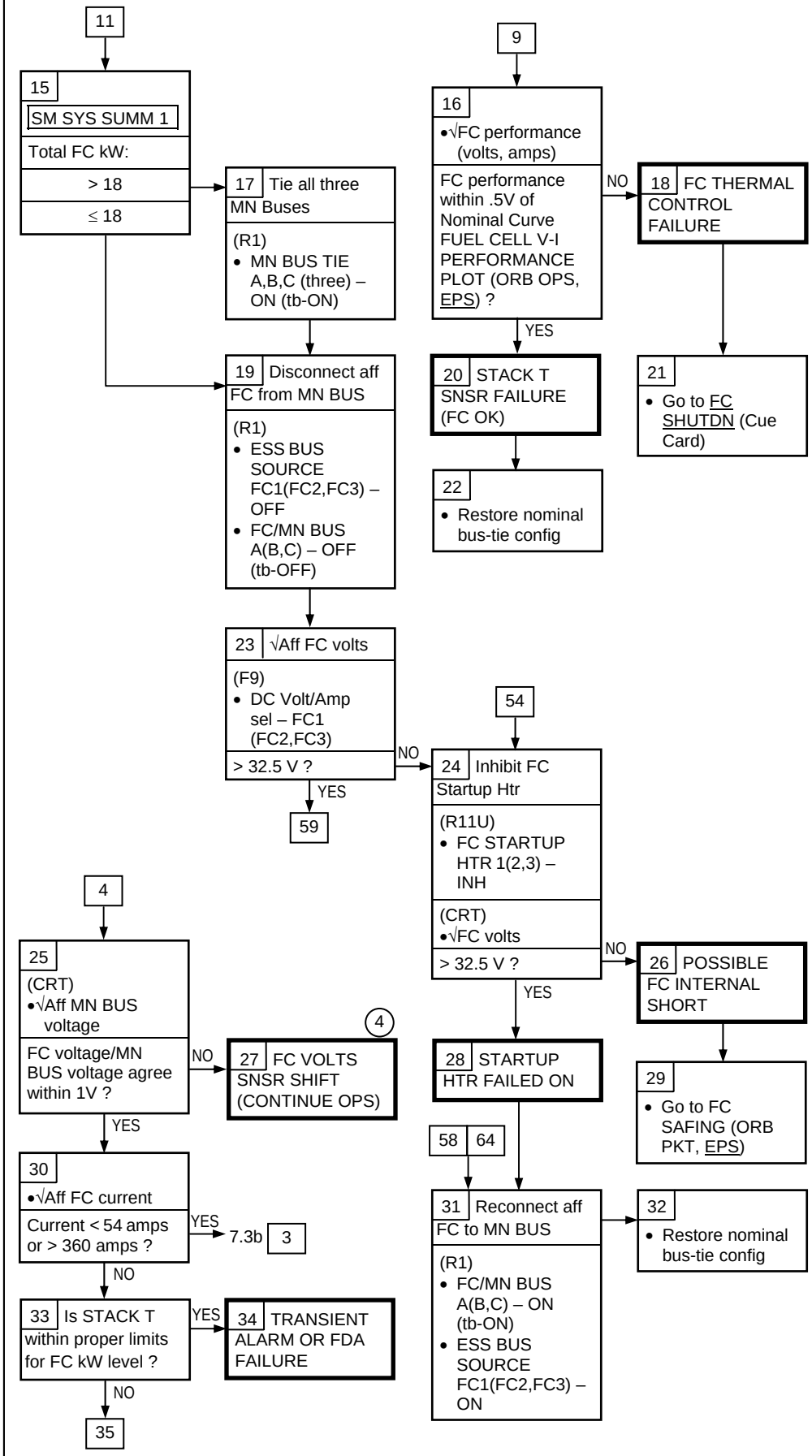

4 Loss of correct precondition check for STACK T FDA Class 3 limit set based on kW for this FC

EPS 7.1b (Cont)

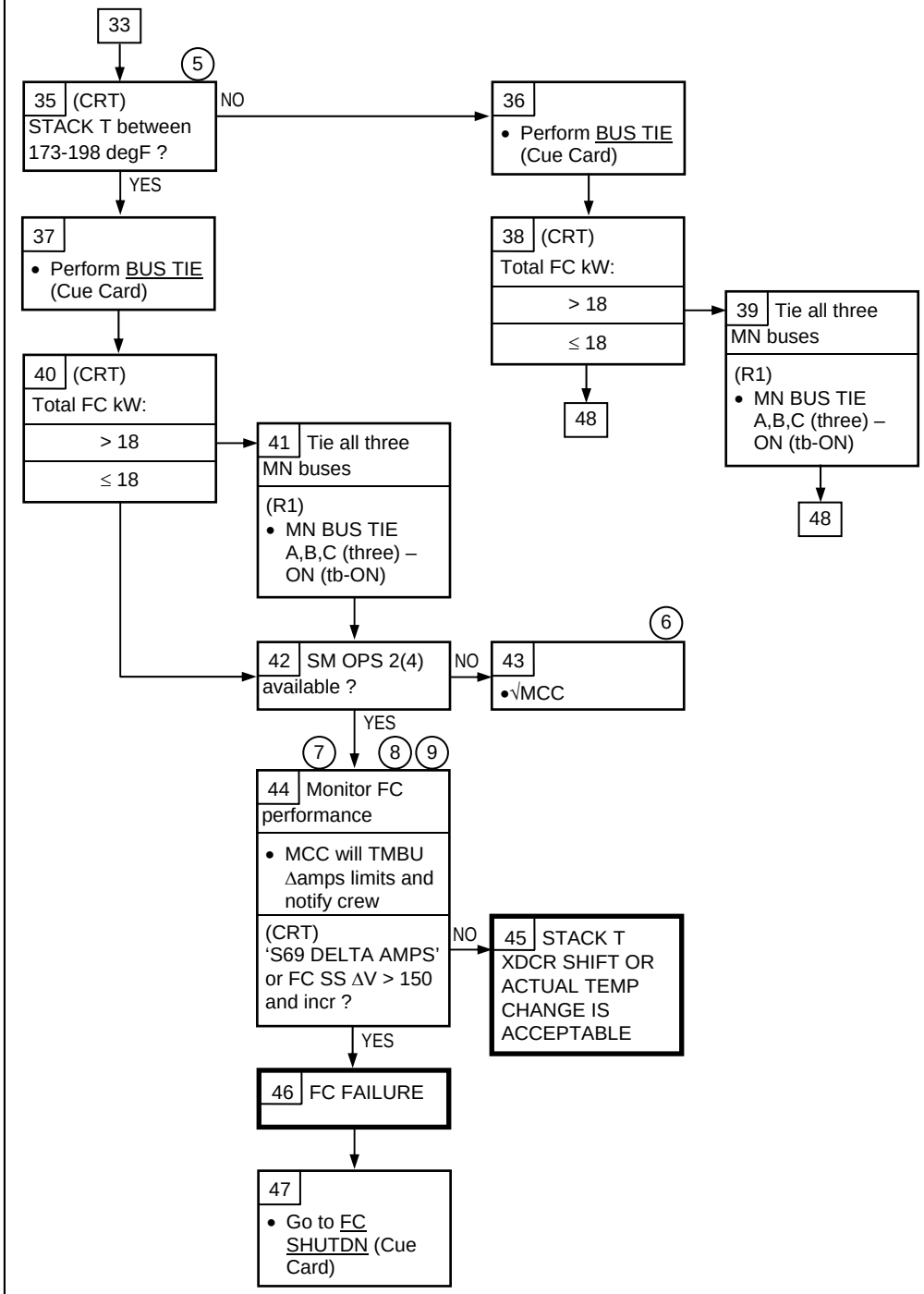

(5) This is the temp range that could result in low stack temp SM ALERT

(6) MCC will monitor FC performance by observing Δamps changes

(7) If loss of comm, reset Δamps limits to present value ± 40 (± 40 takes into account possible differences in FC V-I curves which would cause a Δamps change with a load change)

(8) Depending on load, may take several hours for performance change. Do not purge this FC for 5 hr

(9) With FCs thermally stabilized and at a constant load, a 12-amp change in delta amps would indicate approximately 3% change in KOH concentration. High concentration (indicated by improved performance) > 48% can allow O2/H2 crossover. Low concentration (indicated by degraded performance) < 26% indicates flooding

EPS 7.1b (Cont)

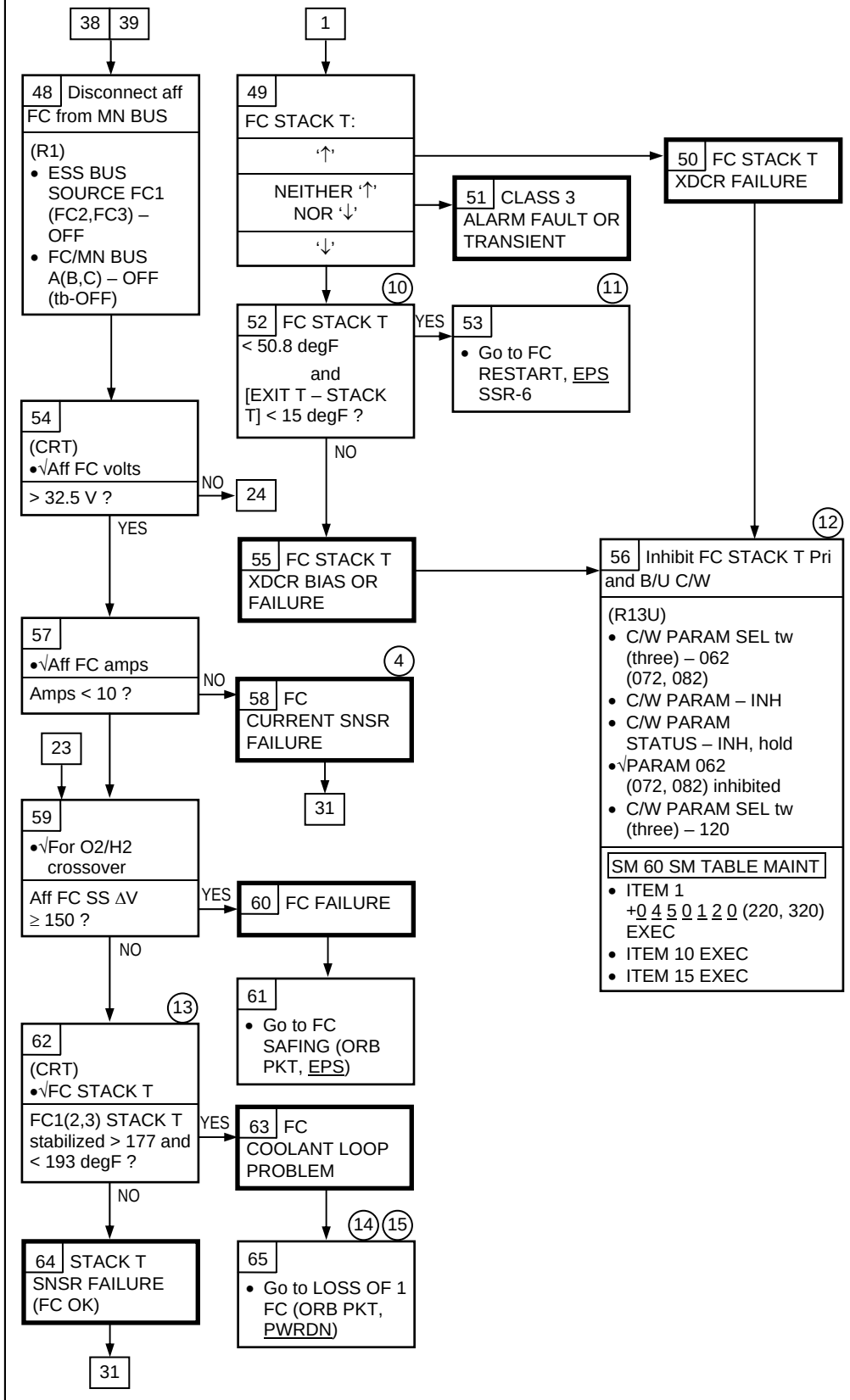

(4) Loss of correct precondition check for STACK T FDA Class 3 limit set based on kW for this FC

(10) Based upon STS-2, 51, 54, & 57 data, FC STACK T and EXIT T should remain within 15 degF of each other during cooldown

(11) Lower limit on allowable temp for reusable FC is 48 degF (includes Xdcr error). FC must be restarted to maintain temp above 48 degF. 50.8 degF was selected due to being closest value to 48 degF in Primary C/W System

(12) With loss of FC STACK T, FC temp may be obtained only from FC EXIT T

(13) FC sustaining heater maintaining stack temp

(14) After cooldown, FC may be usable on cyclic basis or with extensive vehicle pwrdn

(15) Leave FC in STBY mode. MCC analysis may determine later need for FC shutdn

EPS

7.1c H2 PUMP ↑↓

From ORB PKT, EPS, FC 1(2,3) H2 PUMP, step 4

S69 FC H2 PUMP 1(2,3)

Nominal Config:
(L4:C)
cb AC1 ΦA,ΦB,ΦC FC1 PUMPS (three) – cl
cb AC2 ΦA,ΦB,ΦC FC2 PUMPS (three) – cl
cb AC3 ΦA,ΦB,ΦC FC3 PUMPS (three) – cl
(O14)
FC1 CNTLR – ON
(O15)
FC2 CNTLR – ON
(O16)
FC3 CNTLR – ON
(R1)
FC1,FC2,FC3 RDY tb (three) – gray
FC1,FC2,FC3 COOL PUMP ΔP tb (three) – gray

(1)

1

SM 69 FUEL CELLS

Which conditions exist for FC H2 PUMP (VOLTS) ?

- < 0.2 → 4
- > 0.8 and ≤ 2.0
- > 2.0 and ≤ 3.0 → 4
- > 3.0 and ≤ 4.6 → 2
- > 4.6 → 3

2
- Perform BUS TIE (Cue Card)

3
- Perform BUS TIE (Cue Card)

(2) (3)

5 POSSIBLE 2Φ FC H2 PUMP OPS → 12

(2) (3)

6 POSSIBLE DEGRADED H2 PUMP → 12

1

4

SM SYS SUMM 1
- Note aff AC AMPS
  ΦA_____
  ΦB_____
  ΦC_____

Stop affected fuel cell

(R1)
- FC 1(2,3) – STOP

From ORB PKT, EPS, FC 1(2,3) H2 PUMP, step 7

(4)

7

(CRT)
- Note aff AC AMPS
  ΦA_____
  ΦB_____
  ΦC_____

3Φ AC AMPS decr 0.7-0.9 amps/Φ
or
2Φ AC AMPS decr 0.9-1.2 amps/Φ ?

NO → 8 STALLED H2 PUMP OR PUMP PWR LOSS → 9
- Go to FC SHUTDN (Cue Card)

YES

10 SHIFTED OR FAILED XDCR → 11 Restart aff FC
- Perform FC RESTART, EPS SSR-6

5 6 → 12
- Perform FDA limit change by resetting high limit to present value + 0.3 volts (REF DATA, C/W and FDA OPS)

(1) Normal H2 Pump range 0.28-0.65 volt. See Table A

(2) If degradation of H2 pump worsens, FC should be shut down so that pump could be used during entry

(3) Non-satisfactory H2 pump ops would eventually be reflected in FC amps (low) SSDV (erratic), exit temp, and FC pH (event)

(4) H2 PUMP operates at .3A/Φ for 3-phase and .45A/Φ for 2-phase operation. Coolant pump operates at .5A/Φ for 3-phase and .62A/Φ for 2-phase operation

Table A

FC PUMP PACKAGE POWER RANGES

3-PHASE OPERATION

	COOLANT PUMP	H2 PUMP	
LOAD	AMPS/PHASE	AMPS/PHASE	VOLTS
NORMAL	0.51	0.3	0.28-0.65
OVERLOAD		0.5	> 0.8
STALL	1.0	1.2	2.2

2-PHASE OPERATION

	COOLANT PUMP	H2 PUMP	
LOAD	AMPS/PHASE	AMPS/PHASE	VOLTS
NORMAL (open motor winding)	0.62	0.45	3.15-3.5
NORMAL (1Φ cb open)	0.62	0.45	4.15-4.5
STALL	1.0	1.3	4.8

EPS

7.2b FC PURGE TEMP

FC PURGE TEMP

If:

SM 69 FUEL CELLS

FC PURGE LN O2 T < 69 degF or
FC PURGE LN H2 T1 < 79 degF or
FC PURGE LN H2 T2 < 40 degF
After 27 min since AUTO PURGE SEQ started

(1)

1 GPC PURGE OR INSTRU-MENTATION FAILURE. LOSS OF AUTO PURGE SEQUENCE

2

- Go to FUEL CELL PURGE – MANUAL (ORB OPS, EPS)

(1) GPC will terminate AUTO PURGE SEQ as indicated by (R11U) FC GPC PURGE SEQ tb – bp. (R11U) ON position of FC PURGE HTR sw utilizes redundant htrs

EPS

7.2c FC PURGE SEQ

FC PURGE SEQ

If:
- S/W detects AUTO PURGE SEQ, purge-line htrs ON-signal has been lost after GPC AUTO PURGE SEQ initiated

Nominal Config:
(R11U)
FC PURGE HTR – GPC

(1)

1 MDM CHANNEL OR INSTRU-MENTATION FAILURE. LOSS OF AUTO PURGE SEQUENCE

2
- Go to FUEL CELL PURGE – MANUAL (ORB OPS, EPS)

(1) If this alarm occurs: Purge vlv commanded closed. Purge line htrs are commanded OFF. May be verified by (R11U) FC GPC PURGE SEQ
tb – bp

EPS

7.3a FC/H2O LINE pH HIGH

SM ALERT

S69 FC PH 1(2,3)

S69 H2O LN PH

If:
pH high

From ORB PKT, EPS, FC pH HIGH OR H2O LINE pH HIGH, step 5

(1)

1
- Note time of earliest pH ↓ msg
____:____:____

(2)

NOTE
If following conditions are met at any time within 1 hr, FC Safing should be performed:
FC pH ↓ or H2O LINE pH ↓ and FC SS ΔV ≥ 150 and increasing

(3)

2
- Perform FC H2O TEST (IFM)

pH < 9

pH > 9

(4)

3
- Wait 1 hr from earliest pH msg
- Perform FC H2O TEST (IFM)

Is FC pH ↓ or H2O LINE pH ↓ and pH > 9 ?

NO → 4 TRANSIENT pH INDICATION OR pH XDCR FAILURE → 10

YES

5
- Perform aff FC SAFING (ORB PKT, EPS)

6

(1) After individual pH alarm, 10 min could elapse before H2O Line pH alarm activates

(2) FC health and performance will be monitored for 1 hr. If signs of FC flooding occur, FC Safing will be performed

(3) May take as long as 20 min for aff FC H2O to reach galley QD

(4) Waiting 1 hr may allow transient pH condition to clear

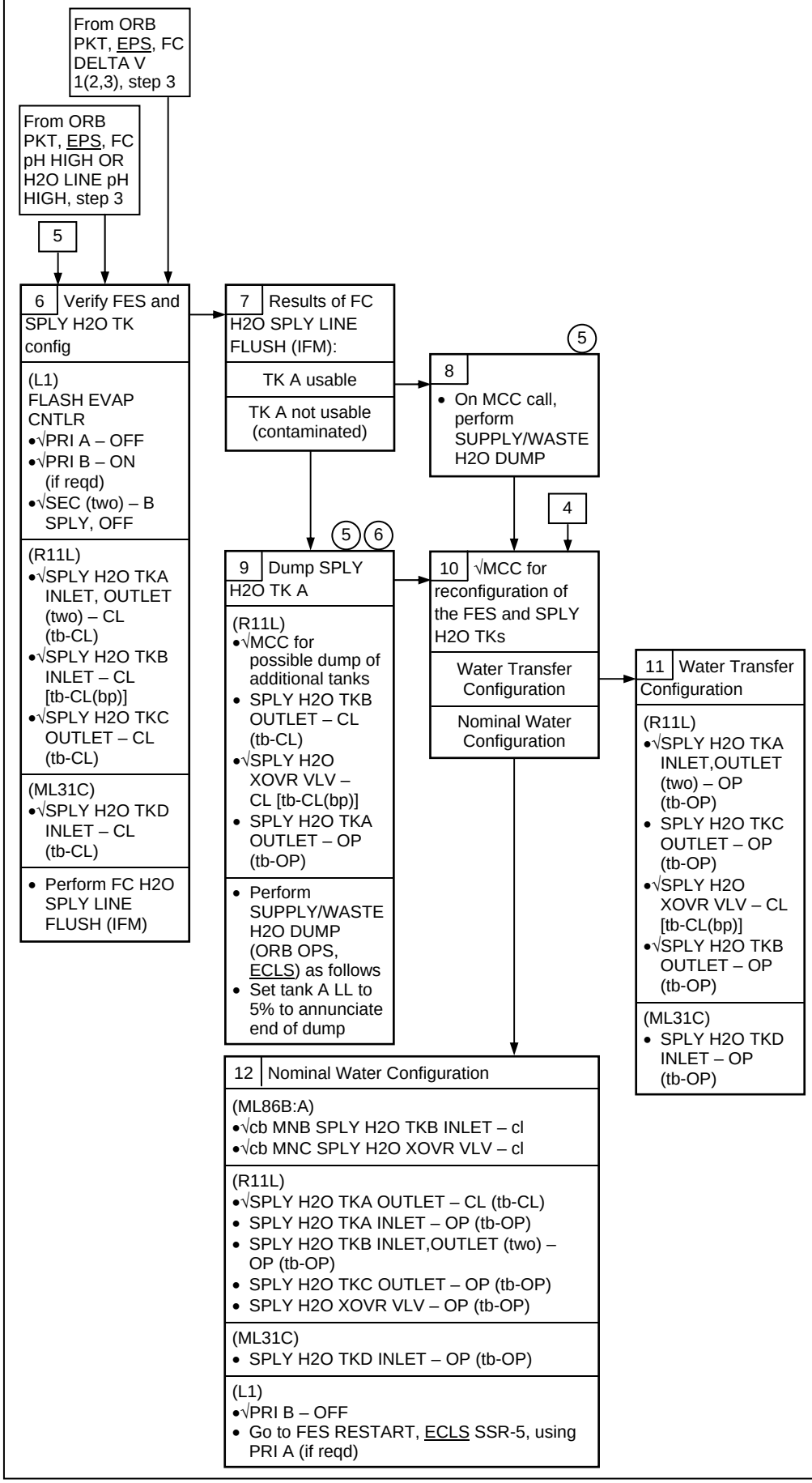

(5) SPLY TKC may be contaminated. TKC will be dumped and then flushed per nominal TKC management

(6) SPLY TKA will be dumped periodically to flush pH out of system

EPS

BACKUP C/W ALARM
(F7)

SM ALERT

S67 MAIN BUS V A(B,C)

BFS

SM1 MAIN BUS V A(B,C)

If:
MNA(B,C) BUS
VOLTS < 27 vdc
> 32 vdc

S69 FC VOLTS 1(2,3)

S69 FC AMPS 1(2,3)

If FC operating and FC AMPS:
< 54
> 360

If FC shutdn and AMPS < current C/W FDA lower limit, > current C/W FDA upper limit

BFS

SM1 DC VOLT FC1(2,3)

If FC operating and:
VOLTS < 27.5 vdc
> 32.5 vdc

If FC shutdn and Volts < current C/W FDA lower limit, > current C/W FDA upper limit

BFS

SM1 FC AMPS 1(2,3)

If FC AMPS < 54
> 410

Nominal Config:
(O13:A)
cb ESS 1BC MNA CONTR – cl
(O13:C)
cb ESS 2CA MNB CONTR – cl
(O13:E)
cb ESS 3AB MNC CONTR – cl

(Cont in notes column)

7.3b FUEL CELL VOLTS ↑↓, FUEL CELL AMPS ↑↓, MAIN BUS V A(B,C) ↑↓

From ORB PKT, EPS, MN BUS U/V FC VOLTS, step 22

1 Is FC shutdn ? YES → 2 FC VOLTS msg → 48; FC AMPS msg → 62

NO

7.1b 30

3 SM 67 ELECTRIC
Following conditions met:

MN VOLTS	FC VOLTS	FC AMPS	
		HIGH > 360	→ 11
	LOW < 27.5		→ 4
LOW < 27			→ 4
HIGH > 32			→ 4
	HIGH > 32.5		→ 5
		LOW < 54	→ 34
None of the above			→ 4 5

4 FC and MN Bus volts differ by > 1V ? YES → 7; NO → 13

5 FC and MN Bus volts differ by > 1V ? YES → 7; NO → 8

6 C/W FAULT OR TRANSIENT → 3
9 (R13U)
- Determine which param triggered C/W ALARM

7 VOLTS SNSR FAILED → 2 → 3
11 SM 69 FUEL CELLS
Does FC AMPS (± 50) = O2 FLOW x 47.5 or FC AMPS (± 68) = H2 FLOW x 377 ?
NO → 12 FC AMP SNSR FAILURE (2 5)
YES → 7.3j 11 4 (6)
13 Aff Bus tied ? YES → 14 Untie Buses
(R1)
- MN BUS TIE A(B,C) – OFF (tb-OFF)
- MN BUS TIE B(C,A) – OFF (tb-OFF)

→ 15

NO → 15

8 FC/MN BUS LIGHTLY LOADED → 4
10
- Incr load to decr volts

(2 5)

15

(1) Meters on pnl F9 should be used only if SM is not available, since wiring of TM vs METER results in a different reading in the case of a shunt blowing

(2) FC Stack Temp Class 3 FDA may cause erroneous alarms and is unreliable. MCC will inhibit Class 3 FDA via TMBU. Class 2 FDA still exists

(3) If hi amps caused transient and short cleared, cockpit check should be made for open cbs or bus loss indications

(4) Consult MCC for powerup

(5) If SM OPS 2, FC amps may be approximated by utilizing Reac flows in the following equations:
AMPS (± 50) = O2 FLOW x 47.5
AMPS (± 68) = H2 FLOW x 377

(6) FC AMPS up to 450 may be expected if FC pwrs MN BUS plus PRI PL Bus or FC pwrs two main buses

Nominal Config: (Cont)
(O13:E)
PL PRI FC3 – OFF (tb-OFF)
PL PRI MNB – OFF (tb-OFF)
PL PRI MNC – ON (tb-ON)
If FC operating:
(R1)
FC/MAIN BUS A(B,C) – ON (tb-ON)
FC1(2,3) REAC (six) – OP
If FC shutdn:
Aff FC/MN BUS – OFF (tb-OFF)
Aff FC REAC (two) – CL

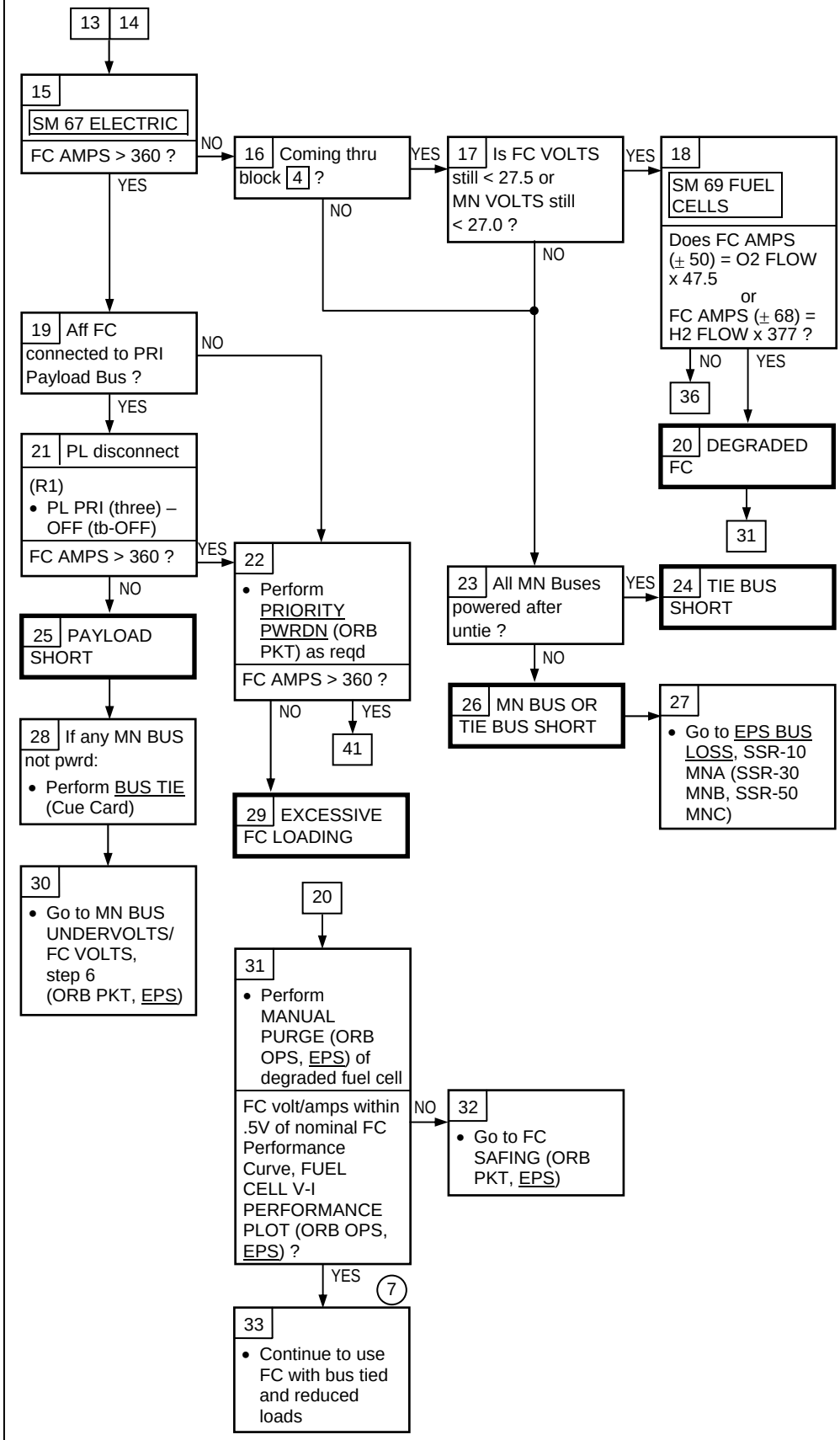

(7) MCC analysis reqd before increasing loads on FC

EPS 7.3b (Cont)

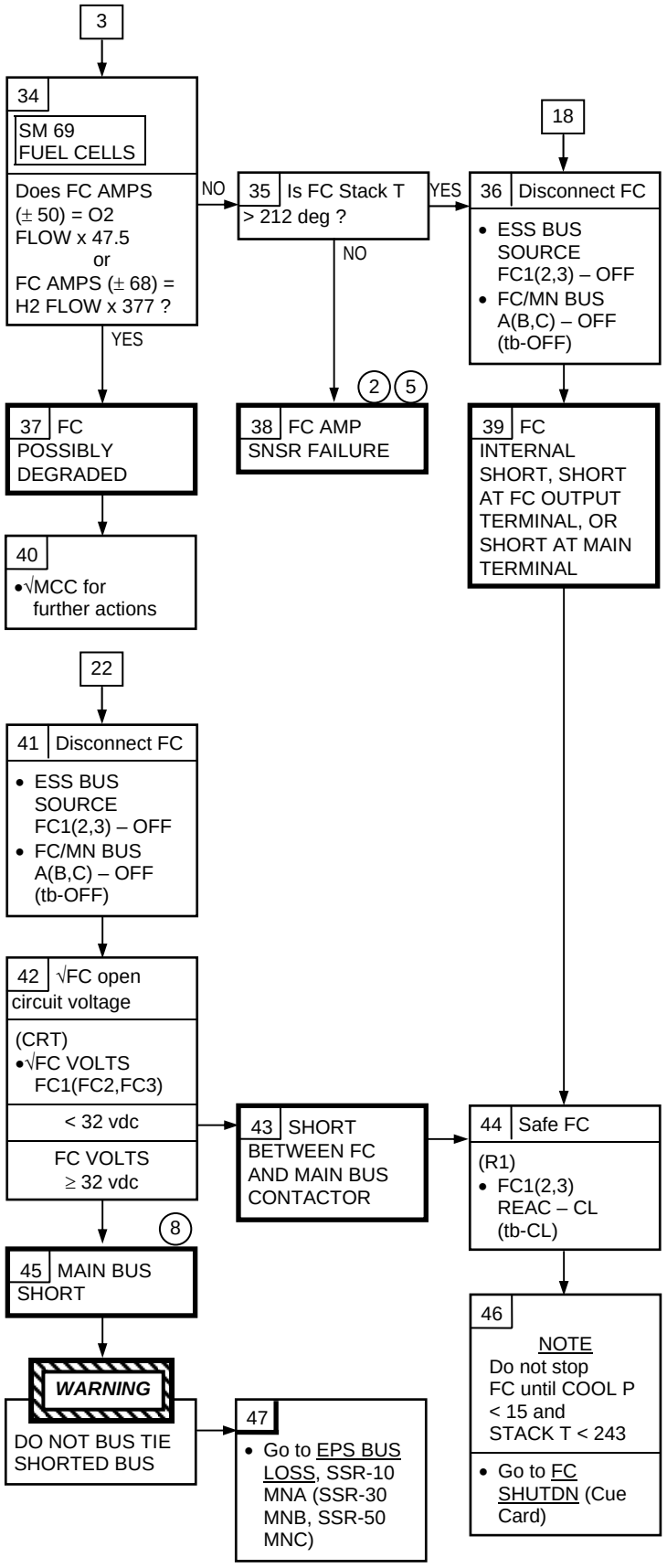

(2) FC Stack Temp Class 3 FDA may cause erroneous alarms and is unreliable. MCC will inhibit Class 3 FDA via TMBU. Class 2 FDA still exists

(5) If SM OPS 2, FC amps may be approximated by utilizing Reac flows in the following equations:
AMPS (± 50) = O2 FLOW x 47.5
AMPS (± 68) = H2 FLOW x 377

(8) Short on MN BUS causes FC loss. For loss of MNC, FC3 pumps will be pwrd with AC Transfer Cable and FC3 pwr will be supplied to MNB through PL pwr contactors

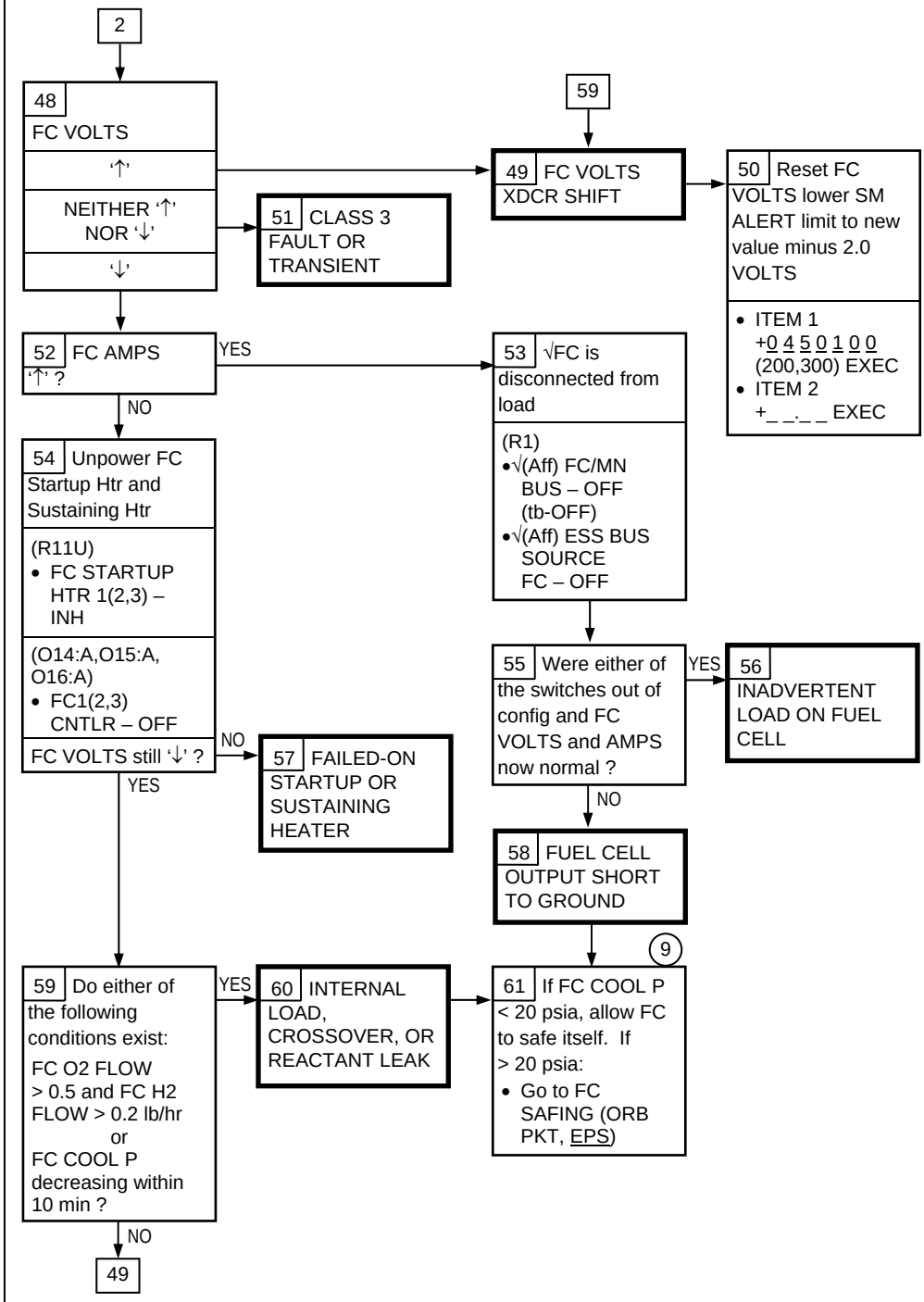

(9) At FC coolant pressure of less than 20 psia, electrolyte boiling may occur (i.e., KOH escaping from cell matrix); in addition, Dual Gas Regulator may not control O2/H2 relative pressures and crossover may result

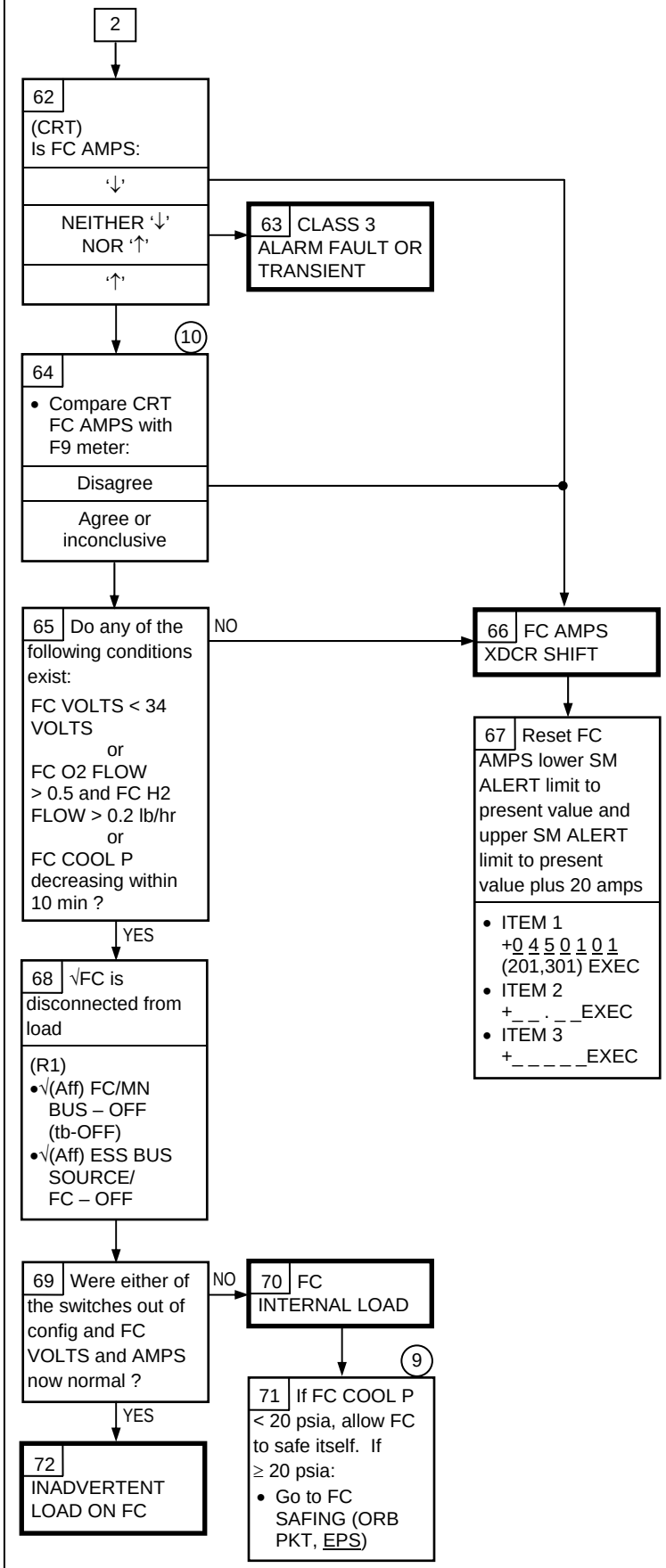

(9) At FC coolant pressure of less than 20 psia, electrolyte boiling may occur (i.e., KOH escaping from cell matrix); in addition, Dual Gas Regulator may not control O2/H2 relative pressures and crossover may result

(10) Due to limited resolution of F9 meter, close comparison may be unobtainable

EPS

7.3d FUEL CELL EXIT T ↑↓

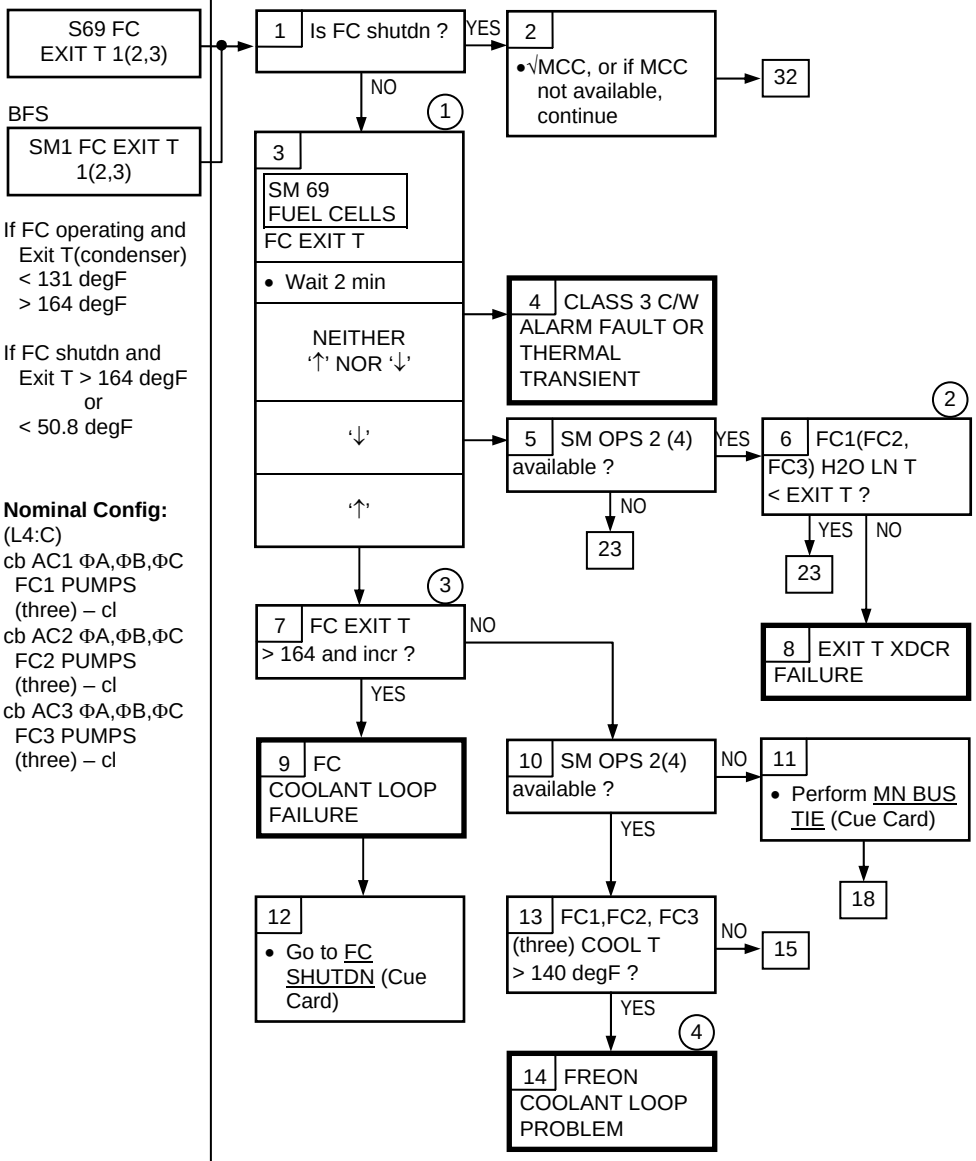

If FC operating and Exit T(condenser)
< 131 degF
> 164 degF

If FC shutdn and Exit T > 164 degF
or
< 50.8 degF

Nominal Config:
(L4:C)
cb AC1 ΦA,ΦB,ΦC FC1 PUMPS (three) – cl
cb AC2 ΦA,ΦB,ΦC FC2 PUMPS (three) – cl
cb AC3 ΦA,ΦB,ΦC FC3 PUMPS (three) – cl

(1) Transient loads may cause EXIT T < LN T for up to 2 min

(2) Data indicates H2O LN T < EXIT T by up to 15 degF

(3) FC EXIT T will quickly increase to FC STACK T if CONDENSER COOLANT FLOW is stopped while H2 PUMP is operational. FC should be quickly shutdn for possible Coolant Pump failure

(4) √MCC

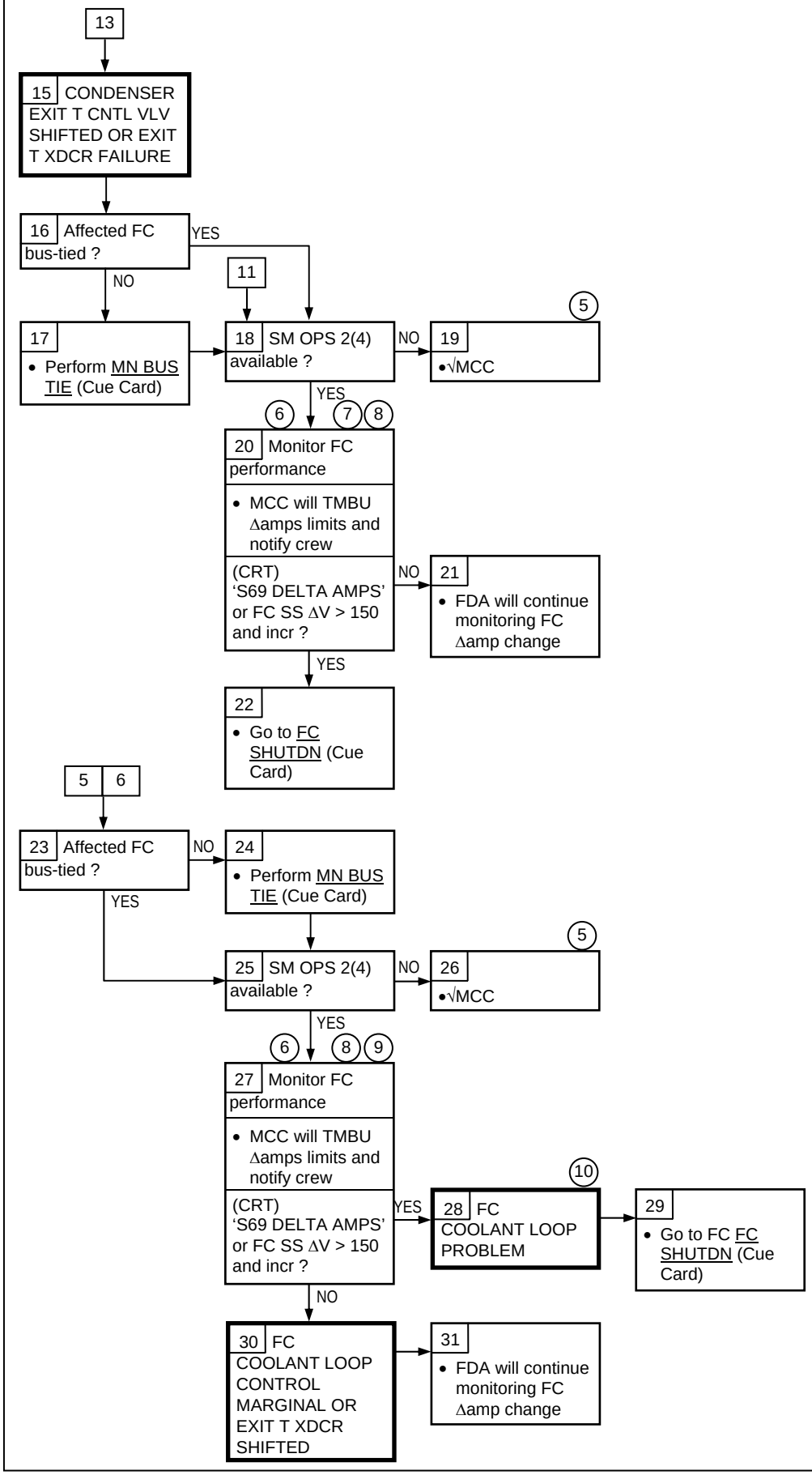

(5) MCC will monitor FC performance by observing Δamps change

(6) If loss of comm, reset Δamps limits to present value ± 40 (± 40 takes into account possible differences in FC V-I curves which would cause a Δamps change with a load change)

(7) High FC EXIT T will reduce H2O removal rate and may result in cell flooding. Uniform cell flooding may not be detected by change in FC SS ΔV

(8) With FCs thermally stabilized and at a constant load, a delta amp change of 12 indicates ~3% change in KOH concentration. Nominal KOH concentration is ~36%. High Concentration (> 48%) would be indicative of FC dryout leading to possible O2/H2 crossover. Low concentration (< 26%) would be indicative of FC flooding

(9) Low FC EXIT T will increase H2O removal and may result in cell dryout sufficient to allow O2/H2 crossover. Individual cell crossover should be detected by change in FC SS ΔV. Uniform cell dryout would result in increased FC performance

(10) Depending on extent of failure after cooldown, FC may be usable in cyclic mode

EPS 7.3d (Cont)

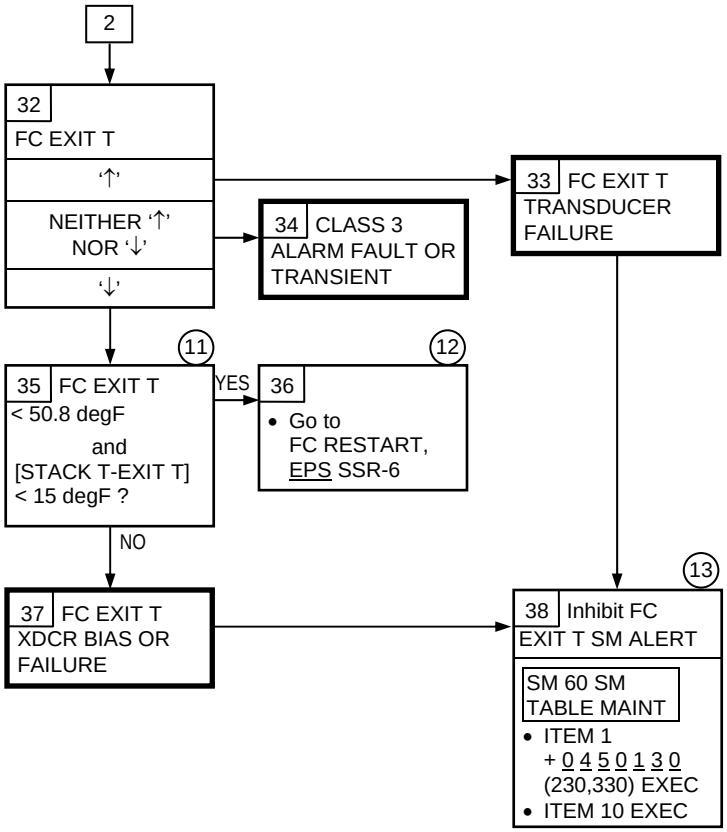

(11) Based upon STS-2 data, FC EXIT and STACK T should remain within 15 degF of each other during cooldown

(12) Lower limit on allowable temp for reusable FC is 48 degF (includes Xdcr error). FC must be restarted to maintain temp above 48 degF. 50.8 degF was selected due to being the closest value to 48 degF in the Primary C/W System

(13) With loss of FC EXIT T, FC temp may be obtained only from FC STACK T

EPS

7.3e FUEL CELL COOL P ↑↓

S69 FC COOL P 1(2,3)

BFS

SM1 FC COOL P 1(2,3)

If FC operating and:
COOL P
< 50 psia
> 75 psia
If FC shutdn:
COOL P
< current C/W FDA lower limit
> 75 psia

1 Is FC shutdn ? YES → 53

NO

2 SM 69 FUEL CELLS FC COOL P is: '↓' or '↑' ? NO → 3 CLASS 3 ALARM FAULT OR TRANSIENT

YES

4
- Perform BUS TIE (Cue Card)

5 Are any of the following present ? YES → 6 PRE-HTR LEAK, FC REG FAILURE, OR COOLANT LOOP LEAKAGE (1)

(R1)
- FC1(FC2,FC3) COOL PUMP ΔP tb – bp or intermittent

(CRT)
- FC1(FC2,FC3) STACK T or EXIT T unstable
- FC1(FC2,FC3) COOL P > 75 and incr (but not 'H')

WARNING

Cryo pressurization of coolant loop due to pre-htr leakage may cause FC HX failure and loss of all three FCs

7
- Go to FC SAFING (ORB PKT, EPS)

NO

From ORB PKT, EPS, FC COOL P, step 3

8 SM 69 FUEL CELLS FC COOL P is:
'↑' or 'H' → 9
'↓' or 'L'

29

(1) Erratic FC COOL T on SM 69 display may also be indicative of pre-htr internal leak

EPS 7.3e (Cont)

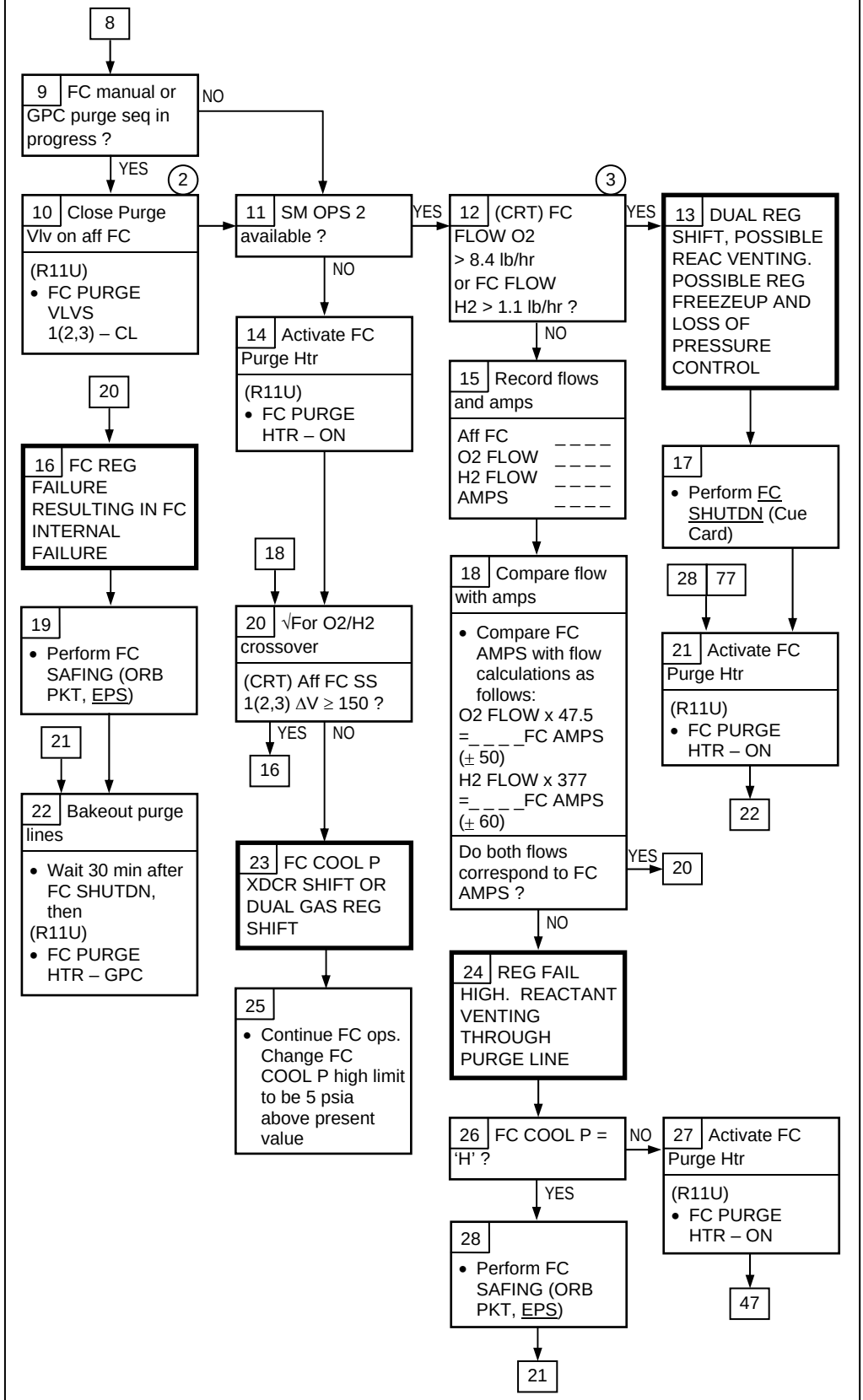

(2) If GPC purge seq selected, manually closing Purge Vlv stops purge and GPC will proceed with purging next FC selected for GPC purge. GPC may or may not alert crew. 'FC PURGE 1(2,3)' msg occurs depending on when Purge Vlv manually closed

(3) Flows correspond to 10 kW (~350 amps) load on FC plus flow sensor accuracy

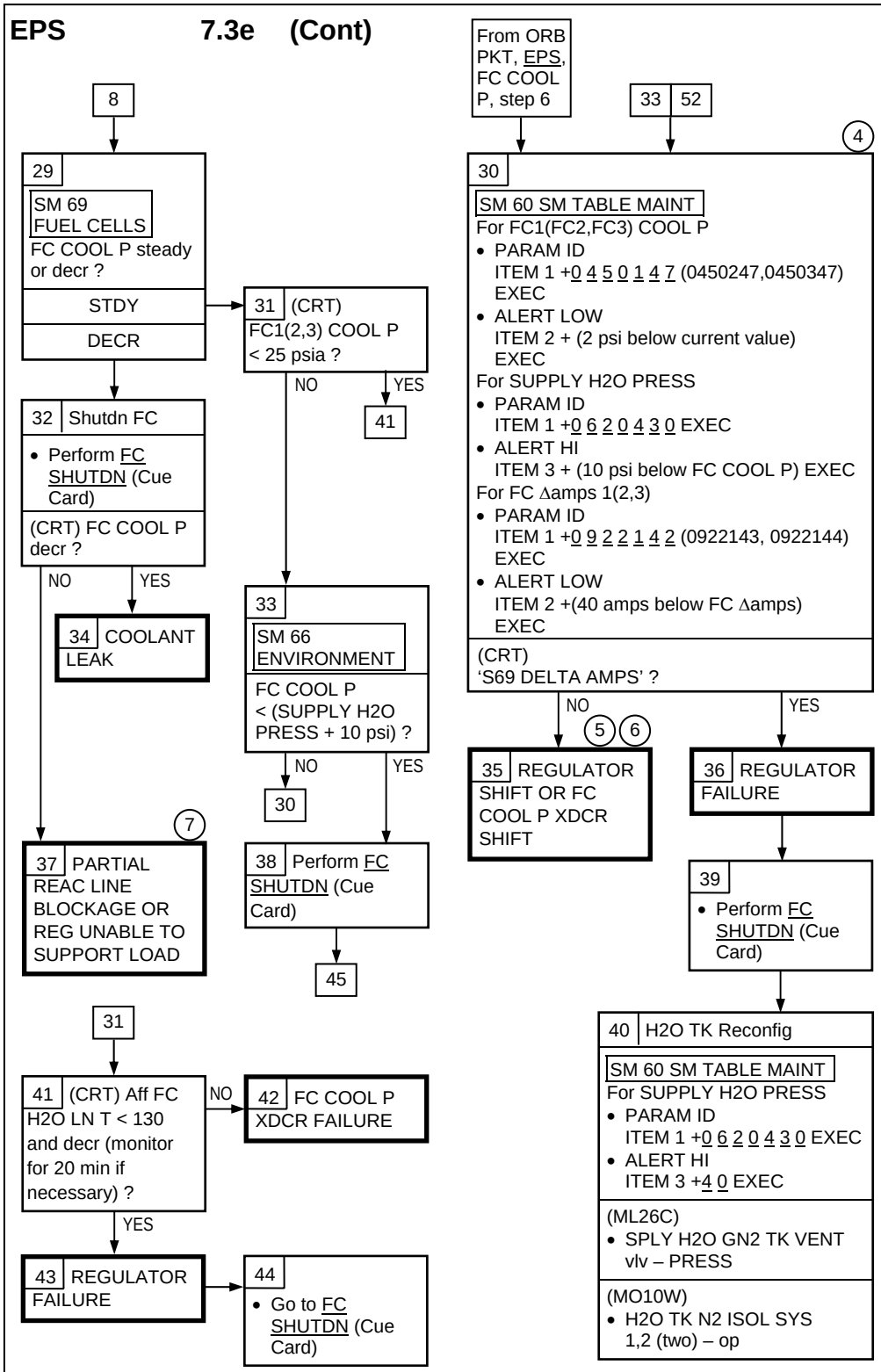

(4) Possible KOH in O2 sys. Do not purge suspect FC until nominal performance at this pressure demonstrated for at least 6 hr

(5) Drop in FC volts vs amps performance that corresponds to new pressure would indicate Regulator shift. If reqd, update FC V-I Curve, FUEL CELL V-I PERFORMANCE PLOT (ORB OPS, EPS), with new nominal data after next purge

(6) For Regulator shift, future FC ops would depend on SPLY H2O TK QTY, FES ops requirement, and FC loads. Suspect FC can be open circuited and saved for entry

(7) FC may be usable if loads reduced to point where reactant demand can be met

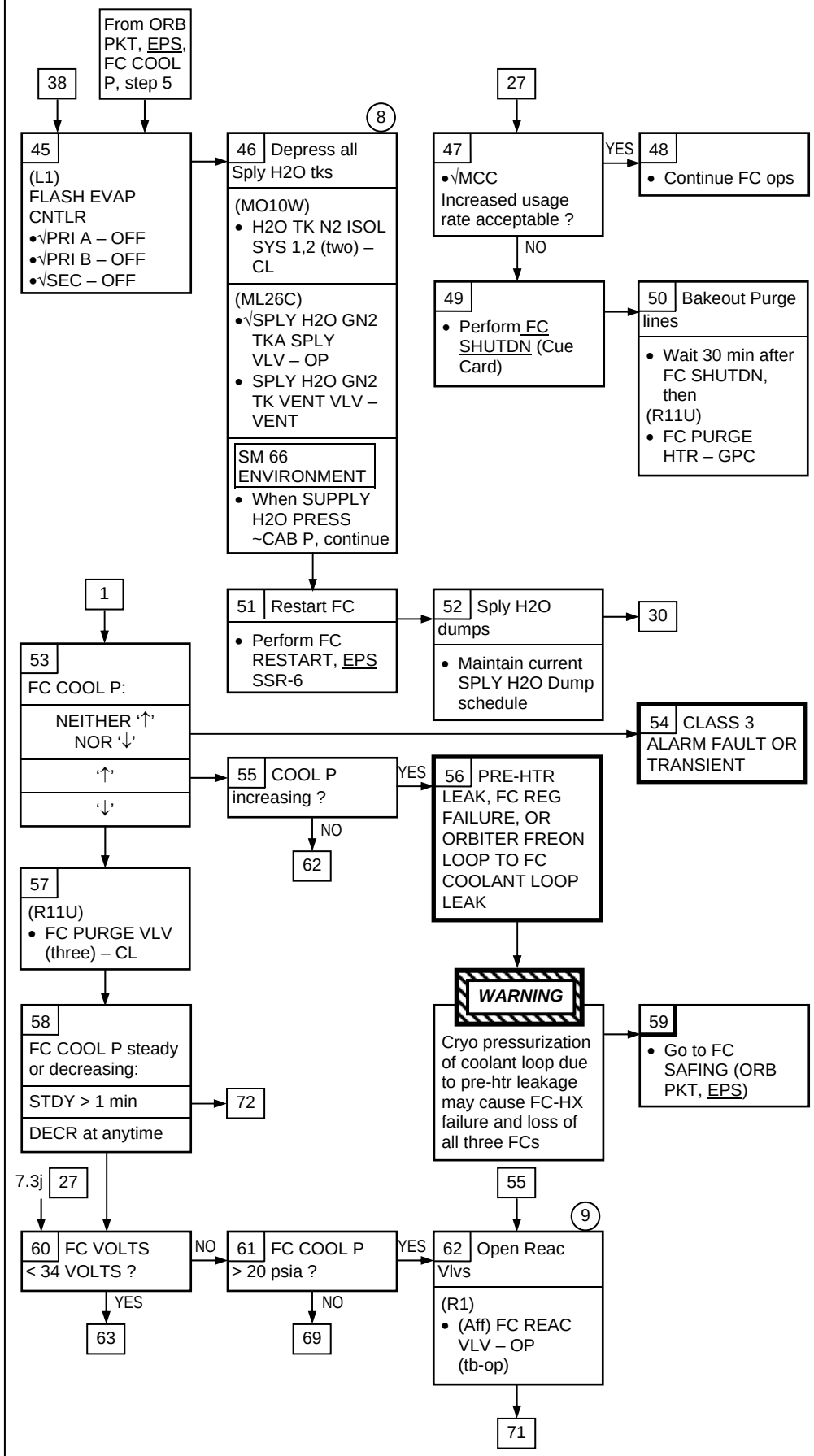

(8) For FES ops, SPLY H2O TKB, TKC, TKD may need to be repressurized. √MCC

(9) For Dual Gas Regulator shift high, reactants may be venting through purge line. If Reac Vlvs are not open, FC could evacuate (i.e., safe)

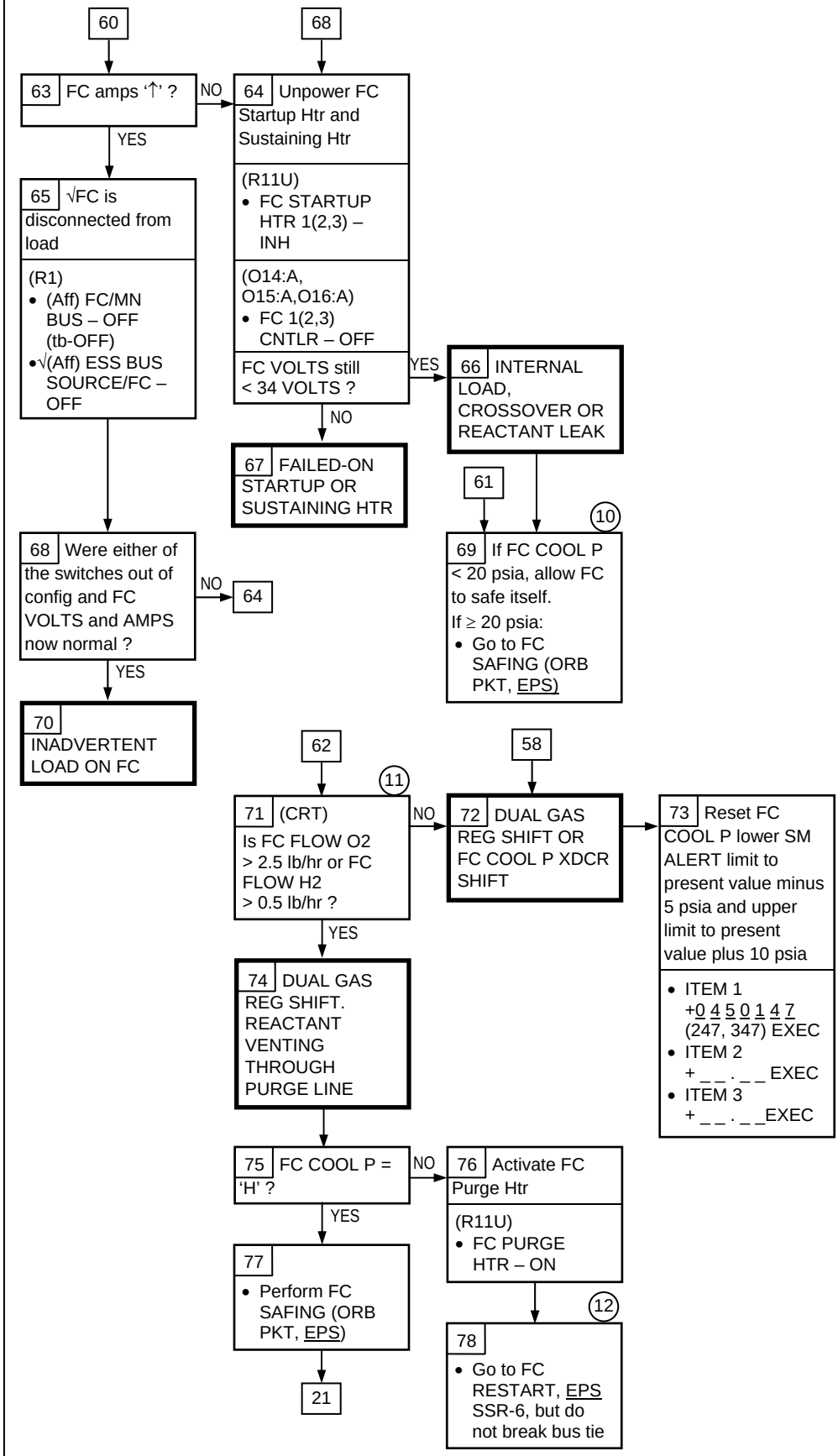

(10) At FC coolant pressure of less than 20 psia, electrolyte boiling may occur (i.e., KOH escaping from cell matrix); in addition, Dual Gas Regulators may not control O2/H2 relative pressures and crossover may result

(11) Typical values for FC purges

(12) With FC shutdn and no coolant flow, there exists no preheating capability of the incoming reactants. Continuous purge flow may freeze or damage regulator

7.3f FUEL CELL H2O LN T ↑↓

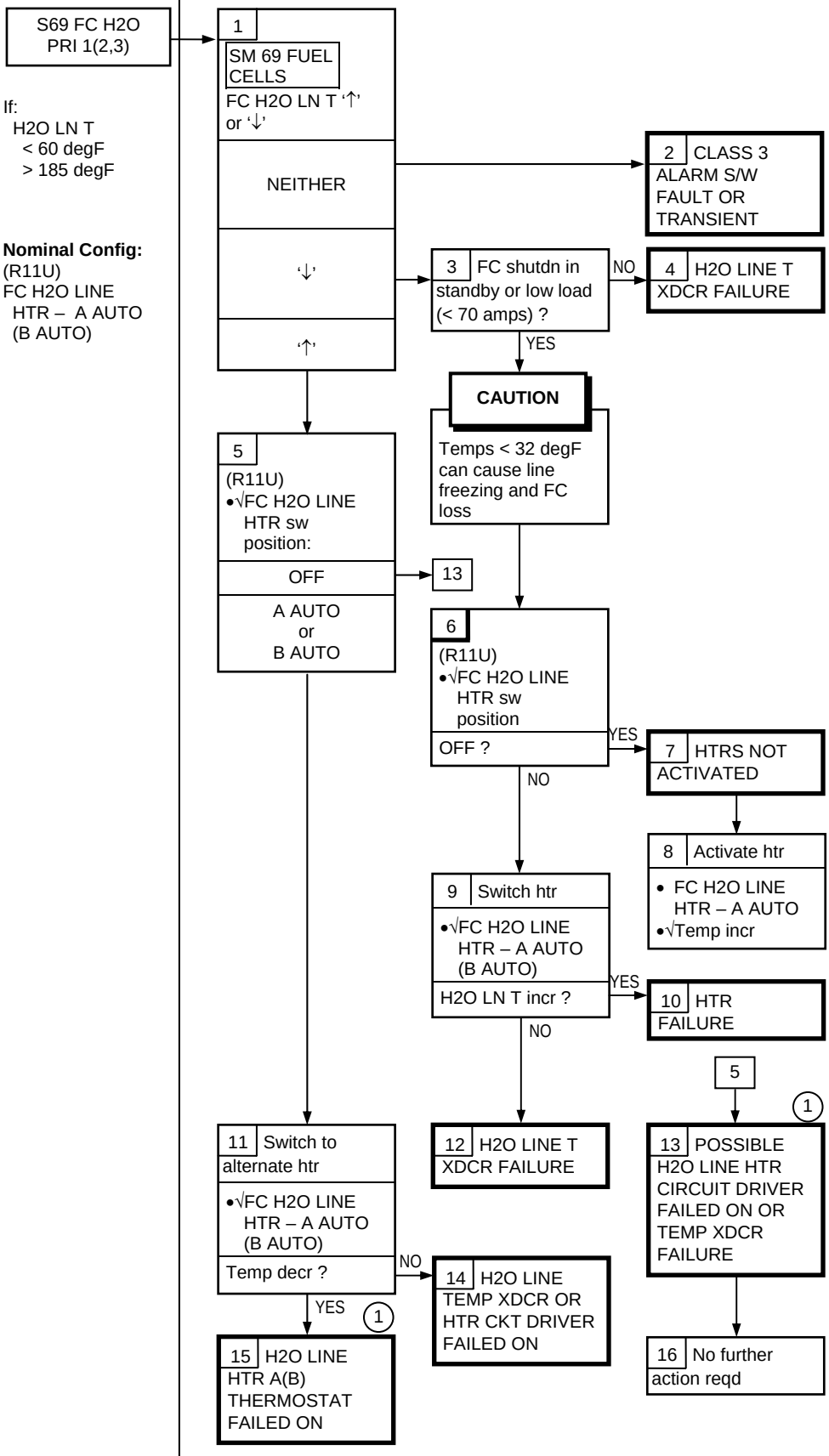

(1) Overtemp caused by driver or thermostat failure will only occur if FC shutdn in standby, or lightly loaded. Failure at normal loads not detectable

EPS

7.3g FUEL CELL H2O RLF VLV T ↑↓
FUEL CELL H2O RLF LINE T ↑↓

S69 FC H2O RLF 1(2,3)

If:
FC H2O RLF VLV T
< 60 degF
> 185 degF

S69 FC H2O RLF LINE

If:
FC H2O RLF LINE T
< 60 degF
> 185 degF

Nominal Config:
(R11U)
FC H2O LINE HTR – A AUTO
(B AUTO)

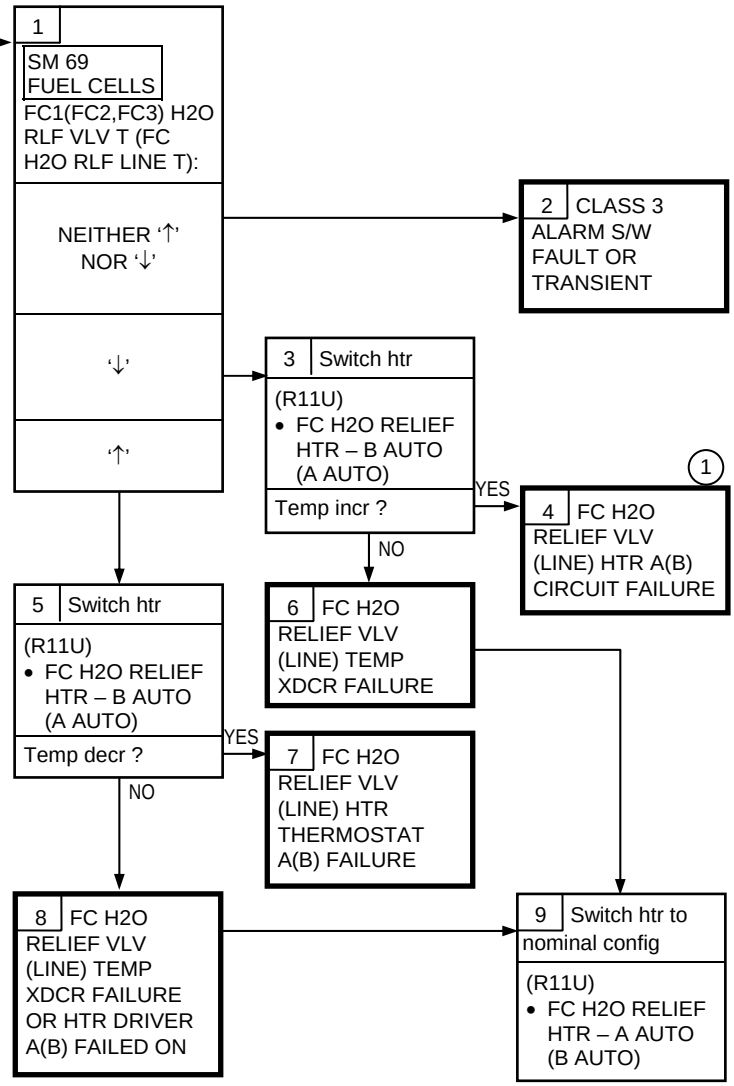

(1) Switching htrs isolated failed circuit

EPS

7.3i FUEL CELL O2(H2) PURGE LN T ↑

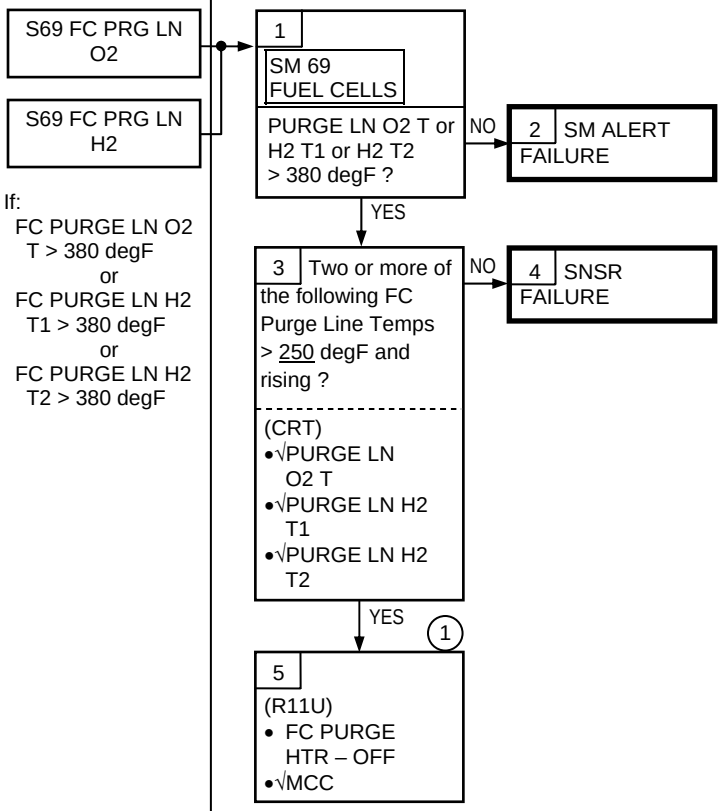

(1) If GPC Auto Purge in progress, expect FC PURGE SEQ msg

EPS

7.3j FUEL CELL O2(H2) FLOW ↑

S69 FC O2 FLOW 1(2,3)

S69 FC H2 FLOW 1(2,3)

If FC operating and:
- O2 FLOW > 11.1 pph
- H2 FLOW > 1.6 pph

11.1 pph O2 FLOW corresponds to ~370 amps plus 3.3 pph purge flow

1.6 pph H2 FLOW corresponds to ~370 amps plus 0.6 pph purge flow

If FC shutdn and:
- O2 FLOW > current C/W FDA upper limit
- H2 FLOW > current C/W FDA upper limit

1 Is FC shutdn ? YES → 25

NO

2 SM 69 FUEL CELLS FC O2(H2) FLOW '↑' ? NO → 1 → 3 CLASS 3 ALARM S/W FAULT, CLEARED BUS SHORT, OR TRANSIENT HIGH FLOW

YES

CAUTION

During purge, FC amps must be < 350 (430 for contingency ops) to avoid Dual Gas Regulator freezeup

2 → 4 Either manual or GPC purge sequence in progress ? NO →

YES

3 → 5 Close aff FC Purge Vlv

(R11U)
- FC PURGE VLVS 1(2,3) – CL

6
- Record Flows and Amps

Aff FC	O2 Flow	H2 Flow	Amps
_ _ _ _	_ _ _ _	_ _ _ _	_ _ _ _

9 → 8 PURGE FLOW PLUS HIGH FC DEMAND TRIPPED ALARM

CAUTION

During purge, FC amps must be < 350 (430 for contingency ops) to avoid Dual Gas Regulator freeze-up

10 If FC purge reqd
- Go to EPS SSR-8 or PRIORITY PWRDN (ORB PKT) to reduce FC AMPS to < 350 (< 430 for contingency ops) during purge

7 Compare Flow with Amps
- Compare FC AMPS with flow calculations as follows:
  O2 FLOW X 47.5 = _ _ _ _ _ _ _ _
  FC AMPS (± 50)
  H2 FLOW X 377 = _ _ _ _ _ _ _ _
  FC AMPS (± 60)

Do both flows correspond to FC AMPS ? YES → 9 (CRT) FC O2 (H2) FLOW '↑' ?

NO → 8

YES → 11 EXCESSIVE LOAD ON FC OR POSSIBLE BUS SHORT → 7.3b 13

NO →

12 FC PURGE HTR sw position:
- ON → 14
- GPC or OFF → 13

1 If bus short caused transient and short cleared, cockpit check should be made for open cbs or bus loss indications

2 If FC purge in progress, alarm may have tripped because of normal load plus purge flow. If one flowmeter previously failed, assume both flows high

3 If GPC PURGE SEQ selected, manually closing Purge Vlv stops purge and GPC will proceed with purging next FC selected for GPC purge. GPC may or may not alert crew. 'S68 FC PURGE 1(2,3)' msg occurs depending on when purge vlvs were manually closed

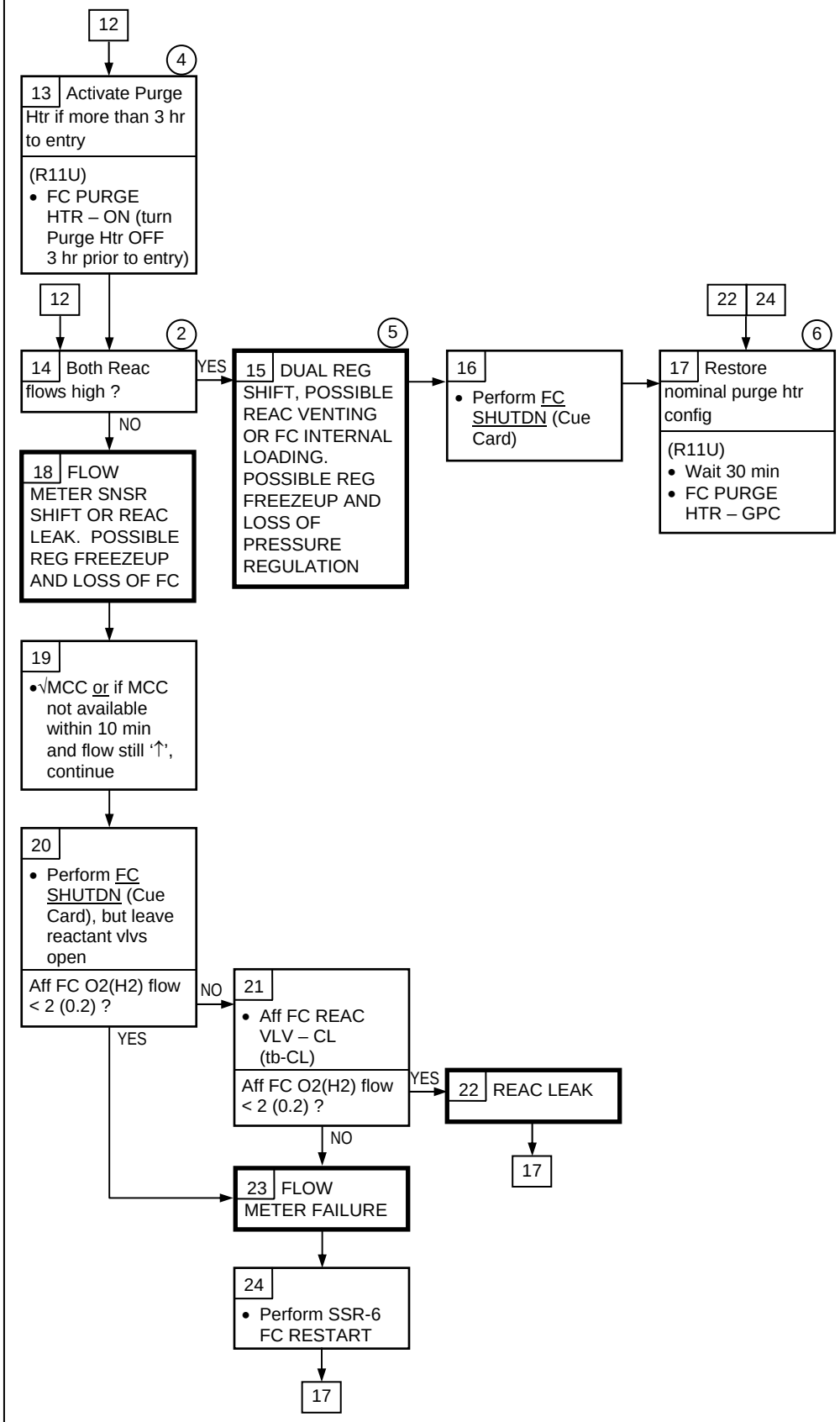

(2) If FC purge in progress, alarm may have tripped because of normal load plus purge flow. If one flowmeter previously failed, assume both flows high

(4) Turning htrs off prevents excessive heat during entry and possible htr element damage

(5) Reactant venting indication: Cool P ≥ 66 psia

(6) Htrs must remain on for 30 min to bakeout purge vent lines

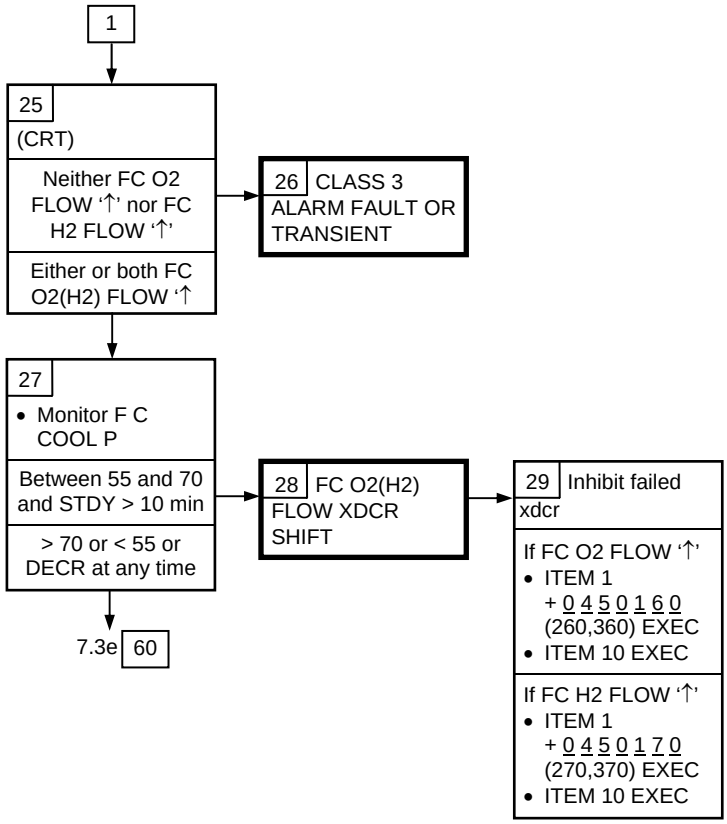
1
25
(CRT)
Neither FC O2 FLOW '↑' nor FC H2 FLOW '↑'
Either or both FC O2(H2) FLOW '↑
26 CLASS 3 ALARM FAULT OR TRANSIENT
27
• Monitor F C COOL P
Between 55 and 70 and STDY > 10 min
> 70 or < 55 or DECR at any time
28 FC O2(H2) FLOW XDCR SHIFT
29 Inhibit failed xdcr
If FC O2 FLOW '↑'
• ITEM 1 + 0 4 5 0 1 6 0 (260,360) EXEC
• ITEM 10 EXEC
If FC H2 FLOW '↑'
• ITEM 1 + 0 4 5 0 1 7 0 (270,370) EXEC
• ITEM 10 EXEC
7.3e 60

EPS

7.3k FUEL CELL RELIEF HTR SW FAIL

S69 FC H2O RLF HTR

If:

SM 69 FUEL CELLS

H2O RLF HTR SW – OFF

H2O RLF HTR SW – A/B

Nominal Config:
(R11U)
If pre-htr reconfig:
FC H2O RELIEF HTR – A AUTO

If post-htr reconfig:
FC H2O RELIEF HTR – B AUTO

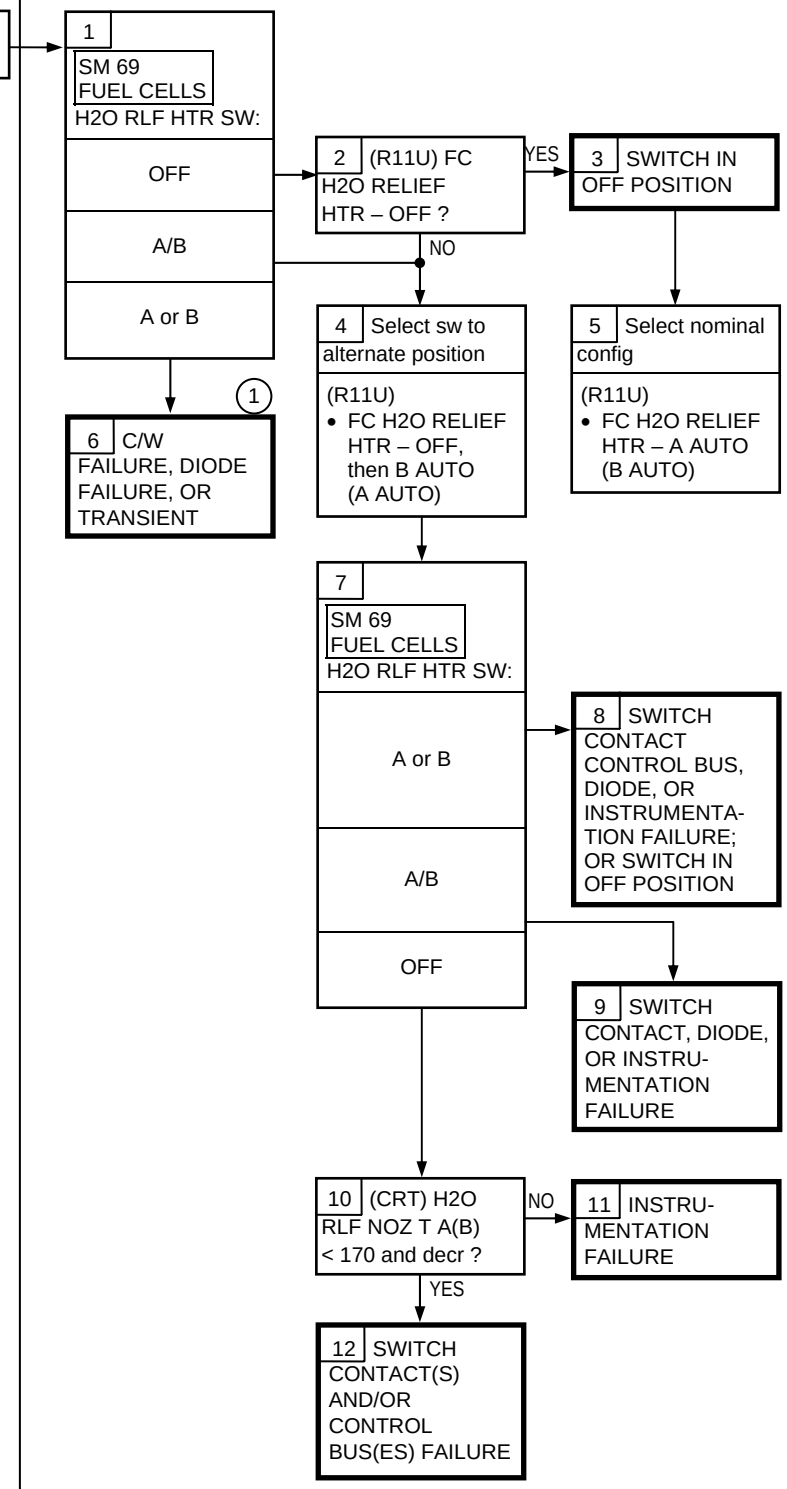

(1) Diode failure would be indicated if an A/B alarm occurred during nozzle htr ops. Alt htr could be selected to eliminate alarms

EPS

7.3l FUEL CELL ALT H2O RLF T ↑↓

S69 FC H2O ALT

If:
FC ALT H2O RLF T
< 60 degF
> 185 degF

Nominal Config:
(R11U)
FC H2O LINE
HTR – A AUTO
(B AUTO after Htr reconfig in ORB OPS)

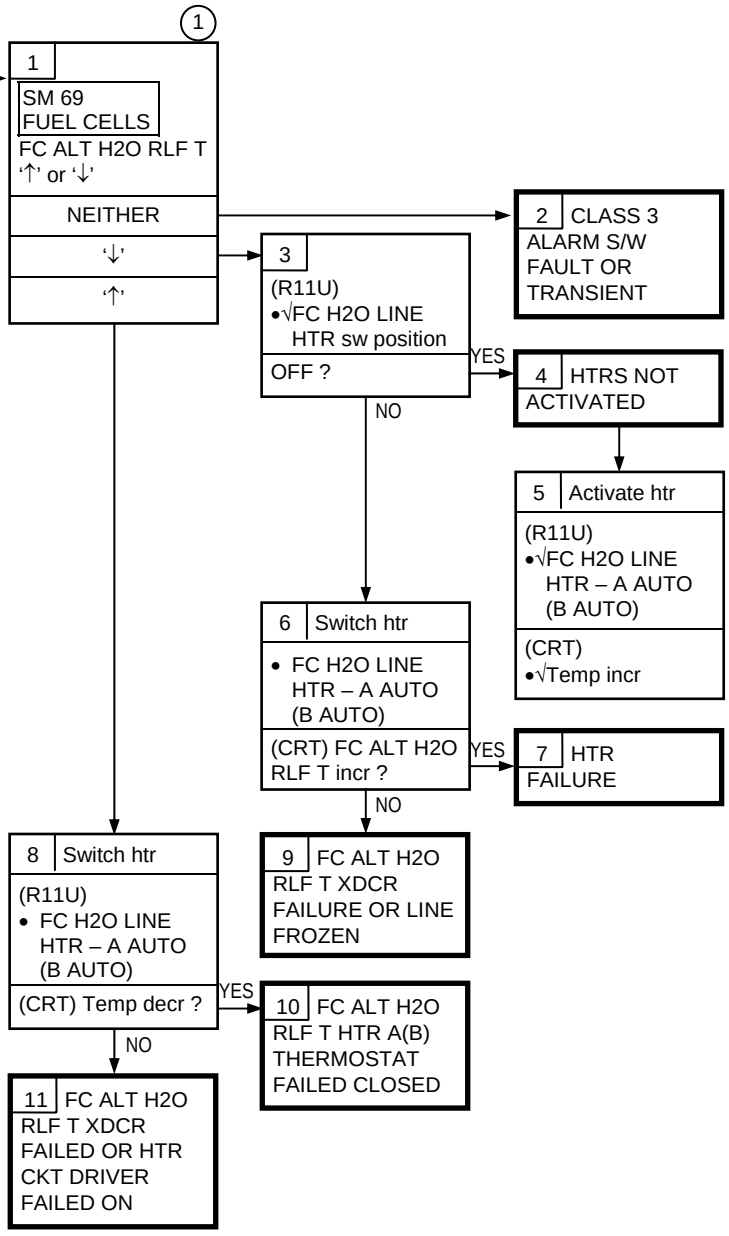

(1) FC ALT H2O RLF LINE T normally controlled to 70-90 degF

EPS

7.3m FC DELTA AMPS ↑↓

S69 DELTA AMPS 1(2,3) ↑↓

If:

SM 60 SM TABLE MAINT

FC DELTA AMPS (0922142, 0922143, 0922144) out of limits set manually or via TMBU

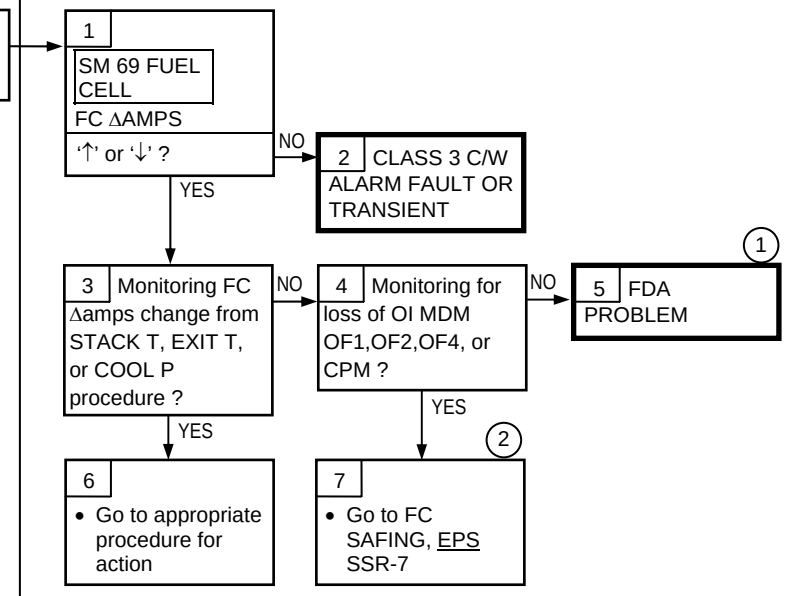

(1) Default limits are OSL, OSH

(2) A ΔAMPS shift of 12 amps between two tied FCs is equivalent to an ~300 mV degradation in one of the 96 cells of the FC. This degree of performance change, which is not related to load changes, may indicate an internal cell problem and, if allowed to continue, could lead to a crossover condition

This Page Intentionally Blank

This Page Intentionally Blank

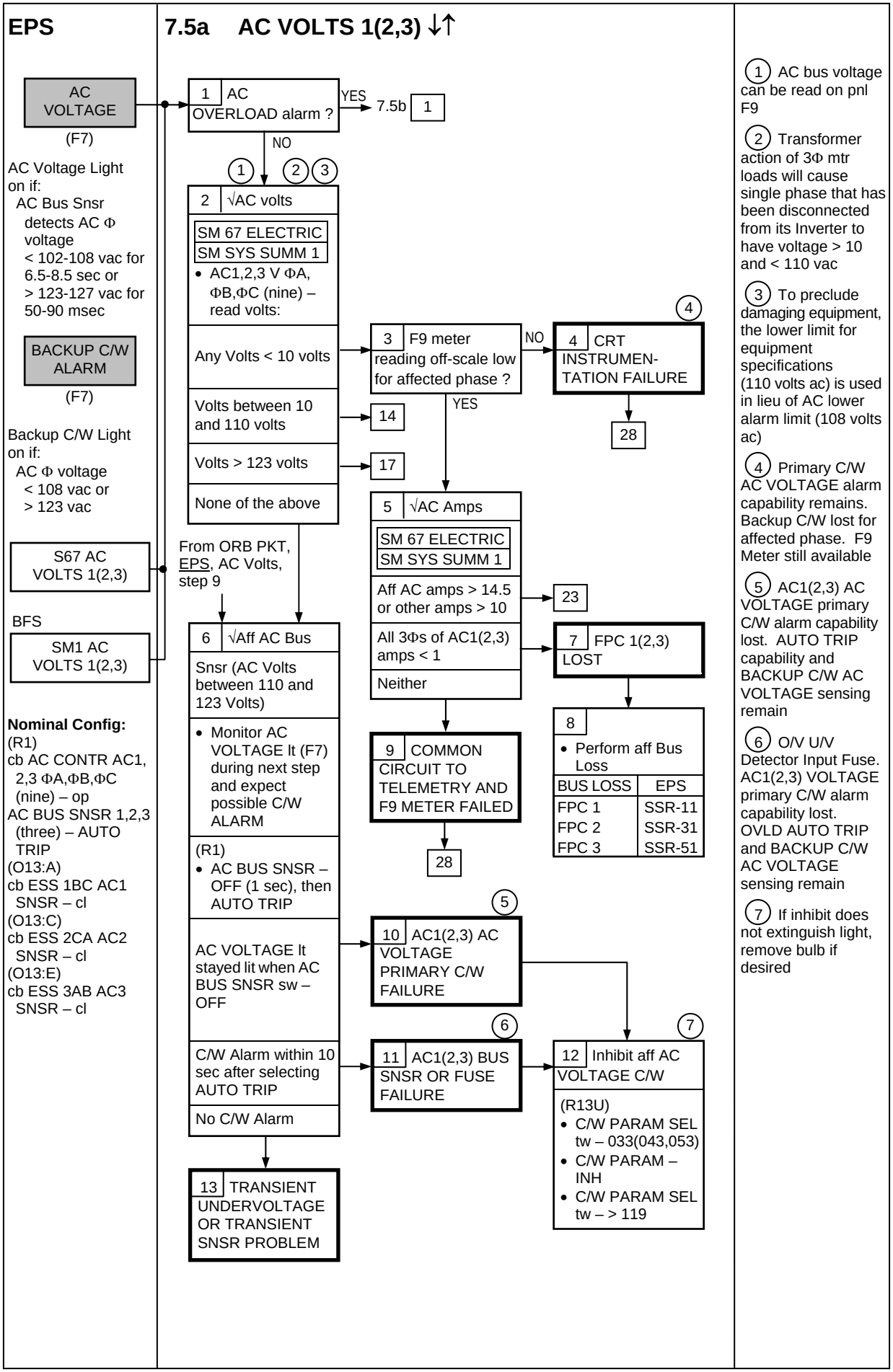
EPS
7.5a AC VOLTS 1(2,3) ↓↑
AC VOLTAGE
(F7)
AC Voltage Light on if:
AC Bus Snsr detects AC Φ voltage < 102-108 vac for 6.5-8.5 sec or > 123-127 vac for 50-90 msec
BACKUP C/W ALARM
(F7)
Backup C/W Light on if:
AC Φ voltage < 108 vac or > 123 vac
S67 AC VOLTS 1(2,3)
BFS
SM1 AC VOLTS 1(2,3)
Nominal Config:
(R1)
cb AC CONTR AC1, 2,3 ΦA,ΦB,ΦC (nine) – op
AC BUS SNSR 1,2,3 (three) – AUTO TRIP
(O13:A)
cb ESS 1BC AC1 SNSR – cl
(O13:C)
cb ESS 2CA AC2 SNSR – cl
(O13:E)
cb ESS 3AB AC3 SNSR – cl
1 AC OVERLOAD alarm ?
YES
7.5b 1
NO
2 √AC volts
SM 67 ELECTRIC
SM SYS SUMM 1
• AC1,2,3 V ΦA, ΦB,ΦC (nine) – read volts:
Any Volts < 10 volts
Volts between 10 and 110 volts
Volts > 123 volts
None of the above
3 F9 meter reading off-scale low for affected phase ?
NO
4 CRT INSTRUMEN-TATION FAILURE
28
YES
14
17
5 √AC Amps
SM 67 ELECTRIC
SM SYS SUMM 1
Aff AC amps > 14.5 or other amps > 10
23
All 3Φs of AC1(2,3) amps < 1
7 FPC 1(2,3) LOST
Neither
8
• Perform aff Bus Loss
BUS LOSS | EPS
FPC 1 | SSR-11
FPC 2 | SSR-31
FPC 3 | SSR-51
9 COMMON CIRCUIT TO TELEMETRY AND F9 METER FAILED
28
From ORB PKT, EPS, AC Volts, step 9
6 √Aff AC Bus
Snsr (AC Volts between 110 and 123 Volts)
• Monitor AC VOLTAGE lt (F7) during next step and expect possible C/W ALARM
(R1)
• AC BUS SNSR – OFF (1 sec), then AUTO TRIP
AC VOLTAGE lt stayed lit when AC BUS SNSR sw – OFF
10 AC1(2,3) AC VOLTAGE PRIMARY C/W FAILURE
C/W Alarm within 10 sec after selecting AUTO TRIP
11 AC1(2,3) BUS SNSR OR FUSE FAILURE
12 Inhibit aff AC VOLTAGE C/W
(R13U)
• C/W PARAM SEL tw – 033(043,053)
• C/W PARAM – INH
• C/W PARAM SEL tw – > 119
No C/W Alarm
13 TRANSIENT UNDERVOLTAGE OR TRANSIENT SNSR PROBLEM
1 AC bus voltage can be read on pnl F9
2 Transformer action of 3Φ mtr loads will cause single phase that has been disconnected from its Inverter to have voltage > 10 and < 110 vac
3 To preclude damaging equipment, the lower limit for equipment specifications (110 volts ac) is used in lieu of AC lower alarm limit (108 volts ac)
4 Primary C/W AC VOLTAGE alarm capability remains. Backup C/W lost for affected phase. F9 Meter still available
5 AC1(2,3) AC VOLTAGE primary C/W alarm capability lost. AUTO TRIP capability and BACKUP C/W AC VOLTAGE sensing remain
6 O/V U/V Detector Input Fuse. AC1(2,3) VOLTAGE primary C/W alarm capability lost. OVLD AUTO TRIP and BACKUP C/W AC VOLTAGE sensing remain
7 If inhibit does not extinguish light, remove bulb if desired

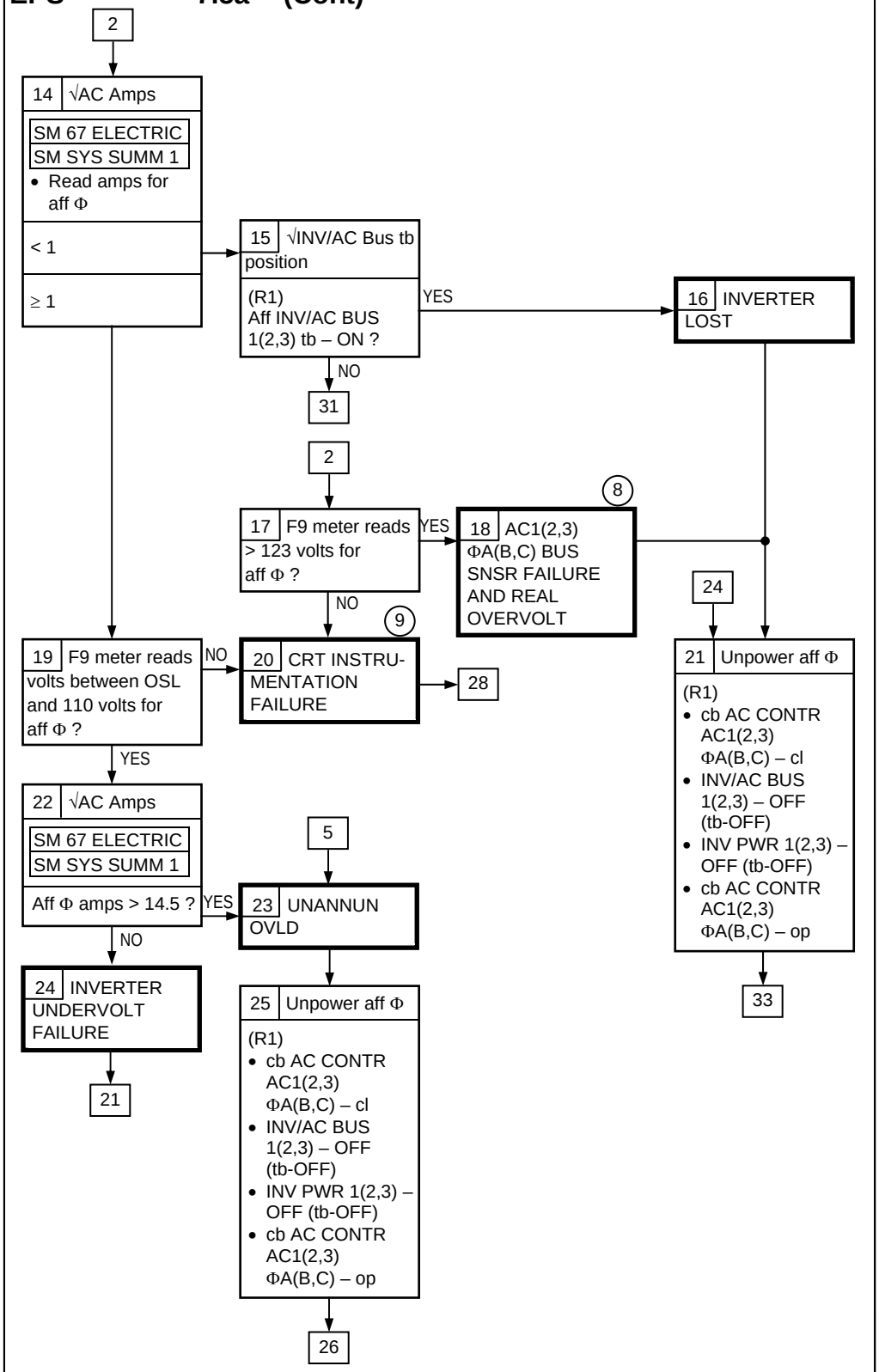

(8) Backup C/W AC Voltage sensing exist. Auto Trip capability suspect

(9) Still have primary C/W AC VOLTAGE alarm capability. Backup C/W lost for affected phase

(10) Pnl L4 cbs UTILITY PWR are 3Φ

25

26 √AC Volts and Amps

SM 67 ELECTRIC
SM SYS SUMM 1

Are other AC volts < 110 or AC amps > 14.5 ?

NO → 32

YES

27 Unpower Remaining Φ's of aff AC Bus

(R1)
- cbs AC CONTR AC1(2,3) (three) – cl
- INV/AC BUS 1(2,3) – OFF (tb-OFF)
- INV PWR 1(2,3) – OFF (tb-OFF)
- cbs AC CONTR AC1(2,3) (three) – op

→ 33

4 | 9 | 20

28 Is MCC able to TMBU BACKUP C&W ALERTS ?

NO → **29**

SM 60 SM TABLE MAINT

Inhibit aff AC volts
- ITEM 1 + _ _ _ _ _ _ _ EXEC
- ITEM 15 EXEC

MSIDs to enter in Item 1 blanks:

AC1	ΦA	0761500
AC1	ΦB	0761501
AC1	ΦC	0761502
AC2	ΦA	0761600
AC2	ΦB	0761601
AC2	ΦC	0761602
AC3	ΦA	0761700
AC3	ΦB	0761701
AC3	ΦC	0761702

YES

30
- MCC will inhibit aff AC volts

15

31
- √AC Amps

SM 67 ELECTRIC
SM SYS SUMM 1

For aff AC1(2,3) are other Φ amps > 10 ?

NO → 34

YES

26

(10)

32 Isolate shorted Φ

(L4, MA73C)
- Open all aff AC1(2,3) three – Φ ganged cbs and all aff AC1(2,3) ΦA(B,C) single – Φ cbs as follows:

BUS	L4	MA73C
AC1 3Φ	1	5
ΦA	16	5
ΦB	16	4
ΦC	13	5
AC2 3Φ	0	9
ΦA	15	5
ΦB	16	4
ΦC	14	5
AC3 3Φ	1	7
ΦA	15	3
ΦB	16	3
ΦC	13	3

21 | 27 | 36

33 Perform aff Bus Loss

BUS LOSS	EPS
AC1	SSR-110
ΦA	SSR-111
ΦB	SSR-112
ΦC	SSR-113
AC2	SSR-120
ΦA	SSR-121
ΦB	SSR-122
ΦC	SSR-123
AC3	SSR-130
ΦA	SSR-131
ΦB	SSR-132
ΦC	SSR-133

EPS 7.5a (Cont)

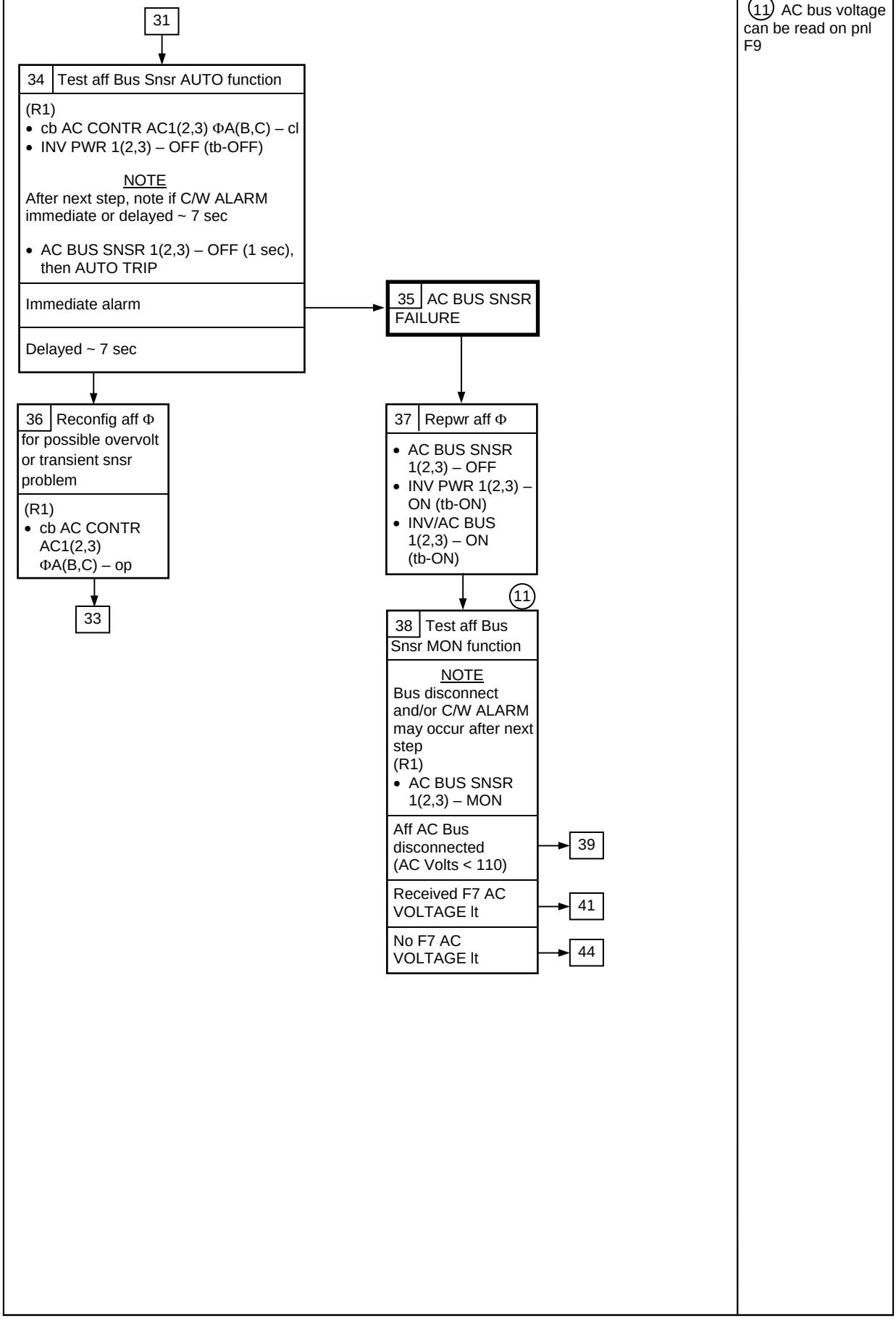
31
34 Test aff Bus Snsr AUTO function
(R1)
• cb AC CONTR AC1(2,3) ΦA(B,C) – cl
• INV PWR 1(2,3) – OFF (tb-OFF)
NOTE
After next step, note if C/W ALARM immediate or delayed ~ 7 sec
• AC BUS SNSR 1(2,3) – OFF (1 sec), then AUTO TRIP
Immediate alarm
Delayed ~ 7 sec
35 AC BUS SNSR FAILURE
36 Reconfig aff Φ for possible overvolt or transient snsr problem
(R1)
• cb AC CONTR AC1(2,3) ΦA(B,C) – op
33
37 Repwr aff Φ
• AC BUS SNSR 1(2,3) – OFF
• INV PWR 1(2,3) – ON (tb-ON)
• INV/AC BUS 1(2,3) – ON (tb-ON)
11
38 Test aff Bus Snsr MON function
NOTE
Bus disconnect and/or C/W ALARM may occur after next step
(R1)
• AC BUS SNSR 1(2,3) – MON
Aff AC Bus disconnected (AC Volts < 110)
39
Received F7 AC VOLTAGE lt
41
No F7 AC VOLTAGE lt
44
11 AC bus voltage can be read on pnl F9

EPS 7.5a (Cont)

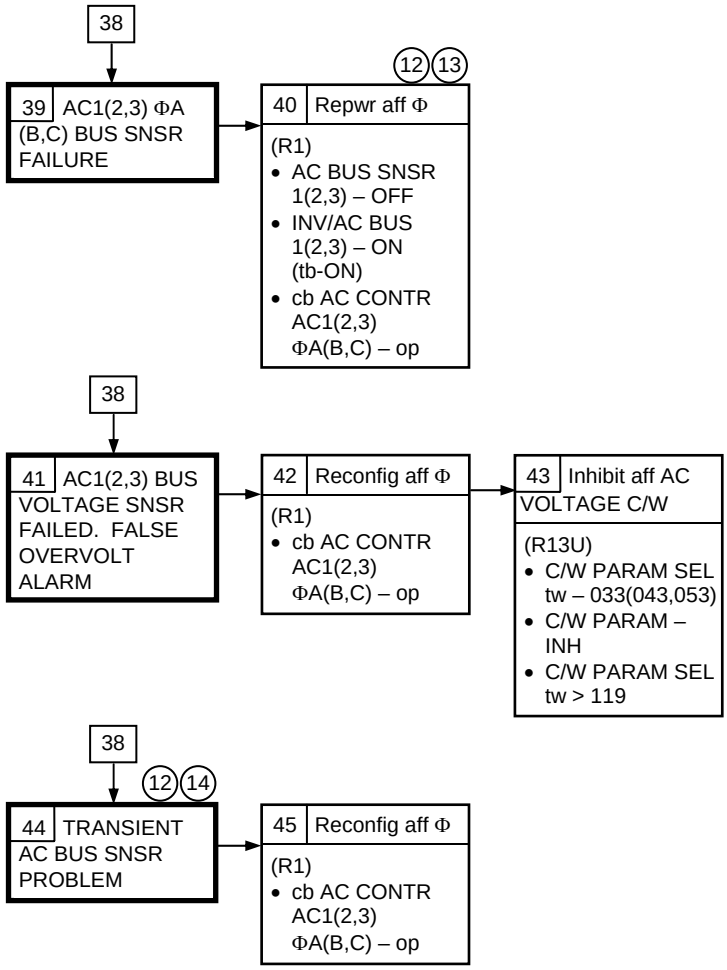

(12) AC1(2,3) AC VOLTAGE primary C/W alarm and AUTO TRIP capability lost. Backup C/W AC VOLTAGE sensing remains

(13) AC1(2,3) OVLD AUTO TRIP and C/W alarm capability lost

(14) AC1(2,3) OVLD AUTO TRIP capability lost. AC OVLD primary C/W alarm remains

7.5b AC OVLD 1(2,3) ↓

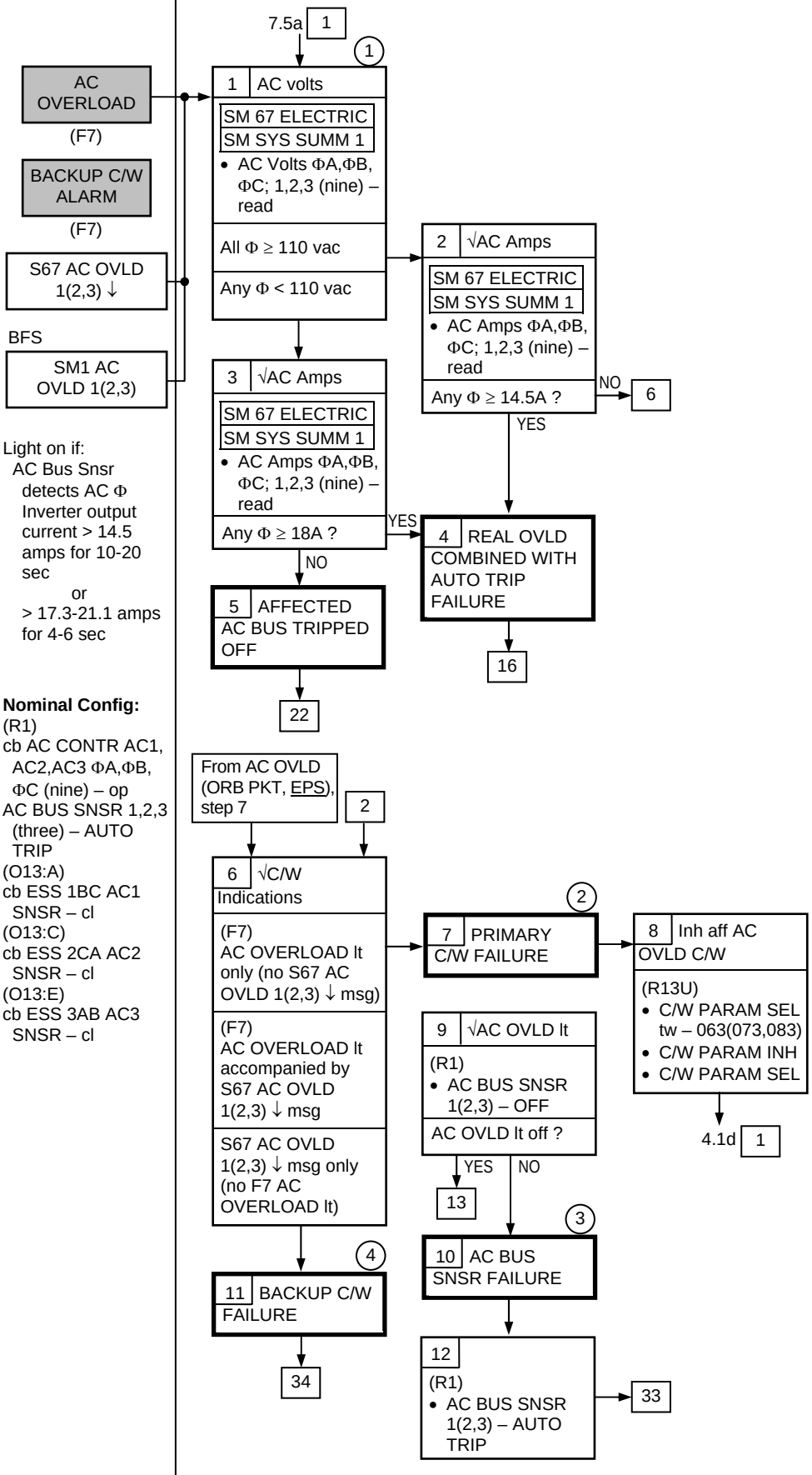

1 AC volts can be read on pnl F9

2 Lost AC1(2,3) Pri C/W OVLD alarm capability. B/U C/W alarm and Auto Trip capabilities remain

3 Lost AC1(2,3) Pri and B/U C/W OVLD alarm capability. Auto Trip capability remains

4 Lost AC1(2,3) B/U C/W OVLD alarm capability. Pri C/W alarm and Auto Trip capabilities remain

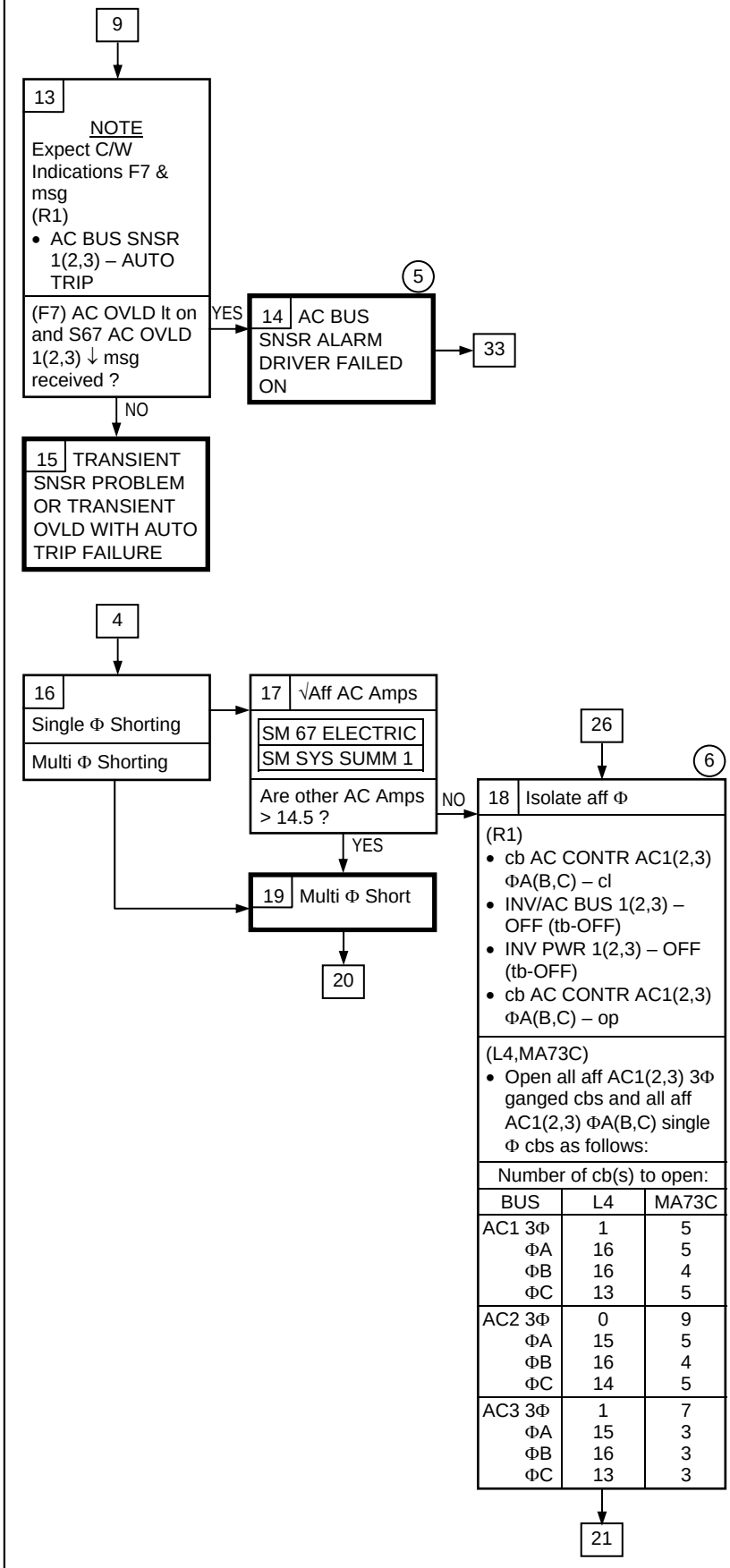

(5) Lost AC1(2,3) Pri and B/U C/W OVLD alarm capability. Auto Trip capability remains

(6) Pnl L4 cbs UTILITY PWR are 3Φ

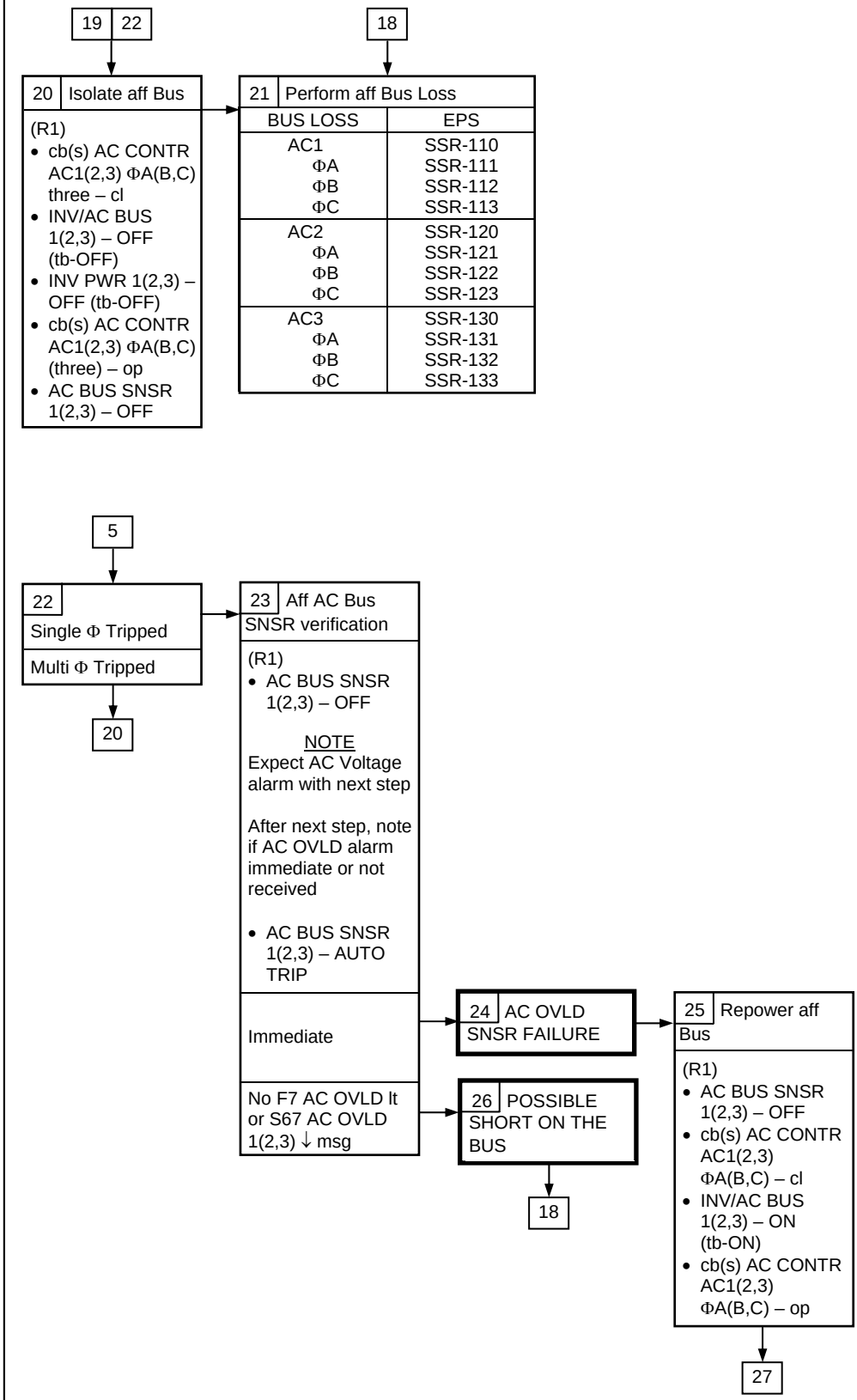
19 22
18
20 Isolate aff Bus
(R1)
• cb(s) AC CONTR AC1(2,3) ΦA(B,C) three – cl
• INV/AC BUS 1(2,3) – OFF (tb-OFF)
• INV PWR 1(2,3) – OFF (tb-OFF)
• cb(s) AC CONTR AC1(2,3) ΦA(B,C) (three) – op
• AC BUS SNSR 1(2,3) – OFF
21 Perform aff Bus Loss
BUS LOSS EPS
AC1 SSR-110
ΦA SSR-111
ΦB SSR-112
ΦC SSR-113
AC2 SSR-120
ΦA SSR-121
ΦB SSR-122
ΦC SSR-123
AC3 SSR-130
ΦA SSR-131
ΦB SSR-132
ΦC SSR-133
5
22
Single Φ Tripped
Multi Φ Tripped
20
23 Aff AC Bus SNSR verification
(R1)
• AC BUS SNSR 1(2,3) – OFF
NOTE
Expect AC Voltage alarm with next step
After next step, note if AC OVLD alarm immediate or not received
• AC BUS SNSR 1(2,3) – AUTO TRIP
Immediate
No F7 AC OVLD lt or S67 AC OVLD 1(2,3) ↓ msg
24 AC OVLD SNSR FAILURE
26 POSSIBLE SHORT ON THE BUS
18
25 Repower aff Bus
(R1)
• AC BUS SNSR 1(2,3) – OFF
• cb(s) AC CONTR AC1(2,3) ΦA(B,C) – cl
• INV/AC BUS 1(2,3) – ON (tb-ON)
• cb(s) AC CONTR AC1(2,3) ΦA(B,C) – op
27

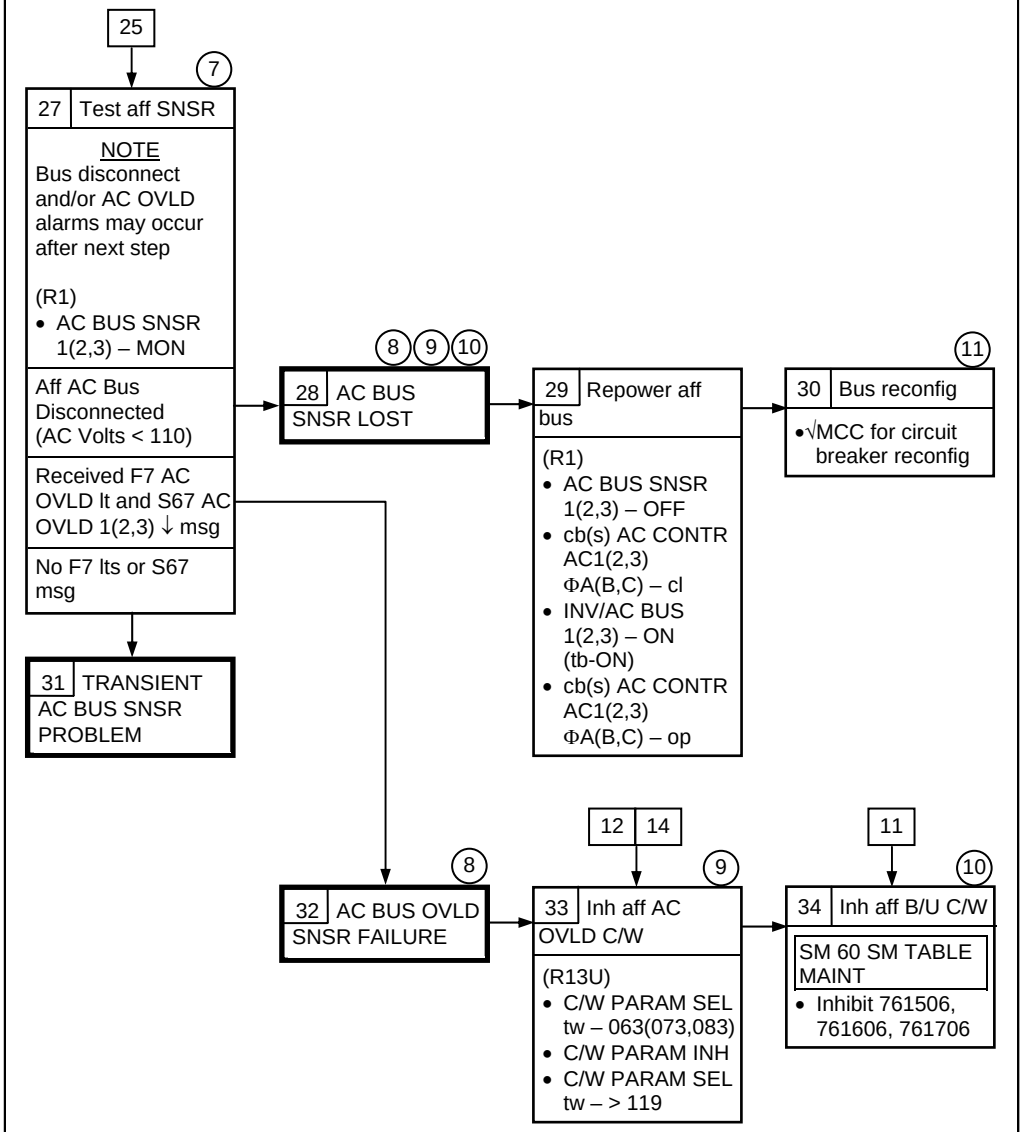

(7) AC Volts can be read on pnl F9

(8) Lost AC1(2,3) Auto Trip capability

(9) Lost AC1(2,3) Pri C/W OVLD alarm capability. S67 AC Volts and S67 AC Amps msgs remain

(10) Lost AC1(2,3) B/U C/W OVLD alarm capability

(11) Affected AC cbs could have been opened in the OPCL AC OVLD or AC Volts procedures, or any of the AC Bus Loss SSRs in the MAL

7.5c AC BUS CURRENT HIGH

SM ALERT

S67 AC AMPS 1(2,3)

If:
AC AMPS 1(2,3)
> 10 amps

1 √AC amps

SM SYS SUMM 1

More than one Φ has high amps ?

YES

NO

8

1

2 On aff Bus

(MA73C)
- cb – open all except rows E & F

Any current decr ?

YES

NO

3 CNTL LIMIT SW SIGNAL FAILURE CAUSES UNWANTED RUN/STALL MTR CURRENTS

2 3

4

(MA73C,L4,R11)
- cb – op and cl ΦA,ΦB,ΦC together on each 3Φ load noting AC amps change on aff bus

Normal cb current listed in parentheses

EQUIPMENT		ID (AMPS/Φ) AC1	AC2	AC3
(MA73C)				
:E	WCS FAN SEP PAYLOAD	1 (.9)*	2 (.9)* AC2 (0)*	AC3 (< 1.7)
(L4)				
UTILITY PWR (3Φ cb)		(0)		(0)
:C	FC PUMPS	1 (.8)	2 (.8)	3 (.8)
:D	C,R ENG	C (< 1.6)*	C (< 1.6)*	R (< 1.6)*
:E	R,L ENG	R (< 1.6)*	L (< 1.6)*	L (< 1.6)*
:F	H2O LOOP PUMP	1A/2 (1.0)*	1B (1.0)*	2 (1.0)
:G	AV BAY FAN	1A (.9)*	1B (.9)	3A (.9)*
:H	AV BAY FAN	3B (.9)	2A (.9)	2B (.9)*
:I	IMU FAN	A (.2)*	B (.2)	C (.2)*
:J	HUM SEP	A (.3)*	B (.3)	
:K	CAB FAN		B (1.7)*	A (1.7)
:M,N	FREON LOOP PUMP	1A (1.7)* 2B (1.7)	1B (1.7)	2A (1.7)*

(CRT) Any AC amps excessive?

NO

YES

4

5 EXCESSIVE 3Φ LOAD ON AC1(2,3)

18

6 CURRENT LIMITED SHORT OR EXCESSIVE MTR LOAD

12

7

(MA73C)
- cb ΦA,ΦB,ΦC of each load – cl together while watching for AC amps change on aff bus
- cb – cl all except those feeding excess load

(1) All (MA73C) 3Φ loads are transient loads normally active as response to flight crew/GPC command. All loads are on < 2 min except row E

(2) Normally '*' not active

(3) Some mtrs have thermal cutoff sw that may remove load unexpectedly. In this event, block 4 will be inconclusive

(4) AC Bus Snsr fused at 3 amps/Φ. AC volt meter and telemetry signal are fused at .5 amps/Φ

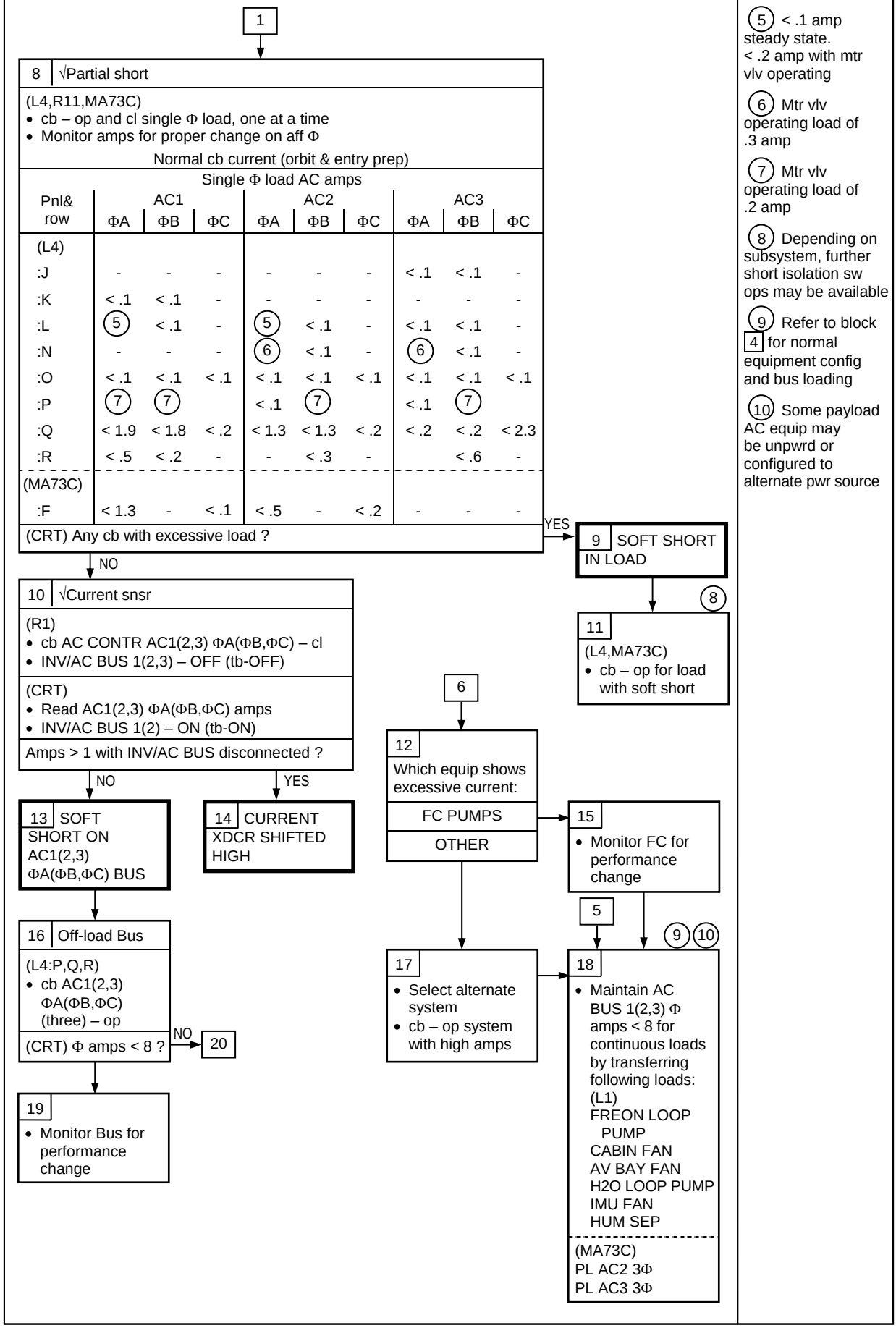

(5) < .1 amp steady state. < .2 amp with mtr vlv operating

(6) Mtr vlv operating load of .3 amp

(7) Mtr vlv operating load of .2 amp

(8) Depending on subsystem, further short isolation sw ops may be available

(9) Refer to block 4 for normal equipment config and bus loading

(10) Some payload AC equip may be unpwrd or configured to alternate pwr source

16

(11)

20	Isolate shorted Φ

(L4,MA73C)

- cb – open all AC1(2,3) ΦA(ΦB,ΦC) cbs (including 3Φ ganged cbs) on failed bus

Number of cb to open:

BUS	L4	MA73C
AC1 3Φ	1	5
ΦA	16	5
ΦB	16	4
ΦC	13	5
AC2 3Φ	0	9
ΦA	15	5
ΦB	16	4
ΦC	13	5
AC3 3Φ	1	7
ΦA	15	3
ΦB	16	3
ΦC	12	3

(R1)

- cb AC CONTR AC1(2,3) ΦA(ΦB,ΦC) – cl

NOTE
Expect C/W AC VOLTAGE alarm after next step

- INV/AC BUS 1(2,3) – OFF (tb-OFF)
- INV PWR 1(2,3) – OFF (tb-OFF)
- cb AC CONTR AC1(2,3) ΦA(ΦB,ΦC) – op

BUS LOSS	EPS
AC1 ΦA	SSR-111
ΦB	SSR-112
ΦC	SSR-113
AC2 ΦA	SSR-121
ΦB	SSR-122
ΦC	SSR-123
AC3 ΦA	SSR-131
ΦB	SSR-132
ΦC	SSR-133

(11) If shorted bus is AC2(3), CABIN FAN B(A) will not start on remaining two phases

CRYO TABLE A
CRYO HEATER SWITCH PROCEDURAL NOMENCLATURE

OXYGEN

HEATER SET		FIVE-TK SET		FIVE-TK SET + PALLET	
O2 TK 1	A	(R1)	O2 TK1 HTR A	(R1)	O2 TK1 HTR A
	B		O2 TK1 HTR B		O2 TK1 HTR B
O2 TK 2	A		O2 TK2 HTR A		O2 TK2 HTR A
	B		O2 TK2 HTR B		O2 TK2 HTR B
O2 TK 3	A		O2 TK3 HTR A		O2 TK3 HTR A
	B		O2 TK3 HTR B		O2 TK3 HTR B
O2 TK 4	A	(A11)	CRYO TK4 HTR O2 A	(A11)	CRYO TK4 HTR O2 A
	B		CRYO TK4 HTR O2 B		CRYO TK4 HTR O2 B
O2 TK 5	A	(A15)	CRYO TK5 HTR O2 A	(A15)	CRYO TK5 HTR O2 A
	B		CRYO TK5 HTR O2 B		CRYO TK5 HTR O2 B

HYDROGEN

HEATER SET		FIVE-TK SET		FIVE-TK SET + PALLET	
H2 TK 1	A	(R1)	H2 TK1 HTR A	(R1)	H2 TK1 HTR A
	B		H2 TK1 HTR B		H2 TK1 HTR B
H2 TK 2	A		H2 TK2 HTR A		H2 TK2 HTR A
	B		H2 TK2 HTR B		H2 TK2 HTR B
H2 TK 3	A		H2 TK3 HTR A		H2 TK3 HTR A
	B		H2 TK3 HTR B		H2 TK3 HTR B
H2 TK 4	A	(A11)	CRYO TK4 HTR H2 A	(A11)	CRYO TK4 HTR H2 A
	B		CRYO TK4 HTR H2 B		CRYO TK4 HTR H2 B
H2 TK 5	A	(A15)	CRYO TK5 HTR H2 A	(A15)	CRYO TK5 HTR H2 A
	B		CRYO TK5 HTR H2 B		CRYO TK5 HTR H2 B

EPS

7.6b CRYO O2(H2) PRES, TK P ↓↑

O2(H2) PRESS

BACKUP C/W ALARM

(F7)

If:
O2(H2) CNTL (TK) P
> 985(293.8) psia
< 540(153) psia

S68 O2(H2) CNTL P 1(2,3,4,5)

BFS
SM2 CRYO O2 (H2) PRES

SM ALERT

S68 O2(H2) TK P 1(2,3,4,5)

If:
O2(H2) TK P:
> 960(283)
< 740(189.3) with AUTO htrs
< 575(165) with htr not in AUTO

If:
H2 TK P (CNTL P)
< 165.6 (153)

Nominal Config:
(O13)
cb ESS 2CA,1BC CRYO CNTLR O2,H2 TK1,2 (four) – cl
cb ESS 2CA,1BC CRYO QTY O2,H2 TK1,2 (four) – cl
(ML86B:G)
cb ESS 3AB,1BC, 2CA CRYO CNTLR O2,H2 TK3 (two) – cl
cb ESS 3AB,1BC, 2CA CRYO QTY O2,H2 TK3 (two) – cl
(O14:C)
cb MNA CRYO O2 HTR TK1 SNSR 1 – cl

(Cont in notes column)

From ORB PKT, EPS, CRYO O2(H2) PRESS/ TEMP HIGH, step 3

1

1
SM 68 CRYO SYSTEM
SM SYS SUMM 2
- Aff O2(H2) TK HTR (two) – OFF
- O2(H2) MANF VLV TK1,2 (two) – OP (tb-OP)

Aff P and TK P agree ? YES → 10

NO

2

2 Which pressure (P or TK P) disagrees with MANF P:
- TK P → 3 INSTRUMENTATION FAILURE. OPS NORMAL
- P

3

4
- P ↑ → 5 INSTRUMENTATION FAILURE → 6 •√MCC for cryo config
- P ↓

ORB PKT, EPS, CRYO O2(H2) LEAK, step 1

7 O2 and H2 P ↓ ? NO → 24

YES

4

8 LOSS OF ESS, SUBBUS COMMON TO BOTH AFF O2 AND H2 HTR CNTLRS. AFF TK QTYS ALSO LOST

9

(1) Use pnl O2 meter for TK P if SM2 not available

(2) O2(H2) TK AUTO Control pressure ranges:
TK 1/2:
803-854 (200-226)
TK 3-5:
832-882 (217-243)

(3) AUTO htr ops still available with failure of this Xdcr

(4) Loss of ESS bus, cb failed open, or loss of htr cntlr results in P Xdcr reading off-scale low (O2: 515 psia, H2: 145 psia) and loss of AUTO capability

Nominal Config:
(Cont):
(O15:C)
cb MNB CRYO O2 HTR TK2 SNSR 2 – cl
(O16:C)
cb MNC CRYO O2 HTR
TK1 SNSR 2 – cl
TK2 SNSR 1 – cl
(ML86B:F)
cb MNA,MNB,MNC CRYO O2 HTR TK3,4,5 SNSR 1,2 (six) – cl
(A15)
cb PALLET ESS 1BC,2CA TK7,8,9 CNTLR O2,H2 (eight) – cl
cb PALLET ESS 1BC,2CA TK7,8,9 QTY O2,H2 (eight) – cl
cb PALLET MNA TK6-9 O2 SNSR 1 (four) – cl
cb PALLET MNB TK6-9 O2 SNSR 2 (four) – cl
(R14:B)
cb MNA,MNB,MNC PALLET DSC 1A/2B,1B,2C (three) – cl

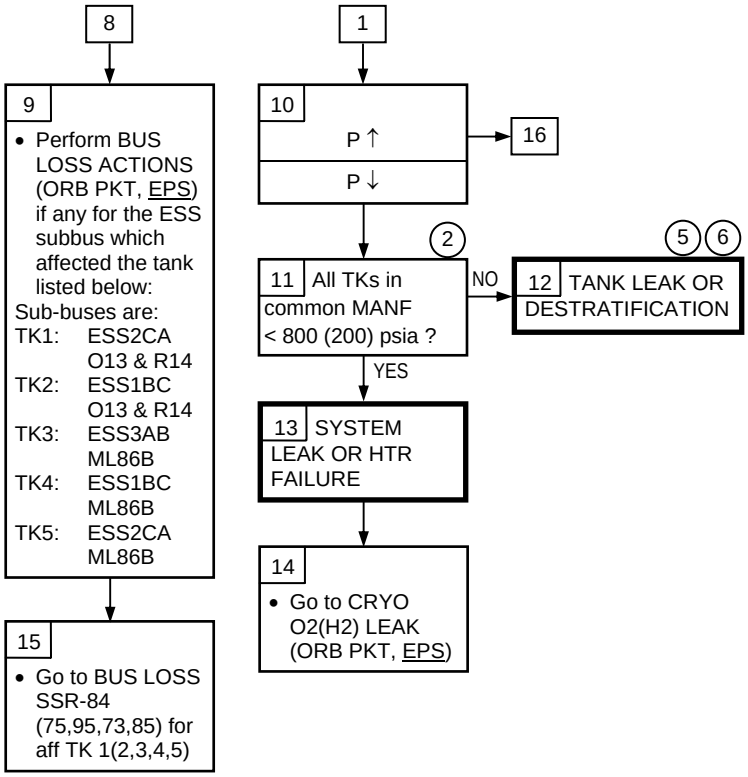

(2) O2(H2) TK AUTO Control pressure ranges:TK 1/2:
803-854 (200-226)
TK 3-5:
832-882 (217-243)

(5) For destratified tk, natural heat leak into tk will eventually build pressure back up

(6) Operating htrs below critical pressure could be hazardous in presence of two-phase fluid. Therefore, htrs are left deactivated

EPS 7.6b (Cont)

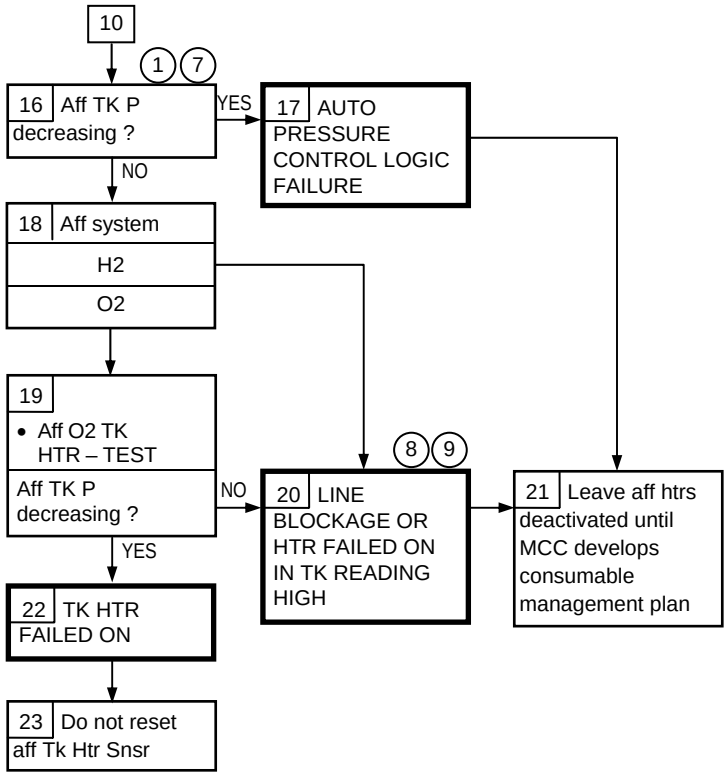

(1) Use pnl O2 meter for TK P if SM2 not available

(7) Once htrs are deactivated in tk with high P, the P should decrease to normal value

(8) Even with htrs OFF, environmental heat leak will eventually cause tk relief vlv to crack

(9) Failed-on htr may require temporarily dropping a main bus until IFM 'CRYO TANK HEATER FUSE REMOVAL' can be performed. If pressure exceeds 1,000(300) psi, overboard relief vlv may open

EPS 7.6b (Cont)

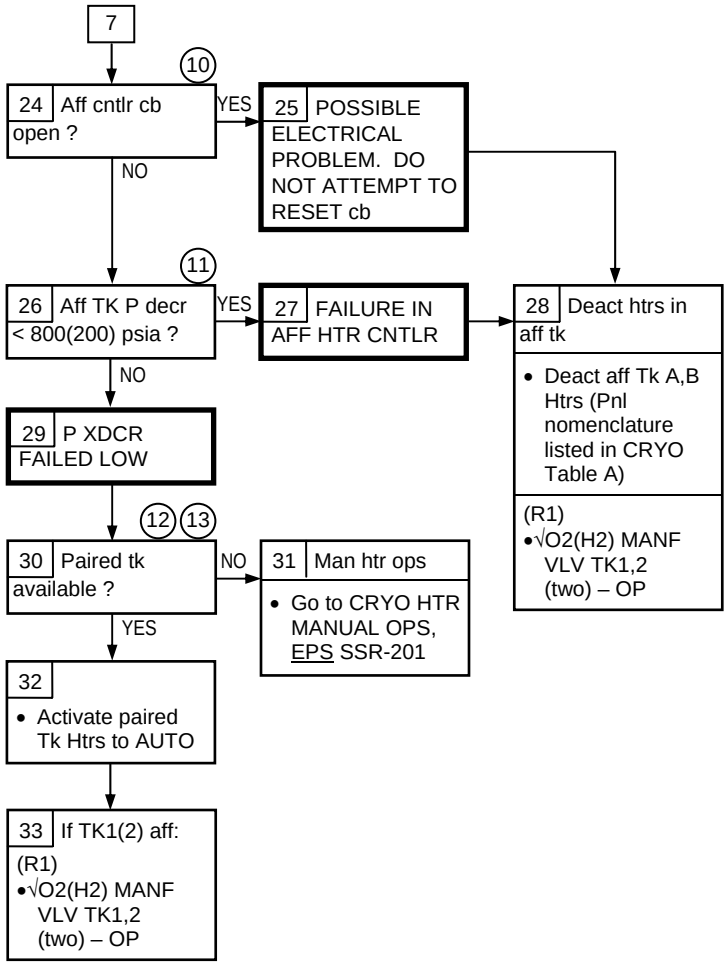

(10) Check nominal config column for cb location

(11) Could take 3 hr to bleed pressures down

(12) For P xdcr failed low, tk can be operated in AUTO only if tk can run simultaneously with a tk paired within its logic. Logic pairings for P controllers are:
1,2
3,4
TK5 not paired

(13) TKs 1,2 cannot be operated simultaneously if a manifold vlv is closed

EPS

7.6d O2(H2) MANF P ↓

S68 O2 MANF PRESS

S68 H2 MANF PRESS

BFS

SM2 CRYO O2 MANF

SM2 CRYO H2 MANF

If:
- O2 MANF P < 200 psia (740 psia for BFS)
- H2 MANF P < 150 psia (189.9 psia for BFS)

Nominal Config:
Refer to 7.6b

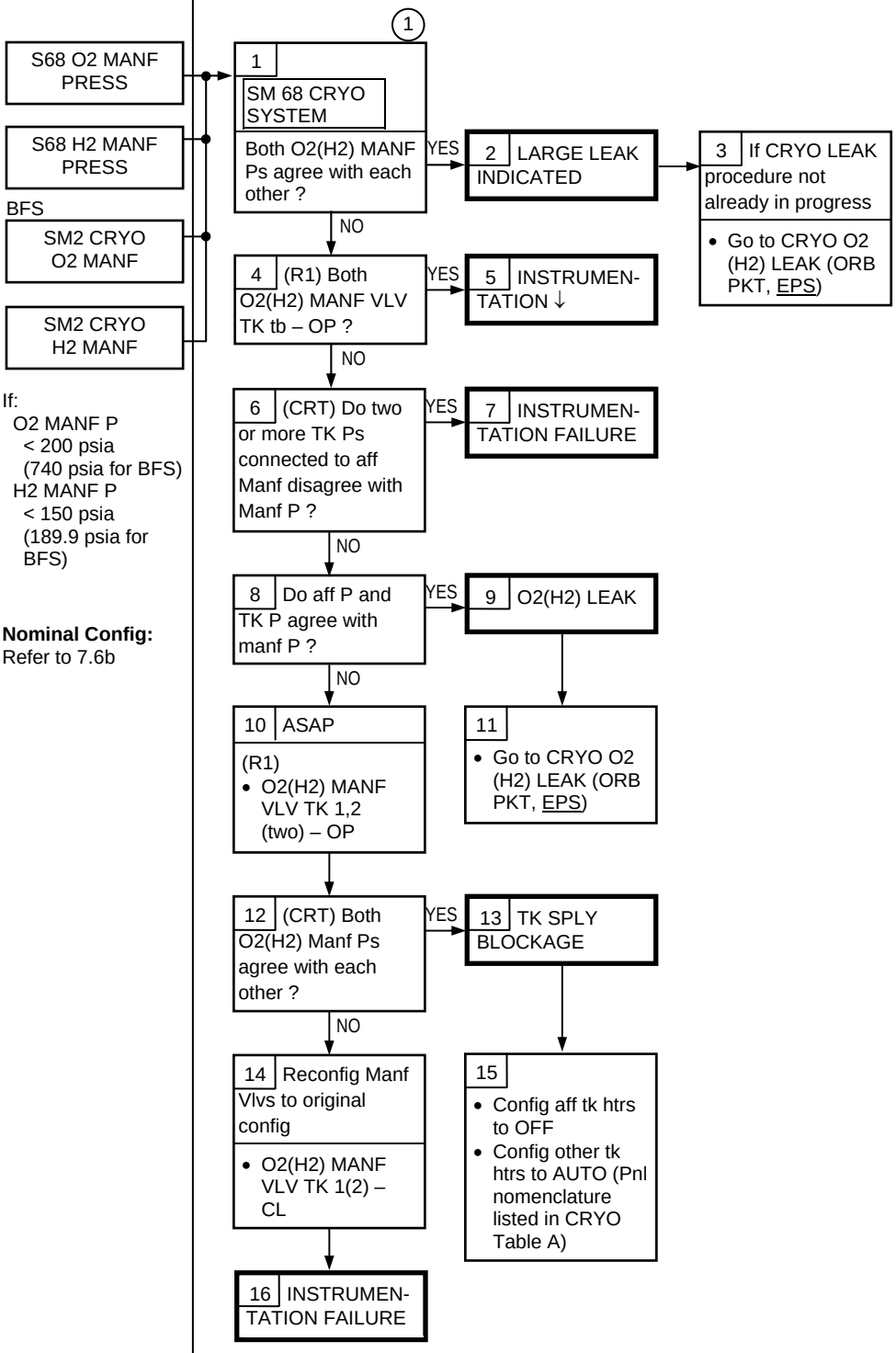

(1) Assumes both Manf vlvs are open. If indicative of continuing system problem, there would have been previous alarms for P and TK P low

EPS

7.6f H2 HTR T

From ORB PKT, EPS, CRYO O2(H2) PRESS/ TEMP HIGH, step 5

S68 H2 HTR T 1(2,3,4,5)

If:
H2 HTR T
> 210 degF

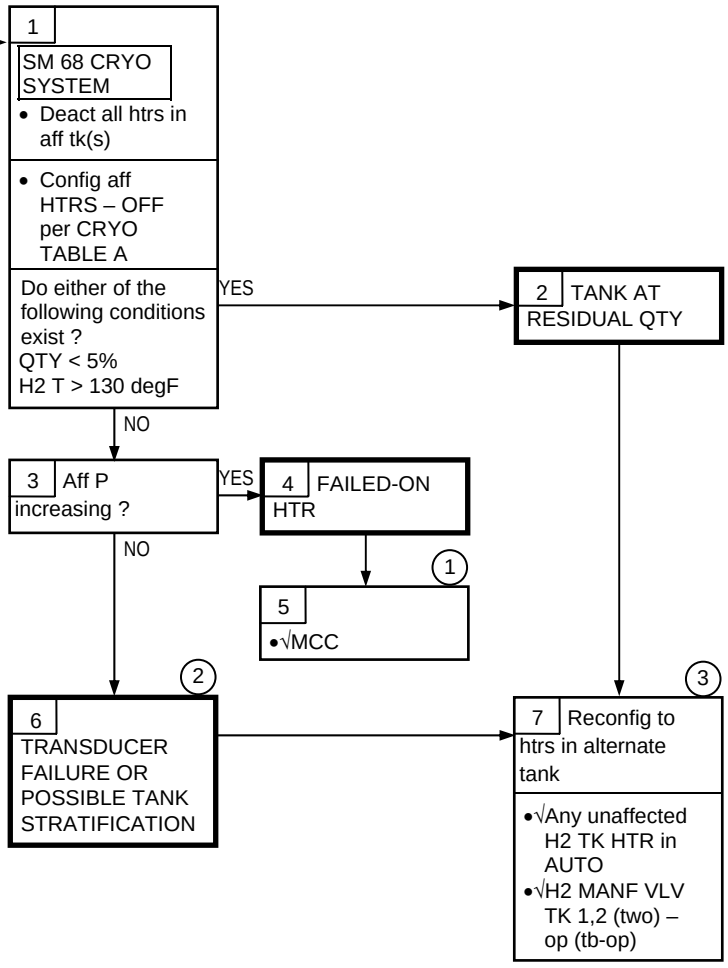

(1) Failed-on htr may require temporarily dropping a main bus until IFM 'CRYO TANK HEATER FUSE REMOVAL' can be performed. If pressure exceeds 300 psi, overboard relief valve may open

(2) Stratification normally occurs when htrs are operating for long periods of time and during periods of attitude holds

(3) MCC will determine cryo management plan

EPS

7.6k O2 HTR CUR SNSR = TRIP

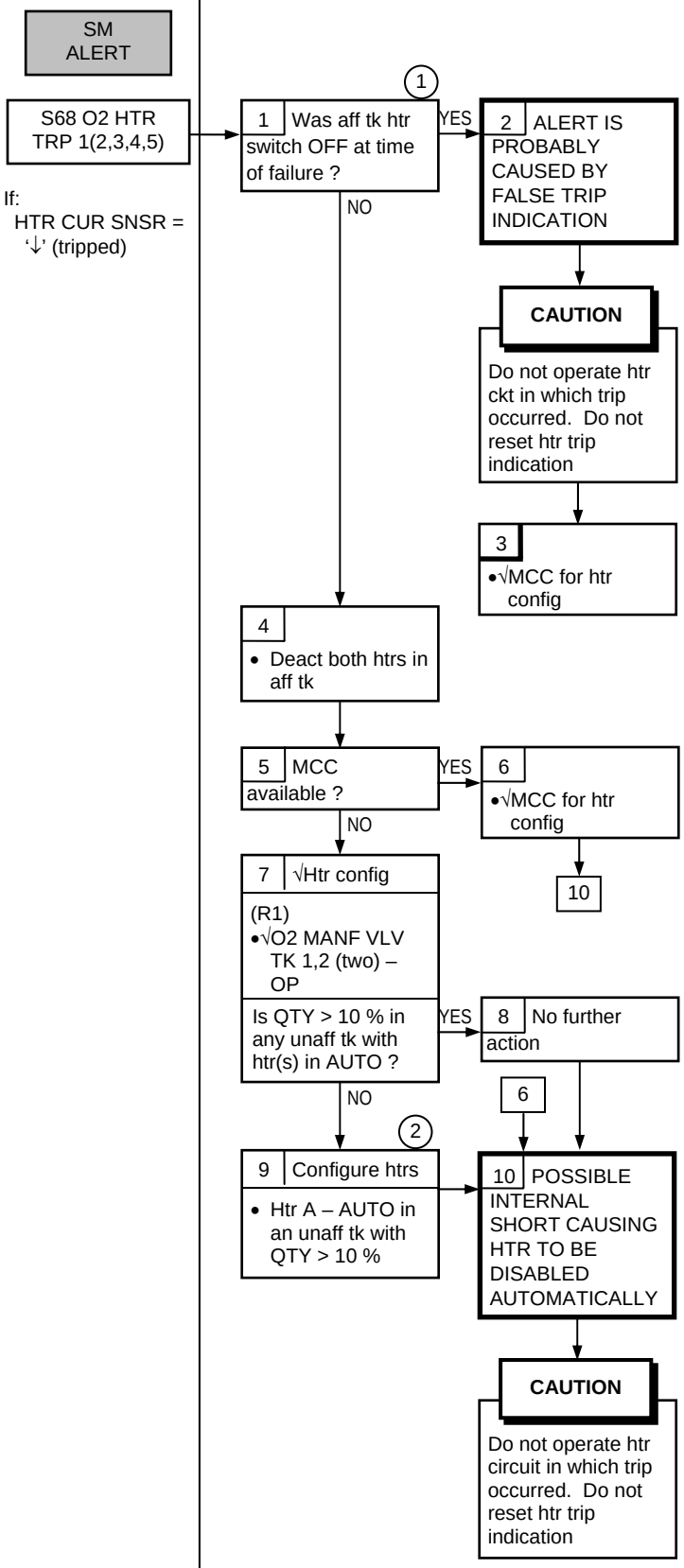

(1) Use CRYO Table A to determine switch nomenclature

(2) A single htr in an undepleted tk should support vehicle power loads. If manifold pressures cannot be maintained, additional htrs may be required

EPS

7.6l O2 HTR T

From ORB OPS, EPS, CRYO O2(H2) PRESS/ TEMP HIGH, step 4

O2 HEATER TEMP (F7)

BACKUP C/W ALARM (F7)

If:
O2 HTR T > 349 degF

S68 O2 HTR T 1(2,3,4,5)

BFS
SM2 CRYO O2 HTR

Nominal Config:
Refer to 7.6b

1 SM 68 CRYO SYSTEM
Deact all htrs in aff tk(s)
- Config aff HTRS – OFF per CRYO TABLE A

Do either of the following conditions exist?
QTY < 10%
O2 T > 130 degF

YES → 2 TANK AT RESIDUAL QTY → 10

NO

3 Is QTY in aff tk < 55% and both A,B Htrs in AUTO ?

YES → 4 INSUFFICIENT QTY FOR DUAL HTR OPS → 5 Config for half htrs
- (Aff) O2 TK HTR A – AUTO

NO

6 Are both HTR T > 349 degF ?

NO → 7 SINGLE HIGH TEMP IS PROBABLY INSTRUMENTA-TION FAILURE → 15

YES

8 Aff P increasing ?

NO → 9 PROBABLE TANK STRATIFICATION (1) → 10 Reconfig to htrs in alternate tank (2)
- •√Any unaffected O2 TK HTR A in AUTO
- •√O2 MANF VLV TK 1,2 (two) – op (tb-op)

YES

11
(R1)
- (Aff) O2 TK HTRS – TEST

Aff TK P still increasing ?

YES → 12 FAILED-ON HTR → 13 (3)
- •√MCC

NO

14 FAILED ON HTR NOW DEACTIVATED. DO NOT RESET TK HTR SNSR → 10

2 14
15

7 → 15 Inhibit Aff TK HTR T HARDWARE C/W (4)

HTR 1		HTR 2	
TANK 1	CH 001	TANK 1	CH 011
TANK 2	CH 021	TANK 2	CH 031
TANK 3	CH 041	TANK 3	CH 051
TANK 4	CH 061	TANK 4	CH 071
TANK 5	CH 081	TANK 5	N/A

→ 10

(1) Stratification normally occurs when htrs are operating for long periods of time or during periods of attitude holds

(2) MCC will determine cryo management plan

(3) Failed-on htr may require temporarily dropping a main bus until IFM 'CRYO TANK HEATER FUSE REMOVAL' can be performed. If pressure exceeds 1,000 psi, overboard relief valve may open

(4) Tank 5 Htr 2 has no associated hardware C/W

This Page Intentionally Blank

EPS

7.7a OPCU CH AMPS ↑

SM ALERT

S179 OPCU 1(2) CH A(B) AMPS

If PTU 1(2) OPCU A(B) AMPS > 75

Dual PTU Config:
(A15)
cb CNTL PWR PTU 1,2 (two) – cl
PTU/MAIN BUS A,B (two) – ON
OPCU 1,2 CONV (two) –- ON

Single PTU Config:
(A15)
cb CNTL PWR PTU 1(2) – cl
PTU/MAIN BUS A(B) – ON
OPCU 1(2) CONV – ON

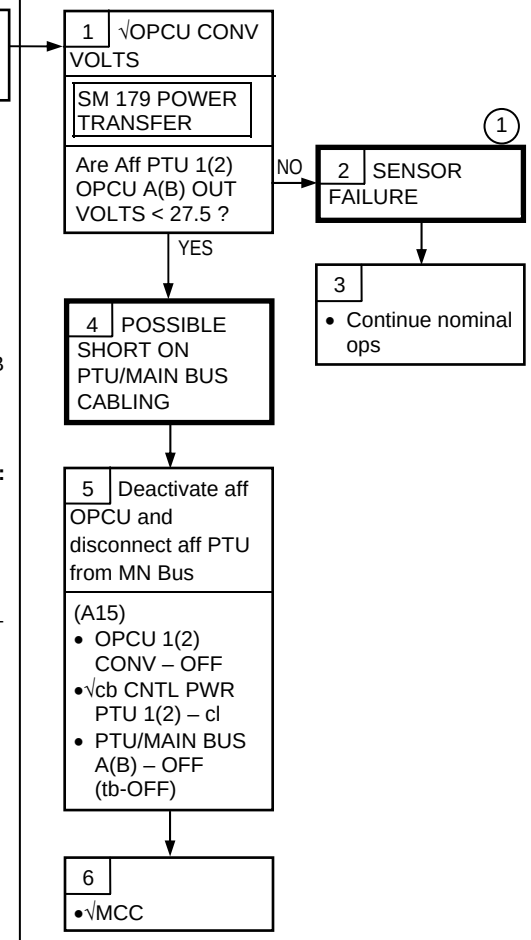

(1) The OPCU output current should not be greater than 75 unless its output voltage is low (output power capability equals ~ 2kw per channel)

EPS

7.7b OPCU CH OUTPUT VOLTS ↓

SM ALERT

S179 OPCU 1(2) CH A(B) VOLT

If PTU 1(2) OPCU A(B) VOLT < 27.0

Dual PTU Config:
(A15)
cb CNTL PWR PTU 1,2 (two) – cl
PTU/MAIN BUS A,B (two) – ON
OPCU 1,2 CONV (two) – ON

Single PTU Config:
(A15)
cb CNTL PWR PTU 1(2) – cl
PTU/MAIN BUS A(B) – ON
OPCU 1(2) CONV – ON

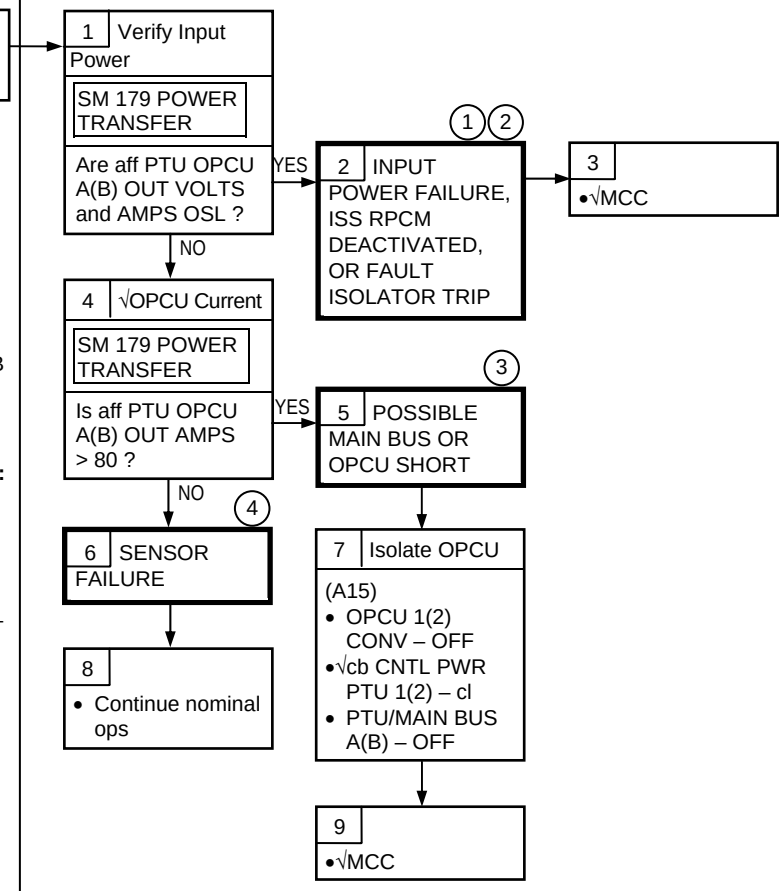

(1) Telemetry for each OPCU Channel requires 120 V house keeping power. If ISS Input Power removed, Telemetry will read OSL ('L')

(2) For Fault Isolator trip, input power (ISS RPCMs) must be cycled to reset the Fault Isolator circuit

(3) If PTU connected to Main Bus, possible Main Bus SHORT

(4) OPCU VOLT Class 3 FDA may cause erroneous alarms and is unreliable. MCC will inhibit Class 3 FDA via TMBU

EPS

7.7c OPCU CH TEMP ↑ APCU TEMP ↑

SM ALERT

S179 OPCU 1(2) CH A(B) TEMP

S179 APCU 1(2) TEMP

If PTU 1(2) OPCU A(B) TEMP ↑

If PTU 1(2) APCU TEMP ↑

Dual PTU Config:
(A15)
cb CNTL PWR PTU 1,2 (two) – cl
PTU/MAIN BUS A,B (two) – ON
OPCU 1,2 CONV (two) – ON
APCU 1,2 CONV (two) – ON

Single PTU Config:
(A15)
cb CNTL PWR PTU 1(2) – cl
PTU/MAIN BUS A(B) – ON
OPCU 1(2) CONV – ON
APCU 1(2) CONV – ON

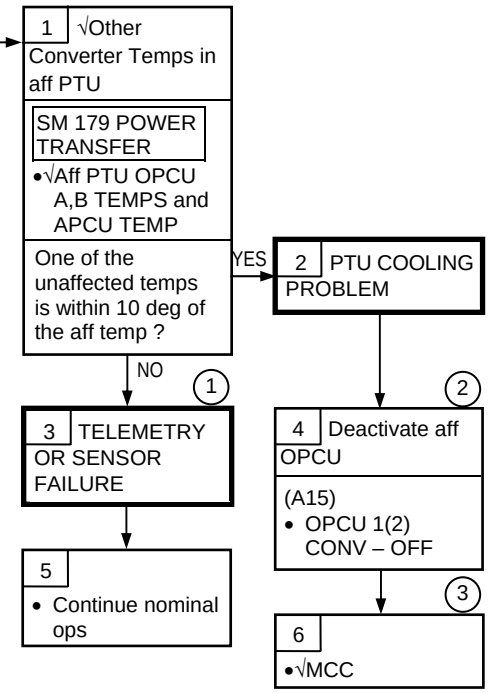

(1) The PTU box should not overheat with only 1 of its 3 converters (OPCU CH A, OPCU CH B, or APCU) activated

(2) OPCU is being deactivated in order to reduce over all heat load on PTU

(3) MCC will determine how to reduce load on OPCU in order to reactivate it

EPS

7.7d OPCU CH OUT OVER VOLT (O OV) TRIP

SM ALERT

S179 OPCU 1(2) CH A(B) O OV

OPCU TRIP = OUT OV if Output Volts > 32 volts

Dual PTU Config:
(A15)
cb CNTL PWR PTU 1,2 (two) – cl
PTU/MAIN BUS A,B (two) – ON
OPCU 1,2 CONV (two) – ON

Single PTU Config:
(A15)
cb CNTL PWR PTU 1(2) – cl
PTU/MAIN BUS A(B) – ON
OPCU 1(2) CONV – ON

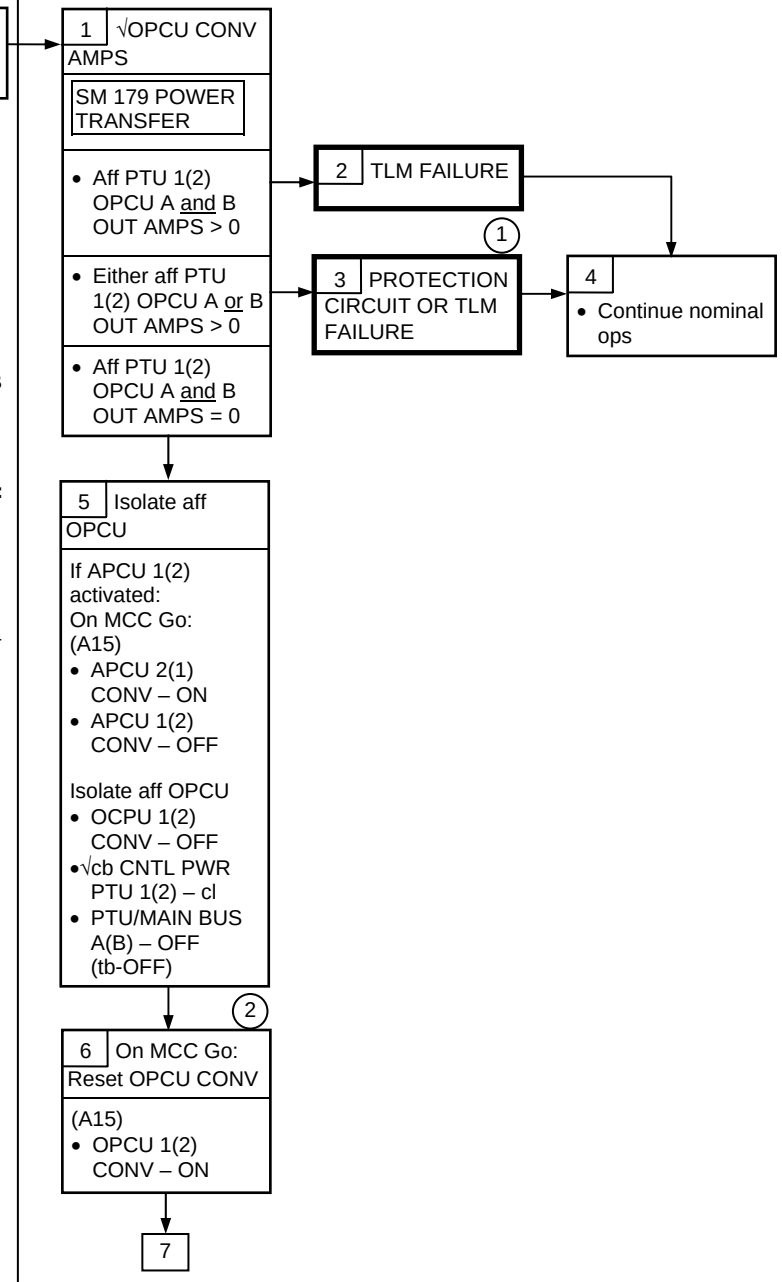

(1) An OPCU 'Output Over Voltage' will cause both OPCU channels A and B to trip. If single OPCU channel is failed power transfer can continue using other channel

(2) A SPEC 179 OPCU CH A(B) VOLT message will be received if 1 of the 2 channels is not activated (all associated TLM is OSL)

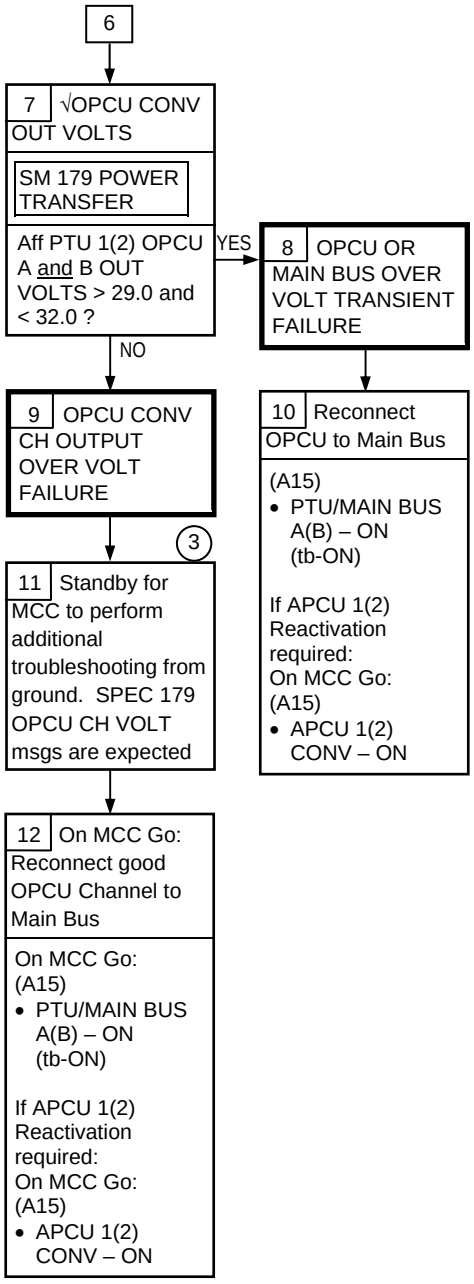

(3) If both OPCU CH A and CH B converters are activated, MCC will command ISS RPC input power off one at a time to determine which OPCU converter (Channel A or B) is failed.
If only one OPCU converter is activated, MCC will determine desired reconfiguration

7.7e OPCU TRIP

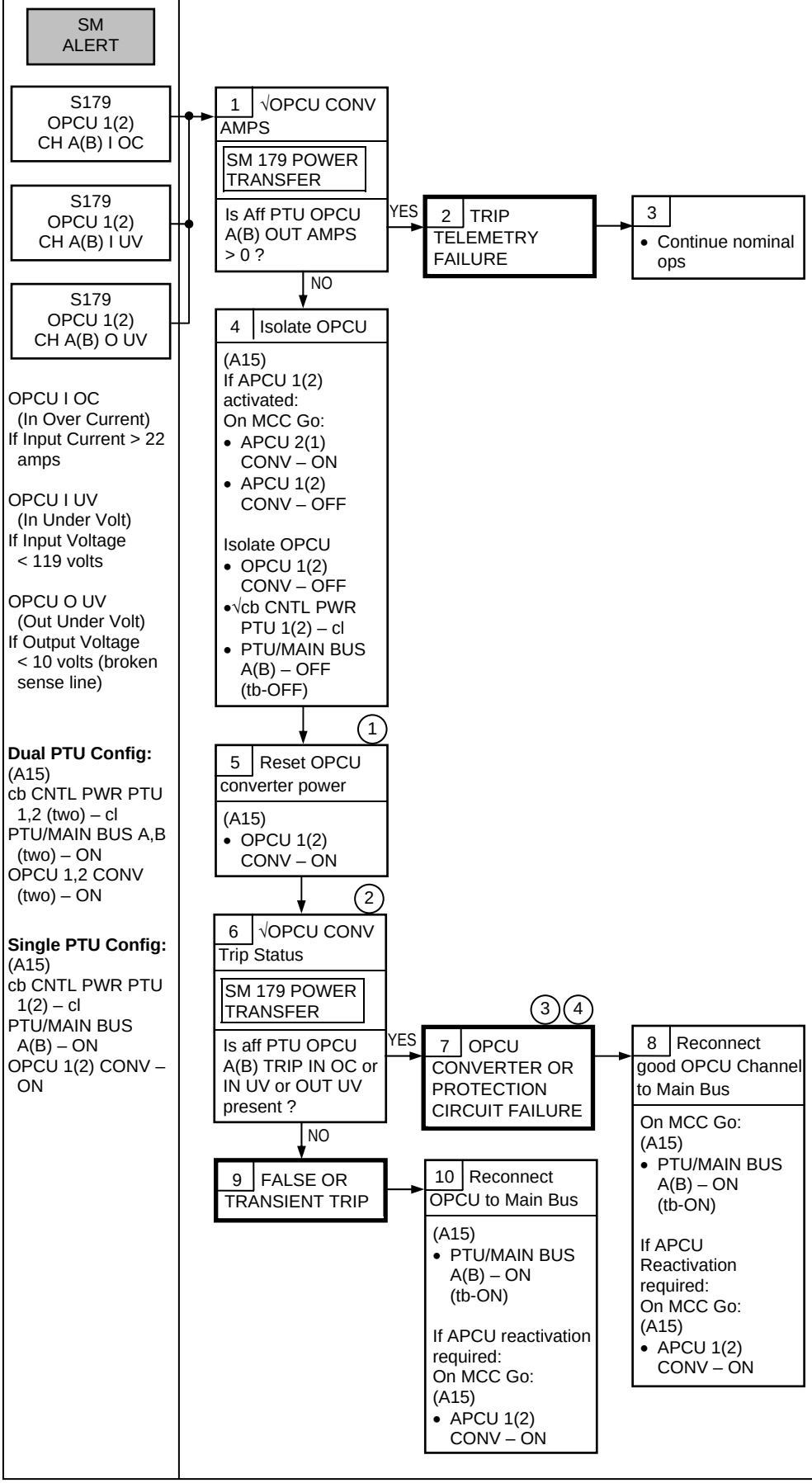

(1) A SPEC 179 OPCU CH A(B) VOLTS message will be received if 1 of the 2 channels is not activated (all associated TLM is OSL)

(2) An OUT UV Trip will not trip the OPCU converter OFF when the PTU is not connected to the Main Bus

(3) MCC will command off ISS RPC input power to failed OPCU Channel Converter

(4) For an OUT UV indication, one of three layers of output over voltage protection might be lost on the unaffected OPCU Channel converter

7.7f APCU 1(2) OUT VOLTS ↑↓

SM ALERT

SM 179 APCU 1(2) OUT VOLT

If PTU 1(2) APCU OUT VOLTS
> 127 ↑
or
< 122 ↓

Dual PTU Config:
(A15)
cb CNTL PWR PTU 1,2 (two) – cl
PTU/MAIN BUS A,B (two) – ON
OPCU 1,2 CONV (two) – ON

Single PTU Config:
(A15)
cb CNTL PWR PTU 1(2) – cl
PTU/MAIN BUS A(B) – ON
OPCU 1(2) CONV – ON

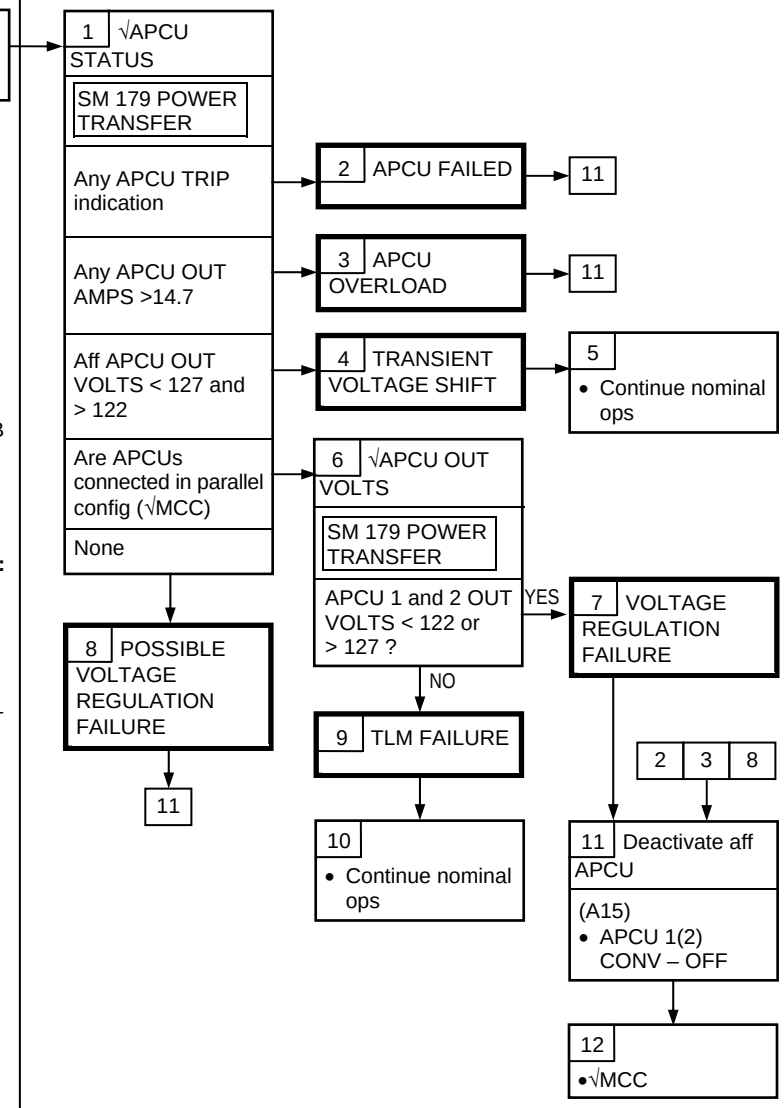

EPS

7.7g APCU OUT AMPS ↑ APCU IN AMPS ↑

SM ALERT

SM 179 APCU 1(2) OUT AMPS

SM 179 APCU 1(2) IN AMPS

If PTU 1(2) APCU OUT AMPS > 14.7 ↑

If PTU 1(2) APCU IN AMPS > 85 ↑

Dual APCU Config:
(A15)
cb CNTL PWR PTU 1,2 (two) – cl
PTU/MAIN BUS A,B (two) – ON
APCU 1,2 CONV (two) – ON

Single APCU Config:
(A15)
cb CNTL PWR PTU 1(2) – cl
PTU/MAIN BUS A(B) – ON
APCU 1(2) CONV – ON

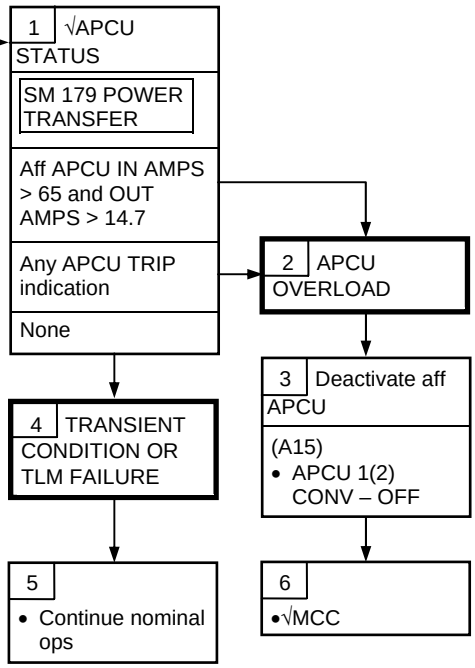

7.7h APCU TRIP

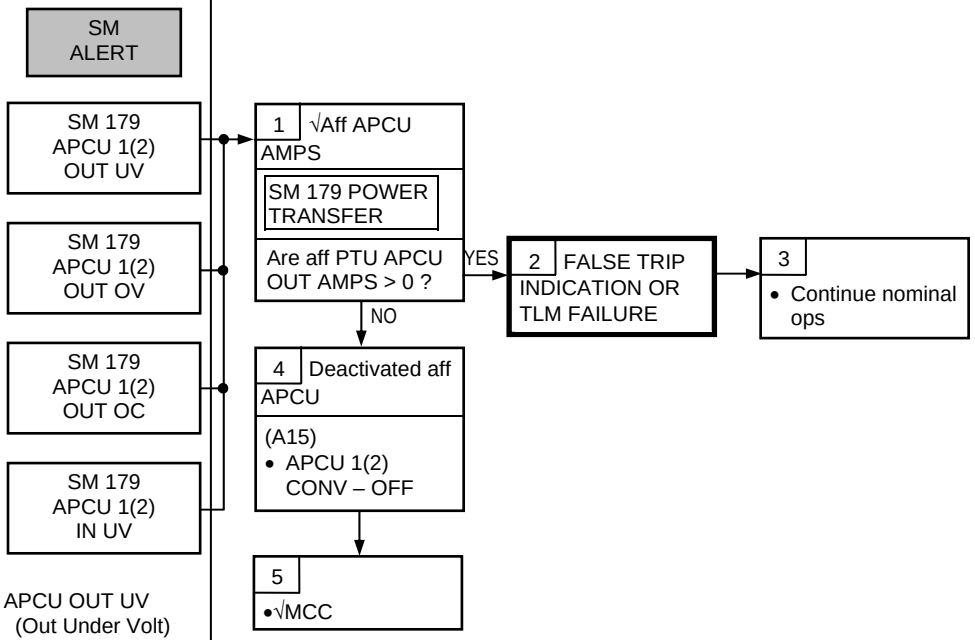

APCU OUT UV
(Out Under Volt)
If Output Volts < 115 volts

APCU OUT OV
(Out Over Volt)
If Output Volts > 130.5 volts

APCU OUT OC
(Out Over Current)
If Output Amps > 14.8 amps

APCU IN UV
(In Under Volt)
If Input Volts < 23 volts

Dual APCU Config:
(A15)
cb CNTL PWR PTU 1,2 (two) – cl
PTU/MAIN BUS A,B (two) – ON
APCU 1,2 CONV (two) – ON

Single APCU Config:
(A15)
cb CNTL PWR PTU 1(2) – cl
PTU/MAIN BUS A(B) – ON
APCU 1(2) CONV – ON

APCU

7.7i APCU AMPS ↑

SM ALERT

S200 APCU 1(2) AMPS HIGH

If any APCU CONV AMPS ≥ 8.5

Nominal Config:
(R1)
PRI PL MNC – ON (tb-ON)
PL CAB – MNA(MNB)
PL AUX – ON
PL AFT MNB – ON (L12/SSP 2)
cb SW PWR 1 – cl

Nominal APCU Activated Config:
L12 (SSP 2)
APCU 1 CONV – ON (tb-gray)
APCU 1 OUTPUT RLY – CLOSE (tb-gray)

{APCU TEMP ↓↑}, block 3
{APCU VOLTS ↑↓}, block 3

1
•√APCU Status
SM 200 APCU STATUS
• Determine the following:
APCU 1(2) TRIP > -4.40
APCU 1(2) CONV A(B) AMPS (two) > 8.5
None of the above

2
• Go to {APCU TRIP}, block 1

15

3
(L12/SSP 2)
• APCU 1(2) CONV – OFF (tb-bp)
• APCU 1(2) OUTPUT RLY – OPEN (tb-bp)

4
• Go to {APCU TRIP}, block 19

5
APCU 1(2) CONV A(B) AMPS > 8.5?
NO
YES

6
•√LCS Status
• Perform LCC DEACT (Cue Card, LCS), then:
• Perform LCC ACT (Cue Card, LCS), then:

7
APCU 1(2) CONV A AMPS = CONV B AMPS ± 3?
YES
NO

15

8
Quick View scan screen updating?
NO
YES

9 SHORT IN LCS ELECTRONICS

1

10 TRANSIENT CONDITION

11
• Go to LCC DEACT (Cue Card, LCS)

12 TRANSDUCER SHIFT OR SINGLE CONV FAILURE

2

13
• Continue nominal operations

14
•√MCC

7

3

15
APCU 1 CONV A AMPS + CONV B AMPS > 14.7?
YES
3
NO

16 CONV A AND CONV B OUTPUTS NOT BALANCED

17
•√MCC

(1) APCU 1 and 2 provide redundant power to LCS when OBSS is on the RMS

(2) MCC will determine between a transducer shift and a real circuitry failure

(3) Total output for each APCU must be maintained less than 14.7 amps and each CONV output must be maintained less than 8.5 amps

APCU

SM ALERT

S200 APCU 1(2) VOLT LMT

If APCU VOLTS RES HIGH ≥ 126.5 or ≤ 122

Nominal Config:
(R1)
PRI PL MNC – ON (tb-ON)
PL CAB – MNA(MNB)
PL AUX – ON
PL AFT MNB – ON
L12 (SSP 2)
cb SW PWR 1 – Close

Nominal APCU Activated Config:
L12 (SSP 2)
APCU CONV 1 – ON (tb-gray)
APCU 1 OUTPUT RLY – CLOSE (tb-gray)

7.7j APCU VOLTS ↑↓

{APCU TEMP ↓↑}, block 4

1
•√APCU Status
SM 200 APCU STATUS

APCU 1(2) TRIP > -4.40 → 2
• Go to {APCU TRIP}, block 1

Any APCU 1(2) CONV A(B) AMPS > 8.5 → 3
• Go to {APCU AMPS ↑}, block 1

None of the above

4
Which APCU CONV is affected?

APCU 1 → 5
APCU 2 → 7

5
•√APCU Volts
SM 200 APCU STATUS

Both APCU 1 OUT VOLTS (two) > 121 and <127 → 6 TRANSIENT VOLTAGE SHIFT → 8
8
• Continue nominal operations

APCU 1 OUT VOLTS RES HIGH and OUT VOLTS RES LOW = OSL → 9
9
UNANNUNCIATED TRIP, LOSS OF CONTROL POWER, OR TELM LOSS → 18

APCU 1 OUT VOLTS RES HIGH = OUT VOLTS RES LOW ± 2 → 11 APCU VOLTAGE REGULATION PROBLEM → 13
13
APCU 1 OUT VOLTS RES HIGH between 115 and 130.5?
YES → 16
NO → 27

None of the above → 14 TRANSDUCER FAILURE → 15
15
• Continue nominal operations

7
•√APCU Volts
SM 200 APCU STATUS

APCU 2 OUT VOLTS RES HIGH >121 and <127?
YES → 6
NO → 10

10
MCC available?
YES → 12
NO → 27 → (1)

12
•√MCC

(1) SPEC voltage for APCU is 122 to 126.5 volts. If APCU volts are outside this range but stable and usable, consideration will be given to continuing APCU operation

APCU 7.7j (Cont)

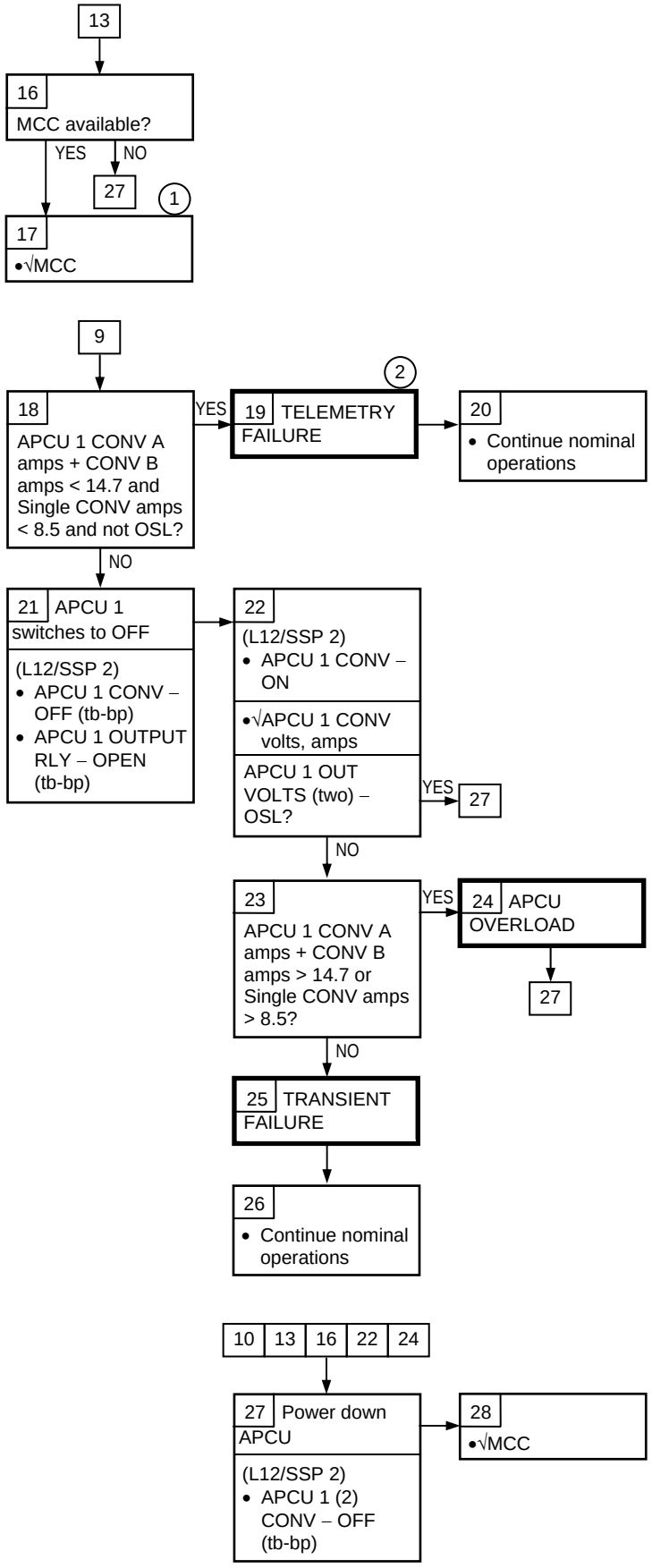

(1) SPEC voltage for APCU is 122 to 126.5 volts. If APCU volts are outside this range but stable and usable, consideration will be given to continuing APCU operation

(2) There is a single point failure that will cause both the HIGH and LOW RES VOLTS to read low (broken wire)

APCU

7.7k APCU TEMP ↓↑

SM ALERT

S200 APCU 1(2) TEMP HIGH

If APCU 1(2) CONV TEMP A(B) ≤ 20 or ≥ 130

Nominal Config:
(R1)
PRI PL MNC – ON (tb-ON)
PL CAB – MNA(MNB)
PL AUX – ON
PL AFT MNB – ON
L12 (SSP 2)
cb SW PWR 1 (CB2) – Close

Nominal APCU Activated Config:
L12 (SSP 2)
APCU 1 CONV – ON (tb-gray)
APCU 1 OUTPUT RLY – CLOSE (tb-gray)

1
•√APCU Status
SM 200 APCU STATUS
• Determine the following:

APCU 1(2) TRIP > -4.40 → 2
• Go to {APCU TRIP}, block 1

Any APCU 1(2) CONV A(B) AMPS > 8.5 → 3
• Go to {APCU AMPS ↑}, block 1

APCU 1(2) VOLTS RES HIGH < 122 or > 126.5 → 4
• Go to {APCU VOLTS ↑↓}, block 1

All APCU 1,2 CONV A,B TEMPS (four) ≥ 130 or rising or ≤ 20? → 5 ORBITER COOLING PROBLEM → 6 All APCU Power OFF
FOR HIGH TEMPS (L12/SSP 1)
• APCU 1,2 CONV (two) – OFF (tb-bp)
• APCU 1(2) OUTPUT RLY – OP (tb-bp)

None of the above

7 CONV A and CONV B TEMPS in a single operating APCU ≥ 130 and rising or ≤ 20?

NO → 8 Single CONV TEMP ≥ 130 or ≤ 20?

YES → 9 TEMP TRANSDUCER SHIFT OR CONVERTER CIRCUIT FAILURE → (2) 11 •√MCC

NO → 10 TRANSIENT TEMPERATURE SHIFT OR TRANSDUCER SHIFT → 13
• Continue nominal operations

YES → 12 SINGLE APCU COOLING PROBLEM OR CIRCUIT FAILURE → (1) 14
(L12/SSP) Affected APCU
• APCU 1(2) CONV – OFF (tb-bp)
• APCU 1(2) OUTPUT RLY – OP (tb-bp)

→ 15 •√MCC

(1) Loss of APCU 1 or 2 results in loss of redundant 120 V power to LCS/IDC

(2) MCC will determine between a transducer shift and a real circuitry failure

125

APCU

7.7l APCU TRIP

SM ALERT

S200 APCU 1(2) TRIP

If APCU TRIP > -4.4
√APCU TRIP STATUS TABLE

Nominal Config:
(R1)
PRI PL MNC – ON (tb-ON)
PL CAB – MNA(MNB)
PL AUX – ON
PL AFT MNB – ON
L12 (SSP 2)
cb SW PWR – Close

Nominal APCU Activated Config:
L12 (SSP 2)
APCU 1 CONV – ON (tb-gray)
APCU 1 OUTPUT RLY – CLOSE (tb-gray)

{APCU TEMP ↓↑}, block 2
{APCU VOLTS ↑↓}, block 2
{APCU AMPS ↑}, block 2

1
- •√APCU Status
- Determine the following:

(L12/SSP 2)
APCU 1,2 CONV (two) tb-bp
and
APCU 1,2 OUTPUT RLY (two) tb-bp
and
SM 200 APCU STATUS
both
APCU 1 TRIP and APCU 2 TRIP approx = 0

APCU 1(2) TRIP > -4.40

None of the above

2
(ORB R1)
•√PL AFT switches
R1 PL AFT MNB(C) (two) OFF?
NO → **3** POSSIBLE PL AFT SHORT
YES → **4** PL AFT BUS DISCONNECTION

3 POSSIBLE PL AFT SHORT
→ (1)

5
•√MCC

4 PL AFT BUS DISCONNECTION
→ (2)

6
•√MCC

9

7 TRANSIENT TRIP INDICATION
→ **8**
- Continue nominal operations

(1)

9
•√Affected APCU CONV amps
Both A and B amps = 0.3L?
NO → **10**
YES → **12** BOTH A AND B CONVERTERS TRIPPED

10
•√Affected APCU CONV amps
CONV A amps = 0.3L or CONV B amps = 0.3L?
NO → **11** FALSE TRIP INDICATOR
YES → **13** SINGLE CONVERTER TRIPPED

11 FALSE TRIP INDICATOR
→ **14**
- Continue nominal operations

12 BOTH A AND B CONVERTERS TRIPPED

15
- Deactivate affected APCU

(L12/SSP 2)
- APCU 1(2) CONV – OFF (tb-bp)
- APCU 1(2) OUTPUT RLY – OP (tb-bp)

13 SINGLE CONVERTER TRIPPED
→ (3)

(3)

16
SM 200 APCU STATUS
- Record Trip Status: ____
- •√APCU TRIP STATUS TABLE
- Remaining converter will trip if CONV amps ≥ 8.5

17 POSSIBLE SHORT, OR APCU CIRCUIT FAILURE
→ **18**
•√MCC

(1) MCC will determine cause of interruption of power or signal to the APCUs

(2) MCC will coordinate recovery of the PL AFT bus and equipment

(3) LCS/IDC is redundantly powered from APCU 1 & 2

125

APCU 7.7l (Cont)

ON MCC GO Only: Recovery Attempt with APCU Power Cycle {APCU AMPS ↓↑}, block 4

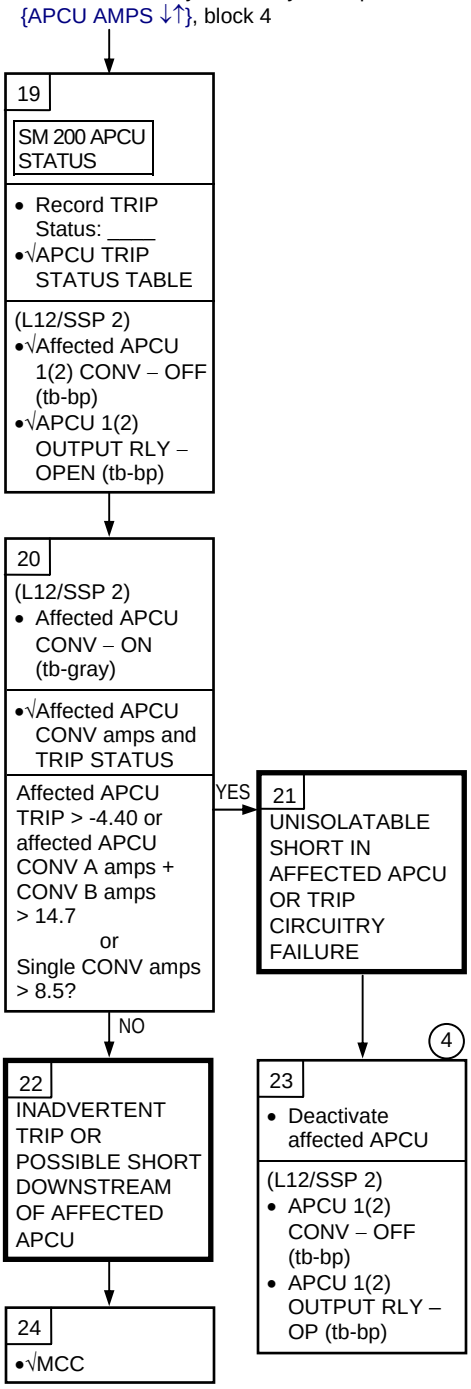

(4) Loss of APCU 1or 2 results in loss of redundant 120 volt power for LCS/IDC

Table 1. APCU Trip Status

TRIP (STATUS VOLTAGE)	TRIP CAUSE(S)			
	OV	OUV	OC	IUV
+4.88	X	X	X	X
+4.23	X	X	X	
+3.59	X	X		X
+2.95	X	X		
+2.27	X		X	X
+1.62	X		X	
+0.98	X			X
+0.34	X			
-0.30		X	X	X
-0.95		X	X	
-1.59		X		X
-2.23		X		
-2.91			X	X
-3.56			X	
-4.20				X
-4.86 (no trip)				

NOTE
OV: Output Overvoltage
OUV: Output Undervoltage
OC: Output Overcurrent
IUV: Input Undervoltage
Tolerance for all reported voltages is ± 0.20V

This Page Intentionally Blank

This Page Intentionally Blank

NOTE

The FCMS application has capability to display FC single cell voltages and also to record those cell voltages in ASCII data file. Primary mode of operation will be to connect WinDecom using the FCMS data cable, bring up the WinDecom-FCMS application, start the FCMS application to record data, then downlink the data file to MCC via OCA for analysis.

The recorded data file names will have format fcDDDHHMM.fcv or fcDDDHHMM.ZIP where "DDDHHMM" references the GMT of the first data point of the file. Data files recorded will contain the single cell voltages from all three fuel cells. If recording a full rate data file, temporarily terminate all other applications on the same PGSC

FCMS DATA DIAGRAM

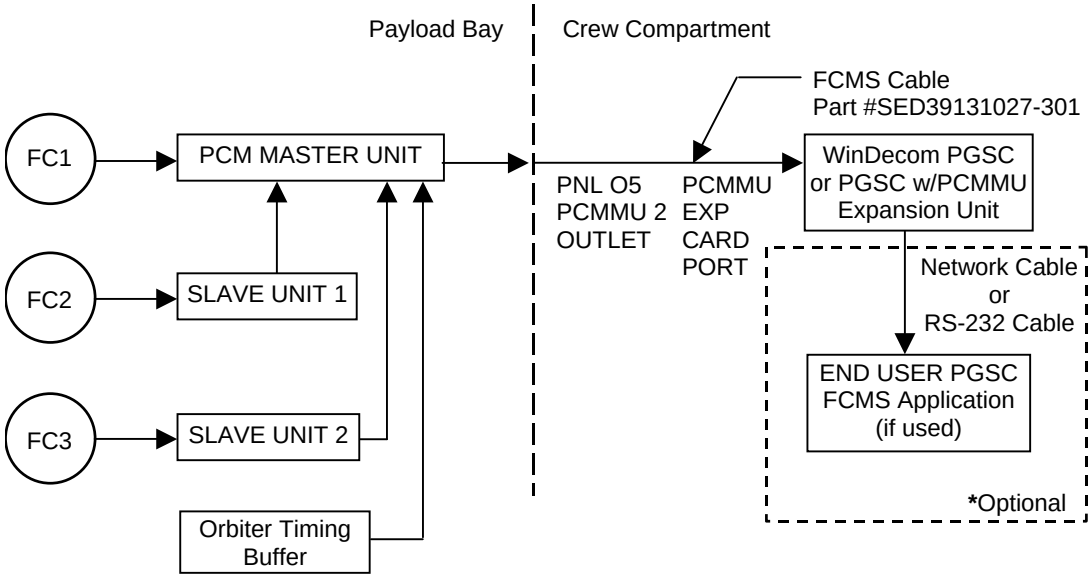

*****The FCMS Application can be run on any one of the following PGSCs

a. WinDecom PGSC or PGSC with PCMMU Expansion Unit
b. Any End User Networked PGSC using network cable
c. Any End User PGSC connected to WinDecom serial port (com 1) using RS232Y Cable

ACTIVATION

1. On PGSC with PCMMU Expansion Unit to be used for FCMS operations, terminate all applications using Telemetry Server, and verify Telemetry Server not active (no green "GO," yellow "TFL," or red "STOP") sign in lower right corner of PGSC display

If using WinDecom PGSC:

2. Double-click 'Shuttle Apps' > 'WinDecom' > 'WinDecom shutdown'
3. Sel 'OK' to shutdown Telemetry System
4. Disconnect PCMMU cable from PCMMU expansion card port on WinDecom PGSC

O5

5. If reqd, disconnect PCMMU cable from pnl O5 PCMMU 2 outlet

NOTE

FCMS cable pin out is different than standard PCMMU data cable

6. Connect FCMS cable from pnl O5 PCMMU 2 outlet to PCMMU expansion card port on PGSC that will run WinDecom-FCMS

ML86B:E 7. cb MNA FC PCM – cl

Starting WinDecom-FCMS

8. Double-click ‘Shuttle Apps’ > ‘WinDecom’ > ‘WinDecom-FCMS’
9. Expect TLM Monitor, TLM Pkt-net, and TLM Pkt-com windows to appear (possibly minimized). Data should be incrementing in TLM Pkt-net window

FCMS Application

10. Double-click ‘Shuttle Apps’ > ‘Fuel Cell Monitoring’
11. Verify data being received on crew FCMS display (data updating and GMT incrementing on FCMS display, green “GO” sign in lower right hand corner of PGSC display)

If fuel cell open circuit voltage recording requested, following steps will be coordinated with MCC:

12. BUS TIE ___,___(two) – ON (tb-ON)
13. ESS BUS SOURCE FC ___ – OFF
14. FC/MN BUS ___ – OFF
15. Record data file using record option specified by MCC (Either full rate or one sample every X seconds for X hours)

16. When recording is complete, notify MCC. The zip data file is in the C:\SPOCAPPS\FCMS directory

If fuel cell open circuit voltage recording was performed, on MCC GO:

17. FC/MN BUS ___ – ON
18. ESS BUS SOURCE FC ___ – ON
19. Bus Tie config per MCC

DEACTIVATION

ML86B:E 1. cb MNA FC PCM – op
2. Close FCMS application
3. Double-click ‘Shuttle Apps’ > ‘WinDecom’ > ‘WinDecom Shutdown’
4. Disconnect and stow FCMS cable
5. Reconfigure WinDecom PGSC as reqd per WINDECOM OPS (ORB OPS, PGSC)

EPS SSR-3
FC SHUTDN C&W LIMIT CHANGE

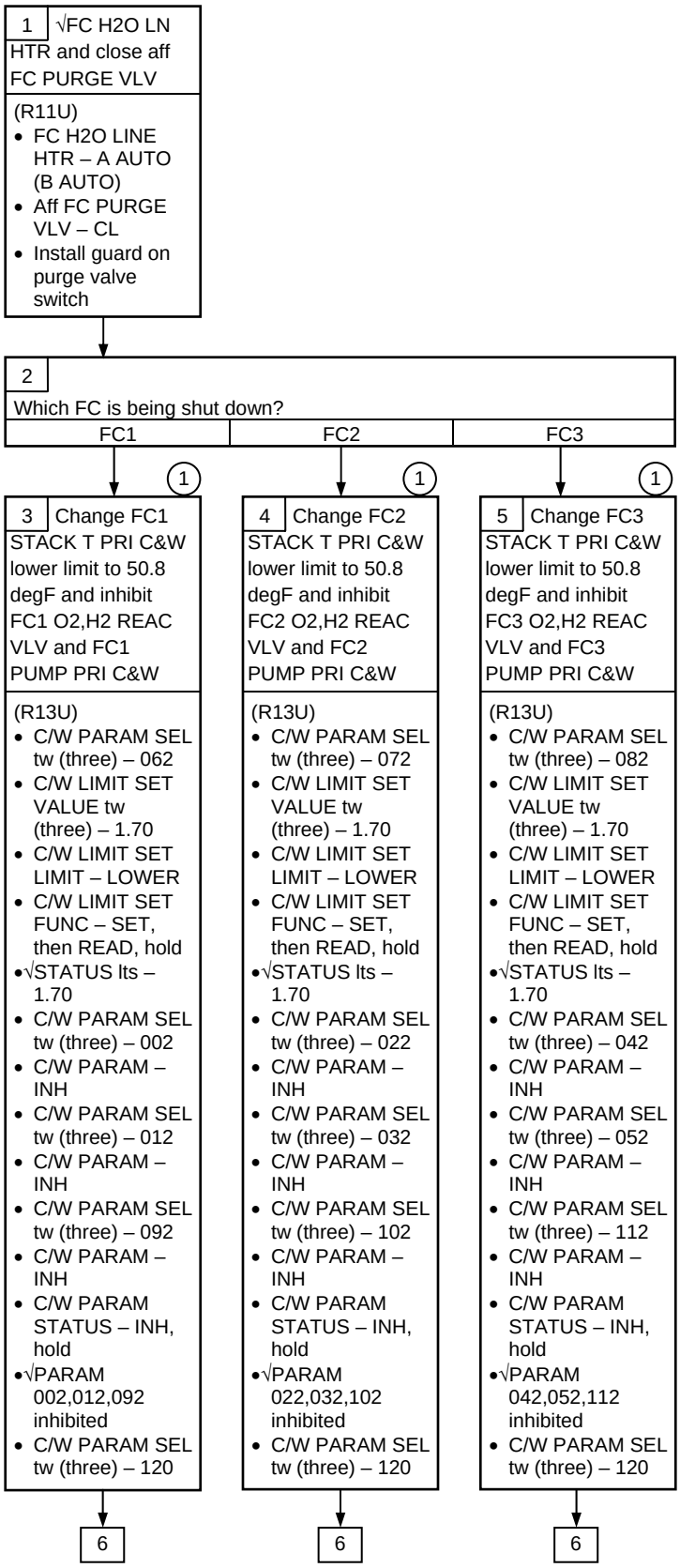

(1) Lower limit on FC temp during cooldown is 48 degF to protect from ice formation. Closest value > 48 degF that PRI C&W system can be set is 50.8 degF

EPS SSR-3 (Cont)

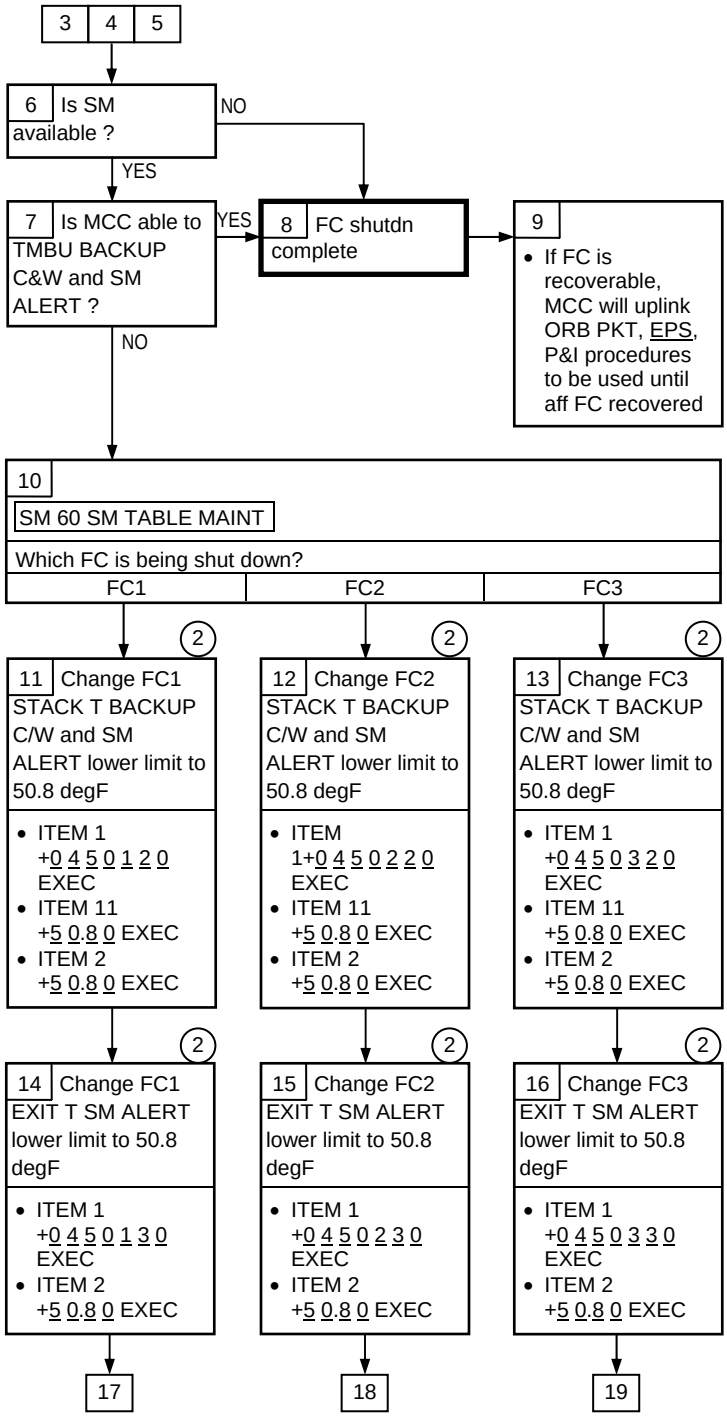

(2) Equal to value set in PRIMARY C&W SYSTEM. Lower limit on FC temp during cooldown is 48 degF to protect from ice formation. Closest value > 48 degF that PRI C&W system can be set is 50.8 degF

EPS SSR-3 (Cont)

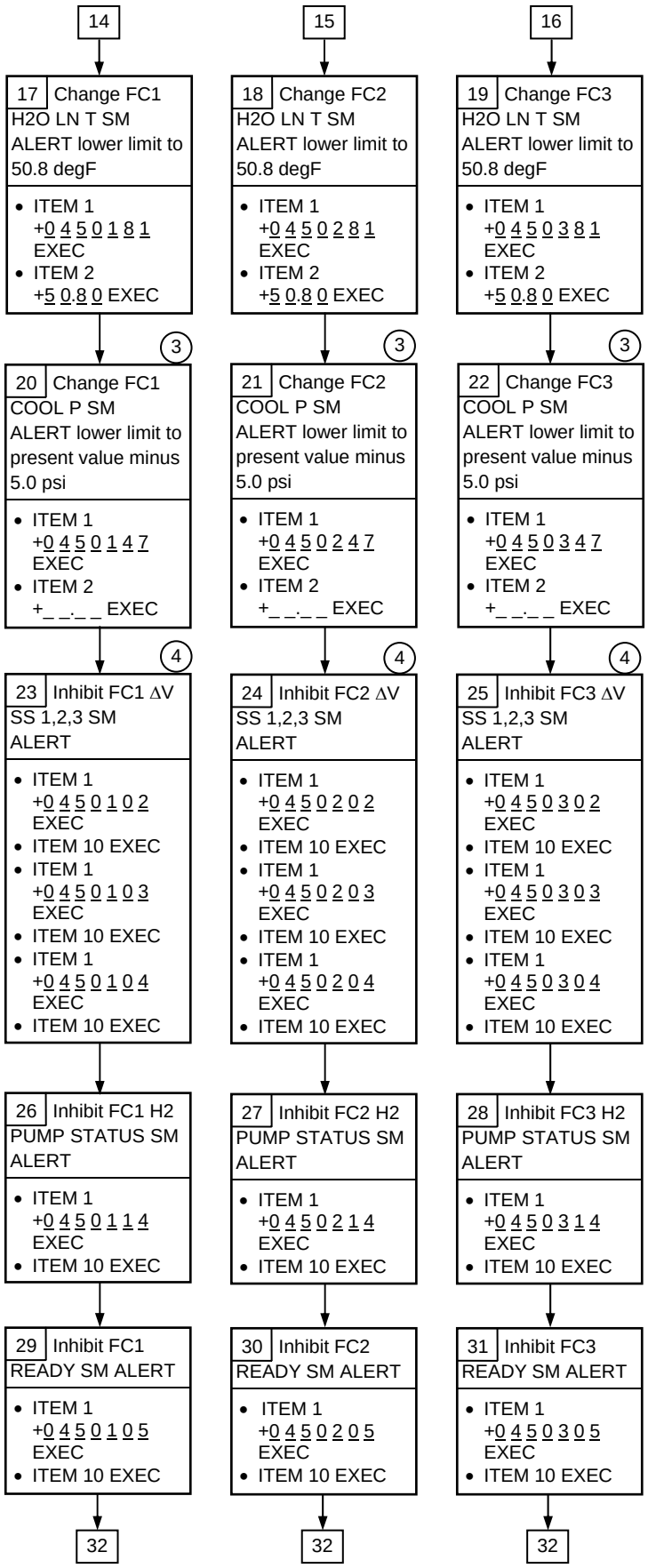

(3) Decrease in FC COOL P with fuel cell shutdn and REAC vlvs closed may indicate internal leak, crossover, or reactant leak

(4) FC SUBSTACK ΔVOLTS are not usable when fuel cell is shut down

EPS SSR-3 (Cont)

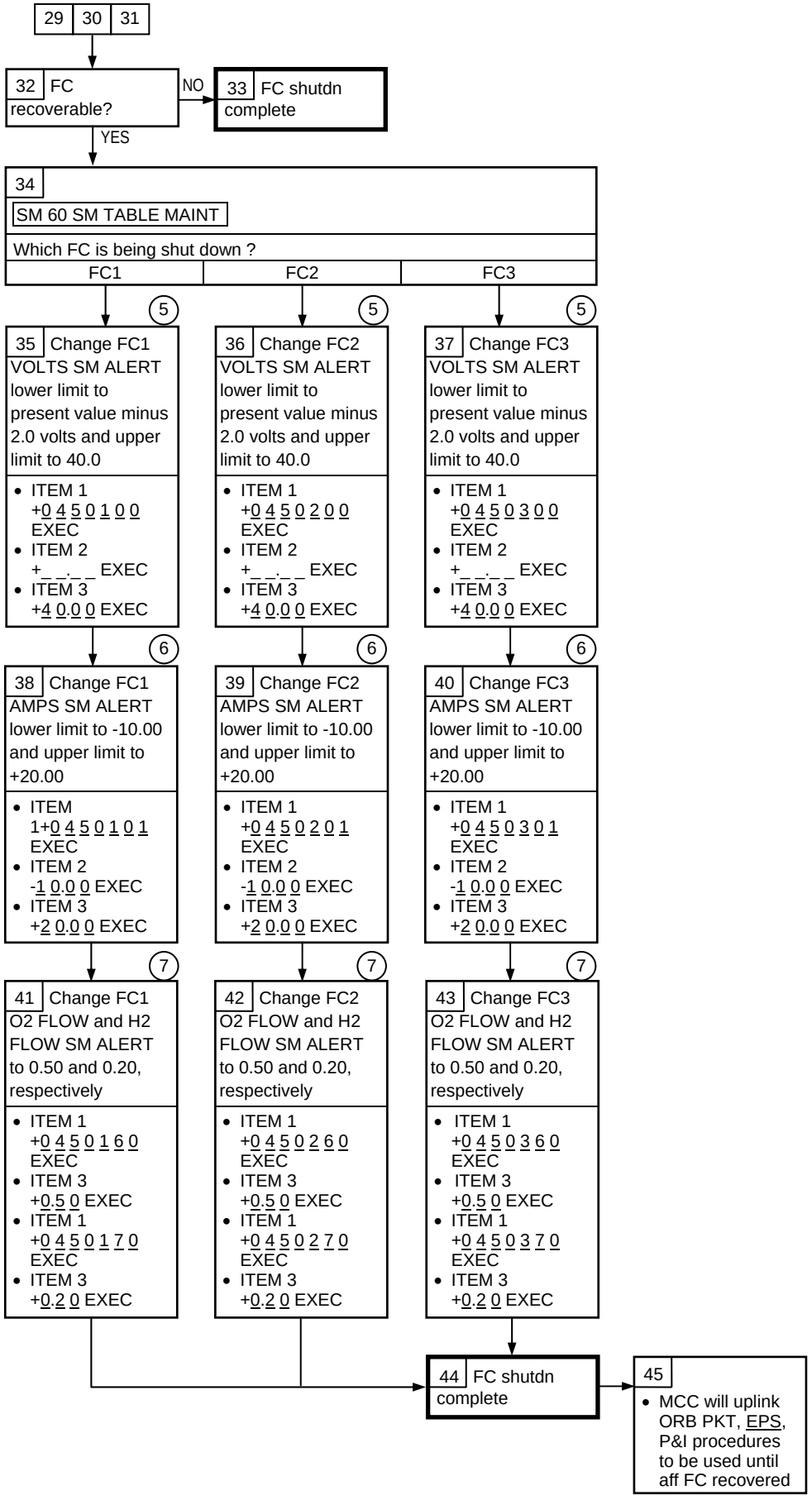

(5) Decrease in FC VOLTS while fuel cell is shut down may indicate internal load, crossover, or reactant leak

(6) Increase in FC O2,H2 FLOWS while fuel cell is shut down may indicate internal load or reactant leak

(7) Increase in FC O2,H2 FLOWS while fuel cell is shut down may indicate internal load or reactant leak

EPS SSR-4
FC STANDBY

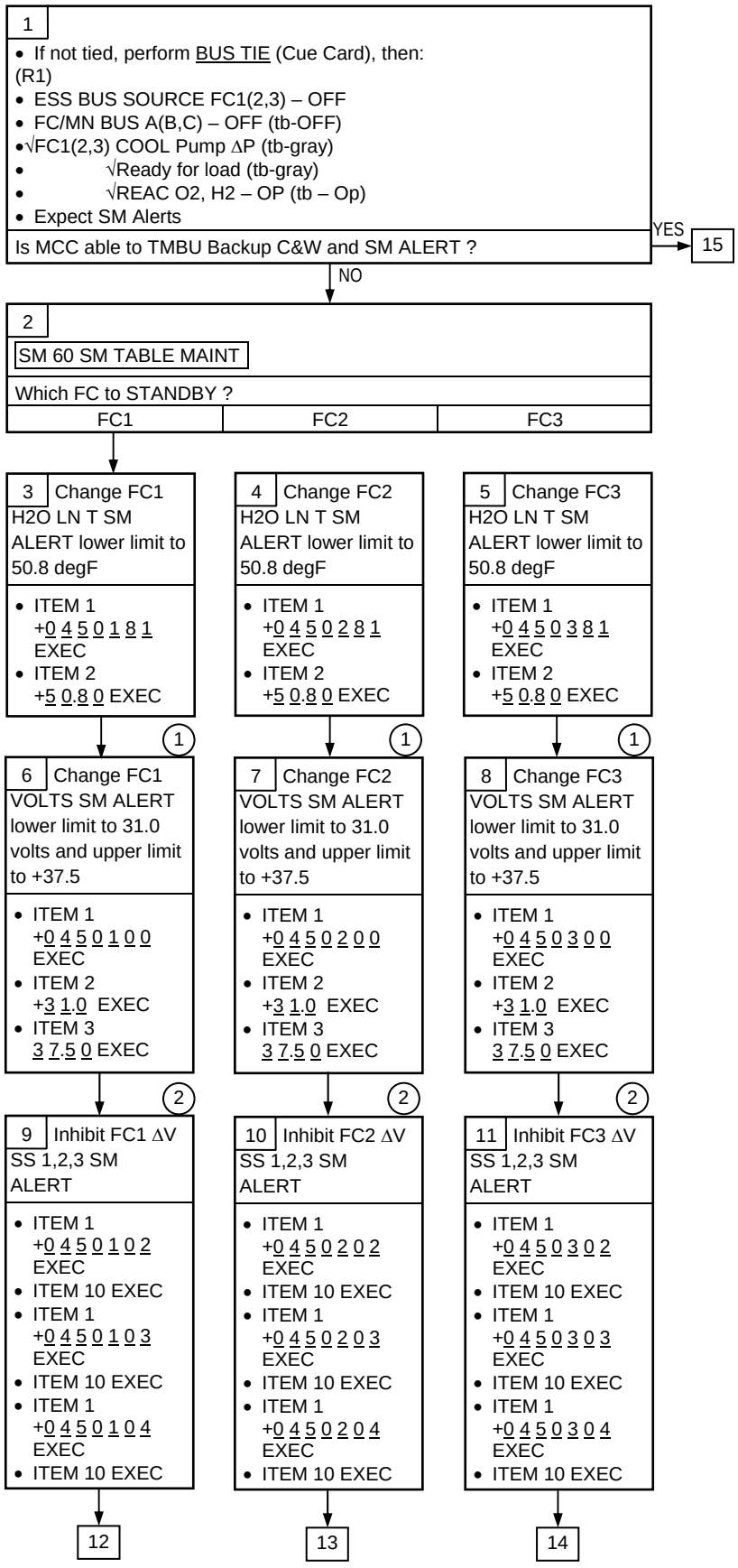

(1) Decrease in FC VOLTS beyond FDA limit while fuel cell is in STANDBY may indicate internal load, crossover, or reactant leak

(2) FC SUBSTACK ΔVOLTS are not usable when fuel cell is in STANDBY

EPS SSR-4 (Cont)

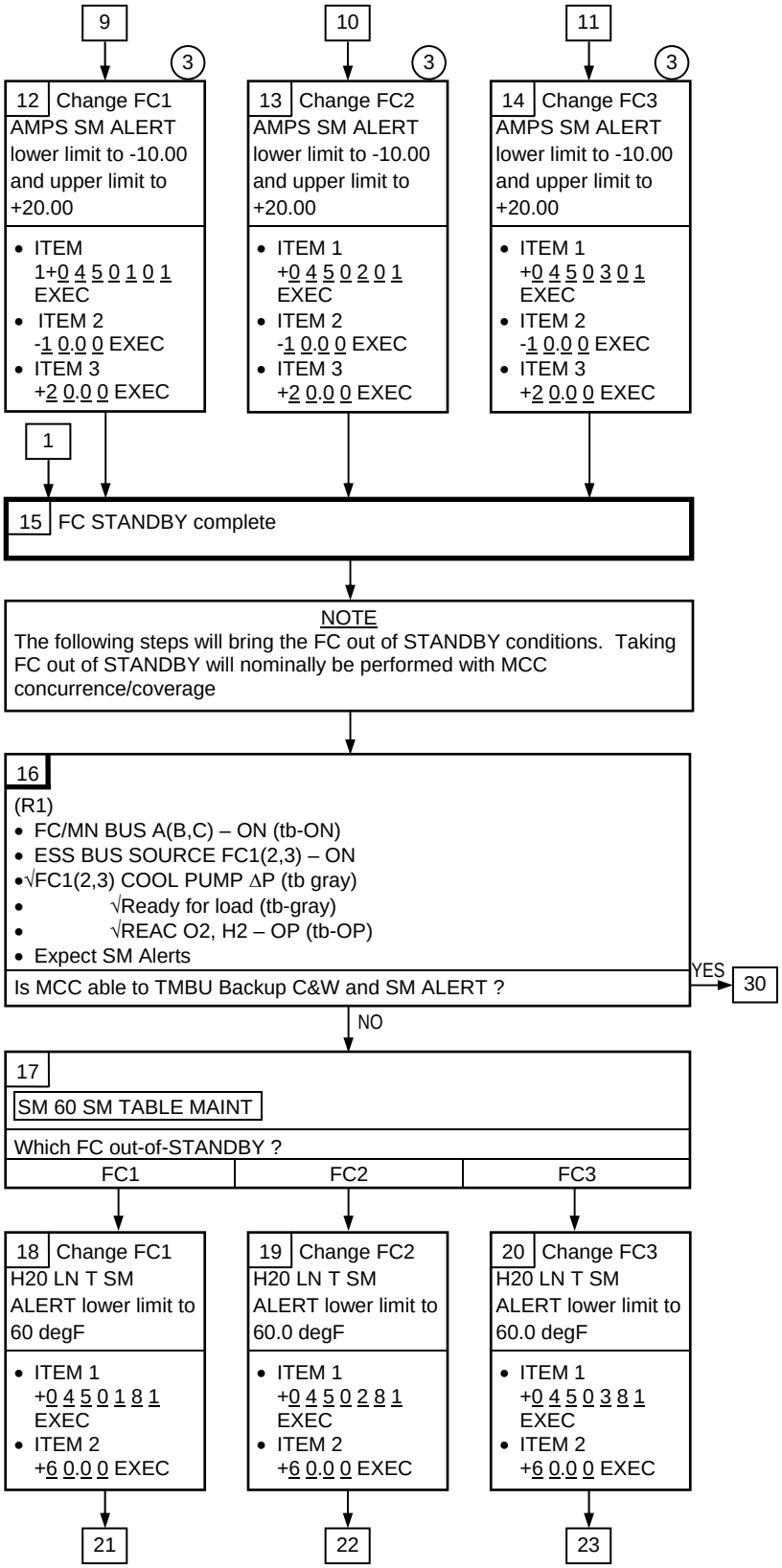

(3) Increase in FC Amps beyond the FDA limit while fuel cell is in STANDBY may indicate external load on the fuel cell

EPS SSR-4 (Cont)

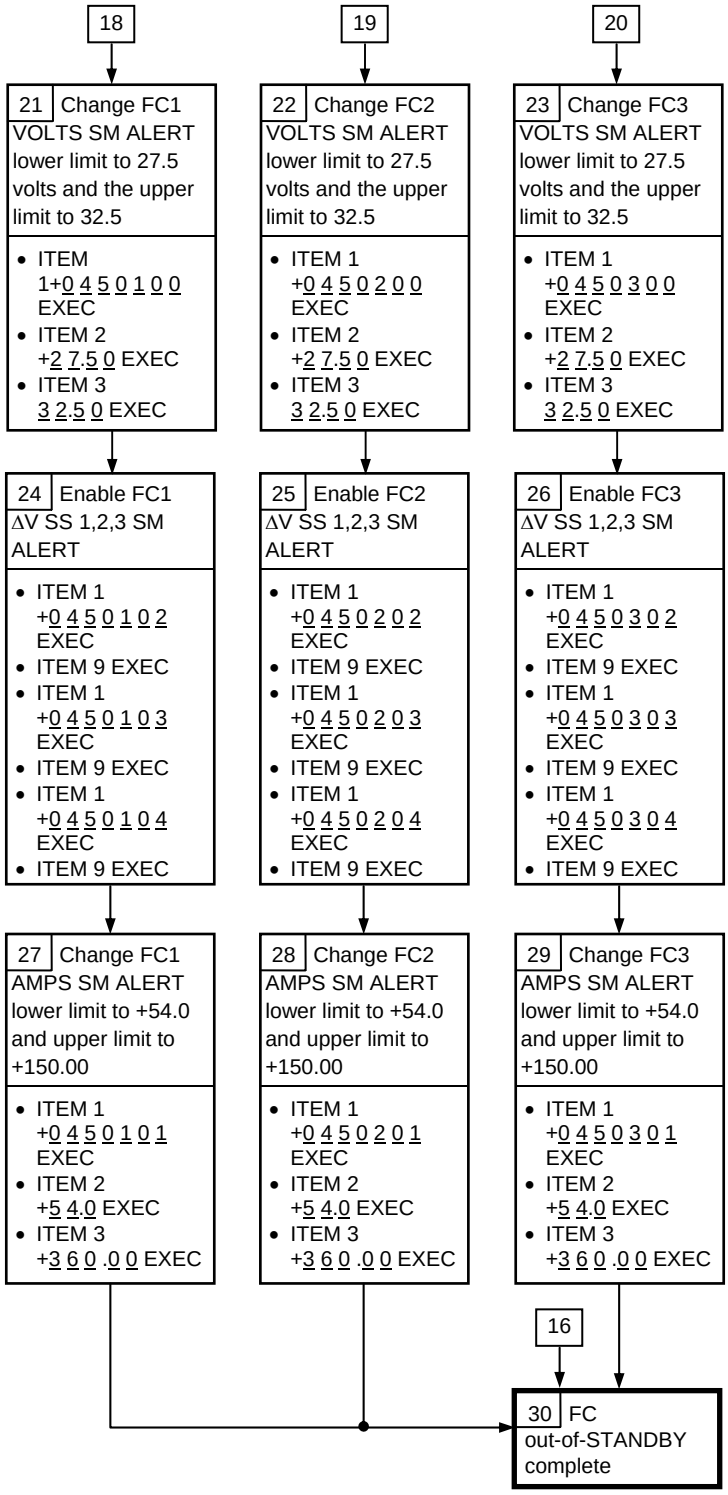

EPS SSR-6
FC RESTART

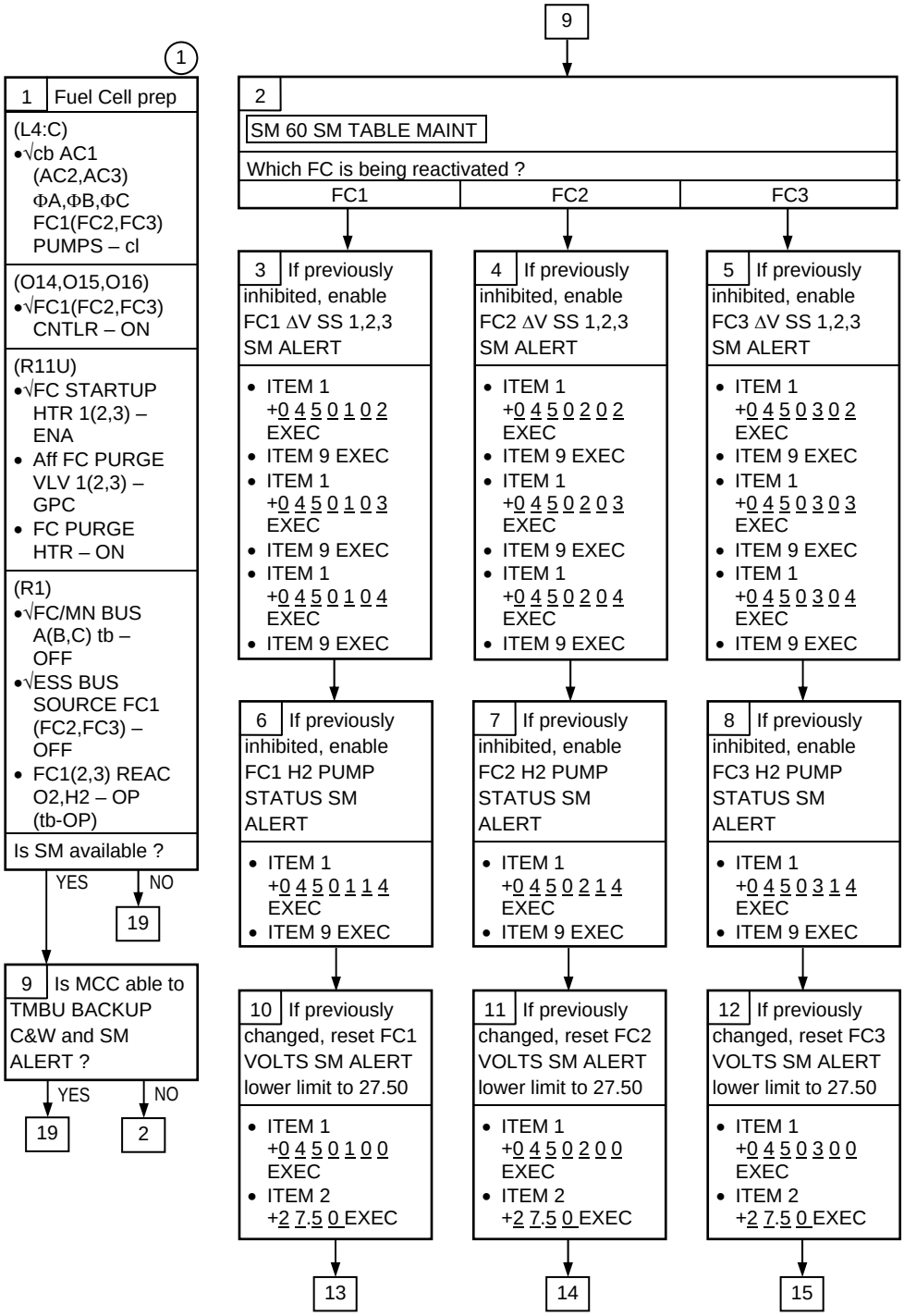

(1) FC may be restarted on two Φs. Loss of AC1(2,3) ΦA cb causes loss of FC1(2,3) pH sensing. Loss of AC2 ΦB cb causes loss of common pH sensing

EPS SSR-6 (Cont)

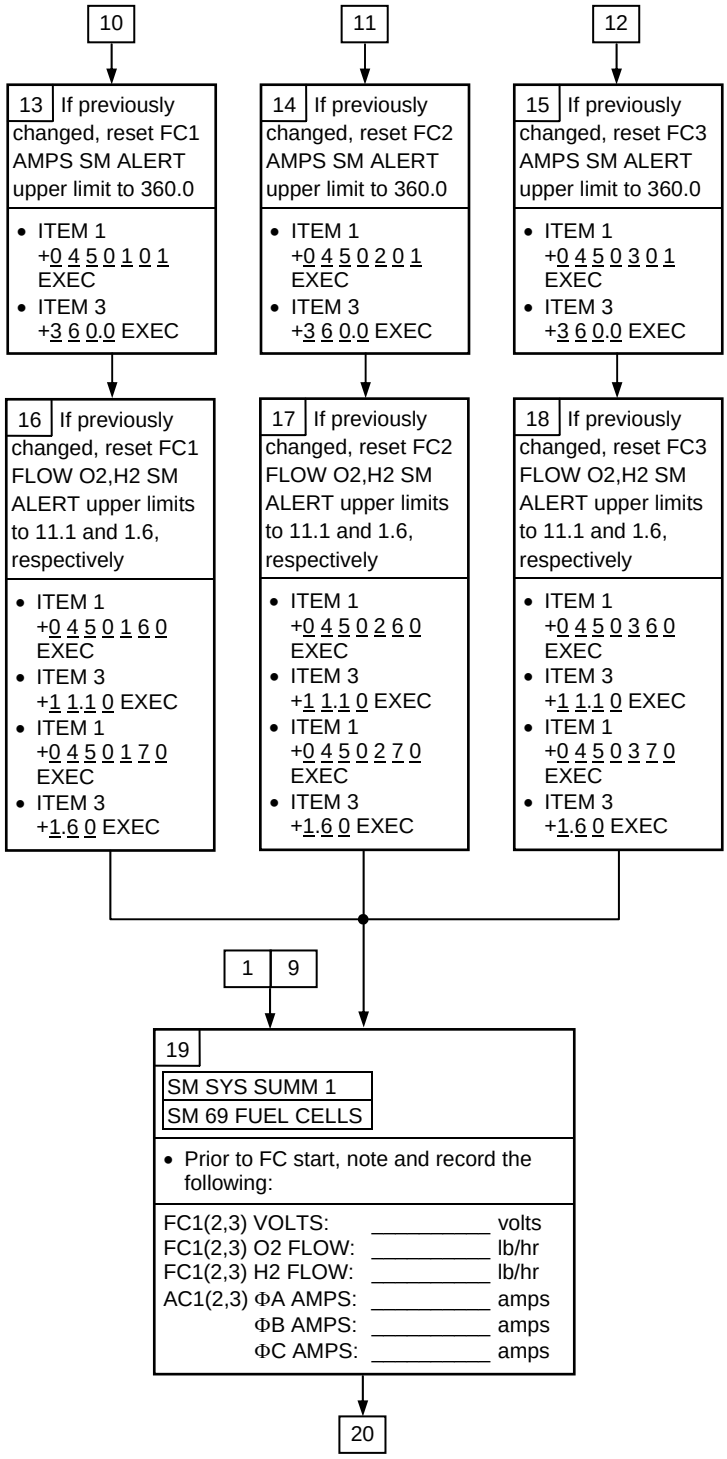

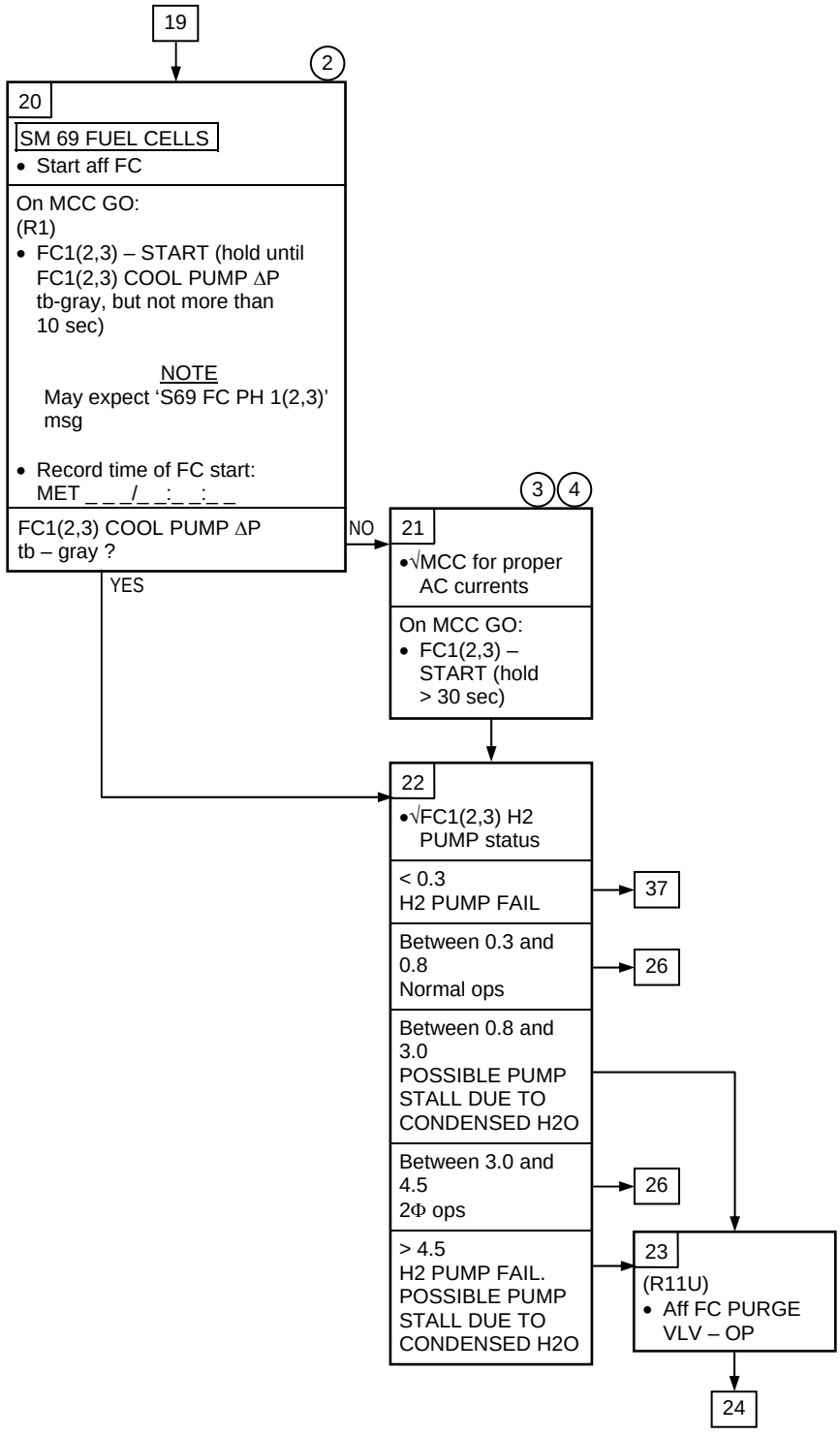

(2) May expect FC pH FSM when FC is started on some fuel cells due to addition of pH self-test capability

(3) Expected AC currents are an increase of ~0.8 amps/Φ (0.55 amps/Φ for COOL PUMPS and 0.25 amps//Φ for H2 mtr)

(4) Failure of COOL PUMP ΔP tb will inhibit FC startup. Holding sw in START for > 30 sec will bypass Logic Timer and allow COOL PUMP and H2 mtr to run

EPS SSR-6 (Cont)

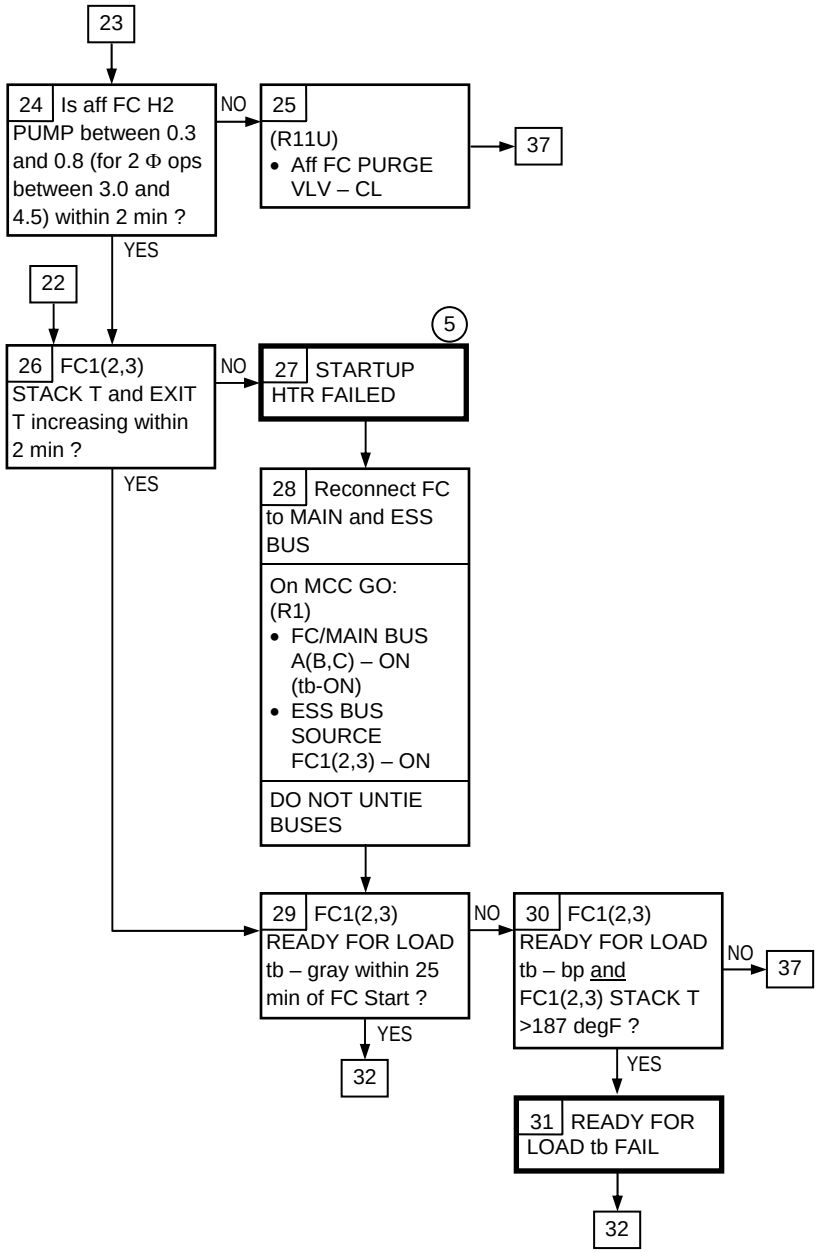

(5) Expected indications of operating STARTUP HTR are:
FC VOLTS ~32V
FC O2 Flow ~1.4 lb/hr
FC H2 FLOW ~0.2 lb/hr
Placing FC on MAIN BUS will generate sufficient heat to raise FC temp to operating levels

EPS SSR-6 (Cont)

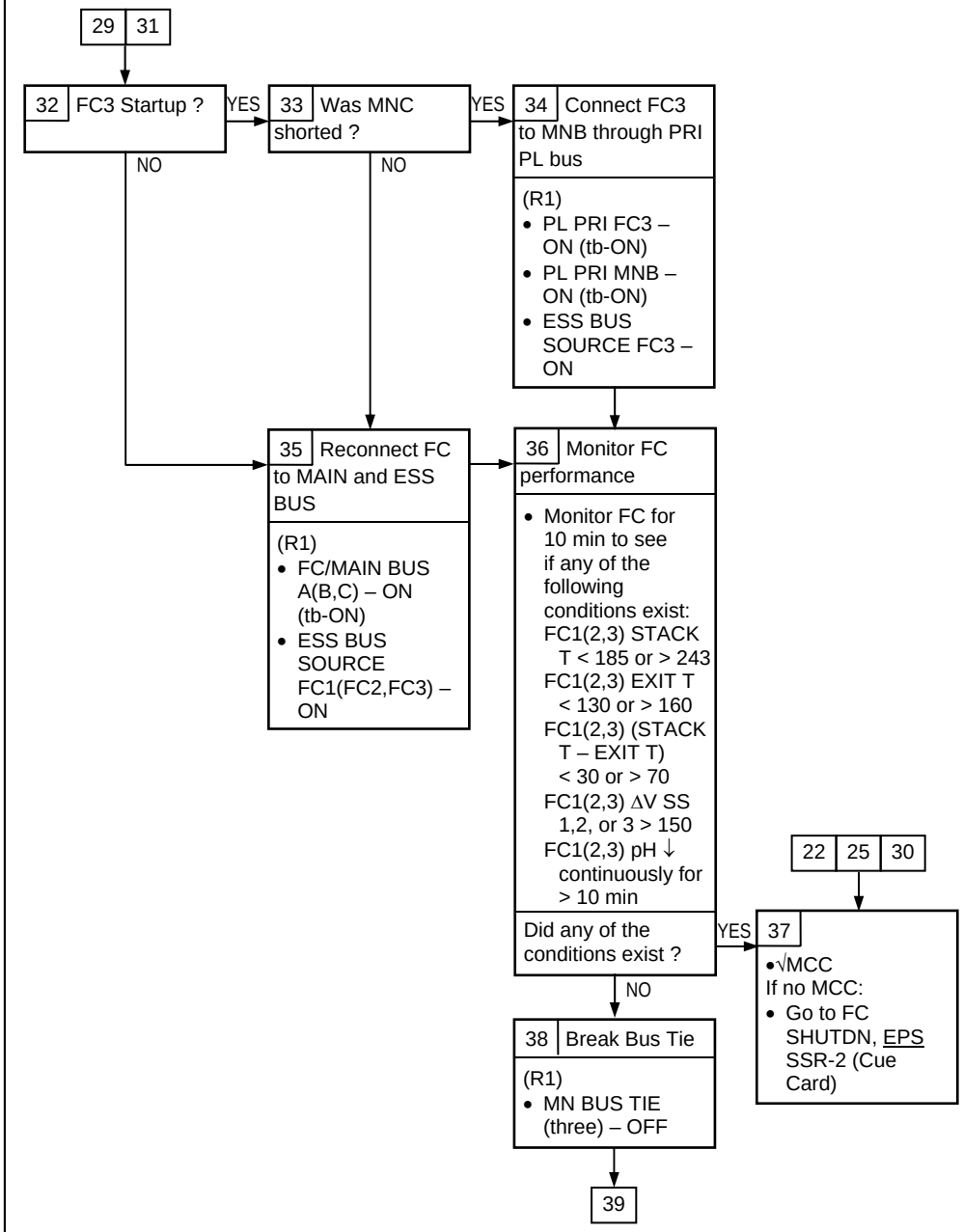

EPS SSR-6 (Cont)

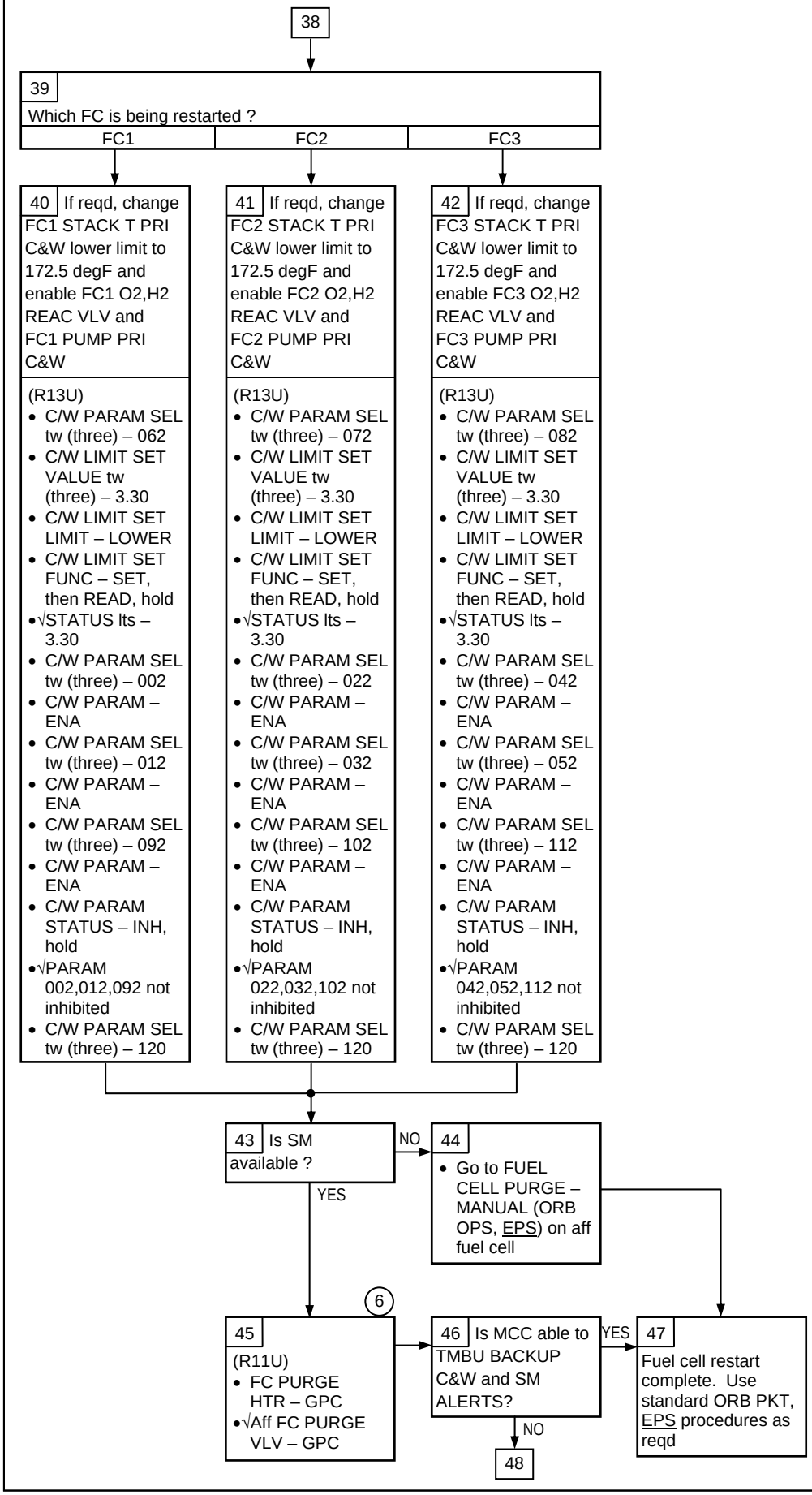

EPS SSR-6 (Cont)

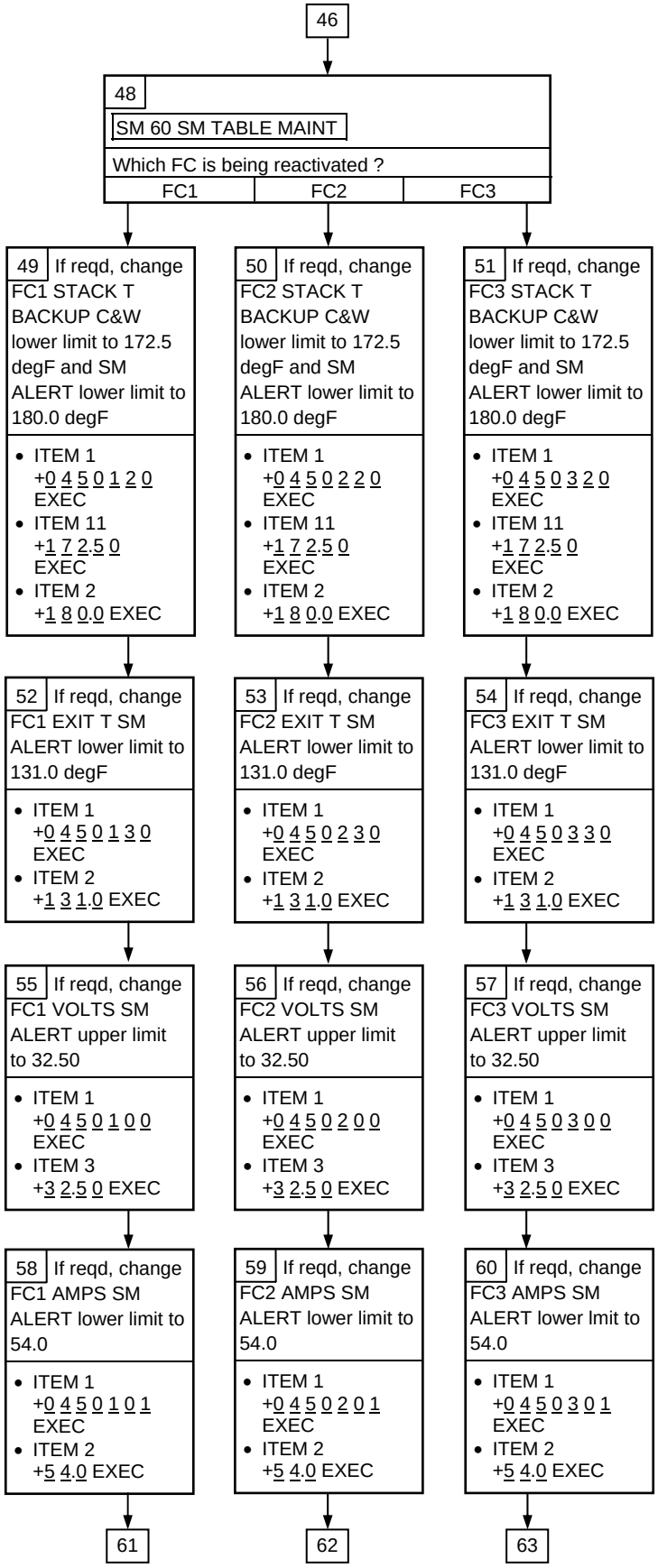

EPS SSR-6 (Cont)

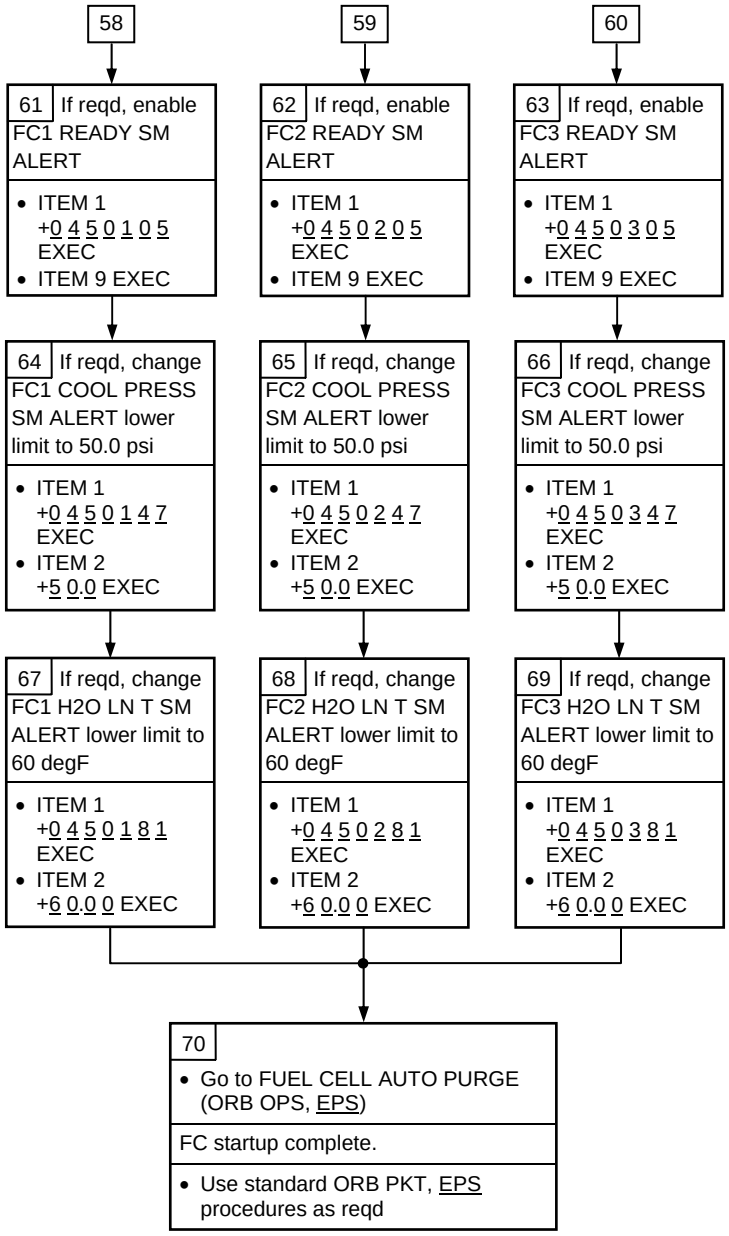

EPS SSR-7
TWO-PHASE FAN START PROCEDURE

NOTE

This procedure assumes the EPS MAL BUS LOSS SSR for the affected phase (not shorted) has already been completed. This procedure will be performed during MCC coverage

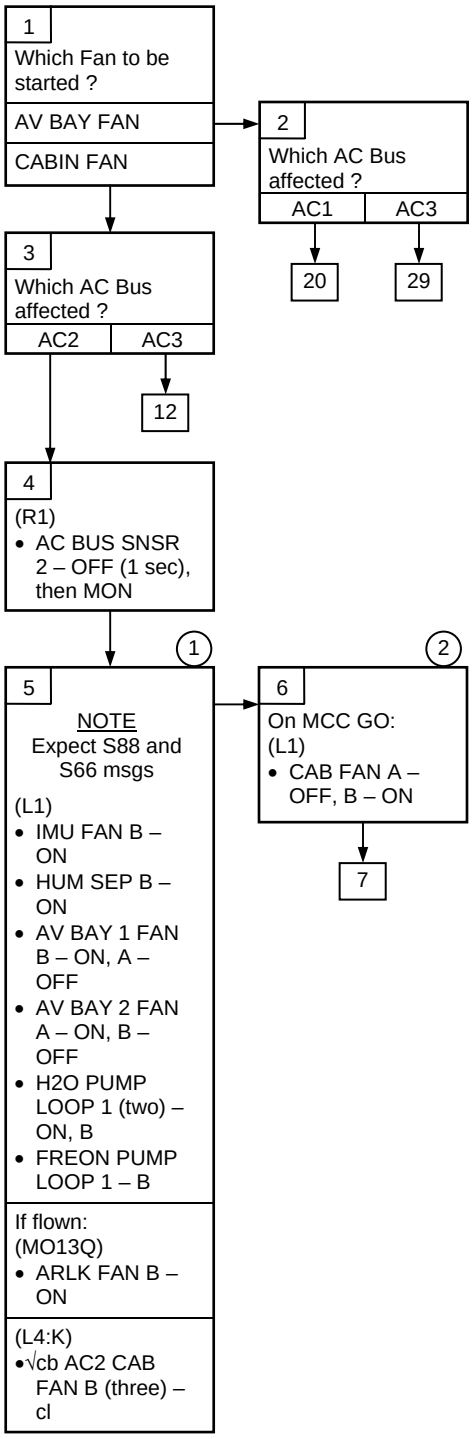

(1) Reconfig 3Φ AC equipment to bus with lost phase to create an induced voltage reqd to start large fan

(2) Off time not to exceed 20 min due to DDU cooling constraints

EPS SSR-7 (Cont)

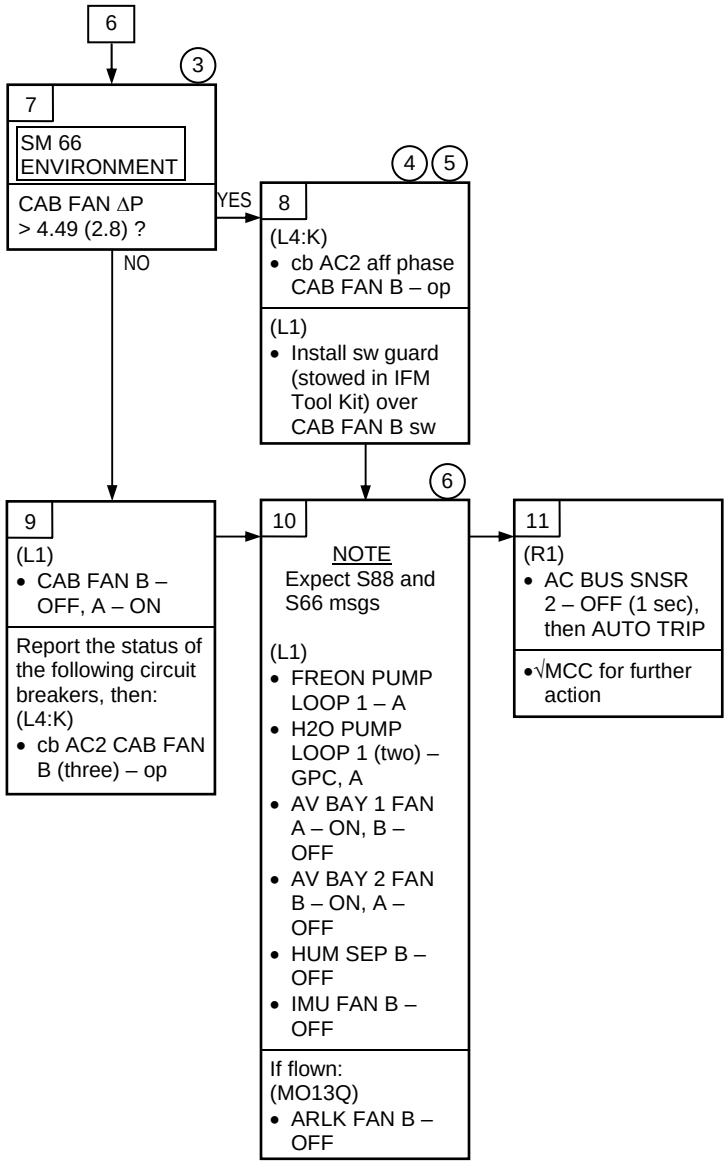

(3) Value in ( ) is the ΔP when the Cabin Press is at 10.2 psi

(4) Switch guard installed to prevent CAB Fan from being turned off during LiOH can changeout and cabin fan filter cleaning

(5) May receive 'S67 AC AMPS' msg

(6) Reconfig back to alternate equipment

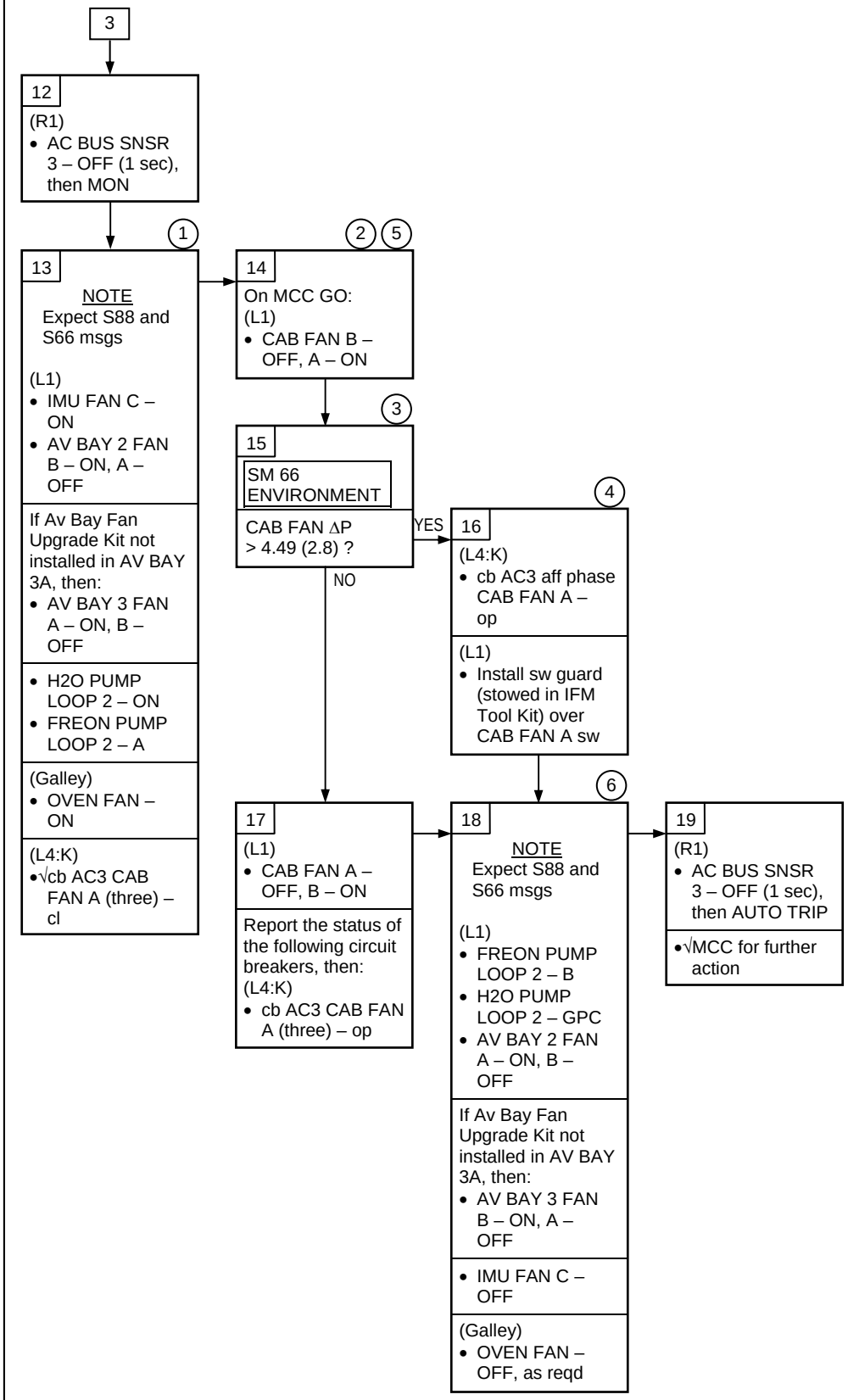

(1) Reconfig 3Φ AC equipment to bus with lost phase to create an induced voltage reqd to start large fan

(2) Off time not to exceed 20 min due to DDU cooling constraints

(3) Value in ( ) is the ΔP when the Cabin Press is at 10.2 psi

(4) Switch guard installed to prevent CAB Fan from being turned off during LiOH can changeout and cabin fan filter cleaning

(5) May receive 'S67 AC AMPS' msg

(6) Reconfig back to alternate equipment

EPS SSR-7 (Cont)

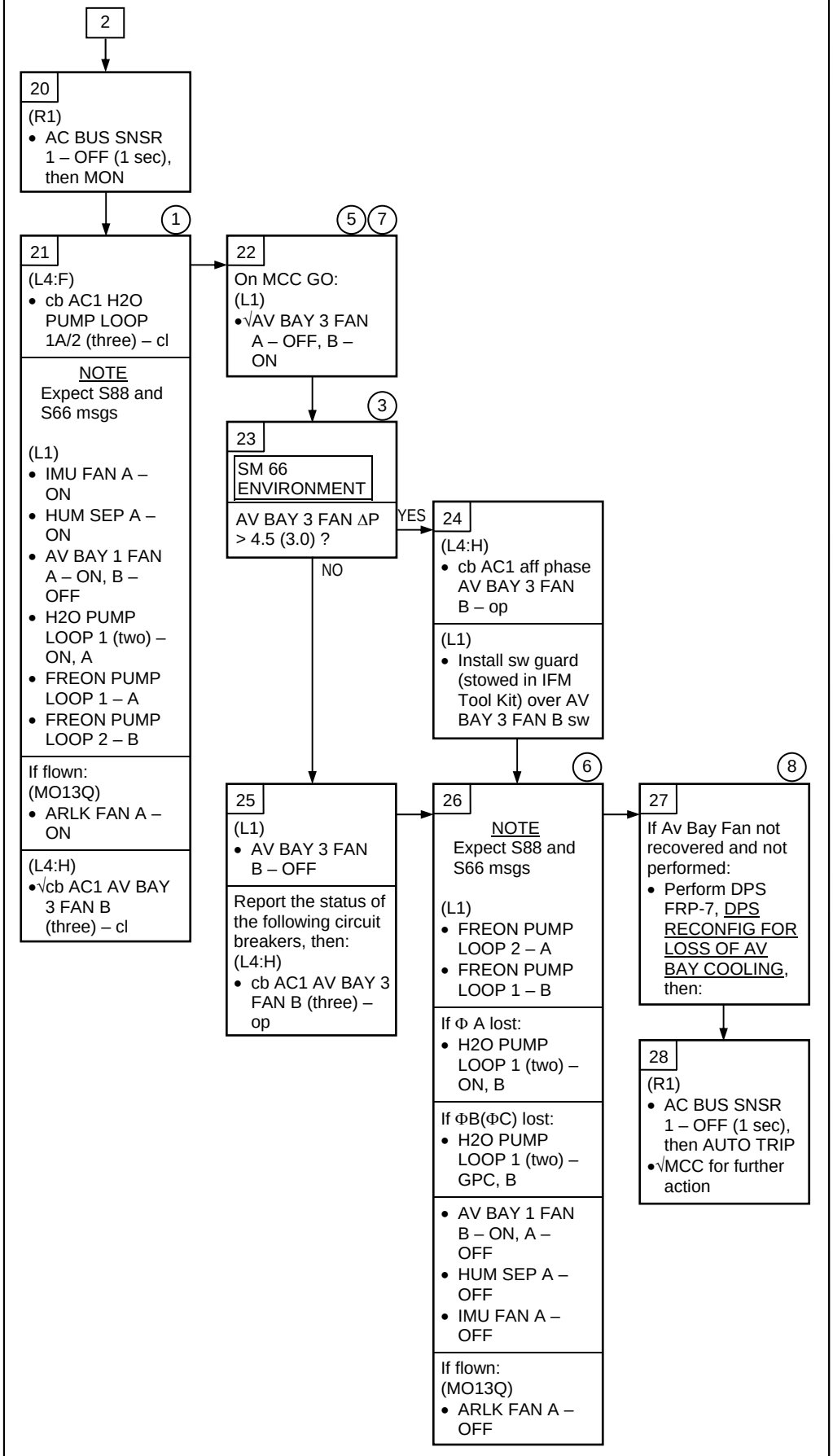

(1) Reconfig 3Φ AC equipment to bus with lost phase to create an induced voltage reqd to start large fan

(3) Value in ( ) is the ΔP when the Cabin Press is at 10.2 psi

(5) May receive 'S67 AC AMPS' msg

(6) Reconfig back to alternate equipment

(7) Off time not to exceed 26 min due to GPC cooling constraints. If GPC 3 Off, time not to exceed 1 hr due to Caution & Warning cooling constraints

(8) The Av Bay air cooled equipment must be powered down due to loss of Av Bay Air Cooling

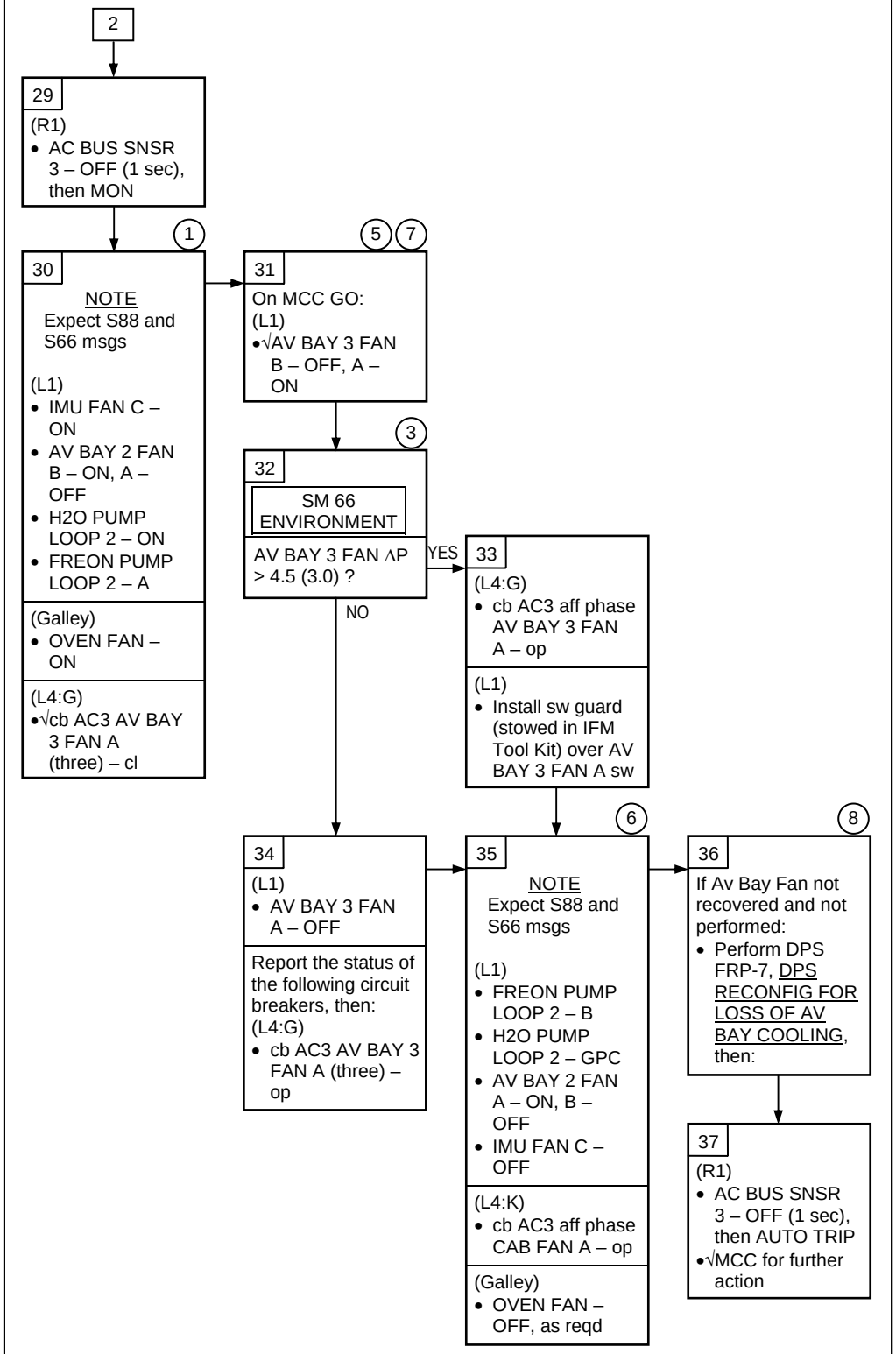

(1) Reconfig 3Φ AC equipment to bus with lost phase to create an induced voltage reqd to start large fan

(3) Value in ( ) is the ΔP when the Cabin Press is at 10.2 psi

(5) May receive 'S67 AC AMPS' msg

(6) Reconfig back to alternate equipment

(7) Off time not to exceed 26 min due to GPC cooling constraints. If GPC 3 Off, time not to exceed 1 hr due to Caution & Warning cooling constraints

(8) The Av Bay air cooled equipment must be powered down due to loss of Av Bay Air Cooling

This Page Intentionally Blank

EPS SSR-8
BUS LOADING – LRU SELECT

1	To load MAIN A, select:

NOTE

Do not change LRU config on LRU(s) configured for Cryo O2/H2 conservation, thermal control, or failure. Only LRUs with > 100 watts load and powered from single bus are listed

(L1)
1. • TOP EVAP HTR DUCT – A
2. • AV BAY 1 FAN A – ON
   • B – OFF
3. • 3 FAN B – ON
   • A – OFF
4. • FREON PUMP LOOP 1 – A
5. • 2 – B

(L2)
6. • FES FEEDLINE HTR A SUP – 1
7. • FES FEEDLINE HTR B SUP – 2

(R1/A11/A15)
8. • CRYO O2,H2 TK 1,3,5 HTR A (six) – AUTO (as reqd)
   • CRYO O2,H2 TK 1,2,3,4,5 HTR B (ten) – OFF
   • CRYO O2,H2 TK 2,4 HTR A (four) – OFF

(A12)
APU HTR
9. • GAS GEN/FUEL PUMP 1 – A AUTO
10. • GAS GEN/FUEL PUMP 3 – B AUTO
11. • LUBE OIL LN 1 – A AUTO
12. • 3 – B AUTO
13. • TK/FU LN/H2O SYS 1A,3B (two) – AUTO
    • TK/FU LN/H2O SYS 1B,3A (two) – OFF

HYD HTR
14. • RUD SPDBK A – AUTO
    • B – OFF
15. • BDY FLP A – AUTO
    • B – OFF
16. • ELEV A – AUTO
    • B – OFF

HYD
17. • CIRC PUMP 3 – MNA

(A14)
RCS/OMS HTR
18. • FWD RCS – A AUTO
19. • L POD A – A AUTO
    • B – OFF
20. • R POD B – B AUTO
    • A – OFF
21. • OMS CRSFD LINES – A AUTO

2	To load MAIN B, select:

NOTE

Do not change LRU config on LRU(s) configured for Cryo O2/H2 conservation, thermal control, or failure. Only LRUs with > 100 watts load and powered from single bus are listed

(L1)
31. • TOP EVAP HTR DUCT – B
32. • AV BAY 1 FAN B – ON
    • A – OFF
33. • 2 FAN A – ON
    • B – OFF
34. • FREON PUMP LOOP 1 – B
35. • CABIN FAN B – ON
    • A – OFF

(L2)
36. • FES FEEDLINE HTR A SUP – 2

(R1/A11/A15)
37. • CRYO O2,H2 TK 2,3,4 HTR B (six) – AUTO (as reqd)
    • CRYO O2,H2 TK 1,2,3,4,5 HTR A (ten) – OFF
    • CRYO O2,H2 TK 1,5 HTR B (four) – OFF
38. • PL PRI MNB – ON (tb-ON)
    • MNC – OFF (tb-OFF)
    • FC3 – OFF (tb-OFF)

(A12)
APU HTR
39. • GAS GEN/FUEL PUMP 1 – B AUTO
40. • GAS GEN/FUEL PUMP 2 – A AUTO
41. • LUBE OIL LN 1 – B AUTO
42. • 2 – A AUTO
43. • TK/FU LN/H2O SYS 1B,2A (two) – AUTO
    • TK/FU LN/H2O SYS 1A,2B (two) – OFF

HYD HTR
44. • RUD SPDBK B – AUTO
    • A – OFF
45. • BDY FLP B – AUTO
    • A – OFF
46. • ELEV B – AUTO
    • A – OFF

HYD
47. • CIRC PUMP 1 – MNB

(A14)
RCS/OMS HTR
48. • FWD RCS – B AUTO
49. • L POD B – B AUTO
    • A – OFF
50. • R POD A – A AUTO
    • B – OFF
51. • OMS CRSFD LINES – B AUTO

3	To load MAIN C, select:

NOTE

Do not change LRU config on LRU(s) configured for Cryo O2/H2 conservation, thermal control, or failure. Only LRUs with > 100 watts load and powered from single bus are listed

(L1)
61. • TOP EVAP HTR DUCT – C
62. • AV BAY 2 FAN B – ON
    • A – OFF
63. • 3 FAN A – ON
    • B – OFF
64. • FREON PUMP LOOP 2 – A
65. • CABIN FAN A – ON
    • B – OFF

(L2)
66. • FES FEEDLINE HTR B SUP – 1

(R1/A11/A15)
67. • CRYO O2,H2 TK 1 HTR B (two) – AUTO
    • CRYO O2,H2 TK 1 HTR A (two) – OFF
    • CRYO O2,H2 TK 2 HTR A (two) – AUTO
    • CRYO O2,H2 TK 2 HTR B (two) – OFF
    • CRYO O2,H2 TK 4 HTR A (two) – AUTO
    • CRYO O2,H2 TK 4 HTR B (two) – OFF
    • CRYO O2,H2 TK 5 HTR B (two) – AUTO
    • CRYO O2,H2 TK 5 HTR A (two) – OFF

(A12)
APU HTR
68. • GAS GEN/FUEL PUMP 2 – B AUTO
69. • GAS GEN/FUEL PUMP 3 – A AUTO
70. • LUBE OIL LN 2 – B AUTO
71. • 3 – A AUTO
72. • TK/FU LN/H2O SYS 2B,3A (two) – AUTO
    • TK/FU LN/H2O SYS 2A,3B (two) – OFF

HYD
73. • CIRC PUMP 2 – MNC

(A14)
RCS/OMS HTR
74. • L POD B – B AUTO
    • A – OFF
75. • R POD B – B AUTO
    • A – OFF

EXPLANATORY NOTES FOR BUS LOSS SSRs

Bus Loss SSRs contain all the orbiter reconfig steps necessary following a bus loss for > 100 electrical power buses. SSRs also list all orbiter equipment lost and resultant onboard crew indications for each bus loss. If a bus powers one or more sub-buses, the sub-bus SSRs do not need to be utilized unless referenced in the SSR (i.e., each stands alone).

The ORB PKT BUS LOSS ACTIONS lists all the reconfig steps that need to be accomplished immediately following recognition of a bus loss. Following completion of the ORB PKT BUS LOSS ACTIONS, the action contained in the BUS LOSS SSR should be accomplished as soon as practical. The following buses are <u>not included</u> in the ORB PKT BUS LOSS ACTIONS listings as no loss of equipment requires quick reconfig:

MNA MMC1, MMC3, AMC1, O14&A8, R1A1, A6&A14, ML86B

MNB MMC1, MMC2, MMC3, MMC4, AMC2, R14, O15&A8, R1A1, A6&A14, ML86B

MNC MPC3, APC3, FMC3, MMC2, MMC4, AMC3, O16RJD, R1A1, A6&A14, ML86B

ESS1BC FP&LC1, ML86B

ESS2CA FP&LC2

ESS3AB FP&LC3, O13, ML86B

AC1 FMC1, MMC1, MMC3, AMC1

AC2 FMC2, MMC1, MMC2, MMC3, MMC4, AMC2

AC3 FMC3, MMC2, MMC4, AMC3

Entry into a BUS LOSS SSR may be from a MAL procedure, from the Bus Loss ID Tables in the PKT C/L, from a direct readout of bus power loss by crew or MCC, or from the PKT C/L BUS LOSS ACTION.

The following additional information refers to each column of SSR-10 thru SSR-148:

1. <u>ACTIONS</u>

   The ACTIONS column lists, by panel, all the orbiter reconfig steps necessary following a bus loss. Reconfig performed prior to starting the ACTIONS, such as from PKT C/L BUS LOSS ACTIONS, is repeated in the ACTIONS column for completeness. No trouble-shooting steps are listed based on the assumption that the bus loss has been confirmed prior to starting the SSR. ACTIONS are config independent, making many of the switch position listings verification steps. Equipment or function loss that necessitates each reconfig step is listed adjacent to that step in the EQUIP/FUNCTION LOST column.

2. <u>BUS ISOLATION</u>

   The BUS ISOLATION steps do not have to be performed following a bus loss since equipment being unpowered is already unpowered if the bus is dead. The BUS ISOLATION column can be used as a shopping list if power must be reduced on a particular bus for any reason. Any equipment loss resulting in each isolation step is listed adjacent to the step in the EQUIP/FUNCTION LOST column if the same equipment is not already listed adjacent to a reconfig ACTION step. Equipment isolation steps listed in the ACTIONS column are not repeated in the BUS ISOLATION column.

3. <u>EQUIP/FUNCTION LOST</u>

   This column lists all equipment of the functions that are lost because of a bus loss. If reconfig action is necessary because of equipment loss, the equipment is listed adjacent to the appropriate ACTIONS column step(s). If no reconfig is necessary, but equipment may be isolated from bus, the equipment is listed adjacent to BUS ISOLATION STEP. Equipment lost for which there is no reconfig or isolation is listed separately. Equipment that is used only during ascent, such as the ET door system, is not included.

EXPLANATORY NOTES FOR BUS LOSS SSRs (Cont)

4. CREW INDICATIONS

Onboard crew indications that occur when a bus fails are grouped according to the type of indication. C/W lights are listed together, as are Fault Summary Messages and lights lost. Dedicated displays and tbs are grouped by the panels on which they are located. Indications listed would occur immediately when bus failed; exceptions are explained by a note or preceded by a qualifier. Indications that are config dependent are preceded by a qualifier such as “If H2O Loop 2 Pump Action.”

If a Fault Summary Message (FSM) is available in OPS 2 only, without a similar message in BFS or OPS 3, the FSM is followed by ‘(2)’. If FSM is available in OPS 3 only or BFS only, the FSM is followed by ‘(3)’ or ‘(B)’. If FSM is available in OPS 3 and BFS, the FSM is followed by ‘(3,B)’. Nothing is listed for FSMs that are available in all mission phases (available in OPS 2 and OPS 3 or in OPS 2 and BFS). OPS 1 and 8 were not considered.

This Page Intentionally Blank

This Page Intentionally Blank

EPS SSR-10
BUS LOSS: MNA DA1

(Includes all MNA sub-buses and AC)

ACTIONS	EQUIP/FUNCTION LOST	CREW INDICATIONS	NOTES
• Perform FC1 SHUTDN (FC SHUTDN Cue Card)	FC1 PUMPS, pH Snsr Purge Vlv O2,H2 Flow Xdcrs Cell Perf Monitor AUX PL A Bus pwr 1 MNA pwr to ESS2CA 1 ESS3AB 1 CNTLAB1,2,3 1 CNTLCA1,2,3	MASTER ALARM Light/ Tone – on SM ALERT Light/Tone – on	(1) Buses remained pwrd (2) Pwrs PL Timing Buffer and OIU 1 (if flown). OIU 1 redundant pwr MNB MPC2 via CAB PL3 (3) Indications do not appear until jet commanded (4) * TIME CRITICAL * If not done within 20 min, may freeze N2H4 and lose APU. However, SM ALERT occurs above freezing temp (5) S86 WSB T1 if in BLR CNTLR/HTR 1B. S86 WSB T3 if in BLR CNTLR/HTR 3A
• Perform LOSS OF 1 FC (ORB PKT, PWRDN)		(F7) MDU CRT 1 blanks	
(R1) • PL CAB – MNB • cb AC CONTR AC1 ΦA,ΦB,ΦC (three) – cl • INV/AC BUS 1 – OFF (tb-OFF) • INV PWR 1 – OFF (tb-OFF) • cb AC CONTR AC1 ΦA, ΦB,ΦC, (three) – op • AC1 BUS SNSR – OFF • O2,H2 MANF VLV TK1,2 (four) – OP	2 MNA pwr to CABPL 1,2,3 buses AC1 ΦA,ΦB,ΦC Inverters	(F1) MDU MFD 2 blanks	
		(F8) MDU PLT 1 blanks	
		(F7) C/W CABIN ATM lt – on C/W FREON LOOP lt – on C/W AV BAY/CAB AIR lt – on C/W MN BUS UNDERVOLT lt – on C/W AC VOLT lt – on C/W FC PUMP lt – on 3 C/W RCS JET lt – on C/W H2O LOOP lt – on EVENT TIMER ind – blank	
(R1) If O2(H2) Tk1 in use: • O2(H2) TK1 HTR B – AUTO • O2(H2) TK1 HTR A – OFF If O2(H2) Tk3 in use: • O2(H2) TK3 HTR B – AUTO • O2(H2) TK1 HTR A – OFF	Cryo O2,H2 Tk1 Htrs A Cryo O2,H2 Tk3 Htrs A	(COMM LOST) MS,OS audio lost Xmit to gnd via UHF	
(A15) If Tk5 in use: • O2(H2) TK5 HTR B – AUTO • O2(H2) TK5 HTR A – OFF	Cryo O2,H2 Tk5 Htrs A	(LIGHTS LOST) L Console Floodlt Pnl lts L/Ctr (pnls L1,L2,L4, C2,C3,F2,F6,F7) Pnl lts L/OH (pnls O5,O6, O7,O13,O14,O15) Numeric lts (pnls O3, F7) Instr lts R (pnls C2,F8,F9) PS Floodlt Orbit Sta Instr lts (pnls A1,A2) Middeck Floodlts 1,8 WMC Floodlt MO13Q pnl lt 2 Airlock Floodlt 1 PLB Floodlts Aft Stbd,Fwd Port, Docking TA Floodlt 2	
	Av Bay 3 Agent discharge capability		
If EMU(s) in battery charge mode: (AW18H) • PWR/BATT CHGR EMU 1(2) BUS SEL – MNB	EMU 1,2 PWR/BATT Charger MNA pwr	(F9) AC1 ΦA,ΦB,ΦC AC volts ind – < 90 DC VOLTS MNA ind – OSL	
(A12) APU HTR 4 • GAS GEN/FUEL PUMP 1 – B AUTO 4 • GAS GEN/FUEL PUMP 3 – A AUTO • LUBE OIL LN 1 – B AUTO • 3 – A AUTO APU HTR TK/FU LN/H2O 4 • SYS 1A – OFF 4 • 1B – AUTO 4 • 3A – AUTO 4 • 3B – OFF HYD HTR • RUD SPDBK A – OFF • B – AUTO • BDY FLP A – OFF • B – AUTO • ELEV A – OFF • B – AUTO	Brake Htrs A APU 1 GG/Fu Pump Htrs A APU 3 GG/Fu Pump Htrs B APU 1 Lube Oil Line Htrs A 3 Lube Oil Line Htrs B 1 Tk/Fu Ln Htrs A APU(1,2,3) GG Inj H2O Tk Htrs A APU 1,2 GG Inj H2O Ln Htrs A 3 GG Inj H2O Ln Htrs B 3 Tk/Fu Ln Htrs B Rud/Spd Brake Htr A Body Flap Htr A Elevon Actr Htrs A	(FSMs) S86 HYD RSVR Q 1 SM2 HYD QTY 1 (B) 5 S86 WSB T (2) SM0 THRM HYD (B) S66 AV BAY 3 FAN S66 AV BAY 2 FAN S66 CABIN FAN S66 CABIN PPCO2 S66 IMU FAN DP S66 CABIN PPO2 A S66 CABIN PRESS SM1 CABN DP/DT BU (B) S67 AC VOLTS 1 S69 FC PUMP 1 S69 FC H2 PUMP 1 S88 FREON FLOW 2 S88 FRN AFT CP 2 S88 FRN PL HX 2 S88 H2O LOOP 1 FLOW S88 H2O LOOP 2 QTY S88 H2O LOOP 2 TEMP S88 H2O PUMP P 2 I/O ERROR CRT 1 S67 MAIN BUS V	
	If SSPTS: PTU 1 (OPCU 1 and APCU 1)		
(Continued)	(Continued)	(Continued)	

EPS SSR-10 (Cont)
BUS LOSS: MNA DA1

ACTIONS	EQUIP/FUNCTION LOST	CREW INDICATIONS	NOTES
(A12) HYD CIRC • PUMP PWR 1 – MNB • 3 – MNC	Circ Pump 1 MNA pwr 3 MNA pwr	(FSMs) S88 THERMAL FRN (2) S88 THERMAL H2O (2) S67 FPC/FLC 1 S67 MPC 1 S67 APC/ALC A 3 L RCS D,L JET RM DLMA MANF	(3) Indications do not appear until jet commanded
If RAD CNTLR LOOP 1,2 – AUTO B: • Perform ON-ORBIT RAD CNTLR SWITCH, ECLS SSR-13 for Freon Loop 1,2 (L1) • FLASH EVAP CNTLR PRI B – OFF • If FES reqd, go to FES RESTART USING FES PRI A, ECLS SSR-5 • TOP EVAP HTR NOZ L – B AUTO • TOP EVAP HTR DUCT – B If HI LOAD EVAP enabled: • HI LOAD DUCT HTR – B(C)	Freon Loop 1 Rad Cntlr B 2 Rad Cntlr B FES Pri B Cntlr Top Evap L Noz Htr A Top Evap Duct L,R,Fwd,Aft Htrs A Hi Load Duct Outbd,Inbd Noz Htrs A	If ADTA 1, MLS 1, – STAR TRKR pwrd: 'BCE STRG 1 ADTA' (3,B) 'BCE STRG 1 MLS' (3) 'BCE STRG 1 STKR'	(6) After MET 3:30, tb already bp (7) Vlv holds position. N2 Sys 2 remains (8) Crew and ground have lost PPCO2 XDCR if Cabin Air Sig Condr not recovered
8 • Maintain LiOH Canister(s) changeout per cue card and FLIGHT PLAN		(L2) 6 CAB VENT ISOL tb – bp 6 CAB VENT tb – bp 7 O2 SYS 1 SPLY tb – CL 7 N2 SYS 1 SPLY tb – bp 7 N2 SYS 1 REG INLET tb – bp	(9) B/U pwr remains for RMS ops (10) When the OBSS is grappled by the RMS, the OBSS uses the RMS Payload power feed for all OBSS subsystem heater and operational power, except LCS
(L2) FLASH EVAP FDLN • HTR A SPLY – 2 • B SPLY – 1	FES H2O Fdln A Htrs 1 (all) B Htrs 2 (all)	(O1) AIR TEMP AV BAY 2 ind – 45 degF H2O PUMP OUT PRESS LOOP 2 ind – 0 psia O2/N2 FLOW SYS 1 ind – 0 pph CAB PRESS ind – 0 psia PPO2 SNSR A ind – 0 psia	(11) All brakes ON and safing initiated (12) Single mtr time. One failure away from loss of two out of three MRLs. EVA or RMS jettison capability exists
• FREON ISOL MODE – OFF	Auto radiator isolation function	(O3) RCS/OMS Prplt Qty Gage blanks Mission Timer blanks	
(A8L) • PORT RMS HTR A – OFF • PORT RMS HTR B – AUTO If OBSS berthed (A8L) • STBD RMS HTR A – OFF • STBD RMS HTR B – AUTO	RMS: 9 Primary pwr 10 Port Payload pwr 11 MCIU 12 Port Mid MRL Mtr 1 12 Port Aft MRL Mtr 2 14 Stbd Fwd MRL Mtr 2 14 Stbd Aft MRL Mtr 1 Shldr Brace Rel Port Htr A Stbd Htr A 9 D&C Primary ltg	HYD/APU HYD QTY 1 ind – 0% 13 APU H2O QTY ind – 0%	(13) APU H2O QTY 1 if in BLR 1B. APU H2O QTY 3 if in BLR 3A (14) Single mtr time. One failure away from loss of MRL latching capability. EVA or OBSS jettison capability exists
(F6,F8) • HSI SEL SOURCE – other than MLS, (OV103,4) TACAN 1 or (OV105) GPS 1 • RDR ALTM – 2	MLS 1 (OV103,4) TACAN 1 (OV105) GPS 1 Radar Altm 1	(R1) FC1 COOL PUMP ΔP tb – bp	
(O6) • ANNUN BUS SEL ACA 1 – MNB • UHF EVA STRING – 2	ACA 1 MNA pwr SSOR 1	(R4) 15 HYD BK ISOL VLV 1 tb – OP 15 LG EXTND ISO VLV tb – OP 15 HYD MPS/TVC ISOL VLV SYS 1 tb – CL	(15) Vlv holds position (16) Vlv holds position. Man OP capability remains
• For attitude control, LOSS OF VERNIER (ORB OPS, RCS)	RCS Manf L5 RJD pwr (L5L,L5D) RCS Manf F1 RJD pwr (F1F,F1L,F1U,F1D)	(O7) 16 AFT L,R RCS He PRESS A (two) tb – bp AFT L,R RCS TK ISOL 3/4/5 A tb – bp (if vlv in CL position)	
Refer to OMS/RCS Slide Rule for vlv loss info 17 Reconfig following vlv(s) only if leak isolation reqd: (O7) • AFT L RCS He PRESS A,B • R RCS He PRESS A	16 L,R,F RCS He Pr Isol A GPC Cntl and man CL capability 18 Aft L RCS He Pr Isol B man OP capability	(O8) 16 FWD RCS He PRESS A tb – bp 15 FWD RCS TK ISOL 3/4/5 tb – bp 15 FWD RCS MANF ISOL 1 tb – bp	(17) Do not reconfig for reg switch or I'CNCT procedures (18) Vlv holds position. Man CL and full GPC cntl remains
(O8) • FWD RCS He PRESS A		(R11L) 15 SPLY H2O TKA INLET tb – bp 15 SPLY H2O TKB OUTLET tb – bp	
		(R13L) RAD CNTL STBD,PORT (two) tb – bp	
(Continued)	(Continued)	(Continued)	

EPS SSR-10 (Cont)
BUS LOSS: MNA DA1

ACTIONS	EQUIP/FUNCTION LOST	CREW INDICATIONS	NOTES
GNC 23 RCS • Reprioritize L,R Manf 2 Jets to first priority: DES INH twice all other jets; highest priority first, then next highest, etc • Set aft pod(s) PRI JET FAIL LIMIT to 6	Aft RCS L,R Jet 2 Htrs	15 (R13L) MMU GN2 SPLY ISOL VLV A tb – bp	(11) All brakes ON and safing initiated
(O8) • If Straight Feed config, Left OMS XFEED B – OP (tb-OP). Otherwise, √MCC	19 OMS Eng/Xfeed Vlv Redundancy	(A4) EVENT TIME ind – blank	(15) Vlv holds position
(C2) • L IDP/CRT SEL – 3 • GPC/CRT 01 EXEC	20 IDP 1 MDU CRT 1 MDU MFD 2 MDU PLT 1 21 ADC 1A/2 A	(A8U) 11 RMS D&C tb – bp except: Brakes tb – OFF RATE MIN tb – OFF RATE HOLD tb – OFF SOFT STOP tb – gray RATE SCALE tb – gray	(19) Maintains deorbit capability for MNB DA2 failure (20) Loss of redundant port to the following: MDU CDR 1 (S) MDU CDR 2 (P)
(O16:D) cb MNC • (OV103) GPS PRE AMPL UC – cl • (OV103) GPS PRE AMPL LC – cl		(A8L) Port RMS: DPY/STO tb – bp RETEN LAT tb – bp R-F-L MID tb – bp STARBOARD RMS: DPY/STO tb – bp RETEN LAT tb – bp R-F-L AFT tb – bp	(21) IDP 1, IDP 2 ADC data lost. MDU port select may be reqd (22) Selecting failed MMU for GNC MF protects against GPC MMU Rcvr failure after OPS XTION prepositioning
SM 1 DPS UTILITY (G2,G8,S2) MMU ASSIGN 22 • GNC ITEM 1 EXEC • SM ITEM 4 EXEC • PL ITEM 6 EXEC	MMU 1	SM 94 PDRS CONTROL PORT RMS Indications lost: Mid MRL Mtr 1 LAT/REL/RDY Aft MRL Mtr 2 LAT/REL/RDY STBD RMS Indications lost: Fwd MRL Mtr 2 LAT/REL/RDY Aft MRL Mtr 1 LAT/REL/RDY	(23) Listen only capability regained when headset used on MS CCU (from PS ATU) as FD speaker is also failed
(R11U) • FC H2O LINE HTR – B AUTO • FC H2O RELIEF HTR – B AUTO	FC H2O Line Htrs A FC H2O Relief Htrs A	If cooling by FES B only: 'S88 EVAP OUT T1' 'S88 EVAP OUT T2'	(24) Loss of MS ATU causes loss of redundant path for ACCU config control bits, loss of xmit capability from CCU, and loss of FD Spkr
(R11L) 23 • MS AUD CNTL – PS	24 MS ATU, CCU & FD Spkr		(25) Htr B remains
(L9) • √PS AUD PNL config for use		(ML31C) 15 WASTE H2O TK 1 VLV tb – bp 15 WASTE H2O DUMP ISOL VLV tb – bp 15 WASTE H2O DUMP VLV tb – bp 15 SPLY H2O TKD OUTLET tb – bp	(26) Vlv holds position. May have to interface EMU 2 with SCU 1 to provide total H2O servicing/recharge
(A13) • (OV103) GPS PRE AMPL UC – MNC • (OV103) GPS PRE AMPL LC – MNC			
(A14) RCS/OMS HTR • FWD RCS – B AUTO • L POD (two) – A OFF, B AUTO • R POD (two) – B OFF, A AUTO • OMS CRSFD LINES – A OFF, B AUTO	25 Fwd RCS A Htrs (all) 25 L Pod A Htrs (all) 27 R Pod B Htrs (partial) 25 OMS Crsfd Ln A Htrs (all)	(AW82D) 26 EMU 2 H2O SPLY,WASTE tb (two) – CL If OMS Gmbl Cmd Abs value > 2 deg: C/W OMS TVC lt – on 'L OMS GMBL' (3,B)	(27) Htr A remains
(ML86B:A) • cb MNB H2O LINE HTR B – cl	H2O Line Htrs A: Waste Dump Line Htr A Sply Dump Line Htr A Vac Vent Line Htr A	SM (BFS SM 63) PL BAY DOORS If in AUTO OP/CL for PLBDs, sequence terminates immediately and msg '(S63) PBD CONFIG'	
(ML86B:C) • cb MNB EXT ARLK HTR STRUC Z1/2/3 – cl • cb MNB EXT ARLK HTR LN ZN 1, ZN 2 (two) – cl If in Rendezvous or Docked: • cb MNB EXT ARLK HTR VEST Z1/2/3 – cl	Ext Arlk Htrs A: Structural Htrs A Water Line Htrs A Ext Arlk Vest Htrs A	During MAN PLBD OP/CL, single mtr run time noted on actuators listed at left During Rad Dpy/Sto ops: (R13L) RAD LAT CNTL tbs (two) indicate single mtr ops	
(ML86B:D) cb MNB • MMU PORT,STBD HTR B (two) – cl	25 MMU Port,Stbd Htr A		
(Continued)	(Continued)	(Continued)	

EPS SSR-10 (Cont)
BUS LOSS: MNA DA1

	ACTIONS		EQUIP/FUNCTION LOST
	For PLBD ops: • OP/CL Drs in man mode		PLBD: C/L Lat 1-4, 5-8, 9-12 Mtrs 1 Port,Stbd Fwd Blkhd Mtrs 1 Port Aft Blkhd Mtr 1 Stbd Door Mtr 1 Port Door Mtr 2 CL Limit sw Stbd Door Mtr 1 OP Limit sw
28	Save L OMS for deorbit (If reqd for on-orbit burn, √MCC)	28	L OMS GN2 Press Vlv Op TM
28	Prior to using L(R) OMS: (O8)	29	L,R OMS He Pr Isol A GPC OP Cntl
30	L(R) OMS He PRESS/VAP • ISOL A – OP • B – GPC	29	L,R OMS He Vap Isol 1 GPC OP Cntl
	GNC XXXXX MNVR YYYYY (3,B) Sel L OMS SEC: • OMS L GMBL SEL – ITEM 30 EXEC Sel R OMS PRI: • OMS R GMBL PRI – ITEM 29 EXEC		L OMS Pri TVC R OMS Sec TVC
	If Waste H2O Dump reqd: • Perform WASTE H2O SYS BACKUP DUMP (IFM)	15	Waste H2O: Dump Vlv Cntl Noz Htr
	If on PCS1: • Perform RECONFIG TO ALT PCS SYS, ECLS SSR-3	15 15 15 31 32	O2/N2 Cntl Sys 1: O2/N2 Sys 1 Flow Xdcrs O2 Sys 1 Sply Vlv Cntl N2 Sply Vlv 1 Cntl N2 Reg Inlet Vlv 1 Cntl O2 Xovr Vlv 1 OP capability O2/N2 Cntl Vlv 1 man Cntl PPO2 Snsr A
			Cabin Press Snsr Emer dP/dT B/U Comp
		33	FC3 Redundant Reac Vlv Cntl on pnl C3
	If reqd during entry (< 120K ft): (L1) • NH3 CNTLR B – PRI/GPC	34	NH3 Sys A Pri Cntlr
	(ML31C) • VAC VENT ISOL VLV BUS SEL – MNB		Vac Vent Isol Vlv MNA Cntl
	If AC Pwr Transfer cable to be installed to regain AC: • Go to EPS SSR-200; otherwise, continue with Bus Loss Actions		
	If Cab Temp Cntlr 2 active: (L1) • CAB TEMP CNTLR – OFF	35	Cabin Temp Cntlr 2 and Hx Byp Vlv Mtr 2
	(MD44F) • Remove pin from SEC Actuator and BYP vlv linkage, connect linkage to PRI Actuator		
	(L1) • CAB TEMP CNTLR – 1		
	(R13U) H2O LOOP 2 OUT P • C/W PARAM SEL tw – 115 • PARAM – INH • C/W PARAM SEL tw – > 119		
	(Continued)		(Continued)

CREW INDICATIONS
If OMS Gmbl Cmd Abs value > 2 deg and Sec TVC selected: C/W OMS TVC lt – on 'R OMS GMBL' (3,B)
If Hum Sep A ON: 'S66 HUMID SEP A'
If H2O Loop 1 Pump A active: 'S88 H2O LOOP 1 FLOW' 'S88 H2O LOOP 1 TEMP' 'S88 H2O PUMP P 1'
(O1) H2O PUMP OUT PRESS LOOP 1 ind – 20-25 psia
(F7) If APUs active, and using BLR CNTLR/HTR 1B or 3A: C/W APU TEMP lt – on after ~ 2 min
If first AA failure and S/W Processing Accel data: RM FAIL ACC (3)
CCTV Video and TV Annun lts lost if MNA selected for VCU CCTV Mon 1 lost
STAR TRKR DR POS -Y OP/CL time incr from 8 to 16 sec
L ADP deploy time incr from 15 to 30 sec

NOTES
(15) Vlv holds position
(28) Lost TM: GNC SYS SUMM 2 L OMS N2 P VLV: If Eng – ARM/PRESS, assume vlv OP L,R OMS ENG VLV 1: Assume Vlv 1 status same as Vlv 2
(29) Man Cntl remains. Redundant Isol remains
(30) Maintains He Isol redundancy
(31) Vlv fails closed. IFM or real-time flow test will be required. √MCC for additional direction
(32) O2/N2 Cntl Vlv 1 normally closed when unpowered
(33) Not yet active on all vehicles
(34) Sys A Sec Cntlr man on capability remains
(35) Lose Auto Temp Cntl via Cntlr 2 and H2O Loop 2 Cabin Hx In Temp snsr. Hx Byp vlv holds position. May be repwrd after AC Pwr Transfer Cable connected

EPS SSR-10 (Cont)
BUS LOSS: MNA DA1

	ACTIONS		EQUIP/FUNCTION LOST	CREW INDICATIONS	NOTES
36	SM 60 TABLE MAINT • Inhibit 0612705, 0612700, 0612740, 0612710, 0612665, 0612742				(36) Inhibits H2O Loop 2 Pump ΔP, Pump Out Press, Pump Out Temp, Accum Qty, Cabin HX in T, H2O Loop 1 Ich Flow respectively (37) H2O Loop 2 Byp vlv holds position (38) H2O Loop 2 Pump Out Press, Pump ΔP, Accum Qty, Pump Out Temp snsrs lost (39) May be repwrd after AC Pwr Transfer Cable connected (40) AV Bay 2 Fan ΔP, Air Out Temp snsrs lost (41) Use streamers (if flown) or monitor by feel during wake period if Cabin Air Sig Condr not recovered
	(WCS) • √MODE – AUTO • √CRADLE – AUTO • √Hose stowed in cradle • √WCS ON lt – OFF • FAN SEP SEL sw – OFF • HOSE BLOCK – SEP 2 • In next step, alternate fan sep will turn on for 30 sec. Normal ops may proceed after 30-sec run complete • FAN SEP SEL sw – 2		WCS Fan/Sep 1 Sep Fan 1 Mtr Relay		
	(R2) • BLR CNTLR/HTR 1 – A • 3 – B		Hyd H2O Blr Cntlr 1B 3A		
	(L1) • HUM SEP A – OFF • B – ON • IMU FAN A – OFF • B(C) – ON • H2O PUMP LOOP 1 – ON, B • H2O PUMP LOOP 2 – OFF • H2O LOOP 1 BYP MODE – AUTO • AV BAY 1 FAN A – OFF • √B – ON • AV BAY 2 FAN (two) – ON • AV BAY 3 FAN A – ON • B – OFF • FREON PUMP LOOP 1 – B • 2 – A		Humidity Sep A IMU Fan A 37 H2O Loop 2 Byp Cntlr, Sig 38 Condr H2O Loop 2 Byp Vlv pwr 2 Pump GPC Cntl 1 Pump A Av Bay 1 Fan A 39 Av Bay 2 Sig Condr, Xdcrs 40 (ECLS SC3) Av Bay 3 Fan B Freon Loop 1 Pump A 2 Pump B		
41	During sleep periods: • CAB FAN (two) – ON		Cabin Air Sig Condr (ECLS SC6)		
	(MO13Q) If Arlk/Tnl Fan active: • ARLK FAN A – OFF • B – ON		Arlk/Tnl Fan A		
	(Continued)		(Continued)		

BUS LOSS: MNA DA1

	BUS ISOLATION		EQUIP/FUNCTION LOST	CREW INDICATIONS	NOTES
42	ONLY ON MCC CALL, PERFORM				(42) AC1 Bus Isolation for AC Pwr Transfer Cable Installation accomplished in MNA DA1 ACTIONS column. No additional bus isolation steps reqd
	• MDU CRT 1 PWR – OFF • MDU MFD 2 PWR – OFF • MDU PLT 1 PWR – OFF				(43) Redundant pwr source remains for equipment
	(C2) • IDP/CRT 1 PWR – OFF				(44) H2O Loop 1 Intchgr Flow rate and IMU Fan ΔP snsrs lost
	(O6) • STAR TRKR PWR -Z – OFF		-Z Star Trkr Dr OP capability Tracker		(45) Cabin Smoke Detector remains
	(O7) • (OV105) GPS 1 PWR – OFF • (OV105) GPS 1 PRE AMPL UPPER – OFF • (OV105) GPS 1 PRE AMPL LOWER – OFF		(OV105) GPS 1		(46) Current Snsr 2 remains
	(O8) • RADAR ALTM 1 – OFF • MLS 1 – OFF				(47) Cntlr A remains
	(O14:B) cb MNA				
43	• OI SIG CONDR OF 1/4 A – op				
43	• OI SIG CONDR OM 1/2 A – op				
43	• OI MDM OF 1/2 A – op				
43	• 3/4 A – op				
	• OI H2O BYP LOOP 1 SNSR – op	44	H2O Byp Loop 1 Snsr (ECLS SC11)		
	• MNC CONTR – op				
	• MSN TIMER FWD – op		Fwd Mission Timer		
	• EVENT TIMER AFT – op		Aft Event Timer		
	(O14:C) cb MNA				
	• (OV103,4) TACAN 1 – op		Tacan 1		
45	• SMOKE DETN L/R FLT DK – op	45	L,R Flt Dk Smoke Detectors		
	• SMOKE DETN BAY 2A/3B – op		Av Bay 2 Smoke Detector A Av Bay 3A Smoke Detector B		
	• FIRE SUPPR BAY 3 – op				
	• UTIL PWR O19/MO52J – op		MNA Utility pwr		
	• FLOOD L CNSL – op		L Console Floodlt		
	• ANNUN FWD ACA 1 – op				
	• cb MNA CRYO O2 HTR TK1 SNSR 1 – op	46	Cryo O2 Tk1 Htr Current Snsr 1		
	• cb RAD ISOL CONTR – op		Auto radiator isolation function		
	(O14:D) cb MNA				
47	• FREON RAD CNTLR 1 – op				
47	• FREON RAD CNTLR 2 – op				
	• N2 SPLY 1 – op				
	• O2/N2 CNTLR 1 – op				
	• O2 XOVR 1 – op				
	• N2 REG INLET 1 – op				
	• CAB VENT – op		Cabin Vent Vlv		
	• VENT ISOL – op		Vent Isol		
	• (OV105) GPS 1 PRE AMPL UPPER – op				
	• (OV105) GPS 1 PRE AMPL LOWER – op				
	• (OV103) GPS PRE AMPL UC – op				
	• (OV103) GPS PRE AMPL LC – op				
	(Continued)		(Continued)		

EPS SSR-10 (Cont)
BUS LOSS: MNA DA1

	BUS ISOLATION		EQUIP/FUNCTION LOST	CREW INDICATIONS	NOTES
	ONLY ON MCC CALL, PERFORM				(43) Redundant pwr source remains for equipment
	(O14:E) cb MNA • RDR ALTM 1 – op • MLS 1 – op • ADTA 1 – op • S TRK -Z – op • ACCEL 1 – op 43 • DDU L – op 43 • AFT – op 48 • NWS – op		ADTA 1 AA 1 NWS 1		(48) NWS 2 is still available (49) Six vlvs fail to non-isolation position (50) Capability to xmit to gnd from UHF degraded (51) GCIL also pwrd via MNC cb (52) MNB pwr may be selected via TV pwr sw (pnl A7) or GCIL if reqd
	(O14:F) • MMU 1 – OFF				
		49	ATVC 2 Isol ME		
	(R11U) • FC PURGE VLV 1 – CL • FC STARTUP HTR 1 – ENA		FC1 Startup Htr Inh capability		
	(R14:A) • cb MNA AUD MS – op • ADC 1A/2A – op • MDU MFD 2 – op • PLT 1 – op		MS ATU FD Spkr		
	(R14:B) cb MNA 43 cb PALLET/DSC • 1A/2B – op (EDO) • 3A – op (EDO) • UHF – op • GCILC – op • CNTL BUS BC1/2/3 – op	 50 51 	 UHF Splx Pwr Amp GCIL MNA pwr MNA pwr for Cntl BC1,2,3 Buses		
	(R14:C) • cb UHF EVA – op		SSOR EVA STRG 1		
	(R14:D) cb MNA TV C CAMR • CAMR/PTU – op • CAMR HTR – op • ILLUM/PTU HTR – op cb MNA TV • CONTR UNIT – op • MON 1 – op	 52	 TV C Camr and Pan-Tilt TV C Aft Bay Camr Htr TV C Camr Pan-Tilt Htr and Illum Video Cntl Unit MNA pwr CTVM 1		
	(R14:E) • cb MNA PS FLOOD – op cb MNA D CAMR • CAMR/PTU – op • CAMR HTR – op • ILLUM/PTU HTR – op		PS Floodlt TV D Camr and PAN-TILT TV D Camr Htr TV D Camr PAN-TILT Htr and Illum		
	(A7U) PL BAY • FLOOD AFT STBD – OFF • FWD PORT – OFF • DOCKING – OFF • PORT RMS LIGHT – OFF		PLB Aft Stbd Floodlt Fwd Port Floodlt Docking Floodlt Port RMS lt		
	(A6L) IF DOCKING MISSION • cb ESS 1BC DEP SYS 1 VENT ISOL – op • cb MN A DEP SYS 1 VENT – op		Vest DEP Vlv Sys 1 Vent Vent Isol		
	(Continued)		(Continued)		

EPS SSR-10 (Cont)
BUS LOSS: MNA DA1

BUS ISOLATION		EQUIP/FUNCTION LOST
ONLY ON MCC CALL, PERFORM		
(A6L) IF DOCKING MISSION cb MN A DOCK LT • TRUSS FWD – op • VEST PORT – op • SYS PWR MNA – OFF • PSU PWR MNA – OFF cb MNA • LOGIC 1 – op • 3 – op • PYRO PWR MNA – OFF LIGHTS • AIRLK 1/4 MNA – OFF		MNA A7 Fwd Truss Docking lt Port Vestibule Docking lt DSP SYS PWR MN A 53 PSU PWR MN A 54 MNA pwr to DSP Logic buses 1,3 MNA Pyro System External Airlock lts 1,4
(A7L) MADS • STRAIN GAGE – OFF • W/B/ACIP PCM – OFF		MADS W/B FDM, WBSC, SGSC, ACIP PCM
(MA73C:A,B) MCA LOGIC MNA • FWD 1 – OFF • AFT 1 – OFF • MID 1,3 (two) – OF		MNA FMC1 Bus pwr AMC1 Bus pwr MMC1 Bus pwr MMC3 Bus pwr
(ML86B:A) • cb MNA H2O LINE HTR A – op • cb MNA SUPPLY H2O TKA INLET – OP • cb MNA SUPPLY H2O TKB OUTLET – OP • cb MNA WASTE H2O DUMP VLV/NOZ HTR – OP	15 15	Sply H2O TKA Inlet Vlv Cntl Sply H2O TKB Outlet Vlv Cntl
(ML86B:B) • cb MNA WASTE H2O TK1 VLV – op • cb MNA SPLY H2O TKD OUTLET – op • cb MNA WASTE H2O DUMP ISOL – op • cb MNA VAC VENT ISOL VLV – op • cb MNA WCS CNTLR – op • cb MNA GALLEY OVEN – op	15 15 15	Waste H2O TK1 Inlet Vlv Cntl Sply H2O TKD Outlet Vlv Cntl Waste H2O Dump Isol Cntl
(ML86B:C) • cb MNA EXT ARLK HTR STRUC Z1/2/3 – op • cb MNA EXT ARLK HTR LN ZN1, ZN2 (two) – op • cb MNA EXT ARLK HTR VEST Z1/2/3 – op		Ext Arlk Htrs A
(ML86B:D) cb MNA MMU • PORT/STBD HTR A (two) – op • GN2 SPLY ISOL VLV A – op	25 15	MMU Port,Stbd Htr A MMU GN2 Sply Isol Vlv A
(ML86B:E) cb MNA EMU 2 H2O • SPLY – op • WASTE – op cb MNA FLOOD • TNL ADAPT 2 – op		TA Floodlt 2
(Continued)		(Continued)

CREW INDICATIONS
DSP SYS PWR SYS 1 tb – OFF

NOTES
(15) Vlv holds position
(25) Htr B remains
(53) All docking mechanisms will have single mtr times
(54) Logic buses 1(3) remain pwrd via MNB(MNC)

EPS SSR-10 (Cont)
BUS LOSS: MNA DA1

BUS ISOLATION		EQUIP/FUNCTION LOST
ONLY ON MCC CALL, PERFORM		
(ML86B:F) cb MNA FLOODS • MIDDECK 1/8 – op • WMC/MO13Q – op • AIRLK 1 – op cb MNA CRYO • O2 HTR TK3 SNSR 1 – op • O2 HTR TK5 SNSR 1 – op		Middeck floodlts 1,8 WMC Floodlt, MO13Q pnl lt 2 Airlk Floodlt 1 46 Cryo O2 Tk3 Htr Current Snsr 1 Cryo O2 Tk5 Htr Current Snsr 1
(A15:H,I,J,K) • cb MNA TK6-TK9 O2 HTR SNSR 1 – op		55 Cryo O2 Tk 6-9 Htr Current Snsr 1
		CDR HUD
		Port,Stbd Rad Dpy/Sto Mtr 1 Port,Stbd Rad Lat 1-6, 7-12 Mtrs 1
		Fwd RCS Jet 1 Htrs
		56 L OMS Purge Vlv 1,2 57 L OMS Eng Pr Vlv Coil 1 58 L OMS Cntl Vlv 1,2 Coils 1 58 R OMS Eng Pr Vlv Coil 2 and Cntl Vlv 1,2 Coils 2 59 OMS Qty Gaging 60 APU 1 Cntlr Pwr Sply A 61 1 Fu Tk Vlv A 1 GBX GN2 Repress Vlv 62 3 Cntlr Pwr Sply B 61 3 Fu Tk Vlv B
		Hyd Rsvr 1 Qty Snsr 15 TVC Hyd Sys 1 Isol Cntl 15 Hyd Brake Isol Vlv 1 Cntl 63 LG Extend Isol Vlv 63 Vlv 1 64 NWS Hyd Sys 1
		-Y Star Trkr Dr Sys 1 OP/CL capability LH Vents 5,6,8,9 Mtrs 1 RH Vents 1,2,3,5,6 Mtrs 1 65 L ADP Deploy Mtr 1 66 Htr Cntlr 1
		67 Hyd Main Pump 1 Depress Solenoid RPC A 67 Hyd Main Pump 3 Depress Solenoid RPC B
		7 Atm Press Cntl O2 Sys 1 Sply Vlv Cntl 26 EMU 2 Sply and Waste H2O Vlv Cntl 68 EMU 1,2 Pwr/Batt Chgr MNA pwr
		PL Reten Sys A Rel/Lat Mtrs
		(Continued)

CREW INDICATIONS	NOTES
Ctr MPS He reg A < 680 during entry (MM303)	(7) Vlv holds position. N2 Sys 2 remains (15) Vlv holds position (26) Vlv holds position. May have to interface EMU 2 with SCU 1 to provide total H2O servicing/recharge (46) Current Snsr 2 remains (55) Snsr 2 remains (56) **CAUTION** No purge. Wait 10 min between burns (57) Unable to confirm redundant coils (58) Redundant coils remain (59) √MCC for OMS Qtys. Aft Qtys are frozen on GNC SYS SUMM 2 (60) Pwr Sply B remains. GG Bed T and GBX P ind lost when APU running (61) Vlv fails closed. Redundant vlv remains (62) Pwr Sply A remains. Turbine speed ind lost (63) Loss of Hyd Sys 1 deploy capability for all Ldg Gear. Pyro backup release sys will deploy Ldg Gear. NLG can also be deployed by Hyd Sys 2 (64) Hyd Sys 2 still available for NWS (65) Mtr 2 remains (66) Htr Cntlr 2 remains (67) Redundant RPC remains (68) MNB pwr select capability remains

EPS SSR-10 (Cont)
BUS LOSS: MNA DA1

BUS ISOLATION		EQUIP/FUNCTION LOST	CREW INDICATIONS	NOTES
		MPS:		(61) Vlv fails closed. Redundant vlv remains
	69	Ctr Eng He Intercon Outlet Vlv		(69) Vlv fails closed
	61	Ctr Eng He Isol A		(70) Vlv fails closed. Aft compartment, OMS pods, ET umbilical cavity will not be purged during entry (MM304)
	61	Pneu He Isol 1		(71) Vlv holds position. Loss of manual capability to inert LH2 Manf
	70	He Sply Blowdn Vlv 1,2		(72) Redundant mtrs remain
	71	Prplt F/D Inbd LH2 Vlv		(73) Sys B remains
	72	ET Door Mtrs: C/L Lat Actr 1 Mtr 1, 2 Mtr 1; L Dr Closure Mtr 1; Uplock Lat Mtr 1		(74) Bypass vlv holds position and Cntlr A Rad Byp Vlv Mtr remains
	73	Ku-Bd Jettison Sys A		
	73	Stbd RMS: Jett/Guil Sys A Deadface Relays		
	74	Freon Loop 1,2 Cntlr B Rad Byp Vlv Mtrs		
		Ops Hyd Actr Instr		

EPS SSR-11
BUS LOSS: MNA FPC1 (Includes MNA FLC1, MNA FMC1, AC1)

ACTIONS	EQUIP/FUNCTION LOST	CREW INDICATIONS	NOTES
1 • Perform FC1 SHUTDN (FC SHUTDN Cue Card), pwrdn not needed, then:	2 FC1 Pumps & pH Snsr	MASTER ALARM Light/Tone – on CRT 1 blanks	(1) * TIME CRITICAL * FC1 must be shutdn within 9 min to avoid potentially hazardous condition
(R1) • cb AC CONTR AC1 ΦA, ΦB, ΦC (three) – cl • INV/AC BUS 1 – OFF (tb-OFF) • INV PWR 1 – OFF (tb-OFF) • cb AC CONTR AC1 ΦA, ΦB, ΦC (three) – op • AC1 BUS SNSR – OFF	AC1 ΦA, ΦB, ΦC Inverters	(F7) C/W FC PUMP lt – on C/W AC VOLT lt – on C/W FREON LOOP lt – on C/W AV BAY/CAB AIR lt – on C/W H2O LOOP lt – on SM ALERT Light/Tone – on EVENT TIMER ind – blank	(2) Will be repwrd after AC Pwr Transfer Cable connected
3 • Maintain LiOH canister(s) changeout per cue card and FLIGHT PLAN		(F9) AC1 ΦA,ΦB,ΦC AC volts < 90	(3) Crew and gnd have lost PPO2 Xdcr if Cabin Air Sig Condr not recovered
Refer to OMS/RCS Slide Rule for vlv loss info 4 Reconfig following vlv(s) only if leak isolation reqd: (O8) • FWD RCS He PRESS A	5 Fwd RCS He Press Isol A GPC Cntl and man CL capability RCS Manf F1 RJD Driver (F1F,F1L,F1U,F1D)	(LIGHTS LOST) Instr lts R (pnls C2, F8, F9) Pnl lts L/Ctr (pnls L1,L2,L4, C2,C3,F2,F6,F7) Pnl lts L/OH (pnls O5,O6, O7,O13,O14,O15) Numeric lts (pnls O3,F7) Orbit Sta Instr lts (pnls A1,A2)	(4) Do not reconfig for reg switch or I'CNCT procedures (5) Vlv holds position. Man OP capability remains. Isol B remains
(C2) • L IDP/CRT SEL – 3 On MCC GO: • GPC/CRT 01 EXEC	6 IDP 1 MDU CRT 1	(FSMs) S67 FPC/FLC 1 S67 AC VOLTS 1 S86 HYD RSVR Q SM2 HYD QTY 1 (B) 7 S86 WSB T (2) SM0 THRM HYD (B) S66 AV BAY 2 FAN S66 AV BAY 3 FAN S66 CABIN FAN S69 FC PUMP 1 S69 FC H2 PUMP 1 S88 FREON FLOW 2 S88 FRN AFT CP 2 S88 FRN PL HX 2 S88 H2O LOOP 2 FLOW S88 H2O LOOP 2 QTY S88 H2O LOOP 2 TEMP S88 H2O PUMP P2 I/O ERROR CRT 1 RM DLMA MANF	(6) Loss of redundant port to the following: MDU CDR 1 (S) MDU CDR 2 (P) MDU MFD 2(P) MDU PLT 1 (S) (7) S86 WSB T1 if in BLR CNTLR/HTR 1B. S86 WSB T3 if in BLR CNTLR/HTR 3A
SM 1 DPS UTILITY (G2,G8,S2) MMU ASSIGN 8 • GNC – ITEM 1 EXEC • SM – ITEM 4 EXEC • PL – ITEM 6 EXEC • OPS 0 – ITEM 8 EXEC	MMU 1		(8) Selecting failed MMU for GNC MF protects against GPC MMU Rcvr failure after OPS XTION prepositioning
(A14) • RCS/OMS HTR FWD RCS – B AUTO	Fwd RCS A Htrs (all)		
If EMU(s) in battery charge mode: (AW 18M) • PWR/BATT CHGR EMU 1(2) BUS SEL – MNB	EMU 1,2 Pwr/Batt Chgr MNA pwr		(9) Temp sensing lost
(A8L) 9 • PORT RMS HTR A – AUTO • PORT RMS HTR B – AUTO If OBSS berthed: (A8L) • STBD RMS HTR A – AUTO • STBD RMS HTR B – AUTO	RMS: 10 MCIU 11 Port Mid MRL Mtr 1 11 Port Aft MRL Mtr 2 12 Stbd Fwd MRL Mtr 2 12 Stbd Aft MRL Mtr 1 14 Shldr Brace Release 14 D&C Primary Ltg	(R1) FC1 COOL PUMP ΔP tb – bp	(10) All brakes ON and safing initiated (11) Single mtr time. One failure away from loss of two out of three MRLs. EVA or RMS jettison capability exists. May be repwrd after AC Pwr Transfer Cable connected
Pre-seat ingress: • Discharge handheld fire ext into AV BAY 3	Av Bay 3 agent discharge capability	HYD/APU HYD QTY 1 ind – 0% 13 APU H2O QTY ind – 0%	(12) Single mtr time. One failure away from loss of MRL latching capability. EVA or OBSS jettison capability exists. May be repwrd after AC Pwr Transfer Cable connected
If AC Pwr Transfer Cable to be installed to regain AC: • Go to EPS SSR-200; otherwise, continue with bus loss actions		(O1) FREON FLOW LOOP 1 ind – 578 pph AIR TEMP AV BAY 2 ind – 45 degF H2O PUMP OUT PRESS LOOP 2 ind – 0 psia	(13) APU H2O QTY 1 if in BLR CNTLR/HTR 1B. APU H2O QTY 3 if in BLR CNTLR/HTR 3A
		(O3) RCS/OMS PRPLT QTY Gage and MSN TIMER ind – blank	(14) May be repwrd after AC Pwr Transfer Cable connected
		(O8) FWD RCS 5 He PRESS A tb – bp 15 TK ISOL 3/4/5 tb – bp 15 MANF ISOL 1 tb – bp	(15) Vlv holds position
		L ADP deploy time incr from 15 to 30 sec	
(Continued)	(Continued)	(Continued)	

EPS SSR-11 (Cont)
BUS LOSS: MNA FPC1

	ACTIONS		EQUIP/FUNCTION LOST		CREW INDICATIONS		NOTES
	If Cab Temp Cntlr 2 active: (L1) • CAB TEMP CNTLR – OFF	16	Cabin Temp Cntlr 2, Hx Byp Vlv Mtr 2		STAR TRKR DR POS -Y OP/CL time incr from 8 to 16 sec		(10) All brakes ON and safing initiated
	(MD44F) • Remove pin from SEC Actuator and BYP vlv linkage, connect linkage to PRI Actuator				(L1) If H2O PUMP LOOP 1 A active: 'S88 H2O LOOP 1 FLOW' 'S88 H2O LOOP 1 TEMP' 'S88 H2O PUMP P1' If FREON PUMP LOOP 2 B – ON: 'S88 FREON FLOW 2' 'S88 FRN AFT CP 2' 'S88 FRN PL HX 2'		(16) Lose Auto Temp Cntl via Cntlr 2 and H2O Loop 2 Cabin Hx In Temp snsrs. Hx Byp Vlv holds position. May be repwrd after AC Pwr Transfer Cable connected
	(L1) • CAB TEMP CNTLR – 1				(O1) H2O PUMP OUT PRESS LOOP 1 ind – 20-25 psia FREON FLOW LOOP 2 ind – 578 pph		(17) Inhibits H2O Loop 2 Pump ΔP, Pump Out Press, Pump Out Temp, Accum Qty, respectively
	(R13U) H2O LOOP 2 OUT P • C/W PARAM SEL tw – 115 • PARAM – INH • C/W PARAM SEL tw – > 119				If Hum Sep A ON: 'HUMID SEP A'		(18) H2O Loop 2 Byp Vlv holds position
17	SM 60 SM TABLE MAINT • Inhibit 0612705, 0612700, 0612740, 0612710				If IMU Fan A ON: 'S66 IMU FAN DP' 'S66 IMU FN SPD A'		(19) H2O Loop 2 Pump Out Press, Pump ΔP, Accum Qty, Pump Out Temp snsrs lost
	(R2) • BLR CNTLR/HTR 1 – A • 3 – B		Hyd H2O Blr 1 Cntlr B 3 Cntlr A Rsvr 1 Qty Snsr		(F7) If APUs active and using BLR CNTLR/HTR 1B or 3A: C/W APU TEMP lt – on after ~2 min		(20) Av Bay 2 Fan ΔP, Air Out Temp snsrs lost
	(L1) • HUM SEP A – OFF • √B – ON • IMU FAN A – OFF • B(C) – ON • H2O PUMP LOOP 1 – ON, B • H2O PUMP LOOP 2 – OFF • AV BAY 1 FAN A – OFF • √B – ON • AV BAY 2 FAN A,B (two) – ON • AV BAY 3 FAN A – ON • B – OFF • FREON PUMP LOOP 1 – B • FREON PUMP LOOP 2 – A		Hum Sep A IMU Fan A 18 H2O Loop 2 Byp Cntlr, Sig Condr 19 H2O Loop 2 Byp Vlv pwr 2 Pump GPC Cntl 1 Pump A Av Bay 1 Fan A 20 Av Bay 2 Sig Condr, Xdcrs (ECLS SC3) Av Bay 3 Fan B Freon Loop 1 Pump A 2 Pump B	10	(A8U) RMS D&C tb – bp except: BRAKES tb – OFF RATE MIN tb – OFF RATE HOLD tb – OFF SOFT STOP tb – gray RATE SCALE tb – gray	(21) Use streamers (if flown) or monitor by feel during wake periods if Cabin Air Sig Condr not recovered
	(MO13Q) If Arlk/Tnl Fan active: • ARLK FAN A – OFF • B – ON		Arlk/Tnl Fan A				(22) CO2 partial Press and Cabin Fan ΔP snsrs lost
21	During sleep periods: • CAB FAN (two) – ON	22	Cabin Air Sig Condr (ECLS SC6)				
	(WCS) • √MODE – AUTO • √CRADLE – AUTO • √Hose stowed in cradle • √WCS ON lt – OFF • FAN SEP SEL sw – OFF • HOSE BLOCK – SEP 2 • In next step, alternate fan sep will turn on for 30 sec. Normal ops may proceed after 30-sec run complete • FAN SEP SEL sw – 2		WCS Fan/Sep 1				
	• Perform LOSS OF 1 FC (ORB PKT, PWRDN)						
	(Continued)		(Continued)				

EPS SSR-11 (Cont)
BUS LOSS: MNA FPC1

23 BUS ISOLATION		EQUIP/FUNCTION LOST	CREW INDICATIONS	NOTES
ONLY ON MCC CALL, PERFORM				(23) AC1 Bus Isolation for AC Pwr Transfer Cable installation accomplished in MNA FPC1 ACTIONS column. No additional bus isolation steps reqd
• MDU CRT 1 PWR – OFF				(24) Mtr 2 remains
(C2) • IDP/CRT 1 PWR – OFF				(25) Htr Cntlr 2 remains
(O7) • (OV105) GPS 1 PWR – OFF • (OV105) GPS 1 PRE AMPL UPPER – OFF • (OV105) GPS 1 PRE AMPL LOWER – OFF		(OV105) GPS 1		(26) Loss of Hyd Sys 1 deploy capability for all Ldg Gear. Pyro backup Release Sys will deploy Ldg Gear. NLG can also be deployed by Hyd Sys 2
(O14:C) • cb MNA FIRE SUPPR BAY 3 – op				(27) Buses remain pwrd
(014:D) cb MNA • (OV105) GPS 1 PRE AMPL UPPER – op • (OV105) GPS 1 PRE AMPL LOWER – op				(28) Redundant mtrs remain
(O14:F) • MMU 1 – OFF				(29) Hyd Sys 2 still available for NWS
(MA73C:A) • MCA LOGIC MNA FWD 1 – OFF		MNA FMC1 Bus pwr		(30) Bypass vlv holds position and Cntlr A Rad Byp Vlv Mtr remains
	24 25	CDR HUD -Y Star Trkr Dr Sys 1 OP/CL capability L ADP Dpy Mtr 1 Htr Cntlr 1		
		RH Vents 1,2,3,5,6 Mtrs 1 LH Vents 5,6,8,9 Mtrs 1		
	26	LG Extend Vlv 1		
	27	MNA pwr to Cntl Buses AB1, AB2,AB3,CA1,CA2,CA3		
	28	ET Door Mtrs: C/L Lat Actr 1 Mtr 1 Actr 2 Mtr 1 L Dr Closure Mtr 1 Uplock Lat Mtr 1		
	29	NWS Hyd Sys 1		
	30	Freon Loop 1,2 Cntlr B Rad Byp Vlv Mtrs		
		Port,Stbd Rad Lat 1-6, 7-12 Mtrs 1 Port,Stbd Rad Dpy/Sto Mtr 1		
		PLBD: C/L Lat 1-4, 5-8, 9-12 Mtrs 1 Port,Stbd Fwd Blkhd Mtr 1 Port Aft Blkhd Mtr 1 Stbd Door Mtr 1		
		PL Reten Sys A Rel/Lat Mtrs		

EPS SSR-12
BUS LOSS: MNA MPC1 (Includes MNA MMC1 & MNA MMC3)

	ACTIONS		EQUIP/FUNCTION LOST	CREW INDICATIONS	NOTES
1	• Perform MNA BUS TIE (BUS TIE Cue Card) • Monitor, record ∆amps between FC1 and tied FC	1 1	FC1 Purge Vlv O2,H2 Flow Xdcrs SS ∆V Snsrs	(L2) 2 O2 SYS 1 SPLY tb – CL	(1) Buses are tied due to: Loss of FC1 Purge capability. As FC1 loses performance, tied FC will pick up load, slowing FC1 degradation. If degradation projection does not allow nominal EOM, FC1 will be shut dn. √MCC; and Loss of FC1 SS ∆V Snsrs. Change in ∆Amps >12 amps indicates possible cell crossover problem. ∆Amps shift due to loss of FC1 Purge capability is indicated by change in ∆Amps between pre and post purge readings. MCC will aid in this determination
	(R1) • PL CAB – MNB	3	MNA pwr to CABPL1,2,3 buses	(R13L) RAD CNTL STBD,PORT tb (two) – bp (when stowed)	(2) Vlv holds position. Sys 2 remains
	(A8L) • PORT RMS HTR A – OFF • PORT RMS HTR B – AUTO If OBSS berthed: (A8L) • STBD RMS HTR A – OFF • STBD RMS HTR B – AUTO	4 5 6 6 7 7	RMS: Primary pwr Port Payload Pwr Port Mid MRL Mtr 1 Port Aft MRL Mtr 2 Stbd Fwd MRL Mtr 2 Stbd Aft MRL Mtr 1 Port Htr A Stbd Htr A	(A8L) PORT RMS: DPY/STO tb – bp RETEN LAT tb – bp R-F-L MID tb – bp STARBOARD RMS: DPY/STO tb – bp RETEN LAT tb – bp R-F-L AFT tb – bp	(3) Pwrs PL Timing Buffer and OIU 1. OIU 1 redundant pwr MNB MPC2 via CAB PL3
	(L1) • TOP EVAP HTR DUCT – B If Hi Load Evap enabled: • HI LOAD DUCT HTR – B(C)		Top Evap Duct Fwd,Aft Htrs A Hi Load Duct Outbd,Inbd Htrs A	SM 94 PDRS CONTROL PORT RMS Indications lost: Mid MRL Mtr 1 LAT/REL/RDY Aft MRL Mtr 2 LAT/REL/RDY STBD RMS Indications lost: Fwd MRL Mtr 2 LAT/REL/RDY Aft MRL Mtr 1 LAT/REL/RDY	(4) B/U pwr remains for RMS ops. All brakes ON and safing initiated
	(L2) FLASH EVAP FDLN HTR • A SPLY – 2 • B SPLY – 1		FES H2O Fdln A Mid 2 Htr 1 B Mid 2 Htr 2		(5) When the OBSS is grappled by the RMS, the OBSS uses the RMS Payload power feed for all OBSS subsystem heater and operational power, except LCS
	(R11U) FC H2O • LINE HTR – B AUTO • RELIEF HTR – B AUTO		FC H2O Line Htrs A Relief Htrs A	PLB Floodlts lost: Fwd Port Aft Stbd Docking	(6) Single mtr time. One failure away from loss of two out of three MRLs. EVA or jettison capability exists
8	(MA73C:C,D) • cb MCA PWR AC1 3Φ MID 1,3 (two) – op	8 9	Port,Stbd Rad Lat 1-6,7-12 Mtrs 1 Limit sw Port,Stbd Rad Dpy/Sto Mtrs 2 Limit sw Port,Stbd Rad Dpy/Sto Mtrs 1	SM (BFS,SM) 63 PL BAY DOORS If in AUTO OP/CL for PLBDs, sequence terminates immediately and msg '(S63) PBD CONFIG'	(7) Single mtr time. One failure away from loss of MRL latching capability. EVA or OBSS jettison capability exists
10	(ML86B:C) • cb MNB EXT ARLK HTR STRUC – cl	10	Ext A/L Structural Htrs MNA pwr	During MAN PLBD OP/CL, single mtr run time noted on actuators listed at left	(8) If AC1 MMC1 and MMC3 cbs not opened, Lat Mtrs 1 of actuators for Port and Stbd Rad Lat 1-6, 7-12 continue to run until Sys A Lat Cntl sw placed to OFF
	For PLBD ops: • OP/CL Drs in man mode		PLBD: C/L Lat 1-4,5-8,9-12 Mtrs 1 Port,Stbd Fwd Blkhd Lat Mtrs 1 Port Aft Blkhd Lat Mtr 1 Stbd Door Mtr 1 Port Door Mtr 2 CL Limit sw		(9) Mtrs 2 will continue to drive until Sys A,B Cntl sw are taken to OFF
			Hyd Bk Htr A		(10) MNB htrs remain
	BUS ISOLATION				(11) FC1 Startup Htr is disconnected
	ONLY ON MCC CALL, PERFORM				
	(R11U) • FC PURGE VLV 1 – CL				
11	• FC STARTUP HTR 1 – ENA	11	FC1 Startup Htr Inh capability		
	(A7U) PL BAY FLOOD • AFT STBD – OFF • FWD PORT – OFF • DOCKING – OFF • PORT RMS LIGHT – OFF		PLB Aft Stbd Floodlt Fwd Port Floodlt Docking Floodlt Port RMS lt		
	(A7L) IF DOCKING MISSION • cb DEP MNA SYS 1 VENT ISOL – op • cb DEP MNA SYS 1 VENT – op		Vest Dep Vlv Sys 1 Vent Vent Isol		
	(Continued)		(Continued)		

EPS SSR-12 (Cont)
BUS LOSS: MNA MPC1 (Includes MNA MMC1 & MNA MMC3)

	ACTIONS		EQUIP/FUNCTION LOST	CREW INDICATIONS	NOTES
	(A7L) IF DOCKING MISSION cb DOCK LT MNA • TRUSS FWD – op • VEST PORT – op • SYS PWR SYS 1 MNA – OFF • PSU PWR MNA – OFF cb MNA • LOGIC 1 – op • 3 – op • PYRO PWR MNA – OFF LIGHTS • AIRLK 1/4 MNA – OFF		MNA A7 Fwd Truss Docking lt Port Vestibule Docking lt DSP SYS 1 Pwr 12 PSU MNA Pwr 13 MNA pwr to DSP Logic buses 1,3 MNA Pyro System External Airlock lts 1,4	DSP SYS PWR SYS 1 tb – OFF	(2) Vlv holds position. Sys 2 remains (10) MNB htrs remain (12) All docking mechanisms will have single mtr times (13) Logic buses 1(3) remain pwrd via MNB(MNC) (14) Buses remain pwrd (15) Cntlrs A,B Rad Byp Vlv mtrs auto cntl and Cntlr A Rad Byp Vlv mtr remain (16) Snsr 2 remains (17) Lost capability to observe and record FC single cell voltages
	(A7L) MADS • STRAIN GAGE – OFF • WB/ACIP PCM – OFF		MADS W/B FDM, WBSC, SGSC, ACIP PCM		
	(MA73C:A,B) • MCA LOGIC MNA MID 1,3 (two) – OFF		MNA MMC1 and MNA MMC3 Bus pwr		
			14 MNA pwr to ESS2CA and ESS3AB AUX PL A Bus pwr		
			15 Freon Loop 1,2 Cntlr B Rad Byp Vlv Mtrs Man Cntl 2 ATM Press Cntl O2 Sys 1 Sply Vlv Cntl		
			Port Rad Dpy/Sto Mtr 1 Stbd Rad Dpy/Sto Mtr 1 LH Vents 5,6 Mtrs 1 RH Vents 3,5,6 Mtrs 1		
	(A15:H,I,J,K) • cb MNA TK6-TK9 O2 HTR SNSR 1 – op		16 Cryo O2 Tk 6-9 Htr Current Snsr 1		
			FC3 Redundant Reac Vlv Close Cntl on pnl C3		
10	(ML86B:C) • cb MNA EXT ARLK HTR STRUC – op		10 Ext A/L Structural Htrs MNA pwr		
	(ML86B:D) • cb MNA FC PCM – op		17 FCMS		

EPS SSR-13
BUS LOSS: MNA APC1

ACTIONS	EQUIP/FUNCTION LOST	CREW INDICATIONS	NOTES
For attitude control, perform LOSS OF VERNIERS (ORB OPS, RCS)	2 RCS Manf L5 RJD pwr (L5L,L5D)	1 MASTER ALARM Light/Tone – on	(1) Indications do not appear until jet commanded
Refer to OMS/ RCS Slide Rule for vlv loss info (use APC 4 Slide for Aft RCS)	3 Aft L,R RCS He Pr Isol A GPC Cntl and Man CL capability	(F7) C/W RCS JET lt – on	(2) Manf status not automatically declared closed. Fail-offs will occur when jets commanded
GNC 23 RCS 4 DES INH on L Manf 3 Jets: • ITEM 2 EXEC • L3L ITEM 12 EXEC (*) • L3D ITEM 28 EXEC (*) • L3A ITEM 30 EXEC (*) Set aft pod(s) PRI JET FAIL LIMIT to 6		(FSM) L RCS D(L) JET	(3) Vlv holds position. Man OP capability remains
5 Reconfig following vlv(s) only if leak isolation reqd: (O7) • AFT L RCS He PRESS A,B • R RCS He PRESS A	6 Aft L RCS He Pr Isol B Man OP capability	If OMS GMBL cmd abs value > 2 deg: C/W OMS TVC lt 'L OMS GMBL' (3,B)	(4) Maintains control capability for APC6 failure
(A12) APU HTR TK/FU LN/H2O • SYS 1A – OFF • 1B – AUTO • 3A – AUTO • 3B – OFF HYD HTR • RUD SPDBK A – OFF • B – AUTO	7 APU 1 FU TK VLV A CL capability via APU 1 Auto Shutdn signal APU 1 GG Inj H2O Htrs A APU 3 GG Inj H2O Htrs B Rud Spd Bk Htr A	If OMS GMBL cmd abs value > 2 deg and Sec TVC selected: C/W OMS TVC lt 'R OMS GMBL' (3,B)	(5) Do not reconfig for reg switch or I'CNCT procedures
(A14) RCS/OMS HTRS • L POD (two) – A OFF, B AUTO • R POD (two) – B OFF, A AUTO • OMS CRSFD LINES (two) – A OFF, B AUTO	8 L Pod A Htrs (all) 9 R Pod B Htrs (partial) 8 OMS Crsfd Ln A Htrs (all)		(6) Vlv holds position. Man CL and full GPC cntl remain
10 Prior to using L(R) OMS: (O8) 12 L(R) OMS He PRESS/VAP • ISOL A – OP • B – GPC	11 L,R OMS He Pr A GPC Cntl 11 L,R OMS He Vap Isol 1 GPC Cntl		(7) In event of APU 1 auto shutdn, vlv remains OP until APU FU TK VLV – CL
GNC XXXXX MNVR YYYYY (3,B) Sel L OMS SEC TVC: • L OMS GMBL SEC – ITEM 30 EXEC Sel R OMS PRI TVC: • R OMS GMBL PRI – ITEM 29 EXEC	L OMS Pri TVC R OMS Sec TVC		(8) Htr B remains (9) Htr A remains (10) Lost TM: GNC SYS SUMM 2 L,R OMS ENG BALL VLV 1: Assume Vlv 1 status same as Vlv 2
			(11) Vlv fails closed. Man cntl remains. Redundant Isols remain
			(12) Maintains He Isol redundancy

BUS ISOLATION
ONLY ON MCC CALL, PERFORM
NONE

EPS SSR-14
BUS LOSS: MNA APC4 (Includes MNA APC1, MNA ALC1, MNA AMC1)

ACTIONS	EQUIP/FUNCTION LOST	CREW INDICATIONS	NOTES
(A12) APU HTR GAS GEN/FUEL 2 • PUMP 1 – B AUTO 2 • 3 – A AUTO APU HTR • LUBE OIL LINE 1 – B AUTO • LUBE OIL LINE 3 – A AUTO APU HTR TK/FU LN/H2O 2 • SYS 1A – OFF 2 • 1B – AUTO 2 • 3A – AUTO 2 • 3B – OFF HYD HTR • RUD SPD BK A – OFF • BK B – AUTO • BDY FLP A – OFF • B – AUTO • ELEVON A – OFF • B – AUTO HYD CIRC PUMP • PWR 1 – MNB • 3 – MNC	APU 1 GG/Fu Pump Htrs A 3 GG/Fu Pump Htrs B APU 1 Lube Oil Line Htr A APU 3 Lube Oil Line Htr B APU 1 Tk/Fu Ln Htrs A APU 1 Inj H2O Htrs A 3 Tk/Fu Ln Htrs B Rud/Spd Brake Htr A Body Flap Htr A Elevon Actr Htrs A Circ Pump 1 MNA pwr 3 MNA pwr	1 MASTER ALARM Light/Tone – on (F7) C/W RCS JET lt – on SM ALERT Light/Tone – on (FSMs) L RCS D(L) JET (R4) 3 HYD BRAKE ISOL VLV 1 tb – OP 4 LG EXTEND ISOL VLV tb – OP 3 HYD MPS/TVC ISOL VLV SYS 1 tb – CL (O7) AFT L RCS He PRESS A tb – bp 5 AFT R RCS He PRESS A tb – bp 6 AFT L,R RCS TK ISOL 3/4/5A tb – bp (if vlv in CL position) (F7) If APUs active, and using BLR CNTLR/HTR 1B or 3A: C/W APU TEMP lt – on after ~2 min If OMS GMBL cmd abs value > 2 deg: C/W OMS TVC lt L OMS GMBL (3,B) If OMS GMBL cmd abs value > 2 deg and TVC selected: C/W OMS TVC lt R OMS GMBL (3,B) If cooling by FES B only: C/W FREON LOOP lt 'S88 EVAP OUT T1' 'S88 EVAP OUT T2'	(1) Indications do <u>not</u> appear until jet commanded (2) * TIME CRITICAL * If not done within 20 min, may freeze N2H4 and lose APU. However, SM ALERT occurs above freezing temp (3) Vlv holds position (4) Vlv holds position. Loss of Hyd Sys 1 deploy capability for all Ldg Gear. Pyro backup release sys will deploy Ldg Gear. NLG can also be deployed by Hyd Sys 2 (5) Vlv holds position. Man OP capability remains (6) Full vlv capability remains. If switch in CL, vlv will continuously drive to CL position (7) Manf status <u>not</u> automatically declared closed. Fail-offs will occur when jet commanded (8) Htr B remains (9) Htr A remains (10) Do not reconfig for reg switch or I'CNCT procedures (11) Vlv holds position. Man CL, full GPC Cntl remains
(L1) • FLASH EVAP CNTLR PRI A(SEC) – ON (if reqd) • TOP EVAP HTR NOZ L – B AUTO • TOP EVAP HTR DUCT – B If Hi Load Evap enabled: • HI LOAD DUCT HTR – B (C)	FES Pri B Cntlr Top Evap L Noz Htr A Top Evap Duct L,R Htrs A Hi Load Duct Noz Htr A		
(L2) FLASH EVAP FDLN • HTR A SPLY – 2 • B SPLY – 1	FES H2O Fdln A Htrs 1 (all except MID 2) FES H2O Fdln B Htrs 2 (all except MID 2)		
(R2) • BLR CNTLR/HTR 1 – A • 3 – B	Hyd H2O Blr 1 Cntlr B 3 Cntlr A		
• For attitude control, perform LOSS OF VERNIERS (ORB OPS, <u>RCS</u>)	7 RCS Manf L5 RJD pwr (L5L,L5D)		
(A14) RCS/OMS HTR • L POD (two) – A OFF, B AUTO • R POD (two) – B OFF, A AUTO • OMS CRSFD LINES (two) – A OFF, B AUTO	8 L Pod A Htrs (all) 9 R Pod B Htrs (partial) 8 OMS Crsfd Ln A Htrs (all)		
Refer to OMS/RCS Slide Rule for vlv loss info 10 Reconfig following vlv(s) only if leak isolation reqd: (O7) • AFT L RCS He PRESS A,B • R RCS He PRESS A	5 Aft L,R RCS He Pr Isol A GPC Cntl and man CL capability 11 Aft L RCS He Pr Isol B man OP capability		
If ICNCT config: (07) 6 • AFT L RCS TK ISOL 3/4/5 A – GPC (tb-bp) • AFT R RCS TK ISOL 3/4/5 A – GPC (tb-bp)	AFT L,R RCS TK ISOL 3/4/5 A CL microswitch feedback		
(Continued)	(Continued)		

EPS SSR-14 (Cont)
BUS LOSS: MNA APC4

ACTIONS	EQUIP/FUNCTION LOST	CREW INDICATIONS	NOTES
GNC 23 RCS • Reprioritize L,R Manf 2 Jets to first priority: DES INH twice all other jets, highest priority first, then next highest, etc 12 DES INH on L Manf 3 Jets: • ITEM 2 EXEC • L3L ITEM 12 EXEC (*) • L3D ITEM 28 EXEC (*) • L3A ITEM 30 EXEC (*) • Set aft pod(s) PRI JET FAIL LIMIT to 6	Aft RCS L,R Jet 2 Htrs		(12) Maintains control capability for APC3 failure (13) Lost TM: GNC SYS SUMM 2 L OMS N2 P VLV: If Eng – ARM/PRESS, assume vlv OP L,R OMS ENG VLV 1: Assume Vlv 1 status same as Vlv 2
13 • Save L OMS eng for deorbit (If reqd for additional on-orbit burns, √MCC)	13 L OMS GN2 Press Vlv OP TM 14 Eng Pr Vlv Coil 1		(14) Unable to confirm redundant coils
(O8) • If Straight feed config, L OMS Crossfeed B – OP (tb-OP). Otherwise, √MCC	15 OMS Eng/Crossfeed Vlv Redundancy		(15) Maintains deorbit capability for MNB DA2 failure
Prior to using L(R) OMS: (O8) 17 L(R) OMS He PRESS/VAP • ISOL A – OP • B – GPC	16 L,R OMS He Pr Isol A GPC Cntl 16 L,R OMS He Vap Isol 1 GPC Cntl 18 L OMS Eng Cntl Vlv 1,2 Coils 1 18 R OMS Eng Pr Vlv Coil 2 and Cntl Vlv 1,2 Coils 2 19 L OMS Purge Vlv 1,2 20 OMS Qty Gage		(16) Vlv fails closed. Man cntl remains. Redundant Isols remain (17) Maintains He Isol redundancy (18) Redundant coils remain (19) **CAUTION** No purge. Wait 10 min between burns (20) √MCC for OMS Qtys. Disregard qtys on meter and GNC SYS SUMM 2
GNC XXXXX MNVR YYYYY (3,B) Sel L OMS SEC TVC: • L OMS GMBL SEC – ITEM 30 EXEC Sel R OMS PRI TVC: • R OMS GMBL PRI – ITEM 29 EXEC	L OMS Pri TVC R OMS Sec TVC		
If reqd during entry (< 120K ft): (L1) • NH3 CNTLR B – PRI/GPC If NH3 CNTLR A(B) – SEC/ON reqd, then: (L1) • H2O PUMP LOOP 1,2 (two) – ON • √FLOW PROP VLV LOOP 1,2 (two) – ICH • Activate PL H2O LOOP(s) (if applicable)	21 NH3 Sys A Pri Cntlr and Auto Sw over to Sec Cntlr		(21) Sys A Sec Cntlr man on capability remains (22) Pwr Sply B remains. GG Bed T and GBX P ind lost when APU running (23) Vlv B remains (24) Pwr Sply A remains. Turbine speed ind lost (25) Vlv A remains

BUS ISOLATION	
ONLY ON MCC CALL, PERFORM	
(MA73C:B) • MCA LOGIC MNA AFT 1 – OFF	MNA AMC1 Bus pwr LH Vent 8,9 Mtr 1
	22 APU 1 Cntlr pwr Sply A 23 1 Fu Tk Vlv A 1 GBX GN2 Repress Vlv 24 3 Cntlr pwr Sply B 25 3 Fu Tk Vlv B

(Continued)

EPS SSR-14 (Cont)
BUS LOSS: MNA APC4

BUS ISOLATION		EQUIP/FUNCTION LOST	CREW INDICATIONS	NOTES
	3	Hyd Brake Isol Vlv Cntl 4 LG Extend Isol Vlv Cntl 3 TVC Hyd Sys 1 Isol Cntl	Ctr MPS He reg A < 680 during entry (MM303)	(3) Vlv holds position (4) Vlv holds position. Loss of Hyd Sys 1 deploy capability for all Ldg Gear. Pyro backup release sys will deploy Ldg Gear. NLG can also be deployed by Hyd Sys 2 (26) Hyd Sys 2 stillavailable for NWS (27) Redundant RPC remains (28) Six vlvs fail to non-isolation position (29) Vlv fails closed (30) Vlv fails closed. Redundant vlv remains (31) Vlv fails closed. Aft compartment, OMS pods, and ET Umbilical cavity will not be purged during entry (MM304) (32) Vlv holds position. Loss of manual capability to inert LH2 manf (33) Redundant mtrs remain (34) Actuators continue to operate until Stow, Rel/Lat, or OP/CL sw is taken to GND or OFF
	26 27	NWS Hyd Sys 1 Hyd Main Pump 1 Depress Solenoid RPC A 27 Hyd Main Pump 3 Depress Solenoid RPC B		
	28	ATVC 2 Isol ME		
	29	L OMS Purge Vlv 1,2 Qty gauging		
	30 30 29 31 32	MPS: Pneu He Isol 1 Ctr Eng He Isol A Ctr Eng He Intercon Outlet Vlv He Sply Blowdn Vlv 1,2 Prplt F/D Inbd LH2 Vlv		
	33	ET Door Mtrs: C/L Lat Actr 1 Mtr 1 GPC Cntl C/L Lat Actr 2 Mtr 1 GPC Cntl L Dr Closure Mtr 1 GPC CL capability L Dr Uplock Lat Mtr 1 GPC Lat capability		
	34	AC pwr removal capability via Limit sw for ET Dr Mtrs: C/L Lat Actr 1 Mtr 1 2 Mtr 1 L Dr Closure Mtr 1 Uplock Lat Mtr 1		

EPS SSR-15
BUS LOSS: MNA FLC1

ACTIONS
Refer to OMS/RCS Slide Rule for vlv loss info
2 Reconfig following vlv(s) only if leak isolation reqd: (O8) • FWD RCS He PRESS A
4 GNC 23 RCS Override F1 Manf status to CL: • RCS FWD – ITEM 1 EXEC • MANF VLVS 1 OVRD – ITEM 40 EXEC
Pre-seat ingress for entry: • Discharge handheld fire ext into AV BAY 3

BUS ISOLATION
ONLY ON MCC CALL, PERFORM
(O14:C) • cb MNA FIRE SUPPR BAY 3 – op

EQUIP/FUNCTION LOST
1 Fwd RCS He Press Isol GPC CNTL and MAN CL capability
RCS Manf F1 RJD pwr (F1F,F1L,F1U,F1D)
Av Bay 3 agent discharge capability
5 L ADP Htr Cntlr 1

CREW INDICATIONS
MASTER ALARM Light/Tone – on
(F7) 3 C/W RCS JET lt – on
(FSM) 3 F RCS D(F,L,U) JET
(O8) 1 FWD RCS He PRESS A tb – bp

NOTES
(1) Vlv holds position. Man OP capability remains
(2) Do not reconfig for reg switch or I'CNCT procedures
(3) Indications do not appear until jet commanded
(4) Manf status not automatically declared closed. Jet fail-offs may occur
(5) Htr Cntlr 2 remains

EPS SSR-16
BUS LOSS: MNA ALC1

ACTIONS	EQUIP/FUNCTION LOST
(A12) APU HTR 2 • GAS GEN/FUEL PUMP 1 – B AUTO	APU 1 GG/Fu Pump Htrs A
2 • GAS GEN/FUEL PUMP 3 – A AUTO	APU 3 GG/Fu Pump Htrs B
• LUBE OIL LN 1 – B AUTO • LUBE OIL LN 3 – A AUTO	APU 1 Lube Oil Line Htrs A APU 3 Lube Oil Line Htrs B
APU HTR TK/FU LN/H2O 2 • SYS 1A – OFF 2 • 1B – AUTO 2 • 3A – AUTO 2 • 3B – OFF	APU 1 Tk/Fu Ln Htrs A 3 Tk/Fu Ln Htrs B
HYD HTR • BDY FLP A – OFF • B – AUTO	Body Flap Htr A
• ELEV A – OFF • B – AUTO	Elevon Actr Htrs A
HYD CIRC PUMP • PWR 1 – MNB • 3 – MNC	Circ Pump 1 MNA pwr 3 MNA pwr
(L1) • FLASH EVAP CNTLR PRI A(SEC) – ON (if reqd)	FES Pri B Cntlr
• TOP EVAP HTR NOZ L – B AUTO	Top Evap L Noz Htr A
• TOP EVAP HTR DUCT – B	Top Evap Duct L,R Htrs A
If Hi Load Evap enabled • HI LOAD DUCT HTR – B(C)	Hi Load Duct Noz Htr A
(L2) FLASH EVAP FDLN HTR • A SPLY – 2 • B SPLY – 1	FES H2O Fdln A Htrs 1 (all except MID 2) FES H2O Fdln B Htrs 2 (all except MID 2)
(R2) • BLR CNTLR/HTR 1 – A • 3 – B	6 Hyd H2O Blr 1 Cntlr B 6 3 Cntlr A
For attitude control: • Perform LOSS OF VERNIERS (ORB OPS, RCS)	7 RCS Manf L5 RJD pwr (L5L,L5D)
(A14) RCS/OMS HTR OMS • CRSFD LINES (two) – A OFF, B AUTO	OMS Crsfd Ln A Htrs (partial)
Refer to OMS/RCS Slide Rule for vlv loss info 8 Reconfig following vlv(s) only if leak isolation reqd: (O7) • AFT L RCS He PRESS A,B • R RCS He PRESS A	4 Aft L,R RCS He Pr Isol A GPC Cntl and man CL capability 9 Aft L RCS He Pr Isol B man OP capability
GNC 23 RCS • Reprioritize L,R Manf 2 Jets to first priority: DES INH twice all other jets, highest priority first, then next highest priority, etc • Set aft pod(s) PRI JET FAIL LIMIT to 6	Aft RCS L,R Jet 2 Htrs
(Continued)	(Continued)

CREW INDICATIONS
1 MASTER ALARM Light/Tone – on
(R4) 3 HYD BRAKE ISOL VLV 1 tb – OP 3 HYD MPS/TVC ISOL VLV SYS 1 tb – CL
(O7) 4 AFT L RCS He PRESS A tb – bp 4 AFT R RCS He PRESS A tb – bp 5 AFT L,R RCS TK ISOL 3/4/5A tb (two) – bp (if vlv in CL position)
If cooling by FES only using PRI B CNTLR: C/W FREON LOOP lt – on 'S88 EVAP OUT T1' 'S88 EVAP OUT T2'
(F7) If APUs active and using BLR CNTLR/HTR 1B or 3A: C/W APU TEMP lt – on after ~2 min
(F7) 1 C/W RCS JET lt
(FSM) 1 L RCS D(L) JET

NOTES
(1) Indications do not appear until jet commanded
(2) * TIME CRITICAL *
If not done within 20 min, may freeze N2H4 and lose APU. However, SM ALERT occurs above freezing temp
(3) Vlv holds position
(4) Vlv holds position. Man OP capability remains
(5) Full vlv capability remains. If switch in CL, vlv will continuously drive to CL position
(6) HYD H2O Blr and Tk Htrs still operative, but GN2 SOV fails open and steam vent htr and spray logic are disabled. Alternate controller must be selected
(7) Manf status not automatically declared closed. Fail-offs will occur when jet commanded
(8) Do not reconfig for reg switch or I'CNCT procedures
(9) Vlv holds position. Man CL and full GPC Cntl remain

EPS SSR-16 (Cont)
BUS LOSS: MNA ALC1

ACTIONS	EQUIP/FUNCTION LOST
If ICNCT config: (O7) 5 • AFT L RCS TK ISOL 3/4/5 A – GPC (tb-bp) • AFT R RCS TK ISOL 3/4/5 A – GPC (tb-bp)	AFT L,R RCS TK ISOL 3/4/5 A CL microswitch feedback
10 Save L OMS eng for deorbit (If reqd for additional on-orbit burns, √MCC)	11 L OMS GN2 Press Vlv OP TM 12 L OMS Eng Pr Vlv Coil 1
Prior to using OMS: (O8) 13 L(R) OMS He PRESS/VAP • ISOL A – OP • B – GPC	14 L,R OMS He Pr Isol A GPC Cntl
If reqd during entry (< 120K ft): (L1) • NH3 CNTLR B – PRI/GPC	15 NH3 Sys A Pri Cntlr & Auto sw over to Sec Cntlr
If NH3 CNTLR A(B) – SEC/ON reqd, then: (L1) • H2O PUMP LOOP 1,2 (two) – ON • √FLOW PROP VLV LOOP 1,2 (two) – PL HX If applicable • Activate P/L H2O LOOP(s)	

BUS ISOLATION	
ONLY ON MCC CALL, PERFORM	
NONE	16 L OMS Cntl Vlv 1,2 Coils 1 16 R OMS Eng Pr Vlv Coil 2 and Cntl Vlv 1,2 Coils 2
	10 OMS Qty gauging 17 L OMS GN2 Purge Vlv 1,2
	18 APU 1 Fu Tk Vlv A 18 3 Fu Tk Vlv B 3 Hyd Brake Isol Vlv 1 Cntl 19 TVC Hyd Sys 1 Isol Cntl
	MPS: 20 Pneu He Isol 1 20 Ctr Eng He Isol A 18 Ctr Eng He Intercon Outlet Vlv 21 He Sply Blowdn Vlv 1,2 19 Prplt F/D Inbd LH2 Vlv

CREW INDICATIONS
Ctr MPS He Reg A < 680 during entry (MM303)

NOTES

(3) Vlv holds position

(5) Full vlv capability remains. If switch in CL, vlv will continuously drive to CL position

(10) √MCC for OMS Qtys. Disregard Qtys on meter and

GNC SYS SUMM 2

(11) Lost TM:

GNS SYS SUMM 2

L OMS N2 P VLV:
If Eng – ARM/PRESS, assume vlv OP

(12) Unable to confirm redundant coils

(13) Maintains He Isol redundancy

(14) Vlv fails closed. Man cntl remains. Isol B remains

(15) Sys A Sec Cntlr man on capability remains

(16) Redundant coils remains

(17)

CAUTION

No purge. Wait 10 min between burns

(18) Vlv fails closed

(19) Vlv holds position. Loss of manual capability to inert LH2 Manf

(20) Vlv fails closed. Redundant vlv remains

(21) Vlv fails closed. Aft compartment, OMS pods, and ET umbilical cavity will not be purged during entry (MM304)

EPS SSR-17
BUS LOSS: MNA FMC1

ACTIONS	EQUIP/FUNCTION LOST	CREW INDICATIONS	NOTES
(L1) • H2O PUMP LOOP 1 – B	H2O Loop 1 Pump A	MASTER ALARM Light/ Tone – on	(1) Vlv holds position
Refer to OMS/RCS Slide Rule for vlv loss info		(F7) SM ALERT Light/Tone – on	(2) If this action taken, H2O Pump Loop 2 must be pwrd
GNC 23 RCS Override F1 Manf status to OP: • RCS FWD ITEM 1 EXEC • MANF VLVS 1 OVRD ITEM 40 EXEC		(FSM) RM DLMA MANF	(3) Mtr 2 remains
		(O8) FWD RCS 1 TK ISOL 3/4/5 tb – bp 1 MANF ISOL 1 tb – bp	(4) Htr Cntlr 2 remains
		L ADP deploy time incr from 15 to 30 sec	
		STAR TRKR DR POS -Y OP time incr from 8 to 16 sec	
		If H2O PUMP LOOP 1,A active: C/W H2O LOOP lt – on 'S88 H2O LOOP 1 FLOW' 'S88 H2O LOOP 1 TEMP' 'S88 H2O PUMP P 1'	
		(O1) H2O PUMP OUT PRESS LOOP 1 ind – 20-25 psia	

BUS ISOLATION	EQUIP/FUNCTION LOST
ONLY ON MCC CALL, PERFORM	
(L1) 2 • H2O PUMP LOOP 1 – OFF	
(MA73C:A) • MCA LOGIC MNA FWD 1 – OFF	MNA FMC 1 Bus pwr
	RH Vent 1,2 Mtr 1 3 L ADP Deploy Mtr 1 Disc 1 4 Htr Cntlr 1 -Y Star Trkr Dr Sys 1 OP/CL capability

EPS SSR-18
BUS LOSS: MNA MMC1

ACTIONS	EQUIP/FUNCTION LOST	CREW INDICATIONS	NOTES
(MA73C:C) 1 • cb MCA PWR AC1 3Φ MID 1 – op	1 Port Rad Lat 1-6,7-12 Mtrs 1 Limit sw Port Rad Dpy/Sto Mtr 1 2 Stbd Rad Dpy/Sto Mtr 2 Limit sw	(R13L) RAD CNTL STBD tb – bp If PORT RAD pnl stowed: RAD CNTL PORT tb – bp	(1) If AC1 MMC1 cb not opened, Lat Mtrs 1 of both Port Lat 1-6,7-12 Actuators continue to run until Sys A Lat Cntl sw placed to OFF
For PLBD ops: • OP/CL Drs in man mode	PLBD: C/L Lat 9-12 Mtr 1 Port,Stbd Fwd Blkhd Lat Mtrs 1 Stbd Door Mtr 1 3 Port Door Mtr 2 CL Limit sw 4 Stbd Door Mtr 1 OP Limit sw	SM (BFS SM 63) PL BAY DOORS If in AUTO OP/CL for PLBDs, sequence terminates immediately and msg '(S63) PBD CONFIG' During MAN PLBD OP/CL, single mtr run time noted on actuators listed at left	(2) Mtr 2 will continue to drive until Sys A Cntl sw is taken to OFF (3) Mtr 2 will continue to drive closed until PL BAY DR – STOP (4) Mtr 1 will continue to drive open until PL BAY DR – STOP
		(A8L) PORT RMS: RETEN LAT tb – bp R-F-L MID tb – bp STARBOARD RMS: DPY/STO tb – bp	(5) Single mtr time (6) Single mtr time. One failure away from loss of MRL latching capability. EVA or OBSS jettison capability exists
		SM 94 PDRS CONTROL PORT RMS Indications lost: Mid MRL Mtr 1 LAT/REL/RDY STBD RMS Indications lost: Fwd MRL Mtr 2 LAT/REL/RDY	

BUS ISOLATION	EQUIP/FUNCTION LOST
ONLY ON MCC CALL, PERFORM	
(MA73C:A) • MCA LOGIC MNA MID 1 – OFF	MNA MMC1 Bus pwr RH Vents 3,5,6 Mtrs 1
	5 Port RMS Mid MRL Mtr 1 6 Stbd RMS Fwd MRL Mtr 2

EPS SSR-19
BUS LOSS: MNA MMC3

ACTIONS
(MA73C:D) 1 • cb MCA LOGIC MCA PWR AC1 3Φ MID 3 – op
For PLBD ops: • OP/CL Drs in man mode

BUS ISOLATION
ONLY ON MCC CALL, PERFORM
(MA73C:B) • MCA LOGIC MNA MID 3 – OFF

EQUIP/FUNCTION LOST
1 Stbd Rad Lats 1-6,7-12 Mtrs 1 Limit sw Stbd Rad Dpy/Sto Mtr 1 2 Port Rad Dpy/Sto Mtr 2 Limit sw
PLBD: C/L Lat 1-4,5-8 Mtr 1 Port Aft Blkhd Lats Mtr 1
MNA MMC3 Bus pwr LH Vents 5,6 Mtr 1
3 Port RMS Aft MRL Mtr 2 4 Stbd RMS Aft MRL Mtr 1

CREW INDICATIONS
(R13L) 1 RAD CNTL PORT tb – bp If STBD RAD pnl stowed: RAD CNTL STBD tb – bp
SM (BFS SM 63) PL BAY DOORS If in AUTO OP/CL for PLBDs, sequence terminates immediately and msg '(S63) PBD CONFIG'
During MAN PLBD OP/CL, single mtr run time noted on actuators listed at left
(A8L) STARBOARD RMS: RETEN LAT tb – bp R-F-L AFT tb – bp
SM 94 PDRS CONTROL PORT RMS Indication lost: Aft MRL Mtr 2 LAT/REL/RDY STBD RMS Indications lost: Aft MRL Mtr 1 LAT/REL/RDY

NOTES
(1) If AC1 MM3 cb not opened, Lat Mtrs 1 of both Stbd Lat 1-6,7-12 Actuators continue to run until Sys A Lat Cntl sw placed to OFF (2) Mtr 2 will continue to drive until Sys B Cntl sw is taken to OFF (3) Single mtr time (4) Single mtr time. One failure away from loss of MRL latching capability. EVA or OBSS jettison capability exists

EPS SSR-20
BUS LOSS: MNA AMC1

ACTIONS
NONE

BUS ISOLATION
ONLY ON MCC CALL, PERFORM
(MA73C:B) • MCA LOGIC MNA AFT 1 – OFF

	EQUIP/FUNCTION LOST
	LH Vent 8,9 Mtr 1
	MNA AMC1 Bus pwr
2	ET Door Mtrs: C/L Lat Actr 1 Mtr 1 GPC Cntl C/L Lat Actr 2 Mtr 1 GPC Cntl L Dr Closure Mtr 1 GPC CL capability L Dr Uplock Lat Mtr 1 GPC Lat capability
3	AC pwr removal capability via Limit sw for ET Dr Mtrs: C/L Lat Actr 1 Mtr 1 2 Mtr 1 L Dr Closure Mtr 1 Uplock Lat Mtr 1
1	LG Extend Isol Vlv
4	NWS Hyd Sys 1

	CREW INDICATIONS
	(R4)
1	LG EXTEND ISOL VLV tb – OP

NOTES
(1) Vlv holds position. Loss of Hyd Sys 1 deploy capability for all Ldg Gear. Pyro backup release sys will deploy Ldg Gear. NLG can also be deployed by Hyd Sys 2
(2) Redundant mtrs remain
(3) Actuators continue to operate until the Stow, Rel/Lat, or OP/CL sw is taken to GND or OFF
(4) Hyd Sys 2 still available for NWS

EPS SSR-21
BUS LOSS: MNA R14

ACTIONS	EQUIP/FUNCTION LOST
(R11L) 1 • MS AUD CNTL – PS	2 MS ATU, CCU, FD Spkr
(L9) • √PS ATU PNL config for use	
(O6) • UHF EVA STRING – 2	SSOR 1

BUS ISOLATION	
ONLY ON MCC CALL, PERFORM	
(R14:A) • cb MNA AUD MS – op • ADC 1A/2A – op • MDU MFD 2 – op • MDU PLT 1 – op	MS ATU FD Spkr
(R14:B) 3 cb PALLET/DSC • 1A/2B – op (EDO) • 3A – op (EDO) cb MNA • UHF – op • GCILC – op • CNTL BUS BC 1/2/3 – op	 4 UHF Splx Pwr Amp 5 GCILC MNA pwr 6 MNA pwr for Cntl BC 1,2,3 Buses
(R14:C) • cb UHF EVA – op	SSOR EVA STRG 1
(R14:D) cb MNA TV C CAMR • CAMR/PTU – op • CAMR HTR – op • ILLUM/PTU HTR – op cb MNA TV • CONTR UNIT – op • MON 1 – op	 TV C Camr and Pan-Tilt TV C Camr Htr TV C Camr Pan-Tilt Htr and Illum 7 Video Cntl Unit MNA pwr CCTV Mon 1
(R14:E) • cb MNA PS FLOOD – op cb MNA D CAMR • CAMR/PTU – op • CAMR HTR – op • ILLUM/PTU HTR – op	 PS Floodlt TV D STBD RMS: Camr and Pan-Tilt Camr Htr Pan-Tilt Htr
• MDU MFD 2 PWR – OFF • MDU PLT 1 PWR – OFF	MDU MFD 2 MDU PLT 1 8 ADC 1A/2A

CREW INDICATIONS
PS Floodlt lost MS, OS CCTV Video lost if MNA selected for VCU CCTV Mon 1 lost
(F7) MDU MFD 2 blanks
(F8) MDU PLT 1 blanks

NOTES
(1) Listen only capability regained when headset used on MS CCU (from PS ATU) as FD speaker is also failed
(2) Causes loss of redundant path for ACCU config control bits, loss of xmit capability via CCU, loss of FD spkr
(3) Redundant pwr source remains for equipment
(4) Possible loss of capability for xmitting to gnd via UHF
(5) GCILC also pwrd via MNC cb
(6) Buses remain powered
(7) MNB pwr may be selected via TV pwr sw (pnl A7) or GCILC, if reqd
(8) IDP 1 and IDP 2 ADC data lost. MDU port select may be reqd

EPS SSR-22
BUS LOSS: MNA O14&A8

ACTIONS
(A8L) • PORT RMS HTR A – OFF • PORT RMS HTR B – AUTO If OBSS berthed: (A8L) • STBD RMS HTR A – OFF • STBD RMS HTR B – AUTO

BUS ISOLATION
ONLY ON MCC CALL, PERFORM
NONE

EQUIP/FUNCTION LOST
RMS: 1 Port Primary pwr 3 Port Payload pwr 2 MCIU Port Htr A Stbd Htr A
4 ON control for RCS Manf F1 RJD pwr (F1F,F1L,F1U,F1D)

CREW INDICATIONS
(A8U) 2 RMS D&C tb – bp except: BRAKES tb – OFF RATE MIN tb – OFF RATE HOLD tb – OFF SOFT STOP tb – gray RATE SCALE tb – gray

NOTES
(1) B/U drive capability remains. All brakes ON and safing initiated
(2) All brakes ON and safing initiated
(3) When the OBSS is grappled by the RMS, the OBSS uses the RMS Payload power feed for all OBSS subsystem heater and operational power, except LCS
(4) If driver sw OFF when bus failed, F1 Manf Drivers lost

EPS SSR-23
BUS LOSS: MNA O14

ACTIONS	EQUIP/FUNCTION LOST	CREW INDICATIONS	NOTES
(R1) 1 • MN BUS TIE C – ON (tb-ON)		MASTER ALARM Light/ Tone – on	(1) FC3 only one failure away (loss of ESS3AB) from inability to bus tie
(L1) If RAD CNTLR LOOP 1,2 – AUTO B: • Perform ON-ORBIT RAD CNTLR SWITCH, ECLS SSR-13 for Freon Loop 1,2	Freon Loop 1,2 Rad Cntlr B	(F7) C/W CAB ATM lt – on SM ALERT Light/Tone – on	(2) H2O Loop 1 Intchgr flowrate and IMU fan ΔP snsrs lost
(L2) • FREON ISOL MODE – OFF	Auto radiator isolation function	(FSMs) 2 S66 IMU FAN DP S66 CABIN PPO2 A S66 CABIN PRES 2 S88 H2O LOOP 1 FLOW SM0 TIRE PRESS S78 CABIN O2 CONC	(3) ACA recovered by switching to alternate pwr
(F6,F8) • HSI SEL SOURCE – other than MLS, (OV103,4) TACAN 1 or (OV105) GPS 1 • RDR ALTM – 2	MLS 1 (OV103,4) TACAN 1 (OV105) GPS 1 Radar Altm 1	If ADTA 1, MLS 1, -Z STAR TRKR pwrd: 'BCE STRG 1 ADTA' (3,B) 'BCE STRG 1 MLS' (3) 'BCE STRG 1 STKR'	(4) After MET 3:30, tb already bp
(O6) • ANNUN BUS SEL ACA 1 – MNB	3 ACA 1 MNA pwr	(L2) 4 CAB VENT ISOL tb – bp 4 tb – bp 5 N2 SYS 1 SPLY tb – bp 5 N2 SYS 1 REG INLET tb – bp	(5) Vlv holds position
If on PCS 1: • Perform RECONFIG TO ALT PCS SYS, ECLS SSR-3	O2/N2 Cntl Sys 1: O2/N2 Sys 1 Flow Xdcrs 5 N2 Sply Vlv 1 Cntl 5 N2 Reg Inlet Vlv 1 Cntl 6 O2 Xovr Vlv 1 OP capability 7 O2/N2 Cntl Vlv 1 man Cntl PPO2 Snsr A Cabin Press Snsr Emer dP/dT B/U comp	(O1) O2/N2 FLOW SYS 1 ind – 0 pph CAB PRESS ind – 0 psia PPO2 SNSR A ind – 0 psia	(6) Vlv fails closed. IFM or real-time flow test will be required. √MCC for additional direction
SM 60 SM TABLE MAINT 8 • Inhibit 0612405, 0612511, 0612105, 0612553, 0612869, 0612742 • Perform ECLS COMPUTATION INHIBIT, ECLS SSR-14 Table B		(O3) MSN TIME ind – blank (A4) EVENT TIME ind – blank	(7) O2/N2 Cntl Vlv 1 normally closed when unpowered
(R13 U) 9 • C/W PARAM SEL tw (three) – 004, 034, 014, 054 • C/W PARAM – INH • C/W MEM – CLEAR • C/W PARAM SEL tw (three) – > 119		If first AA failure and S/W processing accel data: 'RM FAIL ACC' (3)	(8) Inhibits Cabin P, Cabin PPO2A, Cabin O2 Flow 1, Cabin N2 Flow 1, IMU Fan ΔP, and H2O Loop ICH Flow 1 respectively
• Pre-seat ingress for entry: discharge hand-held fire ext into AV BAY 3	Av Bay 3 agent discharge capability	(LIGHTS LOST) L Console Floodlt 3 If ACA 1 – MNA, lights lost: (C3) DAP lights right three columns ALL (F2) PBIs except MA	(9) Inhibits Primary C/W for Cabin P, Cabin PPO2A, Cabin O2 Flow 1 and Cabin N2 Flow 1 respectively
(O14:D) cb MNA • (OV105) GPS 1 PRE AMPL UPPER – op • (OV105) GPS 1 PRE AMPL LOWER – op		If NWS 1 selected: (F3) NWS FAIL lt – on	
(A13) • (OV103) GPS PRE AMPL UC – MNC • (OV103) GPS PRE AMPL LC – MNC			
(Continued)	(Continued)		

EPS SSR-23 (Cont)
BUS LOSS: MNA O14

	BUS ISOLATION		EQUIP/FUNCTION LOST
	ONLY ON MCC CALL, PERFORM		
	(O6) • S TRK PWR -Z – OFF		-Z Star Tracker Dr OP capability -Z Star Tracker
	(O7) • (OV105) GPS 1 PWR – OFF • (OV105) GPS 1 PRE AMPL UPPER – OFF • (OV105) GPS 1 PRE AMPL LOWER – OFF		GPS 1 (OV105)
	(O8) • RDR ALTM 1 – OFF • MLS 1 – OFF		
	(O14:B) cb MNA OI SIG CONDR		
10	• OF 1/4 A – op		
10	• OM 1/2 A – op		
	cb MNA OI MDM OF		
10	• 1/2 A – op		
10	• 3/4 A – op		
	cb MNA OI H2O		
	• BYP LOOP 1 SNSR – op	2	H2O Byp Loop 1 Snsr (ECLS SC11)
	cb MNA OI		
	• TIRE PRESS – op	11	Tire Press Sig Cond A1,A2
	cb MNA		
	• MNC CONTR – op		
	• MSN TIMER FWD – op		Fwd Mission Timer
	• EVENT TIMER AFT – op		Aft Event Timer
	(O14:C) cb MNA		
	• (OV103,4) TACAN 1 – op		Tacan 1
12	• SMOKE DETN L/R FLT DK – op	12	L,R Flt Dk Smoke Detectors
	• SMOKE DETN BAY 2A/3B – op		Av Bay 2 Smoke Detector A 3A Smoke Detector B
	• FIRE SUPPR BAY 3 – op		Av Bay 3 agent discharge capability
	• UTIL PWR O19/MO52J – op		MNA Utility pwr
	• FLOOD L CNSL – op		L Console Floodlt
	• ANNUN FWD ACA 1 – op		
13	• cb MNA CRYO O2 HTR TK1 SNSR 1 – op	13	Cryo O2 Tk 1 Htr Current Snsr 1
	• cb RAD ISOL CONTR – op		Auto radiator isolation function
	(O14:D)		
14	cb MNA		
	• FREON RAD CNTLR 1,2 (two) – op		
	• N2 SPLY 1 – op		
	• O2/N2 CNTLR 1 – op		
	• O2 XOVR 1 – op		
	• N2 REG INLET 1 – op		
	• CAB VENT – op		Cabin Vent Vlv
	• VENT ISOL – op		Isol
	• (OV105) GPS 1 PRE AMPL UPPER – op		
	• (OV105) GPS 1 PRE AMPL LOWER – op		
	(O14:E)		
	cb MNA		
	• RDR ALTM 1 – op		
	• MLS 1 – op		
	• ADTA 1 – op		ADTA 1
	• S TRK -Z – op		
	• ACCEL 1 – op		AA 1
10	• DDU L,AFT (two) – op	10	L DDU MNA pwr
		10	Aft DDU MNA pwr
15	• NWS – op		NWS 1

CREW INDICATIONS

NOTES
(2) H2O Loop 1 Intchgr flowrate and IMU fan ΔP snsrs lost
(10) Redundant pwr source remains for equip
(11) Redundant measurement remains. FDA Alarm – BFS only; OPS 3,6
(12) Cabin Smoke Detector remains
(13) Current Snsr 2 remains
(14) Cntlr A remains
(15) NWS 2 still available

EPS SSR-24
BUS LOSS: MNA R1A1

ACTIONS	EQUIP/FUNCTION LOST	CREW INDICATIONS	NOTES
NONE	1 MNA pwr to CNTL buses AB1,AB2,AB3,CA1,CA2, CA3 1 MNA pwr to ESS2CA, ESS3AB	NONE	(1) Buses remain pwrd

BUS ISOLATION
ONLY ON MCC CALL, PERFORM
NONE

EPS SSR-25
BUS LOSS: MNA A6&A14

ACTIONS	EQUIP/FUNCTION LOST	CREW INDICATIONS	NOTES
GNC 23 RCS • Reprioritize FRCS Manf 1 Jets to first priority: DES INH twice all other jets; highest priority first, then next highest, etc • Set forward pod PRI JET FAIL LIMIT to 4	Fwd RCS Jet 1 Htrs	(A6U) PL RETEN RDY tb – bp RETEN/LAT tb – bp	(1) Single mtr time
		(A6A1 – pnl overlay) RELAX tb – bp DEMATE tb – bp MATE tb – bp ELEC CONT tb – bp	
		SM 97 PL RETENTION Indication lost: RELAX DEMATE MATE	
	PL Reten Sys A Rel/Lat Mtrs		
	ROEU Logic Pwr Sys 1 1 Orbiter arm drive mtr (ODM mtr 1 – mate A, demate A, relax A) 1 ODA mtr 1 latch/release		

BUS ISOLATION
ONLY ON MCC CALL, PERFORM
NONE

EPS SSR-26
BUS LOSS: MNA ML86B

ACTIONS	EQUIP/FUNCTION LOST	CREW INDICATIONS	NOTES
(ML86B:A) • cb MNB H2O LINE HTR B – cl	1 H2O Line Htrs A: Waste Dump Line Htr A Sply Dump Line Htr A Vac Vent Ln Htr A	(R11L) 2 SPLY H2O TKA INLET tb – bp 2 SPLY H2O TKB OUTLET tb – bp	(1) Htr B remains (2) Vlv holds position (3) Vlv holds position. May have to interface EMU 2 with SCU 1 to provide total H2O servicing/ recharge (4) Without circulation, H2O will lose heat with time and never reheat to nominal temp (5) MNB and MNC line htrs remain. MNB struc and vestibule htrs remain
(ML86B:D) cb MNB MMU • PORT,STBD HTR B (two) – cl	1 MMU Port,Stbd Htr A	(R13L) 2 MMU GN2 SPLY ISOL VLV A tb – bp	
If Waste H2O Dump reqd: • Perform WASTE WATER SYS BACKUP DUMP (IFM)	2 Waste H2O: Dump Vlv Cntl Noz Htr	(ML31C) 2 WASTE H2O TK 1 VLV tb – bp 2 WASTE H2O DUMP ISOL VLV tb – bp 2 WASTE H2O DUMP VLV tb – bp 2 SPLY H2O TKD OUTLET tb – bp	
(ML31C) • VAC VENT ISOL VLV BUS SEL – MNB	Vac Vent Isol MNA Cntl	(AW82D) 3 EMU 2 H2O SPLY, WASTE (two) tb – CL	
(WCS) • √MODE – AUTO • √CRADLE – AUTO • √Hose stowed in cradle • √WCS ON lt – OFF • FAN SEP SEL sw – OFF • HOSE BLOCK – SEP 2 • In next step, alternate fan sep will turn on for 30 sec. Normal ops may proceed after 30-sec run complete • FAN SEP SEL sw – 2	WCS Sep Fan 1 Mtr Relay	(LIGHTS LOST) Middeck Floodlts 1,8 WMC Floodlt MO13Q pnl lt 2 Airlk Floodlt 1 TA Flood 2 (SL only)	
(GALLEY) • OVEN/RHS – OFF • √OVEN FAN: OFF • Config for backup H2O dispense per ECLS	Galley Electronics Assy Oven 4 One of six htr strips Galley Hot H2O Tk		
(ML86B:C) • cb MNB(MNC) EXT ARLK HTR LINE ZN1 – cl • cb MNB(MNC) EXT ARLK HTR LINE ZN2 – cl • cb MNB EXT ARLK HTR STRUC – cl If in Rendezvous or Docked: • cb MNB EXT ARLK HTR VEST Z1/2/3 – cl	5 Ext A/L H2O and Structural Htrs MNA pwr		

BUS ISOLATION		
ONLY ON MCC CALL, PERFORM		
(ML86B:A) cb MNA H2O • LINE HTR A – op cb MNA SPLY H2O • TKA INLET – op • TKB OUTLET – op cb MNA WASTE H2O • DUMP VLV/NOZ HTR – op	2 Sply H2O TkA Inlet Vlv Cntl 2 Sply H2O TkB,D Outlet Vlv Cntl	
(ML86B:B) cb MNA WASTE H2O • TK1 VLV – op • DUMP ISOL – op cb MNA SPLY H2O • TKD OUTLET – op cb MNA VAC • VENT ISOL VLV – op cb MNA • WCS CNTLR – op • GALLEY OVEN – op	Waste H2O Dump Isol Cntl Tk1 Inlet Vlv Cntl Galley Oven Electronics Assy	
(Continued)	(Continued)	

EPS SSR-26 (Cont)
BUS LOSS: MNA ML86B

	BUS ISOLATION		EQUIP/FUNCTION LOST	CREW INDICATIONS	NOTES
	ONLY ON MCC CALL, PERFORM				(1) Htr B remains (2) Vlv holds position (3) Vlv holds position. May have to interface EMU 2 with SCU 1 to provide total H2O servicing/ recharge (5) MNB and MNC line htrs remain. MNB struc and vestibule htrs remain (6) Current Snsr 2 remains (7) Sys B remains (8) Lost capability to observe and record FC single cell voltages
6	(ML86B:F) • cb MNA CRYO O2 HTR TK3 SNSR 1 – op • cb MNA CRYO O2 HTR TK5 SNSR 1 – op	6	Cryo O2 Tk 3 Htr Current Snsr 1 Cryo O2 Tk 5 Htr Current Snsr 1		
	(ML86B:D) cb MNA MMU • PORT,STBD HTR A (two) – op • GN2 SPLY ISOL VLV A – op cb MNA PYRO JETT SYS A • KU ANT – op • STBD RMS – op	1 2 7 7	MMU Port,Stbd Htr A MMU GN2 Sply Isol Vlv A Ku-Bd Jettison Sys A Stbd RMS: Jett/Guil Sys A Deadface Relays		
	(ML86B:E) cb MNA EMU 2 H2O • SPLY – op • WASTE – op cb MNA FLOOD • TNL ADAPT 2 – op		TA Floodlt 2		
	(ML86B:F) cb MNA FLOODS • MIDDECK 1/8 – op • WMC/MO13Q – op • AIRLK 1 – op		Middeck Floodlts 1,8 WMC Floodlt, MO13Q pnl lt 2 Airlk Floodlt 1		
		3	EMU 2 Sply H2O Vlv Cntl Waste H2O Vlv Cntl		
5 5 5 5	(ML86B:C) • cb MNA EXT ARLK HTR LINE ZN1 – op • cb MNA EXT ARLK HTR LINE ZN2 – op • cb MNA EXT ARLK HTR STRUC – op • cb MNA EXT ARLK HTR VEST Z1/2/3 – op	5	Ext A/L H2O and Structural Htrs MNA pwr		
	(ML86B:D) • cb MNA FC PCM – op	8	FCMS		

EPS SSR-29
BUS LOSS: MNA A7

ACTIONS
NONE

BUS ISOLATION
ONLY ON MCC CALL, PERFORM
(A6L) IF DOCKING MISSION cb DEP MNA SYS 1 • VENT ISOL – op • VENT – op LIGHTS • AIRLK 1/4 MNA – OFF cb DOCK LT • MNA TRUSS FWD – op

EQUIP/FUNCTION LOST
Vestibule Depress Vlv Sys 1 Vent Isol Vestibule Depress Vlv Sys 1 Vent External Airlock lts 1,4 Fwd Truss Docking lt

CREW INDICATIONS
VEST DEP VLV SYS 1 VENT ISOL tb – bp VEST DEP VLV SYS 1 VENT tb – bp 1 DSP SYS PWR SYS 1 tb – OFF

NOTES
(1) DSP SYS 1 PWR still available to all users except MNA A7

This Page Intentionally Blank

EPS SSR-30
BUS LOSS: MNB DA2

(Includes all MNB sub-buses and AC2)

ACTIONS	EQUIP/FUNCTION LOST	CREW INDICATIONS	NOTES
• Perform FC2 SHUTDN (FC SHUTDN Cue Card)	FC2 Pumps and pH Snsr Purge Vlv O2,H2 Flow Xdcrs Cell Perf Monitor AUX PL B Bus pwr 1 MNB pwr to ESS1BC 1 ESS3AB 1 CNTLAB1,2,3 1 CNTLBC1,2,3	MASTER ALARM Light/ Tone – on SM ALERT Light/Tone – on	(1) Buses remain pwrd (2) Pwrs PL Timing Buffer, OIU 1, and OIU 2 (if flown). OIU 1 redundant pwr MNA MPC1 via CAB PL3 (3) Indications do not appear until jet commanded (4) * TIME CRITICAL * If not done within 20 min, may freeze N2H4 and lose APU. However, SM ALERT occurs above freezing temp
• Perform LOSS OF 1 FC (ORB PKT, PWRDN)		(F6) MDU CDR 2 blanks	
(R1) • PL CAB – MNA • cb AC CONTR AC2 ΦA,ΦB,ΦC (three) – cl • INV/AC BUS 2 – OFF (tb-OFF) • INV PWR 2 – OFF (tb-OFF) • cb AC CONTR AC2 ΦA,ΦB,ΦC (three) – op • AC2 BUS SNSR – OFF	2 MNB pwr to CABPL 1,2,3 buses AC2 ΦA,ΦB,ΦC Inverters	(F7) MDU CRT 2 blanks MDU MFD 1 blanks C/W CABIN ATM lt – on C/W MN BUS UNDERVOLT lt – on C/W AC VOLT lt – on C/W FC PUMP lt – on C/W FREON LOOP lt – on 3 C/W RCS JET lt – on	
• O2,H2 TK1 HTRS A – AUTO • O2,H2 TK1 HTRS B – OFF • O2,H2 MANF vlv TK1, TK2 – OP	Cryo O2(H2) Tk2,3,4 Htrs A if in Auto Cryo O2,H2 Tk2,3,4 Htrs B	(COMM LOST) All S-BD A/G voice lost if Sys 1 selected Middeck Spkr audio lost	
• O2,H2 TK2,3 HTRS A,B (eight) – OFF		(LIGHTS LOST) R Ovhd pnl (pnls O1,O2, O3,O8,O9,O16,O17) R Pnl (pnls F4,F8,F9, R1,R2,R4) Ovhd Instr (pnls O1,O2,O3) OS Numeric (pnls A2,A4) L Seat/Ctr Cnsl Floodlts R Ovhd Cnsl Floodlt OS Floodlt Middeck Floodlts 2,6 Bunk Floodlts 2/4 PHS Floodlt Airlock Floodlt 3 PLB Fwd Blkhd Floodlt PLB Mid Port Floodlt PLB Fwd Stbd Floodlt TA Floodlt 3	
(A11) • O2,H2 TK4 HTRS A,B (four) – OFF			
(A15) If O2,H2 TK5 QTY > 10%: • O2,H2 TK5 HTR A (two) – AUTO		(F9) AC2 ΦA,ΦB,ΦC AC volts ind – < 90 DC VOLTS MNB ind – OSL	
	Av Bay 1 Agent discharge capability		
(A12) APU HTR 4 • GAS GEN/FUEL PUMP 1 – A AUTO 4 • GAS GEN/FUEL PUMP 2 – B AUTO • LUBE OIL LN 1 – A AUTO • 2 – B AUTO APU HTR TK/FU LN/H2O 4 • SYS 1A – AUTO 4 • 1B – OFF 4 • 2A – OFF 4 • 2B – AUTO HYD HTR • RUD SPD BK A – AUTO • B – OFF • BDY FLP A – AUTO • B – OFF • ELEV A – AUTO • B – OFF • AFT FUS A – OFF • B – AUTO HYD CIRC • PUMP PWR 1 – MNA • 2 – MNC	APU 1 GG/Fu Pump Htrs B APU 2 GG/Fu Pump Htrs A APU 1 Lube Oil Line Htrs B 2 Lube Oil Line Htrs A GG Inj H2O Tank Htrs B 1 GG Inj H2O Line Htrs B 2 GG Inj H2O Line Htrs B 1 Tk/Fu Line Htr B 2 Tk/Fu Line Htr A Rudder/Speed Brake Htr B Body Flap Htr B Elev Act Htr B Aft Fuselage Htrs A HYD BK HTR B Circ Pump 1 MNB pwr 2 MNB pwr	(FSM) S67 AC VOLTS 2 S86 HYD RSVR Q SM2 HYD QTY (B) S86 WSB T SM0 THRM HYD (B) S66 AV BAY 1,2 FAN S66 AV BAY 3 FAN S78 CABIN DP/DT S66 CABIN PPO2 B,C S66 IMU FAN DP S66 IMU FN SPD B S69 FC PUMP 2 S69 FC H2 PUMP 2 S88 FREON FLOW 1 S88 FRN AFT CP 1 S88 FRN PL HX 1 S88 FREON QTY 2 S88 FREON FLOW 2 3 R RCS D,R JET S67 MAIN BUS V B I/O ERROR CRT 2 S67 FPC/FLC 2	
	If SSPTS: PTU 2(OPCU 2 and APCU 2)		
(Continued)	(Continued)	(Continued)	

EPS SSR-30 (Cont)
BUS LOSS: MNB DA2

ACTIONS	EQUIP/FUNCTION LOST	CREW INDICATIONS	NOTES
(A1L) S-BD PM • ANT SW ELEC – 2 • XPNDR – 2 • PWR AMPL OPER – 2 • STBY – 2 • PRE AMP – 2 NSP • PWR – 2	S-BD PM Sys 1: Xpndr 1 PreAmp 1 NSP 1 COM SEC 1 Pwr Amp 1 PM and FM Ant SW 1	(FSM) S67 MPC 2 S67 APC/ALC B RM DLMA MANF If ADTA 2, MLS 2, -Y STAR TRKR pwrd: 'BCE STRG 2 ADTA' (3,B) 'BCE STRG 2 MLS' (3) 'BCE STRG 3 STKR'	(3) Indications do not appear until jet commanded
(A1L) If PSP and/or INTRG reqd for PL or ISS ops: • S-BD PL PWR SYS – 2 • CNTL – PNL • – CMD 6 • Reconfig PSP 6 • Perform PL INTRG REACQ (if reqd)	S-BD PL Intrg 1 PSP 1 SW PL Ant capability to 2RH,2LH	(L2) 5 CAB RELIEF A tb – bp 5 O2 SYS 2 SPLY tb – CL 5 N2 SYS 2 SPLY tb – bp 5 N2 SYS 2 REG INLET tb – bp	(5) Vlv holds position (6) REACQ and PSP reconfig procedures are flight specific. If reqd, procedures are found in payload or ISS specific books
7 If OIU reqd, √MCC	3 OIU 2 OIU 1 MNB Pwr	SM 212 OIU OIU 2 TEMP ≥ 140 SM 62 PCMMU/PL COMM If OIU 2, active possible msg 'S62 PDI DECOM FAIL'	(7) OIU CABLE SWAP (IFM PROCEDURES, IFM) will be reqd to regain OIU cmd via OIU 1 and PSP 2
(A1R) • S-BD FM PWR – 2	S-BD FM Sig Proc 1 Xmtr 1	(F6/F8) 8 LDG GEAR L, NOSE (two) tb – bp	(8) When gear deployed, tb does not indicate DN
If no comm: (C3) • S-BD PM CNTL – PNL • – CMD		(F7) FWD EVENT TIME ind – blank	(9) Vlv holds position. Loss of redundant hyd NLG deploy and NWS redundancy if failed closed
(L1) • Perform ON-ORBIT RAD CNTLR SWITCH, ECLS SSR-13 for Freon Loop 1,2 • FLASH EVAP CNTLR PRI A(B) – ON (if reqd) • TOP EVAP HTR NOZ L – A AUTO • TOP EVAP HTR NOZ R – B AUTO • TOP EVAP HTR DUCT – A(C) If Hi Load Evap enabled: • HI LOAD DUCT HTR – A(C)	Freon Loop 1,2 Rad Cntlr A FES Sec Cntlr Top Evap L Noz Htr B Top Evap L R Noz Htr A Top Evap Duct R Fwd,Aft Htrs B Hi Load Duct Inbd,Outbd Noz Htrs B	(R1) FC2 COOL PUMP ΔP tb – bp (R4) 5 HYD MPS/TVC ISOL VLV SYS 2 tb – CL 9 HYD BRAKE ISOL VLV 2 tb – OP If Sys 1 pwrd: 'S62 BCE BYP PSP 1' Loss of PL TLM and CMD If PDI FDA enabled: 'S62 PDI DECOM FAIL'	(10) May be repwrd after AC Pwr Transfer Cable connected (11) When the OBSS is grappled by the RMS, the Cabin Payload A or B power feeds are used to pass MPC1 or MPC2 power, respectively, to the Payload Cabin 3 power bus for distribution to all OBSS equipment, except for LCS
(L2) • FLASH EVAP FDLN HTR A SPLY – 1	FES H2O Fdln A Htrs 2 (all)	(O7) 5 AFT R RCS He PRESS B tb – bp AFT L,R RCS TK ISOL 3/4/5B tb – bp (if vlv in CL position)	(12) Single mtr time. One failure away from EVA to stow MPM or from RMS/OBSS jettison
(L4:P) • cb AC3 ΦA LG SNSR 1 – cl	10 Prox Snsr Electronics Box 2	(O8) FWD RCS 5 He Press B tb – bp 5 MANF ISOL 2 tb – bp	(13) Single mtr time. One failure away from loss of two out of three MRLs. EVA or RMS jettison capability exists
(A8L) • PORT RMS HTR B – OFF • PORT RMS HTR A – AUTO If OBSS berthed: (A8L) • STBD RMS HTR B – OFF • STBD RMS HTR A – AUTO	RMS: B/U Pwr 11 Port Payload Cntl Pwr B 12 Port MPM Mtr 2 12 Stbd MPM Mtr 1 13 Port Fwd MRL Mtr 1 13 Port Mid MRL Mtr 2 14 Stbd Fwd MRL Mtr 1 14 Stbd Mid MRL Mtr 1 14 Stbd Aft MRL Mtr 2 D&C B/U edge ltg 10 Port Htr B 10 Stbd Htr B	(R11L) SPLY H2O 5 DUMP ISOL VLV tb – bp 5 TKB INLET tb – bp 5 TKC OUTLET tb – bp 5 B SPLY ISOL VLV tb – bp (R13L) 5 MMU GN2 SPLY ISOL VLV B tb – bp	(14) Single mtr time. One failure away from loss of MRL latching capability. EVA or OBSS jettison capability exists
(F6) • HSI SEL SOURCE – other than MLS, (OV103,4) TACAN 2 or (OV105) GPS 2	MLS 2 (OV103,4) TACAN 2 (OV105) GPS 2		
(F6,F8) • RDR ALTM – 1	RA 2		
(Continued)	(Continued)	(Continued)	

EPS SSR-30 (Cont)
BUS LOSS: MNB DA2

ACTIONS	EQUIP/FUNCTION LOST	CREW INDICATIONS	NOTES
(O6) ANNUN BUS • SEL ACA 1 – MNA • 2/3 – MNC	ACA 1 MNB pwr ACA 2/3 MNB pwr	(ML31C) 5 WASTE H2O TK1 DRAIN VLV tb – bp 5 SPLY H2O TKD INLET tb – bp	(5) Vlv holds position (15) Manf status not automatically declared closed. Fail-offs will occur when jet commanded
• For attitude control, perform LOSS OF VERNIERS (ORB OPS, RCS)	15 RCS Manf R5 RJD pwr (R5R,R5D)	(O1) AIR TEMP AV BAY 3 ind – 45 degF FREON FLOW LOOP 2 ind – 443 pph CAB dP/dT ind – .45 O2/N2 FLOW SYS 2 ind – 0 pph PPO2 SNSR B,C ind – 0	(16) Do not reconfig for reg switch or I'CNCT procedures
Refer to OMS/RCS Slide Rule for vlv loss info	RCS manf F2 RJD pwr (F2F,F2R,R2U,F2D)		(17) Man CL and GPC cntl remain. Vlv holds position
16 Reconfig following vlvs only if leak isolation reqd: (O7) • AFT L RCS He PRESS A • R RCS He PRESS A,B	17 F,L,R RCS He Pr Isol A man OP capability 18 F,R RCS He Pr Isol B GPC Cntl, man CL capability	(A4) MSN and EVENT TIME ind – blank	(18) Man OP capability remains. Vlv holds position
(O8) • FWD RCS He PRESS A,B		19 If Site AOS and using S-BD Ant Elect 1: 'ANTENNA' (2)	(19) Antenna miscompare causes FSM
(C2) • R IDP/CRT SEL – 3 • GPC/CRT O2 EXEC	20 IDP 2 MDU CRT 2 MDU CDR 2 MDU MFD 1 21 ADC 1B/2B	If NSP 1 selected: 'BCE STRG 1 NSP'	(20) Loss of redundant port to the following: MDU PLT 1 (P) MDU PLT 2 (S) MDU AFD 1 (S)
		If Hum Sep B ON: 'S66 HUMID SEP B'	(21) IDP 3, IDP 4 ADC data lost. MDU port select may be reqd
SM 1 DPS UTILITY (G2,G8,S2) MMU ASSIGN 22 • GNC – ITEM 2 EXEC • SM – ITEM 3 EXEC • PL – ITEM 5 EXEC	MMU 2	If Cabin Fan B ON: C/W AV BAY/CAB AIR lt – on 'S66 CABIN FAN'	(22) Selecting failed MMU for GNC MF protects against GPC MMU Rcvr failure after OPS XTION prepositioning
(A6U) • ANNUN BUS SEL – MNC	ACA 4/5 MNB pwr	If IMU Fan B ON: 'S66 IMU FAN DP' 'S66 IMU FAN SPD B'	
(A14) RCS/OMS HTR • FWD RCS – A AUTO • L POD (two) – A AUTO, B OFF • R POD (two) – A OFF, B AUTO • OMS CRSFD LINES – A AUTO, B OFF	Fwd RCS Htrs B (all) 23 L Pod B Htrs (partial) 24 R Pod A Htrs (all) 16 OMS Crsfd Ln Htrs B (all)	If Freon Loop 1 Pump B ON: 'S88 FREON FLOW 1' 'S88 FRN AFT CP 1' 'S88 FRN PL HX 1'	(23) Htr A remains
		If H2O Loop 1 Pump B ON: C/W H2O LOOP lt 'S88 H2O LOOP 1 FLOW' 'S88 H2O LOOP 1 TEMP' 'S88 H2O PUMP P 1'	(24) Htr B remains
(ML86B:A) • cb MNA H2O LINE HTR A – cl	H2O Line Htrs B: Waste Dump Line Htr Sply Dump Line Htr Vac Vent Line Htr	(O1) H2O PUMP OUT PRESS LOOP 1 ind – 20-25 psia	(25) O2/N2 Cntl Vlv 2 normally closed when unpowered
(ML86B:C) • cb MNA EXT ARLK HTR STRUC Z1/2/3 – cl • cb MNA EXT ARLK HTR LN ZN 1, ZN 2 (two) – cl If in Rendezvous or Docked: • cb MNA EXT ARLK HTR VEST Z1/2/3 – cl	Ext Arlk Htrs B: Structural Htrs B Water Line Htrs B Ext Arlk Vest Htrs B	During Rad Dpy/Sto ops: (R13L) RAD CNTL tbs (four) indicate single mtr ops	(26) Vlv fails closed. IFM or real-time flow test will be required. √MCC for additional direction
(ML86B:D) cb MNA MMU • PORT HTR A – cl • STBD HTR A – cl	23 MMU Port,Stbd Htr B	(A8L) PORT RMS: DPY/STO tb – bp RETEN LAT tb – bp R-F-L FWD tb – bp STARBOARD RMS: RETEN LAT tb – bp R-F-L FWD tb – bp R-F-L MID tb – bp	
• If on PCS 2: Perform RECONFIG TO ALT PCS SYS, ECLS SSR-3	O2/N2 Cntl Sys 2: 5 O2 Sply Vlv Cntl 5 N2 Sply Vlv 2 Cntl 5 Reg Inlet Vlv 2 Cntl 25 O2/N2 Cntl Vlv 2 Man Cntl 26 O2 Xovr Vlv 2 OP capability O2/N2 Sys 2 Flow Xdcrs PPO2 Snsrs B,C	SM 94 PDRS CONTROL PORT RMS Indications lost: MPM Mtr 2 STO/DPY Fwd MRL Mtr 1 LAT/REL/RDY Mid MRL Mtr 2 LAT/REL/RDY STBD RMS Indications lost: MPM Mtr 1 STO/DPY Fwd MRL Mtr 1 LAT/REL/RDY Mid MRL Mtr 1 LAT/REL/RDY Aft MRL Mtr 2 LAT/REL/RDY	
	dP/dT Snsr		
(Continued)	(Continued)	(Continued)	

EPS SSR-30 (Cont)
BUS LOSS: MNB DA2

	ACTIONS		EQUIP/FUNCTION LOST	CREW INDICATIONS	NOTES
	For PLBD ops: • OP/CL Drs in man mode		PLBD: C/L Lat 13-16 Mtr 2 Stbd Aft Blkhd Mtr 2 Port Door Mtr 2 Stbd Door Mtr 2 Port,Stbd Fwd Blkhd Mtrs 2 Port,Stbd Door Mtr 1 CL Limit sws	If Freon sig condr A(B) on pnl O17:C in AC2 position: 'S88 FREON FLOW 2(1)' 'S88 FRN PL HX 1(2)' 'S88 FREON QTY 2(1)'	(5) Vlv holds position (27) Lost TM: GNC SYS SUMM 2 L OMS ENG VLV 2: Assume VLV 2 status same as VLV 1 (28) Man cntl remains. Vap Isol closes. Pr Isol normally closed (29) Maintains He Isol redundancy (30) GPC cntl remains. Vlv fails closed (31) Prevents simultaneous opening of parallel reg paths and possibly rupturing burst disk (32) Maintains deorbit capability for CNTL AB1 failure (33) Not yet active on all vehicles (34) APU H2O QTY 1 ind – 0% if BLR CNTLR/HTR 1A selected. APU H2O QTY 2 ind – 0% if BLR CNTLR/HTR 2B selected (35) Sys B Pri Cntlr, auto switchover to Sec Cntlr remain
				(O1) FREON FLOW LOOP 2(1) ind – 443 pph	
				CCTV video TV Annun lts lost if MNB selected for VCU CCTV Mon 2 lost (VTR input lost)	
				(F7) If APUs active and using BLR CNTLR/HTR 1A or 2B: C/W APU TEMP lt – on after ~2 min	
				SM (BFS,SM) 63 PL BAY DOORS If in AUTO OP/CL for PLBDs, sequence terminates immediately and msg '(S63) PBD CONFIG'	
				During MAN PLBD OP/CL single mtr run time noted on actuators listed at left	
				If OMS Gmbl cmd abs value > 2 deg and Sec TVC selected: OMS TVC C/W lt 'L OMS GMBL' (3,B)	
				If first AA failure and S/W Processing Accel data: 'RM FAIL ACC' (3)	
				If first RGA failure and rates sensed: 'RM FAIL RGA' (3)	
				Star Trkr Dr -Z OP/CL time and -Y CL time incr from 8 to 16 sec	
				L,R ADP deploy times incr from 15 to 30 sec	
				HYD/APU 34 APU H2O QTY 1 Ind – 0% 2 Ind – 0% HYD QTY 2 Ind – 0% APU 1 SPEED % Ind – 0	
27	Prior to using L(R) OMS: (O8)	28	L OMS He Pr Isol B and Vap Isol 2 GPC Cntl		
29	L OMS He PRESS/VAP ISOL • A – GPC • B – OP	30	R OMS He Pr Isol A, B man Cntl and Vap Isol 1,2 man A,B Cntl		
31	R OMS He PRESS/VAP ISOL • A(B) – GPC • B(A) – CL				
	(O8) • Right OMS TK ISOL A – CL (tb-CL)	32	OMS Eng/Xfeed Redundancy		
	If Supply H2O Dump reqd and DUMP ISOL VLV failed closed: • Perform SUPPLY WATER DUMP USING FES (ORB OPS, ECLS)	5	Supply H2O Dump Isol Cntl		
	If EMU(s) in battery charge mode: (AW18H) • PWR/BATT CHGR EMU 1(2) BUS SEL – MNA		EMU 1,2 Pwr/Batt Chgr MNB pwr		
	GNC 23 RCS • Reprioritize L,R Manf 1, F Manf 3 Jets to first priority: DES INH twice all other jets; highest priority first, then next highest, etc • Set aft pod(s) PRI JET FAIL LIMIT to 3 • Set forward pod PRI JET FAIL LIMIT to 4		Aft RCS L,R Jet 1 Htrs Fwd RCS Jet 3 Htrs		
	If CCTV reqd: (A7U) • TV PWR CONTR UNIT – MNA		Video Cntl Unit MNB pwr		
		33	FC1 Redundant Reac Vlv Cntl on pnl C3		
	For SSME Hyd Repress: (R4) • HYD MPS/TVC ISOL VLV SYS 1,3 (two) – OP, wait 10 sec, then CL	5	MPS/TVC Hyd Sys 2 Isol Cntl		
	GNC XXXXX MNVR YYYYY Sel L OMS PRI GMBL • ITEM 28 EXEC		L OMS Sec TVC		
	(ML31C) • VAC VENT ISOL VLV BUS SEC – MNA		Vac Vent Isol MNB Cntl		
	If reqd during entry (< 120 K ft): (L1) • NH3 CNTLR A(B) – PRI/GPC	35	NH3 Sys B Sec Cntlr Man capability		
	(Continued)		(Continued)		

EPS SSR-30 (Cont)
BUS LOSS: MNB DA2

ACTIONS		EQUIP/FUNCTION LOST	CREW INDICATIONS	NOTES
If AC Pwr Transfer Cable to be installed to regain AC: • Go to EPS SSR-200; otherwise, continue with Bus Loss Actions				(36) Av Bay 3 Fan ΔP, Air Out Temp Snsrs lost (37) Freon Loop 1 P/L Hx Flow Rate, Freon Loop 2 ICH Flow Rate, and Accum Qty snsrs lost (38) Freon Loop 2 P/L Hx Flow Rate, Freon Loop 1 ICH Flow Rate, and Accum Qty snsrs lost (39) Lose Auto Temp Cntl via Cntlr 1 and Cabin Temp, Cabin Hx Air Out Temp, and H2O Loop 1 Cabin Hx In Temp snsrs. Hx Byp Vlv holds position
(WCS) • √MODE – AUTO • √CRADLE – AUTO • √Hose stowed in cradle • √WCS ON lt – OFF • FAN SEP SEL sw – OFF • HOSE BLOCK – SEP 1 • In next step, alternate fan sep will turn on for 30 sec. Normal ops may proceed after 30-sec run complete • FAN SEP SEL sw – 1				
(R2) • BLR CNTLR/HTR 1 – B • 2 – A		Hyd H2O Blr 1 Cntlr A 2 Cntlr B		
(L4:F) • cb AC1 H2O LOOP PUMP 1A/2 (three) – cl				
(L1) • HUM SEP B – OFF • A – ON • IMU FAN B – OFF • A(C) – ON • H2O PUMP LOOP 1 – A • CAB FAN B – OFF • √A – ON • AV BAY 1 FAN B – OFF • A – ON • 2 FAN A – OFF • B – ON • AV BAY 3 FAN A,B (two) – ON • FREON PUMP LOOP 1 – A	 36	Hum Sep B IMU Fan B H2O Loop 1 Pump B Cabin Fan B AV Bay 1 Fan B AV Bay 2 Fan A AV Bay 3 Sig Condr, Xdcrs (ECLS SC4) Freon Loop 1 Pump B		
(MO13Q) If Arlk/Tnl Fan active: • ARLK FAN B – OFF • √A – ON		Arlk/Tnl Fan B		
(O17:C) • SIG CONDR FREON A – AC3 • SIG CONDR FREON B – AC3	37 38	Freon Sig Condr A AC2 pwr (ECLS SC 1A) Freon Sig Condr B AC2 pwr (ECLS SC 1B)		
(CDRs SEAT) • SEAT PWR BUS SEL – AC3		CDR Seat Adj via AC2 pwr		
(PLTs SEAT) • SEAT PWR BUS SEL – AC3		PLT Seat Adj via AC2 pwr		
• If Cab Temp Cntlr 1 active: (L1) • CAB TEMP CNTLR – OFF	39	Cabin Temp Cntlr 1, Hx Byp Vlv Mtr 1		
(MD44F) • Remove pin from PRI Actuator BYP vlv linkage, connect linkage to SEC Actuator				
(L1) • CAB TEMP CNTLR – 2				
(Continued)		(Continued)		

EPS SSR-30 (Cont)
BUS LOSS: MNB DA2

	BUS ISOLATION		EQUIP/FUNCTION LOST
40	ONLY ON MCC CALL, PERFORM		
41	(L1) • H2O PUMP LOOP 1 – OFF		
	(L4:N) • cb AC2 ΦC RAD ISOL A – op	42	Freon Loop 1,2 Rad Isol Motor A
	• MDU CRT 2 PWR – OFF • MDU CDR 2 PWR – OFF • MDU MFD 1 PWR – OFF		
	(C2) • IDP/CRT 2 PWR – OFF		
	(C3) • MSTR MADS PWR – OFF		
	(O6) • STAR TRKR PWR -Y – OFF		-Y Star Tracker
	(O7) • (OV105) GPS 2 PWR – OFF • (OV105) GPS 2 PRE AMPL UPPER – OFF • (OV105) GPS 2 PRE AMPL LOWER – OFF		GPS 2
	(O8) • RADAR ALTM 2 – OFF • MLS 2 – OFF		
	(O15:A) • RGA 2 – OFF		RGA 2
	(O15:B) cb MNB OI SIG CONDR		
43	• OF 1/4 B – op		
43	• OF 2/3 A – op		
	cb MNB		
43	• OM 1/2 B – op		
43	• OI MDM OF 1/2 B – op		
	• OI SIG CONDR OM 3A – op		
43	• OI H2O BYP LOOP 2 SNSR – op	44	H2O Byp Loop 2 Snsr (ECLS SC12)
	(O15:B) • cb MNA CONTR – op		
	• MSN TIMER AFT – op		Aft Mission Timer
	• EVENT TIMER FWD – op		Fwd Event Timer
	(O15:C) cb MNB		
	• (OV103) TACAN 2 – op		Tacan 2
45	• SMOKE DETN BAY 1B/3A – op		Av Bay 1 Smoke Det B, Av Bay 3 Smoke Det A
	• FIRE SUPPR BAY 1 – op		
	• UTIL PWR F1/MO13Q – op		MNB Utility pwr
	• FLOOD R CNSL – op		R Console Floodlt
	• L CTR – op		L Seat/Ctr Console Floodlt
	• ANNUN FWD ACA 1 – op		
	• ANNUN FWD ACA 2/3 – op		
	• ANNUN AFT ACA 4/5 – op		
	• CRYO O2 HTR TK2 SNSR 2 – op	46	Cryo O2 Tk2 Htr Current Snsr 2
	• (OV104,5) GPS 2 PRE AMPL UPPER – op		
	(A13) • (OV104) GPS 2 PWR - OFF		GPS 2
	• (OV104) GPS 2 PRE AMPL UPPER - OFF		
	• (OV104) GPS 2 PRE AMPL LOWER - OFF		
	(A15:H,I,J,K) • cb MNB TK6-TK9 O2 HTR SNSR 2 – op	46	Cryo O2 Tk6-9 Htr Current Snsr 2
	(O15:D) cb MNB		
47	• FREON RAD CNTLR 1 – op		
47	• FREON RAD CNTLR 2 – op		
	(Continued)		(Continued)

CREW INDICATIONS	NOTES
	(40) AC2 Bus Isolation for AC Pwr Transfer Cable installation accomplished in MNB DA2 Actions column. No additional bus isolation steps reqd (41) If this action taken, activate H2O Pump Loop 2 (42) Motor B remains (43) Redundant pwr source remains for equipment (44) H2O Loop 2 ICH Flow Rate snsr lost (45) Other detn in Av Bay remains (46) Current Snsr 1 remains (47) Cntlr B remains

EPS SSR-30 (Cont)
BUS LOSS: MNB DA2

	BUS ISOLATION		EQUIP/FUNCTION LOST
	ONLY ON MCC CALL, PERFORM		
	• PPO2 C CAB dP/dT – op • (OV104,5) GPS 2 PRE AMPL LOWER – op • N2 SPLY 2 – op • O2/N2 CNTLR – op • O2 XOVR 2 – op • N2 REG INLET 2 – op • CAB RELIEF A – op		Cabin Relief Vlv A Cntl
48	• NWS – op		NWS – 2
	(O15:E) cb MNB • RDR ALTM 2 – op • MLS 2 – op • (OV104) TACAN 2 – op		Tacan 2
	• ADTA 2 – op	5	ADTA 2
	• STAR TRKR -Y – op • ACCEL 2 – op		AA2
43	• DDU L – op		
43	• R – op		
	• DRAG CHUTE SYS 2 – op	49	Drag Chute, PLT Arm
	(O15:F) • MMU 2 – OFF		
		50	ASA 4 Isol
		50	ATVC 3 Isol ME
		50	4 Isol ME
	(R1) • PL AFT MNB – OFF		Aft PL MNB pwr
	(R11U) • FC PURGE VLV 2 – CL • FC STARTUP HTR 2 – ENA		FC2 Startup Htr Inhibit capability
	(R14:A) • cb MNB AUD MIDDECK SPKR – op • ADC 1B/2B – op • MDU MFD 1 – op • MDU CDR 2 – op		Middeck ATU Middeck Spkr
	(R14:B) • cb MNB CNTL BUS CA 1/2/3 – op	1	MNB pwr for CNTL CA 1,2,3 Buses
43	cb PALLET/DSC • 1B – op (EDO) • 4B – op (EDO)		
	(R14:C) cb MNB KU • ELEC – op • ANT HTR – op	51	Ku-Bd sys (I/F and cont Unit, RDR) Sig Proc & Dpy Assy
	• CABLE HTR – op		Deployed Assy Htrs
	(R14:D) cb MNB TV A CAMR • CAMR/PTU – op • CAMR HTR – op • ILLUM/PTU HTR – op		TV A Camr/Pan-Tilt TV A Camr Htr TV A Camr Pan-Tilt Htr and Illum
	cb MNB TV • CONTR UNIT – op • MON 2 – op		CCTV Mon 2
	(R14:E) • cb MNB OS FLOOD – op		OS Floodlt
	cb MNB RMS CAMR • CAMR/PTU – op • WRIST ILLUM/CAMR HTR – op • ELB ILLUM/PTU HTR – op		RMS Camr/Pan-Tilt RMS Camr Htr and Wrist Illum RMS Camr Pan-Tilt Htr and Elb Illum
	(Continued)		(Continued)

CREW INDICATIONS	NOTES
	(1) Buses remain pwrd (5) Vlv holds position (43) Redundant pwr source remains for equipment (48) NWS 1 still available (49) CDR Arm remains (50) Six vlvs fail to non-isolation position (51) KU-BAND ANTENNA: CONTINGENCY STOW – W/EVA ANT GIMBAL ALIGNMENT (IFM) reqd to stow Ku-Bd. Jettison reqd if antenna cannot be positioned within GO FOR PLBD CLOSURE envelope

EPS SSR-30 (Cont)
BUS LOSS: MNB DA2

BUS ISOLATION		EQUIP/FUNCTION LOST
ONLY ON MCC CALL, PERFORM		
(A7U) PL BAY FLOOD • FWD BHD – OFF • MID PORT – OFF • FWD STBD – OFF		PLB Fwd Blkhd Floodlt Mid Port Floodlt Fwd Stbd Floodlt
(A7L) IF DOCKING MISSION • cb DEP MNB SYS 2 VENT ISOL – op • cb DEP MNB SYS 2 VENT – op		Vest Dep Vlv Sys 2 Vent Vent Isol
(A7L) IF DOCKING MISSION cb DOCK LT MNB • TRUSS AFT – op • VEST STBD – op • SYS PWR SYS 2 MNB – OFF • PSU PWR MNB – OFF cb MNB • LOGIC 1 – op • 2 – op LIGHTS • AIRLK 2/3 MNB – OFF	 52 53 	MNB A7 Aft Truss Docking lt Stbd Vestibule Docking lt DSP SYS 2 Pwr PSU MNB Pwr MNB pwr to DSP Logic buses 1,2 External Airlock lts 2,3
(MA73C:A,B) MCA LOGIC MNB • FWD 2 – OFF • AFT 2 – OFF • MID 1,2,3,4 (four) – OFF		MNB FMC2 Bus pwr AMC2 Bus pwr MMC1,MMC2,MMC3, MMC4 Bus pwr
(ML86B:A) cb MNB • H2O LINE HTR B – op • SUPPLY H2O TKB INLET – op • SUPPLY H2O TKC OUTLET – op • SUPPLY H2O DUMP ISOL – op • SUPPLY H2O B SPLY ISOL VLV – op	 5 5 5	 Sply H2O TKB Inlet Vlv Cntl Sply H2O TKC Outlet Vlv Cntl Sply H2O B Sply ISOL Vlv Cntl
(ML86B:B) cb MNB • VAC VENT NOZ HTR – op • WASTE H2O TK1 DRAIN – op • SUPPLY H2O TKD INLET – op • VAC VENT ISOL VLV – op • WCS CNTLR – op • GALLEY H2O HTR – op	 54 5 5 	 Waste H2O Vac Vent Noz Htr Tk1 Drain Vlv Cntl Sply H2O TKD Inlet Vlv Cntl WCS Press Xdcr Galley H2O Htrs
(ML86B:C) cb MNB • EXT ARLK HTR STRUC Z1/2/3 – op • EXT ARLK HTR LN ZN 1, ZN 2 (two) – op • EXT ARLK HTR VEST Z1/2/3 – op		Ext Arlk Struc Htrs B Ext Arlk H2O Ln Htrs B Ext Arlk Vest Htrs B
(ML86B:D) cb MNB MMU • PORT,STBD HTR B – op • GN2 SPLY ISOL VLV B – op cb MNB PYRO JETT SYS A • PORT RMS – op	 23 5 55 	 MMU Port,Stbd Htr B GN2 Sply Isol Vlv B Port RMS: Jett/Guil Sys A Deadface Relays
(ML86B:E) cb MNB SEAT • L – op • R – op cb MNB FLOOD • TNL ADAPT 3 – op		 TA Floodlt 3
(Continued)		(Continued)

CREW INDICATIONS
DSP SYS PWR SYS 2 tb – OFF

NOTES
(5) Vlv holds position
(23) Htr A remains
(52) All docking mechanisms will have single mtr times
(53) Logic buses 1(2) remain pwrd via MNA(MNC)
(54) No redundancy
(55) One failure away from loss of jettison capability

EPS SSR-30 (Cont)
BUS LOSS: MNB DA2

BUS ISOLATION	EQUIP/FUNCTION LOST	CREW INDICATIONS	NOTES
(ML86B:F) cb MNB FLOODS • MIDDECK 2/6 – op • BUNK 2/4 – op	Middeck Floods 2,6 Bunk Floodlts 2/4	L MPS He reg A < 680 during entry (MM 303)	(5) Vlv holds position
ONLY ON MCC CALL, PERFORM			(9) Vlv holds position. Loss of redundant hyd NLG deploy and NWS redundancy if failed closed
• PHS – op • AIRLK 3 – op cb MNB CRYO O2 46 • HTR TK3 SNSR 2 – op 56 • TK4 SNSR 1 – op	PHS Floodlt Airlk Flood 3 Cryo O2: 46 Tk 3 Htr Current Snsr 2 56 4 Htr Current Snsr 1		(46) Current Snsr 1 remains (56) Current Snsr 2 remains
	57 Port,Stbd Rad Mtrs 2 Dpy capability Port,Stbd Rad Lat 1-6 Mtrs 2		(57) Mtrs 2 stow capability unaffected
	Fwd RCS Jet 2 Htrs 58 L OMS ENG Press Vlv Coil 2, Cntl Vlv 1,2 Coil 2		(58) Redundant coils remain
	59 OMS Qty Gauging for all L OMS single engine burns		(59) √MCC for OMS Qtys
	9 Hyd Brake Isol Vlv 2 Cntl 60 APU 1 Cntlr Pwr Sply B 61 1 Fuel Tk Vlv B 62 2 Cntlr Pwr Sply A 2 Fuel Tk Vlv A APU 2 GBX GN2 Repress Vlv Hyd Rsvr 2 Qty Snsr		(60) Pwr supply A remains. Turbine speed ind lost (61) Vlv fails closed. Redundant vlv remains (62) Pwr supply B remains. GG Bed T and GBX P lost when APU running
	63 Freon Loop 2 Cntlr A Rad Byp Vlv Mtr Man Cntl 64 Freon Loop 1 Cntlr A Rad Byp Vlv Mtr 5 Freon Loop 1 Flow Prop Vlv Freon Loop 1 Cold Plate Flow Xdcr		(63) Cntlrs A,B Rad Byp Vlv Mtrs Auto Cntl and Cntlr B Rad Byp Vlv Mtr Man Cntl remain (64) Bypass vlv holds position and Cntlr B Rad Byp Vlv Mtr remains
	65 L,R ADP Dpy Mtrs 2 66 Htr Cntlr 2 RH Vents 1,2,6,8,9 Mtrs 2 LH Vents 1,2,3,5,8,9 Mtrs 2		(65) Mtr 1 remains (66) Htr Cntlr 1 remains
	NLG B/U Rel and Ext Sys 2 LMG, RMG B/U Rel Sys 2		
	-Y Star Trkr Dr OP and Sys 2 CL capability -Z Star Trkr Dr Sys 1 OP/CL capability		
	PL Reten Sys B Rel/Lat Mtrs 67 Ku Ant Sto/Dpy Mtr 2		(67) √MCC for stow reqmts
	MPS: 68 L Eng He Intercon Outlet Vlv 63 L Eng He Isol A 63 Pneu He Isol 2 69 Prplt F/D Inbd LO2 Vlv 69 Outbd LH2 Vlv 70 Manf Repress LH2 Vlv 1,2		(68) Vlv fails closed (69) Vlv holds position. Loss of manual capability to inert LO2 and LH2 Manf (70) Vlv fails closed. LH2 Manf will not be pressurized with He during entry (MM304)
	71 ET Door Mtrs: C/L Lat Actr 1 Mtr 2 L Dr Uplock Lat Mtr 2 R Dr Closure Mtr 2 Uplock Lat Mtr 2		(71) Redundant mtrs remains
	72 NWS Hyd Sys 2		(72) Hyd Sys 1 still available for NWS
	9 LG Extend Vlv 2		
	Ops Hyd Actr Instr 73 Hyd Main Pump 2 Depress Solenoid RPC A 73 Hyd Main Pump 1 Depress Solenoid RPC B		(73) Redundant RPC remains

EPS SSR-31
BUS LOSS: MNB FPC2 (Includes MNB FLC2, MNB FMC2, AC2)

	ACTIONS		EQUIP/FUNCTION LOST	CREW INDICATIONS	NOTES
1	• Perform FC2 SHUTDN (FC SHUTDN Cue Card), pwrdn not needed, then:	2	FC2 Pumps and pH Snsr	MASTER ALARM Light/Tone – on CRT 2 blanks	(1) * TIME CRITICAL * FC2 must be shutdn within 9 min to avoid potentially hazardous condition
	(R1) • cb AC CONTR AC2 ΦA, ΦB, ΦC (three) – cl • INV/AC BUS 2 – OFF (tb-OFF) • INV PWR 2 – OFF (tb-OFF) • cb AC CONTR AC2 ΦA, ΦB, ΦC (three) – op • AC2 BUS SNSR – OFF		AC2 ΦA,ΦB,ΦC Inverters	(F7) C/W FC PUMP lt – on C/W AC VOLT lt – on C/W FREON LOOP lt – on C/W AV BAY/CAB AIR SM ALERT Light/Tone – on	
				(F9) AC2 ΦA,ΦB,ΦC AC volts < 90	(2) Will be repwrd after AC Pwr Transfer Cable connected
	(L4:P) • cb AC3 ΦA LG SNSR 1 – cl	2	Prox Snsr Electronics Box 2	(COMM LOST) All S-BD A/G voice lost if Sys 1 selected	(3) Man CL and full GPC cntl remains. Vlv holds position
	Refer to OMS/RCS Slide Rule for vlv loss info Reconfig following vlv only if leak isolation reqd:	3	Fwd RCS He Press Isol A man OP capability	(LIGHTS LOST) Right Ovhd pnl (pnls O1, O2,O3,O8,O9,O16,O17) Right pnl (pnls F4,F8,F9, R1,R2,R4) Ovhd Instr (pnls O1,O2,O3) Orbit Sta Numeric lts (pnls A2,A4)	(4) Man OP capability remains. Vlv holds position
	(O8)	4	Fwd RCS He Press Isol B man CL and full GPC Cntl		
5	• FWD RCS He PRESS A,B		RCS Manf F2 RJD pwr (F2F,F2R,F2U,F2D)		(5) Do not reconfig for reg switch or I'CNCT procedures
	(A1L) S-BD PM • ANT SW ELEC – 2 • XPNDR – 2 • PWR AMPL OPER – 2 • STBY – 2 • PRE AMPL – 2 NSP • PWR – 2		S-BD PM Sys 1: Xpndr 1 Pre-Amp 1 Pwr Amp 1 PM, FM Ant Sw 1 NSP 1/COMSEC 1	(FSMs) S67 FPC/FLC 2 S67 AC VOLTS 2 S86 HYD RSVR Q SM2 HYD QTY (B) S86 WSB T SM0 THRM HYD (B) S66 AV BAY 1,2 FAN S66 AV BAY 3 FAN S69 FC PUMP 2 S69 FC H2 PUMP 2 S88 FRN AFT CP 1 S88 FREON FLOW 1 S88 FRN PL HX 1	(6) REACQ and PSP reconfig procedures are flight specific. If reqd, procedures can be found in payload or ISS specific books
	If simo loss of MNA & MNB: • NSP ENCRYPTION MODE – SEL • NSP ENCRYPTION SEL – BYP				(7) When gear deployed, tb will not indicate DN
	If PSP and/or INTRG reqd for PL or ISS ops: • S-BD PL PWR SYS – 2 • CNTL – PNL • – CMD		S-BD PL Intrg 1 PSP 1	RM DLMA MANF S88 I/O ERROR CRT 2 S66 CABIN FAN S66 IMU FAN DP S66 IMU FN SPD B	(8) APU H2O QTY 1 ind – 0% if BLR CNTLR/HTR 1A active. APU H2O QTY 2 ind – 0% if BLR CNTLR/HTR 2B active
6	• Reconfig PSP			(F6/F8) 7 LDG GEAR L,NOSE tb – bp	(9) OIU 2 interfaces with PSP 2 for commanding
6	• Perform PL INTRG REACQ (if reqd)				(10) Vlv holds position
	(A1R) • S-BD FM PWR – 2		S-BD FM Sys 1	HYD/APU 8 APU H2O QTY 1 ind – 0% 2 ind – 0% HYD QTY 2 ind – 0%	(11) Loss of redundant port to the following: MDU CDR 2 (S) MDU MFD 1 (P) MDU PLT 1 (P) MDU PLT 2 (S) MDU AFD 1 (S)
	If no comm: (C3) • S-BD PM CNTL – PNL • – CMD			(R1) 4 FC2 COOL PUMP ΔP tb – bp	
9	If OIU reqd: (SSP) • OIU PWR – OIU 2 ON • OIU tb – DN • √MCC, OIU reconfig			(O8) 10 FWD RCS He PRESS B tb – bp FWD RCS MANF ISOL 2 tb – bp	
	(C2) • R IDP/CRT SEL – 3 On MCC GO: • GPC/CRT O2 EXEC	11	IDP 2 MDU CRT 2	(O1) AIR TEMP AV BAY 3 ind – 45 degF AIR TEMP CAB HX OUT ind – 45 degF FREON FLOW LOOP 1 ind – 578 pph	
	(A14) • RCS/OMS HTR FWD RCS A AUTO		Fwd RCS Htrs B (all)		
	(Continued)		(Continued)	(Continued)	

EPS SSR-31 (Cont)
BUS LOSS: MNB FPC2

ACTIONS	EQUIP/FUNCTION LOST	CREW INDICATIONS	NOTES
DPS UTILITY (G2,G8,S2) 12 MMU ASSIGN • GNC – ITEM 2 EXEC • SM – ITEM 3 EXEC • PL – ITEM 5 EXEC • OPS 0 – ITEM 7 EXEC	MMU 2	(A4) MSN and EVENT TIME ind – blank L,R ADP deploy times incr from 15 to 30 sec 13 If site AOS and using S-BD Ant Elec 1: 'ANTENNA' (2) -Y,-Z Star Trkr Drs OP/CL time incr from 8 to 16 sec If Sys 1 pwrd: 'S62 BCE BYP PSP1' Loss of PL TLM and CMD If PDI FDA Enabled: 'S62 PDI DECOM FAIL' If NSP 1 selected: 'BCE STRG 1 NSP' If Freon Loop 1 Pump B ON: 'S88 FREON FLOW 1' 'S88 FRN AFT CP 1' 'S88 FRN PL HX 1' If Freon Sig Condr A(B) (O17:C) in AC2 position: 'S88 FREON FLOW 2(1)' 'S88 FRN PL HX 1(2)' 'S88 FREON QTY 2(1)' (O1) FREON FLOW LOOP 2(1) ind – 578 pph If H2O Loop 1 Pump B ON: C/W H2O LOOP lt 'S88 H2O PUMP P 1' 'S88 H2O LOOP 1 FLOW' 'S88 H2O LOOP 1 TEMP' (O1) H2O PUMP OUT PRESS LOOP 1 ind – 20-25 psia (F7) If APUs active and using H2O Blr Cntlr 1A(2B): C/W APU TEMP lt after ~2 min During Rad Dpy/Sto ops: (R13L) RAD LAT CNTL tbs (two) indicate single mtr ops	(12) Selecting failed MMU for GNC MF protects against GPC MMU Rcvr failure after OPS XTION prepositioning (13) FSM caused by antenna miscompare (14) AV Bay 3 Fan ΔP Air Out Temp Snsrs lost (15) Freon Loop 1 P/L Hx Flow Rate, Freon Loop 2 ICH Flow Rate and Accum Qty Snsrs lost (16) Freon Loop 2 P/L Hx Flow Rate, Freon Loop 1 ICH Flow Rate and Accum Qty Snsrs lost
If EMU(s) in battery charge mode: (AW18H) • PWR/BATT CHGR EMU 1(2) BUS SEL – MNA	EMU 1,2 Pwr/Batt Chgr MNB pwr		
Pre-seat ingress for Entry: • Discharge handheld fire ext into AV BAY 1	Av Bay 1 agent discharge capability		
If AC Pwr Cable to be installed to regain AC: • Go to EPS SSR-200; otherwise, continue with Bus Loss Actions			
(R2) • BLR CNTLR/HTR 1 – B • 2 – A	Hyd H2O Blr 1 Cntlr A 2 Cntlr B RSVR 2 Qty Snsr		
(L4:F) • cb AC1 H2O LOOP PUMP 1A/2 (three) – cl			
(L1) • HUM SEP B – OFF • A – ON • CAB FAN B – OFF • A – ON • IMU FAN B – OFF • A(C) – ON • H2O PUMP LOOP 1 – A • AV BAY 1 FAN B – OFF • A – ON • 2 FAN A – OFF • B – ON • AV BAY 3 FAN A,B (two) – ON • FREON PUMP LOOP 1 – A • 2 – A	Humidity Sep B Cabin Fan B IMU Fan B H2O Loop 1 Pump B Av Bay 1 Fan B Av Bay 2 Fan A 14 Av Bay 3 Sig Condr, Xdcrs (ECLS SC4) Freon Loop 1 Pump B		
(MO13Q) If Arlk/Tnl Fan active: • ARLK FAN B – OFF • √A – ON	Arlk/Tnl Fan B		
(O17:C) • SIG CONDR FREON A – AC3 • SIG CONDR FREON B – AC3	15 Freon Sig Condr A AC2 pwr (ECLS SC1A) 16 Freon Sig Condr B AC2 pwr (ECLS SC1B)		
(WCS) • √MODE – AUTO • √CRADLE – AUTO • √Hose stowed in cradle • √WCS ON lt – OFF • FAN SEP SEL sw – OFF • HOSE BLOCK – SEP 1 • In next step, alternate fan sep will turn on for 30 sec. Normal ops may proceed after 30-sec run complete • FAN SEP SEL sw – 1	WCS Fan/Sep 2		
(Continued)	(Continued)		

EPS SSR-31 (Cont)
BUS LOSS: MNB FPC2

ACTIONS		EQUIP/FUNCTION LOST	CREW INDICATIONS	NOTES
(CDR's SEAT) • CDR SEAT PWR BUS SEL – AC3		CDR Seat Adj via AC2 pwr		(10) Vlv holds position (17) Lost Auto Temp Cntl via Cntlr 1 and Cabin Temp, Cabin Hx Air Out Temp and H2O Loop Cabin Hx In Temp Snsrs Hx Byp Vlv holds position (18) Bypass vlv holds position and Cntlr B Rad Byp vlv mtr remains (19) AC2 Bus isolation for AC Pwr Transfer Cable installation accomplished in MNB FPC2 Actions Column. No additional bus isolation steps reqd (20) Motor B remains
(PLT's SEAT) • PLT SEAT PWR BUS SEL – AC3		PLT Seat Adj via AC2 pwr		
If Cab Temp Cntlr 1 active: (L1) • CAB TEMP CNTLR – OFF	17	Cabin Temp Cntlr 1 and Hx Byp vlv Mtr 1		
(MD44F) • Remove pin from PRI Actuator and BYP vlv linkage • Connect linkage to SEC Actuator				
(L1) • CAB TEMP CNTLR – 2				
• Perform LOSS OF 1 FC (ORB PKT, PWRDN)				
	18 10	Freon Loop 1 Cntlr A Rad Byp Vlv Mtr Freon Loop 1 Flow Prop Vlv		

19 BUS ISOLATION				
ONLY ON MCC CALL, PERFORM				
(L1) • H2O PUMP LOOP 1 – OFF • 2 – ON				
(L4:N) • cb AC2 ΦC RAD ISOL A – op	20	Freon Loop 1,2 Rad Isol Motor A		
• MDU CRT 2 PWR – OFF				
(C2) • IDP/CRT 2 PWR – OFF				
(O7) • (OV105) GPS 2 PWR – OFF • (OV105) GPS 2 PRE AMPL UPPER – OFF • (OV105) GPS 2 PRE AMPL LOWER – OFF		(OV105) GPS 2		
(O15:F) • MMU 2 – OFF				
(A7L) • MADS RCDR PWR – OFF		MADS Rcdr All MADS and ACIP data		
(A13) • (OV104) GPS 2 PWR – OFF • (OV104) GPS 2 PRE AMPL UPPER – OFF • (OV104) GPS 2 PRE AMPL LOWER – OFF		GPS 2		
(MA73C:A) • MCA LOGIC MNB FWD 2 – OFF		MNB FMC2 Bus pwr		
(Continued)		(Continued)		

EPS SSR-31 (Cont)
BUS LOSS: MNB FPC2

BUS ISOLATION		EQUIP/FUNCTION LOST	CREW INDICATIONS	NOTES
ONLY ON MCC CALL, PERFORM				(2) Will be repwrd after AC Pwr Transfer Cable connected
(O15:C) cb MNB • FIRE SUPPR BAY 1 – op • (OV104,5) GPS 2 PRE AMPL UPPER – op	21	MNB Pwr to CNTL Buses AB1,AB2,AB3,BC1,BC2,BC3		(21) Buses remain pwrd
(O15:D) • (OV104,5) cb MNB GPS 2 PRE AMPL LOWER – op				(22) Vlv holds position. Loss of redundant hyd NLG deploy and NWS hyd redundancy, if failed closed
		NLG B/U Rel and Ext Sys 2 LMG,RMG B/U Rel Sys 2		(23) Hyd Sys 1 still available for NWS
	22 23	LG Extend Vlv 2 NWS Hyd Sys 2		(24) Redundant mtrs remain
		-Y Star Trkr Dr Sys 2 OP/CL capability -Z Star Trkr Dr Sys 1 OP/CL capability		(25) Single mtr time. One failure away from EVA to stow MPM or from RMS/OBSS jettison. May be repwrd after AC Pwr Transfer Cable connected
		L,R ADP Dpy Mtrs 2 Htr Cntlr 2 RH Vents 1,2,6,8,9 Mtrs 2 LH Vents 1,2,3,5,8,9 Mtrs 2		(26) Single mtr time. One failure away from loss of two out of three MRLs. EVA or RMS jettison capability exists. May be repwrd after AC Pwr Transfer Cable connected
	24	ET Door Mtrs: C/L Lat Actr 1 Mtr 2 L Dr Uplock Lat Mtr 2 R Dr Closure Mtr 2 Uplock Lat Mtr 2		(27) Single mtr time. One failure away from loss of MRL latching capability. EVA or OBSS jettison capability exists. May be repwrd after AC Pwr Transfer Cable connected
		RMS: 25 Port MPM Mtr 2 25 Stbd MPM Mtr 1 26 Port Fwd MRL Mtr 1 26 Port Mid MRL Mtr 2 27 Stbd Mid MRL Mtr 1 27 Stbd Aft MRL Mtr 2 2 D&C B/U edge ltg		(28) √MCC for stow reqmts
	28	Ku Ant Sto/Dpy Mtr 2		
		PL Reten Sys B Rel/Lat Mtrs		
		Port,Stbd Rad Lat 1-6 Mtrs 2		

EPS SSR-32
BUS LOSS: MNB MPC2

(Includes MNB MMC1, MNB MMC2, MNB MMC3, MNB MMC4)

ACTIONS	EQUIP/FUNCTION LOST	CREW INDICATIONS	NOTES
1 • Perform MNB BUS TIE (BUS TIE Cue Card) • Monitor, record Δamps between FC2 and tied FC	1 FC2 Purge Vlv O2,H2 Flow Xdcrs 1 SS ΔV Snsrs	(L2) 2 O2 SYS 2 SPLY tb – CL	(1) Buses are tied due to: Loss of FC2 Purge Capability. As FC2 loses performance, tied FC will pick up load, slowing FC2 degradation. If degradation projection does not allow nominal EOM, Fuel Cell will be shut down. √MCC and Loss of FC2 SSΔV Snsrs. Change in ΔAmps > 12 amps indicates possible cell crossover problem. The ΔAmps shift due to loss of FC2 purge capability is indicated by change in ΔAmps between pre- and post-purge readings. MCC will aid in this determination
(R1) • PL CAB – MNA	3 MNB pwr to CABPL1,2,3 Buses	(LIGHTS LOST) PLB Fwd Blkhd Floodlt Mid Port Floodlt Fwd Stbd Floodlt	
(A8L) • PORT RMS HTR B – OFF • PORT RMS HTR A – AUTO If OBSS berthed: (A8L) • STBD RMS HTR B – OFF • STBD RMS HTR A – AUTO	RMS: B/U pwr 4 Port Payload Cntl Pwr B 5 Port MPM Mtr 2 5 Stbd MPM Mtr 1 6 Port Fwd MRL Mtr 1 6 Port Mid MRL Mtr 2 7 Stbd Fwd MRL Mtr 1 7 Stbd Mid MRL Mtr 1 7 Stbd Aft MRL Mtr 2 Port Htr B Stbd Htr B	(A8L) PORT RMS: DPY/STO tb – bp RETEN LAT tb – bp R-F-L FWD tb – bp STARBOARD RMS: RETEN LAT tb – bp R-F-L FWD tb – bp R-F-L MID tb – bp	
(L1) • TOP EVAP HTR DUCT – A If Hi Load Evap enabled • HI LOAD DUCT HTR – A(C)	Top Evap Duct Fwd,Aft Htrs B HI Load Duct Inbd,Outbd Htrs B	SM 94 PDRS CONTROL PORT RMS Indications lost: MPM Mtr 2 STO/DPY Fwd MRL Mtr 1 LAT/REL/RDY Mid MRL Mtr 2 LAT/REL/RDY STBD RMS Indications lost: MPM Mtr 1 STO/DPY Fwd MRL Mtr 1 LAT/REL/RDY Mid MRL Mtr 1 LAT/REL/RDY Aft MRL Mtr 2 LAT/REL/RDY	
(L2) • FLASH EVAP FDLN HTR A SPLY – 1	FES H2O Fdln A Mid 2 Htr 2		
(A12) • HYD HTR AFT FUS B – AUTO • HYD HTR AFT FUS A – OFF	Aft Fuselage Hyd Htrs A HYD BK HTR B		
(MA73C:C,D) 8 • cb MCA PWR AC2 3Φ MID 2 – op 8 • cb MCA PWR AC2 3Φ MID 4 – op	8 Stbd Rad Lat 1-6 Mtr 2 Limit sw 8 Port Rad Lat 1-6 Mtr 2 Limit sw	(R13L) During Rad Dpy ops: RAD CNTL tbs (two) indicate single mtr ops	(2) Vlv holds position
For PLBD ops: • OP/CL Drs in man mode	PLBD: C/L Lat 13-16 Mtr 2 Stbd Aft Blkhd Lat Mtr 2 Port Door Mtr 2 Port,Stbd Fwd Blkhd Lat Mtr 2 Stbd Door Mtr 2 Port,Stbd Door Mtr 1 CL Limit sw	If in RDR/Comm Track, will break track (A1U) SIG STRENGTH – 0 SM 201 ANTENNA SIG STR – 0 Erratic antenna motion	(3) Pwrs PL Timing Buffer, OIU 1, and OIU 2 (if flown). OIU 1 redundant pwr MNA MPC1 via CAB PL3
(R14:C) cb MNB KU • ELEC – op • ANT HTR – op • CABLE HTR – op cb MNC KU • SIG PROC – op		SM (BFS SM 63) PL BAY DOORS If in AUTO OP/CL for PLBDs, sequence terminates immediately and msg '(S63) PBD CONFIG'	(4) When the OBSS is grappled by the RMS, the Cabin Payload A or B power feeds are used to pass MPC1 or MPC2 power, respectively, to the Payload Cabin 3 power bus for distribution to all OBSS equipment, except for LCS
(ML86B:C) 9 • cb MNA EXT ARLK HTR STRUC – cl	9 Ext A/L Structural Htrs MNB pwr	During MAN PLBD OP/CL single mtr run time noted on actuators listed at left	(5) Single mtr time. One failure away from EVA to stow MPM or from RMS/OBSS jettison
If OIU reqd, √MCC: (SSP 1) • OIU PWR – OIU 1 ON	3 OIU 2 OIU 1 MNB pwr	S177 EXTERNAL AIRLOCK Indications lost: EXT A/L PRESS	(6) Single mtr time. One failure away from loss of two out of three MRLs. EVA or RMS jettison capability exists
(AIL) • S-BD PL PWR SYS – 1 • CNTL – PNL • – CMD		SM 212 OIU OIU 2 TEMP ≥ 140 SM 62 PCMMU/PL COMM If OIU 2 active msg, 'S62 PDI DECOM FAIL'	(7) Single mtr time. One failure away from loss of MRL latching capability. EVA or OBSS jettison capability exists
			(8) If AC2 cbs not opened, Lat Mtrs 2 of actuators for Port and Stbd Rad Lat 1-6 continues to run until Sys B Lat Cntl sw placed to OFF
			(9) MNA htrs remain

(Continued)

(Continued)

EPS SSR-32 (Cont)
BUS LOSS: MNB MPC2

BUS ISOLATION		EQUIP/FUNCTION LOST
ONLY ON MCC CALL, PERFORM		
(R11U) • FC PURGE VLV 2 – CL • FC STARTUP HTR 2 – ENA		FC2 Startup Htr Inhibit capability
(A7U) PL BAY FLOOD • FWD BHD – OFF • MID PORT – OFF • FWD STBD – OFF		PLB Fwd Blkhd Floodlt Mid Port Floodlt Fwd Stbd Floodlt
(A7L) IF DOCKING MISSION • cb DEP MNB SYS 2 VENT ISOL – op • cb DEP MNB SYS 2 VENT – op		Vest Dep Vlv Sys 2 Vent Vent Is
(A7L) IF DOCKING MISSION cb DOCK LT MNB • TRUSS AFT – op • VEST STBD – op • SYS PWR SYS 2 MNB – OFF • PSU PWR MNB – OFF cb MNB • LOGIC 1 – op • 2 – op LIGHTS • AIRLK 2/3 MNB – OFF		MNB A7 Aft Truss Docking lt Stbd Vestibule Docking lt DSP SYS 2 pwr 10 PSU MNB pwr 11 MNB pwr to DSP Logic buses 1,2 External Airlock lts 2,3
(A7L) • MADS PCM – OFF		MADS PCM
(MA73C:A,B) • MCA LOGIC MNB MID (four) – OFF		MNB MMC1,2,3,4 Bus pwr
	12 2	Freon Loop 2 Cntlr A Rad Byp Vlv Mtr Man Cntl Atm Press Cntl O2 Sys 2 Sply Vlv Cntl
	13	Port,Stbd Rad Mtrs 2 Dpy capability LH Vent 3,5 Mtrs 2 RH Vent 6 Mtrs 2
	14	MNB pwr to ESS1BC, ESS3AB AUX PL B Bus pwr
	15 16 17 18	Ku Ant Sto/Dpy Mtr 2 Sto and Dpy Limit sw Ku-Bd Sys Deployed Assy including Htr Ckts (Rdr & Comm) Redundant Ku-Bd Xmit Enable Redundant Ku-Bd Boom Stow Enable II Excitation Signal
(A15:H,I,J,K) • cb MNB TK6-TK9 O2 HTR SNSR 2 – op	19	Cryo O2 Tk 6-9 Htr Current Snsr 2
		FC1 Redundant Reac Vlv Close Cntl on pnl C3
(ML86B:C) 9 • cb MNB EXT ARLK HTR STRUC – op	9	Ext A/L Structural Htrs MNB pwr

CREW INDICATIONS	NOTES
DSP SYS PWR SYS 2 tb – OFF	(2) Vlv holds position (9) MNA htrs remain (10) All docking mechanisms will have single mtr times (11) Logic buses 1(2) remain pwrd via MNA(MNC) (12) Cntlrs, A,B Rad Byp Vlv Mtrs Auto Cntl and Cntlr B Rad Byp Vlv Mtr Man Cntl remain (13) Mtr 2 stow capability remains (14) Buses remain pwrd (15) With an inoperative limit sw, mtr will continue to run until DPY/STO sw placed to GND position (16) KU-BAND ANTENNA: CONTINGENCY STOW – W/EVA ANT GIMBAL ALIGNMENT (IFM) reqd to stow Ku-Bd. Jettison reqd if ant cannot be positioned within GO FOR PLBD CLOSURE envelope (17) MNC MMC2 pwr for Ku-Bd Xmit Enable signal remains (18) MNC MMC2 pwr remains to supply pwr to Boom stow Enable II signal for stow mtrs (19) Snsr 1 remains

EPS SSR-33
BUS LOSS: MNB APC2

ACTIONS	EQUIP/FUNCTION LOST	CREW INDICATIONS	NOTES
Refer to OMS/RCS Slide Rule for vlv loss info 3 Reconfig following vlv(s) only if leak isolation reqd: (O7) • AFT R RCS He PRESS A,B • L RCS He PRESS A	1 Aft L,R RCS He Pr Isol A man OP capability 4 Aft R RCS He Pr Isol B GPC Cntl and man CL capability	2 MASTER ALARM Light/ Tone – on	(1) Man CL and full GPC cntl remains. Vlv holds position
• For attitude control, perform LOSS OF VERNIERS (ORB OPS, RCS)	5 RCS Manf R5 RJD pwr (R5R,R5D)	If OMS GMBL cmd abs value > 2 deg and Sec TVC selected: C/W OMS TVC lt – on 'L OMS GMBL' (3,B)	(2) Indications do not appear until jet commanded
(A12) APU HTR TK/FU LINE/H2O • SYS 1A – AUTO • 1B – OFF	APU 1 GG Inj H2O Htrs B 6 APU 2 Fu TK Vlv A CL capability via APU 2 Auto Shutdn Signal	(F7) 2 C/W RCS JET lt – on	(3) Do not reconfig for reg switch or I'CNCT procedures
7 Prior to using L(R) OMS: (O8) 8 L OMS He PRESS/VAP ISOL 7 • A – GPC • B – OP 10 R OMS He PRESS/VAP ISOL • A(B) – GPC • B(A) – CL	9 Left OMS He Pr Isol B and Vap Isol 2 GPC Cntl 11 Right OMS He Pr Isol A,B man Cntl and Vap Isol 1,2 man A,B Cntl	(FSM) 2 R RCS D, R JET	(4) Man OP capability remains. Vlv holds position
(A14) RCS/OMS HTR • R POD (two) – A OFF, B AUTO • OMS CRSFD LINES – A AUTO, B OFF • L POD (two) – A AUTO, B OFF	12 Right Pod A Htrs (all) 13 Left Pod B Htrs (partial) 13 OMS Crsfd Ln B Htrs (all)		(5) Manf status not automatically declared closed. Fail-offs will occur when jet commanded
GNC XXXXX MNVR YYYYY Sel L OMS PRI TVC: • GMBL L PRI – ITEM 28 EXEC	L OMS Sec TVC		(6) In event of APU 2 auto shutdn, vlv remains OP until pwr removed by APU FUEL TK VLV sw throw
			(7) Lost TM: GNC SYS SUMM 2 L OMS ENG VLV 2: assume VLV 2 status same as VLV 1
			(8) Maintains He Isol redundancy
			(9) Man cntl remains. Vap Isol closes. Pr Isol normally closed
			(10) Prevents simultaneous opening of parallel reg paths and possibly rupturing burst disk
			(11) GPC cntl remains. Vlv fail closed
			(12) B Htrs remain
			(13) A Htrs remain
			(14) Six vlvs fail to non-isolation position

BUS ISOLATION
ONLY ON MCC CALL, PERFORM
(R1) • PL AFT MNB – OFF
Aft PL MNB pwr
14 ASA 4 Isol ATVC 4 Isol ME

EPS SSR-34
BUS LOSS: MNB APC5 (Includes MNB APC2, MNB ALC2, MNB AMC2)

ACTIONS	EQUIP/FUNCTION LOST	CREW INDICATIONS	NOTES
(A12) APU HTR 2 • GAS GEN/FUEL PUMP 1 – A AUTO 2 • GAS GEN/FUEL PUMP 2 – B AUTO • LUBE OIL LINE 1 – A AUTO • LUBE OIL LINE 2 – B AUTO APU HTR TK/FU LINE/H2O 2 • SYS 1A – AUTO 2 • 1B – OFF 2 • 2A – OFF 2 • 2B – AUTO HYD HTR • RUD SPD BK A – AUTO • B – OFF • BDY FLP A – AUTO • B – OFF • ELEV A – AUTO • B – OFF HYD CIRC PUMP • PWR 1 – MNA • 2 – MNC	APU 1 GG/Fu Pump Htrs B APU 2 GG/Fu Pump Htrs A APU 1 Lube Oil Line Htrs B APU 2 Lube Oil Line Htrs A APU 1 Tk/Fu Line Htr B GG Inj H2O Htrs B 2 Tk/Fu Line Htr A Body Flap Htr B Elev Act Htr B Rudder/Speed Brake Htr B Circ Pump 1 MNB pwr 2 MNB pwr	1 MASTER ALARM Light/Tone – on (R4) 3 HYD MPS/TVC ISOL VLV SYS 2 tb – CL 4 HYD BRAKE ISOL VLV 2 tb – OP 5 (O7) AFT R RCS He PRESS B tb – bp 6 AFT L,R RCS TK ISOL 3/4/5 B tb – bp (if vlv in CL position) (F7) If APUs active and using BLR CNTLR/HTR 1A(2B): C/W APU TEMP lt – on after ~ 2 min If OMS GMBL cmd abs valve > 2 deg and Sec TVC selected: C/W OMS TVC lt – on 'L OMS GMBL' (3,B) If first RGA failure and rates sensed: 'RM FAIL RGA' (3) (F7) 1 C/W RCS JET lt – on (FSM) 1 R RCS D,R JET HYD/APU 7 APU H2O QTY 1 Ind – 0% 2 Ind – 0% 1 SPEED % Ind – 0	(1) Indications do not appear until jet commanded (2) * TIME CRITICAL * If not done within 20 min, may freeze N2H4 and lose APU. However, SM ALERT occurs above freezing temp (3) Vlv holds position (4) Vlv holds position. Loss of redundant hyd NLG deploy and NWS hyd redundancy if failed closed (5) Man OP capability remains. Vlv holds position (6) Full vlv capability remains. If switch in CL, vlv will continuously drive to CL position (7) APU H2O QTY 1 ind – 0% if BLR CNTLR/HTR 1A selected. APU H2O QTY 2 ind – 0% if BLR CNTLR/HTR 2B selected (8) Manf status not automatically declared closed. Fail-offs will occur when jet commanded (9) Man CL and GPC cntl remains. Vlv holds position (10) Do not reconfig for reg switch or I'CNCT procedures
(L1) • FLASH EVAP CNTLR PRI A(B) – ON (if reqd) • TOP EVAP HTR NOZ L – A AUTO • TOP EVAP HTR NOZ R – B AUTO • TOP EVAP HTR DUCT – A If Hi Load Evap enabled • HI LOAD DUCT HTR – A(C)	FES Sec Cntlr Top Evap L Noz Htr B Top Evap R Noz Htr A Top Evap Duct L,R Htrs B Hi Load Duct Noz Htr B		
(L2) • FLASH EVAP FDLN HTR A SPLY – 1	FES H2O Fdln A Htrs 2 (all except Mid 2)		
(R2) • BLR CNTLR/HTR 1 – B • 2 – A	Hyd H2O Blr 1 Cntlr A 2 Cntlr B		
• For attitude control, perform LOSS OF VERNIERS (ORB OPS, RCS)	8 RCS Manf R5 RJD pwr (R5R,R5D)		
Refer to OMS/RCS Slide Rule for vlv loss info 10 Reconfig following vlv(s) only if leak isolation reqd: (O7) • AFT R RCS He PRESS A,B • L RCS He PRESS A	9 Aft L RCS He Pr Isol A man OP capability 9 Aft R RCS He Pr Isol A man OP capability 5 Aft R RCS He Pr Isol B GPC Cntl and man Cl capability		
GNC 23 RCS • Reprioritize L,R Manf 1 Jets to first priority: DES INH twice all other jets; highest priority first, then next highest, etc • Set aft pod(s) PRI JET FAIL LIMIT to 3	Aft RCS L,R Jets 1 Htrs		
If ICNCT config: (O7) 6 • AFT L RCS TK ISOL 3/4/5 B – GPC (tb-bp) • AFT R RCS TK ISOL 3/4/5 B – GPC (tb-bp)	AFT L,R RCS TK ISOL 3/4/5 B CL microswitch feedback		
(Continued)	(Continued)		

EPS SSR-34 (Cont)
BUS LOSS: MNB APC5

ACTIONS		EQUIP/FUNCTION LOST	CREW INDICATIONS	NOTES
(A14) RCS/OMS HTR • R POD (two) – A OFF, B AUTO • L POD (two) – A AUTO, B OFF • CRSFD LINES A,B (two) – A AUTO, B OFF	11 12 12	R Pod A Htrs (all) L Pod B Htrs (partial) OMS Crsfd Ln Htrs B		(3) Vlv holds position (11) B Htrs remain (12) A Htrs remain (13) Maintain deorbit capability for MNC DA3 failure (14) Maintains deorbit capability for CNTL AB1 failure (15) Maintains He Isol redundancy (16) Man cntl remains. Vap Isol closes. Primary Isol normally closed (17) Lost TM: GNC SYS SUMM 2 L OMS ENG VLV 2: Assume Vlv 2 status same as Vlv 1 (18) GPC cntl remains. Vlv fails closed (19) Prevents simultaneous opening of parallel reg paths and possibly rupturing burst disk (20) Sys B Pri Cntlr, auto switchover to Sec Cntlr remain (21) Six vlvs fail to nonisolation position (22) Redundant coils remain (23) √MCC for OMS Qtys (24) Hyd Sys 1 still available for NWS (25) Vlv holds position. Loss of redundant hyd NLG deploy and NWS hyd redundancy if failed closed (26) Redundant RPC remains
(O8) • If Straight feed config, Right OMS Crossfeed A – OP (tb-OP). Otherwise, √MCC 14 • Right OMS TK ISOL A – CL (tb-CL)	13 14	OMS Engine/Crossfeed Valve Redundancy OMS Eng/XFeed Redundancy		
Prior to using L(R) OMS: (O8) 15 L OMS He PRESS/VAP ISOL 17 • A – GPC • B – OP 19 R OMS He PRESS/VAP ISOL • A(B) – GPC • B(A) – CL	16 18	Left OMS He Pr Isol B and Vap Isol 2 GPC Cntl Right OMS He Pr Isol A,B man Cntl and Vap Isol 1,2 man OP		
For SSME Hyd Repress: (R4) • HYD MPS/TVC ISOL VLV SYS 1,3 (two) – OP, wait 10 sec, then CL	3	MPS/TVC Hyd Sys 2 Isol Cntl		
GNC XXXXX MNVR YYYYY Sel L OMS PRI TVC: • GMBL L PRI – ITEM 28 EXEC		L OMS Sec TVC		
If reqd during entry (< 120K ft): (L1) • NH3 CNTLR A(B) – PRC/GPC	20	NH3 Sys B Sec Cntlr man ON capability		

BUS ISOLATION		
ONLY ON MCC CALL, PERFORM		
(R1) • PL AFT MNB – OFF		Aft PL MNB pwr
(O15:A) • RGA 2 – OFF		RGA 2
	21	ASA 4 Isol ATVC 3 Main Eng Isol 4 Main Eng Isol
(MA73C:B) • MCA LOGIC MNB AFT 2 – OFF		MNB AMC 2 Bus pwr LH,RH Vents 8,9 Mtrs 2
	22 23	L OMS Eng Press Vlv Coil 2, Cntl Vlv 1,2 Coil 2 OMS Qty Gaging for all L OMS Single engine burns
	24 25	NWS Hyd Sys 2 Hyd Brake Isol Vlv 2 Cntl
	26	Hyd Main Pump 1 Depress Solenoid RPC B
	26	Hyd Main Pump 2 Depress Solenoid RPC A

(Continued)

EPS SSR-34 (Cont)
BUS LOSS: MNB APC5

BUS ISOLATION		EQUIP/FUNCTION LOST	CREW INDICATIONS	NOTES
		Freon Loop 1 Cold Plate Flow Xdcr	L MPS He Reg A < 680 during entry (MM 303)	(27) Pwr Sply A remains. Turbine speed ind lost
	27	APU 1 Cntlr Pwr Sply B		(28) Vlv A remains
	28	Fu Tk Vlv B		(29) Pwr Sply B remains. GG Bed T and GBX P ind lost when APU running
	29	2 Cntlr Pwr Sply A		(30) Vlv B remains
	30	Fu Tk Vlv A		(31) Vlv fails closed
		GBX GN2 Repress Vlv		(32) Vlv fails closed. Redundant vlv remains
		MPS:		(33) Vlv holds position. Loss of manual capability to inert LO2 and LH2 manfs
	31	L Eng He Intercon Outlet Vlv		(34) Vlv fails closed. LH2 Manf will not be pressurized with He during entry (MM304)
	32	L Eng He Isol A		(35) Redundant mtrs and m/s remain
		Pneu He Isol 2		(36) Actuators continue to operate until Stow, Rel/Lat, or OP/CL sw is taken to OFF
	33	Prplt F/D Inbd LO2 Vlv		
	33	Outbd LH2 Vlv		
	34	Manf Repress LH2 Vlv 1,2		
	35	ET Door Mtrs:		
		C/L Lat Actr 1 Mtr 2 GPC Cntl		
		L Dr Uplock Lat Mtr 2 GPC Lat capability		
		R Dr Uplock Lat Mtr 2 GPC Lat capability		
		R Dr Closure Mtr 2 GPC CL capability		
		L,R DR RTL Ind 3		
	36	AC pwr removal capability via Limit sw for ET Dr Mtrs:		
		C/L Lat Actr 1 Mtr 2		
		L Dr Uplock Lat Mtr 2		
		R Dr Uplock Lat Mtr 2		
		Closure Mtr 2		

EPS SSR-35
BUS LOSS: MNB FLC2

ACTIONS	EQUIP/FUNCTION LOST	CREW INDICATIONS
Refer to OMS/RCS Slide Rule for valve loss info	1 Fwd RCS He Press Isol A man OP capability	2 MASTER ALARM Light/Tone – on
3 Reconfig following vlv(s) only if leak isolation reqd: (O8) • FWD RCS He PRESS A,B	4 Fwd RCS He Press Isol B man CL and GPC Cntl	(F7) 2 C/W RCS JET lt – on
(A1L) S-BD PM • ANT SW ELEC – 2 • XPNDR – 2 • PWR AMPL OPER – 2 • STBY – 2 • PRE AMP – 2 • NSP PWR – 2	S-BD PM Sys 1: Xpnder 1 Pre Amp 1 Pwr Amp 1 FM, PM Auto sw 1 NSP 1	(COMM LOST) All S-BD A/G voice lost if Sys 1 selected (FSM) 2 'F RCS D(F,R,U) JET'
If PSP and/or INTRG reqd for PL or ISS ops: • S-BD PL PWR SYS – 2 • CNTL – PNL • – CMD 6 • Reconfig PSP 6 • Perform PL INTRG REACQ (if reqd)	S-BD PL Intrg 1 PSP 1	If site AOS and using S-BD ANT ELEC 1: 5 'ANTENNA' (2) If sys 1 pwrd: 'S62 BCE BYP PSP1' Loss of PL TLM and CMD If PDI FDA enabled: 'S62 PDI DECOM FAIL' If NSP 1 selected, 'BCE STRG 1 NSP'
If no comm: (C3) • S-BD PM CNTL – PNL • – CMD		(F6/F8) 7 LDG GEAR L,NOSE tb – bp
8 If OIU reqd: (SSP) • OIU PWR – OIU 2 ON • OIU tb – DN • √MCC, OIU reconfig		(O8) 4 FWD RCS He PRESS B tb – bp
(A1R) • S-BD FM PWR – 2	S-BD FM Sys 1	
9 GNC 23 RCS Override F2 Manf status to CL: • RCS FWD – ITEM 1 EXEC • MANF VLVS 2 OVRD – ITEM 41 EXEC	RCS Manf F2 RJD pwr (F2F,F2R,F2U,F2D)	
Pre-seat ingress: • Discharge handheld fire ext into AV BAY 1	Av Bay 1 agent discharge capability	

BUS ISOLATION	
ONLY ON MCC CALL, PERFORM	
(O15:C) • cb MNB FIRE SUPPR BAY 1 – op	10 L,R ADP Htr Cntlr 2
	LMG, NLG, B/U Rel 2 Fire 2, Arm

NOTES

(1) Man CL and full GPC cntl remains. Vlv holds position

(2) Indications do not appear until jet commanded

(3) Do not reconfig for reg switch or I'CNCT procedures

(4) Man OP capability remains. Vlv holds position

(5) FSM caused by antenna miscompare

(6) REACQ and PSP reconfig procedures are flight specific. If reqd, procedure can be found in payload or ISS specific books

(7) When gear deployed, tb will not indicate DN

(8) OIU 2 interfaces with PSP 2 for commanding

(9) Manf status not automatically declared closed. Jet fail-offs may occur

(10) Htr Cntlr 1 remains

EPS SSR-36
BUS LOSS: MNB ALC2

ACTIONS	EQUIP/FUNCTION LOST	CREW INDICATIONS	NOTES
(A12) APU HTR 2 • GAS GEN/FUEL PUMP 1 – A AUTO 2 • GAS GEN/FUEL PUMP 2 – B AUTO • LUBE OIL LINE 1 – A AUTO • LUBE OIL LINE 2 – B AUTO APU HTR TK/FU LINE/H2O 2 • SYS 1A – AUTO • 1B – OFF • 2A – OFF 2 • 2B – AUTO HYD HTR • RUD SPD BRK A – AUTO • B – OFF • BDY FLP A – AUTO • B – OFF • ELEV A – AUTO • B – OFF HYD CIRC PUMP • PWR 1 – MNA • 2 – MNC	APU 1 GG/Fu Pump Htrs B APU 2 GG/Fu Pump Htrs A APU 1 Lube Oil Line Htrs B APU 2 Lube Oil Line Htrs A APU 1 Tk/Fu Line Htr B APU 2 Tk/Fu Line Htr A Body Flap Htr B Elev Act Htr B Rud/Spd Brake Htr B Circ Pump 1 MNB pwr 2 MNB pwr	1 MASTER ALARM Light/ Tone – on	(1) Indications do not appear until jet commanded
(L1) • FLASH EVAP CNTLR PRI A(B) – ON (if reqd) TOP EVAP HTR • NOZ L – A AUTO • R – B AUTO • DUCT – A If Hi Load Evap enabled: • HI LOAD DUCT HTR – A(C)	FES Sec Cntlr Top Evap L Noz Htr B R Noz Htr A Duct L,R Htrs B HI Load Duct Noz Htr B	(R4) 3 HYD BRAKE ISOL VLV 2 tb – OP 4 HYD MPS/TVC ISOL VLV SYS 2 tb – CL	(2) * TIME CRITICAL * If not done within 20 min, may freeze N2H4 and lose APU. However, SM ALERT occurs above freezing temp
(L2) • FLASH EVAP FDLN HTR A SPLY – 1	FES H2O Fdln A Htrs 2 (all except Mid 2)	(O7) 5 AFT R RCS He PRESS B tb – bp 6 AFT L,R RCS TK ISOL 3/4/5 B tb – bp (if vlv in CL position)	(3) Vlv holds position. Loss of redundant hyd NLG deploy and NWS hyd redundancy if failed closed
(R2) • BLR CNTLR/HTR 1 – B • 2 – A	8 Hyd H2O Blr 1 Cntlr A 8 2 Cntlr B	(F7) If APUs active and using BLR CNTLR/HTR 1A or 2B: C/W APU TEMP lt – on after ~2 min	(4) Vlv holds position
Refer to OMS/RCS Slide Rule for vlv loss info 10 Reconfig following vlv(s) only if leak isolation reqd: (O7) • AFT R RCS He PRESS A,B • L RCS He PRESS A	9 Aft L,R RCS He Pr Isol A man OP capability 5 Aft R RCS He Pr Isol B GPC Cntl and man CL capability	(F7) 1 C/W RCS JET lt – on	(5) Man OP capability remains. Vlv holds position
For attitude control: • Perform LOSS OF VERNIERS (ORB OPS, RCS)	11 RCS Manf R5 RJD pwr (R5R,R5D)	(FSM) 1 R RCS D,R JET	(6) Full vlv capability remains. If switch in CL, vlv will continuously drive to Cl position
GNC 23 RCS • Reprioritize L,R Manf 1 Jets to first priority: DES INH twice all other jets; highest priority first, then next highest, etc • Set aft pod(s) PRI JET FAIL LIMIT to 6	Aft L,R RCS Jet 1 Htrs	HYD/APU 7 APU H2O QTY 1 ind – 0% 2 ind – 0%	(7) APU H2O QTY 1 ind – 0% if BLR CNTLR/HTR 1A selected. APU H2O QTY 2 ind – 0% if BLR CNTLR/HTR 2B selected
(A14) • RCS/OMS HTR OMS CRSFD LINES (two) – A AUTO, B OFF	OMS Crsfd Ln B Htrs (partial)		(8) HYD H2O Blr and Tk Htrs still operative, but GN2 SOV fails open and steam vent htr and spray logic are disabled. Alternate controller must be selected
			(9) Man CL and full GPC Cntl remains. Vlv holds position
			(10) Do not reconfig for reg switch or I'CNCT procedures
			(11) Manf status not automatically declared closed. Fail-offs will occur when jet commanded
(Continued)	(Continued)		

EPS SSR-36 (Cont)
BUS LOSS: MNB ALC2

ACTIONS	EQUIP/FUNCTION LOST	CREW INDICATIONS	NOTES
If ICNCT config: (O7) 6 • AFT L RCS TK ISOL 3/4/5 B – GPC (tb-bp) • AFT R RCS TK ISOL 3/4/5 B – GPC (tb-bp)	6 AFT L,R RCS TK ISOL 3/4/5 B CL microswitch feedback	L MPS He Reg A < 680 during entry (MM303)	(3) Vlv holds position. Loss of redundant hyd NLG deploy and NWS hyd redundancy if failed closed (4) Vlv holds position (6) Full vlv capability remains. If switch in CL, vlv will continuously drive to Cl position (12) Maintains deorbit capability for CNTL AB1 failure (13) To maintain He Isol redundancy (14) Man cntl remains (15) Sys B Pri Cntlr, auto switchover to Sec Cntlr remain (16) √MCC for OMS Qtys (17) Vlv fails closed. Redundant vlv remains (18) Hyd Sys 1 still available for NWS (19) Vlv fails closed (20) Vlv holds position. Loss of manual capability to inert LO2,LH2 Manfs (21) Vlv fails closed. LH2 Manf will not be pressurized with He during entry (MM304)
(O8) • Right OMS TK ISOL A – CL (tb-CL)	12 OMS Eng/Xfeed Redundancy		
Prior to using L OMS: (O8) 13 L OMS He PRESS/VAP ISOL • A – GPC • B – OP	14 L OMS He Pr Isol B GPC Cntl		
For SSME Hyd Repress: (R4) • HYD MPS/TVC ISOL VLV SYS 1,3 (two) – OP • Wait 10 sec, then CL	4 MPS/TVC Hyd Sys 2 Isol Cntl		
If reqd during entry (< 120K ft): (L1) • NH3 CNTLR A(B) – PRI/GPC	15 NH3 Sys B Sec Cntlr man ON capability		
	14 L OMS Eng Pr Vlv Coil 2 and Cntl Vlv 1,2 Coils 2		
	16 OMS Qty gauging for all L OMS single engine burns		
	17 APU 1 Fu Tk Vlv B 17 2 Fu Tk Vlv A 4 TVC Hyd Sys 2 Isol Cntl 3 Hyd Brake Isol 2 Cnt 18 NWS Hyd Sys 2		
	MPS: 19 L Eng He Intercon Outlet Vlv 17 L Eng He Isol A 17 Pneu He Isol 2 20 Prplt F/D Inbd LO2 Vlv 20 Outbd LH2 Vlv 21 Manf Repress LH2 Vlv 1,2		

BUS ISOLATION
ONLY ON MCC CALL, PERFORM
NONE

EPS SSR-37
BUS LOSS: MNB FMC2

ACTIONS
(L4:F) • cb AC1 H2O LOOP PUMP 1A/2 (three) – cl
(L1) • H2O PUMP LOOP 1 – A
Refer to OMS/RCS Slide Rule for vlv loss info GNC 23 RCS Override F2 Manf status to OP • RCS FWD ITEM 1 EXEC • MANF VLVS 2 OVRD ITEM 41 EXEC

BUS ISOLATION
ONLY ON MCC CALL, PERFORM
(MA73C:A) • MCA LOGIC MNB FWD 2 – OFF

EQUIP/FUNCTION LOST
H2O Loop 1 Pump B
MNB FMC2 Bus pwr L,R Vents 1,2 Mtrs 2 1 ADP Deploy Mtrs 2 Deploy Disc 2 2 Htr Cntlr 2 1 -Y Star Trkr Dr Sys 2 OP/CL capability 1 -Z Star Trkr Dr Sys 1 OP/CL capability

CREW INDICATIONS
MASTER ALARM Light/ Tone – on
(F7) SM ALERT Light/Tone – on
(FSM) RM DLMA MANF
(O8) FWD RCS MANF ISOL 2 tb – bp
If H2O PUMP LOOP 1,B ON: C/W H2O LOOP lt – on 'S88 H2O LOOP 1 FLOW' 'S88 H2O LOOP 1 TEMP' 'S88 H2O PUMP P 1' (O1) H2O PUMP OUT PRESS LOOP 1 ind – 20-25 psia
L,R ADP deploy time incr from 15 to 30 sec
STAR TRKR DRS POS -Y,-Z OP/CL time incr from 8 to 16 sec

NOTES
(1) Redundant mtr remains (2) Htr Cntlr 1 remains

EPS SSR-38
BUS LOSS: MNB MMC1

ACTIONS
NONE

BUS ISOLATION
ONLY ON MCC CALL, PERFORM
(MA73C:A) • MCA LOGIC MNB MID 1 – OFF

EQUIP/FUNCTION LOST
MNB MMC1 Bus pwr
LH Vent 5 Mtr 2

CREW INDICATIONS
NONE

NOTES

EPS SSR-39
BUS LOSS: MNB MMC2

ACTIONS
(MA73C:C) 1 • cb MCA PWR AC2 3Φ MID 2 – op
For PLBD ops: • OP/CL Drs in man mode MANUAL PLBD CLOSING (DEORBIT PREP)

BUS ISOLATION
ONLY ON MCC CALL, PERFORM
(MA73C:A) • MCA LOGIC MNB MID 2 – OFF

EQUIP/FUNCTION LOST
1 Stbd Rad Lat 1-6 Mtr 2 Limit sw 2 Stbd Rad Mtr 2 Dpy capability
PLBD: C/L Lat 13-16 Mtr 2 Stbd Aft Blkhd Lat Mtr 2 Port Door Mtr 2 Stbd Door Mtr 1 CL Limit sw
MNB MMC2 Bus pwr
RMS: 3 Port MPM Mtr 2 3 Stbd MPM Mtr 1 4 Port Fwd MRL Mtr 1 5 Stbd Aft MRL Mtr 2
LH Vent 3 Mtr 2

CREW INDICATIONS
SM (BFS SM 63) PL BAY DOORS If in AUTO OP/CL for PLBDs, sequence terminates immediately and msg '(S63) PBD CONFIG'
During MAN PLBD OP/CL, single mtr run time noted on actuators listed at left
(A8L) PORT RMS: RETEN LAT tb – bp R-F-L FWD tb – bp
SM 94 PDRS CONTROL PORT RMS Indications lost: Fwd MRL Mtr 1 LAT/REL/RDY STBD RMS Indications lost: Aft MRL Mtr 2 LAT/REL/RDY
(R13L) During RAD Dpy ops: RAD CNTL STBD tb indicates single mtr ops

NOTES
(1) If AC2 cb not opened, Lat Mtr 2 of Stbd Lat 1-6 Actuator continues to run until Sys B Lat Control sw placed to OFF
(2) Mtr 2 stow capability remains
(3) Single mtr time. One failure away from EVA to stow MPM or from RMS/OBSS jettison
(4) Single mtr time. One failure away from loss of two out of three MRLs. EVA or RMS jettison capability exists
(5) Single mtr time. One failure away from loss of MRL latching capability. EVA or OBSS jettison capability exists

EPS SSR-40
BUS LOSS: MNB MMC3

ACTIONS
NONE

BUS ISOLATION
ONLY ON MCC CALL, PERFORM
(MA73C:B) • MCA LOGIC MNB MID 3 – OFF

EQUIP/FUNCTION LOST
MNB MMC3 Bus pwr

CREW INDICATIONS
NONE

NOTES

EPS SSR-41
BUS LOSS: MNB MMC4

ACTIONS
(MA73C:D) 1 • cb MCA PWR AC2 3Φ MID 4 – op
For PLBD ops: • OP/CL Drs in man mode MANUAL PLBD CLOSING (DEORBIT PREP)

BUS ISOLATION
ONLY ON MCC CALL, PERFORM
(MA73C:B) • MCA LOGIC MNB MID 4 – OFF

EQUIP/FUNCTION LOST
1 Port Rad Lat 1-6 Mtr 2 Limit sw 2 Port Rad Mtr 2 Dpy capability
PLBD: Port,Stbd Fwd Blkhd Lat Mtrs 2 Stbd Door Mtr 2 Port Door Mtr1 CL Limit sw
MNB MMC4 Bus pwr
RH Vent 6 Mtr 2
RMS: 3 Port Mid MRL Mtr 2 4 Stbd Fwd MRL Mtr 1 4 Stbd Mid MRL Mtr 1
5 Ku Ant Sto/Dpy Mtr 2 Sto and Dpy Limit sw 6 Redundant Ku-Band Xmit Enable 7 Redundant Boom Stow Enable II Excitation Signal

CREW INDICATIONS
SM (BFS SM 63) PL BAY DOORS If in AUTO OP/CL for PLBDs, sequence terminates immediately and msg '(S63) PBD CONFIG'
During MAN PLBD OP/CL, single mtr run time noted on actuators listed at left
(R13L) During Rad Dpy ops, RAD CNTL PORT tb indicates single mtr ops
(A8L) STARBOARD RMS: RETEN LAT tb – bp R-F-L FWD tb – bp R-F-L MID tb – bp
SM 94 PDRS CONTROL PORT RMS Indications lost: MPM Mtr 2 STO/DPY Mid MRL Mtr 2 LAT/REL/RDY STBD RMS Indications lost: MPM Mtr 1 STO/DPY Fwd MRL Mtr 1 LAT/REL/RDY Mid MRL Mtr 1 LAT/REL/RDY

NOTES
(1) If AC2 cb not opened, Lat Mtr 2 of Port Lat 1-6 Actuator continues to run until Sys B Lat Cntl sw placed to OFF
(2) Mtr 2 stow capability remains
(3) Single mtr time. One failure away from loss of two out of three MRLs. EVA or RMS jettison capability exists
(4) Single mtr time. One failure away from loss of MRL latching capability. EVA or OBSS jettison capability exists
(5) With inoperative limit sw, mtr will continue to run until DPY/STO sw is placed in GND position
(6) Redundant pwr (MNC) enables Ku-Band xmit
(7) MNC MMC2 pwr remains to supply pwr to Boom Stow Enable II signal for stow mtrs

EPS SSR-42
BUS LOSS: MNB AMC2

ACTIONS
NONE

BUS ISOLATION
ONLY ON MCC CALL, PERFORM
(MA73C:B) • MCA LOGIC MNB AFT 2 – OFF

EQUIP/FUNCTION LOST
MNB AMC2 Bus pwr LH,RH Vents 8,9 Mtrs 2
1 ET Door Mtrs: C/L Lat Actr 1 Mtr 2 GPC Cntl L Dr Uplock Lat Mtr 2 GPC Lat capability R Dr Uplock Lat Mtr 2 GPC Lat capability R Dr Closure Mtr 2 GPC CL capability L,R DR RTL Ind 3
2 AC pwr removal capability via Limit sw for ET Dr Mtrs: C/L Lat Actr 1 Mtr 2 L Dr Uplock Lat Mtr 2 R Dr Uplock Lat Mtr 2 Closure Mtr 2

CREW INDICATIONS
NONE

NOTES
(1) Redundant mtrs and m/s remain (2) Actuators continue to operate until the Stow, Rel/Lat, or OP/CL sw is taken to OFF

EPS SSR-43
BUS LOSS: MNB R14

ACTIONS	EQUIP/FUNCTION LOST	CREW INDICATIONS	NOTES
(A7U) If CCTV reqd: • TV PWR CONTR UNIT – MNA	Video Cntl Unit MNB pwr	CCTV Video and TV Annun lts lost if MNB selected for VCU CCTV Mon 2 lost	(1) IDP3, IDP4 ADC data lost. MDU port select may be reqd (2) MNA and MNC pwr sources remain (3) Redundant pwr source remains for equipment (4) KU-BAND ANTENNA: CONTINGENCY STOW – W/EVA ANT GIMBAL ALIGNMENT (IFM) reqd to stow Ku-Bd. Jettison reqd if antenna cannot be positioned within GO FOR PLBD CLOSURE envelope
(R14:C) • cb MNC KU SIG PROC – op	MDU CDR 2 MDU MFD 1 1 ADC 1B/2B	OS Floodlt lost	
(R12) If VPU flown • VPU PWR – OFF	VPU OSVS OUT 2A video input to VPU	(FSM) 'BCE BYP KU' (2)	
		(A2) Meters: X-PNTR will display 'OFF' flag Digital – display will blank	
BUS ISOLATION		(F6) MDU CDR 2 blanks	
ONLY ON MCC CALL, PERFORM		(F7) MDU MFD 1 blanks	
• MDU CDR 2 PWR – OFF • MDU MFD 1 PWR – OFF	Middeck ATU Middeck Spkr	OSVS OUT 2A video to ISS is lost	
(R14:A) • cb MNB AUD MIDDECK SPKR – op • ADC 1B/2B – op • MDU MFD 1 – op • MDU CDR 2 – op			
(R14:B) • cb MNB CNTL BUS CA1/2/3 – op 3 cb PALLET/DSC • 1B – op (EDO) • 4B – op (EDO)	2 MNB pwr for CNTL CA1,2,3 Buses		
(R14:C) cb MNB KU • ELEC – op • ANT HTR – op • CABLE HTR – op	4 Ku-Bd Sys Rdr & Comm I/F Cont Unit (EA-1), RDR Sig Proc, Deployed Assy and Deployed Assy Htrs		
(R14:D) cb MNB TV A CAMR • CAMR/PTU – op • CAMR HTR – op • ILLUM/PTU HTR – op cb MNB TV • CONTR UNIT – op • MON 2 – op	TV A Camr and Pan-Tilt TV A Camr Htr TV A Camr Pan-Tilt Htr and Illum CCTV Mon 2		
(R14:E) • cb MNB OS FLOOD – op cb MNB RMS CAMR • CAMR/PTU – op • WRIST ILLUM/CAMR HTR – op • ELB ILLUM/PTU HTR – op	OS Floodlt RMS: Camr/Pan-Tilt Camr Htr and Wrist Illum Camr Pan-Tilt Htr and Elb Illum		

EPS SSR-44
BUSS LOSS: MNB O15&A8

ACTIONS	EQUIP/FUNCTION LOST	CREW INDICATIONS	NOTES
(A8L) • PORT RMS HTR B – OFF • PORT RMS HTR A – AUTO If OBSS berthed: (A8L) • STBD RMS HTR B – OFF • STBD RMS HTR A – AUTO	RMS: B/U pwr Port Htr B Stbd Htr B	NONE	(1) If Driver sw OFF when bus failed, F2 Manf Drivers lost
BUS ISOLATION			
ONLY ON MCC CALL, PERFORM			
(C3) • MSTR MADS PWR – OFF	All MADS equipment		
	1 RJDF 1A Drivers ON Cntl (Jets F2F,F2R,F2U,F2D)		

EPS SSR-45
BUS LOSS: MNB O15

ACTIONS	EQUIP/FUNCTION LOST	CREW INDICATIONS	NOTES
(R1) 1 • BUS TIE MNA – ON (tb-ON)		MASTER ALARM Light/Tone – on	(1) FC1 only one failure away (loss of ESS1BC) from inability to bus tie
(L1) • Perform ON-ORBIT RAD CNTLR SWITCH, ECLS SSR-13 for Freon Loop 1,2	Freon Loop 1,2 Rad Cntlr A	(F7) C/W CAB ATM lt SM ALERT Light/Tone – on Fwd EVENT TIME ind blank	(2) ACAs recovered by switching to alternate pwr
(F6,F8) • HSI SEL SOURCE – other than MLS, (OV103,4) TACAN 2 or (OV105) GPS 2	MLS 2 (OV103,4) TACAN 2 (OV105) GPS 2	(A4) MSN TIME ind blank	(3) Vlv holds position
(F6,F8) • RADAR ALTM – 1	RA 2	(O1) CABIN dP/dT ind – .45 O2/N2 FLOW SNSR 1 ind – 0 pph PPO2 SNSR B,C ind – 0 psia	(4) O2/N2 Cntl Vlv 2 normally closed when unpowered
(O6) ANNUN BUS SEL • ACA 1 – MNA • 2/3 – MNC	2 ACA 1 MNB pwr 2 2/3 MNB pwr	(FSMs) S66 CABIN PPO2 B,C S88 H2O LOOP 2 FLOW SM0 TIRE PRESS	(5) Vlv fails closed. IFM or real-time flow test will be required. √MCC for additional direction
(A6U) • ANNUN BUS SEL – MNC	2 ACA 4/5 MNB pwr	If ADTA 2, MLS 2, -Y Star Trkr pwrd: BCE STRG 2 ADTA (3,B) BCE STRG 2 MLS (3) BCE STRG 3 STKR (2,3)	(6) Current Snsr 1 remains
If on PCS 2: • Perform RECONFIG TO ALT PCS SYS, ECLS SSR-3	O2/N2 Cntl Sys 2: 3 N2 Sply Vlv 2 Cntl 3 N2 Reg Inlet Vlv 2 Cntl 4 O2/N2 Cntl Vlv 2 man Cntl 5 O2 Xover Vlv 2 OP capability O2/N2 Sys 2 Flow Xdcrs PPO2 Snsr B,C	(L2) 6 CABIN RELIEF A tb – bp 6 N2 SYS 2 SPLY tb – bp 6 N2 SYS 2 REG INLET tb – bp	(7) Inhibits Cabin PPO2 B, Cabin O2 Flow 2, Cabin N2 Flow 2, and H2O Loop ICH Flow 2 respectively
	dP/dT Snsr	If first AA failure and S/W processing accel data: 'RM FAIL ACC' (3)	(8) Inhibits Primary C/W for Cabin PPO2 B, Cabin O2 Flow 2, and Cabin N2 Flow 2 respectively
SM 60 SM TABLE MAINT 7 • Inhibit 0612513, 0612205, 0612554, 0612722 • Perform ECLS COMPUTATION INHIBIT ECLS SSR-14 Table A		(LIGHTS LOST) L Seat/Ctr Cnsl Floodlt R Ovhd Cnsl Floodlt If ACA 1 – MNB, lights lost: (C3) 2 DAP lights right three columns ALL (F2) PBIs except MA	
(R13 U) 8 • C/W PARAM SEL tw (three) – 044, 024, 064 • C/W PARAM – INH • C/W MEM – CLEAR • C/W PARAM SEL tw (three) – > 119		If ACA 2/3 – MNB, lights lost: (C3) 2 DAP lights left three columns ALL (F6/F8) Landing Gear ARM/DOWN (L1) Smoke detection, fire suppression ALL MO29J MIC KEY	
• Prior to seat ingress for entry: discharge handheld ext into AV BAY 1	Av Bay 1 Agent discharge capability	If NWS 2 selected: (F3) NWS FAIL lt – on	
		2 If ACA 4/5 – MNB, lights lost: (A6U) DAP lights ALL (A7U Video input, output, Gamma, ALC A2 MIC KEY	
(Continued)	(Continued)		

EPS SSR-45 (Cont)
BUS LOSS: MNB O15

BUS ISOLATION	EQUIP/FUNCTION LOST	CREW INDICATIONS	NOTES
ONLY ON MCC CALL, PERFORM			(3) Vlv holds position (6) Current Snsr 1 remains (9) Redundant pwr source remains (10) H2O Loop 2 ICH Flow Rate snsr lost (11) Redundant measurement remains. FDA Alarm BFS only; OPS 3,6 (12) Cntlr B remains (13) NWS 1 still available
(O6) • STAR TRKR PWR -Y – OFF	-Y Star Trkr Dr OP capability Trkr		
(O7) • (OV105) GPS 2 PWR – OFF • (OV105) GPS 2 PRE AMPL UPPER – OFF • (OV105) GPS 2 PRE AMPL LOWER – OFF	(OV105) GPS 2		
(O8) • RADAR ALTM 2 – OFF • MLS 2 – OFF			
(O15:B) 9 cb MNB • OI SIG CONDR OF 1/4 B – op • OI SIG CONDR OF 2/3 A – op • OI SIG CONDR OM 1/2 B – op • OI MDM OF 1/2 B – op • OI SIG CONDR OM3 A – op • OI H2O BYP LOOP 2 SNSR – op • OI TIRE PRESS – op • MNA CONTR – op • MSN TIMER AFT – op • EVENT TIMER FWD – op	10 H2O Byp Loop 2 Snsr (ECLS SC12) 11 Tire Press Sig Condr A3,A4 Aft Mission Timer Fwd Event Timer		
(O15:C) cb MNB • (OV103) TACAN 2 – op • SMOKE DETN BAY 1B/3A – op • FIRE SUPPR BAY 1 – op • UTIL PWR F1/MO13Q – op • FLOOD R CNSL – op • L CTR – op • ANNUN FWD ACA 1,2/3 (two) – op • ANNUN AFT ACA 4/5 – op • CRYO O2 HTR TK2 SNSR 2 – op • (OV104,5) GPS 2 PRE AMPL UPPER – op	Tacan 2 Av Bay 1 Smoke Det B 3 Smoke Det A MNB Utility pwr R Ovhd Console Floodlt L Seat/Ctr Cnsl Floodlts 6 Cryo O2 Tk2 Htr Current Snsr 2		
(O15:D) cb MNB 12 • FREON RAD CNTLR 1,2 (two) – op • PPO2 C CAB dP/dT – op • N2 SPLY 2 – op • O2/N2 CNTLR 2 – op • O2 XOVR 2 – op • N2 REG INLET 2 – op • CAB RELIEF A – op 13 • NWS – op • (OV104,5) GPS 2 PRE AMPL LOWER – op	PPO2 Snsr C 3 Cabin Relief Vlv A Cntlr NWS 2		
(Continued)	(Continued)		

EPS SSR-45 (Cont)
BUS LOSS: MNB O15

BUS ISOLATION	EQUIP/FUNCTION LOST	CREW INDICATIONS	NOTES
ONLY ON MCC CALL, PERFORM			(9) Redundant pwr source remains (14) CDR Arm remains
(O15:E) cb MNB • RADAR ALTM 2 – op • MLS 2 – op • (OV104) TACAN 2 – op • ADTA 2 – op • STAR TRKR -Y – op • ACCEL 2 – op • DDU L – op • R – op • DRAG CHUTE SYS 2 – op	Tacan 2 ADTA 2 AA2 9 Left DDU MNB pwr 9 Right DDU MNB pwr 14 Drag Chute, PLT Arm		
(A13) • (OV104) GPS 2 PWR – OFF • (OV104) GPS 2 PRE AMPL UPPER – OFF • (OV104) GPS 2 PRE AMPL LOWER – OFF	GPS 2		

EPS SSR-46
BUS LOSS: MNB R1A1

ACTIONS
NONE

BUS ISOLATION
ONLY ON MCC CALL, PERFORM
NONE

EQUIP/FUNCTION LOST
1 MNB pwr to CNTLAB 1,2,3 CNTLBC 1,2,3 ESS1BC ESS3AB

CREW INDICATIONS
NONE

NOTES
(1) Buses remain pwrd

EPS SSR-47
BUS LOSS: MNB A6&A14

ACTIONS	EQUIP/FUNCTION LOST	CREW INDICATIONS	NOTES
GNC 23 RCS • Reprioritize Fwd Manf 2,3 Jets to first priority: DES INH twice all other jets; highest priority first, then next highest, etc • Set forward pod PRI JET FAIL LIMIT to 4	Fwd RCS Jet 2,3 Htrs	SM 97 RETENTION Indication lost: RELAX DEMATE MATE	(1) Single mtr time
BUS ISOLATION			
ONLY ON MCC CALL, PERFORM			
(C3) • MSTR MADS PWR – OFF	PL Reten Sys B Rel/Lat Mtrs All MADS equipment		
	ROEU Logic Pwr Sys 2 1 Orbiter arm drive mtr (ODM mtr 2 – mate B, demate B, relax B) 1 ODA mtr 2 latch/release		

EPS SSR-48
BUS LOSS: MNB ML86B

ACTIONS	EQUIP/FUNCTION LOST	CREW INDICATIONS	NOTES
(ML86B:A) • cb MNA H2O LINE HTR A – cl	H2O Line Htr B: Waste Dump Line Sply Dump Line Vac Vent Line	(R11L) SPLY H2O 1 DUMP ISOL VLV tb – bp 1 TKB INLET tb – bp 1 TKC OUTLET tb – bp 1 B SPLY ISOL VLV tb – bp	(1) Vlv holds position (2) Htr A remains (3) MNA,MNC line htrs remain. MNA struct htrs remain
(ML86B:D) cb MNA MMU • PORT,STBD HTR A (two) – cl	2 MMU Port,Stbd Htr B	(R13L) 1 MMU GN2 SPLY ISOL VLV B tb – bp	
(ML31C) • VAC VENT ISOL VLV BUS SEL – MNA	Vac Vent Isol Vlv MNB Cntl	(ML31C) 1 WASTE H2O TK1 DRAIN VLV tb – bp 1 SPLY H2O TKD INLET tb – bp	
(WCS) • √MODE – AUTO • √CRADLE – AUTO • √Hose stowed in cradle • √WCS ON lt – OFF • FAN SEP SEL sw – OFF • HOSE BLOCK – SEP 1 • In next step, alternate fan sep will turn on for 30 sec. Normal ops may proceed after 30-sec run complete • FAN SEP SEL sw – 1	WCS Sep Fan 2 Mtr Relay	(LIGHTS LOST) Middeck Floodlts 2,6 Bunk Floodlts 2/4 PHS Floodlt Airlk Floodlt 3 TA Floodlt 3 (SL only)	
(CDR's SEAT) • CDR SEAT PWR BUS SEL – AC3 (dn)	CDR Seat Adj via AC2 pwr	(MO13Q) 1 ARLK H2O S/O VLV – bp	
(PLT's SEAT) • PLT SEAT PWR BUS SEL – AC3 (dn)	PLT Seat Adj via AC2 pwr		
If Supply H2O Dump reqd and dump ISOL VLV is failed closed: • Perform SUPPLY WATER DUMP USING FES (ORB OPS, ECLS)	1 Sply H2O Dump Isol Vlv Cntl		
(ML86B:C) • cb MNA(MNC) EXT ARLK HTR LINE ZN1 – cl • cb MNA(MNC) EXT ARLK HTR LINE ZN2 – cl • cb MNA EXT ARLK HTR STRUC – cl	3 Ext A/L H2O and Structural Htrs MNB pwr		
(Continued)	(Continued)		

EPS SSR-48 (Cont)
BUS LOSS: MNB ML86B

	BUS ISOLATION		EQUIP/FUNCTION LOST
	ONLY ON MCC CALL, PERFORM		
	(ML86B:A) cb MNB • SPLY H2O TKB INLET – op • SPLY TKC OUTLET – op • DUMP ISOL – op • SPLY H2O B SPLY ISOL VLV – op • H2O LINE HTR B – op		Sply H2O: 1 Tk B Inlet Vlv Cntl 1 Tk C Outlet Vlv Cntl 1 B Sply Isol Vlv Cntl
	(ML86B:B) cb MNB • VAC VENT NOZ HTR – op • WASTE H2O TK1 DRAIN – op • SPLY H2O TKD INLET – op • VAC VENT ISOL VLV – op • WCS CNTLR – op • GALLEY H2O HTR – op		4 Waste H2O Vac Vent NozHtr 1 Tk 1 Drain Vlv Cntl 1 Sply H2O Tk D Inlet Vlv Cntl WCS Press Xdcr 5 Galley Hot H2O Htr (Five of six htr strips lost)
	(ML86B:D) cb MNB MMU • PORT HTR B – op • STBD HTR B – op • GN2 SPLY ISOL VLV B – op cb MNB PYRO JETT SYS A • PORT RMS – op		2 MMU Port Htr B 2 Stbd Htr B 1 GN2 Sply Isol Vlv B Port RMS: 6 Jett/Guil Sys A Deadface Relays
	(ML86B:E) cb MNB SEAT • LEFT – op • RIGHT – op cb MNB FLOOD • TNL ADAPT 3 – op		TA Floodlt 3
	(ML86B:F) cb MNB FLOODS • MIDDECK 2/6 – op • BUNK 2/4 – op • PHS – op • AIRLK 3 – op cb MNB CRYO		Middeck Floodlts 2,6 Bunk Floodlts 2/4 PHS Floodlt Airlk Floodlt 3
7	• O2 HTR TK3 SNSR 2 – op	7	Cryo O2 Tk 3 Htr Current Snsr 2
8	• O2 HTR TK4 SNSR 1 – op	8	Cryo O2 Tk 4 Htr Current Snsr 1
	(ML86B:C) • cb MNB EXT ARLK HTR LINE ZN1 – op • cb MNB EXT ARLK HTR LINE ZN2 – op • cb MNB EXT ARLK HTR STRUC – op • cb MNB EXT ARLK HTR S/O VLV – op		3 Ext A/L H2O Line and Structural Htrs MNB pwr 1 A/L H2O Isol Vlv Cntl

CREW INDICATIONS	NOTES
	(1) Vlv holds position (2) Htr A remains (3) MNA,MNC line htrs remain. MNA struct htrs remain (4) No redundancy (5) One htr strip pwrd by MNA ML86B still remains. Water will still heat, but at a very slow rate (6) One failure away from loss of jettison capability (7) Current Snsr 1 remains (8) Current Snsr 2 remains

EPS SSR-49c
BUS LOSS: MNB A7

ACTIONS
NONE

BUS ISOLATION
ONLY ON MCC CALL, PERFORM
(A6L) IF DOCKING MISSION • cb MNB DEP SYS 2 VENT – op • cb ESS 2CA DEP SYS 2 VENT ISOL – op • cb MNB DOCK LT AFT – op • LT TRUSS AFT – OFF

EQUIP/FUNCTION LOST
Vestibule Depress Vlv Sys 2 Vent Vestibule Depress Vlv Sys 2 Vent Isol Aft Truss Docking lt

CREW INDICATIONS
VEST DEP VLV SYS 2 VENT ISOL tb – bp VEST DEP VLV SYS 2 VENT tb – bp 1 DSP SYS PWR SYS 2 tb – OFF

NOTES
(1) DSP SYS 2 pwr still available to all users except MNB A7

EPS SSR-50
BUS LOSS: MNC DA3 (Includes all MNC sub-buses & AC3)

ACTIONS	EQUIP/FUNCTION LOST	CREW INDICATIONS	NOTES
1 • Perform FC3 SHUTDN 2 (FC SHUTDN Cue Card)	2 FC3 Pumps and pH Snsr 1 Purge Vlv O2,H2 Flow Xdcrs Cell Perf Monitor 3 MNC pwr to ESS1BC 3 ESS2CA 3 CNTLBC1,2,3 3 CNTLCA1,2,3	SM ALERT Light/Tone – on MASTER ALARM Light/Tone – on	(1) Because of FC3 Purge Vlv loss, FC3 will remain isolated to limit voltage degradation and allow FC3 to MNB use during entry via PL Bus contactors
• Perform LOSS OF 1 FC (ORB PKT, PWRDN)		(F6) MDU CDR 1 blanks	(2) May be repwrd after AC Pwr Transfer Cable connected
(R1) • cb AC CONTR AC3 ΦA,ΦB,ΦC (three) – cl • INV/AC BUS 3 – OFF (tb-off) • INV PWR 3 – OFF (tb-off) • cb AC CONTR AC3 ΦA,ΦB,ΦC (three) – op • AC3 BUS SNSR – OFF	AC3 ΦA,ΦB,ΦC Inverters	(F8) MDU PLT 2 blanks	(3) Buses remain pwrd
		(AFT) MDU AFD 1 blanks	(4) If Aud Ctr 2 selected, all intercomm, A/G, and recorded voice lost until AUD CTR 1 selected
• O2,H2 MANF VLV TK1,2 (four) – OP • O2,H2 TK1 HTR A,B (four) – OFF • O2,H2 TK2 HTR B (two) – AUTO • O2,H2 TK2 HTR A (two) – OFF	Cryo O2,H2 Tk1 Htrs A if in Auto Cryo O2,H2 Tk1 Htrs B Tk2 Htrs A	(F7) C/W MN BUS UNDERVOLT lt – on BACKUP C/W ALARM lt – on C/W FREON LOOP lt – on C/W FC PUMP lt – on C/W AC VOLT lt – on C/W H2O LOOP lt – on MDU CRT 3,4 blank	(5) Loss of redundant port to the following: IDP 3 MDU MFD 1 (S) MDU MFD 2 (S) IDP 4 MDU MFD 1 (P)
(A11) If Tk 4 in use: • O2,H2 TK4 HTR B (two) – AUTO • O2,H2 TK4 HTR A (two) – OFF	Cryo O2,H2 Tk4 Htrs A	(COMM LOST) Comm via PS ATU & A/L 4 All S-BD A/G voice lost if Sys 2 selected	(6) S86 WSB T 2 if in BLR CNTLR/HTR 2A. S86 WSB T 3 if in BLR CNTLR/HTR 3B
(A15) • O2,H2 TK5 HTR A,B (four) – OFF	Cryo O2,H2 Tk5 Htrs A in Auto Cryo O2,H2 Tk5 Htrs B	(LIGHTS LOST) Inst lts L/Ctr (pnls C2,F6,F7) MS pnl lts (pnls R10,R12) OS pnl lts (pnls A1,A2,A6, A7,A8,A13,L9) PLB Floodlts Aft Port, Mid Stbd MS Floodlt R Seat/Ctr Cnsl Floodlts Middk Floodlts 3,4,5,7 MO13Q pnl lt 1 Bunk Floodlts 1/3 Airlock Floodlt 4 TA Floodlt 4	(7) REACQ and PSP reconfig procedures are flight specific. If reqd, procedures can be found in payload or ISS specific books
(C2) • L IDP/CRT SEL – 1 • R IDP/CRT SEL – 2 • GPC/CRT 03 EXEC • 04 EXEC	5 IDP 3,4 MDU CRT 3,4 MDU CDR 1 MDU PLT 2 MDU AFD 1	(F9) AC3 ΦA,ΦB,ΦC AC volts ind – < 90 DC VOLTS MNC ind – OSL	(8) OIU 1 interfaces with PSP 1 for commanding
(A1L) S-BD PM • ANT SW ELEC – 1 • XPNDR – 1 • PWR AMPL OPER – 1 • STBY – 1 • PRE AMPL – 1 NSP • PWR – 1	S-BD PM Sys 2: Xpndr 2 Pre Amp 2 Pwr Amp 2 PM, FM Ant sw 2 NSP 2 COM SEC 2	(FSMs) S67 CNTL RPC S67 AC VOLTS 3 S86 HYD RSVR Q 3 SM2 HYD QTY 3 (B) 6 S86 WSB T (2) S66 AV BAY 1 FAN S66 CABIN FAN (2) S68 FC PUMP 3 S69 FC H2 PUMP 3 S88 H2O PUMP P2 S88 H2O LOOP 2 FLOW S88 H2O LOOP 2 TEMP S88 H2O PUMP P 1 S88 H2O LOOP 1 TEMP S88 H2O LOOP 1 QTY S67 MAIN BUS V C RCS PWR FAIL S88 FREON FLOW 1 S88 FRN PL HX 2 S88 FREON QTY 1	(9) * TIME CRITICAL * If not done within 20 min, may freeze N2H4 and lose APU. However, SM ALERT occurs above freezing temp
If PSP and/or INTRG reqd for PL or ISS ops: (A1L) • S-BD PL PWR SYS – 1 • CNTL – PNL • – CMD 7 • Reconfig PSP 7 • Perform PL INTRG REACQ (if reqd)	S-BD PL Intrg 2 PSP 2		
8 If OIU reqd: (SSP) • OIU PWR – OIU 1 ON • OIU tb – UP • √MCC, OIU reconfig			
(A12) APU HTR 9 • GAS GEN/FUEL PUMP 2 – A AUTO 9 • GAS GEN/FUEL PUMP 3 – B AUTO • LUBE OIL LINE 2 – A AUTO • LUBE OIL LINE 3 – B AUTO	APU 2 GG/Fu Pump Htrs B APU 3 GG/Fu Pump Htrs A APU 2 Lube Oil Ln Htr B 3 Lube Oil Ln Htr A	SM0 THRM/HYD (B) BCE STRG 3 ADTA (3,B) BCE STRG 4 ADTA (3,B) BCE STRG 3 MLS (3)	
(Continued)	(Continued)	(Continued)	

EPS SSR-50 (Cont)
BUS LOSS: MNC DA3

ACTIONS	EQUIP/FUNCTION LOST	CREW INDICATIONS	NOTES
(A12) APU HTR TK/FU LN/H2O SYS 9 • 2A – AUTO 9 • 2B – OFF 9 • 3A – OFF 9 • 3B – AUTO HYD HTR • AFT FUS A – AUTO • B – OFF	APU 2 Tk/Fu Ln Htr B 3 Tk/Fu Ln Htr A APU 3 GG Inj H2O Htrs 3A, 23A Aft Fuselage Hyd Htrs B	(FSMs) I/O ERROR CRT 3 I/O ERROR CRT 4 RM DLMA MANF S67 FPC/FLC3 S67 MPC 3 S67 APC/ALC C	(9) * TIME CRITICAL * If not done within 20 min, may freeze N2H4 and lose APU. However, SM ALERT occurs above freezing temp
(A1R) • S-BD FM PWR – 1	S-BD Fm Sig Proc 2, Xmtr 2	If NSP 2 selected: BCE STRG 3 NSP If cooling by FES only: C/W FREON LOOP lt – on 'S88 EVAP OUT T1' 'S88 EVAP OUT T2'	(10) Vlv holds position
If no comm: (C3) • S-BD PM CNTL – PNL • – CMD • AUD CTR – 1	Audio Ctr 2	(L2) 10 O2 EMER tb – bp 10 CAB RELIEF B tb – bp	(11) Indicates DN when NLG down
(L1) • FLASH EVAP CNTLR PRI A – OFF • FLASH EVAP CNTLR PRI B(SEC) – ON (If reqd) • TOP EVAP HTR NOZ R – A AUTO • TOP EVAP HTR DUCT – A(B) If Hi Load Evap enabled: • HI LOAD DUCT HTR – A(B)	Flash Evap Cntlr Pri A Topping Evap R Noz Htr B Topping Evap Duct Fwd,Aft Htrs C Hi Load Duct Inbd,Outbd, Noz Htrs C	(R1) FC3 COOL PUMP ΔP tb – bp	(12) Will not indicate DN when RMG down
(L2) • FLASH EVAP FDLN HTR B SPLY – 2	FES H2O Fdln B Htrs 1 (all)	(F6,F8) 11 NOSE LDG GEAR tb – bp 12 R LDG GEAR tb – bp	(13) APU H2O QTY 2 if in BLR CNTLR/HTR 2A. APU H2O QTY 3 if in BLR CNTLR/HTR 3B
	Prox Snsr Electronics Box 1	HYD/APU HYD QTY 3 ind – 0% 13 APU H2O QTY ind – 0%	(14) Single mtr time. One failure away from EVA to stow MPM or from RMS/OBSS jettison
	Av Bay 2 Agent discharge capability	If SYS 2 pwrd: 'S62 BCE BYP PSP2' Loss of PL TLM and CMD If PDI FDA enabled: 'S62 PDI DECOM FAIL'	(15) Single mtr time. One failure away from loss of two out of three MRLs. EVA or RMS jettison capability exists
	RMS: 14 Port MPM Mtr 1 14 Stbd MPM Mtr 2 15 Port Fwd MRL Mtr 2 15 Port Aft MRL Mtr 1 16 Stbd Mid MRL Mtr 2 16 Stbd Fwd MRL Mtr 1	(O1) H2O PUMP OUT PRESS LOOP 1 ind – 0 psia H2O PUMP OUT PRESS LOOP 2 ind – 20-25 psia	(16) Single mtr time. One failure away from loss of MRL latching capability. EVA or OBSS jettison capability exists
• For attitude control, perform LOSS OF VERNIERS (ORB OPS, RCS)	RCS Manf F5 RJD pwr (F5L,F5R)	(O3) RCS/OMS PRPLT QTY display is blank R ADP deploy time incr from 15-30 sec	(17) Do not reconfig for reg switch or I'CNCT procedures
	RCS Manf F4 RJD pwr (F4R,F4D)	(O7) 10 AFT L RCS He PRESS B tb – bp 10 AFT L RCS MANF ISOL 5 tb – bp 10 AFT R RCS MANF ISOL 5 tb – bp	(18) Man CL and GPC cntl remains
(F6,F8) • HSI SEL SOURCE – other than MLS, (OV103,4) TACAN 3 or (OV105) GPS 3	MLS 3 (OV103,4) TACAN 3 (OV105) GPS 3	(O8) 10 FWD RCS TK ISOL 1/2 tb – bp 10 FWD RCS MANF ISOL 4 tb – bp 10 FWD RCS MANF ISOL 5 tb – bp	(19) If SPLY H2O DUMP VLV ENA/NOZ HTR – OFF, tb upward and already bp
(O6) • ANNUN BUS SEL ACA 2/3 – MNB	ACA 2/3 MNC pwr	(R4) 10 HYD BK ISOL VLV 3 tb – OP 10 HYD MPS/TVC ISOL VLV SYS 3 tb – CL	
Refer to OMS/RCS Slide Rule for vlv loss info 17 Reconfig following vlv(s) only if leak isolation reqd: (O7) • AFT L RCS He PRESS B • R RCS He PRESS B	10 Aft L RCS He Press Isol B GPC Cntl, man CL capability 18 F,R RCS He Press Isol B man OP capability	(R11L) 10 SPLY H2O TKA OUTLET tb – bp 19 SPLY H2O DUMP VLV tb – bp 10 SPLY H2O XOVR VLV tb – bp	
(Continued)	(Continued)	(Continued)	

EPS SSR-50 (Cont)
BUS LOSS: MNC DA3

ACTIONS	EQUIP/FUNCTION LOST	CREW INDICATIONS	NOTES
(O8) • FWD RCS He PRESS B		(R11L) 10 SPLY H2O GALLEY SPLY VLV tb – bp 10 SPLY H2O TKC INLET tb – bp	(10) Vlv holds position (20) Lost TM: GNC SYS SUMM 2 R OMS ENG VLV 2: Assume VLV 2 status same as Vlv 1 R OMS N2 P VLV: If ENG – ARM/PRESS, assume vlv OP (21) Unable to confirm redundant coil (22) Maintains He Isol redundancy (23) Vlv norm closed. Manual cntl remains (24) Prevents simultaneous opening of parallel reg paths and possibly rupturing burst disk (25) FSM caused by Antenna miscompare (26) During MAN PLBD OP/CL, single mtr run time noted on actuators
GNC 23 RCS • Reprioritize L,R Manf 3,4 Jets to first priority: DES INH twice all other jets; highest priority first, then next highest priority, etc • Set aft pod(s) PRI JET FAIL LIMIT of 6	Aft RCS L,R Jet 3,4,5 Htrs Fwd RCS Jet 4,5 Htrs	(R13L) RAD CNTL STBD,PORT (two) tb – bp	
20 Save R OMS for deorbit (if reqd for additional on-orbit burns, √MCC)	20 R OMS GN2 Press Vlv Op TM 21 Eng Pr Vlv Coil 1	(A8L) PORT RMS: DPY/STO tb – bp RETEN LAT tb – bp R-F-L AFT tb – bp STARBOARD RMS: DPY/STO tb – bp	
20 Prior to using L(R) OMS: (O8)			
22 R OMS He PRESS/VAP ISOL • A – GPC • B – OP	23 R OMS He Vap Isol 2 GPC Cntl 23 R OMS He Pr Isol B GPC Cntl	SM 94 PDRS CONTROL PORT RMS Indications lost: MPM Mtr 1 STO/DPY Fwd MRL Mtr 2 LAT/REL/RDY Aft MRL Mtr 1 LAT/REL/RDY STBD RMS Indications lost: MPM Mtr 2 STO/DPY Mid MRL Mtr 2 LAT/REL/RDY	
24 L OMS He PRESS/VAP ISOL • A(B) – GPC • B(A) – CL	20 L OMS He Pr/Vap Isol A,B man Cntl		
GNC XXXXX MNVR VYYYY (3,B) Sel R OMS SEC TVC: • OMS GMBL SEC R ITEM 31 EXEC	R OMS Pri TVC		
(A6U) • ANNUN BUS SEL – MNB	ACA 4/5 MNC pwr	(AW82D) 10 EMU 1 H2O SPLY,WASTE tb – CL	
(A12) HYD CIRC PUMP • PWR 2 – MNB • 3 – MNA	MNC Circ Pump 2 pwr 3 pwr	STAR TRKR DR POS -Z OP/CL time incr from 8-16 sec	
(A14) RCS/OMS HTR • L POD (two) – A AUTO, B OFF • R POD (two) – A AUTO, B OFF	L,R Pod Htrs B (partial)	If Cabin Fan A selected: C/W AV BAY/CAB AIR lt – on 'S66 CABIN FAN'	
		If site AOS and using S-BD ANT ELEC 2: 25 'ANTENNA' (2)	
(AW18D) • AIRLK AUD CNTL – MIDDECK	AL ATU,EMU CCU 1,2 PS ATU and CCU	If H2O Loop 2 Pump active: 'S88 H2O PUMP P2'	
(R11U) • FC H2O LINE HTR – A AUTO • FC H2O RELIEF HTR – A AUTO	FC H2O Line Htrs B FC H2O Relief Htrs B Noz Htr	If OMS Gmbl cmd abs value > 2 deg: C/W OMS TVC lt – on 'R OMS GMBL' (3,B)	
For PLBD ops: • OP/CL Drs in man mode	26 PLBD: C/L Lat 13-16 Mtr 1 1-4,5-8,9-12 Mtrs 2 Stbd Aft Blkhd Mtr 1 Port Aft Blkhd Mtr 2 Port Door Mtr 1 Stbd Door Mtr 2 CL Limit sw	(F7) If APUs active and using BLR CNTLR/HTR 2A or 3B: C/W APU TEMP lt – on after ~2 min	
		If first RGA failure and Rates sensed: 'RM FAIL RGA'	
		If ANNUN BUS SEL ACA 2/3 – MNC, L/R Event Seq lts lost	
If supply H2O dump reqd: For TK A and/or TK B • Perform SUPPLY H2O SYS BACKUP DUMP TK A,B (IFM) For TK C and/or TK D • Perform SUPPLY WATER DUMP USING FES (ORB OPS, ECLS) using FLASH EVAP CNTLR PRI B	10 Sply H2O Dump Vlv Cntl Noz Htr 10 Xovr Vlv Cntl	(L2) 10 O2 EMER tb – bp 10 CAB RELIEF B tb – bp	
(Continued)	(Continued)	(Continued)	

EPS SSR-50 (Cont)
BUS LOSS: MNC DA3

ACTIONS		EQUIP/FUNCTION LOST	CREW INDICATIONS	NOTES
	10	MPS/TVC Hyd Sys 3 Isol Cntl	SM (BFS,SM) 63 PL BAY DOORS If in AUTO OP/CL for PLBDs, sequence terminates immediately and msg '(S63) PBD CONFIG'	(10) Vlv holds position
If reqd during entry (< 120K ft): (L1) • NH3 CNTLR A – PRI/GPC If reqd for Post Rollout: • NH3 CNTLR B – SEC/ON	27 28	NH3 Sys A Sec Cntlr man ON capability NH3 Sys B Pri Cntlr		(27) Sys A Pri Cntlr, auto switchover to Sec Cntlr remain (28) Sys B Sec Cntlr man On capability remains
If AC Pwr Transfer Cable to be installed to regain AC: • Go to EPS SSR-200; otherwise, continue with bus loss actions			(R13L) During Rad Dpy/Sto ops: RAD LAT CNTL tb (two) indicate single mtr ops	(29) Not yet active on all vehicles
(R2) • BLR CNTLR/HTR 2 – B • 3 – A		APU/HYD Blr Cntlr/Htr 2A 3B		(30) H2O Loop 1 Pump Out P, Pump ΔP, Accum Qty, Pump Out Temp snsrs lost
	29	FC2 Redundant Reac Vlv Cntl on pnl C3		(31) Av Bay 1 Fan ΔP, Air Out Temp snsrs lost
(L1) • IMU FAN B(A) – ON • C – OFF • Perform SSR-10 (H2O Loop 2 only), H2O PUMP OPS via GPC, ECLS • CAB FAN A – OFF • B – ON • AV BAY 1 FAN A,B (two) – ON • √AV BAY 2 FAN A – ON • B – OFF • 3 FAN A – OFF • √B – ON • FREON PUMP LOOP 2 – B	 10 30 31 	IMU Fan C H2O Loop 2 Pump man ON capability H2O Loop 1 Byp Cntlr, Sig Condr H2O Loop 1 Byp Vlv pwr Cabin Fan A Av Bay 1 Sig Condr, Xdcrs (ECLS SC2) Av Bay 2 Fan B 3 Fan A Freon Loop 2 Pump A		(32) Freon Loop 1 P/L Hx Flow Rate, Freon Loop 2 ICH Flow Rate, and Accum Qty snsrs lost (33) Freon Loop 2 P/L Hx Flow Rate, Freon Loop 1 ICH Flow Rate, and Accum Qty snsrs lost (34) Maintains deorbit capability for CNTL BC1 failure (35) Inhibits H2O Loop 1 Pump ΔP, Pump Out Temp, Accum Qty, respectively
(O17:C) • SIG CONDR FREON A – AC2 • SIG CONDR FREON B – AC2	32 33	Freon S/C A AC3 pwr (ECLS SC 1A) Freon S/C B AC3 pwr (ECLS SC 1B)		
(CDR SEAT PNL) • CDR SEAT PWR BUS SEL – AC2 (up)		CDR Seat adj via AC3 pwr		
(PLT SEAT PNL) • PLT SEAT PWR BUS SEL – AC2 (up)		PLT Seat adj via AC3 pwr		
(O8) • Right OMS XFEED B – OP (tb-OP)	34	OMS Eng/Xfeed Vlv Redundancy		
SM 60 SM TABLE MAINT 35 • Inhibit 0612605, 0612600, 0612640, 0612610				
(Continued)		(Continued)		

EPS SSR-50 (Cont)
BUS LOSS: MNC DA3

	BUS ISOLATION		EQUIP/FUNCTION LOST	CREW INDICATIONS	NOTES
	ONLY ON MCC CALL, PERFORM				(10) Vlv holds position
	• MDU CRT 3 PWR – OFF • MDU CDR 1 PWR – OFF • MDU PLT 2 PWR – OFF				(36) AC3 bus isolation for AC Pwr Transfer Cable installation accomplished in MNC DA3 ACTIONS column. No additional bus isolation steps reqd
	(C2) • IDP/CRT 3 PWR – OFF				(37) Motor A remains
	(L4:N) • cb AC3 ΦC RAD ISOL B – op	37	Freon Loop 1,2 Rad Isol Motor B		(38) Redundant pwr source remains
	(R1) • PL AFT MNC – OFF		Aft Payload C pwr		(39) Current Snsr 1 remains
	(O7) • (OV105) GPS 3 PWR – OFF • (OV105) GPS 3 PRE AMPL UPPER – OFF • (OV105) GPS 3 PRE AMPL LOWER – OFF		(OV105) GPS 3		(40) Current Snsr 2 remains
	(O8) • MLS 3 – OFF • R SEAT/CTR CNSL FLOOD – OFF		R Seat/Ctr Cnsl Floodlts		(41) If Emer O2 Mission Kit not flown, cb is open prelaunch
	(O16:A) • RGA 3 – OFF		RGA 3		
38	(O16:B) cb MNC • OI SIG CONDR OM3B – op • OI SIG CONDR OF 2/3 – op • OI MDM OF 3/4B – op • MNB CONTR – op • AUX TIMING BUFFER – op		Orbiter Timing Buffer Aft Mission Timer		
	(O16:C) cb MNC • (OV103,4) TACAN 3 – op • SMOKE DETN CAB – op • SMOKE DETN BAY 1A/ 2B – op • FIRE SUPPR BAY 2 – op • UTIL PWR A11/A15/ MO30F – op • FLOOD R CTR – op • ANNUN FWD ACA 2/3 – op • ANNUN AFT ACA 4/5 – op		Tacan 3 Cabin Smoke Detector Av Bay 1 Smoke Detector A 2 Smoke Detector B MNC DC Utility pwr outlets at panels A11, A15, MO30F		
	• cb MNC CRYO O2 HTR TK1 SNSR 2 – op	39	Cryo O2 Tk1 Htr Current Snsr 2		
	• cb MNC CRYO O2 HTR TK2 SNSR 1 – op	40	Cryo O2 Tk2 Htr Current Snsr 1		
41	(O16:D) cb MNC • H2O ALT PRESS – op • O2 EMER – op • CAB RELIEF B – op • (OV105) GPS 3 PRE AMPL UPPER – op • (OV105) GPS 3 PRE AMPL LOWER – op • (OV103) GPS PRE AMPL UC – op • (OV103) GPS PRE AMPL LC – op	10 10 10	Emer O2 Sply Vlv Cntl Cabin Relief Vlv B Cntl H2O Alternate Press Vlv Cntl		
	(Continued)		(Continued)		

EPS SSR-50 (Cont)
BUS LOSS: MNC DA3

	BUS ISOLATION		EQUIP/FUNCTION LOST
	ONLY ON MCC CALL, PERFORM		
	(O16:E) cb MNC • ADTA 3,4 (two) – op • MLS 3 – op • DDU R,AFT (two) – op • RCS/OMS PRPLT QTY GAUGE – op • DRAG CHUTE SYS 1 – op		ADTA 3, 4 MLS 3 RCS/OMS Prplt Qty Gauge 42 Drag Chute, CDR Arm
		43	ATVC 1 Isol ME
	(A7U) PL BAY • FLOOD AFT PORT – OFF • MID STBD – OFF		PLB Aft Port Floodlt Mid Stbd Floodlt
	(A7L) IF DOCKING MISSION • PYRO PWR MNC – OFF cb MNC • LOGIC 2 – op • 3 – op		MNC Pyro system 44 MNC pwr to DSP Logic buses 2,3
	(A13) • (OV103) GPS – OFF • (OV103) GPS PRE AMPL UC – OFF • (OV103) GPS PRE AMPL LC – OFF		GPS 2
	(R11U) • FC PURGE VLV 3 – CL • FC START UP HTR 3 – ENA • IDP/CRT 4 PWR – OFF • MDU CRT 4 PWR – OFF • MDU AFD 1 PWR – OFF		FC3 Start Up Htr Inhibit capability
	(R14:A) cb MNC • AUD CTR 2 – op • AUD PS/AIRLK – op • MDU CDR 1 – op • MDU PLT 2 – op • MDU AFD 1 – op		
	(R14:B) cb MNC • UHF – op • GCILC – op • CNTL BUS AB1/2/3 – op		UHF redundant pwr GCIL redundant pwr MDM cmds to CCTV Sys MNC pwr for CNTLAB 1,2,3 Buses
45	(R14:B) cb PALLET/DSC • 2A – op (EDO) • 3B/4A – op (EDO)		
	(R14:C) • cb MNC KU SIG PROC – op • cb UHF EVA – op	46	Ku-Bd Sys Rdr & Comm I/F Cont Unit (EA1), Ku Comm Sig Proc SSOR EVA STRG 2
	(R14:D) cb MNC TV B CAMR • CAMR/PTU – op • CAMR HTR – op • ILLUM/PTU HTR – op • cb MNC TV CAB – op		TV B Camr/Pan-Tilt TV B Camr Htr TV B Camr Pan/Tilt Htr and Illum Flt,Middeck TV Camrs and VFMs
	(R14:E) • cb MNC MS FLOOD – op		MS Floodlt
	(Continued)		(Continued)

CREW INDICATIONS	NOTES
	(42) PLT Arm remains (43) Six vlvs fail to non-isolation position (44) Logic buses 2(3) remain pwrd via MNB(MNA) (45) Redundant pwr source remains for equipment (46) Ku Comm and RDR function lost. KU-BAND CONT STOW – EA1 ALTERNATE POWER IFM reqd to stow antenna. Jettison reqd if antenna cannot be positioned within GO FOR PLBD CLOSURE envelope

EPS SSR-50 (Cont)
BUS LOSS: MNC DA3

BUS ISOLATION		EQUIP/FUNCTION LOST
ONLY ON MCC CALL, PERFORM		
(ML86B:F) cb MNC FLOODS • MIDDECK 5/7 – op • MIDDECK 3/4/MO13Q – op • BUNK 1/3 – op • AIRLK 4 – op		Middeck Floodlts 3,4,5,7 MO13Q Pnl Lt 1 Bunk Floodlts 1/3 Airlock Lt 4
(MA73C:A,B) • MCA LOGIC MNC FWD 3 – OFF • MCA LOGIC MNC MID 2 – OFF • MCA LOGIC MNC MID 4 – OFF • MCA LOGIC MNC AFT 3 – OFF		MNC FMC3 Bus pwr MMC2 Bus pwr MMC4 Bus pwr AMC3 Bus pwr
	47	Ku Ant Sto/Dpy Mtr 1
	48	R HUD -Z Star Trkr Dr Sys 2 OP/CL capability
		PL MNC Cur Sig Condr
		Port,Stbd Rad Dpy/Sto Mtr 2 Port,Stbd Rad Lat 7-12 Mtrs 2 48 R ADP Dpy Mtr 1 49 Htr Cntlr 1 LH Vents 1,2,3 Mtrs 1 6 Mtrs 2 RH Vents 8,9 Mtrs 1 3,5 Mtrs 2 NLG Extend Sys 1 50 NLG,LMG,RMG Bkup Rel Sys 1
(ML86B:A) • cb MNC SPLY H2O TKA OUTLET – op • cb MNC SPLY H2O TKC INLET – op • cb MNC DUMP VLV/NOZ HTR – op • cb MNC SPLY H2O XOVR VLV – op • cb MNC SPLY H2O GALLEY SPLY – op	10 10 10	Sply H2O TK A Out Vlv Cntl C In Vlv Cntl Galley H2O Sply Vlv Cntl
(ML86B:D) cb PYRO JETT SYS B • KU ANT – op • PORT RMS – op • STBD RMS – op	51 52	Ku-Bd Jettison Sys A RMS/OBSS Jett/Guil Sys B
(ML86B:E) cb MNC EMU 1 H2O • WASTE – op • SPLY – op cb MNC SEAT • L – op • R – op cb MNC FLOOD • TNL ADAPT 4 – op cb MNC • CO2 SYS 2 CNTLR – op	10 10 	EMU 1 Waste H2O Vlv Cntl Sply H2O Vlv Cntl TA Floodlt 4
(ML86B:F) • cb MNC CRYO O2 HTR TK4 SNSR 2 – op • cb MNC CRYO O2 HTR TK5 SNSR 2 – op	39	Cryo O2 Tk4 Htr Current Snsr 2 Cryo O2 Tk5 Htr Current Snsr 2
(Continued)		(Continued)

CREW INDICATIONS

NOTES
(10) Vlv holds position
(39) Current Snsr 1 remains
(47) √MCC for Ku Ant stow reqmts
(48) Redundant mtr remains
(49) Htr Cntl 2 remains
(50) LG can still be deployed by redundant Pyro Bkup Rel Sys 2 and by Pri Hyd Sys. NLG extension pwr assist available from redundant sys. NLG can also be deployed by Hyd Sys 2
(51) SYS A remains
(52) One failure away from loss of jettison capability

EPS SSR-50 (Cont)
BUS LOSS: MNC DA3

BUS ISOLATION		EQUIP/FUNCTION LOST	CREW INDICATIONS	NOTES
(MO63P) cb CB2/J2,CB3/J3, CB4/J4,CB5/J5,CB6/J6, RLY PWR (six) – op		MO63P DC Utility Pwr panel	R MPS He reg A < 680 during entry MM303)	(10) Vlv holds position (53) Unable to confirm redundant coils (54) Redundant coils remain (55) Vlv fails closed **CAUTION** No purge. Wait 10 min between burns (56) √MCC for OMS Tot Qtys. Aft Qtys are found on GNC SYS SUMM 2 (57) Pwr Sply A remains. Turbine speed ind lost (58) Pwr Sply B remains. GG Bed T and GBX P ind lost when APU running (59) Vlv fails closed. Redundant vlv remains (60) Cntlrs A,B Rad Byp Mtrs Auto Cntl and Cntlr B Rad Byp Vlv Mtr remain (61) Bypass vlv holds position and Cntlr B Rad Byp Vlv Mtr remains (62) Vlv fails closed (63) Vlv fails closed. LO2 manf will not be pressured with He during entry (MM304) (64) Vlv holds position. Loss of manual capability to inert LO2 manf (65) Redundant mtrs remain (66) Brake/Skid Cntl Box A,B enabled before WOW (67) Redundant RPC remain
	53	R OMS ENG Pr Vlv Coil 1		
	54	R OMS ENG Cntl Vlv 1,2 Coils 1		
	55	R OMS Purge Vlv 1,2		
	56	OMS QTY Gauging for all R OMS Single Engine burns Press Vlv Op Sig		
	57	APU 2 Cntlr Sply B pwr		
	58	3 Cntlr Sply A pwr		
	59	2 Fu Tk Vlv B		
	59	3 Fu Tk Vlv A		
		APU 3 GBX GN2 Repress Vlv		
	10	HYD BK ISOL VLV 3 Cntl Hyd Rsvr 3 Qty Snsr		
	10	EMU 1 Waste H2O Vlv Cntl		
	10	Sply H2O Vlv Cntl		
	60	Freon Loop 1 Cntlr A Rad Byp Vlv Mtr man Cntl		
	61	Freon Loop 2 Cntlr A Rad Byp Vlv Mtr		
	10	Freon Loop 2 Flow Prop vlv Freon Loop 2 Cold Plate Flow Xdcr		
		MPS:		
	62	R Eng He Intercon Outlet Vlv		
	62	L Eng He Xovr Vlv		
	59	R Eng He Isol A		
	63	Manf Repress LO2 Vlv 1,2		
	64	Prplt F/D Outbd LO2 Vlv		
	65	ET Door Mtrs: C/L Lat Actr 2 Mtr 2 L Dr Closure Mtr 2 R Dr Closure Mtr 1 Uplock Lat Mtr 1		
	66	No WOW Relay K9,K11,K13		
	67	Hyd Main Pump 3 Depress Solenoid RPC A		
	67	Hyd Main Pump 2 Depress Solenoid RPC B		

EPS SSR-51
BUS LOSS: MNC FPC3 (Includes MNC FLC3, MNC FMC3, AC3)

	ACTIONS		EQUIP/FUNCTION LOST		CREW INDICATIONS		NOTES
1	• Perform FC3 SHUTDN (FC SHUTDN Cue Card), pwrdn not needed, then:	2	FC3 Pumps and pH Snsr		MASTER ALARM Light/Tone – on CRT 3,4 blank		(1) * TIME CRITICAL * FC3 must be shutdn within 9 min to avoid potentially hazardous condition
	(R1) • cb AC CONTR AC3 ΦA, ΦB, ΦC (three) – cl • INV/AC BUS 3 – OFF (tb-OFF) • INV PWR 3 – OFF (tb-OFF) • cb AC CONTR AC3 ΦA, ΦB, ΦC (three) – op • AC3 BUS SNSR – OFF		AC3 ΦA,ΦB,ΦC Inverters		(F7) C/W FREON LOOP lt – on C/W FC PUMP lt – on C/W AC VOLT lt – on C/W H2O LOOP lt – on SM ALERT Light/Tone – on		(2) Will be repwrd after AC Pwr Transfer Cable connected
	(C2) • L IDP CRT SEL – 1 • R IDP CRT SEL – 2 On MCC GO: • GPC/CRT 03 EXEC • 04 EXEC	3	IDP 3,4 MDU CRT 3,4		(F9) AC3 ΦA,ΦB,ΦC AC volts < 90		(3) Loss of redundant port to the following: IDP 3 MDU CDR 1 (P) MDU MFD 1 (S) MDU MFD 2 (S) MDU PLT 2 (P) IDP 4 MDU AFD 1 (P)
					(COMM LOST) All S-BD A/G voice lost if Sys 2 selected		
					(LIGHTS LOST) Instr lts L/Ctr (pnls C2,F6,F7) MS pnl lts (pnls R10,R12) OS pnl lts (pnls A1,A2, A6, A7,A8,A13,L9)		
	(A1L) S-BD PM • ANT SW ELEC – 1 • XPNDR – 1 • PWR AMPL OPER – 1 • STBY – 1 • PRE AMPL – 1 NSP • PWR – 1		S-BD PM Sys 2: Xpndr 2 Pre Amp 2 Pwr Amp 2 PM,FM Ant Sw 2 NSP 2/COM SEC 2		(FSMs) S67 FPC/FLC 3 S69 FC H2 PUMP 3 S66 AV BAY 1 FAN S66 CABIN FAN S66 IMU FN SPD B S67 AC VOLTS 3 S69 FC PUMP 3 S86 HYD RSVR Q 3 SM2 HYD QTY 3 (B) 4 S86 WSB T (2) SM0 THRM HYD (B) S88 FREON FLOW 1 S88 FRN PL HX 2 S88 FREON QTY 1 S88 H2O PUMP P2 S88 H2O LOOP 2 FLOW S88 H2O LOOP 2 TEMP BCE BYP KU (2) S88 H2O PUMP P1 S88 H2O LOOP 1 TEMP S88 H2O LOOP 1 QTY		(4) S86 WSB T 2 if in BLR CNTLR/HTR 2A. S86 WSB T 3 if in BLR CNTLR/HTR 3B
	If PSP and/or INTRG reqd for PL or ISS ops: • S-BD PL PWR SYS – 1 • CNTL – PNL • – CMD 5 • Reconfig PSP 5 • Perform PL INTRG REACQ (if reqd)		S-BD PL Intrg 2 PSP 2				(5) REACQ and PSP reconfig procedures are flight specific. If reqd, procedures can be found in payload or ISS specific books
	(A1R) • S-BD FM PWR – 1		S-BD FM Sys 2		I/O ERROR CRT 3 I/O ERROR CRT 4 RM DLMA MANF		(6) OIU 1 interfaces with PSP 1 for commanding
	If no comm: (C3) • S-BD PM CNTL – PNL • – CMD				If CABIN FAN A selected: C/W AV BAY/CAB AIR lt – on 'S66 CABIN FAN'		(7) Vlv holds position. Do not reconfig for reg switch or I'CNCT procedures
6	If OIU reqd: (SSP) • OIU PWR – OIU 1 ON • OIU tb – UP • √MCC, OIU reconfig				If SYS 2 pwrd: 'S62 BCE BYP PSP 2' Loss of PL TLM and CMD If PDI FDA enabled: 'S62 PDI DECOM FAIL'		(8) Will indicate DN when NLG down
	(L4:P) • cb AC2 ΦA LG SNSR 2 – cl		Prox Snsr Electronics Box 1		If NSP 2 selected: BCE STRG 3 NSP If site AOS and using S-BD Ant Elect 2: 'ANTENNA' (2)		(9) Will not indicate DN when RMG down
	Refer to OMS/RCS Slide Rule for vlv loss info Reconfig following vlv(s) only if leak isolation reqd: (O8) • FWD RCS He PRESS B	7	Fwd RCS He Press Isol B man OP capability		(R1) FC3 COOL PUMP ΔP tb – bp		(10) KU-BAND CONT STOW – EA1 ALTERNATE POWER IFM reqd to stow Ku Ant. Jettison reqd if antenna cannot be positioned within GO FOR PLBD CLOSURE envelope
	• For attitude control, perform LOSS OF VERNIERS (ORB OPS, RCS)		RCS Manf F5 RJD pwr (F5L,F5R)		(F6,F8) 8 LDG GEAR NOSE tb – bp 9 LDG GEAR R tb – bp		(11) Performing DIRECT STOW, MECH SSR-5, may be reqd. √MCC
			RCS Manf F4 RJD pwr (F4R,F4D)				
	(R14:C) 11 • cb MNC KU SIG PROC – op	10	Ku-Bd Sys Rdr & Comm I/F Cont Unit (EA1)				
	(Continued)		(Continued)		(Continued)		

EPS SSR-51 (Cont)
BUS LOSS: MNC FPC3

ACTIONS	EQUIP/FUNCTION LOST	CREW INDICATIONS	NOTES
Pre-seat ingress for Entry: • Discharge handheld fire ext into AV BAY 2	Av Bay 2 agent discharge capability	HYD/APU HYD QTY 3 ind – 0% 12 APU H2O QTY ind – 0%	(12) APU H2O QTY 2 if in BLR CNTLR/HTR 2A. APU H2O QTY 3 if in BLR CNTLR/HTR 3B
	13 RMS: 14 Port MPM Mtr 1 14 Stbd MPM Mtr 2 15 Port Fwd MRL Mtr 2 15 Port Aft MRL Mtr 1 17 Stbd Mid MRL Mtr 2 17 Stbd Fwd MRL Mtr 1	(O8) FWD RCS 16 TK ISOL 1/2 tb – bp 16 MANF ISOL 4 tb – bp 16 5 tb – bp	(13) MPM and MRLS may be repwrd after AC Pwr Transfer Cable connected
If AC Pwr Transfer Cable to be installed to regain AC: • Go to EPS SSR-200; otherwise, continue with bus loss actions		(O1) H2O PUMP OUT PRESS LOOP 1 ind – 0 psia H2O PUMP OUT PRESS LOOP 2 ind – 20-25 psia	(14) Single mtr time. One failure away from EVA to stow MPM or from RMS/OBSS jettison. May be repwrd after AC Pwr Transfer Cable connected
SM 60 SM TABLE MAINT 18 • INHIBIT 0612605, 0612600, 0612640, 0612610		AIR TEMP AV BAY ind – 45 degF FREON FLOW 1 ind – 578 pph	(15) Single mtr time. If unlatched, one failure away from loss of two out of three MRLs. EVA or RMS jettison capability exists. If latched, one failure away from inability to use RMS
(CDR SEAT PNL) • CDR SEAT PWR BUS SEL – AC2 (up)	CDR Seat Adj via AC3 pwr	R ADP deploy time incr from 15 to 30 sec	(16) Vlv holds position
(PLT SEAT PNL) • PLT SEAT PWR BUS SEL – AC2 (up)	PLT Seat Adj via AC3 pwr	(F7) If APUs active and using BLR CNTLR/HTR 2A or 3B: C/W APU TEMP lt – on after ~2 min	(17) Single mtr time. One failure away from loss of MRL latching capability. EVA or OBSS jettison capability exists. May be repwrd after AC Pwr Transfer Cable connected
(O17) • SIG CONDR FREON A – AC2 • SIG CONDR FREON B – AC2	19 Freon Sig Condr A AC3 pwr (ECLS SC 1A) 20 Freon Sig Condr B AC3 pwr (ECLS SC 1B)	STAR TRKR DR POS -Z OP/CL time incr from 8 to 16 sec	(18) Inhibits H2O Loop 1 Pump ΔP, Pump Out Press, Pump Out Temp, Accum Qty, respectively
(R2) • BLR CNTLR/HTR 2 – B • 3 – A	APU/HYD Blr Cntlr/Htr 2A 3B Hyd Rsvr 3 Qty Snsr		(19) Freon Loop 1 P/L Hx Flow Rate, Freon Loop 2 ICH Flow Rate, and Accum Qty snsrs lost
(L1) • IMU FAN B(A) – ON • C – OFF	IMU Fan C H2O Loop 2 Pump man ON capability		(20) Freon Loop 2 P/L Hx Flow Rate, Freon Loop 1 ICH Flow Rate, and Accum Qty snsrs lost
• Perform (H2O Loop 2 only) H2O PUMP OPS via GPC, ECLS SSR-10	16 H2O Loop 1 Byp Cntlr, Sig 21 Condr H2O Loop 1 Byp vlv pwr		(21) H2O Loop 1 Pump Out P, Pump ΔP, Accum Qty, Pump Out Temp snsrs lost
• CAB FAN A – OFF • B – ON	Cabin Fan A		(22) AV Bay 1 Fan ΔP, Air Out Temp snsrs lost
• AV BAY 1 FAN (two) – ON • √AV BAY 2 FAN A – ON • B – OFF • 3 FAN A – OFF • √B – ON • √FREON PUMP LOOP 2 – B	Av Bay 1 Sig condr, Xdcrs 22 (ECLS SC2) Av Bay 2 Fan B Av Bay 3 Fan A Freon Loop 2 Pump A		
(Continued)	(Continued)		

EPS SSR-51 (Cont)
BUS LOSS: MNC FPC3

	BUS ISOLATION		EQUIP/FUNCTION LOST
23	ONLY ON MCC CALL, PERFORM		
	• MDU CRT 3 PWR – OFF		
	(L4:N) • cb AC3 ΦC RAD ISOL B – op	24	Freon Loop 1,2 Rad Isol Motor B
	(C2) • IDP/CRT 3 PWR – OFF		
	(O7) • (OV105) GPS 3 PWR – OFF • (OV105) GPS 3 PRE AMPL UPPER – OFF • (OV105) GPS 3 PRE AMPL LOWER – OFF		(OV105) GPS 3
	(O16:C) • cb MNC FIRE SUPPR BAY 2 – op		
	• MDU CRT 4 PWR – OFF		
	(R11L) • IDP/CRT 4 PWR – OFF		
	(MA73C:A) • MCA LOGIC MNC FWD 3 – OFF		MNC FMC 3 Bus pwr
	(R14:C) • cb MNB KU ELEC – op		
	(A13) • (OV103) GPS PWR – OFF • (OV103) GPS PRE AMPL UC – OFF • (OV103) GPS PRE AMPL LC – OFF		(OV103) GPS 2
			AC3 FMC3 Bus Pwr LH Vents 1,2,3 Mtr 1 6 Mtr 2 RH Vents 8,9 Mtr 1 3,5 Mtr 2 -Z Star Trkr Dr Sys 2 OP/CL capability
		25	R ADP Dpy Mtr 1
			PLT HUD
		26	R ADP Htr Cntlr 1
		27	NLG Ext Sys 1
		27	NLG,LMG,RMG Bkup Rel Sys 1
			MNC Pwr to CNTL Buses BC1,BC2,BC3,CA1,CA2, CA3
		28	ET Door Mtrs: C/L Lat Actr 2 Mtr 2 L Dr Closure Mtr 2 R Dr Closure Mtr 1 Uplock Lat Mtr 1
		29	Freon Loop 2 Cntlr A Rad Byp Vlv Mtr
		16	Freon Loop 2 Flow Prop Vlv
			Port,Stbd Rad Lat 7-12 Mtrs 2 Port,Stbd Rad Dpy/Sto Mtrs 2
			PLBD: C/L Lat 13-16 Mtr 1 1-4, 5-8, 9-12 Mtr 2 Stbd Aft Blkhd Mtr 1 Port Aft Blkhd Mtr 2 Door Mtr 1
		30	Ku Ant Sto/Dpy Mtr 1

CREW INDICATIONS

NOTES
(16) Vlv holds position
(23) AC3 Bus Isolation for AC Pwr Transfer Cable installation accomplished in MNC FPC 3 ACTIONS column. No additional bus isolation steps reqd
(24) Motor A remains
(25) Mtr 2 remains
(26) Htr Cntlr 2 remains
(27) LG can still be deployed by Pri Hyd System or by redundant Pyro Backup Release System 2. NLG extension pwr assist still available from redundant sys. NLG can also be deployed by Hyd Sys 2
(28) Redundant mtrs remain
(29) Bypass vlv holds position and Cntlr B Rad Byp Vlv Mtr remains
(30) √MCC for Ku Ant stow reqmts

EPS SSR-52
BUS LOSS: MNC MPC3 (Includes MNC MMC2 & MNC MMC4)

ACTIONS	EQUIP/FUNCTION LOST	CREW INDICATIONS	NOTES
1 • Perform MNC BUS TIE (BUS TIE Cue Card) 1 • Monitor, record Δamps between FC3 and tied FC	1 FC3 Purge Vlv O2,H2 Flow Xdcrs SS ΔV Snsrs	(R13L) 2 RAD CNTL PORT,STBD (two) tb – bp	(1) Buses are tied due to: Loss of FC3 Purge capability. As FC3 loses performance the tied FC will pick up load, slowing FC3 degradation. If degradation projection does not allow for nominal EOM, Fuel Cell will be shut down. √MCC and Loss of FC3 SS ΔV Snsrs. Change in ΔAmps >12 amps indicates possible cell crossover problem. ΔAmps shift due to loss of FC3 purge capability is indicated by change in ΔAmps between pre- and post-purge readings. MCC will aid in this determination
(L2) • FLASH EVAP FDLN HTR B SPLY – 2	FES H2O Fdln B Mid 2 Htr 1	(Lights Lost) PLB Floodlts Aft Port, Mid Stbd	
(A12) • HYD HTR AFT FUS A – AUTO • HYD HTR AFT FUS B – OFF	Aft Fuselage Hyd Htrs B	If first RGA failure and rates sensed: 'RM FAIL RGA' (3)	
(R11U) • FC H2O LINE HTR – A AUTO • FC H2O RELIEF HTR – A AUTO	FC H2O Line Htrs B Relief Htrs B Noz Htr	If FC H2O Rlf Htrs in B AUTO: SM ALERT Light/Tone – on 'S69 FUEL CELL'	
(MA73C:C,D) 2 • cb MCA PWR AC3 3Φ MID 2 – op 2 • cb MCA PWR AC3 3Φ MID 4 – op	2 Port,Stbd Rad Lat 7-12 Mtr 2 Limit sw 3 Port,Stbd Rad Dpy/Sto Mtrs 1 Limit sw Port,Stbd Rad Dpy/Sto Mtrs 2	SM (BFS SM 63) PL BAY DOORS If in AUTO OP/CL for PLBDs, sequence terminates immediately and msg '(S63) PBD CONFIG'	(2) If AC3 MMC2 and MMC4 cbs not opened, Lat Mtrs 2 of actuators for Port,Stbd Rad Lat 7-12 continues to run until Sys B Lat Cntl sw placed to OFF
For PLBD ops: • OP/CL Drs in man mode	PLBD: C/L Lat 13-16 Mtr 1 1-4,5-8,9-12 Mtr 2 Stbd Aft Blkhd Lat Mtr 1 Port Aft Blkhd Lat Mtr 2 Door Mtr 1 Stbd Door Mtr 2 CL Limit sw	During MAN PLBD OP/CL, single mtr run time noted on actuators listed at left (A8L) PORT RMS: DPY/STO tb – bp RETEN LAT tb – bp R-F-L AFT tb – bp STARBOARD RMS: DPY/STO tb – bp	(3) Mtrs 1 will continue to drive until Sys A,B Cntl sw are taken to OFF
(L1) • TOP EVAP HTR DUCT – A(B) If Hi Load Evap enabled: • HI LOAD DUCT HTR – A(B)	Topping Evap Duct Fwd,Aft Htr C Hi Load Duct Inbd,Outbd Htr C	SM 94 PDRS CONTROL PORT RMS Indications lost: MPM Mtr 1 STO/DPY Fwd MRL Mtr 2 LAT/REL/RDY Aft MRL Mtr 1 LAT/REL/RDY STBD RMS Indications lost: MPM Mtr 2 STO/DPY Mid MRL Mtr 2 LAT/REL/RDY	(4) Logic buses 2(3) remain pwrd via MNB(MNA)
BUS ISOLATION			(5) Buses remain pwrd
ONLY ON MCC CALL, PERFORM			(6) Cntlrs A,B Rad Byp Mtrs Auto Cntl and Cntlr B Rad Byp Vlv Mtr Man Cntl remain
(A7U) PL BAY FLOOD • AFT PORT – OFF • MID STBD – OFF	PLB Aft Port Floodlt Mid Stbd Floodlt		
(A7L) IF DOCKING MISSION • PYRO PWR MNC – OFF cb MNC • LOGIC 2 – op • 3 – op	MNC Pyro system 4 MNC pwr to DSP Logic buses 2,3		
(O16:A) • RGA 3 – OFF	RGA 3		
(R11U) • FC PURGE VLV 3 – CL • FC STARTUP HTR 3 – ENA	FC3 Startup Htr INH capability		
(MA73C:A,B) • MCA LOGIC MNC MID 2,4 (two) – OFF	MNC MMC2, MNC MMC4 Bus pwr		
	5 MNC pwr to ESS1BC,2CA		
	6 Freon Loop 1 Cntlr A Rad Byp Vlv Mtr man Cntl		
	(Continued)		

EPS SSR-52 (Cont)
BUS LOSS: MNC MPC3

BUS ISOLATION		EQUIP/FUNCTION LOST	CREW INDICATIONS	NOTES
		RMS: 7 Port MPM Mtr 1 7 Stbd MPM Mtr 2 8 Port Fwd MRL Mtr 2 8 Port Aft MRL Mtr 1 9 Stbd Mid MRL Mtr 2		(7) Single mtr time. One failure away from EVA to stow MPM or from RMS/OBSS jettison (8) Single mtr time. One failure away from loss of two out of three MRLs. EVA or RMS jettison capability exists (9) Single mtr time. One failure away from loss of MRL latching capability. EVA or OBSS jettison capability exists (10) With an inop limit sw, mtr will continue to run until primary sw returned to GND (11) Redundant sig (MNB) enables Ku Band Xmit (12) MNB MMC4 pwr remains to supply pwr to Boom Stow Enable II signal for stow mtrs
		RH Vent 3 Mtr 2 5 Mtr 2 LH Vent 3 Mtr 1 6 Mtr 2 10 Ku Ant Dpy/Sto Mtr 1 Limit sw		
		11 Redundant Ku Band Xmit Enable 12 Redundant Boom Stow Enable II Excitation Signal		
		FC2 Redundant Reac Vlv Close Cntl on pnl C3		

EPS SSR-53
BUS LOSS: MNC APC3

ACTIONS	EQUIP/FUNCTION LOST
GNC 23 RCS	
1 DES INH on L Manf 3 Jets: • ITEM 2 EXEC • L3L ITEM 12 EXEC (*) • L3D ITEM 28 EXEC (*) • L3A ITEM 30 EXEC (*) Set aft pod(s) PRI JET FAIL LIMIT to 6	
Refer to OMS/RCS Slide Rule for vlv loss info (use APC6 Slide for Aft RCS)	2 Aft L RCS He Press Isol B GPC Cntl, man CL capability
3 Reconfig following vlv(s) only if leak isolation reqd: (O7) • AFT L RCS He PRESS B • R RCS He PRESS B	4 Aft R RCS He Press Isol B man OP capability 2 Aft L,R RCS Manf Isol 5 Cntl
(A12) APU HTR TK/FU LN/H2O • SYS 3B – AUTO • SYS 3A – OFF	APU 3 GG Inj H2O Htrs 3A,23A
(A14) RCS/OMS HTR • L POD (two) – A AUTO, B OFF • R POD (two) – A AUTO, B OFF	L,R Pod Htrs B (partial)
5 Prior to using L,R OMS: (O8)	
6 R OMS He PRESS/VAP ISOL • A – GPC • B – OP 8 L OMS He PRESS/VAP ISOL • A(B) – GPC • B(A) – CL	7 R OMS He Vap Isol 2 GPC Cntl 7 R OMS He Pr Isol B GPC Cntl 9 L OMS He Pr/Vap Isol A,B man Cntl
GNC XXXXX MNVR YYYYY (3,B) Sel R OMS SEC TVC: • GMBL SEC R – ITEM 31 EXEC	R OMS Pri TVC

BUS ISOLATION	
ONLY ON MCC CALL, PERFORM	
(R1) • PL AFT MNC – OFF	Aft Payload C pwr
	R OMS BPV 2 OP sig 10 APU 2 Fu Tk Vlv B

CREW INDICATIONS
If OMS GMBL cmd abs value > 2 deg: C/W OMS TVC lt – on 'R OMS GMBL' (3,B)

NOTES
(1) Maintains control capability for APC4 failure
(2) Vlv holds position
(3) Do not reconfig for reg switch or I'CNCT procedures
(4) Man CL and GPC cntl remains
(5) Lost TM: GNC SYS SUMM 2 R OMS Eng Vlv 2: Assume Vlv 2 status same as Vlv 1
(6) Maintains He Isol redundancy
(7) Vlv normally closed. Man cntl remains
(8) Prevents simultaneous opening of parallel reg paths and possibly rupturing burst disk
(9) Vlv normally closed. GPC cntl remains
(10) Vlv fails closed. Redundant vlv remains

EPS SSR-54
BUS LOSS: MNC APC6

(Includes MNC APC3, MNC ALC3, MNC AMC3)

ACTIONS	EQUIP/FUNCTION LOST	CREW INDICATIONS	NOTES
(L1) • FLASH EVAP CNTLR PRI A – OFF • FLASH EVAP CNTLR PRI B(SEC) – ON (If reqd) • TOP EVAP HTR NOZ R – A AUTO If HI LOAD EVAP enabled: • HI LOAD DUCT HTR – A(B)	Flash Evap Cntlr Pri A Topping Evap R Noz Htr B Hi Load Duct Noz Htr C	(R4) 1 HYD BK ISOL VLV 3 tb – OP 1 HYD MPS/TVC ISOL VLV SYS 3 tb – CL	(1) Vlv holds position (2) Do not reconfig for reg switch or l'CNCT procedures (3) Man CL and GPC cntl remains (4) Maintains control capability for APC1 failure (5) * TIME CRITICAL * If not done within 20 min, may freeze N2H4 and lose APU. However, SM ALERT occurs above freezing temp
(L2) • FLASH EVAP FDLN HTR B SPLY – 2	FES H2O Fdln B Htrs 1 (all except Mid 2)	(O7) 1 AFT L RCS He PRESS B tb – bp 1 AFT L,R RCS MANF ISOL 5 (two) tb – bp	
Refer to OMS/RCS Slide Rule for vlv loss info 2 Reconfig following vlv(s) only if leak isolation reqd: (O7) • AFT L RCS He PRESS B • R RCS He PRESS B	1 Aft L RCS He Press Isol B GPC Cntl and man CL capability 3 Aft R RCS He Press Isol B man OP capability	(FSMs) S88 FRN AFT CP 2 RCS PWR FAIL	
GNC 23 RCS • Reprioritize L,R Manf 3,4 Jets to first priority: DES INH twice all other jets; highest priority first, then next highest, etc 4 DES INH on L Manf 3 Jets: • ITEM 2 EXEC • L3L ITEM 12 EXEC (*) • L3D ITEM 28 EXEC (*) • L3A ITEM 30 EXEC (*) • Set aft pod(s) PRI JET FAIL LIMIT to 6	Aft RCS L,R Jets 3,4 Htrs	If cooling by FES only: C/W FREON LOOP lt – on 'S88 EVAP OUT T 1' 'S88 EVAP OUT T 2'	
(R2) • BLR CNTLR/HTR 2 – B • 3 – A	APU/HYD Blr Cntlr/Htr 2A 3B	(F7) If APUs active and using BLR CNTLR/HTR 2A or 3B, C/W APU TEMP lt – on after ~2 min	
(A12) APU HTR TK/FU LN/H2O 5 • SYS 2A – AUTO • 2B – OFF 5 • SYS 3A – OFF • 3B – AUTO APU HTR GAS GEN/FUEL 5 • PUMP 2 – A AUTO 5 • 3 – B AUTO APU HTR • LUBE OIL LINE 2 – A AUTO • LUBE OIL LINE 3 – B AUTO HYD CIRC • PUMP PWR 2 – MNB • 3 – MNA	APU 2 TK/FU Ln Htr B 3 TK/FU Ln Htr A 3 GG Inj H2O Htrs 3A,23A APU 2 GG/FU Pump Htr B 3 GG/FU Pump Htr A APU 2 Lube Oil Ln Htr B APU 3 Lube Oil Ln Htr A Circ Pmp 2 MNC pwr 3 MNC pwr	If OMS Gmbl cmd abs value > 2 deg: C/W OMS TVC lt – on 'R OMS GMBL' (3,B)	
(A14) RCS/OMS HTR • L POD (two) – A AUTO, B OFF • R POD (two) – A AUTO, B OFF	L,R Pod Htrs B (partial)	No R MPS He usage during entry (MM304)	
(Continued)	(Continued)		

EPS SSR-54 (Cont)
BUS LOSS: MNC APC6

ACTIONS	EQUIP/FUNCTION LOST
6 Save R OMS Eng for deorbit (If reqd for additional on-orbit burns, √MCC)	6 R OMS GN2 Press Vlv OP TM 7 R OMS Eng Pr Vlv Coil 1
Prior to using L(R) OMS: (O8) 8 R OMS He PRESS/VAP ISOL • A – GPC • B – OP 10 L OMS He PRESS/VAP ISOL • A(B) – GPC • B(A) – CL	9 R OMS He Vap Isol 2 GPC Cntl 9 R OMS He Pr Isol B GPC Cntl 11 L OMS He Pr/Vap Isol A,B man Cntl
GNC XXXXX MNVR YYYYY (3,B) Sel R OMS SEC TVC: • GMBL SEC R – ITEM 31 EXEC	R OMS Pri TVC
For SSME Hyd Repress: (R4) • HYD MPS/TVC ISOL VLV SYS 1,2 (two) – OP, wait 10 sec, then CL	1 MPS/TVC Hyd Sys 3 Isol Cntl
If reqd during entry (< 120K ft): (L1) • NH3 CNTLR A – PRI/GPC If reqd for Post Rollout: • NH3 CNTLR B – SEC/ON	12 NH3 Sys A Sec Cntlr Man ON capability 13 NH3 Sys B Pri Cntlr and Auto switchover to Sec Cntlr
If NH3 CNTLR A(B) – SEC/ON reqd, then: (L1) • H2O PUMP LOOP 1,2 (two) – ON • √FLOW PROP VLV LOOP 1,2 (two) – ICH If applicable: • Activate PL H2O LOOP(s)	

BUS ISOLATION	EQUIP/FUNCTION LOST
ONLY ON MCC CALL, PERFORM	
(R1) • PL AFT MNC – OFF	Aft Payload C pwr PL MNC Cur Sig Condr
	14 ATVC 1 Isol ME
(MA73C:B) • MCA LOGIC MNC AFT 3 – OFF	MNC AMC3 Bus pwr RH Vents 8,9 Mtr 1
	Freon Loop 2 Cold Plate Flow Xdcr 15 APU 2 Cntlr Pwr Sply B 16 Fu Tk Vlv B 17 APU 3 Cntlr Pwr Sply A 16 Fu Tk Vlv A GBX GN2 Repress Vlv
	18 Hyd Main Pump 3 Depress Solenoid RPC A 18 Hyd Main Pump 2 Depress Solenoid RPC B
	(Continued)

CREW INDICATIONS

NOTES
(1) Vlv holds position
(6) Lost TM: GNC SYS SUMM 2 R OMS N2 P VLV If Eng – ARM/PRESS assume vlv OP R OMS ENG Vlv 2: assume Vlv 2 status same as Vlv 1
(7) Unable to confirm redundant coils
(8) Maintains He Isol redundancy
(9) Vlv normally closed. Man cntl remains
(10) Prevents simultaneous opening of parallel reg paths and possibly rupturing burst disk
(11) Vlv normally closed. GPC cntl remains
(12) Sys A Pri Cntlr, auto switchover to Sec Cntlr remain
(13) Sys B Sec Cntlr man On capability remains
(14) Six vlvs fail in non-isolation position
(15) Pwr Sply A remains. Turbine Speed ind lost
(16) Vlv fails closed. Redundant vlv remains
(17) Pwr Sply B remains. GG Bed T and GBX P ind lost when APU running
(18) Redundant RPC remains

EPS SSR-54 (Cont)
BUS LOSS: MNC APC6

BUS ISOLATION		EQUIP/FUNCTION LOST	CREW INDICATIONS	NOTES
	1	Hyd Brake Isol 3 Cntl	R MPS He reg A < 680 during entry (MM303)	(1) Vlv holds position
	19	R OMS Cntl Vlv 1,2 Coils 1		(19) Redundant coils remain
	20	OMS Qty Gauging for all R OMS single engine burns		(20) √MCC for OMS Qtys
	21	R OMS Purge Vlv 1,2 Aft RCS L,R Jet 5 Htr		(21) **CAUTION** No purge. Wait 10 min between burns
	22	MPS: R Eng He Intercon Outlet Vlv		(22) Vlv fails closed
	23	R Eng He Isol A		(23) Vlv fails closed. Redundant vlv remains
	22	L Eng He Xovr Vlv		(24) Vlv fails closed. LO2 Manf will not be pressurized with He during entry (MM304)
	24	Manf Repress LO2 Vlv 1,2		(25) Vlv holds position. Loss of manual capability to inert LO2 manf
	25	Prplt F/D Outbd LO2 Vlv		(26) Redundant mtrs remain
	26	ET Door Mtrs: C/L Lat Actr 2 Mtr 2 GPC Cntl L Dr Closure Mtr 2 GPC CL capability R Dr Closure Mtr 1 GPC CL capability R Dr Uplock Lat Mtr 1 GPC Lat capability		
		AC Pwr removal capability via Limit sw for ET Dr Mtrs: C/L Lat Actr 2 Mtr 2 L Dr Closure Mtr 2 R Dr Closure Mtr 1 Uplock Lat Mtr 1		

EPS SSR-55
BUS LOSS: MNC FLC3

ACTIONS	EQUIP/FUNCTION LOST
(A1L) S-BD PM • ANT SW ELEC – 1 • XPNDR – 1 • PWR AMPL OPER – 1 • PWR AMPL STBY – 1 • PRE AMP – 1 NSP • PWR – 1	S-BD PM Sys 2: FM, PM Ant Sw 2 Xpndr 2 Pwr Ampl 2 Pre Amp 2 NSP 2
If PSP and/or INTRG reqd for PL or ISS ops: • S-BD PL PWR SYS – 1 • CNTL – PNL • – CMD 5 • Reconfig PSP 5 • Perform PL INTRG REACQ (if reqd)	S-BD PL Intrg 2 PSP 2
(A1R) • S-BD FM PWR – 1	S-BD FM Sys 2
If no comm: (C3) • S-BD PM CNTL – PNL • – CMD	
7 If OIU reqd: (SSP) • OIU PWR – OIU 1 ON • OIU tb – UP • √MCC, OIU reconfig	
• For attitude control, perform LOSS OF VERNIERS (ORB OPS, RCS)	RCS Manf F5 RJD pwr (F5L,F5R)
GNC 23 RCS 8 Override F4 Manf status to CL: • RCS FWD – ITEM 1 EXEC • MANF VLVS 4 OVRD – ITEM 43 EXEC	RCS Manf F4 RJD pwr (F4R,F4D)
Refer to OMS/RCS Slide Rule for vlv loss info 9 Reconfig following vlv only if leak isolation reqd: (O8) • FWD RCS He PRESS B	4 Fwd RCS He Press Isol B man OP capability
• Pre-seat ingress for Entry, discharge hand-held fire ext into AV BAY 2	Av Bay 2 agent discharge capability

BUS ISOLATION
ONLY ON MCC CALL, PERFORM
(O16:C) • cb MNC FIRE SUPPR BAY 2 – op

EQUIP/FUNCTION LOST
10 R ADP Htr Cntlr 1 NWS fail indication (pnl F2)
NLG, RMG B/U Rel 1 Fire 2, Arm

CREW INDICATIONS
(COMM LOST) All S-BD A/G voice lost if Sys 2 selected
(F7) 1 C/W RCS JET lt – on
(F6,F8) 2 LDG GEAR R tb – bp 3 LDG GEAR NOSE tb – bp
(O8) 4 FWD RCS MANF ISOL 5 tb – bp
(FSMs) 1 F RCS D(R) JET RM DLMA MANF
If NSP 2 selected: 'BCE STRG 3 NSP' If site AOS and using S-BD 6 ANT Elec 2: 'ANTENNA (2)
If Sys 2 pwrd: 'S62 BCE BYP PSP2' Loss of PL TLM and CMD If PDI FDA enabled: 'S62 PDI DECOM FAIL'

NOTES
(1) Indications do not appear until jets commanded
(2) Does not indicate DN when RMG down
(3) Indicates DN when Nose Gear down
(4) Vlv holds position
(5) REACQ and PSP reconfig procedures are flight specific. If reqd, procedures can be found in payload or ISS specific books
(6) FSM caused by Antenna miscompare
(7) OIU 1 interfaces with PSP 1 for commanding
(8) Manf status not automatically declared closed. Jet fail-offs may occur when commanded
(9) Do not reconfig for reg switch or I'CNCT procedures
(10) Htr Cntlr 2 remains

EPS SSR-56
BUS LOSS: MNC ALC3

ACTIONS	EQUIP/FUNCTION LOST	CREW INDICATIONS	NOTES
(L1) • FLASH EVAP CNTLR PRI A – OFF • FLASH EVAP CNTLR PRI B(SEC) – ON (If reqd) • TOP EVAP HTR NOZ R – A AUTO If HI LOAD EVAP enabled: • HI LOAD DUCT HTR – A(B)	FES Cntlr Pri A Topping Evap R Noz Htr B Hi Load Duct Noz Htr C	(R4) 1 HYD BK ISOL VLV 3 tb – OP 1 HYD MPS/TVC ISOL VLV SYS 3 tb – CL	(1) Vlv holds position (2) Do not reconfig for reg switch or l'CNCT procedures (3) HYD H2O Blr and Tk Htrs are still operative, but GN2 SOV fails open and steam vent htr and spray logic are disabled. Alternate controller must be selected
(L2) • FLASH EVAP FDLN HTR B SPLY – 2	FES H2O Fdln B Htrs 1 (all except Mid 2)	(O7) 1 AFT L RCS He PRESS B tb – bp 1 AFT L,R RCS MANF ISOL 5 (two) tb – bp	
Refer to OMS/RCS Slide Rule for bus loss info 2 Reconfig following vlv(s) only if leak isolation reqd: (O7) • AFT R RCS He PRESS B • L RCS He PRESS B	Aft R RCS He Pr Isol B man OP capability 1 Aft L RCS He Press Isol B GPC Cntl, man CL capability	(FSMs) RCS PWR FAIL	(4) * TIME CRITICAL * If not done within 20 min, may freeze N2H4 and lose APU. However, SM ALERT occurs above freezing temp
GNC 23 RCS • Reprioritize L,R Manf 3,4 Jets to first priority: DES INH twice all other jets; highest priority first, then next highest, etc • Set aft pod(s) PRI JET FAIL LIMIT to 6	Aft RCS L,R Jet 3,4 Htrs	If cooling by FES only: C/W FREON LOOP lt – on 'S88 EVAP OUT T1' 'S88 EVAP OUT T2'	
(R2) • BLR CNTLR/HTR 2 – B • 3 – A	3 APU/HYD Blr Cntlr/Htr 2A 3 3B	(F7) If APUs active and using BLR CNTLR/HTR 2A or 3B: C/W APU TEMP lt – on after ~2 min	(5) Lost TM: GNC SYS SUMM 2 R OMS N2 P VLV If Eng – ARM/PRESS, assume vlv OP
(A12) APU HTR TK/FU LN/H2O 4 • SYS 2A – AUTO • 2B – OFF 4 • 3A – OFF • 3B – AUTO APU HTR GAS GEN/FUEL 4 • PUMP 2 – A AUTO 4 • 3 – B AUTO APU HTR LUBE OIL • LINE 2 – A AUTO • 3 – B AUTO HYD CIRC • PUMP PWR 2 – MNB • 3 – MNA	APU 2 Tk/Fu Ln Htr B APU 3 Tk/Fu Ln Htr A APU 2 GG/FU Pump Htr B 3 GG/FU Pump Htr A APU 2 Lube Oil Ln Htr B 3 Lube Oil Ln Htr A Circ Pump 2 MNC pwr 3 MNC pwr		(6) Unable to confirm redundant coils (7) Maintains He Isol redundancy (8) Vlv normally closed. Man cntl remains
5 Save R OMS eng for deorbit (If reqd for additional on-orbit burns, √MCC)	5 R OMS GN2 Press Vlv OP TM 6 R OMS Eng Pr Vlv Coil 1		
Prior to using R OMS: (O8) 7 R OMS He PRESS/VAP ISOL • A – GPC • B – OP	8 R OMS He Pr Isol B GPC Cntl		
	1 MPS/TVC Hyd Sys 3 Isol Cntl		
(Continued)	(Continued)		

EPS SSR-56 (Cont)
BUS LOSS: MNC ALC3

ACTIONS		EQUIP/FUNCTION LOST
If reqd during entry (< 120K ft): (L1) • NH3 CNTLR A – PRI/GPC If reqd for Post Rollout: • NH3 CNTLR B – SEC/ON	9 10	NH3 Sys A Sec Cntlr man ON capability NH3 Sys B Pri Cntlr and Auto sw over to Sec Cntlr
If NH3 CNTLR A(B) – SEC/ ON reqd, then: (L1) • H2O PUMP LOOP 1,2 (two) – ON • √FLOW PROP VLV LOOP 1,2 (two) – ICH If applicable: • Activate PL H2O LOOP(s)		
BUS ISOLATION		
ONLY ON MCC CALL, PERFORM		
NONE	11 12 13	R OMS Eng Cntl Vlv 1,2 Coils 1 OMS Qty Gauging for all R OMS Single Engine burns R OMS Purge Vlv 1,2 Aft RCS L,R Jet 5 Htr
	1 14 14	Hyd Brake Isol 3 Cntl APU 2 Fu Tk Vlv B 3 Fu Tk Vlv A
		MPS: 15 R Eng He Intercon Outlet Vlv 14 R Eng He Isol A 15 L Eng He Xovr Vlv 16 Manf Repress LO2 Vlv 1,2 17 Prplt F/D Outbd LO2 Vlv

CREW INDICATIONS
R MPS He reg A < 680 during entry (MM303)

NOTES
(1) Vlv holds position
(9) Sys A Pri Cntlr, auto switchover to Sec Cntlr remain
(10) Sys B Sec Cntlr man On capability remains
(11) Redundant coils remain
(12) √MCC for OMS Qtys
(13) **CAUTION** No purge. Wait 10 min between burns
(14) Vlv fails closed. Redundant vlv remains
(15) Vlv fails closed
(16) Vlv fails closed. LO2 Manf will not be pressurized with He during entry (MM304)
(17) Vlv holds position. Loss of manual capability to inert LO2 manf

EPS SSR-57
BUS LOSS: MNC FMC3

ACTIONS
• Refer to OMS/RCS Slide Rule for vlv loss info
GNC 23 RCS
Override F4 Manf status to OP • RCS FWD – ITEM 1 EXEC • MANF VLVS 4 OVRD – ITEM 43 EXEC

BUS ISOLATION
ONLY ON MCC CALL, PERFORM
(MA73C:A) • MCA LOGIC MNC FWD 3 – OFF

EQUIP/FUNCTION LOST
2 -Z Star Trkr Dr Sys 2 OP/CL capability R ADP Deploy Mtr 1 Disc 1
3 MNC FMC3 Bus pwr R ADP Htr Cntlr 1 LH Vent 1,2 Mtr 1

CREW INDICATIONS
(FSM) RM DLMA MANF
(O8) 1 FWD RCS TK ISOL 1/2 tb – bp 1 FWD RCS MANF ISOL 4 tb – bp
R ADP deploy time incr from 15 to 30 sec
STAR TRKR DR POS -Z OP/CL time incr from 8 to 16 sec

NOTES
(1) Vlv holds position (2) Mtr 2 remains (3) Htr Cntlr 2 remains

EPS SSR-58
BUS LOSS: MNC MMC2

ACTIONS
(MA73C:C) 1 • cb MCA PWR AC3 3Φ MID 2 – op
For PLBD Ops: • OP/CL Drs in man mode, MANUAL PLBD CLOSING (DEORBIT PREP)

BUS ISOLATION
ONLY ON MCC CALL, PERFORM
(MA73C:A) • MCA LOGIC MNC MID 2 – OFF

EQUIP/FUNCTION LOST
1 Stbd Rad Lat 7-12 Mtr 2 Limit sw 2 Port Rad Dpy/Sto Mtr 1 Limit sw Stbd Rad Dpy/Sto Mtr 2
PLBD: C/L Lat 1-4 Mtr 2 5-8 Mtr 2 Port Aft Blkhd Lat Mtr 2
MNC MMC2 Bus pwr
LH Vents 3 Mtr 1 6 Mtr 2
3 Ku Ant Dpy/Sto Mtr 1 limit sw 4 Redundant Ku-Band Xmit Enable 5 Redundant Boom Stow Enable II Excitation Signal
RMS: 6 Port Aft MRL Mtr 1 7 Stbd Mid MRL Mtr 2

CREW INDICATIONS
1 (R13L) RAD CNTL PORT tb – bp If STBD RAD pnl deployed: RAD CNTL STBD tb – bp
SM (BFS SM 63) PL BAY DOORS If in AUTO OP/CL for PLBDs, sequence terminates immediately and msg '(S63) PBD CONFIG'
During MAN PLBD OP/CL, single mtr run time noted on actuators listed at left
(A8L) PORT RMS: DPY/STO tb – bp RETEN LAT tb – bp R-F-L AFT tb – bp
SM 94 PDRS CONTROL PORT RMS Indications lost: MPM Mtr 1 STO/DPY Fwd MRL Mtr 2 LAT/REL/RDY Aft MRL Mtr 1 LAT/REL/RDY STBD RMS Indications lost: MPM Mtr 2 STO/DPY Mid MRL Mtr 2 LAT/REL/RDY

NOTES
(1) If AC3 MMC2 cb not opened, Lat Mtr 2 of Stbd Lat 7-12 Actuator continues to run until Sys B Lat Cntl sw placed to OFF
(2) Mtr 1 will continue to drive until Sys B Cntl sw is taken to OFF
(3) With an inoperative limit switch, mtr will continue to run until stow sw returned to gnd
(4) Redundant sig (MNB) enables Ku-Band Xmit
(5) MNB MMC4 pwr remains to supply pwr to Boom Stow Enable II Signal for Stow mtrs
(6) Single mtr time. One failure away from loss of two out of three MRLs. EVA or RMS jettison capability exists
(7) Single mtr time. One failure away from loss of MRL latching capability. EVA or OBSS jettison capability exists

EPS SSR-59
BUS LOSS: MNC MMC4

ACTIONS
(MA73C:D) 1 • cb MCA PWR AC3 3Φ MID 4 – op
For PLBD ops: • OP/CL Drs in man mode, MANUAL PLBD CLOSING (DEORBIT PREP)

BUS ISOLATION
ONLY ON MCC CALL, PERFORM
(MA73C:B) • MCA LOGIC MNC MID 4 – OFF

EQUIP/FUNCTION LOST
1 Port Rad Lat 7-12 Mtr 2 Limit sw Port Rad Dpy/Sto Mtr 2 2 Stbd Rad Dpy/Sto Mtr 1 Limit sw
PLBD: C/L Lat 9-12 Mtr 2 13-16 Mtr 1 Stbd Aft Bkhd Lat Mtr 1 Port Door Mtr 1 Stbd Door Mtr 2 CL Limit sw
MNC MMC 4 Bus pwr
RH Vent 5 Mtr 2 3 Mtr 2
RMS: 3 Port MPM Mtr 1 3 Stbd MPM Mtr 2 4 Port Fwd MRL Mtr 2

CREW INDICATIONS
(R13L) RAD CNTL STBD tb – bp If PORT RAD pnl deployed: RAD CNTL PORT tb – bp
SM (BFS SM 63) PL BAY DOORs If in AUTO OP/CL for PLBDs, sequence terminates immediately and msg '(S63) PBD CONFIG'
During MAN PLBD OP/CL, single mtr run time noted on actuators listed at left
(A8L) STARBOARD RMS: DPY/STO tb – bp
SM 94 PDRS CONTROL PORT RMS Indications lost: Fwd MRL Mtr 2 LAT/REL/RDY

NOTES
(1) If AC3 MMC4 cb not opened, Lat Mtr 2 of Port Lat 7-12 Actuator continues to run until Sys B Lat Control sw placed to OFF
(2) Mtr 1 will continue to drive until Sys A Cntl sw is taken to OFF
(3) Single mtr time. One failure away from EVA to stow MPM or from RMS/OBSS jettison
(4) Single mtr time. One failure away from loss of MRL latching capability. EVA or OBSS jettison capability exists

EPS SSR-60
BUS LOSS: MNC AMC3

ACTIONS
NONE

BUS ISOLATION
ONLY ON MCC CALL, PERFORM
(MA73C:B) • MCA LOGIC MNC AFT 3 – OFF

	EQUIP/FUNCTION LOST
	RH Vents 8,9 Mtr 1
	MNC AMC3 Bus pwr
1	ET Door Mtrs: C/L Lat Actr 2 Mtr 2 GPC Cntl L Dr Closure Mtr 2 GPC CL capability R Dr Closure Mtr 1 GPC CL capability R Dr Uplock Lat Mtr 1 GPC Lat capability
	AC pwr removal capability via Limit sw for ET Dr Mtrs: C/L Lat Actr 2 Mtr 2 L Dr closure Mtr 2 R Dr closure Mtr 1 Uplock Mtr 1

CREW INDICATIONS
NONE

NOTES
(1) Redundant mtrs remain

EPS SSR-61
BUS LOSS: MNC R14

ACTIONS	EQUIP/FUNCTION LOST	CREW INDICATIONS	NOTES
(C3) 1 • AUD CTR – 1	1 Audio Center 2	MS Floodlt lost Comm via PS ATU lost 1 If Aud Ctr 2 selected, all comm lost	(1) If AUD CTR 2 selected, all intercom, A/G, recorded voice lost until AUD CTR 1 selected
(AW18D) • AIRLK AUD CNTL – MIDDECK	A/L ATU, EMU CCU 1,2 PS ATU, CCU	2 If operating Ku-Band comm, no U/L voice	(2) Ku comm function lost. RDR function OK
		(F6) MDU CDR 1 blanks	(3) Redundant pwr source remains for equipment
		(F8) MDU PLT 2 blanks	
		(AFT) MDU AFD 1 blanks	

BUS ISOLATION	
ONLY ON MCC CALL, PERFORM	
(R14:A) cb MNC • AUD AUD CTR 2 – op • PS/AIRLK – op • MDU CDR 1 – op • MDU PLT 2 – op • MDU AFD 1 – op	 MDU CDR 1 MDU PLT 2 MDU AFD 1
(R14:B) cb MNC • UHF – op • GCILC – op • CNTL BUS AB1/2/3 – op 3 cb PALLET/DSC • 2A – op (EDO) • 3B/4A – op (EDO)	 UHF redundant pwr GCIL redundant pwr MDM cmds to CCTV Sys MNC pwr for CNTL AB1,AB2 AB3
(R14:C) • cb MNC KU SIG PROC – op • cb UHF EVA – op	 2 Ku Comm Sig Proc SSOR EVA STRG 2
(R14:D) • cb MNC TV CAB – op cb MNC TV B CAMR • CAMR/PTU – op • CAMR HTR – op • ILLUM/PTU HTR – op	 Flt, Middeck TV Camrs, VFMs TV B Camr/Pan-Tilt TV B Camr Htr TV B Pan-Tilt Htr and Illum
(R14:E) • cb MNC MS FLOOD – op	 MS Floodlt
• MDU CDR 1 PWR – OFF • MDU PLT 2 PWR – OFF • MDU AFD 1 PWR – OFF	

EPS SSR-62
BUS LOSS: MNC O16RJD

ACTIONS
NONE

BUS ISOLATION
ONLY ON MCC CALL, PERFORM
NONE

	EQUIP/FUNCTION LOST
1	ON Cntl of RCS F4 Manf Drivers (F4D,F4R)

CREW INDICATIONS

NOTES
(1) F4 Manf Drivers lost if both F3 Driver sw and F4 Driver sw OFF when bus failed. F1 Driver sw now controls pwr to F3 Manf Drivers

EPS SSR-63
BUS LOSS: MNC O16

	ACTIONS
1	(R1) • BUS TIE MNB – ON (tb-ON)
	(O6) • ANNUN BUS SEL ACA 2/3 – MNB
	(F6,F8) • HSI SEL SOURCE – other than MLS, (OV103,4) TACAN 3 or (OV105) GPS 3
	(A6U) • ANNUN BUS SEL – MNB
	(O14:D) cb MNA • (OV103) GPS PRE AMPL UC – cl • (OV103) GPS PRE AMPL LC – cl
	(A13) • (OV103) GPS PRE AMPL UC – MNA • (OV103) GPS PRE AMPL LC – MNA

	EQUIP/FUNCTION LOST
2	ACA 2/3 MNC pwr
	MLS 3 (OV103,4) TACAN 3 (OV105) GPS 3
2	ACA 4/5 MNC pwr

	CREW INDICATIONS
	(FSMs) BCE STRG 3 ADTA (3,B) 4 ADTA (3,B) 3 MLS (3)
	(O3) RCS/OMS Prplt Qty Gauge blanks
3	(L2) O2 EMER tb – bp CAB RELIEF B tb – bp
	Time stops updating
2	(LIGHTS LOST) R Seat/Ctr Cnsl Floodlts If ACA 2/3 – MNC, lights lost: (C3) DAP lights left three columns ALL (F6/F8) Landing Gear ARM/DOWN (F3) NWS FAIL lt (L1) Smoke detection fire suppression ALL MO29J MIC KEY
2	If ACA 4/5 – MNC, lights lost: (A6U) DAP lights ALL (A7U) Video input, output, Gamma, ALC A2 MIC KEY

NOTES
(1) FC2 only one failure away (loss of ESS2CA) from inability to bus tie (2) ACAs recovered by switching to alternate pwr (3) If EMER O2 Mission Kit not flown, cb is opened prelaunch

EPS SSR-63 (Cont)
BUS LOSS: MNC O16

ACTIONS	EQUIP/FUNCTION LOST	CREW INDICATIONS	NOTES
Pre-seat ingress for entry, • Discharge handheld fire ext into AV BAY 2	Av Bay 2 Agent discharge capability		(3) If EMER O2 Mission Kit not flown, cb is opened prelaunch (4) Redundant pwr remains (5) L,R L+ DK smoke detectors remain (6) Current Snsr 1 remains (7) Current Snsr 2 remains (8) Vlv remains closed (9) Vlv holds position (10) √MCC for total OMS Qtys. Aft Qtys are found on GNC SYS SUMM 2 (11) PLT Arm remains

BUS ISOLATION	
ONLY ON MCC CALL, PERFORM	
(O8) • MLS 3 – OFF • R SEAT/CTR CNSL FLOOD – OFF	R Seat/Ctr Cnsl Floodlts
(O16:B) cb MNC 4 • OI SIG CONDR OM3 B – op • OI SIG CONDR OF 2/3 B – op • OI MDM OF 3/4 B – op • MNB CONTR – op • AUX TIMING BUFF – op	Orbiter Timing Buffer
(O16:C) cb MNC • (OV103,4) TACAN 3 – op • SMOKE DETN CAB – op • SMOKE DETN BAY 1A/2B – op • UTIL PWR A11/A15/ MO30F – op • FIRE SUPP BAY 2 – op • FLOOD R CTR – op • ANNUN FWD ACA 2/3 – op • ANNUN AFT ACA 4/5 – op • CRYO O2 HTR TK1 SNSR 2 – op • CRYO O2 HTR TK2 SNSR 1 – op	Tacan 3 5 Cabin Smoke Detector Av Bay 1 Smoke Detector A 2 Smoke Detector B MNC Utility pwr 6 Cryo O2 Tk1 Htr Current 7 Snsr 2 Cryo O2 Tk2 Htr Current Snsr 1
(O16:D) cb MNC • H2O ALT PRESS – op 3 • O2 EMER – op • CAB RELIEF B – op • (OV105) GPS 3 PRE AMPL UPPER – op • (OV105) GPS 3 PRE AMPL LOWER – op • (OV103) GPS PRE AMPL UC – op • (OV103) GPS PRE AMPL LC – op	8 H2O Alternate Press Vlv 9 Emer O2 Sply Vlv 9 Cabin Relief Vlv B
(O16:E) cb MNC • ADTA 3,4 (two) – op • MLS 3 – op • DDU R, AFT (two) – op • RCS/OMS PRPLT QTY GAUGE – op • DRAG CHUTE SYS 1 – op	ADTA 3,4 4 R,Aft DDU MNC pwr 10 RCS/OMS Prplt Qty Gauge 11 Drag Chute, CDR Arm

EPS SSR-64
BUS LOSS: MNC R1A1

ACTIONS	EQUIP/FUNCTION LOST	CREW INDICATIONS	NOTES
NONE	1 MNC pwr to CNTLBC1,2,3 and CNTLCA1,2,3 2 MNC pwr to ESS1BC, ESS2CA		(1) Cntl Buses remain pwrd (2) ESS1BC and ESS2CA remain pwrd

BUS ISOLATION
ONLY ON MCC CALL, PERFORM
NONE

EPS SSR-65
BUS LOSS: MNC A14

ACTIONS	EQUIP/FUNCTION LOST	CREW INDICATIONS	NOTES
GNC 23 RCS • Reprioritize Fwd Manf 4 jets to first priority: Des INH twice all other jets, highest priority first, then next highest priority, etc	Fwd RCS Jet 4,5 Htrs		

BUS ISOLATION
ONLY ON MCC CALL, PERFORM
NONE

EPS SSR-66
BUS LOSS: MNC ML86B

ACTIONS	EQUIP/FUNCTION LOST	CREW INDICATIONS	NOTES
(PLT SEAT PNL) • PLT SEAT PWR BUS SEL – AC2 (up)	CDR Seat Adj via AC3 pwr	(AW82D) 1 EMU 1 H2O SPLY tb – CL 1 WASTE tb – CL	(1) Vlv holds position (2) If SPLY H2O DUMP VLV ENA/NOZ HTR – OFF, tb unpwrd and already bp (3) MNA,MNB line htrs remain
(CDR SEAT PNL) • CDR SEAT PWR BUS SEL – AC2 (up)	PLT Seat Adj via AC3 pwr	(R11L) SPLY H2O 1 TKA OUTLET tb – bp 2 DUMP VLV tb – bp 1 XOVR VLV tb – bp 1 GALLEY SPLY VLV tb – bp 1 TKC INLET tb – bp	
If Supply H2O Dump reqd: For TK A and/or TK B • Perform SUPPLY WATER DUMP USING FES (ORB OPS, ECLS), using FLASH EVAP CNTLR PRI A For TK C and/or TK D • Perform SUPPLY WATER DUMP USING FES (ORB OPS, ECLS), using FLASH EVAP CNTLR PRI B	Supply H2O: 1 Dump Vlv Cntl Noz Htr 1 Xovr Vlv Cntl	(LIGHTS LOST) Middeck Floodlts 3,4,5,7 Bunk Floodlts 1/3 Airlock Floodlt 4 MO13Q Pnl lt 1 TA Floodlt 4	
(ML86B:C) • cb MNA(MNB) EXT ARLK HTR LINE ZN1 – cl • cb MNA(MNB) EXT ARLK HTR LINE ZN2 – cl	3 Ext A/L H2O Line Htrs MNC pwr		

EPS SSR-66 (Cont)
BUS LOSS: MNC ML86B

BUS ISOLATION		EQUIP/FUNCTION LOST	CREW INDICATIONS	NOTES
ONLY ON MCC CALL, PERFORM				(1) Vlv holds position (3) MNA,MNB line htrs remain (4) Sys A remains (5) One failure away from loss of jettison capability (6) Current Snsr 1 remains
(ML86B:A) cb SPLY H2O • GALLEY SPLY – op • XOVR VLV – op • TK C INLET – op • TKA OUTLET – op • DUMP VLV/NOZ HTR – op	1	Galley H2O Sply Vlv Cntl Sply H2O Tk C In Vlv Cntl Tk A Out Vlv Cntl Dump Noz Htr		
(ML86B:D) cb MNC PYRO JETT SYS B • KU ANT – op • PORT RMS – op • STBD RMS – op	4 5	Ku-BD Jettison Sys B RMS/OBSS Jett/Guil Sys B		
(ML86B:E) cb MNC EMU 1 H2O • WASTE – op • SPLY – op cb MNC SEAT • L – op • R – op cb MNC FLOOD • TNL ADAPT 4 – op	1 1	EMU 1 Waste H2O Vlv Cntl Sply H2O Vlv Cntl TA Floodlt 4		
(ML86B:F) cb MNC FLOODS • MIDDECK 5/7 – op • MIDDECK 3/4/MO13Q – op • BUNK 1/3 – op • AIRLK 4 – op cb MNC CRYO • O2 HTR TK4 SNSR 2 – op • O2 HTR TK5 SNSR 2 – op	6	Middeck Floodlts 3,4,5,7 MO13Q Pnl lt 1 Bunk Floodlts 1/3 Airlk Floodlt 4 Cryo O2 Tk4 Current Snsr 2 Cryo O2 Tk5 Current Snsr 2		
(ML86B:C) • cb MNC EXT ARLK HTR LINE ZN1 – op • cb MNC EXT ARLK HTR LINE ZN2 – op	3	Ext A/L H2O Line Htrs MNC pwr		

EPS SSR-70
BUS LOSS: ESS1BC DA1

(Includes all ESS1BC sub-buses)

	ACTIONS		EQUIP/FUNCTION LOST		CREW INDICATIONS
1 3 4	• Perform FC1 SHUTDN (FC SHUTDN Cue Card), then:	1 4	FC1 Controller and Pumps FC1 Reac Vlv Cntl via pnl R1 sw	2	MASTER ALARM Light/Tone – on
	(R1) • PL CAB – MNB	5	MNA pwr to CABPL 1,2,3 buses		L Audio lost L Glrshld Floodlt lost
	(O5) 2 • L AUD CNTL – R	2	L Audio pwr		(F7) 6 No C/W lts Two of four bulbs in MA lts not lt SM ALERT Light/Tone – on
	(O6) • MTU – OSC 2		MTU Pwr Sply A/Osc 1		(R1) 7 FC/MN BUS A tb – OFF 7 MN BUS TIE A tb – OFF 9 INV/AC BUS 1 tb – OFF 4 O2 MANF VLV TK1 tb – CL 4 H2 MANF VLV TK1 tb – CL 4 FC1 REAC (two) tb – CL FC1 RDY tb – bp 11 FC1 COOL PUMP ΔP tb – bp
	If add'l ltg reqd: (C3) • EMER LTG – ON/OFF	8	L Glareshield Floodlts via pnl O6 sw		(FSMs) S67 ESS BUS V 1BC S69 FC PUMP 1 S69 FC REAC 1 S68 O2 MANF VLV S68 H2 MANF VLV S68 O2 CNTL P 2,4 S68 H2 CNTL P 2,4 S69 FC H2 PUMP 1
	(R1) • O2,H2 TK2 HTRS A,B (four) – OFF • O2,H2 TK1,3 HTRS A (four) – AUTO • O2,H2 MAN VLV TK2 (two) – OP	10	Cryo O2,H2 Tk1 Manf Vlv Cntl Cryo Tk1 O2,H2 Htrs Auto ops if O2,H2 Tk2 Htrs A(B) in Auto Cryo Tk2 O2,H2 Htrs Auto ops		
	(A11) • O2,H2 TK4 HTRS A,B (four) – OFF (refer to EPS, 7.6 CRYO TABLE A for nomenclature)		Cryo Tk3 Htrs in Auto ops if Tk4 in Auto Cryo Tk4 Htrs Auto ops		
			Cryo Tk3 O2,H2 Htrs Auto ops if O2,H2 Tk4 Htrs A(B) in AUTO Cryo Tk4 O2,H2 Htrs Auto ops		
12	If GPC 1 or 4 dump reqd, attempt S/W dump in RUN	12 12	GPC Mode sw Halt Contacts for GPCs 1,4 (pnl O6) GPC Output sw Terminate capability for GPCs 1,4	7	If SSPTS: (A15) PTU 1 tb – OFF
13 14	To release crewmember from constant monitoring requirement: • Perform C&W EU CONTINGENCY POWER (IFM)				(Continued)
15	Once C&W EU CONTINGENCY POWER (IFM) is completed (R13U) • C/W PARAM SEL tw (three) – 010, 030, 060, 080 • C/W PARAM – INH • MEM – CLEAR • C/W PARAM SEL tw (three) – > 119				**NOTES** (Cont) (13) Until IFM cables installed: a) Loss of ESS2CA DA2 would not generate aural alarm so that Fuel Cell 2 could be safed within 9 min. FSM should be closely monitored. b) Loss of C/W B system would not be annunciated and subsequent orbiter problems would not trigger aural alarm (14) IFM procedure recovers C/W A system by providing pwr source, which bypasses failed ESS1BC DA1 bus (15) Inhibits Primary C/W for O2 and H2 Tk 2 and 4 Control Pressure (16) Caused by loss of purge vlv sw position TM (17) OPCU 1 Voltage Adjust Capability still exists via MCC CMDs
	When reqd: • For FC1, perform FUEL CELL PURGE – MANUAL (ORB OPS, EPS)	16	FC1 Auto purge capability		
		17	If SSPTS: OPCU 1 Voltage Adjust Capability via switch		
	(Continued)		(Continued)		

NOTES

(1) * TIME CRITICAL *
FC1 must be shut down within 9 min to avoid potentially hazardous condition

(2) No intercom, A/G, or recorded voice from CDR ATU. When L AUD CNTL switched to RIGHT, only listen capability restored

(3) FC/MN BUS A and MN BUS TIE A sws work, but tbs are lost

(4) Vlv holds position, but tb and sw lost. Redundant Reac Vlv Close Cntl on pnl C3 remains

(5) Pwrs PL Timing Buffer, VTR, and one string of OBSS power while attached to SRMS

(6) Retain backup C/W thru Sys B. Ref C/W MAL 4.1b [5] for C/W capabilities lost. Only two of four bulbs lit in MA lt

(7) Switch works but tb lost

(8) Flood lts available via EMER LTG (C3,ML18F)

(9) AC1 remains pwrd, but tb lost. INV/AC BUS 1 sw inop. INV PWR 1 sw also inop

(10) Vlv holds position, but tb and sw lost

(11) FC1 Coolant Pump ΔP tb lost

(12) Unable to HALT or terminate GPC, IPL GPC, or perform HISAM dump. Do not pwr off GPCs 1 or 4 since they must be transitioned thru HALT to force RUN state

EPS SSR-70 (Cont)
BUS LOSS: ESS1BC DA1

BUS ISOLATION	EQUIP/FUNCTION LOST	CREW INDICATIONS	NOTES
ONLY ON MCC CALL, PERFORM		(F9) ESS 1BC DC VOLTS – OSL	(3) FC/MN BUS A and MN BUS TIE A sws work, but tbs are lost
(O13:A) cb ESS 1BC 6 • C/W A – op • AC1 SNSR – op • MTU A – op	6 Pri C/W Sys, Annun pnl F7 18 AC1 Bus Snsr	SM 67 ELECTRIC ESS 1BC VOLTS < 20	(6) Retain backup C/W thru Sys B. Ref C/W MAL 4.1b [5] for C/W capabilities lost. Only two of four bulbs lit in MA lt
(O13:B) cb ESS 1BC • CRYO CNTLR O2,H2 TK2 (two) – op • CRYO QTY O2,H2 TK2 (two) – op	Cryo O2,H2 Tk2 Htrs Auto ops Cryo O2,H2 Tk2 Qty Xdcrs	(O2) CRYO O2,H2 TK2,4 QTY METER (four) – 0%	(18) Disables AC1 AUTO TRIP. AC1 Voltage and OVLD c/w lost
(R14:F) cb ESS 1BC • FLOOD L GLRSHLD – op • AUD L – op		Airlock Floodlt 2 lost Tnl Adapt Floodlt 1 lost	(19) AC1 inverters and buses remain pwrd, but sws and tb lost. INV/AC BUS 1 sw inop. INV PWR 1 sw also inop
(ML86B:G) cb ESS 1BC • FLOOD AIRLK 2 – op • FLOOD TNL ADAPT 1 – op • CRYO CNTLR O2,H2 TK4 (two) – op • CRYO QTY O2,H2 TK4 (two) – op	Airlock Floodlt 2 Tnl Adapt Floodlt 1 Cryo O2,H2 Tk4 Htrs Auto ops Cryo O2,H2 Tk4 Qty Xdcrs		(20) Vlv closes. Redundant vlv B remains
	Cryo Tk2,Tk4 Htr Snsr Test/ Reset sw		
	19 AC1 Inverters: Input DC pwr Cntl INV/AC Bus Cntl 3 ESS pwr to FC1 MN BUS A and MN BUS TIE A pwr contactor cntl Capability to switch to MADS Rcdr Trk Seq 2 AUX PL A BUS LG Arm/Dn Reset capability (OV103,4) TACAN 1 Auto Self-Test		
	20 APU 1 Fu Tk Vlv A		
(O7) • (OV105) GPS 1 PWR – OFF • (OV105) GPS 1 PRE AMPL UPPER – OFF • (OV105) GPS 1 PRE AMPL LOWER – OFF	(OV105) GPS 1		
(O14:D) cb MNA • (OV105) GPS 1 PRE AMPL UPPER – op • (OV105) GPS 1 PRE AMPL LOWER – op			

EPS SSR-71
BUS LOSS: ESS1BC FP&LC1

ACTIONS
NONE

BUS ISOLATION
ONLY ON MCC CALL, PERFORM
NONE

	EQUIP/FUNCTION LOST
1	AC1 Inverters Input DC pwr Cntl
	Capability to switch to MADS Rcdr Trk Seq 2

	CREW INDICATIONS
	(R1)
1	INV PWR 1 tb – OFF

NOTES
(1) Inverters remain pwrd, but tb and sw lost

EPS SSR-72
BUS LOSS: ESS1BC MPC1

	ACTIONS
1 2	• Perform FC1 SHUTDN (FC SHUTDN Cue Card)

BUS ISOLATION
ONLY ON MCC CALL, PERFORM
NONE

	EQUIP/FUNCTION LOST
1 2	FC1 Controller and Pumps FC1 Reac Vlv Cntl via pnl R1 sw
2	Cryo O2,H2 Tk1 Manf Vlv Cntl

	CREW INDICATIONS
	MASTER ALARM Light/Tone – on
	(F7)
2	C/W FC REAC lt C/W FC PUMP lt SM ALERT Light/Tone
	(R1)
2 2 2 3	O2 MANF VLV TK1 tb – CL H2 MANF VLV TK1 tb – CL FC1 REAC (two) tb – CL FC1 RDY tb – bp FC1 COOL PUMP ΔP tb – bp
	(FSMs) S68 H2 MANF VLV S68 O2 MANF VLV S69 FC PUMP 1
2	S69 FC REAC 1 S69 FC H2 PUMP 1

NOTES
(1) * TIME CRITICAL * FC1 must be shut down within 9 min to avoid potentially hazardous condition (2) Vlv holds position, but tb and sw lost. Redundant Reac Vlv Close Cntl on pnl C3 remains (3) FC1 Coolant Pump ΔP tb lost

EPS SSR-73
BUS LOSS: ESS1BC ML86B

ACTIONS	EQUIP/FUNCTION LOST	CREW INDICATIONS	NOTES
(A11) • CRYO TK4 HTR O2,H2 A,B (four) – OFF	Cryo Tk3 O2,H2 Htrs Auto ops if O2,H2 Tk4 Htrs A(B) in Auto Cryo Tk4 O2,H2 Htrs Auto ops	MASTER ALARM Light/Tone – on	(1) Inhibits Primary C/W for O2 and H2 Tk 4 Control Pressure
1 (R13U) • C/W PARAM SEL tw (three) – 030, 080 • C/W PARAM – INH • MEM – CLEAR • C/W PARAM SEL tw (three) – > 119		(F7) C/W O2 PRESS lt C/W H2 PRESS lt	
		(FSMs) S68 H2 CNTL P 4 S68 O2 CNTL P 4	
		(O2) CRYO O2,H2 QTY TK4 meters (two) = 0%	
		Airlk Floodlt 2 lost TA Floodlt 1	

BUS ISOLATION	
ONLY ON MCC CALL, PERFORM	
(ML86B:G) cb ESS 1BC • FLOOD AIRLK 2 – op • FLOOD TNL ADAPT 1 – op • CRYO CNTLR O2,H2 TK4 (two) – op • CRYO QTY O2,H2 TK4 (two) – op	Airlk Floodlt 2 TA Floodlt 1 Cryo O2,H2 Tk4 Qty Xdcrs

EPS SSR-74
BUS LOSS: ESS1BC FD

ACTIONS
1 • Perform FC1 SHUTDN (FC SHUTDN Cue Card), then:
(R1) • PL CAB – MNB
3 If GPC 1 or 4 dump reqd, attempt S/W dump in RUN
When reqd: • For FC1, perform FUEL CELL PURGE – MANUAL (ORB OPS, EPS)
(R1) • O2,H2 TK3 HTR A (two) – AUTO

BUS ISOLATION
ONLY ON MCC CALL, PERFORM
NONE

EQUIP/FUNCTION LOST
1 FC1 Controller and Pumps
2 MNA pwr to CABPL 1,2,3 Buses
3 GPC Mode sw Halt Contacts for GPCs 1,4 (pnl O6) 3 GPC Output sw Terminate capability for GPCs 1,4 (pnl O6)
5 FC1 Auto purge capability
6 OIU 1 MNA pwr
AUX PL A Bus pwr 7 AC1 Inverters: Input DC Pwr Cntl Inv/AC Bus Cntl Cryo O2 Tk2,4 Htr Snsr Test/Reset sw
(OV103,4) TACAN 1 Auto Self-Test
8 If SSPTS: OPCU 1 Voltage Adjust Capability via switch

CREW INDICATIONS
MASTER ALARM Light/Tone – on
(F7) C/W FC PUMP lt
(R1) FC1 RDY tb – bp 4 FC1 COOL PUMP ΔP tb – bp
(FSMs) S69 FC H2 PUMP 1 S69 FC PUMP 1
(F9) ESS 1BC DC VOLTS – OSL
SM 67 ELECTRIC ESS1BC Volts 25-32V

NOTES
(1) * TIME CRITICAL * FC1 must be shut down within 9 min to avoid potentially hazardous condition
(2) Pwrs PL Timing Buffer and OIU 1 (if flown). OIU 1 redundant pwr MNB MPC2 via CAB PL3
(3) Unable to HALT or terminate GPC, IPL GPC, or perform HISAM dump. Do not pwr off GPCs 1 or 4 since they must be transitioned through HALT to force RUN state
(4) FC1 Coolant Pump ΔP tb lost
(5) Caused by loss of purge vlv sw position TM
(6) OIU 1 redundant pwr MNB MPC2 via CAB PL3
(7) AC1 inverters and buses remain pwrd. INV PWR 1 and INV/AC BUS 1 switches and INV PWR 1 tb lost
(8) OPCU 1 Voltage Adjust Capability still exists via MCC CMDs

EPS SSR-75
BUS LOSS: ESS1BC O13&R14

	ACTIONS		EQUIP/FUNCTION LOST		CREW INDICATIONS	NOTES
	(O5)			1	MASTER ALARM Light/Tone – on	(1) No intercom, A/G, or recorded voice from CDR ATU. When L AUD CNTL switched to RIGHT, only listen capability is restored
1	• L AUD CNTL – R	1	L Audio pwr			
	(O6) • MTU – OSC 2		MTU Pwr Sply A/Osc 1		L Audio lost L Glrshld Floodlt lost	
	(R1) • O2,H2 TK1,3 HTRS A (four) – AUTO • O2,H2 TK2 HTRS A,B (four) – OFF • O2,H2 MANF VLV TK2 (two) – OP		Cryo Tk1 O2,H2 Htrs Auto ops if O2,H2 Tk2 Htrs A(B) in Auto Cryo Tk2 O2,H2 Htrs Auto ops	2	(F7) No C/W lts Two of four bulbs in MA lts not ON SM ALERT Light/Tone – on	(2) Retain BACKUP C/W thru Sys B. Ref C/W MAL 4.1b for C/W capabilities lost. Only two of four bulbs lit in MA lts
	If add'l ltg reqd: (C3) • EMER LTG – ON/OFF	3	L Glareshield Floodlts via pnl O6 sw		(FSMs) S68 H2 CNTL P 2 S68 O2 CNTL P 2	(3) Floodlts available via EMER LTG (C3, ML18F)
5	To release crewmember from constant monitoring requirement:			4	(R1) INV/AC BUS 1 tb – OFF	(4) AC1 bus remains pwrd. INV/AC BUS 1 sw works, but tb lost
6	• Perform C&W EU CONTINGENCY POWER (IFM)				(O2) CRYO O2,H2 QTY TK2 METER (two) ind – 0%	(5) Until IFM cables installed: a) Loss of ESS2CA DA2 would not generate aural alarm so that Fuel Cell 2 could be safed within 9 min. FSM should be closely monitored. b) Loss of C/W B system would not be annunciated and subsequent orbiter problems would not trigger aural alarm
7	Once C&W EU CONTINGENCY POWER (IFM) is completed (R13U) • C/W PARAM SEL tw (three) – 010, 060 • C/W PARAM – INH • MEM – CLEAR • C/W PARAM SEL tw (three) – > 119					(6) IFM procedure recovers C/W A system by providing pwr source, which bypasses failed ESS1BC O13&R14 bus
						(7) Inhibits Primary C/W for O2 and H2 Tk 2 Control Pressure

(Continued)

(Continued)

EPS SSR-75 (Cont)
BUS LOSS: ESS1BC O13&R14

ACTIONS	EQUIP/FUNCTION LOST	CREW INDICATIONS	NOTES
ONLY ON MCC CALL, PERFORM			(2) Retain BACKUP C/W thru Sys B. Ref C/W MAL 4.1b for C/W capabilities lost. Only two of four bulbs lit in MA lts (8) Disables AC1 Auto Trip. AC1 Voltage and OVLD C/W lost (9) Switches and tbs still operate
(O13:A) cb ESS1BC • C/W A – op • AC1 SNSR – op • MTU A – op	2 Pri C/W Sys, Annun Pnl F7 8 AC1 Bus Snsr		
(O13:B) cb ESS1BC • CRYO CNTLR O2,H2 TK2 (two) – op • CRYO QTY O2,H2 TK2 (two) – op	Cryo O2,H2 Tk2 Htrs Auto ops Cryo O2,H2 Tk2 Qty Xdcrs		
(R14:F) cb ESS1BC • FLOOD L GLRSHLD – op • AUD L – op			
	LG ARM/DN Reset capability		
	9 ESS pwr to FC/MN BUS A and MN BUS TIE A Pwr Contactor Cntl		

EPS SSR-80
BUS LOSS: ESS2CA DA2 (Includes all ESS2CA sub-buses)

ACTIONS	EQUIP/FUNCTION LOST	CREW INDICATIONS	NOTES
1 3 4 • Perform FC2 SHUTDN (FC SHUTDN Cue Card), then:	1 FC2 Controller and Pumps 4 FC2 Reac Vlv Cntl via pnl R1 sw	2 All comm lost via AUD CTR 1 2 R AUDIO lost R Glareshield Floodlt lost	(1) * TIME CRITICAL * FC2 must be shut down within 9 min to avoid potentially hazardous condition
(R1) • PL CAB – MNA	5 MNB pwr to CABPL 1,2,3 Buses	MASTER ALARM Light/Tone – on	(2) If Aud Ctr 1 active, all intercom, A/G, and recorded voice lost until Aud Ctr 2 selected. No intercom A/G, or recorded voice from PLT ATU. When R AUD CNTL switched to LEFT, only listen capability restored
(C3) 2 • AUD CTR – 2	2 Audio Center 1	(F7) C/W O2 PRESS lt – on C/W H2 PRESS lt – on 4 C/W FC REAC lt – on C/W FC PUMP lt – on 6 C/W PRI C/W lt – on C/W BACKUP C/W ALARM lt – on Two of four bulbs in MA lts – inoperative SM ALERT lt/Tone – on	(3) FC/MN BUS B and MN BUS TIE B SWS work, but tbs lost
(O9) 2 • R AUD CNTL – L	2 R Audio pwr		(4) Vlv holds position, but tb and sw lost. Redundant Reac Vlv Close Cntl on pnl C3 remains
(O6) • MTU – OSC 1	MTU Pwr Sply B/Osc 2	(FSMs) S69 FC PUMP 2 S69 FC REAC 2 S67 ESS BUS V 2CA S68 O2 CNTL P1,5 S68 H2 CNTL P1,5 S68 H2 MANF VLV S68 O2 MANF VLV S69 FC H2 PUMP 2	(5) Pwrs PL Timing Buffer, VTR, and one string of OBSS power while attached to SRMS
If add'l ltg reqd: (C3) • EMER LTG – ON/OFF	7 R Glareshield Floodlts via pnl O8 sw	If SSPTS: (A15) PTU 2 tb – OFF	(6) Retain C/W Sys A Alarm tones (Pri & B/U) Ref C/W MAL 4.1a [8] for capabilities lost. Only two of four bulbs lit in MA lt. PRIMARY C/W and BACKUP C/W ALARM lts are not resettable
(R1) • O2,H2 MANF VLV TK1 (two) – OP • O2,H2 TK1 HTRS A,B (four) – OFF • O2,H2 TK2,3 HTRS A (four) – AUTO • O2,H2 TK 2,3 HTRS B (four) – OFF	8 Cryo O2,H2 Tk2 Manf Vlv Cntl Cryo Tk2 O2,H2 Htrs Auto ops if O2,H2 Tk1 Htrs A(B) in Auto Cryo Tk1 O2,H2 Htrs Auto ops Pallet Cryo Tk 8,9 Htrs Auto ops		(7) Floodlts available via EMER LTG (C3, ML18F)
(A15) • O2,H2 TK5 HTR A,B (four) – OFF	Cryo Tk5 O2, H2 Htrs Auto ops		(8) Vlv holds position, but tb and sw lost
When reqd: • Perform FUEL CELL PURGE – MANUAL (ORB OPS, EPS)	9 All FC Auto Purge capability		(9) Caused by loss of FC Purge Htr – GPC sw position TM pwr
10 If GPC 2 or 5 dump reqd, attempt S/W dump in RUN	10 GPC Mode sw Halt Contacts for GPCs 2,5 (pnl O6) 10 GPC Output sw Terminate capability for GPCs 2,5 (pnl O6)		(10) Unable to HALT or terminate GPC, IPL GPC, or perform HISAM dump. Do not pwr-off GPC 2 since it must be transitioned thru HALT to force RUN state. GPC 5 (BFS) may be pwrd off, but pwrd up in STBY
(R13U) 11 • C/W PARAM SEL tw (three) – 000, 040, 050, 090 • C/W PARAM – INH • MEM – CLEAR • C/W PARAM SEL tw (three) – > 119			(11) Inhibits Primary C/W for O2 and H2 Tk 1 and 5 Control Pressure
	12 If SSPTS: OPCU 2 Voltage Adjust Capability via switch		(12) OPCU 2 Voltage Adjust Capability still avail via MCC CMDs
(Continued)	(Continued)	(Continued)	

EPS SSR-80 (Cont)
BUS LOSS: ESS2CA DA2

ACTIONS	EQUIP/FUNCTION LOST	CREW INDICATIONS	NOTES
13 To release crewmember from constant monitoring requirement: 14 • Perform C&W EU CONTINGENCY POWER (IFM)		(R1) 3 FC/MN BUS B tb – OFF 3 MN BUS TIE B tb – OFF 3 PL PRI MNB tb – OFF 15 INV/AC BUS 2 tb – OFF 8 O2 MANF VLV TK2 tb – CL 8 H2 MANF VLV TK2 tb – CL 8 FC2 REAC (two) tb – CL FC2 RDY tb – bp 16 FC2 COOL PUMP ΔP tb – bp	(3) FC/MN BUS B and MN BUS TIE B sws work, but tbs lost (8) Vlv holds position, but tb and sw lost (13) Until IFM cables installed: a) Loss of ESS1BC DA1 would not generate aural alarm so that Fuel Cell 1 could be safed within 9 min. FSM should be closely monitored. b) Loss of C/W A system would not be annunciated and subsequent orbiter problems would not trigger aural alarm (14) IFM procedure recovers C/W B system by providing pwr source, which bypasses failed ESS 2CA DA2 bus (15) AC2 Inverters and buses remain pwrd, but switches and tbs lost (16) FC2 Coolant Pump ΔP tb lost (17) Retain C/W Sys A Alarm tones (Pri & B/U) Ref C/W MAL 4.1a [8] for capabilities lost. Only lower two of four bulbs lit in MA lt. PRIMARY C/W and BACKUP C/W ALARM lts are not resettable (18) Disables AC2 AUTO Trip. AC2 Voltage and OVLD C/W lost (19) FC3/PRIPL pwr-off capability of SL not affected. MNB/PRIPL sw, MNC/PRIPL sw, pnl R1 not affected (20) Vlv closes. Redundant vlv B remains
BUS ISOLATION			
ONLY ON MCC CALL, PERFORM			
(O13:C) cb ESS 2CA 17 • C/W B – op 18 • AC2 SNSR – op • MTU B – op	17 C/W Sys B Alarm Tones 18 AC2 Bus Snsr		
(O13:D) cb ESS 2CA • CRYO CNTLR O2,H2 TK1 (two) – op • CRYO QTY O2,H2 TK1 (two) – op	Cryo O2,H2 Tk1 Htrs Auto ops Cryo O2,H2 Tk1 Qty Xdcrs	SM 67 ELECTRIC ESS2CA Volts < 20	
(R14:F) cb ESS 2CA • FLOOD R GLRSHLD – op • AUD R – op • CTR 1 – op		(O2) CRYO O2,H2 QTY TK1 meters (two) ind – 0%	
(ML86B:G) cb ESS 2CA • CRYO CNTLR O2,H2 TK5 (two) – OP			
• CRYO QTY O2,H2 TK5 (two) – OP	Cryo O2,H2 Tk5 Qty Xdcr		
	Cryo O2 Tk1 Htr Snsr Test/ Reset sw		
	Cryo O2 Tk5 Htr Snsr Test/ Reset sw		
	AUX PL B BUS 15 AC2 Inverters: Input DC Pwr Cntl INV/AC BUS Cntl ESS pwr to FC/MN BUS B and MN BUS TIE B Pwr Contactor Cntl 19 MNB/PRIPL and MNC/PRIPL pwr-off capability via Spacelab Pwr-Kill Signal		
	(OV103,4) TACAN 2 Auto Self-Test		
	20 APU 2 Fu Tk Vlv A		
(O7) • (OV105) GPS 2 PWR – OFF • (OV105) GPS 2 PRE AMPL UPPER – OFF • (OV105) GPS 2 PRE AMPL LOWER – OFF	(OV105) GPS 2		
(O15:C) • (OV105) cb MNB GPS 2 PRE AMPL UPPER – op			
(O15:D) • (OV105) cb MNB GPS 2 PRE AMPL LOWER – op			

EPS SSR-81
BUS LOSS: ESS2CA FP&LC2

ACTIONS
NONE

BUS ISOLATION
ONLY ON MCC CALL, PERFORM
NONE

EQUIP/FUNCTION LOST
1 AC2 Inverters Input DC Pwr Cntl

CREW INDICATIONS
(R1)
1 INV PWR 2 tb – OFF

NOTES
(1) Loss of tb and sw. Inverters remain pwrd

EPS SSR-82
BUS LOSS: ESS2CA MPC2

ACTIONS
1 • Perform FC2 SHUTDN (FC SHUTDN Cue Card)

BUS ISOLATION
ONLY ON MCC CALL, PERFORM
NONE

EQUIP/FUNCTION LOST
1 FC2 Controller and Pumps
2 FC2 Reac Vlv Cntl via pnl R1 sw
3 Cryo O2,H2 Tk2 Manf Vlv Cntl
4 MNB/PRIPL and MNC/PRIPL pwr-off capability via Spacelab Pwr-Kill Signal

CREW INDICATIONS
MASTER ALARM Light/Tone – on
(F7)
2 C/W FC REAC lt
C/W FC PUMP lt
SM ALERT Light/Tone
(R1)
2 O2 MANF VLV TK2 tb – CL
2 H2 MANF VLV TK2 tb – CL
2 FC2 REAC (two) tb – CL
RDY tb – bp
5 FC2 COOL PUMP ΔP tb – bp
(FSMs)
S69 FC PUMP 2
2 S69 FC REAC 2
S69 FC H2 PUMP 2
S68 H2 MANF VLV
S68 O2 MANF VLV

NOTES
(1) * TIME CRITICAL * FC2 must be shut down within 9 min to avoid potentially hazardous condition
(2) Vlv holds position, but tb and sw lost. Redundant Reac Vlv Close Cntl on pnl C3 remains
(3) Vlv holds position, but tb and sw lost
(4) FC3/PRIPL pwr-off capability of SL not affected. MNB/PRIPL sw, MNC/PRIPL sw, pnl R1 not affected
(5) FC2 Coolant Pump ΔP tb lost

EPS SSR-83
BUS LOSS: ESS2CA FD

ACTIONS
1 • Perform FC2 SHUTDN (FC SHUTDN Cue Card)
(R1) • PL CAB – MNA
When reqd: • Perform FUEL CELL PURGE – MANUAL (ORB OPS, EPS)
5 If GPC 2 or 5 dump reqd, attempt S/W dump in RUN
(R1) • O2,H2 TK3 HTR A (two) – AUTO • O2,H2 TK3 HTR B (two) – OFF
If OIU reqd: (SSP 1) • OIU PWR – OIU 1 ON
(AIL) • S-BD PL PWR SYS – 1 • CNTL – PNL • – CMD

BUS ISOLATION
ONLY ON MCC CALL, PERFORM
NONE

EQUIP/FUNCTION LOST
1 FC2 Controller and Pumps
2 MNB pwr to CABPL 1,2,3 Buses
3 All FC Auto Purge capability
5 GPC Mode sw Halt Contacts for GPCs 2,5 (Pnl O6) 5 GPC Output sw Terminate capability for GPCs 2,5 (pnl O6)
2 OIU 2 OIU 1 MNB pwr
AUX PL B Bus pwr 6 AC2 Inverters: Input DC Pwr Cntl Inv/AC Bus Cntl
(OV103,4) TACAN 2 Auto Self-Test
Cryo O2 Tk1 Htr Snsr Test/Reset sw
Cryo O2 Tk5 Htr Snsr Test/Reset sw
7 If SSPTS: OPCU 2 Voltage Adjust Capability via switch

CREW INDICATIONS
MASTER ALARM Light/Tone – on
(F7) C/W FC PUMP lt
(R1) FC2 RDY tb – bp 4 FC2 COOL PUMP ΔP tb – bp
(FSMs) S69 FC PUMP 2 S69 FUEL CELL
(F9) ESS2CA DC VOLTS – OSL
SM 67 ELECTRIC ESS2CA Volts 25-32V
SM 62 PCMMU 'S62 PDI DECOM FAIL' S 212 OIU OIU 2 TEMP ≥ 140

NOTES
(1) * TIME CRITICAL * FC2 must be shut down within 9 min to avoid potentially hazardous condition
(2) Pwrs PL Timing Buffer, OIU 1, and OIU 2 (if flown). OIU 1 redundant pwr MNA MPC1 via CAB PL3
(3) Caused by loss of FC Purge Htr – GPC sw position TM pwr
(4) FC 2 Coolant Pump ΔP tb lost
(5) Unable to HALT or terminate GPC, IPL GPC, or perform HISAM dump. Do not pwr-off GPC 2 since it must be transitioned thru HALT to force RUN state. GPC 5 (BFS) may be pwrd off, but pwrd up in STBY
(6) AC2 inverters and buses remain pwrd. INV PWR 2 and INV/AC BUS 2 switches lost and INV PWR 2 tb lost
(7) OPCU 2 Voltage Adjust Capability still avail via MCC CMDs

EPS SSR-84
BUS LOSS: ESS2CA O13&R14

	ACTIONS
	(C3)
1	• AUD CTR – 2
	(O9)
2	• R AUD CNTL – L
	(O6)
	• MTU – OSC 1
	(R1)
	• O2,H2 TK1 HTRS A,B (four) – OFF
	• O2,H2 TK2,3 HTRS A (four) – AUTO
	• O2,H2 MANF VLV TK1 (two) – OP
	If add'l ltg reqd:
	(C3)
	• EMER LTG – ON/OFF
5	To release crewmember from constant monitoring requirement:
7	• Perform C&W EU CONTINGENCY POWER (IFM)
	(R13U)
8	• C/W PARAM SEL tw (three) – 000, 050
	• C/W PARAM – INH
	• MEM – CLEAR
	• C/W PARAM SEL tw (three) – > 119

	BUS ISOLATION
	ONLY ON MCC CALL, PERFORM
	(O13:C)
	cb ESS 2CA
4	• C/W B – op
9	• AC2 SNSR – op
	• MTU B – op
	(O13:D)
	cb ESS 2CA
	• CRYO CNTLR O2,H2 TK1 (two) – op
	• CRYO QTY O2,H2 TK1 (two) – op
	(R14:F)
	cb ESS 2CA
	• FLOOD R GLRSHLD – op
	• AUD R – op
	• CTR 1 – op
	(Continued)

	EQUIP/FUNCTION LOST
1	Audio Center 1
2	R Audio pwr
	MTU Pwr Sply B/OSC 2
	Cryo Tk2 O2,H2 Htrs Auto ops if O2,H2 Tk1 Htrs A(B) in Auto
	Cryo Tk1 O2,H2 Htrs Auto ops
3	R Glareshield Floodlts via pnl O8 sw
4	C/W Sys B Alarm Tones
9	AC2 Bus Snsr
	Cryo O2,H2 Tk1 Htrs Auto ops
	Cryo O2,H2 Tk1 Qty Xdcrs
10	ESS pwr to FC/MN BUS B and MN BUS TIE B Pwr Contactor Cntl
	(Continued)

	CREW INDICATIONS
1	All Comm lost via AUD CTR 1 selected
2	R Audio lost
3	R Glareshield Floodlt lost
	MASTER ALARM Light/Tone – on
	(F7)
	C/W O2 PRESS lt – on
	C/W H2 PRESS lt – on
4	C/W PRI C/W lt – on
	C/W BACKUP C/W ALARM lt – on
	Two of four bulbs in MA lts – inoperative
	(FSMs)
	S68 H2 CNTL P 1
	S68 O2 CNTL P 1
	(R1)
6	INV/AC BUS 2 tb – OFF
	(O2)
	CRYO O2,H2 QTY TK1 METER (two) – 0%

NOTES
(1) If Audio Ctr 1 active, all intercom, A/G, and recorded voice lost until Audio Ctr 2 selected
(2) No intercom, A/G, or recorded voice from PLT ATU until R AUD CNTL switched to LEFT which then restores only listen capability
(3) Floodlt available via EMER LTG (C3, ML18F)
(4) Retain C/W Sys A alarm tones (Pri & B/U) Ref C/W MAL 4.1a [8] for C/W capabilities lost. Only two of four bulbs lit in MA lt. PRIMARY C/W, BACKUP C/W ALARM lts are not resettable
(5) Until IFM cables installed: a) Loss of ESS1BC DA1 would not generate aural alarm so that Fuel Cell 1 could be safed within 9 min. FSM should be closely monitored. b) Loss of C/W A system would not be annunciated and subsequent orbiter problems would not trigger aural alarm
(6) AC2 bus remains pwrd. INV/AC BUS 2 sw works, but tb lost
(7) IFM procedure recovers C/W B system by providing pwr source, which bypasses failed ESS2CA O13&R14 bus
(8) Inhibits Primary C/W for O2 and H2 Tk 1 Control Pressure
(9) Disables AC2 Auto Trip. AC2 Voltage and OVLD C/W lost
(10) Switches and tbs still operate

EPS SSR-85
BUS LOSS: ESS2CA ML86B

ACTIONS	EQUIP/FUNCTION LOST	CREW INDICATIONS	NOTES
If Tk5 in use: (R1) • O2,H2 TK3 HTR A – AUTO • O2,H2 TK3 HTR B – OFF	Cryo Tk5 O2,H2 Htrs if in Auto	MASTER ALARM Light/Tone – on	(1) Inhibits Primary C/W for O2 and H2 Tk 5 Control Pressure
(A15) • O2,H2 TK5 HTR A,B (four) – OFF		(F7) C/W O2 PRESS lt C/W H2 PRESS lt	
1 (R13U) • C/W PARAM SEL tw (three) – 040, 090 • C/W PARAM – INH • MEM – CLEAR • C/W PARAM SEL tw (three) – > 119		(FSMs) S68 O2 CNTL P 5 S68 H2 CNTL P 5	
		(O2) CRYO O2,H2 QTY Tk5 = 0%	

BUS ISOLATION	EQUIP/FUNCTION LOST
(ML86B:G) cb ESS 2CA • CRYO CNTLR O2,H2 TK5 (two) – op • CRYO QTY O2,H2 TK5 (two) – op	Cryo O2,H2 Tk5 Qty Xdcrs

EPS SSR-90
BUS LOSS: ESS3AB DA3

ACTIONS	EQUIP/FUNCTION LOST	CREW INDICATIONS	NOTES
1 2 3 • Perform FC3 SHUTDN (FC SHUTDN Cue Card)	1 3 FC3 Controller and Pumps Reac Vlv Cntl via pnl R1 sw	MASTER ALARM Light/Tone – on	(1) * TIME CRITICAL * FC3 must be shut down within 9 min to avoid potentially hazardous condition
(R1) • O2,H2 MANF VLV TK1,2 (four) – OP • O2,H2 TK1,2 HTRS A (four) – AUTO • O2,H2 TK1,2 HTRS B (four) – OFF • O2,H2 TK3 HTRS A,B (four) – OFF	Cryo Tk3 O2,H2 Htrs Auto ops Cryo O2,H2 Tk4 Htr Auto ops if O2,H2 Tk3 Htrs A(B) in Auto	(F7) C/W O2 PRESS lt – on C/W H2 PRESS lt – on 3 C/W FC REAC lt – on C/W FC PUMP lt – on SM ALERT lt/Tone – on	(2) FC/MN BUS C and MN BUS TIE C switches work, but tbs are lost
	6 FC GPC Purge Seq Start sw	(R1) 4 FC/MN BUS C tb – OFF 4 MN BUS TIE C tb – OFF 5 INV/AC BUS 3 tb – OFF 4 PL PRI FC3 tb – OFF 4 PL PRI MNC tb – OFF 3 FC3 REAC (two) tb – CL FC3 RDY tb – bp 8 FC3 COOL PUMP ΔP tb – bp	(3) Vlv holds position, but tb and sw lost. Redundant Reac Vlv Close Cntl on pnl C3 remains
7 • If GPC 3 dump reqd, attempt S/W dump in RUN	7 GPC Mode sw Halt Contacts for GPC 3 (pnl O6) 7 GPC Output sw Terminate capability for GPC 3 (pnl O6)		(4) Switch works, but tb lost
(R13U) 9 • C/W PARAM SEL tw (three) – 020, 070 • C/W PARAM – INH • MEM – CLEAR • C/W PARAM SEL tw (three) – > 119		(A12) 4 FC3 STRUCT RTN tb – OFF	(5) AC3 inverters and buses remain pwrd. INV PWR 3 and INV/AC BUS 3 switches and tbs lost
		(FSMs) S67 ESS BUS V 3AB S68 H2 CNTL P 3 S68 O2 CNTL P 3 S69 FC PUMP 3 3 S69 FC REAC 3 S69 H2 PUMP 3	(6) GPC Purge Seq Start capability remains using TMBU or SM 60 constant. MCC will normally initiate auto purge via TMBU
		(F9) ESS 3AB DC VOLTS ind – OSL	(7) Unable to HALT or terminate GPC, IPL GPC, or perform HISAM dump. Do not pwr-off GPC 3 since it must be transitioned thru HALT to force RUN state
BUS ISOLATION		SM 67 ELECTRIC ESS 3AB Volts < 20	(8) FC3 Coolant Pump ΔP tb lost
ONLY ON MCC CALL, PERFORM		(O1) GPC status lts lost	(9) Inhibits Primary C/W for O2 and H2 Tk 3 Control Pressure
(O13:E) cb ESS 3AB 10 • AC3 SNSR – op • GPC STAT – op	10 AC3 Bus Snsr Computer Status Matrix (pnl O1) and CCIU	(O2) CRYO O2,H2 QTY TK3 ind (two) – 0%	(10) Disables AC3 Auto Trip. AC3 Voltage and OVLD C/W lost
(C3) 11 • EMER LTG – OFF/ON	11 Emer Ltg capability (Middeck Floodlts 6,7,8, L,R Glrshld Floodlts, OS Floodlt)		(11) Ltg pwr remains via individual lt sws
(ML18F) 11 • EMER LTG – ON/OFF			
(ML86B:G) cb ESS 3AB • CRYO CNTLR TK3 (two) – op • CRYO QTY TK3 (two) – op	Cryo O2,H2 Tk3 Htrs Auto ops Cryo O2,H2 Tk3 Qty Xdcrs		
	5 AC3 Inverters: Input DC Pwr Cntl INV/AC Bus Cntl		
	Cryo O2 Tk3 Htr Snsr Test/ Reset sw		
(O7) • (OV105) GPS 3 PWR – OFF • (OV105) GPS 3 PRE AMPL UPPER – OFF • (OV105) GPS 3 PRE AMPL LOWER – OFF	(OV105) GPS 3		
(O16:D) cb MNC • (OV105) GPS 3 PRE AMPL UPPER – op • (OV105) GPS 3 PRE AMPL LOWER – op			
	(Continued)		

EPS SSR-90 (Cont)
BUS LOSS: ESS3AB DA3

ACTIONS		EQUIP/FUNCTION LOST	CREW INDICATIONS	NOTES
	12	Lost BFS select and BF engage capability to all GPCs		(2) FC/MN BUS C and MN BUS TIE C switches work, but tbs are lost (12) Pressing Engage button will cause all PASS GNC GPCs to go to software halt (13) MNB/PRIPL and MNC/PRIPL pwr-off capability of SL not affected. FC3/PRIPL sw, pnl R1 not affected (14) Vlv closes. Redundant vlv B remains
	13	FC3/PRIPL pwr-off capability via Spacelab Pwr-Kill Signal		
		(OV103,4) TACAN 3 Auto Self-Test		
	2	ESS pwr to FC/MN BUS C and MN BUS TIE C Pwr Contactor Cntl		
	14	APU 3 Fu Tk Vlv A		

EPS SSR-91
BUS LOSS: ESS3AB FP&LC3

ACTIONS		EQUIP/FUNCTION LOST	CREW INDICATIONS	NOTES
NONE	1	AC3 Inverters Input DC Pwr Cntl	(R1) 1 INV PWR 3 tb – OFF	(1) Inverters remain pwrd, but tb and sw lost (2) Ltg pwr remains via individual lt switches
	2	Emer Ltg capability (Middeck Floodlts 6,7,8, L,R Glareshield Floodlts, OS Floodlt)		

BUS ISOLATION
ONLY ON MCC CALL, PERFORM
(C3) 2 • EMER LTG – OFF/ON
(ML18F) 2 • EMER LTG – ON/OFF

EPS SSR-92
BUS LOSS: ESS3AB MPC3

ACTIONS
1 • Perform FC3 SHUTDN 2 (FC SHUTDN Cue Card)

BUS ISOLATION
ONLY ON MCC CALL, PERFORM
NONE

EQUIP/FUNCTION LOST
1 FC3 Controller and Pumps 2 FC3 Reac Vlv Cntl via pnl R1 sw
3 FC3/PRIPL pwr-off capability via Spacelab Pwr-Kill Signal

CREW INDICATIONS
MASTER ALARM Light/Tone – on
(F7) 2 C/W FC REAC lt – on C/W FC PUMP lt – on
(R1) 2 FC3 REAC (two) tb – CL FC3 RDY tb – bp 4 FC3 COOL PUMP ΔP tb – bp
(FSMs) S69 FC PUMP 3 2 S69 FC REAC 3 S69 FC H2 PUMP 3

NOTES
(1) * TIME CRITICAL * FC3 must be shut down within 9 min to avoid potentially hazardous condition
(2) Vlv holds position, but tb and sw lost. Redundant Reac Vlv Close Cntl on pnl C3 remains
(3) MNB/PRIPL and MNC/PRIPL pwr-off capability of SL not affected. FC3/PRIPL sw pnl R1 not affected
(4) FC3 Coolant Pump ΔP tb lost

EPS SSR-93
BUS LOSS: ESS3AB FD

ACTIONS
1 • Perform FC3 SHUTDN (FC SHUTDN Cue Card)
3 • If GPC 3 dump reqd, attempt S/W dump in RUN

BUS ISOLATION
ONLY ON MCC CALL, PERFORM
(C3) 5 • EMER LTG – OFF/ON
(ML18F) 5 • EMER LTG – ON/OFF

EQUIP/FUNCTION LOST
1 FC3 Controller and Pumps
2 FC GPC Purge Seq Start sw
3 GPC Mode sw Halt Contact for GPC 3 (pnl O6) 3 GPC Output sw Terminate capability for GPC 3 (pnl O6)
5 Emer Ltg capability (Middeck Floodlts 6,7,8, L,R Glrshld Floodlts OS Floodlt)
6 Lost BFS select and BFS engage capability to all GPCs
7 AC3 Inverters: Input DC Pwr Cntl INV/AC Bus Cntl
Cryo O2 Tk3 Htr Snsr Test/Reset sw
(OV103,4) TACAN 3 Auto Self-Test

CREW INDICATIONS
MASTER ALARM Light/Tone – on
(F7) C/W FC PUMP lt
(R1) FC3 RDY tb – bp 4 FC3 COOL PUMP ΔP tb – bp
(FSMs) S69 FC PUMP 3 S69 FC H2 PUMP 3
(F9) ESS3AB DC VOLTS – OSL
SM 67 ELECTRIC ESS3AB Volts 25-32V

NOTES
(1) * TIME CRITICAL * FC3 must be shut down within 9 min to avoid potentially hazardous condition
(2) GPC Purge Seq Start capability remains using TMBU or SM 60 constant. MCC will normally initiate auto purge via TMBU
(3) Unable to HALT or terminate GPC, IPL GPC, or perform HISAM dump. Do not pwr-off GPC 3 since it must be transitioned thru HALT to force RUN state
(4) FC3 Coolant Pump ΔP tbs lost
(5) Ltg pwr remains via individual lt sws
(6) Pressing the engage button will cause all PASS GNC GPCs to go to software halt
(7) AC3 Inverters and Buses remain pwrd. INV PWR 3 and INV/AC BUS 3 switches lost and INV PWR 3 tb lost

EPS SSR-94
BUS LOSS: ESS3AB O13

ACTIONS
NONE

BUS ISOLATION
ONLY ON MCC CALL, PERFORM
(O13:E) cb ESS 3AB 2 • AC3 SNSR – op • GPC STAT – op

EQUIP/FUNCTION LOST
1 ESS pwr to FC/MN BUS C and MN BUS TIE C pwr Contractor Cntl
3 AC3 Bus Snsr Computer Status Matrix (pnl O1) and CICU

CREW INDICATIONS
(R1) 2 INV/AC BUS 3 tb – OFF
(O1) GPC status lts lost

NOTES
(1) Switches and tbs still operate
(2) AC1 Bus remains pwrd. INV/AC BUS 3 sw works but tb lost
(3) Disables AC3 Auto Trip. AC3 Voltage and OVLD C/W lost

EPS SSR-95
BUS LOSS: ESS3AB ML86B

ACTIONS
(R1) • O2,H2 TK1,2 HTRS A (four) – AUTO • O2,H2 TK1,2 HTRS B (four) – OFF • O2,H2 MANF VLV TK 1,2 (four) – OP • O2,H2 TK3 HTR A,B (four) – OFF
(R13U) 1 • C/W PARAM SEL tw (three) – 020, 070 • C/W PARAM – INH • MEM – CLEAR • C/W PARAM SEL tw (three) – > 119

BUS ISOLATION
ONLY ON MCC CALL, PERFORM
(ML86B:G) cb ESS 3AB • CRYO CNTLR O2,H2 TK3 (two) – op • CRYO QTY O2,H2 TK3 (two) – op

EQUIP/FUNCTION LOST
Cryo Tk3 O2,H2 Htrs Auto ops Cryo O2,H2 Tk4 Htr Auto ops if O2,H2 Tk3 Htrs A(B) in Auto
Cryo O2,H2 Tk3 Qty Xdcrs

CREW INDICATIONS
MASTER ALARM Light/Tone – on
(F7) C/W O2 PRESS lt C/W H2 PRESS lt
(FSMs) S68 H2 CNTL P 3 S68 O2 CNTL P 3
(O2) CRYO O2,H2 QTY TK3 METER (two) ind – 0%

NOTES
(1) Inhibits Primary C/W for O2 and H2 Tk 3 Control Pressure

EPS SSR-100
BUS LOSS: CNTLAB1

ACTIONS	EQUIP/FUNCTION LOST	CREW INDICATIONS	NOTES
(A12) APU HTR 1 • GAS GEN/FUEL PUMP 1 – B AUTO 1 • GAS GEN/FUEL PUMP 3 – A AUTO • LUBE OIL LINE 1 – B AUTO APU HTR TK/FU LINE/H2O/ 1 • SYS 1A – OFF 1 • 1B – AUTO 1 • 3A – AUTO 1 • 3B – OFF HYD HTR • ELEV A – OFF • B – AUTO • AFT FUS A – OFF • B – AUTO HYD CIRC PUMP • PWR 1 – MNB • 3 – MNC	(A12) APU 1 GG/Fu Pump Htrs A APU 3 GG/Fu Pump Htrs B APU 1 Lube Oil Line Htrs A 1 Tk/Fu Ln Htrs A APU 1,2 GG Inj H2O Htrs 4A,5A APU 3 Tk/Fu Ln Htrs B Elevon Actr Htrs A Aft Fuselage Htrs A Circ Pump 1 MNA pwr 3 MNA pwr	CRT 1 blanks SM ALERT Light/Tone – on	(1) * TIME CRITICAL * If not done within 20 min, may freeze N2H4 and lose APU. However, SM ALERT occurs above freezing temp
	(R4) HYD Brake Htrs A	(FSMs) S68 H2 MANF VLV S68 O2 MANF VLV S86 APU/HYD APU SM0 THRM HYD S67 CNTL BUS V 2 S69 FC REAC 1 I/O ERROR CRT 1	(2) Msg occurs only if A AUTO (pnl R12U) selected for FC H2O Relief Htr
(L1) If using B CNTLR: • FLASH EVAP CNTLR PRI B – ON • TOP EVAP HTR DUCT – B If Hi Load Evap enabled: • HI LOAD DUCT HTR – B(C)	(L1A2) 3 Flash Evap Cntlr Pri B GPC Sel capability Top Evap Duct Fwd,Aft L,R Htrs A Hi Load Duct Outbd,Inbd Noz Htrs A	SM 67 ELECTRIC CNTL AB1 Volts < 20 During Rad Dpy/Sto: (R13L) RAD CNTL tbs (four) indicate single mtr ops	(3) Pri B Man ON Sel capability remains. Pri A and Sec Cntlrs remain
(L2) • FLASH EVAP FDLN HTR B SPLY – 2	(L2A1) FES H2O Fdln B Htrs 1	L ADP deploy time incr from 15 to 30 sec	(4) Vlv holds position. Vlv B remains
(R2) • BLR CNTLR/HTR 1 – A	(R2) Hyd H2O Blr 1 Cntlr B	STAR TRKR DR POS -Y OP/CL time incr from 8 to 16 sec	(5) Do not reconfig for reg switch or I'CNCT procedures
Refer to OMS/RCS Slide Rule for vlv loss info 5 Reconfig following vlv(s) only if leak isolation reqd: (O7) • AFT L RCS He PRESS A • AFT L,R RCS XFEED 3/4/5	(O7) 4 Aft L RCS He Pr Isol A man CL capability 6 Aft L,R RCS Xfeed Vlv 3/4/5 man CL capability	(F7) If APUs active and using BLR CNTLR/HTR 1B: C/W APU TEMP lt – on after ~2 min	(6) Vlv holds position
(O8) • L OMS XFEED A • R OMS XFEED A • FWD RCS He PRESS A	(O8) 7 R OMS He Press Isol A man Cntl and He Vap Isol 1,2 man Cntl 4 L,R OMS Tk Isol A man CL capability 4 L,R OMS Xfeed Vlv A man CL capability 4 Fwd RCS He Press Isol A man CL capability	CCTV Video TV Annun is lost if MNA selected for VCU	(7) Vlv normally closed
	8 (R13A2) PLBD: C/L Lat 9-12 Mtr 1 Port,Stbd Fwd Blkhd Mtrs 1 Stbd Door Mtr 1	SM 76 COMMUNICATIONS Ku Band A,B, GMBL and PA TEMP Read High '↑'	(8) Pwr to MCA Drivers lost through ENABLE sw
If AB1,2,3 unpwrd at same time: GNC 23 RCS Override F1 Manf status to CL: • RCS FWD – ITEM 1 EXEC • MANF VLVS 1 OVRD – ITEM 40 EXEC	(O14) RCS Manf F1 RJD pwr (F1F, F1L, F1U, F1D)	SM (BFS,SM) 63 PL BAY DOORS During PLBD OP/CL, single mtr run time noted on actuators listed at left	
(Continued)	(Continued)		

EPS SSR-100 (Cont)
BUS LOSS: CNTLAB1

	ACTIONS		EQUIP/FUNCTION LOST	CREW INDICATIONS	NOTES
	(C2) • L IDP/CRT SEL – 3 On MCC GO: • GPC/CRT 01 EXEC		(C2A2) MDU CRT 1 9 IDP 1		(7) Vlv normally closed (9) Loss of redundant port to the following: MDU CDR 1 (S) MDU CDR 2 (P) MDU MFD 2 (P) MDU PLT 1 (S) (10) Selecting failed MMU for GNC MF protects against GPC MMU Rcvr failure after OPS XTION prepositioning (11) Noz Htr A not wired; Noz Htr B still operates in A AUTO position. Other A Relief Htrs lost (12) Right Trim and Body Flap cntl remains. Left Trim and Body Flap cntl function is regained after the lost contacts have been deselected in OPS-8 (3,B) (13) B Htrs remain (14) Sys A Pri Cntlr, Auto switchover to Sec Cntlr remains (15) When SM not available, use NSP block to inhibit UL cmds. 'BCE STRG 1(3) NSP' annunciates and it requires GNC I/O RESET after UPLK – ENA for AOS
	SM 1 DPS UTILITY (G2,G8,S2) MMU ASSIGN		(O14) MMU 1		
10	• GNC – ITEM 1 EXEC • SM – ITEM 4 EXEC • PL – ITEM 6 EXEC • OPS 0 – ITEM 8 EXEC				
	(R11U) • FC H2O RELIEF HTR – B AUTO • FC H2O LINE HTR – B AUTO		(R11U) 11 FC H2O Relief: Vlv Htrs A Vent Line Htrs A Barrel Htrs A Noz Htrs A H2O Line Htrs A		
	When reqd: • For FC1, perform FUEL CELL PURGE – AUTO (ORB OPS, EPS)		(R11U) 7 FC1 Purge Vlv man Cntl		
	During OPS 8: GNC 43 CONTROLLERS Deselect L Pnl Trim L1: • DES PNL TRIM L1 – ITEM 36 EXEC Deselect Bdy Flp UP/DN L1: • DES BDY FLP L1 – ITEM 19 EXEC		(F6A7) 12 L Trim RHC INH capability 12 Pnl ON capability (L2A1) 12 L Bdy Flp UP/DN capability		
	(A14) RCS/OMS HTR • FWD RCS – B AUTO • L POD (two) – A OFF, B AUTO		(A14) 13 Fwd RCS A Htrs (all) 13 L Pod A Htrs (all)		
	GNC 23 RCS • Reprioritize L, R Manf 2 Jets to first priority: DES INH twice, all other jets highest priority first, then next highest priority, etc • Set aft pod(s) PRI JET FAIL LIMIT to 3		(A14) Aft RCS L,R Jet 2 Htrs		
			COMSEC 1 & 2 Pwr Redundancy		
	If reqd during entry (< 120K ft): (L1) • NH3 CNTLR A(B) – PRI/GPC		(L1A2) 14 NH3 Sys A Sec Cntlr man ON capability		
15	If AB1,2,3 unpwrd at same time: (AIL) • NSP ENCRYPTION MODE – SEL • NSP ENCRYPTION SEL – BYP		If AB1,2,3 unpwrd at same time: (A1A2) COMSEC 1,2 Key		
	No SM GPC and LOS: (C3) • UPLK – NSP BLK				
	(Continued)		(Continued)		

EPS SSR-100 (Cont)
BUS LOSS: CNTLAB1

ACTIONS
If CCTV reqd: (A7U) • TV PWR CONTR UNIT – MNB

BUS ISOLATION
ONLY ON MCC CALL, PERFORM
• MDU CRT 1 PWR – OFF
(C2) • IDP/CRT1 PWR – OFF
(O14:F) • MMU 1 – OFF
(F3) • TRIM RHC PNL – ENA • PNL – OFF
(R4) • MPS FILL/DRAIN LH2 INBD – GND
(R14D) • cb MNA TV CONTR UNIT – op
(A7U) PL BAY • FLOOD AFT STBD – OFF • FLOOD FWD PORT – OFF • FLOOD FWD BHD – OFF

	EQUIP/FUNCTION LOST
	(R4) 16 Prplt F/D Inbd LH2 Vlv Man OP capability
	(A7A1) Video Cntl Unit MNA pwr
	(A7A1) PLB Floodlts: Aft Stbd Fwd Port Blkhd
	(R1A2) 17 Man ON Cntl of Cryo O2,H2 Tk1 Htrs B, Tk3 Htrs A 6 Cryo O2,H2 Tk1 Manf Vlv Cntl
	(A8L) Port RMS: 18 Fwd MRL Mtr 1 18 Mid MRL Mtr 1 18 Aft MRL Mtr 2 STBD RMS: 19 Fwd MRL Mtr 2 19 Mid MRL Mtr 1 19 Aft MRL Mtr 1
	ROEU AC1 PBM MMC 1 pwr to: 20 Orbiter arm drive mtr (ODM mtr 1 – mate A, demate A, relax A) 20 ODA mtr 1 latch/ release
	(R1A2) 21 FC1 Reac Vlv Cntl via pnl R1 sw FC1 STOP capability via START/STOP sw (pnl R1)
	(R2) Ctr MPS He Isol A Man Cntl
	(C3) FC3 Redundant Reac Vlv Close Cntl
	(L2A1) 22 Atm Press Cntl O2 Sys 1 Sply Vlv Cntl (L1A2) 23 Freon Loop 1,2 Cntlr B Rad Byp Vlv Mtrs Man Cntl
	(Continued)

CREW INDICATIONS

NOTES
(6) Vlv holds position
(16) Loss of manual capability to inert LH2 Manf
(17) Auto Cntl of these Htrs also lost if single Htr Ops and tank not paired
(18) Single mtr time. One failure away from loss of two out of three MRLs. EVA or RMS jettison capability exists
(19) Single mtr time. One failure away from loss of MRL latching capability. EVA or OBSS jettison capability exists
(20) Single mtr time
(21) Vlv holds position. FC1 Redundant Reac Vlv Close Cntl on pnl C3 remains
(22) Vlv holds position. Sys 2 remains
(23) Cntlrs A,B Rad Byp Vlv Mtrs Auto Cntl and Cntlr A Rad Byp Vlv Mtr Man Cntl remain

EPS SSR-100 (Cont)
BUS LOSS: CNTLAB1

BUS ISOLATION	EQUIP/FUNCTION LOST	CREW INDICATIONS	NOTES
	(O14) 24 RJDF 1B F1 Manf Logic sw pwr (F1F,F1L,F1U,F1D)	(F3) 25 NWS fail lt (for actuator pressure sw)	(6) Vlv holds position (24) **WARNING** Driver pwr to F1 jets lost if RJDF 1B Driver sw OFF (O14:F) (25) NWS fail light still driven by miscompare logic feedback on rollout (26) Redundant mtrs remain (27) Vlv closes. Redundant vlv remains (28) Redundant pwr sply remains. GG Bed T and GBX P ind lost when APU running (29) Redundant RPC remains (30) Vlv holds position. GPC OP capability remains during entry (31) Loss of redundant hyd NLG deploy and NWS redundancy (32) Hyd Sys 1 still available for NWS (33) MNB pwr select capability remains (34) Mtr 2 remains (35) Htr Cntlr 2 remains (36) L OMS auto shutdown if Pc < 80% and '↓' on MNVR EXEC display **CAUTION** No purge. Wait 10 min between burns (37) Redundant coils remain
	(F6A1) L ADI Att Ref Set capability		
	(R13A2) 26 Rad Cntl Sys: Port Lat 7-12 Mtr 1 Dpy/Sto Mtr 1 Stbd Lat 1-6 Mtr 1 Dpy/Sto Mtr 2		
	(R2) 27 APU 1 Fu Tk Vlv A 28 Cntlr Pwr Sply A APU 1 GBX GN2 Repress Vlv 29 Hyd Main Pump 1 Depress Solenoid RPC A 29 Hyd Main Pump 3 Depress Solenoid RPC B		
	(R4) 6 TVC Hyd Sys 1 Isol man Cntl 30 Hyd Brake Isol 1 man Cntl (F6A6,F8A5) NLG Backup Rel and Extension Sys 2 LMG, RMG Backup Rel Sys 2 31 LG Extend Vlv 2 32 NWS Hyd Sys 2		
	(FPC1/AW18H) 33 EMU 1,2 Pwr/Batt chgr MNA pwr		
	(O6) -Y Star Trkr Dr Sys 1 OP/CL capability		
	(C3A5) 34 L ADP Dpy Mtr 1 35 Htr Cntlr 1		
	(A6A1) PL Reten Sys A Rel/Lat Mtrs		
	(R2) 26 ET Door Mtrs: C/L Lat Actr 1 Mtr 1 man STO capability C/L Lat Act 2 Mtr 1 man STO capability L Dr Closure Mtr 1 man Cntl L Dr Uplock Lat Mtr 2 man Cntl R Dr Uplock Lat Mtr 2 man Cntl		
	(A14) 6 Ku-Band Temp Meas PA, Rcvr, A&B Gimbal, Rate Snsr, Ant Feed		
	(C3A1) 36 L OMS Arm 1, Arm/Press 1 sw Contacts 37 L OMS Eng Pr Vlv Coil 1, Cntl Vlv 1,2 Coils 1		

EPS SSR-101
BUS LOSS: CNTLAB2

ACTIONS	EQUIP/FUNCTION LOST	CREW INDICATIONS	NOTES
(A12) APU HTR 2 • GAS GEN/FUEL PUMP 1 – B AUTO APU HTR TK/FU LINE/H2O/ 2 • SYS 1A – OFF 2 • 1B – AUTO 2 • 3A – AUTO 2 • 3B – OFF HYD HTR • RUD SPD BK A – OFF • B – AUTO • CIRC PUMP PWR 1 – MNB	(A12) APU 1 GG/Fu Pump Htrs A APU 1 TK/Fu Ln Htrs A APU GG Inj H2O Tank Htrs 1A,2A APU 3 Tk/Fu Ln Htrs B Rud/Spd Brk Htr A (R2) Circ Pump 1 MNA pwr	(F7) 1 C/W RCS JET lt – on SM ALERT Light/Tone – on (FSMs) S86 APU/HYD W/B SM0 THRM HYD (B) S67 CNTL BUS V S67 DISPLAY SW L 1 F RCS D(F,L,U) JET S68 H2 MANF VLV S68 O2 MANF VLV SM 67 ELECTRIC CNTL AB2 Volts < 20 During Rad Dpy/Sto ops: (R13L) RAD CNTL tbs (four) indicate single mtr ops If H2O PUMP LOOP 1,A active: C/W H2O LOOP lt – on 'S88 H2O PUMP P1' 'S88 H2O LOOP 1 FLOW' 'S88 H2O LOOP 1 TEMP' (O1) H2O PUMP OUT PRESS meter ind – 20-25 psia L ADP deploy time incr from 15 to 30 sec STAR TRKR DR POS -Y CL time incr from 8 to 16 sec (F7) If APUs active and using H2O BLR CNTLR/HTR 1B: C/W APU TEMP lt – on after ~2 min SM (BFS,SM) 63 PL BAY DOORS During PLBD OP/CL, single mtr run time noted on actuators listed at left	(1) Indications do not appear until jet commanded (2) * TIME CRITICAL * If not done within 20 min, may freeze N2H4 and lose APU. However, SM ALERT occurs above freezing temp (3) Pri B GPC Sel capability remains. Pri A and Sec Cntlrs remain (4) In OPS 2, FES GPC cmd is not present, but one may be sent if reqd (5) Vlv holds position. Isol B remains (6) Do not reconfig for reg switch or I'CNCT procedures (7) Vlv holds position (8) Pwr to MCA Drivers lost through ENABLE sw (9) Vlv holds position. GPC OP capability remains during entry
(L1) • H2O PUMP LOOP 1 – B • FLASH EVAP CNTLR PRI A – ON (if reqd) • TOP EVAP HTR NOZ L – A AUTO • TOP EVAP HTR DUCT – B If Hi Load Evap enabled • HI LOAD DUCT HTR – B(C)	(L1A2) H2O Loop 1 Pump A man ON capability 3 Flash Evap Cntlr Pri B man 4 ON Sel capability Top Evap L Noz Htr B Top Evap Duct Fwd,Aft L,R Htrs A Hi Load Duct Outbd,Inbd Htrs A		
(L2) • FLASH EVAP FDLN HTR A SPLY – 2	(L2A1) FES H2O Fdln A Htrs 1 (all)		
Place CDR disp sws (eight) to green dot position: (F6) • AIR DATA – NAV • ADI ATT – LVLH • ERR – MED • RATE – MED • HSI SEL MODE – ENTRY • HSI SEL SOURCE (two) – NAV, 3	(F6A1) Air Data Source Sel capability L ADI Att, Err, Rate Sel capability (F6A5) L HSI Mode, Source Sel capability		
(F7) • RADAR ALTM – 2	(F6A7) L Radar Altm Sel capability		
Refer to OMS/RCS Slide Rule for vlv loss info 6 Reconfig following vlv(s) only if leak isolation reqd: (O7) • AFT R RCS He PRESS A • L, R RCS XFEED 3/4/5	(O7) 5 Aft L RCS He Pr Isol A man Cntl and GPC CL capability 5 Aft R RCS He Pr Isol A man CL capability 7 Aft L,R RCS Xfeed Vlv 3/4/5 man CL capability		
(O8) • L OMS XFEED A • R OMS XFEED A	(O8) 5 L,R OMS Tk Isol A man CL cap 5 L,R OMS Xfeed Vlv A man CL cap 5 Fwd RCS He Pr Isol A man Cntl and GPC CL cap Fwd RCS Tk Isol 3/4/5 man CL and man Ovrd of GPC CL cap		
	(R13A2) 8 PLBD: C/L Lat 1-4, 5-8 Mtrs 1 Port Aft Blkhd Mtr 1		
	9 (R4) LG Extend Isol Vlv man Cntl		
(Continued)	(Continued)		

EPS SSR-101 (Cont)
BUS LOSS: CNTLAB2

	ACTIONS		EQUIP/FUNCTION LOST	CREW INDICATIONS	NOTES
	(R1) If TK1 in use: O2,H2 TK1 • HTR A (two) – AUTO • B (two) – OFF If TK3 in use: O2,H2 TK3 HTR • HTR A (two) – OFF • B (two) – AUTO	7	(R1A2) Cryo O2,H2 Tk1 Manf Vlv Cntl Cryo O2,H2 Tk1 Htrs B Cryo O2,H2 Tk3 Htrs A		(7) Vlv holds position (10) Manf status not automatically declared closed. Jet fail-offs may occur (11) Selecting failed MMU for GNC MF protects against GPC MMU Rcvr failure after OPS XTION prepositioning (12) RM sw downmodes to 2-level for -X position (13) When SM unavailable, use NSP block to inhibit UL Cmds. 'BCE STRING 1(3) NSP' annunciates and it requires GNC I/O RESET after UPLK – ENA for AOS (14) Vlv normally closed (15) B Htrs remain
	(R2) • BLR CNTLR/HTR 1 – A		(R2) Hyd H2O Blr 1 Cntlr B		
10	GNC 23 RCS Override F1 Manf status to CL: • RCS FWD – ITEM 1 EXEC • MANF VLVS 1 OVRD – ITEM 40 EXEC		(O14) RCS Manf F1 RJD pwr (F1F,F1L,F1U,F1D)		
11	SM 1 DPS UTILITY (G2,G8,S2) MMU ASSIGN • GNC – ITEM 2 EXEC • SM – ITEM 3 EXEC • PL – ITEM 5 EXEC • OPS 0 – ITEM 7 EXEC		(O15) MMU 2		
12	If Network Sig Proc Encryption Select – Bypass (A1L) and no SM GPC: (C3) • UPLK – NSP BLK	13	(C3A5) Uplink switch GPC block of UL Cmds capability		
	When reqd: • Perform FC1 purges in AUTO mode (ORB OPS)	14	(R11U) FC1 Purge Vlv man Cntl		
			(C3) FC3 Redundant Reac Vlv Close Cntl		
	(A14) RCS/OMS HTR • FWD RCS – B AUTO • L POD (two) – A OFF, B AUTO	15	Fwd RCS A Htrs (all) L Pod A Htrs (partial)		
	If SENSE – -Z: (A6U) • SENSE – -X • Wait at least 1 sec, then reposition as desired	12	(A6A1) 3-level sw RM for -X Sense		
	If AB1,2,3 unpwrd at same time: (A1L) • NSP ENCRYPTION MODE – SEL • NSP ENCRYPTION SEL – BYP		If AB1,2,3 unpwrd at same time: (A1A2) COMSEC 1,2 Key		
	(Continued)		(Continued)		

EPS SSR-101 (Cont)
BUS LOSS: CNTLAB2

ACTIONS
If reqd during entry (< 120K ft): (L1) • NH3 CNTLR A(B) – PRI/GPC

BUS ISOLATION
ONLY ON MCC CALL, PERFORM
(R2) • MPS He I'CNECT CTR – GPC
(R4) • MPS FILL/DRAIN LH2 INBD – GND
(O15:F) • MMU 2 – OFF
If SSPTS: (A15) OPCU 1 CONV – OFF OPCU 1 V-ADJ – OFF APCU 1 CONV – OFF

	EQUIP/FUNCTION LOST
16	(L1A2) NH3 Sys B Sec Cntlr man ON capability
	(R2) Ctr MPS He Intercom Vlvs man Cntl
17	(R4) Prplt F/D LH2 Inbd Vlv man Cntl
	If SSPTS: (A15) PTU 1 (OPCU 1 and APCU 1) Ability to change state of APCU 1's OUTPUT relay
18	(O17) ATVC 2 Isol ME
19	(R1A2) FC1 Reac Vlv Cntl via pnl R1 sw
20	FC1 STOP capability via START/STOP sw (pnl R1)
21	(L2A1) Atm Press Cntl O2 Sys 1 Sply Vlv Cntl
	(F6) L HUD
	(F6A1) L ADI Att Ref Set capability
7	(R4) TVC Hyd Sys 1 Isol man Cntl
22	(O6) -Y Star Trkr Dr Sys 1 CL capability
23	(C3A5) L ADP Deploy Mtr 1
24	Htr Cntlr 1
	(R2) L MPS He Isol B man Cntl
22	(R13A2) Rad Cntl Sys Port Lat 1-6 Mtr 1 Dpy/Sto Mtr 1 Stbd Lat 7-12 Mtr 1 Dpy/Sto Mtr 2
25	(O15) RJDA L Vernier Logic pwr (L5L)
	(Continued)

CREW INDICATIONS

NOTES
(7) Vlv holds position
(16) Sys B Pri Cntlr, Auto switchover to Sec Cntlr remain
(17) Loss of manual capability to inert LH2 Manf
(18) Six vlvs fail to non-isolation position
(19) Vlv holds positions. FC1 Redundant Reac Vlv Close Cntl on pnl C3 remains
(20) FC1 can be stopped via FC1 CNTLR sw (O14:A)
(21) Vlv holds position. Sys 2 remains
(22) Redundant mtrs remain
(23) Mtr 2 remains
(24) Htr Cntlr 2 remains
(25) ***WARNING*** Driver pwr to L5 jets lost if L5/F5/R5 Driver sw OFF (O16:F)

EPS SSR-101 (Cont)
BUS LOSS: CNTLAB2

BUS ISOLATION	EQUIP/FUNCTION LOST	CREW INDICATIONS	NOTES
	(R2) 22 ET Door Mtrs C/L Lat Actr 1 Mtr 2 man Stow capability C/L Lat Actr 2 Mtr 2 man Stow capability L Dr Uplock Lat Mtr 2 man Cntl R Dr Closure Mtr 2 man Cntl R Dr Uplock Lat Mtr 2 man Cntl		(22) Redundant mtrs remain (26) L OMS auto shutdown if Pc < 80% and '↓' on MNVR EXEC display **CAUTION** No purge. Wait 10 min between burns (27) Redundant coils remain (28) Vlv closes. Redundant vlv remains (29) Redundant RPC remains
	(C3A1) 26 L OMS ARM 2, ARM/PRESS 2 sw Contacts 27 L OMS Eng Pr Vlv Coil 2, Cntl Vlv 1,2 Coils 2		
	(R2) 28 APU 2 Fu TK Vlv B 29 Hyd Main Pump 1 Depress Solenoid RPC A 29 Hyd Main Pump 3 Depress Solenoid RPC B		

EPS SSR-102
BUS LOSS: CNTLAB3

(Includes MNA FMC1, MNA MMC1, MNA MMC3, MNA AMC1)

ACTIONS	EQUIP/FUNCTION LOST	CREW INDICATIONS	NOTES
(A12) APU HTR 1 • GAS GEN/FUEL PUMP 1 – A AUTO • LUBE OIL LINE 1 – A AUTO APU HTR TK/FU LINE/H2O/ 1 • SYS 1A – OFF 1 • 1B – AUTO 1 • 3A – AUTO 1 • 3B – OFF HYD HTR • BDY FLP A – OFF • B – AUTO • CIRC PUMP PWR 1 – MNA	(A12) APU 1 GG/Fu Pump Htrs B 1 Lube Oil Line Htrs B 1 Tk/Fu Ln Htrs A APU 3 Tk/Fu Ln Htrs B APU 3 GG Inj H2O Htrs 3B, 23B Body Flap Htr A Circ Pump 1 MNB pwr	SM ALERT Light/Tone – on 'S67 CNTL/ESS V' 'S88 THERMAL FRN' (2)	(1) * TIME CRITICAL * If not done within 20 min, may freeze N2H4 and lose APU. However, SM ALERT occurs above freezing temp
(R2) • BLR CNTLR/HTR 1,3 (two) – B	(R2) Hyd H2O BLR 1,3 Cntlr A	(FSM) RM DLMA MANF	(2) Freon Loop 1 Flow Prop Vlv operation not affected
(A14) RCS/OMS HTR • OMS CRSFD LINES – A OFF, B AUTO	(A14) OMS Crsfd Ln Htrs A	(L1) 2 FLOW PROP VLV LOOP 1 tb – bp	(3) Vlv holds position
(L1) • H2O PUMP LOOP 1 – B • TOP EVAP HTR DUCT – B If Hi Load Evap enabled: • HI LOAD DUCT HTR – B(C)	(L1A2) H2O Loop 1 Pump A Top Evap Duct Fwd,Aft Htrs A Hi Load Duct Outbd,Inbd Noz Htrs A	(O8) FWD RCS 3 TK ISOL 3/4/5 tb – bp 3 MANF ISOL 1 tb – bp	(4) If AC1 cb not opened, Lat Mtrs 1 of actuators for Port,Stbd Rad Lat 1-6,7-12 continue to run until Sys A Lat Cntl sw placed to OFF. Other equip pwrd by AC1 MMC1 and AC1 MMC3 are lost because MNA MMC1 and MNA MMC3 lost
Refer to OMS/RCS Slide Rule for vlv loss info	(O7) 5 Aft R RCS He Press Isol A man Cntl, GPC CL capability	(R13L) 4 RAD CNTL STBD tb – bp 4 PORT tb – bp	(5) Vlv holds position. GPC OP capability remains. Isol B remains. Auto Overpress protection lost on R RCS A reg
(MA73C:C,D) 4 • cb MCA PWR AC1 3Φ MID 1,3 (two) – op	(MA73C) 4 Port,Stbd Rad Lat 1-6,7-12 Mtrs 1 Limit sw	SM 67 ELECTRIC CNTL AB3 Volts < 20	
For PLBD ops: • OP/CL Drs in man mode	(MA73C) PLBD: C/L Lat 1-4,5-8,9-12 Mtrs 1 Port,Stbd Fwd Blkhd Mtrs 1 Port Aft Blkhd Mtr 1 Stbd Door Mtr 1 Port Door Mtr 2 CL Limit sw	LADP deploy time incr from 15 to 30 sec	
Do not perform if AB1,2,3 unpwrd at same time: GNC 23 RCS Override F1 Manf status to OP: • RCS FWD – ITEM 1 EXEC • MANF VLVS 1 OVRD – ITEM 40 EXEC		(F7) If APUs active and using H2O BLR CNTLR/HTR 1A or 3A: C/W APU TEMP lt – on after ~2 min	
• PLT RHC pb – push, if BFS engage reqd	(F6) CDR BFS no eng capability GPC 1,2,4 no eng capability	SM (BFS,SM) 63 PL BAY DOORS If in AUTO OP/CL for PLBDs, sequence terminates immediately and msg '(S63) PBD CONFIG'	
	COMSEC 1 & 2 Pwr Redundancy	During MAN PLBD OP/CL, single mtr run time noted on actuators listed at left	
(Continued)	(Continued)	(Continued)	

EPS SSR-102 (Cont)
BUS LOSS: CNTLAB3

ACTIONS
6 AB1,2,3 unpwrd at same time: (A1L) NSP ENCRYPTION MODE – SEL NSP ENCRYPTION SEL – BYP
No SM GPC or LOS: (C3) UPLK – NSP BLK

BUS ISOLATION
ONLY ON MCC CALL, PERFORM
NONE

EQUIP/FUNCTION LOST
If AB 1,2,3 unpwrd at same time: (A1A2) COMSEC 1,2 Key
(MA73C) Stbd Rad Dpy/Sto Mtr 1 Port Rad Dpy/Sto Mtr 1 -Y Star Trkr Dr Sys 1 OP/CL capability
(R4) 7 LG Extend Isol Vlv 7 LG Extend Vlv 1 8 NWS Hyd Sys 1
(MA73C) LH Vents 5,6,8,9 Mtrs 1 RH Vents 1,2,3,5,6 Mtrs 1
(MA73C) 9 L ADP Deploy Mtr 1 Disc 1 10 Htr Cntlr 1
(R2) 11 APU 3 Fu Tk Vlv B 12 Cntlr Pwr Sply B
(C3A6) 13 Fwd Pnl Trans X,Y Norm, Pulse, and Fwd Pnl Roll, Pitch,Yaw Disc Rate, Pulse, Select capability 13 Fwd Pnl Trans Z High, Norm, Pulse Sel capability 13 Fwd Pnl Trans Low Z Sel capability 13 Fwd Pnl PRI,ALT,VERN Sel capability 13 Fwd Pnl PCT Exec capability
(R4) 14 MPS Inbd LH2 Prplt Vlv man Cntl
(R2) MPS Pneu He Isol 1 man Cntl R MPS He Isol B man Cntl
(MA73C) 15 ET Door Mtrs: C/L Lat Actr 1 Mtr 1 GPC Cntl C/L Lat Actr 2 Mtr 1 GPC Cntl L Dr Closure Mtr 1 GPC CL capability L Dr Uplock Lat Mtr 1 GPC Lat capability

CREW INDICATIONS
STAR TRKR DR POS -Y OP/CL time incr from 8 to 16 sec
(L1) If H2O PUMP LOOP1,A ON: C/W H2O LOOP lt – on 'S88 H2O PUMP P1' 'S88 H2O LOOP 1 FLOW' 'S88 H2O LOOP 1 TEMP' (O1) H2O PUMP OUT PRESS LOOP 1 ind – 20-25 psia
(A8L) PORT RMS: DPY/STO tb – bp RETEN LAT tb – bp R-F-L MID tb – bp STARBOARD RMS: DPY/STO tb – bp RETEN LAT tb – bp R-F-L AFT tb – bp
SM 94 PDRS CONTROL PORT RMS Indications lost: Mid MRL Mtr 1 LAT/REL/RDY Aft MRL Mtr 2 LAT/REL/RDY STBD RMS Indications lost: Fwd MRL Mtr 2 LAT/REL/RDY Aft MRL Mtr 1 LAT/REL/RDY

NOTES
(6) When SM not available, use NSP block to inhibit UL cmds. 'BCE STRG 1(3) NSP' annunciates and it requires GNC I/O RESET after UPLK – ENA for AOS
(7) Lose Hyd deploy capability for all Ldg Grs. Pyro backup release sys will deploy Ldg Grs. NLG can also be deployed by Hyd Sys 2
(8) Hyd Sys 2 still available for NWS
(9) Mtr 2 remains
(10) Htr Cntlr 2 remains
(11) Vlv closes. Redundant vlv remains
(12) Redundant pwr sply remains. Turbine speed ind lost
(13) Use pb on Aft pnl A6
(14) Loss of manual capability to inert LH2 Manf
(15) Redundant mtrs remain

EPS SSR-102 (Cont)
BUS LOSS: CNTLAB3

ACTIONS		EQUIP/FUNCTION LOST	CREW INDICATIONS	NOTES
		(MA73C) AC pwr removal capability via Limit sw for ET Door Mtrs: C/L Lat Actr 1 Mtr 1 2 Mtr 1 L Dr Closure Mtr 1 Uplock Lat Mtr 1		(16) Single mtr time. One failure away from loss of two out of three MRLs. EVA or RMS jettison capability exists (17) Single mtr time. One failure away from loss of MRL latching capability. EVA or OBSS jettison capability exists
	16 16	Port RMS: Mid MRL Mtr 1 Aft MRL Mtr 2		
	17 17	STBD RMS: Fwd MRL Mtr 2 Aft MRL Mtr 1		

EPS SSR-103
BUS LOSS: CNTLBC1

ACTIONS	EQUIP/FUNCTION LOST	CREW INDICATIONS	NOTES
(A12) APU HTR 1 • GAS GEN/FUEL PUMP 1 – A AUTO 1 • GAS GEN/FUEL PUMP 2 – B AUTO • LUBE OIL LINE 2 – B AUTO APU HTR TK/FU LINE/H2O/ 1 • SYS 1A – AUTO 1 • 1B – OFF 1 • 2A – OFF 1 • 2B – AUTO HYD HTR • BDY FLP A – AUTO • B – OFF • CIRC PUMP PWR 1 – MNA • CIRC PUMP PWR 2 – MNC	(A12) APU 1 GG/Fu Pump Htrs B APU 2 GG/Fu Pump Htrs A APU 2 Lube Oil Line Htrs A APU 1 Tk/Fu Ln Htr B APU 1,2 GG Inj H2O Htrs 4B,5B APU 2 Tk/Fu Line Htr A Body Flap Htr B MNB Circ Pump 1 pwr MNB Circ Pump 2 pwr	MASTER ALARM Light/Tone – on (F7) SM ALERT Light/Tone – on SM 67 ELECTRIC CNTL BC1 Volts < 20 2 C/W RCS JET lt – on (FSMs) S69 FC H2O RLF HTR S67 CNTL BUS V 3 S86 APU/HYD W/B SM0 THRM HYD (B) 2 F,L,R RCS L,R,D JET (COMM LOST) All S-BD A/G voice lost if Sys 1 selected (L1) 4 RAD BYP VLV 2 tb – bp If Site AOS and using S-BD Ant Elec 1: 5 'ANTENNA' If NSP 1 selected: 'BCE STRG 1 NSP' During Rad Dpy/Sto: (R13L) RAD CNTL STBD tb indicates single mtr ops RAD LAT CNTL tbs (two) indicate single mtr ops L,R ADP deploy time incr from 15 to 30 sec STAR TRKR DR POS -Y CL time incr from 8 to 16 sec STAR TRKR DR POS -Z OP/CL time incr from 8 to 16 sec If SYS 1 pwrd: 'S62 BCE BYP PSP 1' Loss of PL TLM and CMD If PDI FDA enabled: 'S62 PDI DECOM FAIL' If first RGA failure and rates sensed: 'RM FAIL RGA' (3) (F7) If APUs active and using BLR CNTLR/HTR 2B: C/W APU TEMP lt – on after ~2 min SM (BFS,SM) 86 APU/HYD APU 1 SPEED % Ind – 0 CCTV Video and Annun is lost if MNB selected for VCU PLB Floodlts lost: Fwd Stbd Mid Port SM (BFS,SM) 63 PL BAY DOORS During PLBD OP/CL, single mtr run time noted on actuators listed at left	(1) * TIME CRITICAL * If not done within 20 min, may freeze N2H4 and lose APU. However, SM ALERT occurs above freezing temp (2) Indications do <u>not</u> appear until jet commanded (3) Msg occurs only if B AUTO (pnl R12U) selected for FC H2O Relief Htr (4) Vlv still functional (5) FSM caused by antenna miscompare (6) REACQ and PSP reconfig procedures are flight specific. If reqd, procedures can be found in payload or ISS specific books (7) OIU 2 interfaces with PSP 2 for commanding (8) Pwr to MCA Drivers lost through ENABLE sw
(A1L) S-BD PM • ANT SW ELEC – 2 • XPNDR – 2 • PWR AMPL OPER – 2 • STBY – 2 • PRE AMP – 2 NSP • PWR – 2 If PSP and/or INTRG reqd for PL or ISS ops: • S-BD PL PWR SYS – 2 • CNTL – PNL • – CMD 6 • Reconfig PSP 6 • Perform PL INTRG REACQ (if reqd)	(A1A2) S-BD PM Sys 1: Xpndr 1 Pre-Amp 1 Pwr Amp 1 PM Ant Sw 1 FM Ant Sw 1 NSP 1/COMSEC 1 S-BD PL INTRG 1 PSP 1		
(A1R) • S-BD FM PWR – 2	(A1A3) S-BD FM Sys 1		
If no comm: (C3) • S-BD PM CNTL – PNL • – CMD			
7 If OIU reqd: (SSP) • OIU PWR – OIU 2 ON • OIU tb – DN • √MCC, OIU reconfig			
(L1) • TOP EVAP HTR NOZ L – B AUTO • TOP EVAP HTR DUCT – A If Hi Load Evap enabled: • HI LOAD DUCT HTR – A (C)	(L1A2) Top Evap L Noz Htr A Top Evap Duct Fwd,Aft Htrs B Hi Load Duct Outbd,Inbd Noz Htrs B		
(R2) • BLR CNTLR/HTR 2 – A	(R2) Hyd H2O Blr 2 Cntlr B		
	(R13A2) 8 PLBD: C/L Lat 13-16 Mtr 2 Stbd Aft Blkhd Mtr 2 Port Drive Mtr 2		
(Continued)	(Continued)		

EPS SSR-103 (Cont)
BUS LOSS: CNTLBC1

	ACTIONS		EQUIP/FUNCTION LOST	CREW INDICATIONS	NOTES
	(O8) • If Straight feed config, Right OMS Crossfeed A – OP (tb-OP). Otherwise, √MCC	9	OMS Eng/Xfeed Vlv Redundancy		(9) Maintains deorbit capability for MNC DA3 failure
	Refer to OMS/RCS Slide Rule for vlv loss info Reconfig following vlv(s) only if leak isolation reqd: (O7)	10	(O8) F,R,RCS He Press Isol B man CL capability		(10) Vlv holds position. Man OP and full GPC cntl remains
11	• AFT R RCS He PRESS B				(11) Do not reconfig for reg switch or I'CNCT procedures
	(O8) • L OMS XFEED B • R OMS XFEED B • FWD RCS He PRESS B	10 10	(O8) L OMS Tk Isol B man CL capability L,R OMS Xfeed Vlv B man CL capability		(12) Manf status not automatically declared closed. Fail-offs will occur when jet commanded
	If BC1,2,3 unpwrd at same time: GNC 23 RCS Override F2 Manf status to CL: • RCS FWD – ITEM 1 EXEC • MANF VLVS 2 OVRD – ITEM 41 EXEC				(13) NOZ Htr A not wired (14) Vlv normally closed. GPC cntl remains. Man override of GPC OP CMD is lost
	For attitude control, perform RCS, LOSS OF VERNIERS (ORB OPS)	12	(O16) RCS Manf F5,L5,R5 RJD pwr (F5L,F5R,L5L,L5D,R5R,R5D)		
	GNC 23 RCS • Reprioritize L,R Manf 1 Jets to first priority: DES INH twice, all other jets highest priority first, then next highest priority, etc • Set aft pod(s) PRI JET FAIL LIMIT to 3		(A14) Aft RCS L,R Jet 1 Htrs		
	(A14) RCS/OMS HTR • FWD RCS – A AUTO • L POD (two) – A AUTO, B OFF • R POD (two) – A OFF, B AUTO		(A14) Fwd RCS Htrs B (all) L Pod Htrs B (all) R Pod Htrs A (all)		
	(R11U) FC H2O • LINE HTR – A AUTO		(R11U) FC H2O Line Htrs B Relief Htrs B Vent Line Htrs B Barrel Htrs B Rlf Noz Htrs B		
13	• RELIEF HTR – A AUTO				
	When reqd: • For FC2, perform FUEL CELL PURGE – AUTO (ORB OPS, EPS)	14	(R11U) FC2 Purge Vlv man Cntl		
	Prior to using L(R) OMS: (O8) L, R OMS He PRESS/VAP • ISOL A (two) – OP, then • – GPC • B (two) – GPC	14	(O8) L,R OMS He Press Isol B man Cntl and VAP ISOL 1,2 Man B Cntl		
	If CCTV reqd: (A7U) • TV PWR CONTR UNIT – MNA		(A7A1) Video Cntl Unit MNB pwr		
	(Continued)		(Continued)		

EPS SSR-103 (Cont)
BUS LOSS: CNTLBC1

ACTIONS	EQUIP/FUNCTION LOST	CREW INDICATIONS	NOTES
If EMU(s) in battery charge mode: (AW18H) • PWR/BATT CHGR EMU 1(2) BUS SEL – MNA	(FPC2/AW18H) EMU 1,2 Pwr/Batt Chgr MNB pwr		(15) Right Trim and Body Flap Cntl remains. Left Trim and Body Flap cntl function is regained after the lost contacts have been deselected in OPS-8 (3,B) (16) Vlv holds position (17) Vlv holds position. Loss of manual capability to inert LO2 and LH2 Manfs (18) Auto Cntl of these Htrs also lost if single Htr Ops and tank not paired (19) Vlv holds position. FC2 Redundant Reac Vlv Close Cntl on pnl C3 remains (20) FC2 can be stopped via FC2 CNTLR sw on pnl O15:A (21) Cntlrs A, B Rad Byp Vlv Mtrs Auto Cntl and Cntlr B Rad Byp Vlv Mtr Man Cntl remain
During OPS 8: GNC 43 CONTROLLERS Deselect L Pnl Trim L2: • DES PNL TRIM L2 – ITEM 37 EXEC Deselect L Bdy Flp UP/DN L2: • DES BDY FLP L2 – ITEM 20 EXEC	(F6A7) 15 L Trim RHC – INH capability 15 Pnl – ON capability (L2A1) 15 L Bdy Flp Cntl		
For SSME Hyd Repress: (R4) • HYD MPS/TVC ISOL VLV SYS 1,3 (two) – OP • Wait 10 sec, then CL	(R4) 16 MPS/TVC Hyd Sys 2 Isol man Cntl		
BUS ISOLATION			
ONLY ON MCC CALL, PERFORM			
(F3) • TRIM RHC – ENA • PNL – OFF			
(R4) MPS • FILL/DRAIN LO2 INBD – GND • FILL/DRAIN LH2 OUTBD – GND	(R4) 17 Prplt F/D Inbd LO2 Vlv man OP capability 17 Prplt F/D Outbd LH2 Vlv man Cntl		
(O15:A) • RGA 2 – OFF	(O15) RGA 2		
(R14:D) cb MNB • TV CONTR UNIT – op			
(A13) • (OV103,4) GPS PWR – OFF • (OV103,4) GPS PRE AMPL UPPER – OFF • (OV103,4) GPS PRE AMPL LOWER – OFF	(OV103,4) GPS 2		
(A7U) PL BAY FLOOD • MID PORT – OFF • FWD STBD – OFF	(A7A1) PLB Mid Port Floodlt Fwd Stbd Floodlt		
	(R1A2) 18 Cryo O2,H2 Tk2,4 Htrs A man On Cntl 16 Cryo O2,H2 Tk2 Manf Vlv Cntl		
	(R2) R MPS He isol B man Cntl		
	(A15) Cryo O2,H2 Tk5 Htr B man On Cntl		
	(R1A2) 19 FC2 Reac Vlv Cntl via pnl R1 sw 20 FC2 Stop capability via START/STOP sw (pnl R1)		
	(C3) FC1 Redundant Reac Vlv Cntl		
	(L1A2) 21 Freon Loop 1 Cntlr A Rad Byp Vlv Mtr man Cntl		
	(Continued)		

EPS SSR-103 (Cont)
BUS LOSS: CNTLBC1

BUS ISOLATION		EQUIP/FUNCTION LOST	CREW INDICATIONS	NOTES
	22	(L2A1) Atm Press Cntl O2 Sys 2 Sply Vlv Cntl		(22) Vlv holds position. Sys 1 remains
		(F8) R HUD Rt ADI Aft Ref Set capability (C3A5) L,R ADP Dpy Mtrs 2 Probe Htr Cntlr 2		(23) Single mtr time. One failure away from EVA to stow MPM or from RMS/OBSS jettison
	23 24 24 23 25 25	(A8L) Port RMS: MPM Mtr 2 Fwd MRL Mtr 1 Mid MRL Mtr 2 STBD RMS: MPM Mtr 1 Mid MRL Mtr 1 Aft MRL Mtr 2		(24) Single mtr time. One failure away from loss of two out of three MRLs. EVA or RMS jettison capability exists (25) Single mtr time. One failure away from loss of MRL latching capability. EVA or OBSS jettison capability exists
	24 24	ROEU AC2 pwr to: Orbiter arm drive mtr (ODM mtr 2 – mate B, demate B, relax B) ODA mtr 2 latch/ release		(26) **WARNING** Driver pwr to F2 jets lost if RJDF 1A Driver sw OFF (pnl O15:F)
		(O6) -Y Star Trkr Dr Sys 2 CL capability -Z Star Trkr Dr Sys 1 OP/CL capability		
	26	(O15) RJDF 1A F2 Manf Logic pwr (F2F,F2R,F2U,F2D)		(27) Redundant pwr sply remains. Turbine speed ind lost
	27 28 28 29	(R2) APU 1 Cntlr Pwr Sply B Hyd Main Pump 2 Depress Solenoid RPC A Hyd Main Pump 1 Depress Solenoid RPC B APU 1 Fu Tk Vlv B		(28) Redundant RPC remains (29) Vlv closes. Redundant vlv A remains
	30 31 (R4) 32	(F6A5,F8A5) NLG Ext 2 Fire 1, Fire 2 NLG,LMG,RMG Bkup Rel 2 Fire 1 LG Extend Vlv 2 NWS Hyd Sys 2 Hyd Brake Isol 2 Man Cntl		(30) Loss of redundant hyd NLG deploy and NWS redundancy (31) Hyd Sys 1 still available for NWS
		(R13A2) Rad Cntl sys: Stbd Rad Lat 1-6 Mtr 2 Dpy/Sto Mtr 1 Port Rad Lat 1-6 Mtr 2		(32) Vlv holds position. GPC cntl remains. Loss of redundant hyd NLG deploy and NWS redundancy if failed closed
	33 34	(R13A2) PL Reten Sys B Rad/Lat Mtrs Ku Ant Sto/Dpy Mtr 2 Direct Stow Mtr 2 Redundant Stow Initiate Signal to Ku-Band		(33) Mtr 1 remains (34) Redundant stow initiate sig (CNTL CA1) to Ku-Band remains
	35 35	(F2,F3) CDR Dpy Fire 2 Jett Fire 2		(35) Plt Dpy/Jett remains

EPS SSR-104
BUS LOSS: CNTLBC2

ACTIONS	EQUIP/FUNCTION LOST	CREW INDICATIONS	NOTES
(A1L) S-BD PM 1 • ANT SW ELEC – 1 1 • XPNDR – 1 • PWR AMP OPER – 1 • STBY – 1 • PRE AMP – 1 NSP 1 • PWR – 1 If PSP and/or INTRG reqd for PL or ISS ops: • S-BD PL PWR SYS – 1 • CNTL – PNL • – CMD 3 • Reconfig PSP 3 • Perform PL INTRG REACQ (if reqd)	(A1A2) S-BD PM Sys 2: Xpndr 2 Pre Amp 2, Pwr Amp 2 PM and FM Ant sw 2 NSP 2/COM SEC 2 S-BD PL Intrg 2 PSP 2	All S-BD A/G voice lost if sys 2 selected CRT 2 blanks (F7) 2 RCS JET C/W lt – on SM ALERT Light/Tone – on (FSMs) S86 APU/HYD W/B SM0 THRM HYD (B) BCE STRG 3 NSP (if using NSP 2) S67 CNTL/ESS V DISPLAY SW R 2 F,L,R RCS(F,R,L,U,D) JET I/O ERROR CRT2 SM 67 ELECTRIC CNTL BC2 Volts < 20 4 If site AOS and using S-BD Ant Elec 2: 'ANTENNA' (2)	(1) If S-BD PM Sys 2 being used at time of bus failure, A/G comm capabilities lost until Sys 1 selected (2) Indications do not appear until jets commanded (3) REACQ and PSP reconfig procedures are flight specific. If reqd, procedures can be found in payload or ISS specific books (4) Indication appears only during site AOS for antenna miscompares (5) OIU 1 interfaces with PSP 1 for commanding (6) * TIME CRITICAL * If not done within 20 min, may freeze N2H4 and lose APU. However, SM ALERT occurs above freezing temp (7) Sec Cntlr Man ON Sel capability remains. Pri A,B Cntlrs remain (8) Single mtr time (9) Pwr to MCA Drivers lost through ENABLE sw
(A1R) • S-BD FM PWR – 1	(A1A3) S-BD FM Sys 2		
If no comm: (C3) • S-BD PM CNTL – PNL • – CMD			
5 If OIU reqd: (SSP) • OIU PWR – OIU 1 ON • OIU tb – UP • √MCC, OIU reconfig			
(A12) APU HTR 6 • GAS GEN/FUEL PUMP 2 – B AUTO APU HTR TK/FU LINE/H2O/ 6 • SYS 1A – AUTO 6 • 1B – OFF 6 • 2A – OFF 6 • 2B – AUTO HYD HTR • ELEV A – AUTO • B – OFF • CIRC PUMP PWR 2 – MNC	(A12) APU 2 GG/Fu Pump Htrs A 1 Tk/Fu Line Htrs B APU GG Inj H2O Tank Htrs B APU 2 Tk/Fu Line Htrs A Elevon Actr Htrs B (R2) Circ Pump 2 MNB pwr	(O1) H2O PUMP OUT PRESS LOOP 1 – 20-25 psia During Rad Dpy/Sto: (R13L) RAD LAT CNTL tbs (two) indicate single mtr ops RAD CNTL STBD tb indicates single mtr ops STAR TRKR DR POS -Y OP/CL time incr from 8 to 16 sec STAR TRKR DR POS -Z CL time incr from 8 to 16 sec	
(L4:F) • cb AC1 H2O LOOP PUMP 1A/2 (three) – cl			
(L1) • H2O PUMP LOOP 1 – A If using Sec Cntlr: • FLASH EVAP CNTLR SEC – ON • TOP EVAP HTR DUCT – A If Hi Load Evap enabled: • HI LOAD DUCT HTR – A(C)	(L1A2) H2O Loop 1 Pump B man ON capability 7 FES Sec Cntlr GPC Sel capability Top Evap Duct Fwd,Aft Htrs B Hi Load Duct Outbd,Inbd Noz Htrs B	(L1) If H2O PUMP LOOP 1,B active: C/W H2O LOOP lt 'S88 H2O PUMP P1' 'S88 H2O LOOP 1 FLOW' 'S88 H2O LOOP 1 TEMP' (F7) If APUs active and using H2O BLR CNTLR/HTR 2B: C/W APU TEMP lt – on after ~2 min If sys pwrd: 'S62 BCE BYP PSP 2' Loss of PL TLM and CMD If PDI FDA enabled: 'S62 PDI DECOM FAIL'	
(L2) • FLASH EVAP FDLN HTR A SPLY – 1	(L2A1) FES H2O Fdln A Htrs 2 (all)	SM (BFS SM 63) PL BAY DOORS During PLBD OP/CL, single mtr run time noted on actuators listed at left	
	ROEU AC2 pwr to: 8 Orbiter arm drive mtr (ODM mtr 2 – mate B, demate B, relax B) 8 ODA mtr 2 latch/ release		
	(R13A2) 9 PLBD: Port,Stbd Fwd Blkhd Mtrs 2 Stbd Door Mtr 2		
(Continued)	(Continued)		

EPS SSR-104 (Cont)
BUS LOSS: CNTLBC2

	ACTIONS		EQUIP/FUNCTION LOST	CREW INDICATIONS	NOTES
	Refer to OMS/RCS Slide Rule for vlv loss info		(O8)		(10) Vlv holds position. GPC OP capability remains. Isol A remains
11	Reconfig following vlv(s) only if leak isolation reqd: (O8) • L OMS XFEED B • R OMS XFEED B	10 12 12	F,R RCS He Pr Isol B man Cntl, GPC CL capability L OMS Tk Isol B man CL capability L,R OMS Xfeed Vlv B man CL capability		(11) Do not reconfig for reg switch or I'CNCT procedures
	(R1) If Tk2 in use:		(R1A2)		(12) Vlv holds position. Man OP and full GPC Cntl remains
14	O2,H2 TK2 • HTR A (two) – OFF • B (two) – AUTO	13	Cryo O2,H2 Tk2 Manf Vlv Cntl Cryo O2,H2 Tk2 Htrs A		(13) Vlv holds position
	(A11) If Tk4 in use:				(14) Refer to EPS 7.6 CRYO TABLE A for switch nomenclature
14	O2,H2 TK4 • HTR A (two) – OFF • B (two) – AUTO		(A11) Cryo O2,H2 Tk4 Htrs A		(15) Loss of redundant port to the following: MDU CDR 2 (S) MDU MFD 1 (P) MDU PLT 1 (P) MDU PLT 2 (S) MDU AFD 1 (S)
14					(16) Manf status not automatically declared closed. Jet fail-offs may occur
	(R2) • BLR CNTLR/HTR 2 – A				(17) When SM not available, use NSP block to inhibit UL cmds. 'BCE STRING 1(3) NSP' annunciates and it requires GNC I/O RESET after UPLK – ENA for AOS
	(C2) • R IDP/CRT SEL – 3 On MCC GO: • GPC/CRT O2 EXEC				
	GNC 23 RCS		(R2) Hyd H2O Blr 2 Cntlr B		
16	Override F2 Manf status to CL: • ITEM 1,41 EXEC		(C2A2) MDU CRT 2		
	• For attitude control, perform LOSS OF VERNIERS (ORB OPS, RCS)	15	IDP 2		
			(C3) FC1 Redundant Reac Vlv Close Cntl		
17	If Network Sig Proc Encryption Select – Bypass (A1L) and no SM GPC: (C3) • UPLK – NSP BLK		(O15) RCS Manf F2 RJD pwr (F2F,F2R,F2U,F2D)		
	Place PLT disp sws (eight) to green dot position: (F8) • AIR DATA – NAV • ADI ATT – LVLH • ERR – MED • RATE – MED • HSI SEL MODE – ENTRY • HSI SEL SOURCE (two) – NAV 3 • RADAR ALTM – 1	16 17	(O16) RCS Manf F5/R5/L5 RJD pwr (F5L,F5R,L5L,L5D,R5R, R5D) (C3A5) Uplink switch GPC Block of UL Cmd capability		
			(F8) Air Data Source Sel capability R ADI Att, Err, Rate Sel capability R HSI Mode, Source Sel capability R Radar ALTM Sel capability		
	(Continued)		(Continued)		

EPS SSR-104 (Cont)
BUS LOSS: CNTLBC2

ACTIONS		EQUIP/FUNCTION LOST
When reqd: • For FC2, perform FUEL CELL PURGE – AUTO (ORB OPS, EPS)	18	(R11U) FC2 Purge Vlv man Cntl
(A6U) If SENSE – -Z: • SENSE – -X • Wait 1 sec, reposition as desired	19	(A6A1) 3-Level sw RM for -X Sense
During OPS 8: GNC 43 CONTROLLER Desel R Pnl Trim R2: • DES PNL TRIM R2 ITEM 39 EXEC Desel R Bdy Flp up/dn R2: • DES BDY FLP UP/DN R2 ITEM 22 EXEC	20 20 20	(F8) R Trim RHC INH capability R Trim Pnl ON capability (C3A1) R Bdy Flp UP/DN capability
For SSME Hyd Repress: (R4) • HYD MPS/TVC ISOL VLV SYS 1,3 – OP, wait 10 sec, then CL	13	(R4) MPS/TVC Hyd Sys 2 Isol man Cntl
If reqd during entry (< 120K ft): (L1) • NH3 CNTLR A – PRI/GPC If reqd for Post Rollout: (L1) • NH3 CNTLR B – SEC/ON	21	(L1A2) NH3 SYS B Pri Cntlr and Auto Swover to Sec Cntlr
If NH3 CNTLR A(B) – SEC/ ON reqd, then: (L1) H2O PUMP • LOOP 1 (two) – ON, A(B) • LOOP 2 – ON • √FLOW PROP VLV LOOP (two) – ICH • Activate PL H2O loop(s) (if applicable)		
(A14) RCS/OMS HTR • FWD RCS – A AUTO • L POD (two) – A AUTO, B OFF • R POD (two) – A OFF, B AUTO	22 22 23	(A14) Fwd RCS B Htrs (all) L Pod B Htrs (partial) R Pod A Htrs (partial)

BUS ISOLATION
ONLY ON MCC CALL, PERFORM
• MDU CRT 2 PWR – OFF
(C2) • IDP/CRT2 PWR – OFF
(F3) • R TRIM RHC/PNL – ENA • PNL – OFF
(R2) • MPS He I'CNECT L – GPC
(R4) • MPS FILL/DRAIN LO2 INBD – GND

EQUIP/FUNCTION LOST
(R2) L MPS He Intercon Vlv man Cntl
(R4) 24 MPS Prplt F/D Inbd LO2 Vlv man OP capability

(Continued)

CREW INDICATIONS

NOTES
(13) Vlv holds position
(18) Vlv normally closed
(19) RM sw downmodes to 2-level for -X position
(20) Left Trim and Body Flap control remains. Right Trim and Body Flap cntl function is regained after the lost contacts have been deselected in OPS-8 (3,B)
(21) Sys B Sec Cntlr man ON capability remains
(22) A Htrs remain
(23) B Htrs remain
(24) Vlv holds position. Loss of manual capability to inert LO2 Manf

EPS SSR-104 (Cont)
BUS LOSS: CNTLBC2

BUS ISOLATION		EQUIP/FUNCTION LOST	CREW INDICATIONS	NOTES
		(O16)		(13) Vlv holds position
	25	ASA 4 Isol Driver pwr		(25) Six vlvs fail to non-isolation position
		(L2A1)		(26) Vlv holds position. FC2 Redundant Reac Vlv Close Cntl on pnl C3 remains
	13	Atm Press Cntl O2 Sys 2 Sply Vlv Cntl		(27) Able to stop FC2 via FC2 CNTLR sw (pnl O15:A)
		(R1A2)		(28) Use Fwd pnl C3 pbs
	26	FC2 Reac Vlv Cntl via pnl R1 sw		(29) Redundant mtrs remain
	27	FC2 STOP capability via START/STOP sw (pnl R1)		(30) Htr Cntlrs 1 remain
		(R2)		(31) Sys 1 remains
		C MPS He Isol B man Cntl		(32) Hyd Sys 1 still available for NWS
		(A6A1)		(33) Loss of redundant hyd NLG deploy and NWS redundancy
		R ADI Att Ref set capability		(34) Mtr 1 remains
	28	Aft Pnl Trans X,Y Norm and Pulse Sel capability		(35) Redundant pwr sply remains. GG Bed T and GBX P ind lost when APU running
	28	Aft Pnl Trans Z High,Norm, and Pulse Sel capability		(36) Redundant RPC remains
	28	Aft Pnl Trans Low Z Sel capability		(37) Single mtr time. One failure away from EVA to stow MPM or from RMS/OBSS jettison
	28	Aft Pnl Rot Roll,Pitch,Yaw Disc Rate, and Pulse Sel capability		(38) Single mtr time. One failure away from loss of two out of three MRLs. EVA or RMS jettison capability exists
	28	Aft Pnl PRI,ALT,VERN Sel capability		(39) Single mtr time. One failure away from loss of MRL latching capability. EVA or OBSS jettison capability exists
	28	Aft Pnl PCT Exec capability		
		(R13A2)		
	29	Rad Cntl Sys: Port,Stbd Lat 1-6 Mtr 2 Stbd Dpy/Sto Mtr 1		
		(C3A5)		
	29	L,R ADP Dpy Mtrs 2		
	30	Htr Cntlrs 2		
		(O6)		
	29	-Y Star Trkr Dr Sys 2 OP/CL capability		
	29	-Z Star Trkr Dr Sys 1 CL capability		
		(F6A5, F8A5)		
	31	NLG Bkup Release,Extension Sys 2		
	31	LMG, RMG Bkup Release Sys 2		
	32	NWS Hyd Sys 2		
	33	LG Extend Vlv 2		
		(R13A2)		
		PL Reten Sys B Rel/Lat Mtrs		
		(R13A2)		
	34	Ku Ant Sto/Dpy Mtr 2 Direct Sto Mtr 2		
		(R2)		
	35	APU 2 Cntlr pwr Sply A		
		APU 2 GBX GN2 Repress Vlv		
	36	Hyd Main Pump 2 Depress Solenoid RPC A		
	36	Hyd Main Pump 1 Depress Solenoid RPC B		
		(A8L)		
		Port RMS:		
	37	MPM Mtr 2		
	38	Fwd MRL Mtr 1		
	38	Mid MRL Mtr 2		
		STBD RMS:		
	37	MPM Mtr 1		
	39	Mid MRL Mtr 1		
	39	Aft MRL Mtr 2		
		(Continued)		

EPS SSR-104 (Cont)
BUS LOSS: CNTLBC2

ACTIONS		EQUIP/FUNCTION LOST	CREW INDICATIONS	NOTES
		(O17) Freon Loop 1 Cold Plate Flow Xdcr Aft PL MNB current Xdcr		(40) Vlv closes. Redundant Vlv A remains (41) PLT Dpy/Jett remains
	40	(R2) APU 2 Fu Tk Vlv B		
	41 41	(F2,F3) CDR Dpy Fire 1 Jett Fire 1		

EPS SSR-105
BUS LOSS: CNTLBC3 (Includes MNB FMC2, MNB MMC1, MNB MMC2, MNB MMC3, MNB MMC4, MNB AMC2)

ACTIONS	EQUIP/FUNCTION LOST	CREW INDICATIONS	NOTES
(A12) APU HTR 1 • GAS GEN/FUEL PUMP 2 – A AUTO • LUBE OIL LINE 2 – A AUTO APU HTR TK/FU LINE/H2O 1 • SYS 1A – AUTO 1 • 1B – OFF 1 • 2A – OFF 1 • 2B – AUTO HYD HTR • RUD SPD BK A – AUTO • B – OFF HYD • CIRC PUMP PWR 2 – MNB	(A12) APU 2 GG/Fu Pump Htr B 2 Lube Oil Line Htrs B 1 Tk/Fu Line Htr B APU 2 Tk/Fu Line Htr A Rud/Spd Bk Htr B Circ Pump 2 MNC pwr	SM ALERT Light/Tone – on S67 CNTL/ESS V SM 67 ELECTRIC CNTL BC3 Volts < 20 (FSM) RM DLMA MANF (O8) 2 FWD RCS MANF ISOL 2 tb – bp If H2O PUMP LOOP 1,B – ON: C/W H2O LOOP lt – on 'S88 H2O PUMP P 1' 'S88 H2O LOOP 1 FLOW' 'S88 H2O LOOP 1 TEMP'	(1) * TIME CRITICAL * If not done within 20 min, may freeze N2H4 and lose APU. However, SM ALERT occurs above freezing temp (2) Vlv holds position (3) In OPS 2, FES GPC cmd is not present, but one may be sent if reqd (4) Sec Cntlr On sel capability remains. Pri A,B Cntlrs remain (5) If AC2 cbs not opened, Lat Mtrs 2 of actuators for Port,Stbd Rad Lat 1-6 continue to run until Sys B Lat Cntl sw placed to OFF. Other equip pwrd by AC2 MMC2 and AC2 MMC4 lost because of MNB MMC2 and MNB MMC4 loss (6) Sys A Sec Cntlr man On capability remains
(A14) • RCS/OMS HTR OMS CRSFD LINES – A AUTO, B OFF	(A14) OMS Crsfd Ln Htrs B (all)	(O1) H2O PUMP OUT PRESS LOOP 1 meter ind – 20-25 psia	
(L4:F) • cb AC1 H2O LOOP PUMP 1A/2 (three) – cl		(F7) If APUs active and using H2O BLR CNTLR/HTR 1A or 2A: C/W APU TEMP lt on after ~2 min	
(L1) • H2O PUMP LOOP 1 – A 3 • FLASH EVAP CNTLR SEC – GPC (if using Sec Cntlr) • TOP EVAP HTR NOZ R – B AUTO • TOP EVAP HTR DUCT – A(C) If HI LOAD EVAP enabled: • HI LOAD DUCT HTR – A(C)	(L1A2) H2O Loop 1 Pump B 4 FES Sec Cntlr man On Sel capability Top Evap R Noz Htr A Top Evap Duct Fwd,Aft L,R Htrs B Hi Load Duct Outbd,Inbd Htrs B	During Rad Dpy ops: (R13L) RAD CNTLR tbs (two) indicate single mtr ops L,R ADP deploy time incr from 15 to 30 sec STAR TRKR DR POS (two) OP/CL time incr from 8 to 16 sec	
(R2) • BLR CNTLR/HTR 1,2 (two) – B	(R2) Hyd H2O Blr 1,2 Cntlr A	SM (BFS SM 63) PL BAY DOORS If in AUTO OP/CL for PLBDs, sequence terminates immediately and msg '(S63) PBD CONFIG'	
Refer to OMS/RCS Slide Rule for vlv loss info Do not perform if BC1,2,3 unpwrd at same time: GNC 23 RCS Override F2 Manf status to OP: • RCS FWD – ITEM 1 EXEC • MANF VLVS 2 OVRD – ITEM 41 EXEC		During MAN PLBD OP/CL, single mtr run time noted on actuators listed at left (A8L) Port RMS: DPY/STO tb – bp RETEN LAT tb – bp R-F-L FWD tb – bp STARBOARD RMS: RETEN LAT tb – bp R-F-L FWD tb – bp R-F-L MID tb – bp	
(MA73C:C,D) 5 • cb MCA PWR AC2 3Φ MID 2,4 (two) – op	(MA73C) 5 Stbd,Port Rad Lat 1-6 Mtr 2 Limit sw	SM 94 PDRS CONTROL PORT RMS Indications lost: MPM Mtr 2 STO/DPY Fwd MRL Mtr 1 LAT/REL/RDY Mid MRL Mtr 2 LAT/REL/RDY STBD RMS Indications lost: MPM Mtr 1 STO/DPY Fwd MRL Mtr 1 LAT/REL/RDY Mid MRL Mtr 1 LAT/REL/RDY Aft MRL Mtr 2 LAT/REL/RDY	
For PLBD ops: • OP/CL Drs in man mode	(MA73C) PLBD: C/L Lat 13-16 Mtr 2 Stbd Aft Blkhd Mtr 2 Port Drive Mtr 2 Port,Stbd Fwd Blkhd Mtr 2 Stbd Door Mtr 2 Port,Stbd Door Mtr 1 CL Limit sw		
If reqd during entry (< 120K ft): (L1) • NH3 CNTLR B – PRI/GPC	(L1A2) 6 NH3 Sys A Pri Cntlr and Auto Swover to Sec Cntlr		
(Continued)	(Continued)		

EPS SSR-105 (Cont)
BUS LOSS: CNTLBC3

ACTIONS	EQUIP/FUNCTION LOST	CREW INDICATIONS	NOTES
	Port RMS: 7 MPM Mtr 2 8 Fwd MRL Mtr 1 8 Mid MRL Mtr 2 STBD RMS: 7 MPM Mtr 1 9 Fwd MRL Mtr 1 9 Mid MRL Mtr 1 9 Aft MRL Mtr 2		(7) Single mtr time. One failure away from EVA to stow MPM or from RMS/OBSS jettison (8) Single mtr time. One failure away from loss of two out of three MRLs. EVA or RMS jettison capability exists (9) Single mtr time. One failure away from loss of MRL latching capability. EVA or OBSS jettison capability exists
If NH3 CNTLR A(B) – SEC/ON reqd, then: (L1) H2O PUMP • LOOP 1 (two) – ON, A(B) • LOOP 2 – ON • √FLOW PROP VLV LOOP (two) – ICH If applicable: • Activate PL H2O LOOP(s)			
(A15) If Tk 5 in use: • O2,H2 Tk5 Htr A (two) – AUTO • O2,H2 Tk5 Htr B (two) – OFF	Cryo O2, H2 Tk5 Htr B		(10) **WARNING** Driver pwr to F4/F5 Jets lost only if both RJDF 2B and L5/F5/R5 Driver sws (pnl O16:F) OFF simultaneously
BUS ISOLATION			
ONLY ON MCC CALL, PERFORM			
(L1) • SMOKE DETN CKT TEST – OFF	(L1A1) Smoke Detn Test capability (all dets)		
	(O16) 10 RJDF 2B F4/F5 Manf Logic pwr (F4R,F4D,F5L,F5R)		(11) Six vlvs fail to non-isolation position
	(O17) 11 TVC 3 Isol ME 11 4 Isol ME		(12) Auto Cntl of these Htrs also lost if single Htr Ops and tank not paired
	(R1A2) 12 Man ON Cntl of Cryo O2,H2 Tk 2,4 Htrs B		(13) Use pb on AFT pnl A6
	(MA73C) L Vents 1,2,3,5,8,9 Mtrs 2 R Vents 1,2,6,8,9 Mtrs 2		(14) Stow capability remains
	(C3A6) 13 Fwd Pnl Trans X,Y Norm, Pulse, Fwd Pnl Rot Roll, Pitch,Yaw Disc Rate, Pulse Sel capability 13 Fwd Pnl Trans Low Z Sel capability 13 Fwd Pnl Trans Z High,Norm, Pulse Sel capability 13 Fwd Pnl PRI,ALT,VERN Sel capability 13 Fwd Pnl PCT Exec capability		
	(R2) Pneu He Isol 2 man Cntl L MPS He Isol A man Cntl (F6A5, F8A5) NLG, LMG, RMG Bkup Rel Sys 1, NLG Pyro Extension Sys 1		
	(MA73C) 14 Port,Stbd Rad Mtrs 2 Dpy capability -Y Star Trkr Dr Sys 2 OP/CL capability -Z Star Trkr Dr Sys 1 OP/CL capability L,R ADP Htr Cntlr 2 Deploy Mtrs 2 Deploy Disc 2		
	(Continued)		

EPS SSR-105 (Cont)
BUS LOSS: CNTLBC3

BUS ISOLATION		EQUIP/FUNCTION LOST	CREW INDICATIONS	NOTES
	15	(MA73C) ET Door Mtrs: C/L Lat Actr 1 Mtr 2 GPC Cntl L Dr Uplock Lat Mtr 2 GPC Lat capability R Dr Uplock Lat Mtr 2 GPC Lat capability R Dr Closure Mtr 2 GPC CL capability		(15) Redundant mtrs remain (16) With inoperative limit sw, mtr will continue to run until DPY/STO sw is placed to GND position (17) MNC MMC2 pwr for Ku-Bd Xmit Enable signal remains (18) MNC MMC2 pwr remains to supply pwr to Boom stow enable II signal for stow mtrs (19) Vlv closes. Redundant Vlv A remains
		(MA73C) AC pwr removal capability via Limit sw for ET Dr Mtrs: C/L Lat Actr 1 Mtr 2 L Dr Uplock Lat Mtr 2 R Dr Uplock Lat Mtr 2 Closure Mtr 2		
	16 17 18	(MA73C) Ku Ant Sto/Dpy Mtr 2 Sto and Dpy Limit sw Redundant Ku-Bd Xmit Enable Signal Redundant Ku-Bd Boom Stow Enable II Excitation Signal		
	19	(R2) APU 3 Fu Tk Vlv B		

EPS SSR-106
BUS LOSS: CNTLCA1

ACTIONS	EQUIP/FUNCTION LOST	CREW INDICATIONS	NOTES
(A12) APU HTR 1 • GAS GEN/FUEL PUMP 2 – A AUTO 1 • GAS GEN/FUEL PUMP 3 – B AUTO • LUBE OIL LINE 3 – B AUTO APU HTR TK/FU LN/H2O 1 • SYS 2A – AUTO 1 • 2B – OFF 1 • 3A – OFF 1 • 3B – AUTO HYD HTR • AFT FUS A – AUTO • B – OFF HYD CIRC PUMP PWR • 2 – MNB • 3 – MNA	(A12) APU 2 GG/Fu Pump Htr B APU 3 GG/Fu Pump Htr A 3 Lube Oil Ln Htr A 2 Tk/Fu Ln Htr B APU 3 Tk/Fu Ln Htr A Aft Fuselage Htrs B Circ Pump 2 MNC pwr 3 MNC pwr	(F7) SM ALERT Light/Tone – on CRT 3 blanks (FSMs) S69 FC REAC S67 CNTL BUS V I/O ERROR CRT3 SM 67 ELECTRIC CNTL CA1 < 20 V During Rad Dpy/Sto ops: (R13L) RAD CNTL PORT tb indicates single mtr ops RAD LAT CNTL STBD tb indicates single mtr ops R ADP deploy time incr from 15 to 30 sec PLB Floodlts lost: Mid Stbd Aft Port Docking (F7) If APUs active and using BLR CNTLR/HTR 3B: C/W APU TEMP lt – on after ~2 min 3 SM 88 APU/ENVIRON THERM H2O LOOP 2 PUMP ΔP↑	(1) * TIME CRITICAL * If not done within 20 min, may freeze N2H4 and lose APU. However, SM ALERT occurs above freezing temp (2) Pri A man On Sel capability remains. Pri B and Sec Cntlrs remain (3) Wrong FDA limit set is selected by SM preconditioning software due to loss of H2O Loop 2 pump On switch scan (4) Loss of redundant port to the following: MDU CDR 1 (P) MDU MFD 1 (S) MDU MFD 2 (S) MDU AFD 1 (S) MDU PLT 2 (P) (5) Do not reconfig for reg switch or I'CNCT procedures
(L1) • H2O PUMP LOOP 2 – ON • H2O PUMP LOOP 1 – GPC • FLASH EVAP CNTLR PRI A – ON (if using A Cntlr) • TOP EVAP HTR NOZ R – A AUTO If HI LOAD EVAP enabled: • HI LOAD DUCT HTR – A(B)	(L1A2) H2O Loop 2 Pump GPC Cntl 2 FES Cntlr Pri A GPC Sel capability Topping Evap R Noz Htr B Topping Evap Duct L,R Fwd, Aft Htr C Hi Load Duct Inbd,Outbd Htrs C		
(L2) • FLASH EVAP FDLN HTR B SPLY – 1	(L2A1) FES H2O Fdln B Htrs 2 (all)		
(C2) • L IDP/CRT SEL – 1 • R IDP/CRT SEL – 2 On MCC GO: • GPC/CRT 03 EXEC	(C2A2) MDU CRT 3 4 IDP 3		
(R2) • BLR CNTLR/HTR 3 – A	(R2) APU/HYD Blr Cntlr/Htr 3B		
• If BFS in GPC 3 or 5, move BFS • If BFS in GPC 1, 2, or 4; and if engage reqd, use pb CDR RHC	(F6A5) GPC 3,5 engage capability PLT BFS engage capability		
If CA1,2,3 unpwrd at same time: GNC 23 RCS Override F3 Manf status to CL: • RCS FWD – ITEM 1 EXEC • MANF VLVS 3 OVRD – ITEM 42 EXEC	(O16) RCS Manf F3 RJD pwr (F3F, F3L,F3U,F3D)		
(A14) • RCS/OMS HTR R POD (two) – A AUTO, B OFF	(A14) R Pod Htrs B (all)		
Refer to OMS/RCS Slide Rule for vlv loss info 5 Reconfig following vlv(s) only if leak isolation reqd: (O7) • AFT L RCS He PRESS B • TK 1/2 • XFEED 1/2 • R RCS TK 1/2 • XFEED 1/2	(O7) Aft L RCS He Press Isol B man CL capability Aft L,R RCS Tk Isol 1/2 man CL capability Aft L,R RCS Xfeed Vlv 1/2 man CL capability		
(Continued)	(Continued)		

EPS SSR-106 (Cont)
BUS LOSS: CNTLCA1

ACTIONS		EQUIP/FUNCTION LOST
(O8) • R OMS TK ISOL B		(O8) R OMS Tk Isol B man CL capability
GNC 23 RCS • Reprioritize L,R Manf 3 Jets to first priority: DES INH twice all other jets, highest priority first, then next highest, etc • Set aft pod(s) PRI JET FAIL LIMIT to 3		(A14) Aft RCS L,R Jet 3 Htrs
When reqd: • For FC3, perform FUEL CELL PURGE – AUTO (ORB OPS, EPS)	6	(R11U) FC3 Purge Vlv man Cntl
Prior to using L OMS: (O8) L OMS He PRESS/VAP ISOL • A – GPC • B – OP		(O8) L OMS He Press Isol A man Cntl, He Vap Isol 1,2 man A Cntl
		(R4) MPS/TVC Hyd Sys 3 Isol man Cntl
If reqd during entry (< 120K ft): (L1) • NH3 CNTLR A(B) – PRI/GPC	7	(L1A2) NH3 Sys B Sec Cntlr man On capability

BUS ISOLATION		EQUIP/FUNCTION LOST
ONLY ON MCC CALL, PERFORM		
• MDU CRT 3 PWR – OFF		
(C2) • IDP/CRT3 PWR – OFF		
(R2) • MPS He I'CNECT R – GPC		(R2) R Eng He Intercon Vlv man Cntl
(R4) • MPS FILL/DRAIN LO2 OUTBD – GND	8	(R4) Prplt F/D Outbd LO2 Vlv man Cntl
(O16:A) • RGA 3 – OFF		(O16) RGA 3
	9	(O17) ATVC 1 Isol ME
(A7U) PL BAY • FLOOD AFT PORT – OFF • MID STBD – OFF • DOCKING – OFF • PORT RMS LIGHT – OFF		(A7A1) PLB Floodlts Aft Port Mid Stbd Docking Port RMS lt
If SSPTS: (A15) OPCU 2 CONV – OFF OPCU 2 V-ADJ – OFF APCU 2 CONV – OFF		If SSPTS: (A15) PTU 2 (OPCU 2 and APCU 2) Ability to change state of APCU 2's OUTPUT relay
	10 11	(C3A5) R ADP Dpy Mtr 1 Htr Cntlr 1
	12 13	(R1A2) FC3 Reac Vlv Cntl via pnl R1 sw FC3 STOP capability via START/STOP sw
(Continued)		(Continued)

CREW INDICATIONS

NOTES
(6) Vlv normally closed
(7) Sys B Pri Cntlr, auto switchover to Sec Cntlr remain
(8) Loss of manual capability to inert LO2 Manf
(9) Six vlvs fail to non-isolation position
(10) Redundant mtr remains
(11) Htr Cntlr 2 remains
(12) Vlv holds position. FC3 Redundant Reac Vlv Close Cntl on pnl C3 remains
(13) FC3 can be stopped via FC3 CNTLR sw (O16:A)

EPS SSR-106 (Cont)
BUS LOSS: CNTLCA1

BUS ISOLATION		EQUIP/FUNCTION LOST	CREW INDICATIONS	NOTES
		(C3) FC2 Redundant Reac Vlv Close Cntl		(10) Redundant mtr remains
	14	(R1A2) Cryo O2,H2 Tk1 Htrs A man On and Tk3 Htrs B man On Cntl		(14) Auto Cntl of these Htrs also lost if single Htr Ops and tank not paired
		(R2) L MPS He Isol B man Cntl		(15) During PLBD OP/CL, single mtr run time noted on actuators
	14	Cryo O2,H2 Tk5 Htr A man On Cntl		(16) Pwr to MCA Drivers lost through ENABLE sw
	15 16	(R13A2) PLBD: C/L Lat 1-4, 5-8 Mtrs 2 Port Aft Blkhd Mtr 2		(17) Single mtr time. One failure away from loss of two out of three MRLs. EVA or RMS jettison capability exists
		(A8L) Port RMS: 17 Fwd MRL Mtr 2 17 Mid MRL Mtr 2 17 Aft MRL Mtr 1 STBD RMS: 18 Fwd MRL Mtr 1 18 Mid MRL Mtr 2 18 Aft MRL Mtr 2		(18) Single mtr time. One failure away from loss of MRL latching capability. EVA or OBSS jettison capability exists
	19	(L1A2) Freon Loop 2 Cntlr A Rad Byp Vlv Mtr man Cntl		(19) Cntlrs A,B Rad Byp Vlv Mtrs Auto Cntl and Cntlr B Rad Byp Vlv Mtr Man Cntl remain
		(A6A1) Aft ADI Att ref set capability		(20) ***WARNING*** Driver pwr to F3 Jets lost if RJDF 2A Driver sw OFF (O16:F)
	20	(O16) RJDF 2A F3 Manf Logic pwr (F3L,F3D,F3U,F3F)		(21) Redundant coils remain
	21 22	(C3A1) R OMS Eng Pr Vlv Coil 1 and Cntl Vlv 1,2 Coils 1 R OMS Arm 1, Arm/Press 1 sw contacts		(22) R OMS auto shtdn if Pc < 80% and '↓' on MNVR EXEC display **CAUTION** No purge. Wait 10 min between burns
	23 24 25	(R4) HYD BK ISOL VLV 3 man Cntl (F6A5,F8A5) LG Extend Vlv 1 NWS Hyd Sys 1		(23) Vlv holds position. GPC capability remains (24) Lost Hyd deploy capability for all Ldg Grs. Pyro Backup Release Sys will deploy Ldg Grs. NLG can also be deployed by Hyd Sys 2 (25) Hyd Sys 2 still available for NWS
	10	(O6) -Z Star Trkr Dr Sys 2 OP/CL capability		
		(R13A2) Rad Cntl Sys: Stbd Rad Lat 7-12 Mtr 2 Port Rad Dpy/Sto Mtr 2		
	10	(R2) ET Door Mtrs: C/L Lat Actr 1 Mtr 1 man Sto capability C/L Lat Actr 2 Mtr 1 man Sto capability L Dr Closure Mtr 2 man Cntl L Dr Uplock Lat Mtr 1 man Cntl R Dr Uplock Lat Mtr 1 man Cntl		
		(Continued)		

EPS SSR-106 (Cont)
BUS LOSS: CNTLCA1

BUS ISOLATION		EQUIP/FUNCTION LOST	CREW INDICATIONS	NOTES
	26	(R13A2) Ku Ant Sto/Dpy Mtr 1 Direct Sto Mtr 1		(26) Mtr 2 remains
	27	(R13A2) Redundant Sto Initiate Signal to Ku-Band		(27) Redundant stow initiate sig (CNTL BC1) to Ku-Band remains
		(O17) Freon Loop 2 Cold Plate Flow Xdcr		(28) Vlv fails closed. Redundant vlv remains
	28 29 29	(R2) APU 1 Fu Tk Vlv B Hyd Main Pump 3 Depress Solenoid RPC A Hyd Main Pump 2 Depress Solenoid RPC B		(29) Redundant RPC remains
		(O17) Aft PL MNC current Xdcr		(30) CDR Dpy/Jett remains
	30 30	(F3,F4) PLT Dpy Fire 2 Jett Fire 2		

EPS SSR-107
BUS LOSS: CNTLCA2

ACTIONS	EQUIP/FUNCTION LOST	CREW INDICATIONS	NOTES
(A12) 1 • APU HTR GAS GEN/FUEL PUMP 3 – B AUTO APU HTR TK/FU LN/H2O 1 • SYS 2A – AUTO 1 • 2B – OFF 1 • 3A – OFF 1 • 3B – AUTO • HYD CIRC PUMP PWR 3 – MNA	(A12) APU 3 GG/Fu Pmp Htrs A 2 Tk/Fu Ln Htrs B APU 3 Tk/Fu Ln Htrs A APU 3 GG Inj H2O Htrs 3A,23A (R2) Circ Pump 3 MNC pwr	MASTER ALARM Light/Tone – on	(1) * TIME CRITICAL * If not done within 20 min, may freeze N2H4 and lose APU. However, SM ALERT occurs above freezing temp
(R1) If TK1 in use: • O2,H2 TK1 HTR B (two) – AUTO • O2,H2 TK1 HTR A (two) – OFF If TK3 in use: • O2,H2 TK3 HTR A (two) – AUTO • O2,H2 TK3 HTR B (two) – OFF	(R1A2) Cryo O2,H2 Tk1 Htr A Cryo O2,H2 Tk3 Htr B	(F7) SM ALERT Light/Tone – on 2 C/W FREON LOOP lt – on 3 C/W RCS JET lt – on CRT 4 blanks	(2) If FES Cntlr Pri A in ON position and cooling by FES only
(A15) If Tk5 in use: • O2,H2 TK5 HTR B (two) – AUTO • O2,H2 TK5 HTR A (two) – OFF	(A15) Cryo O2,H2 Tk5 Htr A	(FSMs) S67 CNTL BUS V S67 DISPLAY SW A (2) 2 S88 EVAP OUT T 1,2 3 F RCS D(L,U,F) JET 4 I/O ERROR CRT4	(3) Indications do not appear until jets commanded
(R2) • BLR CNTLR/HTR 3 – A	(R2) APU/HYD Blr Cntlr/Htr 3B	SM 67 ELECTRIC CNTL CA2 < 20 V	(4) If GPC commands CRT
(L1) • FLASH EVAP CNTLR PRI A – OFF • FLASH EVAP CNTLR PRI B – ON (if reqd) • TOP EVAP HTR DUCT – A(B) If HI LOAD EVAP enabled: • HI LOAD DUCT HTR – A(B)	(L1A2) 5 FES Cntlr Pri A man ON Sel capability Topping Evap Duct Fwd,Aft Htrs C Hi Load Duct Inbd,Outbd, Noz Htrs C	During Rad Dpy/Sto ops: (R13L) RAD CNTL PORT tbs (two) indicate single motor ops	(5) Pri A GPC Sel capability remains. Pri B and Sec Cntlrs remain
(C2) On MCC GO: • GPC/CRT 04 EXEC	(R12A2) 6 IDP 4 MDU CRT 4	R ADP deploy time incr from 15 to 30 sec	(6) Loss of redundant port to the following: MDU AFD 1 (P)
	(C3) FC2 Redundant Reac Vlv Close Cntl	STAR TRKR DR POS -Z CL time incr from 8 to 16 sec	
		(F7) If APUs active and using BLR CNTLR/HTR 3B: C/W APU TEMP lt – on after ~2 min	
(Continued)	(Continued)		

EPS SSR-107 (Cont)
BUS LOSS: CNTLCA2

ACTIONS	EQUIP/FUNCTION LOST	CREW INDICATIONS	NOTES
Refer to OMS/RCS Slide Rule for vlv loss info 7 Reconfig following vlv(s) only if leak isolation reqd: (O7) • AFT L,R RCS TK 1/2 • XFEED 1/2	(O7) AFT L RCS: Tk Isol 1/2 man CL capability He Press Isol B man Cntl, GPC CL capability Xfeed vlv 1/2 man CL capability AFT R RCS: Tk Isol 1/2 man CL capability Xfeed Vlv 1/2 man CL capability (O8) R OMS Tk Isol B man CL capability FWD RCS: Tk Isol 1/2 man CL and man Ovrd of GPC CL capability		(7) Do not reconfig for reg switch or I'CNCT procedures (8) Vlv normally closed (9) Manf status <u>not</u> automatically declared closed. Jet fail-offs may occur (10) RM sw downmodes to 2-level for -X position
When reqd: • Perform FC3 purges in AUTO mode (ORB OPS)	(R11U) 8 FC3 Purge Vlv man Cntl		
(A6U) • ADI ATT – LVLH • ERR – MED • RATE – MED	(A6A1) Aft ADI capability: Att Sel Error Scale Sel Rate Scale Sel Att ref set		
(A14) RCS/OMS HTR • R POD (two) – A AUTO, B OFF	(A14) R Pod B Htrs (partial)		
GNC 23 RCS 9 Override F3 Manf status to CL: • RCS FWD – ITEM 1 EXEC • OVRD MANF VLVS STAT 3 – ITEM 42 EXEC	(O16) RCS Manf F3 RJD pwr (F3L,F3D,F3U,F3F)		
(A6U) If SENSE -Z: • SENSE – -X • Wait at least 1 sec, then reposition as desired	(A6A1) 10 3-level sw RM for -X Sense		
GNC 23 RCS • Reprioritize L,R Manf 4 Jets to first priority: DES INH twice all other jets, highest priority first, then next highest priority, etc • Set aft pod(s) PRI JET FAIL LIMIT to 6	(A14) Aft RCS L,R Jet 4 Htr		
(Continued)	(Continued)		

EPS SSR-107 (Cont)
BUS LOSS: CNTLCA2

ACTIONS		EQUIP/FUNCTION LOST	CREW INDICATIONS	NOTES
During OPS 8: GNC 43 CONTROLLERS Deselect R Pnl Trim R1: • DES PNL TRIM R1 – ITEM 38 EXEC Deselect R BDY FLP UP/DN R1: • DES BDY FLP R1 – ITEM 21 EXEC		(F8A7) 11 R Trim RHC – INH capability 11 PNL – ON capability (C3A1) 11 R Bdy Flp – UP/DN capability		(11) L Trim and Body Flap cntls remain. Right Trim and Body Flap cntl function is regained after lost contacts have been deselected in OPS-8 (3,B) (12) Sys A Pri Cntlr, auto switchover to Sec Cntlr remain (13) Redundant mtrs remain (14) Vlv holds position. FC3 Redundant Reac Vlv Close Cntl on pnl C3 remains (15) FC3 can be stopped via FC3 CNTLR sw (pnl O16:A) (16) Htr Cntlr 2 remains (17) Use pbs at pnl C3 (18) Redundant coils remain (19) R OMS auto shtdn if Pc < 80% and '↓' on MNVR EXEC display **CAUTION** No purge. Wait 10 min between burns
		(R4) MPS/TVC Hyd Sys 3 Isol man Cntl		
If reqd during entry (< 120K ft): (L1) • NH3 CNTLR A(B) – PRI/GPC		(L1A2) 12 NH3 Sys A Sec Cntlr man On capability		
BUS ISOLATION				
ONLY ON MCC CALL, PERFORM				
(F3) • TRIM RHC – ENA • PNL – OFF		(O6) 13 -Z Star Trkr Dr Sys 2 CL capability		
(R11L) • IDP/CRT4 PWR – OFF		(R1A2) 14 FC3 Reac Vlv Cntl via pnl R1 sw		
• MDU CRT 4 PWR – OFF		15 FC3 STOP capability via START/STOP sw		
		(C3A5) 13 R ADP Dpy Mtr 1 16 Htr Cntlr 1		
		(A6A1) 17 Aft Panel Trans X,Y, Norm, Pulse, Rot Roll, Pitch, Yaw Disc Rate, and Pulse Sel capability 17 Aft Pnl Trans Z High,Norm Pulse Sel capability 17 Aft Pnl Trans Low Z Sel capability 17 Aft Pnl PRI,ALT,VERN Sel capability 17 Aft Pnl PCT Exec capability		
		(C3A1) 18 R OMS Eng Pr Vlv Coil 2 and Cntl Vlv 1,2 Coil 2 19 R OMS Arm 2, Arm/Press 2 sw contacts		
		(F6A5,F8A5) NLG Ext Sys 1 NLG,LMG,RMG Bkup Rel Sys 1		
		(R2) R MPS He Isol A man Cntl		
		(R13A2) Rad Cntl Sys: Port RAD Lat 7-12 Mtr 2 Dpy/Sto Mtr 2		
		(Continued)		

EPS SSR-107 (Cont)
BUS LOSS: CNTLCA2

BUS ISOLATION		EQUIP/FUNCTION LOST	CREW INDICATIONS	NOTES
		(A8L)		(13) Redundant mtrs remain
	20	Port RMS MPM Mtr 1		(20) Single mtr time. One failure away from EVA to stow MPM or from RMS/OBSS jettison
	20	Stbd RMS MPM Mtr 2		(21) Mtr 2 remains
		(R2)		(22) Vlv closed. Redundant vlv remains
	13	ET Door Mtrs: C/L Lat Actr 1 Mtr 2 man Stow capability C/L Lat Actr 2 Mtr 2 man Stow capability L Dr Uplock Lat Mtr 1 man R Dr Closure Mtr 1 man Cntl R Dr Uplock Lat Mtr 1 man Cntl		(23) Redundant pwr sply remains. Turbine speed ind lost
		(R13A2)		(24) Redundant RPC remains
	21	Ku Ant Sto/Dpy Mtr 1 Direct Sto Mtr 1		(25) During PLBD OP/CL, single mtr times noted on actuators
		(R2)		(26) Pwr to MCA Drivers lost through ENABLE sw
	22	APU 2 Fu Tk Vlv A		(27) CDR Dpy/Jett remains
	23	Cntlr Pwr Sply B		
	24	Hyd Main Pump 3 Depress Solenoid RPC A		
	24	Hyd Main Pump 2 Depress Solenoid RPC B		
	25	(R13A2)		
	26	PLBD: C/L Lat 9-12 Mtr 2 13-16 Mtr 1 Stbd Aft Blkhd Mtr 1 Port Door Mtr 1		
		(F3,F4)		
	27	PLT Dpy Fire 1		
	27	Jett Fire 1		

EPS SSR-108
BUS LOSS: CNTLCA3

(Includes MNC FMC3, MNC MMC2, MNC MMC4, MNC AMC3)

ACTIONS	EQUIP/FUNCTION LOST	CREW INDICATIONS	NOTES
(A12) APU HTR 1 • GAS GEN/FUEL PUMP 3 – A AUTO • LUBE OIL LINE 3 – A AUTO APU HTR TK/FU LN/H2O 1 • SYS 2A – AUTO 1 • 2B – OFF 1 • 3A – OFF 1 • 3B – AUTO HYD CIRC • PUMP PWR 3 – MNC	(A12) APU 3 GG/Fu Pump Htrs B APU 3 Lube Oil Ln Htr B APU 2 Tk/Fu Ln Htr B APU 3 Tk/Fu Ln Htr A Hyd Circ Pump 3 MNA pwr	MASTER ALARM Light/Tone – on (F7) SM ALERT Light/Tone – on (FSM) S67 CNTL BUS V RM DLMA MANF SM 67 ELECTRIC CNTL CA3 Volts < 20	(1) * TIME CRITICAL * If not done within 20 min, may freeze N2H4 and lose APU. However, SM ALERT occurs above freezing temp (2) Vlv holds position (3) Vlv ops not affected (4) Refer to EPS 7.6 CRYO TABLE A for switch nomenclature (5) If AC3 cbs not opened, Lat Mtrs 2 of actuators for Port,Stbd Rad Lat 7-12 would continue to run until Sys B Lat Cntl sw placed to OFF. Other equip pwrd by AC3 MMC2 and AC3 MMC4 is lost because of MNC MMC2 and MNC MMC4 loss (6) Manf 4 status automatically declared closed
(R1) If Tk2 in use: 4 O2, H2 TK2 • HTR A (two) – AUTO • HTR B (two) – OFF	(R1A2) Cryo O2,H2 Tk2 Htrs B	(O8) 2 FWD RCS TK ISOL 1/2 tb – bp 2 FWD RCS MANF ISOL 3,4 tb – bp	
(A11) If TK4 in use: 4 O2, H2 TK4 • HTR A (two) – AUTO • HTR B (two) – OFF	(A11) Cryo O2,H2 TK4 Htrs B	(L1) 3 RAD BYP VLV 1 tb – bp 3 FLOW PROP VLV LOOP 2 tb – bp	
(R2) • BLR CNTLR/HTR 2 – B • 3 – B	(R2) APU/HYD Blr Cntlr/Htr 2A 3A	(R13L) 5 RAD CNTL (two) tb – bp R ADP deploy time incr from 15 to 30 sec	
Refer to OMS/RCS Slide Rule for vlv loss info		STAR TRKR DR POS -Z OP/CL time incr from 8 to 16 sec	
	(O16) 6 RCS Manf F4 RJD pwr (F4R,F4D)	(F7) If APUs active, using BLR CNTLR/HTR 2A or 3A: C/W APU TEMP lt – on after ~2 min	
(MA73C:C,D) 5 • cb MCA PWR AC3 MID 2,4 (two) – op	(MA73C) 5 Stbd,Port Rad Lat 7-12 Mtr 2 Limit sw		
(Continued)	(Continued)		

EPS SSR-108 (Cont)
BUS LOSS: CNTLCA3

ACTIONS	EQUIP/FUNCTION LOST	CREW INDICATIONS	NOTES
For PLBD ops: • OP/CL Drs in man mode	(MA73C) Port,Stbd Rad Dpy/Sto Mtrs 2 PLBD: C/L Lat 1-4,5-8,9-12 Mtrs 2 13-16 Mtr 1 Port Aft Blkhd Mtr 2 Stbd Aft Blkhd Mtr 1 Port Door Mtr 1 Stbd Door Mtr 2 CL Limit sw	SM (BFS,SM) 63 PL BAY DOORS If in AUTO OP/CL for PLBDs, sequence terminates immediately and msg '(S63) PBD CONFIG'	(7) Mtr 2 remains (8) Htr Cntlr 2 remains (9) Redundant mtrs remain (10) Single mtr time. One failure away from EVA to stow MPM or from RMS/OBSS jettison (11) Single mtr time. One failure away from loss of two out of three MRLs. EVA or RMS jettison capability exists (12) Single mtr time. One failure away from loss of MRL latching capability. EVA or OBSS jettison capability exists
(L1) • TOP EVAP HTR DUCT – A(B) If HI LOAD EVAP enabled: • HI LOAD DUCT HTR – A(B)	(L1A2) Topping Evap Duct Fwd,Aft Htrs C Hi Load Duct Outbd,Inbd Noz Htrs C	During MAN PLBD OP/CL, single mtr run time noted on actuators listed at left	
		(A8L) PORT RMS: DPY/STO tb – bp RETEN LAT tb – bp R-F-L AFT tb – bp STARBOARD RMS: DPY/STO tb – bp	
BUS ISOLATION		SM 94 PDRS CONTROL	
ONLY ON MCC CALL, PERFORM	(A14) Aft RCS L,R Jet 5 Htrs	PORT RMS Indications lost: MPM Mtr 1 STO/DPY Fwd MRL Mtr 2 LAT/REL/RDY Aft MRL Mtr 1 LAT/REL/RDY STBD RMS Indications lost: MPM Mtr 2 STO/DPY Mid MRL Mtr 2 LAT/REL/RDY	
	(R2) C MPS He Isol B man Cntl		
	(MA73C) -Z Star Trkr Dr Sys 2 OP/CL capability 7 R ADP Deploy Mtr 1 8 Deploy Dsc 1 Htr Cntlr 1		
	(MA73C) LH Vents 1,2,3 Mtrs 1 Vent 6 Mtr 2 RH Vents 8,9 Mtrs 1 Vent 3 Mtr 2 Vent 5 Mtr 2		
	(MA73C) 9 ET Door Mtrs: C/L Lat Actr 2 Mtr 2 GPC Cntl L Dr Closure Mtr 2 GPC CL capability R Dr Closure Mtr 1 GPC CL capability R Dr Uplock Lat Mtr 1 GPC Lat capability		
	(MA73C) AC pwr removal capability via Limit sw for ET Dr Mtrs: C/L Lat Actr 2 Mtr 2 L Dr Closure Mtr 2 R Dr Closure Mtr 1 Uplock Lat Mtr 1		
	(A8L) Port RMS: 10 MPM Mtr 1 11 Fwd MRL Mtr 2 11 Aft MRL Mtr 1 STBD RMS: 10 MPM Mtr 2 12 Mid MRL Mtr 2		
	(Continued)		

EPS SSR-108 (Cont)
BUS LOSS: CNTLCA3

BUS ISOLATION		EQUIP/FUNCTION LOST	CREW INDICATIONS	NOTES
	13	(MA73C) Ku Ant Sto/Dpy Mtr 1 Limit sw		(13) With an inop limit sw, mtr will continue to run until primary sw returned to GND
	14	(MA73C) Redundant Ku-Bd Xmit Enable Signal		(14) MNB MMC4 pwr for Ku-Bd Xmit Enable Signal remains
	15	Redundant Boom Stow Enable II Excitation Signal		(15) MNB MMC4 pwr remains to supply pwr to Boom stow enable II signal for stow mtrs
	16	(R2) APU 3 FU Tk Vlv A		(16) Vlv closed. Redundant vlv remains
	17	Cntlr pwr Sply A GBX GN2 Repress Vlv		(17) Redundant pwr sply remains

EPS SSR-109
CONTROL BUS – PANEL WIRING MATRIX

CNTL BUS / PANEL	AB1	AB2	AB3	BC1	BC2	BC3	CA1	CA2	CA3
O6	X	X	X	X	X	X	X	X	X
O14	X	X					X	X	X
L2A1	X	X		X	X		X		
L1A2	X	X	X	X	X	X	X	X	X
L1A1						X			
F6	X	X	X	X	X	X	X	X	X
C3A7	X			X			X		
C3A1	X	X	X	X	X	X	X	X	X
C3A5	X	X	X	X	X		X	X	X
C3A6			X			X			X
C2A2	X			X	X		X		
F8	X	X	X	X	X	X	X	X	X
O7	X	X	X	X	X		X	X	X
O15	X	X		X	X	X	X		X
R1A2	X	X		X	X	X	X	X	X
R2	X	X	X	X	X	X	X	X	X
R4	X	X	X	X	X	X	X	X	X
O16				X	X	X	X	X	X
O8	X	X		X	X		X	X	
O17	X	X	X	X	X	X	X	X	X
R12A1	X	X		X	X		X	X	
R12A2								X	
R13A2	X	X	X	X	X		X	X	X
A1A2	X		X	X	X		X		
A1A3	X	X		X	X		X	X	
A11A1				X	X	X			X
A12	X	X	X	X	X	X	X	X	X
A6A1	X	X		X	X		X	X	
A7A1	X			X			X		
A8A2	X	X		X			X	X	X
A13	X			X			X	X	
A14	X	X	X	X	X	X	X	X	X
MA73C	X	X	X	X	X	X	X	X	X

NOTE
This table shows control bus and “daisy-chained” panels that make up that particular control bus

This Page Intentionally Blank

EPS SSR-110
BUS LOSS: AC1

(Includes all AC1 sub-buses)

	ACTIONS	EQUIP/FUNCTION LOST	CREW INDICATIONS	NOTES
1	• Perform FC1 SHUTDN FC SHUTDN (Cue Card)	FC1 Pumps and pH Snsr	MASTER ALARM Light/Tone – on	(1) * TIME CRITICAL * FC1 must be shutdn within 9 min to avoid potentially hazardous condition
	(R1) • AC1 BUS SNSR – OFF		(F7) EVENT TIME ind blank C/W FC PUMP lt – on C/W AC VOLT lt – on C/W FREON LOOP lt – on C/W AV BAY/CAB AIR lt – on C/W H2O LOOP lt – on SM ALERT Light/Tone – on	
	(R2) • BLR CNTLR/HTR 1 – A • 3 – B	Hyd H2O Blr 1 Cntlr B 3 Cntlr A		(2) H2O Loop 2 Pump Out Press, Pump ΔP, Accum Qty, Pump Out Temp snsrs lost
	(L1) • HUM SEP A – OFF • √B – ON • IMU FAN A – OFF • B(C) – ON • H2O PUMP LOOP 1 (two) – ON, B • H2O LOOP 1 BYP MODE – AUTO • H2O PUMP LOOP 2 – OFF • AV BAY 1 FAN A – OFF • √B – ON • AV BAY 2 FAN (two) – ON • AV BAY 3 FAN A – ON • B – OFF • FREON PUMP LOOP 1 – B • FREON PUMP LOOP 2 – A	Humidity Sep A IMU Fan A 2 H2O Loop 2 Byp Cntlr, Sig Condr 3 H2O Loop 2 Byp Vlv pwr 2 Pump GPC Cntl 1 Pump A Av Bay 1 Fan A 4 Av Bay 2 Sig Condr, Xdcrs (ECLS SC3) Av Bay 3 Fan B Freon Loop 1 Pump A 2 Pump B	(FSMs) S67 AC VOLTS 1 S86 HYD RSVR Q S86 WSB T SM2 HYD QTY (B) SM0 THRM HYD (B) S66 AV BAY 3 FAN S66 AV BAY 2 FAN S69 FC PUMP 1 S69 FC H2 PUMP 1 S88 FREON FLOW 2 S88 FRN AFT CP 2 S88 FRN PL HX 2 S88 H2O PUMP P 2 S88 H2O LOOP 2 QTY S88 H2O LOOP 2 TEMP	(3) H2O Loop 2 Byp vlv holds position (4) Av Bay 2 Fan ΔP, Air Out Temp snsrs lost (5) Crew and gnd have lost PPCO2 Xdcr (6) Use streamers (if flown) or monitor by feel during wake period (7) CO2 partial Press and Cabin Fan ΔP snsrs lost (8) Inhibits Primary C/W for CAB Fan ΔP, H2O Loop 2 Pump P, FC1 stack Temp, FC1 Cool Pump ΔP (9) Inhibits H2O Loop 2 Pump ΔP, Pump Out Press, Pump Out Temp, Accum Qty, and Cabin HX In Temp respectively
	(MO13Q) If Arlk/Tnl Fan active: • ARLK FAN A – OFF • B – ON	Arlk/Tnl Fan A	(R1) FC1 COOL PUMP ΔP tb – bp	
5	• Maintain LiOH canister(s) changeout per cue card and FLIGHT PLAN During sleep periods: (L1)			
6	• CAB FAN (two) – ON	7 Cabin Air S/C (ECLS SC6)	HYD/APU HYD QTY 1 ind – 0% APU H2O QTY 3 ind – 0%	
	(R13U) • C/W PARAM SEL tw (three) – 115, 074, 092, 062		(O1) AIR TEMP AV BAY 2 ind – 45 degF H2O PUMP OUT PRESS LOOP 2 ind – 0 psia FREON FLOW LOOP 1 ind – 578 pph	
8	• C/W PARAM – INH • MEM – CLEAR • C/W PARAM SEL tw (three) – > 119			
9	SM 60 SM TABLE MAINT • Inhibits 0612705, 0612700, 0612740, 0612710, 0612665		(O3) RCS/OMS PRPLT QTY Gage and MSN TIME ind blank	
	(WCS) • √MODE – AUTO • √CRADLE – AUTO • √Hose stowed in cradle • √WCS ON lt – OFF • FAN SEP SEL sw – OFF • HOSE BLOCK – SEP 2 • In next step, alternate fan sep will turn on for 30 sec. Normal ops may proceed after 30-sec run complete • FAN SEP SEL sw – 2	WCS Fan/Sep 1	(L1) If H2O LOOP 1 PUMP A active: 'S88 H2O PUMP P 1' 'S88 H2O LOOP 1 FLOW' 'S88 H2O LOOP 1 TEMP' (O1) H2O PUMP OUT PRESS LOOP 1 ind – 20-25 psia If HUM SEP A ON: 'S66 HUMID SEP A'	
	(Continued)	(Continued)	(Continued)	

EPS SSR-110 (Cont)
BUS LOSS: AC1

ACTIONS		EQUIP/FUNCTION LOST
If CAB TEMP CNTLR 2 active: (L1) • CAB TEMP CNTLR – OFF	10	Cabin Temp Cntlr 2, Hx Byp Vlv Mtr 2
(MD44F) • Remove pin from SEC ACTUATOR and BYP vlv linkage, connect linkage to PRI ACTUATOR		
(L1) • CAB TEMP CNTLR – 1		
Refer to OMS/RCS Slide Rule for vlv loss info (use FPC1 Slide for Aft RCS and FMC1 Slide for Fwd RCS)		

BUS ISOLATION		EQUIP/FUNCTION LOST
ONLY ON MCC CALL, PERFORM		
(MA73C:C) cb MCA PWR • AC1 3Φ FWD 1 – op • MID 1 – op		AC1 FMC1 Bus pwr RH Vent 1,2 Mtr 1 11 -Y Star Trkr Dr Sys 1 OP/CL capability 11 L ADP Dpy Mtr 1 AC1 MMC1 Bus pwr RH Vents 3,5,6 Mtrs 1 PL Reten Sys A Rel/Lat Mtrs Port Rad Lat 1-6, 7-12 Mtrs 1 Port Rad Dpy/Sto Mtr 1 PLBD: C/L Lat 9-12 Mtr 1 Port,Stbd Fwd Blkhd Mtrs 1 Stbd Door Mtr 1
(MA73C:D) cb MCA PWR • AC1 3Φ MID 3 – op • AFT 1 – op		PLBD: C/L Lat 1-4, 5-8 Mtrs 1 Port, Aft Blkhd Mtr 1 AC1 MMC3 Bus pwr AMC1 Bus pwr LH Vent 8,9 Mtr 1
(MA73C:E) • cb AC1 WCS FAN SEP 1 (three) – op		
(MA73C:F) cb AC1 • RMS PRI ΦA – op • MAR 3Φ – op • OPS INST HYD ACTR ΦC – op	12 12 13 13	RMS: Port Mid MRL Mtr 1 Port Aft MRL Mtr 2 Stbd Fwd MRL Mtr 2 Stbd Aft MRL Mtr 1 D&C Primary ltg Shldr Brace release AC1 Middeck Utility Pnl (MUP) Ops Hyd Actr Instr
(MA73C:G) IF DOCKING MISSION • cb AC1 ARLK/TNL FAN A (three) – op		Arlk/Tnl Fan A
(Continued)		(Continued)

CREW INDICATIONS
If IMU FAN A ON: 'S66 IMU FN SPD A' 'S66 IMU FAN DP'
If APUs active and using H2O BLR CNTLR/HTR 1B or 3A, then C/W APU TEMP lt on after ~2 min
STAR TRKR DR POS -Y OP/CL time incr from 8 to 16 sec
L ADP deploy time incr from 15 to 30 sec
If Freon Loop 2 Pump B on: 'S88 FREON FLOW 2' 'S88 FRN AFT CP 2' 'S88 FRN PL HX 2'
(O1) FREON FLOW LOOP 2 ind – 578 pph
SM (BFS SM 63) PL BAY DOORS
During PLBD OP/CL, single mtr run time noted on actuators listed at left
During Rad Dpy/Sto ops: (R13L) RAD CNTL tbs (four) indicate single mtr ops

NOTES
(10) Lose Auto Temp Cntl via Cntlr 2 and H2O Loop 2 Cabin Hx In Temp Snsr. Hx Byp Vlv holds position
(11) Redundant mtr remains
(12) Single mtr time. One failure away from loss of two out of three MRLs. EVA or RMS jettison capability exists
(13) Single mtr time. One failure away from loss of MRL latching capability. EVA or OBSS jettison capability exists

EPS SSR-110 (Cont)
BUS LOSS: AC1

BUS ISOLATION	EQUIP/FUNCTION LOST	CREW INDICATIONS	NOTES
ONLY ON MCC CALL, PERFORM			(14) Bypass vlvs hold position and Cntlr A Rad Byp Vlv Mtrs remain
(MA73C:H,I) • cb AC1 FWD RCS VLV (three) – op • cb AC1 AFT POD VLV GP 1 (three) – op			
(L4:A-E) • cb UTIL PWR F1/MO52J • AC1 – op	AC1 Util pwr (F1/MO52J)		
cb AC1 • FC1 PUMPS (three) – op • CTR ENG (three) – op • R ENG (three) – op			
(L4:F-J) cb AC1 • √H2O LOOP PUMP 1A/2 (three) – op • AV BAY 1 FAN A (three) – op • AV BAY 3 FAN B (three) – op • IMU FAN A (three) – op • HUM SEP A (three) – op			
(L4:K) cb AC1 • ΦA H2O CNTLR 2 – op • ΦB CAB AIR S/C – op			
(L4:L) cb AC1 • ΦA CAB T CNTLR 2 – op • ΦB AV BAY 2 S/C – op			
(L4:M,N) cb AC1 ΦA,ΦB,ΦC • FREON LOOP 1 PUMP A (three) – op • FREON LOOP 2 PUMP B (three) – op			
(L4:O) cb AC1 • ΦA BLR HYD BYP 1B – op • ΦB HYD QTY 1 – op • ΦC BLR HYD BYP 3A – op	Hyd Rsvr 1 Qty Snsr		
(L4:P) cb AC1 • ΦA RAD CNTLR 1B – op • ΦB RAD CNTLR 2B – op	14 Freon Loop 1 Cntlr B Rad Byp Vlv Mtr Freon Loop 2 Cntlr B Rad Byp Vlv Mtr		
(L4:Q) cb AC1 • ΦA LTG PNL L/CTR – op • ΦB LTG PNL L OVHD – op • ΦC LTG INST OS – op	Pnl lts L/Ctr Pnl lts L/OH (pnls O5,O6,O7, O13,O14,O15) Orbit Sta Instr lts		
(Continued)	(Continued)		

EPS SSR-110 (Cont)
BUS LOSS: AC1

BUS ISOLATION		EQUIP/FUNCTION LOST	CREW INDICATIONS	NOTES
ONLY ON MCC CALL, PERFORM				(11) Redundant mtr remains (15) √MCC for total OMS Qtys. Aft Qtys are found on GNC SYS SUMM 2
(L4:R) cb AC1 • ΦA LG INST R – op • ΦB NUMERIC FWD – op	15	Inst lts R Numeric lts (pnls O3,F7) (RCS/OMS Prplt Qty, Gauge, Mission and Event Timers)		
		LH Vents 5,6 Mtrs 1 Stbd Rad 1 Lat 1-6,7-12 Mtrs 1 Stbd Rad Dpy/Sto Mtr 1		
	11	ET Door Mtrs: C/L Lat Actr 1,2 Mtr 1 L Dr Closure Mtr 1 Uplock Lat Mtr 1		

EPS SSR-111
BUS LOSS: AC1 ΦA

ACTIONS	EQUIP/FUNCTION LOST	CREW INDICATIONS	NOTES
(L1) • √HUM SEP A – OFF • √B – ON • √IMU FAN A – OFF • √B(C) – ON • H2O PUMP LOOP 1 (two) – ON, B • H2O LOOP 1 BYP MODE – AUTO • H2O PUMP LOOP 2 – OFF • √FREON PUMP LOOP 1 – B • √FREON PUMP LOOP 2 – A • √AV BAY 1 FAN A – OFF • √B – ON • 3 FAN A – ON • B – OFF	1Φ of Hum Sep A 1Φ of IMU Fan A 1 H2O Loop 2 Byp Cntlr, Sig Condr, Byp Vlv pwr 1Φ of H2O Loop 2 Pump GPC Cntlr pwr 1Φ of H2O Loop 1 Pump A Freon Loop 1 Pump A 2 Pump B 1Φ of AV Bay 1 Fan A 1Φ of AV Bay 3 Fan B	MASTER ALARM Light/Tone – on (F7) C/W AC VOLT lt – on C/W H2O LOOP lt – on SM ALERT Light/Tone – on (F9) AC1 ΦA AC volts < 90 (LIGHTS LOST) Instr lts R (pnls C2,F8,F9) Pnl lts L/Ctr (pnls L1,L2,L4, C2,C3,F2,F6,F7) (FSMs) S67 AC VOLTS 1 S69 FC H2 PUMP 1 S86 WSB T SM0 THRM HYD (B) S88 H2O PUMP P 2 S88 H2O LOOP 2 QTY S88 H2O LOOP 2 TEMP	(1) H2O Loop 2 Byp Vlv holds position and H2O Loop 2 Pump Out Press, Pump ΔP Accum Qty, Pump Out Temp snsrs lost (2) Inhibits H2O Loop 2 Pump ΔP, Pump Out Press, Pump Out Temp, Accum Qty, and Cabin HX In Temp respectively (3) If H2O Loop 1 Pump A active, Loop 1 Pump Out Press must drop below 45 psia to trigger C/W (4) Lose Auto Temp Cntl via Cntlr 2 and H2O Loop 2 Cabin Hx In Temp snsr. Hx Byp vlv holds position (5) Inhibits Primary C/W for AC1 voltage and H2O Loop 2 Pump P (6) 2Φ ops will result in degraded airflow. Crew actions will pwr fans thru alt pwr source with full 3Φ power
(MO13Q) If Arlk/Tnl Fan active: • ARLK FAN A – OFF • B – ON	1Φ of Arlk/Tnl Fan A		
(R2) • BLR CNTLR/HTR 1 – A	Hyd H2O Blr 1 Cntlr B		
SM 60 SM TABLE MAINT 2 • Inhibits 0612705, 0612700, 0612740, 0612710, 0612665 • Reset upper limit of 0450114 (FC1 H2 PUMP STATUS) to current value +0.3 volts	1Φ of FC1 H2 Pump 1Φ of FC1 Coolant Pump		
If CAB TEMP CNTLR 2 active: (L1) • CAB TEMP CNTLR – OFF	4 Cabin Temp Cntlr 2, Hx Byp Vlv Mtr 2	If H2O PUMP LOOP 1, A active: 3 'S88 H2O PUMP P 1'	
(MD44F) • Remove pin from SEC ACTUATOR and BYP vlv linkage, connect linkage to PRI ACTUATOR		3 (O1) H2O PUMP OUT PRESS LOOP 1 ind – 40-45 psia	
(L1) • CAB TEMP CNTLR – 1		If IMU FAN A ON: 'S66 IMU FN SPD A' 'S66 IMU FAN DP'	
(R13U) • C/W PARAM SEL tw (three) – 033,115 5 • C/W PARAM – INH • MEM – CLEAR • C/W PARAM SEL tw (three) – > 119		If HUM SEP A ON: 'S66 HUMID SEP A'	
(R1) • AC1 BUS SNSR – OFF (1 sec) • AC1 BUS SNSR – AUTO TRIP		If APUs active, and using BLR CNTLR/HTR 1B: C/W APU TEMP lt – on after ~2 min	
(WCS) • √MODE – AUTO • √CRADLE – AUTO • √Hose stowed in cradle • √WCS ON lt – OFF • FAN SEP SEL sw – OFF • HOSE BLOCK – SEP 2 • In next step, alternate fan sep will turn on for 30 sec. Normal ops may proceed after 30-sec run complete. • FAN SEP SEL sw – 2	6 1Φ of WCS Fan/Sep 1		
(Continued)	(Continued)		

EPS SSR-111 (Cont)
BUS LOSS: AC1 ΦA

ACTIONS	EQUIP/FUNCTION LOST
	7 1Φ of AC Utility Power Outlets at F1 and MO52J
8 If bus shorted: • Open all AC1 ΦA cbs that pwr 3Φ loads on pnls L4: C-J,M,N (10 cbs), MA73C: E,G,H,I (4 cbs) • Open all AC1 3Φ ganged cbs on pnls L4: B (1 cb), MA73C: C,D,F (5 cbs)	8 AC1 FMC1 Bus pwr MMC1 Bus pwr MMC3 Bus pwr AMC1 Bus pwr
9 If bus not shorted: • Perform the following BUS ISOLATION steps	

9 BUS ISOLATION	
IF BUS NOT SHORTED, PERFORM	
(L4:K) • cb AC1 ΦA H2O CNTLR 2 – op	
(L4:L) • cb AC1 ΦA CAB T CNTLR 2 – op	
(L4:O) • cb AC1 ΦA BLR HYD BYP 1B – op	
(L4:P) • cb AC1 ΦA RAD CNTLR 1B – op	10 Freon Loop 1 Cntlr B Rad Byp Vlv Mtr
(L4:Q) • cb AC1 ΦA LTG PNL L/CTR – op	Pnl lts L/Ctr (pnls L1,L2,L4, C2,C3,F2,F6,F7)
(L4:R) • cb AC1 ΦA INST R – op	Instr lts R (pnls C2,F8,F9)
(MA73C:F) • cb AC1 RMS PRI ΦA – op	RMS: 1Φ of Port Mid MRL Mtr 1 Port Aft MRL Mtr 2 Stbd Fwd MRL Mtr 2 Stbd Aft MRL Mtr 1 D&C Primary Ltg Shldr Brace Release
	FC1 pH Snsr

CREW INDICATIONS	NOTES
	(7) MCC will provide equipment reconfig info if required (8) Ganged cb. Isolation of shorted phase reqd to prevent coupling of energy from remaining two phases into shorts. After opening cbs, refer to the following SSRs for functions lost and crew indications caused by unpowering sub-buses: SSR-114, SSR-115, SSR-116, SSR-117 (9) For unshorted bus, perform single Φ isolation steps to prevent powering single phase loads with coupled energy from remaining two phases (10) Bypass vlv holds position and Cntlr A Rad Byp Vlv Mtr remains

EPS SSR-112
BUS LOSS: AC1 ΦB

ACTIONS	EQUIP/FUNCTION LOST	CREW INDICATIONS	NOTES
(L1) • √HUM SEP A – OFF • √B – ON • √IMU FAN A – OFF • √B(C) – ON • H2O PUMP LOOP 2 – ON • H2O PUMP LOOP 1 (two) – GPC, B • AV BAY 2 FAN (two) – ON • FREON PUMP LOOP 1 – B • FREON PUMP LOOP 2 – A • √AV BAY 1 FAN A – OFF • √B – ON • 3 FAN A – ON • B – OFF	1Φ of Hum Sep A 1Φ of IMU Fan A 1Φ of H2O Loop 2 Pump GPC Cntlr pwr 1 1Φ of H2O Loop 1 Pump A 2 Av Bay 2 Sig Condr, Xdcrs (ECLS SC3) 1Φ Freon Loop 1 Pump A 2 Pump B 1Φ of AV Bay 1 Fan A 1Φ of AV Bay 3 Fan B	MASTER ALARM Light/Tone – on (F7) C/W AC VOLT lt – on C/W AV BAY/CAB AIR lt – on SM ALERT Light/Tone – on (F7) EVENT TIME ind blank (F9) AC1 ΦB volts < 90 (LIGHTS LOST) Pnl lts L/OH (pnls O5,O6, O7,O13,O14,O15) Numeric lts (pnls O3,F7) (FSMs) S67 AC VOLTS 1 S69 FC H2 PUMP 1 S86 HYD RSVR Q SM2 HYD QTY (B) S66 AV BAY 2 FAN S66 CAB PPCO2 S66 CABIN FAN S88 H2O LOOP 2 TEMP	(1) If H2O Loop 1 Pump A active, Loop 1 Pump Out Press must drop below 45 psia to trigger C/W (2) Av Bay 2 Fan ΔP, Air Out Temp snsrs lost (3) Crew and gnd have lost PPCO2 Xdcr (4) Use streamers (if flown) or monitor by feel during wake period (5) CO2 partial Press and Cabin Fan ΔP snsrs lost (6) Inhibits Primary C/W for AC1 voltage and Cabin Fan ΔP (7) 2Φ ops will result in degraded airflow. Crew actions will pwr fans thru alt pwr source with full 3Φ power (8) MCC will provide equipment reconfig info if reqd
(MO13Q) If Arlk/Tnl Fan active: • ARLK FAN A – OFF • B – ON	1Φ of Arlk/Tnl Fan A		
3 • Maintain LiOH canister(s) changeout per cue card and FLIGHT PLAN During sleep periods: (L1) 4 • CAB FAN (two) – ON	4 Cab Air Sig Cond 5 (ECLS SC6)	HYD/APU HYD QTY 1 – 0%	
(R13U) • C/W PARAM SEL tw (three) – 033, 074 6 • C/W PARAM – INH • MEM – CLEAR • C/W PARAM SEL tw (three) – > 119		(O1) AIR TEMP AV BAY 2 – 45 degF	
(R1) • AC1 BUS SNSR – OFF (1 sec) • AC1 BUS SNSR – AUTO TRIP		(O3) RCS/OMS PRPLT QTY Gage and MSN TIME ind blank	
(WCS) • √MODE – AUTO • √CRADLE – AUTO • √Hose stowed in cradle • √WCS ON lt – OFF • FAN SEP SEL sw – OFF • HOSE BLOCK – SEP 2 • In next step, alternate fan sep will turn on for 30 sec. Normal ops may proceed after 30-sec run complete. • FAN SEP SEL sw – 2	7 1Φ of WCS Fan/Sep 1	If H2O PUMP LOOP 1,A active: 1 H2O LOOP C/W lt 'S88 H2O PUMP P 1' (O1) 1 H2O PUMP OUT PRESS LOOP 1 – 40-45 psia	
SM 60 SM TABLE MAINT • Reset upper limit of 0450114 (FC1 H2 PUMP STATUS) to current value + 0.3 volts	1Φ of FC1 H2 Pump 1Φ of FC1 Coolant Pump		
	8 1Φ of AC Utility Power Outlets at F1 and MO52J		
(Continued)	(Continued)		

EPS SSR-112 (Cont)
BUS LOSS: AC1 ΦB

	ACTIONS		EQUIP/FUNCTION LOST	CREW INDICATIONS	NOTES
9	If bus shorted: • Open all AC1 ΦB cbs that pwr 3Φ loads on pnls L4: C-J,M,N (10 cbs), MA73C: E,G,H,I (4 cbs) • Open all AC1 3Φ ganged cbs on pnlsL4:B (1 cb), MA73C: C,D,F (5 cbs)	9	AC1 FMC1 Bus pwr MMC1 Bus pwr MMC3 Bus pwr AMC1 Bus pwr		(9) Ganged cb. Isolation of shorted phase reqd to prevent coupling of energy from remaining two phases into short. After opening cbs, refer to the following SSRs for functions lost and crew indications caused by unpowering sub-buses: SSR-114, SSR-115, SSR-116, SSR-117
10	If bus not shorted: • Perform the following BUS ISOLATION steps				(10) For unshorted bus, perform single Φ isolation steps to prevent powering single phase loads with coupled energy from remaining two phases
	BUS ISOLATION				(11) Bypass vlv holds position and Cntlr A Rad Byp Vlv Mtr remains
	IF BUS NOT SHORTED, PERFORM				(12) √MCC for total OMS Qtys. Aft Qtys are found on GNC SYS SUMM 2
			RMS: 1Φ of Port Mid MRL Mtr 1 Port Aft MRL Mtr 2 Stbd Fwd MRL Mtr 2 Stbd Aft MRL Mtr 1		
	(L4:K) • cb AC1 ΦB CAB AIR S/C – op				
	(L4:L) • cb AC1 ΦB AV BAY 2 S/C – op				
	(L4:O) • cb AC1 ΦB HYD QTY 1 – op		Hyd Rsvr 1 Qty Snsr		
	(L4:P) • cb AC1 ΦB RAD CNTLR 2B – op	11	Freon Loop 2 Cntlr B Rad Byp Vlv Mtr		
	(L4:Q) • cb AC1 ΦB LTG PNL L OVHD – op		Pnl lts L/OH (pnls O5,O6,O7, O13,O14,O15)		
	(L4:R) • cb AC1 ΦB NUMERIC FWD – op	12	Numeric lts (pnls O3,F7) (RCS/OMS Prplt Qty Gage, Mission, and Event Timers)		

EPS SSR-113
BUS LOSS: AC1 ΦC

	ACTIONS		EQUIP/FUNCTION LOST	CREW INDICATIONS	NOTES
	(R2) • BLR CNTLR/HTR 3 – B		Hyd H2O Blr 3 Cntrl A	MASTER ALARM Light/Tone – on	(1) For unshorted bus, perform single Φ isolation steps to prevent powering single phase loads with coupled energy from remaining two phases
	(L1) • √HUM SEP A – OFF • √B – ON • √IMU FAN A – OFF • √B(C) – ON • H2O PUMP LOOP 2 – ON • H2O PUMP LOOP 1 (two) – GPC, B • FREON PUMP LOOP 1 – B • 2 – A • √AV BAY 1 FAN A – OFF • √B – ON • 3 FAN A – ON • B – OFF	1 2	1Φ of Hum Sep A 1Φ of IMU Fan A 1Φ of H2O Loop 2 Pump GPC Cntlr pwr 1Φ of H2O Loop 1 Pump A 1Φ Freon Loop 1 Pump A 2 Pump B 1Φ of AV Bay 1 Fan A 1Φ of AV Bay 3 Fan A	(F7) C/W AC VOLT lt – on SM ALERT Light/Tone – on	(2) If H2O Loop 1 Pump A active, Loop 1 Pump Out Press must drop below 45 psia to trigger C/W
				(F9) AC1 ΦC AC volts < 90	
				(LIGHTS LOST) Orbit Sta Instr lts (pnls A1,A2)	
				(FSMs) S67 AC VOLTS 1 S69 FC H2 PUMP 1 S86 WSB T SM0 THRM HYD (B)	
	(MO13Q) If Arlk/Tnl Fan active: • ARLK FAN A – OFF • B – ON		1Φ of Arlk/Tnl Fan A	HYD/APU APU H2O QTY 3 – 0%	
	(Continued)		(Continued)	(Continued)	

BUS LOSS: AC1 ΦC

ACTIONS	EQUIP/FUNCTION LOST	CREW INDICATIONS	NOTES
(R13U) • C/W PARAM SEL tw (three) – 033 (AC1 voltage) • C/W PARAM – INH • MEM – CLEAR • C/W PARAM SEL tw (three) – > 119		If H2O PUMP LOOP 1, A active: 2 C/W H2O LOOP lt – on 'S88 H2O PUMP P 1' (O1) 2 H2O PUMP OUT PRESS LOOP 1 – 40-45 psia	(2) If H2O Loop 1 Pump A active, Loop 1 Pump Out Press must drop below 45 psia to trigger C/W
(R1) • AC1 BUS SNSR – OFF (1 sec) • AC1 BUS SNSR – AUTO TRIP		If APUs active and using H2O BLR CNTLR/HTR 3A: C/W APU TEMP lt – on after ~2 min	(3) 2Φ ops will result in degraded airflow. Crew actions will pwr fans thru alt pwr source with full 3Φ power
(WCS) • √MODE – AUTO • √CRADLE – AUTO • √Hose stowed in cradle • √WCS ON lt – OFF • FAN SEP SEL sw – OFF • HOSE BLOCK – SEP 2 • In next step, alternate fan sep will turn on for 30 sec. Normal ops may proceed after 30-sec run complete. • FAN SEP SEL sw – 2	3 1Φ of WCS Fan/Sep 1		(4) MCC will provide equipment reconfig info if reqd
SM 60 SM TABLE MAINT • Reset upper limit of 0450114 (FC1 H2 PUMP STATUS) to current value + 0.3 volts	1Φ of FC1 H2 Pump 1Φ of FC1 Coolant Pump		(5) Ganged cb. Isolation of shorted phase reqd to prevent coupling of energy from remaining two phases into short. After opening cbs, refer to the following SSRs for functions lost and crew indications caused by unpowering sub-buses: SSR-114, SSR-115, SSR-116, SSR-117
	4 1Φ of AC Utility Power Outlets at F1 and MO52J		
5 If bus shorted: • Open all AC1 ΦC cbs that pwr 3Φ loads on pnls L4: C-J,M,N (10 cbs), MA73C: E,G,H,I (4 cbs) • Open all AC1 3Φ ganged cbs on pnls L4:B (1 cb), MA73C: C,D,F (5 cbs)	5 AC1 FMC1 Bus pwr MMC1 Bus pwr MMC3 Bus pwr AMC1 Bus pwr		(6) For unshorted bus, perform single isolation steps to prevent powering single phase loads with coupled energy from remaining two phases
If bus not shorted: • Perform the following BUS ISOLATION steps			

6 BUS ISOLATION	
IF BUS NOT SHORTED, PERFORM	
(L4:O) • cb AC1 ΦC BLR HYD BYP 3A – op	
(L4:Q) • cb AC1 ΦC LTG INST OS – op	Orbit Sta Instr lts (Pnls A1,A2)

(Continued)

(Continued)

EPS SSR-113 (Cont)
BUS LOSS: AC1 ΦC

ACTIONS	EQUIP/FUNCTION LOST	CREW INDICATIONS	NOTES
(MA73C:F) • cb AC1 OPS INST HYD ACTR ΦC – op	Ops Hyd Actr Instr		
	RMS: 1Φ of Port Mid MRL Mtr 1 Port Aft MRL Mtr 2 Stbd Fwd MRL Mtr 2 Stbd Aft MRL Mtr 1		

EPS SSR-114
BUS LOSS: AC1 FMC1

ACTION
NONE

BUS ISOLATION
ONLY ON MCC CALL, PERFORM
(MA73C:C) • cb MCA LOGIC MCA PWR AC1 3Φ FWD 1 – op

	EQUIP/FUNCTION LOST
	AC1 FMC1 Bus pwr RH Vent 1,2 Mtr 1
1	L ADP Dpy Mtr 1
1	-Y Star Trkr Dr Sys 1 OP/CL capability

CREW INDICATIONS
L ADP deploy time incr from 15 to 30 sec
-Y Star Trkr OP/CL time incr from 8 to 16 sec

NOTES
(1) Redundant mtr remains

EPS SSR-115
BUS LOSS: AC1 MMC1

ACTION
NONE

BUS ISOLATION
ONLY ON MCC CALL, PERFORM
(MA73C:C) • cb MCA LOGIC MCA PWR AC1 3Φ MID 1 – op

	EQUIP/FUNCTION LOST
	PLBD: C/L Lat 9-12 Mtr 1 Port,Stbd Fwd Blkhd Mtrs 1 Stbd Door Mtr 1 RH Vents 3,5,6 Mtrs 1 AC1 MMC1 Bus pwr
	Port Rad Lat 1-6, 7-12 Mtrs 1 Dpy/Sto Mtr 1 PL Reten Sys A Rel/Lat Mtrs
	RMS:
1	Port Mid MRL Mtr 1
2	Stbd Fwd MRL Mtr 2
	ROEU
3	Orbiter arm drive mtr (ODM mtr 1 – mate A, demate A, relax A)
3	ODA mtr 1 latch/release

CREW INDICATIONS
SM (BFS SM 63) PL BAY DOORS
During PLBD OP/CL, single mtr run time noted on actuators listed at left
During Rad Dpy/Sto ops: (R13L) RAD CNTL PORT tb (two) indicates single mtr ops

NOTES
(1) Single mtr time. One failure away from loss of two out of three MRLs. EVA or RMS jettison capability exists
(2) Single mtr time. One failure away from loss of MRL latching capability. EVA or OBSS jettison capability exists
(3) Single mtr time

EPS SSR-116
BUS LOSS: AC1 MMC3

ACTION
NONE

BUS ISOLATION
ONLY ON MCC CALL, PERFORM
(MA73C:D) • cb MCA LOGIC MCA PWR AC1 3Φ MID 3 – op

	EQUIP/FUNCTION LOST
	PLBD C/L Lat 1-4, 5-8 Mtrs 1 Port Aft Blkhd Mtr 1 LH Vents 5,6 Mtrs 1 AC1 MMC3 Bus pwr Stbd Rad Lat 1-6, 7-12 Mtrs 1 Dpy/Sto Mtr 1
	RMS:
1	Port Aft MRL Mtr 2
2	Stbd Aft MRL Mtr 1

CREW INDICATIONS
SM (BFS SM 63) PL BAY DOORS
During PLBD OP/CL, single mtr run time noted on actuators listed at left
During Rad Dpy/Sto ops: (R13L) RAD CNTL STBD tb (two) indicates single mtr ops

NOTES
(1) Single mtr time. One failure away from loss of two out of three MRLs. EVA or RMS jettison capability exists
(2) Single mtr time. One failure away from loss of MRL latching capability. EVA or OBSS jettison capability exists

EPS SSR-117
BUS LOSS: AC1 AMC1

ACTION
NONE

BUS ISOLATION
ONLY ON MCC CALL, PERFORM
(MA73C:D) • cb MCA PWR AC1 3Φ AFT 1 – op

EQUIP/FUNCTION LOST
AC1 AMC1 Bus pwr LH Vent 8,9 Mtr 1
1 ET Door Mtrs: C/L Lat Actr 1 Mtr 1 2 Mtr 1 L Dr Closure Mtr 1 Uplock Lat Mtr 1

CREW INDICATIONS
NONE

NOTES
(1) Redundant mtrs remain

EPS SSR-120
BUS LOSS: AC2

(Includes all AC2 sub-buses)

	ACTIONS	EQUIP/FUNCTION LOST	CREW INDICATIONS	NOTES
1	• Perform FC2 SHUTDN (FC SHUTDOWN Cue Card)	FC2 Pumps and pH Snsr	MASTER ALARM Light/Tone – on	(1) * TIME CRITICAL * FC2 must be shut down within 9 min to avoid potentially hazardous condition
	(R1) • AC2 BUS SNSR – OFF		(F7) C/W FC PUMP lt – on C/W AC VOLT lt – on C/W FREON LOOP lt – on SM ALERT Light/Tone – on C/W AV BAY/CABIN AIR lt	(2) Av Bay 3 Fan ΔP, Air Out Temp snsrs lost
	(R2) • BLR CNTLR/HTR 1 – B • 2 – A	Hyd H2O Blr 1 Cntlr A 2 Cntlr B	(F9) AC2 ΦA,ΦB,ΦC AC volts < 90	(3) Freon Loop 2 pump switched to avoid having both loops powered by AC 1
	(L4:F) • cb AC1 H2O LOOP PUMP 1A/2 (three) – cl		(LIGHTS LOST) R Ovhd pnl (pnls O1,O2, O3,O8,O9,O16,O17) R pnl (pnls F4,F8,F9,R1,R2, R4) Ovhd Instr (pnls O1,O2,O3) Orbit Sta Numeric (pnls A2,A4)	(4) Brake/Skid Cntl Box A,B enabled before WOW
	(L1) • HUM SEP B – OFF • A – ON • CAB FAN B – OFF • A – ON • IMU FAN B – OFF • A(C) – ON • H2O PUMP LOOP 1 (two) – GPC, A • H2O PUMP LOOP 2 – ON • AV BAY 1 FAN B – OFF • A – ON • 2 FAN A – OFF • B – ON • AV BAY 3 FAN (two) – ON	Humidity Sep B Cabin Fan B IMU Fan B H2O Loop 1 Pump B Av Bay 1 Fan B Av Bay 2 Fan A 2 Av Bay 3 Sig Condr, Xdcrs (ECLS SC4)	(FSMs) S67 AC VOLTS 2 S86 HYD RSVR Q SM2 HYD QTY (B) S86 WSB T SM0 THRM HYD (B) S66 AV BAY 1,2,3 FAN S69 FC PUMP 2 S69 FC H2 PUMP 2 S88 FREON FLOW 1 S88 FRN AFT CP 1 S88 FRN PL HX 1 S88 FREON QTY 2 S88 FREON FLOW 2 S88 H2O LOOP 1 TEMP S66 IMU FN SPD B S66 IMU FAN DP	(5) Freon Loop 1 P/L Hx Flow Rate, Freon Loop 2 ICH Flow Rate, and Accum Qty snsrs lost
3	• FREON PUMP LOOP 1,2 (two) – A	Freon Loop 1 Pump B		(6) Freon Loop 2 P/L Hx Flow Rate, Freon Loop 1 ICH Flow Rate and Accum Qty snsrs lost
	(MO13Q) If Arlk/Tnl Fan active: • ARLK FAN B – OFF • √A – ON	Arlk/Tnl Fan B		(7) When gear deployed, tb will not indicate DN
	(L4:P) • cb AC3 ΦA LG SNSR 1 – cl	4 Prox Snsr Elec Box 2		(8) APU H2O QTY 1 ind – 0% if BLR CNTLR/HTR 1A active. APU H2O QTY 2 ind – 0% if BLR CNTLR/HTR 2B active
	(O17:C) • SIG CONDR FREON A – AC3 • SIG CONDR FREON B – AC3	5 Freon Sig Condr A AC2 pwr (ECLS SC1A) 6 Freon Sig Condr B AC2 pwr (ECLS SC1B)	(F6,F8) 7 LDG GEAR L,NOSE tb – bp	
	(CDR SEAT PNL) • CDR SEAT PWR BUS SEL – AC3 (dn)	CDR Seat Adj via AC2 pwr	HYD/APU 8 APU H2O QTY 1 ind – 0% APU H2O QTY 2 ind – 0% HYD QTY 2 ind – 0%	
	(Continued)	(Continued)	(Continued)	

EPS SSR-120 (Cont)
BUS LOSS: AC2

ACTIONS	EQUIP/FUNCTION LOST	CREW INDICATIONS	NOTES
(PLT SEAT PNL) • PLT SEAT PWR BUS SEL – AC3 (dn)	PLT Seat Adj via AC2 pwr	(R1) FC2 COOL PUMP ΔP tb – bp	(9) Inhibits Primary C/W for FC2 Stack Temp, and Pump ΔP
(R13U) • C/W PARAM SEL tw (three) – 072,102 • C/W PARAM – INH 9 • MEM – CLEAR • C/W PARAM SEL tw (three) – > 119		(O1) AIR TEMP AV BAY 3 – 45 degF FREON FLOW LOOP 2 – 578 pph AIR TEMP CAB HX OUT – 45 degF	(10) Inhibit Loop 1 Cabin HX In Temp
SM 60 SM TABLE MAINT 10 • Inhibit 0612663		(A4) Mission and Event Timers blank	(11) Lose Auto Temp Cntl via Cntlr 1 and Cabin Temp, Cabin Hx Air Out Temp and H2O Loop 1 Cabin Hx In Temp snsrs. Hx Byp Vlv holds position
(WCS) • √MODE – AUTO • √CRADLE – AUTO • √Hose stowed in cradle • √WCS ON lt – OFF • FAN SEP SEL sw – OFF • HOSE BLOCK – SEP 1 • In next step, alternate fan sep will turn on for 30 sec. Normal ops may proceed after 30-sec run complete • FAN SEP SEL sw – 1	WCS Fan/Sep 2	If Freon Loop 1 Pump B ON: 'S88 FREON FLOW 1'	(12) Redundant mtr remains
If CAB TEMP CNTLR 1 active: (L1) • CAB TEMP CNTLR – OFF	11 Cabin Temp Cntlr 1 and Hx Byp Vlv Mtr 1	If APU active and using H2O Blr Cntlr 1A or 2B: C/W APU TEMP lt – on after ~2 min	
(MD44F) • Remove pin from PRI ACTUATOR and BYP Vlv linkage, connect linkage to SEC ACTUATOR		If H2O Loop 1 Pump B active: H2O LOOP C/W lt 'S88 H2O LOOP 1 FLOW' 'S88 H2O LOOP 1 TEMP' 'S88 H2O PUMP P1'	
(L1) • CAB TEMP CNTLR – 2		(O1) H2O PUMP OUT PRESS LOOP 1 – 20-25 psia	
Refer to OMS/RCS Slide Rule for vlv loss info (use FPC2 Slide for Aft RCS and FMC2 for Fwd RCS)		L,R ADP deploy times incr from 15 to 30 sec	
		SM (BFS SM 63) PL BAY DOORS During PLBD OP/CL, single mtr run time noted on actuators listed at left	
		(R13L) During Rad Dpy/Sto ops: RAD LAT CNTL tbs (two) indicate single mtr ops	

BUS ISOLATION	
ONLY ON MCC CALL, PERFORM	
(MA73C:C) cb MCA PWR • AC2 3Φ FWD 2 – op • AC2 3Φ MID 1 – op • AC2 3Φ MID 2 – op	AC2 FMC2 Bus pwr 12 L,R Vents 1,2 Mtrs 2 12 ADP Deploy Mtrs 2 -Y Star Trkr Dr Sys 2 OP/CL 12 capability -Z Star Trkr Dr Sys 1 OP/CL capability AC2 MNC1 Bus pwr LH Vent 5 Mtr 2 AC2 MMC2 Bus pwr PLBD C/L Lat 13-16 Mtr 2 Stbd Aft Blkhd Mtr 2 Port Door Mtr 2 Stbd Rad Lat 1-6 Mtr 2 LH Vent 3 Mtr 2

(Continued)

(Continued)

EPS SSR-120 (Cont)
BUS LOSS: AC2

BUS ISOLATION		EQUIP/FUNCTION LOST	CREW INDICATIONS	NOTES
ONLY ON MCC CALL, PERFORM				(13) √MCC for Ku Ant stow reqmts (14) Single mtr time. One failure away from EVA to stow MPM or from RMS/OBSS jettison (15) Single mtr time. One failure away from loss of two out of three MRLs. EVA or RMS jettison capability exists (16) Single mtr time. One failure away from loss of MRL latching capability. EVA or OBSS jettison capability exists
(MA73C:D) cb MCA PWR • AC2 3Φ AFT 2 – op • AC2 3Φ MID 3 – op • AC2 3Φ MID 4 – op	13	Ku Ant Sto/Dpy Mtr 2 AC2 AMC2 Bus pwr LH,RH Vents 8,9 Mtr 2 AC2 MMC3 Bus pwr PL Reten Sys B Rel/Lat Mtrs AC2 MMC4 Bus pwr PLBD Port,Stbd Fwd Blkhd Mtrs 2 PLBD Stbd Door Mtr 2 Port Rad Lat 1-6 Mtr 2 RH Vent 6 Mtr 2		
(MA73C:E) • cb AC2 WCS FAN SEP 2 (three) – op • cb AC2 PAYLOAD 3Φ – op		AC2 pwr to MS,PS Patch pnl		
(MA73C:F) cb AC2 • RMS B/U ΦA – op • OPS INST HYD ACTR ΦC – op	14 14 15 15 16 16	RMS: Port MPM Mtr 2 Stbd MPM Mtr 1 Port Fwd MRL Mtr 1 Port Mid MRL Mtr 2 Stbd Mid MRL Mtr 1 Stbd Aft MRL Mtr 2 D&C B/U edge ltg Ops Hyd Actr Inst		
(MA73C:G) IF DOCKING MISSION • cb AC2 ARLK/TNL FAN B (three) – op		Arlk/Tnl Fan B		
(MA73C:H,I) cb AC2 • FWD RCS VLV (three) – op • AFT POD VLV GP 2 (three) – op				
(L4:C-E) cb AC2 • FC2 PUMPS (three) – op • CTR ENG (three) – op • L ENG (three) – op				
(L4:F-I) cb AC2 • H2O LOOP PUMP 1B (three) – op • AV BAY 1 FAN B (three) – op • AV BAY 2 FAN A (three) – op • IMU FAN B (three) – op				
(L4:J-K) cb AC2 • HUM SEP B (three) – op • CAB FAN B (three) – op				
(L4:L) cb AC2 • ΦA CAB T CNTLR 1 – op • ΦB AV BAY 3 S/C – op				
(L4:M) cb AC2 • FREON LOOP 1 PUMP B (three) – op				
(Continued)		(Continued)		

EPS SSR-120 (Cont)
BUS LOSS: AC2

ACTIONS		EQUIP/FUNCTION LOST	CREW INDICATIONS	NOTES
ONLY ON MCC CALL, PERFORM				(12) Redundant mtr remains
(L4:N) cb AC2 • ΦA FREON FLOW PROP 1 – op • ΦB FREON SIG CONDR – op	17	Freon Loop 1 Flow Prop Vlv		(17) Flow prop vlv holds position
• cb AC2 ΦC RAD ISOL A – op	18	Freon Loop 1,2 Rad Isol Motor A		(18) Motor B remains
(L4:O) cb AC2 • ΦA BLR HYD BYP 1A – op • ΦB HYD QTY 2 – op • ΦC BLR HYD BYP 2B – op		Hyd Rsvr 2 Qty Snsr		(19) Bypass vlv holds position and Cntlr B Rad Byp Vlv Mtr remains
(L4:P) cb AC2 • ΦA LG SNSR 2 – op • ΦB RAD CNTLR 1A – op	19	Freon Loop 1 Cntlr A Rad Byp Vlv Mtr		(20) √MCC for Reconfig
(L4:Q) cb AC2 • ΦA LTG PNL R OVHD – op • ΦB LTG PNL R – op • ΦC LTG NUMERIC OS – op		R Ovhd Pnl lts R Pnl Lts OS Numeric lts		
(L4:R) • cb AC2 ΦB LTG INST OVHD – op		Ovhd Inst lts		
	12	ET Doors Mtrs: C/L Lat Actr 1 Mtr 2 L Dr Uplock Lat Mtr 2 R Dr Closure Mtr 2 Uplock Lat Mtr 2		
		NLG, LMG B/U Rel 2 Fire 2, Arm		
	20	DTV Vertical Interval Processor (VIP)		

EPS SSR-121
BUS LOSS: AC2 ΦA

	ACTIONS		EQUIP/FUNCTION LOST		CREW INDICATIONS		NOTES
	(L4:F) • cb AC1 H2O LOOP PUMP 1A/2 (three) – cl				MASTER ALARM Light/Tone – on		(1) If H2O Loop 1 Pump B active, Loop 1 Pump Out Press must drop below 45 psia to trigger C/W
	(L1) • HUM SEP A – ON • B – OFF • IMU FAN A(C) – ON • B – OFF • H2O PUMP LOOP 1 (two) – GPC,A • H2O PUMP LOOP 2 – ON		1Φ of Hum Sep B 1Φ of IMU Fan B 1 1Φ of H2O Loop 1 Pump B 1Φ of Freon Loop 1 Pump B		(F7) C/W AC VOLT lt – on SM ALERT Light/Tone – on		(2) Freon Loop 2 pump switched to avoid having both loops powered by AC1
2	• FREON PUMP LOOP 1,2 (two) – A				(F9) AC2 ΦA AC volts < 90		(3) When gear deployed, tb will not indicate DN
	• AV BAY 1 FAN A – ON • B – OFF • 2 FAN A – OFF • B – ON		1Φ of AV Bay 1 Fan B 1Φ of AV Bay 2 Fan A		(LIGHTS LOST) R Ovhd pnl lts (pnls O1,O2, O3,O8,O9,O16,O17)		(4) APU H2O QTY 1 ind – 0% if BLR CNTLR/HTR 1A active
	(MO13Q) If Arlk/Tnl Fan active: • ARLK FAN B – OFF • √A – ON		1Φ of Arlk/Tnl Fan B		(F6/F8) 3 LDG GEAR L,NOSE tb – bp		(5) Brake/Skid Cntl Box A,B enabled before WOW
			1Φ of Cabin Fan B		HYD/APU 4 APU H2O QTY 1 ind – 0%		(6) 2Φ ops will result in degraded airflow. Crew actions will pwr fans thru alt pwr source with full 3Φ power
	(L4:P) • cb AC3 ΦA LG SNSR 1 – cl		5 Prox Snsr Elec Box 2		(FSMs) S67 AC VOLTS 2 S69 FC H2 PUMP 2 S86 WSB T SM0 THRM HYD (B) S66 IMU FAN DP S66 IMU FN SPD B S88 H2O LOOP 1 TEMP		(7) Lose Auto Temp Cntl via Cntlr 1 and Cabin Temp, Cabin Hx A Out Temp and H2O Loop 1 Cabin Hx In Temp snsrs Hx Byp Vlv hold position
	(R2) • BLR CNTLR/HTR 1 – B		Hyd H2O Blr 1 Cntlr A		(O1) AIR TEMP CAB HX OUT ind – 45 degF		
	(WCS) • √MODE – AUTO • √CRADLE – AUTO • √Hose stowed in cradle • √WCS ON lt – OFF • FAN SEP SEL sw – OFF • HOSE BLOCK – SEP 1 • In next step, alternate fan sep will turn on for 30 sec. Normal ops may proceed after 30-sec run complete • FAN SEP SEL sw – 1		6 1Φ of WCS Fan/Sep 2		1 If H2O PUMP LOOP 1,B active: C/W H2O LOOP lt – on 'S88 H2O PUMP P 1'		
					1 (O1) H2O PUMP OUT PRESS LOOP 1 ind – 40-45 psia		
					If IMU FAN B ON: 'S66 IMU FAN DP' 'S66 IMU FN SPD B'		
					If HUM SEP B ON: 'S66 HUMID SEP B'		
	If Cab Temp Cntlr 1 active: (L1) • CAB TEMP CNTLR – OFF		7 Cabin Temp Cntlr 1, Hx Byp Vlv Mtr 1		If APUs active and using BLR CNTLR/HTR 1A: C/W APU TEMP lt – on after ~2 min		
	(MD44F) • Remove pin from PRI Actuator and BYP vlv linkage, connect linkage to SEC Actuator						
	(L1) • CAB TEMP CNTLR – 2						
	(Continued)		(Continued)				

EPS SSR-121 (Cont)
BUS LOSS: AC2 ΦA

ACTIONS	EQUIP/FUNCTION LOST
(R13U) • C/W PARAM SEL tw (three) – 043 (AC2 voltage) • C/W PARAM – INH • MEM – CLEAR • C/W PARAM SEL tw (three) – > 119	
(R1) • AC2 BUS SNSR – OFF (1 sec) • AC2 BUS SNSR – AUTO TRIP	
SM 60 SM TABLE MAINT • Reset upper limit of 0450214 (FC2 H2 PUMP STATUS) to current value + 0.3 volts 8 • Inhibit 0612663	1Φ of FC2 H2 Pump 1Φ of FC2 Coolant Pump
If bus shorted: 10 • Open all AC2 ΦA cbs that pwr 3Φ loads on pnl L4: C-K,M (10 cbs), pnl MA73C: E,G,H,I (4 cbs) • Open all AC2 3Φ ganged cbs on pnl MA73C: C-G (9 cbs)	9 If bus shorted: AC2 payload 3Φ Bus pwr (pwrs MS, PS Patch panel) 10 AC2 FMC2 Bus pwr MMC1 Bus pwr MMC2 Bus pwr MMC3 Bus pwr MMC4 Bus pwr AMC2 Bus pwr
11 If bus not shorted: • Perform the following BUS ISOLATION steps	
	12 DTV Vertical Interval Processor (VIP)

11 BUS ISOLATION	
IF BUS NOT SHORTED, PERFORM	
(L4:L) • cb AC2 ΦA CAB T CNTLR 1 – op	
(L4:N) • cb AC2 ΦA FREON FLOW PROP 1 – op	13 Freon Loop 1 Flow Prop Vlv
(L4:O) • cb AC2 ΦA BLR HYD BYP 1A – op	
(L4:P) • cb AC2 ΦA LG SNSR 2 – op	
(L4:Q) • cb AC2 ΦA LTG PNL R OVHD – op	R Ovhd pnl lts (pnls O1,O2, O3,O8,O9,O16,O17)
(MA73C:F) • cb AC2 RMS B/U ΦA – op	RMS: 1Φ of Port MPM Mtr 2 Stbd MPM Mtr 1 Port Fwd MRL Mtr 1 Port Mid MRL Mtr 2 Stbd Mid MRL Mtr 1 Stbd Aft MRL Mtr 2 D&C B/U edge ltg
	NLG, LMG B/U Rel 2 Fire 2, Arm
	FC2 pH Snsr

CREW INDICATIONS

NOTES
(8) Inhibit Loop 1 Cabin HX In Temp
(9) Ganged cb. Isolation of shorted phase reqd to prevent coupling of energy from two phases into short
(10) Ganged cb. Isolation of shorted phase reqd to prevent coupling of energy from remaining two phases into short. After opening cbs, refer to the following SSRs for functions lost and crew indications caused by unpwring sub-buses: SSR-124, SSR-125, SSR-126, SSR-127, SSR-128, SSR-129
(11) For unshorted bus, perform single Φ isolation steps to prevent pwring single phase loads with coupled energy from remaining two phases
(12) √MCC for Reconfig
(13) Flow prop vlv holds position

EPS SSR-122
BUS LOSS: AC2 ΦB

ACTIONS	EQUIP/FUNCTION LOST	CREW INDICATIONS	NOTES
(L4:F) • cb AC1 H2O LOOP PUMP 1A/2 (three) – cl		MASTER ALARM Light/Tone – on	(1) If H2O Loop 1 Pump B active, Loop 1 Pump Out Press must drop below 45 psia to trigger C/W
(L1) • HUM SEP A – ON • B – OFF • IMU FAN A(C) – ON • B – OFF • H2O PUMP LOOP 1 (two) – GPC,A • H2O PUMP LOOP 2 – ON • AV BAY 3 FAN (two) – ON • FREON PUMP LOOP 1,2 (two) – A • AV BAY 1 FAN A – ON • B – OFF • 2 FAN A – OFF • B – ON	1Φ of Hum Sep B 1Φ of IMU Fan B 1 1Φ of H2O Loop 1 Pump B 2 AV Bay 3 Sig Condr,Xdcrs (ECLS SC4) 3 1Φ of Freon Loop 1 Pump B AV Bay 1 Fan B 1Φ of AV Bay 2 Fan A	(F7) C/W AC VOLT lt C/W FREON LOOP lt SM ALERT Light/Tone	(2) Av Bay 3 Fan ΔP, Air Out Temp snsrs lost
(MO13Q) If Arlk/Tnl Fan active: • ARLK FAN B – OFF • √A – ON	1Φ of Arlk/Tnl Fan B	(F9) AC2 ΦB AC volts < 90	(3) Freon Loop 2 pump switched to avoid having both Freon loops powered by AC1
	1Φ of Cabin Fan B	(LIGHTS LOST) Ovhd Instr (pnls O1,O2,O3) R pnl (pnls F4,F8,F9,R1, R2,R4)	(4) Freon Loop 1 P/L Hx Flow Rate, Freon Loop 2 ICH Flow Rate, and Accum Qty snsrs lost
(O17:C) • SIG CONDR FREON A – AC3 • SIG CONDR FREON B – AC3	4 Freon Sig Condr A AC2 pwr (ECLS SC1A) 5 Freon Sig Condr B AC2 pwr (ECLS SC1B)	(FSMs) S67 AC VOLTS 2 S69 FC H2 PUMP 2 S86 HYD RSVR Q SM2 HYD QTY (B) S66 AV BAY 3 TEMP S66 AV BAY 3 FAN S88 FREON FLOW 2 S88 FRN PL HX 1 S88 FREON QTY 2	(5) Freon Loop 2 P/L Hx Flow Rate, Freon Loop 1 ICH Flow Rate, and Accum Qty snsrs lost
(R13U) • C/W PARAM SEL tw (three) – 043 (AC2 voltage) • C/W PARAM – INH • MEM – CLEAR • C/W PARAM SEL tw (three) – > 119		(A4) Mission and Event Timers blank	(6) 2Φ ops will result in degraded airflow. Crew actions will pwr fans thru alt pwr source with full 3Φ power
(R1) • AC2 BUS SNSR – OFF (1 sec) • AC2 BUS SNSR – AUTO TRIP		HYD/APU HYD QTY 2 – 0%	
SM 60 SM TABLE MAINT • Reset upper limit of 0450214 (FC2 H2 PUMP STATUS) to current value + 0.3 volts	1Φ of FC2 H2 Pump 1Φ of FC2 Coolant Pump	(O1) AIR TEMP AV BAY 3 – 45 degF FREON FLOW LOOP 2 – 578 pph	
(WCS) • √MODE – AUTO • √CRADLE – AUTO • √Hose stowed in cradle • √WCS ON lt – OFF • FAN SEP SEL sw – OFF • HOSE BLOCK – SEP 1 • In next step, alternate fan sep will turn on for 30 sec. Normal ops may proceed after 30-sec run complete • FAN SEP SEL sw – 1	6 1Φ of WCS Fan/Sep 2	1 If H2O Loop 1 Pump active: C/W H2O LOOP lt 'S88 H2O PUMP P1'	
		1 (O1) H2O PUMP OUT PRESS LOOP 1 – 40-45 psia	
(Continued)	(Continued)		

EPS SSR-122 (Cont)
BUS LOSS: AC2 ΦB

	ACTIONS		EQUIP/FUNCTION LOST	CREW INDICATIONS	NOTES
7	If bus shorted: • Open all AC2 ΦB cbs that pwr 3Φ loads on pnl L4: C-K,M (10 cbs), pnl MA73C: E,G,H,I (4 cbs) • Open all AC2 3Φ ganged cbs on pnl MA73C: C-G (9 cbs)	8	If bus shorted: AC2 payload 3Φ Bus pwr (pwrs MS, PS Patch panel) 7 AC2 FMC2 Bus pwr MMC1 Bus pwr MMC2 Bus pwr MMC3 Bus pwr MMC4 Bus pwr AMC2 Bus pwr		(7) Ganged cb. Isolation of shorted phase reqd to prevent coupling of energy from remaining two phases into short. After opening cbs, refer to the following SSRs for functions lost and crew indications caused by unpwring sub-buses: SSR-124, SSR-125, SSR-126, SSR-127, SSR-128, SSR-129
9	If bus not shorted: • Perform the following BUS ISOLATION steps				(8) Ganged cb. Isolation of shorted phase reqd to prevent coupling of energy from remaining two phases into short
9	**BUS ISOLATION**				(9) For unshorted bus, perform single Φ isolation steps to prevent pwring single phase loads with coupled energy from remaining two phases
	IF BUS NOT SHORTED, PERFORM				(10) Bypass vlv holds position and Cntlr B Rad Byp Vlv Mtr remains
	(L4:L) • cb AC2 ΦB AV BAY 3 S/C – OP				
	(L4:N) • cb AC2 ΦB FREON SIG CONDR – op				
	(L4:O) • cb AC2 ΦB HYD QTY 2 – op		Hyd Rdvr 2 Qty Snsr		
	(L4:P) • cb AC2 ΦB RAD CNTLR 1A – op	10	Freon Loop 1 Cntlr A Rad Byp Vlv Mtr H2O Ln pH Snsr		
	(L4:Q) • cb AC2 ΦB LTG PNL R – op		R pnl ltg (pnls F4,F8,F9,R1, R2,R4)		
	(L4:R) • cb AC2 ΦB INST OVHD – op		Ovhd Instr ltg (pnls O1,O2, O3)		
			RMS: 1Φ of Port MPM Mtr 2 Stbd MPM Mtr 1 Port Fwd MRL Mtr 1 Port Mid MRL Mtr 2 Stbd Mid MRL Mtr 1 Stbd Aft MRL Mtr 2		
			1Φ of AC2 payload 3Φ Bus pwr (pwrs MS, PS Patch pnl)		

EPS SSR-123
BUS LOSS: AC2 ΦC

ACTIONS	EQUIP/FUNCTION LOST	CREW INDICATIONS	NOTES
(L4:F) • cb AC1 H2O LOOP PUMP 1A/2 (three) – cl		MASTER ALARM Light/Tone – on	(1) If H2O Loop 1 Pump B active, Loop 1 Pump Out Press must drop below 45 psia to trigger C/W
(L1) • HUM SEP A – ON • B – OFF • IMU FAN A(C) – ON • B – OFF • H2O PUMP LOOP 1 (two) – GPC,A • H2O PUMP LOOP 2 – ON 2 • FREON PUMP LOOP 1,2 (two) – A • AV BAY 1 FAN A – ON • B – OFF • 2 FAN A – OFF • B – ON	1Φ of Hum Sep B 1Φ of IMU Fan B 1 1Φ of H2O Loop 1 Pump B 1Φ of Freon Loop 1 Pump B AV Bay 1 Fan B 1Φ of AV Bay 2 Fan A	(F7) C/W AC VOLT lt SM ALERT Light/Tone	(2) Freon Loop 2 pump switched to avoid having both loops powered by AC1
		(LIGHTS LOST) Orbit Sta Numeric (pnls A2,A4)	(3) APU H2O QTY 2 ind – 0% if in BLR CNTLR/HTR 2B
		(FSM) S67 AC VOLTS 2 S69 FC H2 PUMP 2 S86 WSB T SM0 THRM HYD (B)	(4) 2Φ ops will result in degraded airflow. Crew actions will pwr fans thru alt pwr source with full 3Φ power
(MO13Q) If Arlk/Tnl Fan active: • ARLK FAN B – OFF • √A – ON	1Φ of Arlk/Tnl Fan B	1 If H2O Loop 1 Pump B active: C/W H2O LOOP lt 'S88 H2O PUMP P 1'	
	1Φ of Cabin Fan B	(O1) H2O PUMP OUT PRESS LOOP 1 = 40-45 psia	
(R2) • BLR CNTRL/HTR 2 – A	HYD H2O Blr 2 Cntlr B	HYD/APU If APUs active and using H2O BLR CNTLR 2B: C/W APU TEMP lt after ~2 min	
(R13U) • C/W PARAM SEL tw (three) – 043 (AC2 voltage) • C/W PARAM – INH • C/W MEM – CLEAR • C/W PARAM SEL tw (three) – > 119		3 APU H2O QTY 2 ind – 0%	
(R1) • AC2 BUS SNSR – OFF (1 sec) • AC2 BUS SNSR – AUTO TRIP			
SM 60 SM TABLE MAINT • Reset upper limit of 0450214 (FC2 H2 PUMP STATUS) to current value + 0.3 volts	1Φ of FC2 H2 Pump 1Φ of FC2 Coolant Pump		
(WCS) • √MODE – AUTO • √CRADLE – AUTO • √Hose stowed in cradle • √WCS ON lt – OFF • FAN SEP SEL sw – OFF • HOSE BLOCK – SEP 1 • In next step, alternate fan sep will turn on for 30 sec. Normal ops may proceed after 30-sec run complete • FAN SEP SEL sw – 1	4 1Φ of WCS Fan/Sep 2		
(Continued)	(Continued)		

EPS SSR-123 (Cont)
BUS LOSS: AC2 ΦC

ACTIONS	EQUIP/FUNCTION LOST	CREW INDICATIONS	NOTES
5 If bus shorted: • Open all AC2 ΦC cbs that pwr 3Φ loads on pnl L4: C-K,M (10 cbs), pnl MA73C: E,G,H,I (4 cbs) • Open all AC2 3Φ ganged cbs on pnl MA73C: C-G (9 cbs)	6 If bus shorted: AC2 payload 3Φ Bus pwr (pwrs MS, PS Patch panel) 5 AC2 FMC2 Bus pwr MMC1 Bus pwr MMC2 Bus pwr MMC3 Bus pwr MMC4 Bus pwr AMC2 Bus pwr		(5) Ganged cb. Isolation of shorted phase reqd to prevent coupling of energy from remaining two phases into short. After opening cbs, refer to the following SSRs for functions lost and crew indications caused by unpwring sub-buses: SSR-124, SSR-125, SSR-126, SSR-127, SSR-128, SSR-129
7 If bus not shorted: • Perform the following BUS ISOLATION steps			(6) Ganged cb. Isolation of shorted phase reqd to prevent coupling of energy from remaining two phases into short
7 **BUS ISOLATION**			(7) For unshorted bus, perform single isolation steps to prevent pwring single phase loads with coupled energy from remaining two phases
IF BUS NOT SHORTED, PERFORM			(8) Motor B remains
(L4:N) • cb AC2 ΦC RAD ISOL A – op	8 Freon Loop 1,2 Rad Isol Motor A		
(L4:O) • cb AC2 ΦC BLR HYD BYP 2B – op			
(L4:Q) • cb AC2 ΦC LTG NUMERIC OS – op	Orbit Sta Numeric Ltg (pnls A2,A4)		
(MA73C:F) • cb AC2 OPS INST HYD ACTR ΦC – op	Ops Hyd Act Inst		
	RMS: 1Φ of Port MPM Mtr 2 Stbd MPM Mtr 1 Port Fwd MRL Mtr 1 Port Mid MRL Mtr 2 Stbd Mid MRL Mtr 1 Stbd Aft MRL Mtr 2		
	1Φ of AC2 payload 3Φ Bus pwr (pwrs MS, PS Patch pnl)		

EPS SSR-124
BUS LOSS: AC2 FMC2

ACTIONS
NONE

BUS ISOLATION
ONLY ON MCC CALL, PERFORM
(MA73C:C) • cb MCA LOGIC MCA PWR AC2 3Φ FWD 2 – op

EQUIP/FUNCTION LOST
AC2 FMC2 Bus pwr 1 L,R Vents 1,2 Mtrs 2 1 ADP Dpy Mtrs 2 1 -Y Star Trkr Dr Sys 2 OP/CL capability 1 -Z Star Trkr Dr Sys 1 OP/CL capability

CREW INDICATIONS
L,R ADP deploy times incr from 15 to 30 sec
-Y,-Z Star Trkr OP/CL time incr from 8 to 16 sec

NOTES
(1) Redundant mtr remains

EPS SSR-125
BUS LOSS: AC2 MMC1

ACTIONS
NONE

BUS ISOLATION
ONLY ON MCC CALL, PERFORM
(MA73C:C) • cb MCA LOGIC MCA PWR AC2 3Φ MID 1 – op

EQUIP/FUNCTION LOST
AC2 MMC1 Bus pwr LH Vent 5 Mtr 2

CREW INDICATIONS
NONE

NOTES

EPS SSR-126
BUS LOSS: AC2 MMC2

ACTIONS
NONE

BUS ISOLATION
ONLY ON MCC CALL, PERFORM
(MA73C:C) • cb MCA LOGIC MCA PWR AC2 3Φ MID 2 – op

EQUIP/FUNCTION LOST
RMS: 1 Port MPM Mtr 2 1 Stbd MPM Mtr 1 2 Port Fwd MRL Mtr 1 3 Stbd Aft MRL Mtr 2
AC2 MMC2 Bus pwr PLBD C/L Lat 13-16 Mtr 2 Stbd Aft Bkhd Mtr 2 Port Door Mtr 2
Stbd Rad Lat 1-6 Mtr 2 LH Vent 3 Mtr 2

CREW INDICATIONS
SM (BFS SM 63) PL BAY DOORS
During PLBD OP/CL, single mtr run time noted on actuators listed at left
(R13) During Rad Dpy/Sto ops, RAD LAT CNTL STBD tb indicates single mtr ops

NOTES
(1) Single mtr time. One failure away from EVA to stow MPM or from RMS/OBSS jettison
(2) Single mtr time. One failure away from loss of two out of three MRLs. EVA or RMS jettison capability exists
(3) Single mtr time. One failure away from loss of MRL latching capability. EVA or OBSS jettison capability exists

EPS SSR-127
BUS LOSS: AC2 MMC3

ACTIONS
NONE

BUS ISOLATION
ONLY ON MCC CALL, PERFORM
(MA73C:D) • cb MCA LOGIC MCA PWR AC2 3Φ MID 3 – op

	EQUIP/FUNCTION LOST
	AC2 MMC3 Bus pwr PL Reten Sys B Rel/Lat Mtrs
	ROEU
1	Orbiter arm drive mtr (ODM mtr 2 – mate B, demate B, relax B)
1	ODA mtr 2 latch/release

CREW INDICATIONS
NONE

NOTES
(1) Single mtr time

EPS SSR-128
BUS LOSS: AC2 MMC4

ACTIONS
NONE

BUS ISOLATION
ONLY ON MCC CALL, PERFORM
(MA73C:D) • cb MCA LOGIC MCA PWR AC2 3Φ MID 4 – op

	EQUIP/FUNCTION LOST
	AC2 MMC4 Bus pwr PLBD Port,Stbd Fwd Bkhd Mtrs 2 PLBD Stbd Door Mtr 2
	Port Rad Lat 1-6 Mtr 2 RH Vent 6 Mtr 2
	RMS:
1	Port Mid MRL Mtr 2
2	Stbd Mid MRL Mtr 1
3	Ku Ant Sto/Dpy Mtr 2

CREW INDICATIONS
SM (BFS SM 63) PL BAY DOORS
During PLBD OP/CL, single mtr run time noted on actuators listed at left
(R13L) During Rad Dpy/Sto ops: RAD LAT CNTL PORT tb indicates single mtr ops

NOTES
(1) Single mtr time. One failure away from loss of two out of three MRLs. EVA or RMS jettison capability exists
(2) Single mtr time. One failure away from loss of MRL latching capability. EVA or OBSS jettison capability exists
(3) √MCC for Ku Ant stow reqmts

EPS SSR-129
BUS LOSS: AC2 AMC2

ACTIONS
NONE

BUS ISOLATION
ONLY ON MCC CALL, PERFORM
(MA73C:D) • cb MCA LOGIC MCA PWR AC2 3Φ AFT 2 – op

	EQUIP/FUNCTION LOST
	AC2 AMC2 Bus pwr LH,RH Vents 8,9 Mtr 2
1	ET Door Mtrs: C/L Lat Actr 1 Mtr 2 L Dr Uplock Lat Mtr 2 R Dr Closure Mtr 2 Uplock Lat Mtr 2

CREW INDICATIONS
NONE

NOTES
(1) Redundant mtrs remain

EPS SSR-130
BUS LOSS: AC3 (Includes all AC3 sub-buses)

	ACTIONS	EQUIP/FUNCTION LOST	CREW INDICATIONS	NOTES
1	• Perform FC3 SHUTDN (FC SHUTDN Cue Card) then:	FC3 Pumps and pH Snsr	MASTER ALARM Light/Tone – on	(1) * TIME CRITICAL * FC3 must be shut down within 9 min to avoid potentially hazardous condition
	(R1) • AC3 BUS SNSR – OFF		(F7) C/W FREON LOOP lt – on C/W FC PUMP lt – on C/W AC VOLT lt – on C/W H2O LOOP lt – on SM ALERT Light/Tone – on	
	(R2) • BLR CNTLR/HTR 2 – B • 3 – A	Hyd H2O Blr 2 Cntlr A 3 Cntlr B	(F9) AC ΦA,ΦB,ΦC AC volts < 90	
	(L1) • IMU FAN B(A) – ON • C – OFF • Perform (H2O Loop 2 only), H2O PUMP OPS via GPC, ECLS SSR-10 • CAB FAN A – OFF • B – ON • AV BAY 1 FAN (two) – ON • √AV BAY 2 FAN A – ON • B – OFF • 3 FAN A – OFF • √B – ON • FREON PUMP LOOP 2 – B	IMU Fan C H2O Loop 2 Pump man ON capability H2O Loop 1 Byp Cntlr, Sig Condr 2 H2O Loop 1 Byp Vlv pwr Cabin Fan A 3 Av Bay 1 Sig Condr, Xdcrs (ECLS SC2) Av Bay 2 Fan B Av Bay 3 Fan A Freon Loop 2 Pump A	(LIGHTS LOST) Instr lts L/Ctr (pnls C2,F6, F7) MS pnl lts (pnls R10, R12) OS pnl lts (pnls A1,A2,A6, A7,A8,A13,L9)	(2) Vlv holds position (3) Av Bay 1 Fan ΔP, Air Out Temp snsrs lost
	(L4:P) • cb AC2 ΦA LG SNSR 2 – cl	5 Prox Snsr Elec box 1	(FSMs) S67 AC VOLTS 3 S86 HYD RSVR Q 3 4 S86 WSB T (2) S66 AV BAY 1 FAN S66 CABIN FAN (2) S66 IMU FN SPD B S69 FC PUMP 3 S69 FC H2 PUMP 3 S88 FREON FLOW 1 S88 FREON QTY 1 S88 FRN PL HX 2 S88 H2O PUMP P1 S88 H2O PUMP P2 SM0 THRM HYD (B) SM2 HYD QTY (B)	(4) S86 WSB T 2 if in BLR/CNTLR 2A. S86 WSB T 3 if in BLR/CNTLR 3B (5) Brake/Skid Cntl Box A,B enabled before WOW
	(O17:C) • SIG CONDR FREON A – AC2 • SIG CONDR FREON B – AC2	6 Freon Sig Condr A AC3 pwr (ECLS SC1A) 7 Freon Sig Condr B AC3 pwr (ECLS SC1B)	(R1) FC3 COOL PUMP ΔP tb – bp	(6) Freon Loop 1 P/L Hx Flow Rate, Freon Loop 2 ICH Flow Rate, and Accum Qty snsrs lost (7) Freon Loop 2 P/L Hx Flow Rate, Freon Loop 1 ICH Flow Rate, and Accum Qty snsrs lost
	(CDR SEAT PNL) • CDR SEAT PWR BUS SEL – AC2 (up)	CDR Seat Adj via AC3 pwr	(F6,F8) 8 LDG GEAR NOSE, 9 R tb – bp	(8) Indicates DN when NLG down
	(PLT SEAT PNL) • SEAT PWR BUS SEL – AC2 (up)	PLT Seat Adj via AC3 pwr	HYD/APU HYD QTY 3 ind – 0%	(9) Will not indicate DN when RMG down
	SM 60 SM TABLE MAINT		10 APU H2O QTY ind – 0%	(10) APU H2O QTY 2 if in BLR/CNTLR 2A. APU H2O QTY 3 if in BLR/CNTLR 3B
11	• Inhibit 0612605, 0612600, 0612640, 0612610		(O1) H2O PUMP OUT PRESS LOOP 1 meter ind: 0 psia H2O PUMP OUT PRESS LOOP 2 ind: 20-25 psia	(11) Inhibits H2O Loop 1 Pump ΔP, Pump Out Press, Pump Out Temp, Accum Qty, respectively
12	(R13U) • C/W PARAM SEL tw (three) – 082, 112, 105 • C/W PARAM – INH • C/W MEM – CLEAR • C/W PARAM SEL tw (three) – > 119		If CABIN FAN A selected: C/W AV BAY/CAB AIR lt – on 'S66 CABIN AIR'	(12) Inhibits Primary C/W for FC3 Stack Temp and Pump ΔP, H2O Loop 1,2 Pump P
	Refer to OMS/ RCS Slide Rule for vlv loss info (use FPC3 Slide for Aft RCS, and FMC3 for Fwd RCS)		If APUs active and using BLR CNTLR/HTR 2A or 3B: C/W APU TEMP lt – on after ~2 min	
		NLG, RMG B/U Rel 1 Fire 2, Arm	STAR TRKR DR POS -Z – OP/CL time incr from 8 to 16 sec	
	(Continued)	(Continued)	(Continued)	

EPS SSR-130 (Cont)
BUS LOSS: AC3

ACTIONS		EQUIP/FUNCTION LOST	CREW INDICATIONS	NOTES
ONLY ON MCC CALL, PERFORM			R ADP deploy time incr from 15 to 30 sec	(13) √MCC for Ku Ant stow reqmts
(MA73C:C) cb MCA LOGIC MCA PWR • AC3 3Φ FWD 3 – op • AC3 3Φ MID 2 – op	13 14 14	KU ANT Sto/Dpy Mtr 1 AC3 FMC3 Bus pwr R ADP Dpy Mtr 1 -Z Star Trkr Dr Sys 2 OP/CL capability LH Vents 1,2 Mtr 1 AC3 MMC2 Bus pwr PLBD C/L Lat 1-4 Mtr 2 5-8 Mtr 2 Port Aft Blkhd Mtr 2 Stbd Rad Lat 7-12 Mtr 2 Dpy/Sto Mtr 2 LH Vent 6 Mtr 2 3 Mtr 1	SM (BFS SM 63) PL BAY DOORS During PLBD OP/CL, single mtr run time noted on actuators listed at left During Rad Dpy/Sto ops: (R13L) RAD CNTL tbs (four) indicate single mtr ops	(14) Redundant mtrs remain (15) Hum Sep A,B Speed Norm Snsrs lost (16) IMU Fan A,B,C Speed Norm Snsrs lost
(MA73C:D) cb MCA LOGIC MCA PWR • AC3 3Φ AFT 3 – op • MID 4 – op		AC3 AMC3 Bus pwr RH Vents 8,9 Mtr 1 AC3 MMC4 Bus pwr PLBD C/L Lat 9-12 Mtr 2 13-16 Mtr 1 Stbd Aft Blkhd Mtr 1 Port Door Mtr 1 Port Rad Lat 7-12 Mtr 2 Dpy/Sto Mtr 2 RH Vents 3,5 Mtrs 2		
(MA73C:E) • cb AC3 PAYLOAD 3Φ – op		AC3 pwr to MS, PS Patch pnls		
(MA73C:G) • cb AC3 GALLEY FAN (three) – op		Galley Fan		
(MA73C:H,I) • cb AC3 FWD RCS VLV (three) – op • cb AC3 AFT POD VLV GP 3 (three) – op				
(L4:A) • cb UTIL PWR A15/MO13Q AC3 – op		AC3 Utility pwr (A15/MO13Q)		
(L4:C-E) cb AC3 • FC3 PUMPS (three) – op • R ENG (three) – op • L ENG (three) – op				
(L4:F-H) cb AC3 • H2O LOOP PUMP 2 (three) – op • AV BAY 3 FAN A (three) – op • AV BAY 2 FAN B (three) – op				
(L4:I,J) cb AC3 • IMU FAN C (three) – op • ΦA SIG/CONDR HUM SEP – op • ΦB SIG/CONDR IMU FAN – op	 15 16	 Hum Sep Sig Condr (ECLS SC5) IMU Fan Sig Condr (ECLS SC7)		
(Continued)		(Continued)		

EPS SSR-130 (Cont)
BUS LOSS: AC3

ACTIONS		EQUIP/FUNCTION LOST	CREW INDICATIONS	NOTES
ONLY ON MCC CALL, PERFORM				(2) Vlv holds position (14) Redundant mtrs remain (17) Motor A remains (18) Bypass vlv holds position and Cntlr B Rad Byp Vlv Mtr remains (19) Single mtr time. One failure away from EVA to stow MPM or from RMS/OBSS jettison (20) Single mtr time. One failure away from loss of two out of three MRLs. EVA or RMS jettison capability exists (21) Single mtr time. One failure away from loss of MRL latching capability. EVA or OBSS jettison capability exists
(L4:K,L) cb AC3 • CABIN FAN A (three) – op • ΦA H2O CNTLR 1 – op • ΦB AV BAY 1 S/C – op				
(L4:M,N) cb AC3 • FREON LOOP 2 PUMP A (three) – op • ΦA FREON FLOW PROP 2 – op • ΦB FREON SIG/CONDR – op	2	Freon Loop 2 Flow Prop Vlv		
(L4:N) • cb AC3 ΦC RAD ISOL B – op	17	Freon Loop 1,2 Rad Isol Motor B		
(L4:O) cb AC3 • ΦA BLR HYD BYP 2A – op • ΦB HYD QTY 3 – op • ΦC BLR HYD BYP 3B – op		Hyd Rsvr 3 Qty Snsr		
(L4:P) cb AC3 • ΦA LG SNSR 1 – op • ΦB RAD CNTLR 2A – op	18	Freon Loop 2 Cntlr A Rad Byp Vlv Mtr		
(L4:Q) cb AC3 • ΦA LTG COAS – op • ΦB LTG PNL MS – op • ΦC LTG PNL OS – op		Sta 1,2 COAS ltg pwr MS pnl lts (pnls R10,R12) OS pnl lts (pnls A1,A2,A6, A7,A8,A13,L9)		
(L4:R) • cb AC3 ΦB INST L/CTR – op		L/Ctr Inst lts (pnls C2,F6,F7)		
	14	ET Door Mtrs: C/L Lat Actr 2 Mtr 2 L Dr Closure Mtr 2 R Dr Closure Mtr 1 Uplock Lat Mtr 1		
	19 19 20 20 21 21	RMS: Port MPM Mtr 1 Stbd MPM Mtr 2 Port Fwd MRL Mtr 2 Port Aft MRL Mtr 1 Stbd Mid MRL Mtr 2 Stbd Fwd MRL Mtr 1		

EPS SSR-131
BUS LOSS: AC3 ΦA

	ACTIONS	EQUIP/FUNCTION LOST
	(L1) • √IMU FAN B – ON • √C – OFF • H2O PUMP LOOP 1 (two) – ON, B	1Φ of IMU Fan C
1	• Perform (H2O Loop 2 only), H2O PUMP OPS via GPC, ECLS SSR-10	1Φ of H2O Loop 2 Pump man ON
2		H2O Loop 1 Byp Cntlr, Sig Condr
3		H2O Loop 1 Byp vlv pwr
	• FREON PUMP LOOP 2 – B	1Φ of Freon Loop 2 Pump A
	• √AV BAY 2 FAN A – ON • √B – OFF	1Φ of AV Bay 2 Fan B
	• √3 FAN A – OFF • √B – ON	1Φ of AV Bay 3 Fan A
6	Verify Cabin Fan A operation. If running, then; (L1) • Install sw guard (stowed in IFM tool kit) over Cab Fan A sw in the ON position	
		1Φ of Cabin Fan A
7	(L4:P) • cb AC2 ΦA LG SNSR 2 – cl	Prox Snsr Electronics Box 1
8	SM 60 SM TABLE MAINT • Inhibit 0612605, 0612600, 0612640, 0612610 • Reset upper limit of 0450314 (FC3 H2 PUMP STATUS) to current value +0.3 volts	1Φ of FC3 H2 Pump 1Φ of FC3 Coolant Pump
	(R2) • BLR CNTLR/HTR 2 – B	APY/HYD Blr Cntlr/Htr 2A
9	(R13U) • C/W PARAM SEL tw (three) – 105, 053 • C/W PARAM – INH • C/W MEM – CLEAR • C/W PARAM SEL tw (three) – > 119	
	(R1) • AC3 BUS SNSR – OFF (1 sec) • AC3 BUS SNSR – AUTO TRIP	
10	If bus shorted: • Open all AC3 ΦA cbs that pwr 3Φ loads on pnls L4: C-I,K,M (9 cbs), MA73C: G-I (3 cbs) • Open all AC3 3Φ ganged cbs on pnls L4:B (1 cb), MA73C: C-G (7 cbs)	11 If bus shorted: AC3 payload 3Φ Bus pwr (pwrs MS, PS Patch panel) 10 AC3 FMC3 Bus pwr MMC2 Bus pwr MMC4 Bus pwr AMC3 Bus pwr
		12 1Φ of AC Utility Power Outlets at A15 and MO13Q
	(Continued)	(Continued)

	CREW INDICATIONS
	MASTER ALARM Light/Tone – on
1	(F7) C/W AC VOLT lt – on C/W H2O LOOP lt – on
	(F9) AC3 ΦA AC volts < 90
4 5	(F6/F8) LDG GEAR NOSE, R tb – bp
	(O1) H2O PUMP OUT PRESS LOOP 1 meter ind – 0 psia
	(FSMs) S67 AC VOLTS 3 S69 FC H2 PUMP 3 S86 WSB T 2 (2) S66 HUMID SEP B S88 H2O PUMP P 1 S88 H2O LOOP TEMP S88 H2O LOOP 1 QTY SM0 THRM HYD (B)
	HYD/APU APU H2O QTY 2 ind – 0%
1	If H2O PUMP LOOP 2 active: 'S88 H2O PUMP P 2' (O1) H2O PUMP OUT PRESS LOOP 2 ind – 40-45 psia
	If APUs active and using BLR CNTLR/HTR 2A: C/W APU TEMP lt – on after ~2 min
	If IMU FAN C ON: S66 IMU FAN DP S66 IMU FN SPD C

NOTES
(1) If H2O Loop 2 Pump active, Loop 2 Pump Out Press must drop below 45 psia to trigger C/W
(2) H2O Loop 1 Pump Out Press, Pump ΔP, Accum Qty, Pump Out Temp snsrs lost
(3) H2O Loop 1 Byp Vlv holds position
(4) Indicates DN when NLG down
(5) Will not indicate DN when RMG down
(6) Switch guard installed to prevent Cab Fan A from being turned off during LiOH can changeout and cabin fan filter cleaning
(7) Brake/Skid Cntl Box A,B enabled before WOW
(8) Inhibits H2O Loop 1 Pump ΔP, Pump Out Press, Pump Out Temp, Accum Qty, respectively
(9) Inhibits Primary C/W for H2O Loop 1 Pump P and AC3 voltage
(10) Ganged cb. Isolation of shorted phase reqd to prevent coupling of energy from remaining two phases into short. After opening cbs, refer to the following SSRs for functions lost and crew indications caused by unpwring sub-buses: SSR-134, SSR-135, SSR-136, SSR-137
(11) Ganged cb. Isolation of shorted phase reqd to prevent coupling of energy from remaining two phases into short
(12) MCC will provide equipment reconfig info if reqd

EPS SSR-131 (Cont)
BUS LOSS: AC3 ΦA

13 BUS ISOLATION		EQUIP/FUNCTION LOST	CREW INDICATIONS	NOTES
IF BUS NOT SHORTED, PERFORM				(13) For unshorted bus, perform single Φ isolation steps to prevent pwring single phase loads with coupled energy from remaining two phases
(L4:J) • cb AC3 ΦA SIG CONDR HUM SEP – op	14	Hum Sep Sig Condr (ECLS SC 5)		(14) Hum Sep A,B Speed Norm snsrs lost
(L4:L) • cb AC3 ΦA H2O CNTLR 1 – op				(15) Vlv holds position
(L4:N) • cb AC3 ΦA FREON FLOW PROP 2 – op	15	Freon Loop 2 Flow Prop Vlv		
(L4:O) • cb AC3 ΦA BLR HYD BYP 2A – op				
(L4:P) • cb AC3 ΦA LG SNSR 1 – op				
(L4:Q) • cb AC3 ΦA LTG COAS – op		Sta 1,2 COAS pwr		
		NLG,RMG Backup Rel 1 Fire 2, Arm FC 3 pH Snsr		
		RMS: 1Φ of Port MPM Mtr 1 Stbd MPM Mtr 2 Port Fwd MRL Mtr 2 Port Aft MRL Mtr 1 Stbd Fwd MRL Mtr 1 Stbd Mid MRL Mtr 2		
		1Φ of AC3 payload 3Φ Bus pwr (pwrs MS, PS Patch pnl)		

EPS SSR-132
BUS LOSS: AC3 ΦB

ACTIONS	EQUIP/FUNCTION LOST	CREW INDICATIONS	NOTES
(L4:F) • cb AC1 H2O LOOP PUMP 1A/2 (three) – cl		MASTER ALARM Light/Tone – on	(1) If H2O Loop 2 Pump active, Loop 2 Pump Out Press must drop below 45 psia to trigger C/W
(L1) • √IMU FAN B – ON • √C – OFF • H2O PUMP LOOP 1 (two) – ON,B • H2O PUMP LOOP 2 – GPC • H2O PUMP LOOP 1 BYP MODE – AUTO • H2O PUMP LOOP 2 BYP MODE – MAN • AV BAY 1 FAN (two) – ON • FREON PUMP LOOP 2 – B • √AV BAY 2 FAN A – ON • √B – OFF • √3 FAN A – OFF • √B – ON	1Φ of IMU Fan C 1 1Φ of H2O Loop 2 Pump man ON capability 2 Av Bay 1 Sig Condr, Xdcrs (ECLS SC2) 1Φ of Freon Loop 2 Pump A 1Φ of AV Bay 2 Fan B 1Φ of AV Bay 3 Fan A	(F7) C/W AC VOLT lt C/W FREON LOOP lt SM ALERT lt C/W H2O PUMP lt	(2) Av Bay 1 Fan ΔP, Air Out Temp snsrs lost
		(F9) AC3 ΦB AC volts < 90	
		(FSMs) S67 AC VOLTS 3 S69 FC H2 PUMP 3 S86 HYD RSVR Q 3 SM2 HYD QTY 3 (B) S66 AV BAY 1 FAN S66 IMU FN SPD B S88 FREON FLOW 1 S88 FRN PL HX 2 S88 FREON QTY 1 S88 H2O PUMP P 2	(3) Switch guard installed to prevent Cab Fan A from being turned off during LiOH can changeout and cabin fan filter cleaning
3 Verify Cabin Fan A operation. If running, then (L1) • Install sw guard (stowed in IFM tool kit) over Cab Fan A sw in the ON position		HYD/APU HYD QTY 3 – 0%	(4) Freon Loop 1 P/L Hx Flow Rate, Freon Loop 2 ICH Flow Rate, and Accum Qty snsrs lost
	1Φ of Cabin Fan A	(LIGHTS LOST) L/Ctr Instr lts (pnls C2,F6,F7) MS pnl lts (pnls R10,R12)	(5) Freon Loop 2 P/L Hx Flow Rate Freon Loop 1 ICH Flow Rate, and Accum Qty snsrs lost
(O17:C) • SIG CONDR FREON A – AC2 • SIG CONDR FREON B – AC2	4 Freon Sig Condr A AC3 pwr (ECLS SC1A) 5 Freon Sig Condr B AC3 pwr (ECLS SC1B)	(O1) 1 H2O PUMP OUT PRESS LOOP 2 – 40-45 psia FREON FLOW 1 – 578 pph AV Bay 1 Air Out – 45 degF	(6) Inhibits Primary C/W for AC3 Voltage
(R13U) 6 • C/W PARAM SEL tw (three) – 053 • C/W PARAM – INH 7 • Change PRI C/W PARAM 105 low limit to 1.50 7 • Change PRI C/W PARAM 115 low limit to 0.65 • C/W MEM – CLEAR • C/W PARAM SEL tw (three) – > 119			(7) Sets H2O Loop 1 Pump P low limit to 45 psia and H2O Loop 2 Pump P low limit to 19.5 psia
(R1) • AC3 BUS SNSR – OFF (1 sec) • AC3 BUS SNSR – AUTO TRIP			
SM 60 SM TABLE MAINT • Reset upper limit of 0450314 (FC3 H2 PUMP STATUS) to current value + 0.3 volts	1Φ of FC3 H2 Pump 1Φ of FC3 Coolant Pump		
7 Reconfig B/U C/W • ITEM 1 +0 6 1 2 6 0 0 EXEC • ITEM 11 +4 5 EXEC • ITEM 1 +0 6 1 2 7 0 0 EXEC • ITEM 11 +1 9.5 EXEC			
(Continued)	(Continued)		

EPS SSR-132 (Cont)
BUS LOSS: AC3 ΦB

ACTIONS	EQUIP/FUNCTION LOST	CREW INDICATIONS	NOTES
8 If bus shorted: • Open all AC3 ΦB cbs that pwr 3Φ loads on pnls L4: C-I,K,M (9 cbs), MA73C: G-I (3 cbs) • Open all AC3 3Φganged cbs on pnls L4:B (1 cb), MA73C: C-G (7 cbs)	9 If bus shorted: AC3 payload 3Φ Bus pwr (pwrs MS, PS Patch panel) 8 AC3 FMC3 Bus pwr MMC2 Bus pwr MMC4 Bus pwr AMC3 Bus pwr		(8) Ganged cb. Isolation of shorted phase reqd to prevent coupling of energy from remaining two phases into short. After opening cbs, refer to the following SSRs for functions lost and crew indications caused by unpwring sub-buses: SSR-134, SSR-135, SSR-136, SSR-137
	10 1Φ of AC Utility Power Outlets at A15 and MO13Q		(9) Ganged cb. Isolation of shorted phase reqd to prevent coupling of energy from remaining two phases into shorts
11 **BUS ISOLATION**			(10) MCC will provide equipment reconfig info if reqd
IF BUS NOT SHORTED, PERFORM			(11) For unshorted bus, perform single Φ isolation steps to prevent pwring single phase loads with coupled energy from remaining two phases
(L4:J) • cb AC3 ΦB SIG CONDR IMU FAN – op	12 IMU Fan Sig Condr (ECLS SC7)		(12) IMU Fan A,B,C Speed Norm snsr lost
(L4:L) • cb AC3 ΦB AV BAY 1 S/C – op			(13) Bypass vlv holds position and Cntlr B Rad Byp Vlv Mtr remains
(L4:N) • cb AC3 ΦB FREON SIG CONDR – op			
(L4:O) • cb AC3 ΦB HYD QTY 3 – op	Hyd Rsvr 3 Qty Snsr		
(L4:P) • cb AC3 ΦB RAD CNTLR 2A – op	13 Freon Loop 2 Cntlr A Rad Byp Vlv Mtr		
(L4:Q) • cb AC3 ΦB LTG PNL MS – op	MS pnl lts (pnl R10,R12)		
(L4:R) • cb AC3 ΦB INST L/CTR – op	L/Ctr Inst lts (pnl C2,F6,F7)		
	RMS: 1Φ of Port MPM Mtr 1 Stbd MPM Mtr 2 Port Fwd MRL Mtr 2 Port Aft MRL Mtr 1 Stbd Fwd MRL Mtr 1 Stbd Mid MRL Mtr 2		
	1Φ of AC3 payload 3Φ Bus pwr (pwrs MS, PS Patch pnl)		

EPS SSR-133
BUS LOSS: AC3 ΦC

ACTIONS	EQUIP/FUNCTION LOST	CREW INDICATIONS	NOTES
(L4:F) • cb AC1 H2O LOOP PUMP 1A/2 (three) – cl		MASTER ALARM Light/Tone – on	(1) H2O Loop 2 Pump Out Press must drop below 45 psia to trigger C/W
(L1) • √IMU FAN B – ON • √C – OFF • H2O PUMP LOOP 1 (two) – ON,B • H2O PUMP LOOP 2 – GPC • H2O PUMP LOOP 1 BYP MODE – AUTO • H2O PUMP LOOP 2 BYP MODE – MAN • √FREON PUMP LOOP 2 – B • √AV BAY 2 FAN A – ON • √B – OFF • √3 FAN A – OFF • √B – ON	1Φ of IMU Fan C 1 1Φ of H2O Loop 2 Pump man ON capability 1Φ of Freon Loop 2 Pump A 1Φ of AV Bay 2 Fan B 1Φ of AV Bay 3 Fan A	(F7) C/W AC VOLT lt – on C/W FREON LOOP lt – on SM ALERT lt – on C/W H2O PUMP lt – on	(2) Switch guard installed to prevent Cab Fan A from being turned off during LiOH can changeout and cabin fan filter cleaning
		(F9) AC3 ΦC AC volts < 90	(3) Inhibits Primary C/W for AC3 Voltage
		(LIGHTS LOST) OS pnl lts (pnls A1,A2,A6, A7,A8,A13,L9)	(4) Sets H2O Loop 1 Pump P low limit to 45 psia, and H2O Loop 2 Pump P low limit to 19.5 psia
		(FSMs) S69 FC H2 PUMP 3 S86 WSB T 3 (2) SM0 THRM HYD (B) 1 S88 H2O PUMP P 2	(5) Ganged cb. Isolation of shorted phase reqd to prevent coupling of energy from remaining two phases into shorts
2 Verify Cabin Fan A operation. If running, then: (L1) • Install sw guard (stowed in IFM tool kit) over Cab Fan A sw in the ON position		1 (O1) H2O PUMP OUT PRESS LOOP 2 ind – 40-45 psia	(6) Ganged cb. Isolation of shorted phase reqd to prevent coupling of energy from remaining two phases into short. After opening cbs, refer to the following SSRs for functions lost and crew indications caused by unpwring subbuses: SSR-134, SSR-135, SSR-136, SSR-137
	1Φ of Cabin Fan A	If APUs active and using BLR CNTLR/HTR 3B: C/W APU TEMP lt – on after ~2 min	
(R2) • BLR CNTLR/HTR 3 – A	APU/HYD Blr Cntlr/Htr 3B		
(R13U) • C/W PARAM SEL tw (three) – 053 3 • C/W PARAM – INH 4 • Change PRI C/W PARAM 105 low limit to 1.50 4 • Change PRI C/W PARAM 115 low limit to 0.65 • C/W MEM – CLEAR • C/W PARAM SEL tw (three) – > 119			
(R1) • AC3 BUS SNSR – OFF (1 sec) • AC3 BUS SNSR – AUTO TRIP			
SM 60 SM TABLE MAINT • Reset upper limit of 0450314 (FC3 H2 PUMP STATUS) to current value + 0.3 volts	1Φ of FC3 H2 Pump 1Φ of FC3 Coolant Pump		
4 Reconfig B/U C/W • ITEM 1 +0 6 1 2 6 0 0 EXEC • ITEM 11 +4 5 EXEC • ITEM 1 +0 6 1 2 7 0 0 EXEC • ITEM 11 +1 9.5 EXEC			
If bus shorted: 6 • Open all AC3 ΦC cbs that pwr 3Φ loads on pnls L4: C-I,K,M (9 cbs), MA73C: G-I (3 cbs) • Open all AC3 3Φ ganged cbs on pnls L4:B (1 cb), MA73C: C-G (7 cbs)	5 If bus shorted: AC3 payload 3Φ Bus pwr (pwrs MS, PS Patch panel) 6 AC3 FMC3 Bus Pwr MMC2 Bus Pwr MMC4 Bus Pwr AMC3 Bus Pwr		
(Continued)	(Continued)		

EPS SSR-133 (Cont)
BUS LOSS: AC3 ΦC

BUS ISOLATION	EQUIP/FUNCTION LOST	CREW INDICATIONS	NOTES
7 IF BUS NOT SHORTED, PERFORM			(7) For unshorted bus, perform single Φ isolation steps to prevent pwring single phase loads with coupled energy from remaining two phases
	8 1Φ of AC Utility Power Outlets at A15 and MO13Q		(8) MCC will provide equipment reconfig info if reqd
(L4:N) • cb AC3 ΦC RAD ISOL B – op	9 Freon Loop 1,2 Rad Isol Motor B		(9) Motor A remains
(L4:O) • cb AC3 ΦC BLR HYD BYP 3B – op			
(L4:P)			
(L4:Q) • cb AC3 ΦC LTG PNL OS – op	OS pnl lts (pnls A1,A2,A6, A7,A8,A13,L9)		
	RMS: 1Φ of Port MPM Mtr 1 Stbd MPM Mtr 2 Port Fwd MRL Mtr 2 Port Aft MRL Mtr 1 Stbd Fwd MRL Mtr 1 Stbd Mid MRL Mtr 2		
	1Φ of AC3 payload 3Φ Bus pwr (pwrs MS, PS Patch pnl)		

EPS SSR-134
BUS LOSS: AC3 FMC3

ACTIONS
NONE

BUS ISOLATION
ONLY ON MCC CALL, PERFORM
(MA73C:C) • cb MCA LOGIC MCA PWR AC3 3Φ FWD 3 – op

EQUIP/FUNCTION LOST
AC3 FMC3 Bus pwr LH Vent 1,2 Mtr 1 1 R ADP Dpy Mtr 1 1 -Z Star Trkr Dr Sys 2 OP/CL capability

CREW INDICATIONS
-Z Star Trkr Dr OP/CL time incr from 8 to 16 sec
R ADP deploy time incr from 15 to 30 sec

NOTES
(1) Redundant mtr remains

EPS SSR-135
BUS LOSS: AC3 MMC2

ACTIONS
NONE

BUS ISOLATION
ONLY ON MCC CALL, PERFORM
(MA73C:C) • cb MCA LOGIC MCA PWR AC3 3Φ MID 2 – op

EQUIP/FUNCTION LOST
AC3 MMC2 Bus pwr PLBD C/L Lat 1-4 Mtr 2 5-8 Mtr 2 Port Aft Bkhd Mtr 2 Stbd Rad Lat 7-12 Mtr 2 Dpy/Sto Mtr 2 LH Vent 6 Mtr 2 3 Mtr 1
RMS: 1 Port Aft MRL Mtr 1 2 Stbd Mid MRL Mtr 2
3 KU ANT Dpy/Sto Mtr 1

CREW INDICATIONS
SM (BFS SM 63) PL BAY DOORS
During PLBD OP/CL, single mtr run time noted on actuators listed at left
(R13L) During Rad Dpy/Sto ops, RAD CNTL STBD tb (two) indicates single mtr ops

NOTES
(1) Single mtr time. One failure away from loss of two out of three MRLs. EVA or RMS jettison capability exists (2) Single mtr time. One failure away from loss of MRL latching capability. EVA or OBSS jettison capability exists (3) √MCC for Ku Ant stow reqmts

EPS SSR-136
BUS LOSS: AC3 MMC4

ACTIONS
NONE

BUS ISOLATION
ONLY ON MCC CALL, PERFORM
(MA73C:D) cb MCA LOGIC MCA PWR AC3 3Φ MID 4 – op

EQUIP/FUNCTION LOST
RMS: 1 Port MPM Mtr 1 1 Stbd MPM Mtr 2 2 Port Fwd MRL Mtr 2 3 Stbd Fwd MRL Mtr 1
AC3 MMC4 Bus pwr PLBD C/L Lat 9-12 Mtr 2 13-16 Mtr 1 Stbd Aft Blkhd Mtr 1 Port Door Mtr 1 RH Vents 3,5 Mtrs 2 Port Rad Lat 7-12 Mtr 2 Dpy/Sto Mtr 2

CREW INDICATIONS
SM (BFS SM 63) PL BAY DOORS During PLBD OP/CL, single mtr run time noted on actuators listed at left
(R13L) During Rad Dpy/Sto ops, RAD CNTL PORT tb (two) indicates single mtr ops

NOTES
(1) Single mtr time. One failure away from EVA to stow MPM or from RMS/OBSS jettison
(2) Single mtr time. One failure away from loss of two out of three MRLs. EVA or RMS jettison capability exists
(3) Single mtr time. One failure away from loss of MRL latching capability. EVA or OBSS jettison capability exists

EPS SSR-137
BUS LOSS: AC3 AMC3

ACTIONS
NONE

BUS ISOLATION
ONLY ON MCC CALL, PERFORM
(MA73C:D) • cb MCA LOGIC MCA PWR AC3 3Φ AFT 3 – op

EQUIP/FUNCTION LOST
AC3 AMC3 Bus pwr RH Vents 8,9 Mtr 1
1 ET Door Mtrs: C/L Lat Actr 2 Mtr 2 L Dr Closure Mtr 2 R Dr Closure Mtr 2 Uplock Lat Mtr 1

CREW INDICATIONS
NONE

NOTES
(1) Redundant mtrs remain

EPS SSR-140
BUS LOSS: AC1 RCS/FMC1

ACTIONS
Refer to OMS/RCS Slide Rule for vlv loss info (Use FMC1 Slide for Fwd RCS)

BUS ISOLATION
ONLY ON MCC CALL, PERFORM
(MA73C:H) • cb AC1 FWD RCS VLV (three) – op

EQUIP/FUNCTION LOST

	CREW INDICATIONS
1	The following tb indications do not change position in response to cmds: (O8) FWD RCS TK ISOL 3/4/5 MANF ISOL 1

NOTES
(1) Vlv remains in tb indicated position

EPS SSR-141
BUS LOSS: AC2 RCS/FMC2

ACTIONS
Refer to OMS/RCS Slide Rule for vlv loss info (Use FMC2 Slide for Fwd RCS)

BUS ISOLATION
ONLY ON MCC CALL, PERFORM
(MA73C:H) • cb AC2 FWD RCS VLV (three) – op

EQUIP/FUNCTION LOST

	CREW INDICATIONS
1	The following tb indication does not change position in response to cmds: (O8) FWD RCS MANF ISOL 2

NOTES
(1) Vlv remains in tb indicated position

EPS SSR-142
BUS LOSS: AC3 RCS/FMC3

ACTIONS
Refer to OMS/RCS Slide Rule for vlv loss info (Use FMC3 Slide for Fwd RCS)

BUS ISOLATION
ONLY ON MCC CALL, PERFORM
(MA73C:H) • cb AC3 FWD RCS VLV (three) – op

EQUIP/FUNCTION LOST

	CREW INDICATIONS
1	The following tb indications do not change position in response to cmds: (O8) FWD RCS TK ISOL 1/2 MANF ISOL 3 4

NOTES
(1) Vlv remains in tb indicated position

EPS SSR-143
BUS LOSS: AC1 POD/AMC1

ACTIONS	EQUIP/FUNCTION LOST	CREW INDICATIONS	NOTES
1 Refer to OMS/RCS Slide Rule for vlv loss info (use FPC1 Slide for Aft RCS)			(1) Vlv remains in tb indicated position

BUS ISOLATION
ONLY ON MCC CALL, PERFORM
(MA73C:I) • cb AC 1 AFT POD VLV GP 1 (three) – op

EPS SSR-144
BUS LOSS: AC2 POD/AMC2

ACTIONS	EQUIP/FUNCTION LOST	CREW INDICATIONS	NOTES
1 Refer to OMS/RCS Slide Rule for vlv loss info (use FPC2 Slide for Aft RCS)			(1) Vlv remains in tb indicated position

BUS ISOLATION
ONLY ON MCC CALL, PERFORM
(MA73C:I) • cb AC2 AFT POD VLV GP 2 (three) – op

EPS SSR-145
BUS LOSS: AC3 POD/AMC3

ACTIONS	EQUIP/FUNCTION LOST	CREW INDICATIONS	NOTES
1 Refer to OMS/RCS Slide Rule for vlv loss info (use FPC3 Slide for Aft RCS)			(1) Vlv remains in tb indicated position
BUS ISOLATION			
ONLY ON MCC CALL, PERFORM			
(MA73C:I) • cb AC3 AFT POD VLV GP 3 (three) – op			

EPS SSR-146
BUS LOSS: MNA/B POD/AMC1

ACTIONS	EQUIP/FUNCTION LOST	CREW INDICATIONS	NOTES
1 Refer to OMS/RCS Slide Rule for vlv loss info (use FPC1 Slide for Aft RCS)		1 (O8) L,R OMS TK ISOL A tb – bp L OMS XFEED A tb – bp	(1) Vlv remains in last commanded position
BUS ISOLATION		(O7) AFT L,R RCS TK ISOL 3/4/5 A tb – bp MANF ISOL 2 tb – bp XFEED 3/4/5 tb – bp	(2) √MCC for impacts to OMS Gauging
ONLY ON MCC CALL, PERFORM			
(MA73C:I) • AFT POD VLV LOGIC GP 1/3, 1/2 (two) – OFF	2 OMS Qty Gauging Degraded	(FSMs) RCS PWR FAIL	

EPS SSR-147
BUS LOSS: MNB/C POD/AMC2

ACTIONS	EQUIP/FUNCTION LOST	CREW INDICATIONS	NOTES
1 Refer to OMS/RCS Slide Rule for vlv loss info (use FPC2 Slide for Aft RCS)		1 (O8) L,R OMS XFEED B tb – bp	(1) Vlv remains in last commanded position (2) √MCC for impacts to OMS Gauging
BUS ISOLATION		(O7) AFT L,R RCS TK ISOL 3/4/5 B tb – bp MANF ISOL 1 tb – bp	
ONLY ON MCC CALL, PERFORM		(FSMs) RCS PWR FAIL	
(MA73C:I) • AFT POD VLV LOGIC GP 1/2, 2/3 (two) – OFF	2 OMS Qty Gauging Degraded		

EPS SSR-148
BUS LOSS: MNC/A POD/AMC3

ACTIONS	EQUIP/FUNCTION LOST	CREW INDICATIONS	NOTES
1 Refer to OMS/RCS Slide Rule for vlv loss info (use FPC3 Slide for Aft RCS)		(O8) L,R OMS TK ISOL B tb – bp R OMS XFEED A tb – bp	(1) Vlv remains in last commanded position (2) √MCC for impacts to OMS Gauging
BUS ISOLATION		(O7) AFT L,R RCS TK ISOL 1/2 tb – bp MANF ISOL 3,4 tb – bp XFEED 1/2 tb – bp	
ONLY ON MCC CALL, PERFORM		(FSMs) RCS PWR FAIL	
(MA73C:I) • AFT POD VLV LOGIC GP 1/3, 2/3 (two) – OFF	2 OMS Qty Gauging Degraded		

EPS SSR-150
ALTERNATE PRIMARY PAYLOAD PWR

1.1

Attempt MNC/PRIPL connection again:

O13:E	1. √cb ESS 3AB MNC CONTR – cl
O14:B	2. √cb MNA MNC CONTR – cl
R1	3. PL PRI MNC – OFF, ON (tb-ON)

If MNC/PRIPL connection failed, attempt FC3/PRIPL connection:

R1	4. PL PRI MNC – OFF (tb-OFF)
	5. FC3 – ON (tb-ON)

If FC3/PRIPL connection failed, attempt MNB/PRIPL connection:

O13:C	6. √cb ESS 2CA MNB CONTR – cl
O16:B	7. √cb MNC MNB CONTR – cl
R1	8. PL PRI FC3 – OFF (tb-OFF)
	9. MNB – ON (tb-ON)

EPS SSR-200
AC PWR TRANSFER CABLE

NOTE

This procedure is designed to be a standalone procedure with all necessary Bus Loss Actions included. The procedure also may be entered from the MN bus or FPC Bus Loss Actions (MAL or ENT PKT)

1 Which AC Bus is affected ?

AC1 | AC2 | AC3

2 Isolate AC1

- Perform FC1 SHUTDN (FC SHUTDN Cue Card), pwrdn not needed

(R2)
- BLR CNTLR/HTR 1 – A
- √3 – B

(L1)
- HUM SEP A – OFF
- B – ON
- IMU FAN A – OFF
- √B(C) – ON
- H2O PUMP LOOP 1 (two) – GPC,B
- H2O PUMP LOOP 2 – ON
- AV BAY 1 FAN A – OFF
- √B – ON
- √AV BAY 2 FAN A – ON
- B – OFF
- AV BAY 3 FAN A – ON
- B – OFF
- √FREON PUMP LOOP 1 – B
- FREON PUMP LOOP 2 – A

(MO13Q)
If Arlk/Tnl Fan Active:
- ARLK FAN A – OFF
- B – ON

If CAB TEMP CNTLR 2 active:
(L1)
- CAB TEMP CNTLR – OFF

(MD44F)
- Remove pin from SEC ACTUATOR and BYP vlv linkage, connect linkage to PRI ACTUATOR

(L1)
- CAB TEMP CNTLR – 1

(WCS)
- √MODE – AUTO
- √CRADLE – AUTO
- √Hose stowed in cradle
- √WCS ON lt – OFF
- FAN SEP SEL sw – OFF
- HOSE BLOCK – SEP 2
- In next step, alternate fan sep will turn on for 30 sec. Normal ops may proceed after 30-sec run complete
- FAN SEP SEL sw – 2

→ 5

3 Isolate AC2

- Perform FC2 SHUTDN (FC SHUTDN Cue Card), pwrdn not needed

(R2)
- BLR CNTLR/HTR 1 – B
- 2 – A

(L4:F)
- cb AC1 H2O LOOP PUMP 1A/2 (three) – cl

(L1)
- HUM SEP B – OFF
- A – ON
- CABIN FAN B – OFF
- √A – ON
- IMU FAN B – OFF
- A(C) – ON
- H2O PUMP LOOP 1 (two) – GPC,A
- √H2O PUMP LOOP 2 – ON
- AV BAY 1 FAN B – OFF
- A – ON
- AV BAY 2 FAN A – OFF
- B – ON
- √AV BAY 3 FAN B – ON
- A – OFF
- FREON PUMP LOOP 1 – A

(MO13Q)
If Arlk/Tnl Fan Active:
- √ARLK FAN B – OFF
- √A – ON

If CAB TEMP CNTLR 1 active:
(L1)
- CAB TEMP CNTLR – OFF

(MD44F)
- Remove pin from PRI ACTUATOR and BYP vlv linkage, connect linkage to SEC ACTUATOR

(L1)
- CAB TEMP CNTLR – 2

(WCS)
- √MODE – AUTO
- √CRADLE – AUTO
- √Hose stowed in cradle
- √WCS ON lt – OFF
- FAN SEP SEL sw – OFF
- HOSE BLOCK – SEP 1
- In next step, alternate fan sep will turn on for 30 sec. Normal ops may proceed after 30-sec run complete
- FAN SEP SEL sw – 1

→ 6

4 Isolate AC3

- Perform FC3 SHUTDN (FC SHUTDN Cue Card), pwrdn not needed

(R2)
- BLR CNTLR/HTR 2 – B
- 3 – A

(L4:F)
- cb AC1 H2O LOOP PUMP 1A/2 (three) – cl

(L1)
- IMU FAN C – OFF
- √B(A) – ON
- CABIN FAN A – OFF
- B – ON
- H2O PUMP LOOP 2 – GPC
- Perform (H2O Loop 2 only) H2O PUMP OPS via GPC, ECLS SSR-10
- H2O PUMP LOOP 1 – OFF
- √AV BAY 1 FAN B – ON
- A – OFF
- √AV BAY 2 FAN A – ON
- B – OFF
- AV BAY 3 FAN A – OFF
- √B – ON
- √FREON PUMP LOOP 2 – B

(O17:C)
- SIG CONDR FREON A – AC2
- SIG CONDR FREON B – AC2

(CDR SEAT PNL)
- CDR SEAT PWR BUS SEL – AC2 (up)

(PLT SEAT PNL)
- PLT SEAT PWR BUS SEL – AC2 (up)

→ 7

(1) * TIME CRITICAL *

FC must be shut down within 9 min to avoid potentially hazardous condition

EPS SSR-200 (Cont)

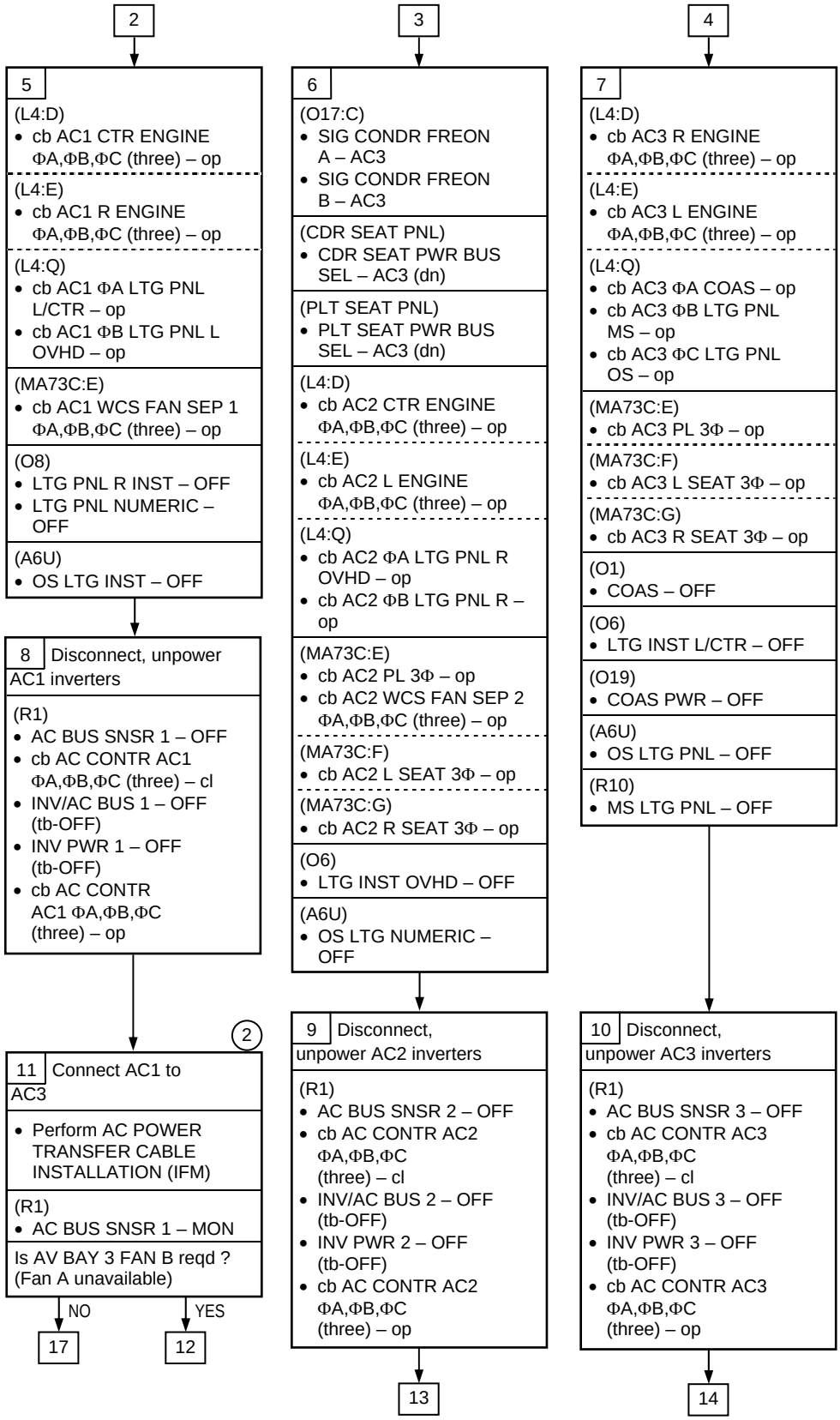

(2) If Cabin Fan or upgraded AV Bay 3 Fan to be powered via the AC XFER cable (because redundant fan is unavailable), other loads on the xfer cable will need to be unpowered. This is due to the current limitations on the AC XFER Cable (3 amp cb at AC UTIL OUTLET)

EPS SSR-200 (Cont)

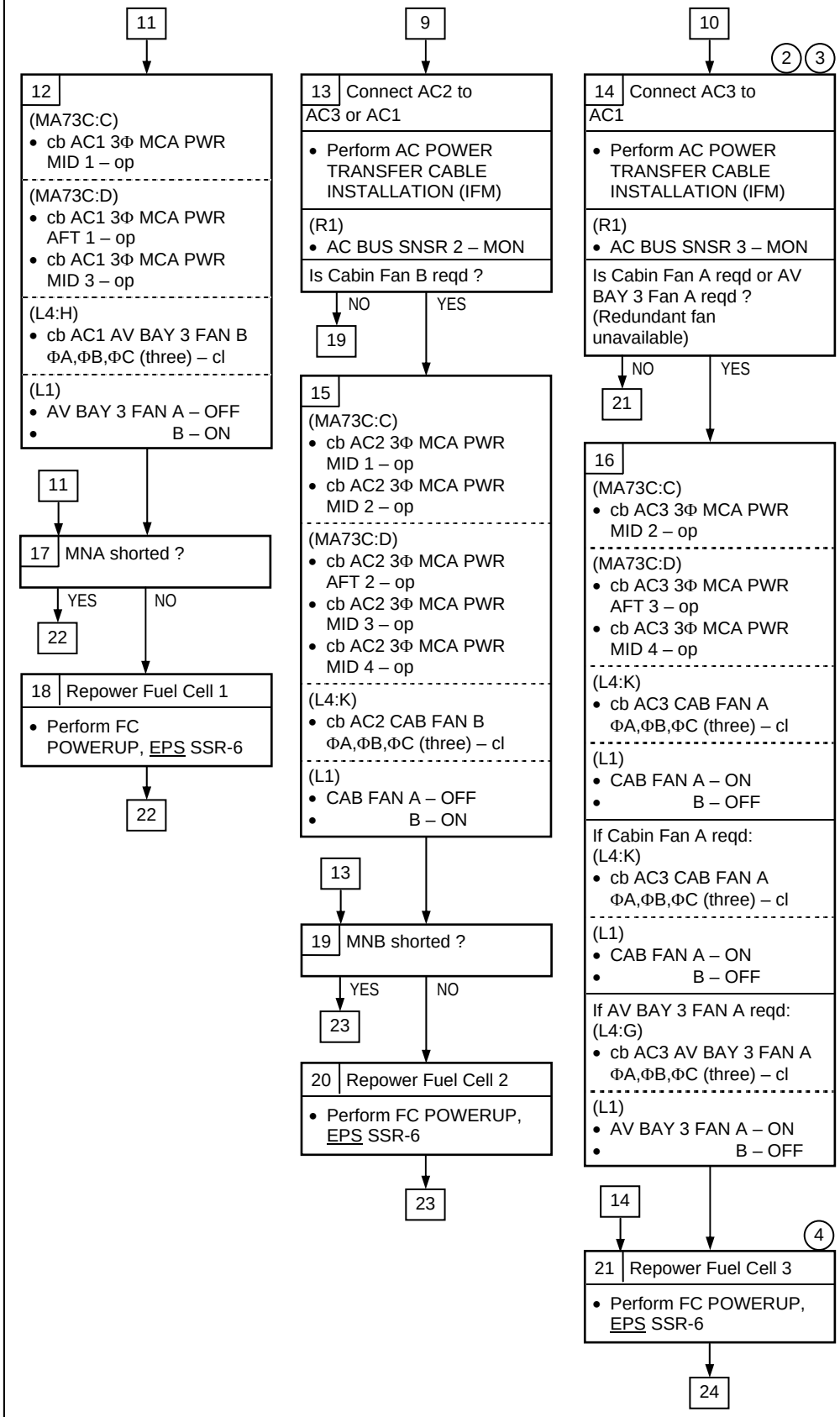

(2) If Cabin Fan or upgraded AV Bay 3 Fan to be powered via the AC XFER cable (because redundant fan is unavailable), other loads on the xfer cable will need to be unpowered. This is due to the current limitations on the AC XFER Cable (3 amp cb at AC UTIL OUTLET)

(3) Due to the limitations of the AC UTIL OUTLET 3 amp cb, the Cabin Fan and AV Bay Fan cannot be powered on the transfer cable simultaneously

(4) For MNC short, SSR-6 ties FC3 to MNB through the PL PRI BUS

17 | 18

AC1 LOAD REFERENCE TABLE

(5)

22 **CONTINUOUS EQUIPMENT** **After cable installation, the following equipment will be powered CONTINUOUSLY:**	AC CURRENT (amps/phase)	AC1 CURRENT AFTER CABLE INSTALLED		
		ΦA	ΦB	ΦC
(R1) FUEL CELL 1 PUMPS (6)	.81	.81	.81	.81
(L4:K) AC1 ΦA H2O CNTLR 2 (S/C)	.06	.06		
ΦB CAB AIR S/C	.04		.04	
(L4:L) ΦB AV BAY 2 S/C	.02		.02	
(L4:O) ΦB HYD QTY 1	.02		.02	
ΦA BLR HYD BYP SENSOR 1B	.07	.07		
ΦC BLR HYD BYP SENSOR 3A	.07			.07
(L4:L) ΦA CABIN TEMP CNTLR 2 (EL)	.04	.04		
(MA73C:F) ΦC OPS HYD ACTR INST (7)	.06			.06
(8)	SUBTOTAL AMPS/PHASE	.98	.89	.94
INTERMITTENT EQUIPMENT **After cable installation, the following equipment will be available for INTERMITTENT operation:**	AC CURRENT (amps/phase)	AC1 CURRENT		
		ΦA	ΦB	ΦC
(L4:K) AC1 ΦA H2O CNTLR 2 (BYP VLV) (9)	.14			
(L4:O) ΦA BLR HYD BYP VLV 1B	.21			
ΦC BLR HYD BYP VLV 3A	.21			
(L4:P) ΦA RAD CNTLR 1B (FREON LOOP 1 CNTLR B RAD BYP VLV MTR) (9) (10)	.17			
ΦB RAD CNTLR 2B (FREON LOOP 2 CNTLR B RAD BYP VLV MTR) (9) (10)	.17			
(MA73C:C) AC1 3Φ FWD 1 RH VENTS 1/2 MTR 1	OP – .28 CL – .21			
-Y STAR TRKR DR SYS 1 OP/CL (9)	.14			
L ADP DPY MTR 1 (9)	.14			
AC1 3Φ MID 1 RH VENT 3 MTR 1	OP – .59 CL – .29			
5 MTR 1	OP – .59 CL – .29			
6 MTR 1	OP – .57 CL – .27			
PL RETEN LAT MTR 1	.41			
PORT RAD LAT 1-6, 7-12 MTRS 1 (2 ea)	.26			
PORT RAD DPY/STO MTR 1	.26			
PLBD C/L LAT 9-12 MTR 1	.72			
PORT,STBD FWD BLKHD MTRS 1	.87			
PLBD STBD DOOR MTR 1	1.64			
PORT RMS MID RETN LAT MTR 1	.25			
(Cont)				

(5) Total current for each phase of AC bus must not exceed 3 amps continuous. Table should be used to calculate total phase current. CONTINUOUS EQUIPMENT will be powered continuously. INTERMITTENT EQUIPMENT will be available for intermittent ops. CONTINGENCY EQUIPMENT will be available for contingency use only

(6) If MNA shorted, FC pumps will not be restarted

(7) Includes RUD/SPDBRK and ELVN SW VLV Xdcrs

(8) AC Utility Outlet cb can handle up to 6 amps for up to 5 sec. AC current for vent door ops peaks at ~4.5 amps/phase for 1 sec for dual mtr ops, peaks for 6 sec for single mtr ops. The cb should not trip if steady-state loads less than 3 amps/phase for dual mtr ops or less than 1 amp/phase for single mtr ops on all associated vent doors

(9) Normal individual load operation should not trip AC Utility Outlet cb if steady-state loads less than 3 amps/phase

(10) If MNA DA1 is not regained, these mtrs (auto and man cntl) will not be operational

AC1 LOAD REFERENCE TABLE (Cont)

INTERMITTENT EQUIPMENT (Cont)	AC CURRENT (amps/phase)	AC1 CURRENT AFTER CABLE INSTALLED		
		ΦA	ΦB	ΦC
(MA73C:D) AC1 3Φ MID 3 PLBD LAT 1-4, 5-8 MTR 1 (2 ea)	.72			
L AFT BLKHD MTR 1	.87			
LH VENTS 5 MTR 1	OP – .59 CL – .27			
6 MTR 1	OP – .57 CL – .27			
STBD RAT LAT 1-6, 7-12 MTRS 1 (2 ea)	.26			
STBD RAD DPY/STO MTR 1	.26			
PORT RMS AFT RETN LAT MTR 2	.25			
AC1 3Φ AFT 1 LH VENT 8/9 MTR 1	OP – .67 CL – .39			
ET DOORS L DRIVE MTR 1	1.06			
L LAT MTR 1	1.28			
C/L LAT 1 MTR 1	.41			
C/L LAT 2 MTR 1	.41			
(MA73C:F) ΦA RMS PRIMARY	.93			
(MA73C:H) FWD RCS VLV (3 ea) (9)	.42			
(MA73C:I) AFT POD VLV GP 1 AFT RCS ISOL L MANF 2 FU VLV (9)	.42			
L MANF 2 OX VLV	.42			
R MANF 2 FU VLV	.42			
R MANF 2 OX VLV	.42			
L TK 3/4/5A FU VLV	.42			
L TK 3/4/5A OX VLV	.42			
R TK 3/4/5A FU VLV	.42			
R TK 3/4/5A OX VLV	.42			
RCS XFEED R MANF 3/4/5 FU VLV	.42			
R MANF 3/4/5 OX VLV	.42			
L MANF 3/4/5 FU VLV	.42			
L MANF 3/4/5 OX VLV	.42			
L OMS XFEED 3/4/5 FU VLV	.42			
3/4/5 OX VLV	.42			
OMS ISOL L FU VLV A	.42			
L OX VLV A	.42			
R FU VLV A	.42			
R OX VLV A	.42			
(Cont)				

(9) Normal individual load operation should not trip AC Utility Outlet cb if steady-state loads less than 3 amps/phase

AC1 LOAD REFERENCE TABLE (Cont)

CONTINGENCY EQUIPMENT **After cable installation, the following AC1 continuous equipment will be powered off but available for CONTINGENCY use only. Minimize loading to prevent exceeding 3 amps/phase**	AC CURRENT (amps/phase)	AC1 CURRENT AFTER CABLE INSTALLED		
		ΦA	ΦB	ΦC
(L4:J) HUM SEP A (9)	.28			
(L4:I) IMU FAN A (9)	.17			
(L4:F) H2O LOOP PUMP 1A (9)	1.01			
(L4:F) H2O LOOP PUMP 2 (9) (11)	1.03			
(L4:G) AV BAY 1 FAN A (9)	.69			
(L4:H) AV BAY 3 FAN B (upgraded) (9)	1.66			
(L4:H) AV BAY 3 FAN B (9)	.73			
(L4:M) FREON LOOP 1 PUMP A	1.68			
(L4:N) FREON LOOP 2 PUMP B (9)	1.68			
(L4:L) AC1 ΦA CABIN TEMP CNTLR 2	.15			
(L4:Q) AC1 ΦA LTG PNL L/CTR (12)	2.85			
ΦB LTG PNL L/OVHD (12)	1.94			
(L4:R) ΦA LTG R INST	.31			
ΦB LTG NUMERIC	.16			
(L4:Q) ΦC OS LTG INST	.13			
(MA73C:E) WCS FAN SEP 1	.86			
(MA73C:G) AIRLOCK TUNNEL FAN A (9)	.80			
(F1/MO52J) AC1 UTILITY POWER				
VACUUM CLEANER	1.44			
	TOTAL AMPS/PHASE			

(9) Normal individual load operation should not trip AC Utility Outlet cb if steady-state loads less than 3 amps/phase

(11) H2O LOOP 2 PUMP GPC position pwrd by AC1

(12) cb opened to prevent powering lights inadvertently

EPS SSR-200 (Cont)

19 | 20

AC2 LOAD REFERENCE TABLE

(5)

23 **CONTINUOUS EQUIPMENT** **After cable installation, the following AC2 equipment will be powered CONTINUOUSLY:**	AC CURRENT (amps/phase)	AC2 CURRENT AFTER CABLE INSTALLED		
		ΦA	ΦB	ΦC
(R1) FUEL CELL 2 PUMPS (13)	.81	.81	.81	.81
(L4:L) AC2 ΦB AV BAY 3 S/C	.02		.02	
(L4:O) ΦB HYD QTY 2	.02		.02	
(L4:L) ΦA CABIN TEMP CNTLR 1 (EL)	.04	.04		
(L4:O) ΦA BLR HYD CNTL SENSOR 1A	.07	.07		
ΦC BLR HYD CNTL SENSOR 2B	.06			.06
(L4:P) ΦA LG PROX SNSR 2	.07	.07		
(MA73C:F) ΦC OPS INST HYD ACTR (14)	.13			.13
(15)	SUBTOTAL AMPS/PHASE	.99	.85	1.00
INTERMITTENT EQUIPMENT **After cable installation, the following equipment will be available for INTERMITTENT operation:**	AC CURRENT (amps/phase)	AC2 CURRENT		
		ΦA	ΦB	ΦC
(L4:O) AC2 ΦA BLR HYD BYPASS VLV 1A	.22			
ΦC BLR HYD BYPASS VLV 2B	.21			
(L4:P) ΦB RAD CNTLR 1A (FREON LOOP 1 CNTLR A RAD BYP VLV MTR) (9) (16)	.17			
(L4:N) ΦA FREON FLOW PROP 1 (VLV) (9)	.30			
(MA73C:C) AC2 3Φ FWD 2 LH VENTS 1/2 MTR 2	OP – .28 CL – .15			
RH VENTS 1/2 MTR 2	OP – .28 CL – .15			
L,R ADP DPY MTR 2 (9)	.14			
-Y STR TRKR DR SYS 2 MTR CNTL (9)	.14			
-Z STR TRKR DR SYS 1 MTR CNTL (9)	.14			
AC2 3 Φ MID 1 LH VENT 5 MTR 2	OP – .65 CL – .33			
AC2 3 Φ MID 2 LH VENT 3 MTR 2	OP – .65 CL – .33			
PLBD PORT DOOR MTR 2	1.64			
STBD AFT BLKHD LAT MTR 2	.87			
C/L LATCH 13-16 MTR 2	.72			
KU BAND ANT DPLY MTR 2	.82			
STBD RAD LAT 1-6 MTR 2	.26			
PORT RMS DPLY MTR 2	.29			
PORT RMS FWD RETN LAT MTR 1	.25			

(5) Total current for each phase of AC bus must not exceed 3 amps continuous. Table should be used to calculate total phase current. CONTINUOUS EQUIPMENT will be powered continuously. INTERMITTENT EQUIPMENT will be available for intermittent ops. CONTINGENCY EQUIPMENT will be available for contingency use only

(9) Normal individual load operation should not trip AC Utility Outlet cb if steady-state loads less than 3 amps/phase

(13) If MNB lost, FC2 pumps will not be restarted

(14) Includes ELIVN PS2 and ME TVC SW VLV Xdcrs

(15) AC Utility Outlet cb can handle up to 6 amps for up to 5 sec. AC current for vent door ops peaks at ~5.1 amps/phase for 1 sec for dual mtr ops, peaks for 6 sec for single mtr ops. The cb should not trip if steady-state loads less than 3 amps/phase for dual mtr ops or less than 1 amp/phase for single mtr ops on all associated vent doors

(16) If MNB DA2 is not regained, this mtr (auto cntl) will not be operational

AC2 LOAD REFERENCE TABLE (Cont)

INTERMITTENT EQUIPMENT (Cont)	AC CURRENT (amps/phase)	AC2 CURRENT		
		ΦA	ΦB	ΦC
(MA73C:C) (Cont) AC2 3 Φ AFT 2 RH VENTS 8/9 MTR 2	OP – .73 CL – .35			
LH VENTS 8/9 MTR 2	OP – .67 CL – .38			
ET DOORS L LAT MTR 2	1.28			
C/L LAT 1 MTR 2	.41			
ET DOORS R DRIVE MTR 2	1.06			
R LAT MTR 2	1.28			
AC2 3 Φ MID 3				
PL RET LAT MTR 2	.41			
AC2 3 Φ MID 4				
RH VENT 6 MTR 2	OP – .59 CL – .29			
PLBD STBD DOOR MTR 2	1.64			
PORT FWD BLKHD LAT MTR 2	.87			
STBD FWD BLKHD LAT MTR 2	.87			
PORT RAD LAT 1-6 MTR 2	.26			
DPLY MTR 2	.26			
PORT RMS MID RETN LAT MTR 2	.25			
(MA73C:F) PAYLOAD				
AC2 ΦA RMS BACKUP	.07			
LEFT SEAT (9)	.99			
AC2 ΦA PORT RMS SHLD BRACE ACTR	.25			
(MA73C:G) OMS KIT VLV				
(MA73C:H) FWD RCS VLV (3 ea) (9)	.42			
(MA73C:I) AFT POD VLV GP 2 (9) AFT RCS ISOL L MANF 1 FU VLV	.42			
L MANF 1 OX VLV	.42			
R MANF 1 FU VLV	.42			
R MANF 1 OX VLV	.42			
L TK 3/4/5B FU VLV	.42			
L TK 3/5/5B OX VLV	.42			
R TK 3/4/5B FU VLV	.42			
R TK 3/4/5B OX VLV	.42			
OMS XFEED L FU VLV B	.42			
L OX VLV B	.42			
R FU VLV B	.42			
R OX VLV B	.42			
(Cont)				

(9) Normal individual load operation should not trip AC Utility Outlet cb if steady-state loads less than 3 amps/phase

AC2 LOAD REFERENCE TABLE (Cont)

CONTINGENCY EQUIPMENT **After cable installation, the following AC2 continuous equipment will be powered off but available for CONTINGENCY use only. Minimize loading to prevent exceeding 3 amps/phase**	AC CURRENT (amps/phase)	AC2 CURRENT AFTER CABLE INSTALLED		
		ΦA	ΦB	ΦC
(L4:F) H2O LOOP PUMP 1B (9)	1.02			
(L4:G) AV BAY 1 FAN B (9)	.69			
(L4:H) AV BAY 2 FAN A (9)	.70			
(L4:I) IMU FAN B (9)	.18			
(L4:J) HUM SEP B (9)	.28			
(L4:K) CABIN FAN B	1.67			
(L4:M) FREON LOOP 1 PUMP B (9)	1.68			
(L4:L) AC2 ΦA CABIN TEMP CNTLR 1	.15			
(L4:R) AC2 ΦB LTG INST OVHD	.26			
(L4:Q) AC2 ΦB OS LTG NUMERIC	.20			
(L4:Q) AC2 ΦA LTG PNL R OVHD (12)	1.34			
AC2 ΦB LTG PNL R (12)	1.51			
(L4:N) AC2 ΦB FREON SIG CONDR	.05			
(MA73C:E) WCS FAN SEP 2 (9)	.86			
(MA73C:G) AIRLOCK TUNNEL FAN B	.80			
	TOTAL AMPS/PHASE			

(9) Normal individual load operation should not trip AC Utility Outlet cb if steady-state loads less than 3 amps/phase

(12) cb opened to prevent powering lights inadvertently

21

AC3 LOAD REFERENCE TABLE

(5)

24 **CONTINUOUS EQUIPMENT** **After cable installation, the following AC3 equipment will be powered CONTINUOUSLY:**	AC CURRENT (amps/phase)	AC3 CURRENT AFTER CABLE INSTALLED		
		ΦA	ΦB	ΦC
(R1) FUEL CELL 3 PUMPS	.81	.81	.81	.81
(L4:J) AC3 ΦA HUM SEP S/C	.02	.02		
(L4:J) AC3 ΦB IMU FAN S/C	.02		.02	
(L4:L) AC3 ΦA H2O CNTLR 1 (S/C)	.06	.06		
AC3 ΦB AV BAY 1 S/C	.02		.02	
(L4:O) AC3 ΦB HYD QTY 3	.02		.02	
AC3 ΦA BLR HYD BYP SENSOR 2A	.07	.07		
AC3 ΦC BLR HYD BYP SENSOR 3B	.07			.07
(L4:P) AC3 ΦA LG PROX SNSR 1	.07	.07		
(15)	SUBTOTAL AMPS/PHASE	1.03	.87	.87
INTERMITTENT EQUIPMENT **After cable installation, the following AC3 equipment will be available for INTERMITTENT operation:**	AC CURRENT (amps/phase)	AC3 CURRENT		
		ΦA	ΦB	ΦC
(L4:L) AC3 ΦA H2O CNTLR 1 (BYP VLV) (9)	.14			
(L4:N) AC3 ΦA FREON FLOW PROP 2 (VLV) (9)	.30			
(L4:O) AC3 ΦA BLR HYD BYP VLV 2A	.21			
AC3 ΦC BLR HYD BYP VLV 3B	.21			
(L4:P) AC3 ΦB RAD CNTLR 2A (FREON LOOP 2 CNTLR A RAD BYP VLV MTR) (9)	.17			
(MA73C:C) AC3 3Φ FWD 3 FWD RCS ISOL TK 1/2 FU VLV (9)	.42			
TK 1/2 OX VLV (9)	.42			
MANF 3 FU VLV (9)	.42			
OX VLV (9)	.42			
4 FU VLV (9)	.42			
OX VLV (9)	.42			
LH VENTS 1/2 MTR 1	OP – .29 CL – .21			
R ADP MTR 1, 18	.14			
-Z STAR TRKR SYS 2 MTR CNTRL (9)	.14			
AC3 3Φ MID 2 LH VENT 3 MTR 1	OP – .59 CL – .29			
LH VENT 6 MTR 2	OP – .59 CL – .29			
PLBD PORT AFT BLKHD LAT MTR 2	.87			
(Cont)				

(5) Total current for each phase of AC bus must not exceed 3 amps continuous. Table should be used to calculate total phase current. CONTINUOUS EQUIPMENT will be powered continuously. INTERMITTENT EQUIPMENT will be available for intermittent ops. CONTINGENCY EQUIPMENT will be available for contingency use only

(9) Normal individual load operation should not trip AC Utility Outlet cb if steady-state loads less than 3 amps/phase

(15) AC Utility Outlet cb can handle up to 6 amps for up to 5 sec. AC current for vent door ops peaks at ~4.2 amps/phase for 1 sec for dual mtr ops, peaks for 6 sec for single mtr ops. The cb should not trip if steady-state loads less than 3 amps/phase for dual mtr ops or less than 1.3 amp/phase for single mtr ops on all associated vent doors

AC3 LOAD REFERENCE TABLE (Cont)

INTERMITTENT EQUIPMENT (Cont)	AC CURRENT (amps/phase)	AC3 CURRENT AFTER CABLE INSTALLED		
		ΦA	ΦB	ΦC
(MA73C:C) (Cont) AC3 3Φ PLBD C/L 1-4 LAT MTR 2	.72			
C/L 5-8 LAT MTR 2	.72			
KU BAND ANT DPLY MTR 1	.82			
STBD RAD DPY/STD MTR 2	.26			
LAT 7-12 MTR 2	.26			
AC3 3Φ MID 2 PORT RMS AFT SYS RETN LCH MTR 1	.25			
(MA73C:D) AC3 3Φ AFT 3 RH VENTS 8/9 MTR 1	OP – .68 CL – .34			
ET DOORS L DRIVE MTR 2	1.06			
C/L LAT 2 MTR 2	.41			
R DRIVE MTR 1	1.06			
R LAT MTR 1	1.28			
AC3 3Φ MID 4 RH VENT 3 MTR 2	OP – .65 CL – .32			
5 MTR 2	OP – .65 CL – .32			
PLBD PORT DOOR MTR 1	1.64			
STBD AFT BLKHD LAT MTR 1	.87			
C/L 9-12 LAT MTR 2	.72			
C/L 13-16 LAT MTR 1	.72			
KU BAND ANT DPY MTR 1	.82			
PORT RAD DPY MTR 2	.26			
7-12 LAT MTR 2	.26			
PORT RMS DPY MTR 1	.29			
FWD RETN LAT MTR 2	.25			
(MA73C:E) PAYLOAD				
(MA73C:G) GALLEY FAN (9)	.37			
RIGHT SEAT (9)	.99			
(MA73C:H) FWD RCS VLV (3 ea) (9)	.42			
(MA73C:I) AFT POD VLV GP 3 (9) AFT RCS ISOL L TK 1/2 FU VLV	.42			
L TK 1/2 OX VLV	.42			
R TK 1/2 FU VLV	.42			
R TK 1/2 OX VLV	.42			
L MANF 3 FU VLV	.42			
L MANF 3 OX VLV	.42			
(Cont)				

(9) Normal individual load operation should not trip AC Utility Outlet cb if steady-state loads less than 3 amps/phase

AC3 LOAD REFERENCE TABLE (Cont)

INTERMITTENT EQUIPMENT (Cont)	AC CURRENT (amps/phase)	AC3 CURRENT AFTER CABLE INSTALLED		
		ΦA	ΦB	ΦC
(MA73C:I) (Cont) AFT RCS ISOL R MANF 3 FU VLV	.42			
R MANF 3 OX VLV	.42			
L MANF 4 FU VLV	.42			
L MANF 4 OX VLV	.42			
(MA73C:I) (9) AFT POD VLV GP 3 R MANF 4 FU VLV	.42			
R MANF 4 OX VLV	.42			
AFT RCS XFEED L MANF 1/2 FU VLV	.42			
L MANF 1/2 OX VLV	.42			
R MANF 1/2 FU VLV	.42			
R MANF 1/2 OX VLV	.42			
OMS XFEED R FU VLV A	.42			
R OX VLV A	.42			
OMS ISOL L FU VLV B	.42			
L OX VLV B	.42			
R FU VLV B	.42			
R OX VLV B	.42			
CONTINGENCY EQUIPMENT **After cable installation, the following AC3 continuous equipment will be switched off but available for CONTINGENCY use only. Minimize loading to prevent exceeding 3 amps/phase**				
(L4:F) H2O LOOP PUMP 2 (9) (17)	1.03			
(L4:G) AV BAY 3 FAN A (upgraded) (9)	1.66			
(L4:G) AV BAY 3 FAN A (9)	.75			
(L4:H) AV BAY 2 FAN B (9)	.75			
(L4:I) IMU FAN C (9)	.18			
(L4:K) CABIN FAN A	1.66			
(L4:M) FREON LOOP 2 PUMP A (9)	1.68			
(L4:R) AC3 ΦB LTG INST L/CTR	.31			
(L4:N) AC3 ΦB FREON SIG CONDR	.05			
(L4:Q) AC3 ΦA LIGHTING COAS	.11			
(R10) AC3 ΦB MS LTG PNL	.31			
AC3 ΦC LIGHTING PANEL OS (12)	2.66			
(A15,MO13Q) AC3 UTILITY POWER				
VACUUM CLEANER	1.44			
	TOTAL AMPS/PHASE			

(9) Normal individual load operation should not trip AC Utility Outlet cb if steady-state loads less than 3 amps/phase

(12) cb opened to prevent powering lights inadvertently

(17) H2O LOOP 2 PUMP Man ON pwrd by AC3

EPS SSR-201
CRYO HTR MANUAL OPS

(1)

1	Config limits

Config SM ALERT limits for affected tank which requires manual htr ops via SM SPEC 60. Do not use B/U C/W limits unless necessary (e.g., Tank P XDCR failure). Do not alter hardware C/W limits. Use appropriate ID listed below to modify SM ALERT, limit set #1

TANK #	SM ALERT (TANK P)		B/U C/W (CNTLR P)	
	O2	H2	O2	H2
1	0451100	0452100	0451110	0452110
2	0451200	0452200	0451210	0452210
3	0451300	0452300	0451310	0452310
4	0451400	0452400	0451410	0452410
5	0451500	0452500	0451510	0452510

(2) (3)

2	Define alert limits

Define upper and lower limits to be used for tank which requires manual heater operations

CRYOGENIC	LOWER LIMIT	UPPER LIMIT
O2	780	920
H2	200	260

3

(1) SM ALERT LIMIT SET 1 is used when both heater switches are in OFF or ON. Limit set 2 is used only when one or both heater switches are in AUTO

(2) MCC may recommend new lower limit based on TK quantity. Limit supplied is OK for all TK QTYs

(3) This procedure assumes that both manifold vlvs are open

EPS SSR-201 (Cont)

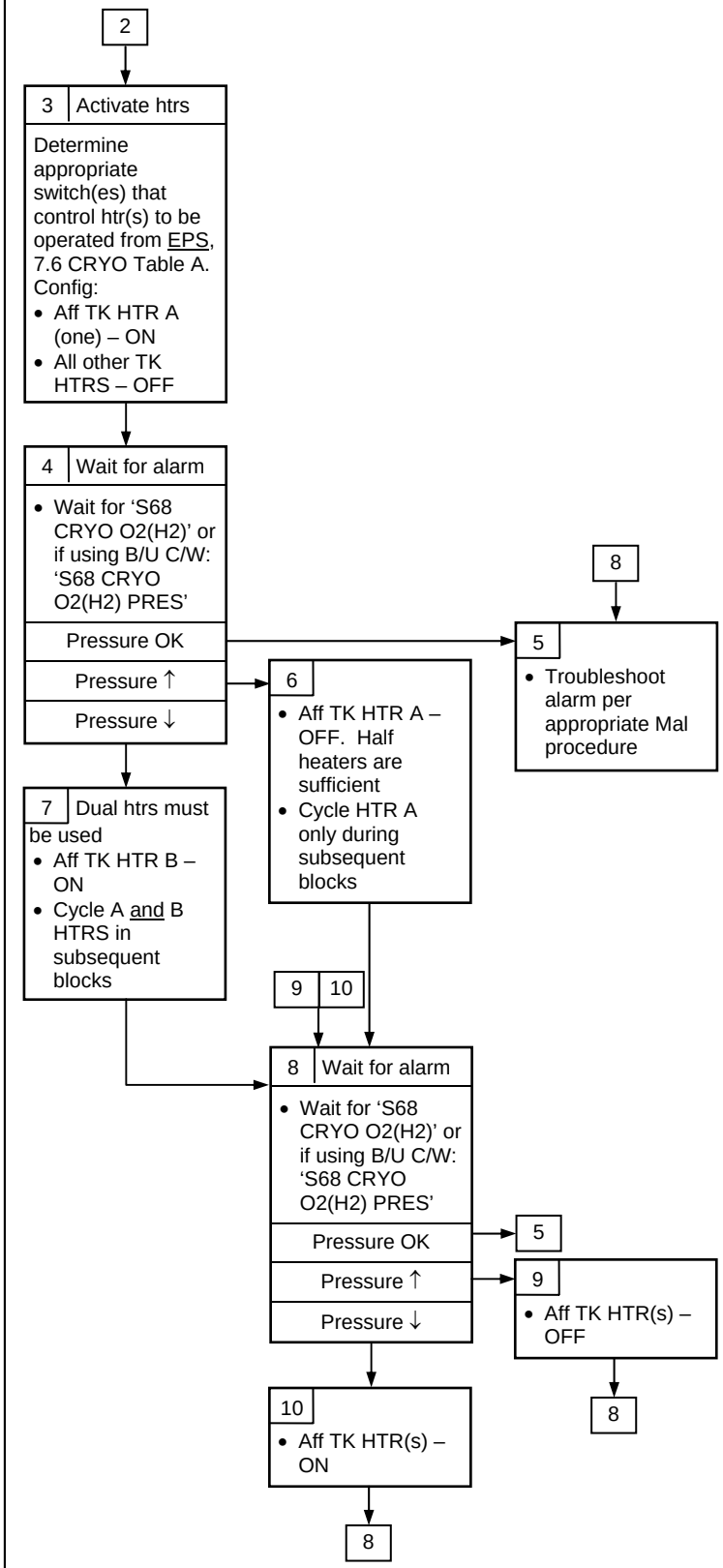

EPS SSR-202
PREFLIGHT TEST BUS USE

NOTE

Powering Preflight Test Bus enables single string circuits that use launch MDMs and data bus normally used to operate many orbiter systems during ground turnaround. Due to design, a single driver failure could cause equipment to be inadvertently commanded whenever Preflight Test Bus is powered. See Table 1 for reference to possible commands available through Preflight MDM/data bus. For any problems experienced that could be attributed to Preflight Bus, remove pwr to Preflight Bus, recover lost systems, and shut down affected FC within 9 min if reqd

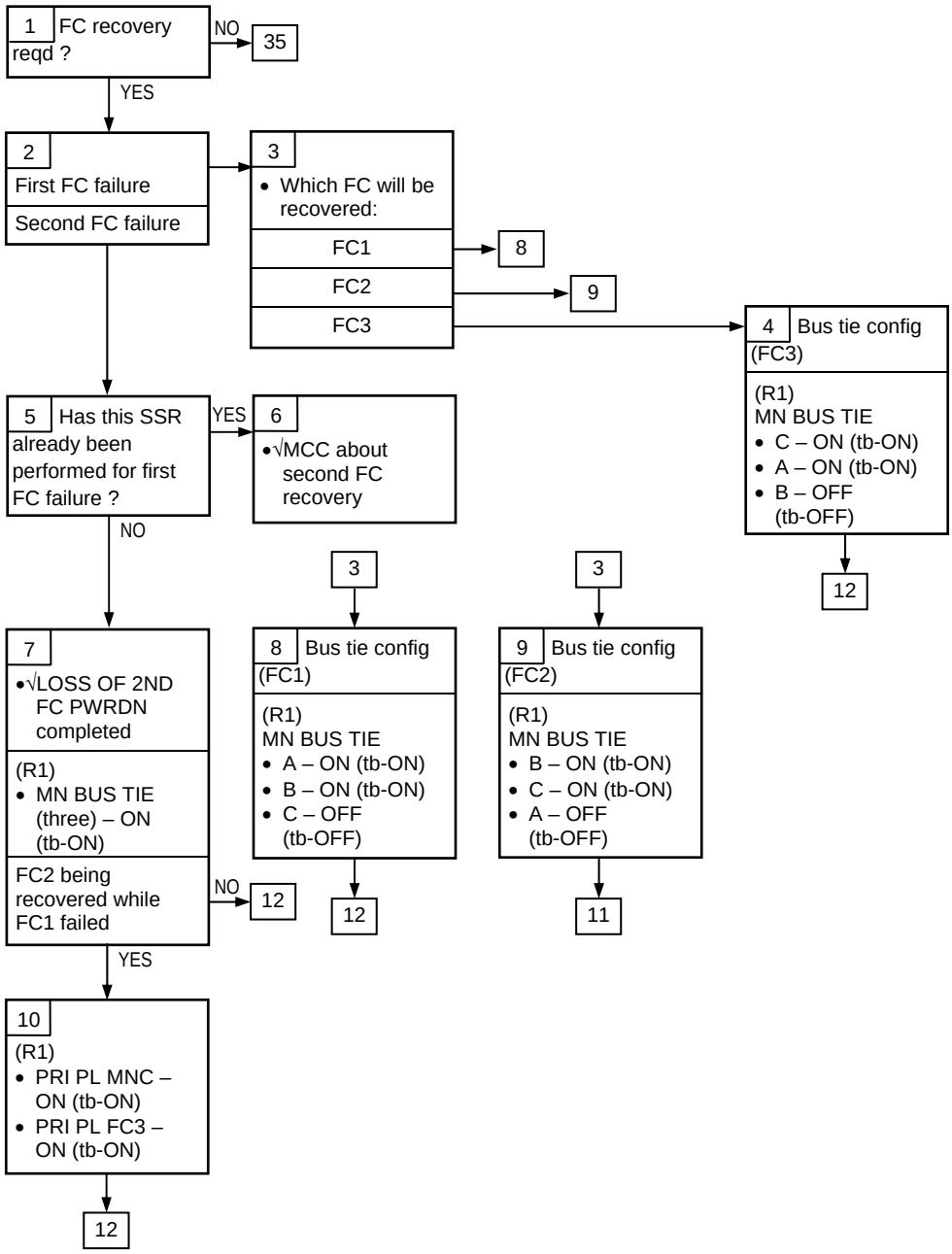

EPS SSR-202 (Cont)

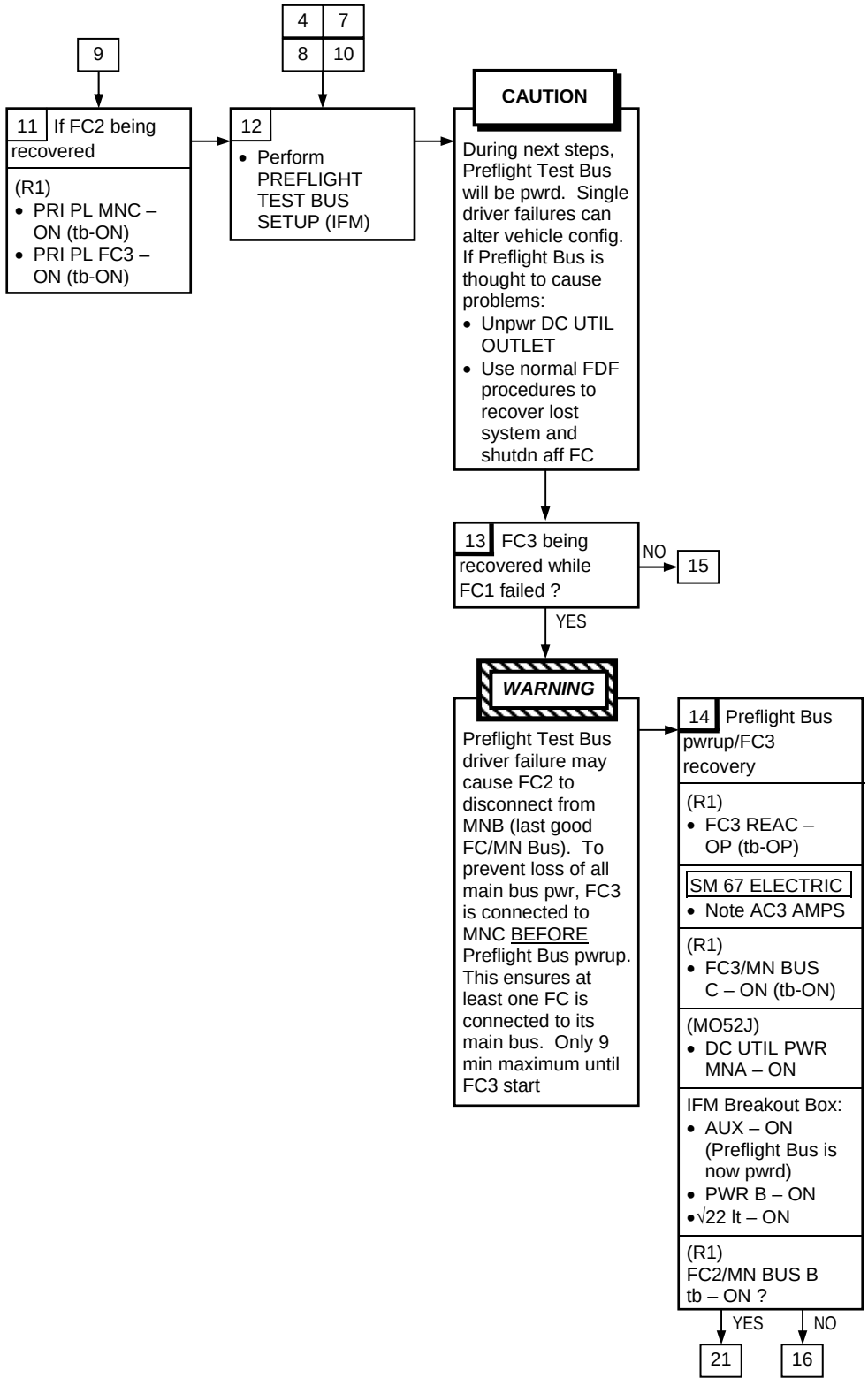

EPS SSR-202 (Cont)

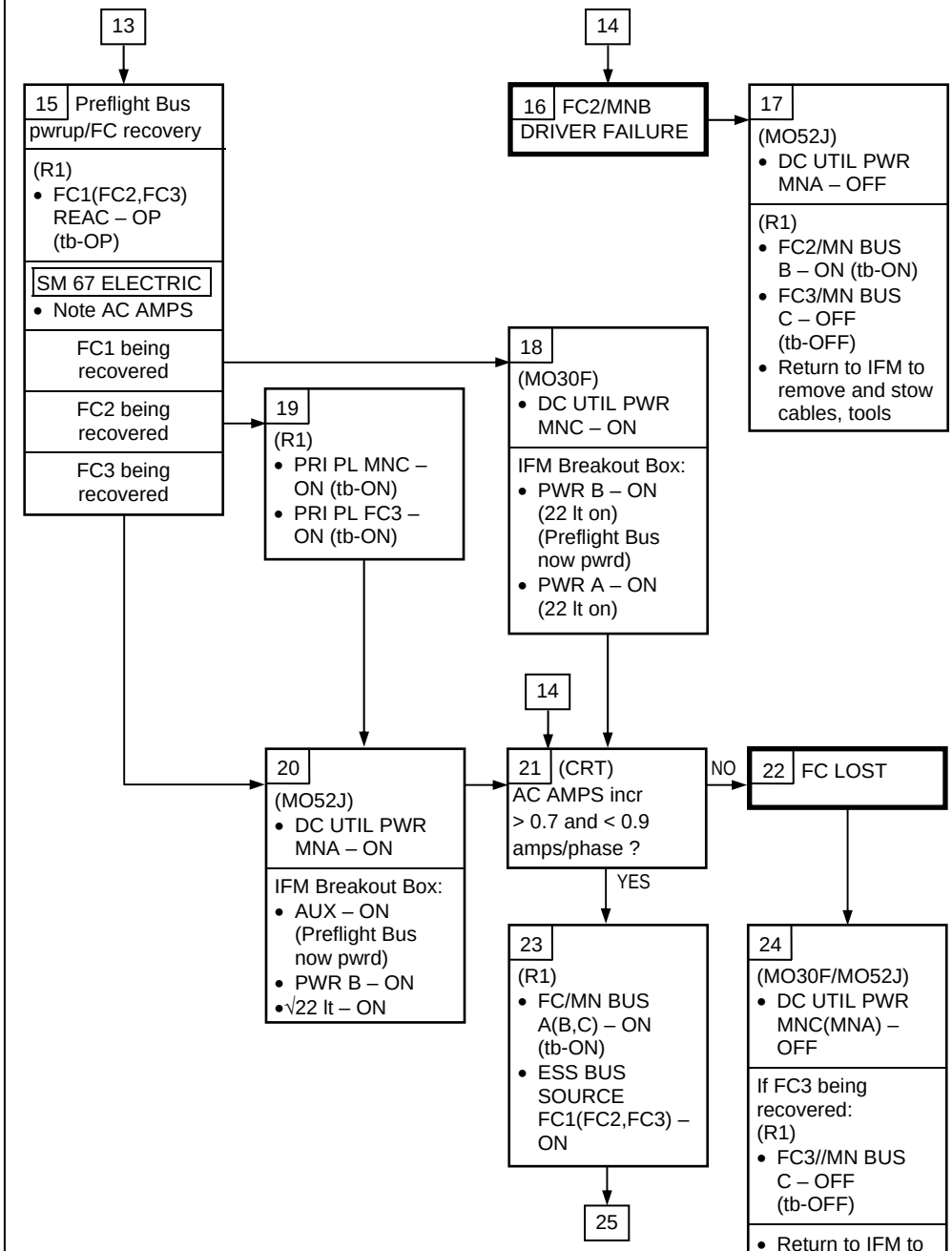

EPS SSR-202 (Cont)

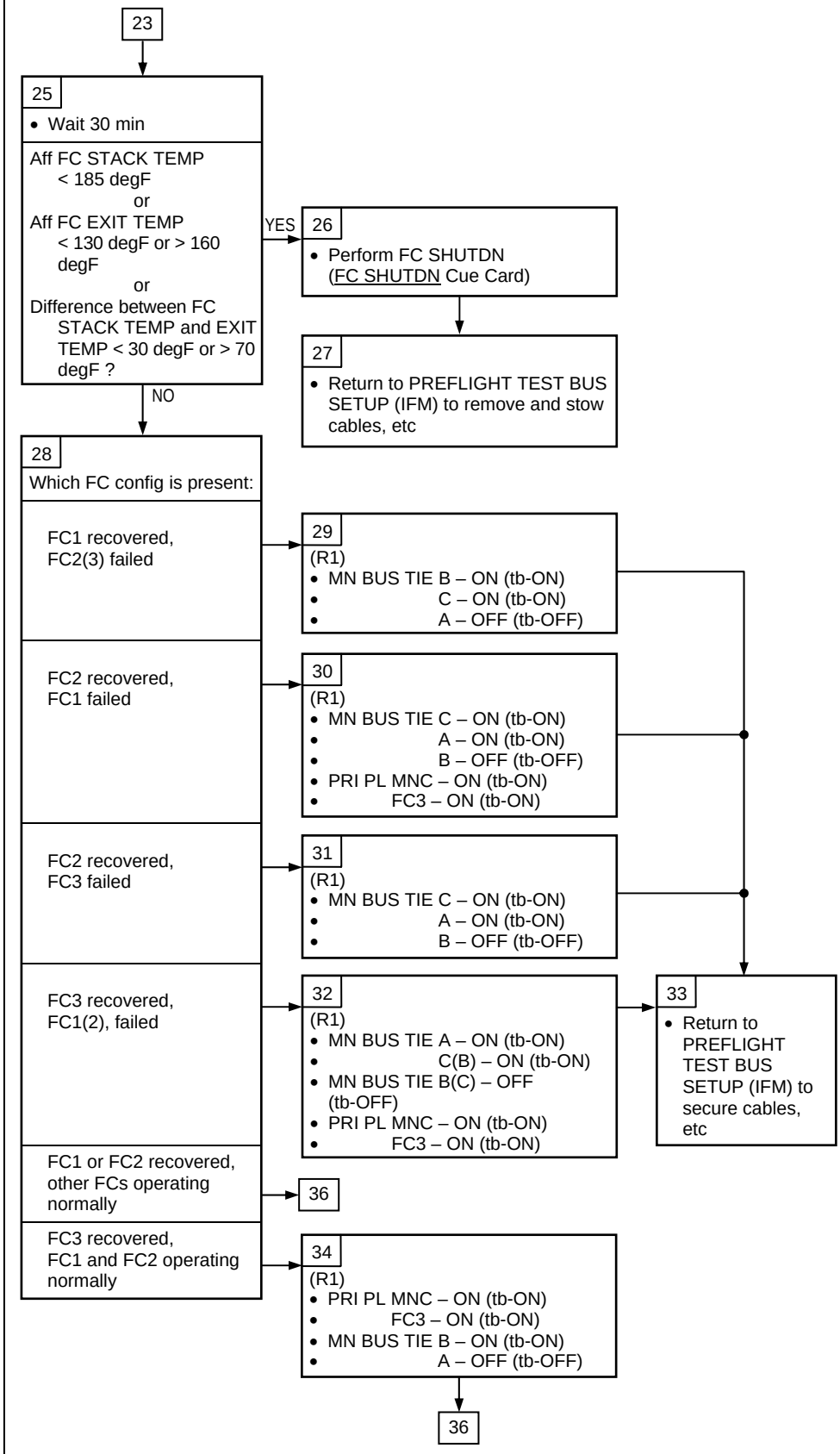

EPS SSR-202 (Cont)

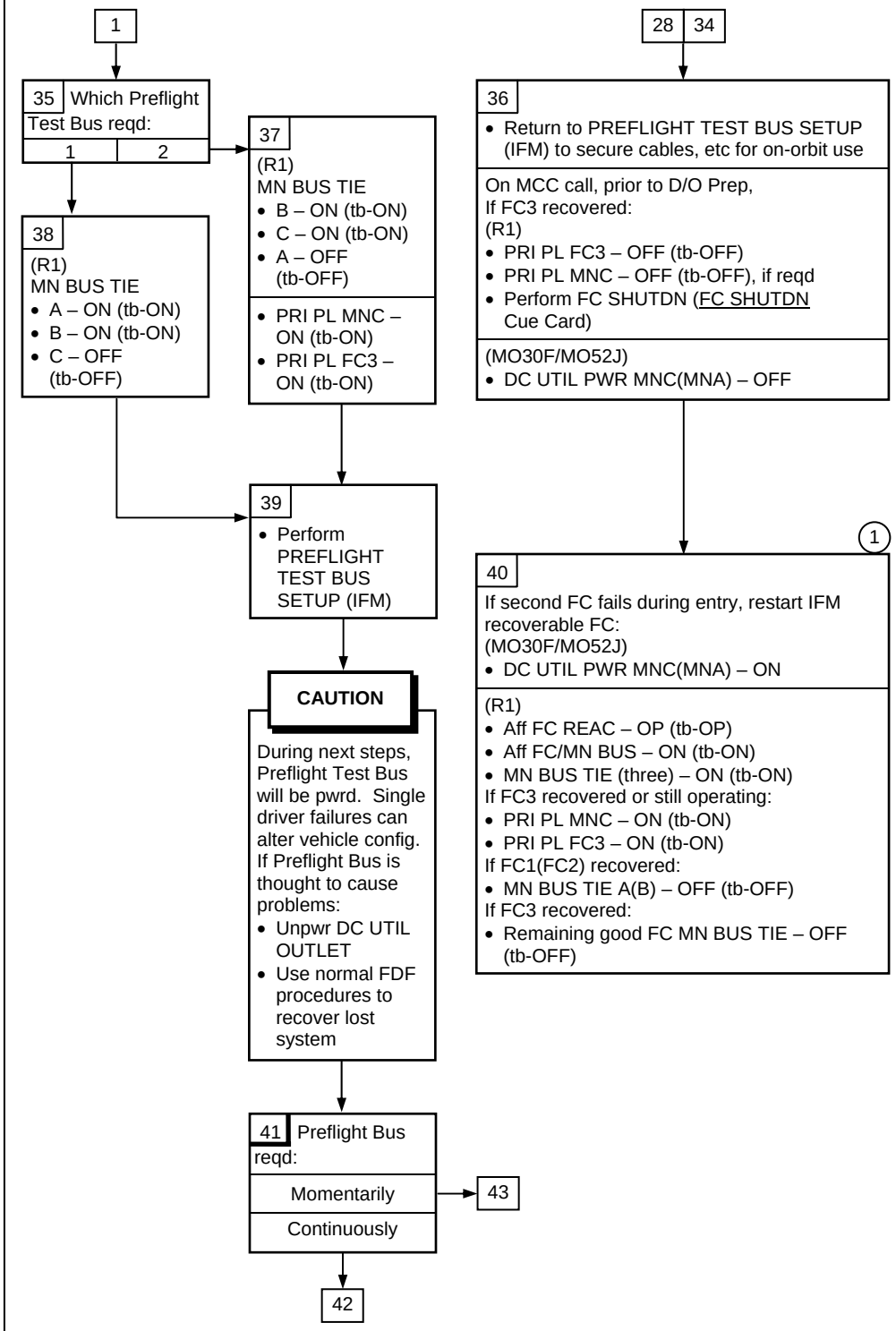

(1) Crewmember must be able to reach DC UTIL PWR switch while secured in seat

EPS SSR-202 (Cont)

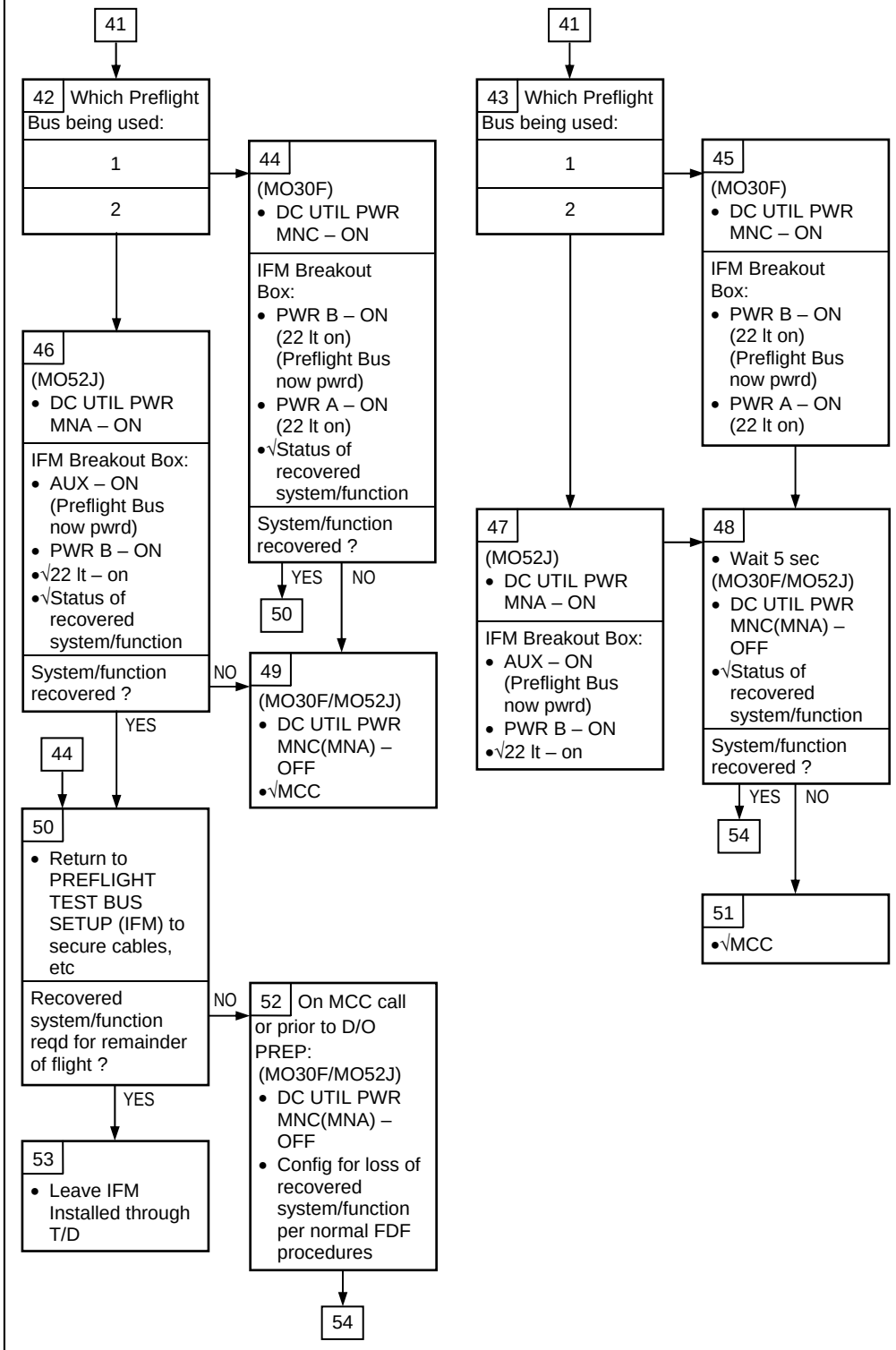

EPS SSR-202 (Cont)

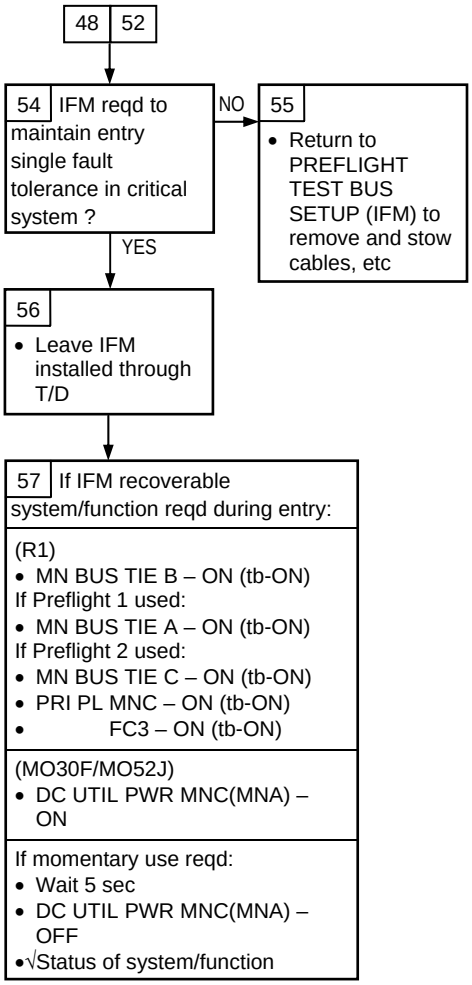

TABLE 1
POSSIBLE PREFLIGHT TEST AND DATA BUSES COMMANDS

NOTE

This table identifies the major Preflight Test Bus single-driver failures that impact critical orbiter systems. After the Preflight Test Bus has been powered, if a driver failure is suspected, the Preflight Test Bus must be unpowered before the affected system can be recovered by standard FDF procedures

Preflight Test Bus 1	Preflight Test Bus 2
FC1 PUMP POWER	FC2(3) PUMP POWER
AV BAY 3 FIRE SUPP INH	AV BAY 1(2) FIRE SUPP INH
FC1 TO MNA ON/OFF	FC2(3) TO MNB(C) ON/OFF
MNA BUS TIE ON/OFF	MNB(C) BUS TIE ON/OFF
AC1 INV PWR ON/OFF	AC2(3) INV PWR ON/OFF
AC1 INV TO BUS ON/OFF	AC2(3) INV TO BUS ON/OFF
APU 1 FU VLV 1 OP (NC)	APU 2(3) FU VLV 1 OP (NC)
APU 1 FU VLV 2 CL (NO)	APU 2(3) FU VLV 2 CL (NO)
FCL PUMP 1A ON	FCL PUMP 2A ON
SMOKE DETN H/W ALERT INH	CAB FAN A(B) ON
	IMU FAN A(B,C) ON

EPS SSR-203 APCU RECOVERY

APCU TRIP Conditions:

APCU OUT UV (Out Under Volt) If Output Volts < 115 volts

APCU OUT OV (Out Over Volt) If Output Volts > 130.5 volts

APCU OUT OC (Out Over Current) If Output Amps > 14.8 amps

APCU IN UV (In Under Volt) If Input Volts < 23 volts

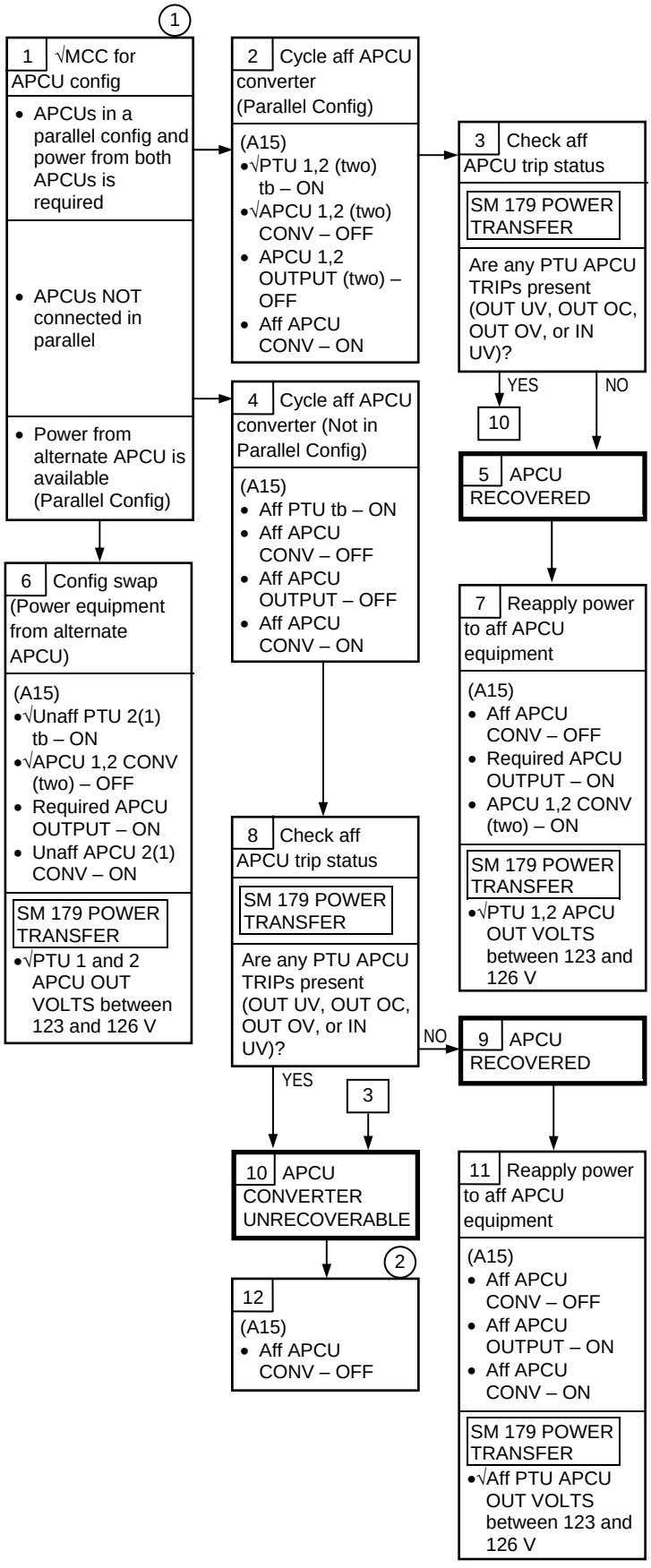

(1) If APCUs are connected in parallel and the output APCU power requirement is < 1800 watts, then alternate APCU can be used to power the equipment

(2) Loss of power to equipment powered from APCU

EPS SSR-204 OPCU FAULT ISOLATOR TRIP RECOVERY

Dual PTU Config:
(A15)
cb CNTL PWR PTU 1,2 (two) – cl
PTU/MAIN BUS A,B (two) – ON
OPCU 1,2 CONV (two) – ON

Single PTU Config:
(A15)
cb CNTL PWR PTU 1(2) – cl
PTU/MAIN BUS A(B) – ON
OPCU 1(2) CONV – ON

NOTE
This procedure can be used to attempt a recovery of an inadvertant Fault Isolator (FI) trip. If an FI trips the OPCU converter TLM will be OSL for the affected channel, due to the isolation of input power; ISS RPC will still indicate ON

(1)

1 Isolate OPCU

(A15)
- OPCU 1(2) CONV – OFF
- √cb CNTL PWR PTU 1(2) – cl
- PTU/MAIN BUS A(B) – OFF (tb-OFF)

2 Stand by while MCC commands affected ISS RPC(s) OFF (10 sec) then ON

3 Activate OPCU converter

On MCC GO:
(A15)
- OPCU 1(2) CONV – ON

4 √OPCU Volts

SM 179 POWER TRANSFER

Aff PTU OPCU A(B) OUT VOLTS > 30?

YES → **5 FALSE TRIP, OPCU CONVERTER RECOVERED**

(2)(3)

6 Reconnect PTU to MN Bus

(A15)
- Aff PTU/MAIN BUS A(B) – ON (tb-ON)

NO (4)

7 OPCU CONVERTER UNRECOVERABLE

8 Is other OPCU converter in aff PTU activated?

YES → (2) **9 Reconnect PTU to MN Bus**

(A15)
- Aff PTU/MAIN BUS A(B) – ON (tb-ON)

NO (2)

10 Deactivate OPCU

(A15)
- OPCU 1(2) CONV – OFF

If required for APCU ops, reconnect PTU to MN Bus:
- Aff PTU/MAIN BUS A(B) – ON (tb-ON)

(1) Associated APCU should be deactivated before procedure is started

(2) If required, APCU can be reactivated

(3) Voltage will need to be adjusted on aff OPCU converter to desired setpoint

(4) ISS will command off affected RPC. Other OPCU converter in affected PTU may be available

GNC FRP

GNC	FRP-1	IMU REFERENCE RECOVERY AFTER GNC GPCs IPL'D	8-4
	FRP-2	RECOVERY	8-6
	FRP-3	IMU RECOVERY WITH AT LEAST ONE IMU AS GOOD REFERENCE	8-7

GNC SSR

GNC	SSR-1	ACTIVATE IMU(s)	8-10
	SSR-2	MATRIX (TORQUE) ALIGN USING HUD STAR DATA	8-10
	SSR-3	ALIGN USING STR TRKR STAR DATA	8-12
	SSR-4	IMU DATA	8-12
	SSR-5	RESERVED	not used
	SSR-6	RESERVED	not used
	SSR-7	RESERVED	not used
	SSR-8	POSITION OMS THROUGH CG	8-13
	SSR-9	RM DESELECTION OF FAILED OPEN THC CONTACT	8-14

The following Fault Msgs have no corresponding MAL procedures in this book:

- AERO DRIVE
- DAP DNMODE
- DISPLAY SW A(L,R)
- L(R) OMS GMBL
- NAV EDIT
- SEL AUTO
- SENSE SW
- IMU BITE/T
- RM FAIL IMU
- RM DLMA IMU
- RHC L(R,A)
- SBTC/THC L(R,A)

This Page Intentionally Blank

This Page Intentionally Blank

GNC FRP-1
IMU REFERENCE RECOVERY AFTER GNC GPCs IPL'D

NOTE

Preferable to accomplish this procedure in GNC OPS 2; however, procedure is also valid for MM301. If all IMUs have been caged, perform steps 1-7. Step 8 of the procedure assumes recovery of "operational" IMUs only. Operational IMUs are IMUs in OPER and not previously caged

O6 1. Configure DAP
√DAP: INRTL
√DAP ROT: DISC/DISC/DISC

2. Ensure pwr ON to both STAR TRKRs and doors open
√S TRK PWR (two) – ON
√DR POS tb (two) – OP

NOTE

'IMU BITE/T' may be annunciated until READ/WRITE is performed to restore IMU gyro delta bias terms. Previous IMU Bias and Scale Factor READ/WRITEs of uplinks will have to be performed again

3. Mass Memory Read of IMU calibration data (gyro and accel biases, scale factors, etc.) computed in preflight cal

GNC 21 IMU ALIGN

Select all IMUs for MASS MEMORY READ
IMU 1,2,3 – ITEM 10,11,12 EXEC (*****)
MM READ – ITEM 19 EXEC (*****)
√MM READ – ITEM 19 (no *****)

O6 4. Configure DAP
√DAP: INRTL
DAP ROT: PULSE/PULSE/PULSE

5. Deselect IMU(s) leaving one IMU selected

NOTE

RM may fail IMU(s) during deselection process

a. GNC 21 IMU ALIGN

IMU DES 1(2,3) – ITEM 7(8,9) (*****)

b. Verify one operational IMU remains selected (no *****)

6. Configure DAP
√DAP: INRTL
DAP ROT: DISC/DISC/DISC

7. If extended loss of comm (ZOE not included) or no uplink CMD capability:
a. Perform Matrix Align of IMUs 1,2,3 in MATRIX (TORQUE) ALIGN USING HUD STAR DATA . . . . . GNC SSR-2

b. Reselect all deselected IMUs

GNC 21 IMU ALIGN

IMU DES – ITEM 7(8,9) EXEC (no *****)

NOTE

Once comm reestablished, verify with MCC uplink of REFSMMATs complete and then proceed to IMU ALIGN – S TRK (ORB OPS, GNC)

8. If comm and uplink CMD capability exists:
a. Confirm with MCC uplink of REFSMMATs has been performed. Do not proceed without confirmation

CAUTION
Each IMU being recovered must be individually matrix aligned to itself in order to incorporate the uplinked REFSMMATs

b. Recover IMU attitude reference of a deselected operational IMU, utilizing Matrix Alignment, aligning the IMU to itself

GNC 21 IMU ALIGN

Utilize as reference one of the IMUs currently deselected
REF IMU – ITEM 14 + __ EXEC
TYPE – ITEM 15 EXEC (MATRIX)

Align Reference IMU to itself
ALIGN IMU 1(2,3) – ITEM 10(11,12) EXEC (*****)
EXEC – ITEM 16 EXEC (*****)

√MCC to repeat step 8b with other deselected operational IMU

c. Configure DAP
√DAP: INRTL
DAP ROT: PULSE/PULSE/PULSE

d. Deselect currently selected IMU (no selected IMUs)

GNC 21 IMU ALIGN

IMU DES – ITEM 7(8,9) EXEC (*****)

e. Reselect IMU(s) aligned in step 8b

GNC 21 IMU ALIGN

IMU DES – ITEM 7(8,9) EXEC (no *****)

f. √DAP: INRTL
DAP ROT: DISC/DISC/DISC

g. √MCC to repeat step 8b with remaining IMU

h. When Matrix Alignment(s) Using IMU Data complete, reselect all recovered IMUs:

GNC 21 IMU ALIGN

IMU DES – ITEM 7(8,9) EXEC (no *****)

i. DAP: as reqd

j. Go to IMU ALIGN – S TRK (ORB OPS, GNC)

GNC FRP-2
IMU REFERENCE RECOVERY

NOTE

If GNC GPCs IPL'd, use GNC FRP-1 for Reference Recovery. Preferable to accomplish this procedure in OPS 2; however, it is also valid for MM301

O6 1. Apply pwr to both STAR TRKRs
√STAR TRKR PWR -Y,-Z – ON

O14:A, O15:A, O16:A 2. Ensure pwr applied to all IMUs
IMU 1,2,3 – ON

If not, ACTIVATE IMU(s). . . . . GNC SSR-1

3. Ensure all IMUs in OPERATE mode

GNC 21 IMU ALIGN

√IMUs: OPER – ITEM 4,5,6 EXEC (*)

NOTE

If ITEMS 4,5, or 6 executed, wait for asterisks to appear (~90 sec)

4. Enable serial data link
GNC I/O RESET

5. Select one IMU for attitude reference

GNC 21 IMU ALIGN

√IMU 1,2, or 3: DES – ITEM 7,8, or 9 EXEC (no *)
Deselect remaining two IMUs
√IMUs: DES – ITEM 7(8,9) EXEC (*)

6. Perform MATRIX ALIGN IMUs 1,2,3 USING HUD STAR DATA. . . . . GNC SSR-2

7. Reselect all deselected IMUs

GNC 21 IMU ALIGN

√IMUs: DES – ITEM 7(8,9) EXEC (no *)

8. Reestablish skew between IMUs with IMU TO IMU ALIGN
Perform IMU/IMU ALIGNMENT – IMUs 1,2,3 using best IMU as reference (ORB OPS, GNC)

9. Go to IMU ALIGN – S TRK (ORB OPS, GNC)

GNC FRP-3
IMU RECOVERY WITH AT LEAST ONE IMU AS GOOD REFERENCE

NOTE
Procedure must be accomplished in GNC OPS 2 or GNC OPS 3

1. Deselect IMUs being recovered

   GNC 21 IMU ALIGN

   √IMUs: DES – ITEM 7(8,9) EXEC (*****)

O14:A, O15:A, O16:A

2. Ensure pwr applied to all IMUs
   If not, ACTIVATE IMU(s) . . . . . GNC SSR-1

NOTE
If ITEMS 4, 5, or 6 executed, wait for asterisks to appear (~90 sec)

3. Ensure all IMUs in OPERATE mode

   GNC 21 IMU ALIGN

   √IMUs: OPER – ITEM 4,5,6 EXEC (*****)

NOTE
Possible erroneous IMU BITE/T 1(2,3) msg after GNC I/O RESET. Ignore msg unless MCC advises otherwise, or if no comm

4. Enable serial data link
   GNC I/O RESET

NOTE
Both nonreference IMUs should be aligned to preclude possibility of IMU RM FAIL (RM threshold reset following any align)

5. Reestablish skew between IMUs. Choose IMU with good reference and align other two IMUs with IMU to IMU ALIGN. Use good IMU as reference for align – IMU to IMU ALIGNMENT (ORB OPS, GNC)

6. Reselect IMUs previously deselected

   GNC 21 IMU ALIGN

   DES – ITEM 7(8,9) EXEC (no *****)

This Page Intentionally Blank

This Page Intentionally Blank

GNC SSR-1
ACTIVATE IMU(s)

O6 √MDM FF 1(2,3) – ON
O14:A, O15:A, O16:A IMU 1(2,3) – ON
L1 √IMU FAN A(B,C) – ON (if avail)

GNC 21 IMU ALIGN

NOTE
IMU 1(2,3) TEMP – LO indication may be displayed. Proceed

CRT √IMU 1(2,3): DES – ITEM 7(8,9) EXEC (*)
OPER – ITEM 4(5,6) EXEC (*)

NOTE
If ITEMS 4,5, or 6 executed, wait for asterisks to appear (~90 sec)

GNC I/O RESET

GNC SSR-2
MATRIX (TORQUE) ALIGN USING HUD STAR DATA

CAUTION
If RMS/payload unberthed, either enable Aft PRCS only or berth payload before proceeding

NOTE
In OPS 201, if Verniers not available, use FREE mode

Remove L(R) HUD Cover
F3 L(R) HUD PWR – ON
F6U(F8U) MODE – TEST
Wait ~15 sec for final symbology of test mode
L(R) HUD BRT – MAN NIGHT
MAN BRT – as reqd

O14:E, O15:E, O16:E √cb DDU L(R) (two) – cl
F7(F8) FLT CNTLR PWR – ON

If OPS 2:
Change DAP A,B to A1,B5
DAP: INRTL/VERN(FREE/PRI)
If OPS 3:

GNC 23 RCS

CRT RCS FWD – ITEM 1 EXEC (*)
MANF VLV OVRD 1 – ITEM 40 EXEC (CL)
2 – ITEM 41 EXEC (CL)
3 – ITEM 42 EXEC (CL)
4 – ITEM 43 EXEC (CL)
5 – ITEM 44 EXEC (CL)

NOTE
Position ADI ATT sw on pnl F6(F8) to REF and depress ATT REF pb prior to enabling COAS SIGHT mode

GNC 22 S TRK/COAS CNTL

√S TABLE CLR – ITEM 20 EXEC
COAS REQD ID – ITEM 21 +__ __ __ EXEC

POS +X – ITEM 26 EXEC
SIGHT mode – ITEM 22 EXEC (*)
DAP: as reqd for precise manual mnvr
Mnvr to center star in HUD boresight ('P' in 'COMPLETE'):

F6(F8) ATT REF pb – push
(Repeat mark if desired)
CRT COAS ACCEPT – ITEM 23 EXEC
√S TABLE TRK ID 2: (reqd ID)

> CAUTION
> Do not deselect COAS SIGHT mode between sightings

DAP: as reqd for large manual mnvr
Mnvr to second HUD star att

NOTE
Second star should be > 35° and < 145° from the first

CRT COAS REQD ID – ITEM 21 +__ __ __ EXEC
DAP: as reqd for precise manual mnvr
Mnvr to center star in HUD boresight:
F6(F8) ATT REF pb – push
(Repeat mark if desired)
CRT COAS ACCEPT – ITEM 23 EXEC
√S TABLE TRK ID 1: (reqd ID)
ANG DIF 1 ≥ 35 deg, ≤ 145 deg
ERR 1 ≤ .2
√SEL – ITEM 17,18 (*)
COAS: DES – ITEM 25 EXEC (*)
F7(F8) FLT CNTLR PWR – OFF
O14:E, O15:E, O16:E cb DDU L(R) (two) – as reqd

GNC 21 IMU ALIGN

√IMU 1(2,3) STAT – (blank)
ALIGN IMU 1(2,3) – ITEM 10(11,12) EXEC (*)
If Matrix Align
√REF STAR, ITEM 13 – (*)
TYPE, ITEM 15 EXEC (MATRIX)
DAP: INRTL
DAP ROT: PULSE/PULSE/PULSE
CRT EXEC – ITEM 16 EXEC (*), Rcd MET __ __ : __ __ : __ __
√EXEC – ITEM 16 (no *)
DAP: as reqd
If Torque Align
√REF STAR, ITEM 13 – (*)
√TYPE, ITEM 15 – TORQUE
√ANG 1,2,3 ΔX,ΔY,ΔZ: < = .80

Rcd ANG	1	2	3
ΔX	( ) __ . __ __	( ) __ . __ __	( ) __ . __ __
ΔY	( ) __ . __ __	( ) __ . __ __	( ) __ . __ __
ΔZ	( ) __ . __ __	( ) __ . __ __	( ) __ . __ __

> CAUTION
> If ANG ΔX,ΔY,ΔZ > .80 for two or more IMUs:
> DO NOT TORQUE PLATFORMS
> EXCEPT UNDER MCC INSTRUCTIONS

CRT EXEC – ITEM 16 EXEC (*), Rcd MET __ __ : __ __ : __ __
√EXEC – ITEM 16 (no *)

GNC SSR-2 (Cont)

F6U(F8U) HUD MODE – NORM
F3 PWR – OFF
Install L(R) HUD Cover
If OPS 3:

GNC 23 RCS

RCS FWD – ITEM 1 EXEC (*)
MANF VLVS OVRD 1 – ITEM 40 EXEC (OP)
2 – ITEM 41 EXEC (OP)
3 – ITEM 42 EXEC (OP)
4 – ITEM 43 EXEC (OP)
5 – ITEM 44 EXEC (OP)
DAP: as reqd

GNC SSR-3
MATRIX ALIGN USING STR TRKR STAR DATA

NOTE

Procedure assumes S TRKs on at least 15 min and vehicle at S TRK star attitude. DAP as reqd for star trk ops

GNC 22 S TRK/COAS CNTL

√S TRK -Y,-Z REQD ID, ITEM 11,12 0
STATUS – (no BITE)
SHUTTER – OP
√S TABLE CLR – ITEM 20 EXEC (*)
STAR TRK -Y,-Z – ITEM 3,4 EXEC (*)
√S TABLE TRK ID 1,2 (reqd ID)
ANG ERR: < .09, Rcd __ . __ __
SEL – ITEM 17,18 (*)

GNC 21 IMU ALIGN

√IMU 1(2,3) STAT – (blank)
√REF STAR, ITEM 13 – (*)
TYPE, ITEM 15 EXEC (MATRIX)
ALIGN IMU 1(2,3) – ITEM 10(11,12) EXEC (*)
EXEC – ITEM 16 EXEC (*), Rcd MET __ __ : __ __ : __ __
√EXEC – ITEM 16 (no *)

GNC SSR-4
MATRIX ALIGN USING IMU DATA

NOTE

Procedure assumes ground knowledge of platform orientation of at least a single IMU

GNC 21 IMU ALIGN

√IMU 1(2,3) STAT – (blank)
REF IMU – ITEM 14 + (REF IMU) EXEC
TYPE – ITEM 15 EXEC (MATRIX)
ALIGN IMU 1(2,3) – ITEM 10(11,12) EXEC (*)
EXEC – ITEM 16 EXEC (*), Rcd MET __ __ : __ __ : __ __
√EXEC – ITEM 16 (no *)

GNC SSR-8
POSITION OMS THROUGH CG

NOTE

This procedure sets up a dummy single engine L(R) OMS burn to position L(R) OMS Thrust Vector through CG. Actual burn will not be executed. When procedure completed, L(R) OMS will be protected from loss due to PRI(SEC) GMBL pwr or data path failures

GNC, OPS 202(302) PRO

GNC XXXXX MNVR YYYYY

If L OMS to be positioned:
| L OMS PRI(SEC) SEL – ITEM 28(30) EXEC
If R OMS to be positioned:
R OMS PRI(SEC) – ITEM 29(31) EXEC

C3 √OMS ENG (two) – OFF
CRT SEL OMS L(R) – ITEM 2(3) EXEC

TRIM LOAD P ITEM 6 ±X.X EXEC
LY ITEM 7 +X.X EXEC
RY ITEM 8 -X.X EXEC

NOTE

Actual values dependent on CG.
If reqd, generic CG trims are:
P = +0.0
LY = +5.2
RY = -5.2

TGT PEG 7
ITEM 19 +1.0 +0 +0 EXEC
TIG – ITEM 10 + (current MET + 2 min) EXEC
LOAD – ITEM 22 EXEC

NOTE

Do NOT MNVR to burn attitude; ignore flashing EXEC

After T-15 sec:
√GMBL position: P = ±X.X
LY = +X.X
RY = -X.X
L(R) GMBL OFF – ITEM 32(33) EXEC

If in OPS 202:
| GNC, OPS 201 PRO
If in OPS 3, and at burn attitude:
Reload Burn Pad

NOTE

Displayed GMBL position is not updated when GMBL OFF.
If in OPS 2, on transition to OPS 3 (prior to deorbit) P/Y positions will read 1.0 deg and GMBL fail will be annunciated

GNC SSR-9
RM DESELECTION OF FAILED OPEN THC CONTACT

NOTE

This procedure will allow RM to deselect failed open THC contact in OPS 2. Use this SSR only under direction from MCC. Procedure will cause primary RCS jet firings which must be coordinated with MCC. Assumes two good channels exist in axis/direction with failed open contact

1. CONFIG DAP FOR MINIMUM TRANS PULSE

   GNC 20 DAP CONFIG

   DAP A(B) TRANS PLS – ITEM 17(37) +0.0 1 EXEC
C3 DAP TRANS: PULSE/PULSE/PULSE/LOW Z

2. RESELECT FAILED OPEN CONTACT

   GNC 25 RM ORBIT

   SEL FAILED CONTACT – ITEM X EXEC

   Verify no '↓'s on affected row
   √SW RM INH – ITEM 16 (no *)

3. DEFLECT THC

O14:E, O15:E, O16:E √cb DDU L(A) (two) – cl

F7(A6U) L(A) FLT CNTLR PWR – ON

L(A) THC – deflect in aff axis for 1 sec

NOTE

This step will cause PRCS jets to fire for 80-320 msec. Expect SBTC/THC Fault Summary msg

Verify '↓' for failed contact

4. RECONFIG DAP

   GNC 20 DAP CONFIG

   Reload DAP A(B) as reqd
   DAP TRANS: as reqd

F7(A6U) L(A) FLT CNTLR PWR – OFF

O14:E, O15:E, O16:E cb DDU L(A) (two) – as reqd

RADIATOR POWER CONFIGURATION 9-2
PLBD POWER/MDM CONFIGURATION 9-3

9.1 PLB DOORS
9.1a NO MOTION/'OP/CL' NOT BLANK/'O' OR 'C'/'R' MICROSW = 1 AFTER DRIVE INITIATION 9-4
9.1b '? ' DISPLAYED IN 'OP/CL' COLUMN 9-6
9.1c PBD SEQ FAIL 9-7
9.1d LATCH GANG NOT 'OP' IN SINGLE MTR TIME 9-8
9.1e 'CL' IN SINGLE MTR TIME 9-10
9.1f DOOR NOT 'OP' IN SINGLE MTR TIME 9-12
9.1g 'CL' IN SINGLE MTR TIME 9-15
9.1h PBD CONFIG 9-17

9.2 RADIATOR
9.2a RAD LAT CNTL PORT(STBD) tb NOT LAT IN 60 SEC OR REL IN 30 SEC 9-18
9.2b RAD CNTL PORT(STBD) tb NOT DPY OR STO WITHIN 50 SEC AND NO MOTION 9-20

9.3 KU ANT
9.3a KU ANT tb NOT DPY IN 46 SEC 9-22
9.3b NOT STO IN 46 SEC 9-23
9.3c GIMBAL ANGLES INCORRECT AFTER 50 SEC 9-24

9.4 MEC ROEU
9.4a ROEU DEMATE – tb NOT REL, MICROSW IND NOT NOMINAL, OR SINGLE MTR DRIVE TIME 9-26
9.4b ROEU MATE – tb NOT LAT, IND NOT NOMINAL, OR SINGLE MTR DRIVE TIME 9-28
9.4c ROEU RELEASE – tb NOT REL, IND NOT NOMINAL, OR SINGLE MTR DRIVE TIME 9-30
9.4d ROEU LATCH – tb NOT LAT, IND NOT NOMINAL, OR SINGLE MTR DRIVE TIME 9-32
9.4e ROEU RELAX – tb NOT NOMINAL, IND NOT NOMINAL, OR SINGLE MTR DRIVE TIME 9-34
9.4f ROEU ELEC CONT – tb NOT NOMINAL OR IND NOT NOMINAL 9-36

MECH SSR
MECH SSR-1 PORT(STBD) RAD OPS 9-38
SSR-2 CONTINGENCY PLBD CLOSURE 9-39
SSR-3 SIMULTANEOUS PLBD CL 9-47
SSR-4 PLBD CHECKOUT AFTER MDM CHANGEOUT 9-52
SSR-5 CONTINGENCY KU-BD ANT DIRECT STOW (CIL) 9-53
SSR-6 PLBD CL MICROSW FAILURE WORKAROUND 9-54
SSR-7 KU-BAND ANTENNA DPY/STO MICROSW FAILURE 9-56
SSR-8 RAD DPY/STO MICROSW FAILURE WORKAROUND 9-58

RADIATOR POWER CONFIGURATION

ACTUATOR	MTR	MICROSW POWER	AC POWER			MCA LOGIC			
						LAT/RAD CNTL		LOGIC PWR	
			BUS	MECH PWR 1	MECH PWR 2	SYS A	SYS B	REL/DPLY	LAT/STOW
STBD 1-6	1	MNA MMC3 (MPC1)	AC1 MMC3		AB1, CA1 AND AB2, CA2	AB1		AB1	AB1
	2	MNB MMC2 (MPC2)	AC2 MMC2	BC1 AND BC2			BC1	BC1	BC1
STBD 7-12	1	MNA MMC3 (MPC1)	AC1 MMC3		AB1, CA1 AND AB2, CA2	AB2		AB2	AB2
	2	MNC MMC2 (MPC3)	AC3 MMC2	AB1, CA1 AND AB2, CA2			CA1	CA1	CA1
STBD DRIVE	1	MNC MMC4 (MPC3)	AC1 MMC3		AB1, CA1 AND AB2, CA2		BC1 AND BC2	BC1 AND BC2	MNA MMC3 AND BC1
	2	MNA MMC1 (MPC1)	AC3 MMC2	AB1, CA1 AND AB2, CA2		AB1 AND AB2		AB1 AND AB2	MNC MMC2 AND AB2
PORT 1-6	1	MNA MMC1 (MPC1)	AC1 MMC1	AB1, CA1 AND AB2, CA2		AB2		AB2	AB2
	2	MNB MMC4 (MPC2)	AC2 MMC4		BC1 AND BC2		BC2	BC2	BC2
PORT 7-12	1	MNA MMC1 (MPC1)	AC1 MMC1	AB1, CA1 AND AB2, CA2		AB1		AB1	AB1
	2	MNC MMC4 (MPC3)	AC3 MMC4		AB1, CA1 AND AB2, CA2		CA2	CA2	CA2
PORT DRIVE	1	MNC MMC2 (MPC3)	AC1 MMC1	AB1, CA1 AND AB2, CA2		AB1 AND AB2		AB1 AND AB2	MNA MMC1 AND AB1
	2	MNA MMC3 (MPC1)	AC3 MMC4		AB1, CA1 AND AB2, CA2		CA1 AND CA2	CA1 AND CA2	MNC MMC4 AND CA2

PLBD POWER/MDM CONFIGURATION

FUNCTION	PLBD CONTROL								PLBD DISPLAY PL MDM								
	Ref: MA73C: C&D for MCA (cb)																
	MTR 1				MTR 2				C	C	O	O	C	R	R	R	O
	AC/MCA	CNTL	MDM	SYS	AC/MCA	CNTL	MDM	SYS	A	B	A	B		A	B	C	
LATCH																	
5-8	1/MID3	AB3/AB2	PL1	2	3/MID2	CA3/CA1	PL2	1	1	2	1	2					
9-12	1/MID1	AB3/AB1	PL1	1	3/MID4	CA3/CA2	PL2	2	1	2	1	2					
1-4	1/MID3	AB3/AB2	PL1	2	3/MID2	CA3/CA1	PL2	1	1	2	1	2					
13-16	3/MID4	CA3/CA2	PL2	2	2/MID2	BC3/BC1	PL1	1	2	1	2	1					
S FWD	1/MID1	AB3/AB1	PL1	1	2/MID4	BC3/BC2	PL2	2	1	2	1	2					
S AFT	3/MID4	CA3/CA2	PL2	2	2/MID2	BC3/BC1	PL1	1	2	1	2	1					
S DOOR	1/MID1	AB3/AB1	PL1	1	2/MID4	BC3/BC2	PL2	2					1	1	2	2	1
													2	1	2	2	2
P FWD	1/MID1	AB3/AB1	PL1	1	2/MID4	BC3/BC2	PL2	2	1	2	1	2					
P AFT	1/MID3	AB3/AB2	PL1	2	3/MID2	CA3/CA1	PL2	1	1	2	1	2					
P DOOR	3/MID4	CA3/CA2	PL2	2	2/MID2	BC3/BC1	PL1	1					2	1	1	2	2
													1	1	1	2	1

MECH

9.1a NO MOTION/'OP/CL' NOT BLANK/'O' OR 'C'/'R' MICROSW = 1 AFTER DRIVE INITIATION

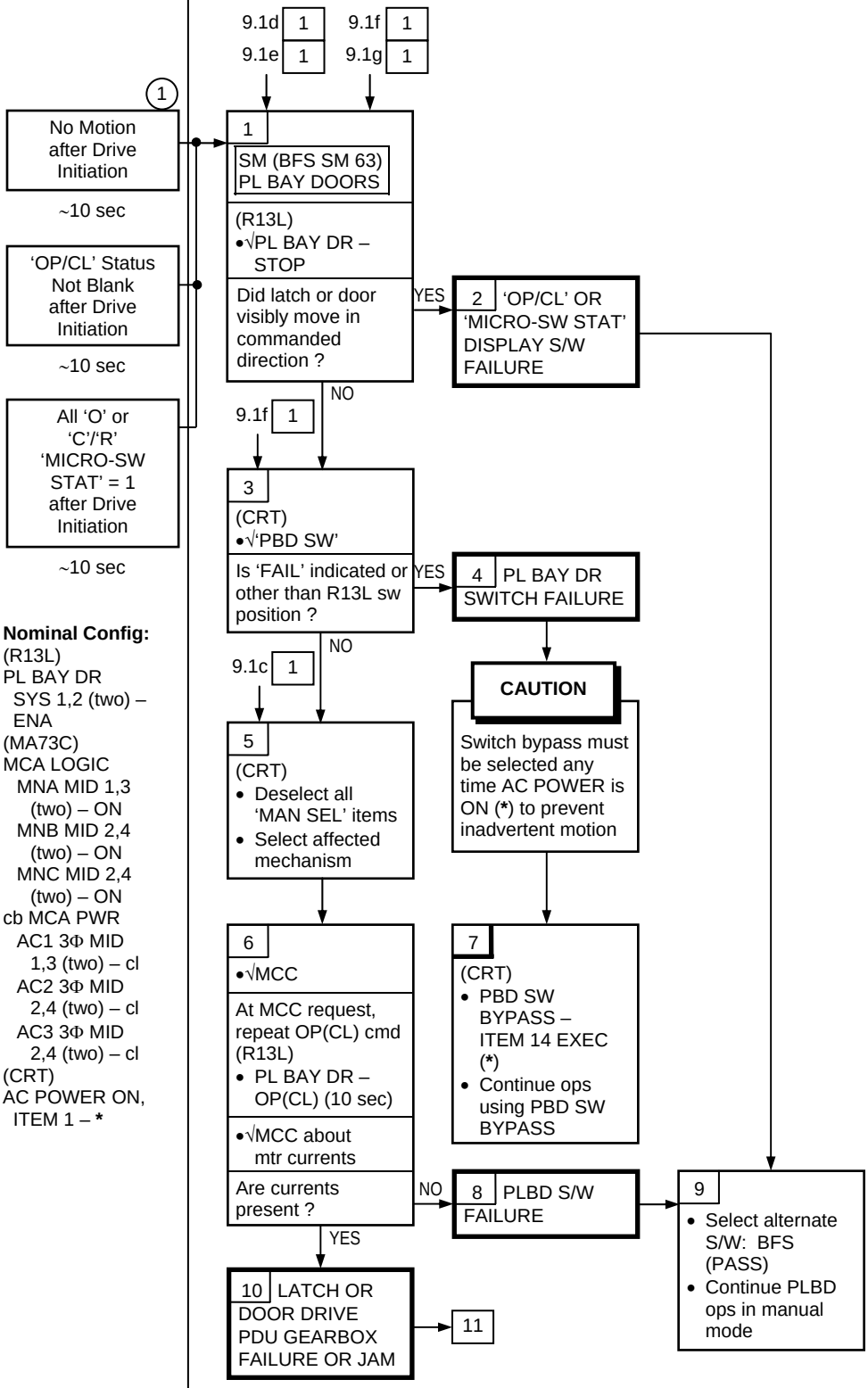

Nominal Config:
(R13L)
PL BAY DR
SYS 1,2 (two) – ENA
(MA73C)
MCA LOGIC
MNA MID 1,3 (two) – ON
MNB MID 2,4 (two) – ON
MNC MID 2,4 (two) – ON
cb MCA PWR
AC1 3Φ MID 1,3 (two) – cl
AC2 3Φ MID 2,4 (two) – cl
AC3 3Φ MID 2,4 (two) – cl
(CRT)
AC POWER ON, ITEM 1 – *

(1) Ops Times
CENTER LATCHES
2 mtrs ~20 sec
1 mtr ~40 sec
FWD,AFT LATCHES
2 mtrs ~30 sec
1 mtr ~60 sec
DOOR
2 mtrs ~63 sec
1 mtr ~126 sec

MECH 9.1a (Cont)

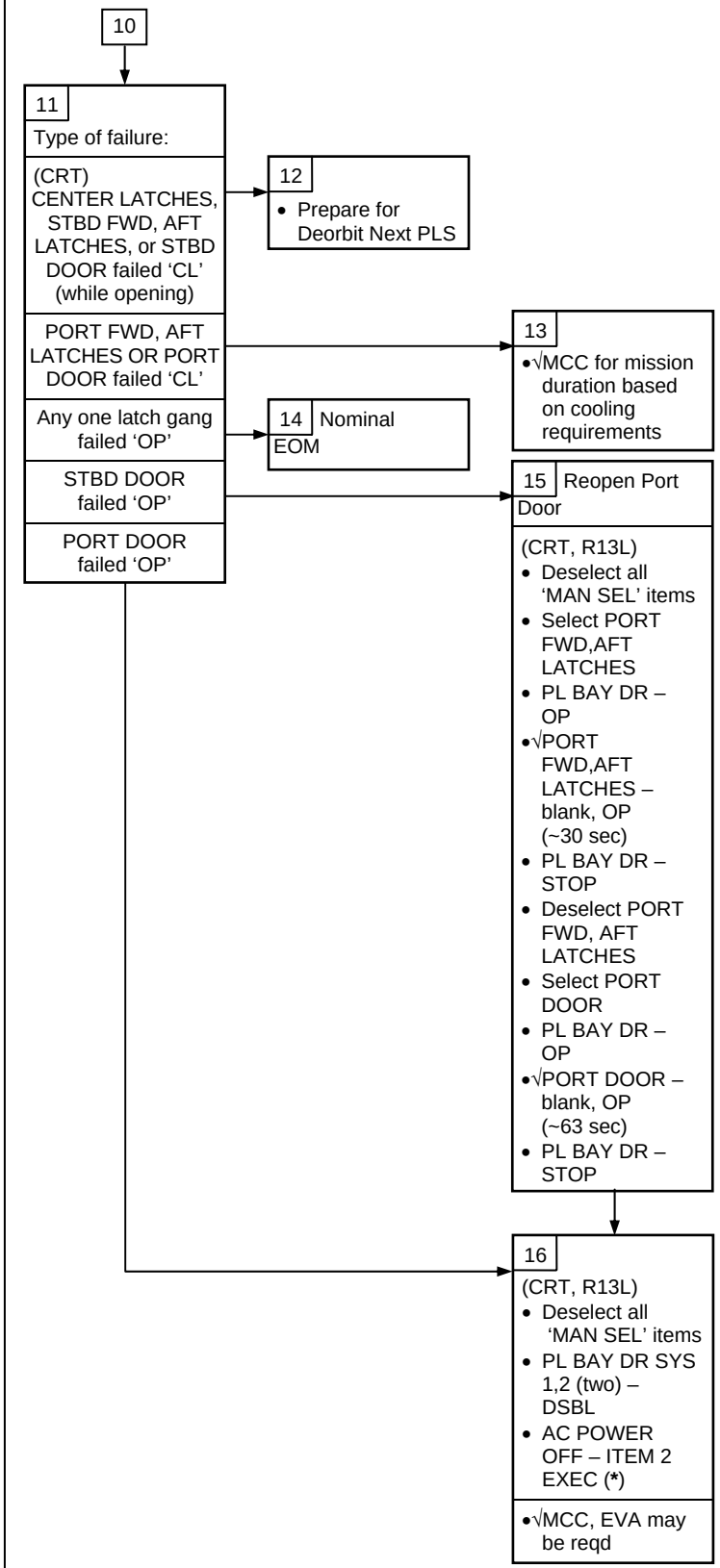

MECH

9.1b '? ' DISPLAYED IN 'OP/CL' COLUMN

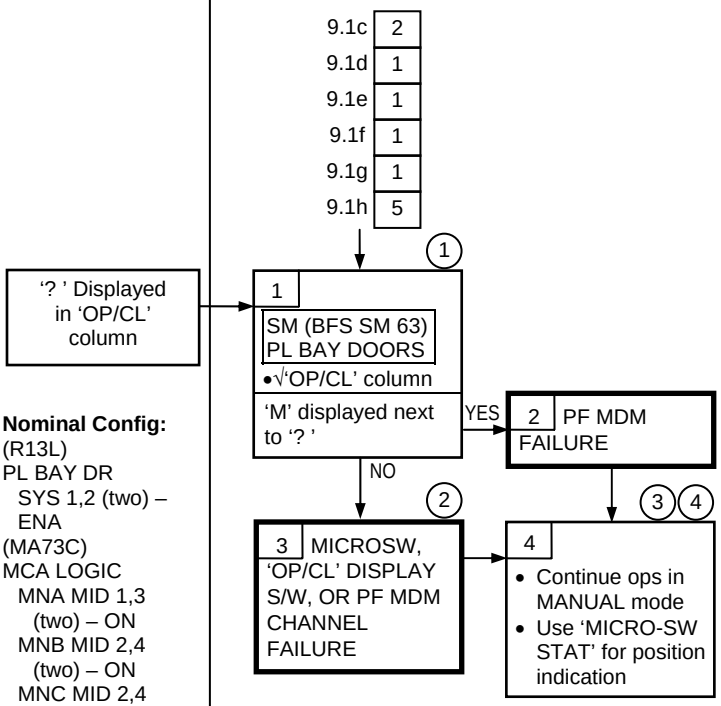

Nominal Config:
(R13L)
PL BAY DR
SYS 1,2 (two) – ENA
(MA73C)
MCA LOGIC
MNA MID 1,3 (two) – ON
MNB MID 2,4 (two) – ON
MNC MID 2,4 (two) – ON
cb MCA PWR
AC1 3Φ MID 1,3 (two) – cl
AC2 3Φ MID 2,4 (two) – cl
AC3 3Φ MID 2,4 (two) – cl
(CRT)
AC POWER ON, ITEM 1 – *****

(1) '?' is displayed for the following:
LATCH:
At least one '1' displayed for both 'O' and 'C' microsws
DOOR:
'1' displayed in:
two 'C' and two 'O' microsws
or
two 'C' and not (two of three)
FWD and AFT 'R':
microsws
or
two 'O' and (two of three) FWD or AFT 'R' microsws

(2) Failed-on door CL microsw can be bypassed to regain mtr function (refer to MECH SSR-6)

(3) In most cases, AUTO mode will not work with '?' indicated

(4) One microsw attained in commanded direction within single mtr time is sufficient verification of position if visual cues not available

MECH

9.1c PBD SEQ FAIL

PBD SEQ FAIL

SM (BFS SM 63) PL BAY DOORS

If:
'↓' in 'AUTO SEQ' column adjacent to timed-out PLBD mechanism

BFS:

S63 PBD SEQ FAIL

Nominal Config:
(R13L)
PL BAY DR
SYS 1,2 (two) – ENA
(MA73C)
MCA LOGIC
MNA MID 1,3 (two) – ON
MNB MID 2,4 (two) – ON
MNC MID 2,4 (two) – ON
cb MCA PWR
AC1 3Φ MID 1,3 (two) – cl
AC2 3Φ MID 2,4 (two) – cl
AC3 3Φ MID 2,4 (two) – cl
(CRT)
AC POWER ON, ITEM 1 – *
AUTO MODE SEL, ITEM 3 – *

(1)

1
(R13L)
- PL BAY DR – STOP

SM (BFS SM 63) PL BAY DOORS
Deselect AUTO MODE SEL
- ITEM 3 EXEC (no *)
- √PBD SW BYPASS – ITEM 14 (no *)

Did latch or door visibly move in commanded direction ?
NO → 9.1a 5
YES ↓

2
(CRT)
- √'OP/CL' column

'?' adjacent to '↓' in 'AUTO SEQ' column ?
YES → 9.1b 1
NO ↓

3 Mechanism affected:
- Latch gang → 4
- Door ↓

4 Desired position:
- 'CL' → 9.1e 2
- 'OP' → 9.1d 2

5
- Select aff DOOR 'MAN SEL' item ↓

6 Desired position:
- 'CL' → 9.1g 2
- 'OP' → 9.1f 1

(1) Although PBD SEQ FAIL will terminate AUTO MODE, ITEM 3 (AUTO MODE SEL) remains selected (*). To reselect AUTO MODE, ITEM 3 must be deselected (no *), then reselected (*)

MECH

9.1d LATCH GANG NOT 'OP' IN SINGLE MTR TIME

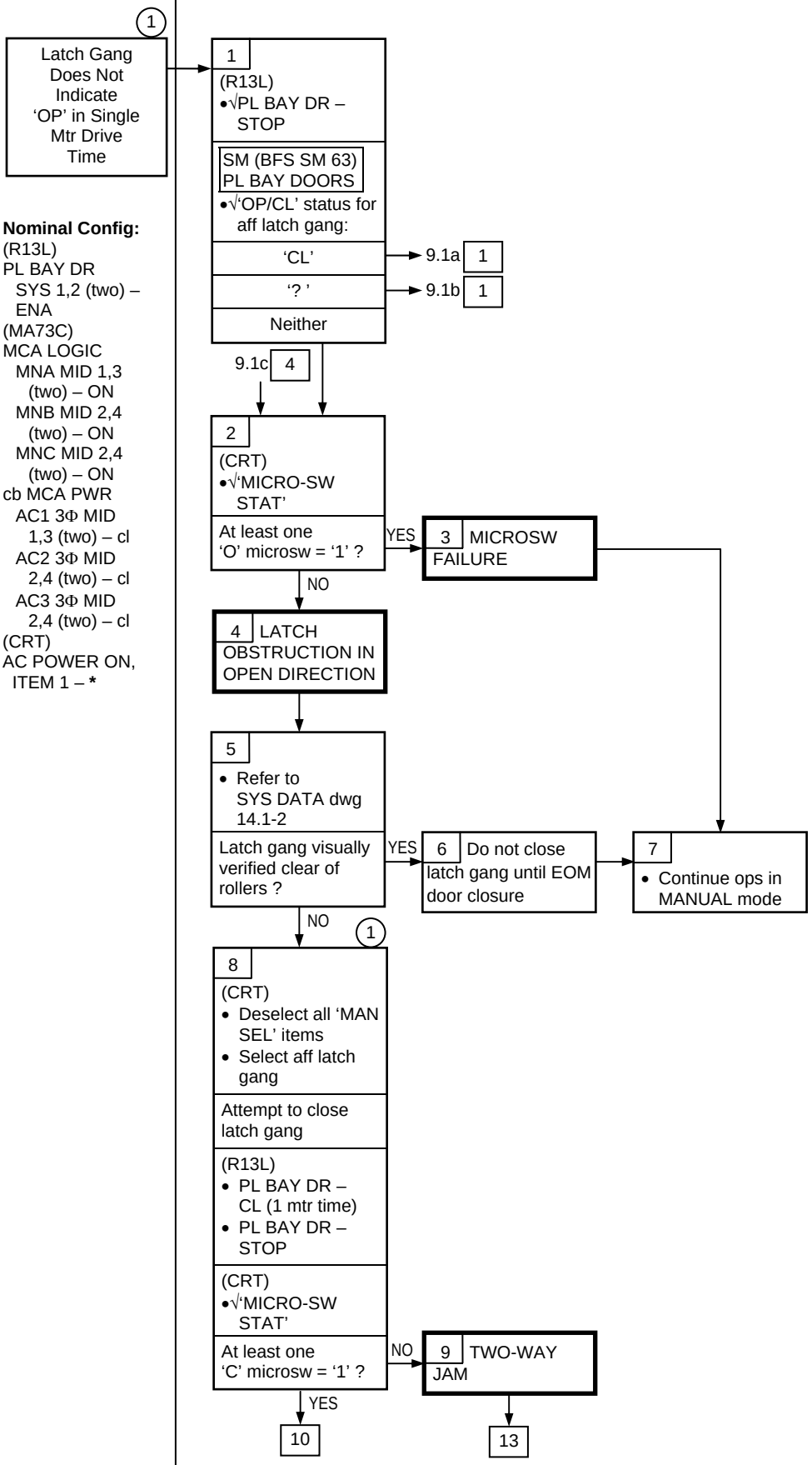

Nominal Config:
(R13L)
PL BAY DR
SYS 1,2 (two) – ENA
(MA73C)
MCA LOGIC
MNA MID 1,3 (two) – ON
MNB MID 2,4 (two) – ON
MNC MID 2,4 (two) – ON
cb MCA PWR
AC1 3Φ MID 1,3 (two) – cl
AC2 3Φ MID 2,4 (two) – cl
AC3 3Φ MID 2,4 (two) – cl
(CRT)
AC POWER ON, ITEM 1 – *****

(1) Ops Times
CENTER LATCHES
2 mtrs ~20 sec
1 mtr ~40 sec
FWD,AFT LATCHES
2 mtrs ~30 sec
1 mtr ~60 sec
DOORS
2 mtrs ~63 sec
1 mtr ~126 sec

MECH 9.1d (Cont)

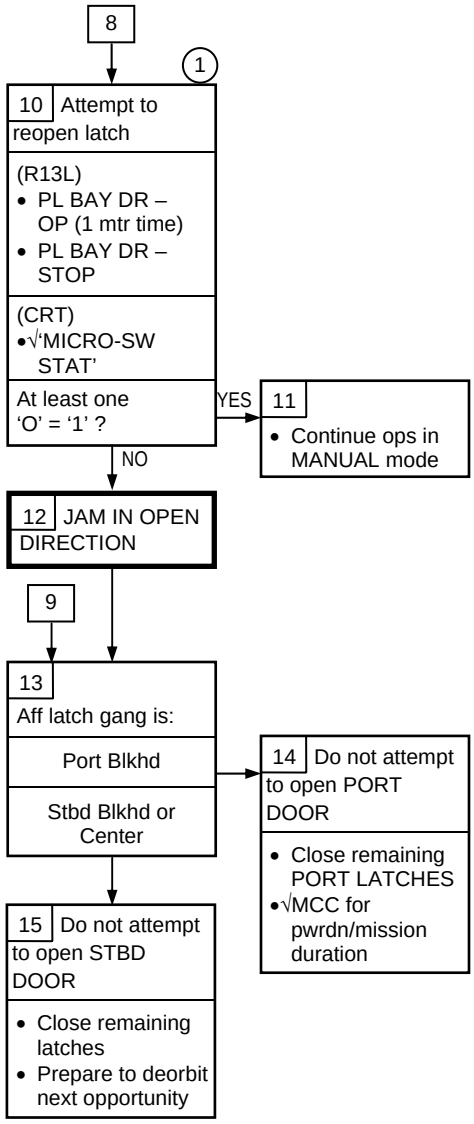

(1) Ops Times

CENTER LATCHES
2 mtrs ~20 sec
1 mtr ~40 sec

FWD,AFT LATCHES
2 mtrs ~30 sec
1 mtr ~60 sec

DOORS
2 mtrs ~63 sec
1 mtr ~126 sec

MECH

9.1e LATCH GANG NOT 'CL' IN SINGLE MTR TIME

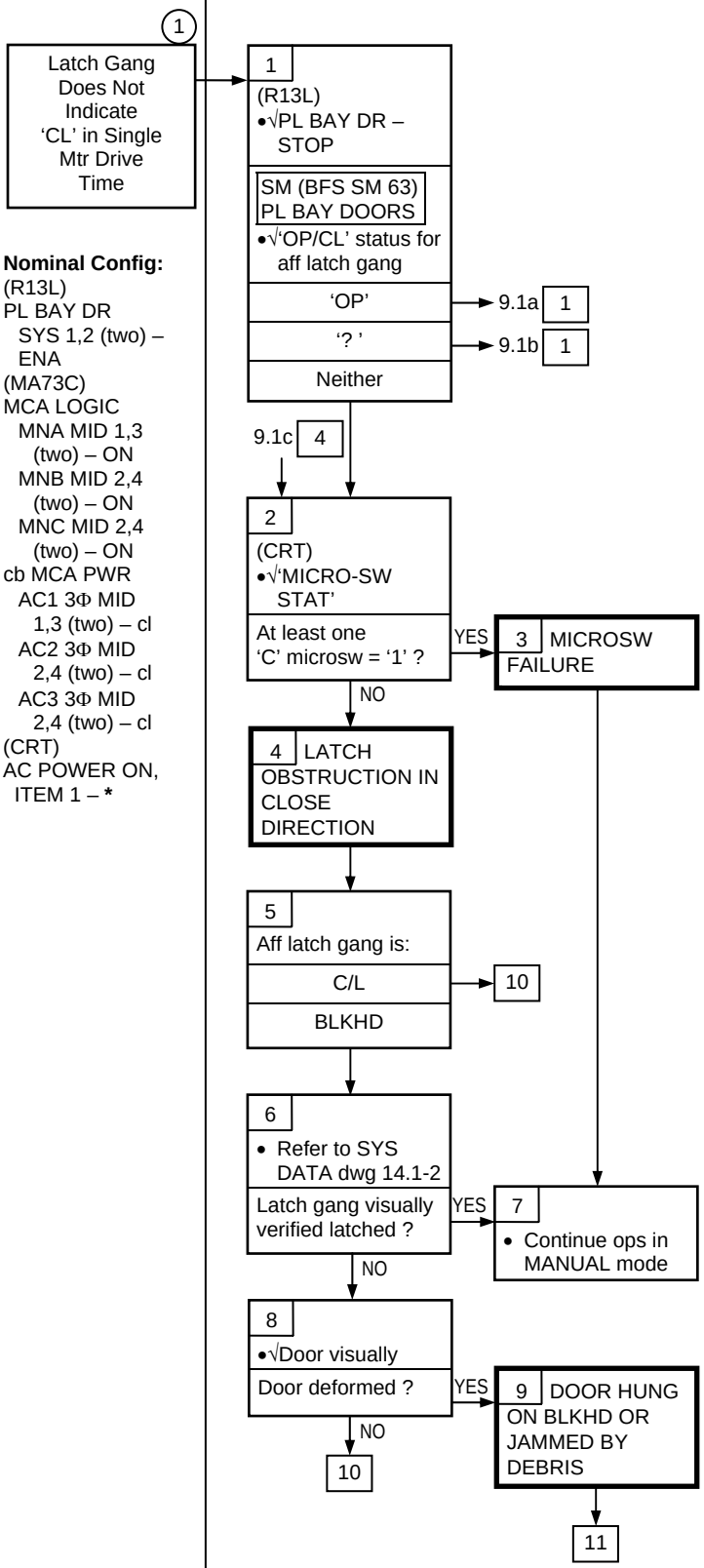

Nominal Config:
(R13L)
PL BAY DR
SYS 1,2 (two) – ENA
(MA73C)
MCA LOGIC
MNA MID 1,3 (two) – ON
MNB MID 2,4 (two) – ON
MNC MID 2,4 (two) – ON
cb MCA PWR
AC1 3Φ MID 1,3 (two) – cl
AC2 3Φ MID 2,4 (two) – cl
AC3 3Φ MID 2,4 (two) – cl
(CRT)
AC POWER ON, ITEM 1 – *

(1) Ops Times
CENTER LATCHES
2 mtrs ~20 sec
1 mtr ~40 sec
FWD,AFT LATCHES
2 mtrs ~30 sec
1 mtr ~60 sec
DOOR
2 mtrs ~63 sec
1 mtr ~126 sec

MECH 9.1e (Cont)

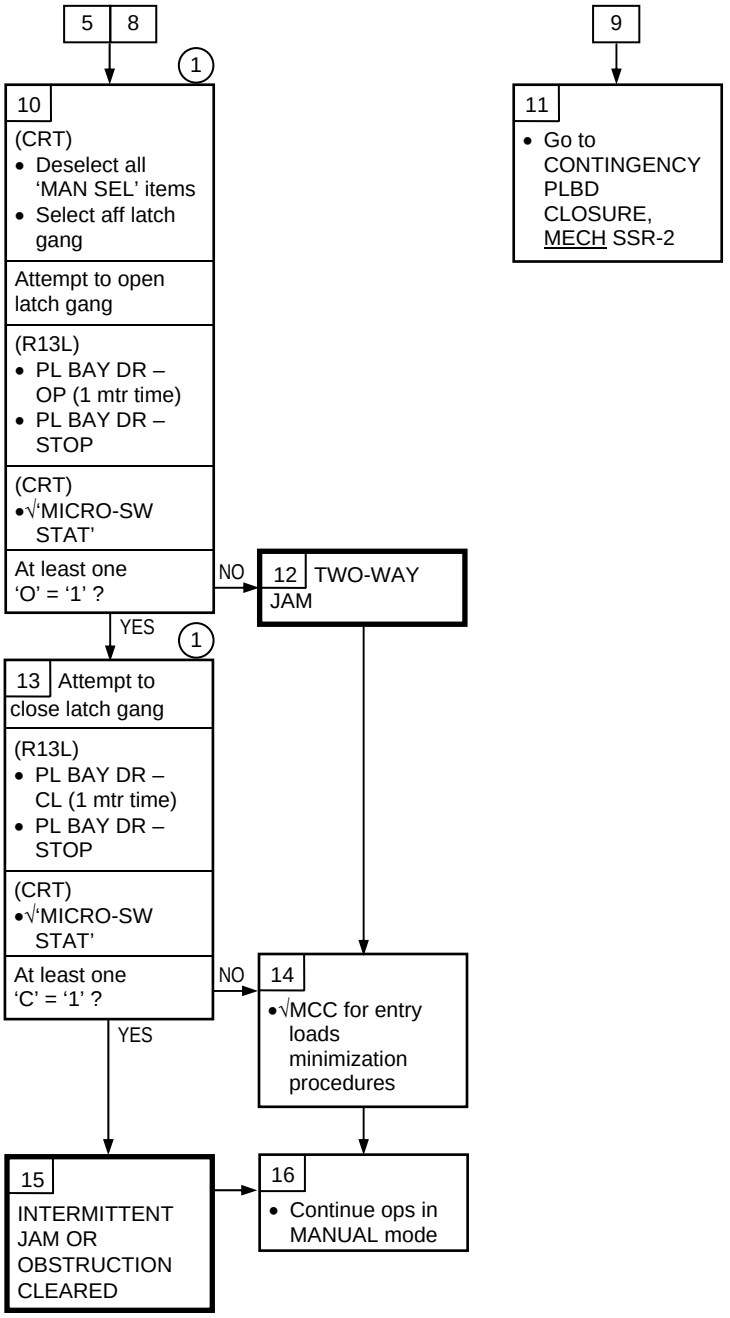

(1) Ops Times

CENTER LATCHES
2 mtrs ~20 sec
1 mtr ~40 sec

FWD, AFT LATCHES
2 mtrs ~30 sec
1 mtr ~60 sec

DOOR
2 mtrs ~63 sec
1 mtr ~126 sec

MECH

9.1f DOOR NOT 'OP' IN SINGLE MTR TIME

(1) Door Does Not Indicate 'OP' in Single Mtr Time

Nominal Config:
(R13L)
PL BAY DR
SYS 1,2 (two) – ENA
(MA73C)
MCA LOGIC
MNA MID 1,3 (two) – ON
MNB MID 2,4 (two) – ON
MNC MID 2,4 (two) – ON
cb MCA PWR
AC1 3Φ MID 1,3 (two) – cl
AC2 3Φ MID 2,4 (two) – cl
AC3 3Φ MID 2,4 (two) – cl
(CRT)
AC POWER – ON (ITEM 1 – *)

9.1c 6

1
(R13L)
•√PL BAY DR – STOP

SM (BFS SM 63) PL BAY DOORS
•√'OP/CL' column

DOOR 'CL' → 9.1a 1
DOOR 'RDY' → 9.1a 3
DOOR '?' → 9.1b 1
DOOR blank

2
(CRT)
•√'MICRO-SW STAT'

Both DOOR 'O' (open) microsws = '1' ?
YES → 3 DISPLAY S/W FAILURE → 4
- Select alt S/W: BFS (PASS)
- Continue PLBD ops

NO

5 Is door deformed (indicated by C/L edge warpage and/or different number of stripes visible on door drive pushrods) ?
NO → 6
(CRT)
•√'MICRO-SW STAT'

One DOOR 'O' (open) microsw = '1' ?
YES → 7 DOOR OP MICROSW FAILURE → 10
- Continue PLBD ops in MANUAL mode

NO → 9 DOOR DRIVE PDU GBX OR TORQUE TUBE JAM → 13

YES → 8 ROTARY ACTUATOR OR BLKHD JAM

11
- Note point of deformation

Close door until deformation relieved

(CRT)
Select door
- ITEM 13(10) EXEC (*)

(R13L)
- PL BAY DR – CL (as reqd)
- PL BAY DR – STOP

13

(1) Drive Times
CENTER LATCHES
2 mtrs ~20 sec
1 mtr ~40 sec
FWD,AFT LATCHES
2 mtrs ~30 sec
1 mtr ~60 sec
DOORS
2 mtrs ~63 sec
1 mtr ~126 sec

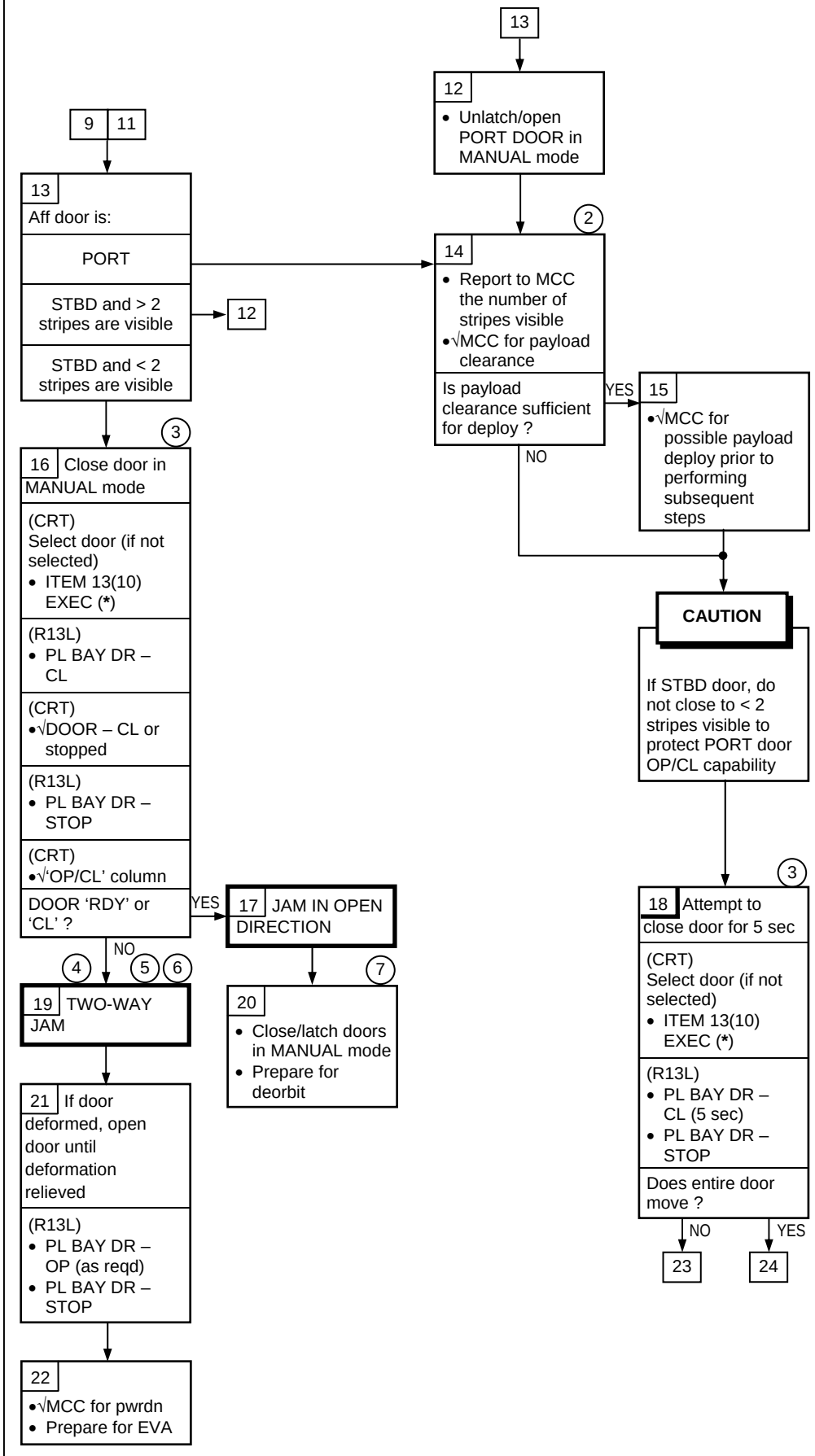

(2) Door may interfere with payload deploy

(3) Cmd door to close to see if EVA necessary to CL

(4) For rotary actuator jam, EVA reqd to cut door drive linkage(s) closest to point of deformation

(5) For door drive PDU gearbox jam, EVA reqd to disconnect PDU

(6) For door drive torque tube jam, EVA reqd to remove obstruction or cut door drive linkage(s)

(7) If door reopen were attempted, two-way jam could occur causing day-1 EVA

MECH 9.1f (Cont)

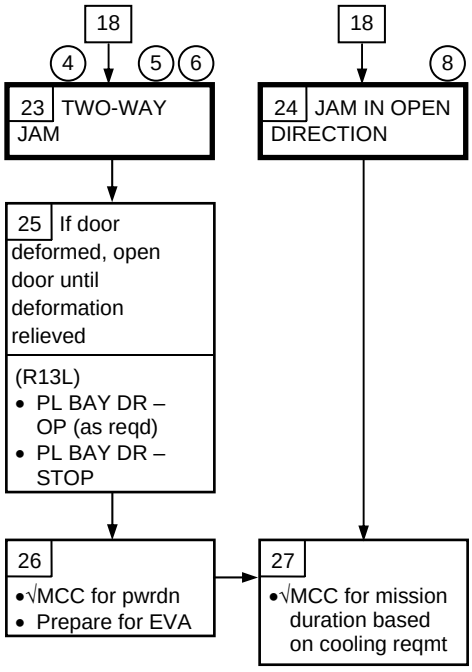

(4) For rotary actuator jam, EVA reqd to cut door drive linkage(s) closest to point of deformation

(5) For door drive PDU gearbox jam, EVA reqd to disconnect PDU

(6) For door drive torque tube jam, EVA reqd to remove obstruction or cut door drive linkage(s)

(8) No EVA reqd to close door

9.1g DOOR NOT 'CL' IN SINGLE MTR TIME

(1) DOOR Does Not indicate 'CL' in Single Mtr Drive Time

Nominal Config:
(R13L)
PL BAY DR
SYS 1,2 (two) – ENA
(MA73C)
MCA LOGIC
MNA MID 1,3 (two) – ON
MNB MID 2,4 (two) – ON
MNC MID 2,4 (two) – ON
cb MCA PWR
AC1 3Φ MID 1,3 (two) – cl
AC2 3Φ MID 2,4 (two) – cl
AC3 3Φ MID 2,4 (two) – cl
(CRT)
AC POWER ON, ITEM 1 – *

1
(R13L)
•√PL BAY DR – STOP

SM (BFS SM 63) PL BAY DOORS
•√'OP/CL' column

DOOR 'OP' → 9.1a 1

DOOR '?' → 9.1b 1

DOOR 'RDY' or blank

9.1c 6

2 Is door deformed (indicated by centerline edge warpage and/or different number of stripes visible on door drive pushrods) ?

YES → 3 Is deformation at extreme fwd or aft end of door ?

YES → 4 BLKHD JAM CAUSED BY THERMAL WARPAGE OR OBSTRUCTION → SSR-2

NO → (2) 5 ROTARY ACTUATOR JAM AT POINT OF DEFORMATION

NO

6
(CRT)
•√'MICRO-SW STAT'

Both DOOR 'C' microsws = '1' and at least two of three FWD and AFT 'R' = '1' → 8 DISPLAY S/W FAILURE → 9
- If s/w failure in PASS(BFS), use BFS SM 63 (PASS SM, OPS 202)
- Continue PLBD ops

FWD (AFT) DOOR 'C' microsw = '1' and at least two of three AFT(FWD) 'R' microsws = '1'

Port door affected, and door position is GO on PORT AFT BULKHEAD LATCH GO/NO-GO DIAGRAM, MECH SSR-2, fig. 9-1 → 10 DOOR CL/RDY MICROSW FAILURE(S) → 11
- Continue PLBD ops in MANUAL mode
- Visual verification reqd for latch capture

Other → 12

7
- Note point of deformation → 13

(1) Drive Times
CENTER LATCHES
2 mtrs ~20 sec
1 mtr ~40 sec
FWD,AFT LATCHES
2 mtrs ~30 sec
1 mtr ~60 sec
DOORS
2 mtrs ~63 sec
1 mtr ~126 sec

(2) EVA reqd to cut PLB door drive linkage for at least one rotary actuator (i.e., one nearest point of deformation)

MECH 9.1g (Cont)

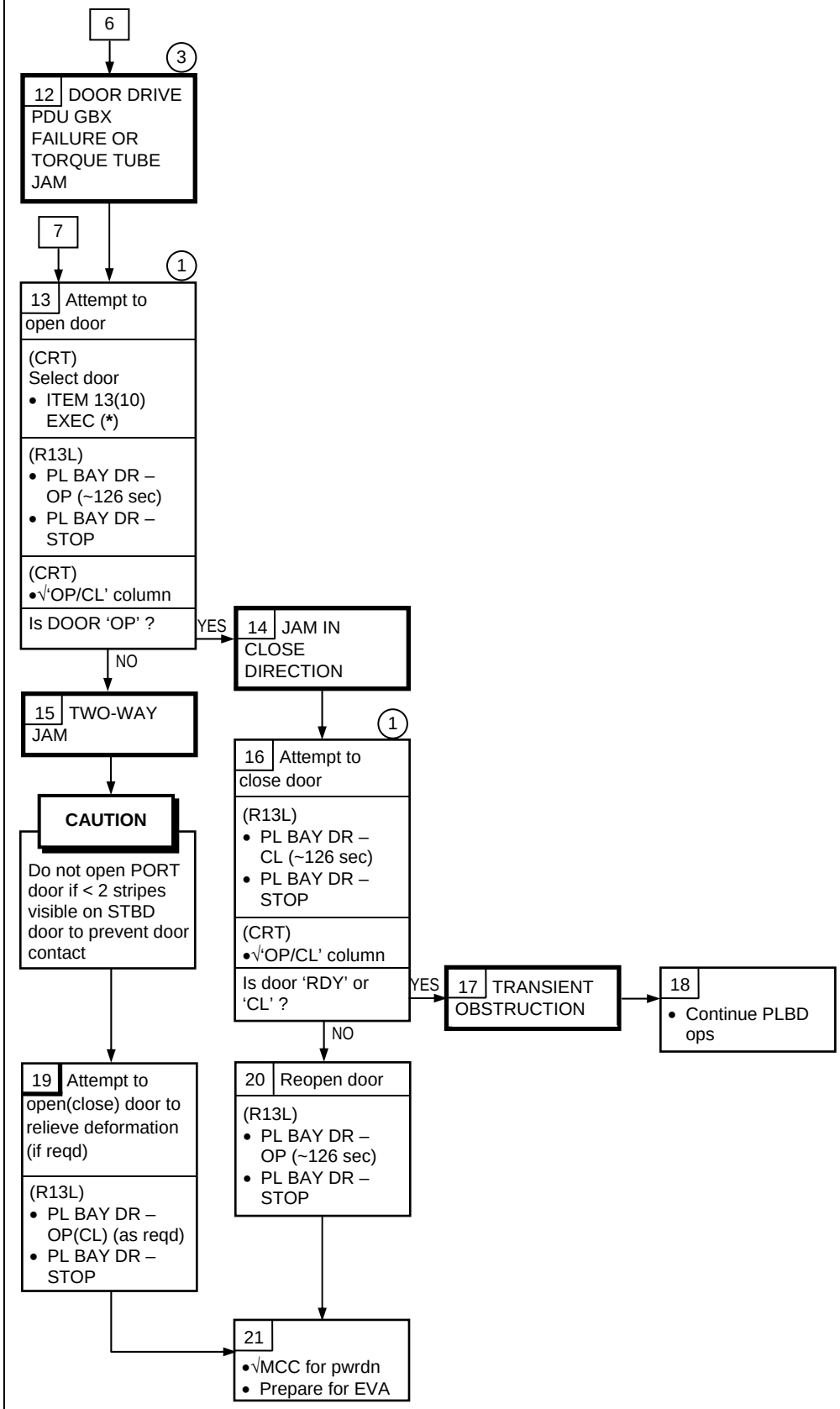

(1) Drive Times

CENTER LATCHES
2 mtrs ~20 sec
1 mtr ~40 sec

FWD,AFT LATCHES
2 mtrs ~30 sec
1 mtr ~60 sec

DOORS
2 mtrs ~63 sec
1 mtr ~126 sec

(3) EVA reqd to disconnect PDU

MECH

9.1h PBD CONFIG

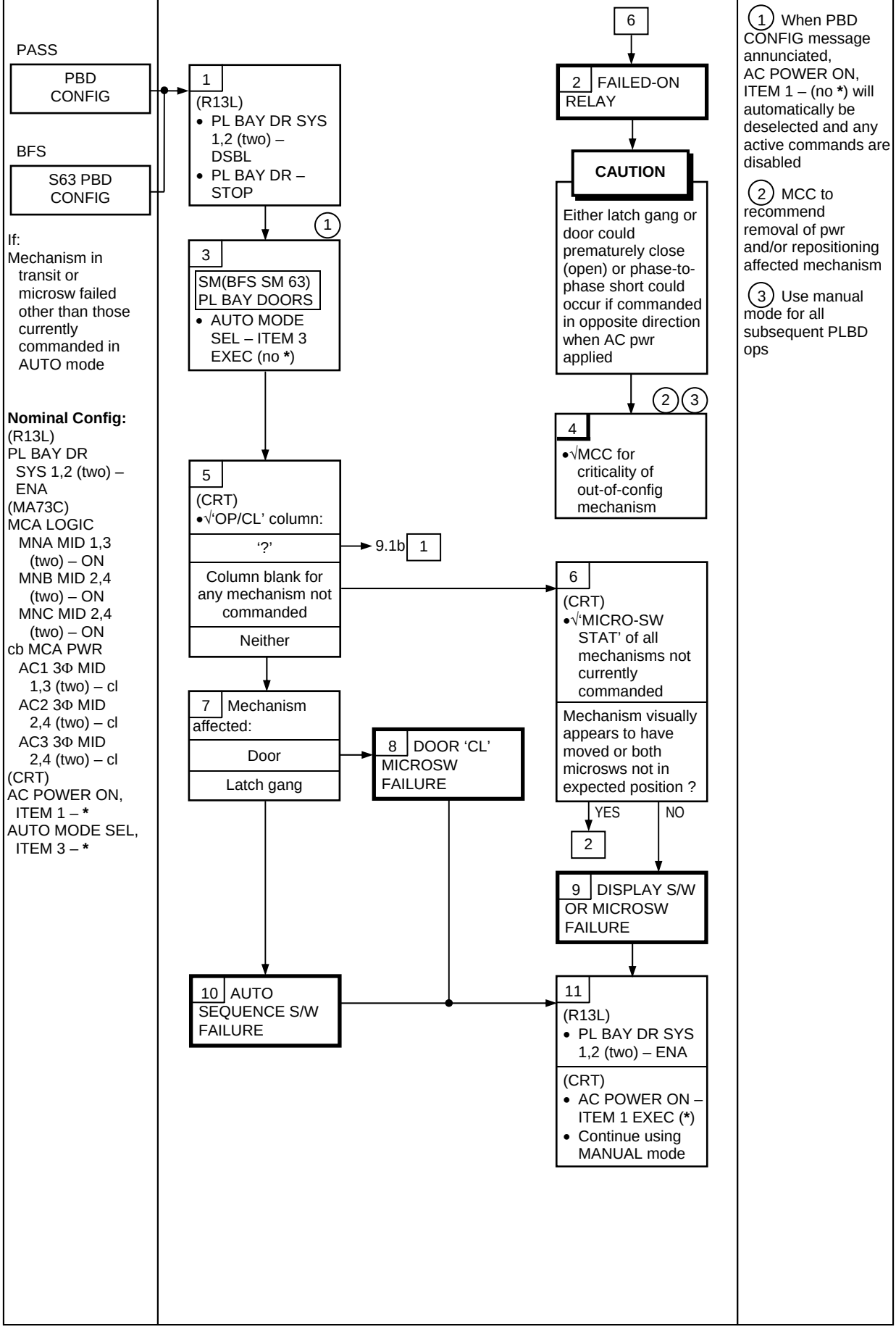

MECH

9.2a RAD LAT CNTL PORT(STBD) tb NOT LAT IN 60 SEC OR REL IN 30 SEC

RAD LAT CNTL PORT(STBD) tb Not LAT in 60 Sec or REL in 30 Sec

Nominal Config:
(MA73C)
MCA LOGIC
- MNA MID 1,3 (two) – ON
- MNB MID 2,4 (two) – ON
- MNC MID 2,4 (two) – ON

cb MCA PWR
- AC1 3Φ MID 1,3 (two) – cl
- AC2 3Φ MID 2,4 (two) – cl
- AC3 3Φ MID 2,4 (two) – cl

(R13L)
PL BAY MECH PWR
- SYS 1,2 (two) – ON

RAD LAT CNTL SYS (two) – OFF
RAD CNTL SYS (two) – OFF
If RMS uncradled:
(MA73C)
cb MCA PWR
- AC2 3Φ MID 2 – op
- AC3 3Φ MID 4 – op

1 (R13L)
RAD LAT CNTL PORT(STBD) tb – bp ?
YES → 5
NO ↓

2 Disable MCA logic to verify tb indication

Port	Stbd
(MA73C:A,B) MCA LOGIC • MNA MID 1 – OFF • MNB MID 4 – OFF • MNC MID 4 – OFF	(MA73C:A,B) MCA LOGIC • MNA MID 3 – OFF • MNB MID 2 – OFF • MNC MID 2 – OFF

tb – bp ?
NO → 7
YES ↓

3

Port	Stbd
(MA73C:A,B) MCA LOGIC • MNA MID 1 – ON • MNB MID 4 – ON • MNC MID 4 – ON	(MA73C:A,B) MCA LOGIC • MNA MID 3 – ON • MNB MID 2 – ON • MNC MID 2 – ON

tb – LAT ?
YES → 4
- Discontinue ops

→ 16

NO ↓
1 ↓

5 Disable good Port(Stbd) Lat Sys

Port	Stbd
(MA73C:C,D) cb MCA PWR • AC1 3Φ MID 1 – op • AC2 3Φ MID 4 – op • AC3 3Φ MID 4 – op	(MA73C:C,D) cb MCA PWR • AC1 3Φ MID 3 – op • AC2 3Φ MID 2 – op • AC3 3Φ MID 2 – op

RMS uncradled ?
NO → 10
YES ↓ (1)

6
- √MCC for next action

2 ↓

7 tb FAILURE

8

Port	Stbd
(MA73C:A,B) MCA LOGIC • MNA MID 1 – ON • MNB MID 4 – ON • MNC MID 4 – ON	(MA73C:A,B) MCA LOGIC • MNA MID 3 – ON • MNB MID 2 – ON • MNC MID 2 – ON

→ **9** (2) (3)
- Continue ops based on PDU actuator times

(1) Opened MCA cbs (for RMS uncradled) prevent verification of dual motor ops during RAD troubleshooting

(2) PDU Actuator Times
NORMAL
Lat – 30 sec
Rad – 50 sec
SINGLE MTR
Lat – 60 sec
Rad – 100 sec

(3) Need MCC verification of microsw status for failed tb

MECH 9.2a (Cont)

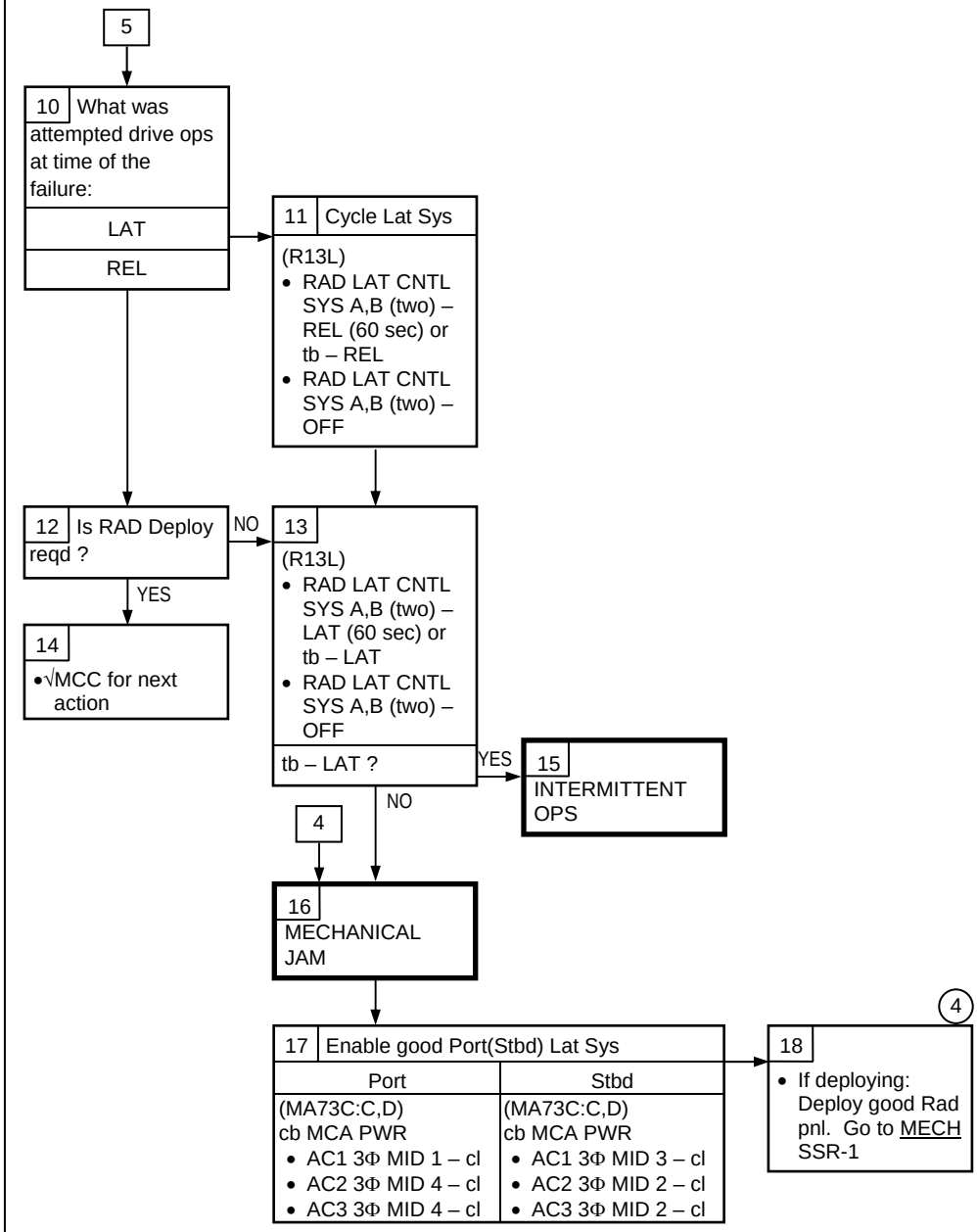

4 √MCC to determine pwrdn reqd, if any

MECH

9.2b RAD CNTL PORT(STBD) tb NOT DPY OR STO WITHIN 50 SEC AND NO MOTION

RAD PORT(STBD) tb not bp after 10 Sec and No Motion

RAD PORT(STBD) Pnl(s) in Transit and No Motion

RAD CNTL PORT(STBD) tb Not DPY/STO within 50 Sec

Nominal Config:
(MA73C)
MCA LOGIC
MNA MID 1,3 (two) – ON
MNB MID 2,4 (two) – ON
cb MCA PWR
AC1 3Φ MID 1,3 (two) – cl
AC2 3Φ MID 2,4 (two) – cl
AC3 3Φ MID 2,4 (two) – cl
(R13L)
PL BAY MECH PWR SYS 1,2 (two) – ON
RAD LAT CNTL SYS (two) – OFF
RAD CNTL SYS (two) – OFF

If RMS uncradled:
(MA73C)
cb MCA PWR
AC2 3Φ MID 2 – op
AC3 3Φ MID 4 – op

(1)
1
- Visually verify anomalous RAD pnl position

Does anomalous RAD pnl appear to be in desired position ?

YES → (2) 2 tb or MICROSW FAILURE → 3 •√MCC for microsw status and verification of RAD pnl end-of-travel

NO → (3) 4 MECHANICAL JAM OR MTR FAILURE

8 → 5 Is RMS Uncradled ?

YES → (4) 6 •√MCC for RMS cradling

NO

7
- Enable PORT RAD pnl mtr disabled as a result of RMS PWRUP procedure

(MA73C)
- cb MCA PWR AC3 3Φ MID 4 – cl

(5) 9
- Continue RAD OPS using RAD STOW/DEPLOY (ORB OPS), step 1, STOW RADIATORS procedure

8 Anomalous RAD pnl in transit, or fully deployed/ stowed:

PORT(STBD) fully stowed	16
PORT fully deployed or in transit	5
STBD fully deployed	11
STBD in transit	

10 Is PORT RAD pnl fully deployed or in transit:

Fully deployed	8 → (6) 11 ONE-WAY MECHANICAL JAM
In transit	(7)

(7) 12 Config for SINGLE RADIATOR ops
- Disable nominal PORT(STBD) RAD Latch and RAD Cntl sys

(MA73C:C,D) PORT Sys Disable cb MCA PWR	(MA73C:C,D) STBD Sys Disable cb MCA PWR
• AC1 3Φ MID 1 – op	• AC1 3Φ MID 3 – op
• AC2 3Φ MID 4 – op	• AC2 3Φ MID 2 – op
• AC3 3Φ MID 4 – op	• AC3 3Φ MID 2 – op

What was attempted drive ops at time of failure ?

STOW	14
DPY	15

(8) 13
- Continue RAD OPS for nominal RAD pnl (If reqd) using MECH SSR-1

(1) Compare PORT (STBD) RAD pnl with fixed RAD pnls or deployed STBD(PORT) RAD pnl

(2) If dual microsw failure, microsws can be bypassed to regain mtrs function (refer to MECH SSR-8)

(3) Both redundant deploy mtrs must be operational to be GO for deploy

(4) Opened MCA cbs (if RMS uncradled) conflict with Rad troubleshooting

(5) Resume in block 12 if RAD STOW/DPY OPS unsuccessful, and affected RAD pnl failed in transit

(6) EVA reqd to stow jammed Rad pnl

(7) If RMS uncradled, expect single mtr drive time for PORT RAD

(8) √MCC to determine if pwrdn is reqd

MECH 9.2b (Cont)

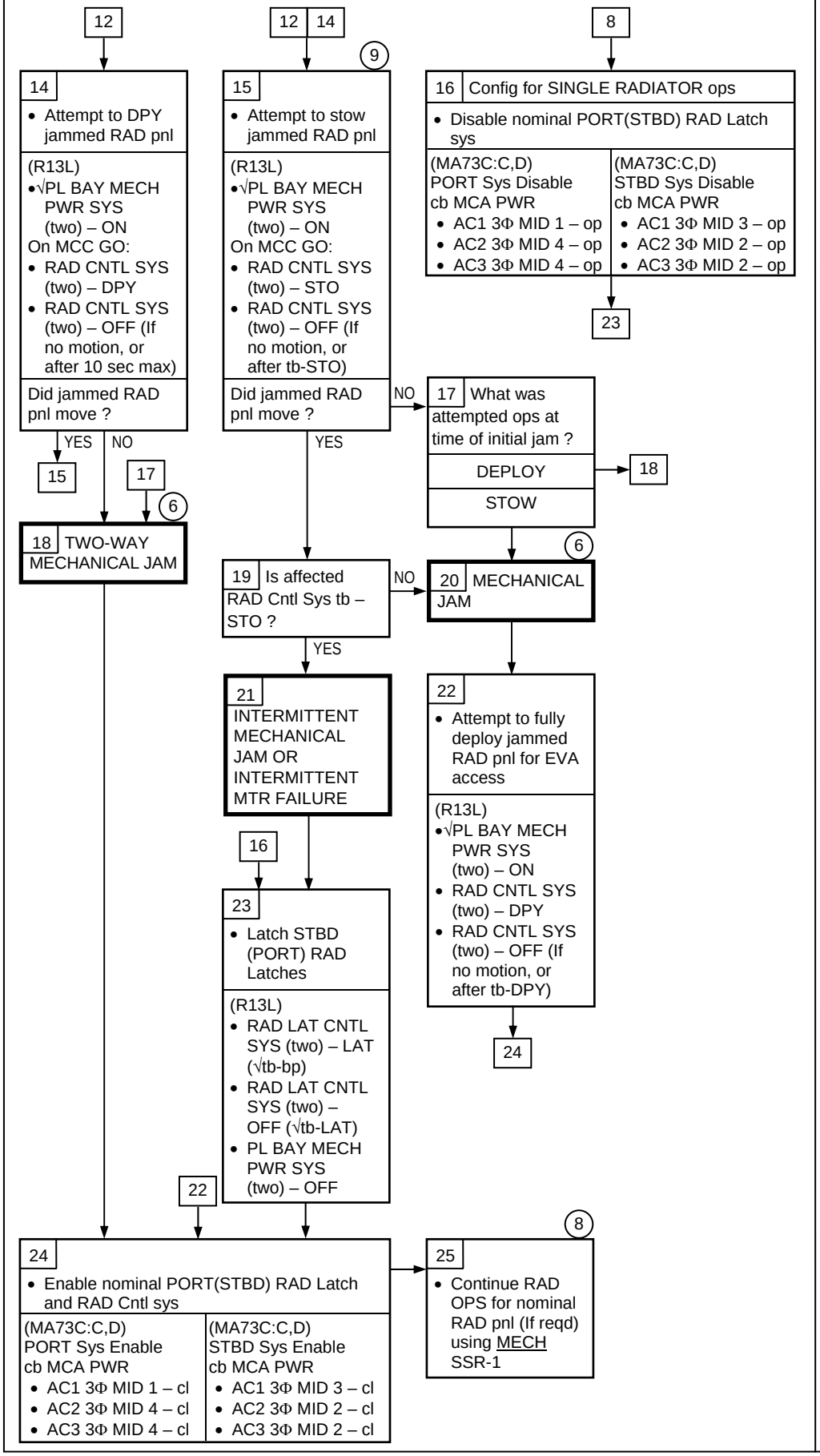

MECH

9.3a KU ANT tb NOT DPY IN 46 SEC

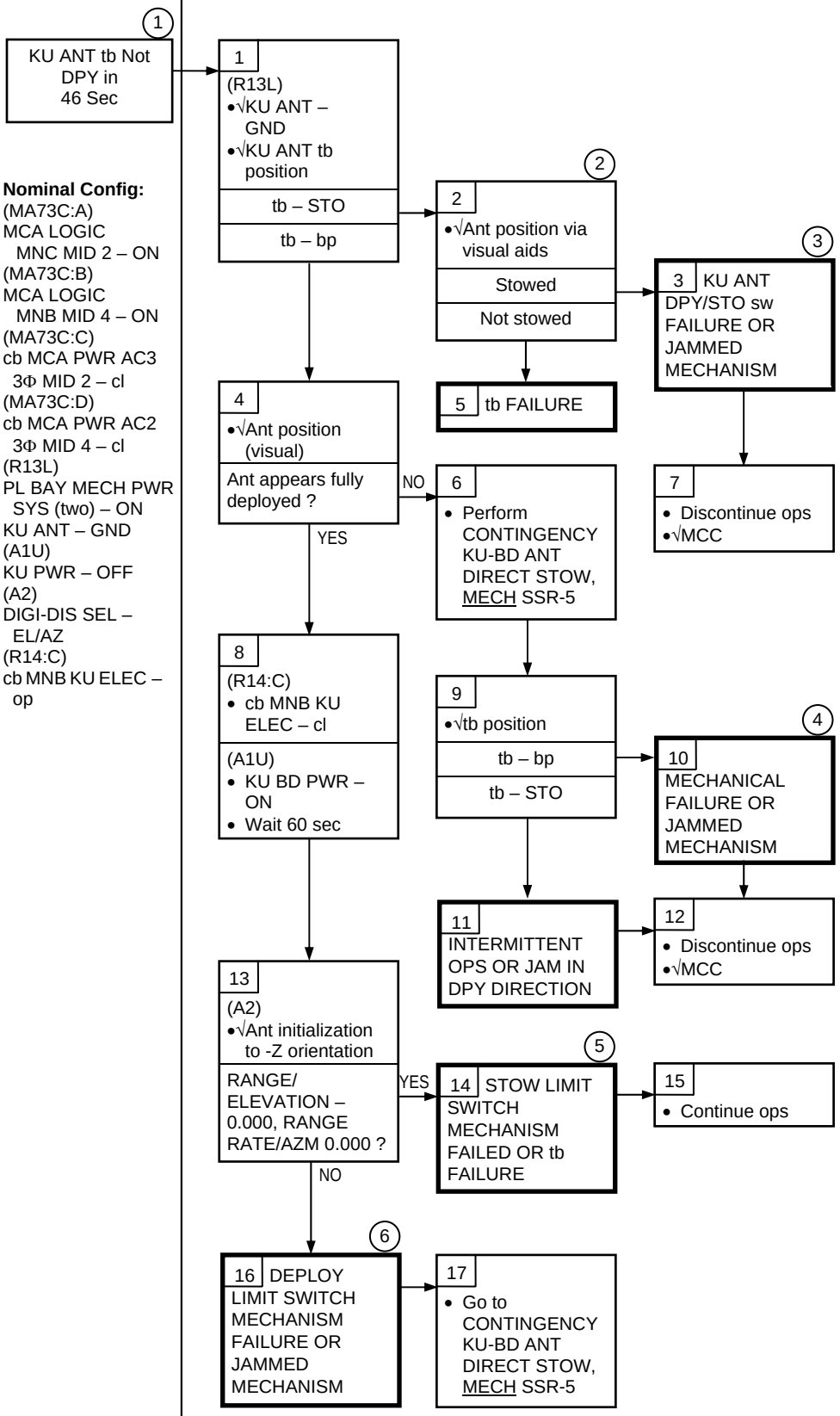

Nominal Config:
(MA73C:A)
MCA LOGIC
MNC MID 2 – ON
(MA73C:B)
MCA LOGIC
MNB MID 4 – ON
(MA73C:C)
cb MCA PWR AC3
3Φ MID 2 – cl
(MA73C:D)
cb MCA PWR AC2
3Φ MID 4 – cl
(R13L)
PL BAY MECH PWR SYS (two) – ON
KU ANT – GND
(A1U)
KU PWR – OFF
(A2)
DIGI-DIS SEL – EL/AZ
(R14:C)
cb MNB KU ELEC – op

(1) Drive Time
Single mtr – 46 sec
Dual mtr – 23 sec

(2) KU-BD CCTV overlay located in Middeck Transparency Kit

(3) KU-BAND ANTENNA CONTINGENCY DEPLOY/STOW FAILED DEPLOY STOW SWITCH (IFM) may be reqd

(4) Possible Ant jettison reqd

(5) If limit sw mechanism failed in stow position, MECH SSR-7 reqd for stow ops

(6) If limit sw mechanism failed to transfer deploy signal, failure results in loss of Ku-Bd comm and radar ops

MECH

9.3b KU ANT tb NOT STO IN 46 SEC

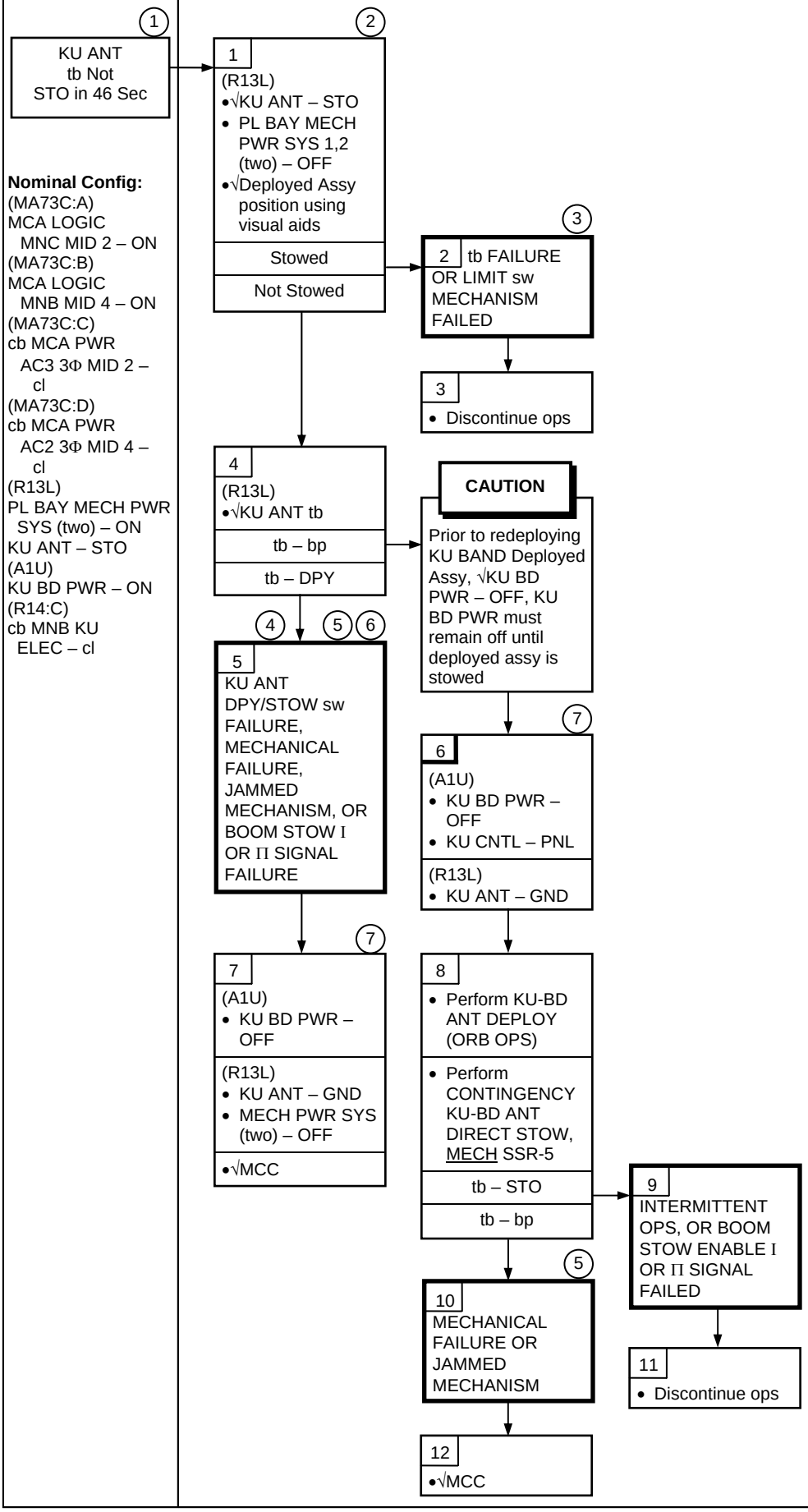

Nominal Config:
(MA73C:A)
MCA LOGIC
MNC MID 2 – ON
(MA73C:B)
MCA LOGIC
MNB MID 4 – ON
(MA73C:C)
cb MCA PWR
AC3 3Φ MID 2 – cl
(MA73C:D)
cb MCA PWR
AC2 3Φ MID 4 – cl
(R13L)
PL BAY MECH PWR SYS (two) – ON
KU ANT – STO
(A1U)
KU BD PWR – ON
(R14:C)
cb MNB KU ELEC – cl

(1) Drive Time
Single mtr – 46 sec
Dual mtr – 23 sec

(2) KU-BAND CCTV overlay located in Middeck Transparency Kit

(3) If limit sw mechanism failed in deploy position, MECH SSR-7 reqd for subsequent deploy ops

(4) If Boom Stow Enable signal failure, MECH SSR-5 reqd for stow ops

(5) Antenna jettison may be reqd; KU-BD ANT JETTISON (ORB OPS)

(6) KU-BAND ANTENNA CONTINGENCY DEPLOY/STOW - FAILED DEPLOY/STOW SW (IFM) may be reqd

(7) KU BD PWR must be turned off prior to taking KU ANT – GND to prevent gimbal locking pins from retracting

MECH

9.3c KU ANT GIMBAL ANGLES INCORRECT AFTER 50 SEC

KU ANT Gimbal Movement within 50 Sec and/or Gimbal Angles Incorrect after 50 Sec

Nominal Config:
(MA73C:A)
MCA LOGIC
MNC MID 2 – ON
(MA73C:B)
MCA LOGIC
MNB MID 4 – ON
(MA73C:C)
cb MCA PWR
AC3 3Φ MID 2 – cl
(MA73C:D)
cb MCA PWR
AC2 3Φ MID 4 – cl
(R13L)
PL BAY MECH PWR SYS (two) – OFF
KU ANT – STO
(A1U)
KU PWR – ON
(R14:C)
cb MNB KU ELEC – cl

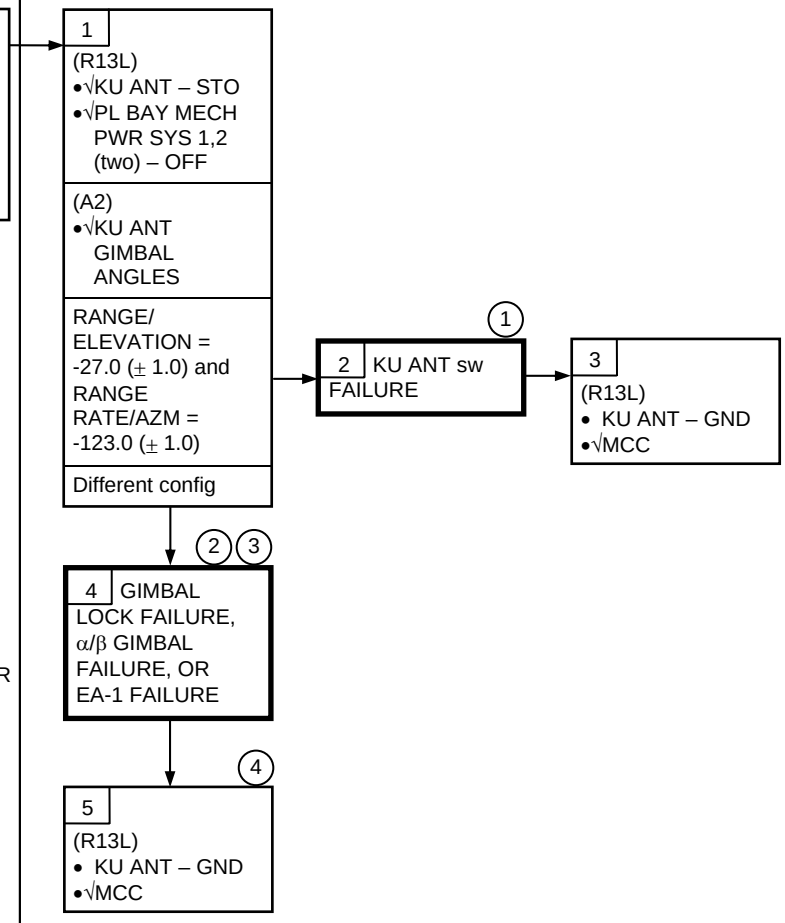

(1) KU-BAND ANTENNA CONTINGENCY DEPLOY/STOW – FAILED DEPLOY/STOW SWITCH (IFM) may be reqd

(2) If α/β GIMBAL FAILURE, KU-BAND ANTENNA CONTINGENCY STOW W/EVA ANTENNA GIMBAL ALIGNMENT (IFM) may be reqd

(3) If EA-1 FAILURE, KU-BAND ANTENNA: CONTINGENCY STOW – EA1 ALTERNATE PWR (IFM) may be reqd

(4) Selecting GND will allow ant to assume safe config

This Page Intentionally Blank

MECH

9.4a ROEU DEMATE – tb NOT REL, MICROSW IND NOT NOMINAL, OR SINGLE MTR DRIVE TIME

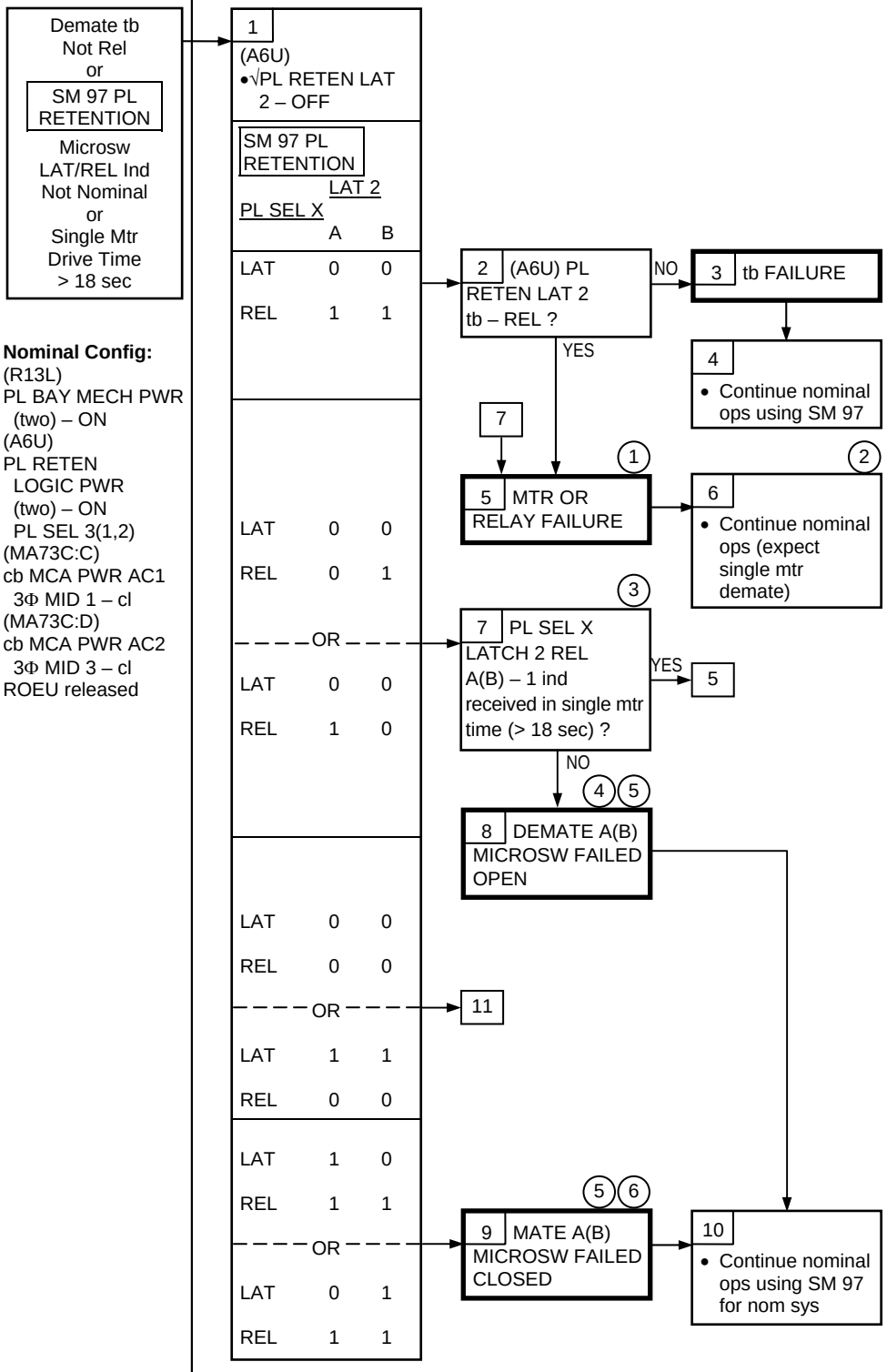

Nominal Config:
(R13L)
PL BAY MECH PWR
(two) – ON
(A6U)
PL RETEN
LOGIC PWR
(two) – ON
PL SEL 3(1,2)
(MA73C:C)
cb MCA PWR AC1
3Φ MID 1 – cl
(MA73C:D)
cb MCA PWR AC2
3Φ MID 3 – cl
ROEU released

(1) MCC can determine which condition exists

(2) Expect single mtr mate/demate/ relax for mtr failure

(3) If PL SEL X LATCH 2 REL A(B) – 1 ind received in single mtr time, microsw misrigged

(4) One mtr will continue to drive while demating until PL RETEN LAT 2 sw turned OFF

(5) If SYS A Microsw failed, tb will be inaccurate

(6) Expect single mtr drive time for mate

MECH 9.4a (Cont)

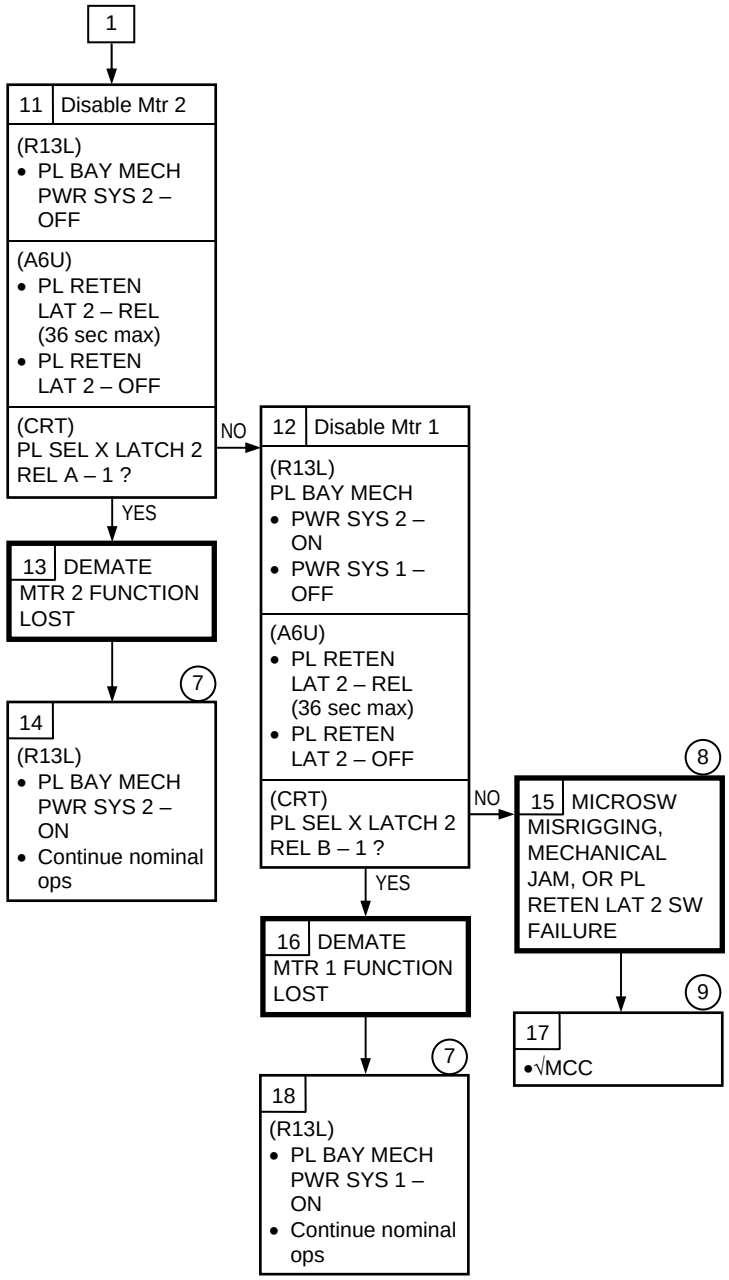

(7) One mtr Φ lost. Good mtr will backdrive failed mtr. Subsequent mate, relax, and demate ops will be performed on single mtr. Good mtr will be isolated by turning PL BAY MECH PWR OFF for failed system

(8) EVA capability exists to perform ROEU demate

(9) MCC can determine if switch is failed

MECH

9.4b ROEU MATE – tb NOT LAT, IND NOT NOMINAL, OR SINGLE MTR DRIVE TIME

Mate tb Not Lat
or
SM 97 PL RETENTION
Microsw LAT/REL Ind Not Nominal
or
Single Mtr Drive Time > 30 sec
or
Not Visually R-F-L

Nominal Config:
(R13L)
PL BAY MECH PWR (two) – ON
(A6U)
PL RETEN LOGIC PWR (two) – ON
PL SEL 3(1,2)
(MA73C:C)
cb MCA PWR AC1 3Φ MID 1 – cl
(MA73C:D)
cb MCA PWR AC2 3Φ MID 3 – cl

1
(A6U)
•√PL RETEN LAT 2 – OFF

SM 97 PL RETENTION

PL SEL X	LAT 2 A	LAT 2 B
LAT	1	1
REL	0	0
LAT	0	1
REL	0	0
OR		
LAT	1	0
REL	0	0
LAT	0	0
REL	0	0
OR		
LAT	0	0
REL	1	1
LAT	1	1
REL	1	0
OR		
LAT	1	1
REL	0	1

2 (A6U) PL RETEN LAT 2 tb – LAT ?
NO → **3** tb FAILURE
YES →

4
• Continue nominal ops using SM 97

5 ODA visually in R-F-L envelope ?
NO → **6** NUMEROUS POSSIBLE MECH SYSTEM FAILURES
YES → **9**

7
•√MCC

8 PL SEL X LATCH 2 LAT A(B) – 1 ind received in single mtr time (> 30 sec) ?
(1)
YES → **9** MTR OR RELAY FAILURE
(5) (2) (1)
NO →

10
• Continue nominal ops (expect single mtr mate)

14 → **11** MATE A(B) MICROSW FAILED OPEN
(3) (4)

12 DEMATE A(B) MICROSW FAILED CLOSE
(4) (5)

13
• Continue nominal ops using SM 97 for nom sys

(1) If PL SEL X LATCH 2 LAT A(B) – 1 ind received in single mtr time, microsw misrigged

(2) MCC can determine which condition exists

(3) One mtr will continue to drive while mating until PL RETEN LAT 2 sw turned OFF

(4) If SYS A Microsw failed, tb will be inaccurate

(5) Expect single mtr drive time for demate

MECH 9.4b (Cont)

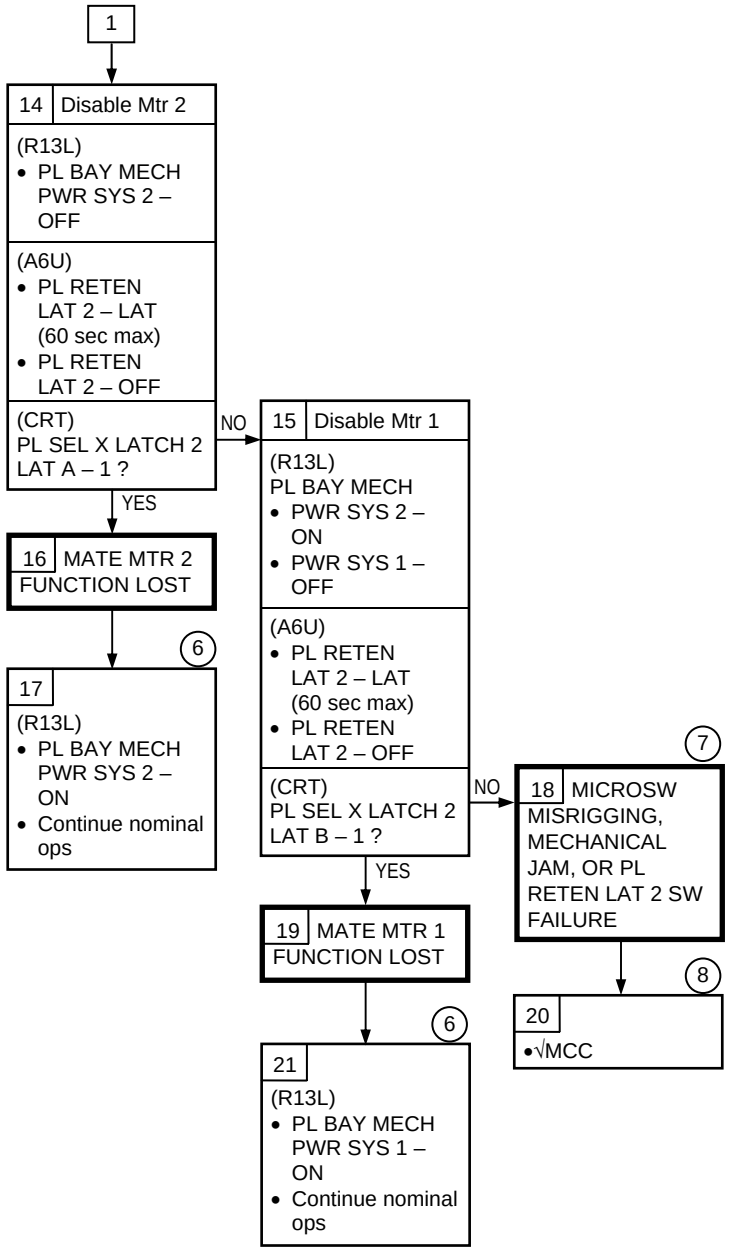

(6) One mtr Φ lost. Good mtr will backdrive failed mtr. Subsequent mate, relax, and demate ops will be performed on single mtr. Good mtr will be isolated by turning PL BAY MECH PWR OFF for failed system

(7) EVA capability exists to perform ROEU demate

(8) MCC can determine if switch is failed

MECH

9.4c ROEU RELEASE – tb NOT REL, IND NOT NOMINAL, OR SINGLE MTR DRIVE TIME

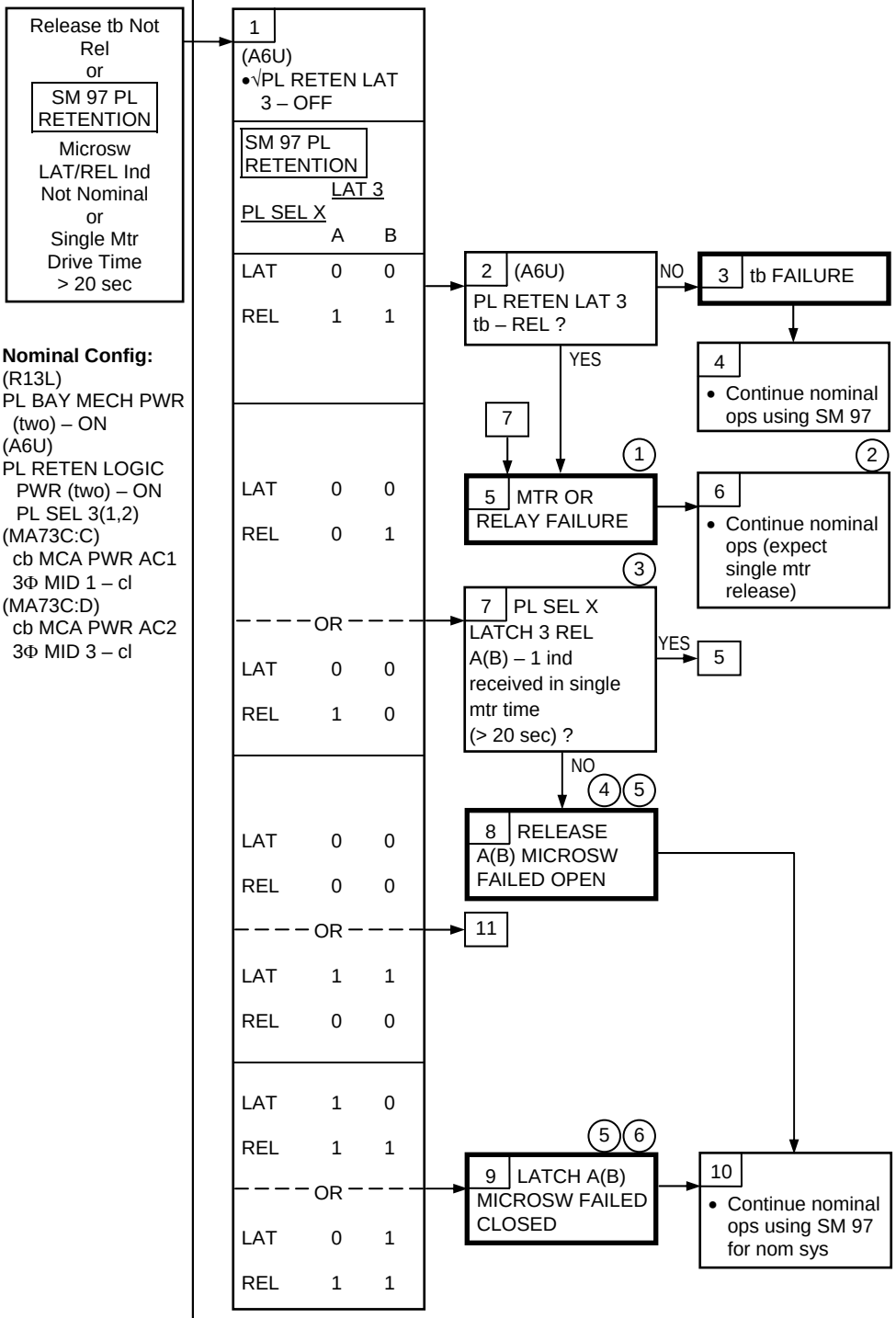

Nominal Config:
(R13L)
PL BAY MECH PWR (two) – ON
(A6U)
PL RETEN LOGIC PWR (two) – ON
PL SEL 3(1,2)
(MA73C:C)
cb MCA PWR AC1 3Φ MID 1 – cl
(MA73C:D)
cb MCA PWR AC2 3Φ MID 3 – cl

(1) MCC can determine which condition exists

(2) Expect single mtr latch/release for mtr failure

(3) If PL SEL X LATCH 3 REL A(B) – 1 ind received in single mtr time, microsw misrigged

(4) One mtr will continue to drive while releasing until PL RETEN LAT 3 sw turned OFF

(5) If SYS A Microsw failed, tb will be inaccurate

(6) Expect single mtr drive time for latch

MECH 9.4c (Cont)

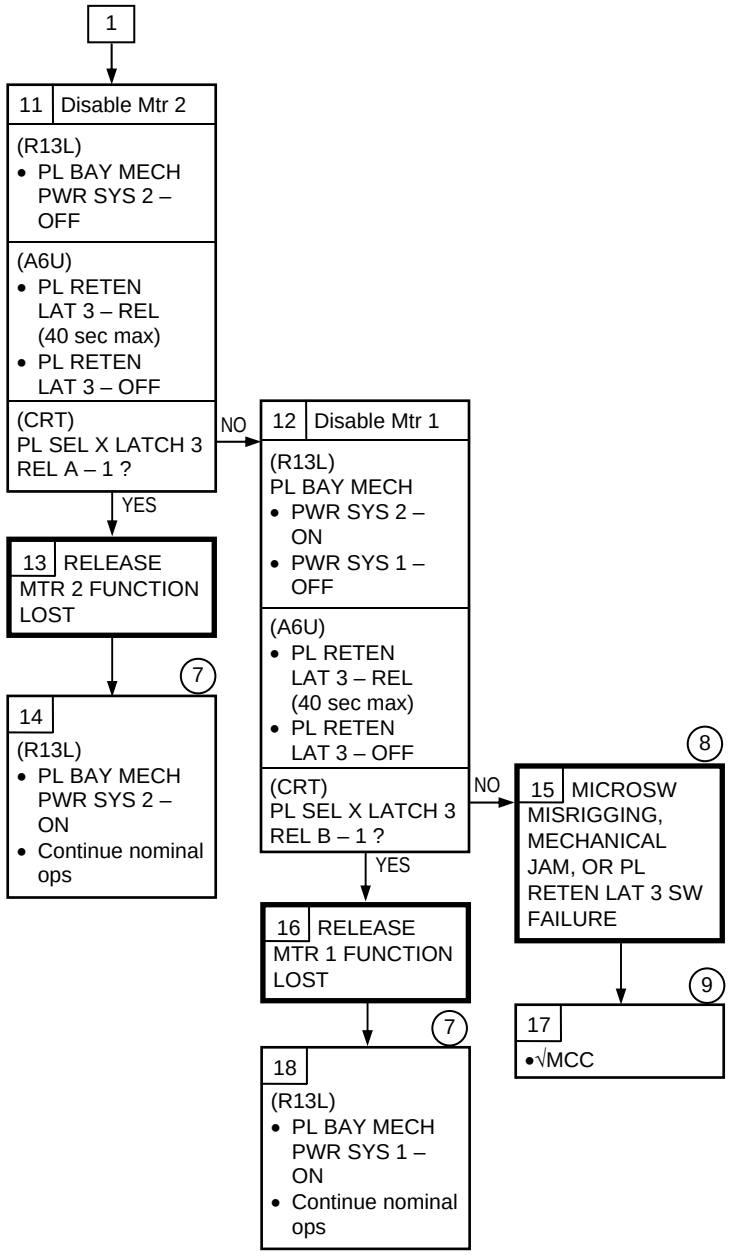

(7) One mtr Φ lost. Good mtr will backdrive failed mtr. Subsequent release and latch ops will be performed on single mtr. Good mtr will be isolated by turning PL BAY MECH PWR OFF for failed system

(8) EVA capability exists to perform ROEU releaseE

(9) MCC can determine if switch is failed

MECH

9.4d ROEU LATCH – tb NOT LAT, IND NOT NOMINAL, OR SINGLE MTR DRIVE TIME

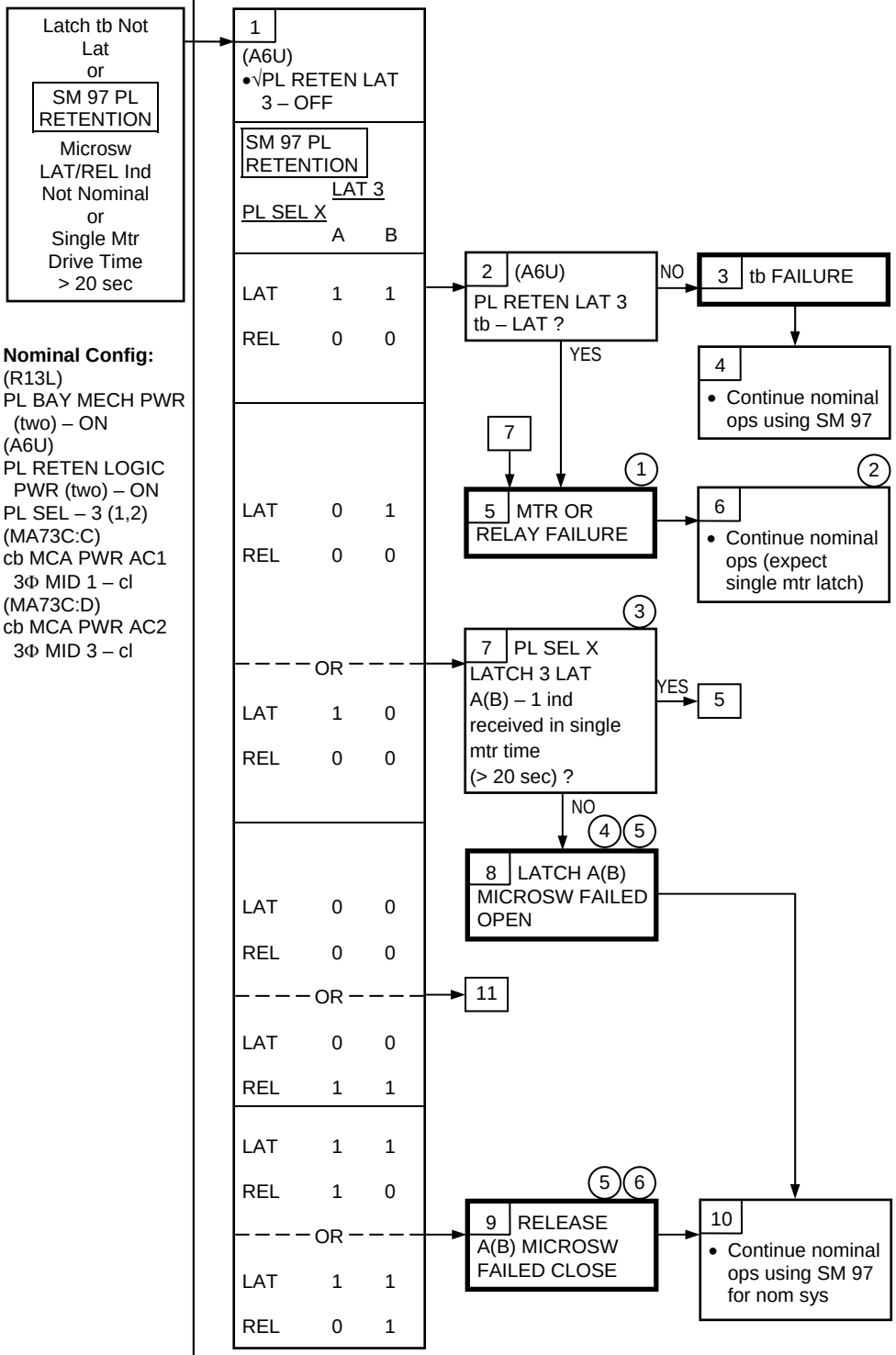

(1) MCC can determine which condition exists

(2) Expect single mtr latch/release for mtr failure

(3) If PL SEL X LATCH 3 LAT A(B) – 1 ind received in single mtr time, microsw misrigged

(4) One mtr will continue to drive while latching until PL RETEN LAT 3 sw turned OFF

(5) If SYS A Microsw failed, tb will be inaccurate

(6) Expect single mtr drive time for release/latch

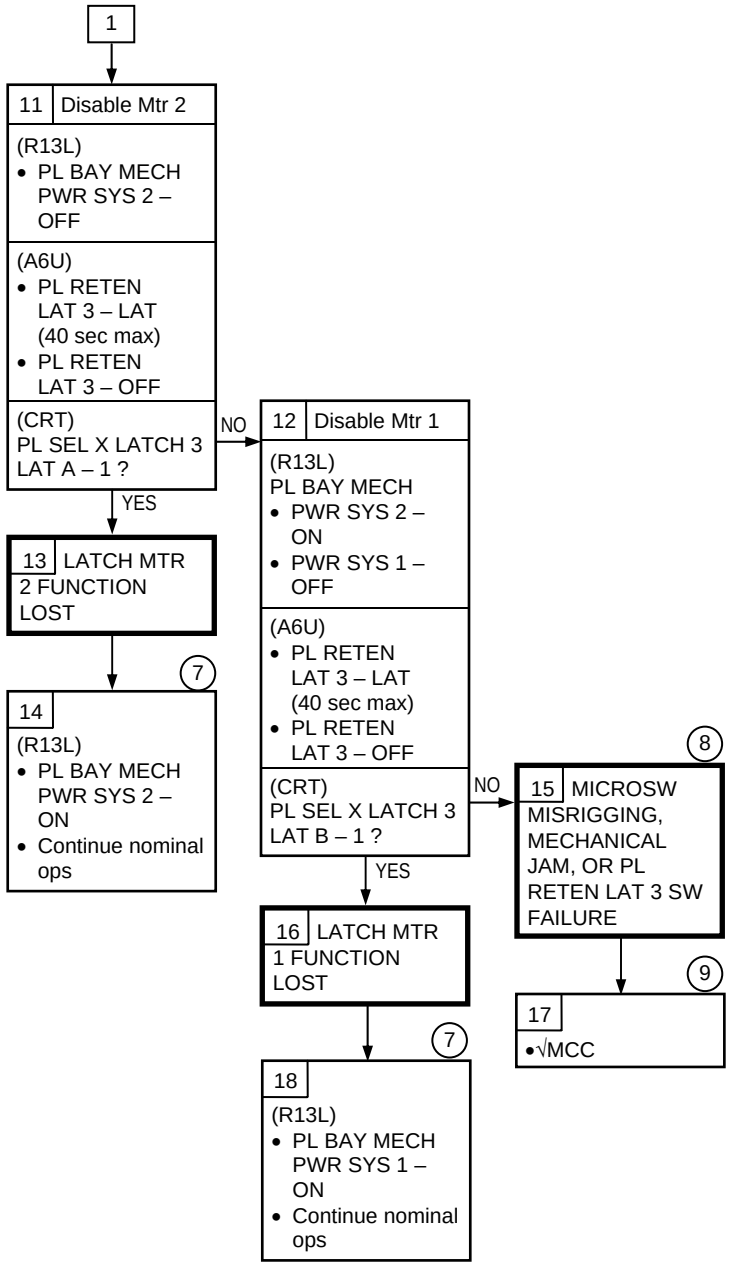

(7) One mtr Φ lost. Good mtr will backdrive failed mtr. Subsequent release and latch ops will be performed on single mtr. Good mtr will be isolated by turning PL BAY MECH PWR OFF for failed system

(8) EVA capability exists to perform ROEU latch

(9) MCC can determine if switch is failed

MECH

9.4e ROEU RELAX – tb NOT NOMINAL, IND NOT NOMINAL, OR SINGLE MTR DRIVE TIME

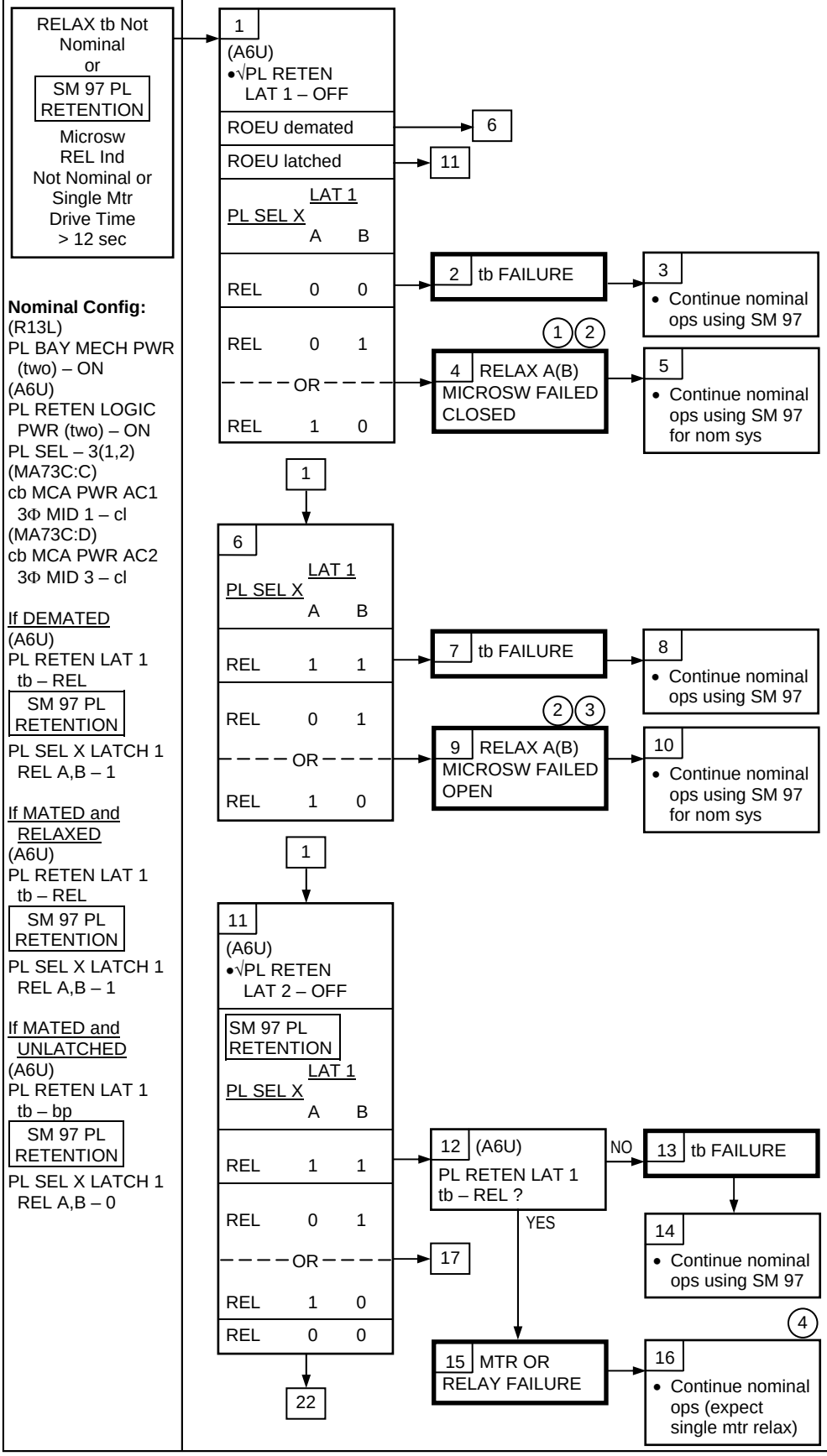

Nominal Config:
(R13L)
PL BAY MECH PWR (two) – ON
(A6U)
PL RETEN LOGIC PWR (two) – ON
PL SEL – 3(1,2)
(MA73C:C)
cb MCA PWR AC1 3Φ MID 1 – cl
(MA73C:D)
cb MCA PWR AC2 3Φ MID 3 – cl

<u>If DEMATED</u>
(A6U)
PL RETEN LAT 1 tb – REL
SM 97 PL RETENTION
PL SEL X LATCH 1 REL A,B – 1

<u>If MATED and RELAXED</u>
(A6U)
PL RETEN LAT 1 tb – REL
SM 97 PL RETENTION
PL SEL X LATCH 1 REL A,B – 1

<u>If MATED and UNLATCHED</u>
(A6U)
PL RETEN LAT 1 tb – bp
SM 97 PL RETENTION
PL SEL X LATCH 1 REL A,B – 0

(1) Expect single mtr drive time for relax

(2) If SYS A Microsw failed, tb will be inaccurate

(3) One mtr will continue to drive while relaxing until PL RETEN LAT 1 sw turned OFF

(4) MCC can determine which condition exists. If mtr failure, demate, mate and relax will be single mtr time

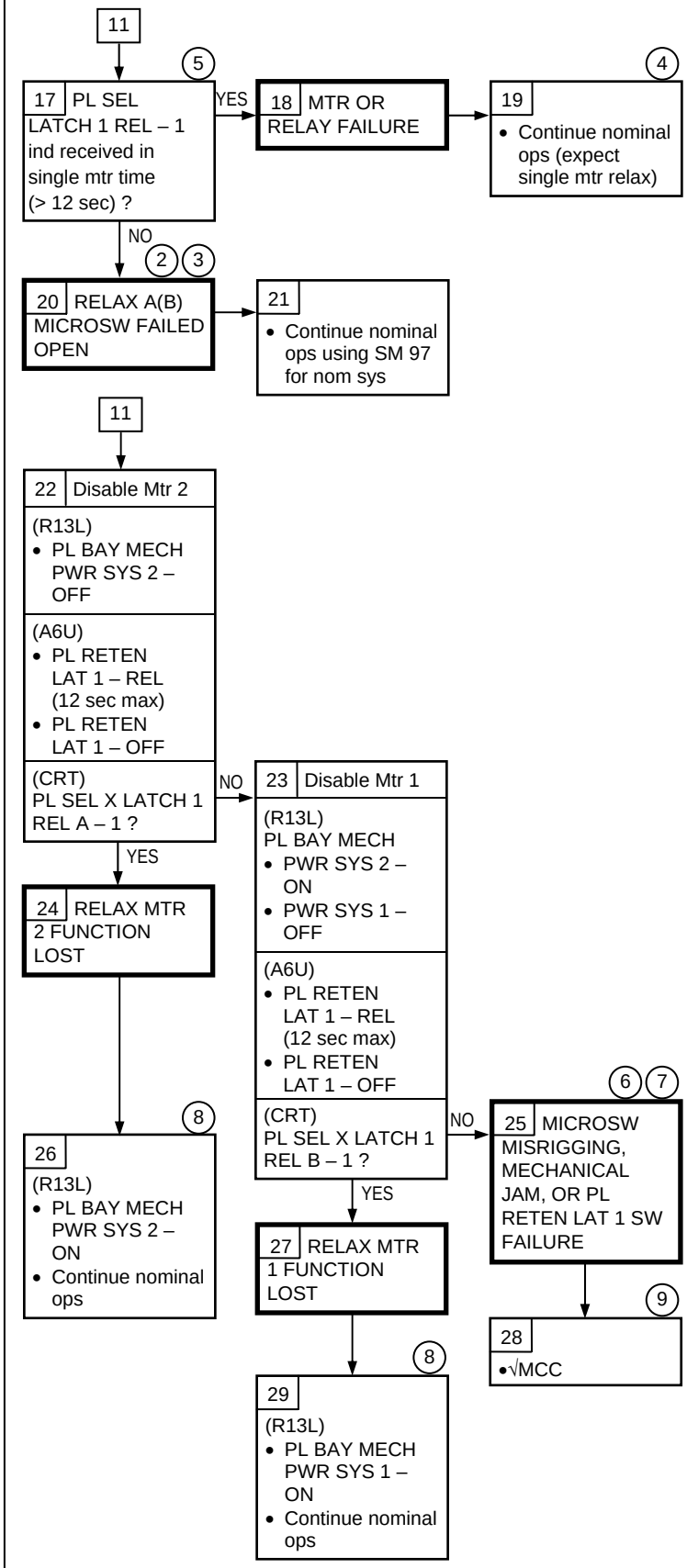

(2) If SYS A Microsw failed, tb will be inaccurate

(3) One mtr will continue to drive while relaxing until PL RETEN LAT 1 sw turned OFF

(4) MCC can determine which condition exists. If MTR failure, demate, mate and relax will be single mtr time

(5) If PL SEL LATCH 1 REL – 1 ind received in single mtr time, microsw misrigged

(6) EVA capability exists to perform ROEU relax

(7) PL RETEN LAT 2 sw to demate may be used to relax ROEU. MCC will explain implementation

(8) Subsequent mate, relax, and demate ops will be performed on single mtr. Good mtr will be isolated by turning PL BAY MECH PWR OFF for failed system

(9) MCC can determine if switch is failed

MECH

9.4f ROEU ELEC CONT – tb NOT NOMINAL OR IND NOT NOMINAL

ELEC CONT tb Not Nominal
or
SM 97 PL RETENTION
RDY Ind Not Nominal

Nominal Config:
(R13L)
PL BAY MECH PWR (two) – ON
(A6U)
PL RETEN LOGIC PWR (two) – ON
PL SEL – 3(1,2)
(MA73C:C)
cb MCA PWR AC1 3Φ MID 1 – cl
(MA73C:D)
cb MCA PWR AC2 3Φ MID 3 – cl

If LATCHED
(A6U)
PL RETEN RDY 1 tb – gray
SM 97 PL RETENTION
PL SEL X LATCH 3 RDY A,B – 1

If UNLATCHED
(A6U)
PL RETEN RDY 1 tb – bp
SM 97 PL RETENTION
PL SEL X LATCH 3 RDY A,B – 0

1
(A6U)
•√PL RETEN LAT 3 – OFF

SM 97 PL RETENTION

PL SEL X	LAT 3 A	LAT 3 B	
RDY	1	1	→ 2 tb FAILED bp → 3 • Continue nominal ops using SM 97
LAT	1	1	
REL	0	0	
RDY	0	1	
LAT	1	1	
REL	0	0	
OR			→ 4 ELECTRICAL CONTINUITY A(B) CIRCUIT/IND FAILED OPEN (1) → 6 • Continue nominal ops using SM 97 for nom sys
RDY	1	0	
LAT	1	1	
REL	0	0	
RDY	0	1	
LAT	0	0	
REL	1	1	
OR			→ 5 ELECTRICAL CONTINUITY A(B) CIRCUIT/IND FAILED CLOSED (1) → 6 • Continue nominal ops using SM 97 for nom sys
RDY	1	0	
LAT	0	0	
REL	1	1	
RDY	0	0	→ 7 tb FAILED GRAY → 8 • Continue nominal ops using SM 97
LAT	0	0	
REL	1	1	

(1) If SYS A Microsw failed, tb will be inaccurate

This Page Intentionally Blank

MECH SSR-1
PORT(STBD) RAD OPS

WARNING

To preclude failures causing inadvertent MPM cycling, RMS must be cradled. This procedure assumes that the RMS (if flown) is cradled

1 Disable STBD(PORT) RAD sys

STBD Panel Disable (MA73C:D,C)
cb MCA PWR
- AC1 3Φ MID 3 – op
- AC2 3Φ MID 2 – op
- AC3 3Φ MID 2 – op

PORT Panel Disable (MA73C:C,D)
cb MCA PWR
- AC1 3Φ MID 1 – op
- AC2 3Φ MID 4 – op
- AC3 3Φ MID 4 – op

2 PORT(STBD) ops reqd:

STO

DPY

3 Stow,latch PORT(STBD) (1)

(R13L)
- PL BAY MECH PWR SYS 1,2 – ON
- RAD CNTL SYS A,B – STO
- PORT(STBD) tb – STO
- SYS A,B – OFF
- LAT CNTL SYS A,B – LAT
- RAD LAT CNTL PORT(STBD) tb – LAT
- RAD LAT CNTL SYS A,B – OFF
- PL BAY MECH PWR SYS 1,2 – OFF

4 Release,deploy PORT(STBD) RAD (1)

(R13L)
- PL BAY MECH PWR SYS 1,2 – ON
- RAD LAT CNTL SYS A,B – REL
- RAD LAT CNTL PORT(STBD) tb – REL
- RAD LAT CNTL SYS A,B – OFF
- RAD CNTL SYS A,B – DPY
- RAD CNTL PORT(STBD) tb – DPY
- RAD CNTL SYS A,B – OFF
- PL BAY MECH PWR SYS 1,2 – OFF

5 Enable STBD(PORT) RAD sys

STBD
(MA73C:D,C)
cb MCA PWR
- AC1 3Φ MID 3 – cl
- AC2 3Φ MID 2 – cl
- AC3 3Φ MID 2 – cl

PORT
(MA73C:C,D)
cb MCA PWR
- AC1 3Φ MID 1 – cl
- AC2 3Φ MID 4 – cl
- AC3 3Φ MID 4 – cl

(1) PDU Actuator Times Normal (2 mtr)
Lat – 30 sec
Rad – 50 sec
Single Mtr
Lat – 60 sec
Rad – 100 sec

MECH SSR-2
CONTINGENCY PLBD CLOSURE

NOTE
This procedure assumes that the door has jammed from orbiter thermal warpage or debris

1 Configuration check

SM (BFS SM 63) PL BAY DOORS
- Deselect all 'MAN SEL' items
- √'OP/CL' column

Are PORT(STBD) FWD,AFT LATCHES (two) – 'OP' ?

NO → **2** Open bulkhead latch gangs

(CRT)
Select PORT(STBD) FWD,AFT LATCHES
- ITEM 11(8) EXEC (*)
- ITEM 12(9) EXEC (*)

(CRT, R13L)
- PL BAY DR – OP
- √PORT(STBD) FWD,AFT LATCHES (two) – blank, OP (~6 sec)
- PL BAY DR – STOP

(CRT)
Deselect PORT(STBD) FWD,AFT LATCHES
- ITEM 11(8) EXEC (no *)
- ITEM 12(9) EXEC (no *)

→ 3

YES → 2

3 Check for debris

(CRT)
Select PORT(STBD) DOOR
- ITEM 13(10) EXEC (*)

(R13L)
- PL BAY DR – OP (10 sec)
- – STOP
- Visually check area for obstruction. If cause of jam found, √MCC before proceeding
- PL BAY DR – CL ('RDY' + 6 sec)
- – STOP

1 2

4 Recheck for jam condition

(CRT)
- √'OP/CL' column and visually inspect door

Is PORT(STBD) DOOR 'RDY' or 'CL' and door is not deformed ?

YES → 9 → **5**

(CRT)
Select PORT(STBD) FWD,AFT LATCHES
- ITEM 11(8) EXEC (*)
- ITEM 12(9) EXEC (*)

→ 11

NO

6
- √MCC

Does time permit one full day side pass TOP SUN SOLAR INERTIAL attitude ?

YES → **7** Open door, complete one day side pass TOP SUN SOLAR INERTIAL attitude, and close door

(R13L)
- PL BAY DR – OP (~63 sec)
- – STOP
- Complete TOP SUN SOLAR INERTIAL pass, then at sunset:
- PL BAY DR – CL (~63 sec)
- – STOP

NO → 9

8 Partially close bulkhead latch gangs and door

(CRT)
Select PORT(STBD) FWD,AFT LATCHES
- ITEM 11(8) EXEC (*)
- ITEM 12(9) EXEC (*)

(R13L)
- PL BAY DR – CL (15 sec)
- – STOP

→ 10

1 2

9 Recheck for jam condition

(CRT)
- √'OP/CL' column and visually inspect door

Is PORT(STBD) DOOR 'RDY' or 'CL' and door is not deformed ?

NO → 8

YES → 5

(1) Aft bulkhead target line can be used to verify port aft door configuration (See Fig. 9-1, PORT AFT BULKHEAD LATCH GO/NO-GO DIAGRAM)

(2) Observe aft centerline for deflection (See Fig. 9-2, PORT AFT CENTERLINE VIEWED BY CAMERA C)

MECH SSR-2 (Cont)

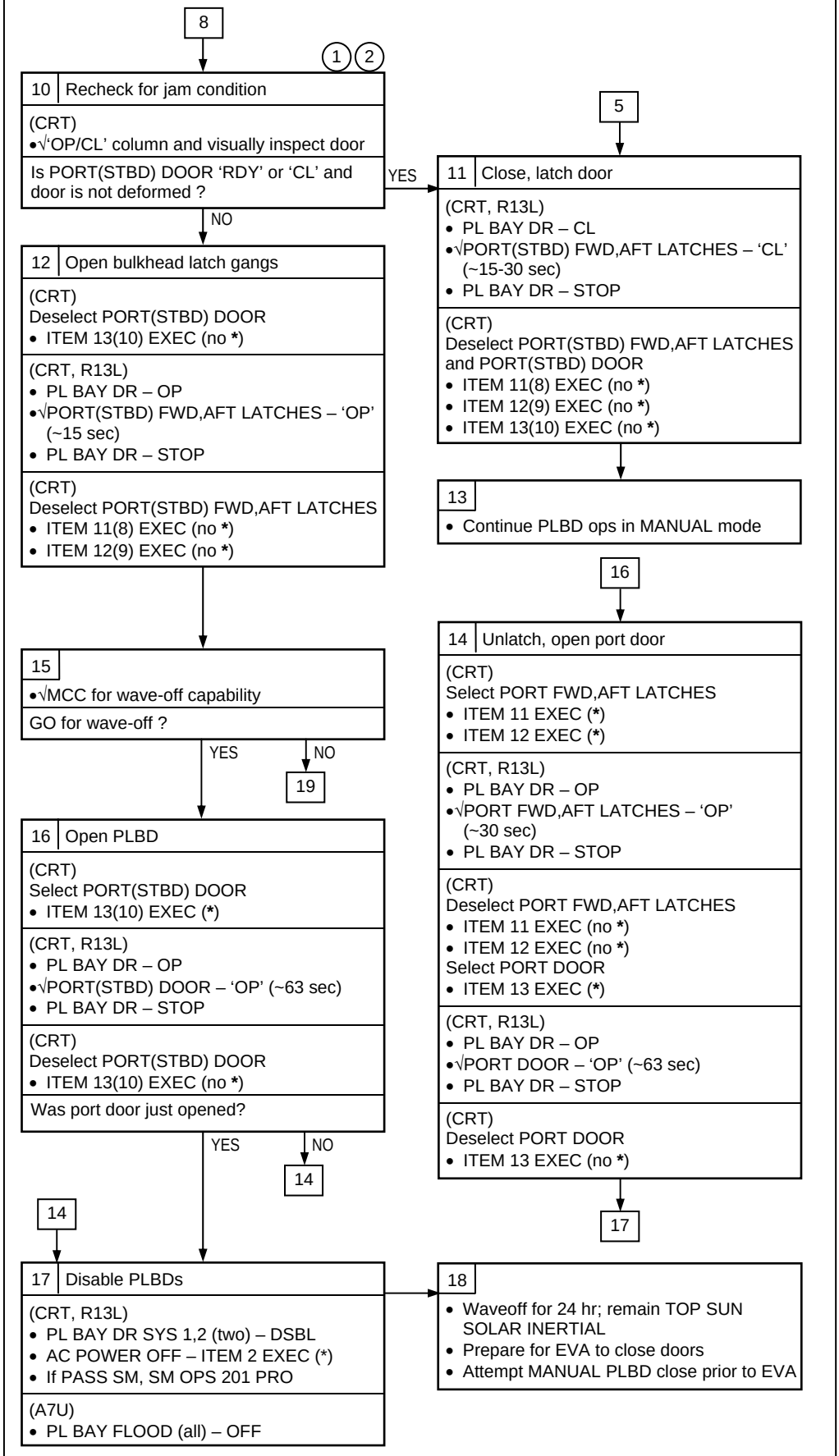

(1) Aft bulkhead target line can be used to verify port aft door configuration (See Fig. 9-1, PORT AFT BULKHEAD LATCH GO/NO-GO DIAGRAM)

(2) Observe aft centerline for deflection (See Fig. 9-2, PORT AFT CENTERLINE VIEWED BY CAMERA C)

MECH SSR-2 (Cont)

15

CAUTION

The following steps risk damaging PLBD structure as maximum latching force is used to close doors

19 Problem appears to be at:

- Forward bulkhead
- Aft bulkhead

21 Close aft bulkhead latch gang and door

(CRT, R13L)
Select PORT(STBD) AFT LATCHES, PORT(SBTD) DOOR
- ITEM 12(9) EXEC (*)
- ITEM 13(10) EXEC (*)
- PL BAY DR – CL
- √PORT(STBD) AFT LATCHES – blank, 'CL' (~30 sec)
- PL BAY DR – STOP

1 2

23 Recheck for jam condition

(CRT)
- √'OP/CL' column and visually inspect door

Is PORT(STBD) DOOR 'RDY' or 'CL' and door is not deformed ?

YES

NO → 27

25 Close forward bulkhead latch gang and door

(CRT)
Deselect PORT(STBD) AFT LATCHES, select PORT(STBD) FWD LATCHES
- ITEM 12(9) EXEC (no *)
- ITEM 11(8) EXEC (*)

(CRT, R13L)
Close PORT(STBD) FWD LATCHES, PORT(STBD) DOOR
- PL BAY DR – CL
- √PORT(STBD) FWD LATCHES – blank, 'CL' (~30 sec)
- PL BAY DR – STOP

(CRT)
Deselect PORT(STBD) FWD LATCHES, PORT(STBD) DOOR
- ITEM 11(8) EXEC (no *)
- ITEM 13(10) EXEC (no *)

20 Close forward bulkhead latch gang and door

(CRT, R13L)
Select PORT(STBD) FWD LATCHES, PORT(STBD) DOOR
- ITEM 11(8) EXEC (*)
- ITEM 13(10) EXEC (*)
- PL BAY DR – CL
- √PORT(STBD) FWD LATCHES – blank, 'CL' (~30 sec)
- PL BAY DR – STOP

1 2

22 Recheck for jam condition

(CRT)
- √'OP/CL' column and visually inspect door

Is PORT(STBD) DOOR 'RDY' or 'CL' and door is not deformed ?

YES

NO → 28

24 Close aft bulkhead latch gang and door

(CRT)
Deselect PORT(STBD) FWD LATCHES, select PORT(STBD) AFT LATCHES
- ITEM 11(8) EXEC (no *)
- ITEM 12(9) EXEC (*)

(CRT, R13L)
Close PORT(STBD) AFT LATCHES, PORT(STBD) DOOR
- PL BAY DR – CL
- √PORT(STBD) AFT LATCHES – blank, 'CL' (~30 sec)
- PL BAY DR – STOP

(CRT)
Deselect PORT(STBD) AFT LATCHES, PORT(STBD) DOOR
- ITEM 12(9) EXEC (no *)
- ITEM 13(10) EXEC (no *)

26

- Continue PLBD ops in MANUAL mode

(1) Aft bulkhead target line can be used to verify port aft door configuration (See Fig. 9-1, PORT AFT BULKHEAD LATCH GO/NO-GO DIAGRAM)

(2) Observe aft centerline for deflection (See Fig. 9-2, PORT AFT CENTERLINE VIEWED BY CAMERA C)

MECH SSR-2 (Cont)

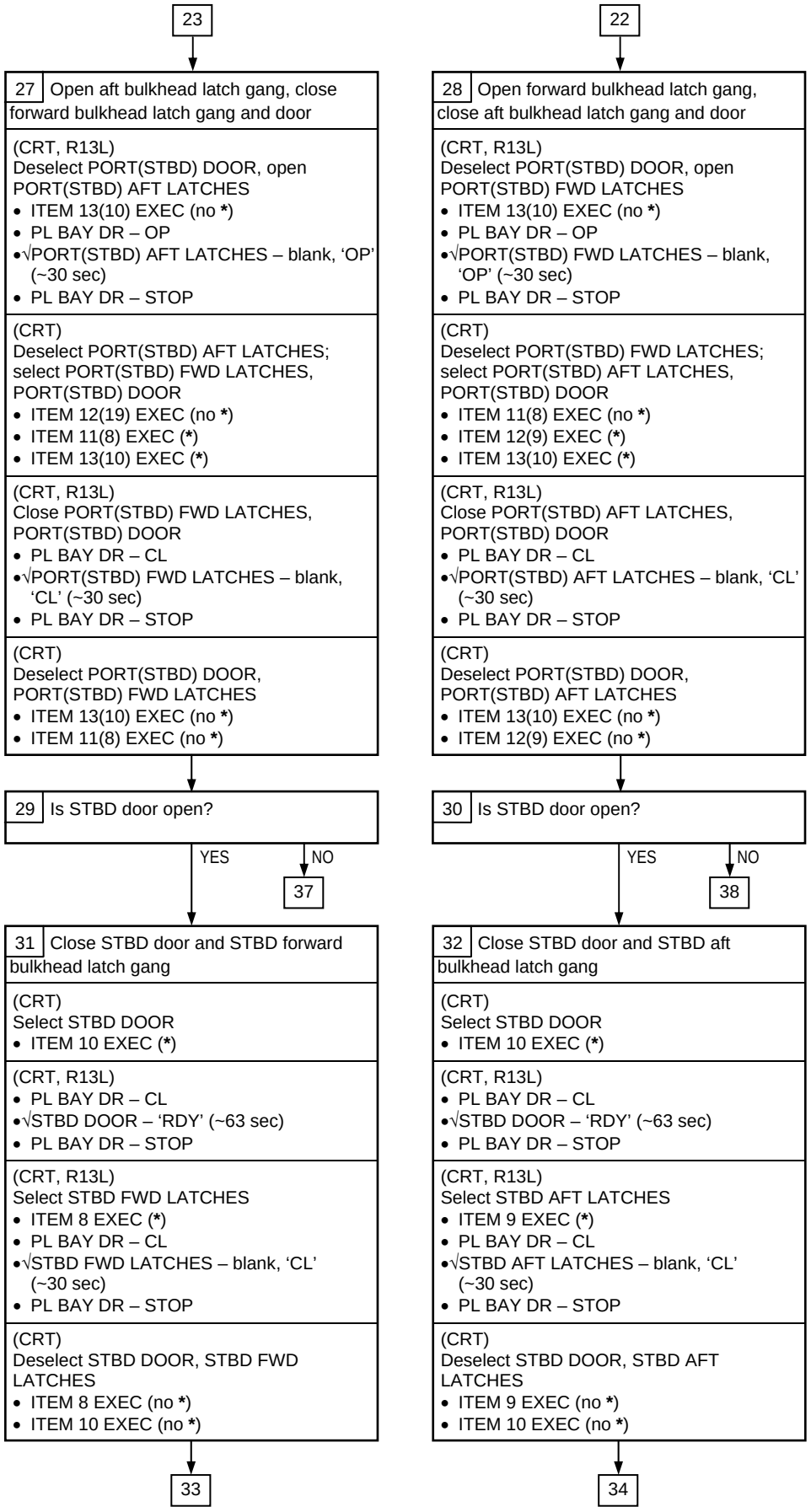

MECH SSR-2 (Cont)

31

33 Close centerline latch gangs forward to aft and both doors

(CRT)
Select PORT, STBD DOOR, CENTER LATCHES 1-4
- ITEM 13 EXEC (*****)
- ITEM 10 EXEC (*****)
- ITEM 6 EXEC (*****)

(CRT, R13L)
- PL BAY DR – CL
- √CENTER LATCHES 1-4 – blank, 'CL' (~20 sec)
- PL BAY DR – STOP

(CRT)
Deselect CENTER LATCHES 1-4
- ITEM 6 EXEC (no *****)
- Repeat closure for CENTER LATCHES 5-8, 9-12, 13-16 in order

35 Close aft bulkhead latch gangs and doors

(CRT)
Select PORT,STBD AFT LATCHES
- ITEM 12 EXEC (*****)
- ITEM 9 EXEC (*****)

(CRT, R13L)
- PL BAY DR – CL
- √PORT, STBD AFT LATCHES – blank, 'CL' (~30 sec)
- PL BAY DR – STOP

(CRT)
Deselect PORT, STBD AFT LATCHES, PORT, STBD DOOR
- ITEM 12 EXEC (no *****)
- ITEM 9 EXEC (no *****)
- ITEM 13 EXEC (no *****)
- ITEM 10 EXEC (no *****)

41

32

34 Close centerline latch gangs aft to forward and both doors

(CRT, R13L)
Select PORT, STBD DOOR, CENTER LATCHES 13-16
- ITEM 13 EXEC (*****)
- ITEM 10 EXEC (*****)
- ITEM 7 EXEC (*****)

(CRT, R13L)
- PL BAY DR – CL
- √CENTER LATCHES 13-16 – blank, 'CL' (~20 sec)
- PL BAY DR – STOP

(CRT)
Deselect CENTER LATCHES 13-16
- ITEM 7 EXEC (no *****)
- Repeat closure for CENTER LATCHES 9-12, 5-8, 1-4 in order

36 Close forward bulkhead latch gangs and doors

(CRT)
Select PORT,STBD FWD LATCHES
- ITEM 11 EXEC (*****)
- ITEM 8 EXEC (*****)

(CRT, R13L)
- PL BAY DR – CL
- √PORT, STBD FWD LATCHES – blank, 'CL' (~30 sec)
- PL BAY DR – STOP

(CRT)
Deselect PORT, STBD FWD LATCHES, PORT, STBD DOOR
- ITEM 11 EXEC (no *****)
- ITEM 8 EXEC (no *****)
- ITEM 13(10) EXEC (no *****)
- ITEM 10 EXEC (no *****)

41

MECH SSR-2 (Cont)

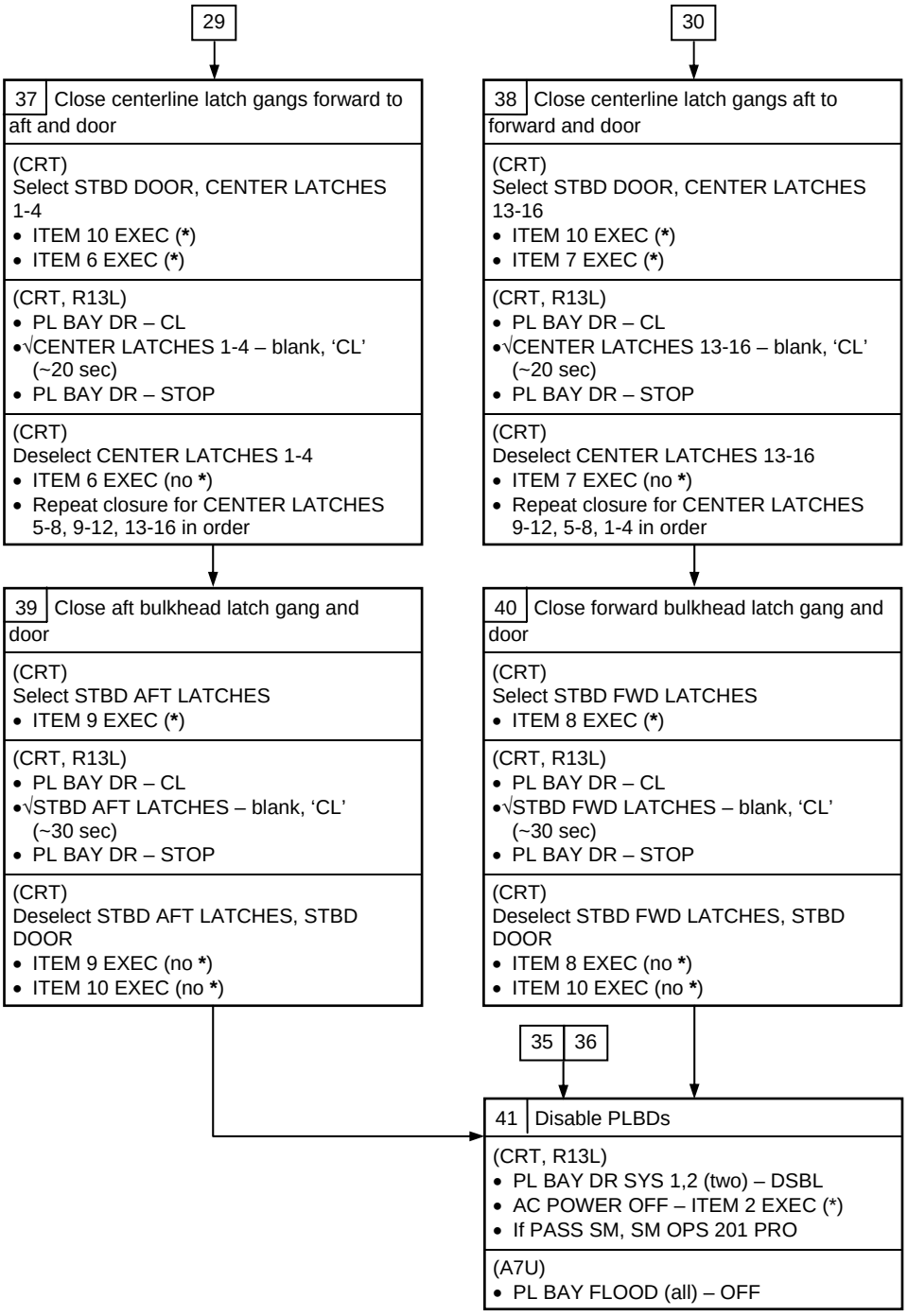

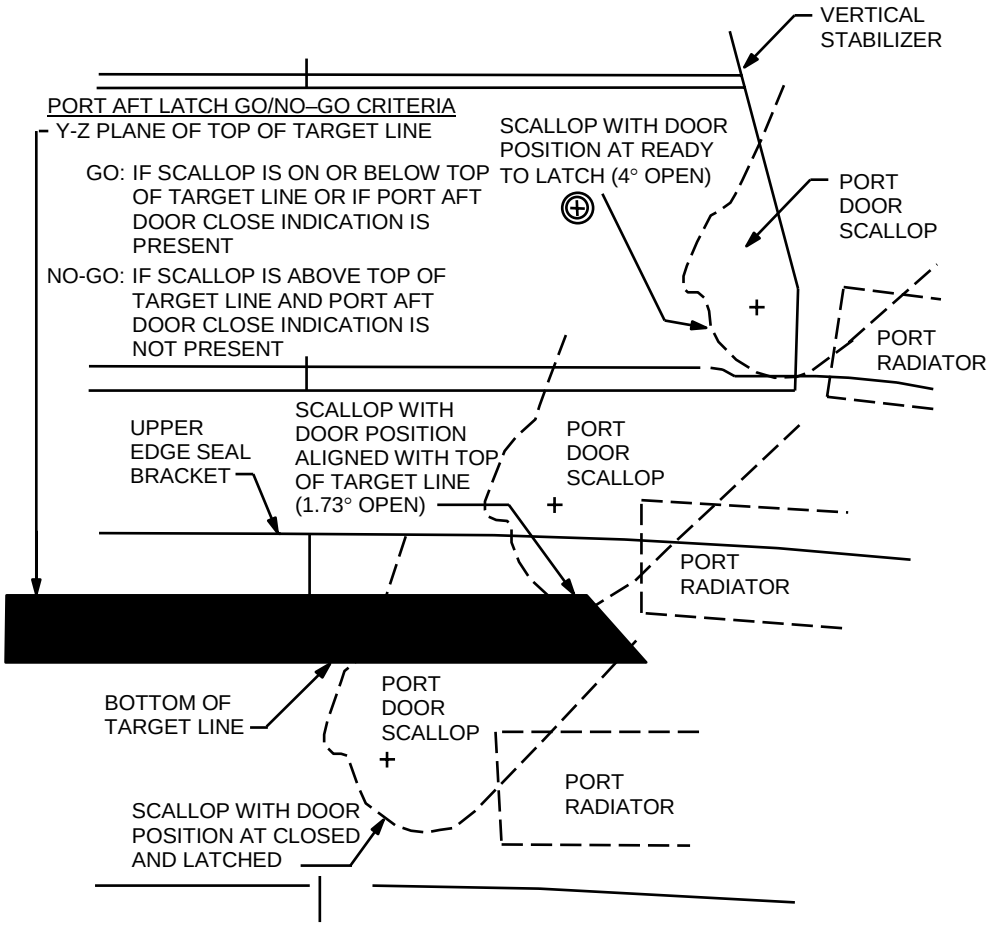

Figure 9-1.- Port aft bulkhead latch GO/NO-GO diagram.

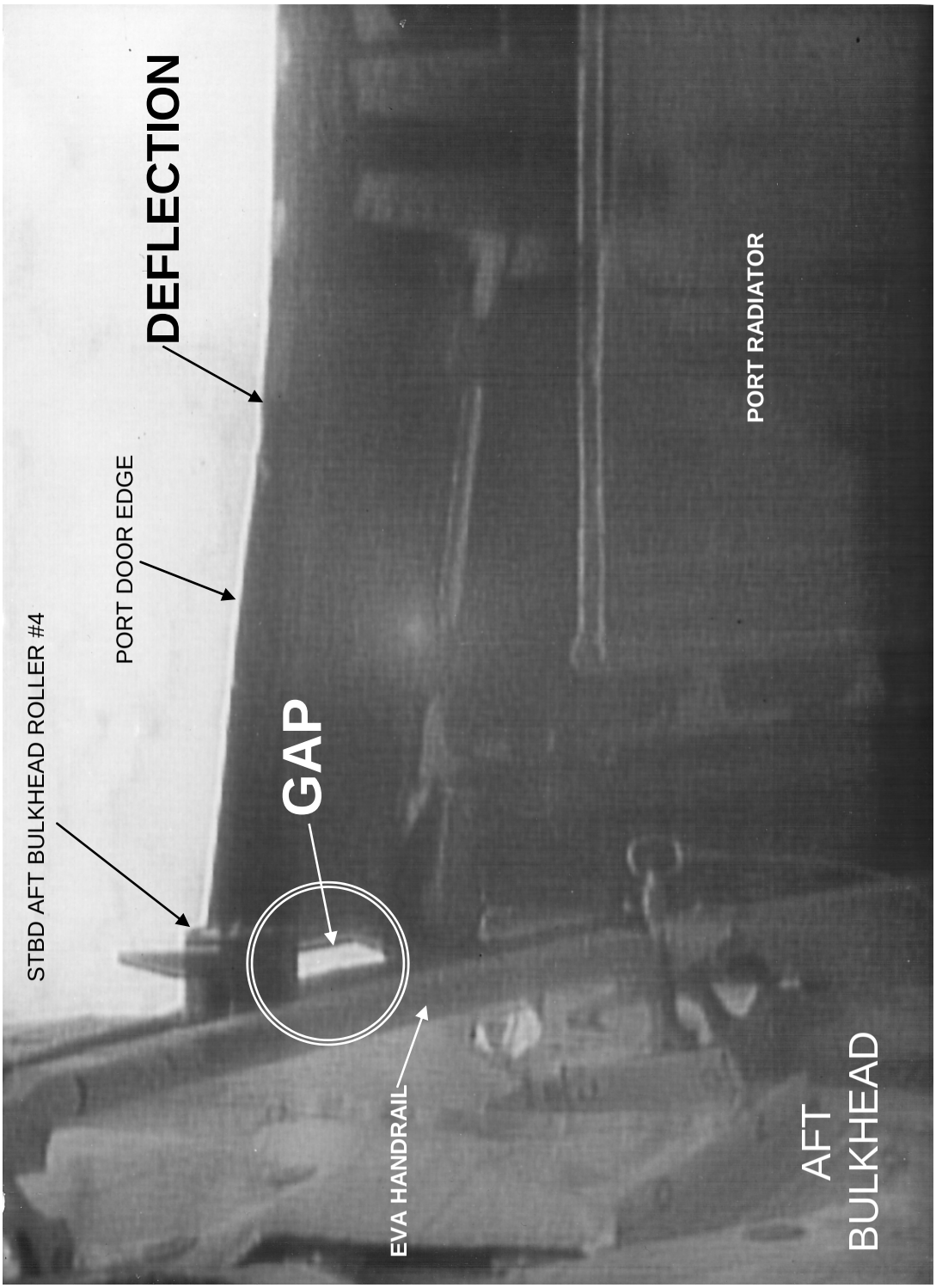

Shows worst case upwards deflection of PLBD seen on STS-4

Figure 9-2.- Port aft centerline viewed by camera C.

MECH SSR-3
SIMULTANEOUS PLBD CL

Excessive C/L Overlap Noted with PORT DOOR Closed and Latched Entry Reqd Next Opportunity

STBD DOOR extended guide roller trajectory is above point D on Fig. 9-3 C/L LATCH EXTENDED GUIDE ROLLER TRAJECTORY NO-GO DIAGRAM

1 Disable one mtr in each actuator

(R13L)
- PL BAY DR SYS 1 – DSBL

4

SM (BFS SM 63) PL BAY DOORS

Deselect 'AUTO MODE SEL'
- ITEM 3 EXEC (no *)
- √'MAN SEL' (ten) – (no *)

5 Open STBD DOOR 2-3 stripes

(CRT)
- √STBD FWD, AFT LATCHES (two) – 'OP'

Select STBD DOOR
- ITEM 10 EXEC (*)

(CRT, R13L)
- PL BAY DR – OP (~25 sec)
- √STBD DOOR – 'RDY', blank
- PL BAY DR – STOP

(CRT)
Deselect STBD DOOR:
- ITEM 10 EXEC (no *)

(2)

9 Partially Open PORT BLKHDs

(CRT)
Select PORT FWD, AFT LATCHES
- ITEM 11 EXEC (*)
- ITEM 12 EXEC (*)

(CRT, R13L)
- PL BAY DR – OP (19 sec)
- √PORT FWD, AFT LATCHES – blank
- PL BAY DR – STOP

(CRT)
Deselect PORT FWD, AFT LATCHES
- ITEM 11 EXEC (no *)
- ITEM 12 EXEC (no *)

→ 2

9

2 Close STBD DOOR until just before contact with PORT DOOR

(CRT)
Select STBD DOOR
- ITEM 10 EXEC (*)

(CRT, R13L)
- PL BAY DR – CL
- √STBD DOOR – blank, 'RDY'
- PL BAY DR – STOP

(CRT)
Deselect STBD DOOR
- ITEM 10 EXEC (no *)

6

- √C/L LATCH EXTENDED GUIDE ROLLER TRAJECTORY NO-GO DIAGRAM, fig. 9-3

NO-GO for PLBD closing ?

NO → 12

YES

8 Open STBD DOOR 2-3 stripes

(CRT)
Select STBD DOOR
- ITEM 10 EXEC (*)

(CRT, R13L)
- PL BAY DR – OP (~25 sec)
- √STBD DOOR – 'RDY', blank
- PL BAY DR – STOP

(CRT)
Deselect STBD DR
- ITEM 10 EXEC (no *)

→ 3

8

3 Open PORT BLKHDs to 'OP'

(CRT)
Select PORT FWD, AFT LATCHES
- ITEM 11 EXEC (*)
- ITEM 12 EXEC (*)

(CRT, R13L)
- PL BAY DR – OP
- √PORT FWD, AFT LATCHES (two) – blank, 'OP' (~41 sec)
- PL BAY DR – STOP

(CRT)
Deselect PORT FWD, AFT LATCHES
- ITEM 11 EXEC (no *)
- ITEM 12 EXEC (no *)

(1)

7 Close STBD DOOR until just before contact with PORT DOOR

(CRT)
Select STBD DOOR
- ITEM 10 EXEC (*)

(CRT, R13L)
- PL BAY DR – CL
- √STBD DOOR – blank
- PL BAY DR – STOP

(CRT)
Deselect STBD DOOR
- ITEM 10 EXEC (no *)
- √C/L LATCH EXTENDED GUIDE ROLLER TRAJECTORY NO-GO DIAGRAM, fig. 9-3

NO-GO for PLBD closing ?

YES → 10

NO → 12

(1) Depending on the position of the port door, STBD DOOR may show 'RDY' instead of blank

(2) Allows LATCHES to unlatch partially while remaining captured

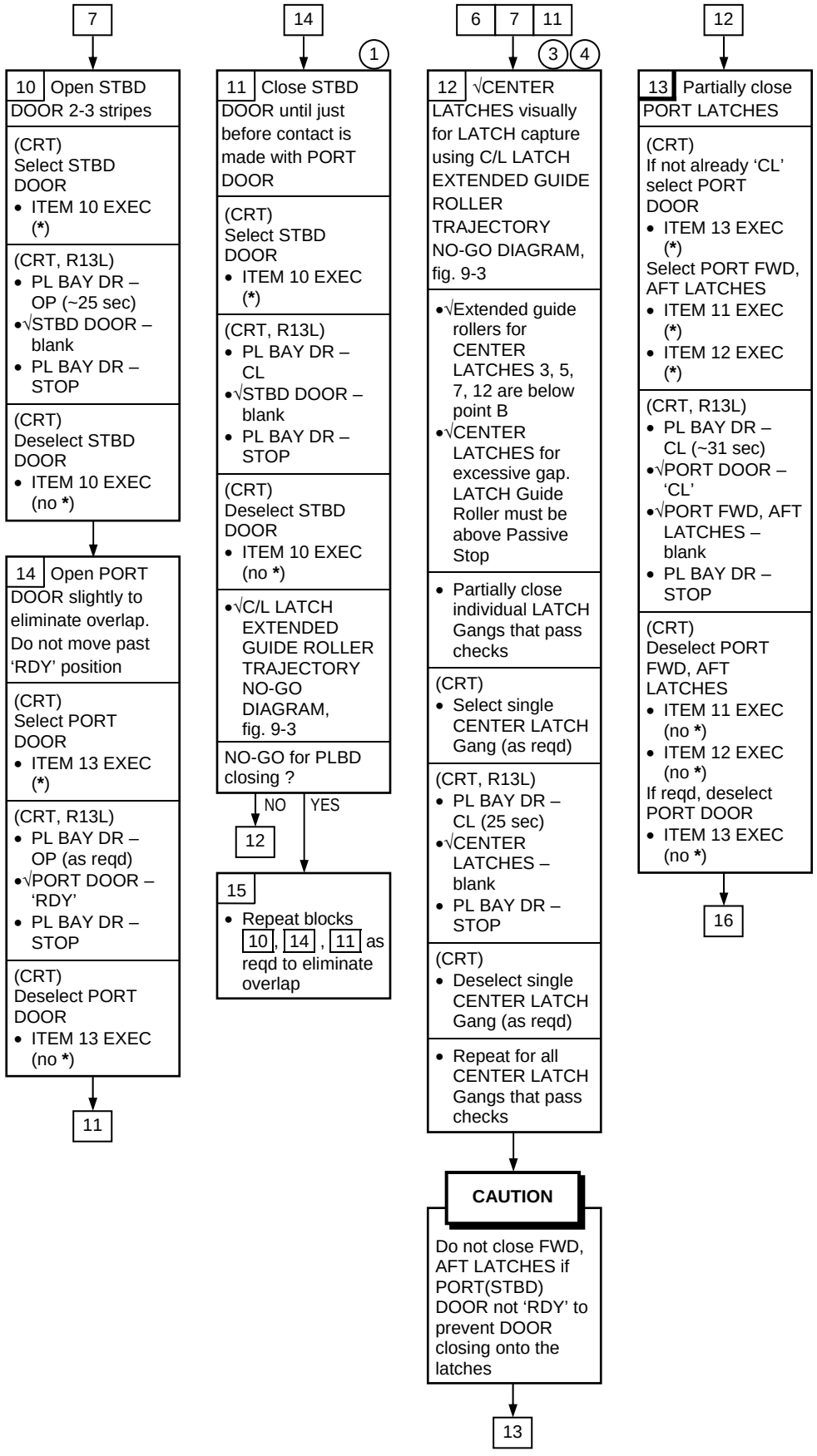

(1) Depending on the position of the port door, STBD DOOR may show 'RDY' instead of blank

(3) Allows LATCHES to latch partially

(4) The latch hangers on CENTER LATCHES 3, 5, 7, 9, and 12 are the only ones that have stripes. The stripes on 9 may not be visible due to obstruction by the passive shear roller

MECH SSR-3 (Cont)

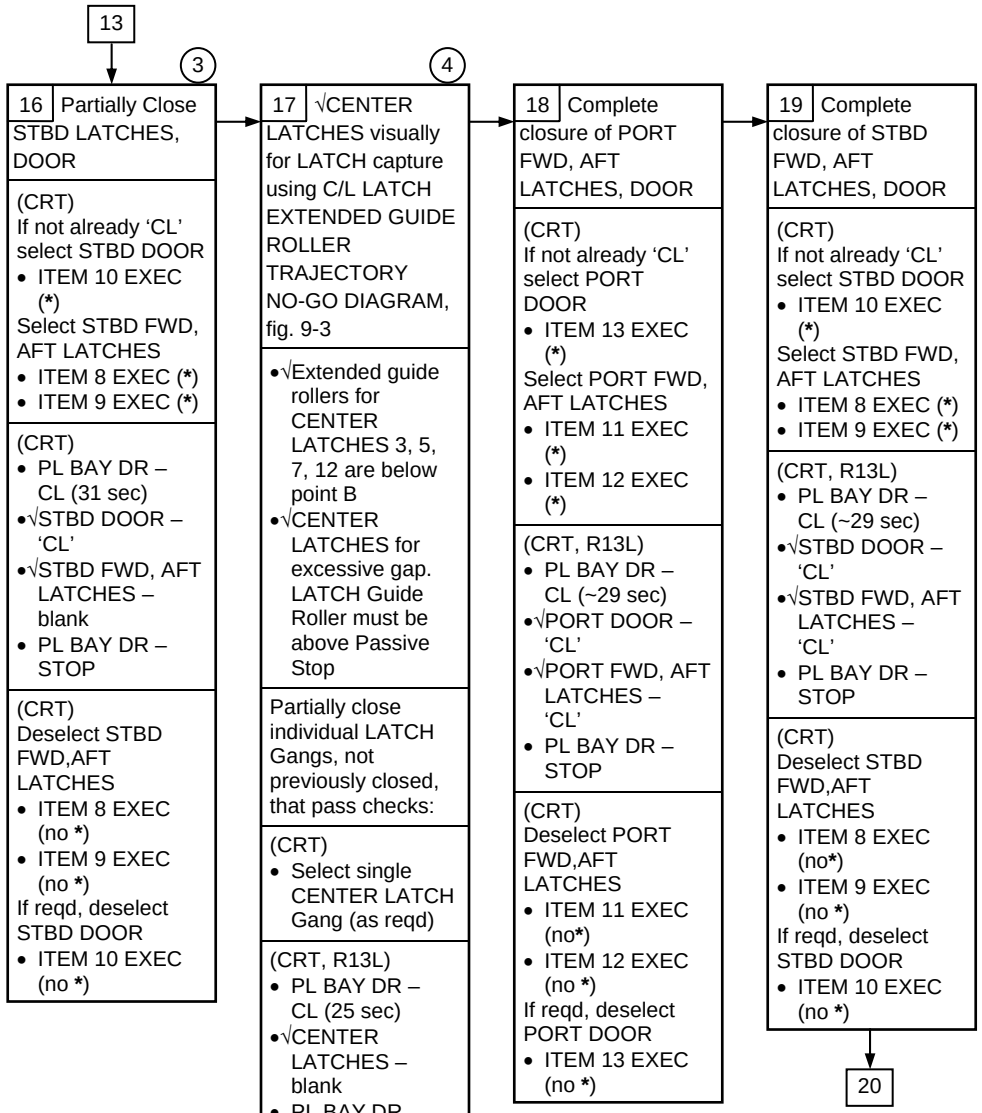

(3) Allows LATCHES to latch partially

(4) The latch hangers on CENTER LATCHES 3, 5, 7, 9, and 12 are the only ones that have stripes. The stripes on 9 may not be visible due to obstruction by the passive shear roller

MECH SSR-3 (Cont)

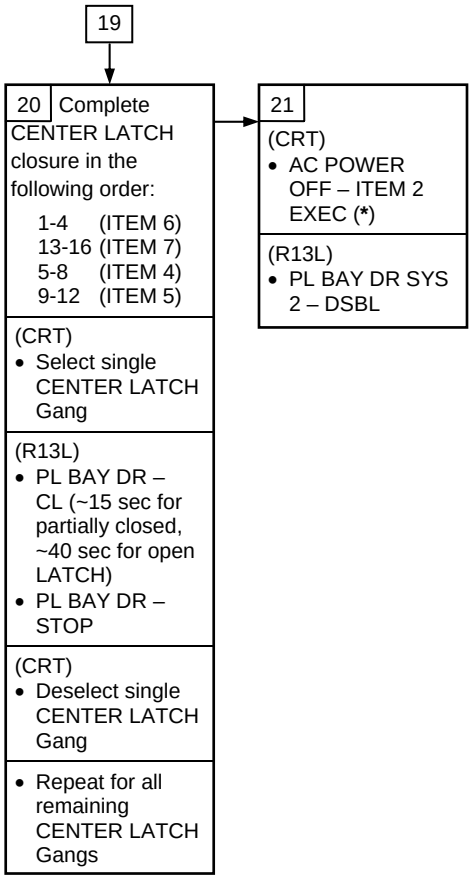

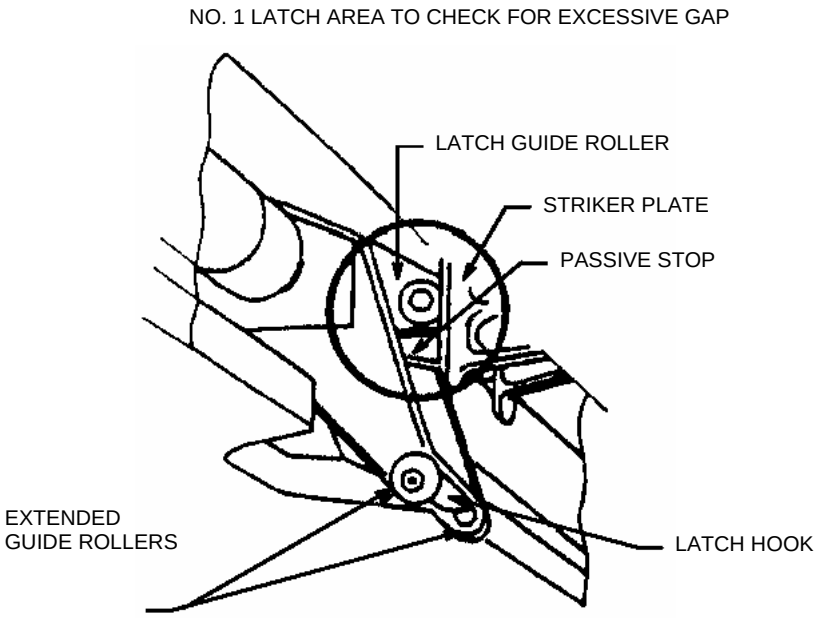

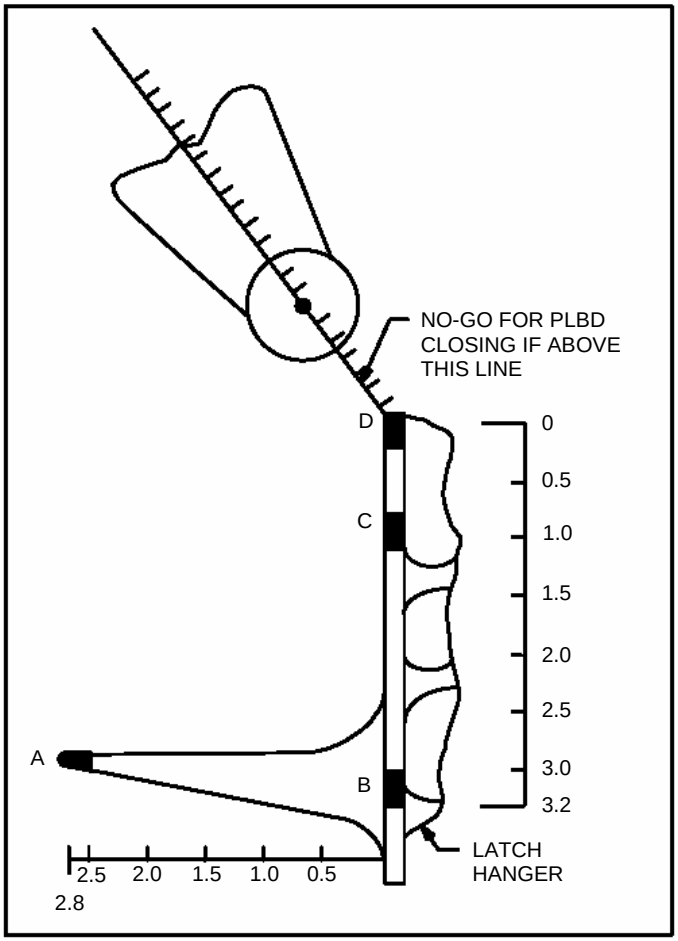

Figure 9-3.– C/L Latch Extended Guide Roller Trajectory NO-GO Diagram

MECH SSR-4
PLBD CHECKOUT AFTER MDM CHANGEOUT

R13L 1. √PL BAY DR – STOP
√PL BAY DR SYS (two) – DSBL

CRT4 2. SM, OPS 202 PRO or BFS, SM 63 PL BAY DOORS
4: SM PL BAY DOORS
√AC POWER OFF, ITEM 2 EXEC (**)
√MAN SEL (ten) – (no **)
√PBD SW BYPASS, ITEM 14 EXEC (no **)
√OP/CL STATUS (ten) – OP

NOTE
Perform remaining steps during AOS only

3. Select CENTER LATCHES 5-8, 9-12, 1-4, 13-16 – ITEM 4, 5, 6, 7 EXEC (**)

R13L 4. PL BAY DR – CL
On MCC GO:
PL BAY DR – STOP

CRT4 5. Deselect CENTER LATCHES 5-8, 9-12, 1-4, 13-16 – ITEM 4, 5, 6, 7 EXEC (no **)

6. Select STBD FWD, AFT LATCHES & DOOR – ITEM 8, 9, 10 EXEC (**)

R13L 7. PL BAY DR – CL
On MCC GO:
PL BAY DR – STOP

CRT4 8. Deselect STBD FWD, AFT LATCHES & DOOR – ITEM 8, 9, 10 EXEC (no **)

9. Select PORT FWD, AFT LATCHES & DOOR – ITEM 11, 12, 13 EXEC (**)

R13L 10. PL BAY DR – CL
On MCC GO:
PL BAY DR – STOP

CRT4 11. Deselect PORT FWD, AFT LATCHES & DOOR – ITEM 11, 12, 13 EXEC (no **)

CAUTION
Driving PLBD mechanisms out of sequence may create a condition that could prevent PLBD closure

* If any OP/CL STATUS changes or any PLBD *
* mechanism is observed to be moving: *
R13L * PL BAY DR SYS (two) – DSBL *

CRT4 12. AC POWER ON – ITEM 1 EXEC (**)

R13L 13. PL BAY DR SYS (two) – ENA
On MCC GO:
PL BAY DR SYS (two) – DSBL

CRT4 14. AC POWER OFF – ITEM 2 EXEC (**)

MECH SSR-5
CONTINGENCY KU-BD ANT DIRECT STOW

> CAUTION
> √MCC to verify Gimbals are locked before applying this procedure

Config CCTVs to monitor KU Ant motion
Point CCTV as reqd
Record all motion on VTR

R13L √PL BAY MECH PWR SYS (two) – OFF
A1U KU BD PWR – OFF
CNTL – PNL
R13L ANT – GND

> CAUTION
> Ku Ant switch must be in GND position prior to use of Direct Stow sw to prevent phase-to-phase short of STO/DPY mtrs

KU ANT DIRECT STO – ON
PL BAY MECH PWR SYS (two) – ON
√KU ANT tb – bp

When KU ANT tb – STO (~23-46 sec),
KU ANT DIRECT STO – OFF
PL BAY MECH PWR SYS (two) – OFF

√KU-BD is within STO envelope

> NOTE
> KU-BD CCTV overlay is located in Middeck Transparency Kit

MECH SSR-6
PLBD CL MICROSW FAILURE WORKAROUND

NOTE

This procedure regains door close capability for door-closed microsw failed-on (closed) (Mtr 1 or Mtr 2 inhibited from running). Procedure will not work for opening or closing latches, or opening doors

1 Check config

SM (BFS SM 63) PL BAY DOORS
- •√AC POWER ON – (*)
- •√AUTO MODE SEL – (no *)
- •√MAN SEL (ten) – (no *)

(R13L)
- •√PL BAY DR SYS (two) – ENA
- • √DR – STOP

2 Aff DOOR:
- STBD
- PORT

3
- Close,latch PORT DOOR in MANUAL mode

4 Disable pwr to microsw failed in closed state (1) (2)

TO ENABLE:

MTR 1 (FWD 'C' MICRO-SW STAT – '1') (MA73C:B)	MTR 2 (AFT 'C' MICRO-SW STAT – '1') (MA73C:A)
• MCA LOGIC MNB MID 4 – OFF	• MCA LOGIC MNA MID 1 – OFF
(CRT) •√PORT DOOR FWD 'C' MICRO-SW STAT – '0'	(CRT) •√PORT DOOR AFT 'C' MICRO-SW STAT – '0'

5 Disable pwr to microsw failed in closed state (3) (4)

TO ENABLE:

MTR 1 (FWD 'C' MICRO-SW STAT – '1') (MA73C:A)	MTR 2 (AFT 'C' MICRO-SW STAT – '1') (MA73C:B)
• MCA LOGIC MNB MID 2 – OFF	• MCA LOGIC MNC MID 4 – OFF
(CRT) •√STBD DOOR FWD 'C' MICRO-SW STAT – '0'	(CRT) •√STBD DOOR AFT 'C' MICRO-SW STAT – '0'

6 Close PORT DOOR

(CRT)
Select PORT DOOR
- • ITEM 13 EXEC (*)

(R13L)
- • PL BAY DR – CL

(CRT)
- •√'OP/CL', 'MICRO-SW STAT' columns

After PORT DOOR 'RDY' and one DOOR 'C' = '1', or ~126 sec:

(R13L)
- • PL BAY DR – STOP

(CRT)
Deselect PORT DOOR
- • ITEM 13 EXEC (no *)

7 PLBD fit check

(CRT)
Select STBD DOOR
- • ITEM 10 EXEC (*)

(R13L)
- • PL BAY DR – CL

When STBD DOOR as close as possible to PORT DOOR before contact:

(R13L)
- • PL BAY DR – STOP
- • Determine C/L Latch Clearance on C/L LATCH EXTENDED GUIDE ROLLER TRAJECTORY NO-GO DIAGRAM, MECH SSR-3, fig. 9-3:

GO	NO-GO

→ 9 (GO) → 12 (NO-GO)

8 Reenable MCA LOGIC pwr

MTR 1 (MA73C:B)	MTR 2 (MA73C:A)
• MCA LOGIC MNB MID 4 – ON	• MCA LOGIC MNA MID 1 – ON

→ 11

(1) To enable mtr 1, this step also disables pwr to:
PORT FWD BLKHD MTR 2
STBD DOOR MTR 2
STBD FWD BLKHD MTR 2

(2) To enable mtr 2, this step also disables pwr to:
PORT FWD BLKHD MTR 1
STBD DOOR MTR 1
STBD FWD BLKHD MTR 1
C/L 9-12 MTR 1

(3) To enable mtr 1, this step also disables pwr to:
PORT DOOR MTR 2
STBD AFT BLKHD MTR 2
C/L 13-16 MTR 2

(4) To enable mtr 2, this step also disables pwr to:
PORT DOOR MTR 1
STBD AFT BLKHD MTR 1
C/L 9-12 MTR 2
C/L 13-16 MTR 1

MECH SSR-6 (Cont)

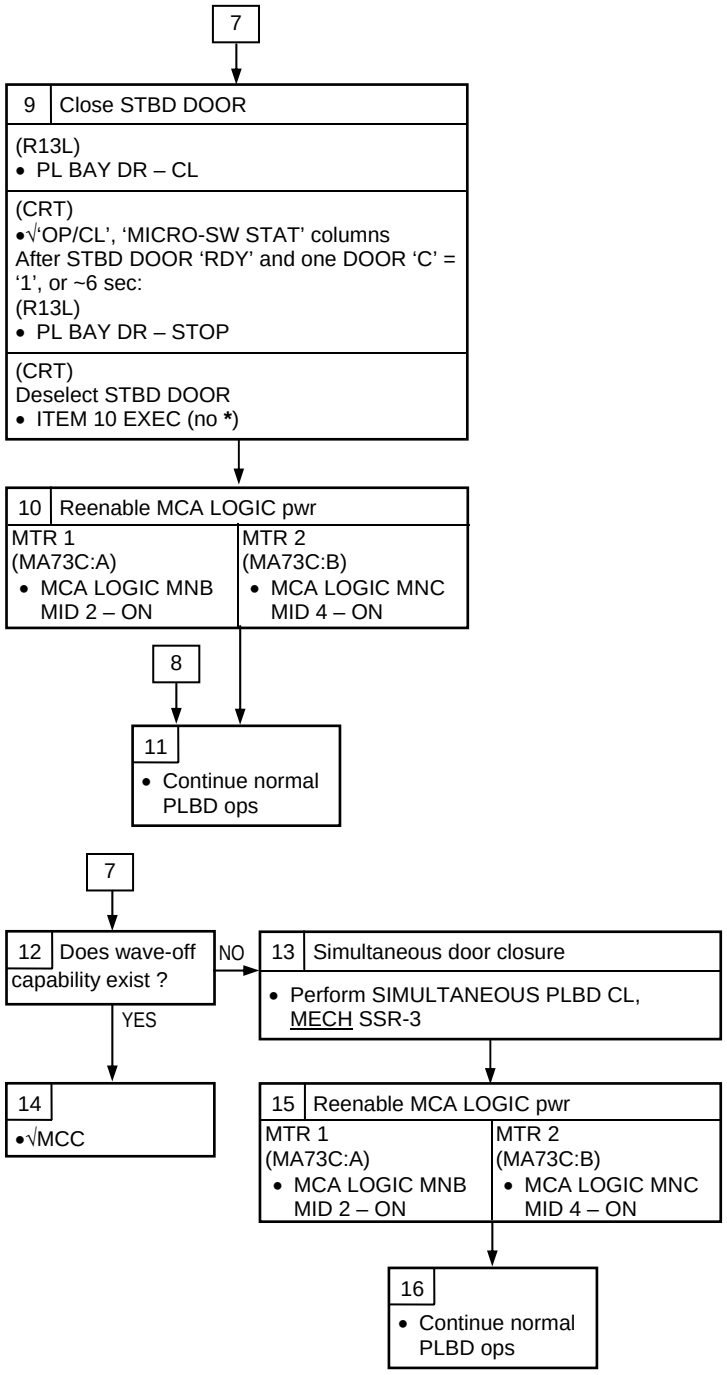

MECH SSR-7
KU-BAND ANTENNA DPY/STO MICROSW FAILURE

NOTE

This procedure regains capability to deploy or stow antenna if (DPY/STO) microsw(s) is (are) failed on, inhibiting deploy/stow mtr ops

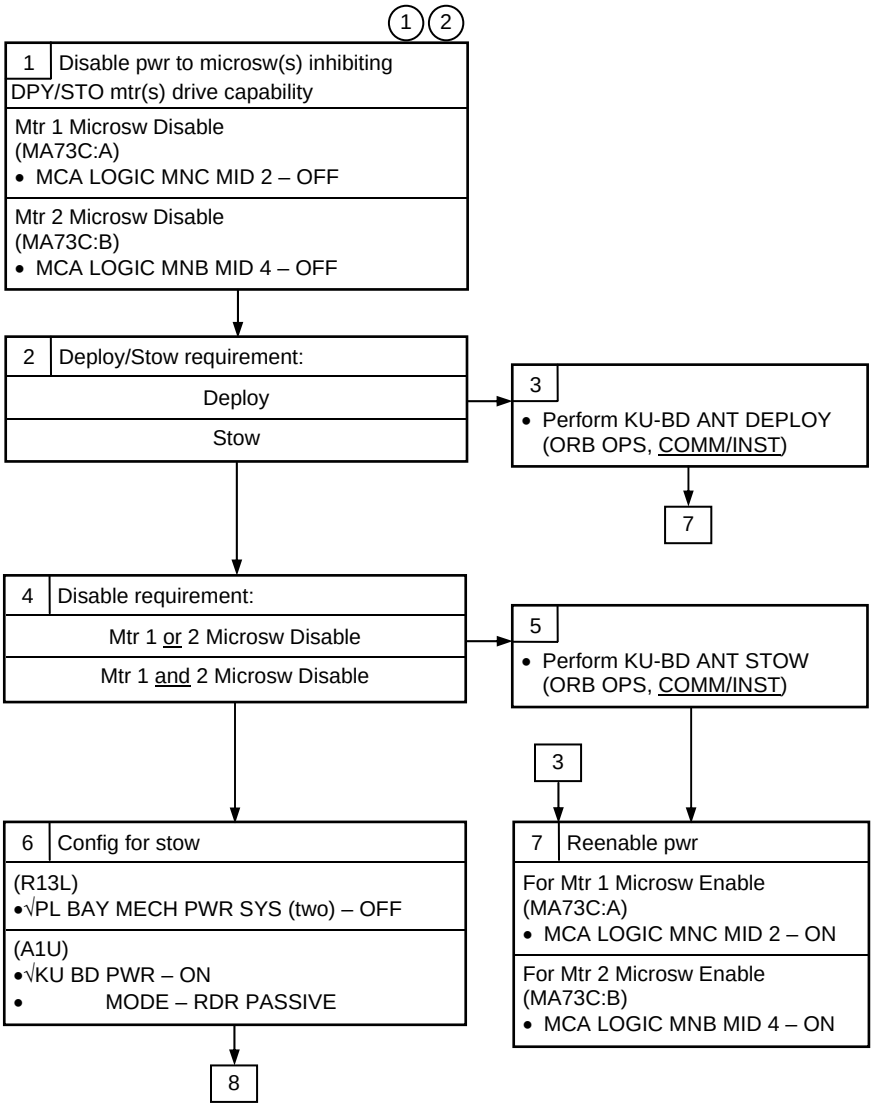

(1) Logic pwr does not inhibit mtr drive capability if pwrd off

(2) Inhibiting logic pwr to both mtr microswitches inhibits pwr for Boom Stow Enable II signals. KU ANT DIRECT STOW sw must be used to stow deployed assy

MECH SSR-7 (Cont)

6

8	Lock Gimbals
• DAP: VERN(FREE)	
(A1U) • SLEW RATE – as reqd • ELEV – as reqd	
(A2) • R/EL ind: -27.0 (± 1°)	
(A1U) • SLEW AZM – as reqd	
(A2) • R/AZM ind: -123.0 (± 1°)	
(R13L) • KU ANT – STOW	

CAUTION

KU ANT sw must remain in STOW until after KU BD PWR sw is in OFF

9
After 50 sec: (A2) •√R/EL ind: -29.0 (± 1°) •√R/AZM ind: -125.0 (± 1°)
(A1U) • KU BD PWR – OFF • CNTL – PNL
(R14C) • cb MNB KU ELEC – op • MNC KU SIG PROC – op
(R13L) • KU ANT – GND
• DAP: as reqd

2 3

10	Stow deployed assy
(R13L) • KU ANT DIRECT STO – ON • PL BAY MECH PWR SYS (two) – ON After 23 sec max: • PL BAY MECH PWR SYS (two) – OFF • KU ANT DIRECT STO – OFF	
•√KU-BD deployed assy is within GO FOR PLBD CLOSURE envelope	

11	Reenable pwr
For Mtr 1 Microsw Enable (MA73C:A) • MCA LOGIC MNC MID 2 – ON	
For Mtr 2 Microsw Enable (MA73C:B) • MCA LOGIC MNB MID 4 – ON	

(2) Inhibiting logic pwr to both mtr microswitches inhibits pwr for Boom Stow Enable II signals. KU ANT DIRECT STOW sw must be used to stow deployed assy

(3) KU-BD CCTV overlay is located in Middeck Transparency Kit

MECH SSR-8
RAD DPY/STO MICROSW FAILURE WORKAROUND

NOTE

This procedure regains radiator panel deploy or stow capability if DPY/STO microsw(s) is (are) failed on, inhibiting deploy/stow motor ops. This procedure accommodates PORT(STBD) and/or dual panel ops

WARNING

To preclude failures causing inadvertent MPM cycling, the RMS (if flown) must be cradled if PORT RAD deploy ops are required. This procedure assumes that the RMS is cradled

1 Dual or PORT(STBD) RAD panel ops reqd ?

- PORT(STBD)
- Dual Panel

2 Disable STBD(PORT) RAD latches and panel

Disable STBD	Disable PORT
(MA73C:C,D) cb MCA PWR • AC1 3Φ MID 3 – op • AC2 3Φ MID 2 – op • AC3 3Φ MID 2 – op	(MA73C:C,D) cb MCA PWR • AC1 3Φ MID 1 – op • AC2 3Φ MID 4 – op • AC3 3Φ MID 4 – op

3 Drive operation reqd

- STOW → 10
- DPY

(1)

4 Release RAD latches

(R13L)
- √RAD LAT CNTL SYS (two) – OFF
- √CNTL SYS (two) – OFF
- PL BAY MECH PWR SYS (two) – ON
- RAD LAT CNTL SYS (two) – REL (√tb-bp, ~30 sec REL)
- RAD LAT CNTL SYS (two) – OFF

Are deploy ops reqd for nominal RAD panel ? NO → 6

YES

(1) (2)

5 Deploy nominal RAD panel

(R13L)
- RAD CNTL SYS (two) – DPY (√tb-bp, ~50 sec DPY)
- RAD CNTL SYS (two) – OFF

6

(1) Drive Times

(Dual Motor)
Lat – 30 sec
Panel – 50 sec

(Single Motor)
Lat – 60 sec
Panel – 100 sec

(2) For either a dual microsw or microsw/motor failure, failed panel will be inhibited from driving

MECH SSR-8 (Cont)

4 | 5

6	Disable pwr to failed-on microsw(s)	
	PORT	STBD
	(MA73C:A) Motor 1 Microsw Disable • MCA LOGIC MNC MID 2 – OFF	(MA73C:B) Motor 1 Microsw Disable • MCA LOGIC MNC MID 4 – OFF
	(MA73C:B) Motor 2 Microsw Disable • MCA LOGIC MNA MID 3 – OFF	(MA73C:B) Motor 2 Microsw Disable • MCA LOGIC MNA MID 1 – OFF

(1)(3)(4)

7	DPY RAD panel with failed-on microsw(s)
	(R13L) On MCC GO: • RAD CNTL SYS (two) – DPY • RAD CNTL SYS (two) – OFF (after 50 sec max) • Visually verify RAD panel is deployed •√MCC to confirm RAD panel is deployed • PL BAY MECH PWR SYS (two) – OFF

8	Enable pwr to failed-on microsw(s)	
	PORT	STBD
	(MA73C:A) Motor 1 Microsw Enable • MCA LOGIC MNC MID 2 – ON	(MA73C:B) Motor 1 Microsw Enable • MCA LOGIC MNC MID 4 – ON
	(MA73C:B) Motor 2 Microsw Enable • MCA LOGIC MNA MID 3 – ON	(MA73C:B) Motor 2 Microsw Enable • MCA LOGIC MNA MID 1 – ON

9	Enable STBD(PORT) RAD sys (if reqd)	
	Enable STBD	Enable PORT
	(MA73C:C,D) cb MCA PWR • AC1 3Φ MID 3 – cl • AC2 3Φ MID 2 – cl • AC3 3Φ MID 2 – cl	(MA73C:C,D) cb MCA PWR • AC1 3Φ MID 1 – cl • AC2 3Φ MID 4 – cl • AC3 3Φ MID 4 – cl

(1) Drive Times
(Dual Motor)
Lat – 30 sec
Panel – 50 sec
(Single Motor)
Lat – 60 sec
Panel – 100 sec

(3) Only nominal RAD panel tb will be operational. MCC verification of AC bus slip currents will verify mechanism end-of-travel

(4) For dual microsw failure expect dual motor drive time. For microsw and motor failure expect single motor drive time (drive for 100 sec)

MECH SSR-8 (Cont)

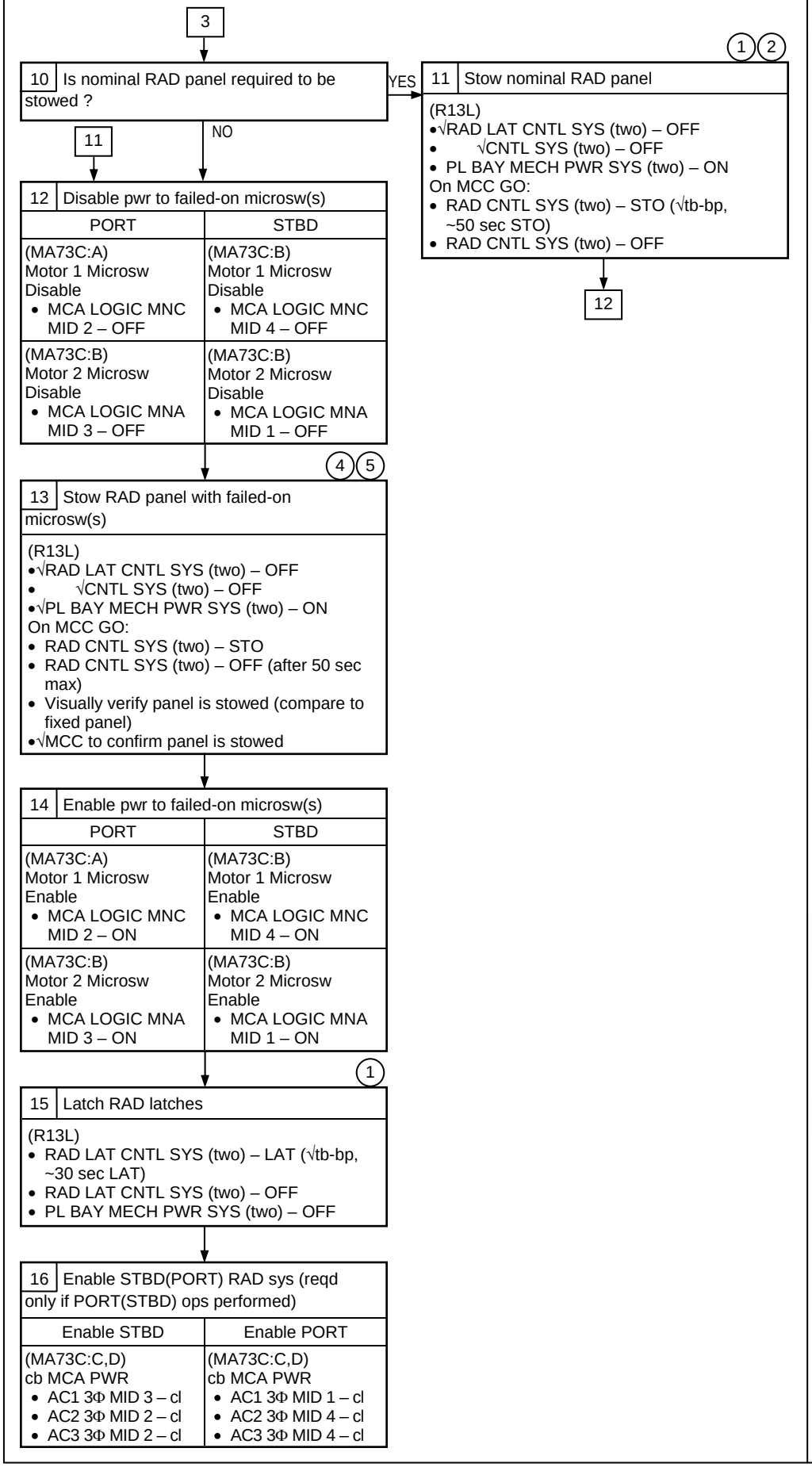

(1) Drive Times
(Dual Motor)
Lat – 30 sec
Panel – 50 sec
(Single Motor)
Lat – 60 sec
Panel – 100 sec

(2) For either a dual microsw or microsw/motor failure, failed panel will be inhibited from driving

(4) For dual microsw failure, expect dual motor drive time. For microsw and motor failure, expect single motor drive time (drive for 100 sec)

(5) RAD panel tb is not operational. MCC verification of AC bus slip currents will verify mechanism end-of-travel

RCS SCHEMATIC 10-3

10.1 RCS JET/DLMA/PWR
10.1a 'L(R,F) RCS (L,U,D,R,A,F) JET', 'F(L,R) RCS TK P', 'F(L,R) RCS LEAK' 10-4
10.1b 'RM DLMA MANF' 10-10
10.1c 'RCS PWR FAIL' 10-11

10.2 RCS VLV MISCOMP
10.2a RCS VLV tb – bp 10-12
10.2b tb AND sw POSITION DISAGREE 10-15

10.3 RCS PRPLT THERM/SYS
10.3a 'S89 PRPLT THRM RCS' 10-16
10.3b 'G23 RCS SYSTEM F(L,R)' 10-17

RCS SSR
RCS SSR-1 RCS MIXED XFEED MEM READ/WRITE 10-20
SSR-2 HOT FIRE RCS 10-22
SSR-3 AFT RCS MANF/LEG PRESS, READ/WRITE 10-25
SSR-4 STAGED, MANF REPRESS 10-27
SSR-5 LEAKING RCS PRPLT/He BURN 10-28

The following Fault Msgs have no corresponding MAL procedures in this book:

ET SEP AUTO (INH,MAN)
F(L,R) RCS PVT
F(L,R) RCS He P
G23 OMS/RCS QTY
RCS XFEED L(R)

This Page Intentionally Blank

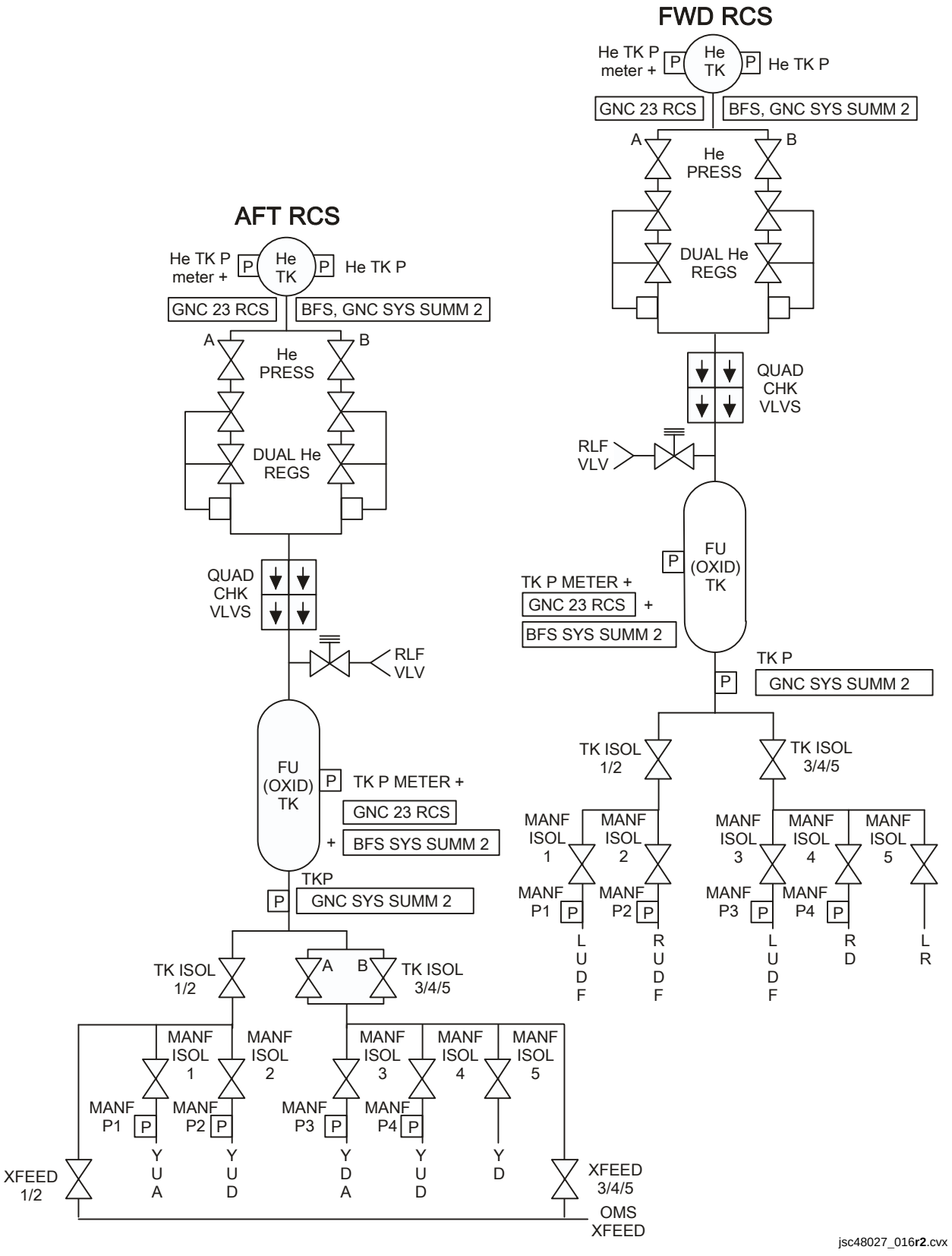

jsc48027_016**r2**.cvx

RCS

10.1a 'L(R,F) RCS (L,U,D,R,A,F) JET'
'F(L,R) RCS TK P'
'F(L,R) RCS LEAK'

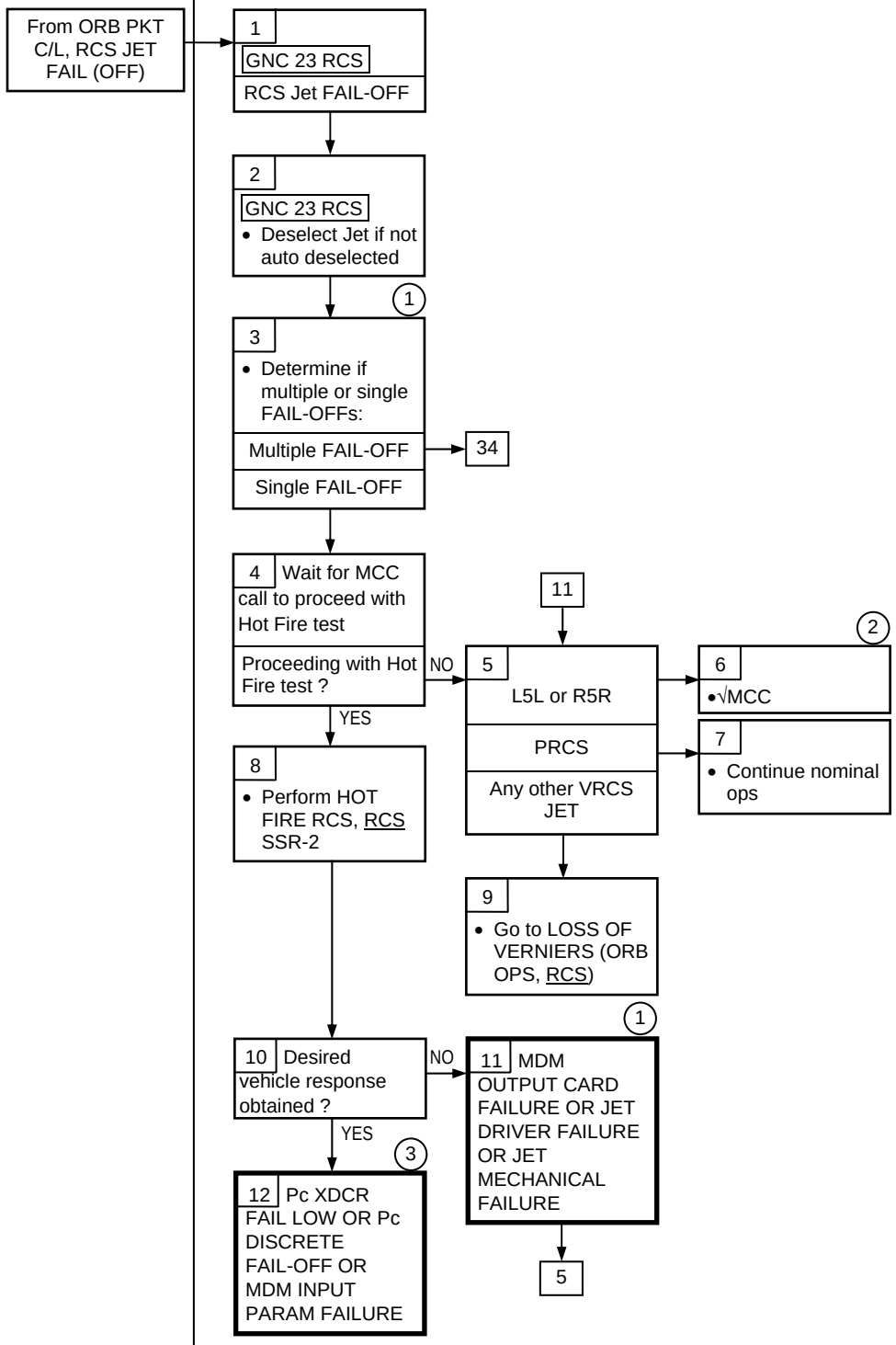

(1) To determine if multiple fail-off jets occurred, √both Aft pods

(2) If L5L or R5R failed, vernier control available except during certain loaded PDRS ops

(3) √MCC for other params possibly lost

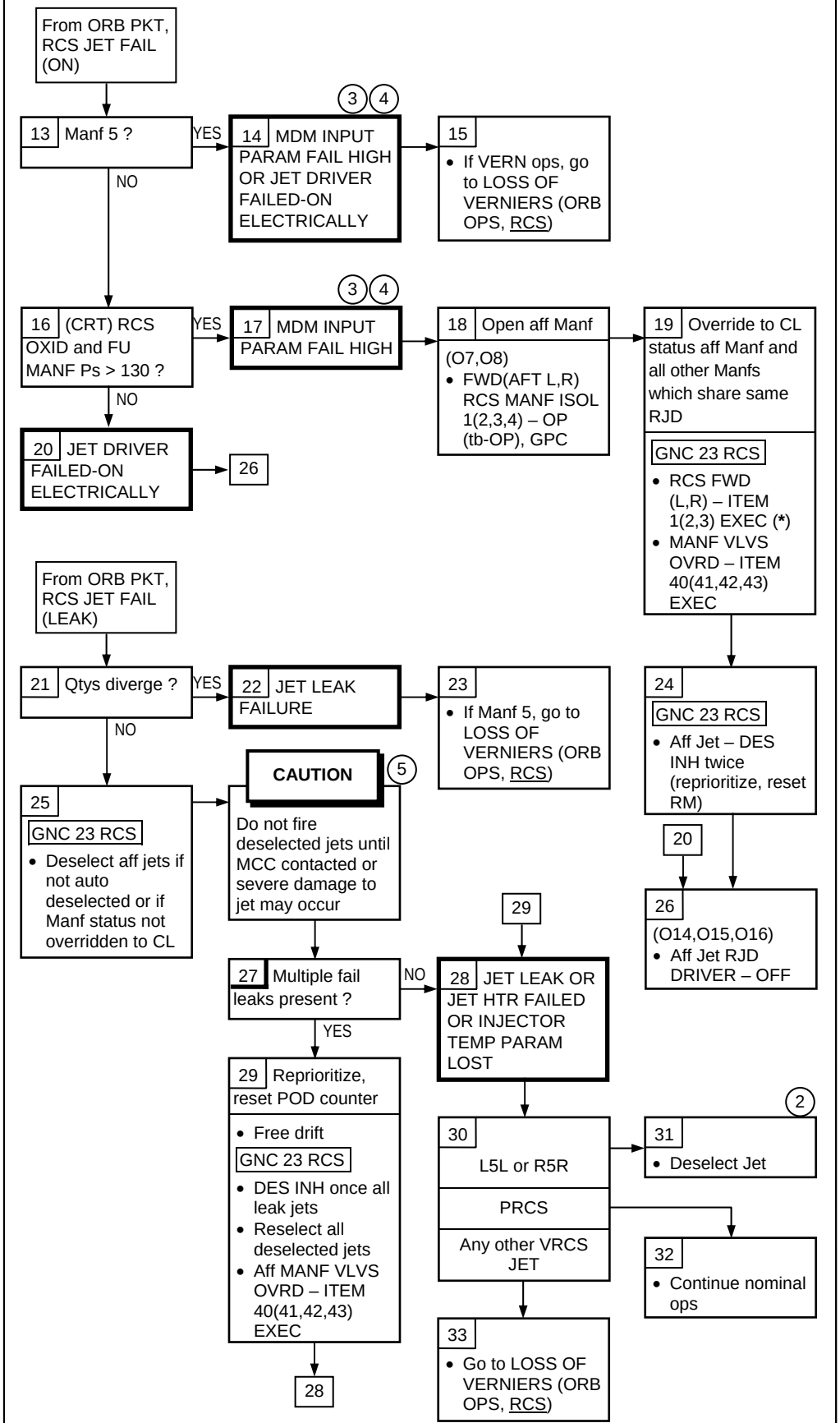

(2) If L5L or R5R failed, vernier control available except during certain loaded PDRS ops

(3) √MCC for other params possibly lost

(4) Fail-on protection lost for affected jet

(5) MCC call based on jet injector temps

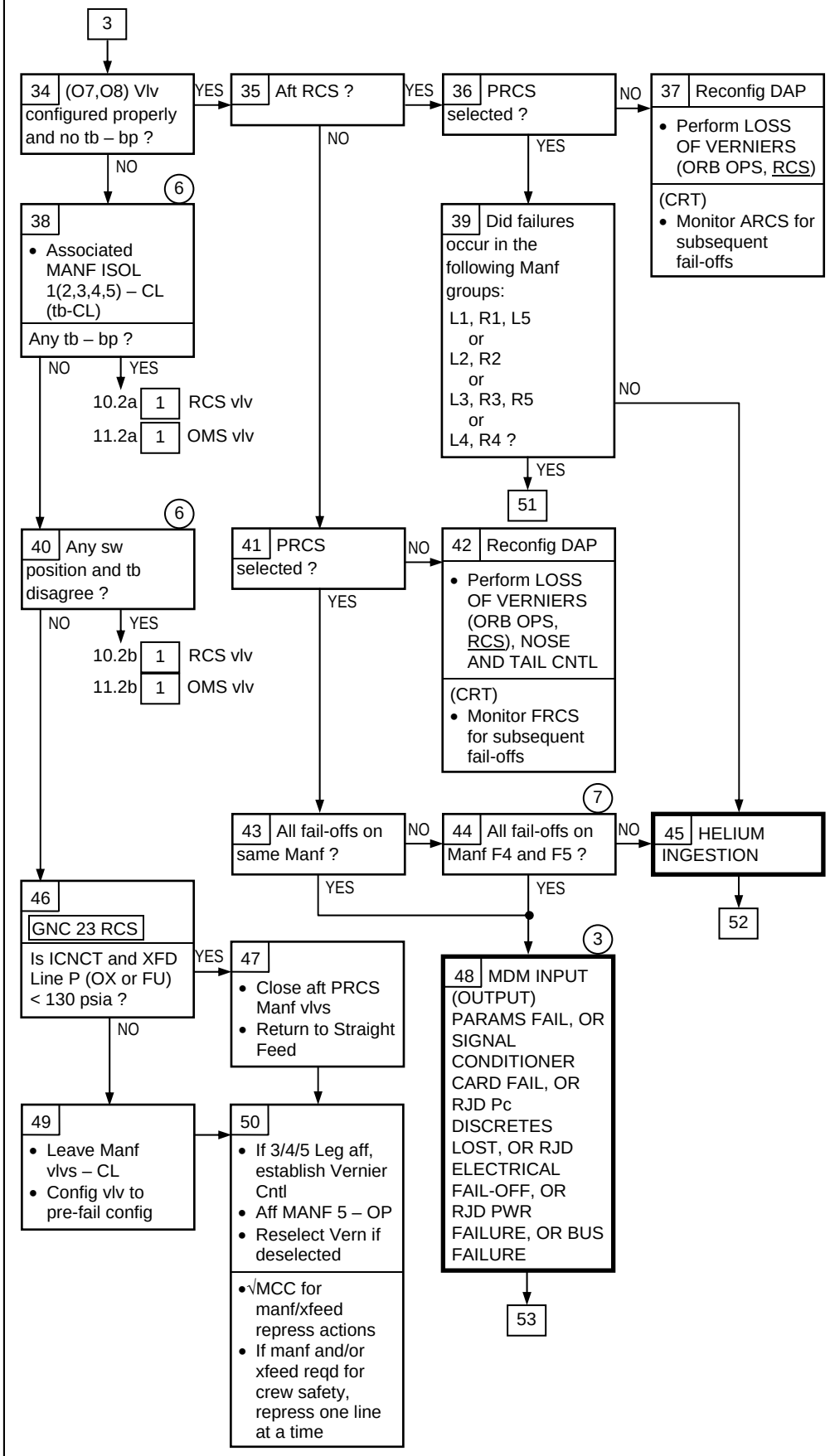

(3) √MCC for other params possibly lost

(6) Evacuated Manfs need to be repressed. √MCC for config and repress procedure

(7) Both F4,F5 commanded by FF3 and return telemetry by DSC OF2

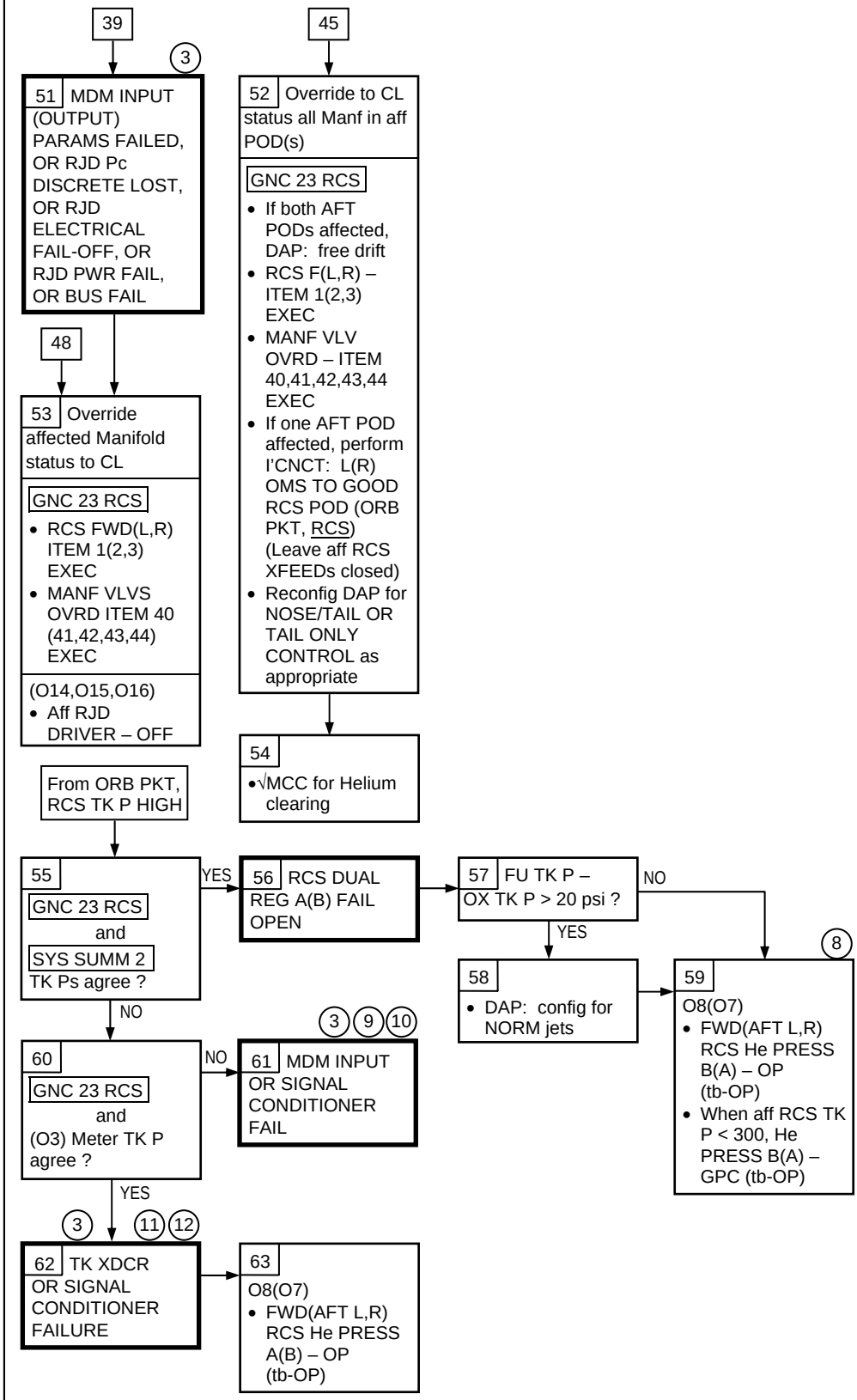

(3) √MCC for other params possibly lost

(8) Vern jets can be used when FU TK P – OX TK P ≤ 20 psi

(9) H/W C&W remains

(10) TK P can be monitored using SYS SUMM or (O3) Meter

(11) Aff POD FU(OX) can be used for qty

(12) TK P can only be monitored in SYS SUMM

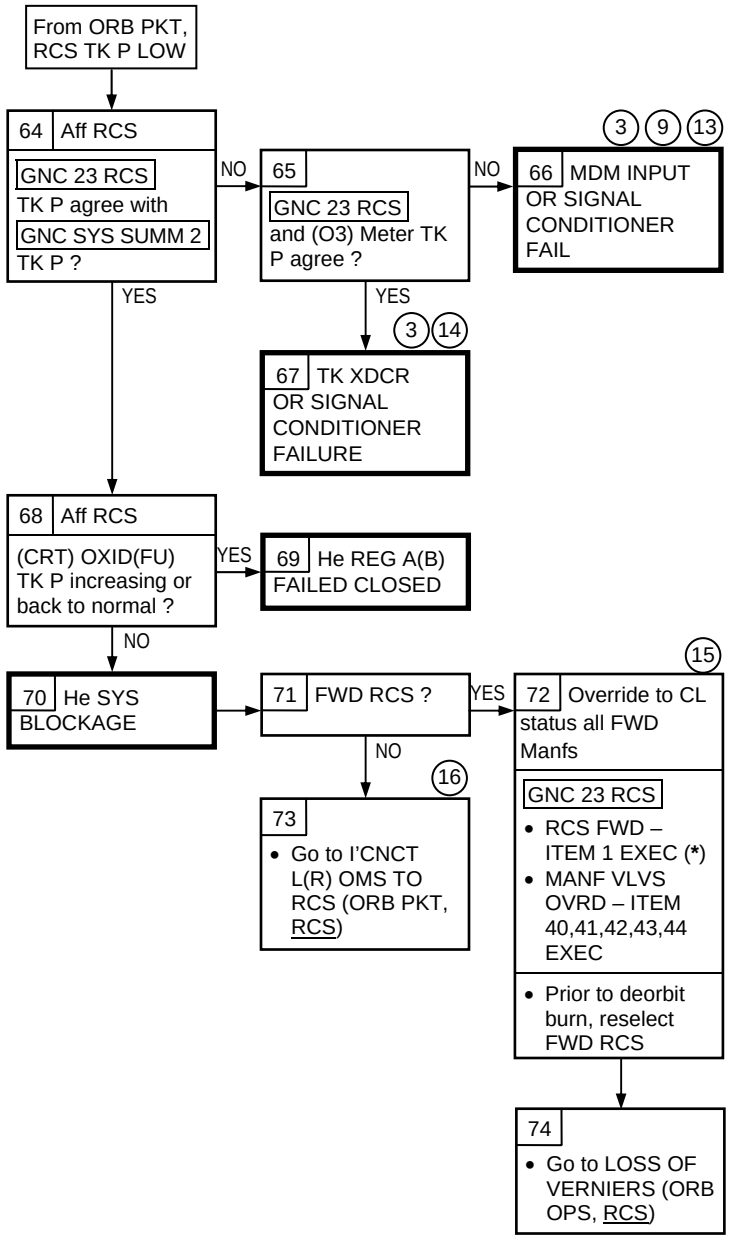

(3) √MCC for other params possibly lost

(9) H/W C&W remains

(13) Use SYS SUMM 2 or (O3) meter TK P only
(O3) Meter

(14) RCS PVT for aff OX(FU) may be in error. Use aff pod FU(OX) for qty

(15) Prior to deorbit burn, reselect FWD RCS. Secure FWD RCS when TK P < 190

(16) Xfeed from good RCS prior to deorbit. Propellant with He blockage available until TK P < 190 psi if reqd

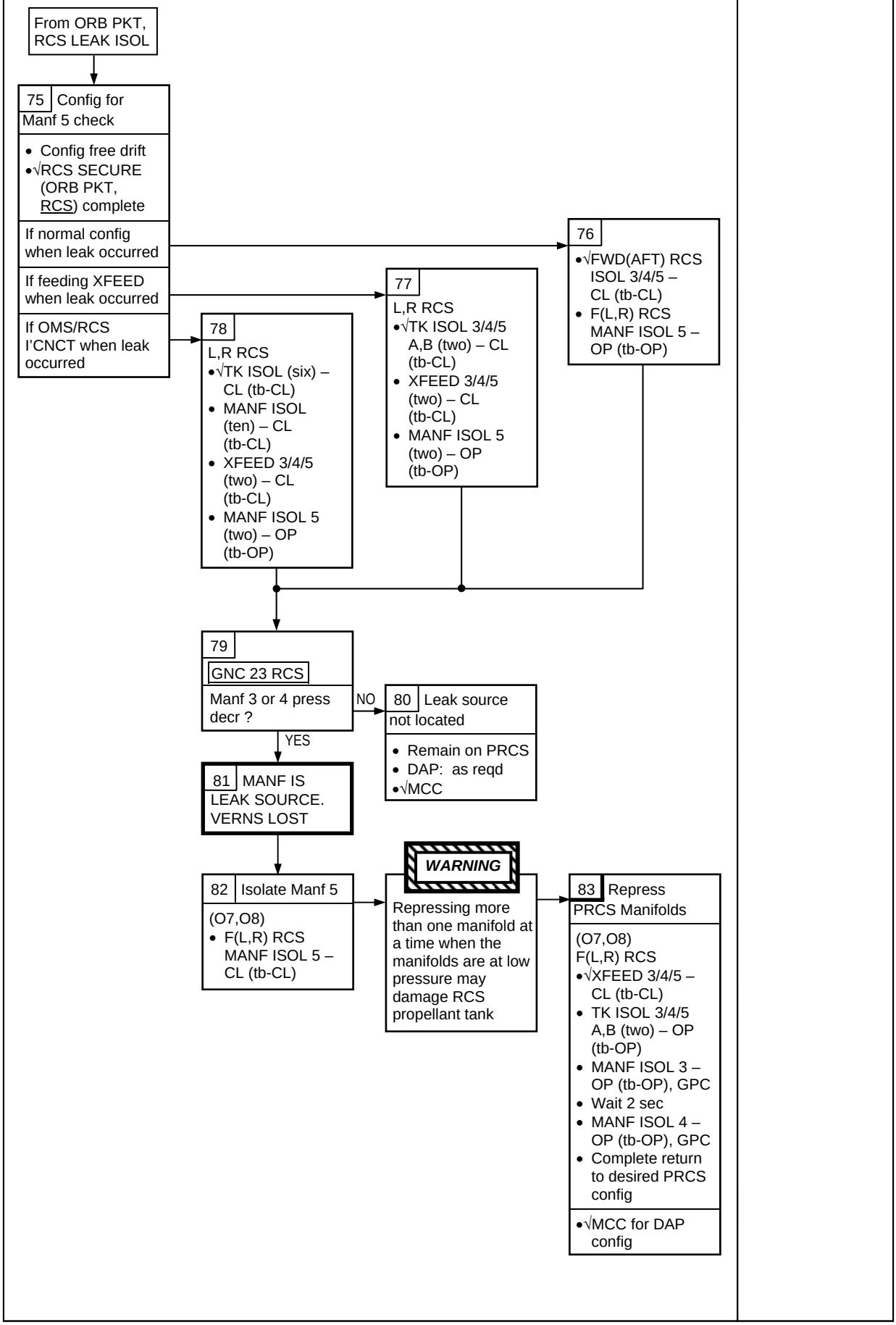
From ORB PKT, RCS LEAK ISOL
75 Config for Manf 5 check
• Config free drift
•√RCS SECURE (ORB PKT, RCS) complete
If normal config when leak occurred
If feeding XFEED when leak occurred
If OMS/RCS I'CNCT when leak occurred
76
•√FWD(AFT) RCS ISOL 3/4/5 – CL (tb-CL)
• F(L,R) RCS MANF ISOL 5 – OP (tb-OP)
77
L,R RCS
•√TK ISOL 3/4/5 A,B (two) – CL (tb-CL)
• XFEED 3/4/5 (two) – CL (tb-CL)
• MANF ISOL 5 (two) – OP (tb-OP)
78
L,R RCS
•√TK ISOL (six) – CL (tb-CL)
• MANF ISOL (ten) – CL (tb-CL)
• XFEED 3/4/5 (two) – CL (tb-CL)
• MANF ISOL 5 (two) – OP (tb-OP)
79
GNC 23 RCS
Manf 3 or 4 press decr ?
NO
80 Leak source not located
• Remain on PRCS
• DAP: as reqd
•√MCC
YES
81 MANF IS LEAK SOURCE. VERNS LOST
82 Isolate Manf 5
(O7,O8)
• F(L,R) RCS MANF ISOL 5 – CL (tb-CL)
WARNING
Repressing more than one manifold at a time when the manifolds are at low pressure may damage RCS propellant tank
83 Repress PRCS Manifolds
(O7,O8)
F(L,R) RCS
•√XFEED 3/4/5 – CL (tb-CL)
• TK ISOL 3/4/5 A,B (two) – OP (tb-OP)
• MANF ISOL 3 – OP (tb-OP), GPC
• Wait 2 sec
• MANF ISOL 4 – OP (tb-OP), GPC
• Complete return to desired PRCS config
•√MCC for DAP config

RCS

10.1b 'RM DLMA MANF'

SM ALERT

From ORB PKT, RM DLMA MANF

If:
- OX and/or FU vlv miscompare, propellant flow path cannot be verified open

Nominal Config:
(MA73C:A)
MCA LOGIC
- MNA FWD 1 – ON
- MNB FWD 2 – ON
- MNC FWD 3 – ON

(MA73C:I)
AFT POD VLV LOGIC GP 1/3 – ON
AFT POD VLV LOGIC GP 1/2 – ON
AFT POD VLV LOGIC GP 2/3 – ON

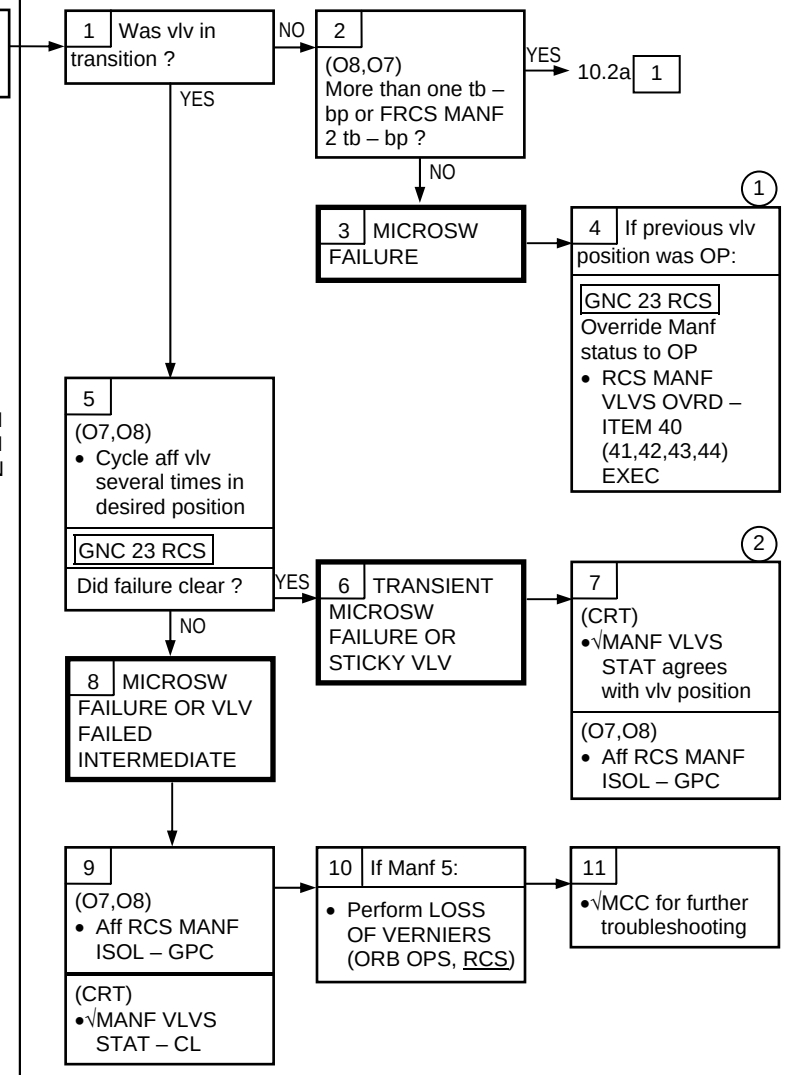

(1) If position discretes are intermediate, MANF ISOL STAT will be evaluated at each change of state. It may be necessary to repeat RCS MANF VLVS OVRD later

(2) Prevent continuous pwr if microsw fails again

RCS

10.1c 'RCS PWR FAIL'

SM ALERT

RCS PWR FAIL

If loss of vlv logic pwr to:
(O7)
AFT L, AFT R
RCS MANF
ISOL 1
or
ISOL 2
or
ISOL 3,4
or
ISOL 5

Nominal Config:
(MA73C:A)
MCA LOGIC
MNC FWD 3 – ON
(MA73C:I)
AFT POD VLV
LOGIC GP 1/3 – ON
LOGIC GP 1/2 – ON
LOGIC GP 2/3 – ON

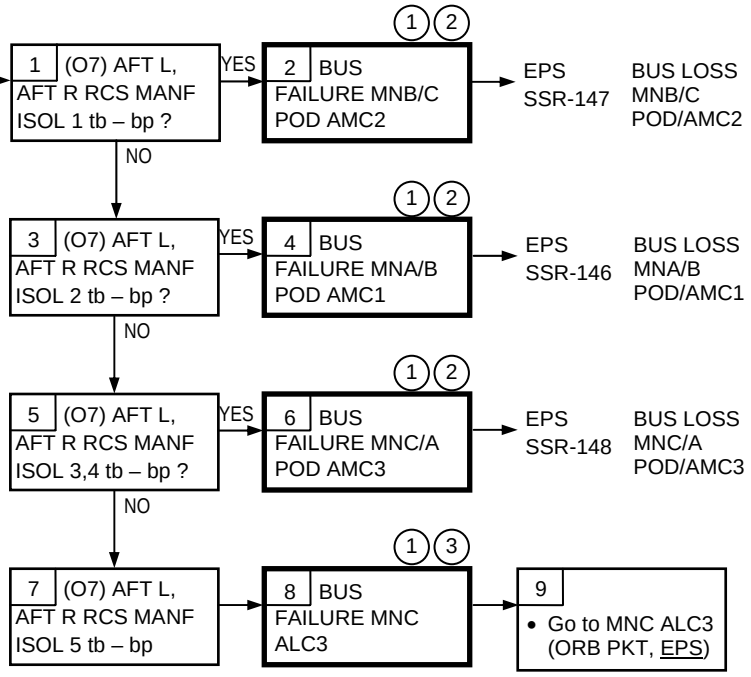

(1) If subsequent leak on affected manf:
GNC 23 RCS
ITEM 2(3) EXEC (as reqd). √Manf status: If OP, override to CL with ITEM 40-43. To isolate leak, close TK ISOL vlv. Affected RCS MANF ISOL vlv cannot be moved from current status

(2) Failure possibly caused by dual CNTL or dual APC bus failures or CNTL and APC bus failure

(3) Failure possibly caused by loss of MNC APC6 or MNC DA3

RCS

10.2a RCS VLV tb – bp

RCS Vlv tb – bp

If tb – bp:
- O8(O7)
- FWD(AFT L,R) RCS
- He PRESS A(B)
- TK ISOL 1/2
- TK ISOL 3/4/5 A(B)
- MANF ISOL 1(2,3,4,5)
- AFT L,R RCS XFEED 1/2(3/4/5)

Nominal Config:
(MA73C:A)
MCA LOGIC
- MNA FWD 1 – ON
- MNB FWD 2 – ON
- MNC FWD 3 – ON

(MA73C:I)
AFT POD VLV LOGIC GP
- 1/3 – ON
- 1/2 – ON
- 2/3 – ON

(MA73C:H)
cb AC1,AC2,AC3
FWD RCS VLV ΦA,ΦB,ΦC (nine) – cl
(MA73C:I)
cb AC1,AC2,AC3
AFT POD VLV GP 1,2,3 ΦA,ΦB,ΦC (nine) – cl
(R14:C)
cb MNC MANF ISOL L5,R5,F5 ENA (three) – cl

10.1a 38
10.1b 2
10.2b 2

1 (O8,O7) More than one tb – bp or FRCS MANF 2 tb – bp ? YES → 13

33 NO

2 Was vlv reconfig in progress ? NO

10.2b 5 YES

3 Aff vlv:

(O7,O8) RCS He PRESS A(B) vlv → 4
- •√RCS He P B(A) vlv GPC (tb-OP)

(O8) FWD RCS TK ISOL 1/2 → 5
- FWD RCS MANF ISOL 1,2 (two) – CL (tb-CL)

(O8) FWD RCS TK ISOL 3/4/5 → 6
- FWD RCS MANF ISOL 3,4 (two) – CL (tb-CL)
- FWD RCS MANF ISOL 5 – CL (tb-CL)
- Perform LOSS OF VERNIERS (ORB OPS, RCS)

(O7) AFT L(R) RCS TK ISOL 1/2 → 7
- Go to desired propellant feed config except:

GNC 23 RCS
- OVERRIDE AFF POD MANF VLVS STATUS 1,2 – CL
- •√Aff POD RCS XFD 1/2 – CL (tb-CL)

(O7) AFT L(R) RCS TK ISOL 3/4/5 A(B) → 8
- Return to RCS STRAIGHT FEED
- •√Aff POD RCS TK ISOL 3,4,5 B(A) – OP (tb-OP)

(O7,O8) FWD(AFT L,R) RCS MANF ISOL → 9

GNC 23 RCS
- •√Aff MANF VLVS STATUS – CL
- If MANF 5, perform LOSS OF VERNIERS (ORB OPS, RCS)

(O7) AFT L(R) RCS XFEED → 10

(C3)
- •√DAP: FREE

(O8)
- •√OMS XFEED VLVS (four) – CL (tb-CL)

(O7)
- •√RCS XFEED VLVS (four) – CL (tb-CL)
- Return to RCS straight feed
- DAP: as reqd

11 Remove vlv pwr

O7(O8)
- Note aff sw position
- Aff sw – GPC

12 POTENTIAL MICROSW FAILURE. √MCC FOR FAILURE DETERMINATION

RCS 10.2a (Cont)

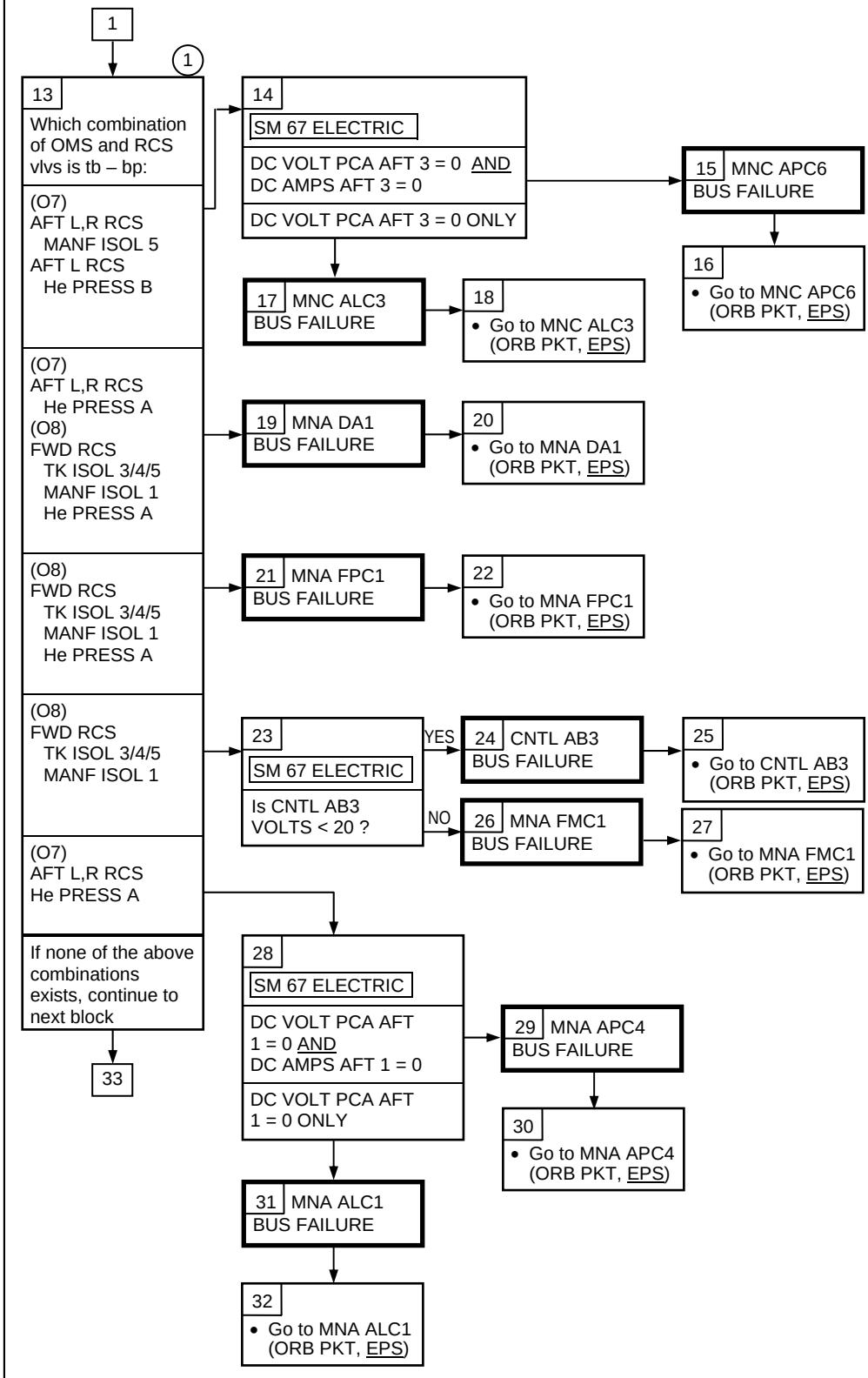

(1) Refer to BUS LOSS ID Table (ORB PKT, EPS) for bus loss verification. Proceed to BUS LOSS SSR if bus loss confirmed. For OMS/RCS function loss, refer to OMS/RCS operational Slide Rule for appropriate bus failure

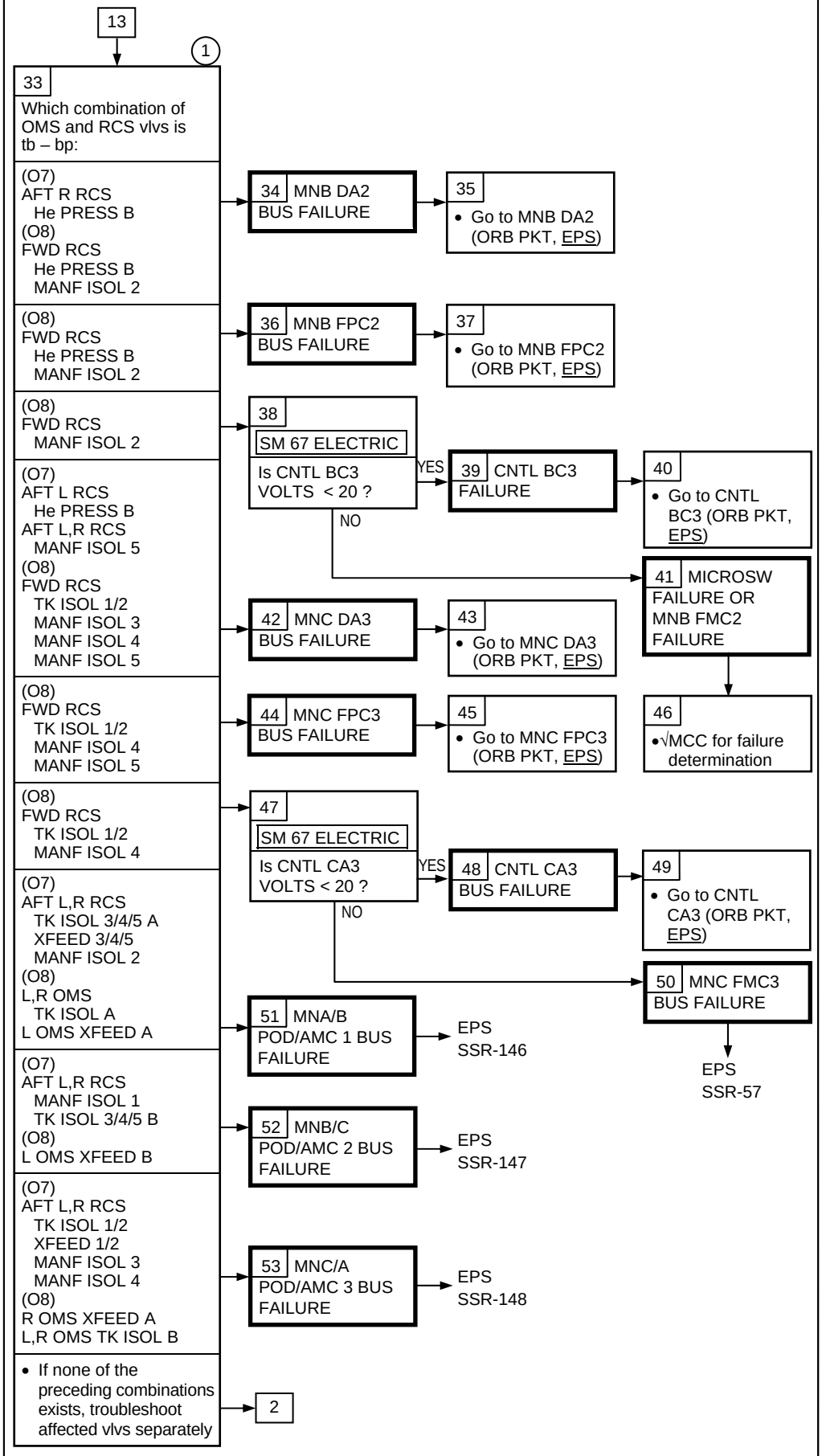

(1) Refer to BUS LOSS ID Table (ORB PKT, EPS) for bus loss verification. Proceed to BUS LOSS SSR if bus loss confirmed. For OMS/RCS function loss, refer to OMS/RCS operational Slide Rule for appropriate bus failure

RCS

10.2b RCS VLV tb AND sw POSITION DISAGREE

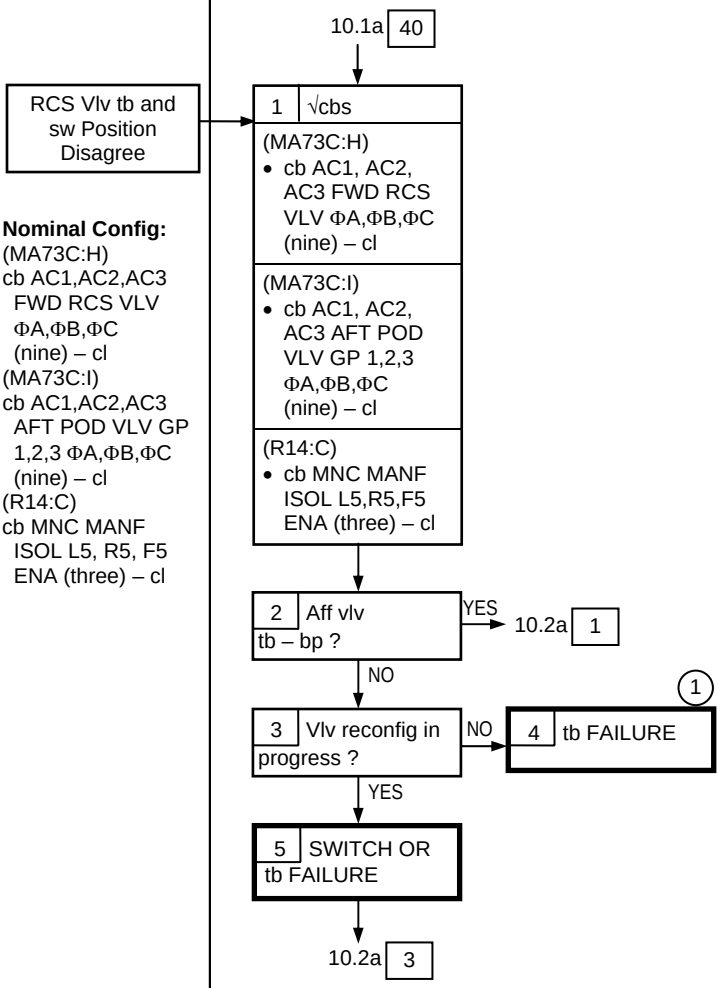

Nominal Config:
(MA73C:H)
cb AC1,AC2,AC3 FWD RCS VLV ΦA,ΦB,ΦC (nine) – cl
(MA73C:I)
cb AC1,AC2,AC3 AFT POD VLV GP 1,2,3 ΦA,ΦB,ΦC (nine) – cl
(R14:C)
cb MNC MANF ISOL L5, R5, F5 ENA (three) – cl

(1) Ignore tb. Vlv in commanded position

RCS

10.3a 'S89 PRPLT THRM RCS'

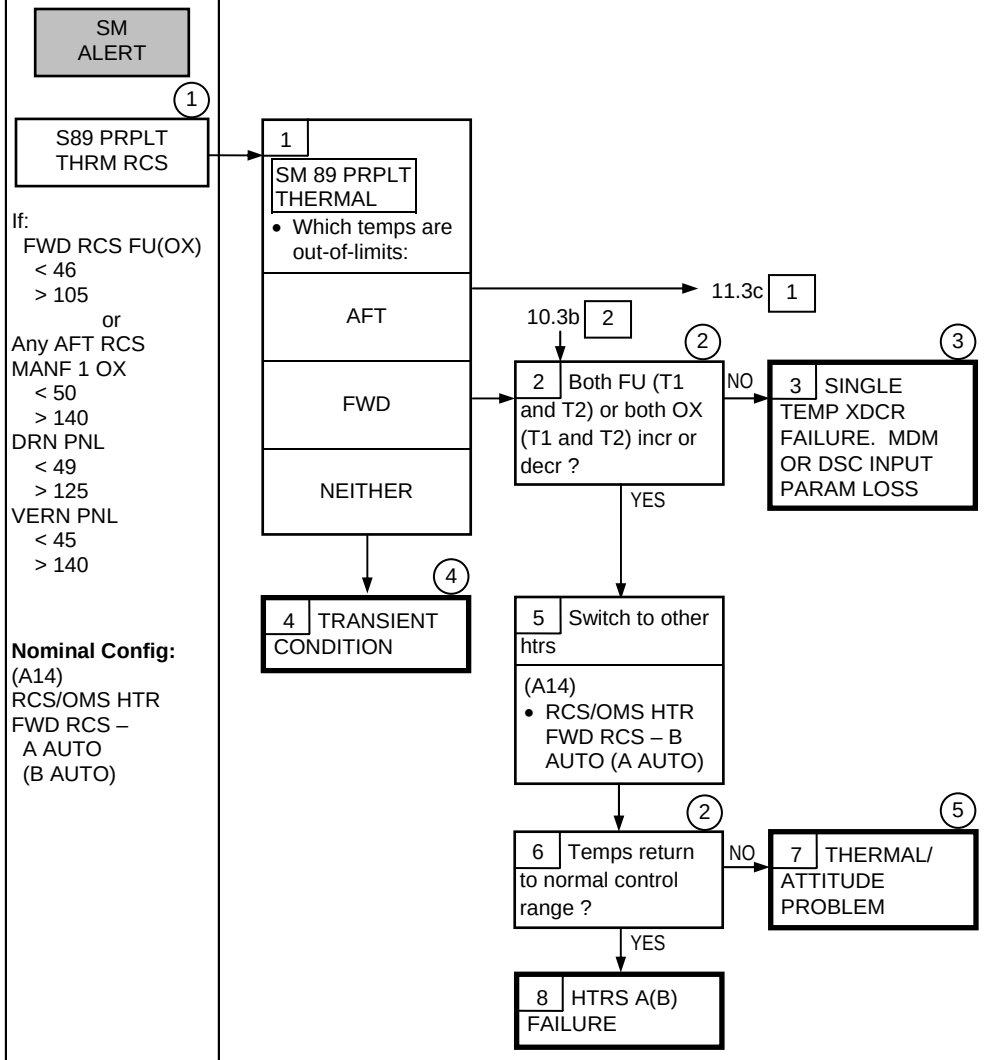

(1) Msg available in SM OPS 2 or 4 only

(2) Since FU and OX Htrs controlled by separate thermostats, both T1 and T2 FU temps normally incr or decr together. Both T1 and T2 OX temps normally incr or decr together

(3) √MCC for other params possibly lost in same MDM or DSC Card

(4) Htrs cycling high/low or intermittent xdcr failure. √MCC

(5) √MCC for additional thermal analysis, possible vehicle attitude change, or htr reconfig. Fwd RCS control can be resumed when temps return to normal

RCS

10.3b 'G23 RCS SYSTEM F(L,R)'

SM ALERT

G23 RCS SYSTEM F(L,R)

If:
- FWD RCS
  - OXID(FU) PRPLT TK T
    - < 50 degF
    - > 90 degF
- or L,R RCS
  - OXID(FU) PRPLT TK T
    - < 50 degF
    - > 100 degF
- or GNC SYS SUMM 2
  - FWD(L,R) OXID (FU) TK P
    - < 220 psi
    - > 300 psi

Nominal Config:
O8(O7)
FWD(AFT L, AFT R)
- RCS He PRESS
  - A(B) – GPC
    - (tb-OP)
  - B(A) – CL
    - (tb-CL)

(A14)
RCS/OMS HTR
- FWD RCS –
  - A AUTO
  - (B AUTO)

RCS/OMS HTR L
- POD (two) –
  - A AUTO(B AUTO)
  - B OFF(A OFF)

RCS/OMS HTR R
- POD (two) –
  - A AUTO(B AUTO)
  - B OFF(A OFF)

1 GNC 23 RCS
- RCS FWD(L,R) ITEM 1(2,3) EXEC (*)

OXID(FU) 'PRPLT TK T' out-of-limits ?
- NO → 11
- YES ↓

2 'S89 PRPLT THRM' msg present for:
- POD → 11.3c 1
- RCS → 10.3a 2
- NEITHER ↓

3 OXID (FU) PRPLT TK T off-scale high or low ?
- YES → 4 OXID(FU) PRPLT TK T XDCR FAILURE; MDM OR DSC INPUT PARAM LOSS (1) (2)
- NO ↓

5 Switch to other htr/thermostat ckt

Which Pod failed:
- FWD RCS → 6 (A14)
  - RCS/OMS HTR FWD RCS – B AUTO (A AUTO)
- L(R) RCS ↓

7 (A14)
- RCS/OMS HTR L(R) POD – A OFF(B OFF)
- RCS/OMS HTR L(R) POD – B AUTO(A AUTO)

8 Temp returns to normal ?
- NO → 9 OXID(FU) PRPLT TK T XDCR BIAS; OR BIAS FROM MDM OR DSC INPUT PARAM (1) (2)
- YES ↓

10 HTR/ THERMOSTAT CKT A(B) FAILURE

(1) MCC can determine other params possibly lost in same MDM or DSC Card

(2) RCS PVT for affected OXID(FU) may be in error for failed or biased temp or press Xdcr

RCS 10.3b (Cont)

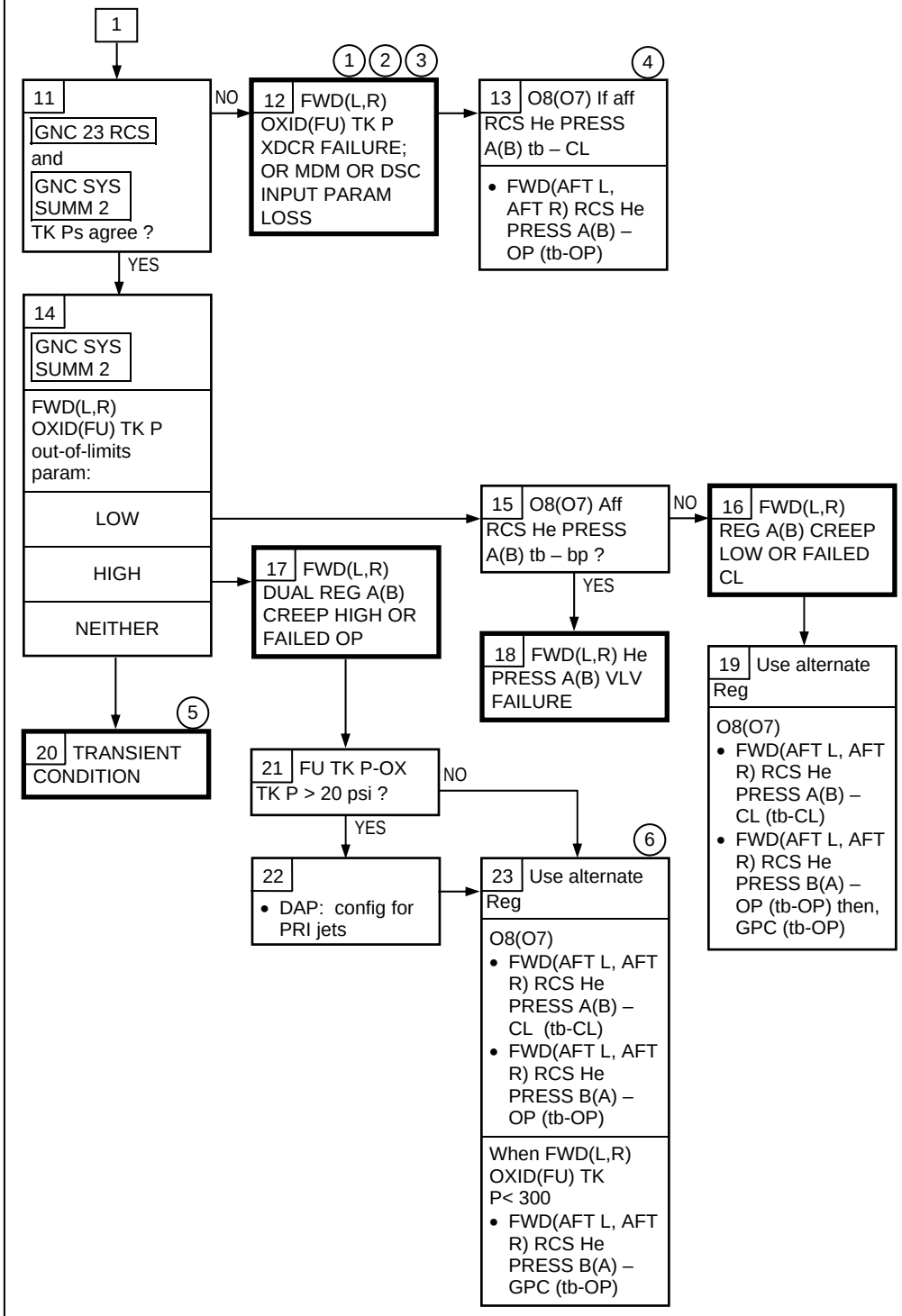

(1) MCC can determine other params possibly lost in same MDM or DSC Card

(2) RCS PVT for affected OXID(FU) may be in error for failed or biased temp or press Xdcr

(3) OXID (FU) PRPLT TK P can be monitored on GNC 23 RCS display or RCS/OMS Press meter (pnl O3)

(4) Overpress protection lost

(5) Transient Xdcr bias or pressure surge

(6) Vern jets can be used when FU TK P-OX TK P $\leq$ 20 psi

This Page Intentionally Blank

RCS SSR-1
RCS MIXED XFEED MEM READ/WRITE

NOTE

This procedure must be performed in OPS 3. OMS/RCS interconnect is assumed to be the initial configuration. A backout procedure is provided in the event of a deorbit waveoff, which would require a return from Mixed RCS Crossfeed to OMS-RCS Interconnect. Address locations are S/W release dependent and will be supplied by MCC. This procedure requires realtime ground verification (24 hr) prior to use

1. Check config:

O7 √AFT L,R RCS TK ISOL (six) – CL (tb-CL)
√XFEED (four) – OP (tb-OP)

O8 √L,R OMS XFEED A (two) – CL (tb-CL)
√L(R) OMS XFEED B – OP (tb-OP)
√R(L) OMS XFEED B – CL (tb-CL)

O7 2. MSTR RCS XFEED – FEED FROM L

NOTE

ADD IDs, TABLEs A, B, C, and D will be supplied by MCC

3. Zero (0) the appropriate RCS TK ISOL reset command:

GNC 0 GPC MEMORY

√HEX – ITEM 27 (*)
BIT RST – ITEM 23 EXEC (*)
Enter ADD IDs and DESIRED values

ADD ID		DESIRED	
28	__ __ __ __	29	1000
30	__ __ __ __	31	0400
32	__ __ __ __	33	1000
34	__ __ __ __	35	0400
36	__ __ __ __	37	1000
38	__ __ __ __	39	0400

TABLE A	TABLE B
__ __ __ __	__ __ __ __
__ __ __ __	__ __ __ __
__ __ __ __	__ __ __ __
__ __ __ __	__ __ __ __
__ __ __ __	__ __ __ __
__ __ __ __	__ __ __ __

√Data values in ACTUAL column agree with TABLE A
WRITE – ITEM 25 EXEC
√Data values in ACTUAL column agree with TABLE B

4. Set to one (1) the appropriate RCS TK ISOL set command
BIT SET – ITEM 22 EXEC (*)
Enter ADD IDs and DESIRED values

ADD ID		DESIRED	
28	__ __ __ __	29	1000
30	__ __ __ __	31	0400
32	__ __ __ __	33	1000
34	__ __ __ __	35	0400
36	__ __ __ __	37	1000
38	__ __ __ __	39	0400

TABLE C	TABLE D
__ __ __ __	__ __ __ __
__ __ __ __	__ __ __ __
__ __ __ __	__ __ __ __
__ __ __ __	__ __ __ __
__ __ __ __	__ __ __ __
__ __ __ __	__ __ __ __

√Data values in ACTUAL column agree with TABLE C
WRITE – ITEM 25 EXEC
√Data values in ACTUAL column agree with TABLE D

RCS SSR-1 (Cont)

5. During AOS, perform ARCS reconfig
   DAP: INRTL
   DAP ROT: PULSE/PULSE/PULSE
O8 L,R OMS XFEED (four) – CL (tb-CL)
O7 AFT L,R RCS XFEED (four) – CL (tb-CL)
   TK ISOL (six) – GPC (tb-bp)

> CAUTION
> Wait for MCC verification of correct config

AFT L,R RCS XFEED (four) – OP (tb-OP)

6. Resume attitude control:
   DAP: as reqd

RCS MIXED XFEED TERMINATE (PERFORM IN OPS 3)

Establish L(R) OMS interconnect config:

F7 1. √FLT CNTLR PWR – OFF
C3 DAP: INRTL
   DAP ROT: PULSE/PULSE/PULSE

O7 2. L,R RCS TK ISOL (six) – CL (tb-CL)
   √XFEED (four) – OP (tb-OP)

3. If RCS MANF P (OX and FU) > 130, continue
   Otherwise, √MCC >>

O8 4. √L(R) OMS He PRESS/VAP ISOL (two) – CL
   TK ISOL (two) – OP (tb-OP)
   √R(L) OMS XFEED (two) – CL (tb-CL)
   L(R) OMS XFEED A – CL (tb-CL)
   B – OP (tb-OP)

O7 5. MSTR RCS XFEED – OFF

C3 6. DAP: as reqd

> NOTE
> Gauging not avail in OPS 3

7. After OPS 2 transition:

   GNC 23 RCS

   OMS PRESS ENA L(R) OMS – ITEM 5(6) EXEC

RCS SSR-2
HOT FIRE RCS

O7(O8) √Prop feed vlvs – OP
O14(O15,O16) √Appropriate RJD LOGIC,DRIVER – ON
Perform Hot Fire during AOS

CONFIG DAP FREE DRIFT FOR HOT FIRE

1. If OPS 2:

   GNC 20 DAP CONFIG

   If PRI:
   ITEM 13 +0.3 EXEC
   ITEM 17 +0.1 EXEC
   √P(Y) OPTION – ITEM 15(16) ALL
   If VERN:
   ITEM 26 +0.0 3 EXEC

   DAP: A/FREE/PRI(VERN)
   DAP TRANS: PULSE/PULSE/PULSE

   If OPS 3:
   DAP: INRTL
   DAP ROT: PULSE/PULSE/PULSE

SET UP FOR HOT FIRE

2. GNC 23 RCS

   Deselect jets per table

3. If jet to be selected is fail-off,
   reselect affected jet (Do not toggle RM)

O14,O15,O16 4. √cb L(R) DDU (two) – cl
F7/F8 FLT CNTLR PWR L(R) – ON

HOT FIRE (Perform during AOS)

5. If OPS 2:
   Command maneuver per table with RHC(THC) and release
   If RHC, do not command past soft stop (no ACCEL mode)
   If OPS 3:
   Command maneuver per table with RHC(THC)
   If THC, command for approximately 1 sec and release
   If RHC, command past soft stop (ACCEL mode) for approximately 1 sec and release

RCS SSR-2 (Cont)

6. GNC 23 RCS

If primary jet:
- If correct response (Failure indication was false.
  - Have lost fail-off protection). Perform following steps to place jet in last priority and to regain fail LK auto deselect protection:
    - DES INH twice (reprioritize, reset RM)
    - Repeat maneuver (expect jet fail-off)
    - Reselect jet (in order to reset auto deselect counter)

NOTE

If > 1 jet/pod/dir lost fail-off RM, after OPS 301 transition, reselect jets

- If no response:
  - Deselect jet

NOTE

During entry, reselect jet if reqd to maintain 1 pitch or 2 yaw Aft RCS jets

If vernier jet:
- If jet fired (√MCC):
  - Continue vernier control (Failure indication was false.
    - Have lost fail-off protection)
- If jet did not fire (√MCC):
  - If L5L or R5R:
    - Deselect jet
    - Continue vernier control
  - If F5L,F5R, L5D, or R5D:
    - Deselect jet
    - Perform LOSS OF VERN (ORB OPS, RCS)

CLEAN UP AFTER HOT FIRE

7. GNC 23 RCS
   Reselect jets deselected in step 2

C3 8. Config DAP: as reqd

F7(F8) 9. FLT CNTLR PWR L(R) – OFF

O14, O15, O16 10. Config cb L,R DDU (four) – as reqd

HOT FIRE TABLE

SUBJECT JET	DESELECT JETS	MANEUVER REQD
F1F F2F F3F	F2F, F3F F1F, F3F F1F, F2F	(-) X TRANSLATION
F1L F3L F5L	F3L, R1R, R2R, R3R, R4R F1L, R1R, R2R, R3R, R4R R5R	(+) YAW
F2R F4R F5R	F4R, L1L, L2L, L3L, L4L F2R, L1L, L2L, L3L, L4L L5L	(-) YAW
F1U F2U F3U	F2U, F3U, L2D, L3D, L4D, R2D, R3D, R4D F1U, F3U, L2D, L3D, L4D, R2D, R3D, R4D F1U, F2U, L2D, L3D, L4D, R2D, R3D, R4D	(-) PITCH
F1D F2D F3D F4D	F2D, F3D, F4D, L1U, L2U, L4U, R1U, R2U, R4U F1D, F3D, F4D, L1U, L2U, L4U, R1U, R2U, R4U F1D, F2D, F4D, L1U, L2U, L4U, R1U, R2U, R4U F1D, F2D, F3D, L1U, L2U, L4U, R1U, R2U, R4U	(+) PITCH
L1L L2L L3L L4L L5L	L2L, L3L, L4L, F2R, F4R L1L, L3L, L4L, F2R, F4R L1L, L2L, L4L, F2R, F4R L1L, L2L, L3L, F2R, F4R F5R	(-) YAW
L1A L3A	L3A, R1A, R3A L1A, R1A, R3A	(+) X TRANSLATION
L1U L2U L4U	L2U, L4U, R1U, R2U, R4U, F1D, F2D, F3D, F4D L1U, L4U, R1U, R2U, R4U, F1D, F2D, F3D, F4D L1U, L2U, R1U, R2U, R4U, F1D, F2D, F3D, F4D	(+) PITCH
L2D L3D L4D L5D	L3D, L4D, R2D, R3D, R4D, F1U, F2U, F3U L2D, L4D, R2D, R3D, R4D, F1U, F2U, F3U L2D, L3D, R2D, R3D, R4D, F1U, F2U, F3U R5D	(-) PITCH
R1R R2R R3R R4R R5R	R2R, R3R, R4R, F1L, F3L R1R, R3R, R4R, F1L, F3L R1R, R2R, R4R, F1L, F3L R1R, R2R, R3R, F1L, F3L F5L	(+) YAW
R1A R3A	R3A, L1A, L3A R1A, L1A, L3A	(+) X TRANSLATION
R1U R2U R4U	R2U, R4U, L1U, L2U, L4U, F1D, F2D, F3D, F4D R1U, R4U, L1U, L2U, L4U, F1D, F2D, F3D, F4D R1U, R2U, L1U, L2U, L4U, F1D, F2D, F3D, F4D	(+) PITCH
R2D R3D R4D R5D	R3D, R4D, L2D, L3D, L4D, F1U, F2U, F3U R2D, R4D, L2D, L3D, L4D, F1U, F2U, F3U R2D, R3D, L2D, L3D, L4D, F1U, F2U, F3U L5D	(-) PITCH

RCS SSR-3
AFT RCS MANF/LEG PRESS, READ/WRITE

NOTE

This procedure is used when affected RCS propellant lines, both oxidizer and fuel (manifold or leg) pressure, is less than or equal to propellant vapor pressure plus instrumentation error (OX P < 49 psia, FU P < 35 psia).

Starting condition for this procedure is straight RCS feed with appropriate MANF or TK ISOL vlv upstream of evacuated section closed.

Manually repressing evacuated aft RCS propellant line (manifold or leg) can result in jet thruster vlv bounce and/or seal leakage. This can result in 'zot' firings which can damage respective thruster(s). Zot firings can be avoided by staggering opening of upstream OX and FU vlvs. However, since both vlvs are gang-commanded by manual switch settings, one of the vlvs must be individually commanded by using GMEM R/W. This procedure uses GMEM R/W to repress evacuated line, from same pod OMS propellant tanks, by setting appropriate GPC open command bit for RCS XFEED OX vlv, then manually opening appropriate FU vlv. Once line repress has been completed, nominal RCS propellant feed is resumed.

Reqd GPC address locations for TABLES 1 and 2 are software release dependent and will be supplied by MCC

1. DAP: FREE

2. Config RCS for repress:

O7 √Aff RCS TK ISOL 1/2(3/4/5 A,B) – CL (tb-CL)
√XFEED 1/2(3/4/5) – CL (tb-CL)
MANF ISOL 1,2(3,4,5) – OP (tb-OP)

3. Config SAME side OMS vlv:

O8 √L(R) OMS TK ISOL A,B – OP (tb-OP)
√XFEED A – CL (tb-CL)
XFEED B – OP (tb-OP)

4. Zero (0) appropriate RCS XFEED VLV reset command:

GNC 0 GPC MEMORY

√HEX 27*****
BIT RST – ITEM 23 EXEC
Obtain and enter ADD IDs and DESIRED values from TABLE 1

ADD ID	DESIRED	Value A	Value B
28 __ __ __ __ __	29 __ __ __ __	__ __ __ __	__ __ __ __

√Data values in ACTUAL column agree with Value A (MCC supplied)
WRITE – ITEM 25 EXEC
√Data values in ACTUAL column agree with Value B (MCC supplied)

5. Set to One (1) the appropriate RCS XFEED VLV set command:
BIT SET – ITEM 22 EXEC
Obtain and enter ADD IDs and DESIRED values from TABLE 2

ADD ID	DESIRED	Value C
28 __ __ __ __ __	29 __ __ __ __	__ __ __ __

√Data values in ACTUAL column agree with Value C (MCC supplied)
WRITE – ITEM 25 EXEC
√Data values in ACTUAL column agree with DESIRED

6. During AOS, perform OX line repress from OMS

O7 L(R) RCS XFEED 1/2(3/4/5) – GPC (tb-bp)
Wait 10 sec

GNC 23 RCS

√OX MANF P > 130 psia

RCS SSR-3 (Cont)

CRT * If MANF P < 130 psia: *
O8 * L(R) OMS XFEED VLV A,B – CL (tb-CL) *
O7 * RCS XFEED VLV 1/2(3/4/5) – CL (tb-CL) *
* Set aff MANF VLVS STAT to CL *
* GNC 23 RCS *
* ITEM 2(3) EXEC *
* ITEM 40,41(42,43,44) EXEC *
* DAP: as reqd *
* √MCC >> *

7. Perform FU line repress from OMS

O7 L(R) RCS XFEED 1/2(3/4/5) – OP (tb-OP)
Wait 10 sec
CRT √FU MANF P > 130 psia

* If MANF P < 130 psia: *
O8 * L(R) OMS XFEED A,B – CL (tb-CL) *
O7 * RCS XFEED 1/2(3/4/5) – CL (tb-CL) *
* Set aff MANF VLVS STAT to CL *
* GNC 23 RCS *
* ITEM 2(3) EXEC *
* ITEM 40,41(42,43,44) EXEC *
* DAP: as reqd *
* √MCC >> *

8. Cleanup and reconfig:

O8 L(R) OMS XFEED A,B – CL (tb-CL)
O7 RCS XFEED 1/2(3/4/5) – CL (tb-CL)
ISOL 1/2(3/4/5 A,B) – OP (tb-OP)
MANF ISOL 1,2(3,4,5) – OP (tb-OP), GPC

9. Reselect jets as reqd

10. DAP: as reqd

11. Zero (0) the appropriate RCS XFEED VLV set command:

GNC 0 GPC MEMORY

√HEX 27*
BIT RST – ITEM 23 EXEC
Obtain and enter ADD IDs and DESIRED values from TABLE 2

ADD ID	DESIRED	Value D	Value E
28 __ __ __ __ __	29 __ __ __ __	__ __ __ __	__ __ __ __

√Data values in ACTUAL column agree with Value D (MCC supplied)
WRITE – ITEM 25 EXEC
√Data values in ACTUAL column agree with Value E (MCC supplied)

12. Set to One (1) the appropriate RCS XFEED VLV reset command:
BIT SET – ITEM 22 EXEC
Obtain and enter ADD IDs and DESIRED values from TABLE 1

ADD ID	DESIRED	Value F	Value G
28 __ __ __ __ __	29 __ __ __ __	__ __ __ __	__ __ __ __

√Data values in ACTUAL column agree with Value F (MCC supplied)
WRITE – ITEM 25 EXEC
√Data values in ACTUAL column agree with Value G (MCC supplied)

RCS SSR-3 (Cont)

	TABLE 1		
X-REF	ADD ID BIT RESET ADDRESS	COMMANDS	DESIRED
(1)	__ __ __ __ __	L RCS OX 1/2 XFEED	4 0 0 0
(2)	__ __ __ __ __	L RCS OX 3/4/5 XFEED	0 0 4 0
(3)	__ __ __ __ __	R RCS OX 1/2 XFEED	4 0 0 0
(4)	__ __ __ __ __	R RCS OX 3/4/5 XFEED	0 0 1 0

	TABLE 2		
X-REF	ADD ID BIT SET ADDRESS	COMMANDS	DESIRED
(1)	__ __ __ __ __	L RCS OX 1/2 XFEED	4 0 0 0
(2)	__ __ __ __ __	L RCS OX 3/4/5 XFEED	0 0 4 0
(3)	__ __ __ __ __	R RCS OX 1/2 XFEED	4 0 0 0
(4)	__ __ __ __ __	R RCS OX 3/4/5 XFEED	0 0 1 0

RCS SSR-4
STAGED, MANF REPRESS

NOTE

1. This procedure attempts to pressurize non-leaking Manf P (OX or FU) to greater than 130 psia, so manifold can then be repressed directly from tank
2. Do not use this procedure if OX MANF P < 49 psia and FU MANF P < 35 psia
3. All manifolds on same tank leg will be affected

> WARNING
> Repressing more than one manifold at a time may damage RCS propellant tanks when manifolds are below vapor pressure (See Note 2.)

GNC 23 RCS

1. DAP: FREE

O7(O8) 2. Aff RCS XFEED(s) – CL (tb-CL)
TK ISOL(s) – CL (tb-CL)
MANF ISOL(s) – OP (tb-OP)

3. If aff MANF P(s) < 130 (OX and FU):
   Aff RCS MANF ISOL(s) – CL (tb-CL)
   TK ISOL(s) – OP (tb-OP)
   Repeat step 2
4. If aff MANF P(s) > 130 (OX or FU):
   Aff RCS MANF ISOL(s) – CL (tb-CL)
   TK ISOL(s) – OP (tb-OP)
   MANF ISOL(s) – OP (tb-OP), GPC one at a time
5. DAP: as reqd

RCS SSR-5
LEAKING RCS PRPLT/He BURN

If FWD RCS LEAK, perform either -X TRANSLATION (uses OPS 2, part A) or FRCS DUMP (uses OPS 3, part B)
(If no MCC, perform -X TRANSLATION)
If AFT RCS LEAK, perform +X TRANSLATION (uses OPS 2, part C)

A. **If FRCS -X TRANSLATION:**

1. RCS BURN PREP

O14:F, O15:F, O16:F — √Pri RJD LOGIC,DRIVER (sixteen) – ON

O14:E, O15:E, O16:E — √cb DDU (six) – cl

O8 — FWD He PRESS A(B) – OP (tb-OP)
B(A) – CL (tb-CL)
TK ISOL (two) – OP (tb-OP)
MANF ISOL 1,2,3,4 (four) – OP (tb-OP), GPC

GNC 55 GPS STATUS

√GPS TO NAV – INH (*)

2. MNVR TO BURN ATTITUDE

DAP: B1/AUTO/PRI

GNC UNIV PTG

TGT ID: 2

√MCC for preferred burn
If no COMM, maneuver to closest out-of-plane attitude and execute burn ASAP

If out-of-plane burn:
- BODY VECTOR: 3
- OM: 90 (270 for nose south)
- Start TRK – ITEM 19 EXEC (CUR - *)

If retro burn (heads down):
- BODY VECTOR: 5
- P: 88
- Y: 0
- OM: 180
- Start TRK – ITEM 19 EXEC (CUR - *)

C2 — GNC, OPS 202 PRO

GNC ORBIT MNVR EXEC

RCS SEL – ITEM 4 EXEC
TIG – ITEM 10 +(consult MCC) EXEC
ΔVX – ITEM 19 -1 0 0 EXEC
ΔVY – ITEM 20 +0 EXEC
ΔVZ – ITEM 21 +0 EXEC
LOAD – ITEM 22 EXEC
TIMER – ITEM 23 EXEC

Do not maneuver (no ITEM 27), ignore computed ATT, perform burn in final ATT
Go to step A3

If posi burn (heads down):
- BODY VECTOR: 5
- P: 92
- Y: 0
- OM: 0
- Start TRK – ITEM 19 EXEC (CUR - *)

C2 — GNC, OPS 202 PRO

GNC ORBIT MNVR EXEC

RCS SEL – ITEM 4 EXEC
TIG – ITEM 10 +(consult MCC) EXEC
ΔVX – ITEM 19 -1 0 0 EXEC
ΔVY – ITEM 20 +0 EXEC
ΔVZ – ITEM 21 +0 EXEC
LOAD – ITEM 22 EXEC
TIMER – ITEM 23 EXEC

Do not maneuver (no ITEM 27), ignore computed ATT, perform burn in final ATT
Go to step A3

3. TERMINATE CONDITIONS

Terminate RCS burn when any one of the following conditions exists:

If He LEAK:

Aff He P < 456 psia, or
CUR HP = 95 nmi, or
Burn Time from below table expired

RCS PRPLT TO BE BURNED TO ACHIEVE MAX BLOWDN
CURRENT NON-LEAKING (OX OR FU)%

	24	25	30	35	40	45	50	55	60	65	70	75	80	85	90
FRCS -X (2 JETS)	0:00	0:03	0:19	0:34	0:49	1:05	1:20	1:36	1:51	2:07	2:22	2:36	2:53	3:08	3:24

TIME FROM BURN INITIATION (M:S)

If PRPLT LEAK:

First RCS jet FAIL OFF or
CUR HP = 95 nmi

4. BURN EXEC

F6(F8) ADI ERROR – MED
RATE – HI

If burning out-of-plane:

Verify burn attitude, execute burn ASAP, and ignore TIG references

If retro burn:

ADI ATT – LVLH
√ATT

	Retro Heads Down
R:	180
P:	358
Y:	000

If posi burn:

ADI ATT – LVLH
√ATT

	Posi Heads Down
R:	000
P:	178
Y:	000

GNC 20 DAP CONFIG

P,Y OPTION – ITEM 35,36 EXEC (NOSE)

F7 FLT CNTLR PWR – ON
DAP TRANS: NORM/PULSE/PULSE

TIG-0:30> DAP: B/INRTL/PRI
ADI ATT – REF
ATT REF pb – push

F5 At TIG: THC – X (pull)
When terminate conditions are met:
THC – release
If burn is terminated at CUR Hp = 95, finish burn out-of-plane (step A2)

5. POST BURN RECONFIG

F7 FLT CNTLR PWR – OFF
O14:E, O15:E, O16:E √cb DDU (six) – as reqd

C2 If retro or posi burn: GNC, OPS 201 PRO
DAP TRANS: PULSE/PULSE/PULSE

GNC 20 DAP CONFIG

P,Y OPTION – ITEM 15,16 EXEC (twice) (TAIL)
– ITEM 35,36 EXEC (TAIL)

O8 If He leak:
FWD He PRESS A(B) – CL (tb-CL)
MANF ISOL 5 – OP (tb-OP), GPC
If Prplt leak:
Perform RCS SECURE (FWD,AFT) (ORB PKT, RCS)

O16 RJD L5/F5/R5 DRIVER – OFF
DAP: as reqd >>

B. **If FRCS DUMP:**

1. RCS DUMP PREP

O14:F, O15:F, O16:F — √Pri RJD LOGIC,DRIVER (sixteen) – ON

O8 — FWD He PRESS A(B) – OP (tb-OP)
B(A) – CL (tb-CL)
TK ISOL (two) – OP (tb-OP)
MANF ISOL 1,2,3,4 (four) – OP (tb-OP), GPC
Perform G2/G8 to G3 TRANS (ENT PKT, DPS)

2. TERMINATE CONDITIONS

Terminate RCS dump when any one of the following conditions exists:

If He LEAK:
- Aff He P < 456 psia, or
- Dump Time from below table expired

RCS PRPLT TO BE DUMPED TO ACHIEVE MAX BLOWDN
CURRENT NON-LEAKING (OX OR FU)%

	24	25	30	35	40	45	50	55	60	65	70	75	80	85	90
OPS 3 FRCS DUMP (4 JETS)	0:00	0:02	0:11	0:20	0:29	0:38	0:47	0:56	1:05	1:14	1:23	1:32	1:41	1:50	1:59

TIME FROM DUMP INITIATION (M:S)

If PRPLT LEAK:
- First RCS jet FAIL OFF

3. PERFORM FWD RCS DUMP

GNC DEORB MNVR COAST

FWD RCS ARM – ITEM 36 EXEC
DUMP – ITEM 37 EXEC
When terminate conditions met:
FWD RCS OFF – ITEM 38 EXEC

4. POST DUMP RECONFIG

Perform G3 to G2/G8 TRANS (ENT PKT, DPS)
Reconfig NBAT to pre-dump config

GNC 20 DAP CONFIG

P,Y OPTION – ITEM 15,16 EXEC (twice) (TAIL)
– ITEM 35,36 EXEC (twice) (TAIL)

O8 — If He leak:
FWD He PRESS A(B) – CL (tb-CL)
MANF ISOL 5 – OP (tb-OP), GPC
If Prplt leak: Perform RCS SECURE (FWD,AFT) (ORB PKT, RCS)

O16 — RJD L5/F5/R5 DRIVER – OFF

DAP: as reqd >>

C. **If AFT RCS LEAK, perform +X TRANSLATION:**

1. XFEED FROM LEAKING RCS 1/2 LEG TO GOOD RCS 1/2 LEG

O14:F, O15:F, O16:F — √Pri RJD LOGIC,DRIVER (sixteen) – ON

O14:E, O15:E, O16:E — √cb DDU (six) – cl

√DAP: FREE

O8 — √L,R OMS XFEED (four) – CL (tb-CL)

O7 — AFT L,R RCS TK ISOL 3/4/5 (four) – CL (tb-CL)
Good AFT RCS TK ISOL 1/2 – CL (tb-CL)
Leaking AFT RCS TK ISOL 1/2 – OP (tb-OP)
He PRESS A(B) – OP (tb-OP)
B(A) – CL (tb-CL)
AFT L,R RCS MANF ISOL 1 (two) – OP (tb-OP), GPC
2,3,4 (six) – CL (tb-CL)
5 (two) – CL (tb-CL), GPC
XFEED 1/2 (two) – OP (tb-OP)
3/4/5 (two) – CL (tb-CL)

If prior config was interconnect:

GNC 23 RCS

OMS PRESS ENA OFF – ITEM 7 EXEC (*)

GNC UNIV PTG

CNCL – ITEM 21 EXEC

2. MNVR TO BURN ATTITUDE
DAP: B1/AUTO/PRI

GNC 55 GPS STATUS

√GPS TO NAV – INH (*)

C2 GNC, OPS 202 PRO

GNC ORBIT MNVR EXEC

RCS SEL – ITEM 4 EXEC
TV ROLL – ITEM 5 +1 8 0 EXEC

√MCC for preferred burn
If no COMM, maneuver to closest out-of-plane attitude and execute burn ASAP

If out-of-plane burn:
- TIG – ITEM 10 + (current MET + 10 min) EXEC
- ΔVX – ITEM 19 +0 EXEC
- ΔVY – ITEM 20 -1 0 0 EXEC (+1 0 0 for nose south) EXEC
- ΔVZ – ITEM 21 +0 EXEC
- LOAD – ITEM 22 EXEC
- TIMER – ITEM 23 EXEC
- MNVR – ITEM 27 EXEC (*)
- Go to step C3

If retro burn:
- TIG – ITEM 10 +(consult MCC) EXEC
- ΔVX – ITEM 19 -1 0 0 EXEC
- ΔVY – ITEM 20 +0 EXEC
- ΔVZ – ITEM 21 +0 EXEC
- LOAD – ITEM 22 EXEC
- TIMER – ITEM 23 EXEC
- MNVR – ITEM 27 EXEC (*)
- Go to step C3

If posi burn:
- TIG – ITEM 10 +(consult MCC) EXEC
- ΔVX – ITEM 19 +1 0 0 EXEC
- ΔVY – ITEM 20 +0 EXEC
- ΔVZ – ITEM 21 +0 EXEC
- LOAD – ITEM 22 EXEC
- TIMER – ITEM 23 EXEC
- MNVR – ITEM 27 EXEC (*)

3. TERMINATE CONDITIONS
Terminate RCS burn when any one of the following conditions exists:

If He LEAK:
- Aff He P < 456 psia, or
- CUR HP = 95 nmi, or
- Burn Time from below table expired

RCS PRPLT TO BE BURNED TO ACHIEVE MAX BLOWDN
CURRENT NON-LEAKING (OX OR FU)%

	35	40	45	50	55	60	65	70	75	80	85	90
AFT +X DUMP (2 JETS)	0:00	0:15	0:31	0:46	1:02	1:17	1:33	1:48	2:02	2:19	2:34	2:50

TIME FROM BURN INITIATION (M:S)

If PRPLT LEAK:
- First RCS jet FAIL OFF or
- CUR HP = 95 nmi

RCS SSR-5 (Cont)

4. BURN EXEC

F6(F8) ADI ERROR – MED
RATE – HI
ATT – INRTL
√ADI ATT
ADI ATT – REF
ATT REF pb – push
If burning out-of-plane, execute burn ASAP and ignore TIG references

GNC 20 DAP CONFIG

DAP B: P,Y OPTION – ITEM 35,36 EXEC (twice) (TAIL)
F7 FLT CNTLR PWR – ON
DAP TRANS: NORM/PULSE/PULSE

TIG-0:30 DAP: B/INRTL/PRI
F5 At TIG: THC +X
When terminate conditions are met:
THC – release
If burn was terminated at CUR Hp = 95, finish burn out-of-plane (step C2)
DAP: FREE
O7 Leaking RCS He PRESS A(B) – CL (tb-CL)
C2 GNC, OPS 201 PRO
If He leak, go to step C11

5. SETUP TO CLEAR He

O7 Leaking RCS TK ISOL 1/2 – CL (tb-CL)
O8 √L OMS TK ISOL (two) – OP (tb-OP)
XFEED B(A) – OP (tb-OP)

GNC 23 RCS

L OMS TO AFT – ITEM 5 EXEC (*****)
Reselect failed-off jets

Set L,R pod fail limit to 0:
RCS L – ITEM 2 EXEC
FAIL LIM – ITEM 4 +0 EXEC
RCS R – ITEM 3 EXEC
FAIL LIM – ITEM 4 +0 EXEC

6. SET UP DAP

GNC 20 DAP CONFIG

Change DAP A to A1

7. CLEAR He FROM LEFT RCS +X

DAP: A/INRTL/PRI
TRANS: NORM/NORM/NORM
If Hp ≤ 98, maneuver out-of-plane

F5 THC +X
After 7 sec,
THC – release

8. CLEAR He FROM XFEED LINE AND RIGHT RCS +X

GNC 23 RCS

Deselect L1A:
RCS L – ITEM 2 EXEC
JET DES – ITEM 33 EXEC

F5 THC +X
After 16 sec,
THC – release

9. CLEAR He FROM RCS MANF 1 PITCH AND YAW

DAP: B/FREE/PRI
TRANS: NORM/NORM/NORM

RHC +yaw past soft stop (ACCEL mode) for 2 sec
RHC -yaw past soft stop (ACCEL mode) for 2 sec

RHC +pitch past soft stop (ACCEL mode) for 2 sec
DAP: A/INRTL/PRI
TRANS: PULSE/PULSE/PULSE

10. POST He CLEAR CLEANUP

F7
FLT CNTLR PWR – OFF
O14:E, O15:E, O16:E
cb DDU (six) – as reqd

GNC 23 RCS

Reselect L1A:
JET DES – ITEM 33 EXEC

Reset L,R Pod Fail Limit to 2:
FAIL LIM – ITEM 4 +2 EXEC
RCS R – ITEM 3 EXEC
FAIL LIM – ITEM 4 +2 EXEC

Reset RCS RM fail counters on all jets:
JET RESET – ITEM 45 EXEC

DAP: FREE
AFT L,R RCS XFEED 3/4/5 (two) – OP (tb-OP)
MANF ISOL 2,3,4 (six) – OP (tb-OP), GPC
5 (two) – OP (tb-OP), GPC
If Group B(C) Powerdown:
O14:F, O15:F, O16:F
Pri RJD LOGIC,DRIVER (sixteen) – OFF
RJD A 1A L2/R2 MANF DRIVER – ON

DAP: A,B as reqd >>

11. SYSTEMS CLEANUP FOR He LEAKS

F7
FLT CNTLR PWR – OFF
O14:E, O15:E, O16:E
cb DDU (six) – as reqd

DAP: FREE
O7
Leaking RCS TK ISOL 1/2 – CL (tb-CL)
AFT L,R RCS XFEED 3/4/5 (two) – OP (tb-OP)
MANF ISOL 2,3,4 (six) – OP (tb-OP), GPC
5 (two) – OP (tb-OP), GPC
√L OMS TK ISOL (two) – OP (tb-OP)
XFEED B(A) – OP (tb-OP)

GNC 23 RCS

Initiate interconnect usage counter:
L OMS TO AFT – ITEM 5 EXEC (*)
If Group B(C) Powerdown:
O14:F, O15:F, O16:F
Pri RJD LOGIC,DRIVER (sixteen) – OFF
RJD A 1A L2/R2 MANF DRIVER – ON

DAP TRANS: as reqd
DAP: A,B as reqd

This Page Intentionally Blank

BFS FSM INDEX 11-2

OMS SCHEMATIC..... 11-3

11.1 L(R) OMS
11.1a 'L(R) OMS TK P'..... 11-4

11.2 OMS SW/VLV MISCOMP
11.2a OMS VLV tb – bp 11-10
11.2b tb AND sw POSITION DISAGREE..... 11-12

11.3 OMS PRPLT THERMAL
11.3a 'S89 PRPLT THRM OMS' – PRPLT THRM OMS..... 11-14
11.3b (see Note A) – THRM PRPLT..... 11-15
11.3c 'S89 PRPLT THRM POD' – PRPLT THRM POD 11-16

OMS SSR
OMS SSR-1 MIXED XFD: OMS PRPLT FAILURE 11-18

The following Fault Msgs have no corresponding MAL procedures in this book:

S89 L(R) OMS TEMP
G23 OMS/RCS QTY
L(R) OMS GMBL
L(R) OMS VLV
L(R) OMS QTY
L(R) OMS PC

NOTE A
The identified MAL represents a support procedure that is entered from other procedures or on MCC call

11.3 OMS PRPLT THERMAL
11.3b 'SM 0 THRM PRPLT' – THRM PRPLT 11-15

OMS

11

OMS SCHEMATIC

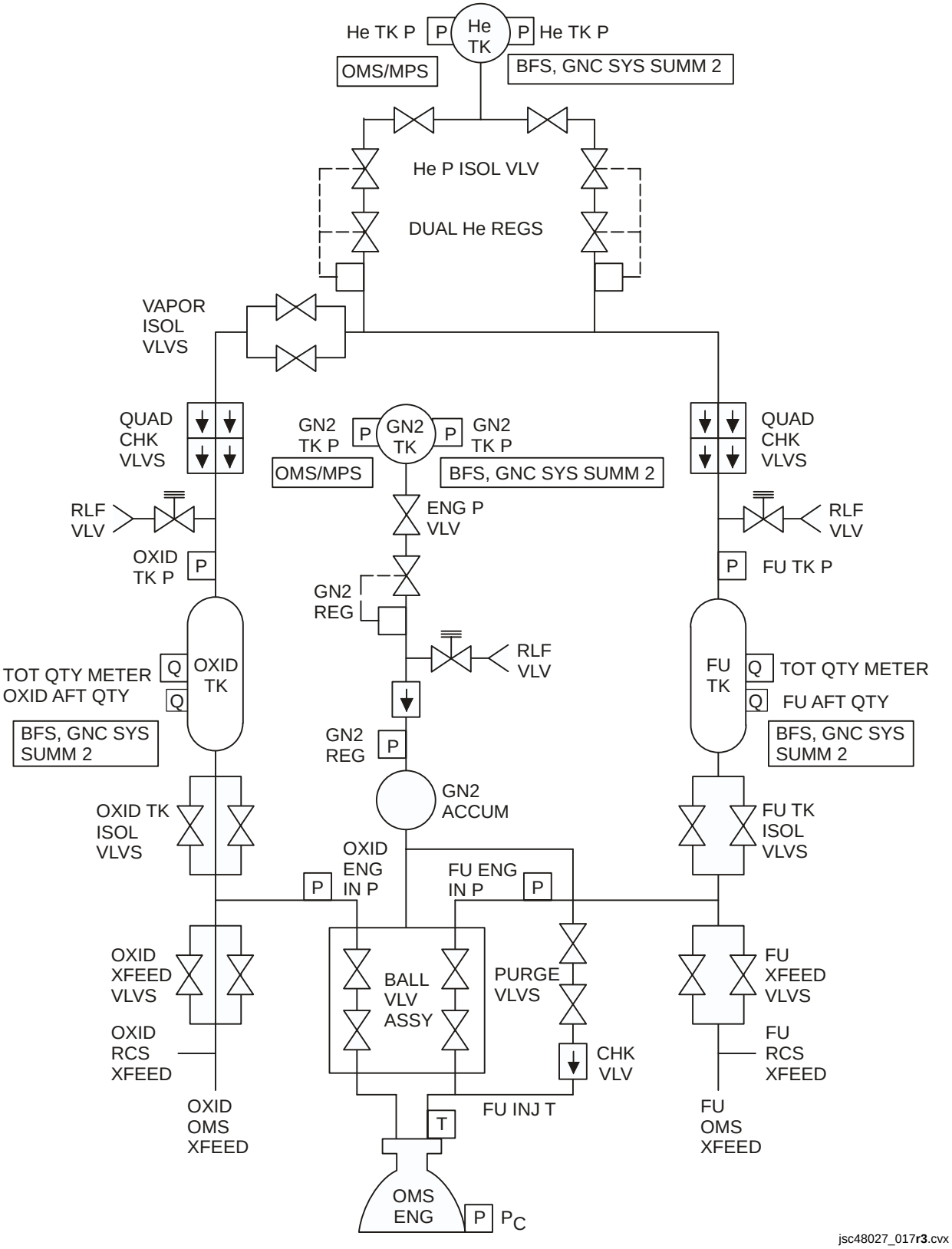

jsc48027_017**r3**.cvx

OMS | **11.1a 'L(R) OMS TK P'**

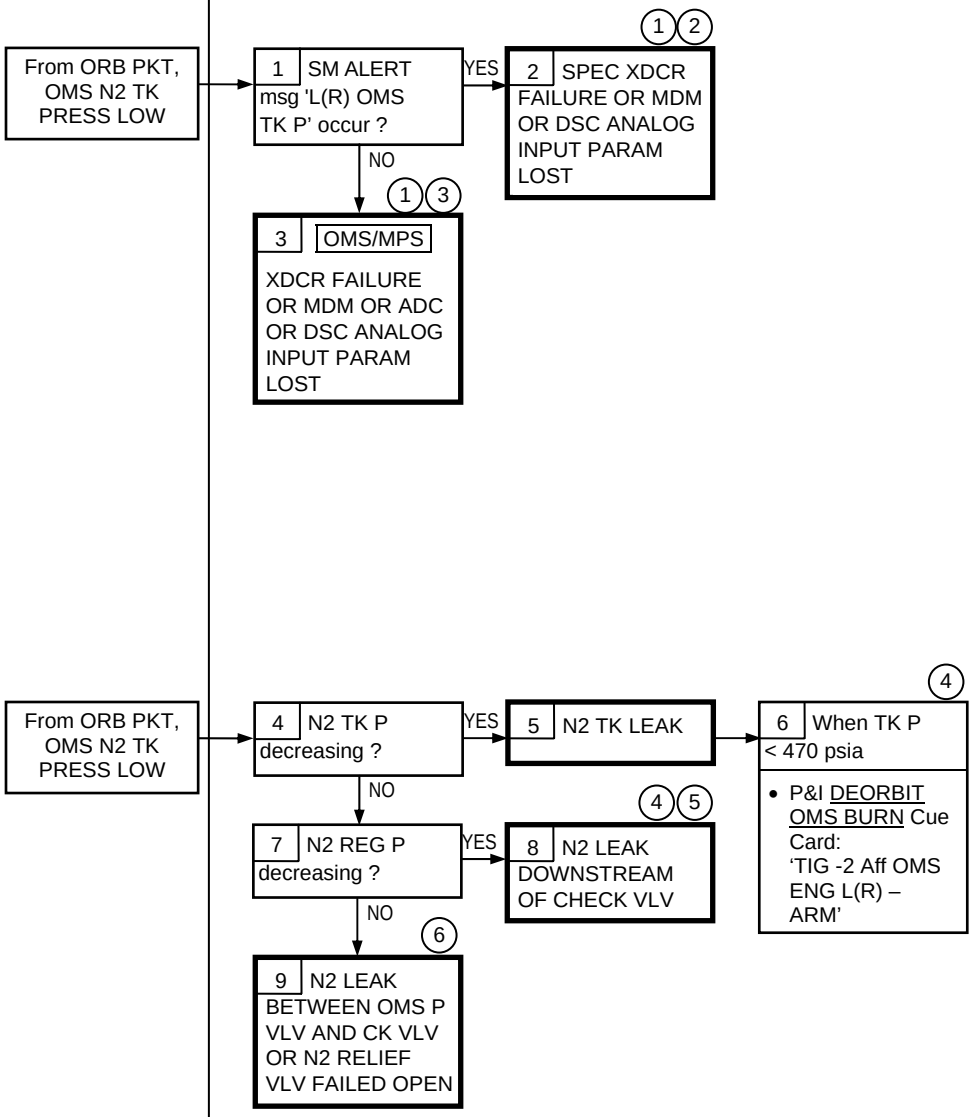

(1) √MCC for other params possibly lost in same MDM or ADC or DSC card

(2) N2 P available on OMS/MPS

(3) N2 P available on GNC SYS SUMM 2 display

(4) Do not use engine for additional on-orbit burns

(5) √MCC to determine if engine is usable for deorbit

(6) If after manual repress, N2 REG P < 299 psia, OMS engine inop

N2 TK P > 564 psia
Attempt repress of N2 sys prior to each burn. Monitor N2 REG P

N2 TK P < 564 psia
Save for Deorbit Burn. Capability exists to allow one additional actuation of bipropellant vlvs from N2 REG. Ignore 'L(R) OMS TK P' msg caused by low N2 REG P (P < 299 psia)

OMS 11.1a (Cont)

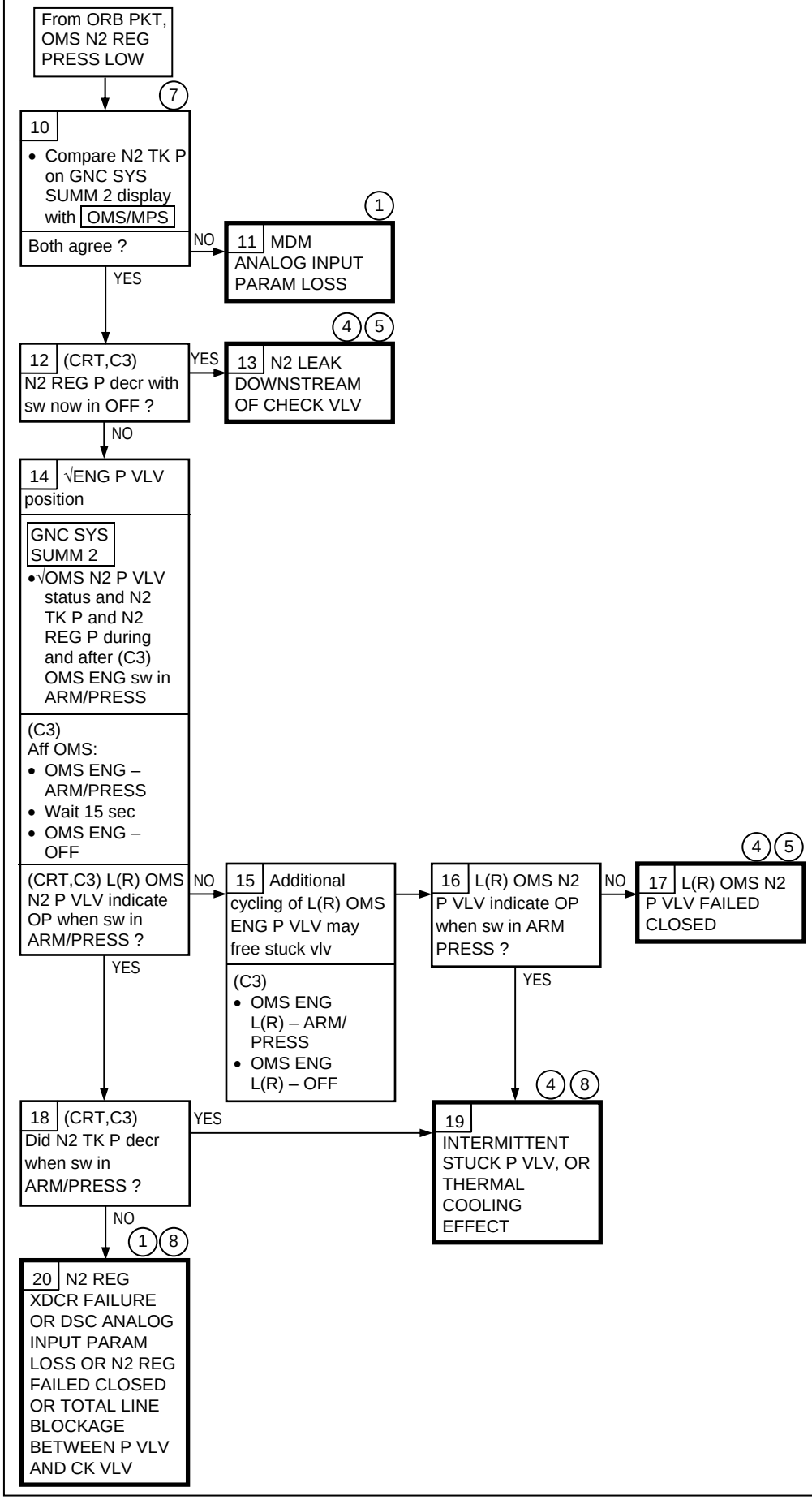

(1) √MCC for other params possibly lost in same MDM or DSC card

(4) Do not use engine for additional on-orbit burns

(5) √MCC to determine if engine is usable for deorbit

(7) N2 REG xdcr and N2 TK P xdcr on CRT have common MDM card. This check detects MDM card failure

(8) √MCC for further engine use

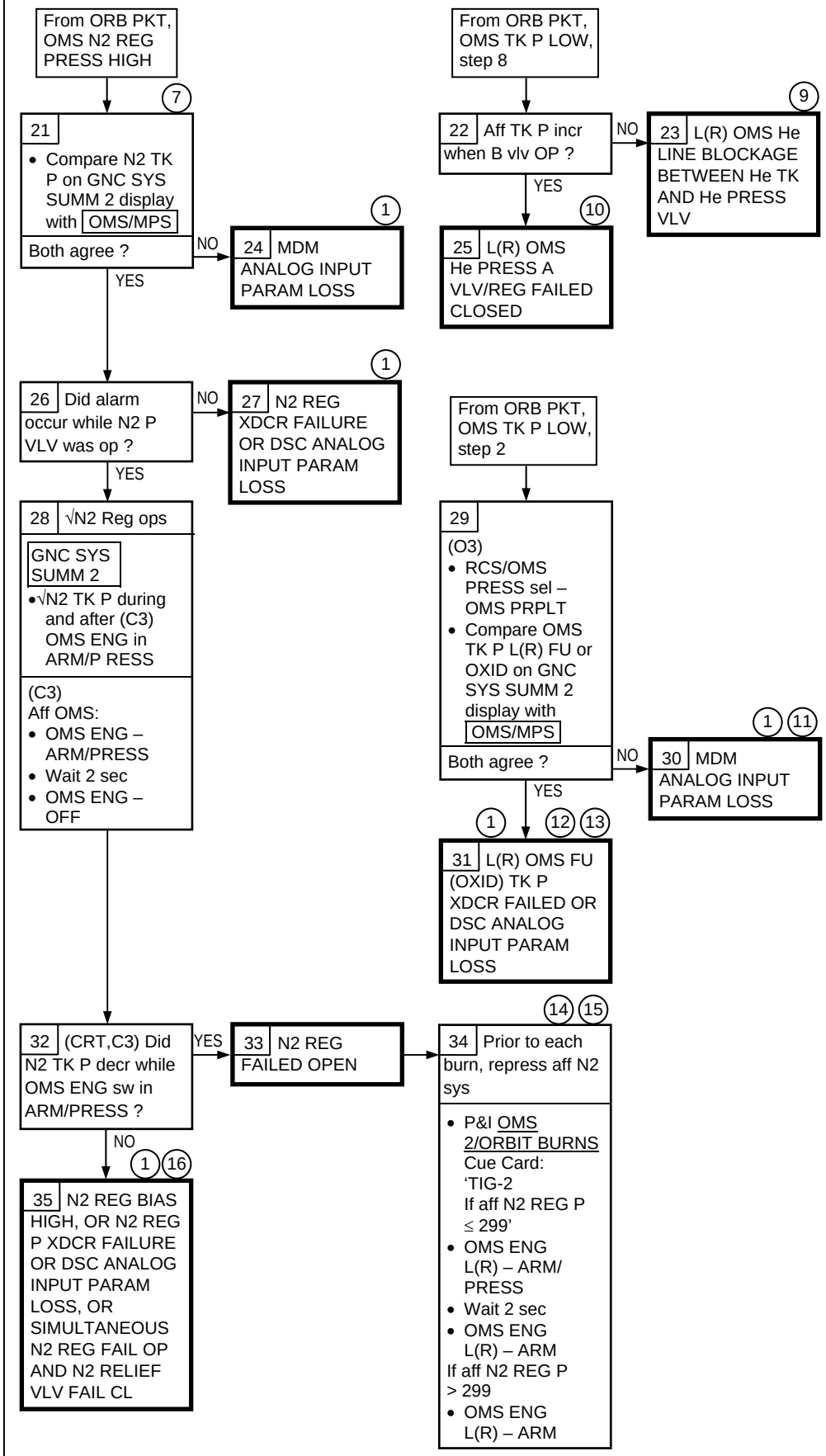

(1) √MCC for other params possibly lost in same MDM or DSC card

(7) N2 REG xdcr and N2 TK P xdcr on CRT have a common MDM card. This check detects MDM card failure

(9) √MCC for blowdown capability. If full blowdown exists, continue with nominal mission profile. If not full blowdown, save available blowdown for deorbit burn

(10) OMS and RCS operational in nominal config. When reqd or on MCC call, use (O8) L(R) OMS He PRESS VAP ISOL B to repress

(11) CRT display of affected TK P and associated msg are invalid. Use OMS/MPS and C/W for status

(12) On GNC SYS SUMM 2 display, use ENG IN P as B/U to failed PRPLT TK P xdcr

(13) H/W C/W lost for affected TK P

(14) Flow through failed Reg will exceed relief vlv setting: 450 psig – RELIEF400 psig – RESEAT

(15) If affected N2 TK P < 564 psia, do NOT use engine for orbit burns

(16) Single failure can result in N2 Reg failing OP and N2 Relief vlv failing CL (N2 Reg P > 500 psia)

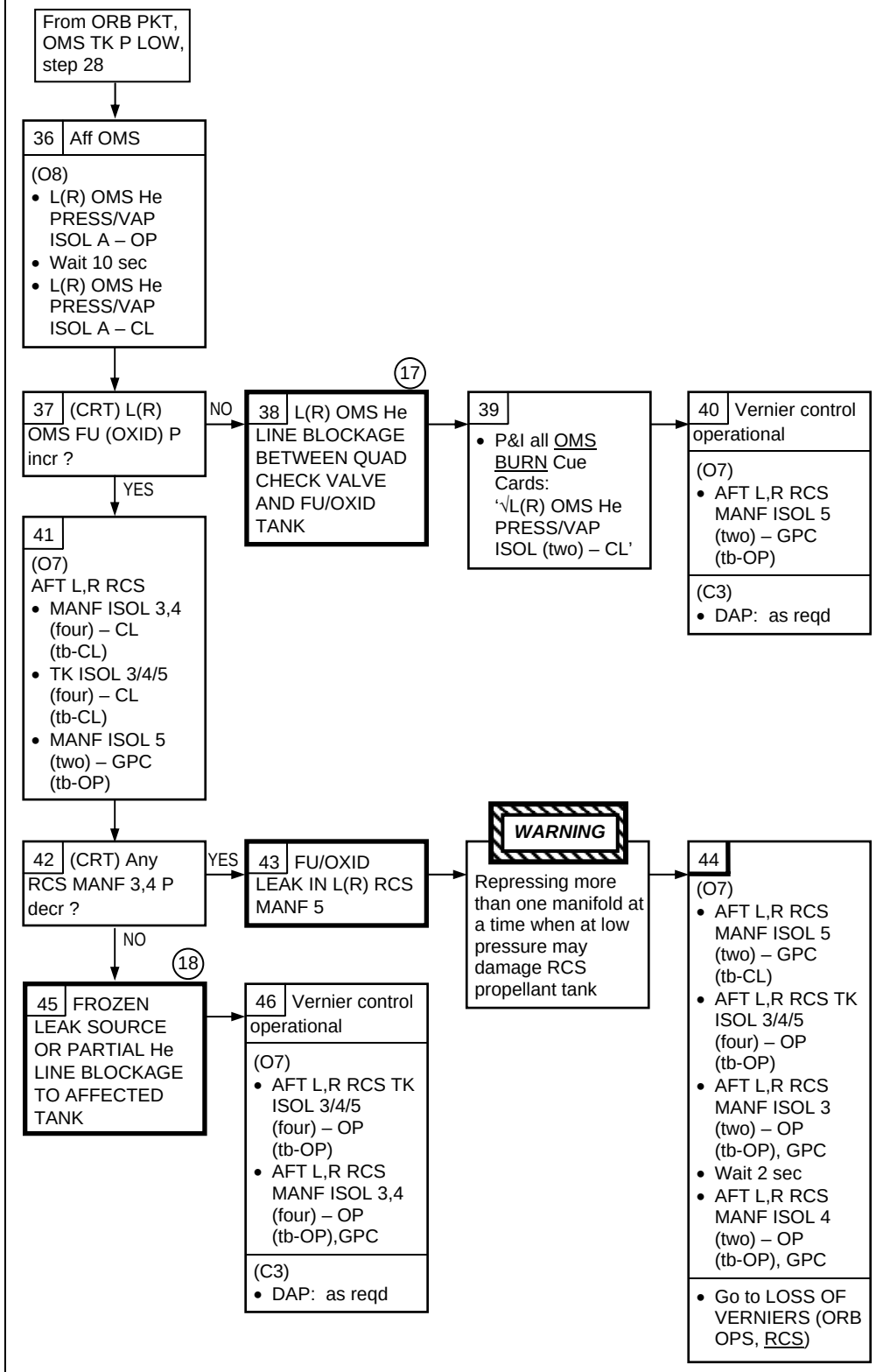

(17) Perform subsequent burns in blowdown in affected pod to prevent mixture ratio variations

(18) √MCC on action to be taken to minimize failure effects and config for subsequent burns

OMS 11.1a (Cont)

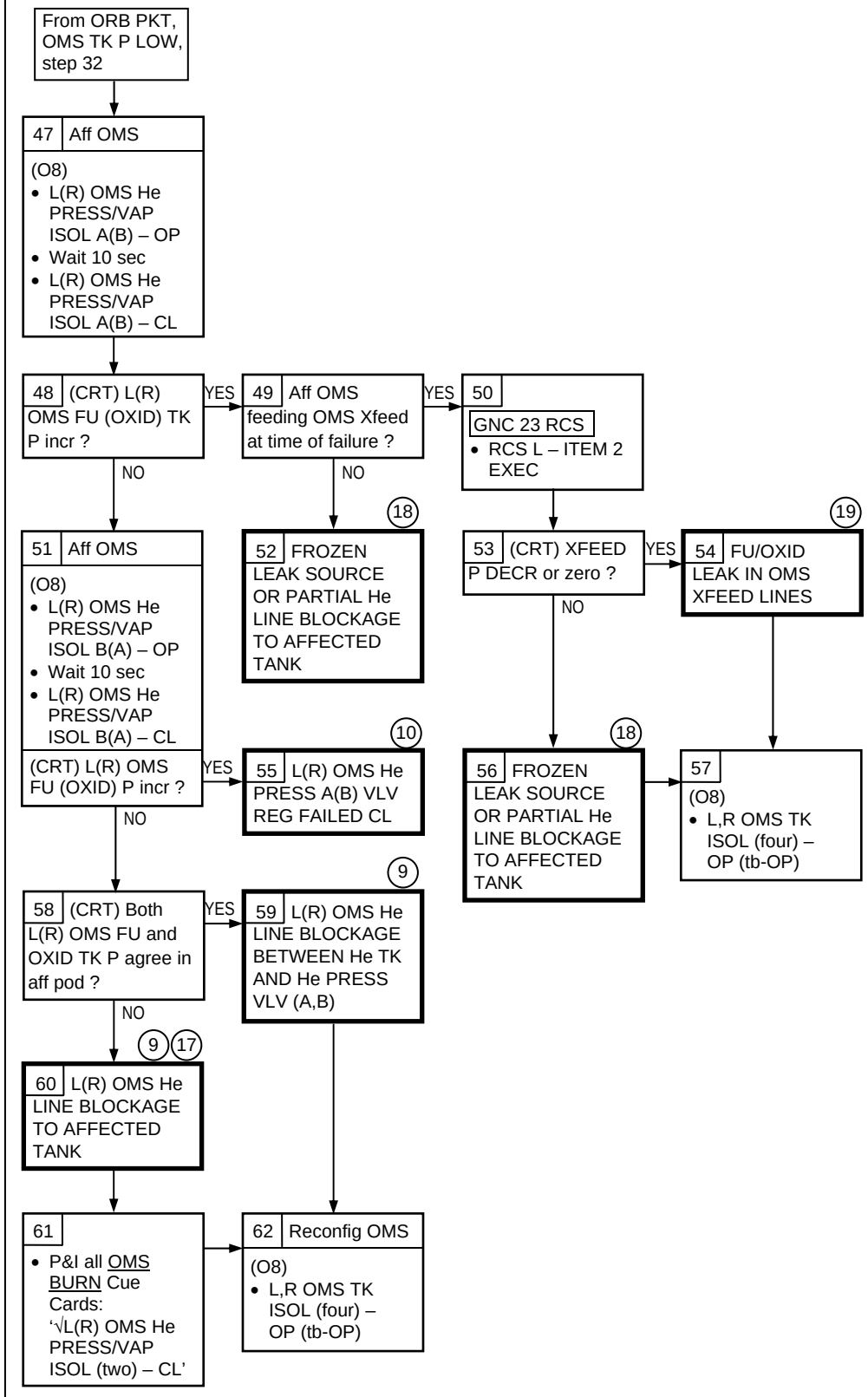

(9) √MCC for blowdown capability. If full blowdown exists, continue with nominal mission profile. If not full blowdown, save available blowdown for deorbit burn

(10) OMS and RCS operational in nominal config. When reqd or on MCC call, use (O8) L(R) OMS He PRESS VAP ISOL B to repress

(17) Perform subsequent burns in blowdown in affected pod to prevent mixture ratio variations

(18) √MCC on action to be taken to minimize failure effects and config for subsequent burns

(19) OMS and RCS operational in nominal config. Do not Xfeed or i'cnct

OMS 11.1a (Cont)

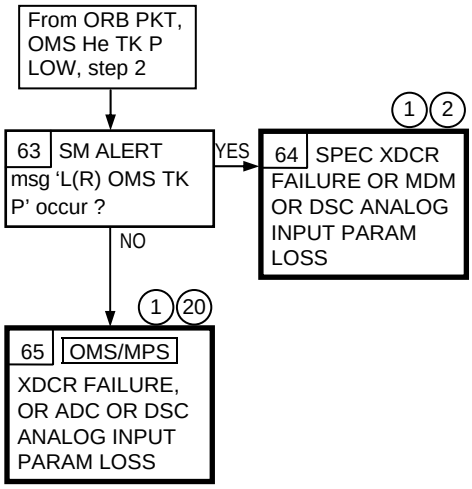

(1) √MCC for other params possibly lost in same MDM or DSC card

(2) N2 P available on OMS/MPS

(20) He P available on GNC SYS SUMM 2 display

OMS

11.2a OMS VLV tb – bp

OMS Vlv tb – bp

If:
- Miscompare exists in L,R OMS TK ISOL VLV A(B) or L,R OMS XFEED VLV A(B)

Nominal Config:
(MA73C:I)
cb AC1 AFT POD VLV GP 1 ΦA(ΦB,ΦC) – cl
cb AC2 AFT POD VLV GP 2 ΦA(ΦB,ΦC) – cl
cb AC3 AFT POD VLV GP 3 ΦA(ΦB,ΦC) – cl
AFT POD VLV LOGIC GP
- 1/3 – ON
- 1/2 – ON
- 2/3 – ON

10.1a 38

1 (O8) More than one tb – bp ?

YES

NO

2 Which OMS vlv tb – bp:

- (O8) L OMS TK ISOL A and R OMS TK ISOL A and L OMS XFEED A → 3 POD/AMC1 BUS FAILURE → EPS SSR-143
- L OMS XFEED B and R OMS XFEED B → 4 POD/AMC2 BUS FAILURE → EPS SSR-144
- L OMS TK ISOL B and R OMS TK ISOL B and R OMS XFEED A → 6 POD/AMC3 BUS FAILURE → EPS SSR-145
- Neither → 5 SEPARATE FAILURES. TROUBLESHOOT VLVS INDIVIDUALLY

7 During reconfig, tb – bp occurred ?

NO → 8 VLV FAILURE OR tb FAILURE OR MICROSW FAILURE → 17

YES

9 √AC motor thermal overload
- Aff OMS sw – GPC
- Wait 3 min, then reposition sw to mode in which tb – bp occurred

tb – bp ?

NO → 10 VLV CONTINUOUS PWR PROBLEM. THERMAL OVERLOAD RESET. VLV OPERATIONAL → (1)

YES → 12

11
- Aff OMS sw – GPC

(1) For subsequent reconfig, ignore tb – bp. After vlv commanded, wait 3 sec; then position appropriate sw to GPC

OMS 11.2a (Cont)

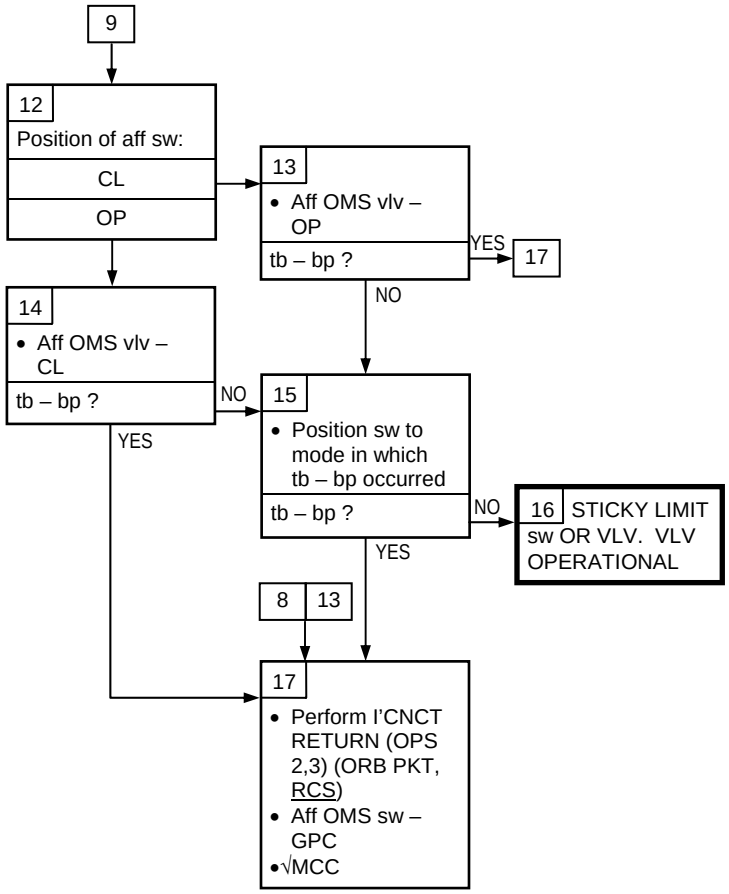

OMS

11.2b OMS VLV tb AND sw POSITION DISAGREE

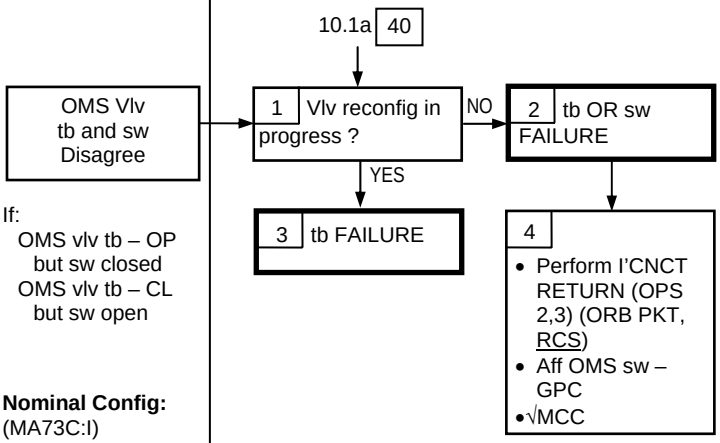

If:
- OMS vlv tb – OP but sw closed
- OMS vlv tb – CL but sw open

Nominal Config:
(MA73C:I)
cb AC1 AFT POD
VLV GP 1
ΦA(ΦB,ΦC) – cl
cb AC2 AFT POD
VLV GP 2
ΦA(ΦB,ΦC) – cl
cb AC3 AFT POD
VLV GP 3
ΦA(ΦB,ΦC) – cl
AFT POD VLV
LOGIC GP
1/3 – ON
1/2 – ON
2/3 – ON

This Page Intentionally Blank

OMS

11.3a PRPLT THRM OMS

SM ALERT

(1) S89 PRPLT THRM OMS

If:
Any param on OMS Thermal Limit Table out-of-limits
Refer to OMS THERMAL LIMIT TABLE

Nominal Config:
(A14)
RCS/OMS HTR OMS CRSFD LINES (two) – A AUTO(B AUTO), B OFF(A OFF)

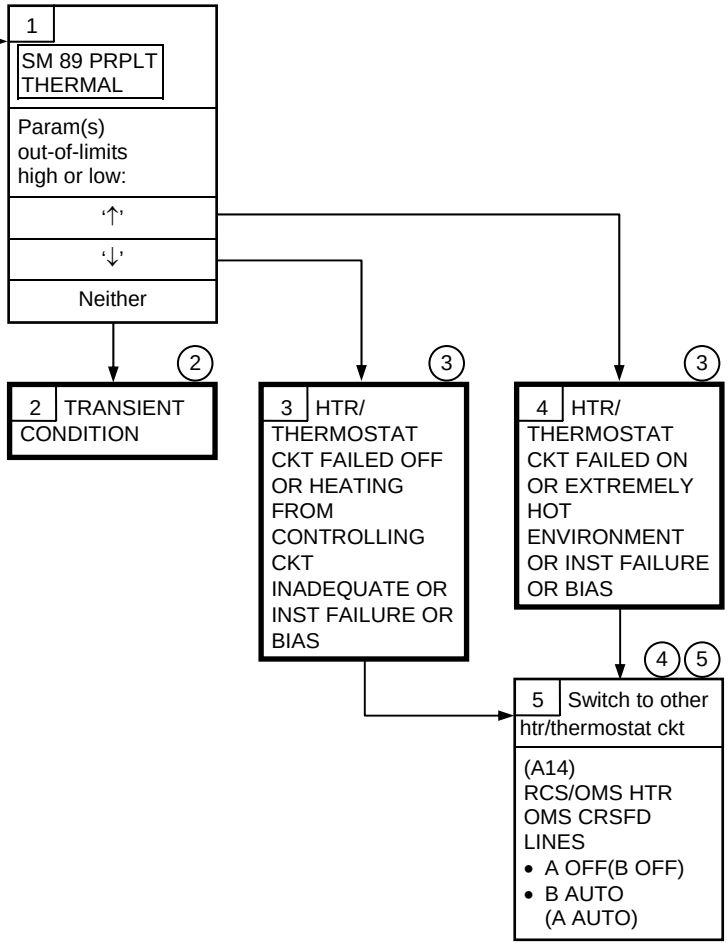

OMS THERMAL LIMIT TABLE

PARAMETER					FDA LIMIT LOW	FDA LIMIT HIGH
OMS CRSFD		L	R	C		
XFD	OX	XXXS	XXXS	XXXS	50	90 (6)
GMBL	LN	XXXS	XXXS		50	90 (6)
DRN	OX	XXXS	XXXS		50	100 (7)
		FU	OX			

(1) Msg available with SM in RUN mode only

(2) Htrs cycling high/low or intermittent xdcr failure. √MCC

(3) Because of insufficient onboard data and complexity of interacting htr/thermostat groups, crew cannot identify specific failure or determine instrument faults

(4) √MCC for further analysis, possible reconfig, and/or attitude change

(5) When no onboard thermal visibility into crossfeed lines (no SM and no BFS) exists, both A,B Htr sets will be turned to AUTO

(6) OMS CRSFD L GMBL LN and OMS CRSFD C XFD OX upper limit is 100 degF

(7) OMS CRSFD R DRN OX upper limit is 110 degF

OMS

11.3b THRM PRPLT

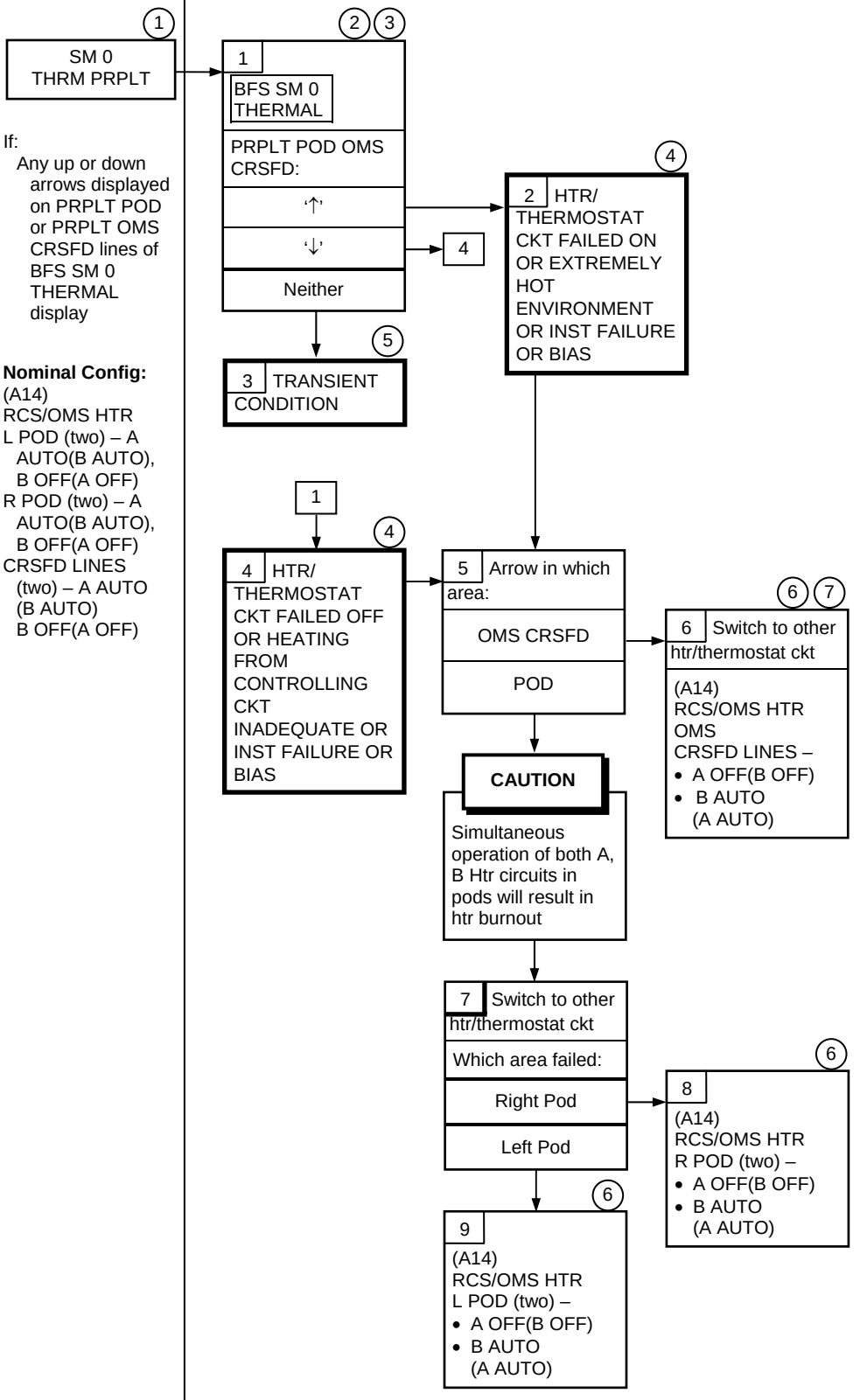

(1) BFS msg available in MM 104, 105, 106, 301, 302, 303, and when BFS in OPS 0

(2) If SM 89 PRPLT THERMAL is available, display may be used to provide insight into problem, with MCC consultation

(3) THERMAL display available only from BFS. No values displayed, only ↑, ↓, M, H, or L

(4) Because of insufficient onboard data and complexity of interfacing htr/thermostat groups, crew cannot identify specific failure or determine instrument faults

(5) Htrs cycling high/low or intermittent xdcr failure. √MCC

(6) √MCC for further analysis, possible reconfig, and/or attitude change

(7) When no onboard thermal visibility into CRSFD LINES (no SM and no BFS) exists, both A,B Htr sets will be turned to AUTO

OMS

11.3c PRPLT THRM POD

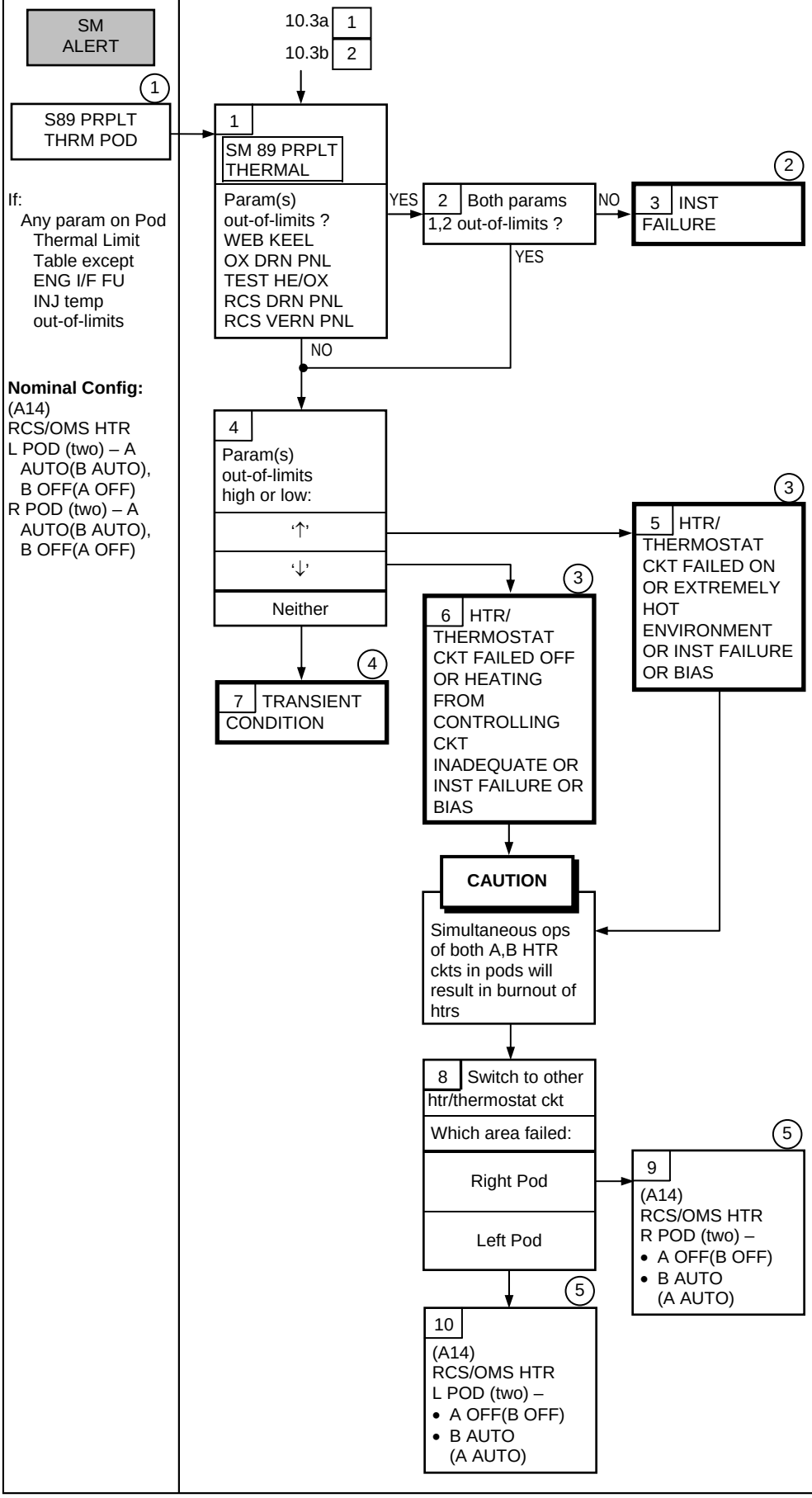

(1) Msg available with SM in RUN mode only

(2) √MCC for verification

(3) Because of insufficient onboard data and complexity of interacting htr/thermostat groups, crew cannot identify specific failure or determine instrument faults

(4) Htrs cycling high/low or intermittent xdcr failure. √MCC

(5) √MCC for further analysis, possible reconfig, and/or attitude change

11.3c (Cont)

POD THERMAL LIMIT TABLE

PARAM					FDA LIMIT	
					LOW	HIGH
POD			L	R		
OMS	TK	OX	XXXS	XXXS	45	95
		FU	XXXS	XXXS	45	95
ENG	I/F	OX	XXXS	XXXS	45	110
		FU	XXXS	XXXS	45	110
		OX VLV	XXXS	XXXS	40	122
		FU INJ	XXXS	XXXS	36	260
WEB	KEEL	1	XXXS	XXXS	45	100
		2	XXXS	XXXS	45	100
	Y	OB	XXXS	XXXS	45	120
		UP	XXXS	XXXS	45	120
OX	DRN PNL	1	XXXS	XXXS	45	110
		2	XXXS	XXXS	45	110
ENG		COVER	XXXS	XXXS	45	
		SERV PNL	XXXS	XXXS	45	140
GSE		SERV PNL	XXXS	XXXS	45	120
TEST		HE/OX 1	XXXS	XXXS	35	95
		2	XXXS	XXXS	35	95

OMS SSR-1
MIXED XFD: OMS PRPLT FAILURE

NOTE

Procedure uses MEMORY READ/WRITE to set appropriate OMS TK ISOL vlv and OMS XFEED vlv commands in order to connect usable OMS tk to opposite side. For single tank or single inlet failures, select engine in good pod. Unstow ASC PKT and reference DEORBIT MIXED XFD BURN PREP procedure on 7-6 for reqd address IDs. Desired values are given in Tables 1 thru 8

O8 1. L,R OMS TK ISOL (four) – CL (tb-CL)
XFEED (four) – CL (tb-CL)

O7 2. AFT L,R RCS XFEED (four) – CL (tb-CL)
√MSTR RCS XFEED – OFF

WARNING
Do not use MSTR RCS XFEED until post burn or loss of Deorbit capability may occur

3. Select failure case table

Single Failures	Use Table
L OMS OX TK	4
L OMS OX INLET	4
L OMS FU TK	6
L OMS FU INLET	6
R OMS OX TK	3
R OMS OX INLET	3
R OMS FU TK	5
R OMS FU INLET	5

Dual Failures	Use Table
L OMS FU TK AND R OMS OX TK	1
L OMS OX TK AND R OMS FU TK	2
L OMS FU TK AND R OMS OX INLET	3
L OMS OX INLET AND R OMS FU TK	4
L OMS OX TK AND R OMS FU INLET	5
L OMS FU INLET AND R OMS OX TK	6
L OMS OX INLET AND R OMS FU INLET	7
L OMS FU INLET AND R OMS OX INLET	8

CRT 4. Set up GPC vlvs

GNC 0 GPC MEMORY

√HEX 27*****
BIT RST – ITEM 23 EXEC (*****)
Obtain and enter ADD ID from ASC PKT, 7-6, DEORBIT MIXED XFD BURN PREP, step 3.
Obtain and enter DESIRED values from Tables 1 thru 8

ADD ID		DESIRED		
28	__ __ __ __ __	29	__ __ __ __	From Tables 1-8
30	__ __ __ __ __	31	__ __ __ __	
32	__ __ __ __ __	33	__ __ __ __	
34	__ __ __ __ __	35	__ __ __ __	

Table A	Table B
__ __ __ __	__ __ __ __
__ __ __ __	__ __ __ __
__ __ __ __	__ __ __ __
__ __ __ __	__ __ __ __

√Data values in ACTUAL column agree with Table A (MCC supplied)
WRITE – ITEM 25 EXEC
√Data values in ACTUAL column agree with Table B (MCC supplied)

5. BIT SET – ITEM 22 EXEC (*****)
Obtain and enter ADD ID from ASC PKT, 7-6, DEORBIT MIXED XFD BURN PREP, step 4.
Obtain and enter DESIRED values from Tables 1 thru 8

ADD ID		DESIRED		
28	__ __ __ __ __	29	__ __ __ __	From Tables 1-8
30	__ __ __ __ __	31	__ __ __ __	
32	__ __ __ __ __	33	__ __ __ __	
34	__ __ __ __ __	35	__ __ __ __	

Table C
0 0 0 0
0 0 0 0
0 0 0 0
0 0 0 0

√Data values in ACTUAL column agree with Table C
WRITE – ITEM 25 EXEC
√Data values in ACTUAL column agree with DESIRED

6. During AOS, perform reconfig:
O8 L,R OMS TK ISOL (four) – GPC
XFEED (four) – GPC
√Vlv config with MCC

7. Go to DEORBIT BURN (MIXED XFEED) (Cue Card) to perform deorbit burn
(√Burn engine in Tables 1 thru 8)

TABLE 1

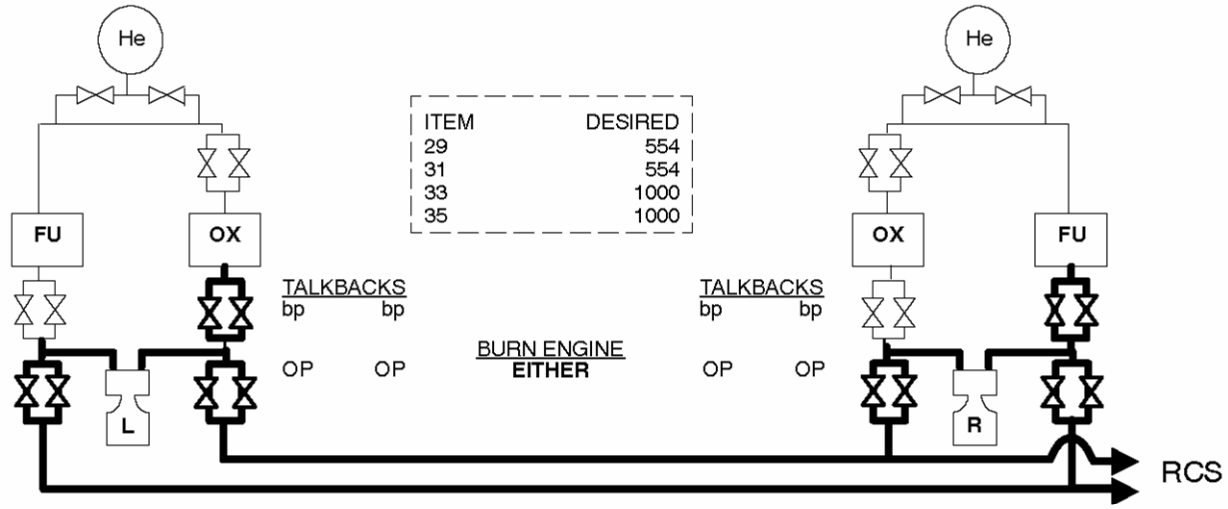

TABLE 2

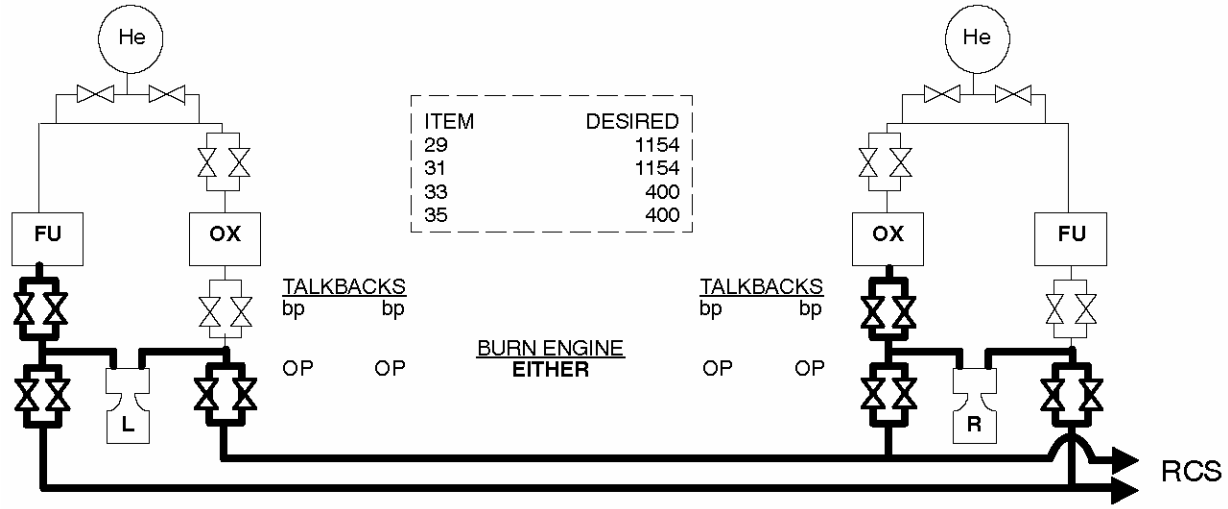

TABLE 3

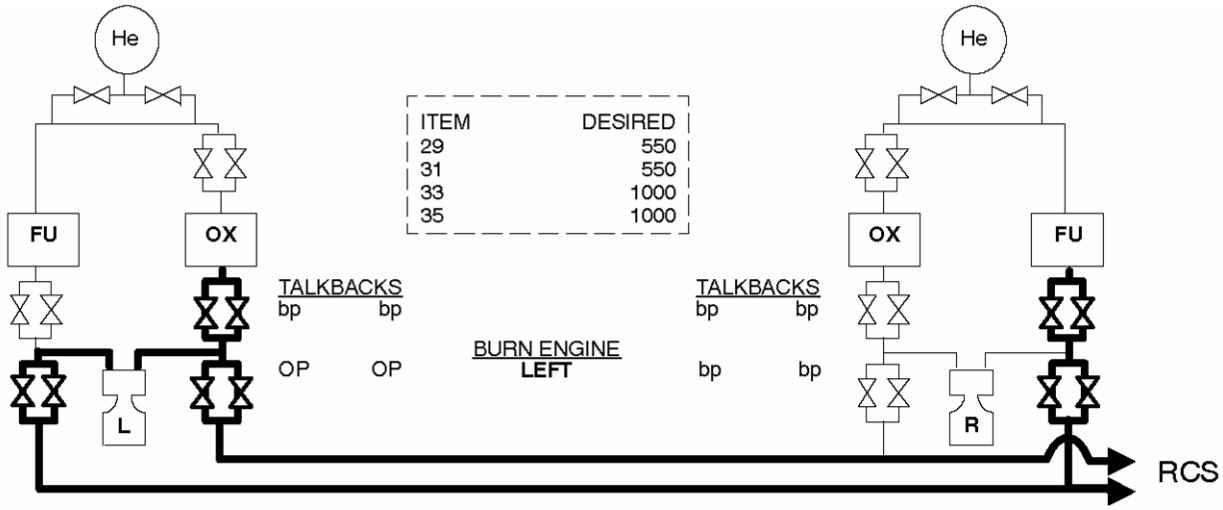

TABLE 4

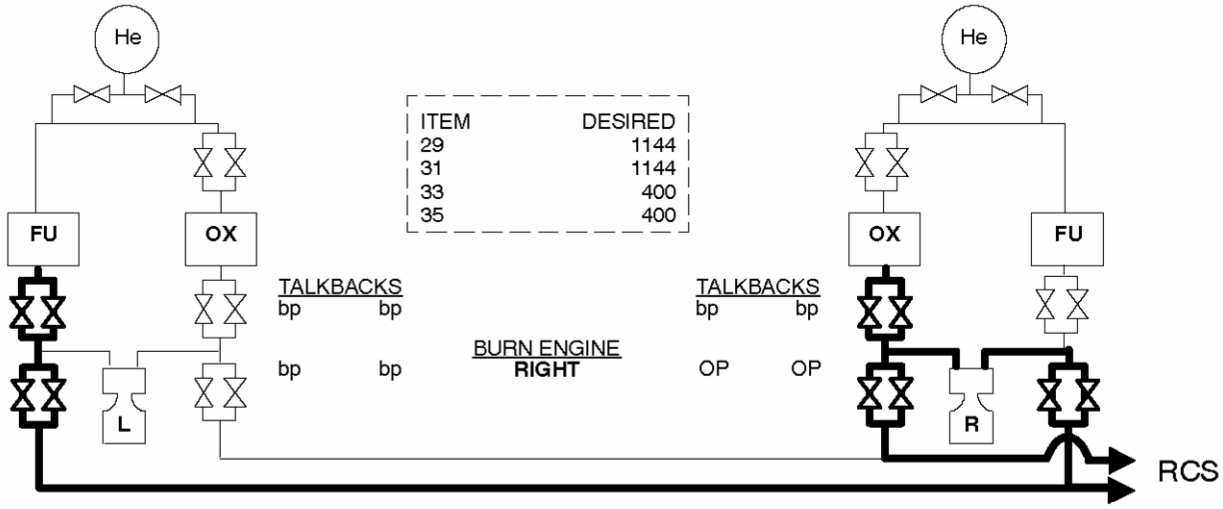

TABLE 5

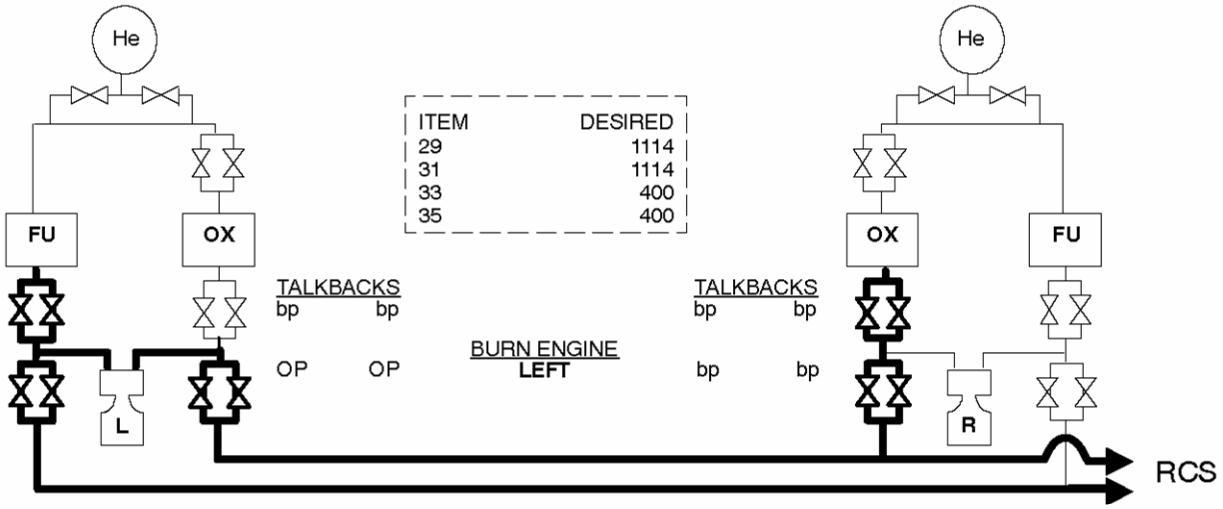

TABLE 6

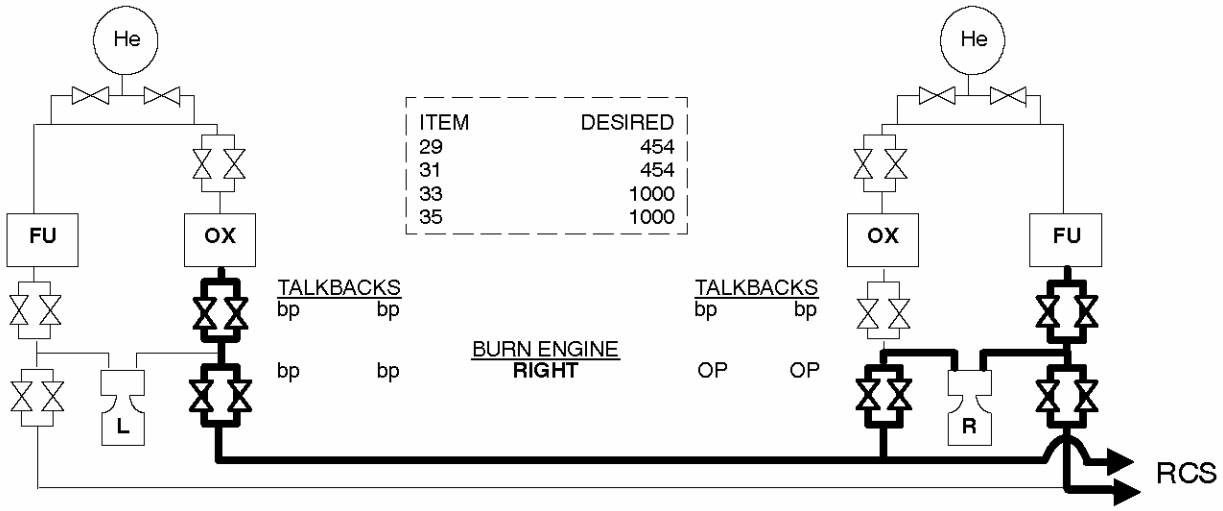

TABLE 7

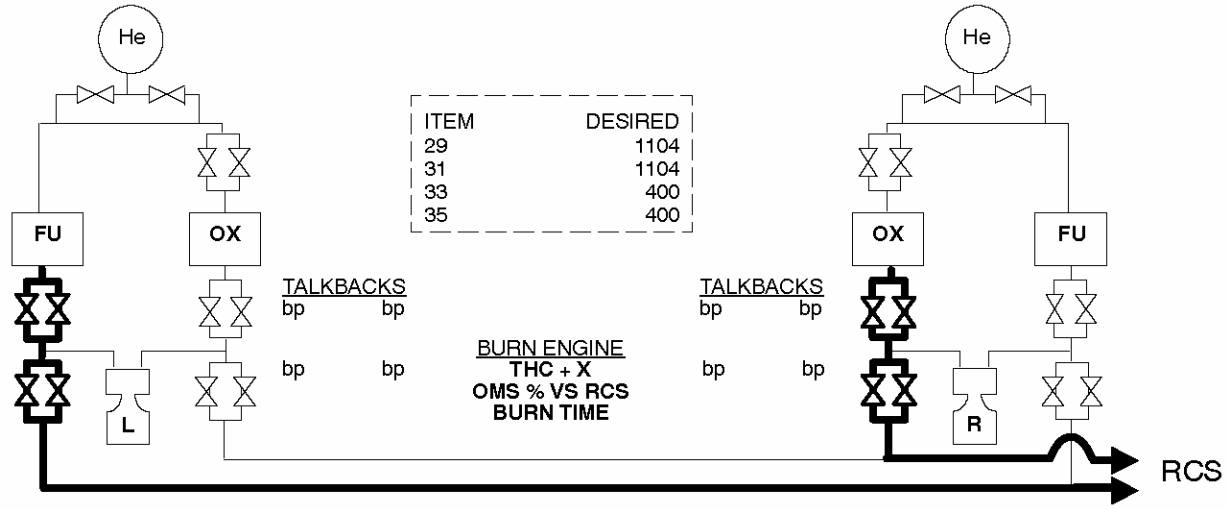

TABLE 8

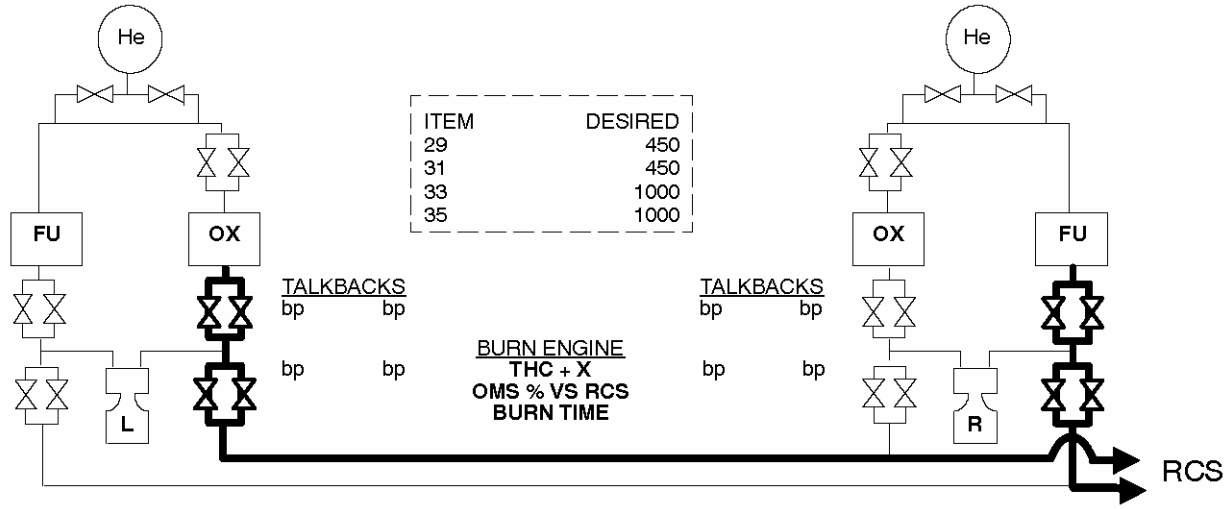

12.1 RMS C/W

12.1a C/W LT(S) ON, BUT RMS MSTR ALARM LT/TONE OFF 12-4
12.1b MULTIPLE C/W LTS AND PDRS MSGS 12-5
12.1c C/W MCIU LT 12-6
12.1d ABE LT – S96 PDRS ABE COMM(SY, SP, EP, WP, WY, WR) 12-8
12.1e CONTR ERR LT – S96 PDRS CNTL SY(SP, EP, WP, WY, WR) OR PDRS CNTL POR 12-19
12.1f GPC DATA LT OR BCE BYP MCIU 12-22
12.1g CHECK CRT LT 12-24
12.1h – S96 PDRS CKCRT D 12-26
12.1i – S96 PDRS TEST SPA 12-27
12.1j – S96 PDRS CKCRT SY(SP, EP, WP, WY, WR) 12-31
12.1k – S96 PDRS CKCRT EE 12-33
12.1l – S96 PDRS CKCRT T CK 12-36
12.1m – S96 PDRS CKCRT HC 12-37
12.1n – PDRS SLIP SY(SP, EP, WP, WY, WR, ALL) 12-38
12.1o – S94 PDRS WR R 12-39
12.1p – PDRS TEST BRK(C/W, NMI, FS, LOSS) 12-40
12.1q – S96 PDRS CKCRT FS 12-42
12.1r RELEASE LT – PDRS REL 12-43
12.1s – PDRS REL (CUE CARD EXECUTED) 12-44
12.1t DERIGIDIZE LT – PDRS DERIG 12-45
12.1u – PDRS DERIG (CUE CARD EXECUTED) 12-46
12.1v PORT TEMP LT – PDRS TEMP PORT 12-47
12.1w STBD TEMP LT – PDRS TEMP STBD 12-49

12.2 RMS D&C

12.2a MSTR ALARM ON, BUT C/W LT(S) OFF 12-52
12.2b BRAKES – ON, BUT BRAKES tb – OFF 12-53
12.2c – OFF, BUT BRAKES tb – ON 12-54
12.2d SAFING – AUTO, BUT SAFING tb – bp 12-55
12.2e RESERVED ..... not used
12.2f RESERVED ..... not used
12.2g SELECTED MODE ANNUN – OFF OR ALL A8 LTS – OFF 12-57
12.2h SHLDR BRACE REL tb – bp AFTER CMD 12-59

12.3 END EFFECTOR

12.3a EE FAILS TO GRAPPLE CONSTRAINED PL IN EE MODE – AUTO 12-60
12.3b EE FAILS TO RELEASE/DERIGIDIZE CONSTRAINED PL IN EE MODE – AUTO 12-62
12.3c RESERVED ..... not used
12.3d RESERVED ..... not used
12.3e EE FAILS TO RELEASE IN EE MODE – MAN 12-67
12.3f DERIGIDIZE/EXTEND IN MANUAL 12-69
12.3g MULTIPLE EE tb ABNORMAL WHILE NO EE CMDS (EE MODE – AUTO OR MAN) 12-71
12.3h EE tb ABNORMAL WHILE EE MODE OFF 12-73
12.3i CAPTURE SEQ ABORTED (CUE CARD EXECUTED) 12-75
12.3j NO AUTO RELEASE (CUE CARD EXECUTED) 12-76
12.3k MANUAL RELEASE (CUE CARD EXECUTED) 12-78
12.3l DERIGID (CUE CARD EXECUTED) 12-80

12.4 RMS OPS
12.4a ARM RESPONSE ABNORMAL IN MANUAL MODES 12-82
12.4b AUTO MODES 12-84
12.4c JOINT RESPONSE ABNORMAL IN SINGLE MODE 12-86
12.4d DIRECT MODE 12-89

12.5 MPM/MRL
12.5a MPM DPY – tb NOT DPY, IND NOT NOMINAL, OR SINGLE MTR DRIVE TIME 12-92
12.5b MPM STO – tb NOT STO, IND NOT NOMINAL, OR SINGLE MTR DRIVE TIME 12-94
12.5c MRL REL – tb NOT REL, IND NOT NOMINAL, OR SINGLE MTR DRIVE TIME 12-96
12.5d MRL LAT – tb NOT LAT, IND NOT NOMINAL, OR SINGLE MTR DRIVE TIME 12-98
12.5e PORT(STBD) RMS RETEN LATCHES R-F-L tb – bp WHEN CRADLED 12-100
12.5f PORT(STBD) RMS RETEN LATCHES R-F-L tb – gray WHEN UNCRADLED 12-101

PDRS SSR
PDRS SSR-1 MPM MTR INHIBIT DISABLE 12-102
SSR-2 RESERVED ..... not used
SSR-3 BACKDRIVE TECHNIQUE – JOINT FREE 12-103
SSR-4 RMS IFM D&C KIT 12-111

This Page Intentionally Blank

PDRS

12.1a C/W LT(S) ON, BUT RMS MSTR ALARM LT/TONE OFF

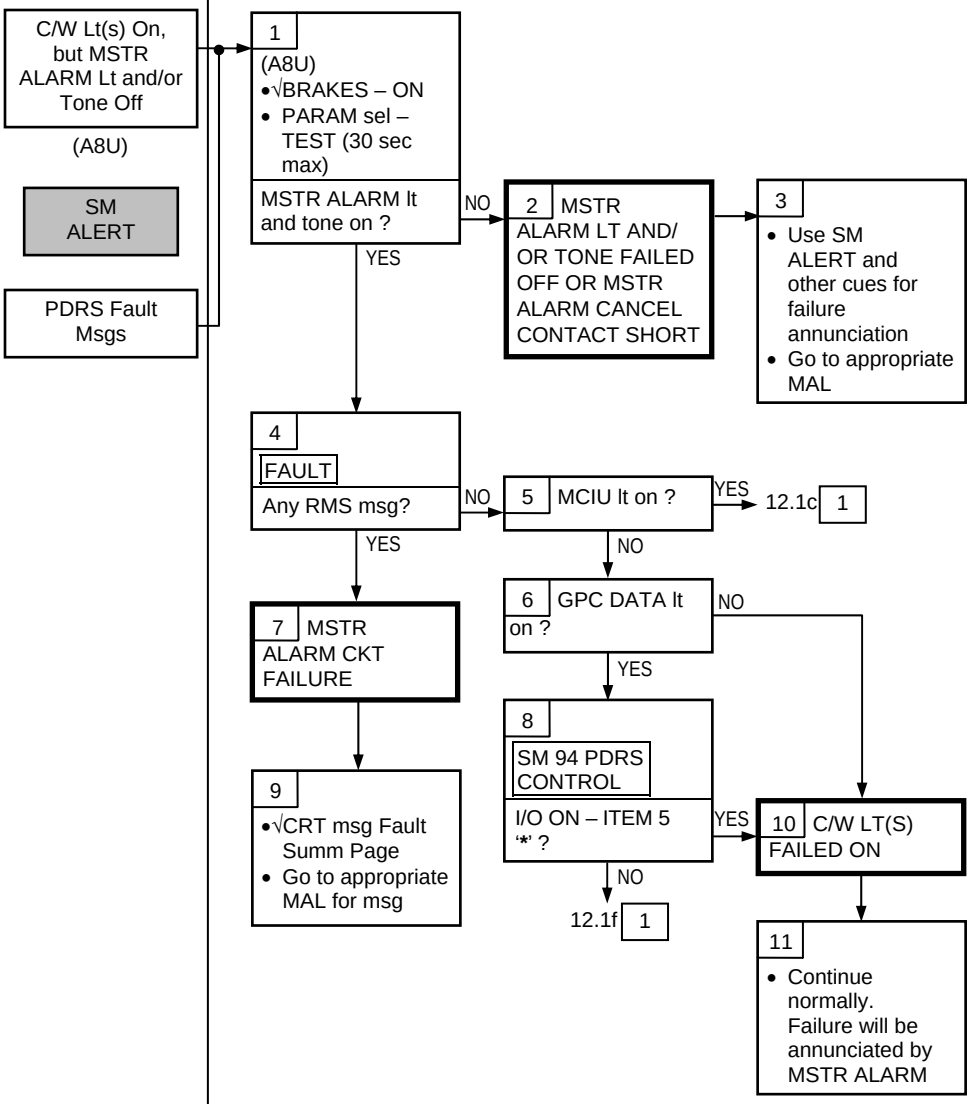

PDRS

12.1b MULTIPLE C/W LTS AND PDRS MSGS

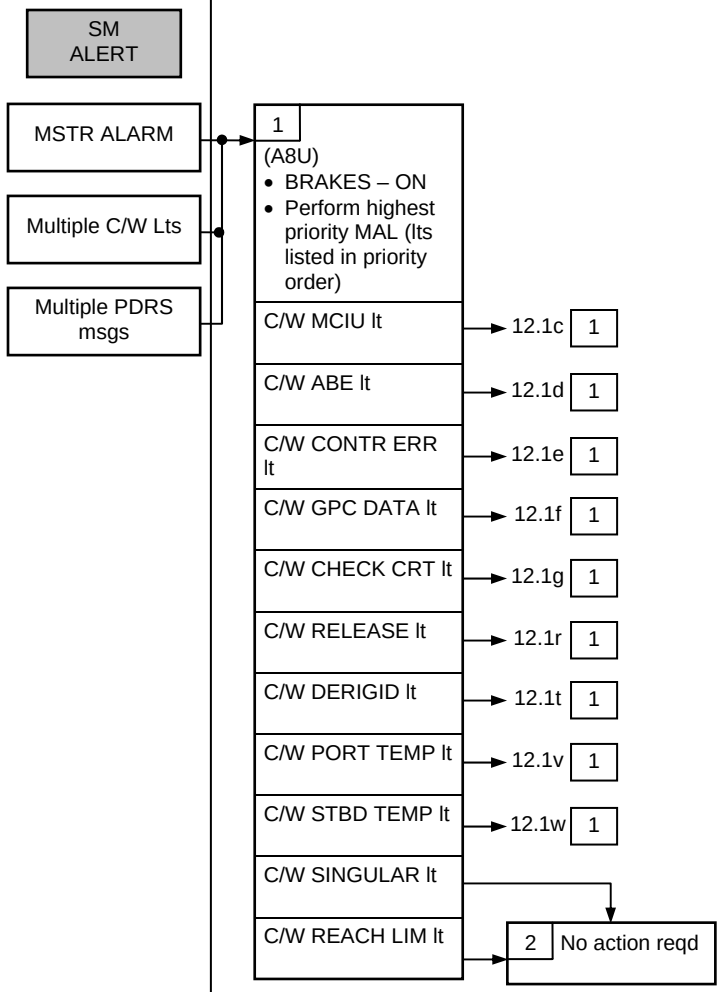

PDRS

12.1c C/W MCIU LT

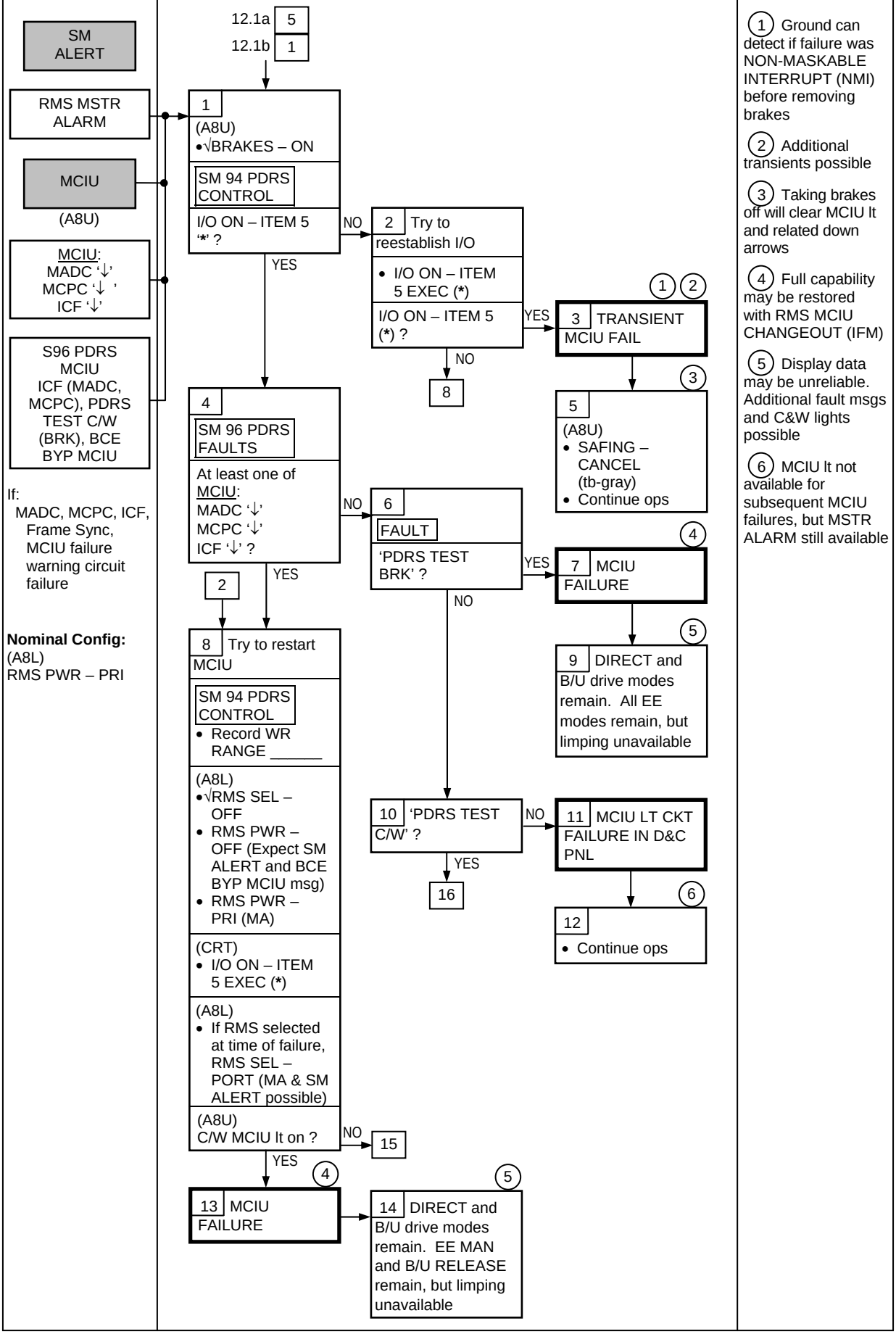

(1) Ground can detect if failure was NON-MASKABLE INTERRUPT (NMI) before removing brakes

(2) Additional transients possible

(3) Taking brakes off will clear MCIU lt and related down arrows

(4) Full capability may be restored with RMS MCIU CHANGEOUT (IFM)

(5) Display data may be unreliable. Additional fault msgs and C&W lights possible

(6) MCIU lt not available for subsequent MCIU failures, but MSTR ALARM still available

PDRS 12.1c (Cont)

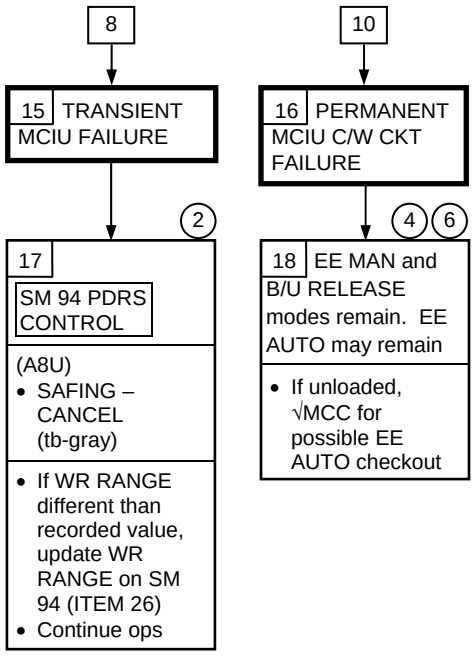

(2) Additional transients possible

(4) Full capability may be restored with RMS MCIU CHANGEOUT (IFM)

(6) MCIU lt not available for subsequent MCIU failures, but MSTR ALARM still available

PDRS

12.1d C/W ABE LT – S96 PDRS ABE COMM (SY, SP, EP, WP, WY, WR)

SM ALERT

RMS MSTR ALARM

ABE

S96 PDRS ABE COMM (SY, SP, EP, WP, WY, WR)

Nominal Config:
(A8L)
RMS PWR – PRI
RMS SEL – PORT (CRT)
SM 94 I/O ON – ITEM 5 (*)

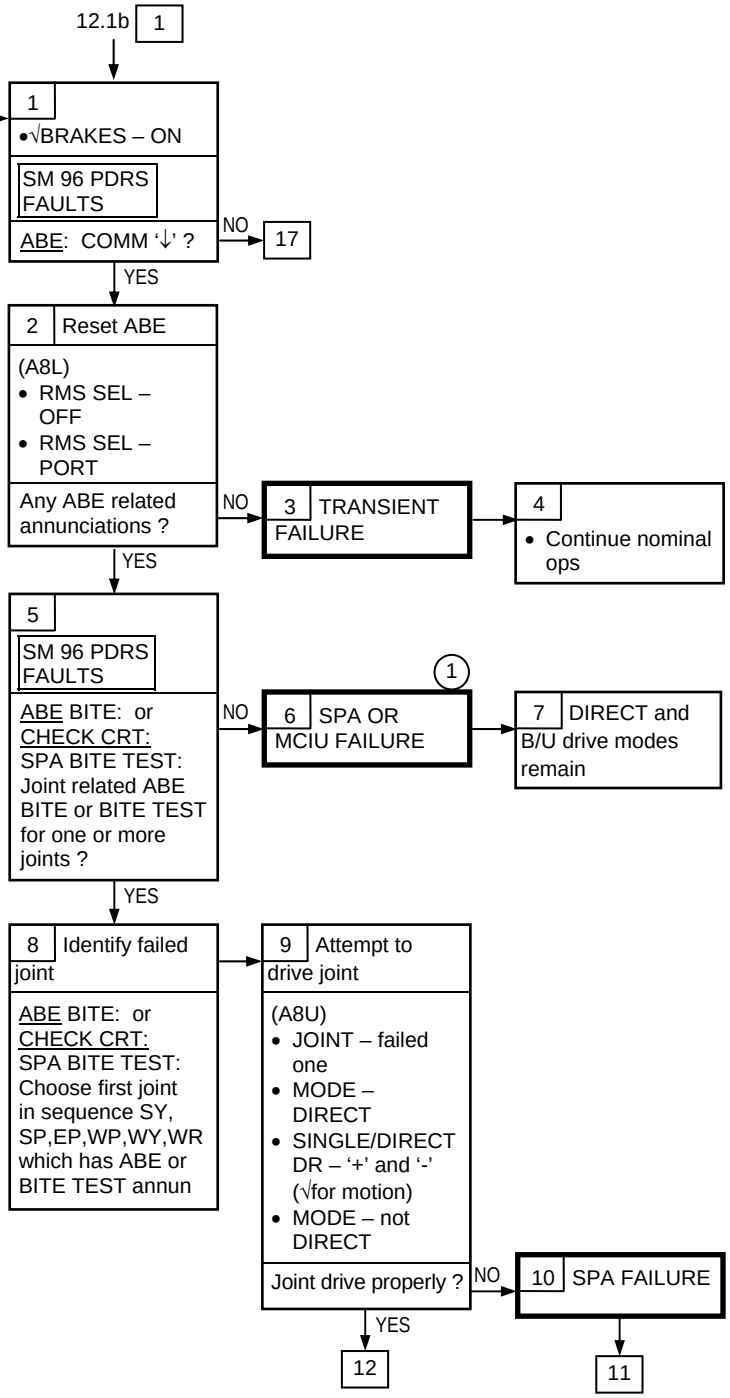

(1) Full capability may be regained by RMS MCIU CHANGEOUT (IFM)

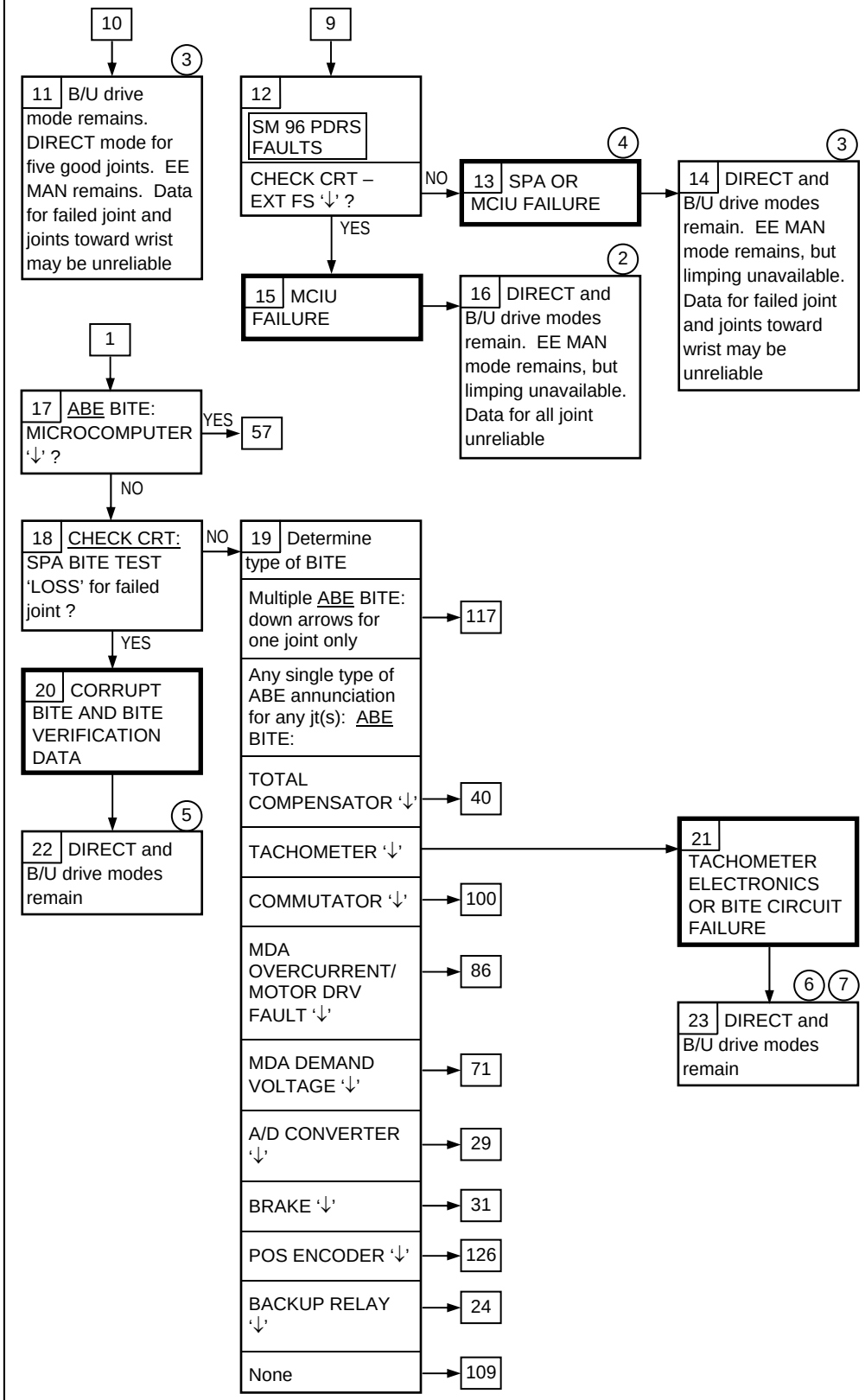

(2) Full capability will be regained by RMS MCIU CHANGEOUT (IFM)

(3) If any wrist joint data is unreliable, EE Auto mode may be lost

(4) If annunciation for all six joints is identical, full capability may be regained by RMS MCIU CHANGEOUT (IFM). If annunciation is not for all six joints, then SPA failure

(5) Computer supported modes available but subsequent SPA failure for same joint may not be annunciated or protected by autobrakes. May receive spurious SPA or EEEU annunciations

(6) For BITE circuit failure, MCIU OVERRIDE: ABE OVRD A (ITEM 36) on SPEC 95, PDRS OVERRIDE, can be used to remove autobrakes and regain computer supported modes (on MCC GO). Subsequent tachometer failure for same joint will be annunciated by CONTR ERR and protected by autobrakes

(7) For tach failure, rate data is unreliable

PDRS 12.1d (Cont)

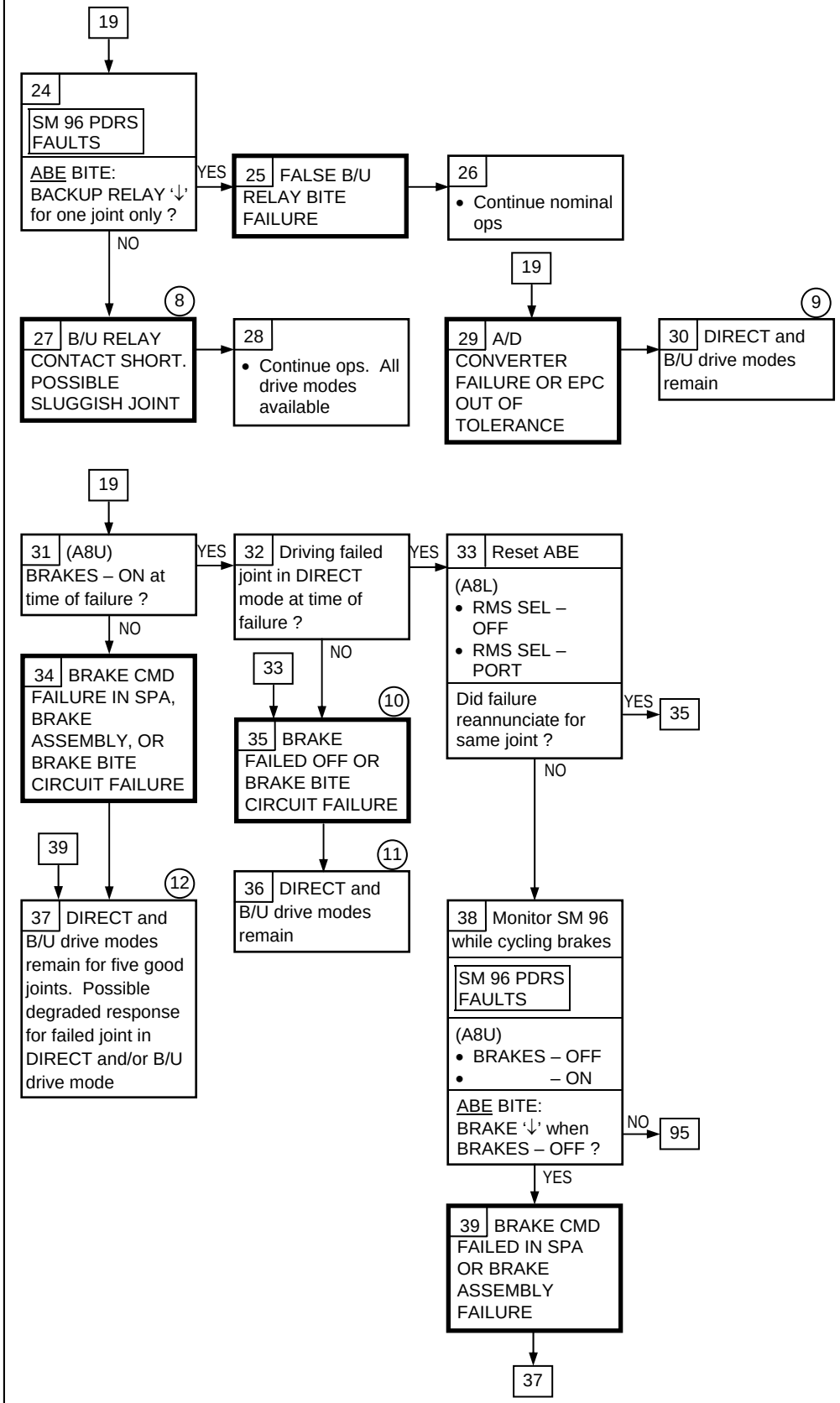

(8) Possible TOTAL COMPENSATOR BITE for failed joint while driving. Direct Drive joint test may determine failed joint

(9) For A/D Converter failure MCIU OVERRIDE ABE OVRD C (ITEM 38) on SPEC 95, PDRS OVERRIDE, can be used to remove autobrakes and regain computer supported modes (on MCC GO). Subsequent failures for same joint will be annunciated by CONTR ERR and protected by autobrakes

(10) MCIU OVERRIDE: ABE OVRD B (ITEM 37) on SPEC 95, PDRS OVERRIDE, can be used to remove autobrakes and regain computer supported modes (on MCC GO). Subsequent failure for same joint will not be annunciated or protected by autobrakes

(11) If brake failed off, brakes available for five good joints and dynamic braking for failed joint

(12) MCIU OVERRIDE: ABE OVRD B (ITEM 37) on SPEC 95, PDRS OVERRIDE, can be used to remove autobrakes and regain computer supported modes (on MCC GO). Possible brake overdrive for failed joint. Ground may determine if joint is sluggish

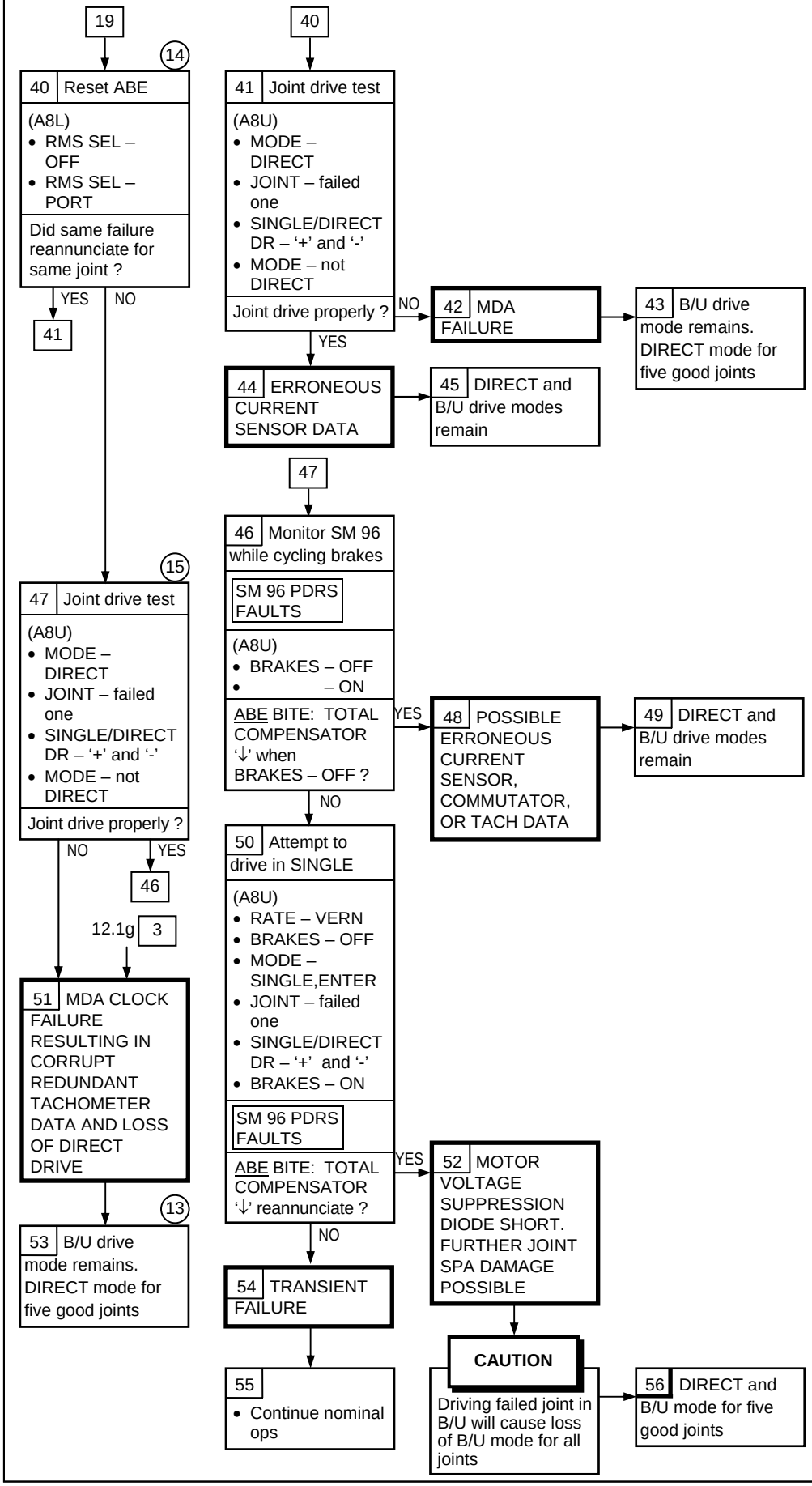

(13) MCIU OVERRIDE: ABE OVRD C (ITEM 38) on SPEC 95, PDRS OVERRIDE, can be used to remove autobrakes and regain computer supported modes (on MCC GO). Subsequent failures for same joint will be annunciated by CONTR ERR and protected by autobrakes

(14) Additional annunciations may be received after ABE reset

(15) May receive CHECK CRT and DIRECT DRIVE BITE annunciation when driving in Direct mode. Cycle Brake sw to clear failure

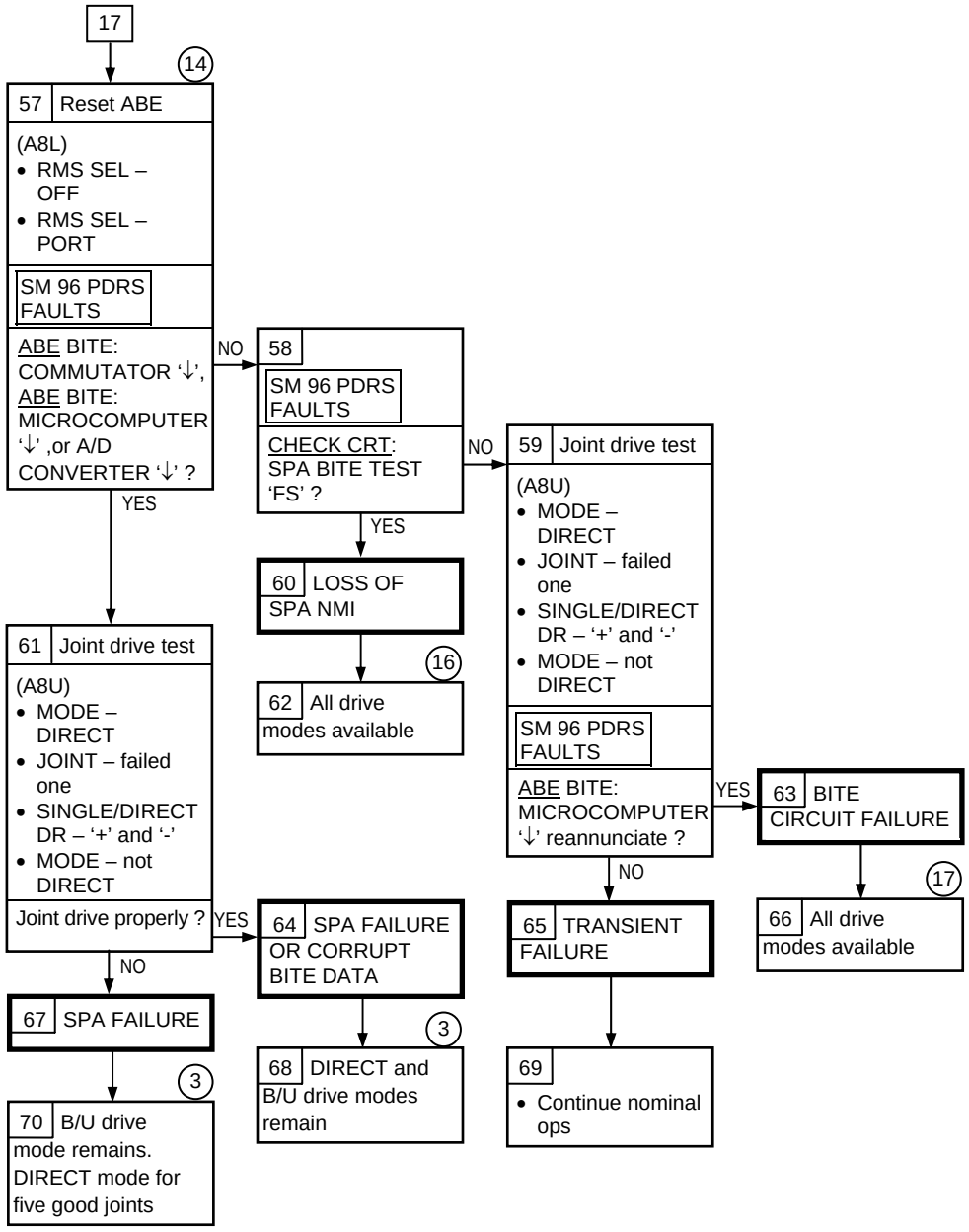

(3) If any wrist joint data is unreliable, EE Auto mode may be lost

(14) Additional annunciations may be received after ABE reset

(16) One failure away from possible uncommanded motion, but protected by auto brakes and annunciated by CONTR ERR

(17) When driving any joint in DIRECT, failure will reannunciate. Recycle arm select to regain computer supported modes

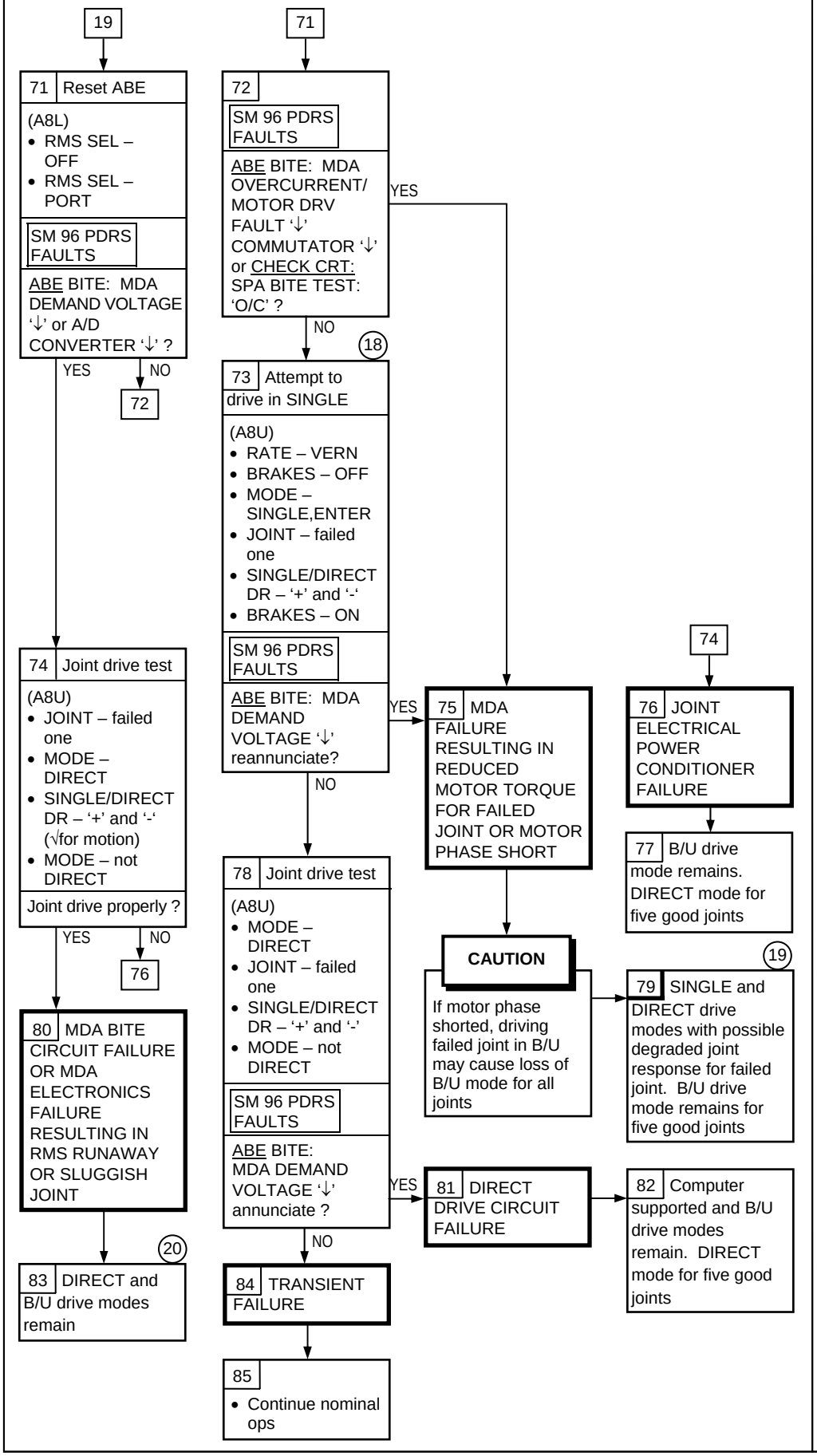

(18) Removing brakes may result in reannunciation of failure and autobrakes

(19) Subsequent MDA Demand Voltage BITE possible while driving failed joint. For commutator and MDA demand voltage failures, MCIU OVERRIDE: ABE OVRD B (ITEM 37) on SPEC 95, PDRS OVERRIDE, can be used to remove autobrakes and regain SINGLE drive mode (on MCC GO). Subsequent failure for same joint will not be annunciated or protected by autobrakes

(20) For MDA BITE circuit failure, MCIU OVERRIDE: ABE OVRD B (ITEM 37) on SPEC 95, PDRS OVERRIDE, can be used to remove autobrakes and regain computer supported modes, or SINGLE drive mode for sluggish joint (on MCC GO). Subsequent failures for same joint will be annunciated by CONTR ERR and protected by autobrakes

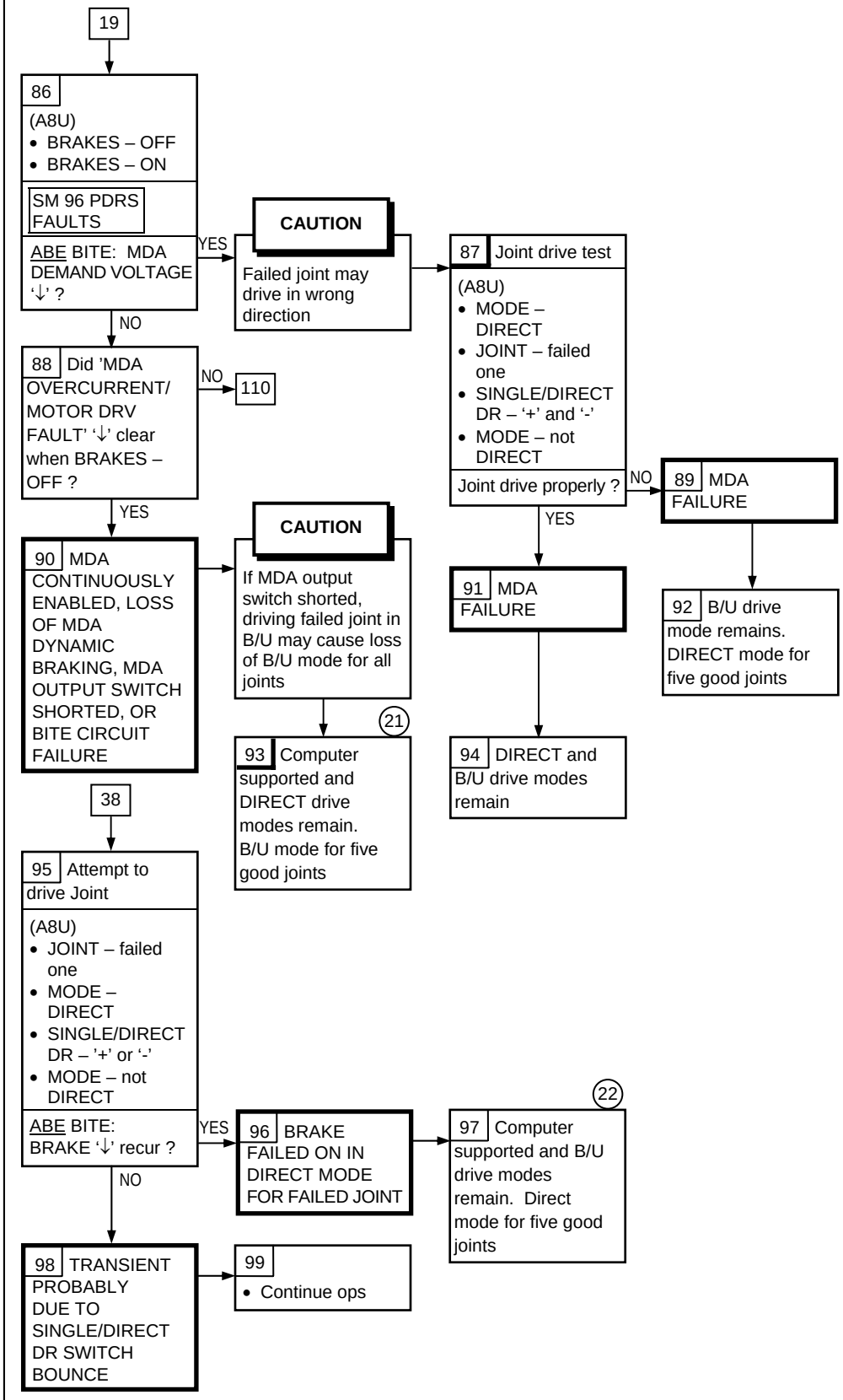

(21) For MDA continuously enabled or loss of dynamic braking, subsequent failure (runaway or failed free joint) will be annunciated but not stopped by autobrakes or dynamic braking, respectively

(22) Port RMS SEL will need to be cycled to regain computer supported modes

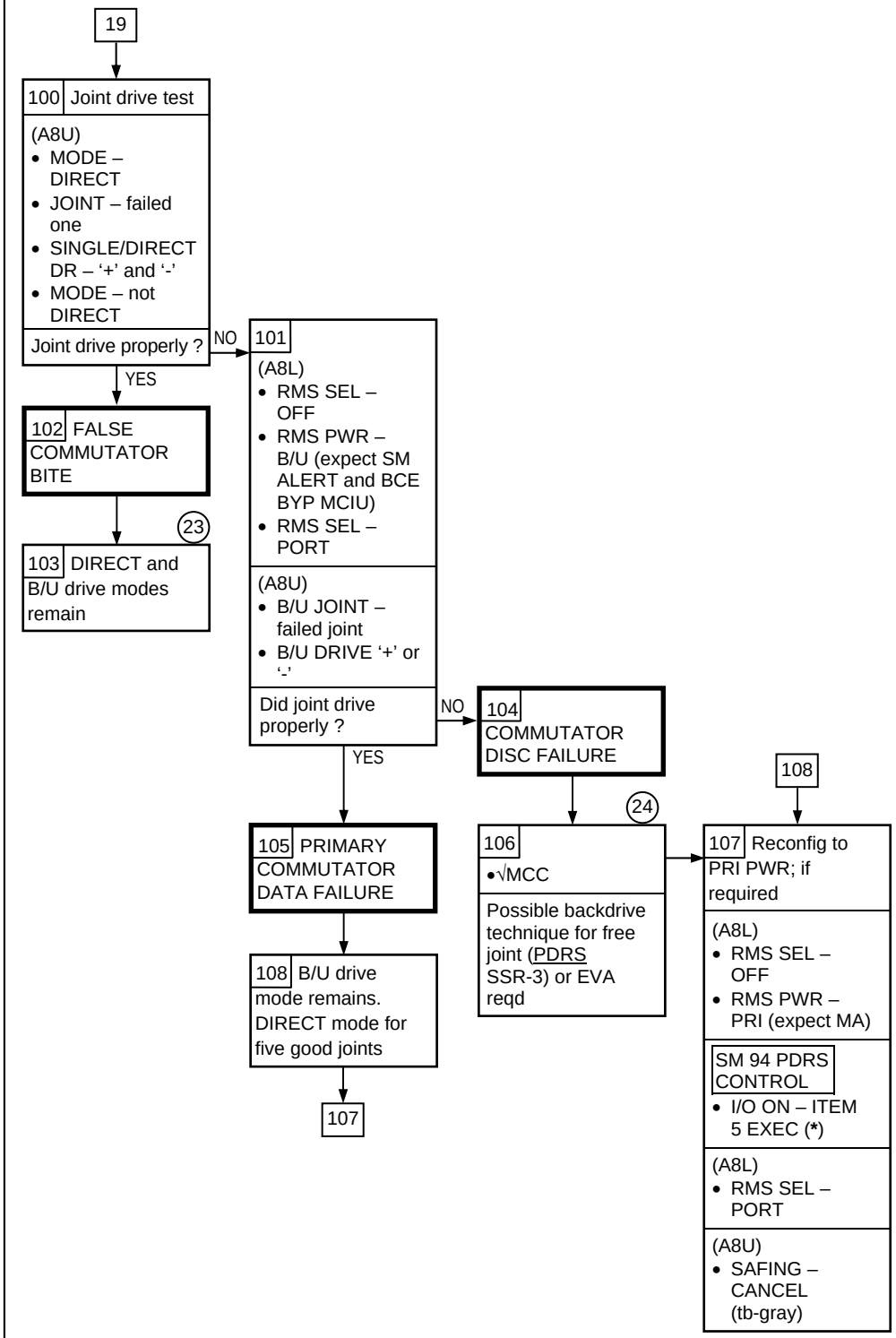

(23) MCIU OVERRIDE: ABE OVRD B (ITEM 37) on SPEC 95, PDRS OVERRIDE, can be used to remove autobrakes and regain single mode for five good joints, but the MDA is inhibited on the failed joint, and is therefore, electrically free. Brakes will stop joint motion. Override may be used with caution on MCC GO

(24) MCIU OVERRIDE: ABE OVRD B (ITEM 37) on SPEC 95, PDRS OVERRIDE, required to regain computer supported modes for the backdrive technique

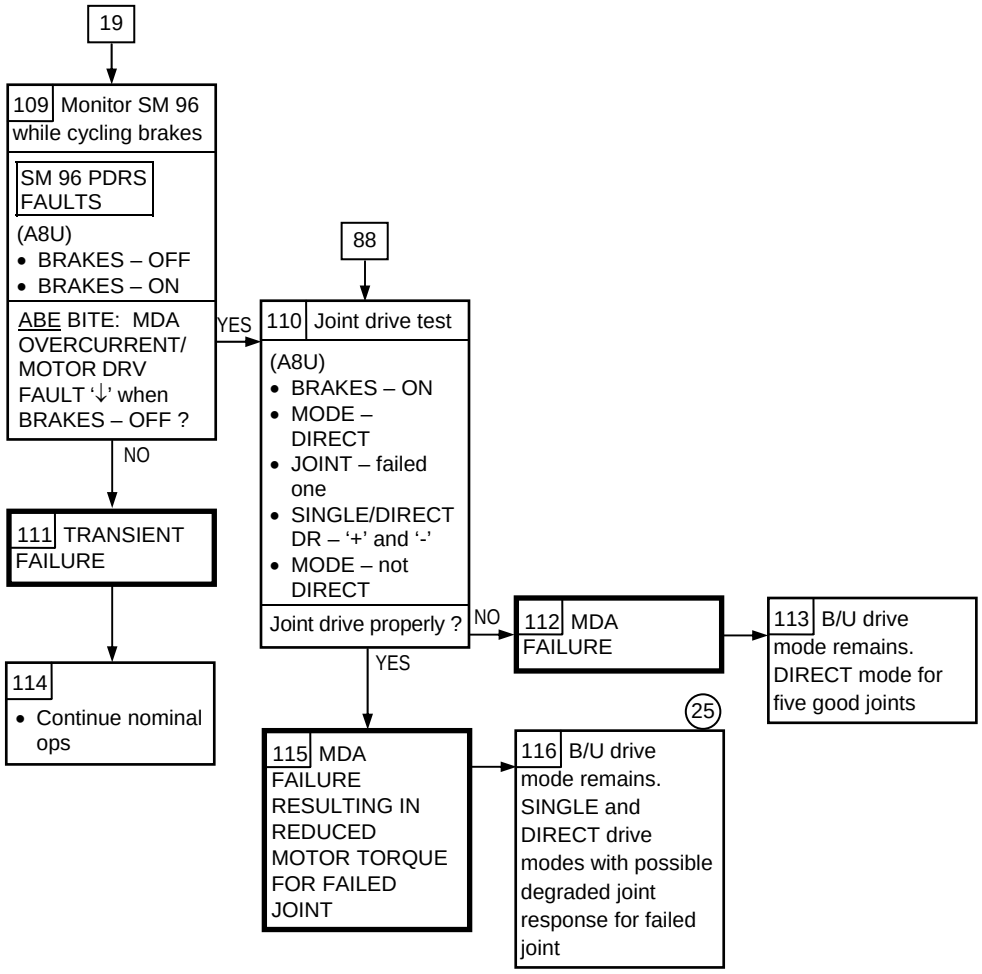

(25) Subsequent MDA Demand Voltage BITE possible while driving failed joint

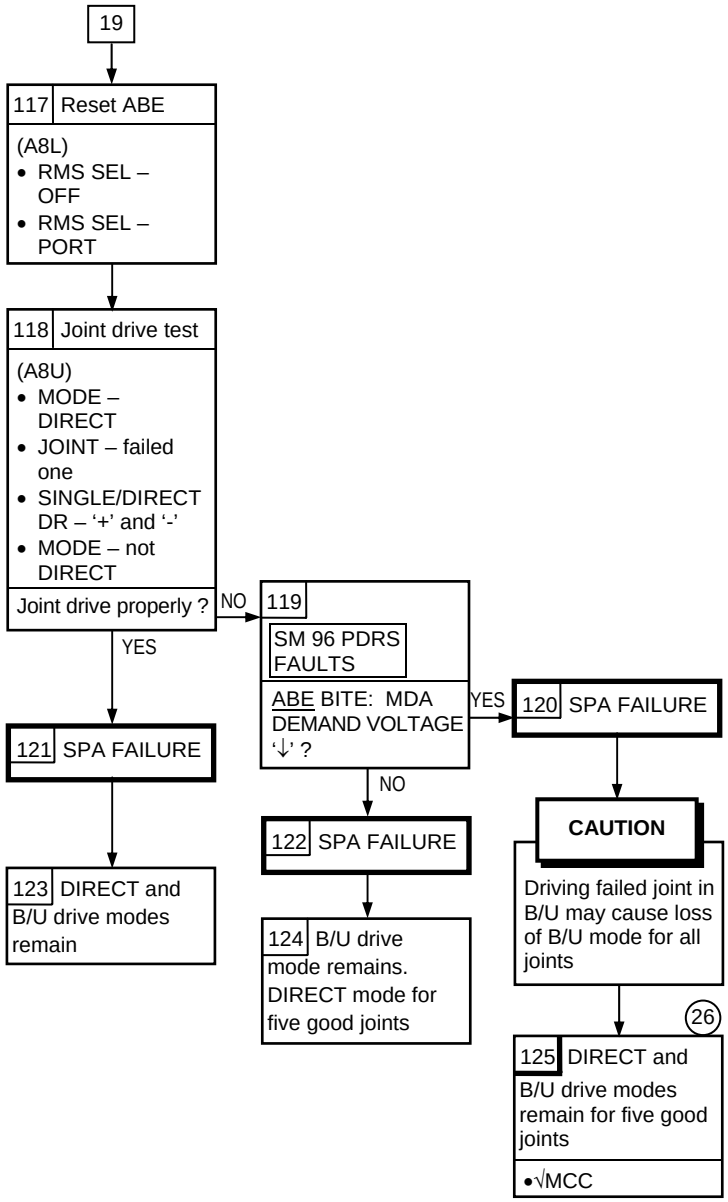

(26) Additional annunciations of TOTAL COMPENSATOR or BACKUP RELAY is good indication that driving failed joint in B/U will cause loss of B/U for all joints

PDRS 12.1d (Cont)

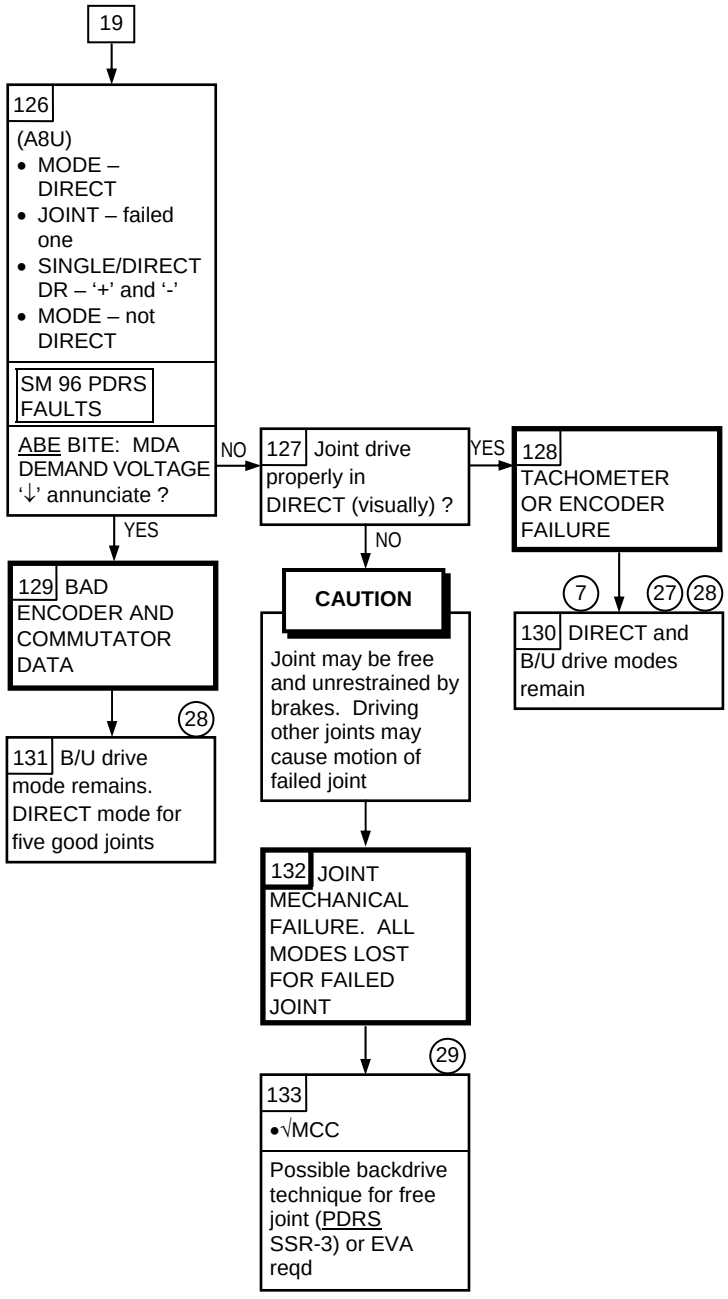

(7) For tach failure, rate data is unreliable

(27) For encoder failure, MCIU OVERRIDE: ABE OVRD A (ITEM 36) on SPEC 95, PDRS OVERRIDE, can be used to remove autobrakes and regain SINGLE mode (on MCC GO). Position hold is not functional for failed joint. Subsequent TACH failure will be annunciated by CONTR ERR or TOTAL COMPENSATOR and protected by autobrakes

(28) For encoder failure, joint data is unreliable. REACH LIMIT and SOFT STOP annunciations not available for failed joint

(29) MCIU OVERRIDE: ABE OVRD A (ITEM 36) on SPEC 95 PDRS OVERRIDE required to regain computer supported modes for backdrive technique

PDRS

12.1e C/W CONTR ERR LT – S96 PDRS CNTL SY(SP, EP, WP, WY, WR) OR PDRS CNTL POR

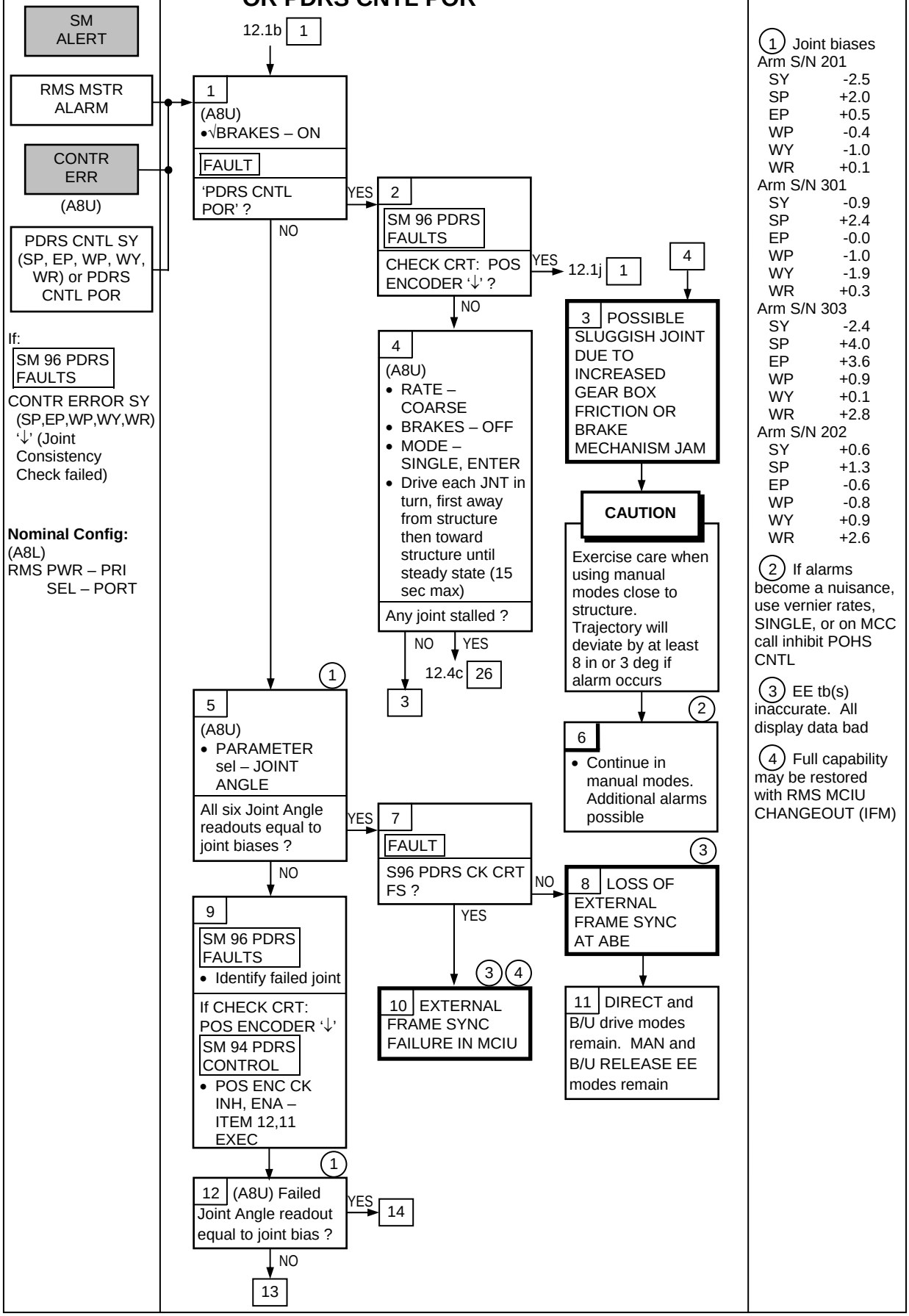

(1) Joint biases

Arm S/N 201	
SY	-2.5
SP	+2.0
EP	+0.5
WP	-0.4
WY	-1.0
WR	+0.1
Arm S/N 301	
SY	-0.9
SP	+2.4
EP	-0.0
WP	-1.0
WY	-1.9
WR	+0.3
Arm S/N 303	
SY	-2.4
SP	+4.0
EP	+3.6
WP	+0.9
WY	+0.1
WR	+2.8
Arm S/N 202	
SY	+0.6
SP	+1.3
EP	-0.6
WP	-0.8
WY	+0.9
WR	+2.6

(2) If alarms become a nuisance, use vernier rates, SINGLE, or on MCC call inhibit POHS CNTL

(3) EE tb(s) inaccurate. All display data bad

(4) Full capability may be restored with RMS MCIU CHANGEOUT (IFM)

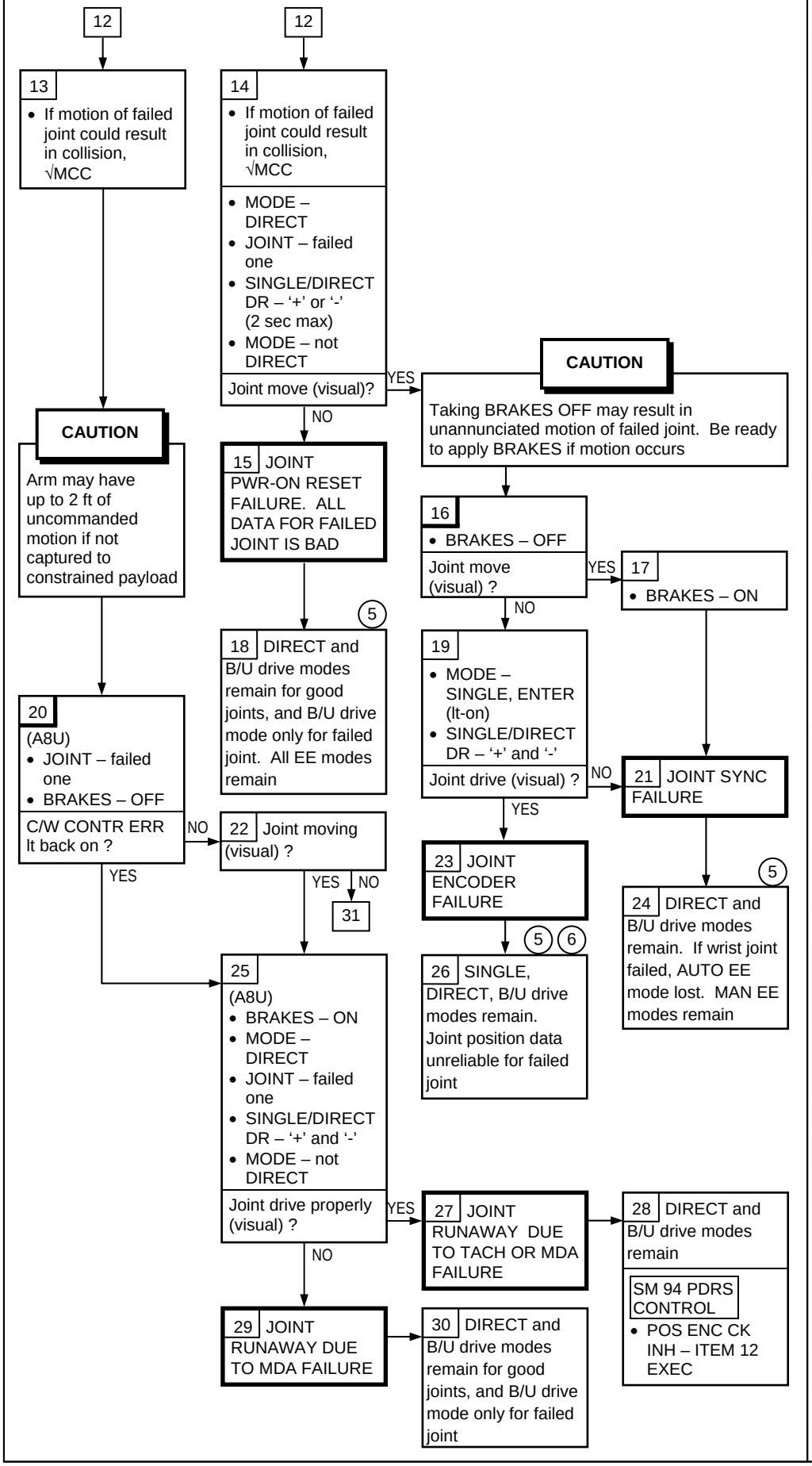

(5) REACH LIMITs and SOFT STOPs annunciation not available for failed joint

(6) Position hold function will not work for failed joint

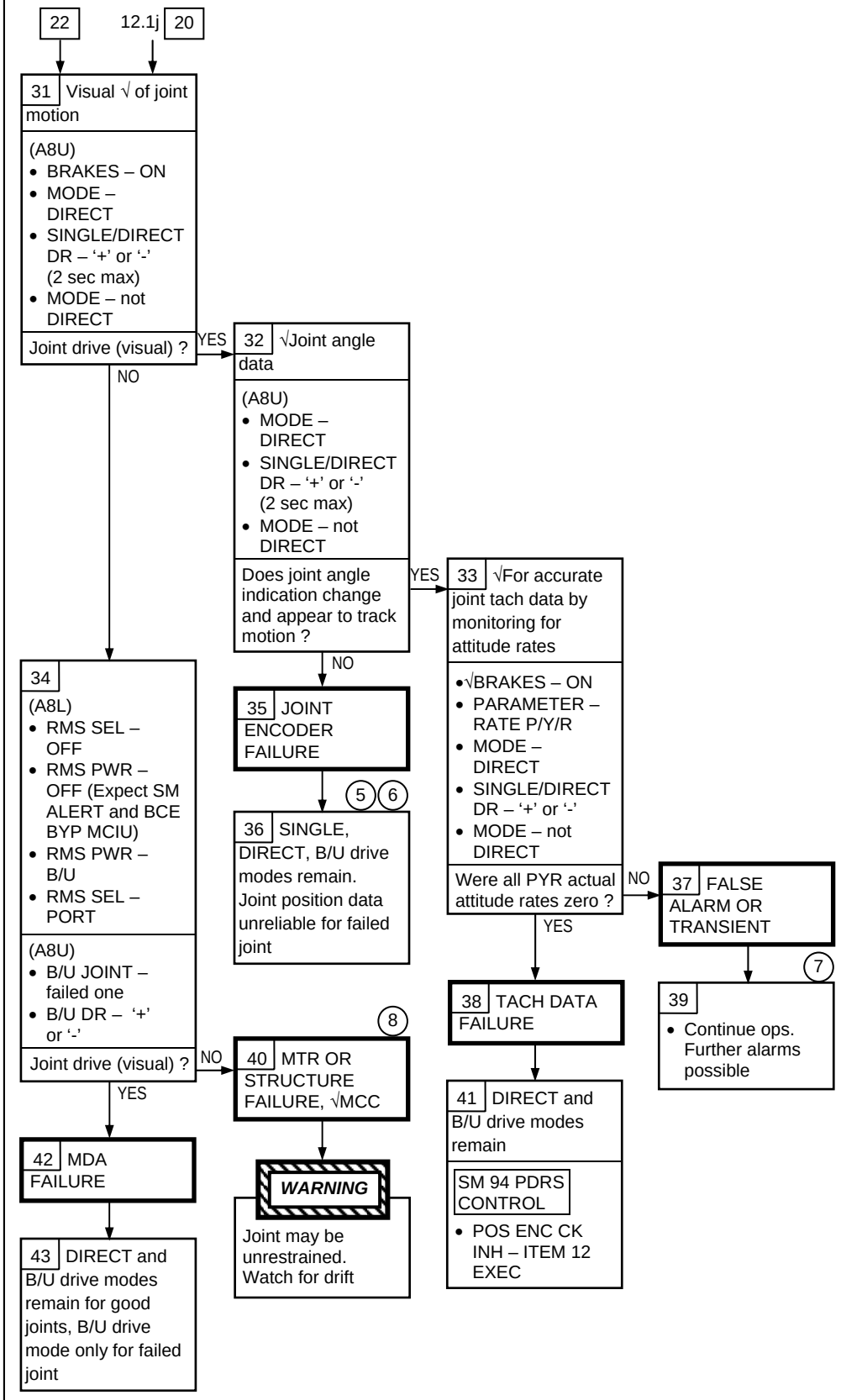

(5) REACH LIMITs and SOFT STOPs annunciation not available for failed joint

(6) Position hold function will not work for failed joint

(7) MCC can determine if fwd/backdrive flag failure is cause of false alarm

(8) Whiplash technique or EVA may be reqd to cradle arm

PDRS

SM ALERT

GPC DATA

(A8U)

RMS MSTR ALARM

BCE BYP MCIU

SM 94 I/O OFF ITEM 6 '*'

No SM Msgs

SAFING tb – bp

If:
Loss of MCIU I/O

Nominal Config:
(A8L)
RMS PWR – PRI

12.1f C/W GPC DATA LT OR BCE BYP MCIU

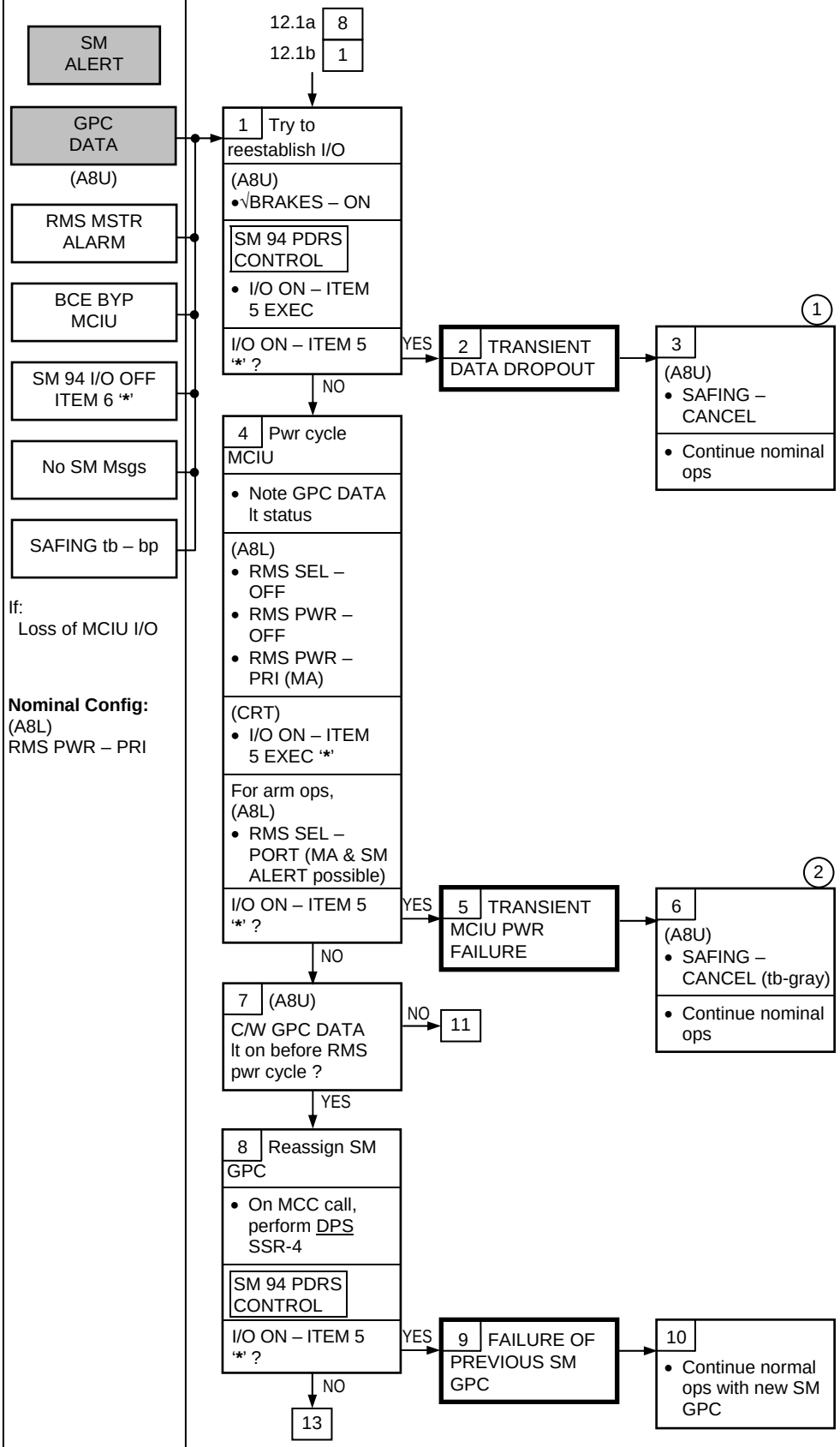

(1) Further transients are possible; and if they continue, full capability can be restored with SM GPC REASSIGNMENT and/or RMS MCIU CHANGEOUT (IFM)

(2) Further transients are possible; and if they continue, full capability can be restored with RMS MCIU CHANGEOUT (IFM)

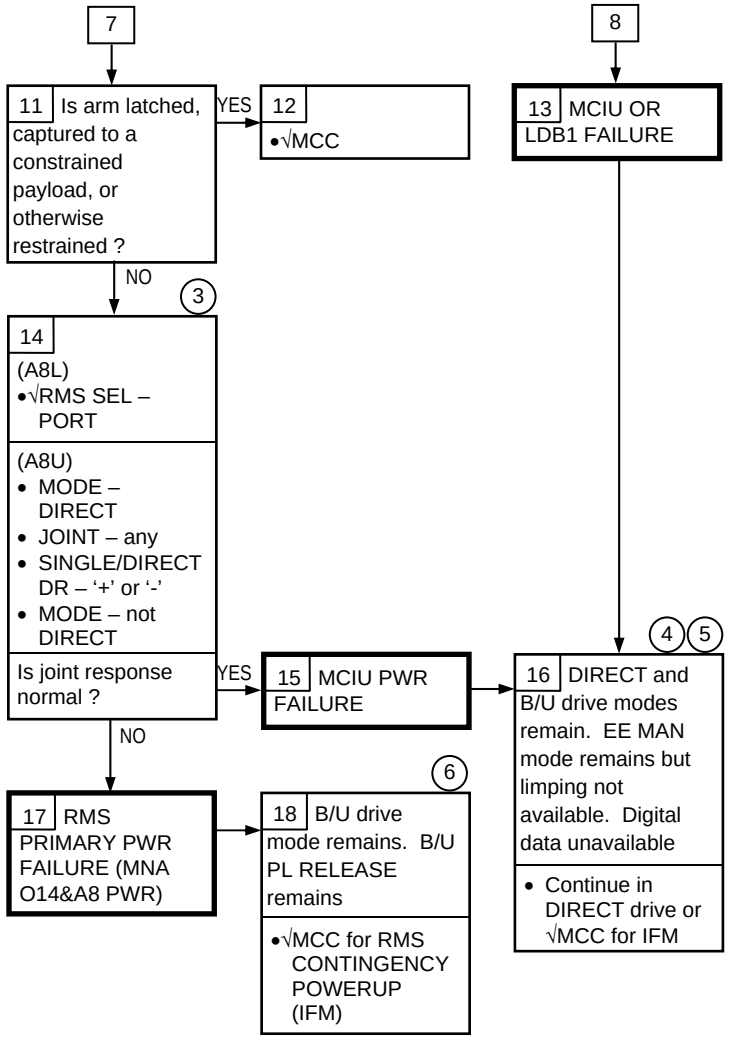

(3) Mode lt may not illuminate

(4) Full capability may be restored with MCIU CHANGEOUT (IFM)

(5) RSAD may be capable of displaying joint data

(6) Primary pwr may be restored following IFM. Panel edge lighting may not be available

PDRS

12.1g C/W CHECK CRT LT

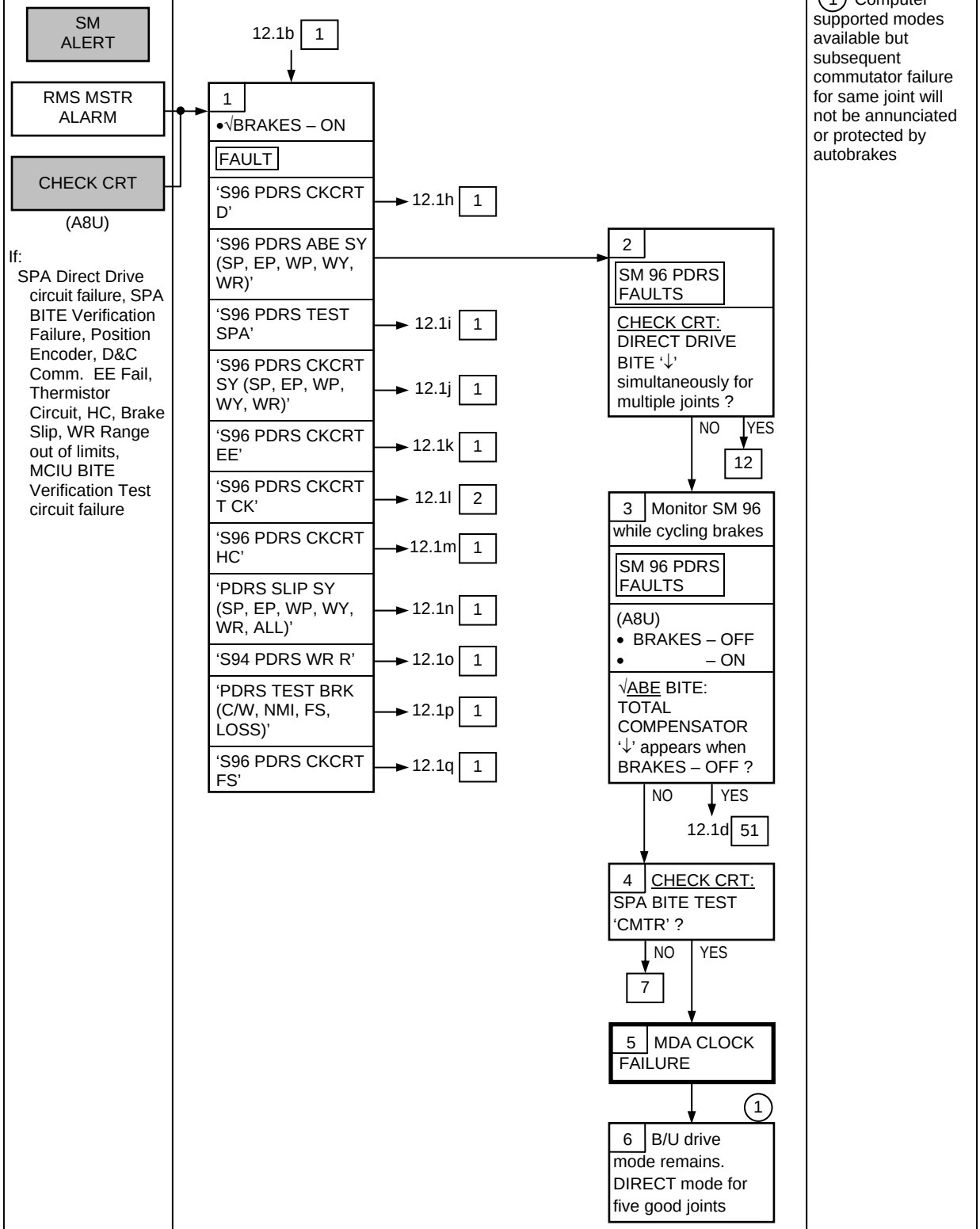

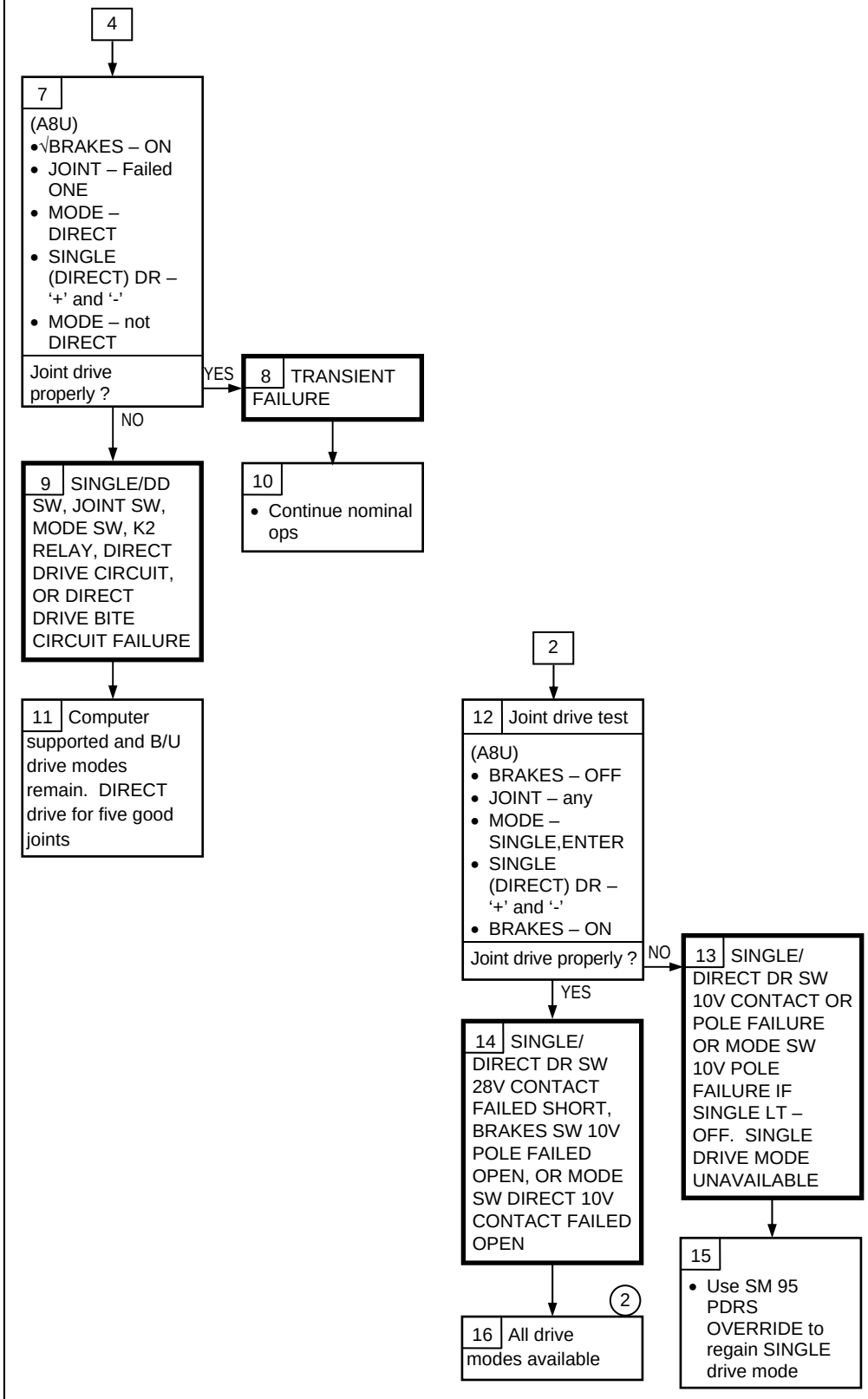
4
7
(A8U)
•√BRAKES – ON
• JOINT – Failed ONE
• MODE – DIRECT
• SINGLE (DIRECT) DR – '+' and '-'
• MODE – not DIRECT
Joint drive properly ?
YES
8 TRANSIENT FAILURE
NO
9 SINGLE/DD SW, JOINT SW, MODE SW, K2 RELAY, DIRECT DRIVE CIRCUIT, OR DIRECT DRIVE BITE CIRCUIT FAILURE
10
• Continue nominal ops
11 Computer supported and B/U drive modes remain. DIRECT drive for five good joints
2
12 Joint drive test
(A8U)
• BRAKES – OFF
• JOINT – any
• MODE – SINGLE,ENTER
• SINGLE (DIRECT) DR – '+' and '-'
• BRAKES – ON
Joint drive properly ?
NO
13 SINGLE/ DIRECT DR SW 10V CONTACT OR POLE FAILURE OR MODE SW 10V POLE FAILURE IF SINGLE LT – OFF. SINGLE DRIVE MODE UNAVAILABLE
YES
14 SINGLE/ DIRECT DR SW 28V CONTACT FAILED SHORT, BRAKES SW 10V POLE FAILED OPEN, OR MODE SW DIRECT 10V CONTACT FAILED OPEN
15
• Use SM 95 PDRS OVERRIDE to regain SINGLE drive mode
2
16 All drive modes available
2 One failure away from uncommanded joint drive in DIRECT

PDRS

12.1h C/W CHECK CRT LT – S96 PDRS CKCRT D

SM ALERT

RMS MSTR ALARM

CHECK CRT

(A8U)

S96 PDRS CK CRT D

CHECK CRT DC/MCIU '↓'

If:
D&C – MCIU transmission parity error, Testword miscompare, or address check fail

Nominal Config:
(A8L)
RMS PWR – PRI
(CRT)
SM 94 I/O ON –
ITEM 5 '*'

12.1g 1

1
(A8U)
•√BRAKES – ON

2 D&C/MCIU COMM FAILURE

CAUTION
Selecting EE Auto may result in uncommanded EE ops

1 2 3

3 DIRECT and B/U drive modes remain. EE MAN and B/U RELEASE remain, but limping not available

(1) Data may be unreliable on D&C pnl. ABE data on SM 169 still good

(2) Full capability may be restored with RMS MCIU CHANGEOUT (IFM). If problem is in D&C pnl, MCIU changeout will not restore capability

(3) Possible PDRS SLIP msgs if driving in DIRECT (once per joint). Possible PDRS DERIG and PDRS RELEASE msgs when performing EE release

PDRS

12.1i C/W CHECK CRT LT – S96 PDRS TEST SPA

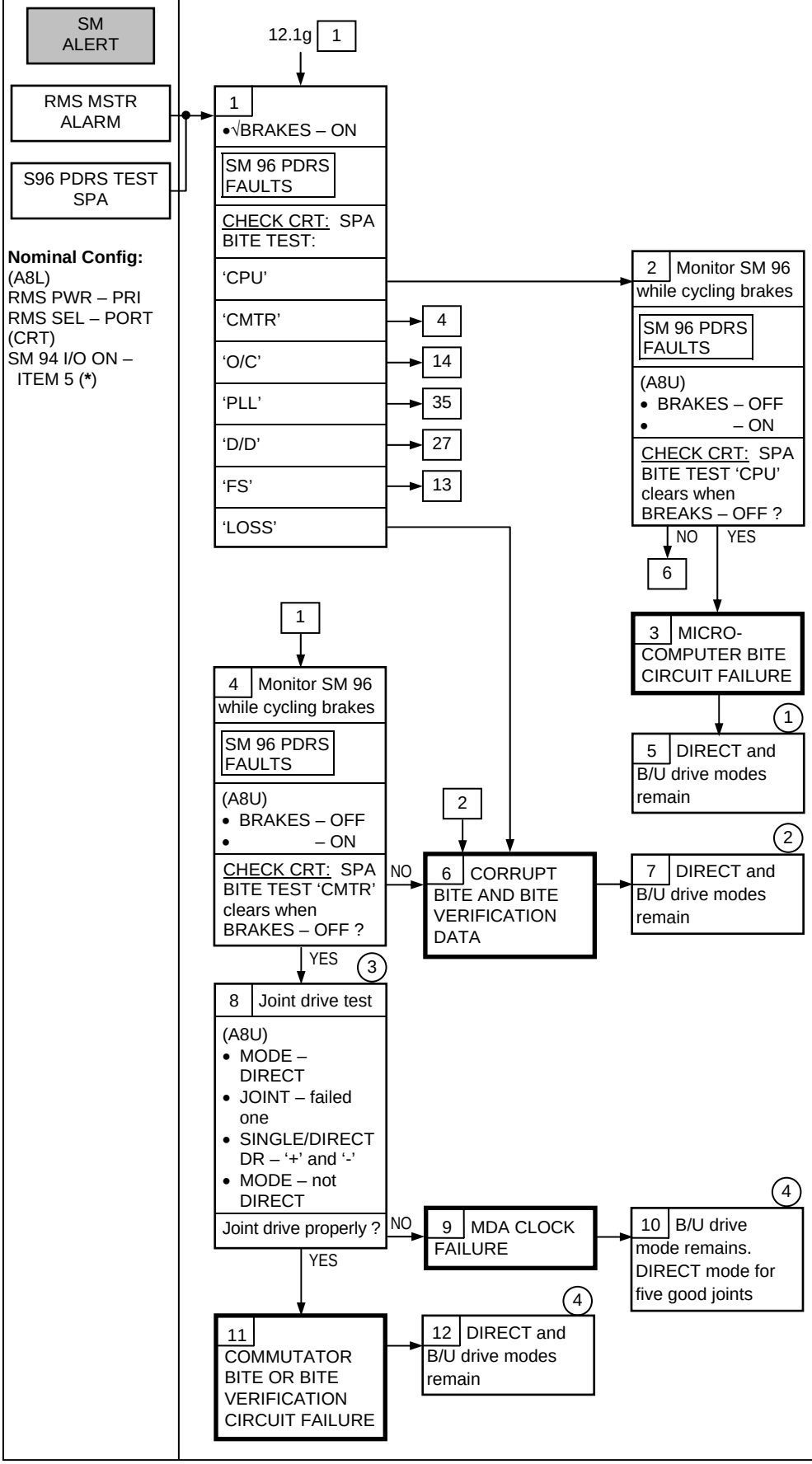

(1) For loss of microcomputer BITE, computer supported modes available but subsequent failure for same joint may not be annunciated or protected by autobrakes

(2) Computer supported modes available but subsequent SPA failure for same joint may not be annunciated or protected by autobrakes. May receive spurious SPA or EEEU annunciations

(3) May receive CHECK CRT lt and DIRECT DRIVE BITE '↓' when driving in Direct Mode. Cycle BRAKES sw to clear failure

(4) Computer supported modes available but subsequent commutator failure for same joint may not be annunciated or protected by autobrakes

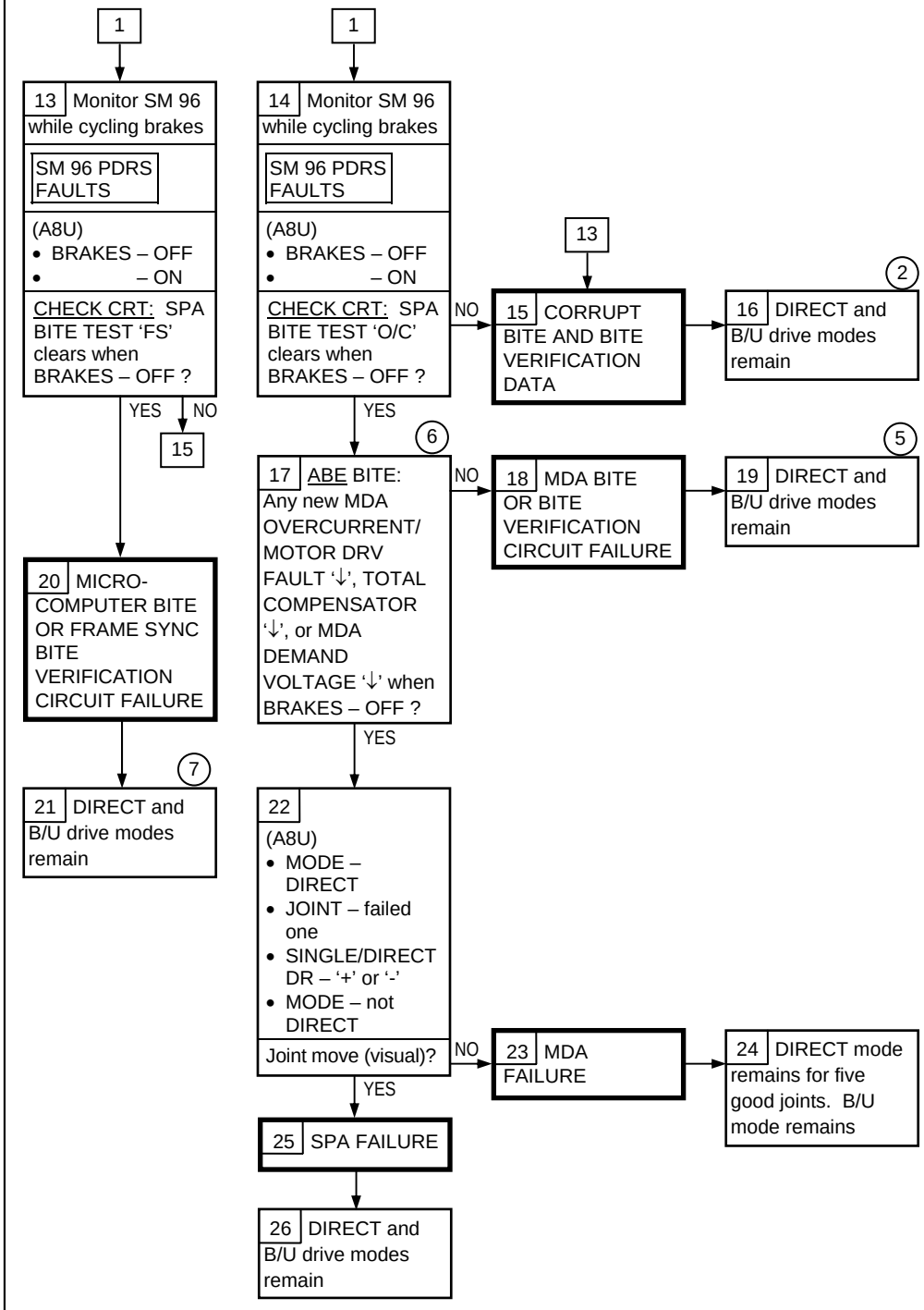

(2) Computer supported modes available but subsequent SPA failure for same joint may not be annunciated or protected by autobrakes. May receive spurious SPA or EEEU annunciations

(5) For MDA BITE circuit failure, computer supported modes available but subsequent MDA failure for same joint will not be annunciated or protected by autobrakes

(6) IF TOTAL COMPENSATOR and MDA DEMAND VOLTAGE occur together, BRAKE and A/D CONVERTER will annunciate due to multiple failure combination

(7) For loss of microcomputer BITE, computer supported modes available but subsequent failure for same joint will not be annunciated or protected by autobrakes

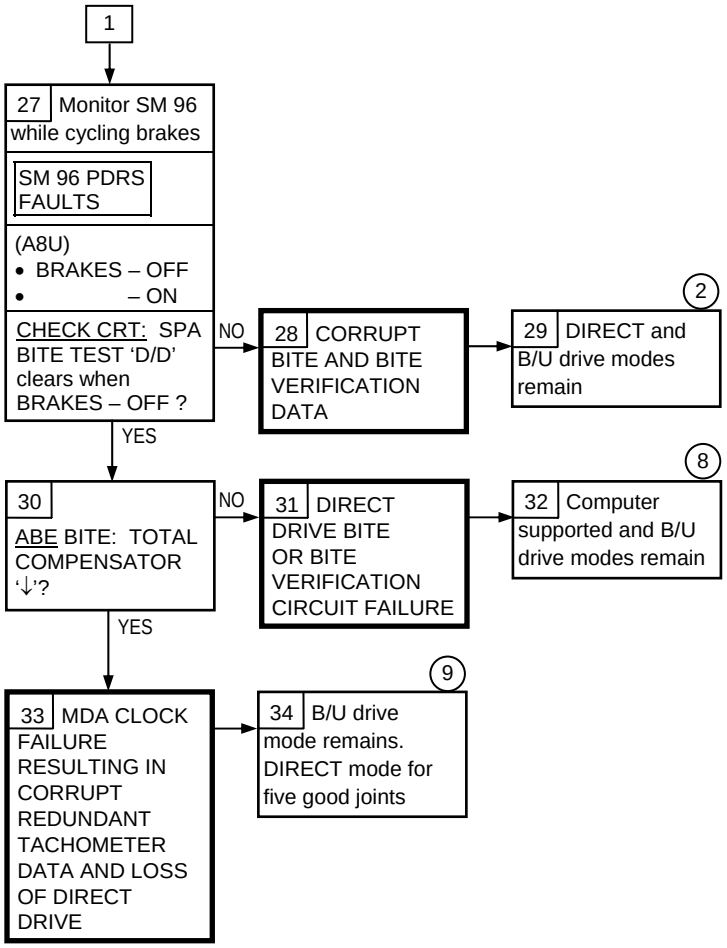

(2) Computer supported modes available but subsequent SPA failure for same joint may not be annunciated or protected by autobrakes. May receive spurious SPA or EEEU annunciations

(8) For DIRECT DRIVE BITE failure, DIRECT mode available but for subsequent failure joint could drive in wrong direction or drive two joints simultaneously

(9) MCIU OVERRIDE: ABE OVRD C (ITEM 38) on SPEC 95, PDRS OVERRIDE, can be used to remove autobrakes and regain computer supported modes (on MCC GO). Subsequent failures for same joint will be annunciated by CONTR ERR and protected by autobrakes

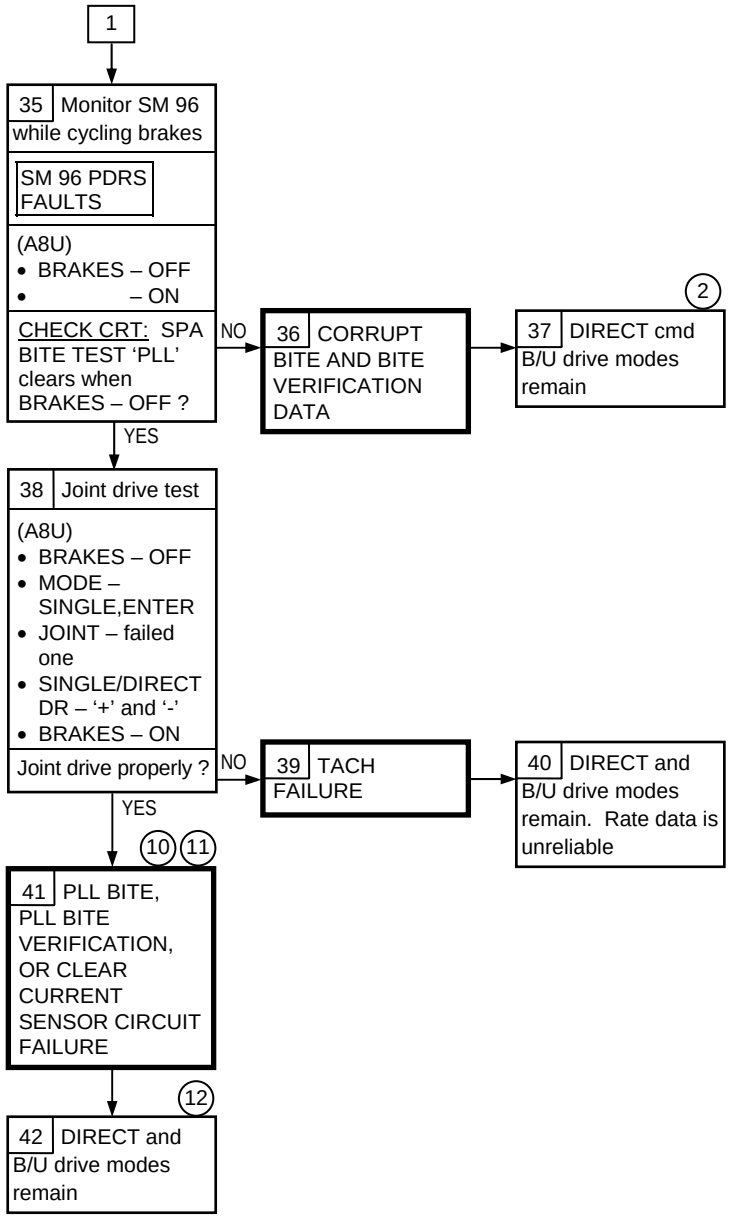

(2) Computer supported modes available but subsequent SPA failure for same joint may not be annunciated or protected by autobrakes. May receive spurious SPA or EEEU annunciations

(10) For PLL BITE Failure Subsequent tachometer failure for same joint will be annunciated by ABE lt and ABE BITE: POS ENCODER '↓' and protected by autobrakes

(11) For clear current sensor circuit failure, subsequent loss of 12.8 MHz clock will result in joint driving at last commanded rate. Not annunciated or protected by auto brakes

(12) Computer supported modes available, but subsequent clock failure may not be annunciated or protected by autobrakes

PDRS

12.1j C/W CHECK CRT LT – S96 PDRS CKCRT SY(SP, EP, WP, WY, WR)

SM ALERT

RMS MSTR ALARM

CHECK CRT

(A8U)

S96 PDRS CKCRT SY (SP, EP, WP, WY, WR)

If CKCKT-POS SY (SP, EP, WP, WY, WR) '↓'

Nominal Config:
(A8L)
RMS PWR – PRI
SEL – PORT

12.1g 1
12.1e 2

1 (A8U)
- √BRAKES – ON
- PARAM sel – JOINT ANGLE

All six Joint Angle readouts equal to joint biases ? YES → 2

2 FAULT

S96 PDRS CKCRT FS ? NO → 3

3 LOSS OF EXTERNAL FRAME SYNC AT ABE (2)

YES → (2)(3)

5 EXTERNAL FRAME SYNC FAILURE IN MCIU

6 DIRECT and B/U drive modes remain. MAN and B/U RELEASE EE modes remain

NO →

4
SM 96 PDRS FAULTS
- Identify failed joint

SM 94 PDRS CONTROL
- POS ENC CK INH, ENA – ITEM 12,11 EXEC

7 (A8U) Failed joint angle readout equal to joint bias ? (1)

YES → 8
- If motion of failed joint could result in collision, √MCC

Joint move (visual) ? NO → 9 JOINT PWR-ON RESET FAILURE. ALL DATA FOR FAILED JOINT IS BAD (4)

10 DIRECT and B/U drive modes remain for good joints, and B/U drive mode only for failed joint. All EE modes remain

YES →

CAUTION

Taking BRAKES OFF may result in unannunciated motion of failed joint. Be ready to apply BRAKES if motion occurs

11
- BRAKES – OFF

Joint move (visual) ? YES → 14

NO →

13

NO →

12

(1) Joint biases

DDT&E	(201)
SY	-2.5
SP	+2.0
EP	+0.5
WP	-0.4
WY	-1.0
WR	+0.1
FOP1	(301)
SY	-0.9
SP	+2.4
EP	-0.0
WP	-1.0
WY	-1.9
WR	+0.3
FOP3	(303)
SY	-2.4
SP	+4.0
EP	+3.6
WP	+0.9
WY	+0.1
WR	+2.8
	(202)
SY	+0.6
SP	+1.3
EP	-0.6
WP	-0.8
WY	+0.9
WR	+2.6

(2) EE tb(s) inaccurate. All display data bad

(3) Full capability may be restored with RMS MCIU CHANGEOUT (IFM)

(4) REACH LIMITs and SOFT STOPs annunciation not available for failed joint

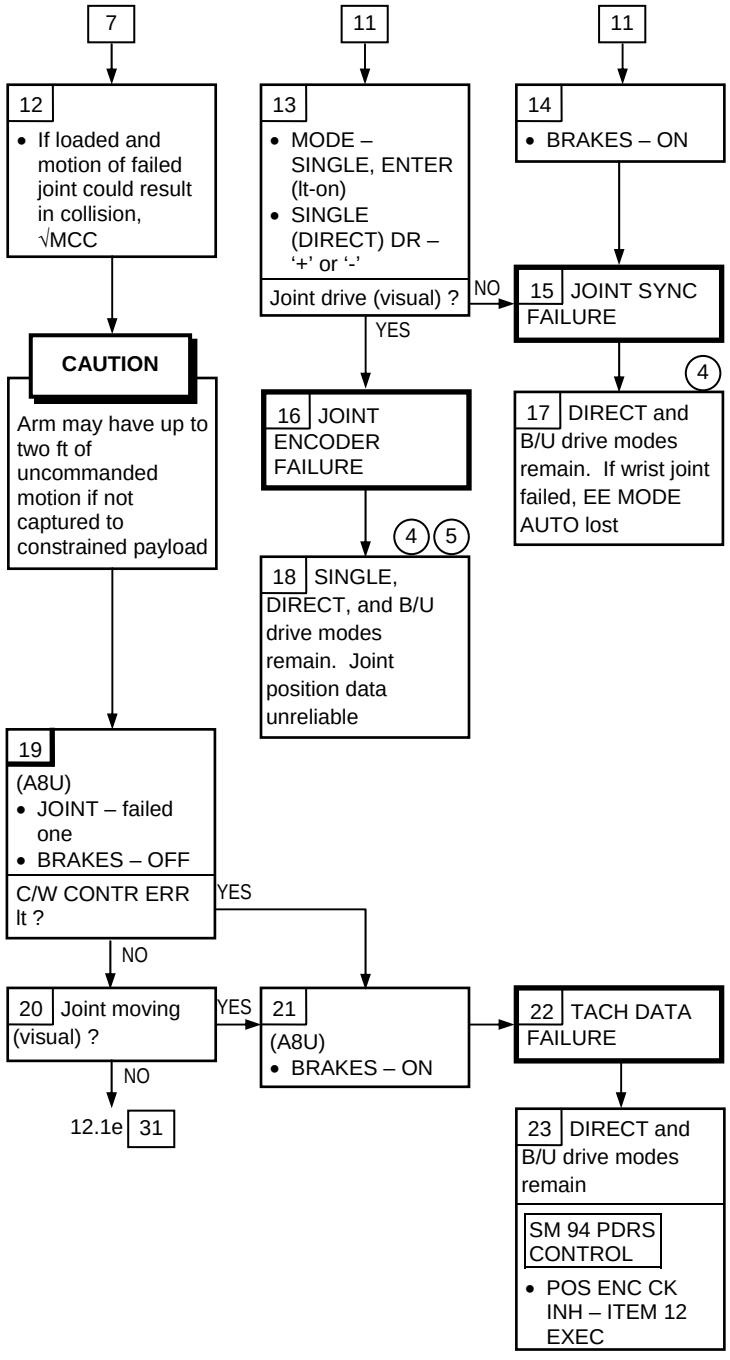

(4) REACH LIMITs and SOFT STOPs annunciation not available for failed joint

(5) Position hold function will not work for failed joint

PDRS

12.1k C/W CHECK CRT LT – S96 PDRS CKCRT EE

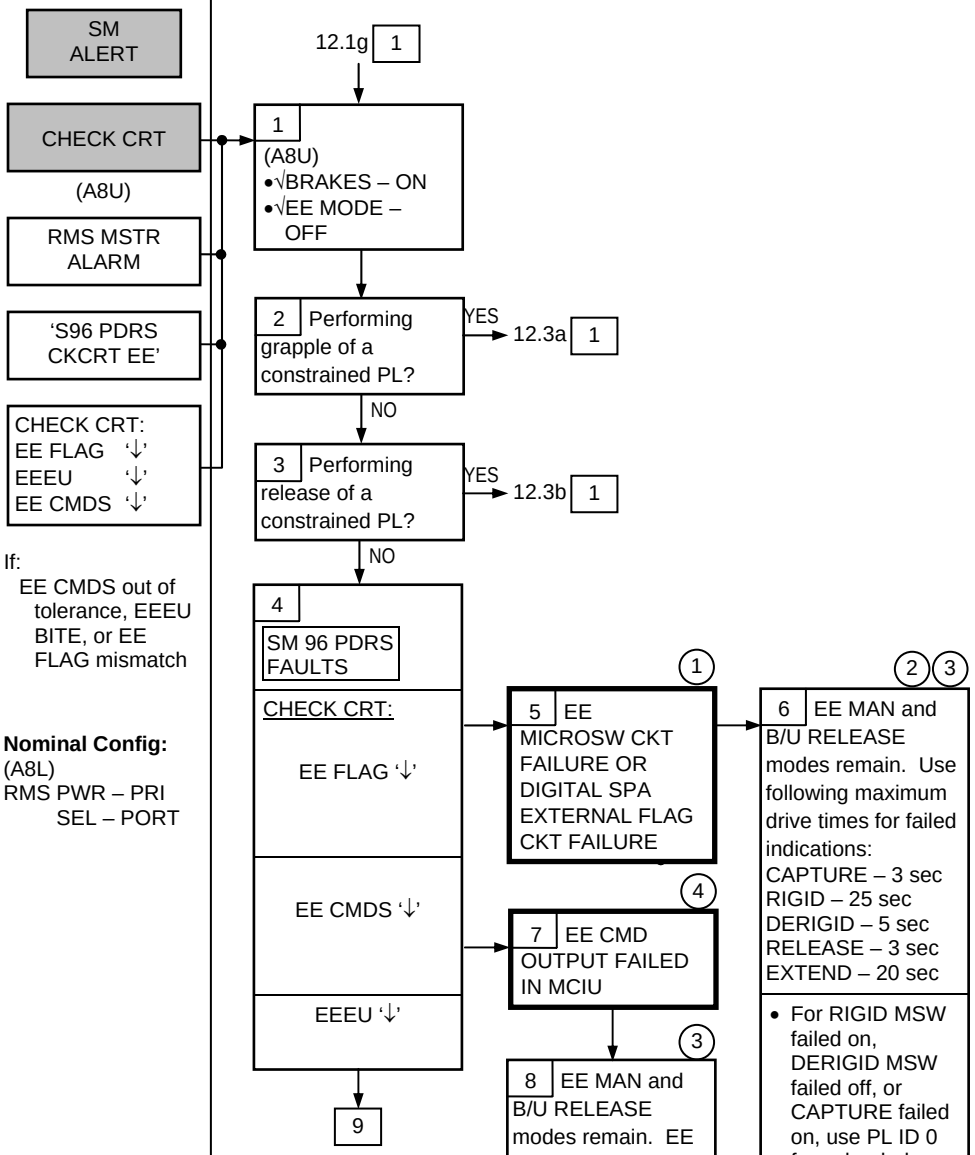

(1) For digital SPA failure, external flags can fail in pairs:
CAP/EXTEND
OPEN/RIG
DERIG/CLOSE

(2) Other CHECK CRT failures will be annunciated with MA and SM msg

(3) Ground can determine which EE Auto functions remain

(4) Full EE AUTO capability may be regained with an MCIU CHANGEOUT (IFM)

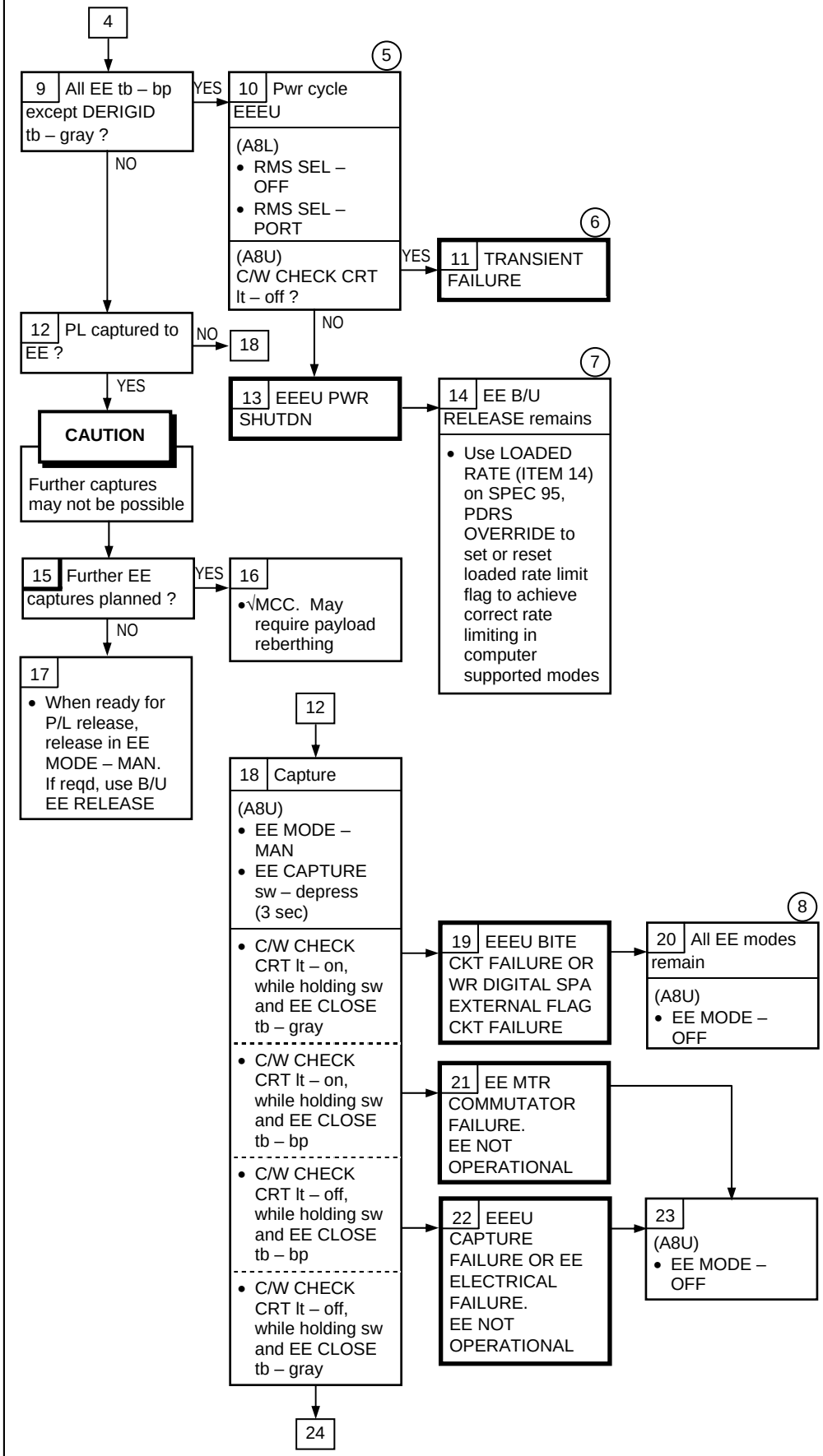

(5) √WR roll range value. Deselecting and reselecting RMS may cause WR roll range value to be incorrect

(6) Additional alarms possible

(7) Subsequent uncommanded release or derigidization will not be annunciated

(8) EEEU BITE checks will be masked. Other CHECK CRT failures will be annunciated with MA and SM msg

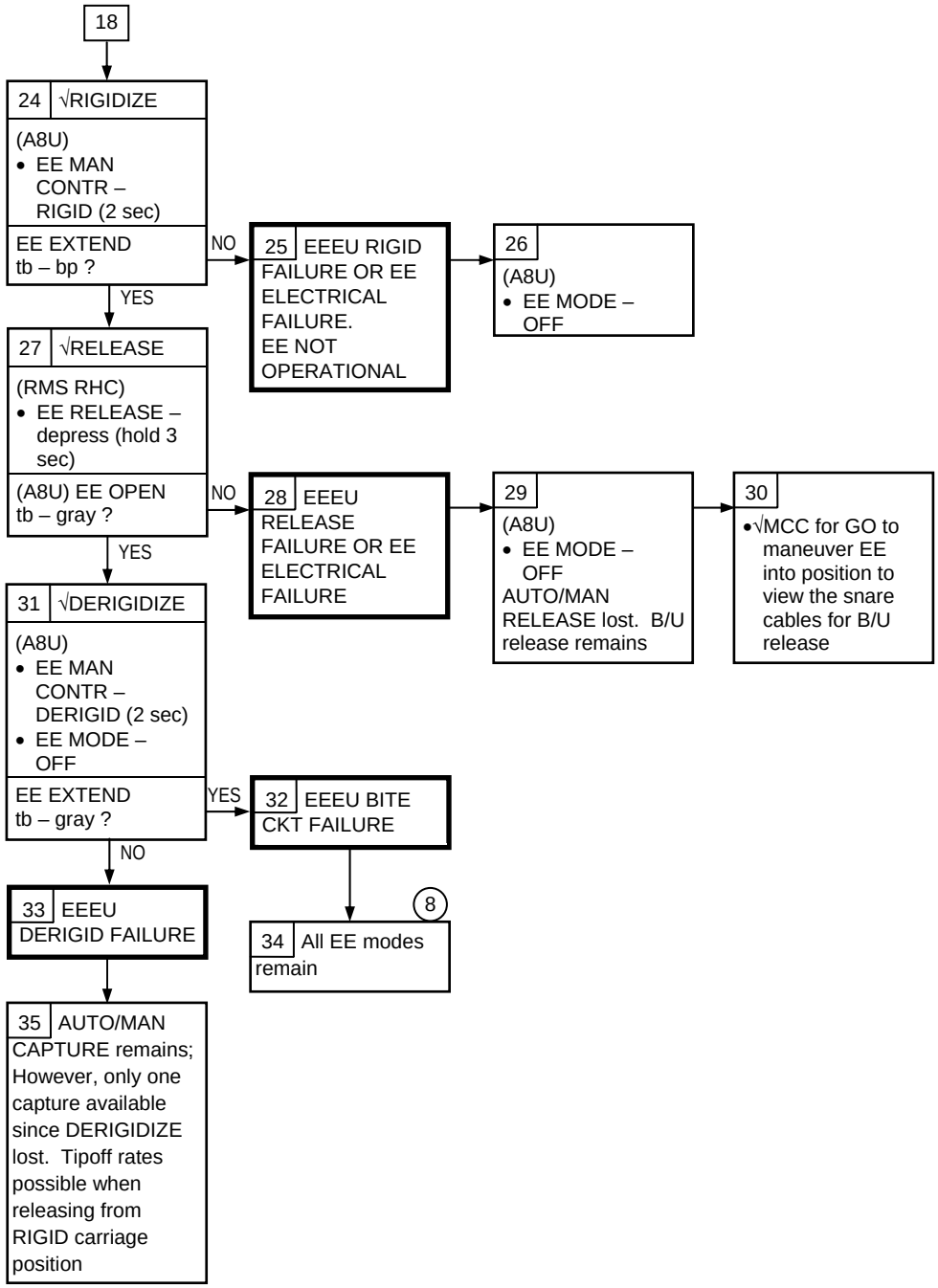

(8) EEEU BITE checks will be masked. Other CHECK CRT failures will be annunciated with MA and SM msg

PDRS

12.1l C/W CHECK CRT LT – S96 PDRS CKCRT T CK

SM ALERT

RMS MSTR ALARM

CHECK CRT LT

SM 96 PDRS FAULTS
CHECK CRT:

TMP CKT '↓'

S96 PDRS CKCRT T CK

PORT TEMP CAUTION AND PDRS TEMP PORT

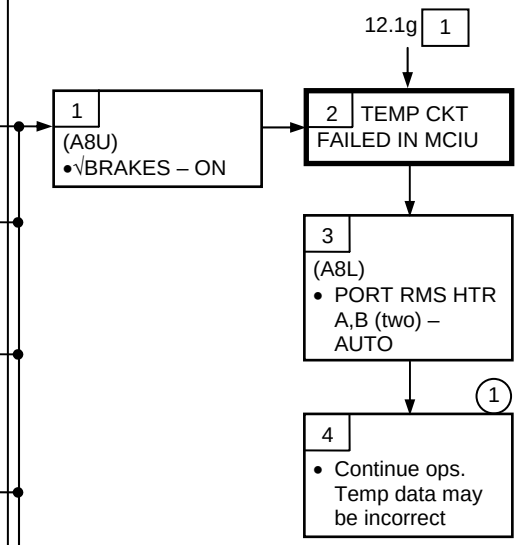

If:
Thermistor circuit reference voltage fail

Nominal Config:
(A8L)
PORT RMS
HTR A(B) – AUTO

(1) MCC may TMBU temp limits to prevent nuisance alarms

PDRS

12.1m C/W CHECK CRT LT – S96 PDRS CKCRT HC

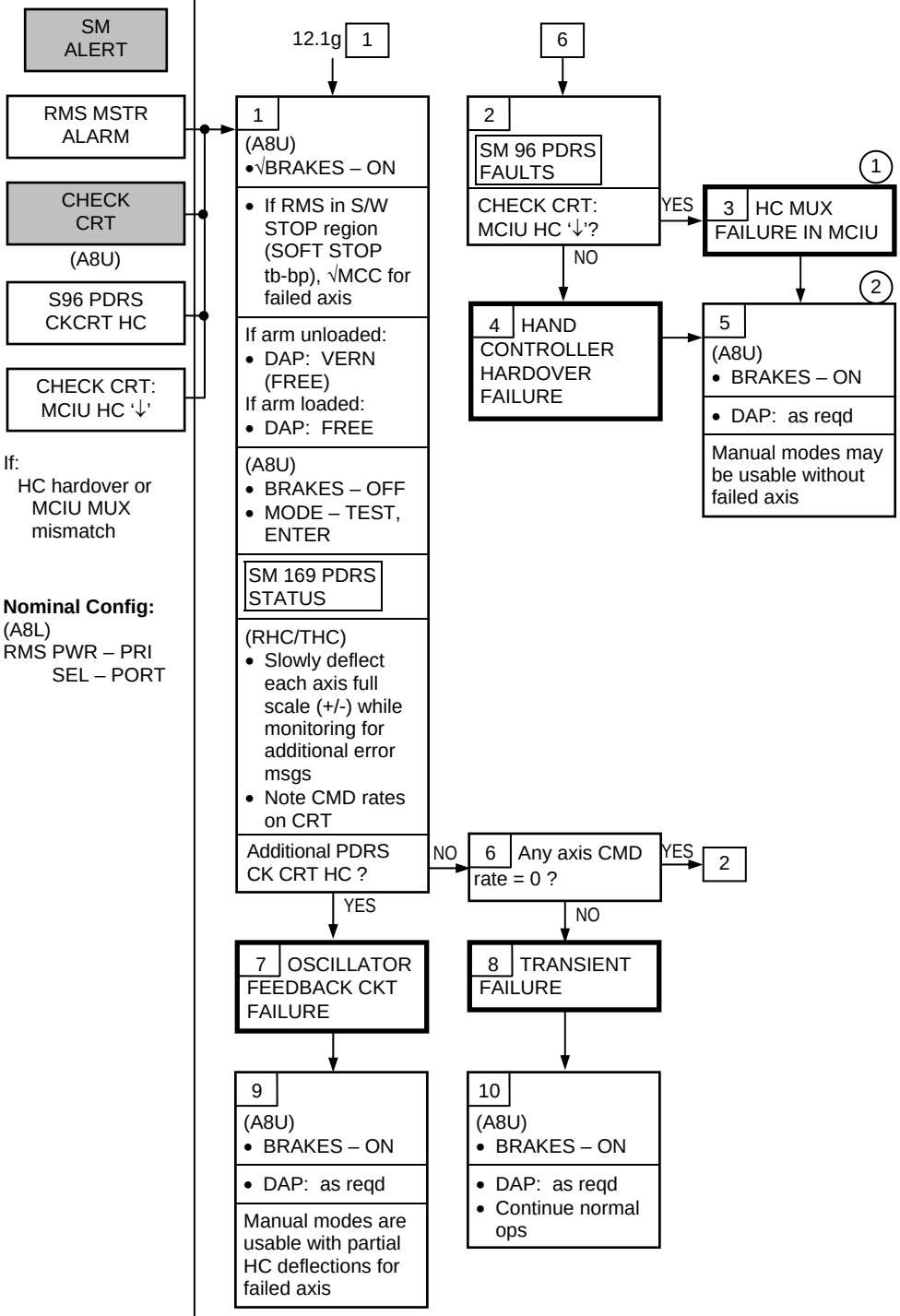

(1) Full capability may be restored with RMS MCIU CHANGEOUT (IFM)

(2) Single HC axis failure workaround capability exists via SM 95 PDRS OVERRIDE. Each time item 33 or 34 is toggled will result in MA and SM alert being reannunciated

PDRS

12.1n C/W CHECK CRT LT – PDRS SLIP SY(SP, EP, WP, WY, WR, ALL)

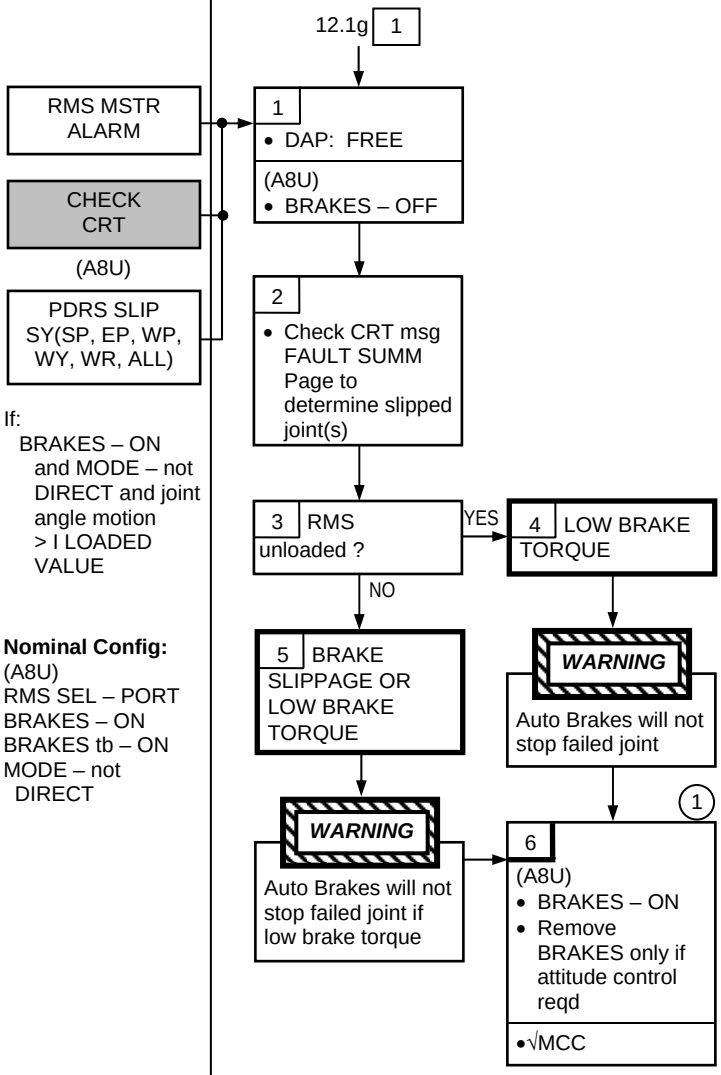

If:
BRAKES – ON and MODE – not DIRECT and joint angle motion > I LOADED VALUE

Nominal Config:
(A8U)
RMS SEL – PORT
BRAKES – ON
BRAKES tb – ON
MODE – not DIRECT

(1) MCC can attempt to correlate jet activity with 'PDRS SLIP' msg or may recommend a joint drive test to ascertain brake health

PDRS

12.1o C/W CHECK CRT LT – S94 PDRS WR R

SM ALERT

RMS MSTR ALARM

CHECK CRT

(A8U)

S94 PDRS WR R

If:
WR range does not agree with encoder quadrant

Nominal Config:
(A8L)
RMS PWR – PRI
SEL – PORT

12.1g 1

1 2 3

1
(A8U)
- BRAKES – ON

Is correct WR RANGE (2-5) known ?

YES

NO

2 (4)
SM 94 PDRS CONTROL
- ITEM 26 + correct value (2-5) EXEC

3
- Continue normal ops

CAUTION

If loaded, damage to RMS and/or PL could result if WR joint driven into hard stop. If loaded, √MCC

4
(A8U)
- JOINT – WR
- MODE – DIRECT

5 (4)
- SINGLE/DIRECT DR – '-' until motion stops (hard stop)

SM 94 PDRS CONTROL
- ITEM 26 +1 EXEC

Expect MA, REACH LIMIT lt and S/W STOP tb – bp

6
- SINGLE/DIRECT DR – '+' to desired WR angle
- Continue ops

(1) MCC may be able to determine correct value

(2) Msg may result because of RMS deselect and reselect, driving WR in B/U, or SM major function move to another GPC

(3)

WR		WRR
-360 to -450		1
-180 to -360		2
0 to -180		3
0 to 180		4
180 to 360		5
360 to 450		6

(4) Expect CKCRT lt and 'S96 PDRS CKCRT WR'. Clear with SM 94 PDRS CONTROL ITEM 12, 11

PDRS

12.1p C/W CHECK CRT LT – PDRS TEST BRK (C/W, NMI, FS, LOSS)

SM ALERT

RMS MSTR ALARM

CHECK CRT Lt

PDRS TEST BRK(C/W, NMI, FS, LOSS)

If:
MCIU BITE Verification test circuit failure

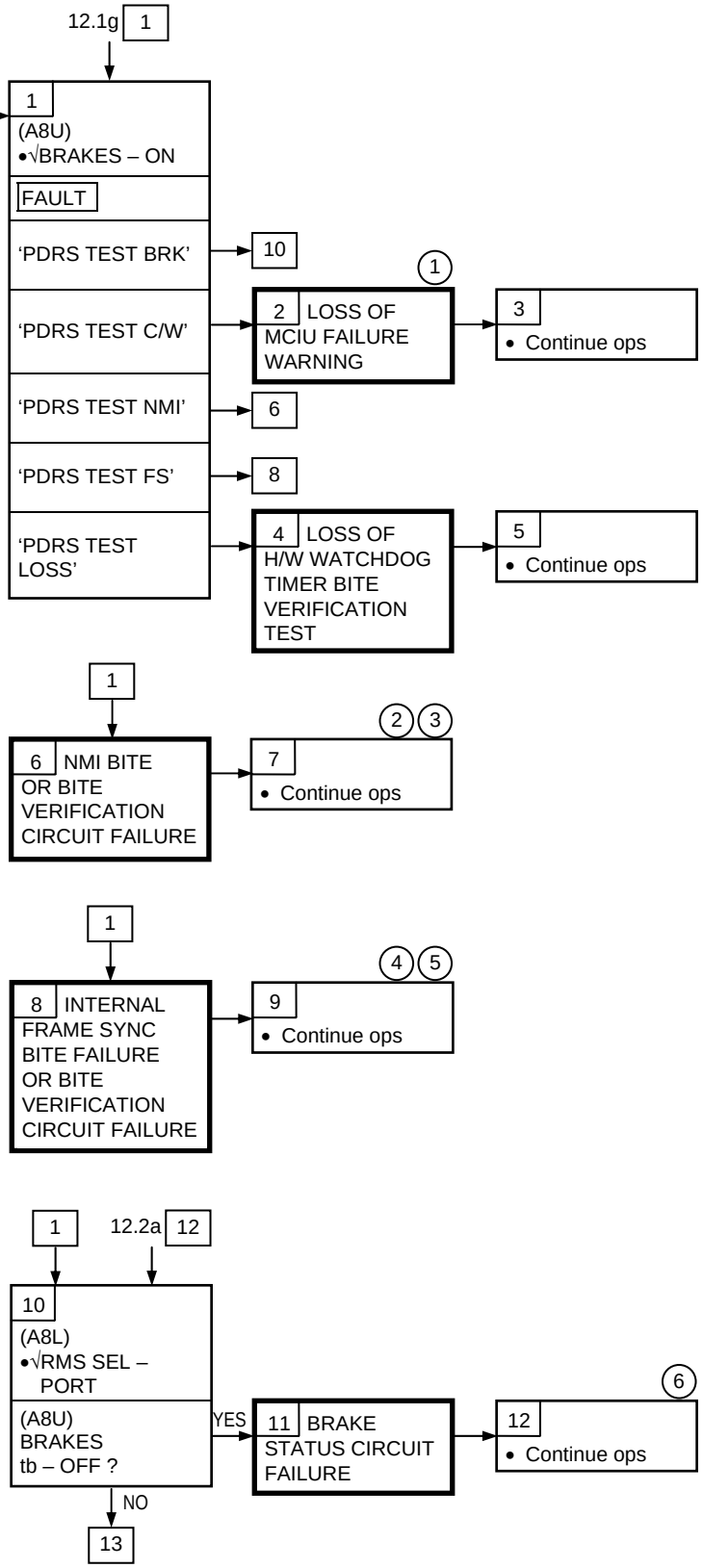

(1) MCIU failure warning/Master Alarm may not be available for subsequent failures. Autobrakes remain

(2) Subsequent MCIU failure warning may be accompanied by additional msgs

(3) NMI may be lost for subsequent H/W Watchdog Timer failure. Autobrakes remain

(4) Autobrakes may not be available for a subsequent loss of Internal Frame Sync

(5) Next failure may result in a six-joint runaway at last commanded rates. Annunciated

(6) Brakes operate nominally, but tb will remain OFF

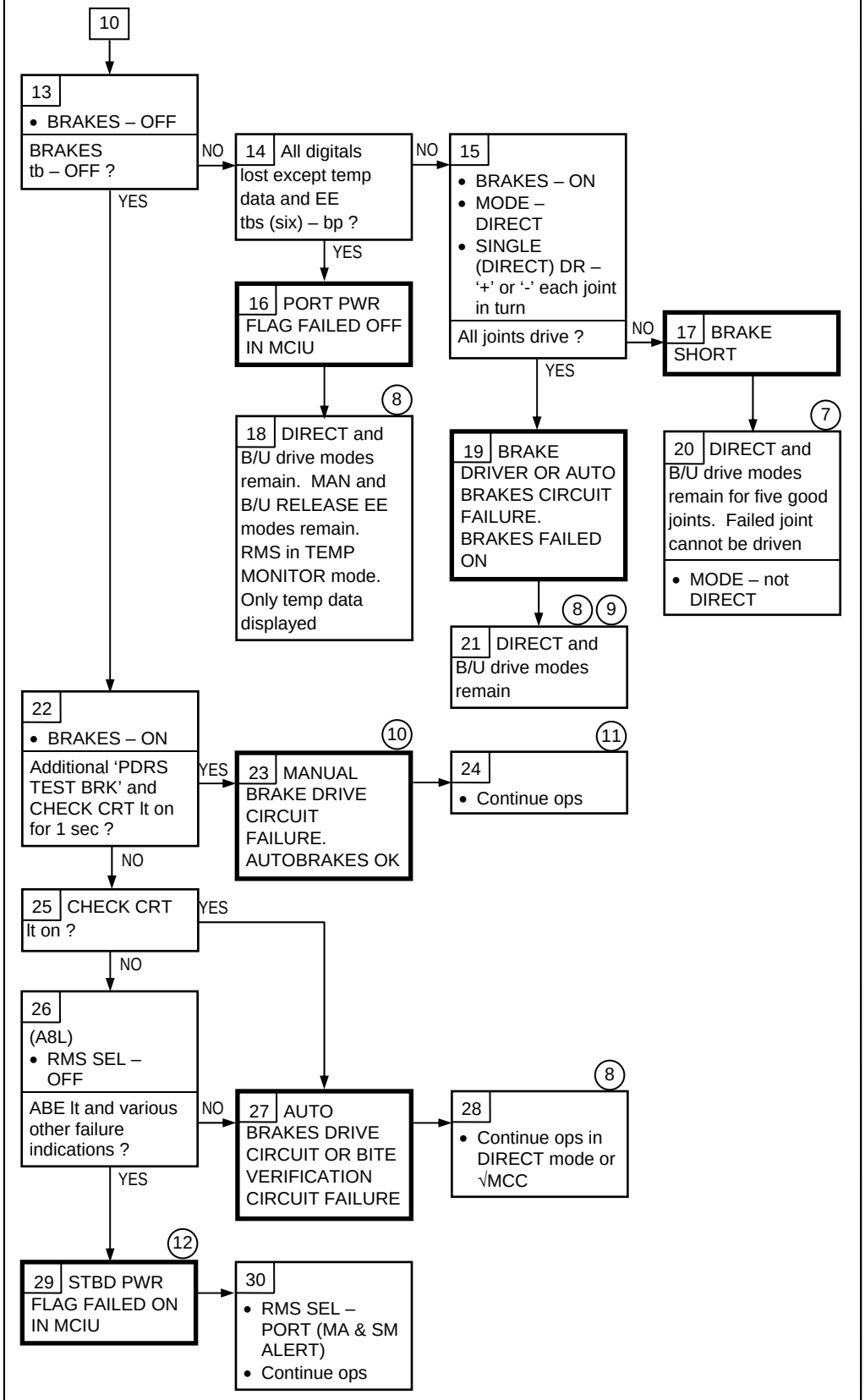

(7) Driving failed joint in B/U will blow +28V BDA fuse for all joints. EVA may be reqd to cradle arm

(8) Full capability may be restored with RMS MCIU CHANGEOUT (IFM)

(9) RMS limping will not exist during EE ops. Use EE MAN RELEASE for single joint ops

(10) MCIU BITE verification test will apply brakes 1 sec after brake sw on

(11) Failure will reannunciate with BRAKE sw transition from OFF to ON

(12) RMS temperature monitor mode not available

PDRS

12.1q C/W CHECK CRT LT – S96 PDRS CKCRT FS

SM ALERT

RMS MSTR ALARM

CHECK CRT lt

If:
MCIU External Frame Sync BITE or BITE Verification Test Circuit failure

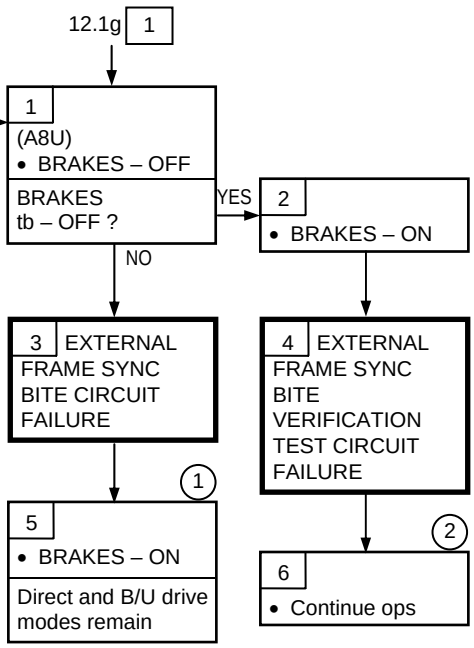

(1) Full capability will be restored with RMS MCIU CHANGEOUT (IFM)

(2) Auto brakes available for subsequent loss of External Frame Sync due to SPA detected loss of Frame Sync

PDRS

12.1r C/W RELEASE LT – PDRS REL

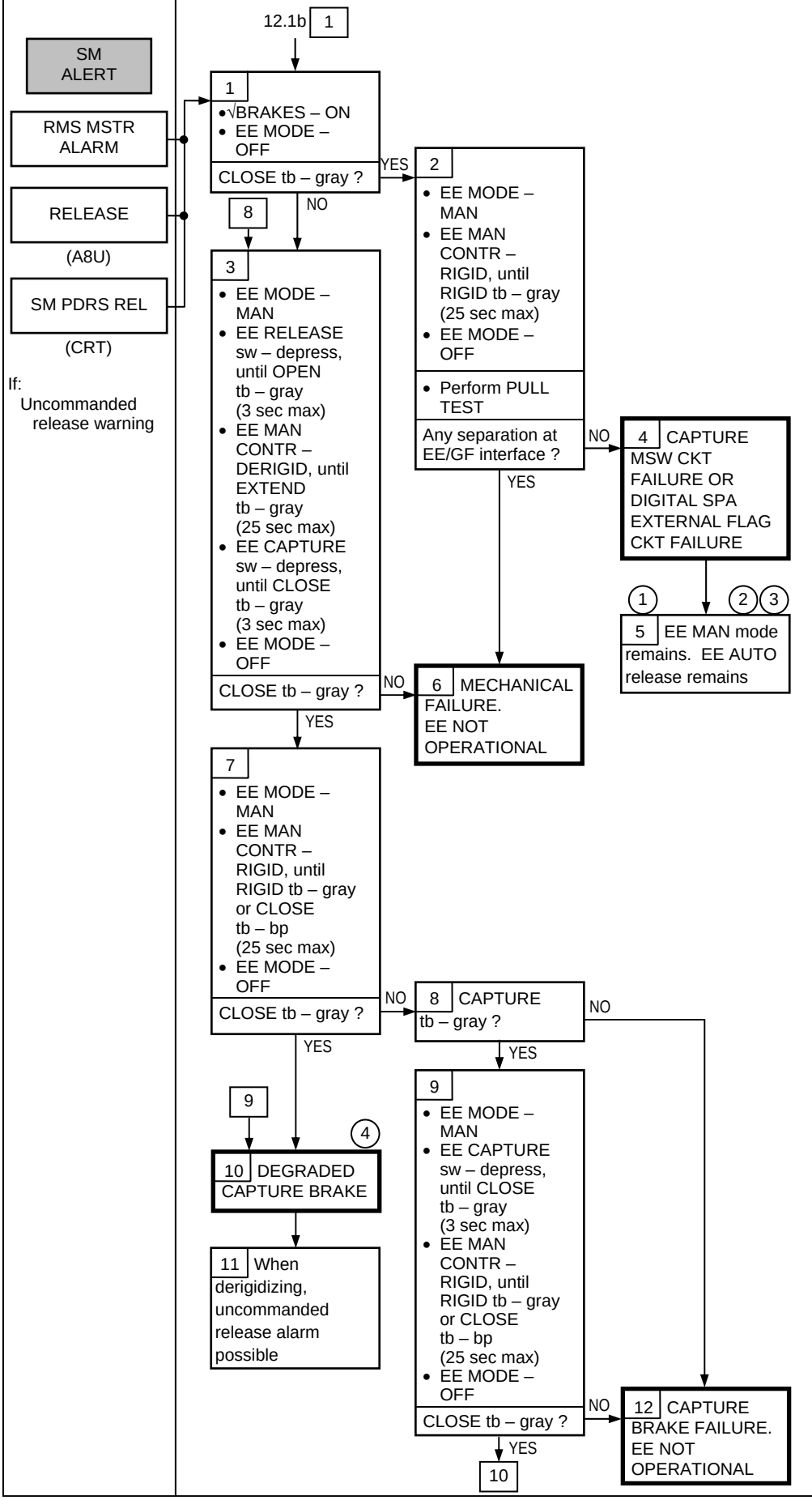

(1) Subsequent uncommanded release will not be annunciated

(2) RMS loaded rates can be set via SM 95 PDRS OVERRIDE

(3) For digital SPA failure, EXTEND flag may be failed OFF causing EE motor to continue to drive until EE MODE – OFF during AUTO RELEASE

(4) Rigidize brake is sufficient to hold EE drive train

PDRS

12.1s C/W RELEASE LT – PDRS REL (CUE CARD EXECUTED)

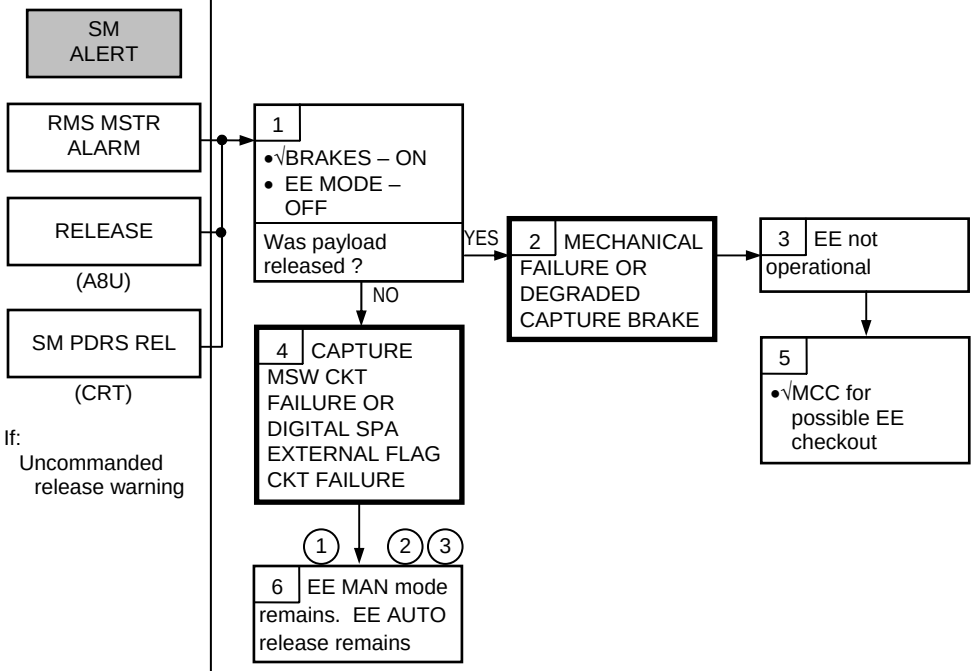

(1) Subsequent uncommanded release will not be annunciated

(2) For subsequent capture, RMS loaded rates can be set via SM 95 PDRS OVERRIDE

(3) For digital SPA failure, EXTEND flag may be failed off causing EE motor to continue to drive until EE MODE – OFF during AUTO RELEASE

PDRS

SM ALERT

DERIGIDIZE

(A8U)

RMS MSTR ALARM

SM PDRS DERIG

(CRT)

If:
Uncommanded derigidize warning

Nominal Config:
PL is 6 DOF constrained

12.1t C/W DERIGIDIZE LT – PDRS DERIG

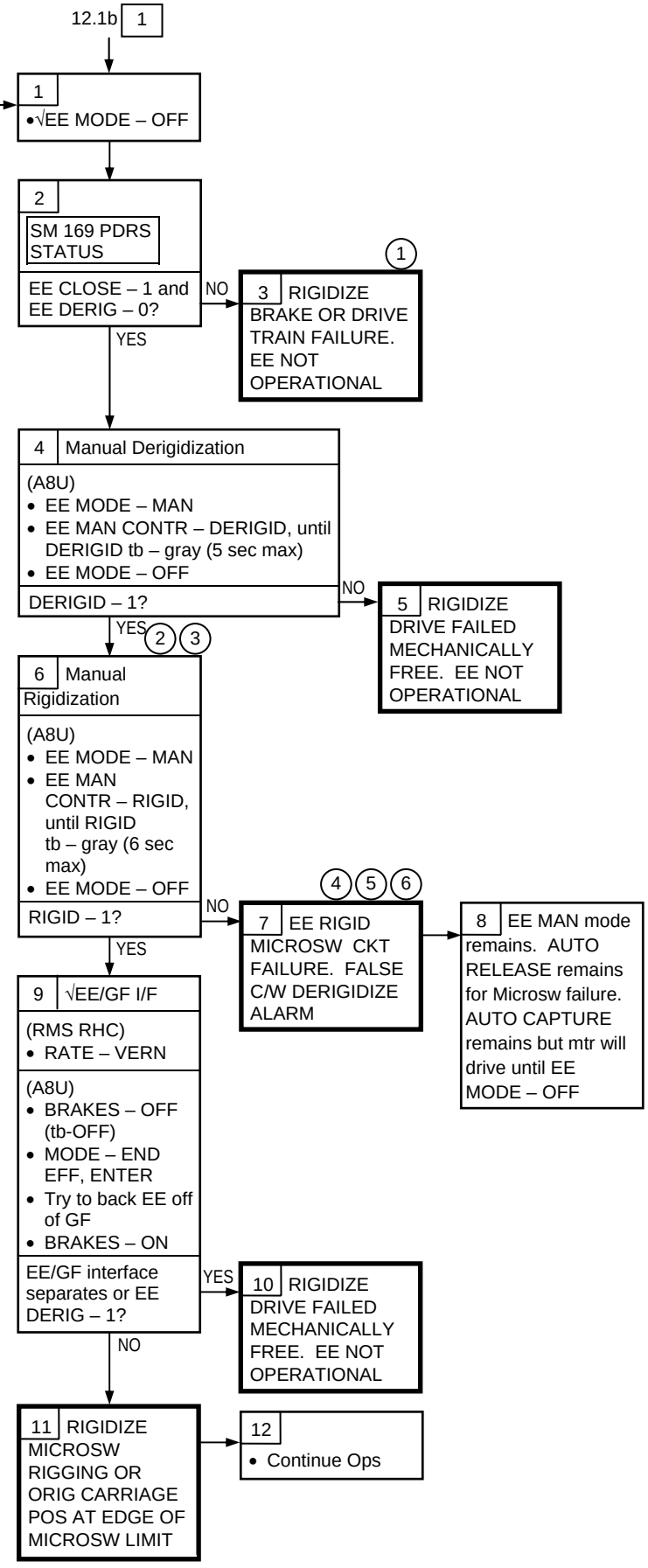

(1) Loss of Rigidize brake will cause motion of the snare drive mechanism

(2) RIGID CMD will reset C/W DERIGIDIZE check and extinguish light

(3) Ground can verify that stall current occurs at the expected time

(4) Further uncommanded derigidizations will not be annunciated

(5) RMS loaded rates can be set via SM 95 PDRS OVERRIDE after next payload capture

(6) Microsw ckt failures include circuitry in the SPA, therefore microswitches can fail in pairs:
CAP/EXTEND
OPEN/RIG
CLOSE/DERIG
Timing of each phase is critical to prevent motor burnout. EE Mode to OFF after spec time

PDRS

12.1u C/W DERIGIDIZE LT – PDRS DERIG (CUE CARD EXECUTED)

SM ALERT

DERIGIDIZE

RMS MSTR ALARM

SM PDRS DERIGID

(CRT)

If:
Uncommanded derigidize warning

1
•√EE MODE – OFF
Was payload released ?

YES

2 RIGIDIZE DRIVE FAILED MECHANICALLY FREE

3 EE not operational

NO

4 EE RIGID tb – gray ?

NO

5 EE DERIGID tb – gray ?

YES

YES

NO

6 DEGRADED RIGIDIZE BRAKE

CAUTION
Payload may derigidize during RMS motion

7
- EE MODE – MAN
- EE MAN CONTR – DERIGID until DERIGID tb – gray (5 sec max)
- EE MODE – OFF

EE DERIGID tb – gray ?

NO

8 RIGIDIZE DRIVE FAILED MECHANICALLY FREE

YES

1

9
(RMS RHC)
- RATE – VERN
- DAP: FREE, until PL released

10
- EE MODE – MAN
- EE MAN CONTR – RIGID (6 sec max)
- EE MODE – OFF

11
- Stay free drift

EE not operational

•√MCC

2 3 4

12 EE RIGID MICROSW CKT FAILURE. FALSE C/W DERIGIDIZE ALARM

13 EE MAN mode remains. AUTO RELEASE remains for MSW failure. AUTO CAPTURE remains but mtr will drive until EE MODE – OFF

(1) Additional DERIGID alarms possible

(2) Further uncommanded derigidizations will not be annunciated

(3) RMS loaded rates can be set via SM 95 PDRS OVERRIDE after next payload capture

(4) MSW ckt failures include circuitry in the SPA, therefore microswitches can fail in pairs: CAP/EXTEND OPEN/RIG CLOSE/DERIG Timing of each phase is critical to prevent motor burnout. EE Mode sw to OFF after spec time

PDRS

12.1v C/W PORT TEMP LT – PDRS TEMP PORT

PDRS TEMP PORT

RMS MSTR ALARM

PORT TEMP

(A8U)

If:
Temp exceeds alarm limits

Nominal Config:
(A8L)
PORT RMS
HTR A(B) – AUTO
or
PORT RMS
HTR A,B (two) – AUTO

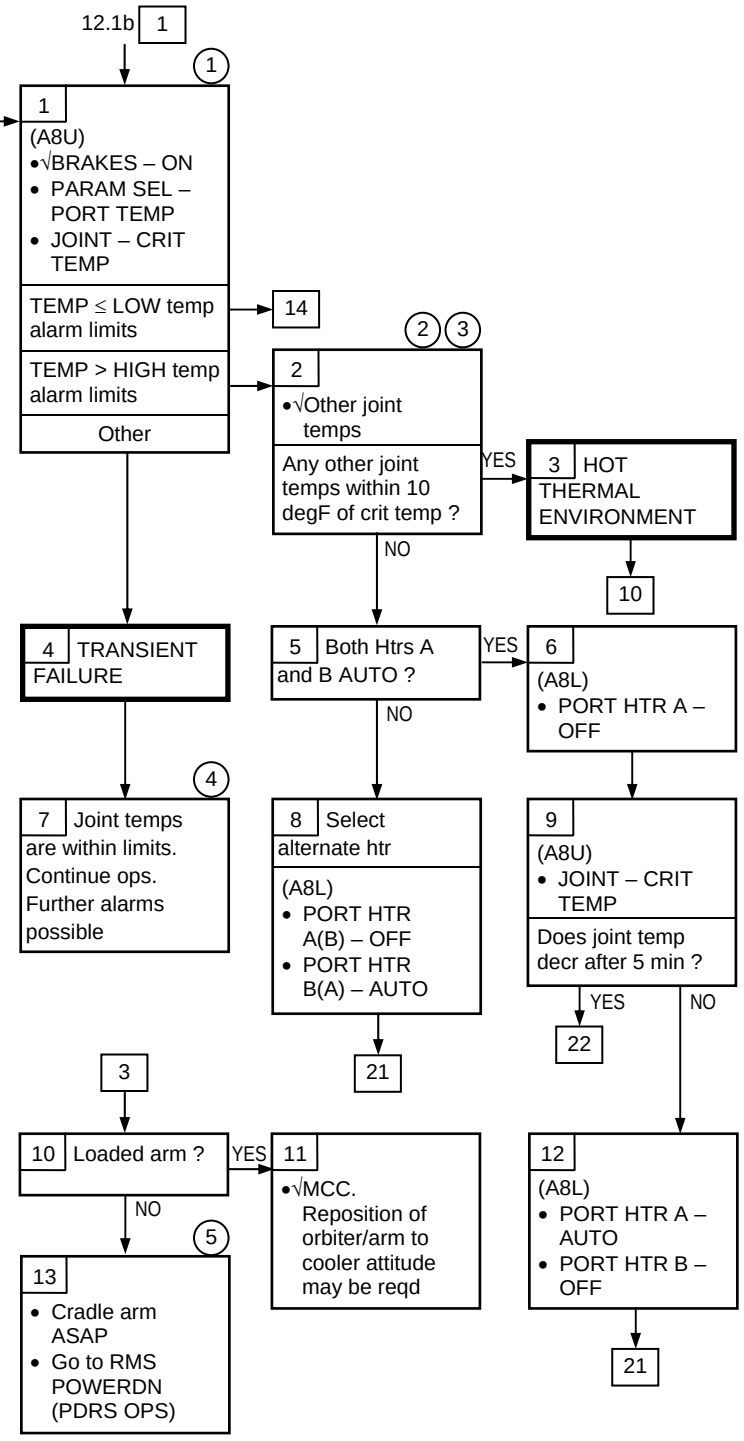

(1) HIGH temp alarm limits:
LED = 172
ABE (SPA) = 106
ABE (EE) = 144
LOW temp alarm limits:
LED = 0
ABE (ALL) = 0

(2) Normally, joint temps vary between 15 degF and 60 degF

(3) SP ABE and SY ABE represent single temp reading. WP ABE and WY ABE represent single temp reading

(4) MCC may TMBU temp limits to prevent nuisance alarms

(5) Since arm hardware damage may occur if limits exceeded, arm must be powered off prior to reaching temp acceptance limits (LED 181 degF, ABE SPA 117 degF, ABE EE 154 degF) to prevent jettison. RMS SEL – OFF will remove power to the arm, reducing heat contributed by arm electronics

PDRS 12.1v (Cont)

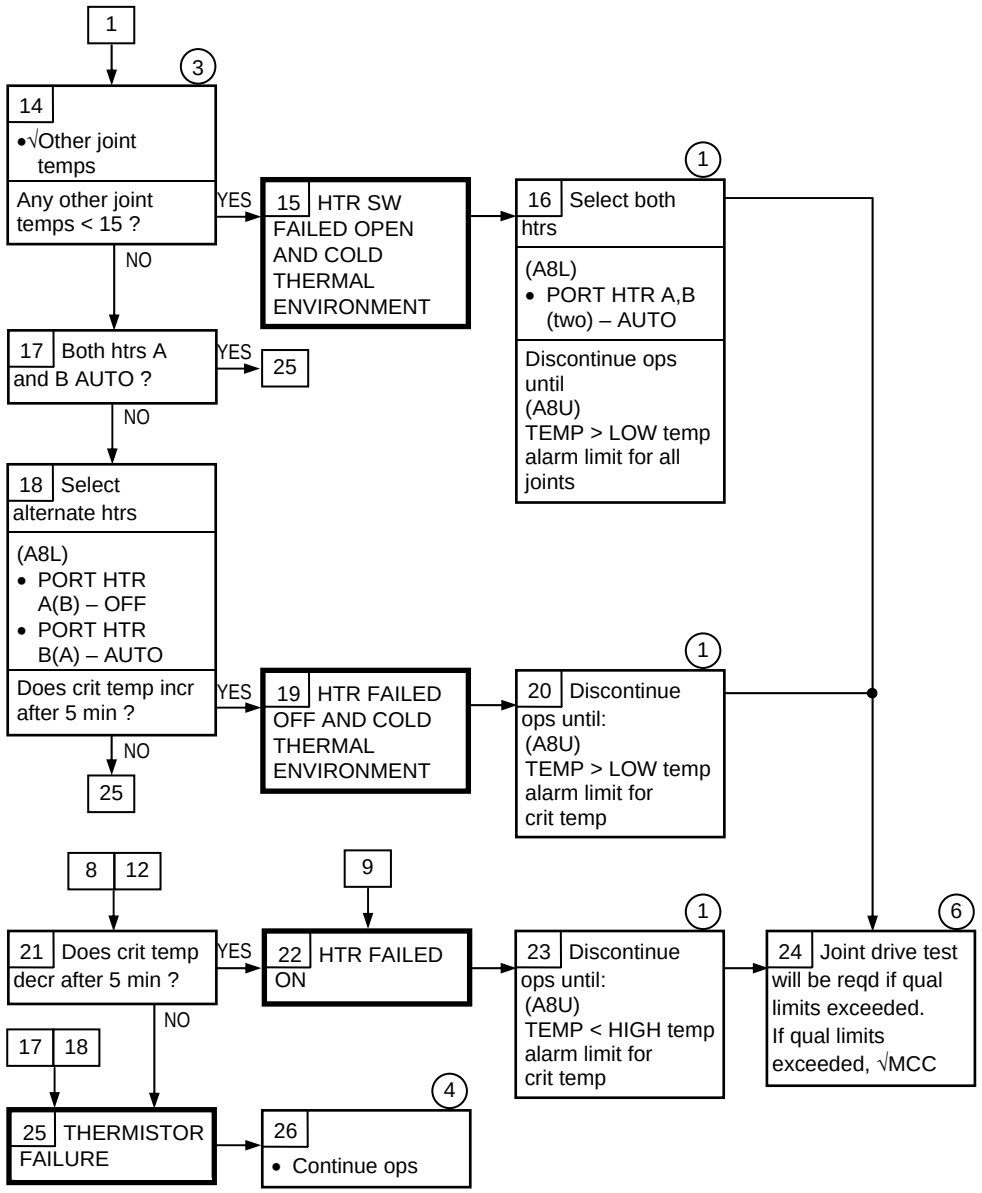

(1) HIGH temp alarm limits:
LED = 172
ABE (SPA) = 106
ABE (EE) = 144
LOW temp alarm limits:
LED = 0
ABE (ALL) = 0

(3) SP ABE and SY ABE represent single temp reading. WP ABE and WY ABE represent single temp reading

(4) MCC may TMBU temp limits to prevent nuisance alarms

(6) Arm qual temp high limits:
LED = 202
ABE (SPA) = 136
ABE (EE) = 176
Arm qual temp low limits:
LED = -10
ABE = -10

PDRS

12.1w C/W STBD TEMP LT - PDRS TEMP STBD

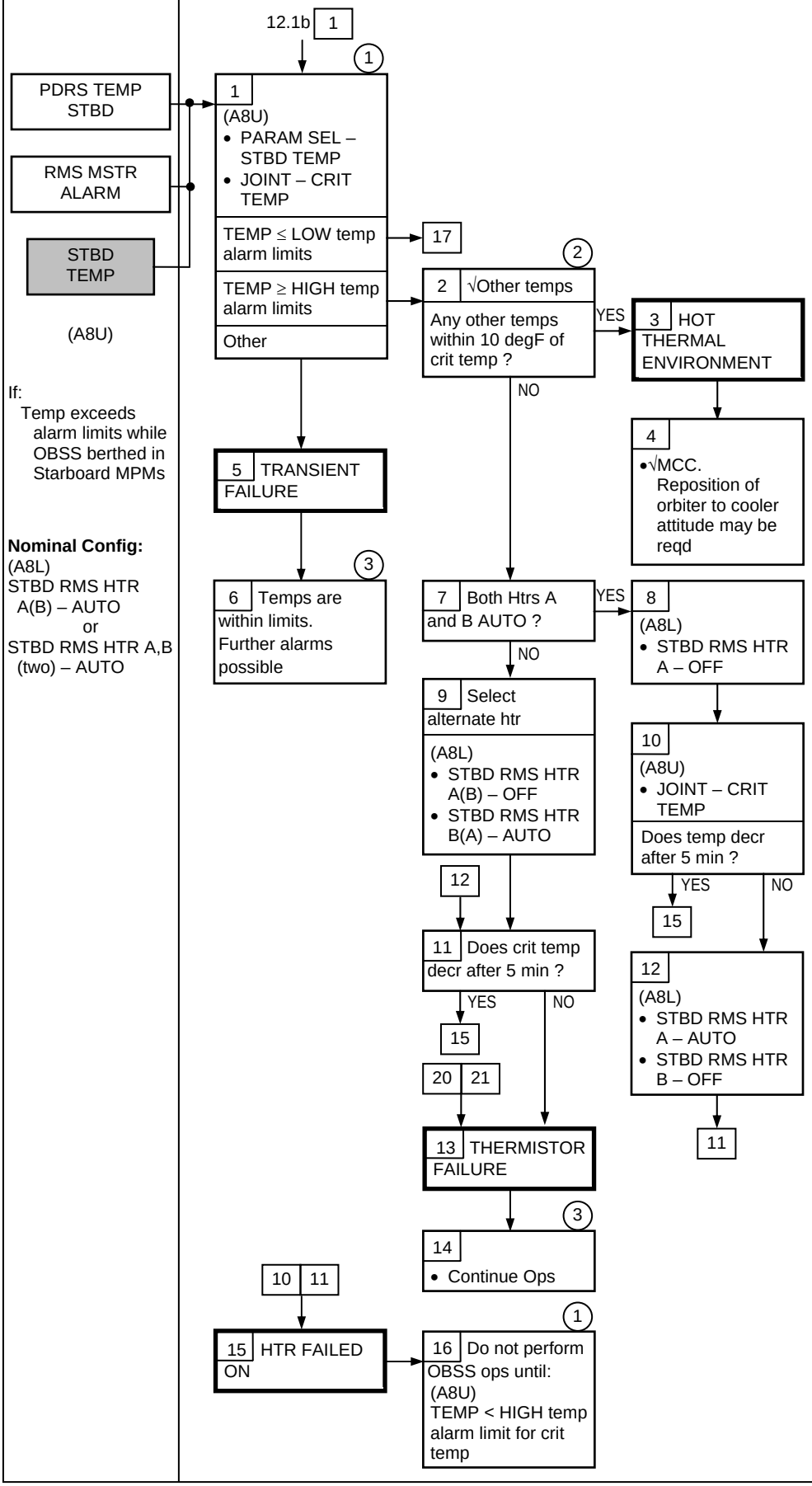

If:
Temp exceeds alarm limits while OBSS berthed in Starboard MPMs

Nominal Config:
(A8L)
STBD RMS HTR A(B) – AUTO
or
STBD RMS HTR A,B (two) – AUTO

(1) HIGH/LOW temp alarm limits (deg F):
LDRI: 156/39
ITVC: 138/8
PTU: 138/-10
LCS: 119/15
LDRI & LCS Avionics: 128/-10

(2) Joint selection corresponds to temps (joint ID) as follows:
SY: LDRI (201)
SP: ITVC (202)
EP: PTU (203)
WP: LCS (204)
WR Ind 1: LDRI Avionics (206)
WR Ind 2: LCS Avionics (206)

(3) MCC may TMBU temp limits to prevent nuisance alarms

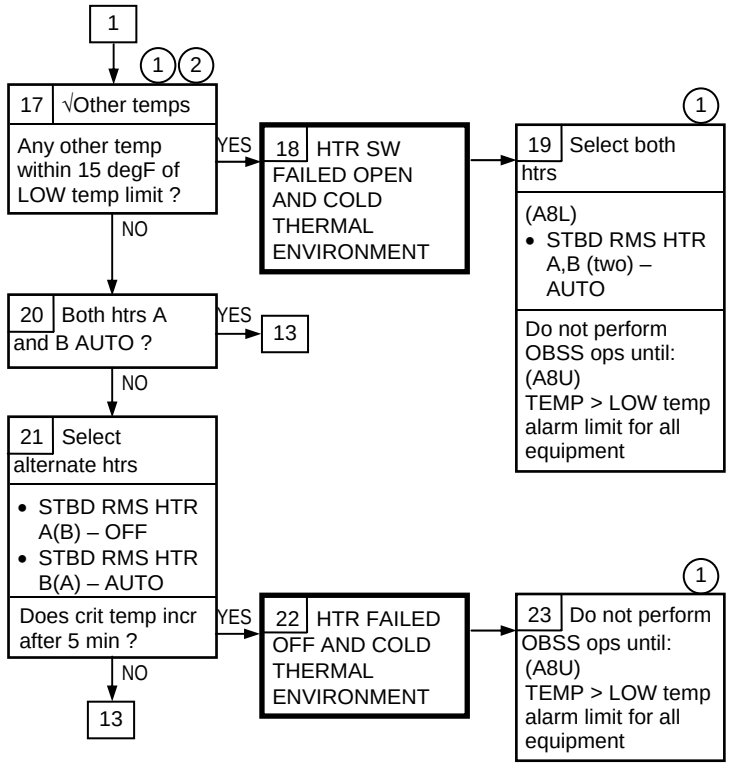

(1) HIGH/LOW temp alarm limits (deg F):

LDRI: 156/39

ITVC: 138/8

PTU: 138/-10

LCS: 119/15

LDRI & LCS Avionics: 128/-10

(2) Joint selection corresponds to temps (joint ID) as follows:

SY: LDRI (201)
SP: ITVC (202)
EP: PTU (203)
WP: LCS (204)

WR Ind 1: LDRI Avionics (206)

WR Ind 2: LCS Avionics (206)

This Page Intentionally Blank

PDRS

12.2a MSTR ALARM ON, BUT C/W LT(S) OFF

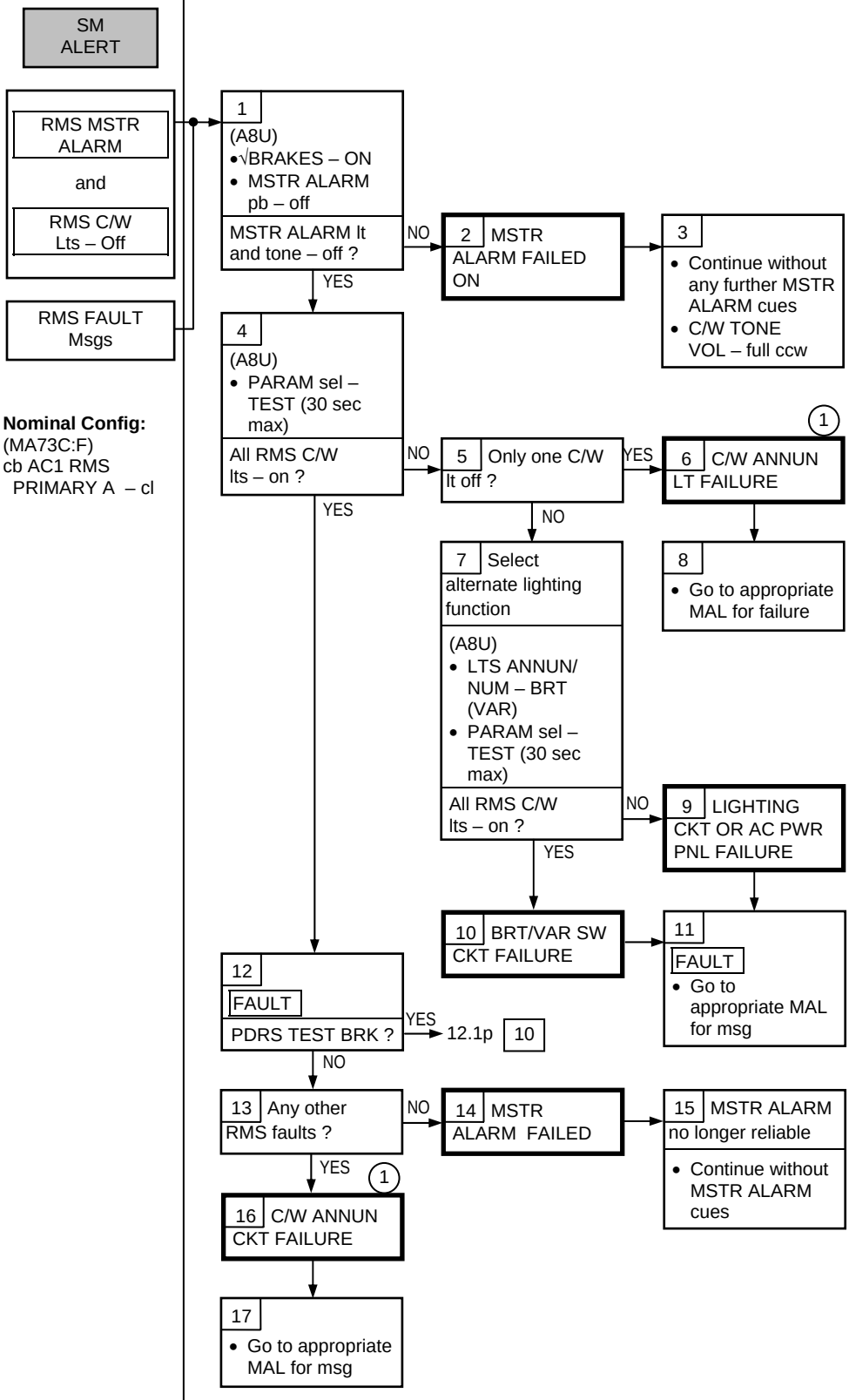

(1) C/W lt associated with fault msg will not illuminate

PDRS

12.2b BRAKES – ON, BUT BRAKES tb – OFF

BRAKES – ON But BRAKES tb – OFF

Nominal Config:
(A8L)
RMS PWR – PRI
SEL – PORT
(A8U)
BRAKES – ON
SM 94 I/O ON ITEM 5 (*)

1
(A8U)
- √BRAKES – ON
- MODE – SINGLE,ENTER

SINGLE lt – on ?

NO → 2 BRAKES tb CKT FAILURE; BRAKES OK → 3
- Continue without BRAKES tb

YES (1) →

4 BRAKES SW FAILURE. LOSS OF BRAKES AND DIRECT MODE. AUTO BRAKES FOR RUNAWAYS OK

(2) →

5 To apply Brakes:
SM 94 PDRS CONTROL
- AUTO BRAKE CK – ITEM 27 EXEC (*)
- √BRAKES tb – ON

To remove Brakes:
SM 94 PDRS CONTROL
- I/O OFF – ITEM 6 EXEC (*)
- I/O ON – ITEM 5 EXEC (*)
- SAFING – CANCEL (tb-gray)
- √BRAKES tb – OFF

6 All computer supported modes and B/U available

(1) RMS IFM D&C Kit available to regain DIRECT mode. Refer to RMS CONTINGENCY OPERATION (INSTALLATION AND REMOVAL OF RMS IFM D&C KIT) (IFM), AND PDRS SSR-4, RMS IFM D&C KIT

(2) If there was a "GOOD" next to ITEM 25 prior to cycling I/O, the "GOOD" indication will remain, but it is a false indication. A new ITEM 25 EXEC will be required after cycling I/O

PDRS

12.2c BRAKES – OFF, BUT BRAKES tb – ON

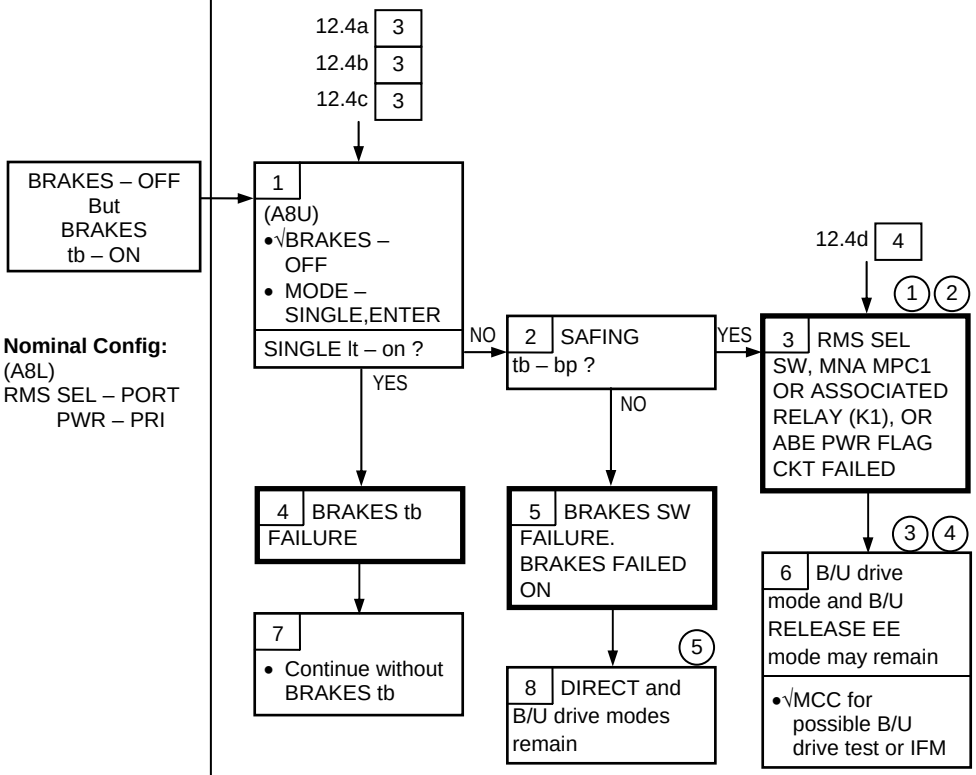

Nominal Config:
(A8L)
RMS SEL – PORT
PWR – PRI

(1) For RMS pwr sw failure, all ABE data lost. For all other failures, only arm temp data remains

(2) Ground can determine if RMS pwr sw is failed

(3) RMS IFM D&C KIT available to regain DIRECT mode and EE – MAN modes for ABE PWR FLAG fuse, but ABE data will be unavailable. Refer to RMS CONTINGENCY OPERATION (INSTALLATION AND REMOVAL OF RMS IFM D&C KIT) (IFM), and PDRS SSR-4, RMS IFM D&C KIT

(4) For RMS pwr or RMS select sw, Contingency Powerup IFM is available to regain primary drive modes and end effector capability. Refer to CONTINGENCY POWERUP (IFM)

(5) RMS limping will not exist during EE ops. Use EE MAN release for single joint ops

PDRS

12.2d SAFING – AUTO, BUT SAFING tb – bp

SAFING – AUTO and SAFING tb – bp

All RMS C/W lts – Off

MASTER ALARM – Off

No CRT SM Msgs

No SM ALERT

Nominal Config:
(A8L)
RMS PWR – PRI
SEL – PORT

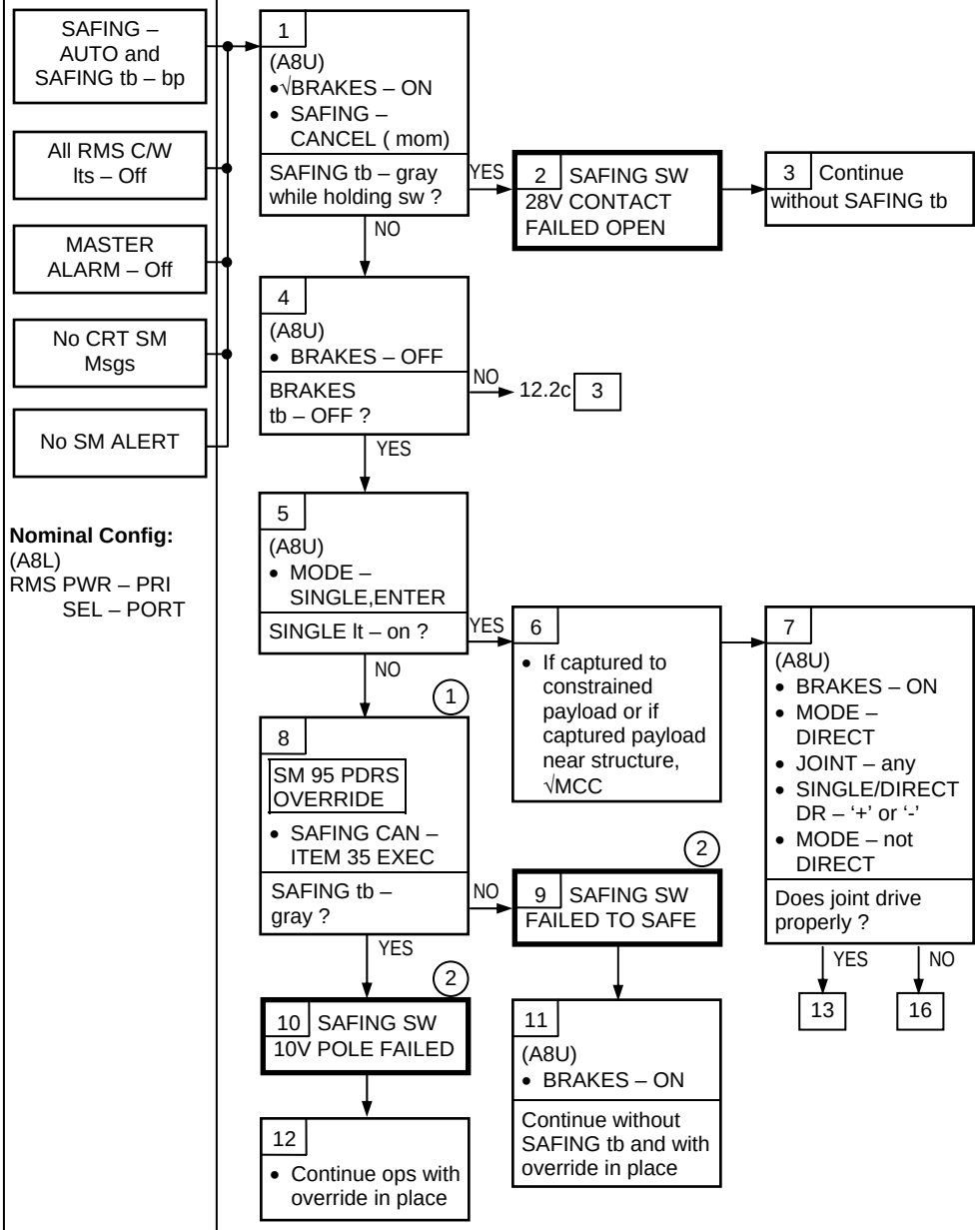

(1) SM 95 ITEM 35 SAFING CAN override is a toggle. If left in place it will override a D&C panel safing command

(2) MCIU SAFING circuit still operational

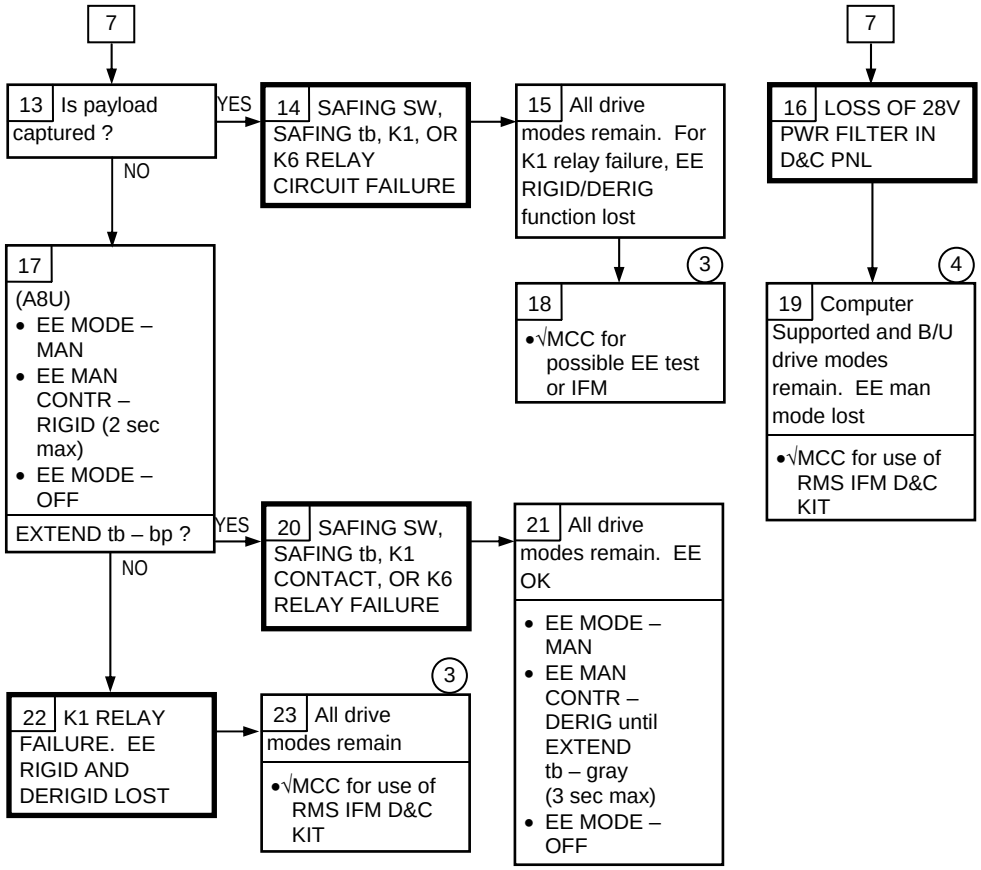

(3) For K1 relay failure, EE MODE – MAN may be restored with RMS CONTINGENCY OPERATION (INSTALLATION AND REMOVAL OF RMS IFM D&C KIT) (IFM), and PDRS SSR-4, RMS IFM D&C KIT

(4) DIRECT drive, and EE MODE – MAN may be restored with RMS CONTINGENCY OPERATION (INSTALLATION AND REMOVAL OF RMS IFM D&C KIT) (IFM), and PDRS SSR-4, RMS IFM D&C KIT

12.2g SELECTED MODE ANNUN – OFF OR ALL A8 LTS – OFF

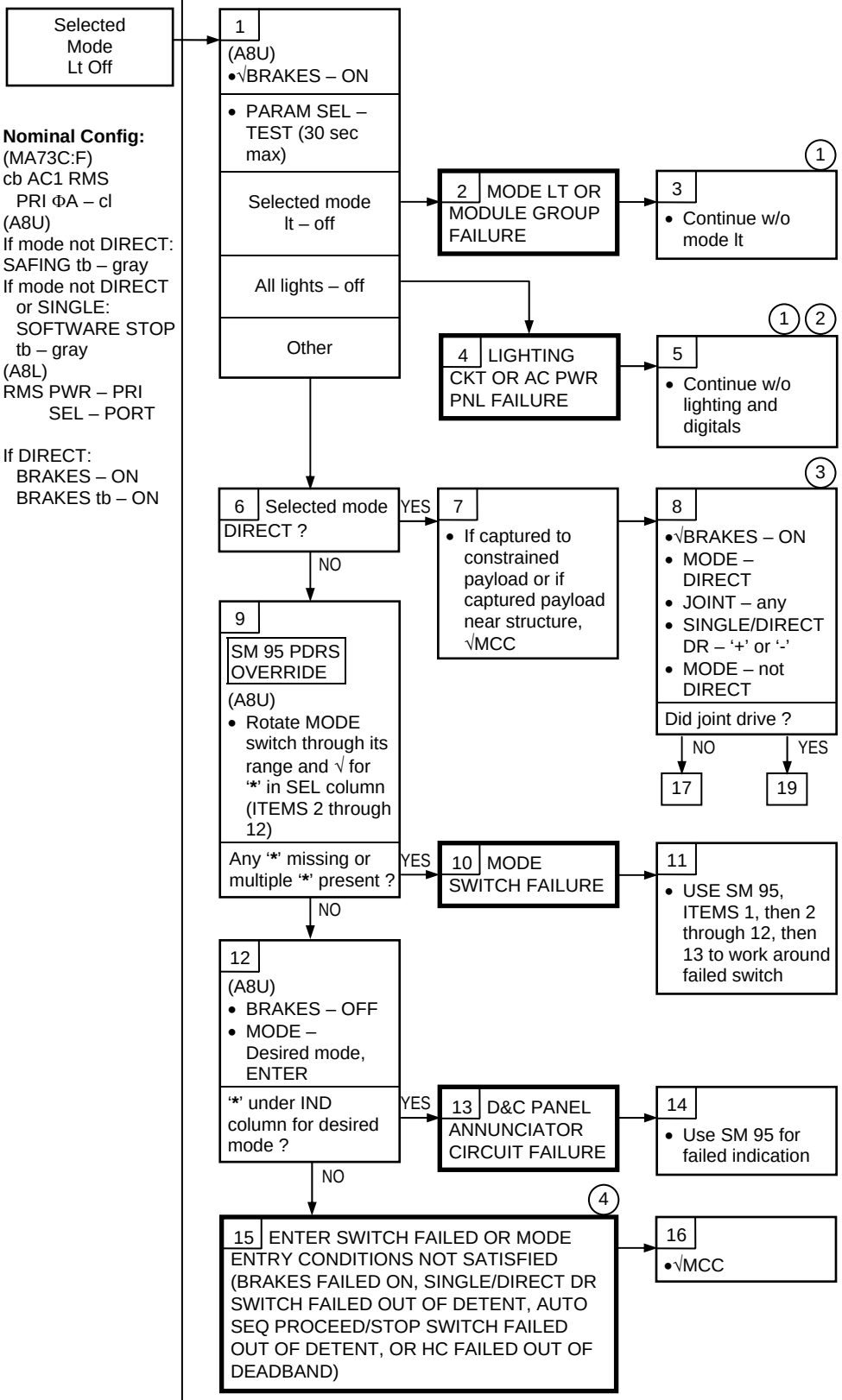

Nominal Config:
(MA73C:F)
cb AC1 RMS
PRI ΦA – cl
(A8U)
If mode not DIRECT:
SAFING tb – gray
If mode not DIRECT or SINGLE:
SOFTWARE STOP tb – gray
(A8L)
RMS PWR – PRI
SEL – PORT

If DIRECT:
BRAKES – ON
BRAKES tb – ON

(1) MODE indications can be read using SM 95 PDRS OVERRIDE

(2) Joint Angles can be read using SM 169 PDRS STATUS

(3) May receive CK CRT lt and DIRECT DRIVE BITE '↓' for one or more joints

(4) SM 95 PDRS OVERRIDE available to work around ENTER pb, SINGLE/DIRECT DR SW or AUTO SEQ PROCEED/STOP SW. Deflecting HCs may regain manual modes

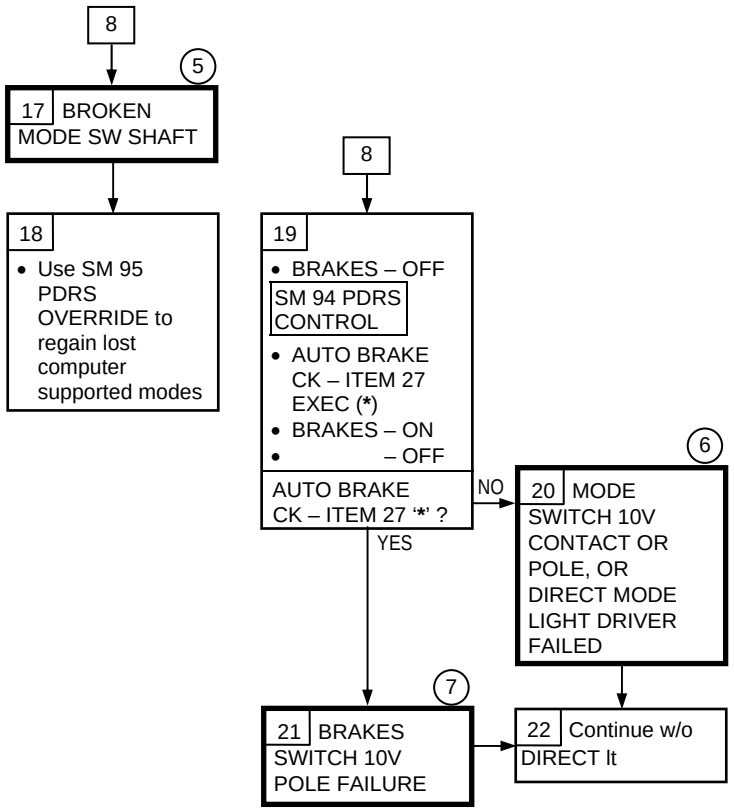

(5) DIRECT mode can be regained with RMS IFM D&C KIT

(6) For MODE sw pole failure, use SPEC 95 for computer supported modes

(7) For BRAKES sw failure, auto brakes can be removed via SM 94 PDRS CONTROL, ITEM 6, ITEM 5, and SAFING – CANCEL

PDRS

12.2h SHLDR BRACE REL tb – bp AFTER CMD

SHLDR BRACE REL tb – bp After Cmd

Nominal Config:
(MA73C:F)
cb AC1 RMS
PRI ΦA – cl
(A8L)
RMS PWR – PRI
SEL – PORT
SM 94 PDRS CONTROL
I/O ON – ITEM 5(*)

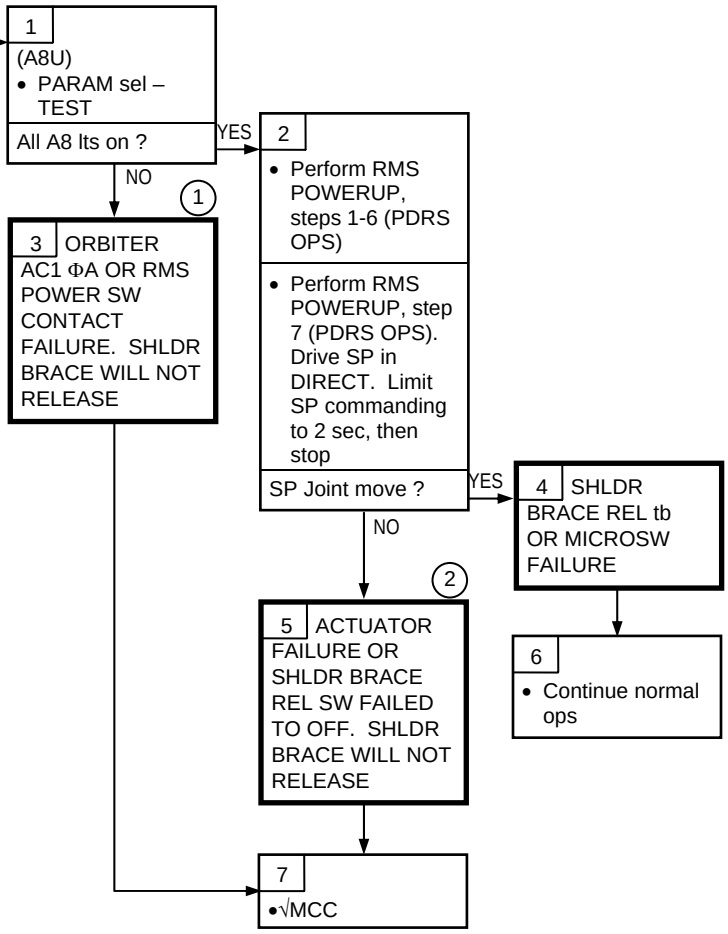

(1) RMS IFM D&C KIT available to recover loss of AC1 ΦA for SHLDR brace release sw. Refer to RMS CONTINGENCY OPERATION (INSTALLATION AND REMOVAL OF RMS IFM D&C KIT) (IFM) and PDRS SSR-4, RMS IFM D&C KIT

(2) If actuator failure, EVA possible to release shldr brace. If SW failure, RMS IFM D&C kit available to regain shldr brace

END EFFECTOR

12.3

PDRS

12.3a EE FAILS TO GRAPPLE CONSTRAINED PL IN EE MODE – AUTO

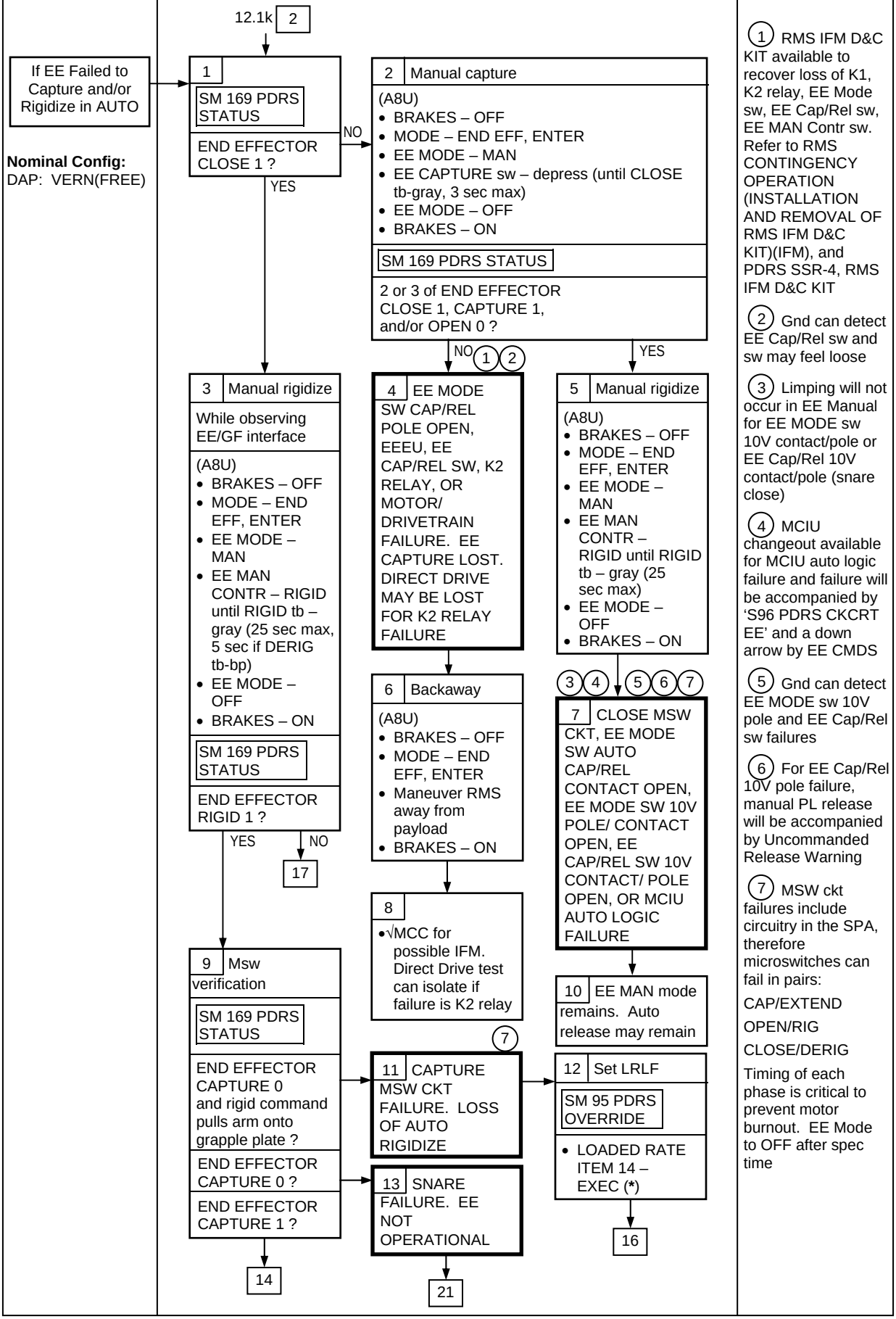

(1) RMS IFM D&C KIT available to recover loss of K1, K2 relay, EE Mode sw, EE Cap/Rel sw, EE MAN Contr sw. Refer to RMS CONTINGENCY OPERATION (INSTALLATION AND REMOVAL OF RMS IFM D&C KIT)(IFM), and PDRS SSR-4, RMS IFM D&C KIT

(2) Gnd can detect EE Cap/Rel sw and sw may feel loose

(3) Limping will not occur in EE Manual for EE MODE sw 10V contact/pole or EE Cap/Rel 10V contact/pole (snare close)

(4) MCIU changeout available for MCIU auto logic failure and failure will be accompanied by 'S96 PDRS CKCRT EE' and a down arrow by EE CMDS

(5) Gnd can detect EE MODE sw 10V pole and EE Cap/Rel sw failures

(6) For EE Cap/Rel 10V pole failure, manual PL release will be accompanied by Uncommanded Release Warning

(7) MSW ckt failures include circuitry in the SPA, therefore microswitches can fail in pairs:

CAP/EXTEND

OPEN/RIG

CLOSE/DERIG

Timing of each phase is critical to prevent motor burnout. EE Mode to OFF after spec time

PDRS 12.3a (Cont)

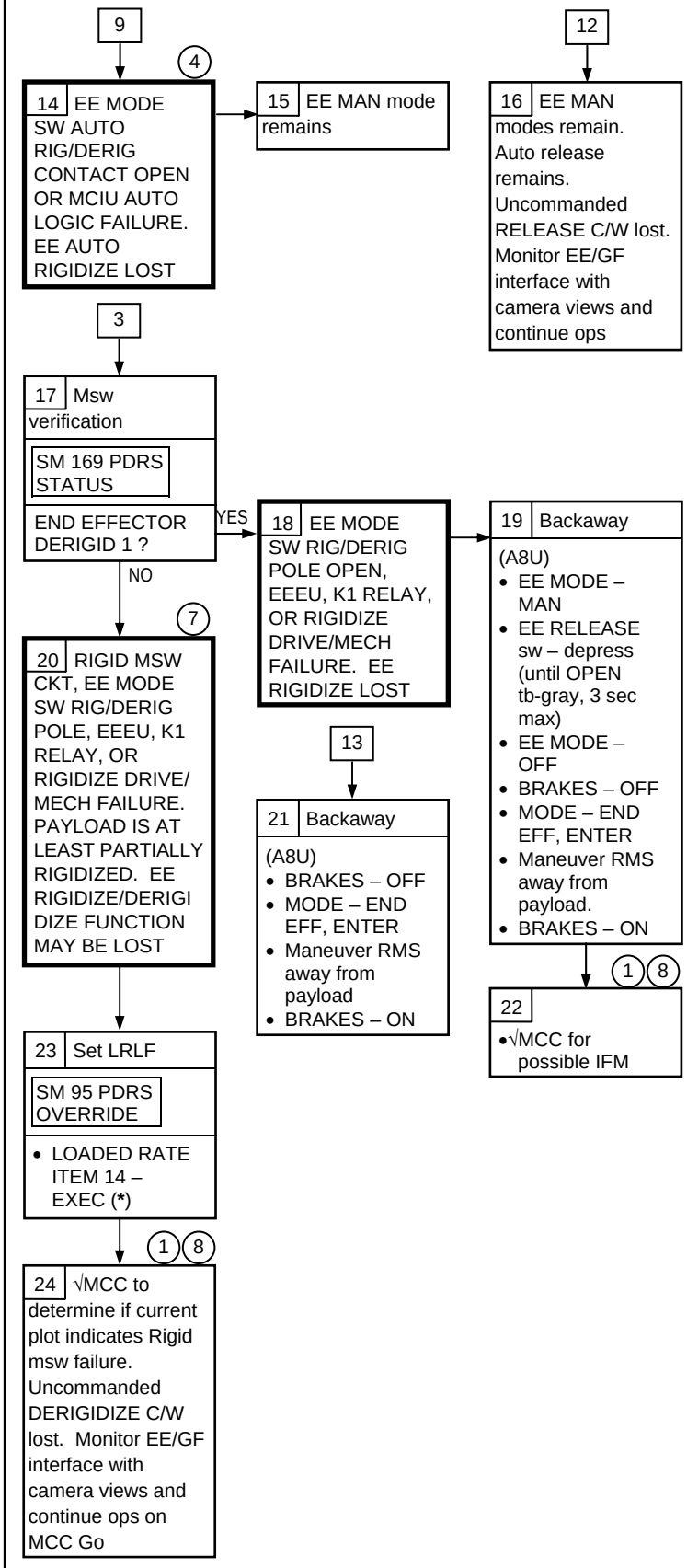

(1) RMS IFM D&C KIT available to recover loss of K1, K2 relay, EE Mode sw, EE Cap/Rel sw, EE MAN Contr sw. Refer to RMS CONTINGENCY OPERATION (INSTALLATION AND REMOVAL OF RMS IFM D&C KIT)(IFM), and PDRS SSR-4, RMS IFM D&C KIT

(4) MCIU changeout available for MCIU auto logic failure and failure will be accompanied by 'S96 PDRS CKCRT EE' and a down arrow by EE CMDS

(7) MSW ckt failures include circuitry in the SPA, therefore microswitches can fail in pairs:

CAP/EXTEND

OPEN/RIG

CLOSE/DERIG

Timing of each phase is critical to prevent motor burnout. EE Mode to OFF after spec time

(8) SAFING tb – bp is a good indication that K1 relay is failed

12.3b EE FAILS TO RELEASE/DERIGIDIZE CONSTRAINED PL IN EE MODE – AUTO

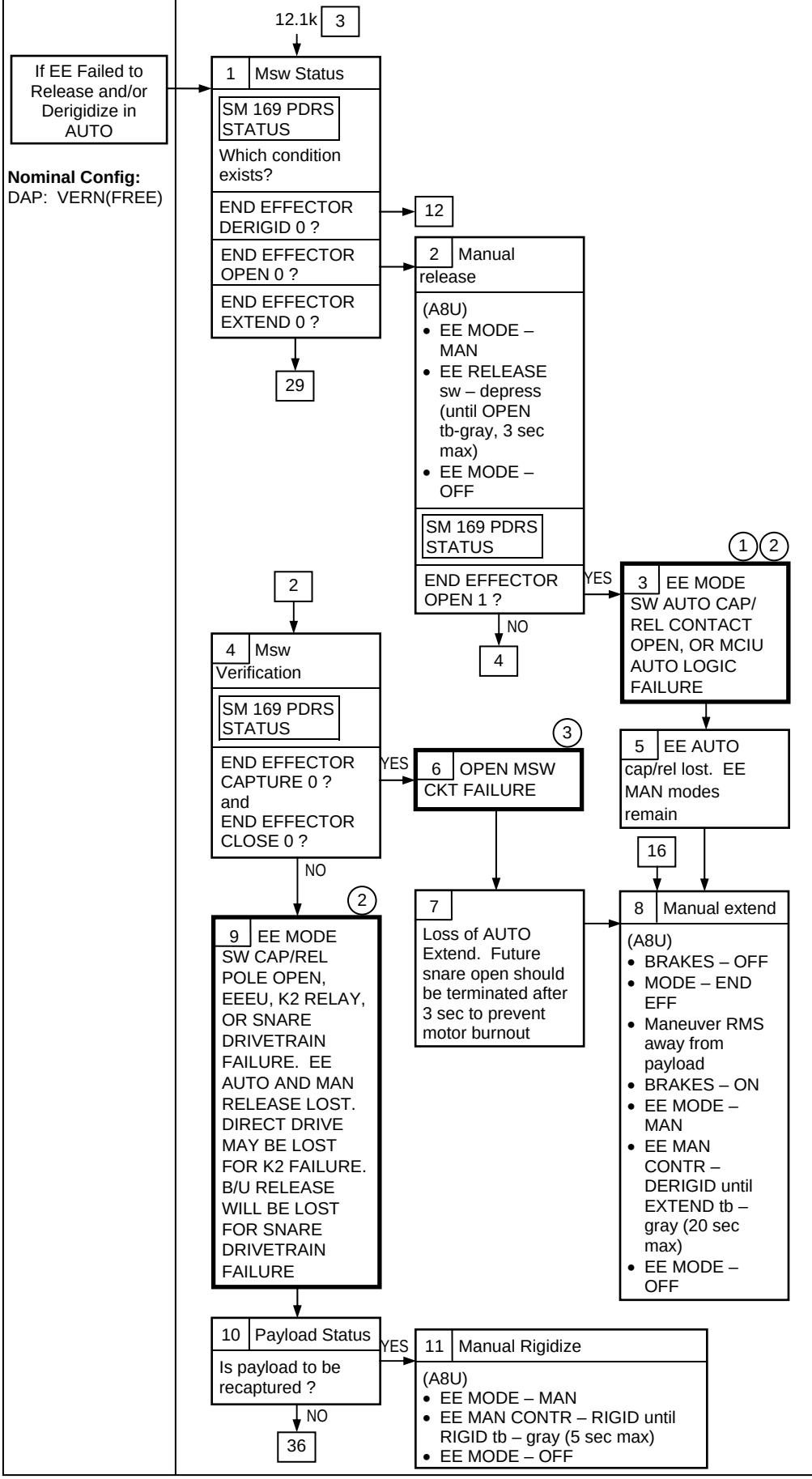

(1) MCIU changeout available for MCIU auto logic failure and failure will be accompanied by 'S96 PDRS CKCRT EE' and a down arrow by EE CMDS

(2) RMS IFM D&C KIT available to recover loss of K1 or K2 relay, EE Mode sw, EE Cap/Rel sw, EE Man Contr sw. Refer to RMS CONTINGENCY OPERATION (INSTALLATION AND REMOVAL OF RMS IFM D&C KIT)(IFM), and PDRS SSR-4, RMS IFM D&C KIT

(3) MSW ckt failures include circuitry in the SPA, therefore microswitches can fail in pairs:

CAP/EXTEND

OPEN/RIG

CLOSE/DERIG

Timing of each phase is critical to prevent motor burnout. EE Mode to OFF after spec time

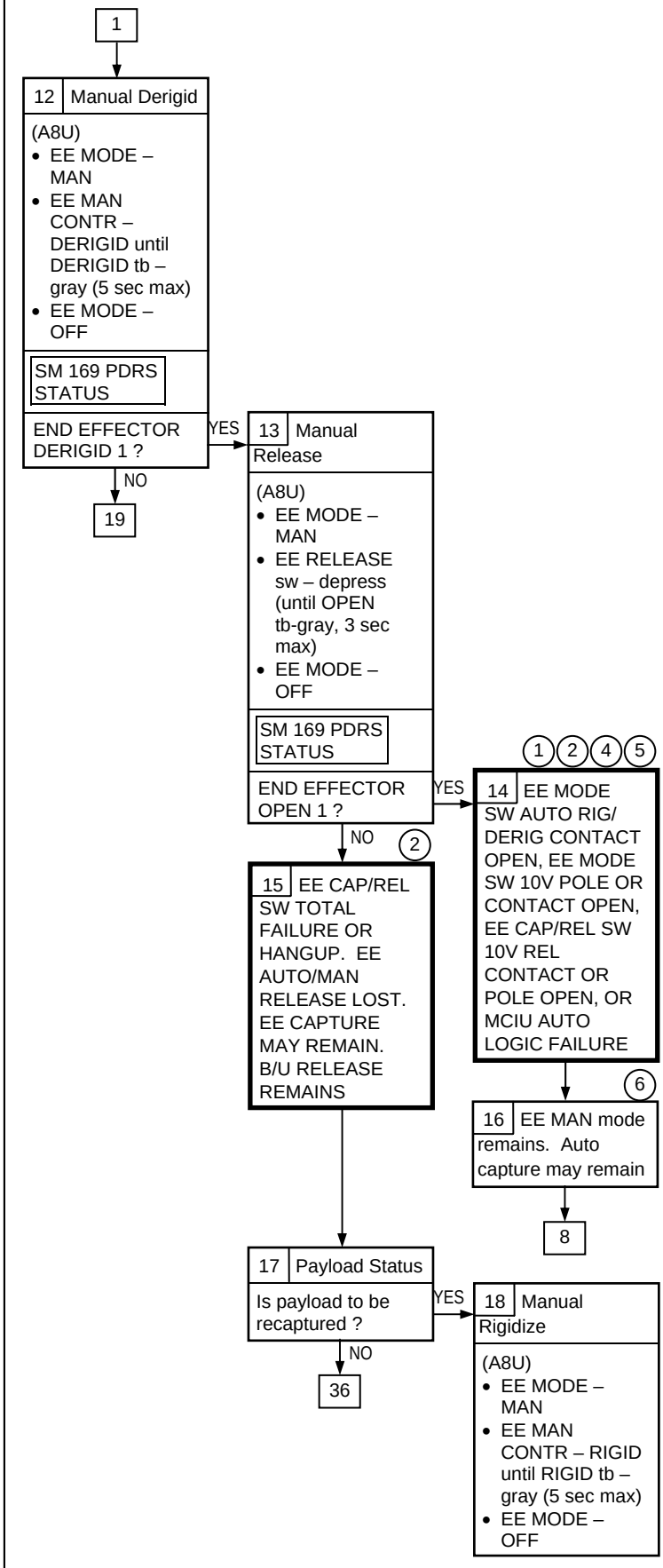

(1) MCIU changeout available for MCIU auto logic failure and failure will be accompanied by 'S96 PDRS CKCRT EE' and a down arrow by EE CMDS

(2) RMS IFM D&C KIT available to recover loss of K1 or K2 relay, EE Mode sw, EE Cap/Rel sw, EE Man Contr sw. Refer to RMS CONTINGENCY OPERATION (INSTALLATION AND REMOVAL OF RMS IFM D&C KIT)(IFM), and PDRS SSR-4, RMS IFM D&C KIT

(4) For EE Cap/Rel 10V pole failure, manual PL release is accompanied by Uncommanded Release Warning

(5) Gnd can detect EE MODE sw 10V pole and EE Cap/Rel sw 10V failures

(6) Limping will not occur in EE Manual for EE MODE sw 10V pole/contact failure, or during EE Manual capture for EE Cap/Rel sw pole

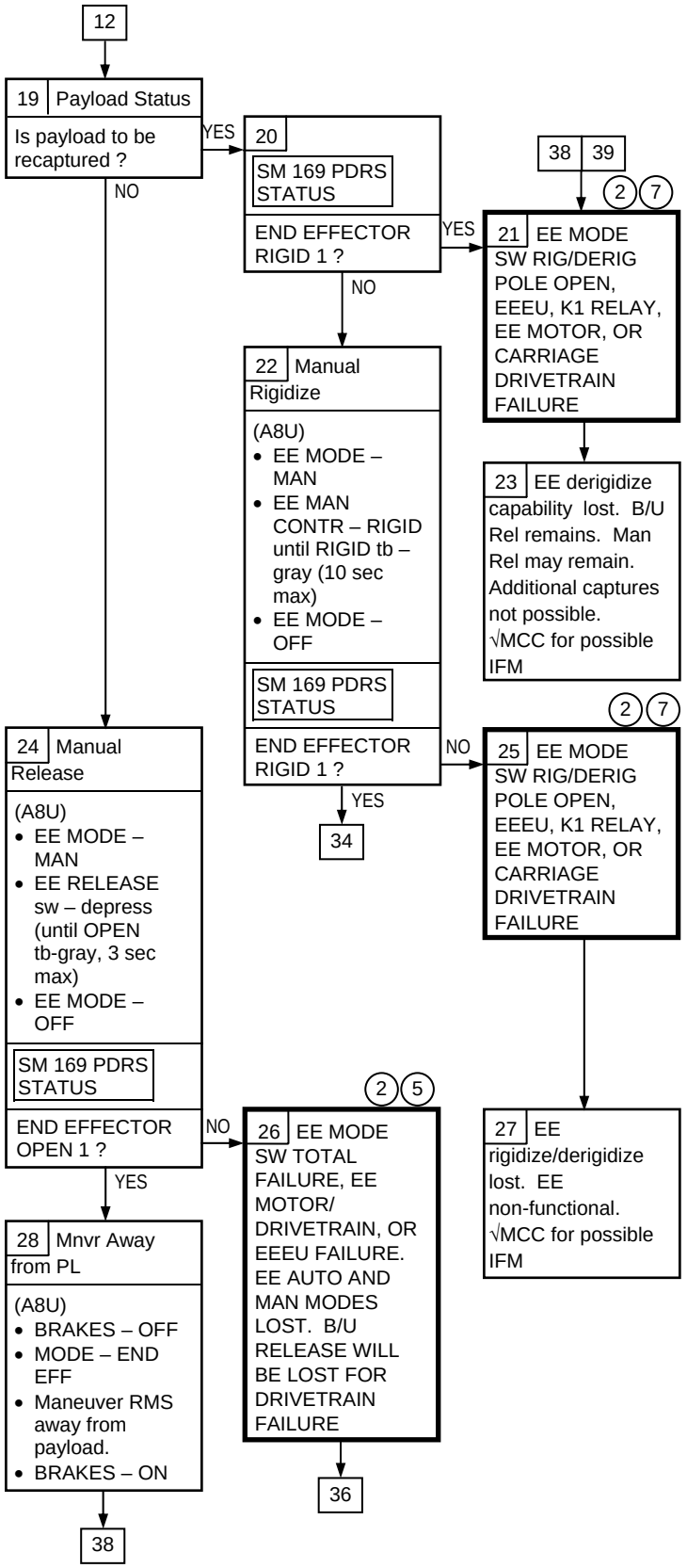

(2) RMS IFM D&C KIT available to recover loss of K1 or K2 relay, EE Mode sw, EE Cap/Rel sw, EE Man Contr sw. Refer to RMS CONTINGENCY OPERATION (INSTALLATION AND REMOVAL OF RMS IFM D&C KIT)(IFM), and PDRS SSR-4, RMS IFM D&C KIT

(5) Gnd can detect EE MODE sw 10V pole and EE Cap/Rel sw 10V failures

(7) SAFING tb – bp is a good indication that K1 relay is failed

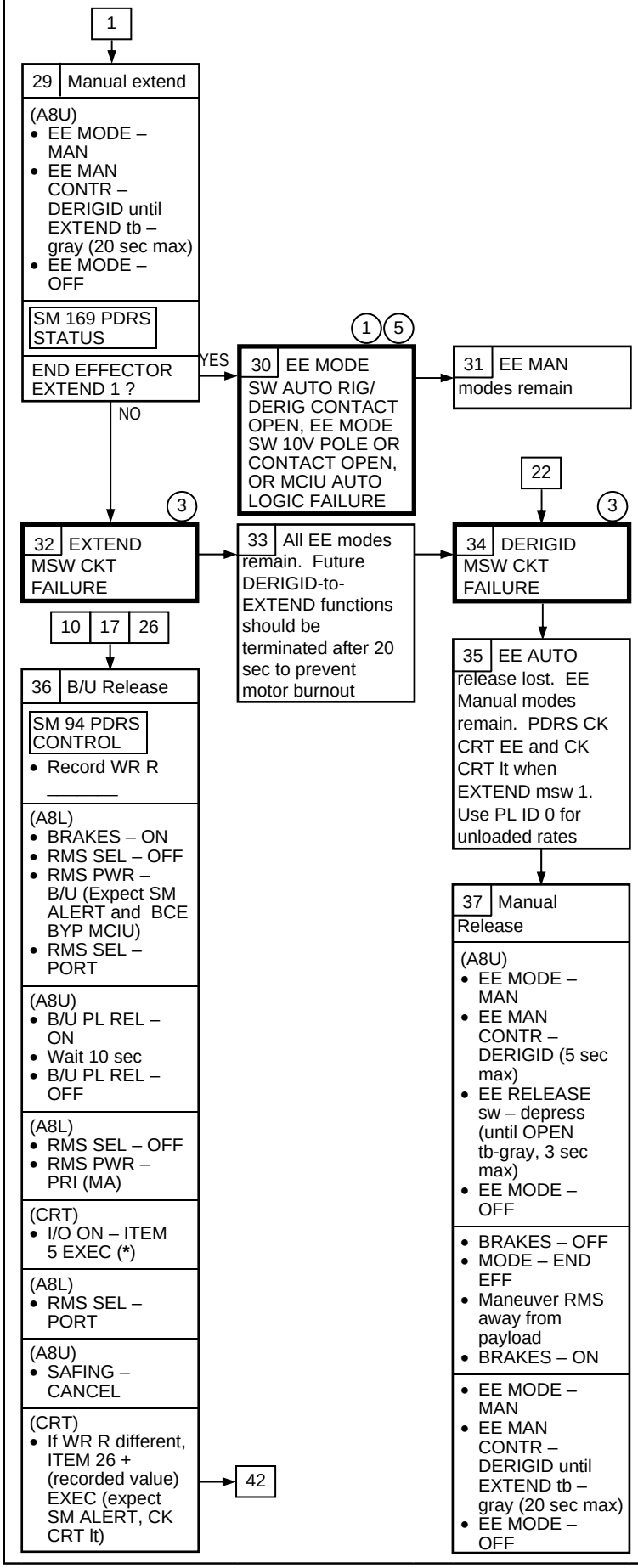

(1) MCIU changeout available for MCIU auto logic failure and failure will be accompanied by 'S96 PDRS CKCRT EE' and a down arrow by EE CMDS

(3) MSW ckt failures include circuitry in the SPA, therefore microswitches can fail in pairs:

CAP/EXTEND

OPEN/RIG

CLOSE/DERIG

Timing of each phase is critical to prevent motor burnout. EE Mode to OFF after spec time

(5) Gnd can detect EE MODE sw 10V pole and EE Cap/Rel sw 10V failures

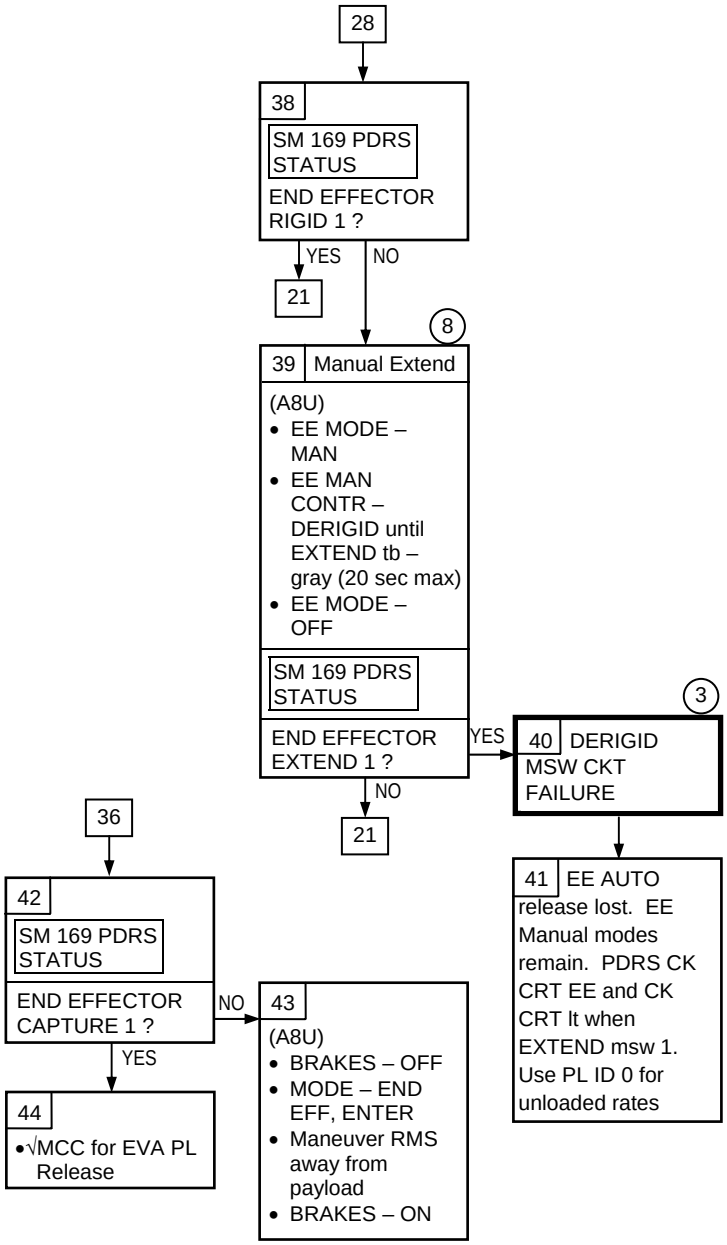

(3) MSW ckt failures include circuitry in the SPA, therefore microswitches can fail in pairs:

CAP/EXTEND

OPEN/RIG

CLOSE/DERIG

Timing of each phase is critical to prevent motor burnout. EE Mode to OFF after spec time

(8) May receive 'S96 PDRS CKCRT EE' and down arrow by EE FLAG

12.3e EE FAILS TO RELEASE IN EE MODE – MAN

EE OPEN
tb – bp

Nominal Config:
DAP: VERN(FREE) (A8U)
SAFING tb – gray

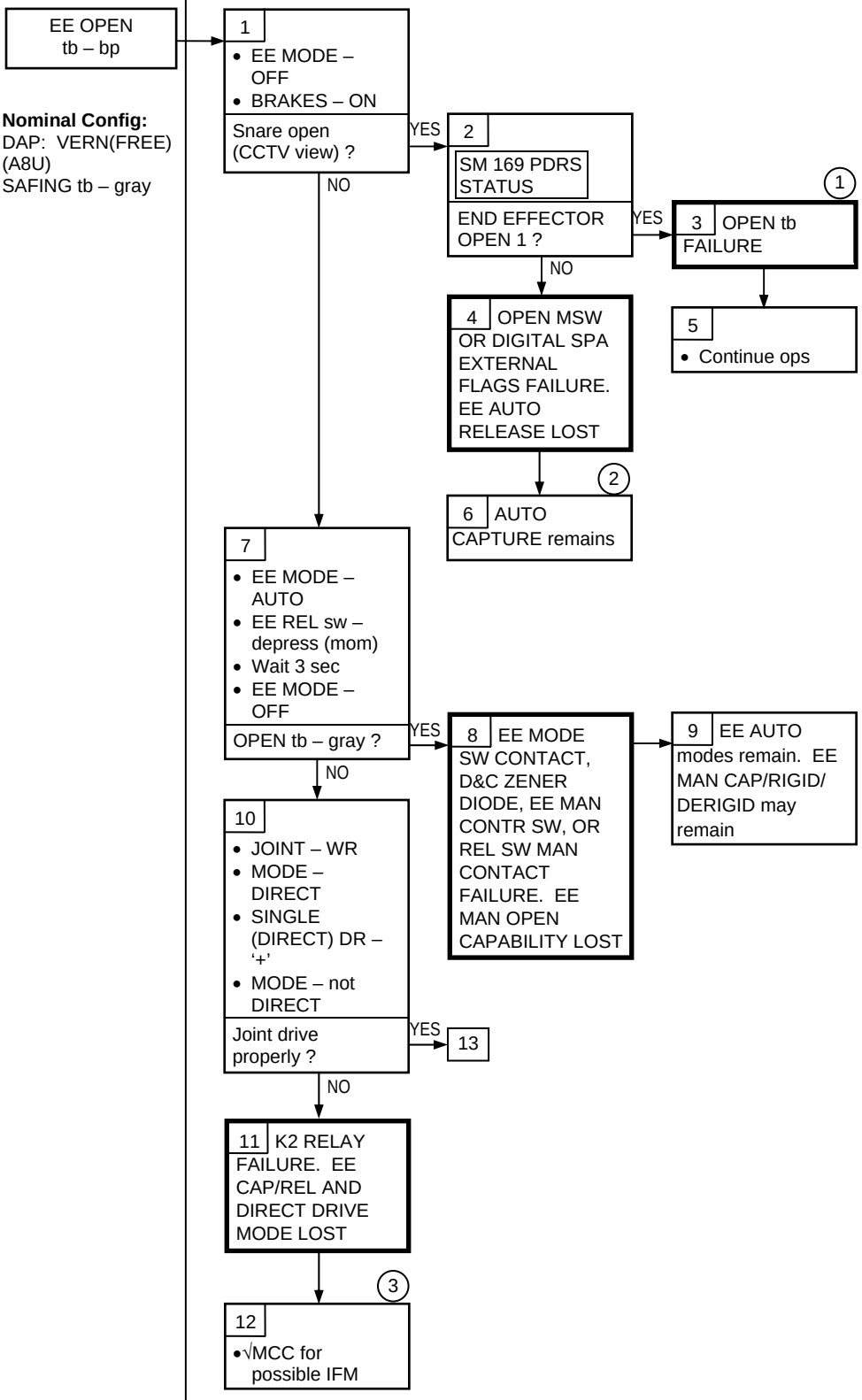

(1) For future EE OPS, use SM 94 PDRS CONTROL or SM 169 PDRS STATUS to determine status of affected EE tb

(2) For digital SPA failure, RIGID flag may be failed OFF causing loss of loaded rates and motor to continue to drive until EE MODE – OFF during AUTO capture. Loaded rates can be set via SM 95 PDRS OVERRIDE

(3) RMS IFM D&C KIT available to recover loss of K1, K2 relay, EE MODE sw, EE Cap/Rel sw, EE MAN CONTR sw. Refer to RMS CONTINGENCY OPERATION (INSTALLATION AND REMOVAL OF RMS IFM D&C KIT) (IFM), and PDRS SSR-4, RMS IFM D&C KIT

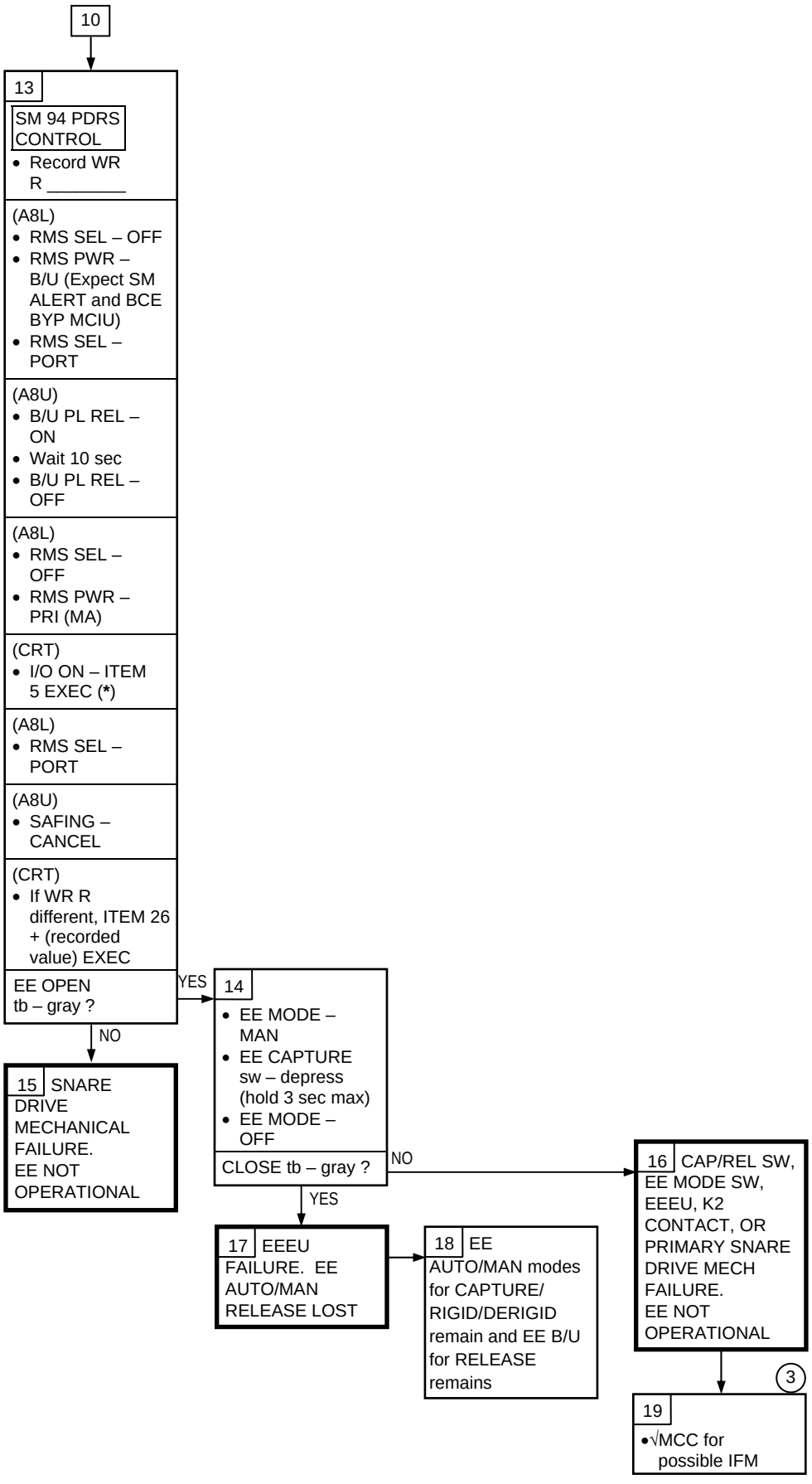

(3) RMS IFM D&C KIT available to recover loss of K1, K2 relay, EE MODE sw, EE Cap/Rel sw, EE MAN CONTR sw. Refer to RMS CONTINGENCY OPERATION (INSTALLATION AND REMOVAL OF RMS IFM D&C KIT) (IFM), and PDRS SSR-4, RMS IFM D&C KIT

12.3f EE FAILS TO DERIGIDIZE/EXTEND IN MANUAL

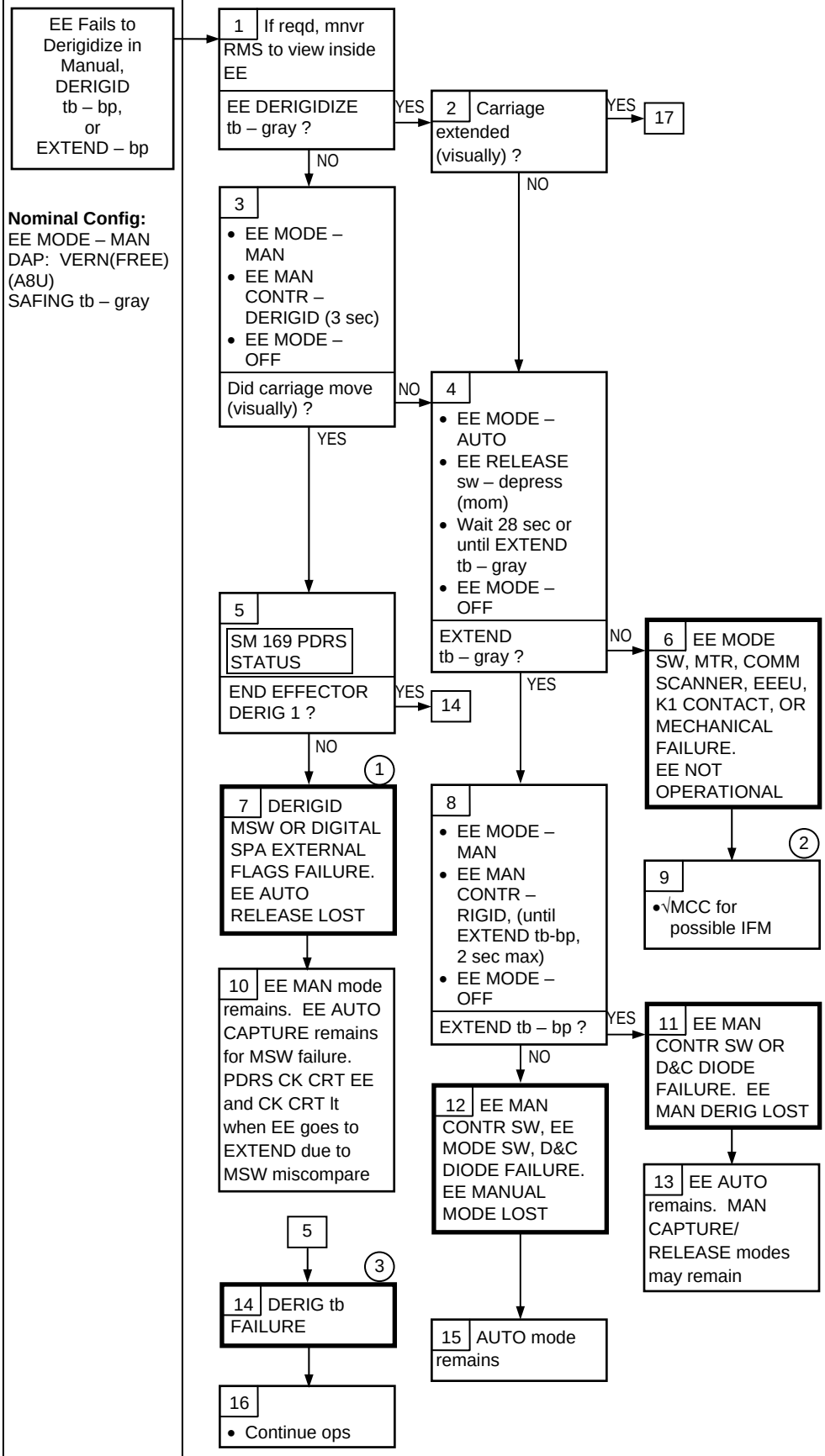

(1) For digital SPA failure, CLOSE flag may be failed ON

(2) RMS IFM D&C KIT available to recover loss of K1, K2 relay, EE MODE sw, EE Cap/Rel sw, EE MAN CONTR sw. Refer to RMS CONTINGENCY OPERATION (INSTALLATION AND REMOVAL OF RMS IFM D&C KIT) (IFM), and PDRS SSR-4, RMS IFM D&C KIT

(3) For future EE OPS, use SM 94 PDRS CONTROL or SM 169 PDRS STATUS to determine status of affected EE tb

PDRS 12.3f (Cont)

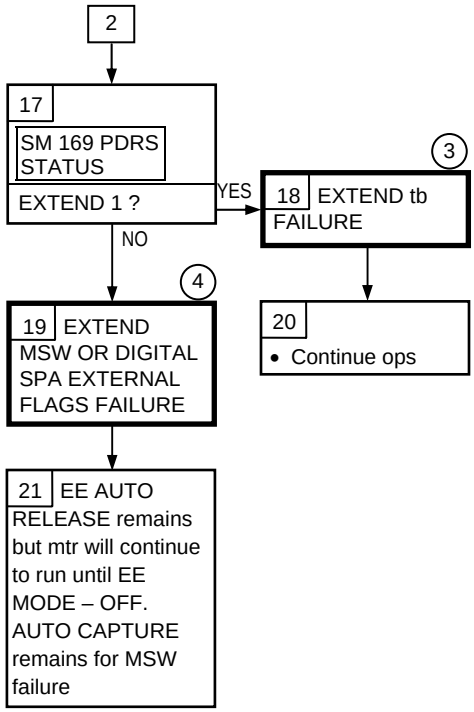

(3) For future EE OPS, use SM 94 PDRS CONTROL or SM 169 PDRS STATUS to determine status of affected EE tb

(4) For digital SPA failure, CAPTURE flag may be failed OFF

PDRS

12.3g MULTIPLE EE tb ABNORMAL WHILE NO EE CMDS (EE MODE – AUTO OR MAN)

EE tb Abnormal While No EE Commands

Nominal Config:
DAP: VERN(FREE)

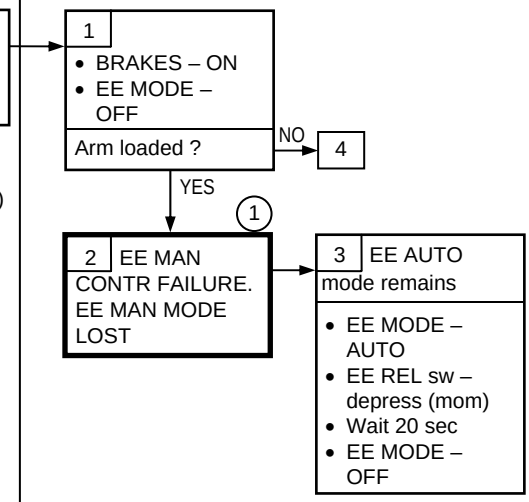

(1) Assumes PL about to be released

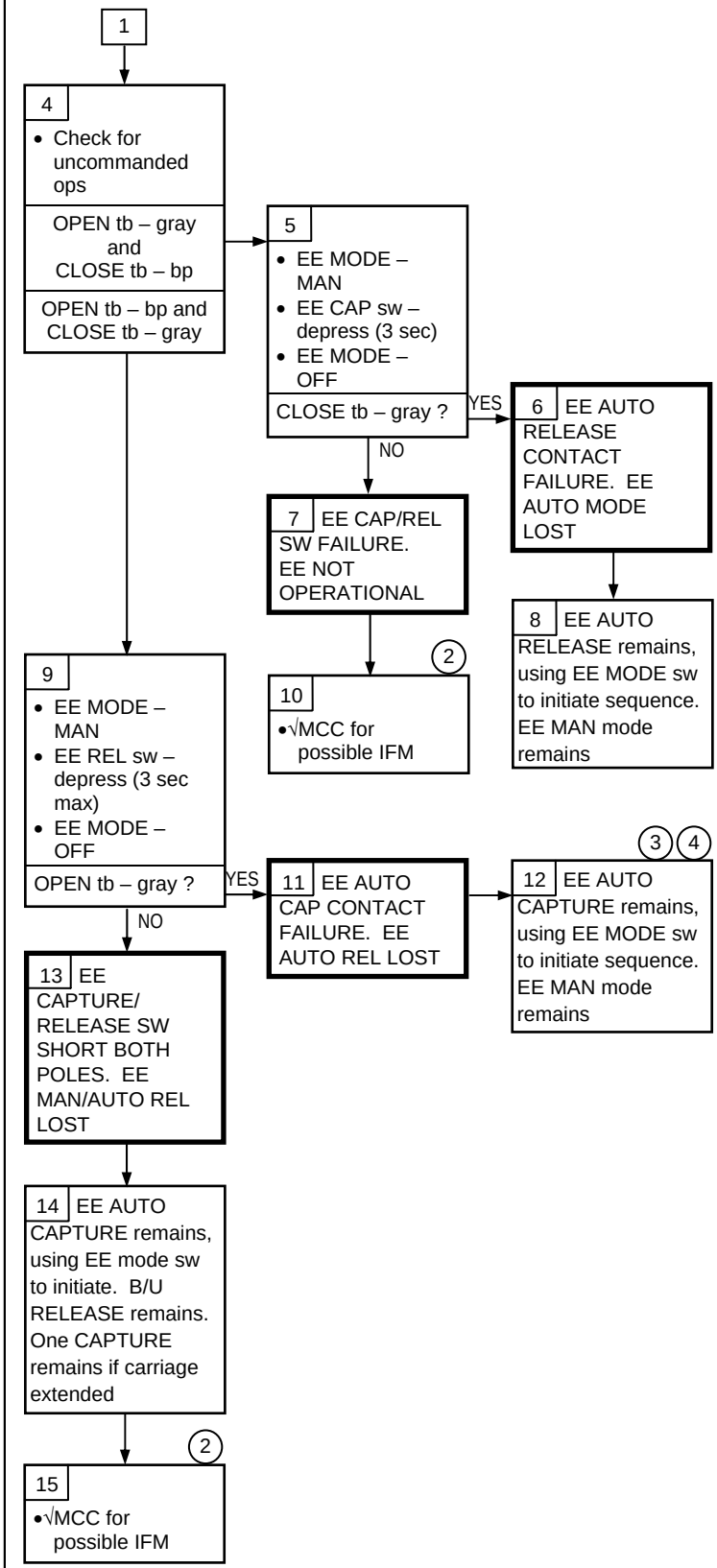

(2) RMS IFM D&C KIT available to recover loss of K1, K2 relay, EE MODE sw, EE Cap/Rel sw, EE MAN CONTR sw. Refer to RMS CONTINGENCY OPERATION (INSTALLATION AND REMOVAL OF RMS IFM D&C KIT) (IFM), and PDRS SSR-4, RMS IFM D&C KIT

(3) RMS limping will occur whenever EE MODE sw is not in OFF position and RMS is in computer supported mode

(4) Uncommanded Release Warning is disabled

PDRS

12.3h EE tb ABNORMAL WHILE EE MODE OFF

EE tb Abnormal While EE MODE – OFF

Nominal Config:
DAP: VERN(FREE)

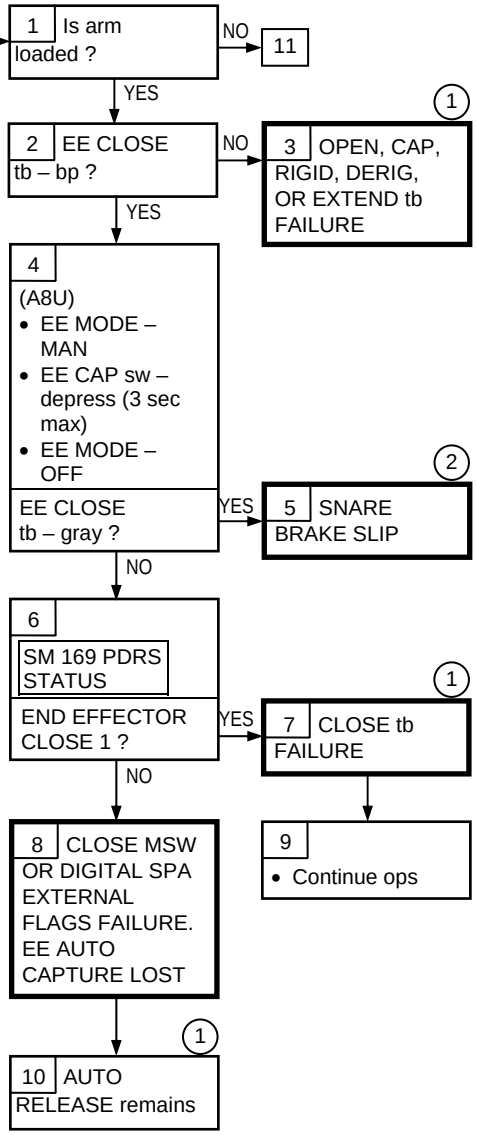

(1) For future EE OPS, use SM 169 PDRS STATUS to determine status of affected EE tb

(2) Subsequent slipping may occur

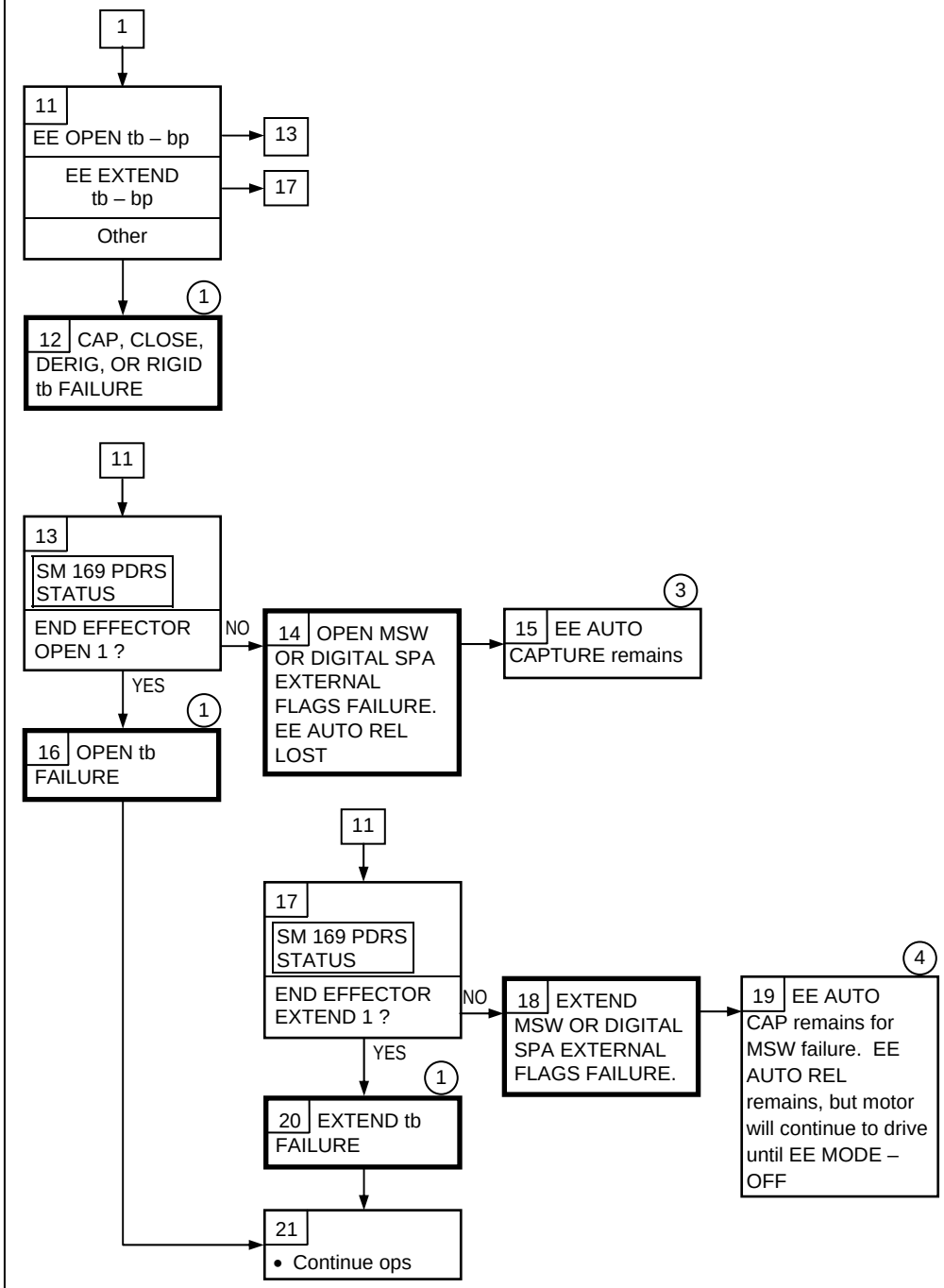

(1) For future EE OPS, use SM 169 PDRS STATUS to determine status of affected EE tb

(3) For digital SPA failure, RIGID flag may be failed OFF causing loss of loaded rates and motor to continue to drive until EE MODE – OFF during AUTO CAPTURE. Loaded rates can be sent via SM 95 PDRS OVERRIDE

(4) For digital SPA failure, CAPTURE flag may be failed OFF

PDRS

12.3i CAPTURE SEQ ABORTED (CUE CARD EXECUTED)

If EE Fails to Capture and/or Rigidize in AUTO

Nominal Config:
SAFING tb – gray

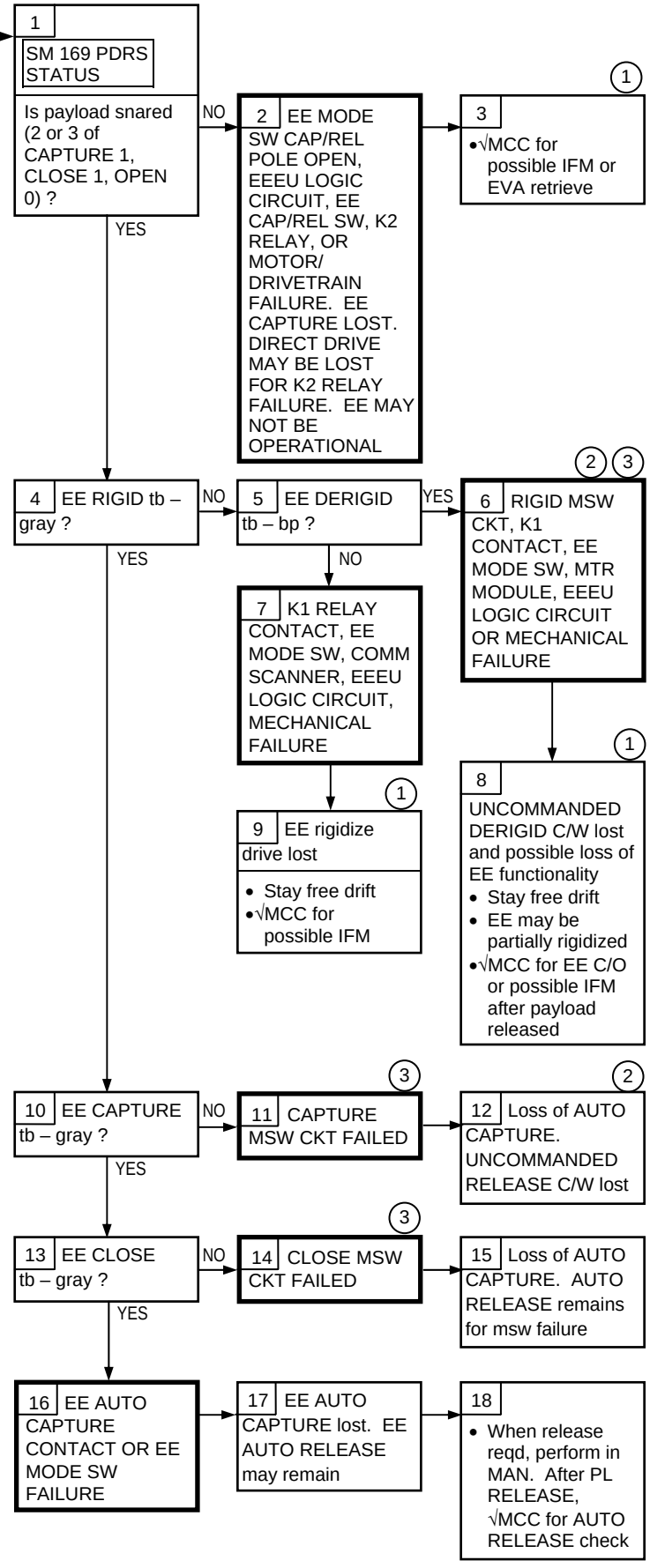

(1) RMS IFM D&C KIT available to recover loss of K1, K2 relay, EE MODE sw, EE Cap/Rel sw, EE MAN CONTR sw. Refer to RMS CONTINGENCY OPERATION (INSTALLATION AND REMOVAL OF RMS IFM D&C KIT) (IFM), and PDRS SSR-4, RMS IFM D&C KIT

(2) Arm will move at unloaded rates. RMS loaded rates can be set via SM 95 PDRS OVERRIDE

(3) MSW ckt failures include circuitry in the SPA, therefore microswitches can fail in pairs: CAP/EXTEND OPEN/RIG CLOSE/DERIG Timing of each phase is critical to prevent motor burnout. EE Mode to OFF after spec time

12.3j NO AUTO RELEASE (CUE CARD EXECUTED)

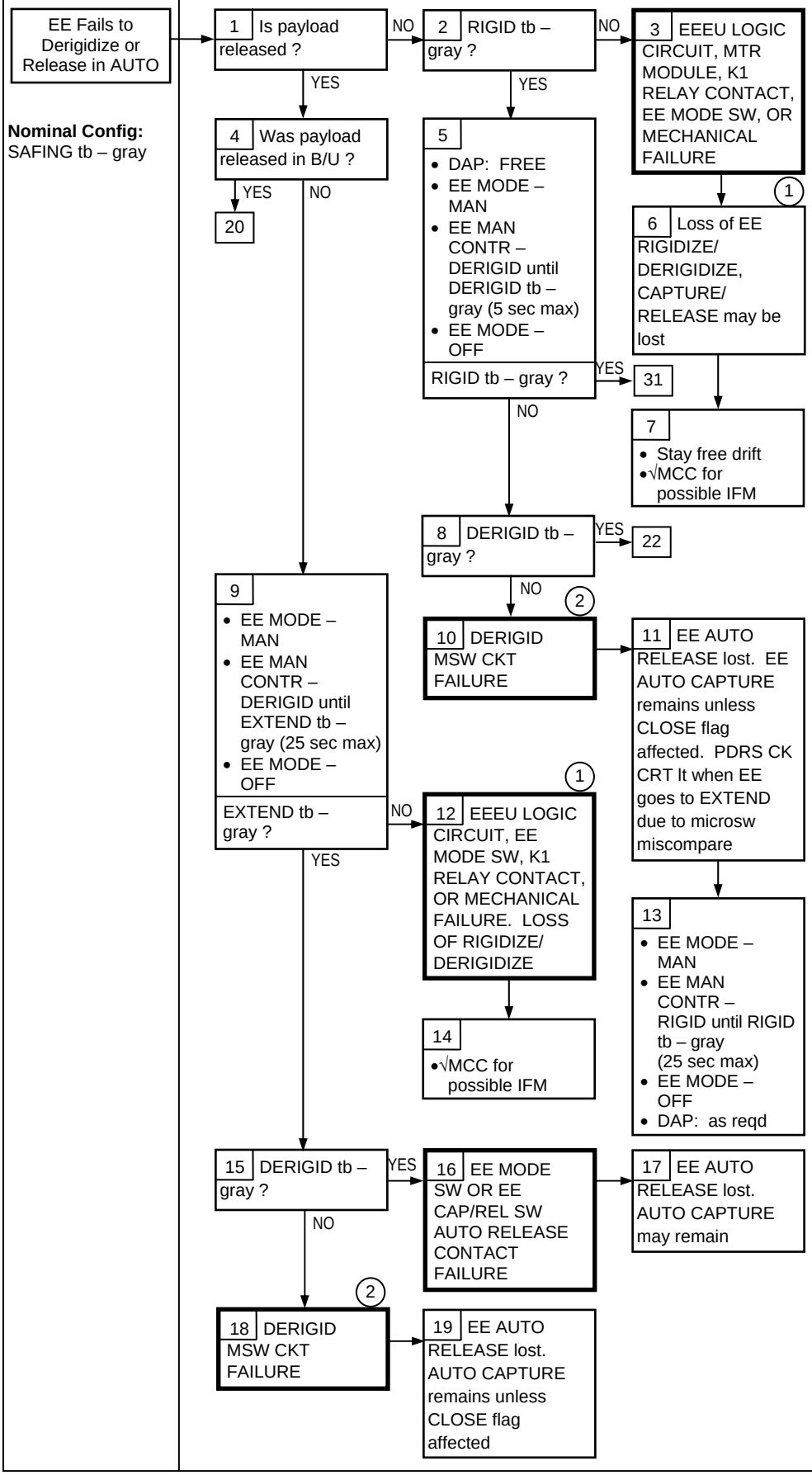

Nominal Config:
SAFING tb – gray

(1) RMS IFM D&C KIT available to recover loss of K1, K2 relay, EE MODE sw, EE Cap/Rel sw, EE MAN CONTR sw. Refer to RMS CONTINGENCY OPERATION (INSTALLATION AND REMOVAL OF RMS IFM D&C KIT) (IFM), and PDRS SSR-4, RMS IFM D&C KIT

(2) MSW ckt failures include circuitry in the SPA, therefore microswitches can fail in pairs: CAP/EXTEND OPEN/RIG CLOSE/DERIG Timing of each phase is critical to prevent motor burnout. EE Mode to OFF after spec time

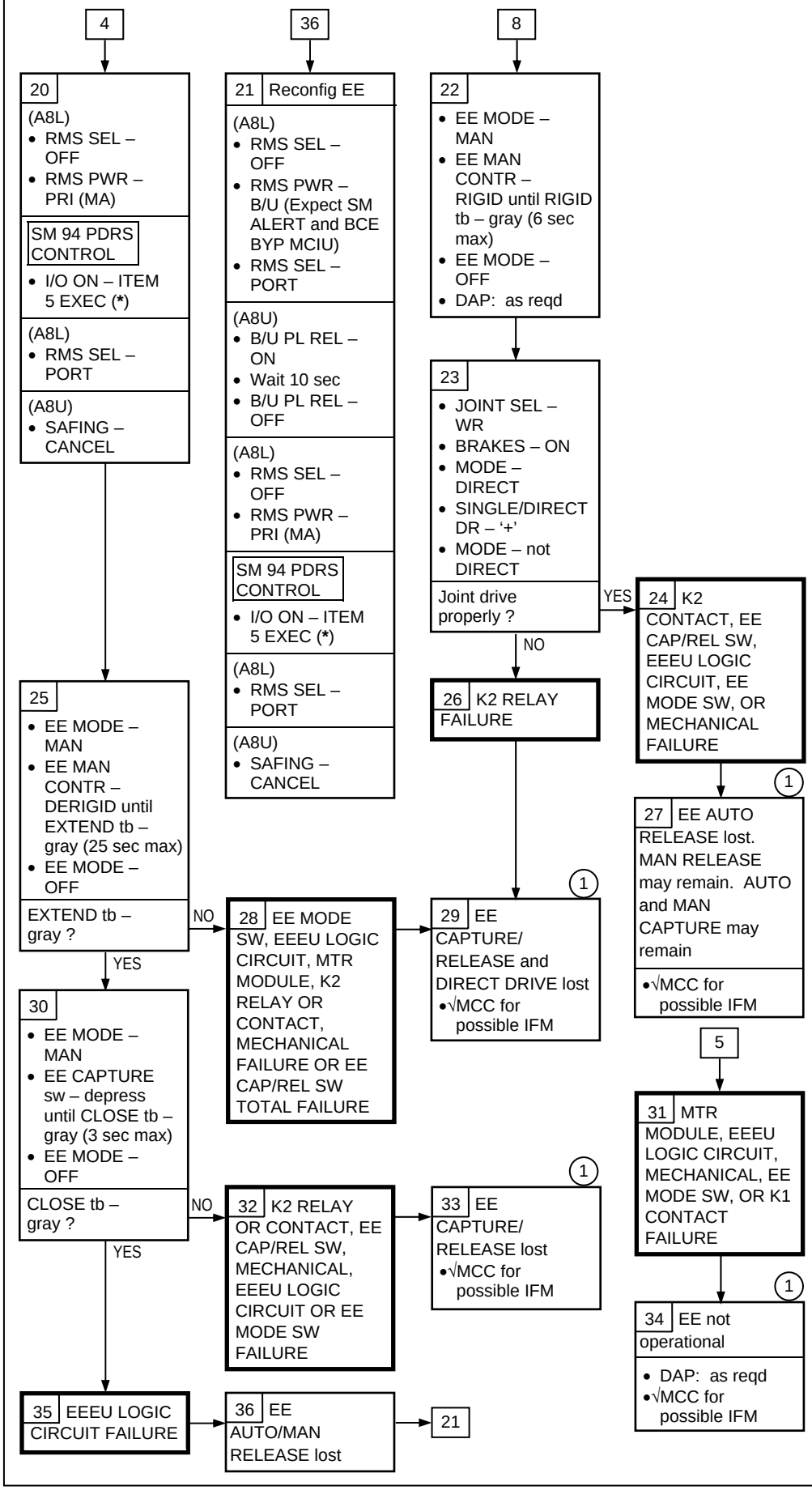

(1) RMS IFM D&C KIT available to recover loss of K1, K2 relay, EE MODE sw, EE Cap/Rel sw, EE MAN CONTR sw. Refer to RMS CONTINGENCY OPERATION (INSTALLATION AND REMOVAL OF RMS IFM D&C KIT) (IFM), and PDRS SSR-4, RMS IFM D&C KIT

12.3k NO MANUAL RELEASE (CUE CARD EXECUTED)

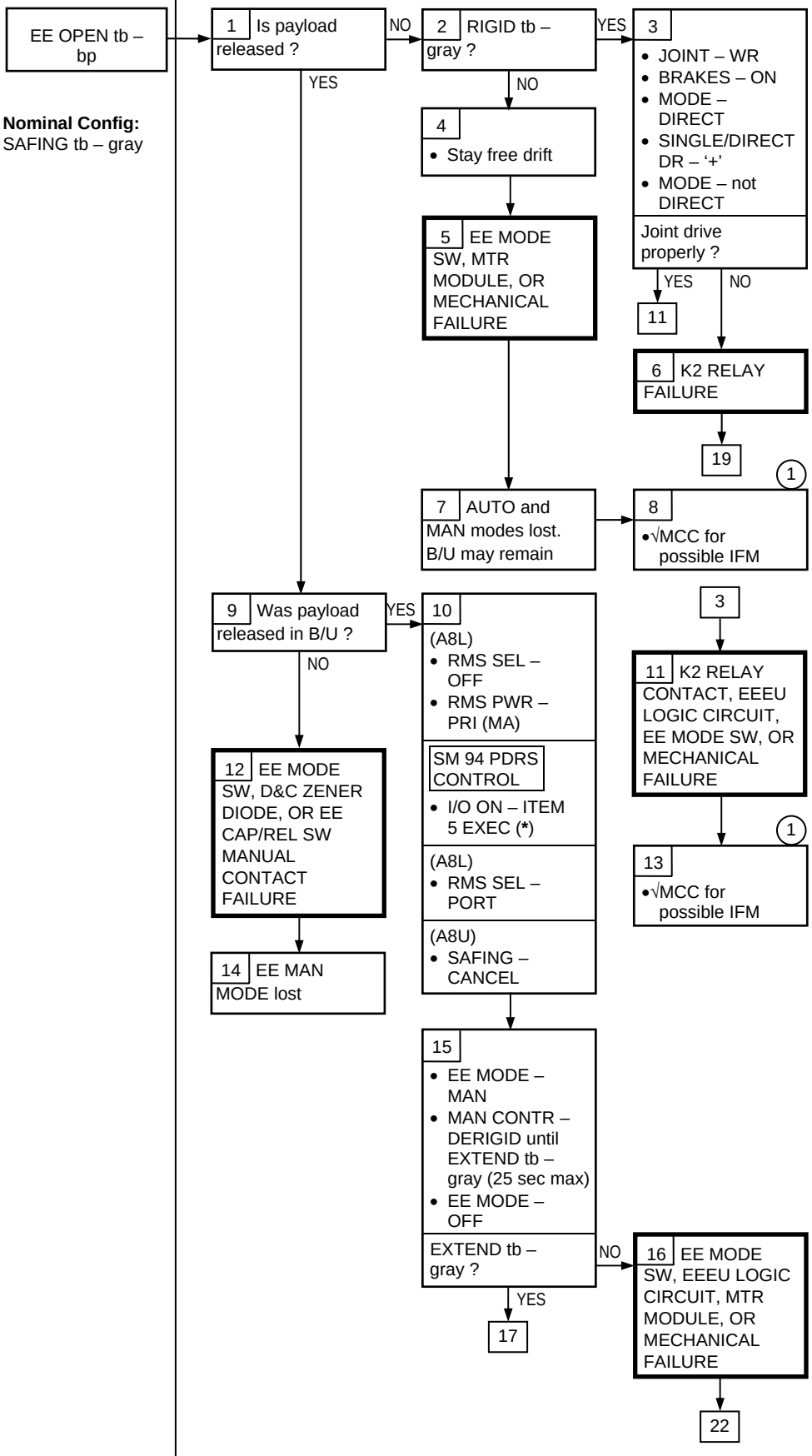

(1) RMS IFM D&C KIT available to recover loss of K1, K2 relay, EE MODE sw, EE Cap/Rel sw, EE MAN CONTR sw. Refer to RMS CONTINGENCY OPERATION (INSTALLATION AND REMOVAL OF RMS IFM D&C KIT) (IFM), and PDRS SSR-4, RMS IFM D&C KIT

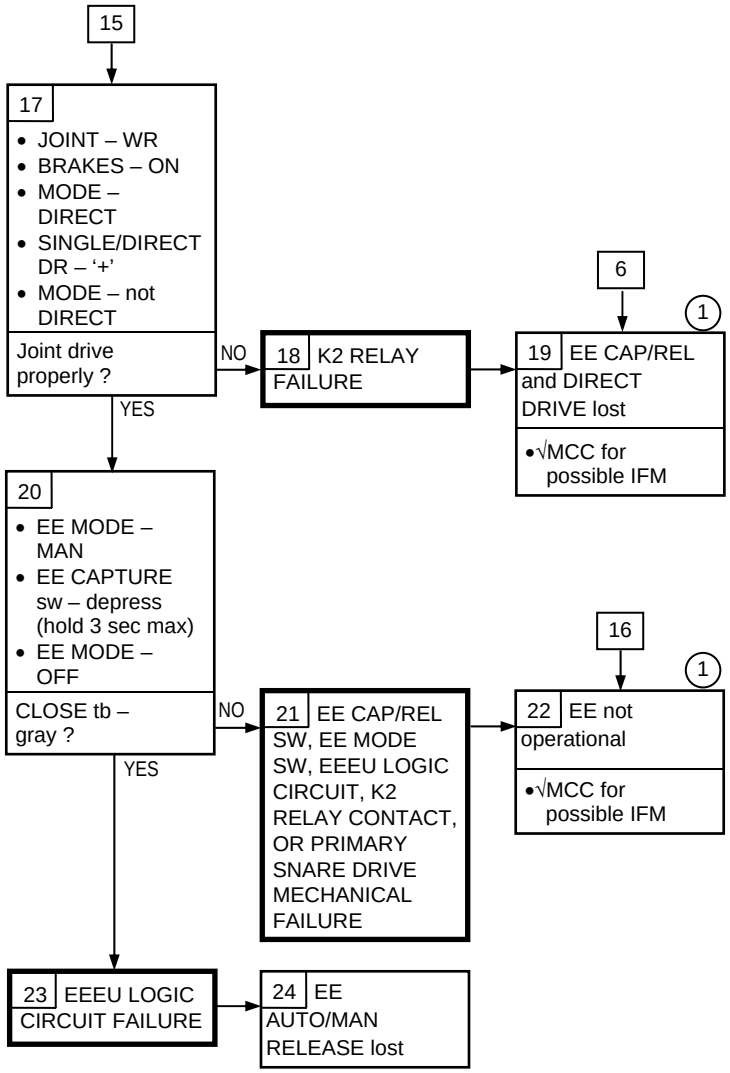

(1) RMS IFM D&C KIT available to recover loss of K1, K2 relay, EE MODE sw, EE Cap/Rel sw, EE MAN CONTR sw. Refer to RMS CONTINGENCY OPERATION (INSTALLATION AND REMOVAL OF RMS IFM D&C KIT) (IFM), and PDRS SSR-4, RMS IFM D&C KIT

12.3l NO MANUAL DERIGID (CUE CARD EXECUTED)

EE Fails to Derigidize in Manual, DERIGID tb – bp

Nominal Config:
SAFING tb – gray

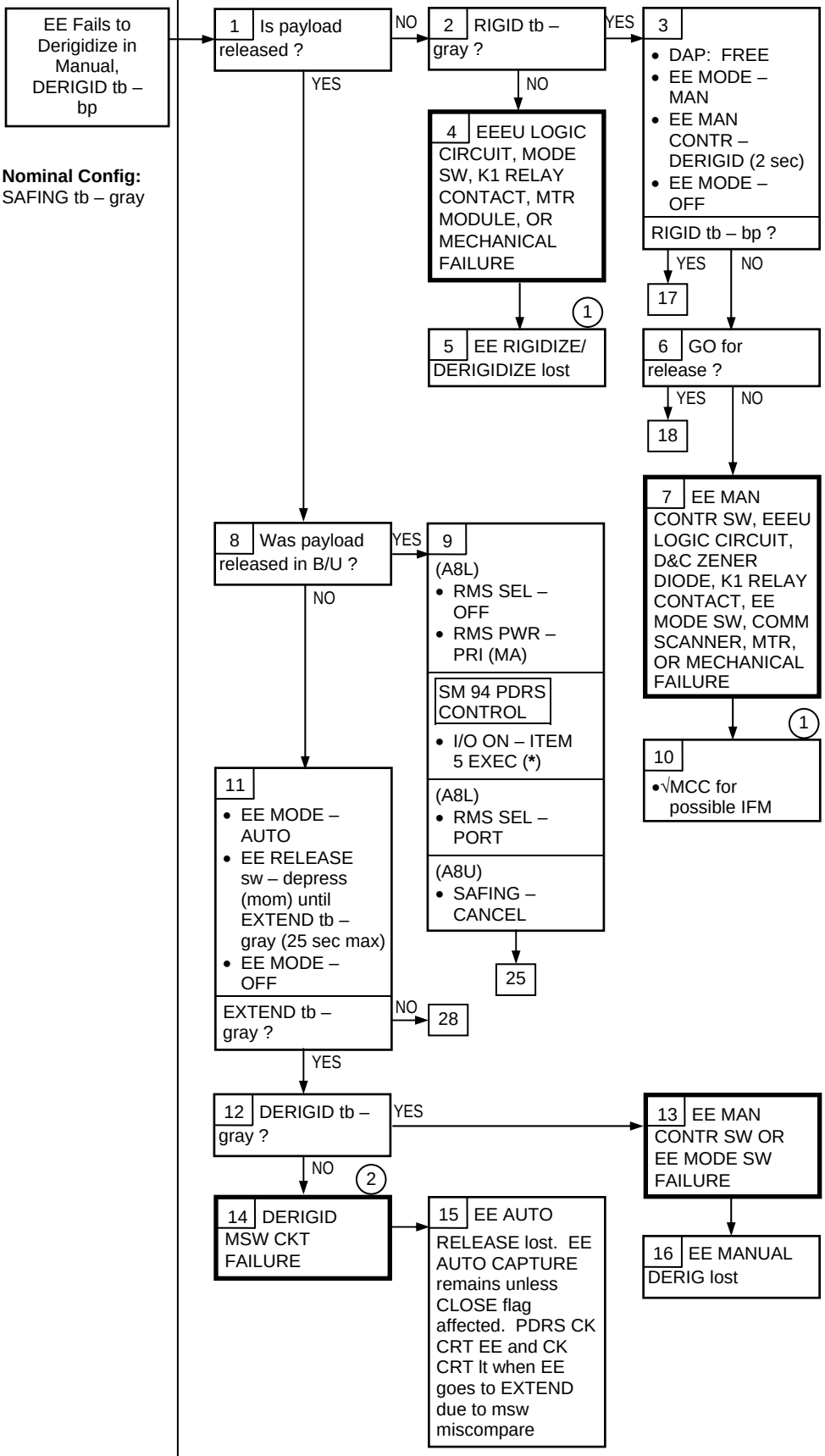

(1) RMS IFM D&C KIT available to recover loss of K1, K2 relay, EE MODE sw, EE Cap/Rel sw, EE MAN CONTR sw. Refer to RMS CONTINGENCY OPERATION (INSTALLATION AND REMOVAL OF RMS IFM D&C KIT) (IFM), and PDRS SSR-4, RMS IFM D&C KIT

(2) MSW ckt failures include circuitry in the SPA, therefore microswitches can fail in pairs: CAP/EXTEND OPEN/RIG CLOSE/DERIG Timing of each phase is critical to prevent motor burnout. EE Mode to OFF after spec time

PDRS 12.3l (Cont)

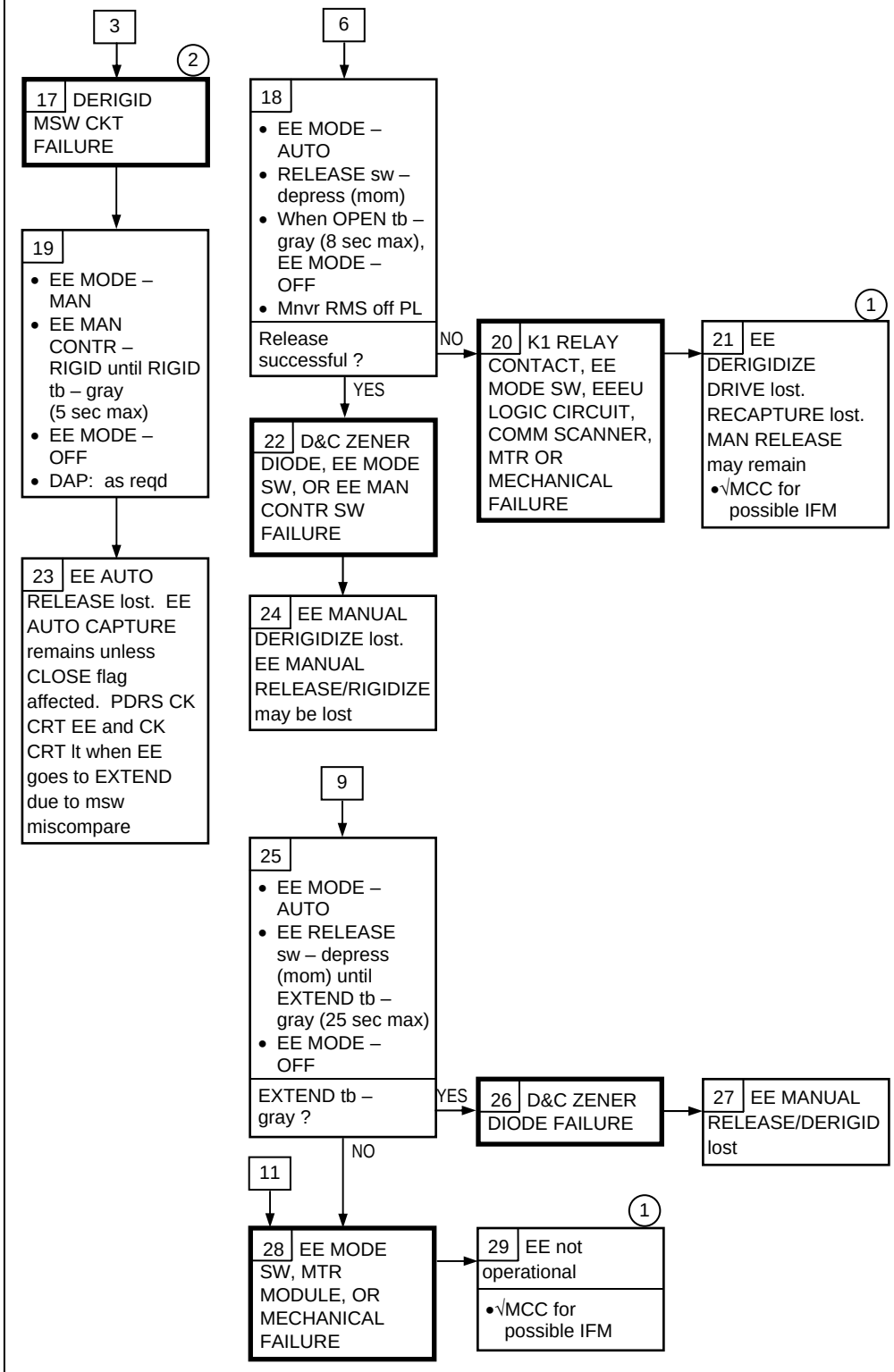

(1) RMS IFM D&C KIT available to recover loss of K1, K2 relay, EE MODE sw, EE Cap/Rel sw, EE MAN CONTR sw. Refer to RMS CONTINGENCY OPERATION (INSTALLATION AND REMOVAL OF RMS IFM D&C KIT) (IFM), and PDRS SSR-4, RMS IFM D&C KIT

(2) MSW ckt failures include circuitry in the SPA, therefore microswitches can fail in pairs: CAP/EXTEND OPEN/RIG CLOSE/DERIG Timing of each phase is critical to prevent motor burnout. EE Mode to OFF after spec time

PDRS

12.4a ARM RESPONSE ABNORMAL IN MANUAL MODES

Arm Response Not Normal for Commands in Manual Modes

Nominal Config:
(A8L)
RMS PWR – PRI
SEL – PORT
(A8U)
SAFING – AUTO
SAFING tb – gray
S/W STOP – gray
EE MODE – OFF

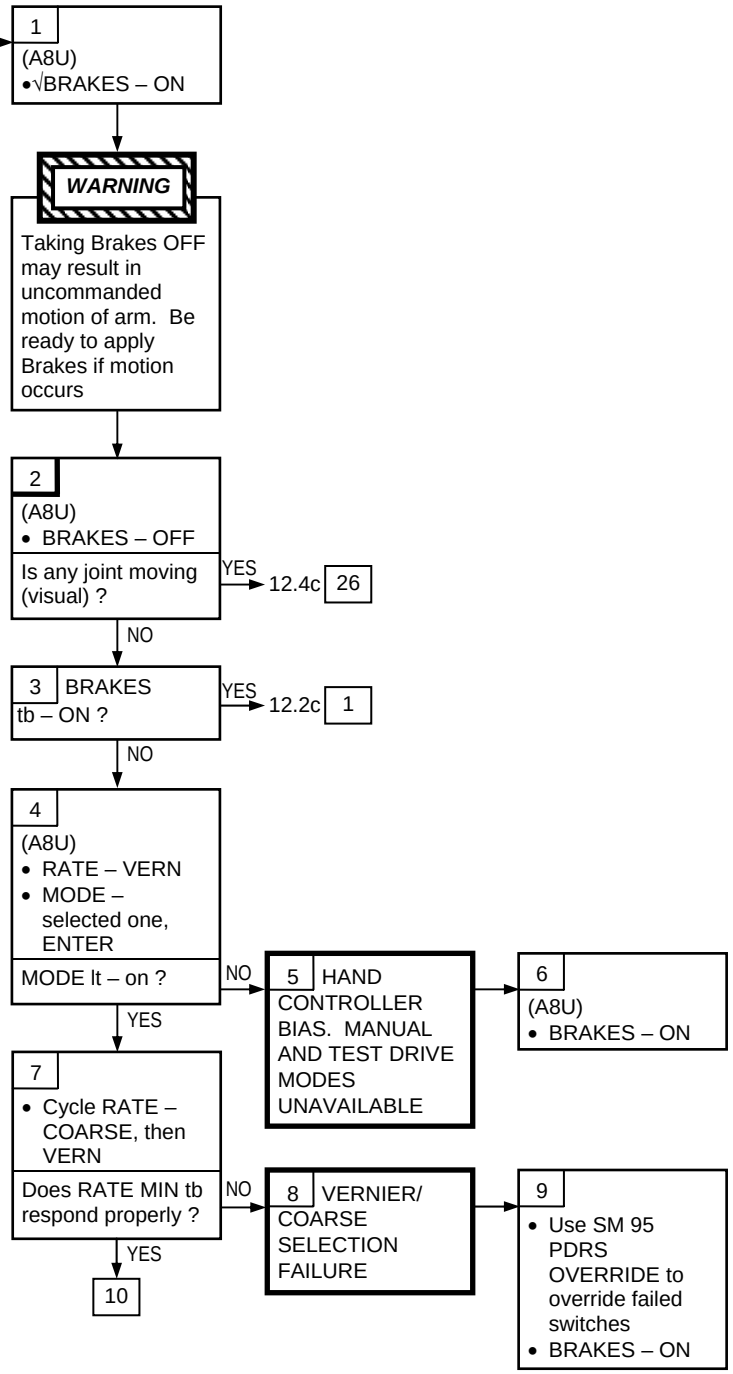

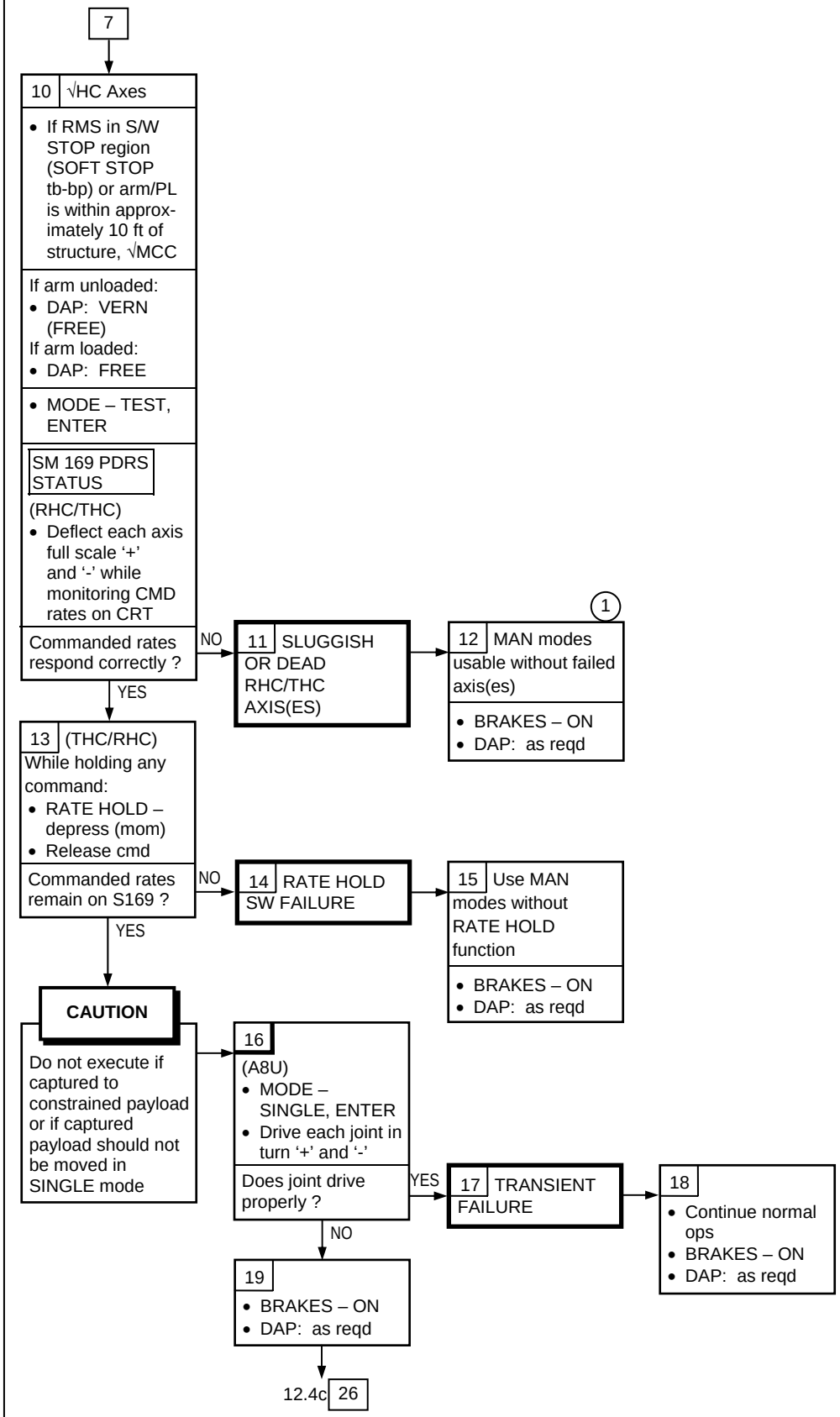

(1) Single HC axis failure workaround capability exists via SM 95 PDRS OVERRIDE

PDRS

12.4b ARM RESPONSE ABNORMAL IN AUTO MODES

Arm Response Not Normal for Commands in Auto Modes

Nominal Config:
(A8L)
RMS PWR – PRI
SEL – PORT
(A8U)
SAFING tb – gray
SOFTWARE STOP tb – gray
EE MODE – OFF

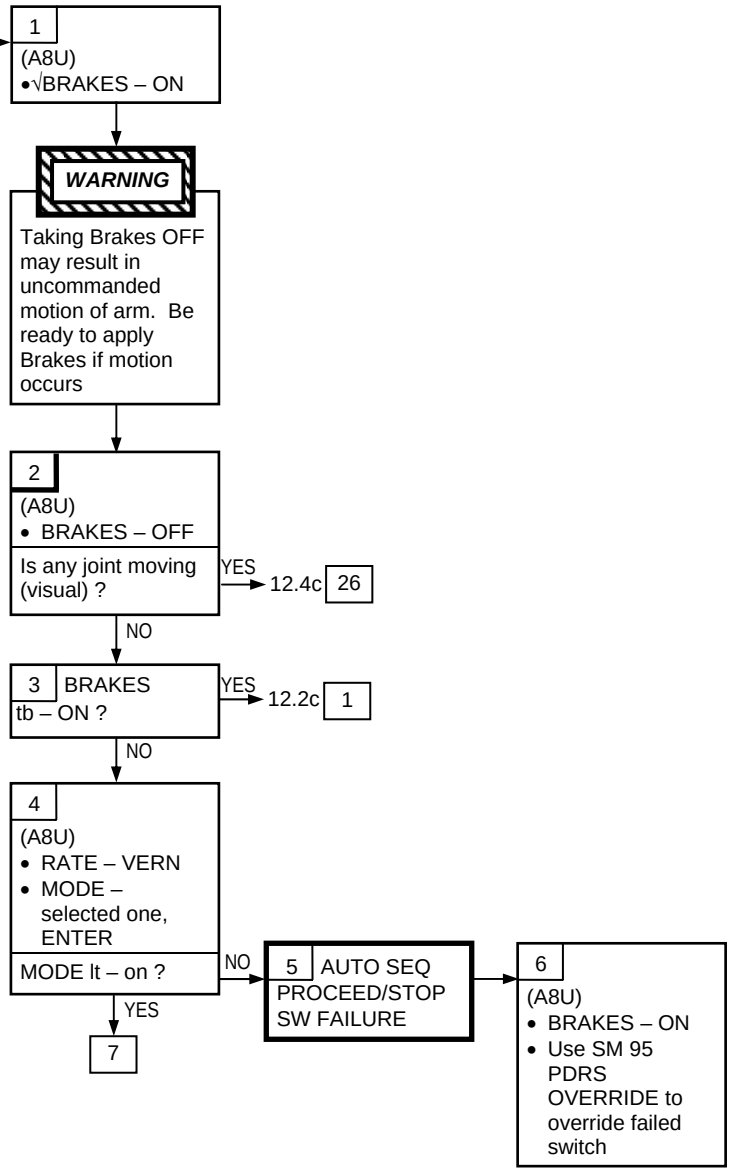

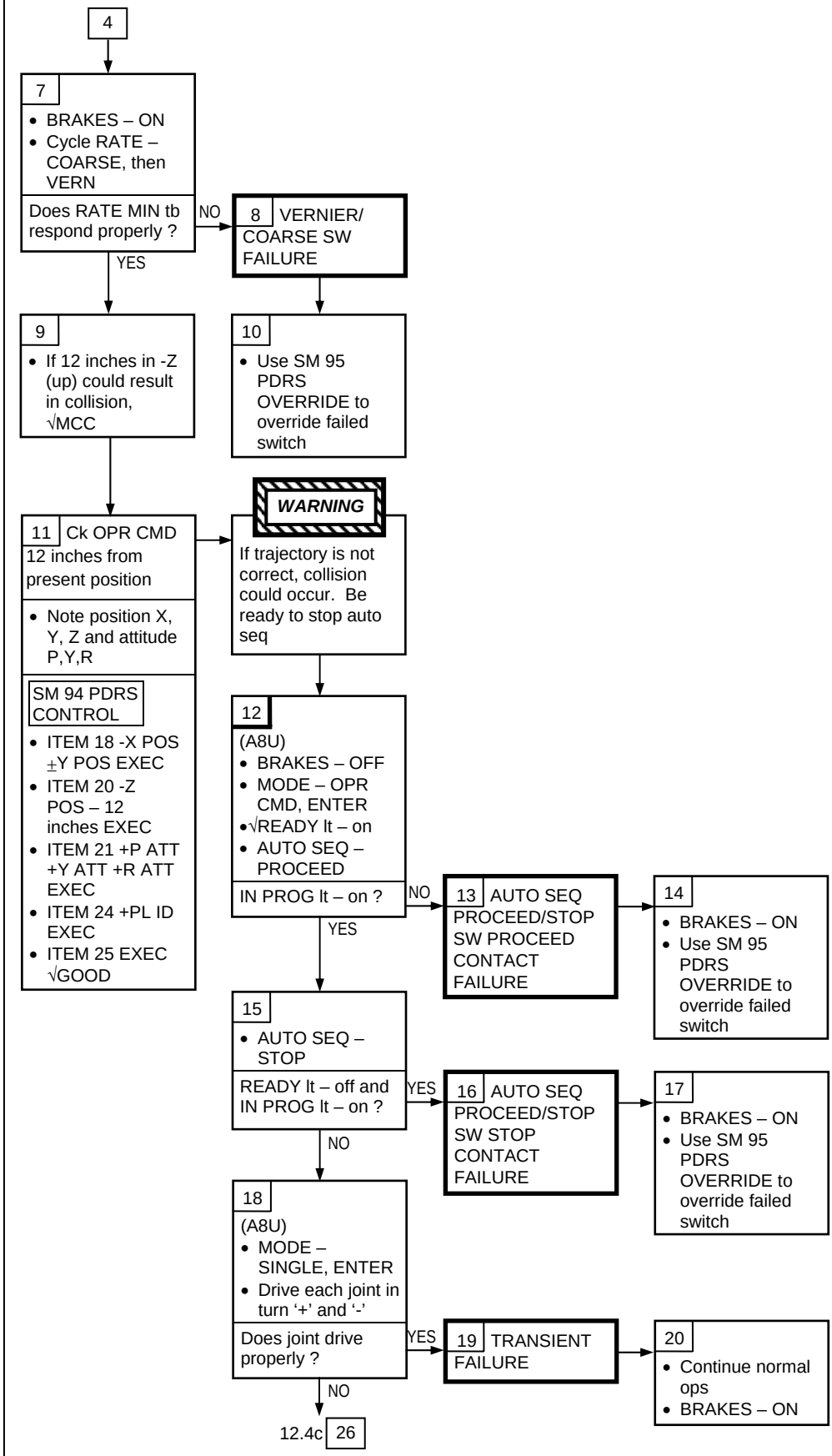
4
7
• BRAKES – ON
• Cycle RATE – COARSE, then VERN
Does RATE MIN tb respond properly ?
NO
8 VERNIER/ COARSE SW FAILURE
YES
9
• If 12 inches in -Z (up) could result in collision, √MCC
10
• Use SM 95 PDRS OVERRIDE to override failed switch
11 Ck OPR CMD 12 inches from present position
• Note position X, Y, Z and attitude P,Y,R
SM 94 PDRS CONTROL
• ITEM 18 -X POS ±Y POS EXEC
• ITEM 20 -Z POS – 12 inches EXEC
• ITEM 21 +P ATT +Y ATT +R ATT EXEC
• ITEM 24 +PL ID EXEC
• ITEM 25 EXEC √GOOD
WARNING
If trajectory is not correct, collision could occur. Be ready to stop auto seq
12
(A8U)
• BRAKES – OFF
• MODE – OPR CMD, ENTER
•√READY lt – on
• AUTO SEQ – PROCEED
IN PROG lt – on ?
NO
13 AUTO SEQ PROCEED/STOP SW PROCEED CONTACT FAILURE
14
• BRAKES – ON
• Use SM 95 PDRS OVERRIDE to override failed switch
YES
15
• AUTO SEQ – STOP
READY lt – off and IN PROG lt – on ?
YES
16 AUTO SEQ PROCEED/STOP SW STOP CONTACT FAILURE
17
• BRAKES – ON
• Use SM 95 PDRS OVERRIDE to override failed switch
NO
18
(A8U)
• MODE – SINGLE, ENTER
• Drive each joint in turn '+' and '-'
Does joint drive properly ?
YES
19 TRANSIENT FAILURE
20
• Continue normal ops
• BRAKES – ON
NO
12.4c 26

12.4c JOINT RESPONSE ABNORMAL IN SINGLE MODE

Joint Response Not Normal for Commands in Single Mode

Nominal Config:
(A8L)
RMS PWR – PRI
SEL – PORT
(A8U)
SAFING tb – gray
EE MODE – OFF

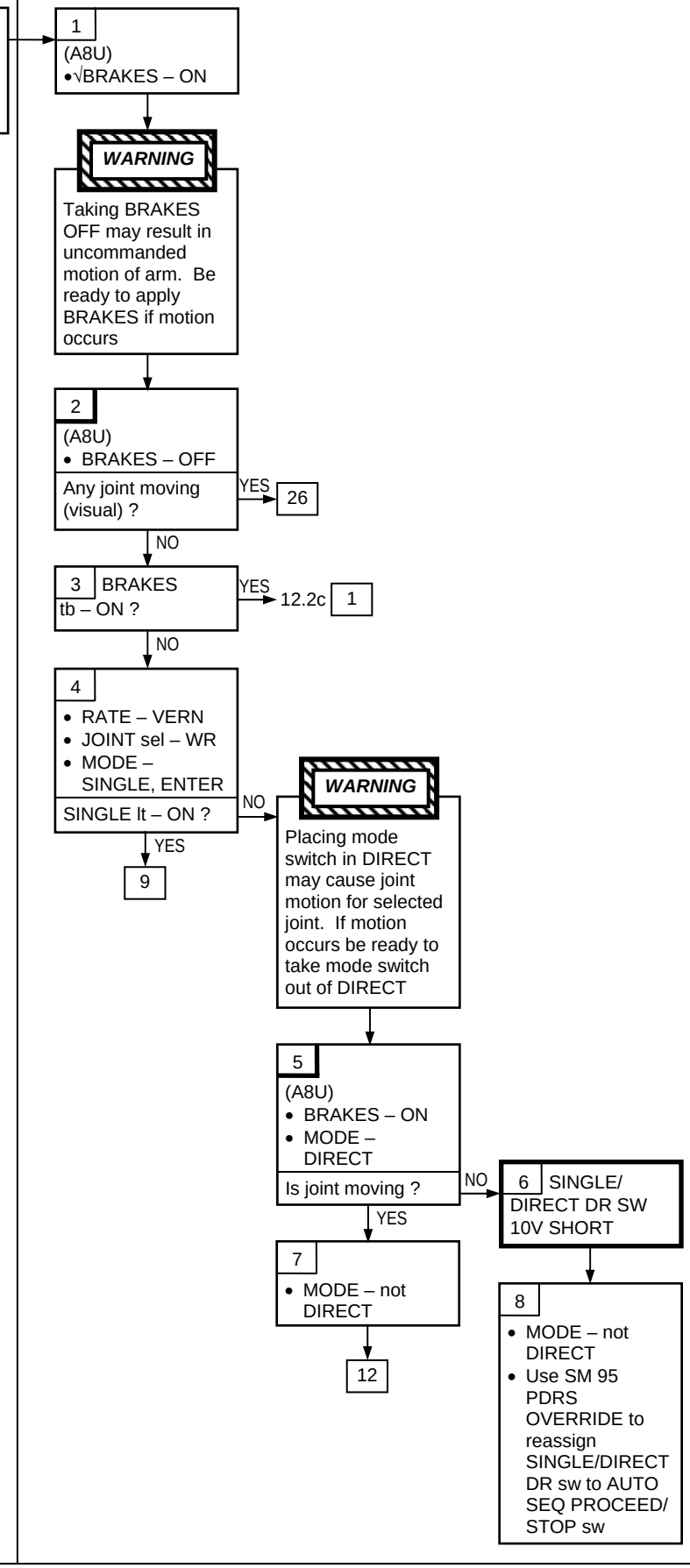

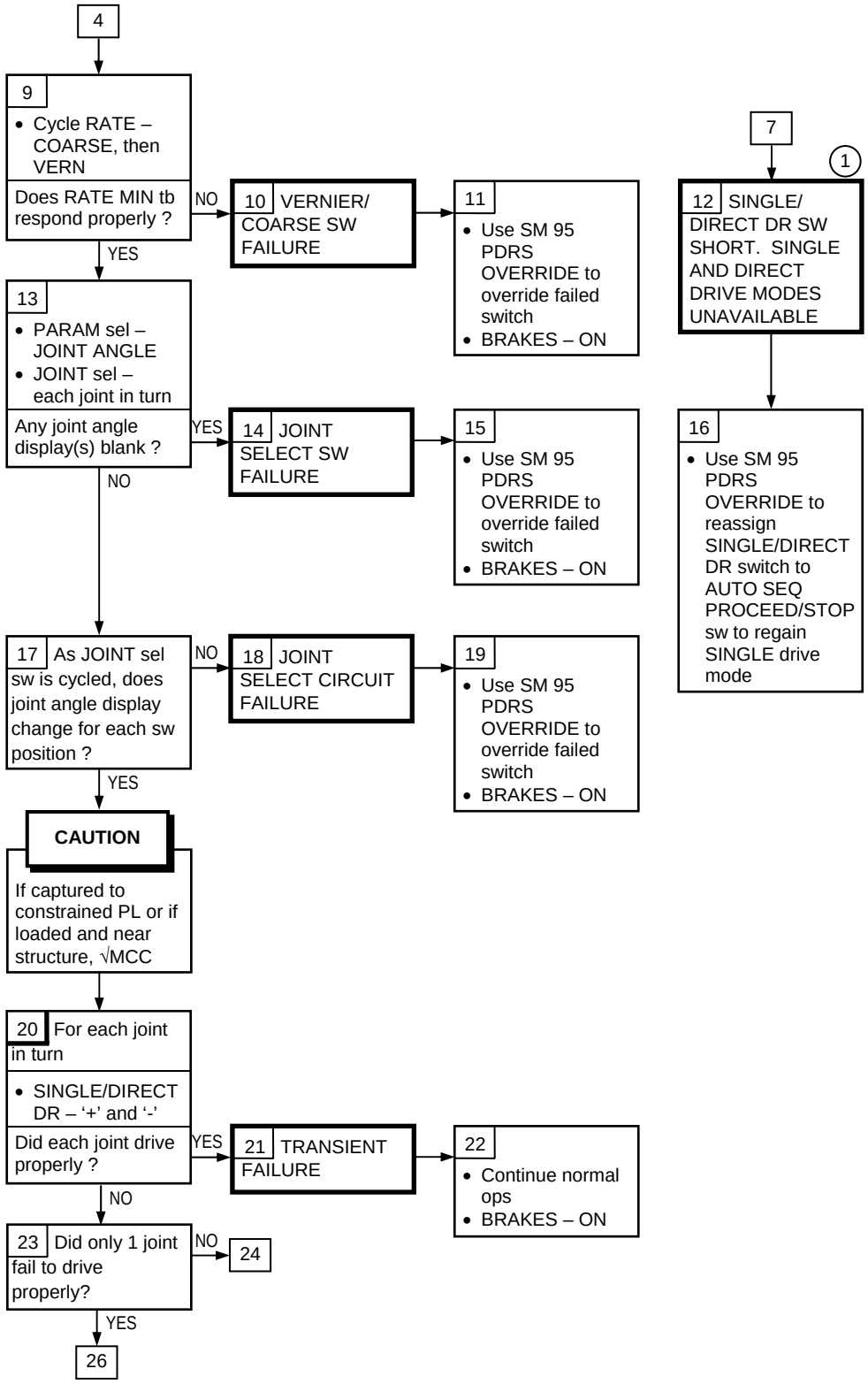

(1) DIRECT mode can be regained with RMS IFM D&C KIT. Refer to RMS CONTINGENCY OPERATION/ INSTALLATION AND REMOVAL OF THE RMS IFM D&C KIT (IFM), and PDRS SSR-4 RMS IFM D&C KIT

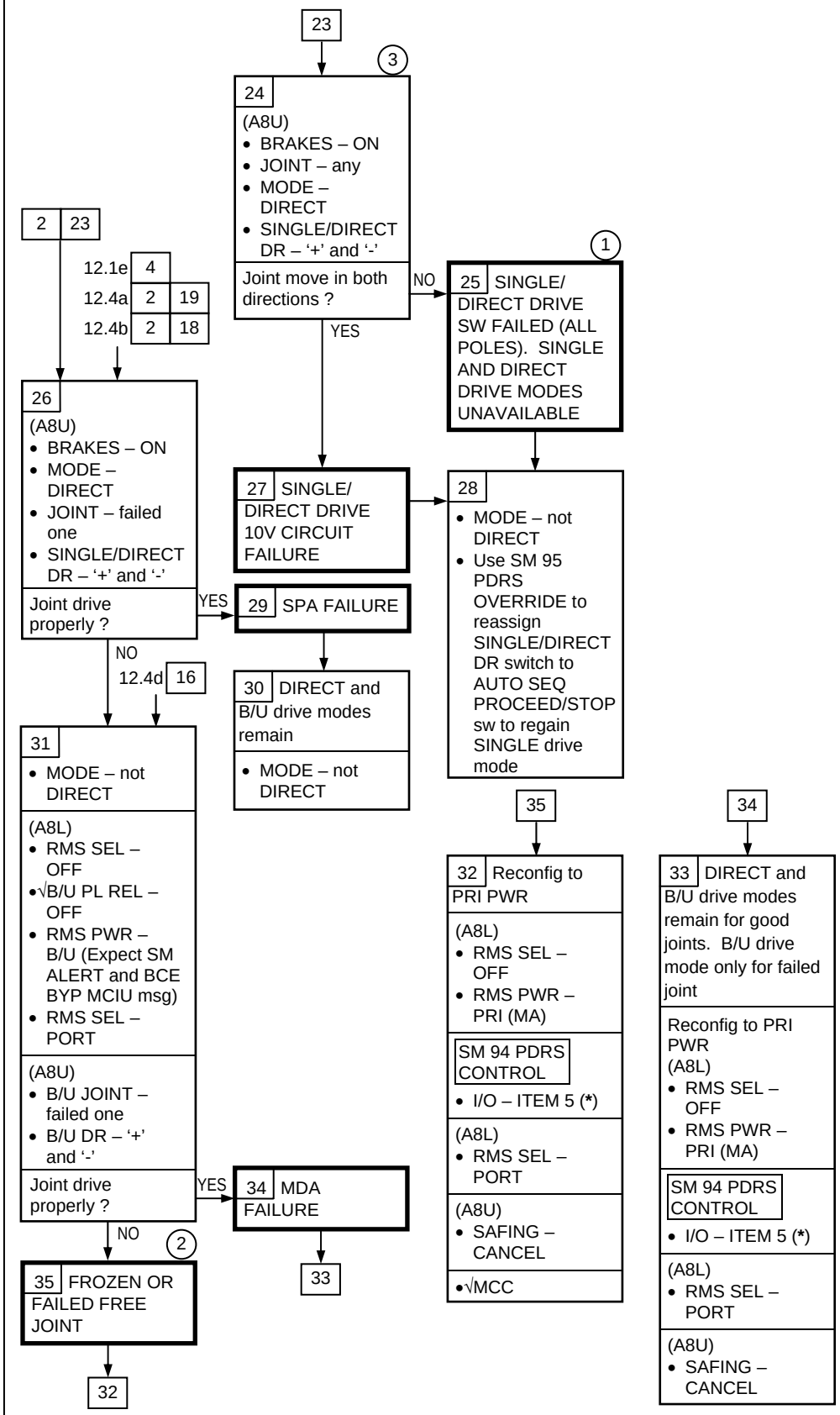

(1) DIRECT mode can be regained with RMS IFM D&C KIT. Refer to RMS CONTINGENCY OPERATION/ INSTALLATION AND REMOVAL OF THE RMS IFM D&C KIT (IFM), and PDRS SSR-4 RMS IFM D&C KIT

(2) BACKDRIVE TECHNIQUE – JOINT FREE, PDRS SSR-3 or EVA reqd to cradle arm for failed free joint

(3) May receive CK CRT lt and DIRECT DRIVE BITE '↓' for undriven joints

12.4d JOINT RESPONSE ABNORMAL IN DIRECT MODE

Joint Response Not Normal for Commands in Direct Mode

Nominal Config:
(A8L)
RMS PWR – PRI
SEL – PORT
(A8U)
BRAKES – ON
BRAKES tb – ON
SAFING tb – gray

1
(A8U)
- √BRAKES – ON
- MODE – not DIRECT
- JOINT – WR

WARNING
Placing mode switch in DIRECT may cause joint motion for selected joint. If motion occurs, be ready to take mode switch out of DIRECT

2
(A8U)
- MODE – DIRECT

Joint motion of selected joint ?

YES → 3
- MODE – not DIRECT

NO

WARNING
Driving in DIRECT may cause incorrect joint to drive or motion in incorrect direction. If captured to constrained PL or if loaded and near structure, √MCC

4 SINGLE/ DIRECT DR SW SHORT. SINGLE AND DIRECT DRIVE MODES UNAVAILABLE

5
- Use SM 95 PDRS OVERRIDE to reassign SINGLE/DIRECT DR sw to AUTO SEQ PROCEED/ STOP sw to regain SINGLE drive mode

6
(A8U)
- SINGLE/DIRECT DR – each joint in turn '+ ' and '- '

Two joints drive simultaneously ?

YES → 7 6V/12V JOINT SEL SW CONTACT SHORT. DIRECT DRIVE MODE UNAVAILABLE

NO

8 Any joint drive in wrong direction ?

YES → 9 ZENER DIODE FAILURE. DIRECT DRIVE MODE LOST

NO → 10

(1) DIRECT mode can be regained with RMS IFM D&C Kit. Refer to RMS CONTINGENCY OPERATION (INSTALLATION AND REMOVAL OF RMS IFM D&C KIT) (IFM), and PDRS SSR-4, RMS IFM D&C KIT

PDRS 12.4d (Cont)

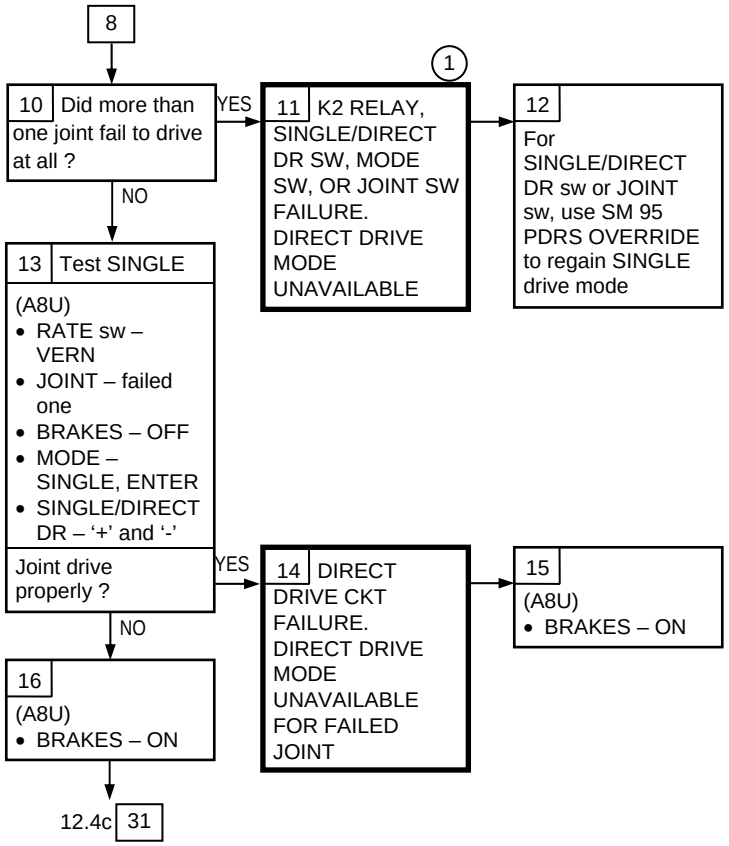

(1) DIRECT mode can be regained with RMS IFM D&C Kit. Refer to RMS CONTINGENCY OPERATION (INSTALLATION AND REMOVAL OF RMS IFM D&C KIT) (IFM), and PDRS SSR-4, RMS IFM D&C KIT

This Page Intentionally Blank

PDRS

12.5a MPM DPY – tb NOT DPY, IND NOT NOMINAL, OR SINGLE MTR DRIVE TIME

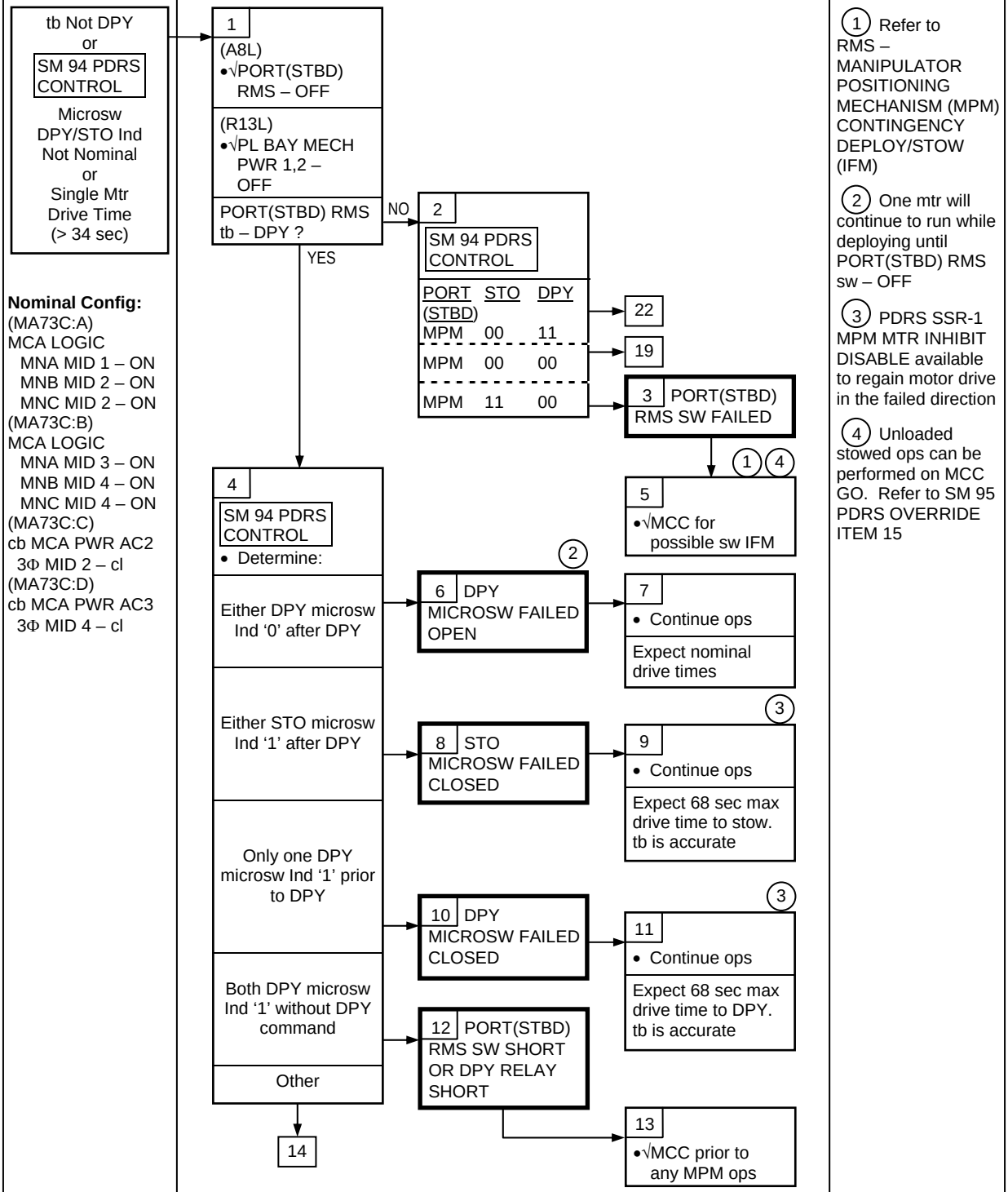

Nominal Config:
(MA73C:A)
MCA LOGIC
MNA MID 1 – ON
MNB MID 2 – ON
MNC MID 2 – ON
(MA73C:B)
MCA LOGIC
MNA MID 3 – ON
MNB MID 4 – ON
MNC MID 4 – ON
(MA73C:C)
cb MCA PWR AC2
3Φ MID 2 – cl
(MA73C:D)
cb MCA PWR AC3
3Φ MID 4 – cl

(1) Refer to RMS – MANIPULATOR POSITIONING MECHANISM (MPM) CONTINGENCY DEPLOY/STOW (IFM)

(2) One mtr will continue to run while deploying until PORT(STBD) RMS sw – OFF

(3) PDRS SSR-1 MPM MTR INHIBIT DISABLE available to regain motor drive in the failed direction

(4) Unloaded stowed ops can be performed on MCC GO. Refer to SM 95 PDRS OVERRIDE ITEM 15

PDRS 12.5a (Cont)

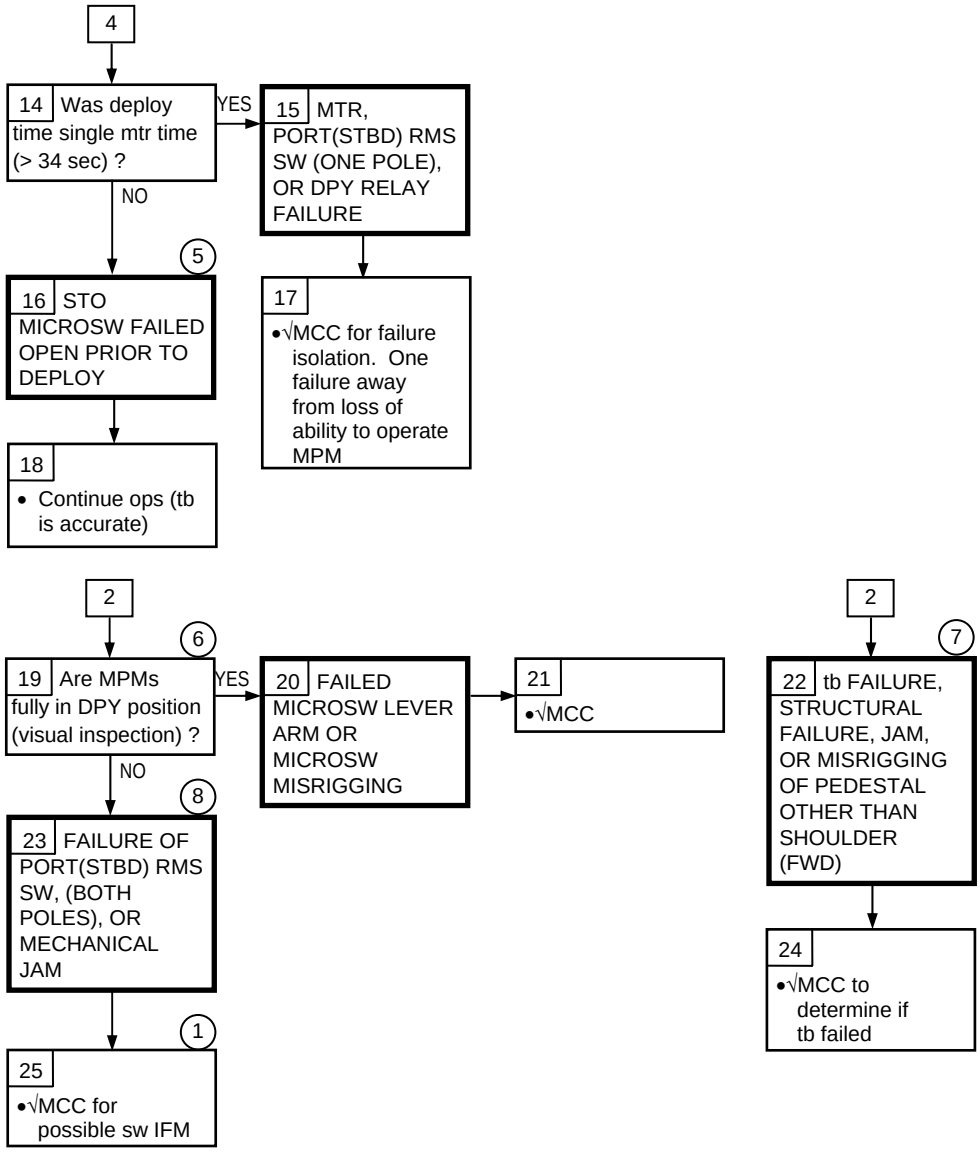

(1) Refer to RMS – MANIPULATOR POSITIONING MECHANISM (MPM) CONTINGENCY DEPLOY/STOW (IFM)

(5) One mtr will continue to run while stowing until PORT(STBD) RMS sw – OFF

(6) RMS should not be used unless shoulder linkage is overcenter locked

(7) To trip port(stbd) tb, signals from all four (three) pedestals are required, i.e., all of SYS 1 or all of SYS 2. SM94 only shows the shoulder (fwd) indications

(8) MCC can determine if switch is failed

12.5b MPM STO – tb NOT STO, IND NOT NOMINAL, OR SINGLE MTR DRIVE TIME

tb Not STO
or
SM 94 PDRS CONTROL
Microsw DPY/STO Ind Not Nominal
or
Single Mtr Drive Time (> 34 sec)

Nominal Config:
(MA73C:A)
MCA LOGIC
MNA MID 1 – ON
MNB MID 2 – ON
MNC MID 2 – ON
(MA73C:B)
MCA LOGIC
MNA MID 3 – ON
MNB MID 4 – ON
MNC MID 4 – ON
(MA73C:C)
cb MCA PWR
AC2 3Φ MID 2 – cl
(MA73C:D)
cb MCA PWR
AC3 3Φ MID 4 – cl

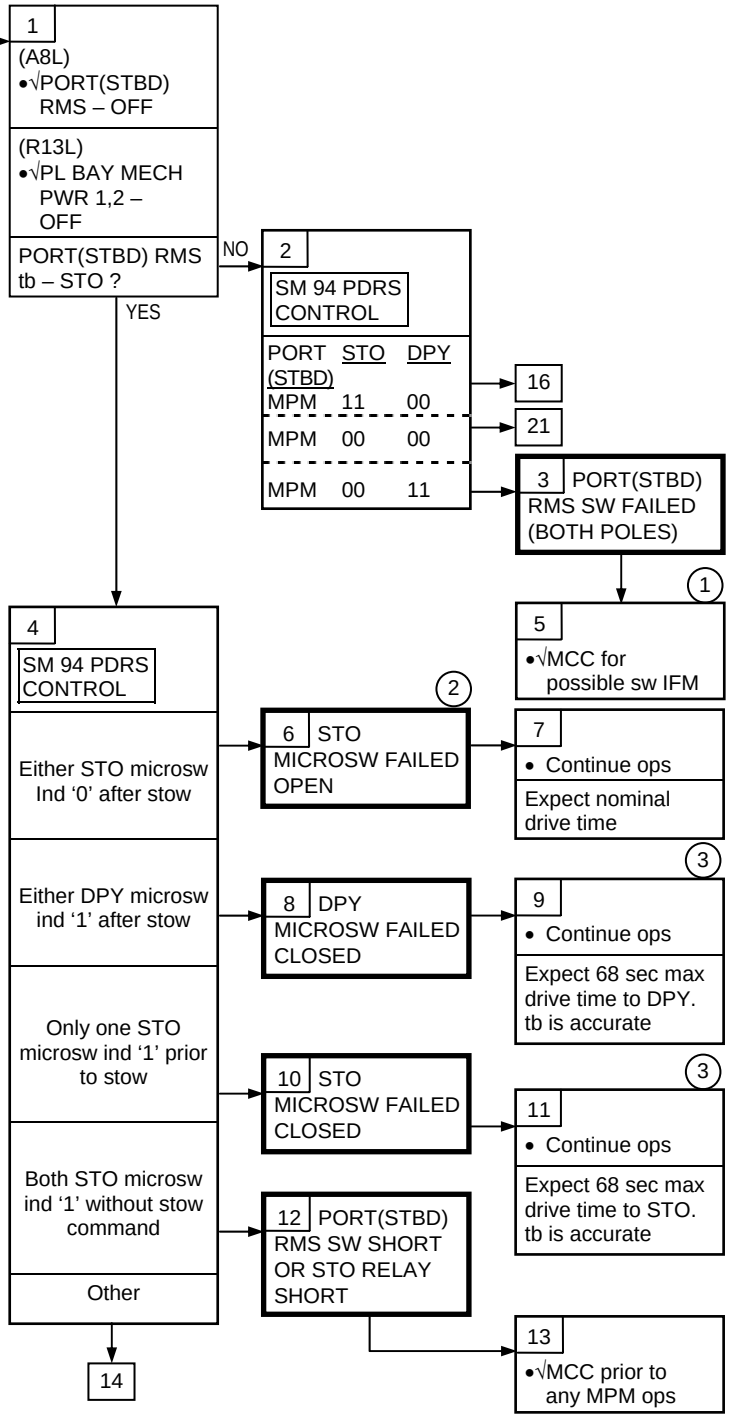

(1) Refer to RMS – MANIPULATOR POSITIONING MECHANISM (MPM) CONTINGENCY DEPLOY/STOW (IFM)

(2) One mtr will continue to run while stowing until PORT (STBD) RMS sw – OFF

(3) PDRS SSR-1 MPM MTR Inhibit Disable available to regain motor drive in the failed direction

PDRS 12.5b (Cont)

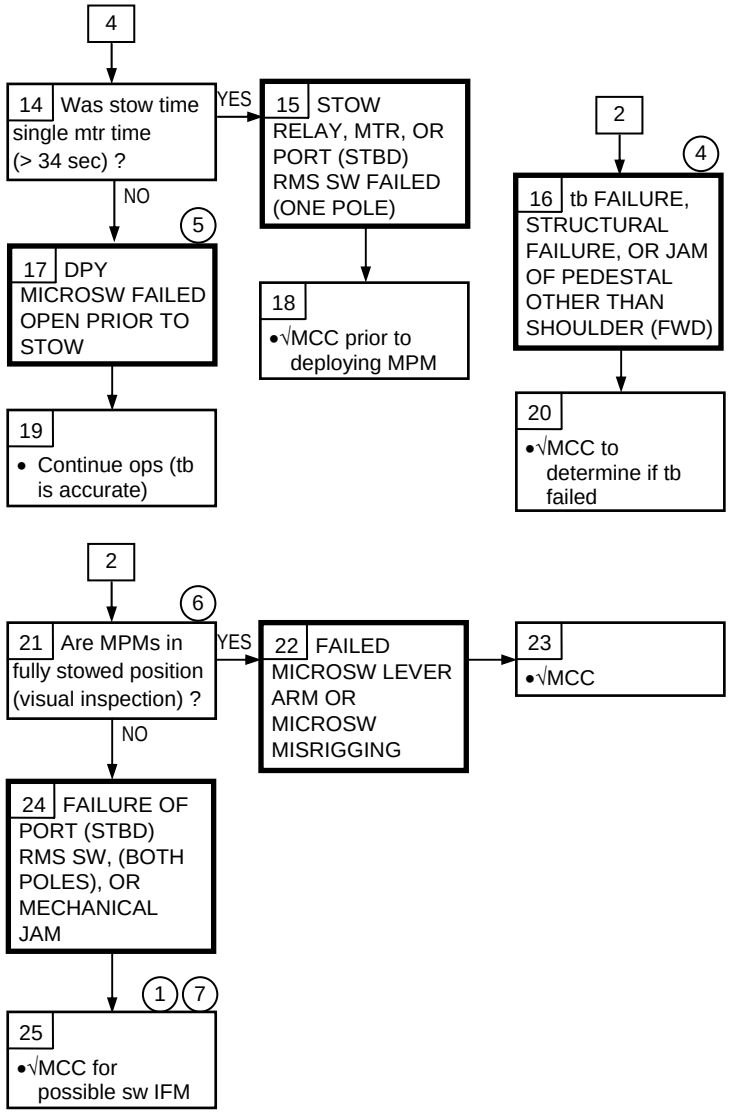

(1) Refer to RMS – MANIPULATOR POSITIONING MECHANISM (MPM) CONTINGENCY DEPLOY/STOW (IFM)

(4) To trip port (stbd) tb, signals from all four (three) pedestals are required, i.e., all of SYS 1 or all of SYS 2. SM94 only shows the shoulder (fwd) indications

(5) One mtr will continue to run while deploying until PORT (STBD) RMS sw – OFF

(6) RMS should not be used unless shoulder linkage is overcenter locked

(7) MCC can determine if switch is failed

12.5c MRL REL – tb NOT REL, IND NOT NOMINAL, OR SINGLE MTR DRIVE TIME

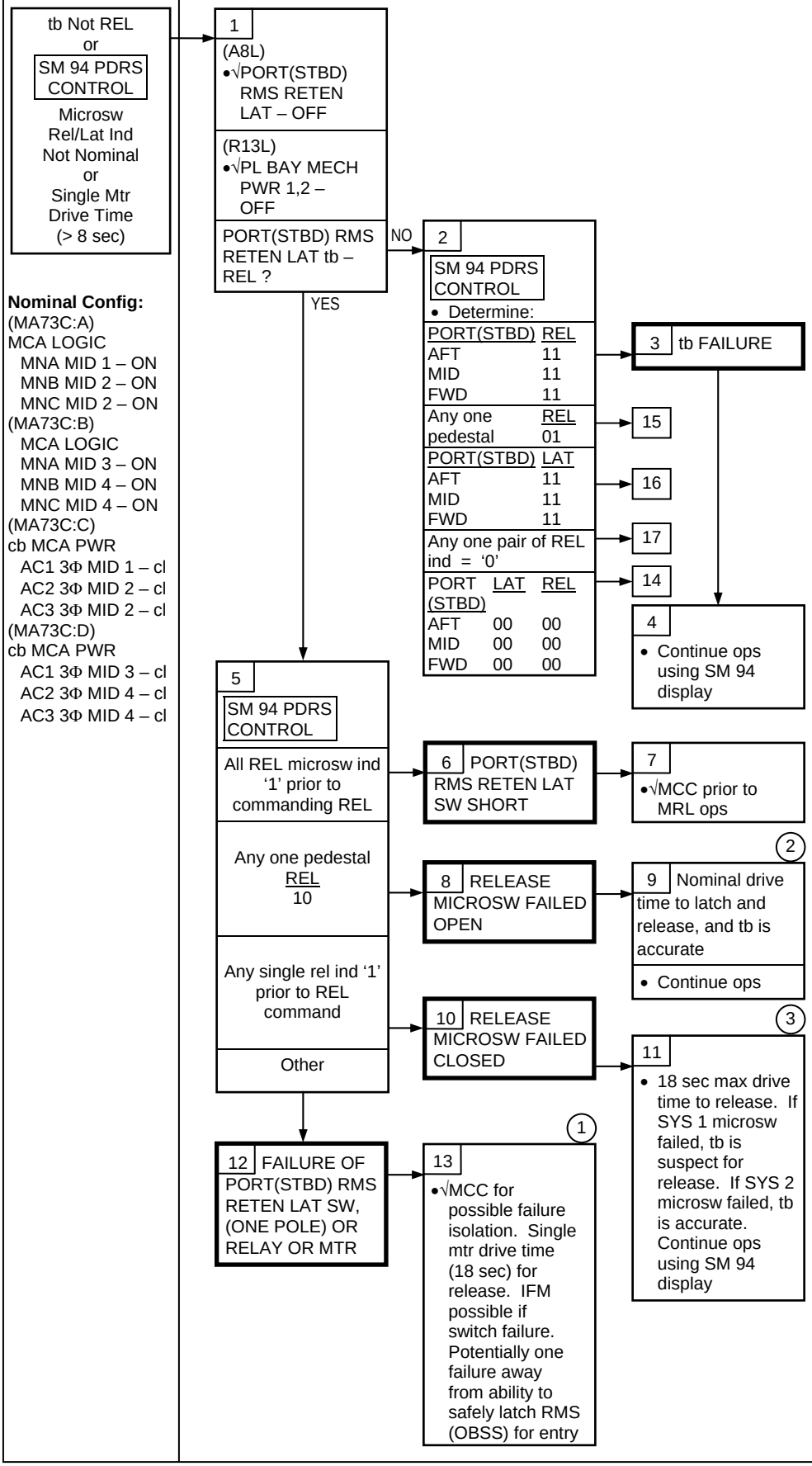

Nominal Config:
(MA73C:A)
MCA LOGIC
MNA MID 1 – ON
MNB MID 2 – ON
MNC MID 2 – ON
(MA73C:B)
MCA LOGIC
MNA MID 3 – ON
MNB MID 4 – ON
MNC MID 4 – ON
(MA73C:C)
cb MCA PWR
AC1 3Φ MID 1 – cl
AC2 3Φ MID 2 – cl
AC3 3Φ MID 2 – cl
(MA73C:D)
cb MCA PWR
AC1 3Φ MID 3 – cl
AC2 3Φ MID 4 – cl
AC3 3Φ MID 4 – cl

(1) Refer to RMS – MANIPULATOR RETENTION LATCHES (MRL) CONTINGENCY RELEASE/LATCH (IFM)

(2) One mtr will continue to drive when commanding release until PORT(STBD) RMS RETEN LAT – OFF

(3) Failed-on microsw disables one mtr. The tb is inaccurate from 8-18 sec (latch halfway open at 8 sec)

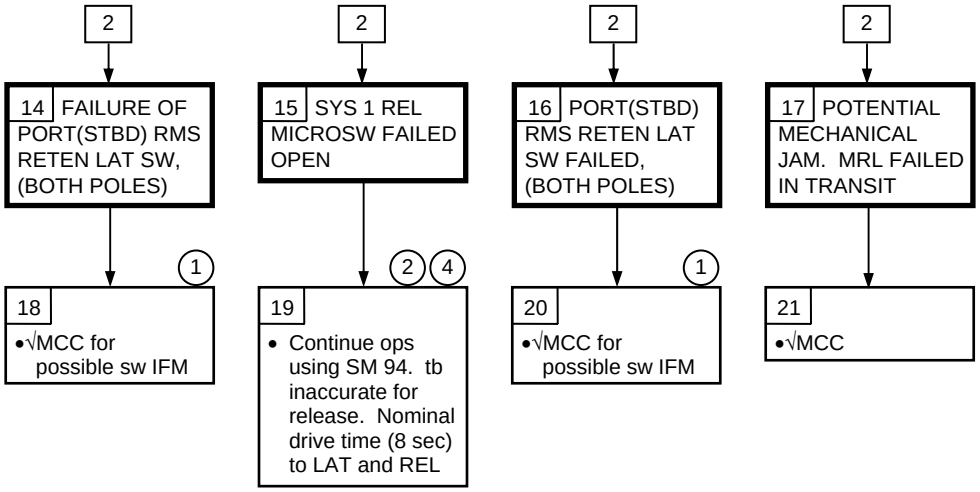

(1) Refer to RMS – MANIPULATOR RETENTION LATCHES (MRL) CONTINGENCY RELEASE/LATCH (IFM)

(2) One mtr will continue to drive when commanding release until PORT(STBD) RMS RETEN LAT – OFF

(4) tb is activated by receiving all three microsw indications from SYS 1 only

12.5d MRL LAT – tb NOT LAT, IND NOT NOMINAL, OR SINGLE MTR DRIVE TIME

tb Not LAT
or
SM 94 PDRS CONTROL
Microsw Rel/Lat Ind Not Nominal
or
Single Mtr Drive Time (> 8 sec)

Nominal Config:
(MA73C:A)
MCA LOGIC
MNA MID 1 – ON
MNB MID 2 – ON
MNC MID 2 – ON
(MA73C:B)
MCA LOGIC
MNA MID 3 – ON
MNB MID 4 – ON
MNC MID 4 – ON
(MA73C:C)
cb MCA PWR
AC1 3Φ MID 1 – cl
AC2 3Φ MID 2 – cl
AC3 3Φ MID 2 – cl
(MA73C:D)
cb MCA PWR
AC1 3Φ MID 3 – cl
AC2 3Φ MID 4 – cl
AC3 3Φ MID 4 – cl

1
(A8L)
•√PORT(STBD) RMS RETEN LAT – OFF

(R13L)
•√PL BAY MECH PWR 1,2 – OFF

PORT(STBD) RMS RETEN LAT tb – LAT ?

NO → 2

SM 94 PDRS CONTROL
• Determine:

PORT(STBD)	LAT	
AFT	11	→ 3 tb FAILURE
MID	11	
FWD	11	
Any one pedestal	LAT 01	→ 15
PORT(STBD)	REL	
AFT	11	→ 16
MID	11	
FWD	11	
Any one pair of LAT ind = '0'		→ 17
PORT (STBD)	LAT REL	→ 14
AFT	00 00	
MID	00 00	
FWD	00 00	

3 tb FAILURE → 4
4
• Continue ops using SM 94 display

YES → 5

5
SM 94 PDRS CONTROL

All LAT microsw ind '1' prior to commanding LAT → 6 PORT(STBD) RMS RETEN LAT SW SHORT → 7
7
•√MCC prior to MRL ops

Any one pedestal LAT 10 → 8 LATCH MICROSW FAILED OPEN → 9 Nominal drive time to latch and release. tb is accurate (2)
• Continue ops

Any single LAT ind '1' prior to LAT command → 10 LATCH MICROSW FAILED CLOSED → 11 18 sec max drive time to LATCH. tb is suspect for release if SYS 1 microsw failed. tb is accurate if SYS 2 microsw failed. Continue ops using SM 94 display (3)

Other → 12 FAILURE OF PORT(STBD) RMS RETEN LAT SW, (ONE POLE) OR RELAY OR MTR → 13 (1)
•√MCC for possible failure isolation

Single mtr drive time (18 sec) for LATCH. IFM possible if switch failure. Potentially one failure away from ability to safely latch RMS(OBSS) for entry

(1) Refer to RMS – MANIPULATOR RETENTION LATCHES (MRL CONTINGENCY RELEASE LATCH) (IFM)

(2) One mtr will continue to drive when commanding LATCH until PORT(STBD) RMS RETEN LAT – OFF

(3) Failed-on microsw disables one mtr. The tb is inaccurate from 8-18 sec (latch halfway closed at 8 sec)

PDRS 12.5d (Cont)

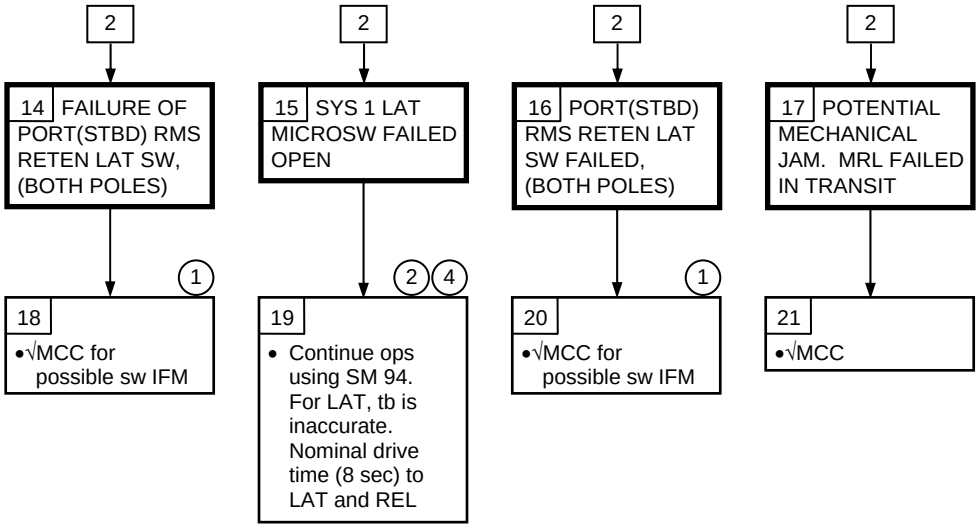

(1) Refer to RMS – MANIPULATOR RETENTION LATCHES (MRL CONTINGENCY RELEASE/LATCH) (IFM)

(2) One mtr will continue to drive when commanding LATCH until PORT(STBD) RMS RETEN LAT – OFF

(4) tb is activated by receiving all three microsw indications from SYS 1 only

PDRS

12.5e PORT(STBD) RMS RETEN LATCHES R-F-L tb – bp WHEN CRADLED

PORT(STBD) RMS Reten Latches R-F-L tb – bp

Nominal Config:
(MA73C:A)
MCA LOGIC
MNA MID 1 – ON
MNB MID 2 – ON
MNC MID 2 – ON
(MA73C:B)
MCA LOGIC
MNA MID 3 – ON
MNB MID 4 – ON
MNC MID 4 – ON

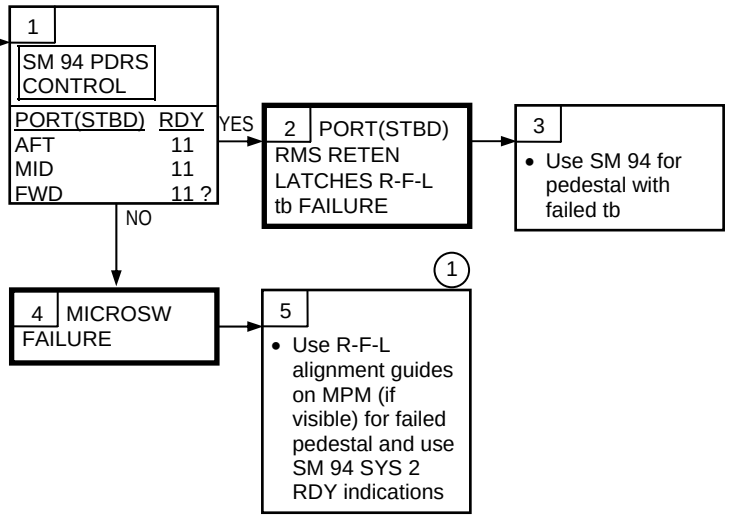

(1) Inaccurate tb because tb is driven by SYS 1 only

12.5f PORT(STBD) RMS RETEN LATCHES R-F-L tb – gray WHEN UNCRADLED

PORT(STBD) RMS Reten Latches R-F-L tb – gray

Nominal Config:
(MA73C:A)
MCA LOGIC
MNA MID 1 – ON
MNB MID 2 – ON
MNC MID 2 – ON
(MA73C:B)
MCA LOGIC
MNA MID 3 – ON
MNB MID 4 – ON
MNC MID 4 – ON

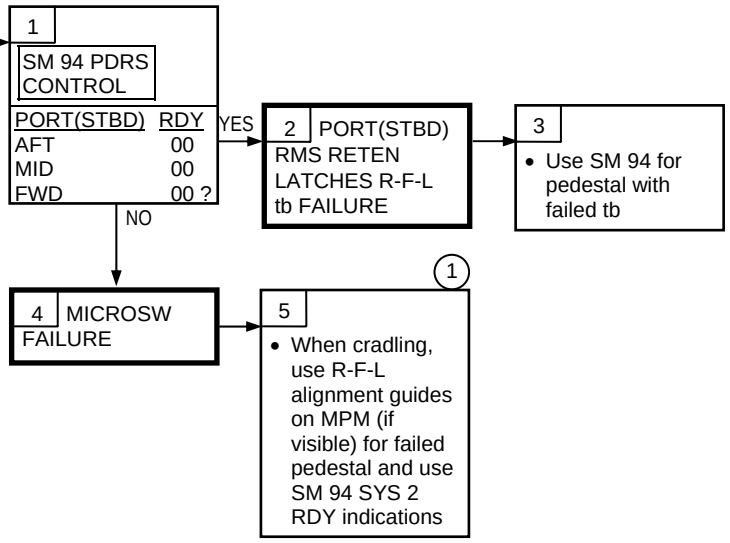

(1) Inaccurate tb because tb is driven by SYS 1 only

PDRS SSR-1
MPM MTR INHIBIT DISABLE

SM 94 PDRS CONTROL

If PORT MPM STO/DPLY – 1 X 1 X (STBD MPM STO/DPLY – X 1 X 1):

1. INHIBIT MICROSWITCH

MA73C:A — MCA LOGIC MNC MID 2 – OFF

CRT — √PORT MPM STO/DPLY – 0 X 0 X (STBD MPM STO/DPLY – X 0 X 0)

2. STOW(DEPLOY) MPM

MA73C:D — cb MCA PWR AC3 3Φ MID 4 – cl

R13L — PL BAY MECH PWR SYS 2 – ON

> CAUTION
> If switch is not turned off, mtr will continue to run. Mechanical damage to mtr may result

A8L — PORT(STBD) RMS – STO(DPY) as reqd (68 sec max)
– OFF

CRT — √MPM is stowed(deployed) using CRT indication (PORT RMS tb inaccurate):
Stowed: PORT MPM STO/DPLY – 0 1 0 X (STBD MPM STO/DPLY – 1 0 X 0)
(Deployed: PORT MPM STO/DPLY – 0 X 0 1 (STBD MPM STO/DPLY – X 0 1 0))

MCC can verify status of FWD, MID, AFT pedestals

R13L — PL BAY MECH PWR SYS 2 – OFF

3. ENABLE BUS

MA73C:A — MCA LOGIC MNC MID 2 – ON

A8L — √PORT(STBD) RMS tb – STO(DPY) >>

If PORT MPM STO/DPLY – X 1 X 1 (STBD MPM STO/DPLY – 1 X 1 X):

4. INHIBIT MICROSWITCH

MA73C:B — MCA LOGIC MNB MID 4 – OFF

CRT — √PORT MPM STO/DPLY – X 0 X 0 (STBD MPM STO/DPLY – 0 X 0 X)

5. STOW(DEPLOY) MPM

MA73C:C — cb MCA PWR AC2 3Φ MID 2 – cl

R13L — PL BAY MECH PWR SYS 1 – ON

> CAUTION
> If switch is not turned off, mtr will continue to run. Mechanical damage to mtr may result

A8L — PORT(STBD) RMS – STO(DPY) as reqd (68 sec max)
– OFF

CRT — √MPM is stowed(deployed) using CRT indication:
Stowed: PORT MPM STO/DPLY – 1 0 X 0 (STBD MPM STO/DPLY – 0 1 0 X)
(Deployed: PORT MPM STO/DPLY – X 0 1 0 (STBD MPM STO/DPLY – 0 X 0 1))

MCC can verify status of FWD, MID, AFT pedestals

R13L — PL BAY MECH PWR SYS 1 – OFF

6. ENABLE BUS

MA73C:B — MCA LOGIC MNB MID 4 – ON

A8L — √PORT(STBD) RMS tb – STO(DPY)

PDRS SSR-3
BACKDRIVE TECHNIQUE – JOINT FREE

SP – FAILED

WARNING
PORT RADIATOR must be stowed

NOTE
Can expect CONTR ERR and Master Alarm

1. SETUP
   If RADIATORS deployed:
   Perform RAD STOW (ORB OPS, ECLS)

   √BRAKES – ON (tb-ON)
   PARAM sel – JOINT ANGLE

   √DAP: VERN(FREE)

   If SP < 7.5 deg, go to step 3

   Calculate IC: If SP < 45, IC = -(2 x SP)
   Otherwise, IC = -90

   MODE – DIRECT (lt on)

   DIRECT DR to:

SY	SP	EP	WP	WY	WR
+ 75	FREE	IC	0	0	0

   MODE – not DIRECT (lt off)

   SM 94 PDRS CONTROL

   AUTO BRAKE INH – ITEM 10 EXEC (*****)

2. BACKDRIVE OPERATION

   NOTE
   Hold SINGLE DR command for 4 sec,
   apply BRAKES – ON, then release
   SINGLE DR command

   RATE – COARSE (RATE MIN tb-OFF)

   JOINT sel – EP
   BRAKES – OFF (tb-OFF)
   MODE – SINGLE, ENTER

   SINGLE DR – '+' after 4 sec and while holding sw
   BRAKES – ON (tb-ON)

   If SP < 7.5 deg, go to step 3

   If EP ≥ -15 deg, reconfig EP:
   MODE – DIRECT (lt on)
   DIRECT DR EP to: -(2 x SP) or max -90
   MODE – not DIRECT (lt off)

   Repeat step 2

3. RECONFIG JOINTS FOR CRADLE

CAUTION
Use CCTVs to monitor proximity of RMS to orbiter

√BRAKES – ON (tb-ON)
MODE – DIRECT (lt on)

DIRECT DR to:

SY	SP	EP	WP	WY	WR
CURRENT VALUE	FREE	+1	+10	0	0
0					
		-1			

MODE – not DIRECT (lt off)

4. START RMS CRADLE

NOTE
Hold SINGLE DR command for 1/2 sec
Apply BRAKES – ON then release
SINGLE DR command

JOINT sel – EP
BRAKES – OFF (tb-OFF)
MODE – SINGLE, ENTER

SINGLE DR – '+' after 1/2 sec and while holding sw
BRAKES – ON (tb-ON)

If PORT RMS R-F-L FWD tb – gray, go to step 5

If EP ≥ +1 deg, reconfig EP:
MODE – DIRECT (lt on)
DIRECT DR EP to: 0
MODE – not DIRECT (lt off)

Repeat step 4

5. COMPLETE RMS CRADLE
√BRAKES – ON (tb-ON)
MODE – DIRECT (lt on)

DIRECT DR to:

SY	SP	EP	WP	WY	WR
0	FREE	0	0	0	0

MODE – not DIRECT (lt off)

√PORT RMS R-F-L tb (three) – gray

Go to step 3, RMS PWRDN (PDRS OPS) >>

EP – FAILED

NOTE
Can expect CONTR ERR and Master Alarm

1. SETUP
√BRAKES – ON (tb-ON)
PARAM sel – JOINT ANGLE

√DAP: VERN(FREE)

If EP ≥ -1 deg, go to step 3

Calculate IC: If EP > -65, IC = -(2 x EP)
Otherwise, IC = +130

MODE – DIRECT (lt on)

DIRECT DR to:

SY	SP	EP	WP	WY	WR
CURRENT VALUE	IC	FREE	+5	0	0
0					

MODE – not DIRECT (lt off)

SM 94 PDRS CONTROL

AUTO BRAKE INH – ITEM 10 EXEC (*****)

2. BACKDRIVE OPERATION

NOTE
Hold SINGLE DR command for 4 sec
Apply BRAKES – ON, then release
SINGLE DR command

RATE – COARSE (RATE MIN tb-OFF)

JOINT sel – SP
BRAKES – OFF (tb-OFF)
MODE – SINGLE, ENTER

SINGLE DR – '-' after 4 sec and while holding sw
BRAKES – ON (tb-ON)

If EP ≥ -1 deg, go to step 3

If SP < -(EP), reconfig SP:
MODE – DIRECT (lt on)
DIRECT DR SP to: -(2 x EP) or max +130
MODE – not DIRECT (lt off)

Repeat step 2

3. RECONFIG FOR CRADLE
√BRAKES – ON (tb-ON)
MODE – DIRECT (lt on)

DIRECT DR to:

SY	SP	EP	WP	WY	WR
CURRENT VALUE	+ 15	FREE	+ 10	0	0
0					

MODE – not DIRECT (lt off)

4. START RMS CRADLE

NOTE
Hold SINGLE DR command for 1/2 sec
Apply BRAKES – ON, then release
SINGLE DR command

JOINT sel – SP
BRAKES – OFF (tb-OFF)
MODE – SINGLE, ENTER

If EP > +0.1:
SINGLE DR – '+' after 1/2 sec and while holding sw
BRAKES – ON (tb-ON)

If EP < -0.1:
SINGLE DR – '-' after 1/2 sec and while holding sw
BRAKES – ON (tb-ON)

Repeat step 4 until -0.1 < EP < +0.1

5. COMPLETE RMS CRADLE
√BRAKES – ON (tb-ON)
MODE – DIRECT (lt on)

DIRECT DR to:

SY	SP	EP	WP	WY	WR
0	0	FREE	0	0	0

MODE – not DIRECT (lt off)

√PORT RMS R-F-L tb (three) – gray

Go to step 3, RMS PWRDN (PDRS OPS)

WP – FAILED

NOTE
Can expect CONTR ERR and Master Alarm

1. SETUP
√BRAKES – ON (tb-ON)
√DAP: VERN(FREE)
MODE – DIRECT (lt on)

DIRECT DR to:

SY	SP	EP	WP	WY	WR
0	+ 90	- 90	FREE	0	+ 19.5

MODE – not DIRECT (lt off)

PARAM sel – JOINT ANGLE

SM 94 PDRS CONTROL

AUTO BRAKES INH – ITEM 10 EXEC (**)

2. BACKDRIVE OPERATION (To config -0.1 ≤ WP ≤ +0.1 deg)

NOTE
For steps 2a and 2b, THC input will be at 1/3 to 1/2 deflection. After 2-3 sec, quickly command full scale deflection in opposite direction. When WP joint angle displayed is constant, apply BRAKES – ON and release THC

2a. If WP < -0.1 deg

RATE sw – COARSE (RATE MIN tb-OFF)
If WP > -2.0 deg,
RATE sw – VERN (RATE MIN tb-ON)

√JOINT sel – WP
BRAKES – OFF (tb-OFF)
MODE – END EFF, ENTER

THC – '-Z' (UP) 1/3 to 1/2 deflection

After 2-3 sec,
THC – '+Z' (DOWN) full deflection

When WP joint angle is constant:
BRAKES – ON (tb-ON)
Release THC

If -0.1 ≤ WP ≤ +0.1, go to step 2c

If SP > 120 deg or < 60 deg, go to step 3

If WP < -0.1 deg, repeat step 2a

If WP > +0.1 deg, go to step 2b

2b. If WP > +0.1 deg

√RATE sw – COARSE (RATE MIN tb-OFF)
If WP < +2.0 deg,
RATE sw – VERN (RATE MIN tb-ON)

√JOINT sel – WP
BRAKES – OFF (tb-OFF)
MODE – END EFF, ENTER

THC – '+Z' (DOWN) 1/3 to 1/2 deflection

After 2-3 sec,
THC – '-Z' (UP) full deflection

When WP joint angle is constant:
BRAKES – ON (tb-ON)
Release THC

If -0.1 ≤ WP ≤ +0.1, go to step 2c

If SP > 120 deg or < 60 deg, reconfig per step 3

If WP > +0.1 deg, repeat step 2b

If WP < -0.1 deg, go to step 2a

2c. If -0.1 ≤ WP ≤ +0.1 deg

√BRAKES – ON (tb-ON)
MODE – DIRECT (lt on)

DIRECT DR to cradle:

SY	SP	EP	WP	WY	WR
0	CURRENT VALUE	+ 1 MA	FREE	0	0
	0 (MA)	0			

MODE – not DIRECT (lt off)

√PORT RMS R-F-L tb (three) – gray

Go to step 3, RMS PWRDN (PDRS OPS) >>

3. RECONFIG OF JOINTS
√BRAKES – ON (tb-ON)
MODE – DIRECT (lt on)

DIRECT DR to:

SY	SP	EP	WP	WY	WR
0	+ 90	- 90	FREE	0	+ 19.5

MODE – not DIRECT (lt off)

If WP < -0.1 deg, go to step 2a

If WP > +0.1 deg, go to step 2b

WY – FAILED

NOTE

Can expect CONTR ERR and Master Alarm. Can also expect SINGULAR if WY is between +75 and +105 degrees or if the WY is between -75 and -105 degrees

1. SETUP
   √BRAKES – ON (tb-ON)
   √DAP: VERN(FREE)
   MODE – DIRECT (lt on)

   DIRECT DR to:

SY	SP	EP	WP	WY	WR
0	+ 90	- 90	0	FREE	+ 19.5

   MODE – not DIRECT (lt off)
   PARAM sel – JOINT ANGLE

   SM 94 PDRS CONTROL

   AUTO BRAKE INH – ITEM 10 EXEC (*****)

2. BACKDRIVE OPERATION (To config -0.1 ≤ WY ≤ +0.1 deg)

   NOTE

   For steps 2a and 2b, THC input will be at 1/3 to 1/2 deflection. After 2-3 sec, quickly command full scale deflection in opposite direction. When WY joint angle displayed is constant, apply BRAKES – ON and release THC

   2a. If WY < -0.1 deg

   RATE sw – COARSE (RATE MIN tb-OFF)
   If WY > -2.0 deg,
   RATE sw – VERN (RATE MIN tb-ON)

   √JOINT sel – WY
   BRAKES – OFF (tb-OFF)
   MODE – END EFF, ENTER

   THC – '+Y' (Right) 1/3 to 1/2 deflection

   After 2-3 sec,
   THC – '-Y' (Left) full deflection

   When WY joint angle is constant:
   BRAKES – ON (tb-ON)
   Release THC

   If -0.1 ≤ WY ≤ +0.1 deg, go to step 2c

   If SP < 60 deg or EP > -60 deg, go to step 3

   If WY < -0.1 deg, repeat step 2a

   If WY > +0.1 deg, go to step 2b

   2b. If WY > +0.1 deg

   √RATE sw – COARSE (RATE MIN tb-OFF)
   If WY < +2.0 deg,
   RATE sw – VERN (RATE MIN tb-ON)

   √JOINT – WY
   BRAKES – OFF (tb-OFF)
   MODE – END EFF, ENTER

   THC – '-Y' (Left) 1/3 to 1/2 deflection

   After 2-3 sec,
   THC – '+Y' (Right) full deflection

   When WY joint angle is constant:
   BRAKES – ON (tb-ON)
   Release THC

If -0.1 ≤ WY ≤ +0.1 deg, go to step 2c

If SP < 60 deg or EP > -60 deg, go to step 3

If WY > +0.1 deg, repeat step 2b

If WY < -0.1 deg, go to step 2a

2c. If -0.1 ≤ WY ≤ 0.1 deg

√BRAKES – ON (tb-ON)
MODE – DIRECT (lt on)

DIRECT DR to cradle:

SY	SP	EP	WP	WY	WR
0	CURRENT VALUE	+ 1 MA	+ 5	FREE	0
	0	0	0		

MODE – not DIRECT (lt off)
√PORT RMS R-F-L tb (three) – gray

Go to step 3, RMS PWRDN (PDRS OPS) >>

3. RECONFIG OF JOINTS
√BRAKES – ON (tb-ON)
MODE – DIRECT (lt on)

DIRECT DR to:

SY	SP	EP	WP	WY	WR
0	+ 90	- 90	0	FREE	+ 19.5

MODE – not DIRECT (lt off)

If WY < -0.1 deg, go to step 2a

If WY > +0.1 deg, go to step 2b

PDRS SSR-4
RMS IFM D&C KIT

NOTE

Applicable AC/DC sw powering kit will remain OFF until immediately prior to reqd operation and will be returned to OFF immediately after operation is completed. When kit is powered, RMS is one failure away from uncommanded motion and/or End Effector ops.

If unexpected arm motion occurs during D&C Kit ops, turn RMS PWR (pnl A8L) to OFF, take DC UTIL PWR MNA (pnl O19) to OFF, then √MCC. If failure causing unexpected motion is in D&C Kit, applying brakes will be ineffective.

All pnl A8U, A8L tbs and C/W annunciators are functional with RMS IFM D&C Kit installed. All pnl A8U functions available except those provided by RMS IFM D&C Kit.

Operation of kit END EFFECTOR, JOINT SELECT, DIRECT DRIVE switches is similar to corresponding pnl A8U switches. Limping of arm not available for End Effector functions. May get brakeslip msg during direct drive ops. Cancel MSTR ALARM, and cycle BRAKES sw or cycle RMS SEL sw. TMBU can prevent subsequent msg.

For loaded RMS ops, downlink must be available to confirm lack of End Effector stall currents.

Orbiter pilot must be available to perform separation in case of uncommanded release. Review RMS-LOADED/RELEASE (Cue Card)

1. SETUP

Install RMS IFM D&C KIT, RMS CONTINGENCY OPERATION/INSTALLATION AND REMOVAL OF THE RMS IFM D&C KIT (IFM, PROCEDURES M THRU R)

A8L RMS PWR – PRI (MA)

SM 94 PDRS CONTROL

I/O ON – ITEM 5 EXEC (*****)

A8L RMS SEL – PORT
A8U SAFING – CANCEL (tb-gray)

2. SHOULDER BRACE RELEASE

If Shoulder Brace still engaged:

O19 COAS PWR – ON

D&C Kit SHOULDER BRACE – RELEASE (Hold for 2 sec following tb-gray on pnl A8U)

O19 COAS PWR – OFF

Go to step 7

3. INITIAL D&C KIT POWERUP FOR END EFFECTOR/DIRECT DRIVE

Position RMS/payload at least 5 ft away from structure, using best available mode on pnl A8U

If unloaded:

D&C Kit JOINT sw – WRIST YAW

If loaded:

√MCC for JOINT sw position for benign motion if uncommanded direct drive occurs and for RMS position for payload rotations due to uncommanded derig/release

WARNING

If unexpected arm/payload motion occurs, (A8L) RMS PWR – OFF, (O19) DC UTIL PWR MNA – OFF, then √MCC

O19 DC UTIL PWR MNA – ON

√No arm/payload motion

DC UTIL PWR MNA – OFF

4. UNLOADED END EFFECTOR TEST
(Reqd for End Effector ops, Direct Drive)

CAUTION
End Effector test must be completed within 2.5 min of DC UTIL PWR MNA sw – ON or End Effector mtr burnout could occur

A8U √BRAKES – ON (tb-ON)
√tb(s)

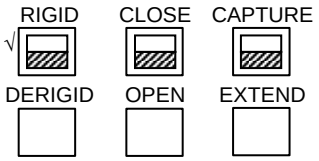

O19 DC UTIL PWR MNA – ON
√No tb(s) change

D&C Kit EE CAPTURE/RELEASE sw – CAPTURE, until CLOSE tb – gray (3 sec max)

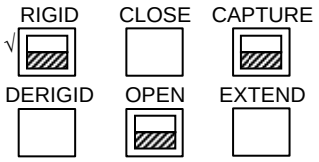

√No tb(s) change after capture

EE RIGID/DERIGID sw – RIGID, until RIGID tb – gray (25 sec max)

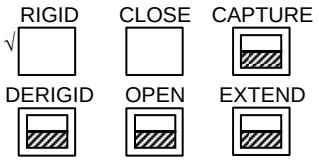

√No tb(s) change after rigidizing

EE RIGID/DERIGID sw – DERIGID; until DERIGID,EXTEND tb – gray (25 sec max)
(MA, DERIGIDIZE lt – ON)

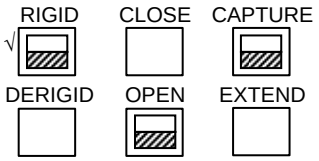

EE CAPTURE/RELEASE sw – RELEASE, until OPEN tb – gray (3 sec max)
(Expect MA, RELEASE lt – on during actual Payload Release)

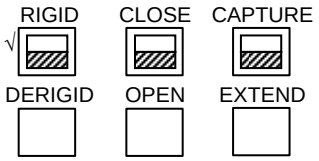

O19 DC UTIL PWR MNA – OFF

To extinguish DERIGIDIZE lt, take EE MAN CONTR sw to RIGID momentarily or cycle RMS SEL sw

5. DIRECT DRIVE TEST (For Direct Drive ops only)

A8U √BRAKES – ON (tb-ON)
PARAM sel – JOINT ANGLE

O19 DC UTIL PWR MNA – ON

D&C Kit For first joint:
Drive '+' then '-'
√Correct joint responses and that only selected joint drives
(Expect MA, CK CRT lt on, 'PDRS SLIP' for driven joint, and 'S96 PDRS ABE' for five undriven joints)

For other joints:
Drive '+'
√Correct joint responses
(Expect MA, CK CRT lt on, 'PDRS SLIP' for driven joint, and 'S96 PDRS ABE' for five undriven joints)

O19 DC UTIL PWR MNA – OFF

6. END EFFECTOR/DIRECT DRIVE

NOTE

(Pnl O19) DC UTIL PWR MNA sw – OFF immediately after completing Direct Drive, or End Effector ops, or when unattended

DC UTIL PWR MNA – ON

Perform RMS IFM D&C Kit End Effector/Direct Drive function as reqd

DC UTIL PWR MNA – OFF

7. RECONFIG
Remove RMS IFM D&C KIT, RMS CONTINGENCY OPERATION/INSTALLATION AND REMOVAL OF THE RMS IFM D&C KIT (IFM, PROCEDURES M THRU R)

Power up RMS if further ops reqd
Refer to ON-ORBIT INITIALIZATION, step 2 and RMS POWERUP, step 2 (PDRS OPS)
(Note: disregard joint angle and position data in the nominal procedures if arm not starting at cradle)

This Page Intentionally Blank

Space Shuttle Program
FLIGHT DATA FILE

JSC-48027
GENERIC, REV J

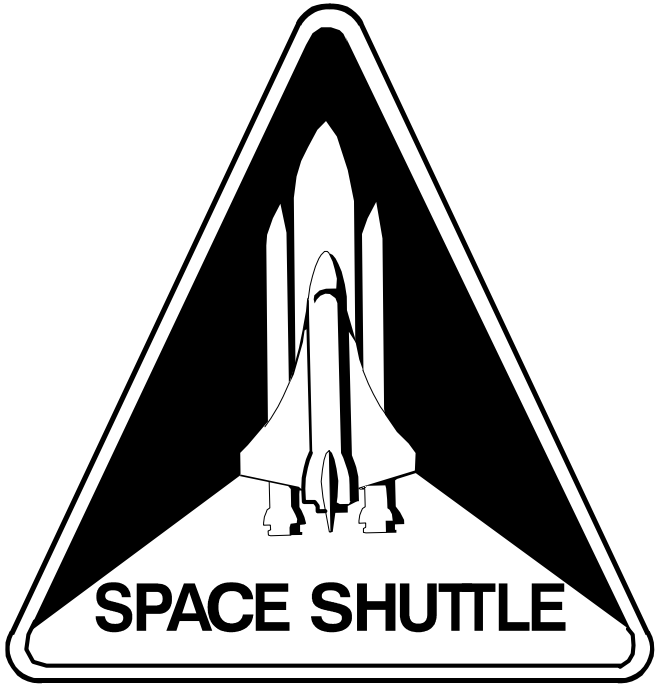

MALFUNCTION PROCEDURES

STS
ALL

Flight Cover (trim bottom to expose tabs)