Space Shuttle Program
FLIGHT DATA FILE

JSC-48024-114

EVA Checklist

STS-114 Flight Supplement

Mission Operations Directorate
EVA, Robotics, and Crew Systems Operations Division

Final, Rev A
August 19, 2004

NOTE
This supplement is to be integrated into the generic edition to provide a complete document for the specific flight. Some pages in the generic edition may be replaced with supplemental pages identified as 'TEMP'. These generic pages, if any, must be retained for use on future flights.

National Aeronautics and
Space Administration

Lyndon B. Johnson Space Center
Houston, Texas

MISSION OPERATIONS DIRECTORATE

EVA CHECKLIST
STS-114 FLIGHT SUPPLEMENT

FINAL, REV A
August 19, 2004

PREPARED BY:

Matthew M. Myers
Book Manager

APPROVED BY:

for Mary A. Fitts
Lead, EVA Systems Group

Randall S. McDaniel
Lead, EVA Task Group

James V. Thornton
Chief, EVA and Crew Systems Operations Branch

This document is under the configuration control of the Crew Procedures Control Board (CPCB). Except for Discrepancy Notices (DN) approved at the flight operations review (FOR), all proposed changes must be submitted via FDF Workflow Crew Procedure Change Request (CR) to DO3/FDF Manager.

Additional distribution of this book, for official use only, may be requested in writing to DO3/FDF Manager. The request must include justification and requester's name, organization, position, and phone number. Contractor requests are made through the NASA or DOD organization supported. Deletions, reduction in quantity, or change of address may be submitted to DO3/FDF Management Office, 281-244-1184.

Incorporates the following:
482#: None – Establishes baseline

AREAS OF TECHNICAL RESPONSIBILITY

Book Manager	DX32/M. Myers	281-483-7501
Alternate Book Manager	DX32/C. Begley	281-483-7495

LIST OF EFFECTIVE PAGES

FINAL	12/06/02
REV A	08/19/04

Sign Off	*	114/FIN A	4-4		generic
FS ii	*	114/FIN A	4-5		generic
iii	*	generic	4-6		generic
iv	*	generic	4-7		generic
FS v	*	114/FIN A	4-8		generic
FS vi	*	114/FIN A	4-9		generic
FS vii	*	114/FIN A	4-10		generic
FS viii	*	114/FIN A	FS CC 4-11		114/FIN A
FS ix		114/FIN A	FS CC 4-12		114/FIN A
FS x		114/FIN A	5-1		generic
FS xi		114/FIN A	5-2		generic
FS xii		114/FIN A	5-3		generic
FS xiii		114/FIN A	5-4		generic
FS xiv		114/FIN A	A6-1		generic
1-1		generic	CC A6-2		generic
1-2		generic	6-3		generic
1-3		generic	CC 6-4		generic
1-4		generic	FS 7-1		114/FIN A
1-5		generic	FS 7-2		114/FIN A
1-6		generic	FS 7-3		114/FIN A
1-7		generic	FS 7-4		114/FIN A
1-8		generic	FS 7-5		114/FIN A
1-9		generic	FS 7-6		114/FIN A
1-10		generic	FS 7-7		114/FIN A
2-1		generic	FS 7-8		114/FIN A
2-2		generic	FS 7-9		114/FIN A
2-3		generic	FS 7-10		114/FIN A
2-4		generic	FS 7-11		114/FIN A
2-5		generic	FS 7-12		114/FIN A
2-6		generic	FS 7-13		114/FIN A
3-1		generic	FS 7-14		114/FIN A
3-2		generic	FS 7-15		114/FIN A
3-3		generic	FS 7-16		114/FIN A
3-4		generic	FS 7-17		114/FIN A
3-5		generic	FS 7-18		114/FIN A
3-6		generic	FS 7-19		114/FIN A
3-7		generic	FS 7-20		114/FIN A
3-8		generic	FS 7-21		114/FIN A
CC 3-9		generic	FS 7-22		114/FIN A
CC 3-10		generic	FS 7-23		114/FIN A
3-11		generic	FS 7-24		114/FIN A
3-12		generic	FS 7-25		114/FIN A
TEMP FS 4-1		114/FIN A	FS 7-26		114/FIN A
TEMP FS 4-2		ALL/FIN A	FS 7-27		114/FIN A
4-3		generic	FS 7-28		114/FIN A

* – Omit from flight book

FS 7-29 ..... 114/FIN A
FS 7-30 ..... 114/FIN A
FS 7-31 ..... 114/FIN A
FS 7-32 ..... 114/FIN A
FS 7-33 ..... 114/FIN A
FS 7-34 ..... 114/FIN A
FS 7-35 ..... 114/FIN A
FS 7-36 ..... 114/FIN A
8-1..... generic
8-2..... generic
8-3..... generic
8-4..... generic
8-5..... generic
8-6..... generic
9-1..... generic
9-2..... generic
9-3..... generic
9-4..... generic
9-5..... generic
9-6..... generic
10-1..... generic
10-2..... generic
10-3..... generic
10-4..... generic
10-5..... generic
10-6..... generic
10-7..... generic
10-8..... generic
10-9..... generic
10-10..... generic
11-1..... generic
11-2..... generic
11-3..... generic
11-4..... generic
12-i ..... generic
12-ii ..... generic
12-1..... generic
12-2..... generic
12-3..... generic
12-4..... generic
12-5..... generic
12-6..... generic
12-7..... generic
12-8..... generic
12-9..... generic
12-10..... generic
12-11..... generic
12-12..... generic
12-13..... generic
12-14..... generic
12-15..... generic
12-16..... generic
12-17 ..... generic
12-18 ..... generic
13-1 ..... generic
13-2 ..... generic
13-3 ..... generic
13-4 ..... generic
14-1 ..... generic
14-2 ..... generic
14-3 ..... generic
14-4 ..... generic
14-5 ..... generic
14-6 ..... generic
14-7 ..... generic
14-8 ..... generic
14-9 ..... generic
14-10 ..... generic
14-11 ..... generic
14-12 ..... generic
14-13 ..... generic
14-14 ..... generic
14-15 ..... generic
14-16 ..... generic
14-17 ..... generic
14-18 ..... generic
14-19 ..... generic
14-20 ..... generic
14-21 ..... generic
14-22 ..... generic
15-1 ..... generic
15-2 ..... generic
15-3 ..... generic
15-4 ..... generic
15-5 ..... generic
15-6 ..... generic
15-7 ..... generic
15-8 ..... generic
15-9 ..... generic
15-10 ..... generic
15-11 ..... generic
15-12 ..... generic
15-13 ..... generic
15-14 ..... generic
16-i ..... generic
16-ii..... generic
TEMP FS 16-1..... 114/FIN A
TEMP FS 16-2..... ALL/FIN A
FS 16-3..... 114/FIN A
FS 16-4..... 114/FIN A
FS 16-5..... 114/FIN A
FS 16-6..... 114/FIN A
FS 16-7..... 114/FIN A
FS 16-8..... 114/FIN A

FS 16-9 ..... 114/FIN A
FS 16-10 ..... 114/FIN A
FS 16-11 ..... 114/FIN A
FS 16-12 ..... 114/FIN A
FS 16-13 ..... 114/FIN A
FS 16-14 ..... 114/FIN A
FS 16-15 ..... 114/FIN A
FS 16-16 ..... 114/FIN A
FS 16-17 ..... 114/FIN A
FS 16-18 ..... 114/FIN A
FS 16-19 ..... 114/FIN A
FS 16-20 ..... 114/FIN A
17-1 ..... * generic
17-2 ..... * generic
FS 18-1 ..... 114/FIN A
FS 18-2 ..... 114/FIN A
FS 18-3 ..... 114/FIN A
FS 18-4 ..... 114/FIN A
FS 18-5 ..... 114/FIN A
FS 18-6 ..... 114/FIN A
FS 18-7 ..... 114/FIN A
FS 18-8 ..... 114/FIN A
FS 18-9 ..... 114/FIN A
FS 18-10 ..... 114/FIN A
FS 18-11 ..... 114/FIN A
FS 18-12 ..... 114/FIN A
FS 18-13 ..... 114/FIN A
FS 18-14 ..... 114/FIN A
FS 18-15 ..... 114/FIN A
FS 18-16 ..... 114/FIN A
FS 18-17 ..... 114/FIN A
FS 18-18 ..... 114/FIN A
FS 18-19 ..... 114/FIN A
FS 18-20 ..... 114/FIN A
FS 18-21 ..... 114/FIN A
FS 18-22 ..... 114/FIN A
FS 18-23 ..... 114/FIN A
FS 18-24 ..... 114/FIN A
FS 18-25 ..... 114/FIN A
FS 18-26 ..... 114/FIN A
FS 18-27 ..... 114/FIN A
FS 18-28 ..... 114/FIN A
FS 18-29 ..... 114/FIN A
FS 18-30 ..... 114/FIN A
FS 18-31 ..... 114/FIN A
FS 18-32 ..... 114/FIN A
FS 18-33 ..... 114/FIN A
FS 18-34 ..... 114/FIN A
FS 18-35 ..... 114/FIN A
FS 18-36 ..... 114/FIN A
FS 18-37 ..... 114/FIN A
FS 18-38 ..... 114/FIN A
FS 18-39 ..... 114/FIN A
FS 18-40 ..... 114/FIN A
FS 18-41 ..... 114/FIN A
FS 18-42 ..... 114/FIN A
FS 18-43 ..... 114/FIN A
FS 18-44 ..... 114/FIN A
FS 18-45 ..... 114/FIN A
FS 18-46 ..... 114/FIN A
19-i ..... generic
19-ii ..... generic
19-1 ..... generic
19-2 ..... generic
19-3 ..... generic
19-4 ..... generic
19-5 ..... generic
19-6 ..... generic
19-7 ..... generic
19-8 ..... generic
19-9 ..... generic
19-10 ..... generic
20-1 ..... * generic
20-2 ..... * generic

* – Omit from flight book

EVA CUE CARDS

Title	Ref. Page	Card No.
SAFER CHECKOUT RESULTS (Front).....	CC 3-9	generic
SAFER STATUS TROUBLESHOOTING (Back)	CC 3-10	generic
EVA PREBREATHE CUE CARD (Front).....	FS CC 4-11	EVA-5a/114/O/B
(Back)	FS CC 4-12	EVA-5b/114/O/B
DEPRESS/REPRESS		
Nominal Configuration		
(Front).....	CC A6-2	generic
FAILED LEAK CHECK		
(Back of DEPRESS/REPRESS).....	CC 6-4	generic

CONTENTS PAGE

10.2 PSI CABIN 1-1
MASK PREBREATHE INITIATE 1-2
PREP FOR 10.2 PSI CABIN 1-3
CABIN DEPRESS TO 10.2 PSI 1-4
10.2 PSIA DEPRESS CHART 1-5
PSI CABIN CONFIG 1-6
MASK PREBREATHE TERMINATE 1-6
10.2 PSI MAINTENANCE 1-7
CABIN REPRESS TO 14.7 PSI 1-8
14.7 PSI CABIN CONFIG 1-9

AIRLOCK CONFIG 2-1
AIRLOCK PREP 2-2
EMU SWAP 2-3
BOOSTER FAN DEACTIVATION/REMOVAL 2-4
INSTALLATION/ACTIVATION 2-4
EVA TOOL TRANSFER 2-4
EMU REMOVAL 2-4
INSTALLATION 2-4
CHECKOUT PREP 2-5
LTA RESTRAINT STRAP REMOVAL 2-6
INSTALLATION 2-6

CHECKOUTS 3-1
EMU CHECKOUT 3-2
EMU POWERUP 3-2
COMM CHECK 3-2
PRIMARY REGULATOR/FAN/PUMP CHECK 3-3
SOP CHECK 3-5
BATTERY CHARGE CHECK INIT 3-5
TERM 3-6
EMU SWAP DURING CHECKOUT 3-6
POST EMU C/O RECONFIG 3-7
SAFER CHECKOUT 3-7
SELF TEST SEQUENCE 3-8
SAFER CHECKOUT RESULTS ..... CC 3-9
STATUS TROUBLESHOOTING ..... CC 3-10
REBA POWERED HARDWARE CHECKOUT 3-11

EVA PREP ..... TEMP FS 4-1
MIDDECK PREP ..... TEMP FS 4-2
EVA PREP ..... TEMP FS 4-2
PREP FOR DONNING ..... TEMP FS 4-2
EMU DONNING 4-4
CHECK 4-5
EMU PURGE 4-6
EMU PREBREATHE 4-6
SAFER DONNING 4-6
EVA COMM CONFIG 4-8
DECONFIG 4-8
CO2 RMVL SYS DEACT 4-9
ACT 4-9
EVA PREBREATHE CUE CARD ..... FS CC 4-11

EMU STATUS 5-1
EMU STATUS 5-2

DEPRESS/REPRESS A6-1
DEPRESS/REPRESS (NOM A/L) ..... CC A6-2
FAILED LEAK CHECK 6-3
FAILED LEAK CHECK (5 PSI) ..... CC 6-4
(14.7/10.2 PSI) ..... CC 6-4

TIMELINES ..... FS 7-1
EVA 1 (TBD) ..... FS 7-3
EVA 2
EVA 2 INHIBIT PAD ..... FS 7-5
NOTES, CAUTIONS, AND WARNINGS ..... FS 7-6
EVA 2 BRIEFING CARD ..... FS 7-7
SUMMARY TIMELINE ..... FS 7-8
TOOL CONFIG ..... FS 7-9
EGRESS/SETUP ..... FS 7-10
CMG R&R (HC) ..... FS 7-12
CLEANUP/INGRESS ..... FS 7-17
EVA 3
EVA 3 INHIBIT PAD ..... FS 7-19
NOTES, CAUTIONS, AND WARNINGS ..... FS 7-20
EVA 3 BRIEFING CARD ..... FS 7-21
SUMMARY TIMELINE ..... FS 7-22
TOOL CONFIG ..... FS 7-23
EGRESS/SETUP ..... FS 7-24
ESPAD INSTALL (HC) ..... FS 7-25
PRIMARY CABLE ROUTING ..... FS 7-28
MISSE 1 AND 2 RETRIEVAL ..... FS 7-29
5 INSTALL ..... FS 7-30
SECONDARY CABLE ROUTING ..... FS 7-31
ESP2 INSTALLATION ..... FS 7-33
FRGF REMOVE AND STOW ..... FS 7-35
CLEANUP/INGRESS ..... FS 7-36

TOOLS AND STOWAGE 8-1
PGT CHECKOUT 8-3
760XD PGSC-PGT CONNECTION 8-4
PROGRAM PGT SETTINGS 8-4
DOWNLOAD/ERASE EVENT LOG 8-5
PGT CONTINGENCIES 8-6

POST EVA 9-1
POST EVA 9-2
SUIT DOFFING 9-2
SAFER DOFFING 9-2
EMU WATER RECHARGE 9-3
SAFER STOW 9-4
SUIT DRYING/SEAL WIPE 9-4
OXYGEN RECHARGE VERIFICATION 9-4
WATER FILL VERIFICATION 9-4
EMU POWERDOWN 9-5

EMU MAINT/RECHARGE 10-1
WATER RECHARGE 10-2
EMU POWERUP 10-2
WATER FILL 10-2
OXYGEN RECHARGE VERIFICATION 10-3
WATER FILL VERIFICATION 10-3

EMU LiOH CHANGEOUT 10-4
MIDDECK EMU BATTERY RECHARGE/LiOH REPLACEMENT 10-5
INITIATE 10-5
TERMINATE 10-5
IN-SUIT EMU BATTERY RECHARGE/CHARGE VERIFICATION 10-6
INITIATE 10-6
TERMINATE 10-6
EMU POWERDOWN 10-6
HELMET LIGHT/PGT BATTERY RECHARGE 10-7
INITIATE 10-7
TERMINATE 10-7
REBA BATTERY INSTALLATION 10-8
EMU BATTERY REMOVAL/INSTALL 10-8
HELMET LIGHT BULB CHANGEOUT 10-9
REBA BATTERY RECHARGE 10-10
INITIATE 10-10
TERMINATE 10-10

POST EVA ENTRY PREP 11-1
POST EVA ENTRY PREP 11-2
SAFER ENTRY STOW 11-2
POST ISS EVA ENTRY PREP 11-3
SAFER ENTRY STOW 11-3

OFF-NOMINAL PROCEDURES 12-i
EMU CONTINGENCY PROCS 12-1
DISPLAY LOSS DURING POWER TRANSFER
(WARM RESTART) 12-2
VACUUM H2O RECHARGE (MANNED) 12-2
LIOH REPLACEMENT (MANNED) 12-3
BATTERY REPLACEMENT (MANNED) 12-4
WATER DUMP 12-5
SCU SWAP (UNMANNED) 12-6
(MANNED) 12-6
EMU COLD RESTART (MANNED) 12-6
12.1 CHEMICAL CHECK/DECONTAMINATION 12-7
CONTAMINATION TEST 12-10
SAFER BATTERY CHANGEOUT 12-11
BENDS TREATMENT ADAPTER (BTA) INSTALLATION (IN-SUIT) 12-12
BTA PREP 12-12
TREATMENT 12-12
BENDS TREATMENT ADAPTER (BTA) INSTALLATION
(POST SUIT DOFFING) 12-14
BTA PREP 12-14
TREATMENT 12-14
EMU RESIZE 12-17

DAP/EVA RESCUE/RETRIEVE 13-1
EVA ORBITER CONFIGURATION 13-2
RESCUE/RETRIEVE 13-4

ORBITER CONTINGENCY EVA 14-1
PAYLOAD BAY EVA NOMENCLATURE 14-2
RMS/PRLA CONTINGENCY EVA 14-3
96 BOLT PRE-EVA TOOL CONFIG 14-13
EVA TIMELINE 14-14
CAPTURE LATCH MANUAL RELEASE (ODS/PMA) 14-19
96 BOLT EVA LAYOUT 14-21

EVA CUFF CHECKLIST (CIL) 15-1
NORMAL EVA STATUS 15-2
EVA COMM FREQUENCIES 15-2
EMU MAL INDEX 15-2
DECOMPRESSION SICKNESS (DCS) 15-3
ABORT EVA 15-3
TERMINATE EVA 15-3
SOP O2 ON 15-4
BATT AMPS HIGH 15-4
VDC LOW 15-4
SUIT P LOW 15-4
HIGH 15-5
SOP P LOW 15-5
O2 USE HIGH 15-5
SUBLM PRESS 15-5
H2O GP LOW 15-6
RESRV H2O ON 15-6
NO VENT FLOW 15-6
CO2 15-6
COMM FAILURE 15-7
MISC MSGS 15-7
AIR FLOW CONTAMINATION 15-7
RADIATOR ACTUATOR DISCONNECT 15-8
PLBD DRIVE CUT 15-8
DOOR DRIVE RESTRAINT 15-8
DISCONNECT 15-9
WINCH OPERATIONS 15-9
3-PT TOOL INSTALLATION 15-9
CL LATCH TOOL 15-10
TOOL RESET 15-10
AIRLOCK LATCH DISCONNECT 15-10
HINGE DISCONNECT 15-10
RMS JOINT ALIGN 15-10
SHOULDER BRACE RELEASE 15-10
MPM STOW/DEPLOY 15-10
RMS TIEDOWN 15-11
FLIGHT RELEASABLE GRAPPLE FIXTURE RELEASE 15-11
PRLA OPEN/CLOSE 15-11
KU ANTENNA STOW 15-12
AIRLOCK EGRESS 15-12
INGRESS 15-12

FLIGHT SPECIFIC REFERENCE 16-i
UNSCHEDULED/CONTINGENCY EVA TASKS ..... TEMP FS 16-1
LF1 EVA FAILURE WORKAROUND CRIBSHEET ..... FS 16-3
RELEASE ROEU LATCHES ..... FS 16-10
LATCH ROEU LATCHES ..... FS 16-11
STOW ROEU ARM ..... FS 16-12
MATE ROEU ARM ..... FS 16-13
ROEU OVERVIEW ..... FS 16-14
MANUALLY OPEN/CLOSE CBM PETAL ..... FS 16-15
CLEAR/RESTRAIN CBM CAPTURE LATCH ..... FS 16-16
REMOVE/REPLACE CBM CONTROLLER ASSEMBLY ..... FS 16-17
MMOD CENTER COVER ..... FS 16-19

GENERIC EVA REFERENCE ..... NOT FLOWN

FLIGHT SPECIFIC EVA REFERENCE ..... FS 18-1
STS-114 PAYLOAD BAY LAYOUT ..... FS 18-3
ESP2 LAUNCH CONFIGURATION (TOP VIEW) ..... FS 18-4
(BOTTOM VIEW) ..... FS 18-5
ESPAD COMPONENTS ..... FS 18-6
ACTIVE ESPAD ..... FS 18-7
ESPAD LAUNCH BOLTS ..... FS 18-8
EUTAS COMPLIANT BOLTS ..... FS 18-9
ESPAD INSTALL ..... FS 18-10
EUTAS ..... FS 18-11
ESPAD STRUT ..... FS 18-12
DEPLOY ..... FS 18-13
V-GUIDE ..... FS 18-14
CLOSEUP ..... FS 18-15
ESP2 INSTALL ..... FS 18-16
POWER FROM ESP2 TO ORBITER ..... FS 18-17
ORBITER POWER CABLE STOWED ..... FS 18-18
ESP2 POWER CABLES ..... FS 18-19
FLIGHT CABLES ..... FS 18-20
CABLE TIES ..... FS 18-21
PRIMARY POWER CABLE ROUTING ..... FS 18-22
SECONDARY CABLE INSTALL – PANEL A119 ..... FS 18-23
ROUTING ..... FS 18-24
ACTIVE ESPAD HR LABELS ..... FS 18-26
PASSIVE ESPAD HR LABELS ..... FS 18-27
HR AND WIF LAYOUT (ZENITH) ..... FS 18-28
(NADIR) ..... FS 18-29
MISSE LOCATIONS ..... FS 18-30
ESP2 FRGF ..... FS 18-31
LMC WITH CMG ..... FS 18-32
CMG NOMENCLATURE ..... FS 18-33
LOCATION ..... FS 18-34
AFT Z1 PRE-LAUNCH WITH BLANKET ..... FS 18-35
CMG ON Z1 ..... FS 18-36
SHIMS AT Z1 ..... FS 18-37
BLANKET CLOSED ON CMG IN FSE ..... FS 18-38
NEW CMG WITH BLANKET ..... FS 18-39
CMG IN FSE WITH MLI ..... FS 18-40
SHIMS ON FSE ..... FS 18-41
FSE WITHOUT MLI OR CMG ..... FS 18-42
SWAP IN PLB ..... FS 18-43

EVA EMERGENCY 19-i
EMERGENCY PROCEDURES 19-1
EMERGENCY AIRLOCK REPRESS 19-3
EMERGENCY AIRLOCK REPRESS 19-4
POST EMERGENCY AIRLOCK REPRESS 19-4
SAFER RESCUE 19-5
SAFER RESCUE 19-6
19.1 DCS TREATMENT 19-7

CUE CARD CONFIGURATION 20-1

This Page Intentionally Blank

EVA PREP

MIDDECK PREP ..... TEMP FS 4-2
EVA PREP ..... TEMP FS 4-2
PREP FOR DONNING ..... TEMP FS 4-2
EMU DONNING 4-4
CHECK 4-5
EMU PURGE 4-6
EMU PREBREATHE 4-6
SAFER DONNING 4-6
EVA COMM CONFIG 4-8
DECONFIG 4-8
CO2 RMVL SYS DEACT 4-9
ACT 4-9
EVA PREBREATHE CUE CARD ..... FS CC 4-11

> **WARNING**
> Payload bay floods exceed EMU thermal limits during operation. If EVA crew will be operating in vicinity of PLB floods, floods must be turned off now. Cooldown time may be as long as 6 hr

MIDDECK PREP (30 min)

AW18A
1. LTG FLOOD (four) – ON
2. √EVA Bag installed in airlock
3. √REBA sw – OFF

If EMU TV:

4. Demate EMU TV power cable; connect ground plug
5. Disconnect helmets; Velcro to lockers

HUT
6. Remove Drink Bag restraint bag
7. Fill Drink Bag from galley, remove gas and insert Drink Bag in restraint bag
8. Install Drink Bag restraint bag in HUT and dispose of fill tool in wet trash
9. Apply anti-fog (EMU Servicing Kit), wipe off:
   - Helmets (not Fresnel lens)
   - EV glasses, attach to comm cap
10. Stow EMU Servicing Kit
11. Install Helmets; lock
12. Attach Cuff C/L to EMUs

EVA PREP (90 min)

MET _____/____:___ _____	MET _____/____:___ _____	MET _____/____:___ _____

PREP FOR DONNING (30 min)

If internal airlock:

ML31C ☐☐☐ 1. √VAC VENT ISOL VLV CNTL tb – OP
√NOZ HTR – ON

If external airlock:

BOTH DCM ☐☐☐ 2. Retrieve, position SCU; remove DCM cover
☐☐☐ 3. Connect SCU to DCM, √locked
AW82B ☐☐☐ 4. EV-1,EV-2 O2 vlv (two) – op
MO13Q ☐☐☐ 5. √ARLK H2O S/O VLV – OP (tb-OP)
MD(flr) ☐☐☐ 6. √EMU O2 ISOL VLV – OP
ML86B:C ☐☐☐ 7. √cb MNC EXT ARLK HTR ZN 1,2 (two) – op
L2 ☐☐☐ 8. √O2 XOVR SYS 1,2 (two) – OP
BOTH DCM ☐☐☐ 9. PWR – BATT

> **CAUTION**
> EMU must be on BATT pwr when airlock power supply turned on

AW18H ☐☐☐ 10. PWR/BATT CHGR EMU 1,2 MODE (two) – PWR
BUS SEL (two) – MNA(MNB)
DCM ☐☐☐ 11. PWR – SCU
☐☐☐ 12. Verify panels as shown next page

TOP

HOOK VELCRO

EVA PREBREATHE CUE CARD

EVA PREBREATHE EVENTS

EVA PREP (170 minutes)

Mask Prebreathe (80 minutes) | EMU Donning | EMU Check

EV1 Exercise (10 minutes)

EV2 Exercise (10 minutes)

Airlock Depress to 10.2 psi (20 minutes)

A P/B PET = 0:00
(Start Clock)
Inform **MCC-H**.
EVA 1)GMT =___/____:____
2)GMT =___/____:____
3)GMT =___/____:____
4)GMT =___/____:____

B EV2 EXERCISE END
Inform **MCC-H**.
EVA 1) P/B PET =___/____:____
2) P/B PET =___/____:____
3) P/B PET =___/____:____
4) P/B PET =___/____:____

C INITIATING 10.2 DEPRESS
If BLOCK B P/B PET ≤ 0:35
Depress at P/B PET = 0:50
If BLOCK B P/B PET > 0:35
Depress 15 minutes after BLOCK B.

Actual depress start, inform **MCC-H**.
EVA 1) P/B PET =___/____:____
2) P/B PET =___/____:____
3) P/B PET =___/____:____
4) P/B PET =___/____:____

NOTE
Will hold at 12.5 to 11.8 psi until depress start P/B PET plus 15 minutes

BREAK DURING 10.2 PSI OPS
E-Lk Pressure Increasing. Don PHA mask immediately.

D MASK PREBREATHE TERM
Inform **MCC-H**.
EVA 1) P/B PET =___/____:____
2) P/B PET =___/____:____
3) P/B PET =___/____:____
4) P/B PET =___/____:____

WARNING
Duration of interruption in protocol must be recorded. Interruptions other than during exercise will use PHA or EMU for O2 buy-back. Contact **MCC-H** for buy-back duration and location.

WARNING
Do not terminate mask prebreathe until airlock pressure at 10.2 psia (527 mmHg) and P/B PET > 1:20 and 45 minutes since block B and airlock O2 concentration between 23.5 to 28.8 % (27 to 28 % target).

EMU Purge (12 minutes) | EMU Prebreathe (60 minutes) | Crewlock Depress (30 minutes)

Airlock Repress

5 minutes

E EMU PURGE START
Inform **MCC-H**.
EVA 1)GMT =___/_____:_____
2)GMT =___/_____:_____
3)GMT =___/_____:_____
4)GMT =___/_____:_____

F EMU PREBREATHE START
Inform **MCC-H**.
EVA 1)GMT =___/_____:_____
2)GMT =___/_____:_____
3)GMT =___/_____:_____
4)GMT =___/_____:_____

G CREWLOCK DEPRESS START:
Start depress when:
EMU Purge/Prebreathe time ≥ 1:12

C-Lk DEPRESS, START TIMER
EVA 1) GMT =___/____:____
2) GMT =___/____:____
3) GMT =___/____:____
4) GMT =___/____:____

EVA-5a/114/O/B

(reduced copy)

TOP
BACK OF 'EVA PREBREATHE CUE CARD'

HOOK
VELCRO

EVA PREBREATHE CUE CARD

EVA EXERCISE PRESCRIPTION

Start Exercise Protocol	When Exercise Complete
DON EXERCISE EQUIPMENT: 1. Don Heart Rate Monitor chest strap and synchronize start of exercise with Heart Rate Watch and CEVIS Refer to {CEVIS ON LINE MODE OPERATIONS}, steps 2 and 4.2 to 4.4 (SODF: MED OPS: NOMINAL: CM), then: 2. Configure bungees on CEVIS. IF USING SHUTTLE O2, RECONFIGURE PHA TO 90 FT HOSE: 3. 90-ft hose from shuttle LEH Port→|← Special Tee Assembly 4. 60-ft hose from PBA port ←|→ Special Tee Assembly 5. Temporarily stow 60-ft hose for use after CEVIS ops. INITIATE EXERCISE 6. Perform exercise per prescription below. Synchronize start of Heart Rate Watch with exercise.	TERMINATE EXERCISE 7. Press STOP on CEVIS display and stop heart rate watch. 8. Record Exercise End PET (For EV2 record in Block B of Prebreathe Events). 9. Momentarily pull mask away from face to verify positive O2 flow. If no O2 flow, contact **MCC-H**. 10. If all EV crew have completed exercise Cycle ergometer Power Switch → OFF Remove PCMCIA card from CEVIS. Temporarily stow PCMCIA card. DOFF EXERCISE EQUIPMENT 11. Doff Heart Rate Monitor chest strap. Clean with alcohol wipes (EMU Servicing Kit) avoiding electrodes. 12. Doff Ergometer/CEVIS shoes IF USING SHUTTLE O2, RECONFIGURE PHA TO 60 FT HOSE When 5 minutes have elapsed after exercise completion 13. 60-ft hose from PBA port →|← Special Tee Assembly 14. 90-ft hose from Shuttle LEH Port ←|→ Special Tee Assembly

NOTE

1. Maintain > 60 rpm and match arm/leg cadence (pedaling effort at < 60 rpm becomes noticeably more difficult). Use table values for workload and record heart rate. If heart rate exceeds the maximum indicated at the top of the table, decrease workload by 25-watt increments until heart rate falls below the maximum.
2. CEVIS timer will not increase while arrows remain displayed. Workload will change as soon as arrows are pressed.
3. If an interruption of either exercise or mask prebreathe < 2 minutes occurs during the 10-minute exercise, extend the 75 % max VO2 portion of the table for a duration equal to the interruption.

EXERCISE PRESCRIPTION		EV 1				EV 2				EV 3				EV 4			
		Workload (watts)	Heart Rate (bpm) (Not to exceed = ____)			Workload (watts)	Heart Rate (bpm) (Not to exceed = ____)			Workload (watts)	Heart Rate (bpm) (Not to exceed = ____)			Workload (watts)	Heart Rate (bpm) (Not to exceed = ____)		
Time	Max VO2		EVA#1	EVA#2	EVA#3		EVA#1	EVA#2	EVA#3		EVA#1	EVA#2	EVA#3		EVA#1	EVA#2	EVA#3
1 min	37.5 %																
1 min	50 %																
1 min	62.5 %																
7 min	75 %																
1 min	Cooldown																
Exercise End PET			:	:	:		:	:	:		:	:	:		:	:	:

EVA-5b/114/O/B

(reduced copy)

TIMELINES

EVA 1 (TBD) ..... FS 7-3
EVA 2
- EVA 2 INHIBIT PAD ..... FS 7-5
- NOTES, CAUTIONS, AND WARNINGS ..... FS 7-6
- EVA 2 BRIEFING CARD ..... FS 7-7
  - SUMMARY TIMELINE ..... FS 7-8
  - TOOL CONFIG ..... FS 7-9
  - EGRESS/SETUP ..... FS 7-10
- CMG R&R (HC) ..... FS 7-12
- CLEANUP/INGRESS ..... FS 7-17

EVA 3
- EVA 3 INHIBIT PAD ..... FS 7-19
- NOTES, CAUTIONS, AND WARNINGS ..... FS 7-20
- EVA 3 BRIEFING CARD ..... FS 7-21
  - SUMMARY TIMELINE ..... FS 7-22
  - TOOL CONFIG ..... FS 7-23
  - EGRESS/SETUP ..... FS 7-24
- ESPAD INSTALL (HC) ..... FS 7-25
- PRIMARY CABLE ROUTING ..... FS 7-28
- MISSE 1 AND 2 RETRIEVAL ..... FS 7-29
  - 5 INSTALL ..... FS 7-30
- SECONDARY CABLE ROUTING ..... FS 7-31
- ESP2 INSTALLATION ..... FS 7-33
  - FRGF REMOVE AND STOW ..... FS 7-35
- CLEANUP/INGRESS ..... FS 7-36

This Page Intentionally Blank

EVA 1

TBD

This Page Intentionally Blank

EVA 2 INHIBIT PAD

MCS

MCC-M
1. √FGB Main Engine Thruster Valves (4) – closed
2. √FGB Manifold Valves (18) – closed
3. √FGB MCS unpowered
4. √SOYUZ manifolds (ten) closed
5. √SOYUZ MCS unpowered

RCS

If EV crew < 27 ft from FRCS:

IV
1. √DAP: √FREE, LO Z

O14,15,16
2. √RJDF F1, F2, F3, F4 MANF DRIVER (four) – OFF

MCC
3. √Above RCS config

Orbiter Antennas

NOTE

Possible loss of comm when forced LL FWD antenna

IV — If EV crew < 1.6 ft from S-Band antenna:

A1R
1. S-BAND FM ANT – XMIT LOWER/RCVR UPPER

O14,15,16
2. √MCC, lower antenna selected

If no comm, or on MCC call:

C3
3. S-BAND PM ANT – LL FWD

When EVA crewmember at least 1.6 ft away from all S-Band upper antennas:

C3
4. S-BAND PM ANT – GPC

MCC-H
5. √KU-BAND Mask active

LAB Window

IV — If EV crew near window, close window shutter

FGB Antennas

MCC-M
1. √TORU [TOPY] – Deactivate
2. √TV System [TBC] – Deactivate
3. √KURS P [Kurs] – Deactivate
4. √KURS A [Kurs] – Deactivate
5. √Sirius – Deactivate

SOYUZ Antennas

MCC-M
1. √KURS – Deactivate

SM Antennas (MCC-M)

MCC-M
1. Global Timing Sys 1 & 2 [GTS] – Deactivate

PCU

NOTE

PCUs may require up to 1 hr warm-up period before they are operational

MCC-H
1. √PCUs (two) operational, in discharge mode
   OR
   √1 PCU operational in discharge mode
   OR
   √One solar arrays oriented at least 105 deg from velocity vector

USOS Antennas

MCC-H
1. SGANT (KU) – Mask for EVA Worksites

CMG Inhibits

MCC-H
1. Verify EA Power Removal and Inhibit
   S0:EPS:RPCM S01A D: RPC 17
   RPCM S01A D RPC 17
   √RPC Position – Op
   √Close Cmd – Inh
2. Verify THA Power Removal and Inhibit
   Z1:EPS:RPCM Z13B B: RPC 10
   RPCM Z13B B RPC 10
   √RPC Position – Op
   √Close Cmd – Inh

NOTE: EV crew should not go more zenith than the IEA bulkhead to avoid S-band antenna high gain keep-out zone (3.6 ft in high gain, 1.3 ft in low gain)

NOTES, CAUTIONS, AND WARNINGS

EVA 2

NOTES

Verify connectors for debris, bent pins, and cable bend radii

CAUTION

Avoid inadvertent contact with:
Grapple fixture shafts (have coating)
- Grapple fixture target pin
- SVS Targets
- SSRMS/MBS operating cameras & lights (heat source)
- MBSVDU, MCU, CRPCMs & Cameras (silver Teflon tape radiative surface)
- Passive UMA
- Deployed TUS cable
- PMA1 MDM sunshade
- PMA2 TCS Reflector
- EVA crane
- APAS hardware
- Deployed MISSEs (A/L)
- CID Switches
- Z1 PCU Cathode Ports
- Z1 heat pipe radiators/coldplates
- SASA – Antenna and Z-93 paint (Z1 & P6)
- P6 FPP
- S0 Radiators (silver Teflon tape)

Avoid inadvertent contact with:
- S0 GPS Antenna (Z-93 paint)
- Lights (Z-93 paint)

CAUTION (Cont)

EVA connectors may become hot if left uncovered. Limited handling may be needed

PMA handrails may be hot. Handling may need to be limited

Keepout zone: Antenna (stbd sill) ft (nominal) 2.3 ft above	EVA UHF PLB Low power = 0.5 High power = 1.3 ft sides
Keepout zone:	WVS Antenna (stbd sill) – none

For structural reasons:
Avoid vigorous body motions, quick grabs, and kickoff tether restraints
Avoid performing shaking motions (sinusoidal functions) more than four cycles
If any of these occur, wait 2-5 min to allow structural response to dissipate

Avoid contact with ROEU power connectors that are below the payload bay sill. Low impact force or contact can cause hardware damage

WARNING

PMA umbilical launch restraints have exposed bolt threads (sharp)

EVA connectors present a pinch hazard. Caution should be used when mating/locking connectors

Fuse tether buckles stowed in Node bag may have sharp edges

During Lab window shutter operations, the EV crew must be clear of the Lab window

EV side of crew lock hatch is a potential pinch point and snag hazard during hatch operations

Avoid inner edges of WIF sockets due to potential sharp edges

TBD PRLA grounding wiper is a sharp edge hazard

EVA 2 BRIEFING CARD

	EV1 – Soichi	EV2 – Steve	IV – Andy
SSRMS:	M1 – Wendy	M2 – Vegas	

EVA Prep start MET: ____ / ____ ____ : ____ ____
Start dressing at MET: ____ / ____ ____ : ____ ____ i.e., _____ hours after wake up

EVA Prep
- Get-up plan – Clothing and WCS usage in post-sleep period Food/Drink in A/L ?
- IDB fills (night before)
- Equipment lock activities – Overall big picture
- Prebreathe protocol review
- Suit donning plan – any special requests ? Boot Bladder Manipulation ?
- SAFER, MWS, tools, CL positions, bag stowage – any deviations from standard ?
- Airlock depress review
- EV/IV comm protocol
- SRMS/SSRMS initial position – any deviations from training ?
- Crib sheet review – only big ticket items (CMG rapid-safing, CIPAA gun safing)

EV Crew Procedure Review
- Overall Timeline – just talk big picture, initial tether config, critical ops
- Any deviations from trained plan ?
- Any late additions from the Ground ?
- Any unplanned constraints ?
- Any get ahead tasks ?
- RMS operations – comm protocol/clearances – any off-nominal operations ?
- Specific Items to remember (clearances, tether ops, interference opportunities, photos, etc)

Unplanned Activities
- Any late requests from ISS expected ?

Emergencies Review
- Lost comm. – check location, show cuff C/L in WVS or bend backwards
- EMU malfunctions – call it out, all get on same page
- Lost tools – don't rush, don't chase unless easy reach
- Lost crewmember – Call Code L, IV to give location directions etc.
- SAFER ops reminders
- DCS procedures – Call Cuff Checklist, or potential Cuff Checklist
- Incapacitated crewmember – work slow, bring him in, safe site

Post EVA
- Suit doffing responsibilities
- Post EVA plan
- Any special food/drink requests ?
- Make sure WCS and galley are available to EV crew

Any lessons learned from prior EVA's:

EVA 2 SUMMARY TIMELINE

PET TIME (HR : MIN)	EVA 2		
	IV/SSRMS	**EV1 (SSRMS)**	**EV2 (FF)**
00:00 --	SSRMS: APFR INGRESS	**EVA 2 EGRESS/SETUP** (01:15) ■ POST DEPRESS and EGRESS (00:15)	**EVA 2 EGRESS/SETUP** (01:15) ■ POST DEPRESS and EGRESS (00:15)
-	SSRMS: NODE LIGHT REMOVAL	■ SETUP (01:00) SSRMS APFR setup and ingress	■ SETUP (01:00) Node gap spanner install Temp stow Node Light Stanchion
01:00 --	SSRMS: Z1 ACCESS (GCA)	CMG shroud removal	
-		**CMG R & R** (04:15) ■ REMOVE FAILED CMG (00:40) Demate connectors Unbolt CMG, shims, remove from soft dock	**CMG R & R** (04:15) ■ REMOVE FAILED CMG (00:40) Unbolt CMG, shims
02:00 --	SSRMS: MANEUVERING TO PAYLOAD BAY	■ REMOVE NEW CMG (01:30) SSRMS translation to PLB Temp stow failed CMG Unbolt new CMG, temp stow	■ REMOVE NEW CMG (01:30) TPS durometer test Ballstack setup Temp stow failed CMG Unbolt new CMG, temp stow
-			
03:00 --			
-		■ INSTALL FAILED CMG (01:00) Retrieve failed CMG Bolt failed CMG to FSE Retrieve new CMG SSRMS translation to Z1 CMG	■ INSTALL FAILED CMG (01:00) Retrieve failed CMG Bolt failed CMG to FSE PLB tool cleanup
04:00 --	SSRMS: MANEUVERING TO Z1		
-		■ INSTALL NEW CMG (00:45) Bolt new CMG to Z1 Mate CMG connectors	■ INSTALL NEW CMG (00:45) Bolt new CMG to Z1 Mate CMG connectors
05:00 --		■ REPLACE THERMAL SHROUD (00:20)	■ REPLACE THERMAL SHROUD (00:20)
-	SSRMS: NODE LIGHT STANCHION INSTALLATION	**CLEANUP/INGRESS** (01:00) ■ CLEANUP (00:35) Install node light stanchion SSRMS APFR cleanup	**CLEANUP/INGRESS** (01:00) ■ CLEANUP (00:35) Install node light stanchion
06:00 --	SSRMS: APFR EGRESS	■ INGRESS and PRE REPRESS (00:25)	■ INGRESS and PRE REPRESS (00:25)
-	EVA Time 6:30		

EVA 2 TOOL CONFIG

Pre-EVA 2 Tool Configuration

AIRLOCK

- ❑ Fuse Tether
- ❑ Spare PGT
- ❑ WIF Extender w/Adj Tether
- ❑ (zenith HR)
- ❑ F5 Camera
- ❑ Digital Camera

- ❑ Crewlock EVA Bag #1 (Aft UIA D-ring)
- ❑ 11/16” box end wrench
- ❑ Durometer
- ❑ Ball Stack
- ❑ MUT EE (2)
- ❑ Trash Bag
- ❑ Gap Spanner (72-in) (2)
- ❑ Gap Spanner (21-in)
- ❑ RET (lg-sm) (2)
- ❑ Adj Tether (2)
- ❑ Safety Tether

- ❑ AL D-ring Extender
- ❑ RET

Crewlock Endcone Bags

Staging Bag
- ❑ Connector Cleaner Tool Kit
- ❑ MUT EE
- ❑ Wire Tie Caddy (long and short)

IV Bag
- ❑ ISS Contamination Sampler (2)
- ❑ Draeger Tubes (6)
- ❑ Gold Salt Kit
- ❑ Socket Caddy
- ❑ Socket, 6-in ext
- ❑ Socket, 1/2 in drive, 8-in ext
- ❑ GP Caddy (2)
- ❑ Thermal Mitten pairs (2)
- ❑ EVA Ratchet
- ❑ DCM plug
- ❑ Ziplock bag w/2 towels

PMA1-WIF 02

- ❑ Ballstack (on tool stanchion)

SSRMS

- ❑ APFR w/WIF adapter

EV1

- ❑ MWS
- ❑ Right Swing Arm
- ❑ PGT, RET
- ❑ T-Bar w/wire ties (2)
- Trash Bag (sm)
- ❑ Socket Caddy
- ❑ Socket, 12-in ext
- ❑ RAD, 2-in ext
- ❑ Socket, 6-in ext
- ❑ RET Tether (2)
- ❑ Adj Tether (2)
- ❑ BRT w/2 wire ties, RET
- ❑ RET (sm/lg)
- ❑ Adj Tether (2, each wrist)
- ❑ Waist Tether (2)
- ❑ D-ring Extenders (2)
- ❑ Safety Tether (L)
- ❑ Safety Tether (R)
- ❑ Ingress Aid

EV2

- ❑ MWS
- ❑ Right Swing Arm
- ❑ PGT w/6-in ext, RET
- ❑ T-Bar w/wire tie (2)
- ❑ Socket Caddy
- ❑ RET Tether (2)
- ❑ Adj Tether (2)
- ❑ BRT w/2 wire ties, RET
- ❑ Adj Tether (left wrist)
- ❑ Waist Tether (2)
- ❑ D-ring Extenders (2)
- ❑ Safety tether (85 ft) (R)

Record:

Spare PGT (serial _____, bat # _____)

EV1 PGT (serial _____, bat # _____)

EV2 PGT (serial _____, bat # _____)

RAD (serial # _____)

Post-EVA 2 Tool Configuration

AIRLOCK

- ❑ Fuse Tether
- ❑ Spare PGT
- ❑ Wire Tie Caddy
- ❑ F5 Camera (2)
- ❑ MUT EE

- ❑ Crewlock EVA Bag #1
- ❑ Durometer
- ❑ 11/16” box end wrench
- ❑ F5 Camera
- ❑ Adj Tether (2)
- ❑ MUT EE (2)
- ❑ Ball stack
- ❑ RET tether (lg/sm) (2)

PMA1-WIF 02

- ❑ Ballstack (on tool stanchion)

AIRLOCK TOOLBOX #1

- ❑ APFR

EV1

- ❑ MWS
- ❑ Right Swing Arm
- ❑ PGT, RET Tether
- ❑ T-Bar w/wire ties (2)
- ❑ Trash Bag (sm)
- ❑ Socket Caddy
- ❑ Socket, 12-in ext
- ❑ RAD, 2-in ext
- ❑ Socket, 6-in ext
- ❑ WIF Adapter, RET Tether (sm/lg)
- ❑ RET Tether (sm-sm) (2)
- ❑ Adj Tether (3)
- ❑ BRT w/2 wire ties, RET Tether
- ❑ Adj Tether (2)
- ❑ Waist Tether (2)
- ❑ D-ring Extenders (2)
- ❑ Safety Tether

EV2

- ❑ MWS
- ❑ Right Swing Arm
- ❑ PGT w/6-in ext, RET Tether
- ❑ T-Bar w/wire tie (2)
- ❑ Socket Caddy
- ❑ Trash Bag (sm)
- ❑ RET Tether (sm-sm) (2)
- ❑ Adj Tether (2)
- ❑ BRT w/1 Wire Tie, RET Tether
- ❑ Adj Tether (1 left wrist)
- ❑ Waist Tether (2)
- ❑ D-ring Extenders (2)
- ❑ Safety tether (85 ft)
- ❑ Safety tether

EVA 2 EGRESS/SETUP

IV/RMS	EV1 (SSRMS)	EV2 (FF)
1. SSRMS: APFR INGRESS (ROBOTICS FS, EVA 2) 2. ISS views for Egress/Setup: PLB C, D 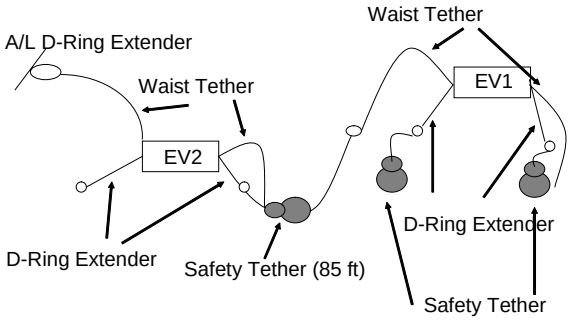 3. ISS view for EV1 Ingress: PLB A, B 4. MCC-H: perform CMG Power Inhibits 5. SSRMS: NODE LIGHT REMOVAL (ROBOTICS FS, EVA 2)	**Initial Configuration:** Waist tether (L) to EV2 Safety Tether (R) POST DEPRESS (00:05) Perform POST DEPRESS (EVA, DEPRESS/REPRESS) EGRESS (00:10) 1. Open A/L thermal cover 2. Egress airlock 3. Check SAFER valves (down) 4. Attach right safety tether to fwd external A/L D-ring, verify hook locked 5. Attach EV2 safety tether to aft external A/L D-ring, verify hook locked 6. Give EV2 GO for egress SETUP (01:00) 7. Translate to SSRMS setup worksite (port Z1, via fwd A/L translation path) 8. Perform Safety tether swap to SSRMS, verify hook locked 9. Remove A/L safety tether from EV1 D-ring extender, stow on Node HR 6013 10. Configure SSRMS APFR[12,PP,F,4] 11. Install Ingress aid 12. Ingress APFR 13. Assist EV2 with Node stanchion light removal; light's white paint is no touch area 14. GCA SSRMS to shroud removal worksite	**Initial Configuration:** Waist tether (L) to A/L D-ring extender. Safety Tether (R) to EV1 Waist tether (L) POST DEPRESS (00:05) Perform POST DEPRESS (EVA, DEPRESS/REPRESS) EGRESS (00:10) 1. Hold for EV1 GO 2. Release left waist tether from A/L D-ring extender 3. Retrieve Crewlock bag 4. Egress A/L w/Crewlock bag on BRT 5. Check SAFER valves (down) 6. Close hatch thermal cover SETUP (01:00) 7. Verify Crewlock bag on BRT 8. Translate to Z1 worksite (via aft translation path) 9. Watch all SSRMS clearances at Z1 worksite as required 10. Temp stow Crewlock bag on Node HR 0122 11. Remove box end wrench from Crewlock bag; stow on Node HR 0122 w/RET from MWS 12. Remove gap spanners/trash bag from Crewlock bag; stow on MWS 13. Install gap spanners in series on Node HRs 0122 (aft standoff) and 0121 (aft standoff), adj. end towards middle. Rotate buckle of gap spanner 90 degrees to ensure tension load is not too great 14. Remove Node light stanchion, light's white paint is no touch area 15. **PGT[B6, CCW2, 30.5]-6Ext-7/16:** Release stanchion bolt, 11 turns, fold stanchion towards Node, tether stanchion to Node HR 0106 away from Z1 worksite

EVA 2 EGRESS/SETUP (Cont)

IV/RMS	EV1 (SSRMS)	EV2 (FF)
SSRMS: Z1 ACCESS (ROBOTICS FS, EVA 2)	15. Remove Velcro and peel back Z1 CMG thermal shroud to gain access to CMG 1. Attach adj equip tether to MLI. Hand off to EV2 16. Perform WVS survey of failed CMG on Z1 ❑ WVS complete  	16. Restrain CMG thermal shroud by attaching adj equip tether to Z1 short HR 6002. Attach 2nd adj equip tether to MLI and stbd IAPFR 17. Retrieve ball stack from TS on PMA1, WIF02, stow in crewlock bag. Inspect ball stack sleeve and report if the sleeve is torn; ball stack will be NO GO

CMG R&R

IV/RMS

1. IV: Verify with MCC inhibits for CMG 1 prior to EV1 action
2. MCC: Confirm CMG EA/THA Power Removal and Inhibits from CMG R & R Task Data Sheet

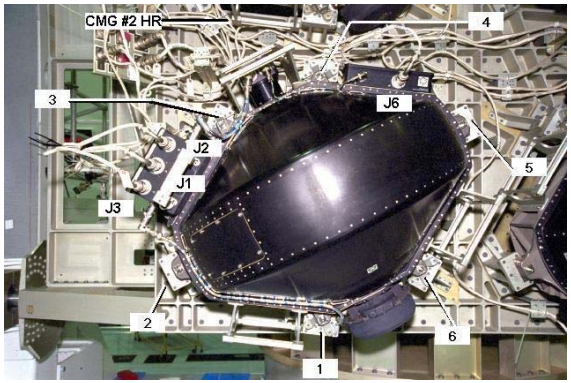

3. SSRMS: On EVA GO, MANEUVERING TO PAYLOAD BAY (ROBOTICS FS, EVA 2)

4. ISS views while in PLB: PLB A, B, no big picture needed

5. Record STA-54 Hardness Check Results:

Reading #	Reading
1	
2	
3	

EV1 (SSRMS)

REMOVE FAILED CMG (00:40)

1. On IV GO, demate connector:
   ❑J6 – tuck behind CMG #2 HR
2. Demate connectors:
   ❑J1 ❑J2 ❑J3
3. Temp stow connectors (3) with wire tie to Z1 HR 6021
4. **PGT[B7, CCW2, 30.5] –12Ext-7/16:** Loosen CMG bolts (4), 2 turns each, any order:
   ❑3 ❑4
   ❑1 ❑2
5. **PGT[A6, CCW2, 10.5] –12Ext-7/16:** Remove shims (2), place in trash bag, expect 10-14 turns, any order
   ❑3c ❑3d
6. Tether to CMG HR using lg/sm RET equip tether before removing last bolt
7. **PGT[B7, CCW2, 30.5] –12Ext-7/16:** Remove CMG bolts (4), expect 9-13 turns, any order:
   ❑3 ❑4
   ❑1 ❑2
8. Remove CMG from soft dock. Expect 16 lb force
9. Replace CMG into soft dock and remove to verify alignment
10. Give SSRMS GO to translate to LMC

REMOVE NEW CMG (01:30)

EV2 (FF)

REMOVE FAILED CMG (00:40)

1. Assist EV1 as required
2. BRT to CMG HR
3. **PGT[B7, CCW2, 30.5] –6Ext-7/16:** Loosen CMG bolts (2), 2 turns each, any order:
   ❑5 ❑6
4. When all 6 bolts loosened, wiggle CMG
5. **PGT[A6, CCW2, 10.5] –6Ext-7/16:** Remove shims (2), place in trash bag, expect 10-14 turns, any order
   ❑6c ❑6d
6. Release BRT from CMG HR
7. **PGT[B7, CCW2, 30.5] –6Ext-7/16:** Remove CMG bolts (2), expect 9-13 turns, any order:
   ❑5 ❑6
8. Assist EV1 until CMG clear of structure, verify EV1 has good EMU boot to APFR bootplate mate
9. Perform WVS survey of CMG location after removal of failed CMG
   ❑ WVS survey complete

REMOVE NEW CMG (01:30)

10. Retrieve Crewlock bag from Node HR 0102, stow on BRT
11. Translate to shuttle ODS truss, via stbd ISS
12. Remove spare safety tether from Crewlock bag, attach to ODS truss, verify hook locked
13. Attach spare safety tether to EMU D-ring extender, verify hook locked
14. Remove A/L 85 ft safety tether from D-ring, stow on PMA structure
15. Translate to LMC, fairlead safety tether on sill
16. Temp stow Crewlock bag on LMC, retrieve durometer
17. Remove pip pins (2) and open test port on DTO box
18. Measure TPS repair hardness (3 readings)
19. Close test port, install pip pins (2)
20. Stow durometer in Crewlock bag

IV/RMS	EV1 (SSRMS)	EV2 (FF)
	11. Hold failed CMG on lower inboard ball stack/MUT EE 12. GCA SSRMS to new CMG 13. **PGT[B7, CCW2, 30.5] –12Ext-7/16:** Loosen CMG bolts (4), 2 turns each, any order: ❑3 ❑4 ❑2 14. **PGT[A6, CCW2, 10.5] –12Ext-7/16:** Remove shims (2), place in trash bag, expect 10-14 turns, any order ❑3c ❑3d 15. Tether to CMG HR using lg/sm RET equip tether before last bolt 16. **PGT[B7, CCW2, 30.5] –12Ext-7/16:** Remove CMG bolts (4), expect 9-13 turns, any order: ❑3 ❑4 ❑2 17. Remove CMG 3 in from soft dock. Expect 16 lb force 18. Replace CMG into soft dock and remove to verify alignment 19. GCA SSRMS to temp stow location 20. Hold new CMG on upper ball stack/MUT EE 21. Remove tether from new CMG <u>INSTALL FAILED CMG</u> (01:00) 22. GCA to failed CMG 23. Tether to failed CMG 24. Remove failed CMG from ball stack/MUT EE after EV2 releases MUT EE 25. Insert CMG into FSE soft dock position on LMC, expect 16 lb force 26. **PGT[B7, CW2, 30.5] – 12Ext-7/16:** Install CMG bolts (3), 2 turns each: ❑3 ❑4 ❑2 27. Remove RET tether from CMG	21. Install ball stack and MUT EE to upper outboard LMC ECOM, attach lg/sm RET to LMC HR standoff, position ball stack 15 degrees to port 22. Route safety tether over lower ball stack 23. Install 2nd ball stack and MUT EE to lower inboard LMC ECOM, attach lg/sm RET to LMC HR standoff 24. Assist EV1 with CMG temp stow, attach MUT EE to CMG, attach lg hook of RET to CMG 25. Open CMG FSE thermal shroud, restrain as required 26. **PGT[B7, CCW2, 30.5] –6Ext-7/16:** Loosen CMG bolts (2), 2 turns each, any order: ❑1 ❑5 ❑6 27. **PGT[A6, CCW2, 10.5] –6Ext-7/16:** Remove shims (2), place in trash bag, expect 10-14 turns, any order ❑6c ❑6d 28. **PGT[B7, CCW2, 30.5] –6Ext-7/16:** Remove CMG bolts (2), expect 9-13 turns, any order: ❑1 ❑5 ❑6 <u>CAUTION</u> Avoid CMG contact with orbiter aft bulkhead WVS antenna 29. GCA EV1 to avoid WVS antenna 30. BRT to LMC, turn on left side, feet to sill 31. Assist EV1 with CMG temp stow, attach MUT EE to CMG, attach lg hook of RET to CMG 32. Release BRT, slide feet down on port side PLB <u>INSTALL FAILED CMG</u> (01:00) 33. Release failed CMG RET tether from failed CMG after EV1 tether to CMG 34. Release CMG from MUT EE 35. Route safety tether under ballstack, translate to FSE 36. GCA EV1 to avoid WVS antenna 37. Assist EV1 as required 38. **PGT[B7, CW2, 30.5] –6Ext-7/16:** Install CMG bolts (3), 2 turns each: ❑1 ❑5 ❑6

IV/RMS

6. IV: Record Installation values:

Bolt	Turns	Torque
CMG02 Bolt 3		
CMG02 Bolt 4		
CMG02 Bolt 5		
CMG02 Bolt 6		
CMG02 Bolt 1		
CMG02 Bolt 2		
ADJ SHIM 3A		
ADJ SHIM 6A		
ADJ SHIM 3B		
ADJ SHIM 6B		

7. SSRMS: On EVA GO, MANEUVER TO Z1 (ROBOTICS FS, EVA 2)

8. ISS views while moving to Z1: PLB A, B

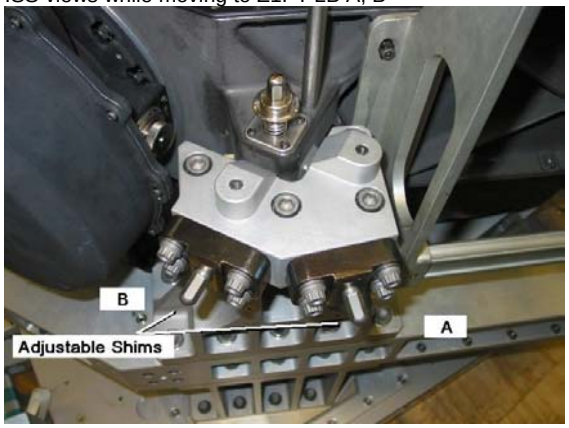

EV1 (SSRMS)

28. **PGT[B7, CW2, 30.5] –12Ext-7/16:** Torque CMG bolts (3), expect 9-13 turns to a torque stall:
    ❑3 ❑4 ❑2

    ← ☐ Report torque/turns

29. PGT: Swap 12Ext-7/16 to RAD, 2Ext-7/16
30. **PGT[A1, CCW1, 5.5] –RAD,2Ext-7/16:** Drive adjustable shim bolts bolts (2) to contact or torque stall, no pattern:
    ❑3a ❑3b

    ← ☐ Report torque/turns

31. GCA to new CMG

32. Tether to new CMG
33. Give EV2 GO for ballstack release

34. Retrieve new CMG (MUT EE/Ballstack w/RET remain on CMG) after EV2 releases ball stack from LMC

35. Give SSRMS GO for Z1 install position

INSTALL NEW CMG (00:45)

36. Hold CMG for EV2 to remove ball stack/MUT EE

37. Insert CMG into soft dock position on Z1. Expect 16 lb force
38. **PGT[B7, CW2, 30.5] –12Ext-7/16:** Install CMG bolts (4), 2 turns each:
    ❑3 ❑4
    ❑1 ❑2
39. Remove tether from CMG

EV2 (FF)

21. **PGT[B7, CW2, 30.5] –6Ext-7/16:** Torque CMG bolts (3), expect 9-13 turns to a torque stall:
    ❑1 ❑5 ❑6

    ← ☐ Report torque/turns

22. **PGT[A1, CCW1, 5.5] –6Ext-7/16:** Drive adjustable shim bolts bolts (2) to contact or torque stall, no pattern:
    ❑6a ❑6b

    ← ☐ Report torque/turns

23. Move lg/sm RET from LMC HR to ball stack on new CMG
24. Release new CMG w/ball stack from LMC on EV1 GO
25. Verify EV1 has good EMU boot to APFR bootplate mate
26. Retrieve lower LMC ball stack/MUT EE and lg/sm RET, stow in Crewlock bag
27. Stow Crewlock bag on BRT
28. Survey worksite for tool inventory, retrieve sill fairlead

INSTALL NEW CMG (00:45)

29. Translate to PMA, retrieve A/L 85ft safety tether, attach to EMU D-ring extender, verify locked
30. Remove spare safety tether from ODS truss and EMU D-ring, stow in Crewlock bag
31. Translate to Z1 worksite
32. Watch all SSRMS clearances at Z1 worksite as required
33. Temp stow Crewlock bag on Node HR 0122

34. Remove Ballstack/MUT EE/RET from CMG. Temp stow
35. Check for FOD in CMG receptacle before installation
36. Assist EV1 with CMG soft dock

37. **PGT[B7, CW2, 30.5] –6Ext-7/16:** Install CMG bolts (2), 2 turns each:
    ❑5 ❑6

CMG R & R (Cont)

IV/RMS

9. IV: Record installation values

Bolt	Turns	Torque
CMG05 Bolt 3		
CMG05 Bolt 4		
CMG05 Bolt 5		
CMG05 Bolt 6		
CMG05 Bolt 1		
CMG05 Bolt 2		

10. IV: Give MCC-H GO for THA power-up
11. If MCC-H unable, ISS crew perform VERIFYING CMG THERMAL HOUSING ASSEMBLY (THA) CONNECTOR MATE (ASSY OPS, CMG 1 On Orbit Checkout, Steps 1-2)

12. IV: Give MCC-H GO for EA power-up
13. If MCC-H unable, ISS crew perform VERIFYING CMG ELECTRONICS ASSEMBLY (EA) CONNECTOR MATE (ASSY OPS, CMG 1 On Orbit Checkout, Step 3)

14. IV: Report CMG R & R complete to MCC

EV1 (SSRMS)

40. **PGT[B7, CW2, 30.5] –12Ext-7/16:** Torque CMG bolts (4), expect 9-13 turns to a torque stall:
    ❑3 ❑4
    ❑1 ❑2
    ◄— ☐ Report torque/turns
41. De-configure PGT socket
42. Demate connector caps (1), stow in trash bag:
    ❑J6
43. Mate connector:
    ❑J6
44. Confirm J6 complete, GO for THA power-up
    ◄— ☐
45. Demate connector caps (3), stow in trash bag:
    ❑J1 ❑J2 ❑J3
46. Mate connectors:
    ❑J1 ❑J2 ❑J3
47. Confirm J1, J2, J3 complete, GO for EA power-up
    ◄— ☐
48. Perform WVS survey of final CMG configuration
    ❑ WVS survey complete

<u>REPLACE Z1 THERMAL SHROUD</u> (00:20)

49. Replace Z1 thermal shroud and attach Velcro
50. Give IV CMG INSTALL COMPLETE
    ◄— ☐

EV2 (FF)

38. **PGT[B7, CW2, 30.5] –6Ext-7/16:** Torque CMG bolts (2), expect 9-13 turns to a torque stall:
    ❑5 ❑6
    ◄— ☐ Report torque/turns
39. Stow ball stack on PMA TS, MUT EE, and sm/lg RET in Crewlock bag
40. Assist EV1 if required
41. Retrieve 11/16” box end wrench from Node HR 0122

<u>REPLACE Z1 THERMAL SHROUD</u> (00:20)

42. Replace Z1 thermal shroud and attach Velcro (use box end wrench as required)

CMG R & R – TASK DATA

Tools:

EV1 (SSRMS)	EV2 (FF)
PGT	PGT
7/16 (wobble) socket-12 ext	7/16 (wobble) socket-6 ext
RAD	

EVA Fasteners:

Fastener Name	Label	Head Size	Qty	Install Torque (ft-lb)	Release Torque (ft-lb)	Failure Torque (ft-lb)	Turns
CMG at Z1 Bolts		7/16	6	22.92	21.7	26.7	10
CMG Shims (fixed, Z1)		7/16	4	5.0	8.0	9.17	10.9
CMG Shims (fixed, FSE)		7/16	4	5.0	8.0	9.17	10.9
CMG at FSE Bolts		7/16	6	22.92	21.7	26.7	10
CMG Shims (adjustable)		7/16	4	2.5	N/A	5.6	2-5
Node Light Stanchion Bolt		7/16	1	23.0	22.5	37.5	10, 16.5

EVA Connectors:

Harness	From	To	Conn Size	Function
CMG J6	Failed CMG, P6	New CMG, P6	15	PWR to THA
CMG J1	Failed CMG, P1	New CMG, P1	15	PWR to EA
CMG J2	Failed CMG, P2	New CMG, P2	15	Primary Data Bus, LB GNC-1, Channel A
CMG J3	Failed CMG, P3	New CMG, P3	15	Secondary Data Bus, LB GNC-1, Channel B

Foot Restraints:

Task	WIF	APFR Setting
ALL	SSRMS	12, PP, F, 4

Warnings:

1. The pop-up spring on the CMG captive EVA fasteners (CMG Bolts 1-6) presents a puncture hazard

Cautions:

1. Avoid inadvertent contact with CMG
2. CMG Shims must be removed within 2 hrs of CMG powerdown on Z1
3. Equal force should be exerted by crew in order to prevent binding when removing/installing the CMG from its mounting on Z1 and the FSE
4. CMG may have oily residue around the Torque Module Assembly, avoid contact (may cause damage to other ORUs through cross-contamination)
5. Avoid contact with Optical Solar Reflector Tiles on Z1 heat pipe radiators at the DDCU-HP and RPDAs. These items can be damaged by kick loads

CMG Inhibits:

MCC-H

1. Verify EA Power Removal and Inhibit
   S0:EPS:RPCM S01A D: RPC 17
   RPCM S01A D RPC 17
   √RPC Position – Op
   √Close Cmd – Inh
2. Verify THA Power Removal and Inhibit
   Z1:EPS:RPCM Z13B B: RPC 10
   RPCM Z13B B RPC 10
   √RPC Position – Op
   √Close Cmd – Inh

CLEANUP/INGRESS

IV/RMS

1. SSRMS: NODE LIGHT STANCHION INSTALLATION (ROBOTICS FS, EVA 2)

Bolt	Turns	Torque
Node Light		

2. SSRMS: APFR EGRESS (ROBOTICS FS, EVA 2)

3. IV: Record WIF # where WIF extender is stowed:

Item	WIF
WIF Extender	

4. IV: Perform tool inventory

EV1

CLEANUP (00:35)

1. Assist EV2 with node light install. Position stanchion as required
2. Egress SSRMS
3. Perform tether swap to A/L tether
4. Configure APFR[6, XX,L,2] to low profile
5. Receive WIF extender from EV2
6. Stow WIF extender in WIF ____

INGRESS (00:20)

7. Translate to Airlock
8. Perform tool inventory
9. Remove spare left safety tether, stow on aft external A/L D-ring and aft A/L HR, verify locked
10. After EV2 GO, remove EV2 85 ft safety tether from aft external A/L D-ring, attach to EV1 left waist tether
11. Remove EV1 right safety tether from EMU D-ring extender and stow on fwd A/L HR
12. √Reels unlocked, retract cable slack
13. Ingress A/L
14. Connect SCU to DCM; check SCU locked
15. Water – OFF
16. Close thermal cover, attach Velcro strap

> CAUTION
> Do not close hatch until EMU water off for 2 min

17. EV Hatch – close and lock
18. Go to PRE REPRESS portion of {CREWLOCK DEPRESS/REPRESS CUE CARD} (SODF: ISS EVA SYS: EVA PREP/POST)

EV2

CLEANUP (00:35)

1. Stow 11/16” box end wrench in Crewlock bag
2. Install Node light stanchion: Release tether from HR 0106. Hand off stanchion to EV1 to posn
3. **PGT[B5, CW2 30.5]-6Ext-7/16:** Install stanchion bolt, 11 turns to a torque stall – if required: **PGT[B2, CW2 30.5]-RAD-6Ext-7/16:** Install stanchion bolt, 11 turns to a torque stall
4. Perform WVS survey of final Node Light configuration
   - ❑ WVS survey complete
5. Retrieve Crewlock bag from Node HR 0102

INGRESS (00:20)

6. Translate to Airlock
7. Perform tool inventory
8. Open thermal cover
9. Ingress A/L
10. Retrieve WIF extender from A/L, hand to EV1
11. Attach left waist tether to A/L D-ring extender
12. Give EV1 GO for tether ops
13. Connect SCU to DCM; check SCU locked
14. Water – OFF
15. Go to PRE REPRESS portion of {CREWLOCK DEPRESS/REPRESS CUE CARD} (SODF: ISS EVA SYS: EVA PREP/POST)

This Page Intentionally Blank

EVA 3 INHIBIT PAD

MCS

MCC-M
1. √FGB Main Engine Thruster Valves (4) – closed
2. √FGB Manifold Valves (18) – closed
3. √FGB MCS unpowered
4. √SOYUZ manifolds (ten) closed
5. √SOYUZ MCS unpowered

RCS

If EV crew < 27 ft from FRCS:

IV
1. √DAP: √FREE, LO Z

O14,15,16
2. √RJDF F1, F2, F3, F4 MANF DRIVER (four) – OFF

MCC
3. √Above RCS config

Orbiter Antennas

NOTE

Possible loss of comm when forced LL FWD antenna

IV — If EV crew < 1.6 ft from S-Band antenna:

A1R
1. S-BAND FM ANT – XMIT LOWER/RCVR UPPER

O14,15,16
2. √MCC, lower antenna selected

If no comm, or on MCC call:

C3
3. S-BAND PM ANT – LL FWD

When EVA crewmember at least 1.6 ft away from all S-Band upper antennas:

C3
4. S-BAND PM ANT – GPC

MCC-H
5. √KU-BAND Mask active

LAB Window

IV — If EV crew near window, close window shutter

FGB Antennas

MCC-M
1. √TORU [TOPY] – Deactivate
2. √TV System [TBC] – Deactivate
3. √KURS P [Kurs] – Deactivate
4. √KURS A [Kurs] – Deactivate
5. √Sirius – Deactivate

SOYUZ Antennas

MCC-M
1. √KURS – Deactivate

SM Antennas (MCC-M)

MCC-M
1. Global Timing Sys 1 & 2 [GTS] – Deactivate

PCU

NOTE

PCUs may require up to 1 hr warm-up period before they are operational

MCC-H
1. √PCUs (two) operational, in discharge mode
   OR
   √1 PCU operational in discharge mode
   OR
   √One solar arrays oriented at least 105 deg from velocity vector

ESP2 Primary Power

MCC-H

√RPCM N1RS2 B RPC 1 – Open	√RPCM N1RS2 B RPC 10 – Open
√RPCM N1RS2 B RPC 2 – Open	√RPCM N1RS2 B RPC 11 – Open
√RPCM N1RS2 B RPC 3 – Open	√RPCM N1RS2 B RPC 12 – Open
√RPCM N1RS2 B RPC 4 – Open	√RPCM N1RS2 B RPC 13 – Open
√RPCM N1RS2 B RPC 5 – Open	√RPCM N1RS2 B RPC 14 – Open
√RPCM N1RS2 B RPC 6 – Open	√RPCM N1RS2 B RPC 15 – Open
√RPCM N1RS2 B RPC 7 – Open	√RPCM N1RS2 B RPC 16 – Open

ESP2 Secondary Power

MCC-H
√RPCM S04B F RPC 10 – Open
√RPCM S04B F RPC 11 – Open
√RPCM S04B F RPC 12 – Open
√RPCM S04B F RPC 13 – Open
√RPCM S04B F RPC 14 – Open

NOTE: EV crew should not go more zenith than the IEA bulkhead to avoid S-band antenna high gain keep-out zone (3.6 ft in high gain, 1.3 ft in low gain)

NOTES, CAUTIONS, AND WARNINGS

EVA 3

NOTES

Verify connectors for debris, bent pins, and cable bend radii.

If EV crewmember within 10 ft of lab window, window shutter must be closed

CAUTION

Avoid inadvertent contact with:
Grapple fixture shafts (have coating)
- Grapple fixture target pin
- SVS Targets
- SSRMS/MBS operating cameras & lights (heat source)
- MBSVDU, MCU, CRPCMs & Cameras (silver Teflon tape radiative surface)
- Passive UMA
- Deployed TUS cable
- PMA1 MDM sunshade
- PMA2 TCS Reflector
- EVA crane
- APAS hardware
- Deployed MISSEs (A/L)
- CID Switches
- Z1 PCU Cathode Ports
- Z1 heat pipe radiators/coldplates
- SASA – Antenna and Z-93 paint (Z1 & P6)
- P6 FPP
- S0 Radiators (silver Teflon tape)

Avoid inadvertent contact with:
- S0 GPS Antenna (Z-93 paint)
- Lights (Z-93 paint)

CAUTION (Cont)

EVA connectors may become hot if left uncovered. Limited handling may be needed

PMA handrails may be hot. Handling may need to be limited

Keepout zone: Antenna (stbd sill) ft (nominal) 2.3 ft above	EVA UHF PLB Low power = 0.5 High power = 1.3 ft sides
Keepout zone:	WVS Antenna (stbd sill) – none

For structural reasons:
Avoid vigorous body motions, quick grabs, and kickoff tether restraints
Avoid performing shaking motions (sinusoidal functions) more than four cycles
If any of these occur, wait 2-5 min to allow structural response to dissipate

Avoid contact with ROEU power connectors that are below the payload bay sill. Low impact force or contact can cause hardware damage

WARNING

PMA umbilical launch restraints have exposed bolt threads (sharp)

EVA connectors present a pinch hazard. Caution should be used when mating/locking connectors

Fuse tether buckles stowed in Node bag may have sharp edges

During Lab window shutter operations, the EV crew must be clear of the Lab window

EV side of crew lock hatch is a potential pinch point and snag hazard during hatch operations

Avoid inner edges of WIF sockets due to potential sharp edges

TBD PRLA grounding wiper is a sharp edge hazard

EVA 3 BRIEFING CARD

	EV1 – Soichi	EV2 – Steve	IV – Andy
SSRMS:	M1 – Wendy	M2 – Vegas	

EVA Prep start MET: ____ / ____ ____ : ____ ____
Start dressing at MET: ____ / ____ ____ : ____ ____ i.e., _____ hours after wake up

EVA Prep
- Get-up plan – Clothing and WCS usage in post-sleep period Food/Drink in A/L ?
- IDB fills (night before)
- Equipment lock activities – Overall big picture
- Prebreathe protocol review
- Suit donning plan – any special requests ? Boot Bladder Manipulation ?
- SAFER, MWS, tools, CL positions, bag stowage – any deviations from standard ?
- Airlock depress review
- EV/IV comm protocol
- SRMS/SSRMS initial position – any deviations from training ?
- Crib sheet review – only big ticket items (CMG rapid-safing, CIPAA gun safing)

EV Crew Procedure Review
- Overall Timeline – just talk big picture, initial tether config, critical ops
- Any deviations from trained plan ?
- Any late additions from the Ground ?
- Any unplanned constraints ?
- Any get ahead tasks ?
- RMS operations – comm protocol/clearances – any off-nominal operations ?
- Specific Items to remember (clearances, tether ops, interference opportunities, photos, etc)

Unplanned Activities
- Any late requests from ISS expected ?

Emergencies Review
- Lost comm. – check location, show cuff C/L in WVS or bend backwards
- EMU malfunctions – call it out, all get on same page
- Lost tools – don't rush, don't chase unless easy reach
- Lost crewmember – Call Code L, IV to give location directions etc.
- SAFER ops reminders
- DCS procedures – Call Cuff Checklist, or potential Cuff Checklist
- Incapacitated crewmember – work slow, bring him in, safe site

Post EVA
- Suit doffing responsibilities
- Post EVA plan
- Any special food/drink requests ?
- Make sure WCS and galley are available to EV crew

Any lessons learned from prior EVA's:

EVA 3 SUMMARY TIMELINE

PET TIME (HR : MIN)	EVA 3		
	IV/SSRMS	**EV1 (FF)**	**EV2 (SSRMS)**
00:00	SSRMS: MANEUVERING TO AIRLOCK EGRESS SSRMS: APFR RECONFIG/INGRESS	**EVA 3 EGRESS/SETUP** (00:50) ■ POST DEPRESS and EGRESS (00:25) ■ SETUP (00:25)	**EVA 3 EGRESS/SETUP** (00:50) ■ POST DEPRESS and EGRESS (00:25) ■ SETUP (00:25)
01:00	SSRMS: MANEUVERING TO ESP2 FOR ESPAD REMOVAL	**PRIMARY CABLE ROUTING** (00:45)	**ESPAD INSTALL** (01:45) ■ ESPAD REMOVAL (00:45)
02:00	SSRMS: MANEUVERING TO A/L TRUNNION FOR ESPAD INSTALL SSRMS: MANEUVER TO APFR EGRESS/REMOVAL SSRMS: ESP2 GRAPPLE	**MISSE 1 AND 2 RETRIEVAL** (01:00)	■ ESPAD INSTALL (01:00)
03:00		**MISSE 5 INSTALL** (01:00)	**MISSE 5 INSTALL** (01:00)
04:00	SSRMS: ESP2 PRE-INSTALL	**SECONDARY CABLE ROUTING** (01:00)	**SECONDARY CABLE ROUTING** (01:00)
05:00		**ESP2 INSTALL** (00:45) ■ GCA ESP2 TO BERTHING (00:15) ■ ATTACH ESP2 TO ESPAD (00:30)	**ESP2 INSTALL** (00:45) ■ GCA ESP2 TO BERTHING (00:15) ■ ATTACH ESP2 TO ESPAD (00:30) ■ CONNECT ESP2 POWER (00:40)
		ESP2 FRGF REMOVE AND STOW (00:40)	
06:00	EVA Time 6:30	**CLEANUP/INGRESS** (00:30) ■ INGRESS and PRE REPRESS (00:15)	**CLEANUP/INGRESS** (00:30) ■ INGRESS and PRE REPRESS (00:15)

EVA 3 TOOL CONFIG

Pre-EVA 3 Tool Configuration

AIRLOCK

- ❑ Fuse Tether #2 (Fwd W-bungee)
- ❑ Spare PGT
- ❑ Wire Tie Caddy (with long and short)
- ❑ Fuse Tether #1 (Aft UIA D-ring, aft UIA HR)
- ❑ F5 Camera (2, 28mm)
- ❑ Ratchet
- ❑ 2-in ext
- ❑ Wire tie caddy
- ❑ MISSE PEC 5 on Stbd zenith bungee
- ❑ RET
- ❑ Adj
- ❑ MISSE Clamp Assembly # 3
- ❑ Adj

- ❑ D-ring extender

- ❑ ESP2 Power cables (2)
- ❑ Adj Tether (2)
- ❑ Wire Ties (4)

- ❑ IV Bag
- ❑ ISS Contamination Sampler (2)
- ❑ Drager Tubes (6)
- ❑ Gold Salt Kit
- ❑ Socket Caddy
- ❑ Socket, 6-in ext
- ❑ Socket, 1/2 in drive, 8-in ext
- ❑ GP Caddy (2)
- ❑ Thermal Mitten pairs (2)
- ❑ EVA Ratchet
- ❑ DCM plug
- ❑ Ziplock bag w/2 towels

Record:
Spare PGT (serial # _____, bat # _____)

EV1 PGT (serial # _____, bat # _____)

EV2 PGT (serial # _____, bat # _____)

RAD (serial # _____)

EV1

- ❑ MWS
- ❑ Right Swing Arm
- ❑ PGT w/6-in ext, RET
- ❑ Trash Bag
- ❑ T-Bar w/wire tie (2)
- ❑ Socket Caddy
- ❑ RAD
- ❑ Adj Tether (2)
- ❑ RET (2) (one to D-ring extender)
- ❑ BRT w/wire ties (2) w/RET, adj
- ❑ D-ring Extender (2)
- ❑ Waist Tether (2)
- ❑ Adj Tether (2) (1 each wrist)
- ❑ Safety tether (85 ft)

EV2

- ❑ MWS
- ❑ Right Swing Arm
- ❑ PGT w/6-in ext, RET
- ❑ T-Bar w/wire tie (2) w/RET to wire tie
- ❑ Trash bag
- ❑ Socket Caddy
- ❑ Adj Tether (2)
- ❑ RET (2)
- ❑ BRT w/wire ties (2) w/RET
- ❑ D-ring Extender (2)
- ❑ Waist Tether (2)
- ❑ Safety Tether (R)

SSRMS

- ❑ APFR [6,XX,L,2]
- ❑ WIF Adapter

Post-EVA 3 Tool Configuration

AIRLOCK

- ❑ Fuse Tether #2
- ❑ Spare PGT
- ❑ Wire Tie Caddy
- ❑ Fuse Tether #1
- ❑ F5 Camera (2, 28mm)
- ❑ WIF Adapter
- ❑ A/L trunnion thermal covers (2)
- ❑ Wire Tie Caddy
- ❑ PEC 1, 2
- ❑ RET
- ❑ D-ring extender with crew hook lock

EV1

- ❑ MWS
- ❑ Right Swing Arm
- ❑ PGT w/6-in ext, RET
- ❑ T-Bar w/wire tie (2)
- ❑ Round Scoop
- ❑ Trash Bag
- ❑ Socket Caddy
- ❑ RAD
- ❑ Adj Tether (2)
- ❑ RET (2)
- ❑ BRT w/wire ties (2) w/RET
- ❑ D-ring Extender (2)
- ❑ Waist Tether (2)
- ❑ Adj Tether (2) (1 each wrist)

EV2

- ❑ MWS
- ❑ Right Swing Arm
- ❑ PGT w/6-in ext, RET
- ❑ Trash Bag
- ❑ T-Bar w/wire tie (2)
- ❑ Socket Caddy
- ❑ BRT w/wire ties (2) w/RET
- ❑ RET (sm-sm) (3)
- ❑ Adj Tether (2)
- ❑ D-ring Extender (2)
- ❑ Waist Tether (2)
- ❑ Safety Tether

EVA 3 EGRESS/SETUP

IV/RMS	EV1 (FF)	EV2 (SSRMS)
1. SSRMS: MANEUVERING TO AIRLOCK EGRESS (ROBOTICS FS, EVA 3) 2. ISS views: PLB B on monitor 2, focus on ESPAD PLB C on downlink, focus at A/L 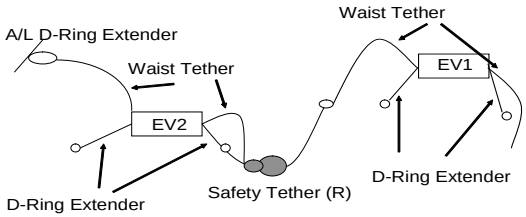 3. IV: When EV1 complete with step 5, give SSRMS GO for APFR RECONFIG/INGRESS maneuver 4. SSRMS: After EVA GO, APFR RECONFIG/INGRESS (ROBOTICS FS, EVA 3) 5. SSRMS: After EVA GO, MANEUVERING TO ESP2 FOR ESPAD REMOVAL (ROBOTICS FS, EVA 3)	**Initial Configuration:** Waist tether (L) to EV2 Safety tether POST DEPRESS (00:05) Perform POST DEPRESS (DEPRESS/REPRESS Cue Card) EGRESS (00:20) 1. Open A/L thermal cover 2. Egress airlock 3. Check SAFER valves down 4. Attach safety tether (85 ft) to A/L ring, verify hook locked 5. Attach EV2 Safety Tether to SSRMS, verify locked 6. Give EV2 GO for EV2 step 2 7. Receive fuse tether #1 and primary and secondary ESP2 cables (2) from EV2; temp stow at A/L HR 0554 SETUP (00:25) 8. Remove A/L trunnion covers (2). Temp stow covers on fuse tether 9. Retrieve ESP2 primary cable 10. Translate to primary cable worksite on Node endcone, connector J602	**Initial Configuration:** Waist tether (L) to A/L D-ring extender, Safety tether (R) to EV1 Waist tether (L) POST DEPRESS (00:05) Perform POST DEPRESS (DEPRESS/REPRESS Cue Card) EGRESS (00:20) 1. Hold for EV1 GO 2. Release Waist tether from A/L D-ring 3. Hand out fuse tether #1 and primary and secondary ESP2 cables (2) to EV1 4. Egress A/L 5. Check SAFER valves down 6. Close thermal hatch SETUP (00:25) 7. Verify/configure SSRMS APFR[12,PP, F, 6] 8. Ingress SSRMS 9. Verify feet in APFR 10. Give SSRMS GO for motion to ESPAD REMOVAL

ESPAD INSTALL

IV/RMS

1. IV: Verify orbiter ESP 2 power cable inhibited
   L12U √APCU 1, 2 CONV (two) – OFF (tb-bp)
   √OUTPUT RLY tb (two) – bp
   √OUTPUT RLY (two) – OP

2. ISS views: PLB B for ESPAD Removal

3. SSRMS: MANEUVERING TO A/L TRUNNION FOR ESPAD INSTALL (ROBOTICS FS, EVA 3), confirm in position hold prior to ESPAD soft docking
4. ISS views: PLB C for ESPAD Install

5. IV: Record final torque values:

Bolt	Turns	Torque
Port EUTAS		
Port EUTAS lock bolt		
Stbd EUTAS		
Stbd EUTAS lock bolt		

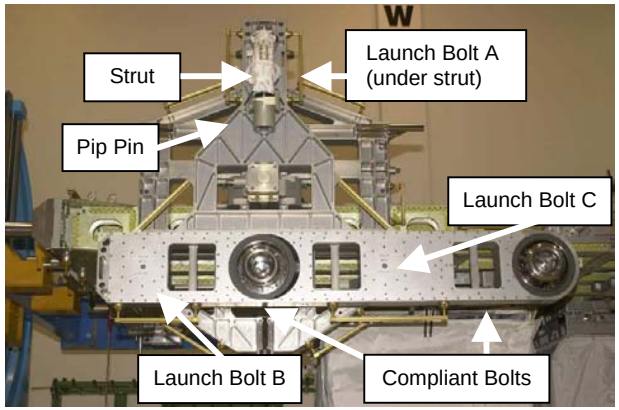

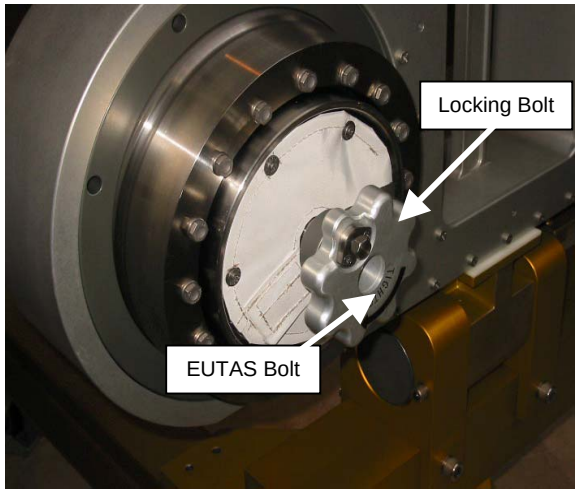

EV2 (SSRMS)

ESPAD REMOVAL (00:45)

1. GCA SSRMS to ESP2 pwr cable
2. On IV GO, demate orbiter power cable from ESP2
   ❑ P1 from J1
3. Mate connector to dummy panel on KYA, stow cable slack on bracket
   ❑ P1 to dummy panel J3
4. Verify ESPAD claw open
5. GCA SSRMS to ESPAD
6. Deploy ESPAD strut clear of launch bolt A. Remove wire ties (2) and stow in trash bag. Remove pip pin from strut FSE
7. **PGT[B7, CCW2, 30.5] –6Ext-7/16**: Release Launch Bolt A. Expect 9 turns
8. Stow ESPAD strut, insert pip pin
9. **PGT[B7, CCW2, 30.5] –6Ext-7/16**: Release EUTAS primary compliant mount lock release. Expect approx 25 turns
10. **PGT[B7, CCW2, 30.5] –6Ext-7/16**: Release Launch Bolt C. Expect 9 turns
11. Tether to active ESPAD HR 8032 inboard using ret
12. **PGT[B7,CCW2,30.5] –6Ext-7/16**: Release EUTAS secondary compliant mount lock release. Expect approx 7 turns
13. **PGT[B7, CCW2, 30.5] –6Ext-7/16**: Release Launch Bolt B. Expect 9 turns
14. Remove active ESPAD from passive ESPAD. Expect to overcome 8 lb of soft dock force
15. Positively control ESPAD and give GO to IV/SSRMS
16. Flip ESPAD into A/L mating position
17. If required, fold down MWS

ESPAD INSTALL (01:00)

18. On SSRMS GO, soft dock ESPAD into A/L trunnion. Expect soft dock force of 46 lb
19. Hand tighten port and starboard EUTAS center bolts with hand knobs

    ◄— ☐ Report torque and turns

20. **PGT[B7, CW2, 30.5] –6Ext-7/16**: Torque down port EUTAS bolt to a torque stall
21. **PGT[B7, CW2, 30.5] –6Ext-7/16**: Torque down stbd EUTAS bolt to a torque stall
22. **PGT[A6, CW2, 10.5] –6Ext-7/16**: Lock down stbd EUTAS lock bolt to a torque stall

ESPAD INSTALL (Cont)

IV/RMS		EV2 (SSRMS)
6. SSRMS: On EVA GO, maneuver to APFR EGRESS/REMOVAL (ROBOTICS FS, EVA 3) 7. SSRMS: On EVA GO, CLEAR STRUCTURE and perform ESP2 GRAPPLE (ROBOTICS FS, EVA 3)		23. **PGT[A6, CW2, 10.5] –6Ext-7/16**: Lock down port EUTAS lock bolt to a torque stall 24. Open starboard and port V guide latches 25. Perform WVS survey of ESPAD ❑ WVS survey complete 26. Give SSRMS GO to APFR EGRESS/RECONFIG 27. Egress APFR 28. Verify A/L toolbox # 2 WIF is [6, GG] 29. Tether to APFR, remove from SSRMS 30. Stow APFR in A/L Toolbox # 2 WIF[6, PP, C, 12] 31. Remove WIF adapter from SSRMS 32. Place waist tether on A/L HR, verify hook locked 33. Remove safety tether from SSRMS, attach to A/L HR, verify hook locked 34. Remove waist tether from A/L HR 35. Give SSRMS GO for ESP2 GRAPPLE 36. Stow WIF adapter on fuse tether 37. Open socket access flap on A/L FRGF thermal cover 38. Deploy ESPAD strut and connect to A/L FRGF. Move slidelocks into locked position (2) 39. Close MLI flap around strut and A/L FRGF 40. Open nadir V guide latch

ESPAD INSTALL – TASK DATA

Estimated Task Duration:

	With SSRMS	Without SSRMS
Two EV Crew	1:45	N/A

Tools:

EV1 (FF)	EV2 (SSRMS)
	PGT
	7/16 (wobble) socket-6 ext

EVA Fasteners:

Fastener Name	Head Size	Qty	Install Torque (ft-lb)	Release Torque (ft-lb)	Failure Torque (ft-lb)	Turns
ESPAD Launch Bolts	7/16	3	20.8	21.6		9
ESPAD Comp. Bolt (primary)	7/16	1	8.3	12.5		7
ESPAD Comp. Bolt (secondary)	7/16	1	8.3	12.5		25
ESPAD EUTAS Bolts	7/16	2	25.5	25.0	101.7	7.5
EUTAS lock down bolts	7/16	2	8.3	8.3	23.6	2.6
ESPAD Claw	7/16	1	20.8	20.8		60

EVA Connectors:

Harness	From	To	Conn Size	Function
ESP2 Shuttle Pwr	ESP2	ICC Keel	25	ESP2 Orbiter Power
ESP2 Primary Power Cable	Dust Cap	Node J602	21	ESP2 Prime Power

Foot Restraints:

Task	WIF	APFR Setting
ALL	SSRMS	12, PP, F, 6

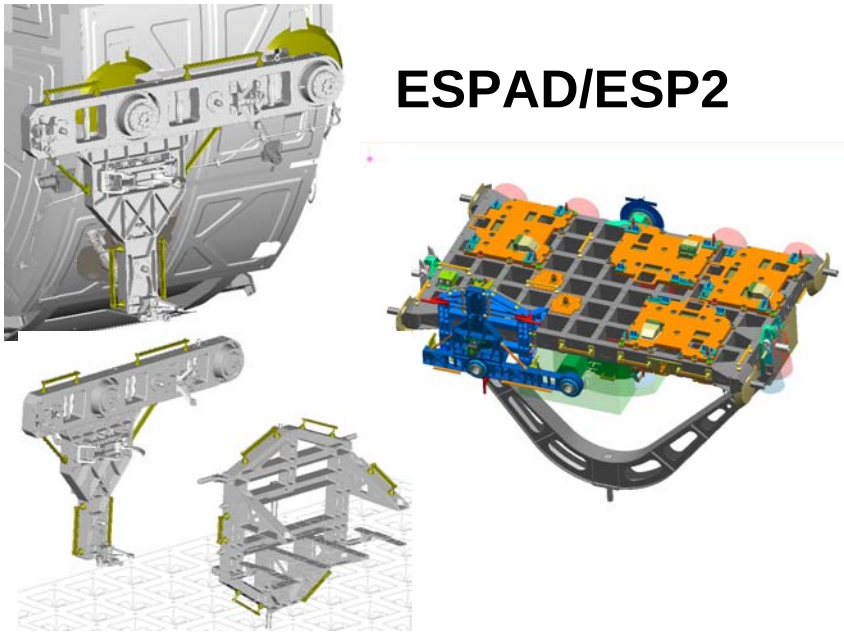

PRIMARY CABLE ROUTING

IV/RMS	EV1 (FF)	
1. IV: Verify with MCC-H ISS ESP2 power inhibits in place per EVA Inhibit pad ESP2 ISS power, primary and secondary inhibits	PRIMARY CABLE ROUTING (00:30) 1. Translate to Node J602 2. Remove dust covers, stow in trash bag ❑ P602 (ESP2 cable) ❑ J602 (Node) 3. On IV GO, mate connector: ❑ ESP2 P602 to Node J602 4. Wire tie J602 pig tail as required, route primary cable using wire ties as required ❑ Node 0134 ❑ Node 0135 ❑ A/L 0519 5. Temp stow cable bundle on A/L 0531	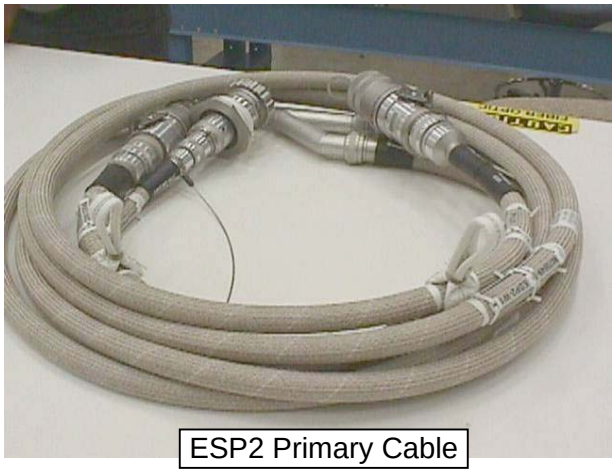 ESP2 Primary Cable

PRIMARY CABLE ROUTING – TASK DATA

Tools:

EV1 (FF)
Wire ties
Trash Bag

EVA Connectors:

Harness	From	To	Conn Size	Function
ESP2 P602	Dust Cap	Node J602		Power
ESP2 J602	Dust Cap	Node HR (wire tie)		Future Use

MISSE 1 AND 2 RETRIEVAL

IV/RMS	EV1 (FF)	
	MISSE #1 RETRIEVE 1. Translate to MISSE #1 on ONTO #2 (equipment lock nadir) 2. Provide WVS survey of MISSE #1 3. Release pip pins (2) securing MISSE #1 open 4. Close MISSE #1; reinsert pip pins (2) to secure MISSE #1 closed 5. Tether to MISSE #1 6. Release probe pip pins (2) on handrail clamp 7. Remove MISSE #1 from HR clamp 8. Translate to airlock hatch; temp stow MISSE #2 RETRIEVE 9. Translate to MISSE #2 on C-Lk endcone 10. Provide WVS survey of MISSE #2 11. Release pip pins (2) securing MISSE #2 open 12. Close MISSE #2; reinsert pip pins (2) to secure MISSE #2 closed 13. Tether to MISSE #2 14. Release probe pip pins (2) on handrail clamp 15. Remove MISSE #2 from HR clamp 16. Translate to airlock, open thermal cover 17. Stow MISSE (2) in A/L	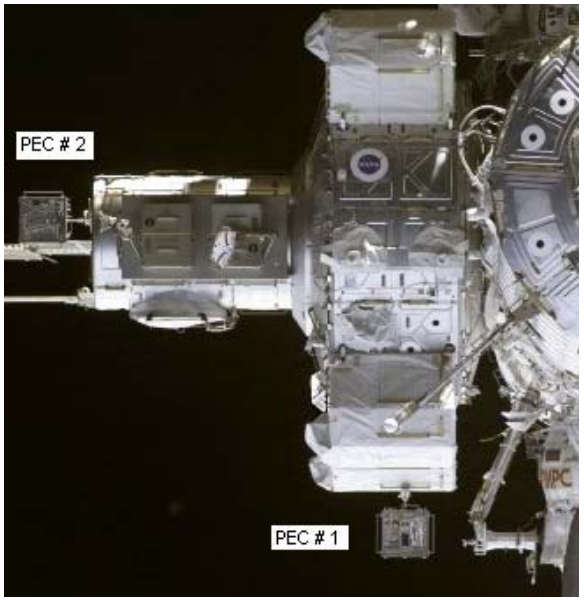

MISSE 1 AND 2 RETRIEVAL – TASK DATA

EVA Fasteners (contingency bolts only):

Fastener Name	Head Size	Qty	Install Torque (ft-lb)	Release Torque (ft-lb)	Failure Torque (ft-lb)	Turns
MISSE Stem Contingency Bolt	7/16	2	1.7	2.1	6.0	16

MISSE 5 INSTALL

IV/RMS	EV1 (FF)	EV2 (FF)
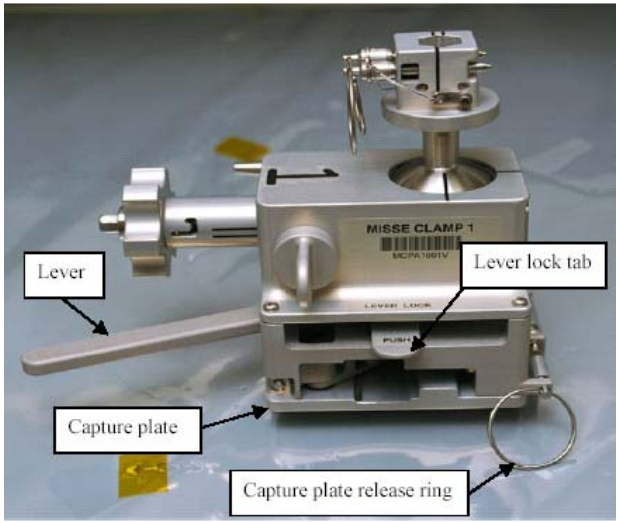 MISSE CLAMP ASSEMBLY	MISSE #5 INSTALL 1. Retrieve MISSE clamp assembly #3 from A/L, hand to EV2 2. Retrieve MISSE 5 3. Place MISSE 5 in BRT 4. Egress A/L, close thermal cover 5. Retrieve safety tether from A/L ring 6. Translate to P6 handrail 5312 7. Perform safety tether swap 8. Attach extra safety tether to HR 5312 and right D-ring extender; verify both hooks locked 9. Temp stow airlock safety tether on HR 5312 10. Translate to P6 aft trunnion HR 5389 11. Install MISSE #5 into handrail clamp pointer; check alignment 12. Insert probe pip pins (2) 13. Release pip pins (2) securing MISSE #5 closed 14. Open MISSE #5; reinsert pip pins (2) to secure MISSE open 15. Install grounding strap into handrail standoff 16. Release antenna Velcro restraints; deploy antennas 17. Verify electronics switch – OFF 18. Swap MISSE safe and arm plugs 19. Move electronics switch to ON 20. Provide WVS survey of MISSE #5 and clamp assy 21. Translate to P6 handrail 5312 22. Perform safety tether swap to airlock safety tether; verify hook locked 23. Remove spare safety tether from HR 24. Translate to joint airlock; stow spare safety tether	MISSE #5 INSTALL 1. Translate to A/L 2. Retrieve safety tether from A/L ring 3. Receive MISSE clamp assembly #3 4. Stow clamp and safety tether on MWS 5. Translate to P6 handrail 5309 6. Perform safety tether swap 7. Attach extra safety tether to HR 5309 and right D-ring extender; verify both hooks locked 8. Temp stow airlock safety tether on HR 5309 9. Translate to P6 aft trunnion HR 5389 10. Verify clamp assy handle in UNLOCK 11. Release capture plate (1 pip pin); open 12. Install clamp pointer around HR 5389 13. Verify capture plate pip pin installed 14. Push LEVER LOCK; place clamp assy lever to LOCK 15. Pull MISSE probe latching pip pins (2) 16. Assist EV1 w/MISSE deploy 17. Translate to P6 handrail 5309 18. Perform safety tether swap onto airlock safety tether; verfiy hook locked 19. Remove spare safety tether from HR 20. Translate to joint airlock; stow spare safety tether

MISSE 5 INSTALL – TASK DATA

EVA Fasteners (contingency bolts only):

Fastener Name	Head Size	Qty	Install Torque (ft-lb)	Release Torque (ft-lb)	Failure Torque (ft-lb)	Turns
MISSE Stem contingency Bolts	7/16	2	1.7	2.1	6.0	16

SECONDARY CABLE ROUTING

IV/RMS	EV1 (FF)	EV2 (FF)
	SECONDARY CABLE ROUTING (01:00) 1. Translate to S0 face 1, bay 3 (stbd) 2. Uncouple CETA cart from MT 3. Reposition CETA carts for bay 3 ingress, set brake 4. Enter bay 3, BRT to HR 3421 5. Receive pigtail cable from EV2; temp stow 6. Verify enough slack for connector operations, give EV2 GO for cable routing 7. Release TA clamps on P59 and P57 if required 8. Remove dust caps from ESP2 cable P57A and J57A and stow in trash bag 9. On IV GO, demate connector: ❑ S0 P57 from S0 panel J64 10. Mate connectors: ❑ ESP2 J57A to S0 P57 ❑ ESP2 P57A to S0 panel J64 11. Restow P59 and P57 in TA clamps if required 12. Restrain remaining slack and perform WVS closeout ❑ WVS survey complete 13. Egress bay and replace CETA carts. Confirm brakes released 14. Assist EV2 as required, watch for helmet and PLSS clearance, stay stbd on CETA spur 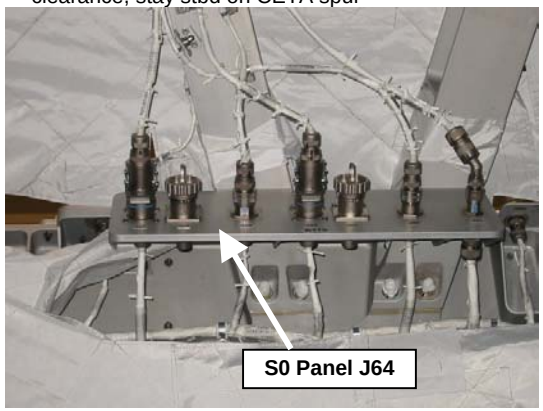 	SECONDARY CABLE ROUTING (01:00) 1. Retrieve wire tie caddy from fuse tether 2. Retrieve secondary power cable bundle from A/L 3. Fair lead at A/L end of CETA spur, stay port on CETA spur 4. Translate to S0 face 6, bay 3, near HR 3423 5. Feed cable with pigtail end to EV1 6. Route secondary power cable. Restrain with wire ties as required ❑ Keel strut HR (stbd end) ❑ S0 3437 (stbd end) ❑ MTS strut very short HR (stbd end) ❑ MTS strut long HR (stbd end) ❑ MTS strut short HR (port end) ❑ Very short HR on Lab at port end of MTS strut ❑ Lab 0215 (zenith end) ❑ A/L 0519 (zenith end) 7. Temp stow remaining cable at A/L HR 0519

SECONDARY CABLE ROUTING – TASK DATA

	With SSRMS	Without SSRMS
Two EV Crew	N/A	1:00

Tools:

EV1 (FF)	EV2 (FF)
Wire ties	Wire ties
Trash Bag	

EVA Fasteners:

EVA Connectors:

Harness	From	To	Conn Size	Function
ESP2 P57A	Dust Cap	S0 panel J64	15	Power
ESP2 J57A	Dust Cap	S0 P57	15	Power
S0 P59	S0 J59	S0 panel J65	15	Power
S0 P57	S0 panel J57	ESP2 J57A	15	Power

Foot Restraints:

Task	WIF	APFR Setting
S0 connector mates (if required)	S0-	12, YY, G, 12

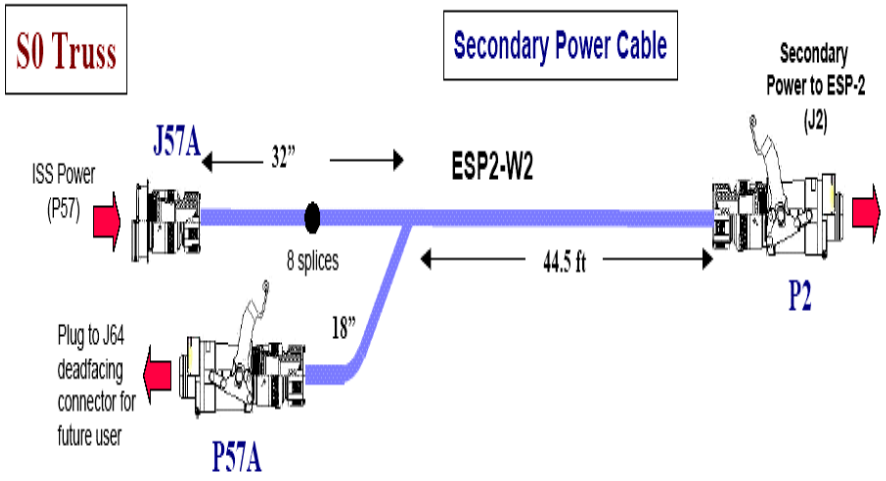

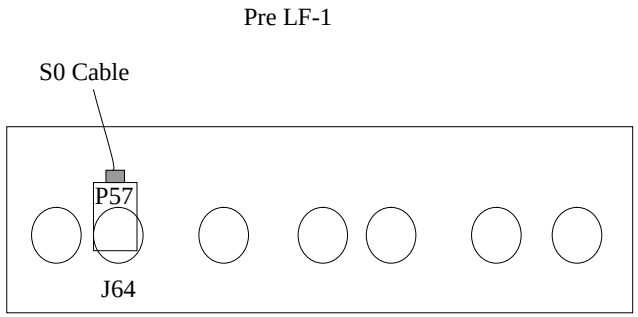

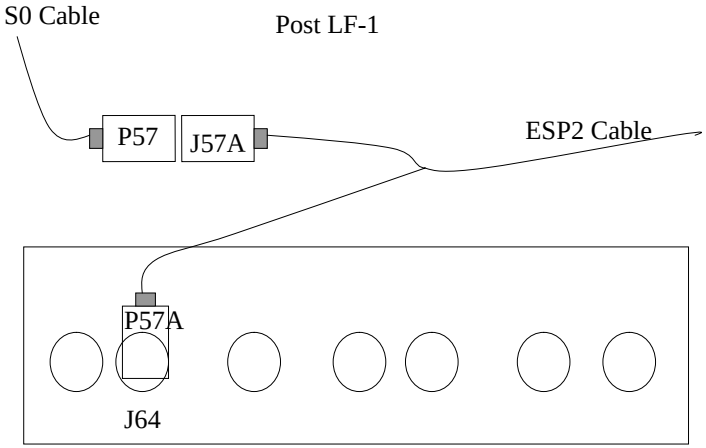

ESP2 INSTALLATION

IV/RMS

1. SSRMS: When 10 min from ESP2 PRE-INSTALL, give EVA a ten-min warning
2. ISS views: PLB C for ESP2 Install

3. SSRMS: Give IV GO to close capture claw to capture bar contact

4. **IV: Record number of turns:** _____
5. IV: Give SSRMS GO for limp mode after capture claw contact and EV1 and EV2 verifications
6. SSRMS: On IV GO, go to limp mode, give IV GO for final capture claw close, remind EV1 to stop if SSRMS calls brakes on
7. Comm protocol: EV1 "Comm check"; "IV GO"; "M1 GO"

8. **IV: Record number of turns:** _____

9. SSRMS: On IV GO, apply brakes, give IV GO for guide vanes
10. Give EV GO for guide vanes

11. **IV: Record final torque values:** _____

12. **Record number of turns:** _____

13. IV: Give SSRMS GO for ESP2 ungrapple when torque/turn values are recorded

Bolt	Turns	Torque
Stbd Guide Vane		
Port Guide Vane		
Nadir Guide Vane		

EV1 (FF)

GCA ESP2 BERTHING (00:15)

1. Translate to A/L HR 0502 location for ESP2 berthing (stbd nadir of the ESPAD)
2. Confirm in position and safety tethers clear, verify ESPAD claw and latches open
3. Provide GCA to SSRMS, verify nadir RTL indicators

ATTACH ESP2 TO ESPAD (00:30)

4. BRT to A/L HR 0503
5. **PGT[B7, CW2, 30.5] –6Ext-7/16**: On IV GO, close capture claw to contact, inform IV GO for limp mode

← ☐ Report Turns

6. Verify ESP2 still within V-guides
7. **PGT[A3, CW1, 30.5] –6Ext-7/16**: On SSRMS GO, close capture claw to hard stop, using pulses of 1.5 turns and verify comm after each pulse (EV1 "Comm check", "IV GO", "M1 GO")

← ☐ Report Turns

8. Give IV GO for brakes
9. On IV GO, manually close nadir guide vane lock down bar

10. **PGT[B7, CW2, 30.5] –6Ext-7/16**: Torque down nadir guide vane lock down bar to a hard stop, lock knob

← ☐ Report Torque and Turns

11. **PGT[B1, CCW2, 30.5] –6Ext-7/16**: After EV2 GO, back off ESPAD capture claw 30 turns

← ☐ Report Turns

12. Perform WVS survey of ESPAD/ESP2
    ❑ WVS survey complete

EV2 (FF)

GCA ESP2 BERTHING (00:15)

1. Translate to MT strut HR location for ESP2 berthing (ESPAD port zenith, on Lab)
2. Confirm in position and safety tethers clear, verify ESPAD claw and latches open
3. Provide GCA to SSRMS, verify port and stbd RTL indicators (2)

ATTACH ESP2 TO ESPAD (00:30)

4. Verify ESP2 still within V-guides

5. On IV GO, manually close port guide vane lock down bar
6. Manually close starboard guide vane lock down bar

7. **PGT[B7, CW2, 30.5] –6Ext-7/16**: Torque starboard guide vane lock down bar to a hard stop, lock knob

← ☐ Report Torque and Turns

8. **PGT[B7, CW2, 30.5] –6Ext-7/16**: Torque port guide vane lock down bar to a hard stop, lock knob
9. Give EV1 GO for claw ops

CONNECT ESP2 POWER

10. Retrieve and route primary and secondary ESP2 cables (2) to ESPAD HR
11. Remove dust covers
    ❑ P1 (Pri Cable) ❑P2 (Sec Cable) ❑J2 (ESP2)
12. Mate connectors:
    ❑ P1 (Cable) to J1 (ESP2)
    ❑ P2 (Cable) to J2 (ESP2)
13. Perform WVS closeout of connectors
    ❑ WVS survey complete
14. Cleanup, coil remaining cable at HR 8032
15. Retrieve adj tethers, stow on fuse tether
16. Give IV GO for ESP2 power

ESP2 INSTALLATION – TASK DATA

Estimated Task Duration:

	With SSRMS	Without SSRMS
Two EV Crew	0:45	N/A

Tools:

EV1 (FF)	EV2 (FF)
PGT	PGT
7/16 (wobble) socket-6 ext	7/16 (wobble) socket-6 ext
Wire ties	Wire ties

EVA Fasteners:

Fastener Name	Head Size	Qty	Install Torque (ft-lb)	Failure Torque (ft-lb)	Turns
ESPAD Lock down bolts	7/16	3	25.0		N/A
ESPAD Claw	7/16	1	10.0		10

EVA Connectors:

Harness	From	To	Conn Size	Function
ESP2 cable P1	Dust cover	ESP2 J1	25	Power (prime)
ESP2 cable P2	Dust cover	ESP2 J2	25	Power (secondary)

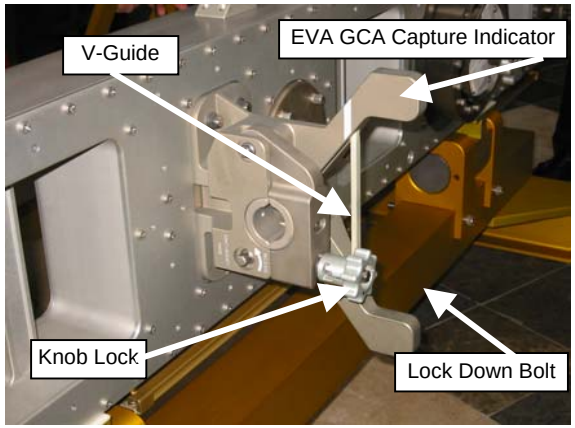

ESPAD Components

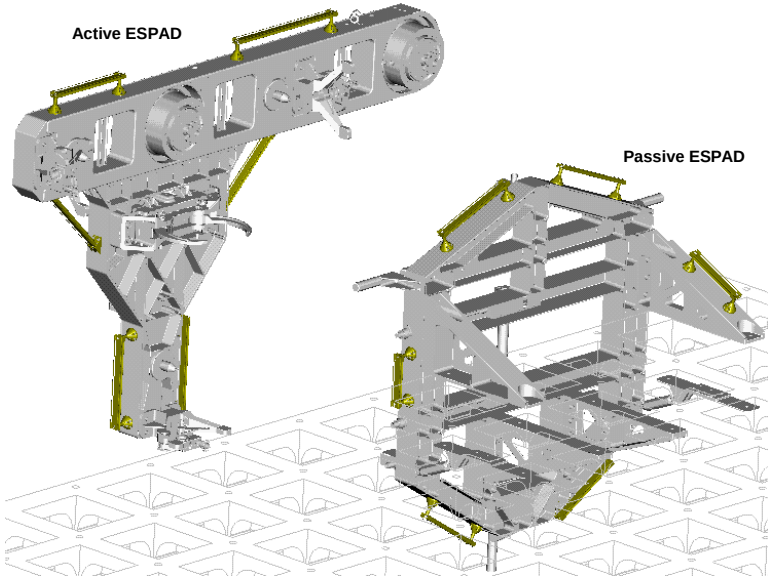

ESP2 FRGF REMOVE AND STOW

<table>
<tr><th>IV/RMS</th><th>EV1 (FF)</th><th></th></tr>
<tr>
<td>1. IV: Record number of turns RAD is used:
<table>
<tr><th>Bolt</th><th>Turns</th></tr>
<tr><td>FRGF 1</td><td></td></tr>
<tr><td>FRGF 2</td><td></td></tr>
<tr><td>FRGF 3</td><td></td></tr>
<tr><td>FRGF 4</td><td></td></tr>
</table>
</td>
<td>
<u>ESP2 FRGF REMOVE</u>
1. Retrieve ratchet w/2-in ext from A/L fuse tether
2. Translate to ESP2 FRGF
3. BRT to ESP2 HR 8011
4. Ratchet: Break torque on ESP2 FRGF stbd bolts (2). Expect 10 turns
5. PGT[B1, CCW2, 30.5] –RAD-2Ext-7/16: Release ESP2 FRGF stbd bolts (2). Expect 12 turns
← ☐ Report # of RAD turns
6. BRT to ESP2 HR 8012
7. Tether to ESP2 FRGF
8. Ratchet: Break torque on ESP2 port FRGF bolts (2)
9. PGT[B1, CCW2, 30.5] –RAD-2Ext-7/16: Release ESP2 FRGF port bolts (2). Expect 12 turns
← ☐ Report # of RAD turns
10. Temp stow ratchet on ESP2 HR
11. Place FRGF in BRT
12. Translate to stbd TSA
<u>ESP2 FRGF STOW</u>
13. Open stbd TSA latches (4)
14. Stow FRGF
15. Close TSA latches (4)
16. Translate to A/L
</td>
<td>ESP2 FRGF
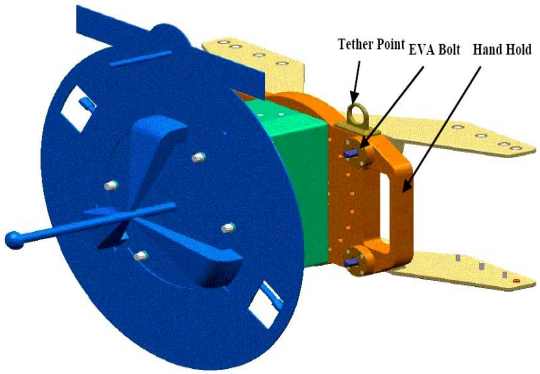

</td>
</tr>
</table>

ESP2 FRGF REMOVE AND STOW – TASK DATA

EVA Fasteners:

Fastener Name	Head Size	Qty	Install Torque (ft-lb)	Release Torque (ft-lb)	Failure Torque (ft-lb)	Turns
FRGF Bolts	7/16	4				12

CLEANUP/INGRESS

IV/RMS	EV1 (FF)	EV2 (FF)
1. Perform EV1 and EV2 tool inventory	CLEANUP (00:15) 1. Photo ops INGRESS (00:15) 2. Translate to hatch 3. Perform tool inventory 4. Hand in fuse tether 5. On EV2 GO, remove EV2 safety tether, attach to left waist tether 6. Remove safety tether from A/L ring and stow on MWS 7. Ingress A/L 8. Connect SCU to DCM; check SCU locked 9. Water – OFF 10. Close thermal cover, attach Velcro strap CAUTION Do not close hatch until EMU water off for 2 min 11. EV Hatch – close and lock 12. Go to PRE REPRESS portion of {CREWLOCK DEPRESS/REPRESS CUE CARD} (SODF: ISS EVA SYS: EVA PREP/POST)	CLEANUP (00:15) 1. Photo ops INGRESS (00:15) 2. Translate to hatch 3. Open thermal cover 4. Perform tool inventory 5. Ingress A/L 6. Attach left waist tether to A/L D-ring 7. Give EV1 GO for tether ops 8. Connect SCU to DCM; check SCU locked 9. Water – OFF 10. Go to PRE REPRESS portion of {CREWLOCK DEPRESS/REPRESS CUE CARD} (SODF: ISS EVA SYS: EVA PREP/POST)

LF1 EVA FAILURE WORKAROUND CRIBSHEET ..... FS 16-3
RELEASE ROEU LATCHES ..... FS 16-10
LATCH ROEU LATCHES ..... FS 16-11
STOW ROEU ARM ..... FS 16-12
MATE ROEU ARM ..... FS 16-13
ROEU OVERVIEW ..... FS 16-14
MANUALLY OPEN/CLOSE CBM PETAL ..... FS 16-15
CLEAR/RESTRAIN CBM CAPTURE LATCH ..... FS 16-16
REMOVE/REPLACE CBM CONTROLLER ASSEMBLY ..... FS 16-17
MMOD CENTER COVER ..... FS 16-19

This Page Intentionally Blank

LF1 EVA FAILURE WORKAROUND CRIBSHEET

Procedure	Failure	Work-Around Steps	Comments
I. GENERIC	A. TA clamps fail to release	Use tether hook for additional leverage to open clamp	
	B. Connector fails to mate	Detach from soft dock and inspect, cycle disengaged connector: ▪ Bent pins ▪ FOD ▪ EMI band ▪ Cable bend radius ▪ Bail linkages/rivets (both passive and active connector sides) ▪ Soft dock spring ▪ O-ring seal on non-active side ▪ Connector keying features	
	C. Connector pin bent	1. Describe bent pin location to MCC ▪ Rotate connector to bail up position, describe pin condition ▪ If possible, obtain WVS view of interface	
		2. On MCC GO, Obtain connector pin straightener (16,21,22 gage) or needle nose pliers. Attempt pin repair	MCC determine if repair is necessary. Repair may damage other pins
	D. Connector FOD	On MCC GO, obtain connector cleaner tool from A/L staging bag. Attempt removal of FOD	MCC determine necessity of time to retrieve tools
	E. Connector EMI band bent	On MCC GO, obtain needle nose pliers or forceps. Remove EMI band from connector	MCC determine necessity of time to retrieve tools
	F. Connector bail linkage failure	On MCC GO, re-attempt connector mate with broken bail. Vice grips may be used for additional leverage	MCC determine potential safety hazards and necessity of time to retrieve tools
	G. Connector soft dock spring bent	On MCC GO, obtain needle nose pliers. Attempt to remove bent spring	MCC determine necessity of time to retrieve tools. Low probability of success
	H. Connector O-ring seal loose	1. Remove seal with tether hook	Common occurrence
		2. On MCC GO, obtain needle nose pliers. Attempt to remove seal	MCC determine necessity of time to retrieve tools

LF1 EVA FAILURE WORKAROUND CRIBSHEET (Cont)

Procedure	Failure	Work-Around Steps	Comments
	I. MMOD shield fastener fails to release	On MCC GO, WARNING Do not touch back side of MMOD Shields or handle any fastener fragments due to sharp edges Fastener and Shield/Tool interface must be covered to avoid potential projectiles ▪ Retrieve ISS prybar from Node Bag and RPCM MLI ▪ Release all other fasteners on MMOD shield ▪ Assess clearance between the MMOD shield and the tools ▪ If possible, rotate fastener to position tangs off of wire (unlock) ▪ Place MLI cover over MMOD shield and tool interface ▪ Insert tool under MMOD shield by failed fastener and pry the shield away from the structure until the fastener is freed ▪ If required, place tape over the failed fastener	Concurrence obtained post 5A via EVA AIT
	J. MMOD shield fastener doesn't engage	Use alternate fastener(s). Two total fasteners per shield should be engaged. For non-overlapping shields, fasteners should be diagonally opposite. Overlapping shields should use fasteners opposite of the overlapping end	
	K. T-handle tool fails to engage shield for handling	1. Remove adjacent fasteners, attempt reinstallation of tool into shield	
		2. Use only one shield tool for handling	
	L. PAD release knob fails to rotate to close	1. Verify knob in release position	
		2. Stow PAD, retrieve backup PAD from Node bag	
	M. PAD release knob fails to rotate to open	1. Verify knob in release position	
		2. Attempt to rotate release knob using 7/16" ratchet on knob's 7/16" hex stud	
		3. To remove PAD from SRMS, release contingency release bar by rotating 7/16" captive release bolts (2) ccw	

LF1 EVA FAILURE WORKAROUND CRIBSHEET (Cont)

Procedure	Failure	Work-Around Steps	Comments
	N. APFR doesn't install in WIF	1. Verify APFR collar in install position	
		2. Attempt APFR installation in adjacent WIF	
		3. If APFR installs in adjacent WIF, use backup WIF	
		4. If APFR doesn't install in adjacent WIF, use alternate APFR	
	O. Safety tether doesn't tend	1. Pull out small amount of cable, allow reel to retract while holding cable slightly tensioned	
		2. Use alternate safety tether	
	P. TSA latch failed closed	Release 7/16" EVA bolt on latch bracket, rotate bracket clear of latch tongue	
	Q. TSA latch failed open	Close remaining latches (3 of 4 required for landing)	
II. INSTALL HANDRAIL	A. Handrail will not install in seat track	1. Verify rigid BRT	
		2. Verify handrail shoe is completely released	
		3. **PGT[A4 5.0ft-lb, CCW2 30RPM]-6Ext-7/16:** Verify handrail bolt completely released	
	B. Fastener will not engage completely	Release bolt, verify alignment, re-attempt nominal installation	
III. ESPAD INSTALL	A. EUTAS compliant mount lock fastener (outboard) fails to release	1. If less than one turn, set PGT to manual ratchet mode	One turn is sufficient to achieve compliance for installation
		2. If less than one turn, use ratchet with cheater bar	
		3. If less than one turn, do not remove from FSE	
	B. EUTAS compliant mount lock fastener (inboard) fails to release	1. If less than 15 turns, set PGT to manual ratchet mode	15 turns is sufficient to achieve compliance for installation
		2. If less than 15 turns, use ratchet with cheater bar	
		3. If less than 15 turns, do not remove from FSE	
	C. ESPAD Launch bolt (A, B or C) fail to release	1. Increase PGT torque setting to B7, ensure locking sleeve is fully depressed	
		2. Contingency Release: Remove contingency bolt from pallet side of passive ESPAD **PGT[B7, CC2, 30.5]**, expect 12 turns. Ball socket housing remains attached to ESPAD After installation to A/L, remove FSE housing from ESPAD. Retrieve ratchet, cheater bar (Z1 ETSD) and release 4 contingency bolts. Expect 38 ft-lb and 14 CCW turns	

LF1 EVA FAILURE WORKAROUND CRIBSHEET (Cont)

Procedure	Failure	Work-Around Steps	Comments
	D. Unable to mate ESPAD to A/L	1. Back off and reattempt. Confirm ESPAD compliant bolts release and no jamming has occurred	
		2. Manipulate/rotate EUTAS by hand to push over trunnion	EUTAS has 3 shear pins that engage with mating holes in the tip of the trunnion. EUTAS is mounted on a compliant mount which allows for 5 degrees of rotational freedom as well as 6 degrees of coning angle provided by the EUTAS gimbal mount
		3. Allow 5-10 minute thermal equalization	ESPAD my require thermal dwell time
		4. Retrieve PRDs (2) and strap down ESPAD to engage EUTAS: Stbd: PRD strap from A/L HR 0501 to ESPAD HR 8033 nadir under ESPAD HR 8031 through the opening in ESPAD then back to A/L HR 0502, hook the ends of the PRD together Port: PRD box hook to A/L HR 0531 then strap nadir over front of ESPAD in between 8036 and port EUTAS then nadir to hook (strap end) on A/L HR 0530	
	E. Unable to deploy strut	1. Verify both wire ties are released	Wire ties installed at CEIT
		2. Release hinge bolt: **PGT[B7, CCW2, 30.5]** Expect 14 ft-lb and 21 turns	
	F. Unable to engage EUTAS locking bolt	1. Install wire ties: ESPAD HR 8036 (port) or 8035 (stbd) attach 2 wire ties together then attach to lock nut	
	F. Unable to mate strut to A/L	Adjust strut length: Open MLI Disengage two slide locks at end of adjustment handle Rotate CW to extend, CCW to retract Engage locks and replace MLI	
	G. Unable to open V-guides	Loosen tie down pin: **PGT[B7, CCW2, 30.5]** Expect 22 turns. After installation of ESP2, V-guide will be attached in reverse order: **PGT[B7, CW2, 30.5]** 22 turns	

LF1 EVA FAILURE WORKAROUND CRIBSHEET (Cont)

Procedure	Failure	Work-Around Steps	Comments
IV. ESP2 DEPLOY	A. ESP2 PRLAs will not release	Perform contingency override on PRLA. Refer to generic PRLA release procedure	
	B. ESP2 will not release from KYA	1. Close PRLAs (IV) then EVA perform: Release Lock Bolt, PGT[B5(21 ft-lb), CCW1, 30.5] 8 turns Turn shaft bolt from ENGAGE to DISENGAGE: **PGT[B7(25 ft-lb), CCW1, 30.5]** ¼ turn Lock down Lock Bolt, **PGT[B5(21 ft-lb), CW2, 30.5]** 8 turns Open PRLAs	
		2. Close PRLAs (IV) then EVA perform: Release Fork Bearing Release **PGT[B2(13.5 ft-lb), CCW2, 30.5]** 9.5 turns Open PRLAs, fwd aft sequence, release ESP2 (SSRMS) Release fork bearing protection cover from KYA and secure fork bearing on shaft	
V. ESP2 BERTHING	A. Unable to achieve capture envelope	1. Back off and reattempt	
		2. TBD other method	
		3. Return ESP2 to PLB. EVA required to verify ESP2 within capture envelope using marks on the keel yoke assembly	
	B. ESPAD claw fails to close	1. If possible, close V guide latches	
		2. GCA SSRMS to full capture	
		3. Retrieve PRD: PRD box hook to A/L HR 0502 over capture bar to port A/L 0534 (inside diagonal HR on ESPAD 8031 and 8000)	
	C. Unable to close V-guide latch	1. Nadir: PRD from ESPAD HR 8029 to ESPAD HR 8030 Stbd: around the pin near ESPD HR 8033, box aft of ESPAD on back face, hooks together Port: around the pin under ESPAD HR 8032, box aft of ESPAD on aft face, hooks together	
	D. Unable to close V-guide locks	1. If J-slot lock fails to engage, torque down report to MCC	
	D. ESPAD claw fails to open	1. Increase torque setting to **PGT[B7(25.5), CCW2, 30.5]**	Bar may or may not come free
		2. Tether to and loosen capture bar, 10 to 12 turns on each passive ESPAD capture bar contingency release bolt (2)	

LF1 EVA FAILURE WORKAROUND CRIBSHEET (Cont)

Procedure	Failure	Work-Around Steps	Comments
VI. ESP2 CABLES	A. Unable to reach ESP2 with primary cable	1. Reroute as required	
		2. Only secondary cable is required-no action necessary	
VII. MISSE	A. Unable to release PEC from MISSE clamp	1. Remove clamp from HR, report to MCC	
VIII. VSSA Node Light Stanchion Release	A. Unable to release Node light stanchion	Contact MCC. Light will not be temporarily removed	
IX. CMG Removal from Z1	A. Unable to release fixed shim bolt	1. Increase PGT torque setting to **PGT[A7(9.2 ft-lb), CCW1, 30.5]**	
		2. Increase PGT torque setting to **PGT[B7(25.5 ft-lb), CCW1, 30.5]**	Bolt may shear, causing loose hardware
	B. Unable to remove fixed shim	1. Remove other shims first, reattempt	
		2. Tether shim, continue with nominal plan, remove shim after CMG is removed	
		3. Use bolt puller to pry shim out	
	C. Unable to release CMG bolt	1. Re-tighten all bolts and attempt stuck bolt first, continue nominal plan if successful	
		2. Set PGT to manual ratchet, contact MCC	Insert in Z1 stanchion may torque out. This will cause an interference with the FSE installation
		3. Use ratchet wrench with cheater bar	
	D. Unable to remove CMG	1. Verify all bolts, connectors released	
		2. Use bolt puller and pry CMG out, contact MCC	
X. CMG REMOVAL FROM FSE	A. Unable to release fixed shim bolt	1. Increase PGT torque setting to **PGT[A7(9.2 ft-lb), CCW1, 30.5]**	Bolt may shear, causing loose hardware
		2. Increase PGT torque setting to **PGT[B7(25.5 ft-lb), CCW1, 30.5]**	
	B. Unable to remove fixed shim	1. Remove other shims first, reattempt	
		2. Tether shim, continue with nominal plan, remove shim after CMG is removed	
	C. Unable to release CMG bolt	1. Re-tighten all bolts and attempt stuck bolt first, continue nominal plan if successful	
		2. Set PGT to manual ratchet, contact MCC	
	D. Unable to remove CMG	1. Verify all bolts released, MLI clear	
		2. Use bolt puller and pry out CMG, contact MCC	

LF1 EVA FAILURE WORKAROUND CRIBSHEET (Cont)

Procedure	Failure	Work-Around Steps	Comments
XI. CMG INSTALL AT THE FSE	A. Unable to drive CMG bolt	1. If 5 of 6 bolts complete, notify MCC and continue	
		2. Verify alignment, release other bolts, reattempt bolt first	
		3. Remove CMG and verify no obstruction, reinstall	
		4. Contact MCC	
	B. Unable to drive adjustable shim bolt	1. Increase torque setting to **PGT[B7 (25.5 ft-lb), CCW1, 30.5]** ½ turn only, return to nominal setting	
		2. Contact MCC, TBD temp stow	
	C. Unable to release ball stack from LMC	1. PGT[TBD] remove contingency bolts (4) from LMC	ECOM will release from LMC
XII. CMG INSTALL AT Z1	A. Unable to drive CMG bolt	1. If 4 of 6 bolts complete, notify MCC and continue	
		2. Verify alignment, release other bolts, reattempt bolt first	
		3. Remove CMG and verify no obstruction, reinstall	
		4. Contact MCC	
XIII. Z1 THERMAL SHROUD INSTALL	A. Unable to reattach shroud	1. Notify MCC of condition and continue	
XVIII. ESP2 FRGF REMOVE	A. Unable to release bolt	1. Ratchet collar to RCCW, apply manual torque	
		2. Retrieve cheater bar and ratchet from Z1 ETSD, manually break torque	

RELEASE ROEU LATCHES

IV	EV
1. √MPLM ROEU DEACT complete (TBD book)	Tools reqd: Ratchet with 3-in Ext (Airlock)
2. <u>ROEU SAFING</u> R13L √PL BAY MECH PWR SYS 1,2 (two) – OFF A6U √RETEN LOGIC PWR SYS 1,SYS 2 (two) – OFF PL SEL – 3 √LAT 1,2,3 (three) – OFF √1 tb – REL (LAT) √2 tb – bp Give EV GO to release ROEU	<u>WARNING</u> For release, do not close access cover until ROEU stowed. Latches may not snap back to closed posn 1. On IV GO, open latch drive access cover: Break safety cord, release access cover (3/4 turn ccw) Open access cover (~120°) Manual drive to RELEASE: Rotate control lever to RELEASE Rotate latch drive cw (~9 ft-lb) to hard stop (~3/4 turn) Remove drive ratchet, clear worksite
3. <u>VERIFY TALKBACKS</u> A6U √PL RETEN LAT 1 tb – REL √2 tb – bp √3 tb – REL	
4. <u>DEMATE ROEU</u> R13L PL BAY MECH PWR SYS 1,2 (two) – ON A6U RETEN LOGIC PWR SYS 1,SYS 2 (two) – ON LAT 2 – REL (tb-REL, 36 sec max) – OFF RETEN LOGIC PWR SYS 1, SYS 2 (two) – OFF R13L BAY MECH PWR SYS 1,2 (two) – OFF	<u>WARNING</u> For release, remain clear of latches during access cover closing. Latches may snap back to closed posn 2. Reengage latch actuator: Rotate control lever to neutral posn Close, secure access cover (3/4 turn cw) Clear worksite

LATCH ROEU LATCHES

IV	EV
1. √MPLM ROEU DEACT complete (TBD book)	Tools reqd: Ratchet with 3-in Ext (Airlock)
2. <u>MATE ROEU</u> R13L √PL BAY MECH PWR SYS 1,2 (two) – OFF A6U RETEN LOGIC PWR SYS 1, SYS 2 (two) – ON PL SEL – 2 LAT 2 – LAT (tb-LAT, 60 sec max) LAT 2 – OFF	
3. <u>ROEU SAFING</u> R13L PL BAY MECH PWR SYS 1,2 (two) – OFF A6U RETEN LOGIC PWR SYS 1, SYS 2 (two) – OFF √LAT 1,2,3 (three) – OFF √1 tb – bp √2 tb – LAT	
Give EV GO to release ROEU	1. On IV GO, open latch drive access cover: Break safety cord, release access cover (3/4 turn ccw) Open access cover (~120°) Manual drive to LATCH: Rotate control lever to LATCH Rotate latch drive ccw (~9 ft-lb) to hard stop (~3/4 turn) Remove drive ratchet, clear worksite
4. <u>VERIFY TALKBACKS</u> A6U √PL RETEN LAT 1 tb – bp √2 tb – LAT √3 tb – LAT √RDY 3 tb – gray	
5. <u>RELAX ROEU</u> R13L PL BAY MECH PWR SYS 1,2 (two) – ON A6U RETEN LOGIC PWR SYS 1,SYS 2 (two) – ON LAT 1 – REL (tb-REL, 24 sec max) – OFF √2 tb – bp LOGIC PWR SYS 1,2 (two) – OFF R13L BAY MECH PWR SYS 1,2 (two) – OFF	2. Reengage latch actuator: Rotate control lever to neutral posn Close, secure access cover (3/4 turn cw) Clear worksite

STOW ROEU ARM

IV	EV
1. √MPLM ROEU DEACT complete (TBD book)	Tools reqd: Ratchet with 3-in Ext (Airlock)
2. <u>RELEASE ROEU LATCHES</u> R13L √PL BAY MECH PWR SYS 1,2 (two) – ON A6U RETEN LOGIC PWR SYS 1, SYS 2 (two) – ON PL SEL – 2 LAT 3 – REL (tb-REL, 40 sec max) – OFF	
3. <u>ROEU SAFING</u> R13L PL BAY MECH PWR SYS 1,2 (two) – OFF A6U RETEN LOGIC PWR SYS 1, SYS 2 (two) – OFF √LAT 1,2,3 (three) – OFF √1 tb – REL √2 tb – bp √3 tb – REL	
Give EV GO to stow ROEU	
	1. On IV GO, open latch drive access cover: Break safety cord, release access cover (3/4 turn ccw) Open access cover (~120°) Manual drive to STOW: Rotate control lever to STOW Rotate arm drive ccw (~23 ft-lb) to hard stop and pull arm inboard to verify Remove drive ratchet
4. <u>VERIFY TALKBACKS</u> A6U √PL RETEN LAT 1 tb – REL √2 tb – bp √3 tb – REL	
	2. Reengage arm actuator: Rotate control lever to neutral posn Close, secure access cover (3/4 turn cw) Clear worksite

MATE ROEU ARM

IV	EV
1. MPLM ROEU DEACT complete (TBD book) 2. <u>ROEU SAFING</u> R13L √PL BAY MECH PWR SYS 1,2 (two) – OFF A6U √RETEN LOGIC PWR SYS 1,SYS 2 (two) – OFF PL SEL – 2 √LAT 1,2,3 (three) – OFF √1 tb – REL √2 tb – REL (bp) √3 tb – REL Give EV GO to mate ROEU	Tools reqd: Ratchet with 3-in Ext (Airlock)
	1. On IV GO, open arm drive access cover: Break safety cord, release access cover (3/4 turn ccw) Open access cover (~120°) Manual drive to MATE: Rotate control lever to MATE Ratchet arm drive cw (~25 ft-lb) until “READY TO LATCH” posn indicated on interface guide Remove drive ratchet Clear worksite (for latching)
3. <u>VERIFY TALKBACKS</u> A6U √PL RETEN LAT 1 tb – bp √2 tb – LAT √3 tb – REL 4. <u>LATCH ROEU LATCHES</u> R13L PL BAY MECH PWR SYS 1,2 (two) – ON A6U RETEN LOGIC PWR SYS 1,SYS 2 (two) – ON LAT 3 – LAT (tb-LAT, 40 sec max) – OFF √RDY 3 tb – gray LOGIC PWR SYS 1,SYS 2 (two) – OFF R13L BAY MECH PWR SYS 1,2 (two) – OFF	
5. <u>RELAX ROEU (EVA)</u> Monitor PL RETEN LAT 1 tb Give EV GO to STOW arm, halt once LAT 1 tb – REL	2. <u>RELAX ROEU (EVA)</u> On IV GO, Rotate control lever to STOW: Ratchet arm drive ccw until IV receives LAT 1 tb – REL. Remove drive ratchet 3. Reengage arm actuator: Rotate control lever to neutral posn Close, secure access cover (3/4 turn cw) Clear worksite

ROEU OVERVIEW

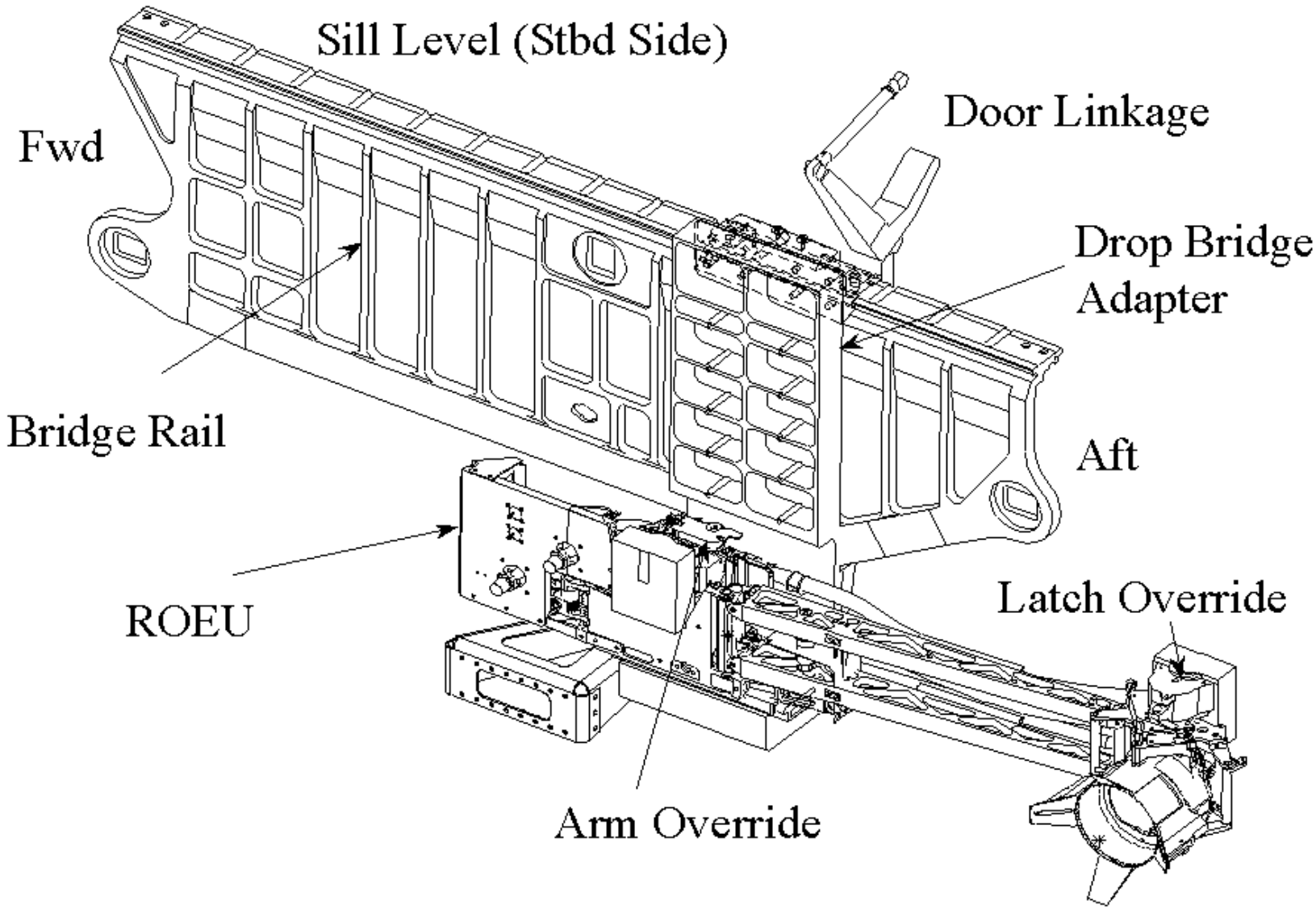

MANUALLY OPEN/CLOSE CBM PETAL (00:30)

TIME (HR:MN)	IV/RMS	EV1	EV2
00:00	CAUTION During any CBM operation, avoid contact with sealing surface Tools reqd: PGT (or EVA ratchet) w/6-in ext NOTE For stbd, nadir, or zenith CBM, EV1 will operate from RMS: CBM ACCESS (PDRS OPS, CONTINGENCY EVA). For port CBM, EV1 will operate from APFR, using following settings: For fwd half of CBM use WIF: NOD1/03-05, C=11:00, P=RR, R=G, Y=12:00 For aft half of CBM use WIF: NOD1/03-03, C=11:00, P=QQ, R=G, Y=1:00	PETAL OPEN 1. Configure/set up APFR, TS, tools as reqd; transfer to worksite	PETAL OPEN 1. Configure/set up APFR, TS, tools as reqd; transfer to worksite
		2. √Launch restraints (two) for failed petal locked (button pushed in) 3. Disengage petal mechanism from capture latch: Turn innermost bolt (one going thru petal) w/PGT ccw until capture latch disengaged (~6-8 turns) Turn innermost bolt cw to retighten 4. While holding petal, release launch restraint 5. Slowly, allow petal to open	2. √Launch restraints (two) for failed petal locked (button pushed in) 3. Assist EV1 as reqd 4. While holding petal, release 2nd launch restraint 5. Slowly, allow petal to open
00:20		6. Clean up worksite	6. Clean up worksite
00:00		PETAL CLOSE 7. Close petal, hold 8. Reengage launch restraint (push in button)	PETAL CLOSE 7. Close petal, hold 8. Reengage 2nd launch restraint (push in button)
00:10			

CLEAR/RESTRAIN CBM CAPTURE LATCH (00:30)

TIME (HR:MN)	IV/RMS	EV1	EV2
00:00	CAUTION During any CBM operation, avoid contact with sealing surface Tools reqd: Wire Tie Caddy Sm-sm Retract Tethers (2) Adj Equip Tethers (2) NOTE For stbd, nadir, or zenith CBM, EV1 will operate from RMS: CBM ACCESS (PDRS OPS, CONTINGENCY EVA). For port CBM, EV1 will operate from APFR, using following settings: For fwd half of CBM use WIF: NOD1/03-05, C=11:00, P=RR, R=G, Y=12:00 For aft half of CBM use WIF: NOD1/03-03, C=11:00, P=QQ, R=G, Y=1:00	1. Configure/set up APFR, TS, tools as reqd; transfer to worksite 2. Restrain failed capture latch with wire ties, sm-sm retract tethers, or adj equip tethers out of contact zone of CBM ring (latch can be secured to turnbuckle or cable for center MMOD cover)	1. Configure/set up APFR, TS, tools as reqd; transfer to worksite 2. Assist EV1 as reqd
00:30		3. Clean up worksite	3. Clean up worksite

REMOVE/REPLACE CBM CONTROLLER ASSEMBLY (02:00)

TIME (HR:MN)	IV/RMS	EV1	EV2
00:00	CAUTION During any CBM operation, avoid contact with sealing surface Tools reqd: Airlock: PGT RAD 6-in ext 5/32-in Allen Driver Seat Track Tether Points (2) Connector Tool TSA: EVA Ratchet NOTE For stbd, nadir, or zenith CBM, EV1 will operate from the RMS: CBM ACCESS (PDRS OPS, CONTINGENCY EVA). For Lab stbd, zenith, nadir CBM, EV1 will operate from RMS. LAB FWD CBM ACCESS (PDRS OPS, EVA CONTINGENCY). For port CBM, EV1 will operate from APFR, using following settings: For fwd half of CBM use WIF: NOD1/03-05, C=11:00, P=RR, R=G, Y=12:00 For aft half of CBM use WIF: NOD1/03-03, C=11:00, P=QQ, R=G, Y=1:00. For Lab, port CBM, EV1 will operate from APFR using following settings: WIF: LAB-13, C=2, P=XX, R=F, Y=12	CONTROLLER REMOVAL 1. Configure/set up APFR, TS, tools as reqd; transfer to worksite	CONTROLLER REMOVAL 1. Configure/set up APFR, TS, tools as reqd; transfer to worksite

REMOVE/REPLACE CBM CONTROLLER ASSEMBLY (02:00) (Cont)

TIME (HR:MN)	IV/RMS	EV1	EV2
		2. Remove MMOD center cover as reqd: REMOVE/REPLACE MMOD CENTER COVER (EVA, ISS EVA CONTINGENCIES), COVER REMOVAL, steps 1-6 3. Attach tether point to seat track on failed controller 4. Disconnect cable connectors J1-J9 on controller (use connector tool as reqd) 5. Disconnect grounding straps (two) from controller with EVA ratchet, 5/32-in Allen Driver 6. Tether to tether point on controller 7. Release fasteners (five) on controller assembly with PGT, 5/32-in Allen Driver (15 ft-lb, 7-8 turns ccw; PGT: A5,CCW2,15.5); detach from bulkhead	2. Assist EV1 as reqd
01:00		8. Stow controller	
00:00		CONTROLLER REPLACE 9. Install new controller; tighten fasteners (five) on controller assembly with PGT, 5/32-in Allen Driver (10 ft-lb, 7-8 turns cw, PGT: A5,CW2,10.5) 10. Remove tether point 11. Connect grounding straps (two) to controller assembly with EVA ratchet, 5/32-in Allen Driver 12. Mate cable connectors J1-J9 to controller (use connector tool as reqd) 13. Reinstall MMOD center cover as reqd: REMOVE/REPLACE MMOD CENTER COVER (EVA, ISS EVA CONTINGENCIES), COVER REINSTALL, steps 1-7	CONTROLLER REPLACE 3. Assist EV1 as reqd
01:00		14. Clean up worksite	4. Clean up worksite

REMOVE/REPLACE MMOD CENTER COVER (00:30)

TIME (HR:MN)	IV/RMS	EV1	EV2
00:00	CAUTION During any CBM operation, avoid contact with sealing surface Tools reqd: Airlock: Wire-tie caddy Sm-sm retract tethers (2) Adj equip tethers (2) TSA: Large cable cutters Velcro/Tape caddy NOTE For stbd, nadir, or zenith CBM, EV1 will operate from RMS: CBM ACCESS (PDRS OPS, CONTINGENCY EVA). For port CBM, EV1 will operate from APFR, using following settings: For fwd half of CBM use WIF: NOD1/03-05, C=11:00, P=RR, R=G, Y=12:00 For aft half of CBM use WIF: NOD1/03-03, C=11:00, P=QQ, R=G, Y=1:00	COVER REMOVAL 1. Configure/set up APFR, TS, tools as reqd; transfer to worksite 2. Attach Adj Eqp Tether to cover near cut point and at an additional location on cover 3. Cut cable at pulley opening: Cut cable next to pulley using large cable cutter 4. Release cover quadrant near affected area: Remove pip pins on pulleys (1 per pulley) Push pulley towards CBM ring, slide pulley toward hatch from slot; repeat for adjacent pulley Cinch tether to pull cover away from mating surface Remove pip pins on each end of standoff bar (2 per standoff) Rotate standoff bar towards hatch center 45 deg, unhook from receptacles Cinch tether to restrain cover for worksite access	COVER REMOVAL 1. Configure/set up APFR, TS, tools as reqd; transfer to worksite 2. Assist EV1 as reqd

REMOVE/REPLACE MMOD CENTER COVER (00:30) (Cont)

TIME (HR:MN)	IV/RMS	EV1	EV2
		5. Repeat step 6 as reqd for other CBM quadrants; restrain cover open with sm-sm retract tethers or adj equip tethers	
00:15			
00:00		<u>COVER REINSTALL</u> 6. Release/stow tethers used to restrain cover 7. Reinstall cover quadrant: Reattach standoff bar, rotate outward 45 deg; reinstall pip pins if time permits (2 per standoff) Insert pullies (two) back into slots (two); reinstall pip pins if times permits (1 per pulley) 8. Repeat step 3 as reqd for other removed CBM quadrants 9. Secure cover using tethers or wire ties as reqd	<u>COVER REINSTALL</u> 3. Assist EV1 as reqd
00:30		10. Clean up worksite	4. Clean up worksite

FLIGHT SPECIFIC EVA REFERENCE

STS-114 PAYLOAD BAY LAYOUT ..... FS 18-3
ESP2 LAUNCH CONFIGURATION (TOP VIEW) ..... FS 18-4
(BOTTOM VIEW) ..... FS 18-5
ESPAD COMPONENTS ..... FS 18-6
ACTIVE ESPAD ..... FS 18-7
ESPAD LAUNCH BOLTS ..... FS 18-8
EUTAS COMPLIANT BOLTS ..... FS 18-9
ESPAD INSTALL ..... FS 18-10
EUTAS ..... FS 18-11
ESPAD STRUT ..... FS 18-12
DEPLOY ..... FS 18-13
V-GUIDE ..... FS 18-14
CLOSEUP ..... FS 18-15
ESP2 INSTALL ..... FS 18-16
POWER FROM ESP2 TO ORBITER ..... FS 18-17
ORBITER POWER CABLE STOWED ..... FS 18-18
ESP2 POWER CABLES ..... FS 18-19
FLIGHT CABLES ..... FS 18-20
CABLE TIES ..... FS 18-21
PRIMARY POWER CABLE ROUTING ..... FS 18-22
SECONDARY CABLE INSTALL – PANEL A119 ..... FS 18-23
ROUTING ..... FS 18-24
ACTIVE ESPAD HR LABELS ..... FS 18-26
PASSIVE ESPAD HR LABELS ..... FS 18-27
HR AND WIF LAYOUT (ZENITH) ..... FS 18-28
(NADIR) ..... FS 18-29
MISSE LOCATIONS ..... FS 18-30
ESP2 FRGF ..... FS 18-31
LMC WITH CMG ..... FS 18-32
CMG NOMENCLATURE ..... FS 18-33
LOCATION ..... FS 18-34
AFT Z1 PRE-LAUNCH WITH BLANKET ..... FS 18-35
CMG ON Z1 ..... FS 18-36
SHIMS AT Z1 ..... FS 18-37
BLANKET CLOSED ON CMG IN FSE ..... FS 18-38
NEW CMG WITH BLANKET ..... FS 18-39
CMG IN FSE WITH MLI ..... FS 18-40
SHIMS ON FSE ..... FS 18-41
FSE WITHOUT MLI OR CMG ..... FS 18-42
SWAP IN PLB ..... FS 18-43

This Page Intentionally Blank

STS-114 PAYLOAD BAY LAYOUT

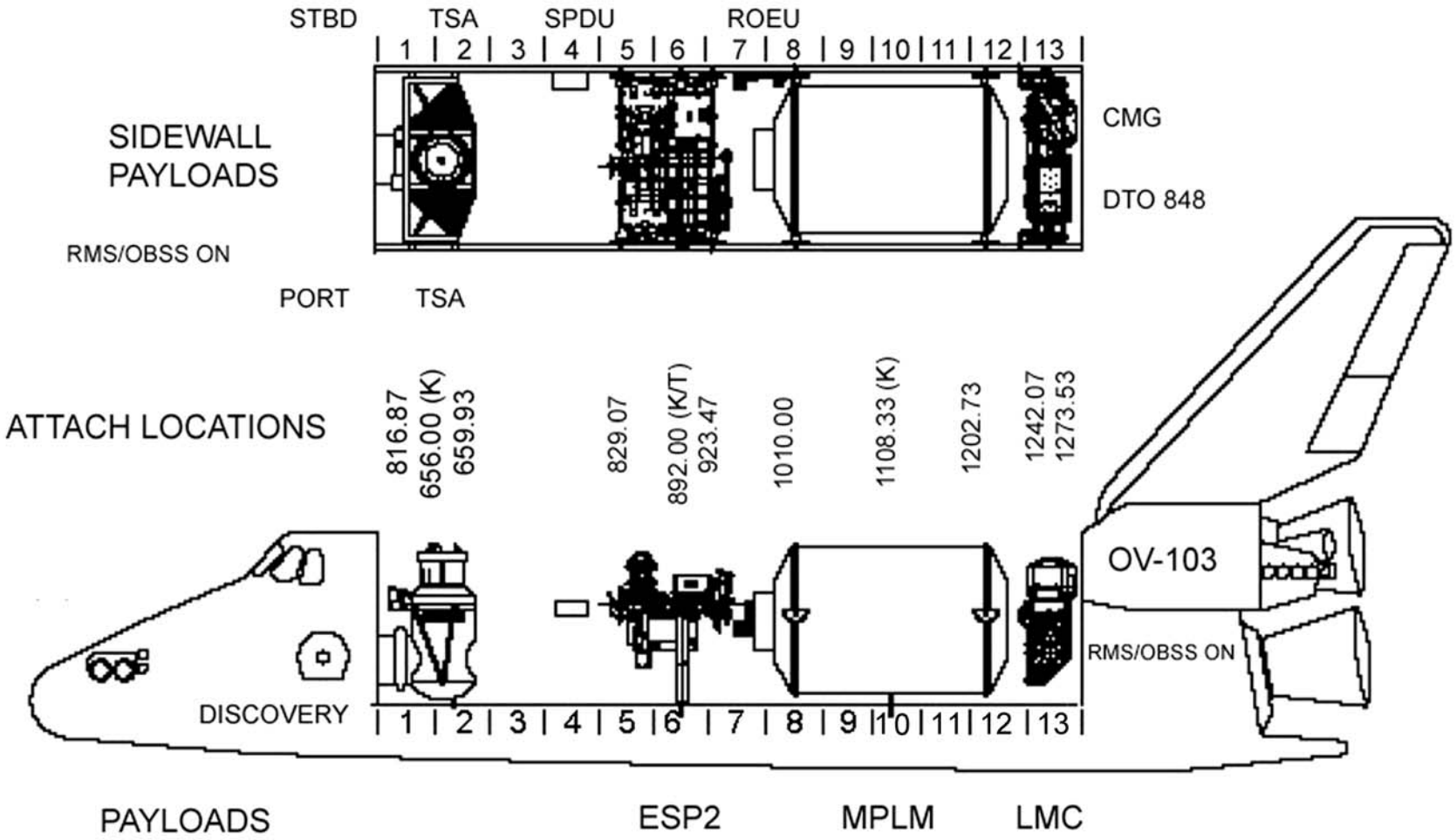

ESP2 LAUNCH CONFIGURATION (TOP VIEW)

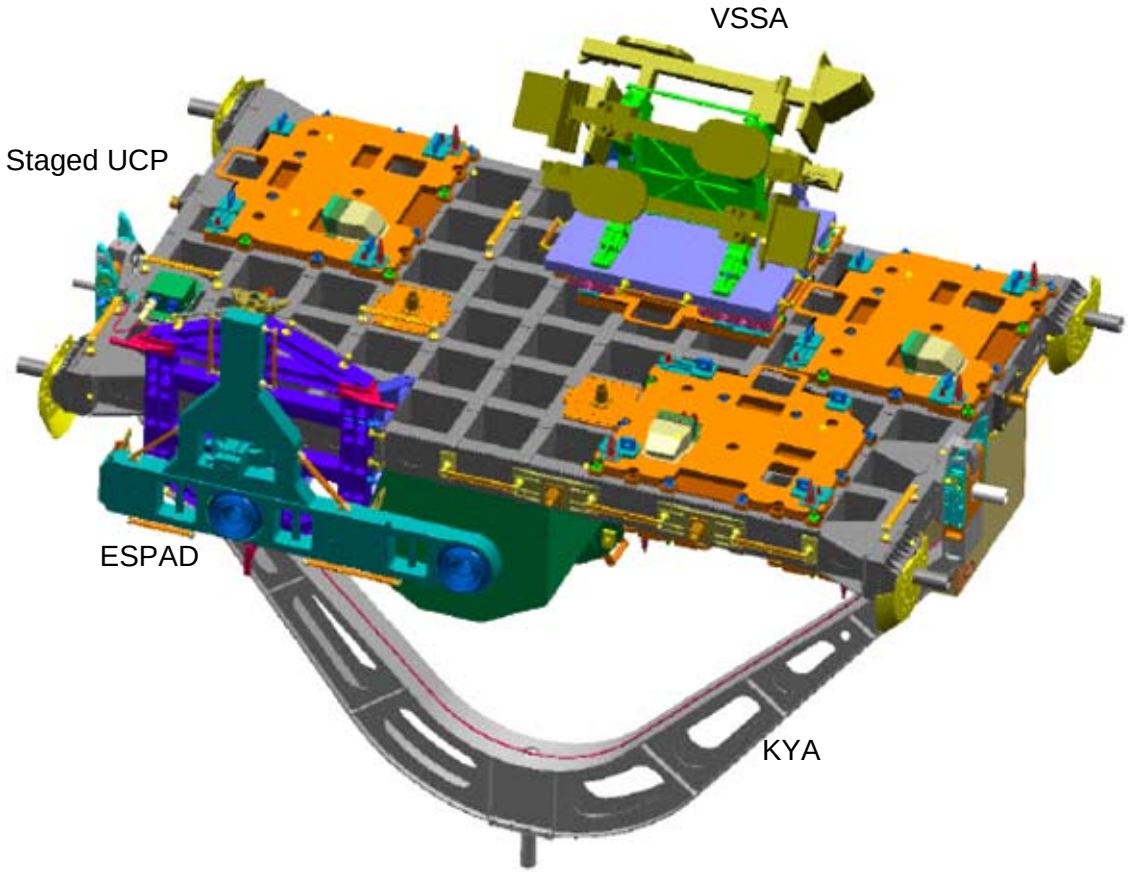

ESP2 LAUNCH CONFIGURATION (BOTTOM VIEW)

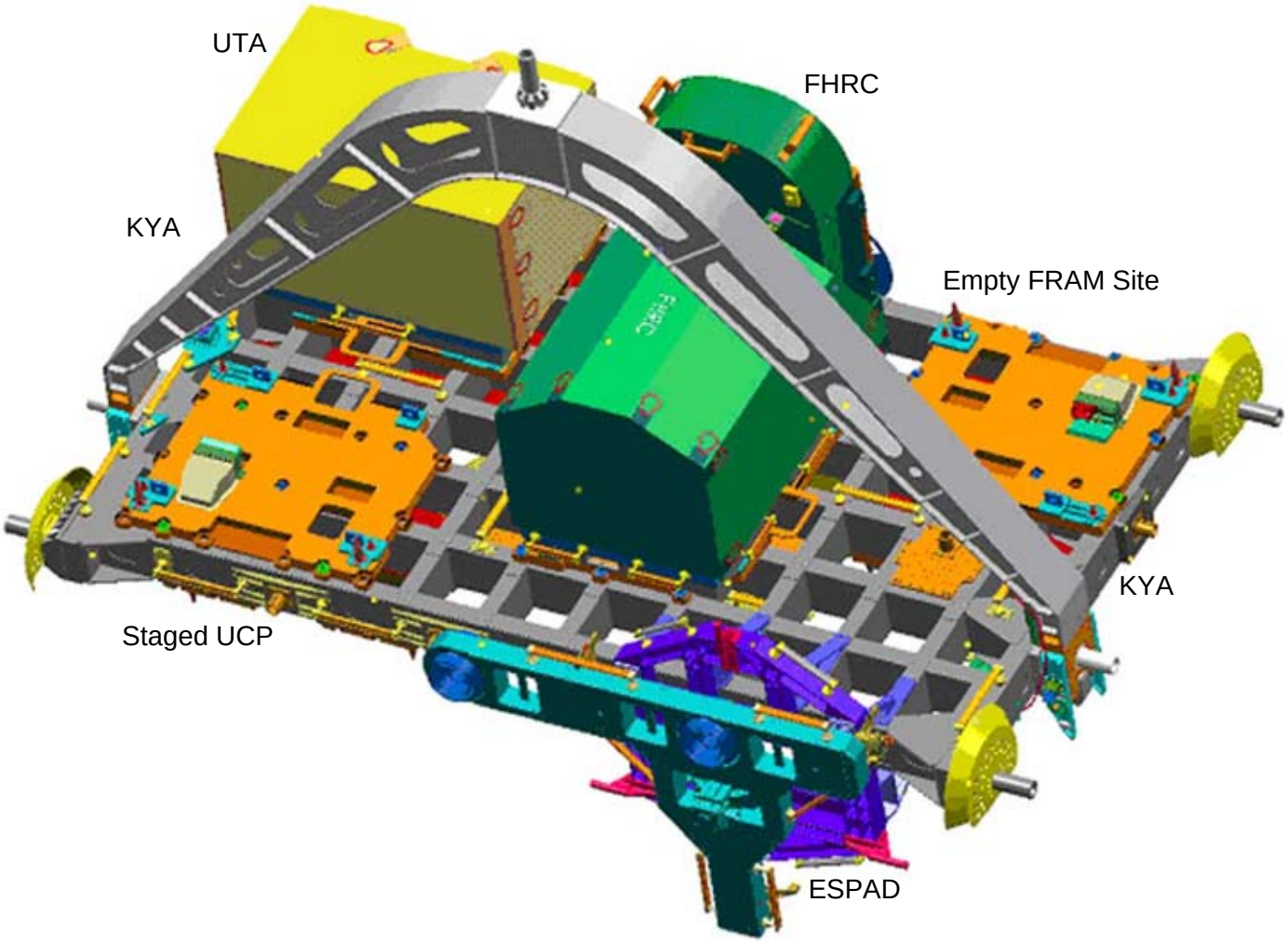

ESPAD COMPONENTS

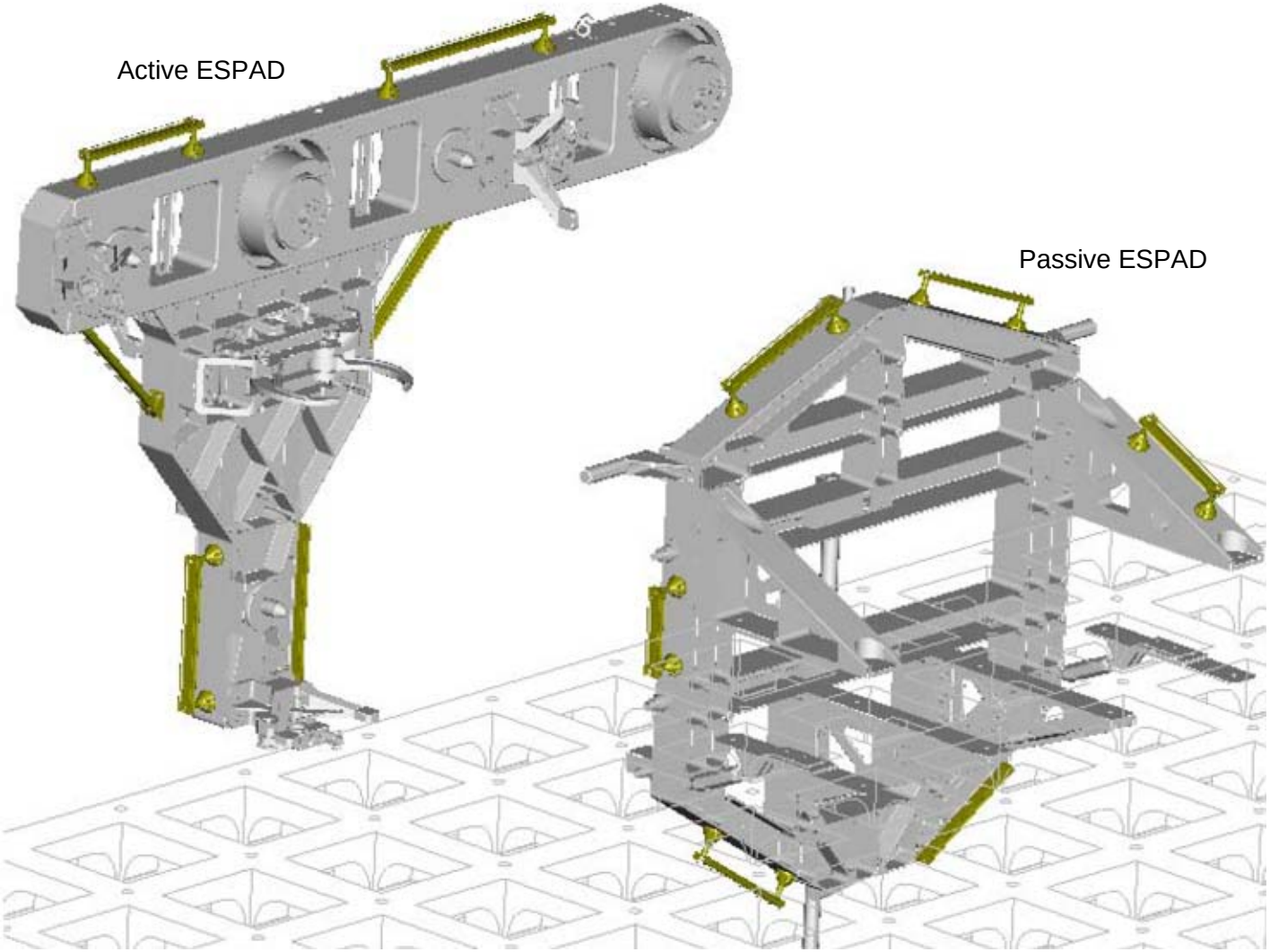

ACTIVE ESPAD

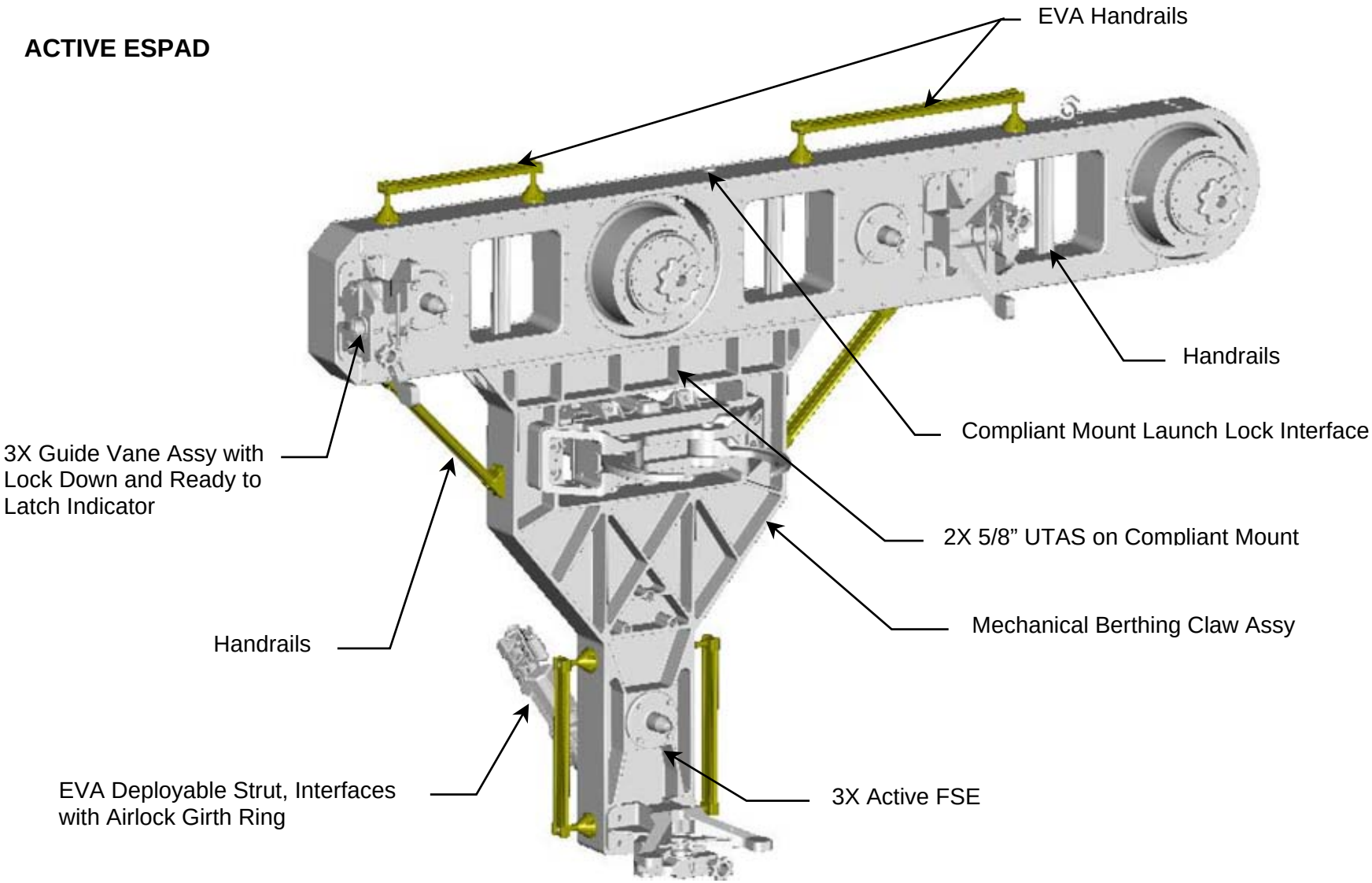

ESPAD LAUNCH BOLTS

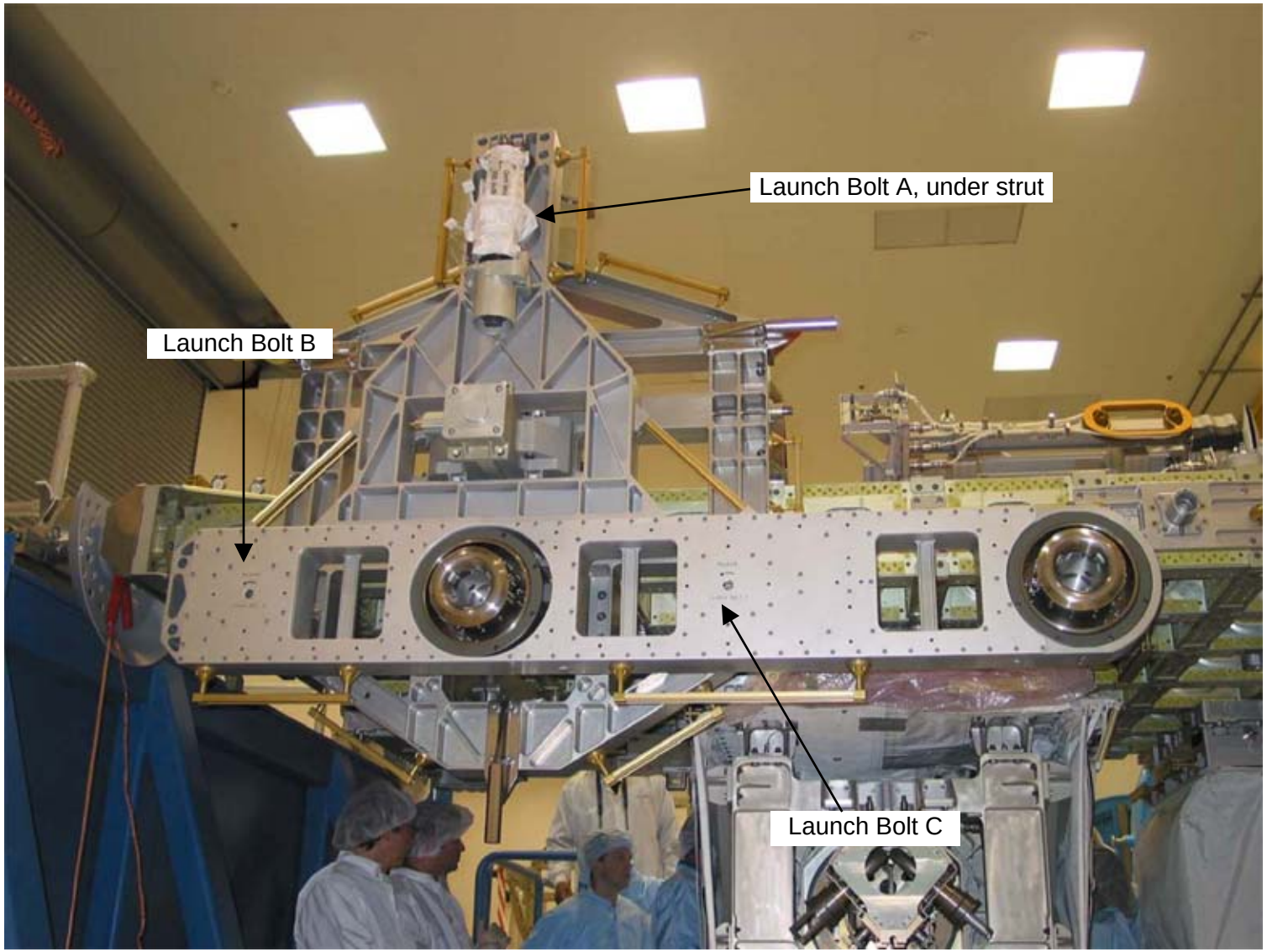

EUTAS COMPLIANT BOLTS

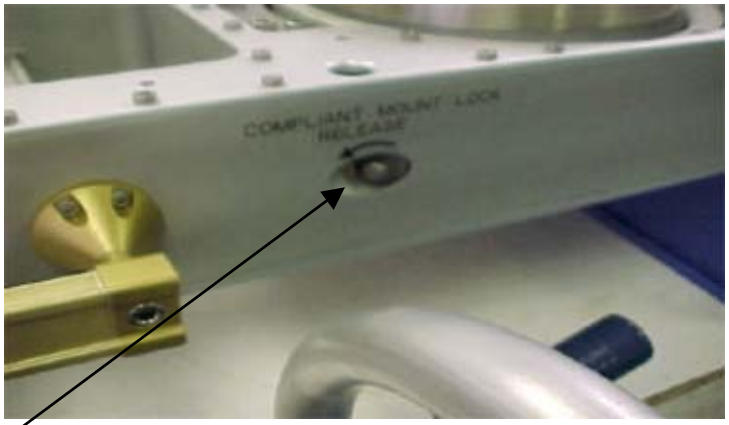

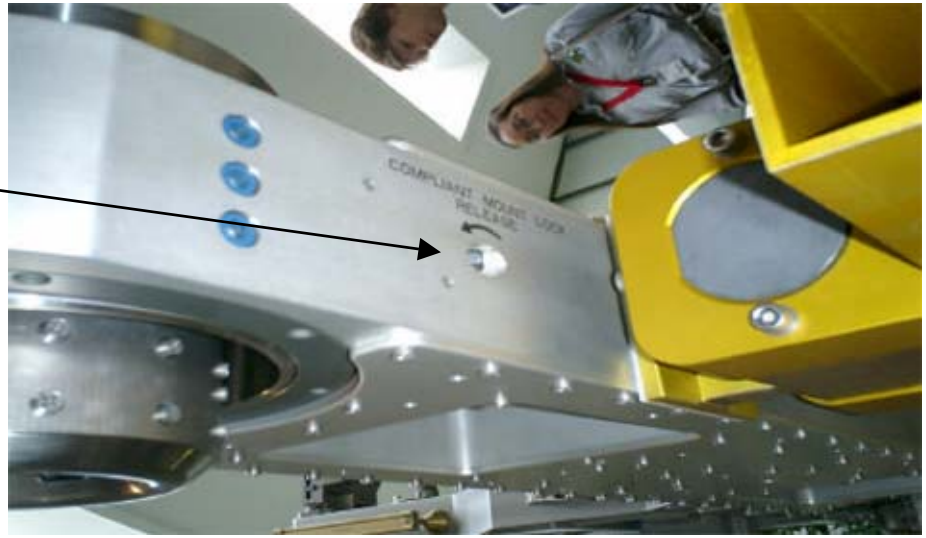

ESPAD INSTALL

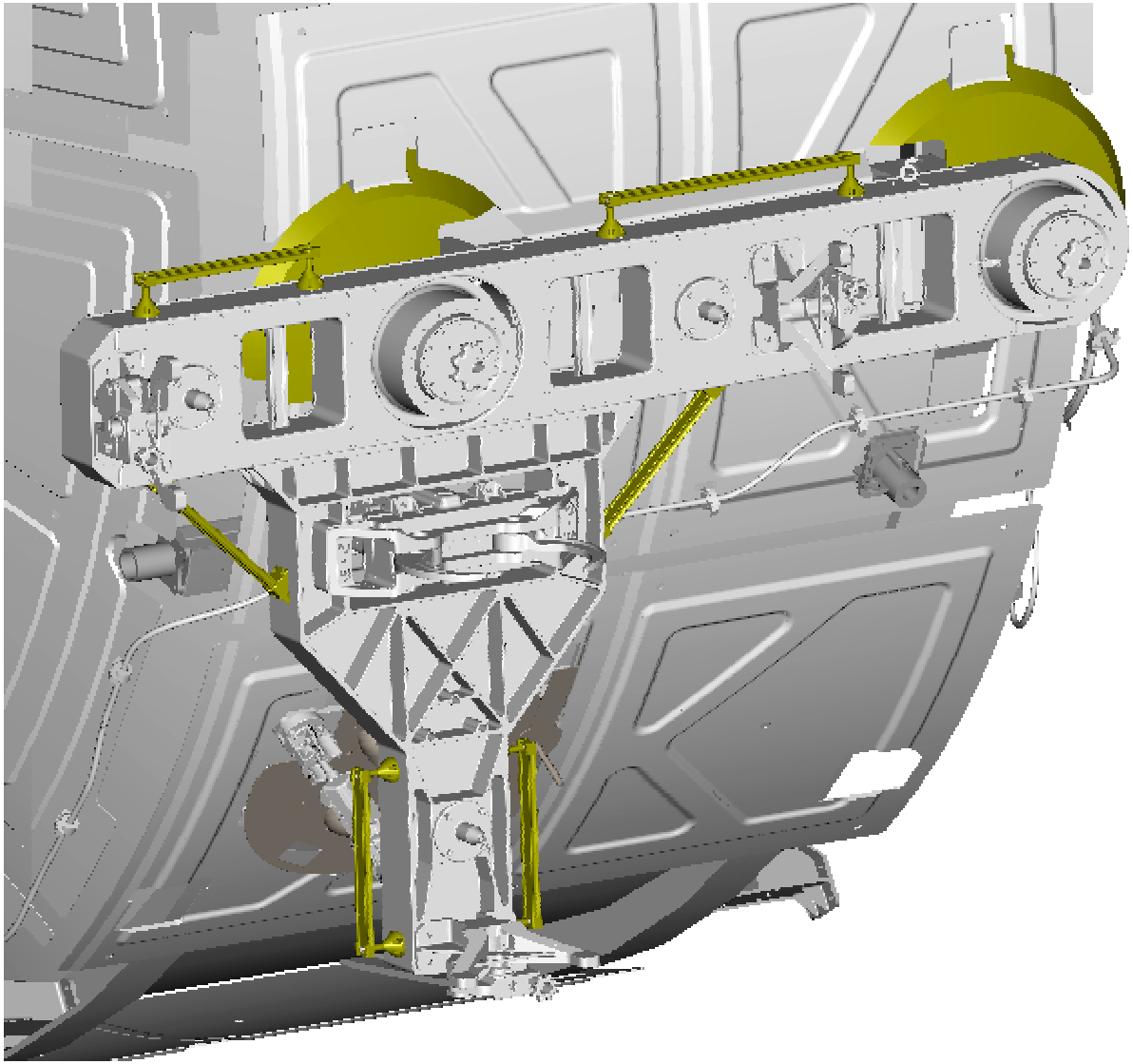

EUTAS

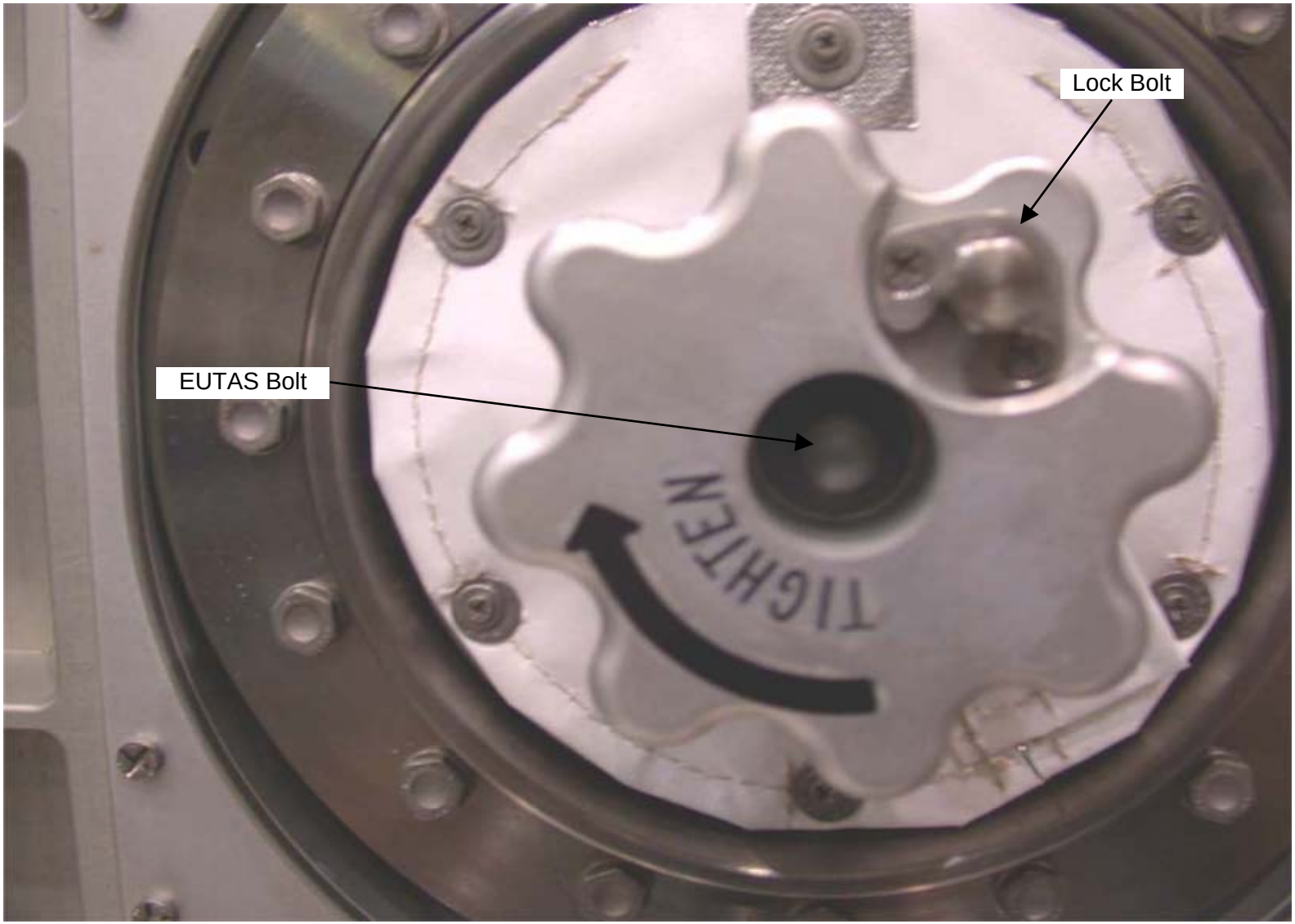

ESPAD STRUT

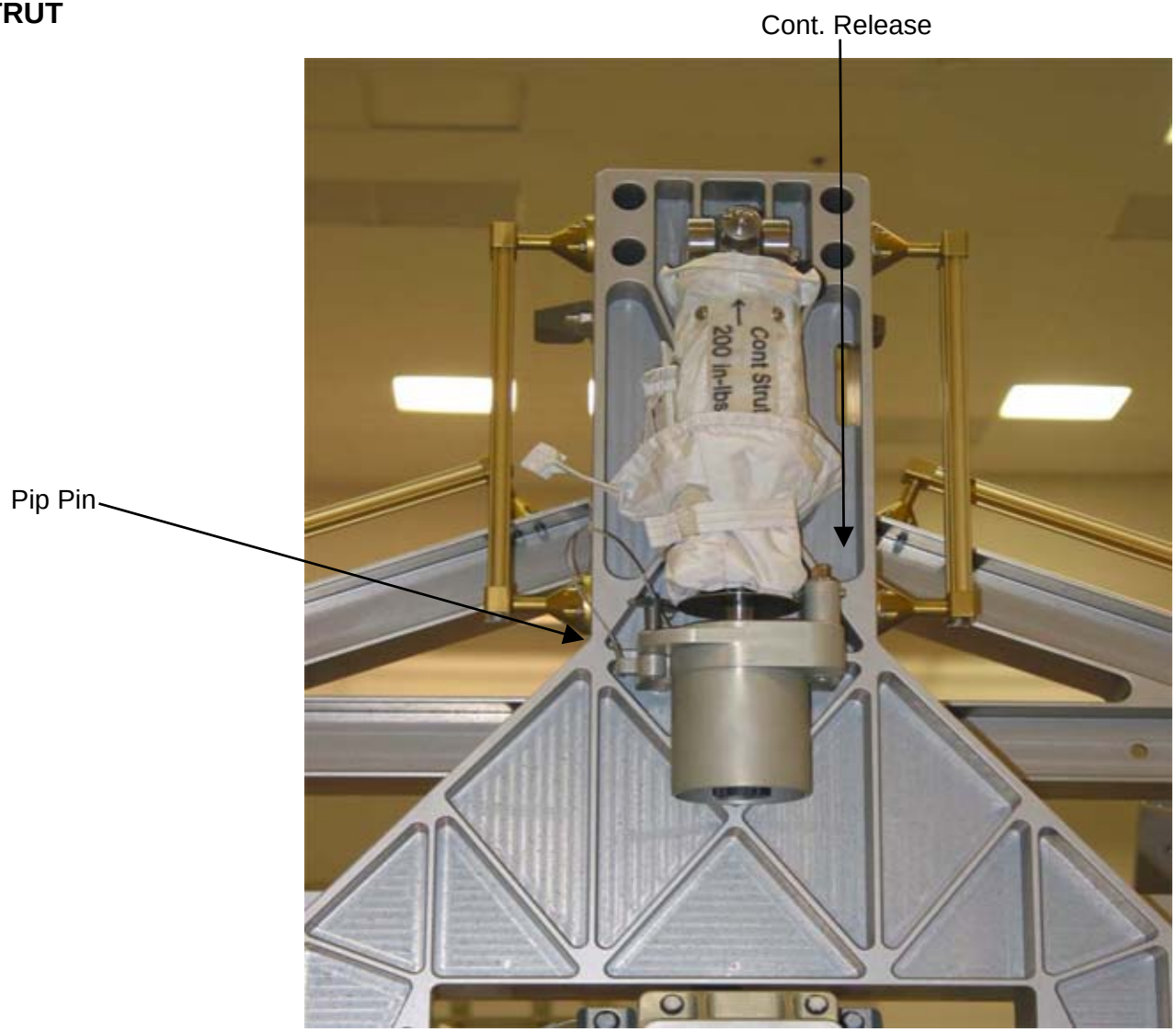

ESPAD STRUT DEPLOY

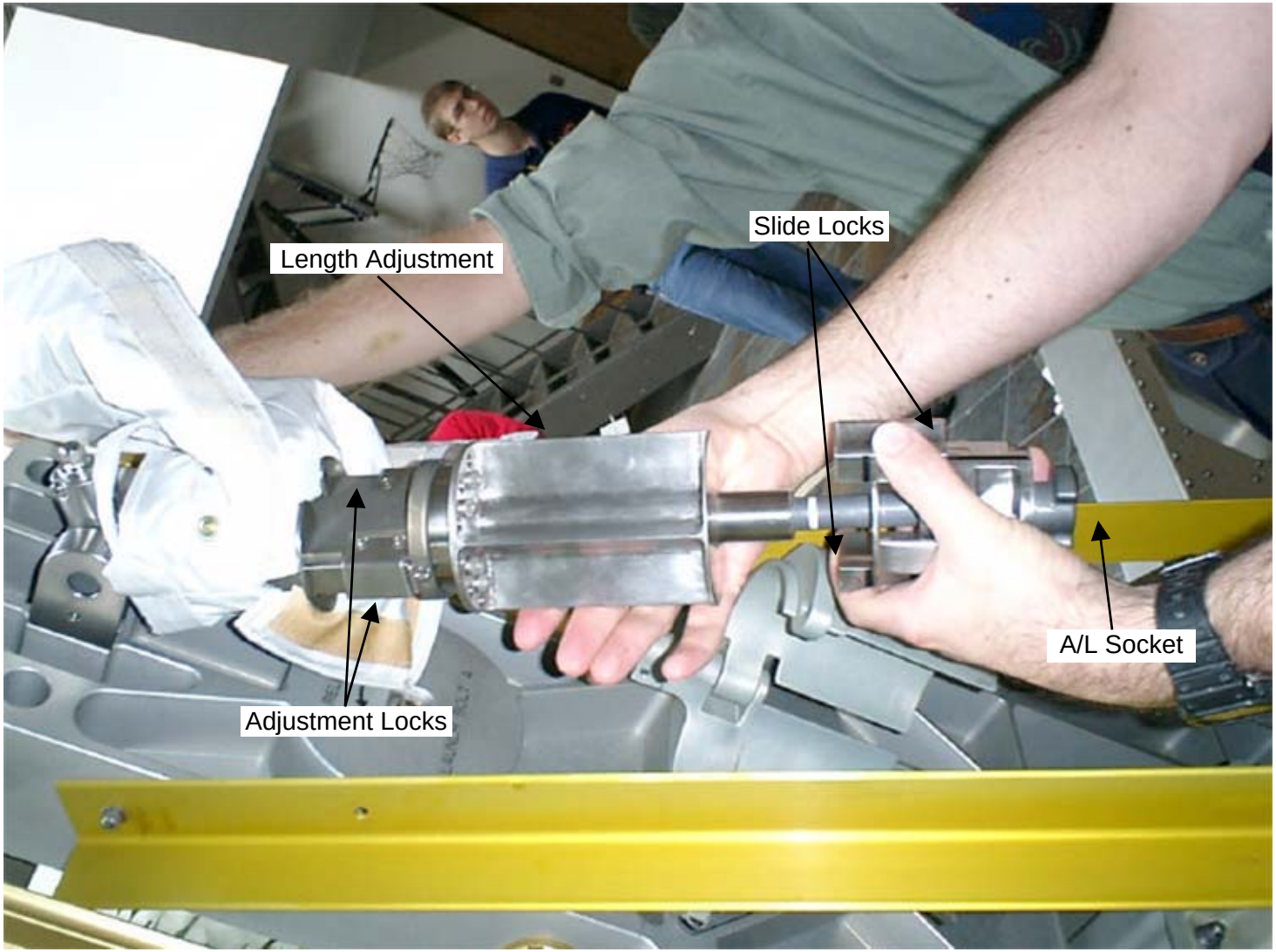

ESPAD V-GUIDE

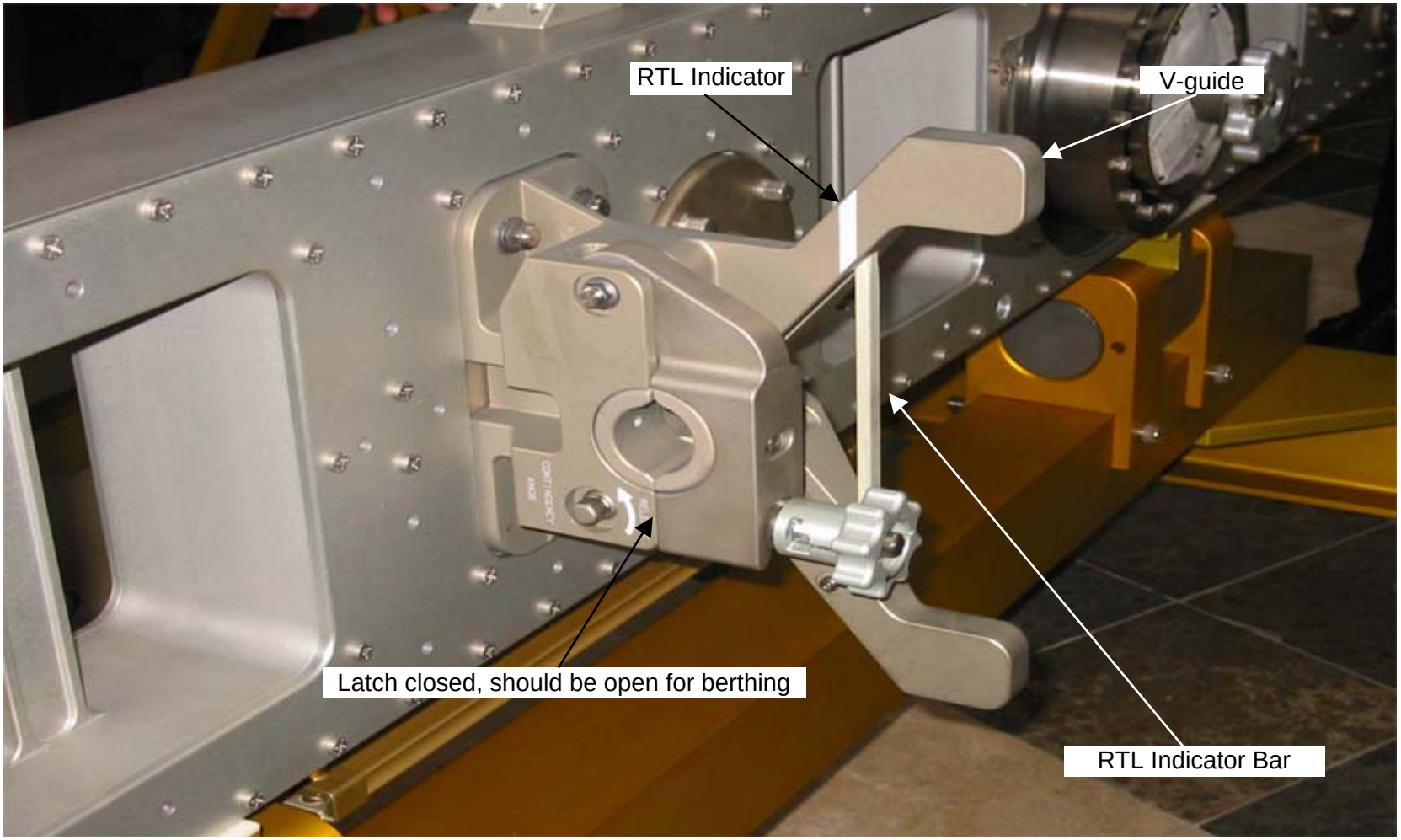

ESPAD V-GUIDE CLOSEUP

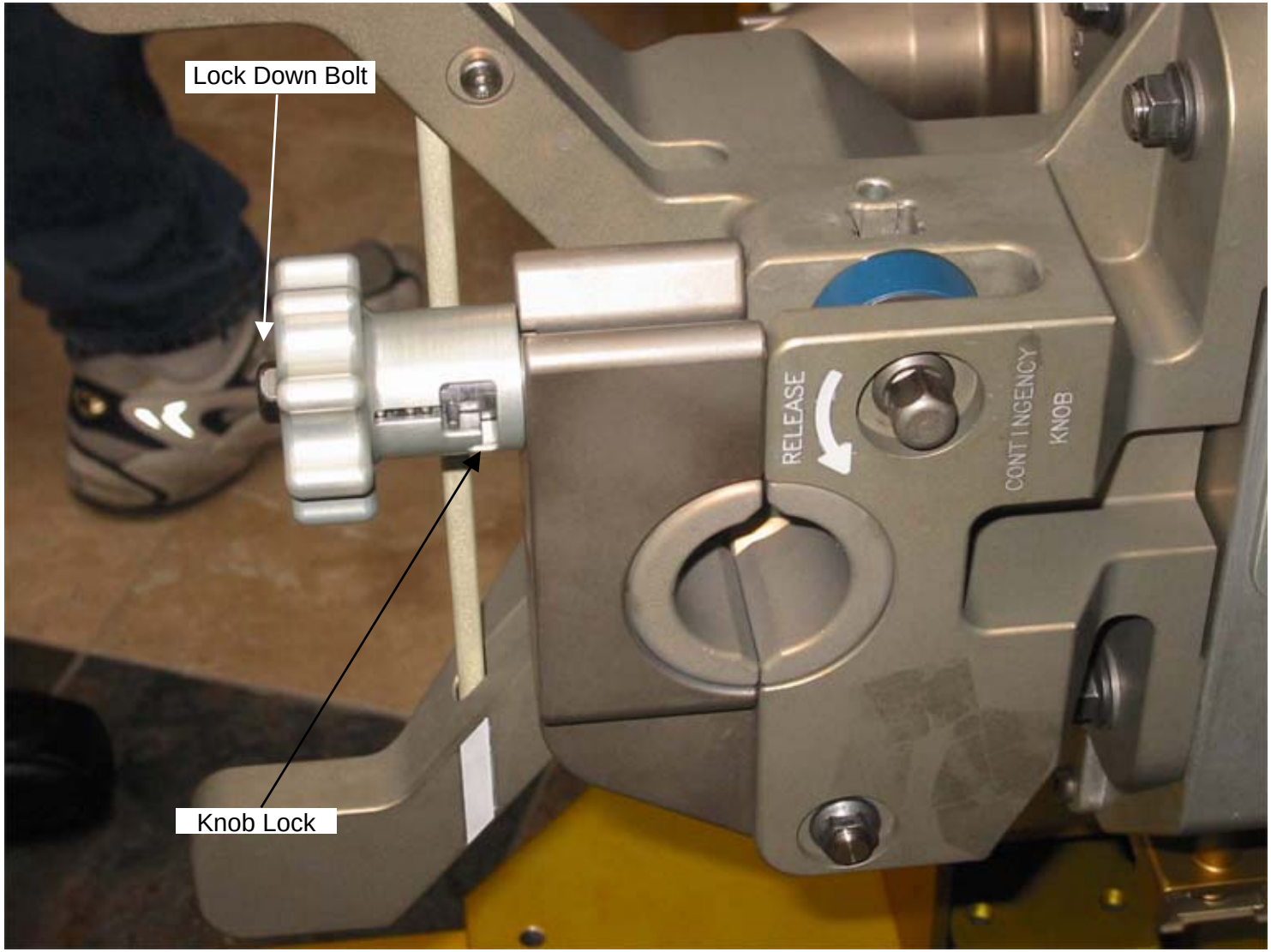

ESP2 INSTALL

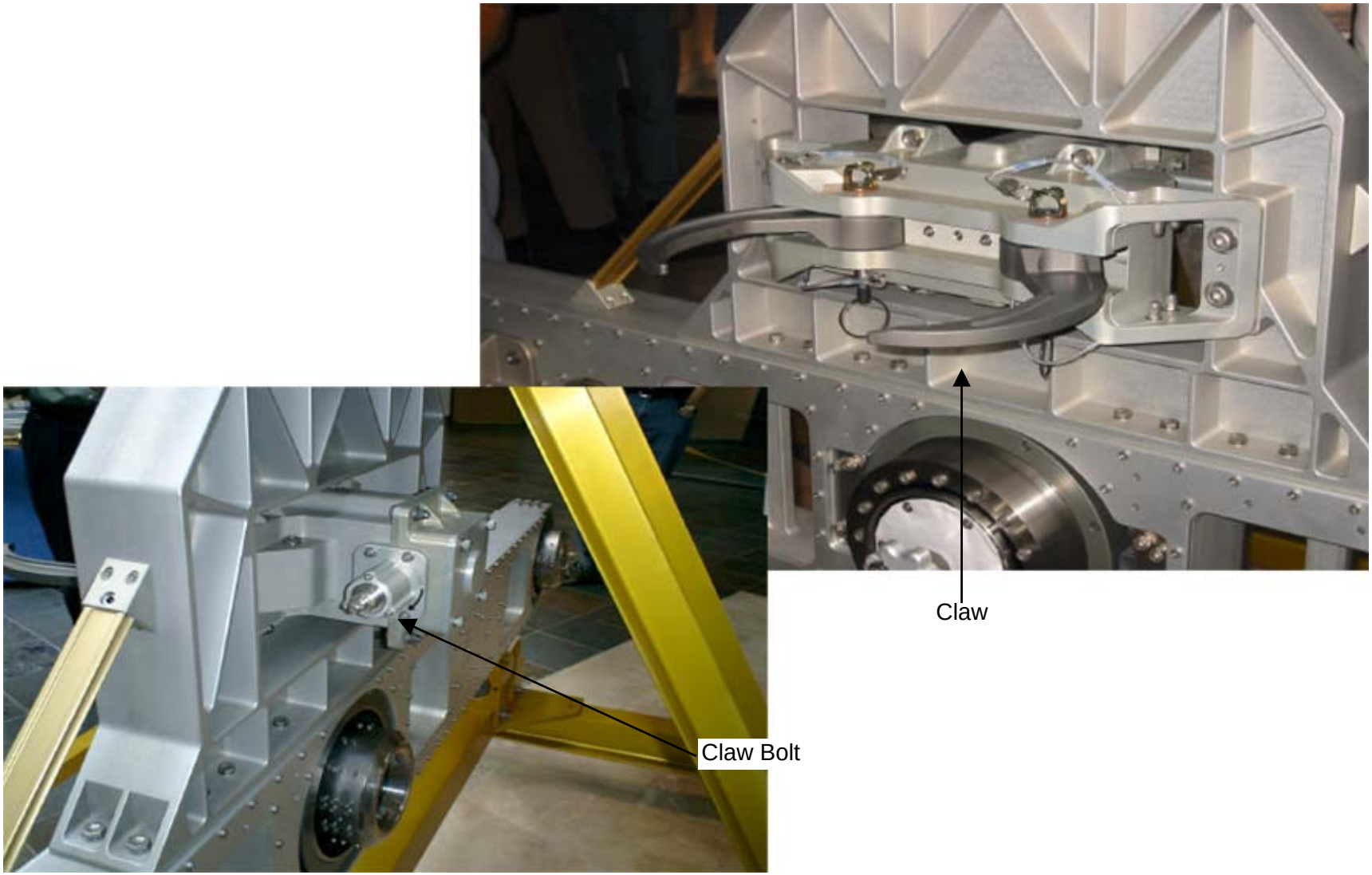

ESP2 POWER FROM ESP2 TO ORBITER

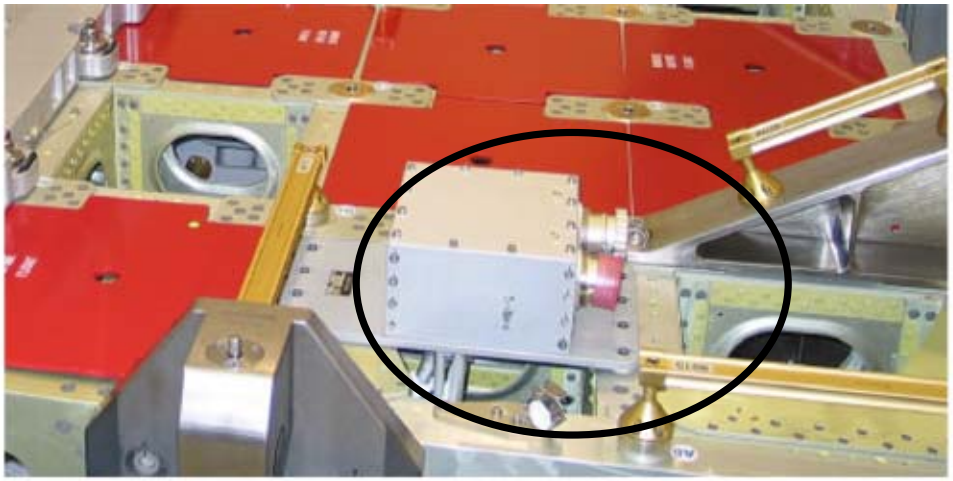

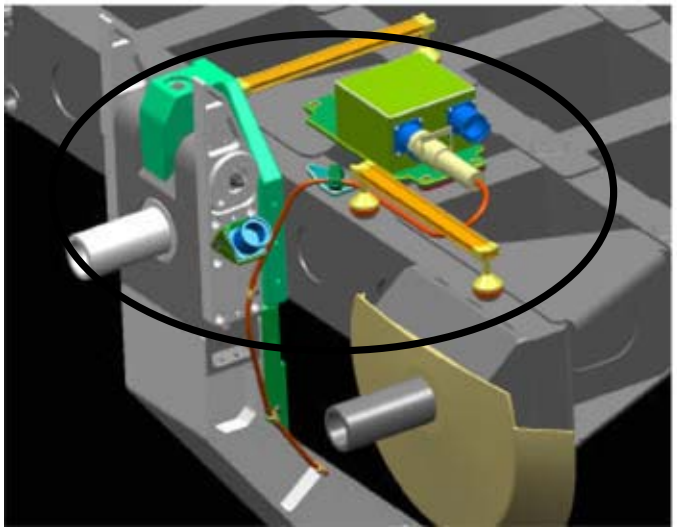

Launch Configuration

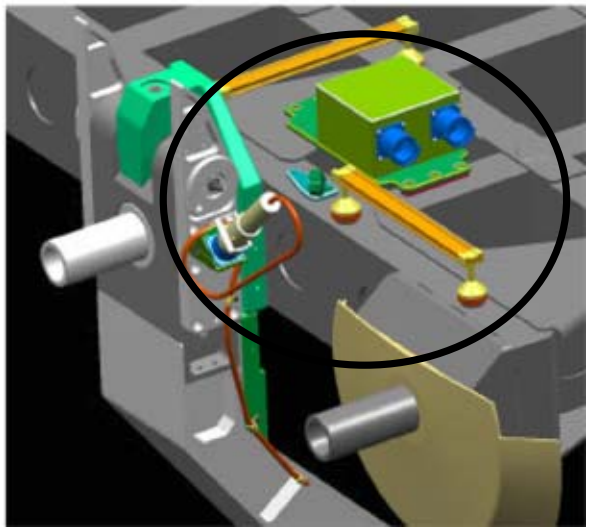

Landing Configuration

ESP2 ORBITER POWER CABLE STOWED

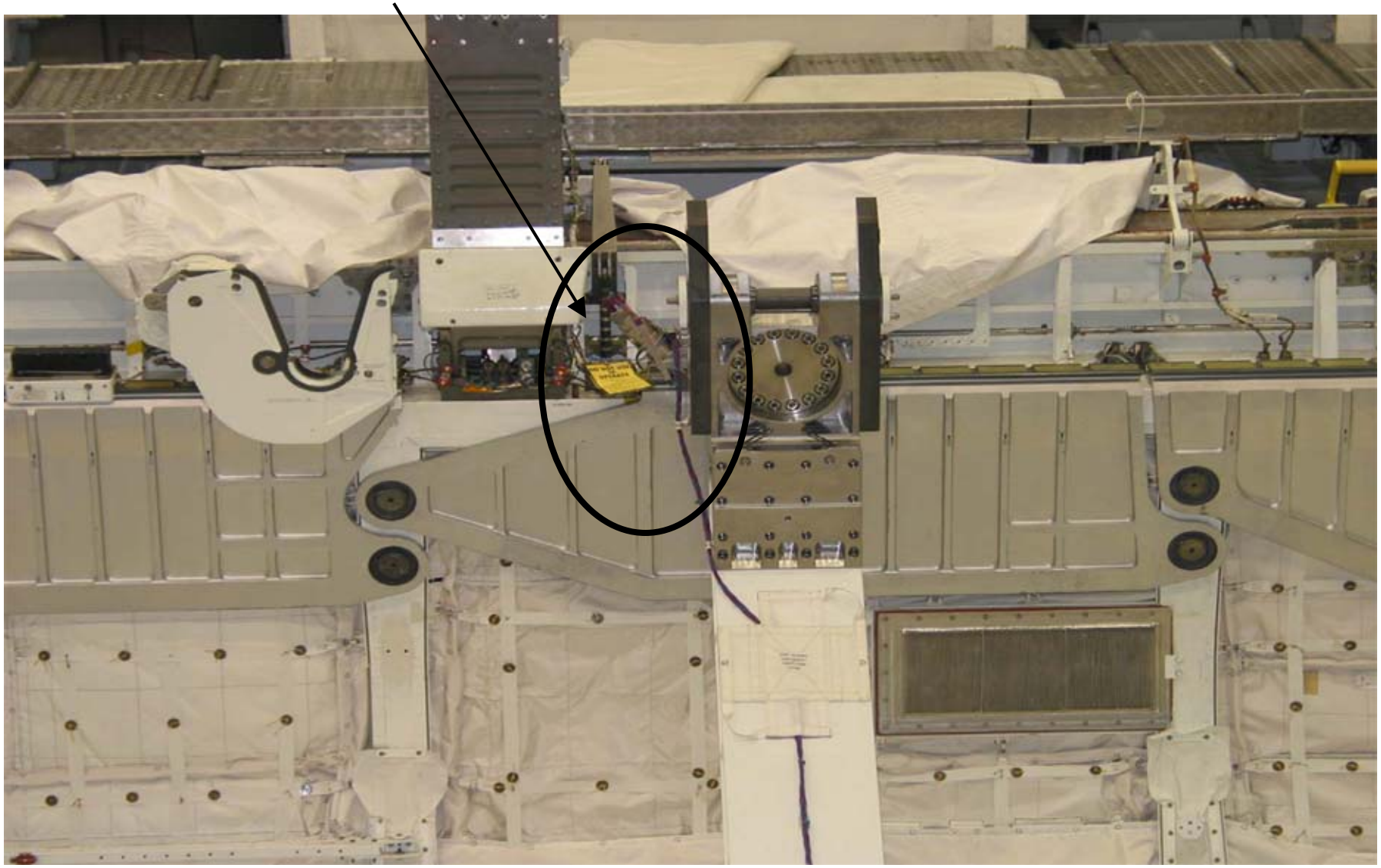

ESP2 POWER CABLES

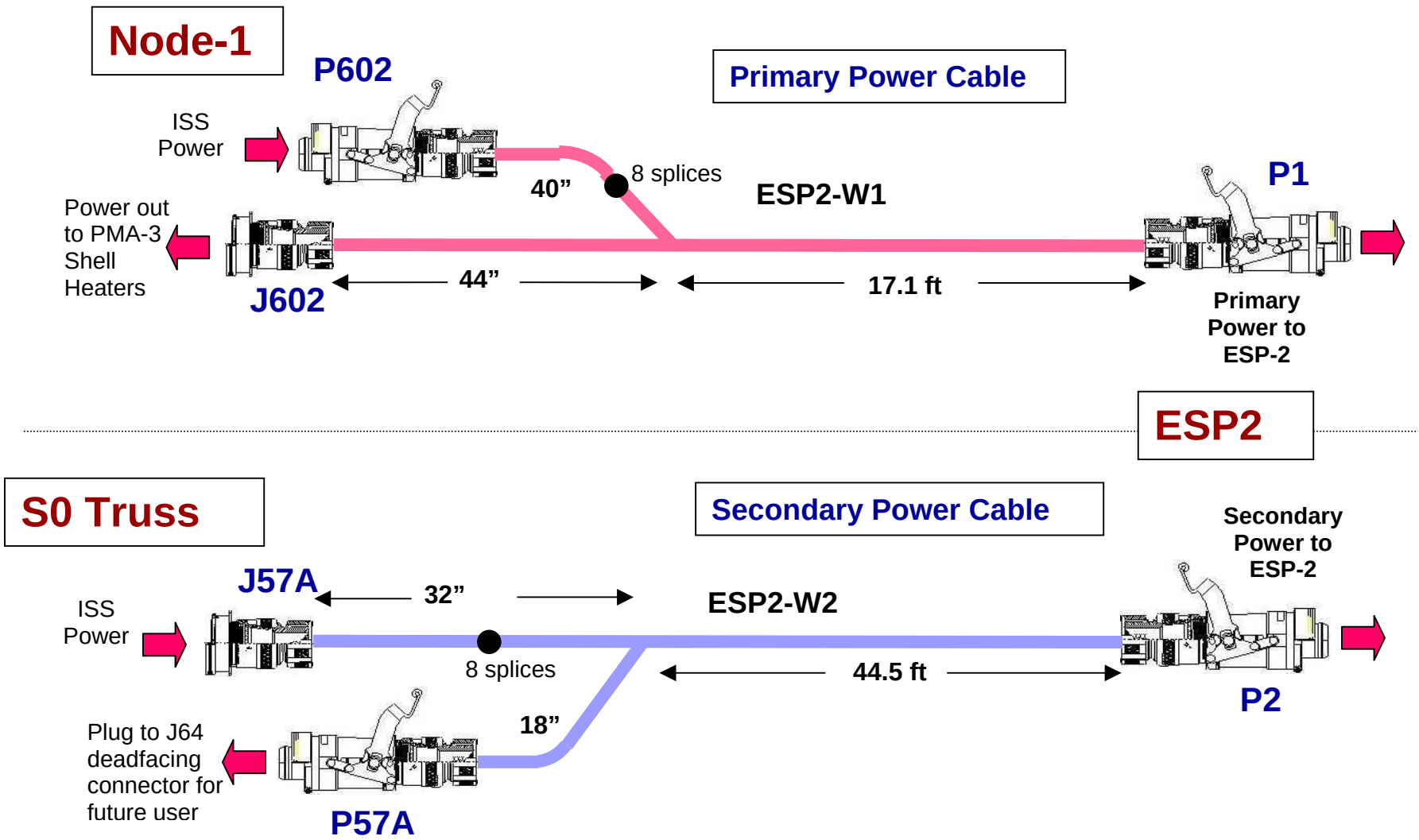

ESP2 FLIGHT CABLES

ESP2 Primary Cable

ESP2 Primary Connectors

ESP2 Secondary Cable

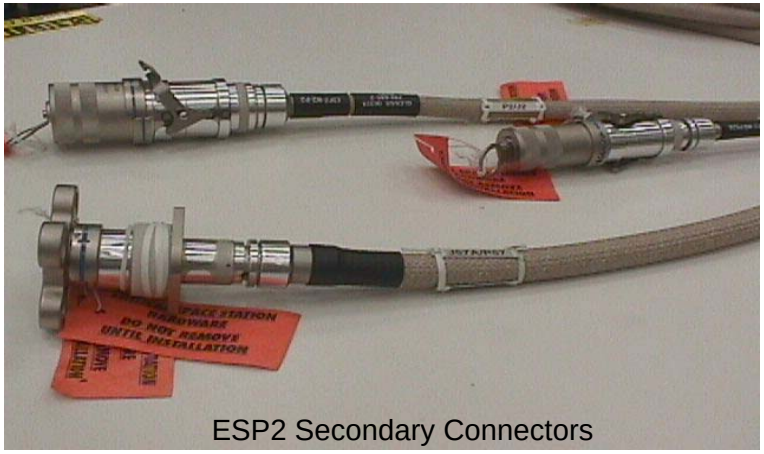

ESP2 Secondary Connectors

ESP2 CABLE TIES

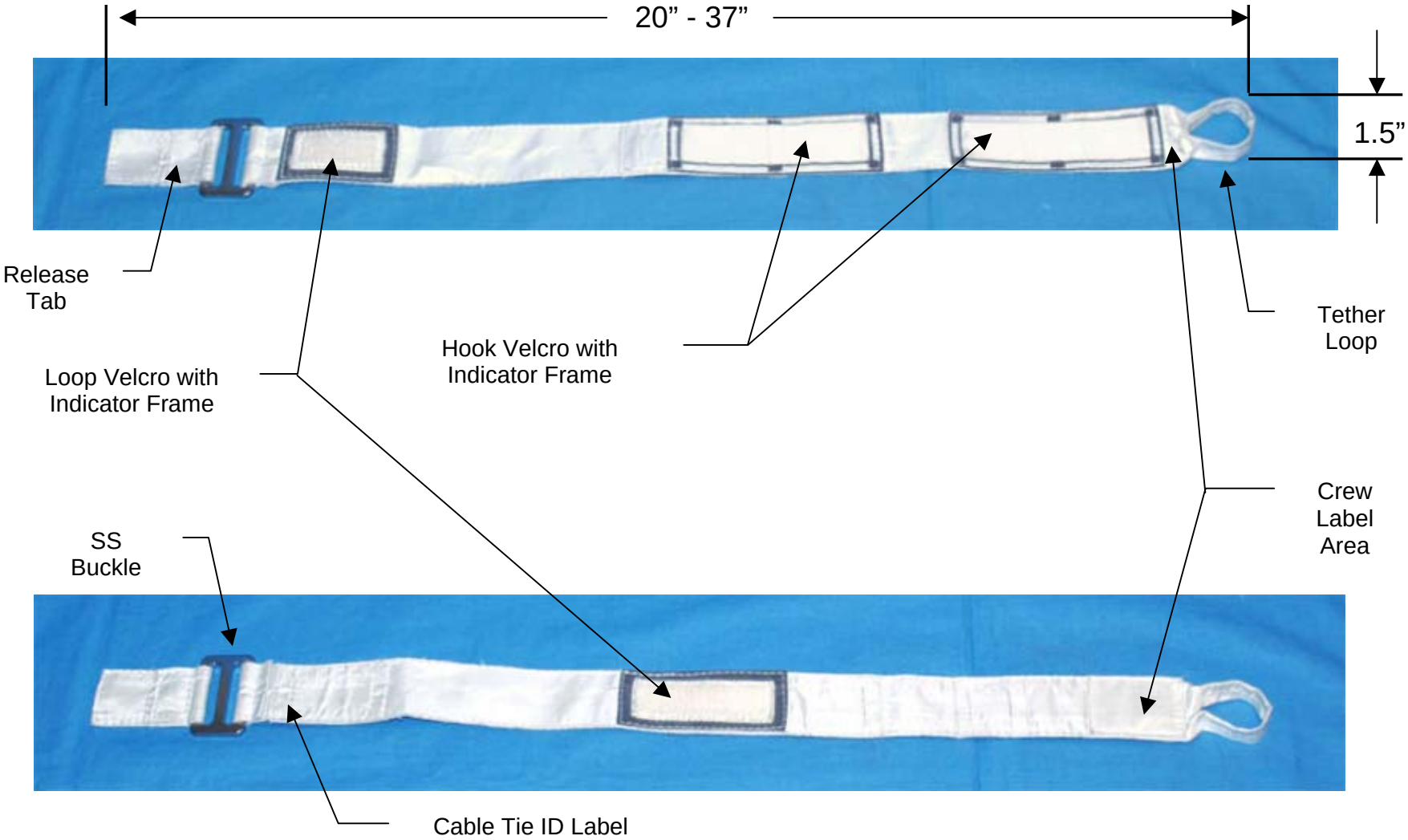

PRIMARY POWER CABLE ROUTING

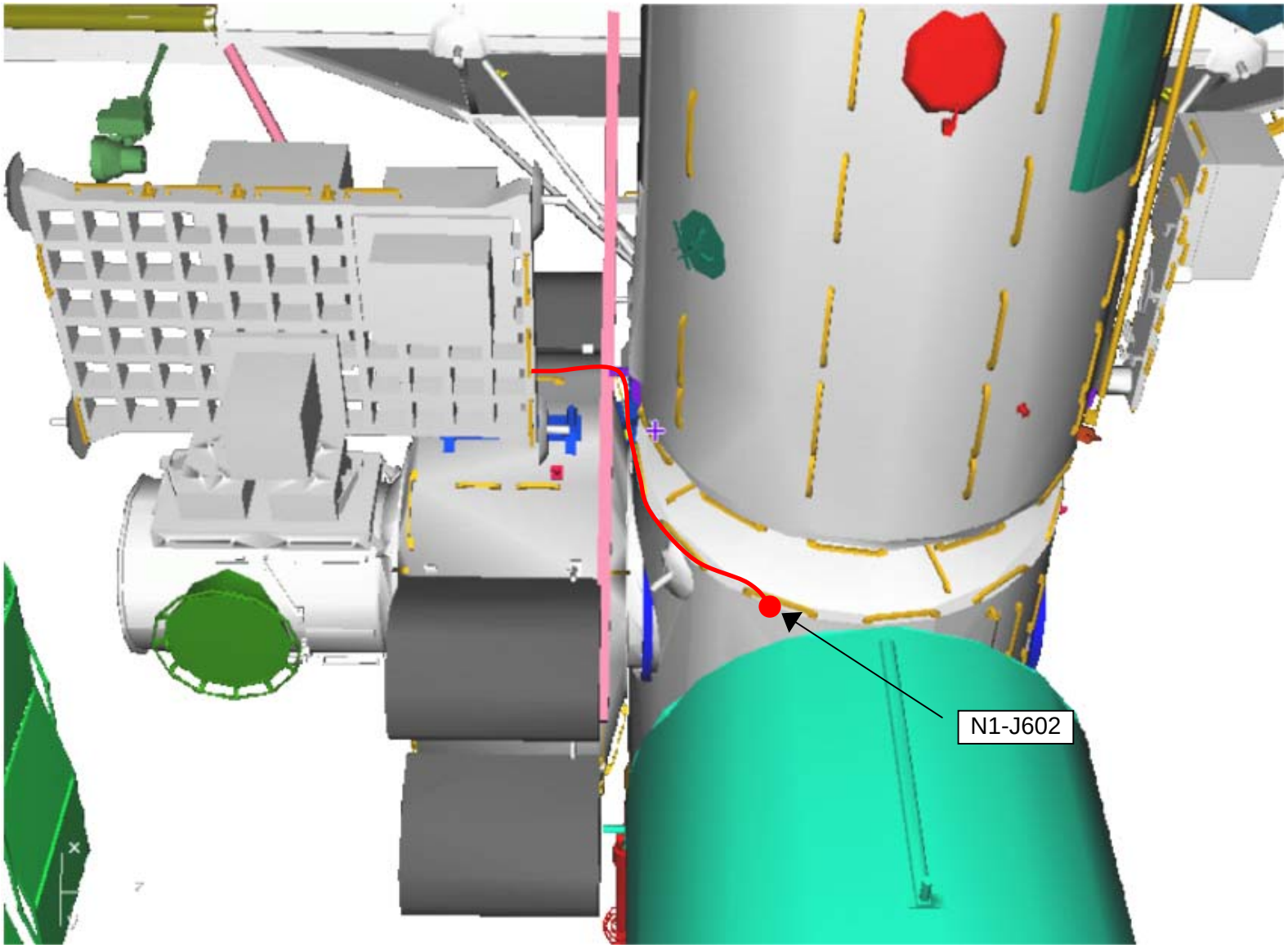

SECONDARY CABLE INSTALL – PANEL A119

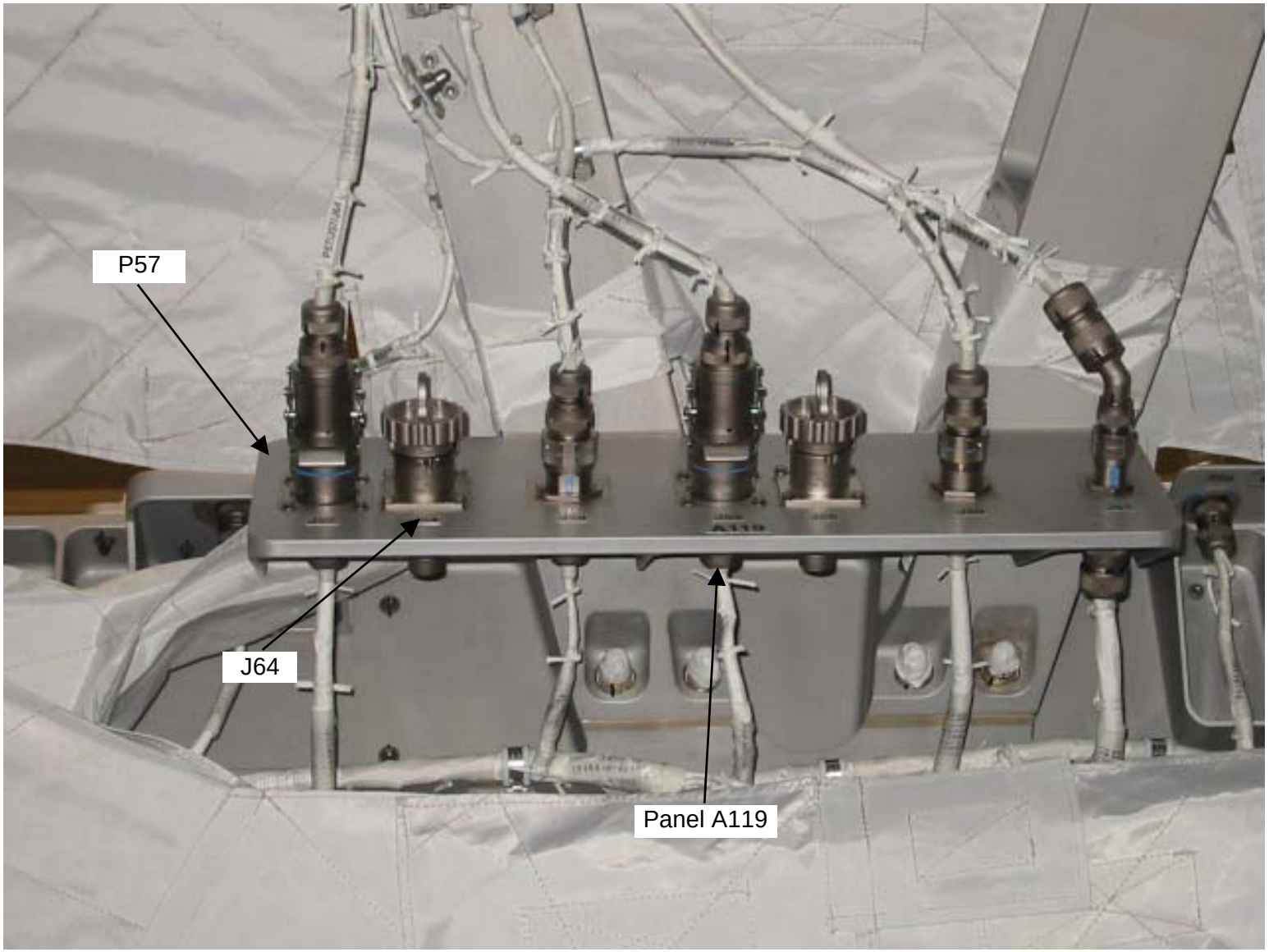

SECONDARY CABLE ROUTING

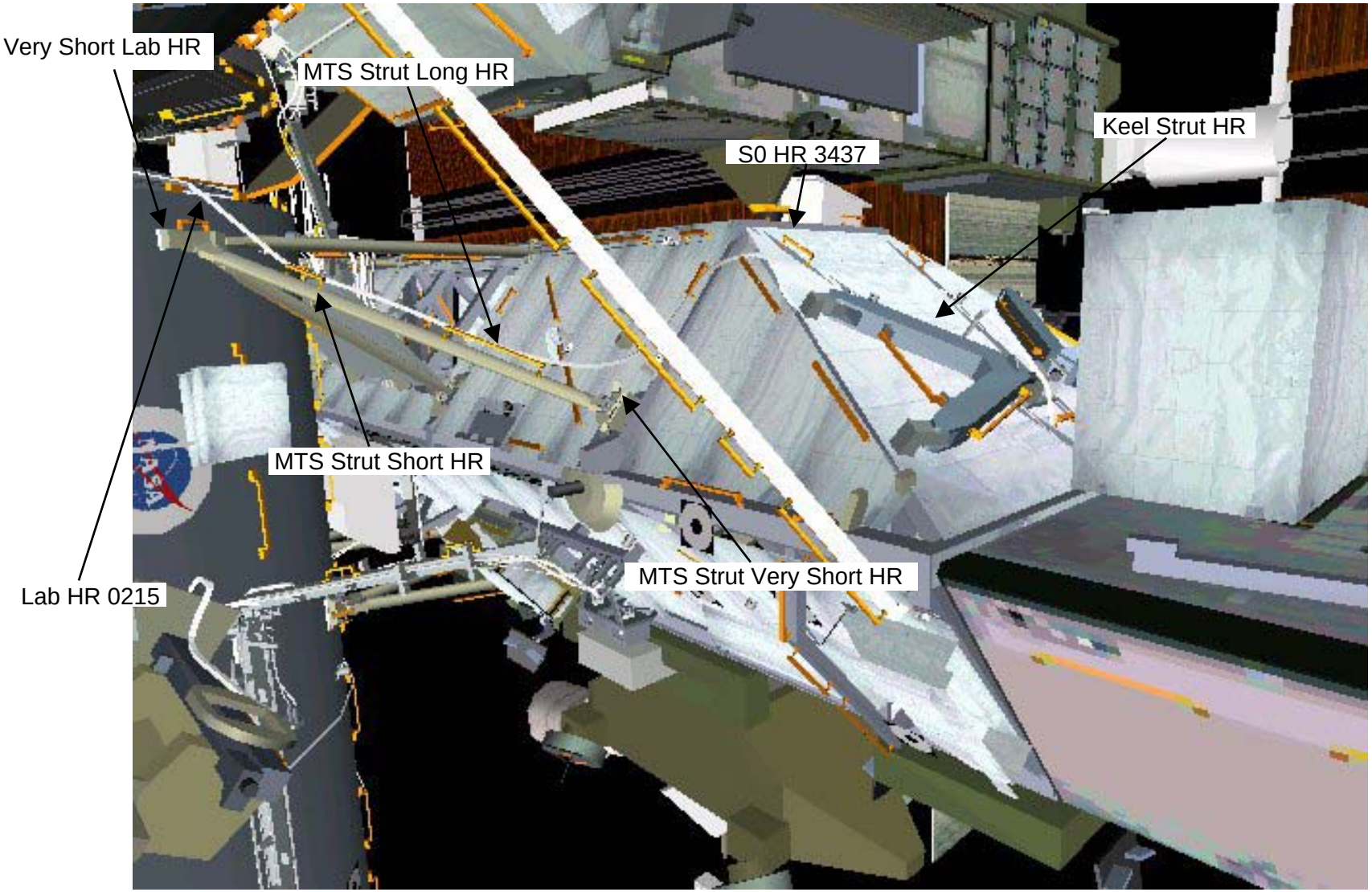

SECONDARY CABLE ROUTING (Cont)

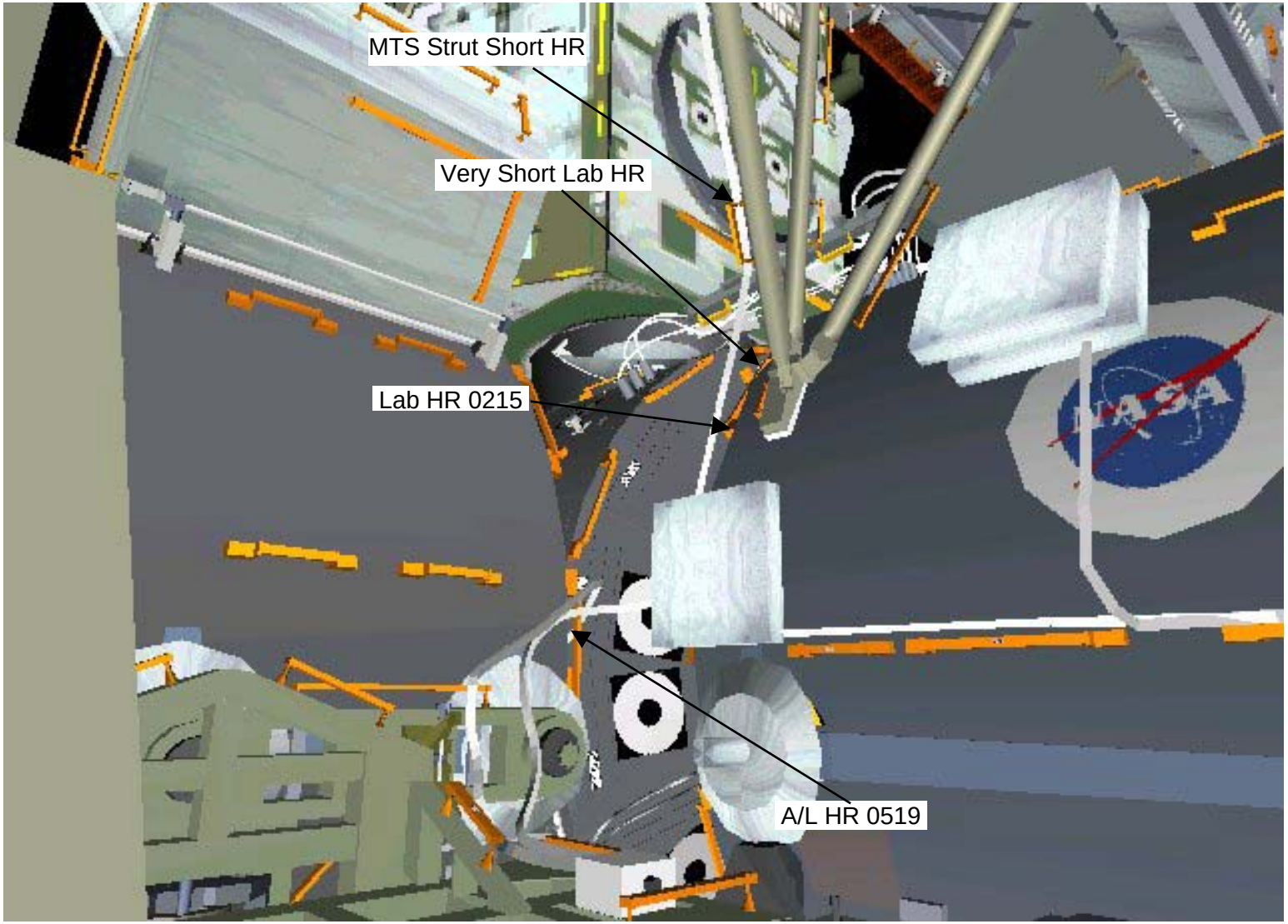

ACTIVE ESPAD HR LABELS

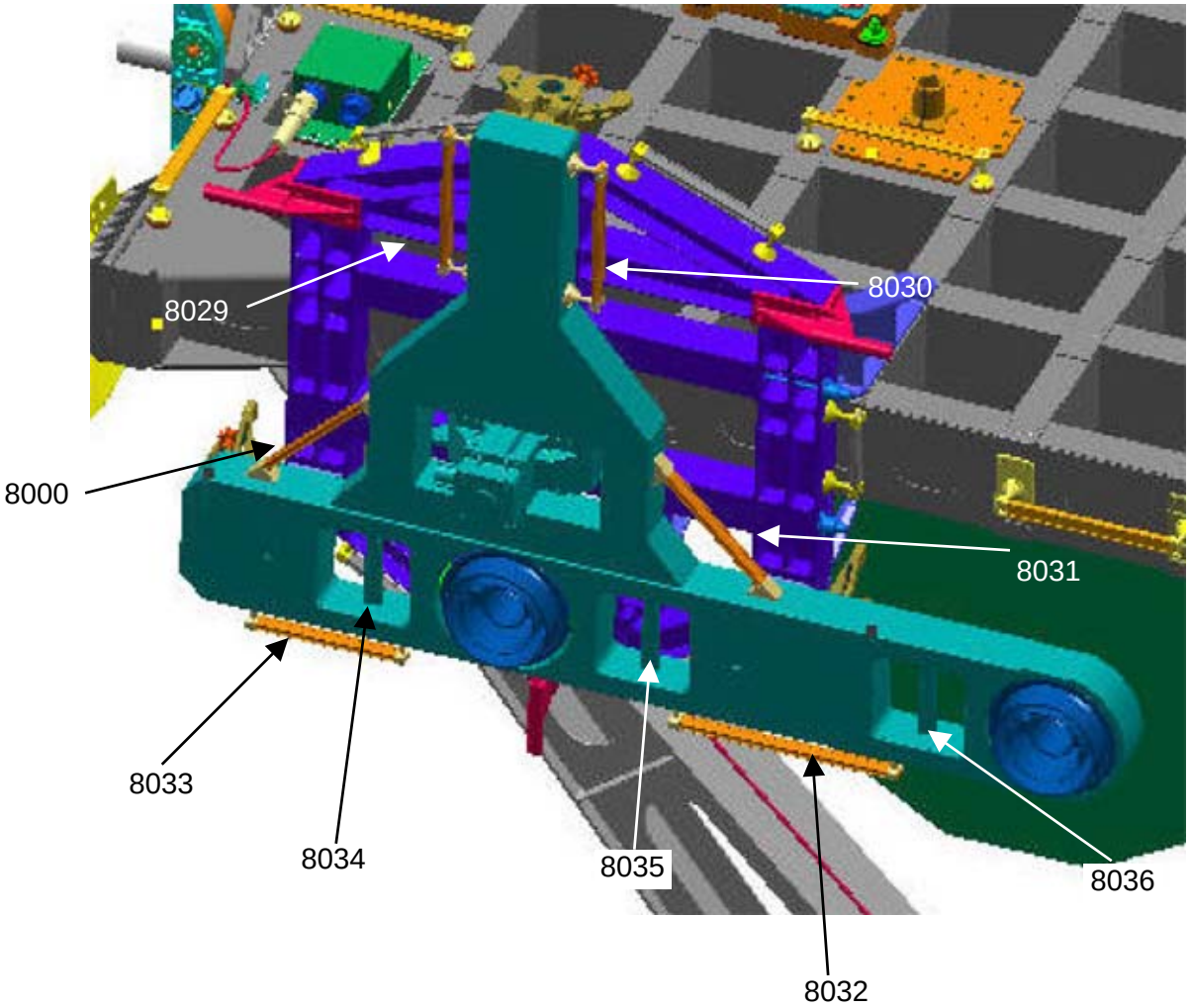

PASSIVE ESPAD HR LABELS

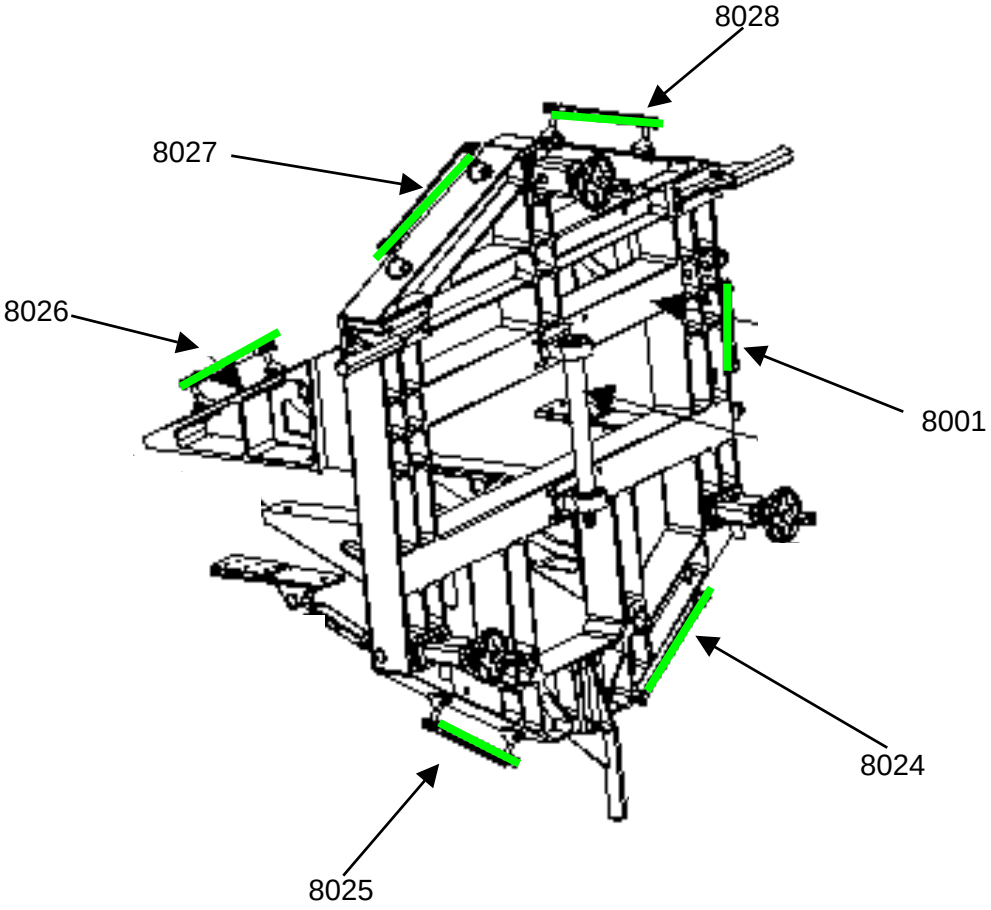

HR AND WIF LAYOUT (ZENITH)

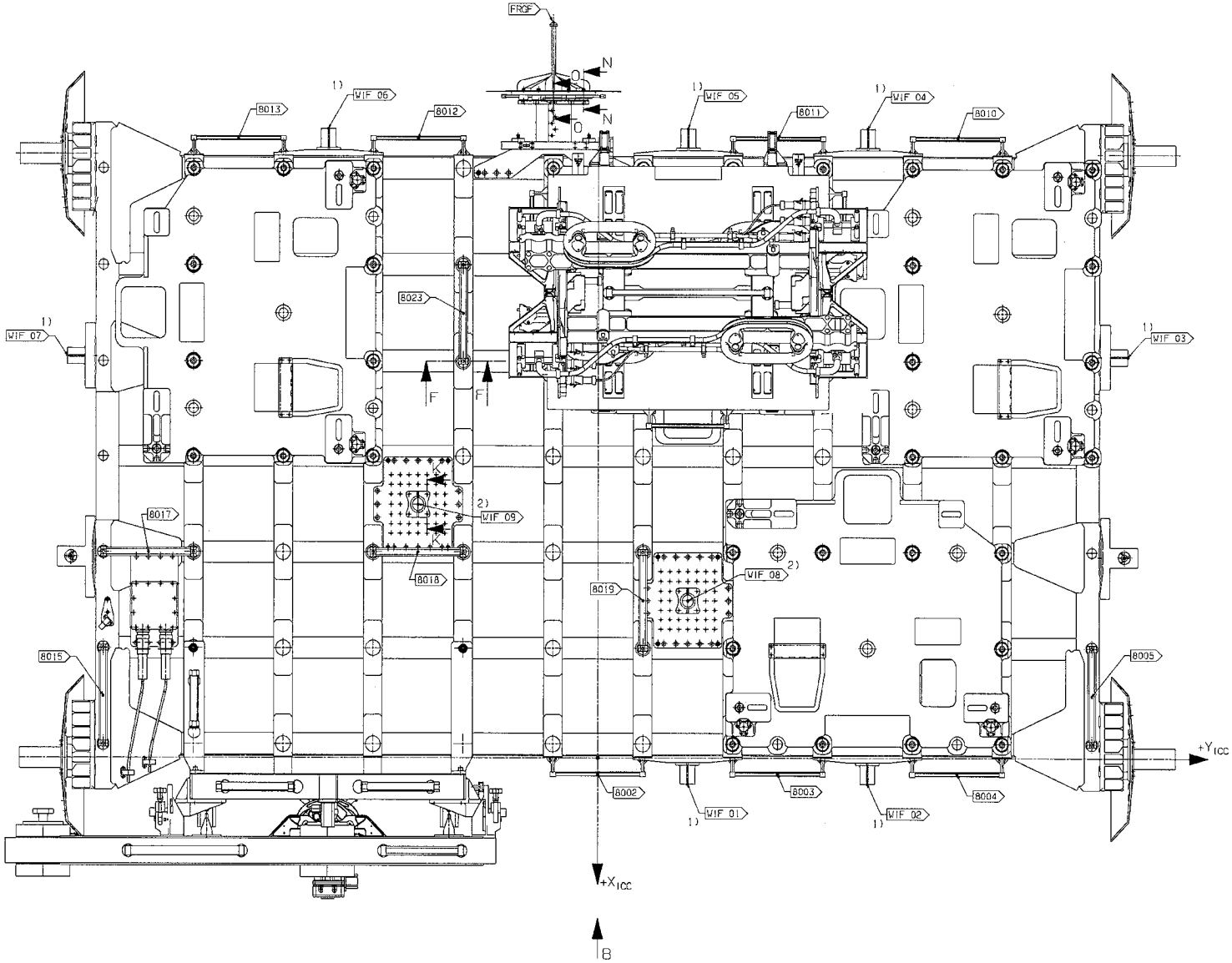

HR AND WIF LAYOUT (NADIR)

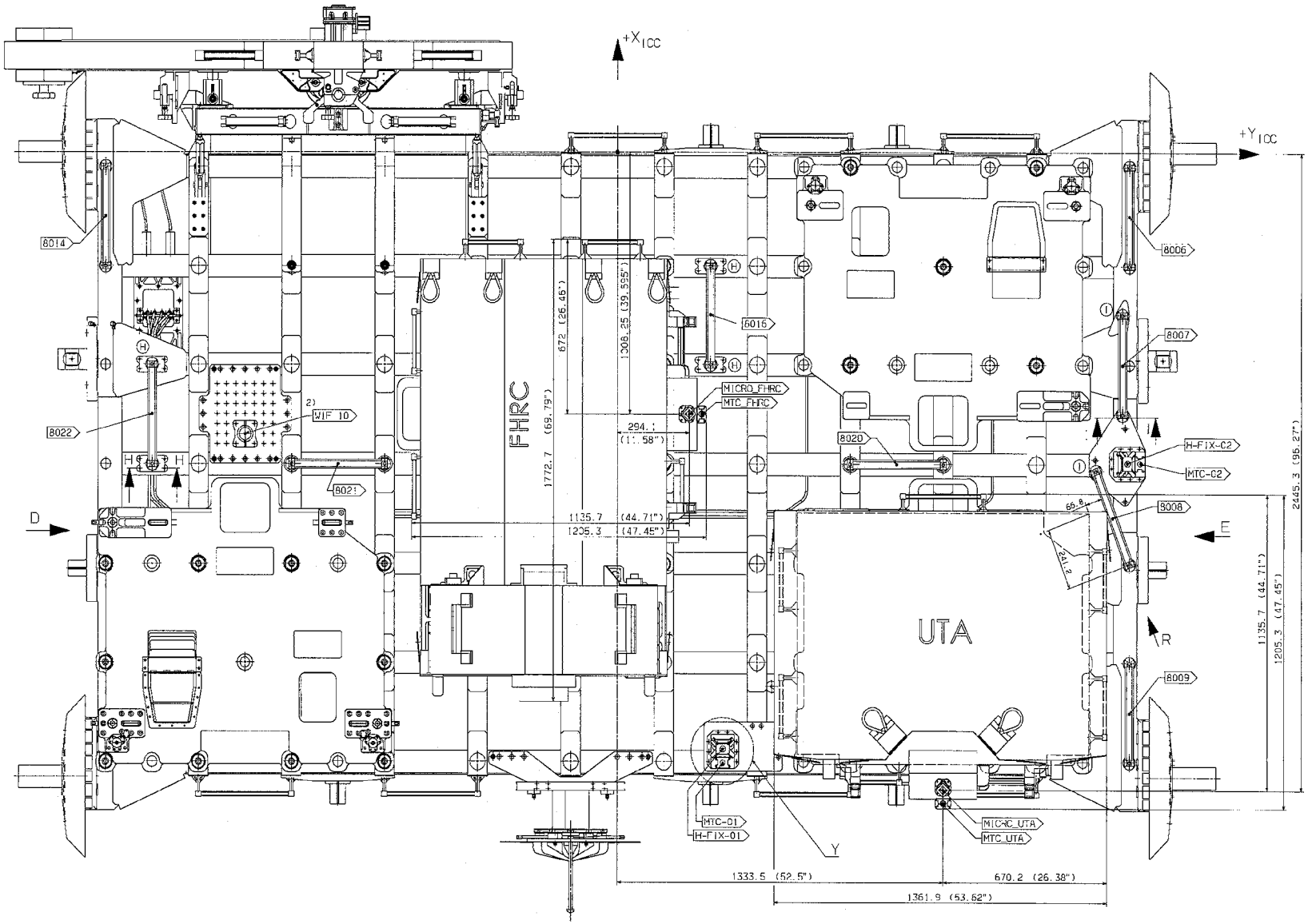

MISSE LOCATIONS

PEC # 2

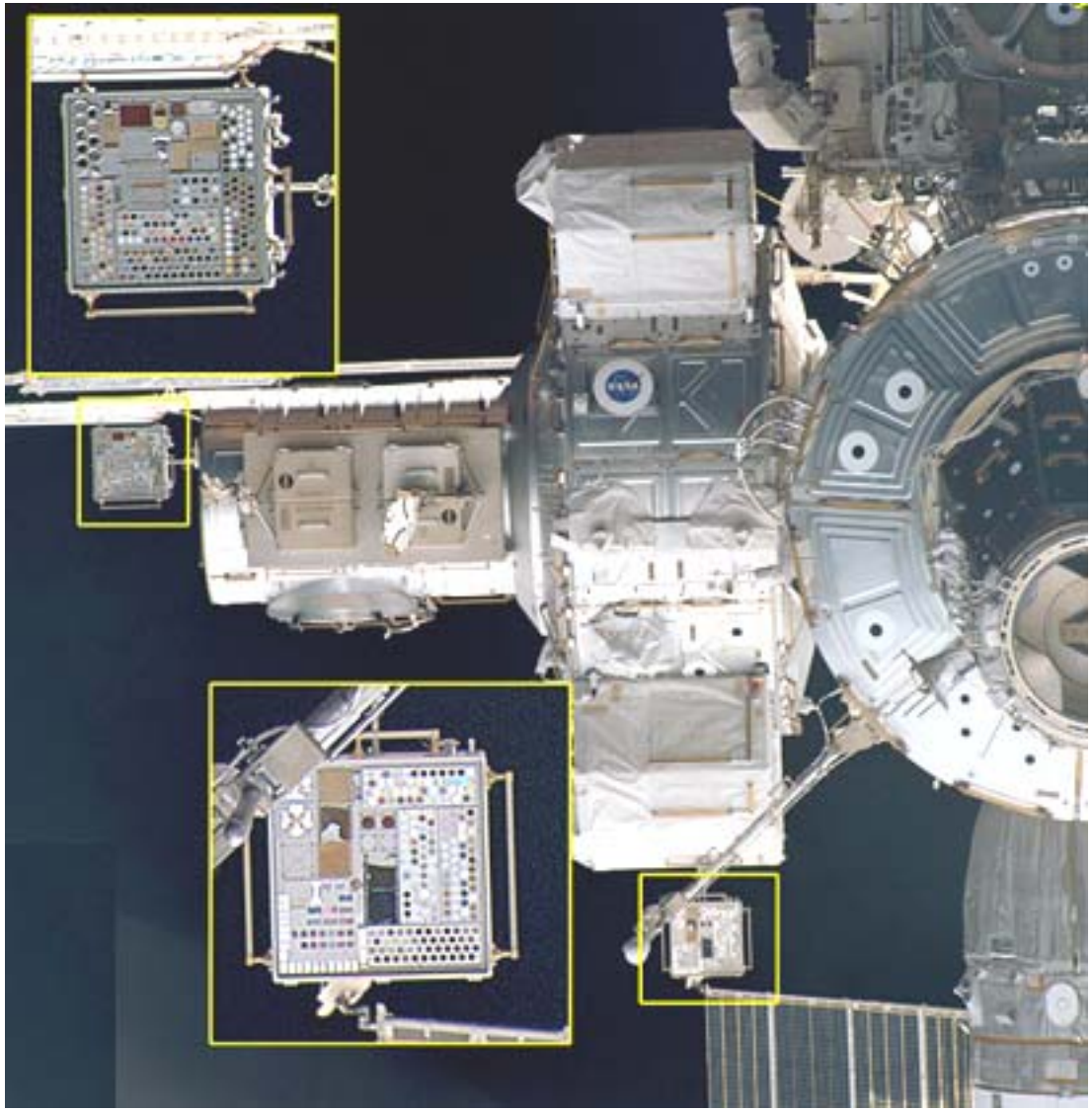

PEC # 1

ESP2 FRGF

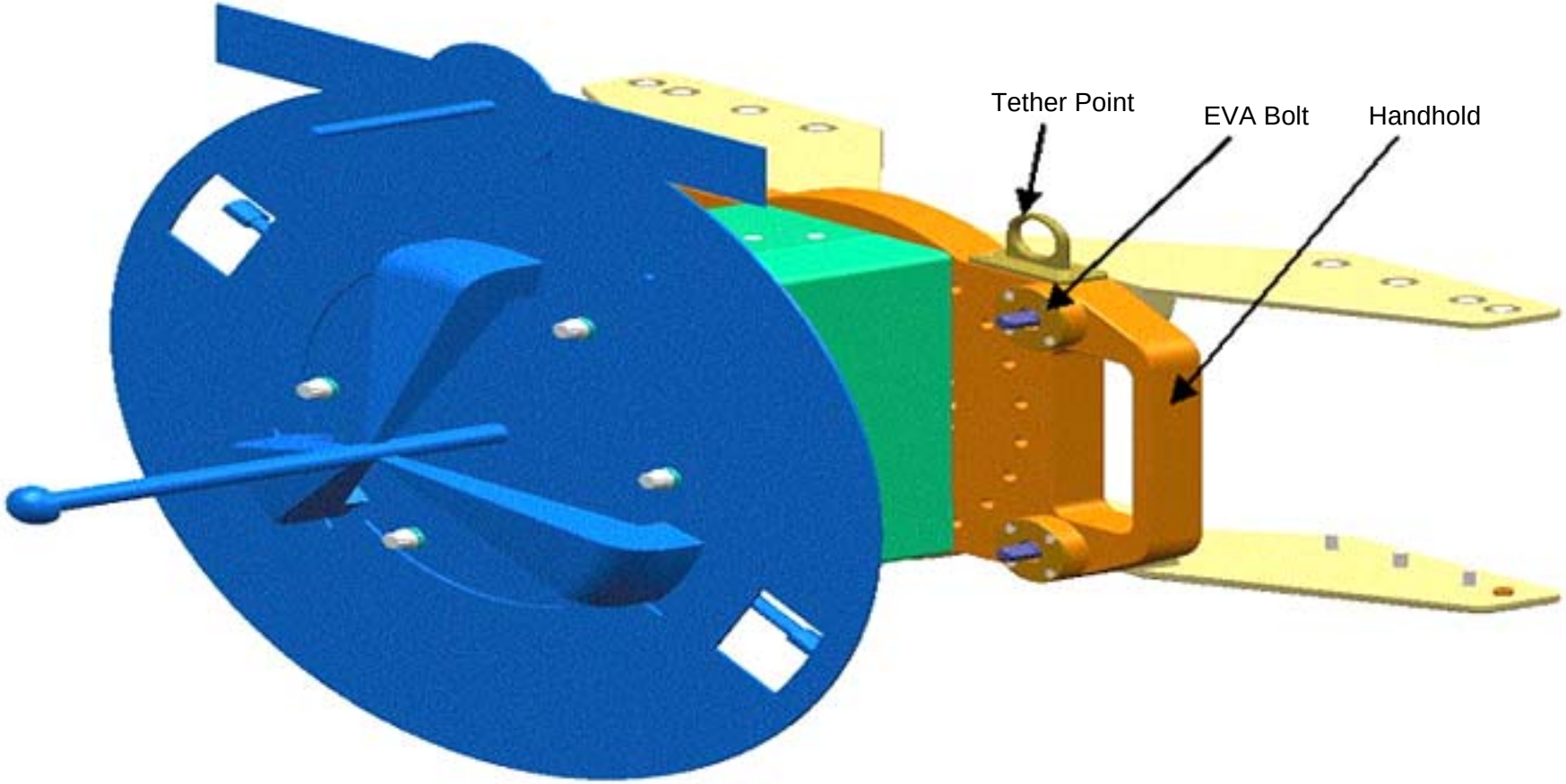

LMC WITH CMG

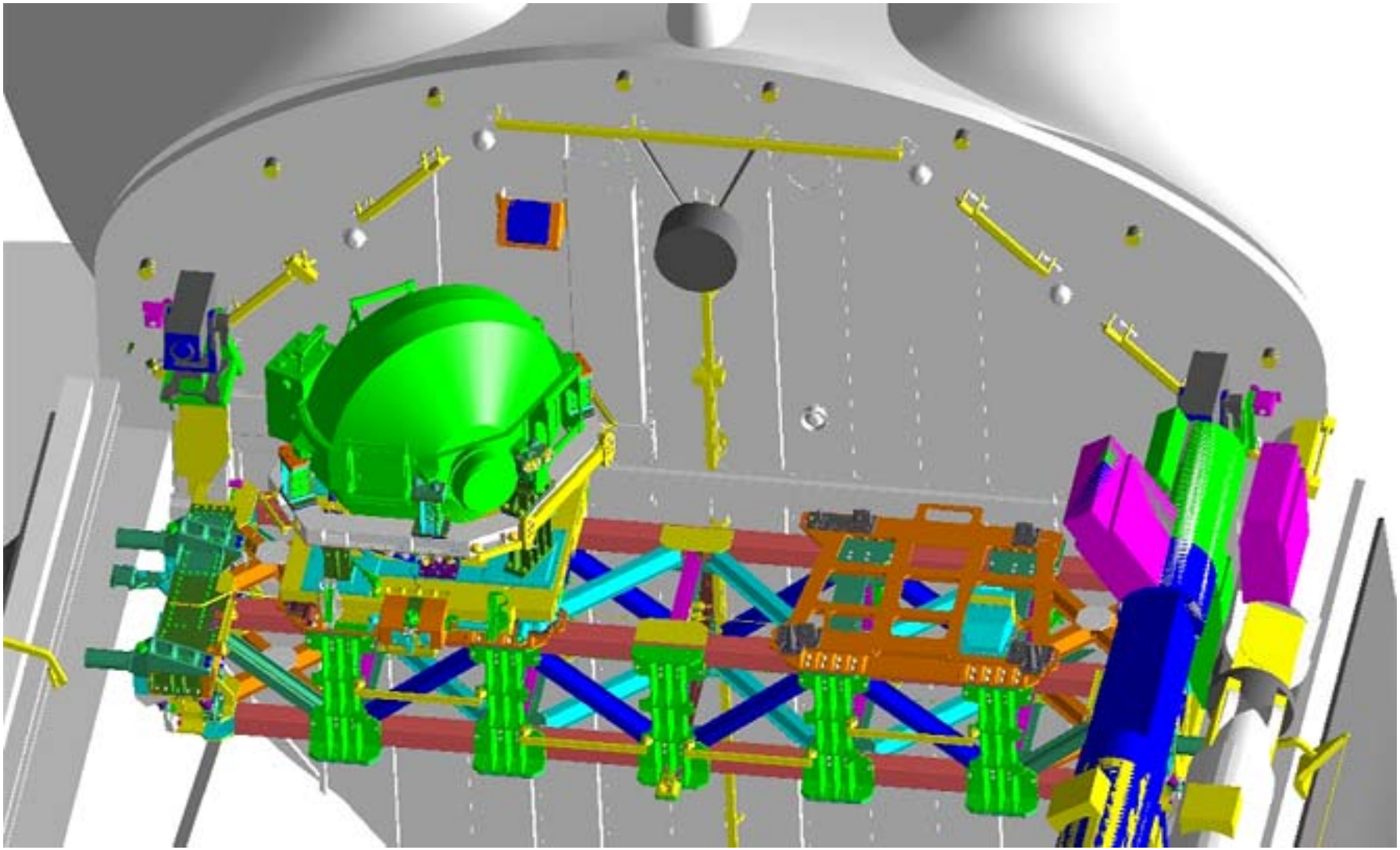

CMG NOMENCLATURE

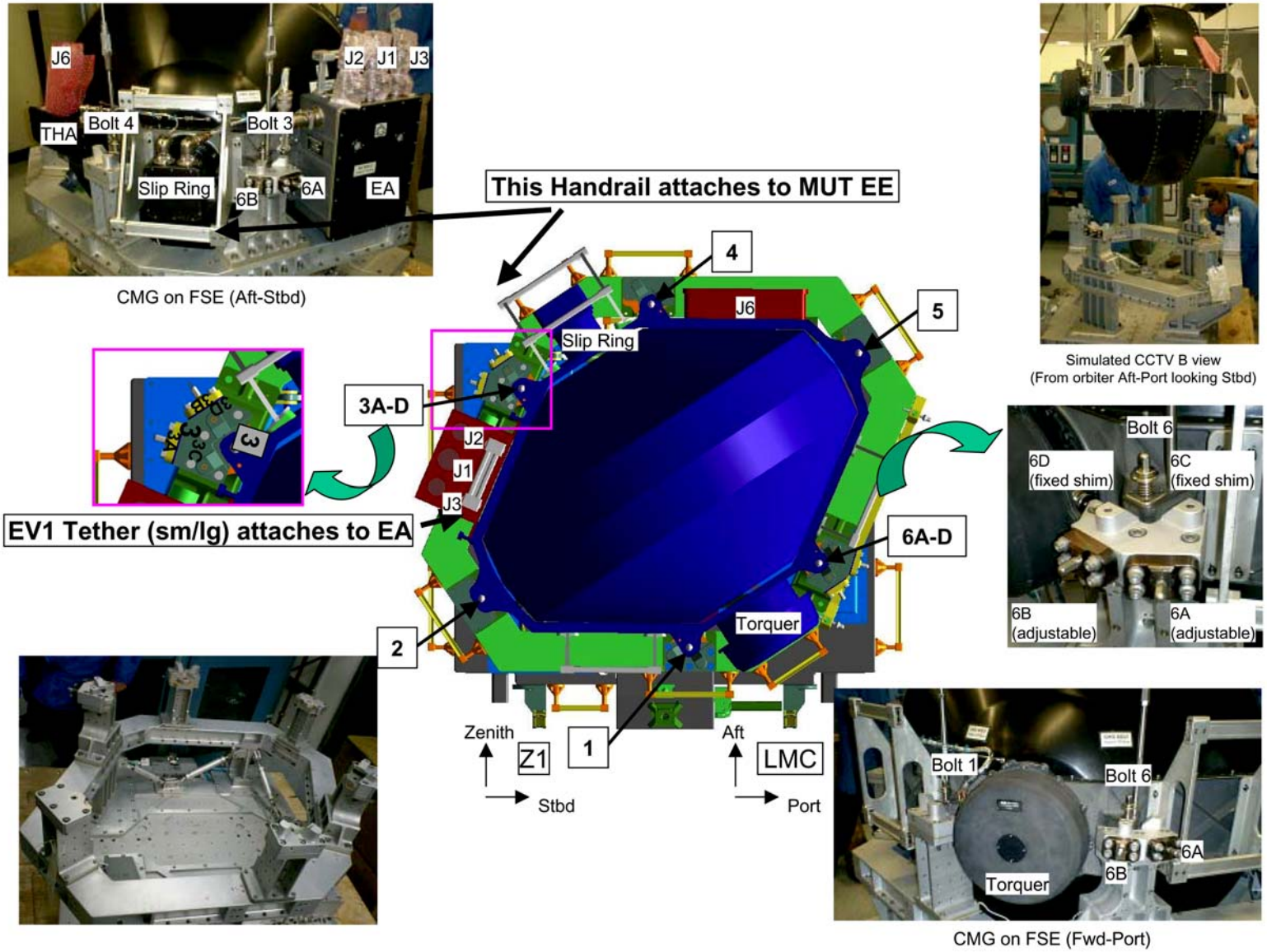

CMG LOCATION

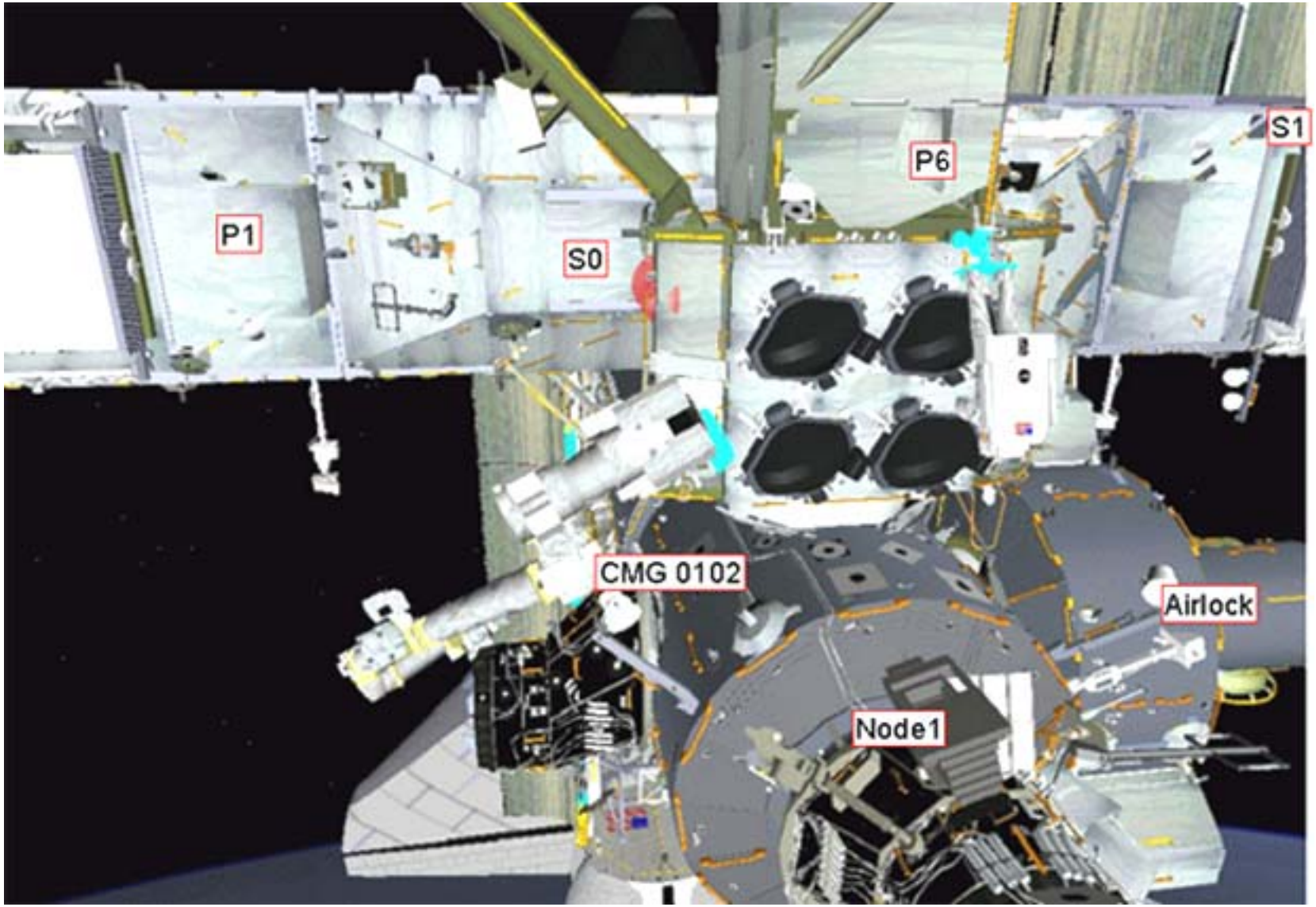

AFT Z1 PRE-LAUNCH WITH BLANKET

CMG ON Z1

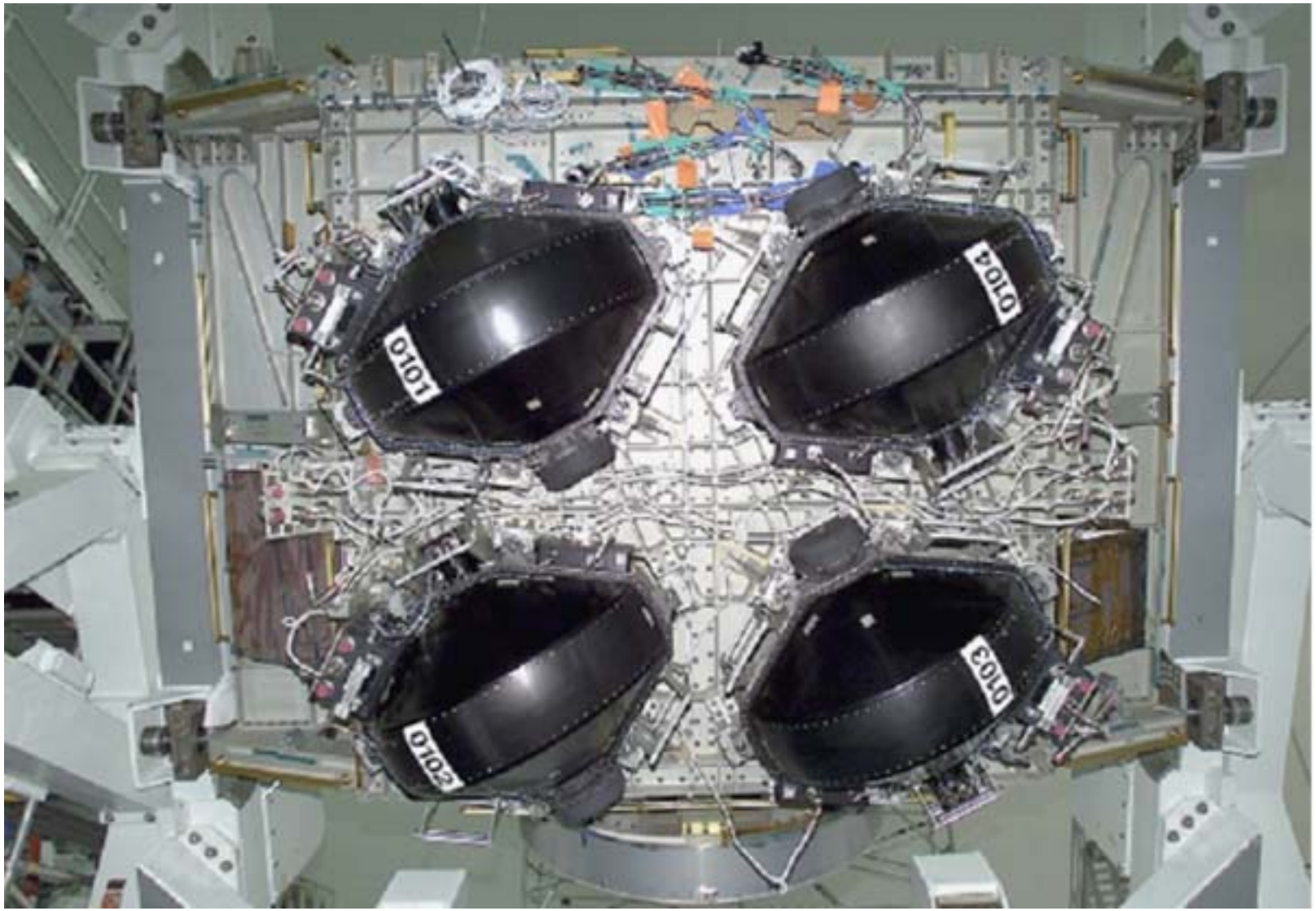

CMG SHIMS AT Z1

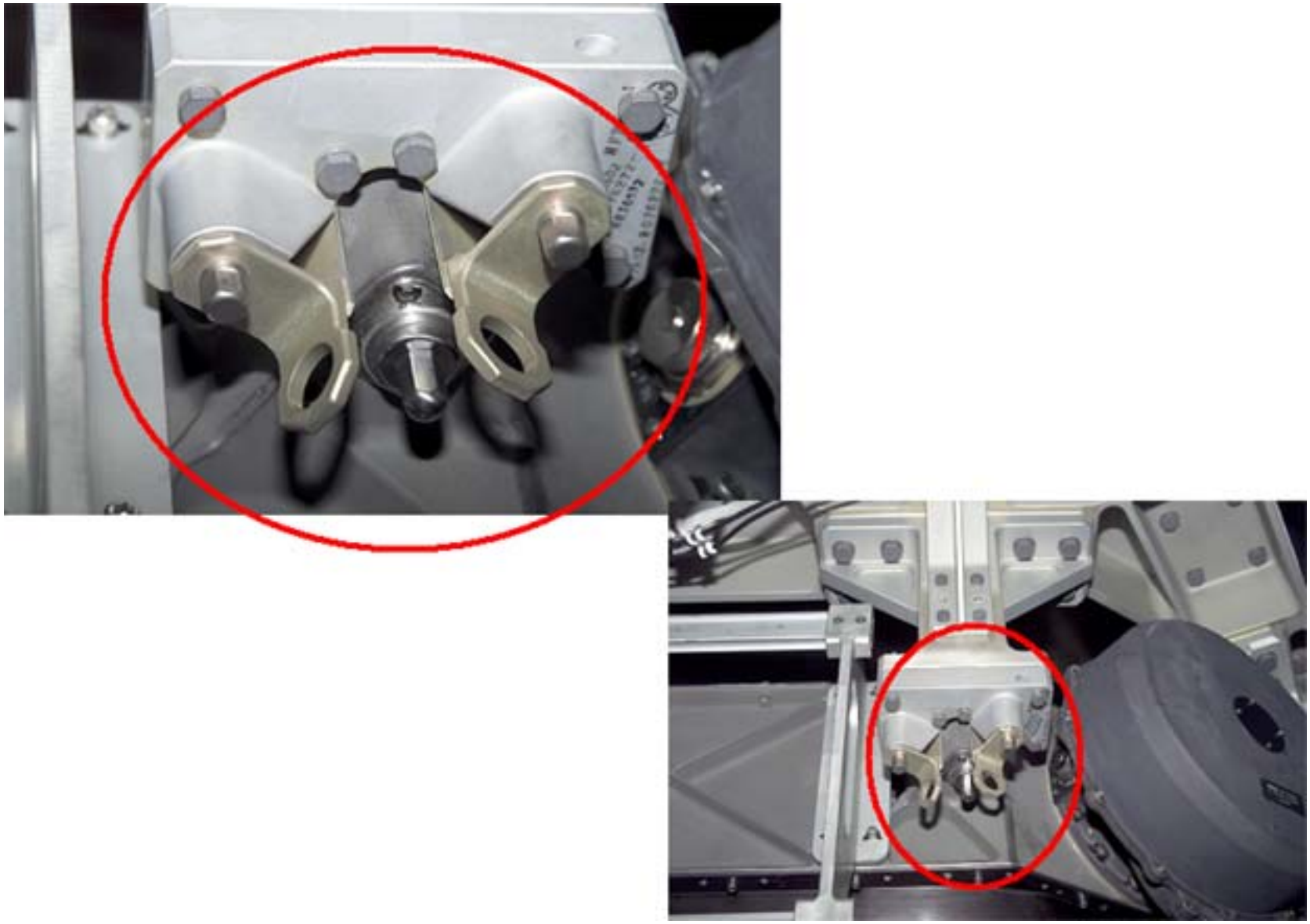

BLANKET CLOSED ON CMG IN FSE

NEW CMG WITH BLANKET

CMG IN FSE WITH MLI

CMG SHIMS ON FSE

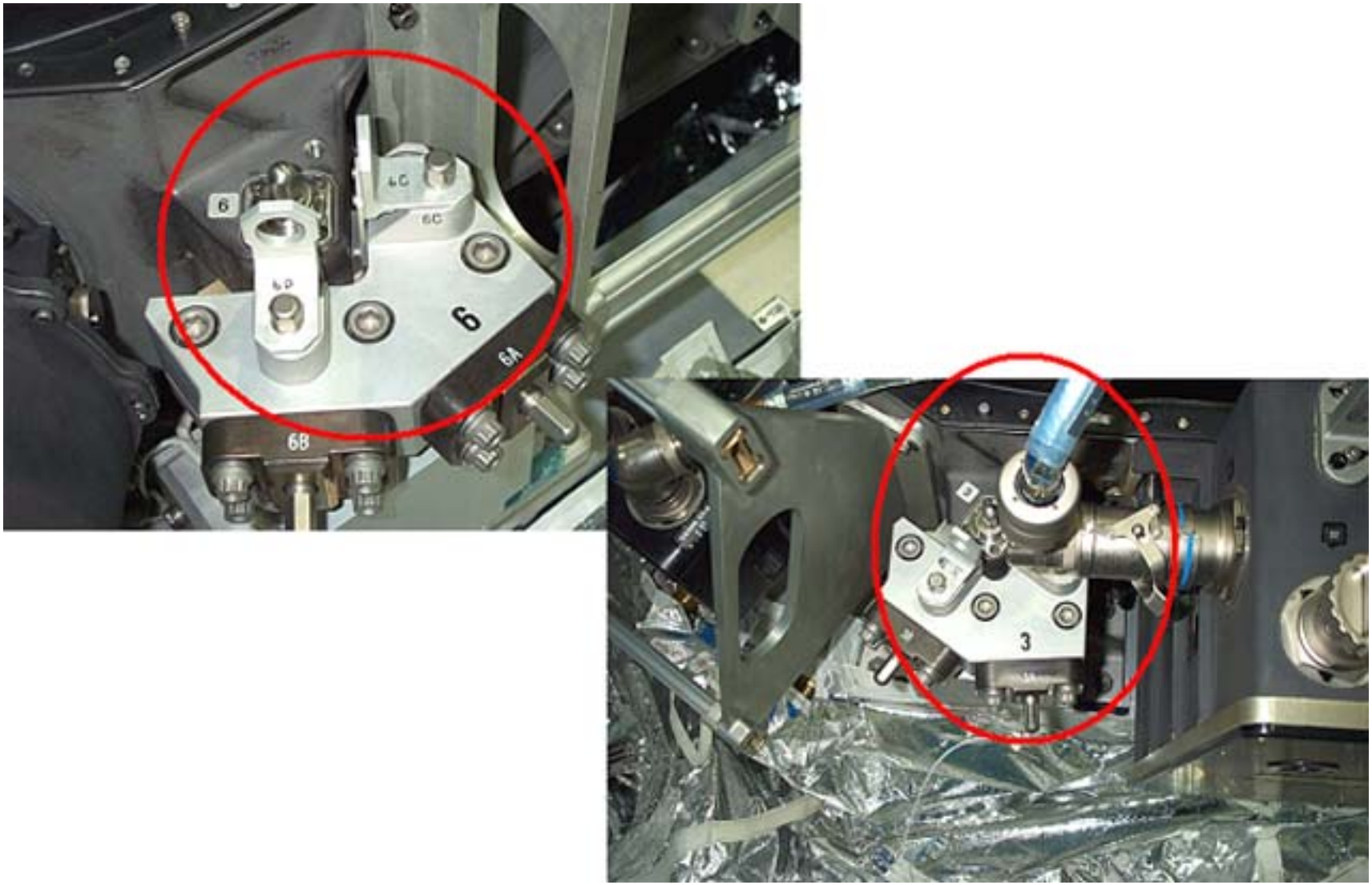

CMG FSE WITHOUT MLI OR CMG

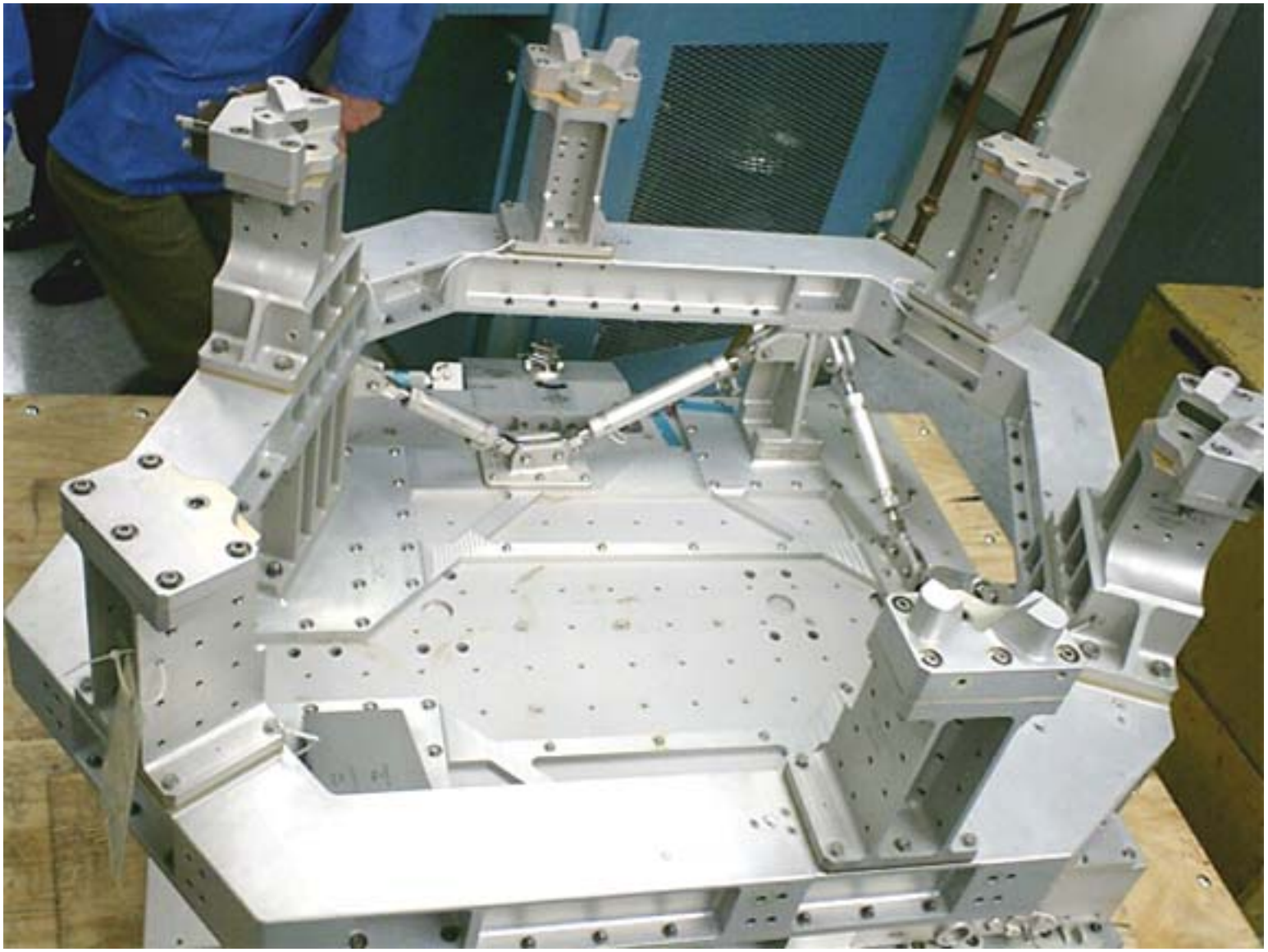

CMG SWAP IN PLB

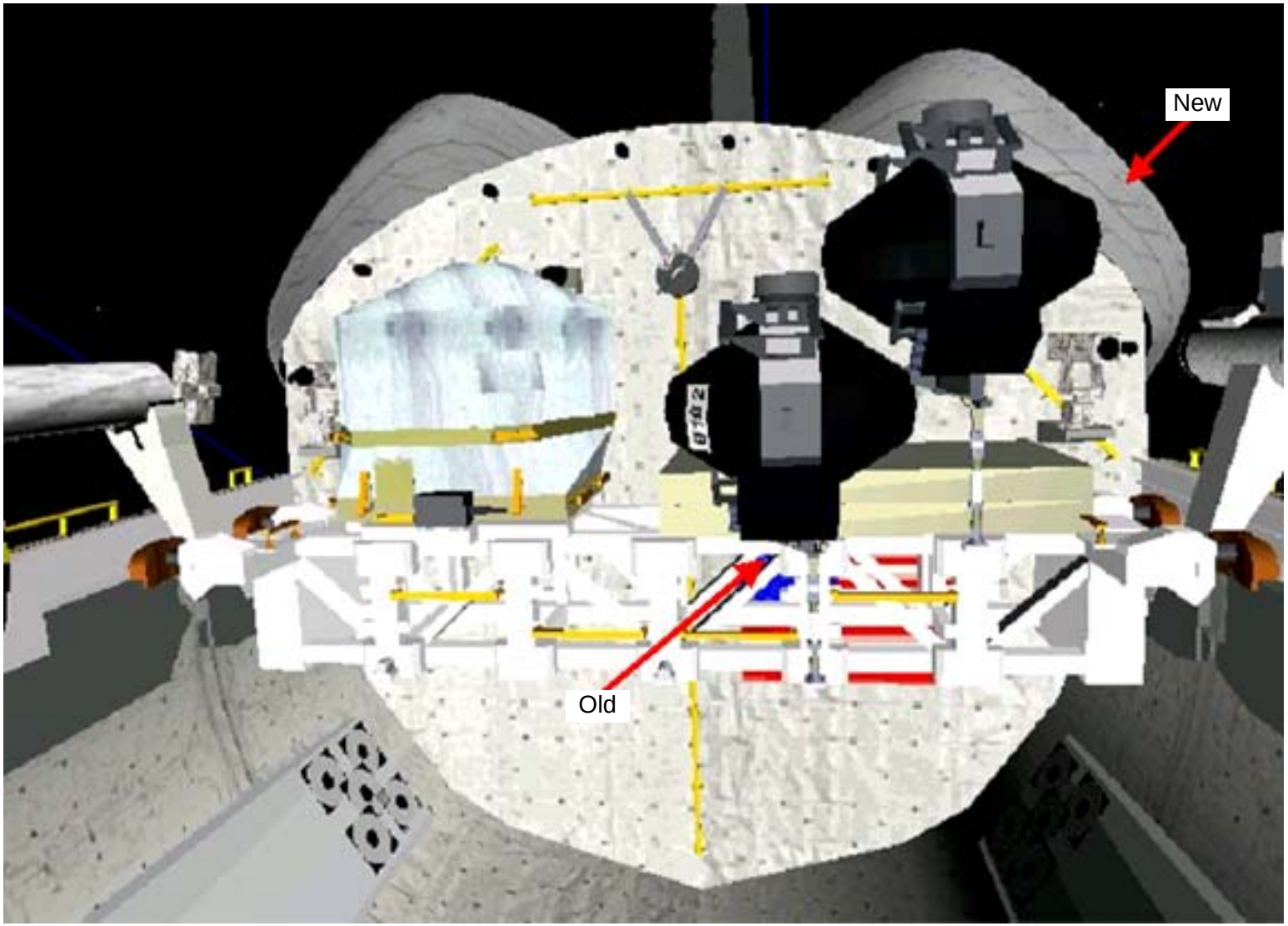

This Page Intentionally Blank

Space Shuttle Program
FLIGHT DATA FILE

JSC-48024-114
FINAL, REV A

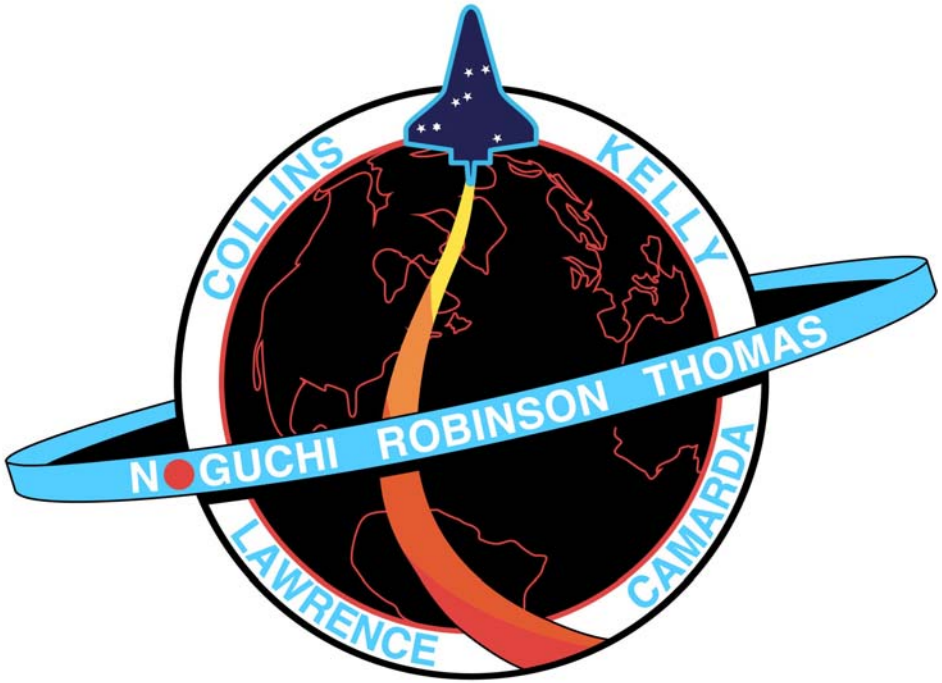

EVA CHECKLIST

STS 114

Flight Cover (trim bottom to expose tabs)