STS83–0026D
OI–21

SPACE SHUTTLE ORBITER

OPERATIONAL

LEVEL C

FUNCTIONAL SUBSYSTEM SOFTWARE REQUIREMENTS

SEQUENCE REQUIREMENTS

January 25, 1991

Contract NAS9–18500

IRD SE–694D1

WBS 39

Approved by

M. J. Kronfly, Director

Flight Systems and Performance

Rockwell International
Space Systems Division

FOREWORD

The primary avionics software system (PASS) requirements for the computer programs that execute in the Shuttle general–purpose computers (GPC's) are specified in the Computer Program Development Specifications (CPDS's) and the Functional Subsystem Software Requirements (FSSR) documents. The requirements are specified at three levels:

- Level A CPDS — System–level constraints and capabilities
- Level B CPDS — Functional requirements
- Level C FSSR — Detailed–level requirements

The Level A CPDS specifies system–level constraints and capabilities that are not oriented toward any particular program end item. The Level B CPDS specifies system–level requirements for guidance, navigation, and control (GN&C) and detailed requirements for systems management (SM) and vehicle utility (VU). The Level C FSSR's specify the detailed requirements for GN&C and display/controls. The Level C reconfigurable requirements are specified in the systems management and payload documents. The Level A, Level B, and Level C requirements documents are listed in Section 2, Applicable Documents.

DOCUMENT CHANGE RECORD

The following tabulation summarizes the change activity to Revision D dated January 25, 1991.

Issue and Date	Change Summary/Effectivity
Revision D January 25, 1991	This baseline release for effectivity OI–21 and subs includes CR's 89319C, 8990E, 90102D and 90114B.

CHANGE REQUEST SUMMARY

The following tabulation lists the paragraphs, figures (F), and tables (T) that have been changed as a result of approved change requests commencing with OI-8A. Changes incorporated prior to OI-8A are listed in the Historical Change Request Summary.

Paragraph	CR No.	OI-	Title
4.1.1.3			
Step 1C	89313A	OI-8C	CLOSE LH2 RECIRC DISC VLV FOR PAD ABORT
Step 1D	79997A	OI-8A	INTCON MPS HELIUM PAD ABORT
Step 1E	79997A	OI-8A	INTCON MPS HELIUM PAD ABORT
Step 1F	79997A	OI-8A	INTCON MPS HELIUM PAD ABORT
Step 2A	89157A	OI-8B	SSME LIMIT EXCEEDANCE PAD ABORT
Step 3A	89157A	OI-8B	SSME LIMIT EXCEEDANCE PAD ABORT
Step 4A	89157A	OI-8B	SSME LIMIT EXCEEDANCE PAD ABORT
Step 13	89355B	OI-8D	SCRUB OUTBOARD FILL/DRAIN LCC FROM RSLS
Step 14	89355B	OI-8D	SCRUB OUTBOARD FILL/DRAIN LCC FROM RSLS
Step 17	89355B	OI-8D	SCRUB OUTBOARD FILL/DRAIN LCC FROM RSLS
Step 17A	89355B	OI-8D	SCRUB OUTBOARD FILL/DRAIN LCC FROM RSLS
Step 18	89355B	OI-8D	SCRUB OUTBOARD FILL/DRAIN LCC FROM RSLS
Step 28A	89348B	OI-8C	MM103 FAST SEP CORRECTION
	90188	OI-8D	CHANGE ENGINE START TIME COMPUTATION
Step 30	89349A	OI-8C	PREVLV CLOSEURE FOR PAD ABORT
Step 30B	89349A	OI-8C	PREVLV CLOSEURE FOR PAD ABORT
Step 31	89349A	OI-8C	PREVLV CLOSEURE FOR PAD ABORT
Step 31B	89349A	OI-8C	PREVLV CLOSEURE FOR PAD ABORT
4.114(F)	79997A	OI-8A	INTCON MPS HELIUM PAD ABORT
	89157A	OI-8B	SSME LIMIT EXCEEDANCE PAD ABORT
	89313A	OI-8C	CLOSE LH2 RECIRC DISC VLV FOR PAD ABORT
	89348B	OI-8C	MM103 FAST SEP CORRECTION
	89349A	OI-8C	PREVLV CLOSEURE FOR PAD ABORT
	89355B	OI-8D	SCRUB OUTBOARD FILL/DRAIN LCC FROM RSLS
4.1.1.4 (T)	89875A	OI-8B	CLEANUP TO CR 89819
	90054A	OI-8D	ENTRY FCS ERRATA

Paragraph	CR No.	OI–	Title
4.1.2.2	89875A	OI–8B	CLEANUP TO CR 89819
4.1.2.3			
Step 17	89819	OI–8B	QD FAILURE PROTECTION FOR RSLS ABORT
Step 17	89875A	OI–8B	CLEANUP TO CR 89819
4.222 (F)	89819	OI–8B	QD FAILURE PROTECTION FOR RSLS ABORT
4.1.2.4 (T)	89875A	OI–8B	CLEANUP TO CR 89819
4.2.1.1	89325B	OI–8B	LOW LVL SNSR MOW SGL SNSR DIS
4.2.1.2	89325B	OI–8B	LOW LVL SNSR MOW SGL SNSR DIS
4.2.1.3			
Step 2	89369B	OI–8C	PD3 SAFING FOR INFLT SHUTDOWN
Step 3	89369B	OI–8C	PD3 SAFING FOR INFLT SHUTDOWN
Step 3A	89369B	OI–8C	PD3 SAFING FOR INFLT SHUTDOWN
Step 6	89369B	OI–8C	PD3 SAFING FOR INFLT SHUTDOWN
Step 7	89369B	OI–8C	PD3 SAFING FOR INFLT SHUTDOWN
Step 7A	89369B	OI–8C	PD3 SAFING FOR INFLT SHUTDOWN
Step 10	89369B	OI–8C	PD3 SAFING FOR INFLT SHUTDOWN
Step 11	89369B	OI–8C	PD3 SAFING FOR INFLT SHUTDOWN
Step 11A	89369B	OI–8C	PD3 SAFING FOR INFLT SHUTDOWN
Step 17	89108A	OI–8A	ERRONEOUS ENG PHASE FLAG FIX
Step 17B	89505B	OI–8D	MODIFY MPS MECO HELIUM INTERCONNECT
	89809B	OI–8D	CR 89505B CLEANUP
	89846B	OI–8D	CR 89809B CLEANUP
Step 17C	89505B	OI–8D	MODIFY MPS MECO HELIUM INTERCONNECT
	89809B	OI–8D	CR 89505B CLEANUP
	89846B	OI–8D	CR 89809B CLEANUP
Step 17D	89505B	OI–8D	MODIFY MPS MECO HELIUM INTERCONNECT
	89809B	OI–8D	CR 89505B CLEANUP
	89846B	OI–8D	CR 89809B CLEANUP
Step 22	89287	OI–8A	SSME OPS SCRUB
Step 22A	89287	OI–8A	SSME OPS SCRUB
Step 22B	89287	OI–8A	SSME OPS SCRUB

Paragraph	CR No.	OI–	Title
Step 22C	89287	OI–8A	SSME OPS SCRUB
Step 22D	89287	OI–8A	SSME OPS SCRUB
Step 22E	89287	OI–8A	SSME OPS SCRUB
Step 22F	89287	OI–8A	SSME OPS SCRUB
Step 24A	89278A	OI–8B	LH2 PREVALVE TIMER FOR FAST SEP
	89325B	OI–8B	LOW LVL SNSR MON SGL SNSR DIS
Step 25	89325B	OI–8B	LOW LVL SNSR MON SGL SNSR DIS
Step 25A	89325B	OI–8B	LOW LVL SNSR MON SGL SNSR DIS
Step 26	89325B	OI–8B	LOW LVL SNSR MON SGL SNSR DIS
Step 26A	89325B	OI–8B	LOW LVL SNSR MON SGL SNSR DIS
4.2.1.4–1(T)	89990E	OI–21	SINGLE ENGINE AUTO CONTINGENCY ABORT
4.165(F)	89278A	OI–8B	LH2 PREVALVE TIMER FOR FAST SEP
	89325B	OI–8B	LOW LVL SNSR MON SGL SNSR DIS
	89369B	OI–8C	PD3 SAFING FOR INFLT SHUTDOWN
	89505B	OI–8D	MODIFY MPS MECO HELIUM INTERCONNECT
	89809B	OI–8D	CR 89505B CLEANUP
4.2.2.2			
Step 1	79987D	OI–8A	SRB SEQ–MDM FAILURES
Step 2	79987D	OI–8A	SRB SEQ–MDM FAILURES
Step 4	79935H	OI–8A	SRB RGA RECHANNELIZATION
4.115(F)	79987D	OI–8A	SRB SEQ–MDM FAILURES
4.2.3.3			
Step 1	89165H	OI–8B	MPS FEED DISC LATCH LOGIC
	89399B	OI–8C	POST MECO LH2 VENT
Step 2	89348B	OI–8C	MM103 FAST SEP CORRECTION
Step 3	89165H	OI–8B	MPS FEED DISC LATCH LOGIC
Step 3a	89165H	OI–8B	MPS FEED DISC LATCH LOGIC
Step 3b	89165H	OI–8B	MPS FEED DISC LATCH LOGIC
Step 3c	89165H	OI–8B	MPS FEED DISC LATCH LOGIC
Step 3d	89165H	OI–8B	MPS FEED DISC LATCH LOGIC
Step 3e	89165H	OI–8B	MPS FEED DISC LATCH LOGIC

Paragraph	CR No.	OI–	Title
Step 3f	79935M	OI–8A	SRB RGA RECHANNELIZATION
	89165H	OI–8B	MPS FEED DISC LATCH LOGIC
Step 5/5a	90277A	OI–8D	ET SEP SEQUENCE CLEANUP
Step 5a	79928	OI–8B	AUTHORIZED SEQUENCER K–LOAD CHANGES
	79935H	OI–8B	SRB RGA RECHANNELIZATION
	89165H	OI–8B	MPS FEED DISC LATCH LOGIC
Step 7	89348B	OI–8C	MM103 FAST SEP CORRECTION
Step 8	89165H	OI–8B	MPS FEED DISC LATCH LOGIC
Step 9	89165H	OI–8B	MPS FEED DISC LATCH LOGIC
4.116(F)	89165H	OI–8B	MPS FEED DISC LATCH LOGIC
	89348B	OI–8C	MM103 FAST SEP CORRECTION
	89399B	OI–8C	POST MECO LH2 VENT
	90277A	OI–8D	ET SEP SEQUENCE CLEANUP
4.2.3.4(T)	89465C	OI–8C	MPS LH2 DUMP RTLS CONTINGENCY
4.2.3	89319E	OI–21	ORBITER SOFTWARE CHANGE REQUEST
4.2.3.4–1(T)	89990E	OI–21	SINGLE ENGINE AUTO CONTINGENCY ABORT
4.2.3.4–2(T)	89319E	OI–21	ORBITER SOFTWARE CHANGE REQUEST
4.2.3.4–1(T)	90114B	OI–21	ABORT SEQUENCING REDESIGN
4.2.4.1	89465C	OI–8C	MPS LHZ DUMP RTLS CONTINGENCY
Step 2	89465C	OI–8C	MPS LH2 DUMP RTLS CONTINGENCY
4.2.4.4(T)	90120B	OI–8D	UPDATE GUIDANCE DOWNMODE RQMTS
4.70(F)	89465C	OI–8C	MPS LH2 DUMP RTLS CONTINGENCY
4.3.1.1	89140E	OI–8A	CENTAUR REQUIREMENTS DELETION
	89150H	OI–8D	ABORT CONTROL SEQ SCRUB
4.3.1.2	59126H	OI–8A	RCS XFEED MCA OPTIMIZATION
	89140E	OI–8A	CENTAUR REQUIREMENTS DELETION
	89150H	OI–8D	ABORT CONTROL SEQ SCRUB
4.3.1.3			
Step 1	89140E	OI–8A	CENTAUR REQUIREMENTS DELETION
	89154B	OI–8A	DUMP ITEM DISPLAY CLEANUP
	89193D	OI–8A	ABT CNTR SEQ/OVERRIDE LASHUP

Paragraph	CR No.	OI–	Title
	89150H	OI–8D	ABORT CONTROL SEQ SCRUB
	89956	OI–8D	ABORT CONTROL SEQ CORRECTIONS
Step 1A	89140E	OI–8A	CENTAUR REQUIREMENTS DELETION
	89150H	OI–8D	ABORT CONTROL SEQ SCRUB
Step 3	89150H	OI–8D	ABORT CONTROL SEQ SCRUB
Step 4	59126H	OI–8A	RCS XFEED MCA OPTIMIZATION
	89150H	OI–8D	ABORT CONTROL SEQ SCRUB
Step 4A	59126H	OI–8A	RCS XFEED MCA OPTIMIZATION
	89150H	OI–8D	ABORT CONTROL SEQ SCRUB
Step 5	59126H	OI–8A	RCS XFEED MCA OPTIMIZATION
	89150H	OI–8D	ABORT CONTROL SEQ SCRUB
Step 6	59126H	OI–8A	RCS XFEED MCA OPTIMIZATION
	89150H	OI–8D	ABORT CONTROL SEQ SCRUB
Step 7	89150H	OI–8D	ABORT CONTROL SEQ SCRUB
Step 7A	89150H	OI–8D	ABORT CONTROL SEQ SCRUB
Step 7B	59126H	OI–8A	RCS XFEED MCA OPTIMIZATION
	89154B	OI–8A	DUMP ITEM DISPLAY CLEANUP
	89193D	OI–8A	ABT CNTL SEQ/OVERRIDE LASHUP
	89150H	OI–8D	ABORT CONTROL SEQ SCRUB
Step 7C	89150H	OI–8D	ABORT CONTROL SEQ SCRUB
Step 8	59126H	OI–8A	RCS XFEED MCA OPTIMIZATION
	89154B	OI–8A	DUMP ITEM DISPLAY CLEANUP
	89193D	OI–8A	ABT CNTL SEQ/OVERRIDE LASHUP
	89150H	OI–8D	ABORT CONTROL SEQ SCRUB
	89956	OI–8D	ABORT CONTROL SEQ CORRECTIONS
Step 9	59126H	OI–8A	RCS XFEED MCA OPTIMIZATION
	79971D	OI–8A	ABORT/INTERCONNECT FLAG FIX
	89150H	OI–8D	ABORT CONTROL SEQ SCRUB
Step 9A	59126H	OI–8A	RCS XFEED MCA OPTIMIZATION
	89150H	OI–8D	ABORT CONTROL SEQ SCRUB
Step 10	59126H	OI–8A	RCS XFEED MCA OPTIMIZATION

Paragraph	CR No.	OI–	Title
	89150H	OI–8D	ABORT CONTROL SEQ SCRUB
Step 10A	59126H	OI–8A	RCS XFEED MCA OPTIMIZATION
	89150H	OI–8D	ABORT CONTROL SEQ SCRUB
Step 11	59126H	OI–8A	RCS XFEED MCA OPTIMIZATION
	89150H	OI–8D	ABORT CONTROL SEQ SCRUB
Step 12	59126H	OI–8A	RCS XFEED MCA OPTIMIZATION
	89150H	OI–8D	ABORT CONTROL SEQ SCRUB
Step 13	89150H	OI–8D	ABORT CONTROL SEQ SCRUB
	89956	OI–8D	ABORT CONTROL SEQ CORRECTIONS
Step 14	89150H	OI–8D	ABORT CONTROL SEQ SCRUB
Step 15	89150H	OI–8D	ABORT CONTROL SEQ SCRUB
Step 16	89150H	OI–8D	ABORT CONTROL SEQ SCRUB
Step 17	89150H	OI–8D	ABORT CONTROL SEQ SCRUB
Step 18	89150H	OI–8D	ABORT CONTROL SEQ SCRUB
Step 19	89150H	OI–8D	ABORT CONTROL SEQ SCRUB
	89810	OI–8D	CORRECTION FOR 89150H
Step 20	89149B	OI–8A	OI–8A VERSION OF CR 79596C
	89193D	OI–8A	ABT CNTL SEQ/OVERRIDE LASHUP
	89150H	OI–8D	ABORT CONTROL SEQ SCRUB
	89956	OI–8D	ABORT CONTROL SEQ CORRECTIONS
Step 21	89150H	OI–8D	ABORT CONTROL SEQ SCRUB
Step 22	79643A	OI–8A	OMS DUMP WITH 3 SSME'S FAILED
Step 23	89150H	OI–8D	ABORT CONTROL SEQ SCRUB
Step 24	89150H	OI–8D	ABORT CONTROL SEQ SCRUB
Step 25	89238	OI–8B	ZERO THRUST AUTO DUMP START
	89479	OI–8C	CONTINGENCY DUMP POST–MECO MANUAL START
	89150H	OI–8D	ABORT CONTROL SEQ SCRUB
Step 26	89150H	OI–8D	ABORT CONTROL SEQ SCRUB
Step 27	89705	OI–8C	POST MECO NZ TERMINATION CORRECTION
	89150H	OI–8D	ABORT CONTROL SEQ SCRUB
Step 28	89150H	OI–8D	ABORT CONTROL SEQ SCRUB

Paragraph	CR No.	OI–	Title
Step 29	89150H	OI–8D	ABORT CONTROL SEQ SCRUB
	89810	OI–8D	CORRECTION FOR 89150H
Step 30	89150H	OI–8D	ABORT CONTROL SEQ SCRUB
Step 31	89150H	OI–8D	ABORT CONTROL SEQ SCRUB
Step 32	79643A	OI–8A	OMS DUMP WITH 3 SSME'S FAILED
	89154B	OI–8A	DUMP ITEM DISPLAY CLEANUP
	89193D	OI–8A	ABT CNTL SEQ/OVERRIDE LASHUP
	89229G	OI–8C	TERMINATE OMS–DUMP POST–MECO
	89150H	OI–8D	ABORT CONTROL SEQ SCRUB
Step 33	89142B	OI–8A	NZ LIMIT FOR MM304 OMS DUMP
	89154B	OI–8A	DUMP ITEM DISPLAY CLEANUP
	89193D	OI–8A	ABT CNTL SEQ/OVERRIDE LASHUP
	89229G	OI–8C	TERMINATE OMS–DUMP POST–MECO
	89705	OI–8C	POST MECO NZ TERMINATION CORRECTION
	89150H	OI–8D	ABORT CONTROL SEQ SCRUB
Step 34	89150H	OI–8D	ABORT CONTROL SEQ SCRUB
Step 35	89150H	OI–8D	ABORT CONTROL SEQ SCRUB
Step 36	89150H	OI–8D	ABORT CONTROL SEQ SCRUB
4.192(F)	59126H	OI–8A	RCS XFEED MCA OPTIMIZATION
	79643A	OI–8A	OMS DUMP WITH 3 SSME'S FAILED
	79971D	OI–8A	ABORT/INTERCONNECT FLAG FIX
	89140E	OI–8A	CENTAUR REQUIREMENTS DELETION
	89142B	OI–8A	NZ LIMIT FOR MM304 OMS DUMP
	89149B	OI–8A	OI–8A VERSION OF CR 79596C
	89154B	OI–8A	DUMP ITEM DISPLAY CLEANUP
	89193D	OI–8A	ABT CNTL SEQ/OVERRIDE LASHUP
	89229G	OI–8C	TERMINATE OMS–DUMP POST–MECO
	89238	OI–8B	ZERO THRUST AUTO DUMP START
	89479	OI–8C	CONTINGENCY DUMP POST–MECO MANUAL START
	89705	OI–8C	POST MECO NZ TERMINATION CORRECTION
	89150H	OI–8D	ABORT CONTROL SEQ SCRUB

Paragraph	CR No.	OI–	Title
	89956	OI–8D	ABORT CONTROL SEQ CORRECTIONS
4.3.2.2	59126H	OI–8A	RCS XFEED MCA OPTIMIZATION
	89237	OI–8B	OMS/RCS I/C DOC CHANGE
	89239B	OI–8B	CLEANUP OF CR 89210B
	89352C	OI–8B	AFT MANIFOLD JET INH RESET DELAY
4.3.2.3			
Step 1	59126H	OI–8A	RCS XFEED MCA OPTIMIZATION
	79971D	OI–8A	ABORT/INTERCONNECT FLAG FIX
	89185A	OI–8A	ABT OMS/RCS INTRCNT MODE TRANS
	89237	OI–8B	OMS/RCS I/C DOC CHANGE
Step 1A	59126H	OI–8A	RCS XFEED MCA OPTIMIZATION
Step 1B	59126H	OI–8A	RCS XFEED MCA OPTIMIZATION
Step 2	59126H	OI–8A	RCS XFEED MCA OPTIMIZATION
	79971D	OI–8A	ABORT/INTERCONNECT FLAG FIX
Step 4	79971D	OI–8A	ABORT/INTERCONNECT FLAG FIX
Step 6	79971D	OI–8A	ABORT/INTERCONNECT FLAG FIX
	89320	OI–8B	OMS/RCS I/C DOC CHANGE
Step 7	59126H	OI–8A	RCS XFEED MCA OPTIMIZATION
	79971D	OI–8A	ABORT/INTERCONNECT FLAG FIX
	89352C	OI–8B	AFT MANIFOLD JET INH RESET DELAY
Step 11	89352C	OI–8B	AFT MANIFOLD JET INH RESET DELAY
Step 13	59126H	OI–8A	RCS XFEED MCA OPTIMIZATION
Step 14	59126H	OI–8A	RCS XFEED MCA OPTIMIZATION
	79971D	OI–8A	ABORT/INTERCONNECT FLAG FIX
	89210B	OI–8B	SMART INTERCONNECT
Step 14A	59126H	OI–8A	RCS XFEED MCA OPTIMIZATION
	79971D	OI–8A	ABORT/INTERCONNECT FLAG FIX
Step 17	59126H	OI–8A	RCS XFEED MCA OPTIMIZATION
	79971D	OI–8A	ABORT/INTERCONNECT FLAG FIX
	89210B	OI–8B	SMART INTERCONNECT
	89239B	OI–8B	CLEANUP OF CR 89210B

Paragraph	CR No.	OI–	Title
Step 19	59126H	OI–8A	RCS XFEED MCA OPTIMIZATION
	79971D	OI–8A	ABORT/INTERCONNECT FLAG FIX
	89210B	OI–8B	SMART INTERCONNECT
	89239B	OI–8B	CLEANUP OF CR 89210B
Step 20	59126H	OI–8A	RCS XFEED MCA OPTIMIZATION
	79972	OI–8A	INTERCONNECT TIMER FIX
	89210B	OI–8B	SMART INTERCONNECT
	89239B	OI–8B	CLEANUP OF CR 89210B
Step 21	59126H	OI–8A	RCS XFEED MCA OPTIMIZATION
Step 22	59126H	OI–8A	RCS XFEED MCA OPTIMIZATION
	79971D	OI–8A	ABORT/INTERCONNECT FLAG FIX
	89352C	OI–8B	AFT MANIFOLD JET INH RESET DELAY
4.181(F)	59126H	OI–8A	RCS XFEED MCA OPTIMIZATION
	79971D	OI–8A	ABORT/INTERCONNECT FLAG FIX
	89210B	OI–8B	SMART INTERCONNECT
	89239B	OI–8B	CLEANUP OF CR 89210B
	89352C	OI–8B	AFT MANIFOLD JET INH RESET DELAY
4.3	90114B	OI–21	ABORT SEQUENCING REDESIGN
4.3.1.4–1(T)			
4.3.1.4–2(T)			
4.3.1.4–3(T)			
4.3.2	90114B	OI–21	ABORT SEQUENCING REDESIGN
4.3.2.4–1(T)			
4.4.1.2	79933F	OI–8A	VENT DOOR SEQ SCRUB CR
	89140E	OI–8A	CENTAUR REQUIREMENTS DELETION
4.4.1.3	79933F	OI–8A	VENT DOOR SEQ SCRUB CR
	89140E	OI–8A	CENTAUR REQUIREMENTS DELETION
Step 1	79933F	OI–8A	VENT DOOR SEQ SCRUB CR
Step 2	79933F	OI–8A	VENT DOOR SEQ SCRUB CR
	89140E	OI–8A	CENTAUR REQUIREMENTS DELETION
Step 9	79933F	OI–8A	VENT DOOR SEQ SCRUB CR

Paragraph	CR No.	OI–	Title
4.161(F)	79933F	OI–8A	VENT DOOR SEQ SCRUB CR
	89140E	OI–8A	CENTAUR REQUIREMENTS DELETION
4.4.1.4(T)	90054A	OI–8D	ENTRY FCS ERRATA
4.5.1.2	89436A	OI–8C	LG HYD ISOL VLV OPEN CMD TIME
4.5.1.3			
4.5	90102	OI–21	LDG GEAR EXTENSION ISOLATION VALVE
4.5.1			
4.5.1.3			
4.5.1.4–1(T)			
Step 2	89436A	OI–8C	LG HYD ISOL VLV OPEN CMD TIME
Step 6	89436A	OI–8C	LG HYD ISOL VLV OPEN CMD TIME
Step 8	89436A	OI–8C	LG HYD ISOL VLV OPEN CMD TIME
Step 9	89436A	OI–8C	LG HYD ISOL VLV OPEN CMD TIME
4.215(F)	89436A	OI–8C	LG HYD ISOL VLV OPEN CMD TIME
4.6.1.1	79964F	OI–8A	RCS REG FAIL PROTECT SEQ
4.6.1.2	79964F	OI–8A	RCS REG FAIL PROTECT SEQ
	89246A	OI–8A	CLEANUP FOR CR 79964F
4.6.1.3	79964F	OI–8A	RCS REG FAIL PROTECT SEQ
Step 1	79964F	OI–8A	RCS REG FAIL PROTECT SEQ
Step 2	79964F	OI–8A	RCS REG FAIL PROTECT SEQ
Step 3	79964F	OI–8A	RCS REG FAIL PROTECT SEQ
Step 4	79964F	OI–8A	RCS REG FAIL PROTECT SEQ
Step 5	79964F	OI–8A	RCS REG FAIL PROTECT SEQ
Sub A	79964F	OI–8A	RCS REG FAIL PROTECT SEQ
Sub B	79964F	OI–8A	RCS REG FAIL PROTECT SEQ
Sub B1	79964F	OI–8A	RCS REG FAIL PROTECT SEQ
Sub B2	79964F	OI–8A	RCS REG FAIL PROTECT SEQ
Sub C	79964F	OI–8A	RCS REG FAIL PROTECT SEQ
4.185(F)	79964F	OI–8A	RCS REG FAIL PROTECT SEQ
4.6.4.1	79964F	OI–8A	RCS REG FAIL PROTECT SEQ
4.6.4.2	79964F	OI–8A	RCS REG FAIL PROTECT SEQ

Paragraph	CR No.	OI–	Title
	89246A	OI–8A	CLEANUP FOR CR 79964F
4.6.4.3	79964F	OI–8A	RCS REG FAIL PROTECT SEQ
	89246A	OI–8A	CLEANUP FOR CR 79964F
Step 1	79964F	OI–8A	RCS REG FAIL PROTECT SEQ
Step 2	79964F	OI–8A	RCS REG FAIL PROTECT SEQ
Step 3	79964F	OI–8A	RCS REG FAIL PROTECT SEQ
Step 4	79964F	OI–8A	RCS REG FAIL PROTECT SEQ
Sub A	79964F	OI–8A	RCS REG FAIL PROTECT SEQ
Step A1	79964F	OI–8A	RCS REG FAIL PROTECT SEQ
Step A2	79964F	OI–8A	RCS REG FAIL PROTECT SEQ
Step A3	79964F	OI–8A	RCS REG FAIL PROTECT SEQ
Step A4	79964F	OI–8A	RCS REG FAIL PROTECT SEQ
Step A5	79964F	OI–8A	RCS REG FAIL PROTECT SEQ
Step A6	79964F	OI–8A	RCS REG FAIL PROTECT SEQ
Step A7	79964F	OI–8A	RCS REG FAIL PROTECT SEQ
Step A8	79964F	OI–8A	RCS REG FAIL PROTECT SEQ
Step A9	79964F	OI–8A	RCS REG FAIL PROTECT SEQ
Sub B	79964F	OI–8A	RCS REG FAIL PROTECT SEQ
Step B1	79964F	OI–8A	RCS REG FAIL PROTECT SEQ
Step B2	79964F	OI–8A	RCS REG FAIL PROTECT SEQ
Step B3	79964F	OI–8A	RCS REG FAIL PROTECT SEQ
Step B4	79964F	OI–8A	RCS REG FAIL PROTECT SEQ
4.189(F)	79964F	OI–8A	RCS REG FAIL PROTECT SEQ
4.7.6.4(T)	90120B	OI–8D	UPDATE GUIDANCE DOWNMODE RQMTS
4.8.1.1	89968A	OI–8C	25 MS TIMING REQ FOR MEC NON–CRIT CMDS
4.8.1.2	89968A	OI–8C	25 MS TIMING REQ FOR MEC NON–CRIT CMDS
4.8.1.4	89968A	OI–8C	25 MS TIMING REQ FOR MEC NON–CRIT CMDS
4.8.2.3.4	79973A	OI–8A	PAD DATA PATH FAIL CRITERIA
4.8.2.3.5	89389B	OI–8C	SSME CONTINUOUS COMMANDS
4.8.2.3.6	89108A	OI–8A	ERRONEOUS ENG PHASE FLAG FIX
	89201A	OI–8A	MAIN ENG SHUTDOWN INDICATION

Paragraph	CR No.	OI–	Title
	89456A	OI–8B	FSSR 26 ERRATA/DOC CLEANUP
4.8.2.3.8	89389B	OI–8C	SSME CONTINUOUS COMMANDS
	89201A	OI–8A	MAIN ENG SHUTDOWN INDICATION
	89456A	OI–8B	FSSR 26 ERRATA/DOC CLEANUP
4.8.2.4–1(T)	89990E	OI–21	SINGLE ENGINE AUTO CONTINGENCY ABORT
4.1.1	90023A	20	GN&C CHECKOUT CONFIGURATION
Step 41			
4.114(F)			
4.2.3			
Step 3			
4.116(F)			
4.6.3	90271	20	CLOSE RCS HELIUM VALVES BASED ON HIGH TANK OUTLET PRESSURE
Step 6			
4.1.1.4–1	89981	20	ADD DOWNLIST REQ FOR LPS ORBITER DOORS
4.116(F)	90114B	OI–21	ABORT SEQUENCING REDESIGN
4.184(F)	90114B	OI–21	ABORT SEQUENCING REDESIGN
4.192(F)	90114B	OI–21	ABORT SEQUENCING REDESIGN
4.215(F)	90102D	OI–21	LDG GEAR EXTENSION ISOLATION VALUE

HISTORICAL CHANGE REQUEST SUMMARY

The following tabulation is a historical record of the approved software change requests incorporated in this document by software release.

CR No.	Title	Release
02166	OFT GNC ENTRY FUNCTIONS UPDATE	16
02173A	ABORT MODE RESELECTION (G021)	16
02313A	SRB MON FCN/SEL FILTER/SRB SEP SEQ	16
02340D	ATTITUDE DATA, IMU DATA	16
02449D	ADD OFT CONTINGENCY ABORT RQT	16
02486B	SRB TVD FDIR ACTIVATION/DEACTIVATION	16
02607A	UPDATE TO D&C BOOK II	16
12008	REDUCE SSME RATE	16
12019	STAND FSSR PRINCIPAL FUNCT	16
12028B	SSME OPERATIONS SEQUENCE	16
12033A	ABORT CONTROL SEQ	16
12034	OMS ENGINE FIRING SEQ REV	16
12037A	ABORT OMS/RCS INTERCONNECT	16
12045	OMS TO RCS GAGING REVISIONS	16
12046A	OMS TO OMS CROSSFEED SEQ	16
12047	VENT DOOR SEQUENCE	16
12071A	MNVR EXECUTE (6.35 AND 6.46) DISPLAY CHANGES	16
12073A	O. OMS/RCS CONN	16
12074A	ET SEPARATION SEQUENCE REVISION	16
12075	HYD SYS LND GEAR ISOL VLV	16
12076A	RCS PROPELLANT CROSSFEED	16
12077A	MPS DUMP SEQUENCE REVISION	16
12078A	SRB MDM DATA ACQUISITION	16
12119	ON ORB I/O UPDT	16
12112	GAX–ANNUNCIATION REWRITE	16
12137	OMS/OMS CONN, RCS/RCS XFEED RATE CHG	16
12160A	RS LAUNCH SEQ REV (4.114)	16
12161	SRB SEP SEQUENCE REVISION	16

CR No.	Title	Release
12162	RCS QUANTITY MONITOR	16
12190D	ASC/RTLS GUID, PFG MODE TEAM	16
12217	SRB AND ET SEP SEQ RATE REDUCTION	16
12218C	AERO ACTUATOR COMMAND SOP	16
12239	GPC/SSME DATA FETCH	16
12240	MEC SOP DOCUMENTATION CHG	16
12241	SSME SOP DOCUMENTATION CHG	16
12248	GAX–RATE TABLE UPDATE	16
12270A	BLOCK UPDT TO OPS 3	16
12313C	ADDITION OF TLM REQMTS	16
12316	GNC SWITCH RM PROC RATE RED	16
12336	I–LD OFT MISS AND LRU DEP	16
12337	I–LD OFT DES DEP PARM	16
12411B	OMS ENGINE FDI SIMPLIFICATION	16
12414C	R/S LCH SEQ AND SSME SOP REV	16
12442A	INTEGRATED ENT NAV, ASC NAV, AND ORB	16
12443	I–LOAD FOR ENTRY FACI	16
12449B	VENT DOOR CONTROL SEQ	16
12455	SSME SOP SWITCH OF EIU 60 KBPS OUTPUT	18
12473B	RCS QUAN MONITOR	16
12480B	SSME OPERATIONS SEQ	16
12481A	MPS DUMP SEQ	16
12482A	ET SEPARATION SEQ	16
12483B	SRB SEPARATION SEQ	16
12484A	MPS DEDICATED DISPLAY DRIVE SEQ	16
12491	OMS FIRE SEQ	16
12494	OMS TO RCS GAGING	16
12495	OMS TO OMS XFEED AND RECONFIGURATION	16
12496	RCS	16
12497	OMS/RCS CONNECT SEQ	16
12508	HYDRAULICS	16

CR No.	Title	Release
12510	PEG TIME-TO-GO AND THRUST INTEGRAL	16
12523	SRB SEPARATION INHIBIT	16
12586	INTEGRATED SIGNAL INTERFACES	18
12639	BACKUP SRB PWR ADDITIONS TO MEC	16
12644C	LAUNCH SEQ COMMAND CODE UPDATE	16
12658A	ASCENT DISPLAYS UPDT	16
12672C	JAN SEQ MODE TEAM MAKE WORK	16
12673A	REDUNDANT SET LAUNCH SEQ	16
12691A	MPS HELIUM REDESIGN	16
12699A	ADDITION OF FAST SEP MODE	16
12704B	RELOCATION OF MPS ACTUATOR PORT CH	16
12716A	MNVR EXEC DISPLAY REFORMAT	18
12722	MANUAL OPEN VENT DOORS DURING ENTRY	16
12745	DELETION OF OMS/OMS INTERCONNECT SEQ	16
12771A	PRINCIPAL FUNCTION DELETIONS	18
12826A	VENT DOOR CONTROL UPDATE	16
12836	RCS RCS XFEED AND RECONFIGURATION	16
12868A	I-LOAD CHG TO REFLECT MODE TEAM	16
12881A	ABORT VENT DOOR	16
12896A	ET SEP SEQ CLEANUP	16
12897A	MPS DUMP SEQ LOX AND LH2 INLET PRESS	16
12901	ORBIT OMS/RCS INTERCONNECT SEQ	18
12928A	SSME OPS SEQ	16
12938A	XXXXXX TRAJ IDD	16
12942A	MPS TVC ACTUATOR BYPASS/OVERRIDE	16
12977	OMS FIRE SEQ CORRECTIONS	18
12981D	ON ORBIT FLIGHT CONTROL	18
12993	I-LOAD FACI	16
12994	I-LOADS OFT-1 FACI U/D	16
12997	ET FAST SEP (MEC SOP IMPACTS)	16
19016	SEQ INTERFACE CLEANUP	16

CR No.	Title	Release
19039C	ASCENT/ENTRY STRUCTURAL PTI'S	17
19040	MANEUV EXEC DOC CLEANUP	16
19048	SRB TVC RST/OVRD SCHEDULING	16
19053A	SRB SEPARATION SEQ LASH UP	16
19060C	VENT DOOR SEQ	16
19061A	FAST SEP CHG TO GRTLS FSSR	16
19066B	CORRECT AND DEFINE MECO ACCURACY RQMT	16
19068A	MAIN ENGINE SHUT DOWN SWITCH RM	17
19081	MPS DED DIS DRIVE SEQ MOD	16
19091B	O. OMS/RCS CONN FAULT CHECKS	16
19092	OMS FIRE SEQ COMMFAULT CHECKS	18
19097A	ADDITION TO M PAD (I–LOAD)	16
19100	FSSR UPDATE	16
19103A	ABORT CONT SEQ MAKE WORK CHANGES (CONTINGENCY ABORT)	16
19107C	MM 102 3 ENGINE OUT MODING PREVENTION	16
19108A	OMS TO RCS GAGING CONSTANTS	16
19142A	BACKUP TO MECO CONFIRMED	16
19147	ET SEP SEQ COMMFAULT PROCESSING	16
19148	SSME SOP COMMFAULT PROCESSING	16
19149	SSME OPS COMMFAULT PROCESSING	16
19163A	RSLS CLEANUP	16
19165	RCS QTY MON (4.102)	16
19173	RS LCH SEQ I–LOAD CHG	16
19176	RTLS ABORT MPS DUMP TERM SOFTWARE	16
19208A	OMS/RCS ADDITIONS TO D/L	16
19222	ET SEP SWITCH DEFAULT AND OVERRIDE POS	16
19224B	SSME OPS PREVALVE I–LOAD	16
19232	R/S LAUNCH SEQUENCE ADDITIONS FOR FRF	16
19237	FLT ACCEL SAFETY CUTOFF SYSTEM (FASCOS)	16
19238	R/S LCH ACTUATOR PORT CHECKS MOD	16
19239	FAST SEP FOR MM 601	16

CR No.	Title	Release
19240	FAST SEP I–LOADS	16
19300	FSSR UPDATE II	16
19358	DELETE ET SEP IDD	16
19371A	FSSR SD 76–SH–0026A I–LOAD	16
19404A	VENT DOOR SEQ	16
19412	SRB IGN DELAY I–LOAD	16
19416A	OMS/RCS I/C REPRESS FUNCTION MOD STS–2	18
19420	ET SEP DOC CHANGE	16
19440	MPS FUEL DUMP LOGIC CORRECTION	16
19455	MEASUREMENT ATTRIBUTE CORRECTIONS	16
19464	INCORRECT BCH CODE	16
19475	SSME SOP DOCUMENTATION CHG	16
19476	R/S LCH SEQ CLARIFICATION	16
19496	GPC CMD PRIORITY TO SSME	16
19500	FSSR UPDATE 3	16
19507	VENT DOOR SEQ ON ORBIT/ENTRY I–LOAD	16
19532A	ET SRB SEQ/UMB RETRACT TIME–DELAY CHG	16
19533A	ADDITION OF "C" CMD TO LO2 AND LH2 FEEDLINE RELIEF S/O VALVE CLOSE COMMANDS	16
19534A	ADDITION OF "C" CMD TO LH2 RTLS MAN REPRESS OPEN CMDS MEC NON–CRITICAL COMM	16
19541	MEC NON–CRITICAL COMMAND CONSTRAINTS	16
19553C	CREW OVERRIDE OF OMS TARGETS VIA ITEM ENTRY (STS–2)	18
19558	SSME SOP FASCOS CHANGE	17
19598A	ATVC DEADFACE REQUIREMENTS IN SRB SEP SEQ	16
19623B	REMOVAL OF 30% CHAMBER PRESSURE INTERLOCK ON PREVALVE CLOSE COMMANDS	16
19626	I–LOAD CORRECTION	16
19632	INCORRECT BCH CODE SPECIFIED FOR GPC TO EIU COMMAND WORDS	16
19651	R/S LCH SEQ RECYCLE I–LOAD	16
19657	OMS BURN AFTER RCS ROLL CONTROL	16

CR No.	Title	Release
19659	VENT DOOR SEQUENCE	16
19664	ABORT CONTROL SEQ CONTINUATION OF INTACT OMS DUMP	18
19665	ABORT CONTROL SEQ CONTINUATION OF INTACT OMS DUMP	17
19681A	SOFTWARE CHANGES TO ACCOMMODATE LO2 LOW LEVEL SENSOR RELOCATION	16
19686A	FRF I–LOAD	16
19698A	RCS QUANTITY MONITOR (STS–2 & SUBS)	17
19713	MAKE WORK CORRECTION CR 19280 AND CR 12899A	16
19736	MAKE WORK LASHUP OF GRTLS DAP REQMTS TO CR 19239 (MM 601 FAST SEP)	16
19738A	RCS QUANTITY MONITOR SEQUENCE ALGORITHM CONSTANTS AND I–LOAD VALUES	17
19770A	ET SEP SEQ CHANGES FOR FAST SEP AFTER RTLS MECO	16
19800	UPDATE OMS/RCS GAGING SCALE FACTOR	19
19823A	VENT DOOR SEQUENCE COMMANDS TERMINATION	16
19824A	ET UMBILICAL DOORS COMMAND ON CHANGE ONLY SEQUENCE TERMINATION	16
19827A	–Z MANEUVER INITIATION MODIFICATION	16
19836	CLOSE OMS TK ISO VALVES FOR RTLS (OPS SINGLE POINT FAILURE)	16
19837A	AFT COMPT RTLS HELIUM PURGE	16
19844	STS–1 RTLS PROPELLANT BURN TIME I–LOAD CHANGES	16
19853A	FAST SEP I–LOAD FOR ME LH2 PREVALVE	16
19857B	UPP I–LOAD REQ CHANGE AGREE WITH IMPLEMENTATION	16
19893A	SEQ FSSR I–LOAD SYMBOLIC NAME CHANGE	16
19900	FSSR UPDATE NO. 5	16
19922	R/S LAUNCH SEQ 90% CHECK I–LOAD CHANGE	16
19923	MOD TO CR 19664 – ABORT SEQUENCE, STS–2 OMS FUEL QUANTITY COMMFAULT MONITORING	18
19946A	STS–1 VENT DOOR I–LOADS	16
19958A	ASCENT FLIGHT CONTROL DOCUMENTATION CLEAN UP	16
19964	SSME COMMAND PATH FAILURE (STS–1)	17
19970	DELETION OF KI–SCALE FACTOR 1 FLAG	17
19973	OMS LEFT/RIGHT AND OMS/RCS VALVE MISCOMPARE RESET	19

CR No.	Title	Release
19998A	SSME STAGGER START	16
29022	REDUCTION OF LOX RESIDUALS FOR ENGINE OUT LOW LEVEL SHUTDOWN	17
29025B	PRE-SRB IGNITION MONITORING OF FASCOS	16
29037	RELOCATE LO2 LOW LEVEL SENSOR	16
29049	FRF I-LOAD CHANGES	16
29081	VENT DOOR SEQUENCE, CORRECTION TO CR 19823A	17
29095	SSME SOP COMMAND CHANGE	16
29099B	POST MECO RCS DUMP DURING RTLS	18
29106B	EIU 60 KBPS OUTPUT SWITCH	16
29119B	SRB SEQUENCE I-LOAD UPDATE	16
29142B	MPAD I-LOAD UPDATE NO. 4 FOR STS-1 CYCLE 3	16
29154B	STS-1 RTLS PROPELLANT BURN TIME I-LOAD CHANGE	16
29162A	I-LOAD CHANGES 'OWNER AUDIT'	16
29192	VENT DOOR COMMAND STAGGER TIME FOR	16
29207	MODIFICATION OF CR 19998A	16
29211	SSME LIMIT CONTROL INHIBIT/ENABLE (STS-2)	18
29216	OMS/RCS DOWNLIST REQUIREMENTS UPDATE	16
29323A	COMPUTER CG TRIM AND IGN PRESS	16
29328A	FAST SEP LW LVL SEN ARM 601	16
29333B	I-LOAD CHANGES RESULTING FROM OWNERS AUDIT	16
29343	RESET EVENT TIME START FLAG	16
29377	VENT DOOR STATUS AND OVERRIDE WORDS	16
29378A	OMS VALVE MISCOMPARE MESSAGE CLEANUP	OI-4
29405A	MPS PREVALVE OPER TO PRECLUDE POSSIBLE HARDWARE DAMAGE	16
29429	MPS LH2 FEEDLINE PRESS RELIEF	18
29433	RCS QUANTITY MONITOR UPDATE	18
29457	SSME STAGGER START TOLERANCE	16
29471B	HFE OVERRUN DEFINITION	16
29480B	MEC SOP NON-CRITICAL CMDS INIT	18
29481A	SSME CHAMBER PRESSURE	16

CR No.	Title	Release
29503A	RTLS ET SEP	16
29548B	ENG TIMER FOR THRUST OK (I–LOAD)	16
29551B	I–LOAD SCRUB – SEQ	19
29552B	SRB IGN TIME DELAY	18
29562	MPS TVC OVRD FOR PRE SRB FTS	18
29574A	LAUNCH SEQ ABORT LOGIC STS–1	16
29582	RTLS HELIUM PURGE I–LOAD	16
29597A	DELETE I–LOADS: ET SEP	19
29603A	SSME DOWNLIST DATA	18
29607A	MPS LH2 LOW LEVEL DELAYS	19
29619A	CALCULATION OF COUNTDOWN TIME	16
29664	LATCH ME–X TVC SERVO OVRD CMD	16
29668A	CMD PATH FAIL	16
29675	SSME STAGGER START TOL	16
29720	FAST SEP/MM103/TWO SSME FAIL	18
29725	AOA I–LOAD TITLE CORRECTION	16
29737A	AFT COMP/OMS POD AOA HELIUM PURGE	16
29749B	LPS COMMAND PROCESSING	19
29762A	ATT PROC IDD CLEAN UP	16
29775	SELECTIVE INHIBIT OF SSME S/D FOR DATA FAIL	OI–4
29783	SRB SEP BACK–UP CUE TIME I–LOAD	16
29793	ET UMBILICAL DOOR CLOSURE	18
29797C	LH2 DUMP VIA FILL/DRAIN VALVE	16
29800	FSSR UPDATE 8	16
29851	DELETE CR 29211C – SSME LIM CNTL	18
29855B	HPOTP OVERSPEED AT MECO	16
29870C	ADD GMTLO TO DOWNLIST	19
29872	CLEAN–UP OF CR 29552B	18
29877B	MPS ENTRY HELIUM PURGE	18
29879	TRANS DAP RATE AND ATT D/B I–LOAD	16
29880	ET FAST SEP I–LOAD CHANGE	16

CR No.	Title	Release
29883	MPS LO2 LOW LVL CUTOFF DELAY	16
29891A	RTLS OMS PROP DUMP I-LOAD CHANGES	16
29943A	CRT TIME TO GO TO SRB IGN (SUPERSEDES 29421)	19
29970C	VENT DOOR PURGE COMMAND TERM	18
29987	POST MECO RCS DUMP-RTLS	18
29996A	CORRECT CR 29720 - FAST SEP/MM103	18
39000	FSSR UPDATE 9	16
39022	LPS - RESUME COUNT COMMAND	19
39065A	LOX LOW LEVEL CUTOFF DELAY	16
39079	LO2 PREVALVE MECO I/L CHANGE	16
39080	FRF THROTTLE CMD	16
39091E	BACKUP MECO CONFIRMED	18
39103A	OMS RTLS PROP DUMP	16
39110A	ADD LO2 PREVALVE CLOSE CMDS	19
39137D	SSME FAIL MESSAGES	OI-2
39220A	OMS RTLS PROP DUMP	16
39244A	MEC SOP ET TUMBLE	18
39253A	SSME CMD PATH FAIL CHECK	18
39261	RTLS PURGE INITIATION	19
39265	RCS QTY MONITOR DOCUMENTATION	16
39323A	STS-2 CYCLE 1 MPAD ABORT I/L	18
39326	ET DOOR LATCH CMD RESET	18
39328B	DELETE FRF REQUIREMENTS	18
39358A	RCS QTY MONITOR UPDATE I/L	18
39370	RCS QTY MONITOR UPDATE	18
39394	MPS LO2 PREVALVE CMDS TO RSLS	OI-2
39400	FSSR UDATE NO. 10/R18 AND R19	18
39401	TRANSATLANTIC ABORT LANDING	18
39430	LATCH MAIN ENGINE SAFING CMDS	OI-3
39447C	SINGLE SSME OMS PRESS	19
39452D	LPS CONTROL—SRB RSC SAFE COND	18

CR No.	Title	Release
39470A	SRB SEP SEQ AND MEC SOP DOC	18
39475A	DELETE MECO HE INJECTION CMDS	OI–6
39477	LAUNCH VENT DOOR SEQUENCE	19
39478	OMS/RCS CONNECT PRIOR TO RRA	18
39492A	DELETE FASCOS LOGIC	OI–6
39503	SSME & SB POSN–ABORTED LAUNCH	OI–4
39520	DELETE HE VLV CK–OMS FIRE SEQ	OI–4
39530F	STS CYCLE 2 I–LOADS	18
39564	THIRD LO2 LL CUTOFF TIMER	18
39575	LO2 LOW LEVEL CUTOFF MOD	18
39579A	CLARIFY RCS/RCS XFEED AND RECON	18
39585	STS–2 CYCLES 2 RTLS DUMP I/L	18
39612	ELIM OF SRP–SEP–MODE FLAG	19
39614	SRB STAGGER START CONSTANT	19
39624	PREVENT EARLY GEAR DEPLOY	18
39630	OMS DUMP TIME FOR UPDATED CG	18
39651	TAL ABORT PRE MECO BURN	18
39681A	FAST SEP IN MM 103/I–LOAD CHANGE	18
39694	ORB OMS/RCS CONN REPRESS FLAG	OI–4
39718A	SRB IGNTION/SEPARATION CMD	18
39721B	ENABLE GEAR DEPLOY AT 800 FPS	18
39732B	ABORT DOWNMODE IN MM 103	18
39846	RTLS OMS PROP DUMP DELAY	18
39848A	DELETE AUTO RECYCLE–SSME SOP	OI–4
39850	DECEMBER BASELINE	18
39851A	SRB TVC FDIR AT ME START	OI–4
39863C	COUNTDOWN HOLD/ABORT IND	OI–4
39877	LH2 LL CUTOFF DOCUMENTATION	19
39964	ABORT CONTROL OMS ON TIME	OI–3
39965	RTLS POST MECO 4 + X CONTROL	19
39968A	LO2/LH2 DUMP TIME REDUCTION	19

CR No.	Title	Release
39977	MECO DOCUMENTATION CLEANUP	18
59019A	HE ISO VLV OPEN CMD TERMINATE	OI–6
59077	PAD DATA PATH FAIL	OI–6
59112B	ET UMB DOOR/RCS XFEED CNTL	OI–3
59126H	RCS XFEED MCA OPTIMIZATION	OI–8A
59216	RTLS LO2 LOW LEVEL–SSME = 104%	19
59217C	VENT DOOR ENTRY CONFIG	OI–5
59224	DATA PATH FAIL FLAG CHECK	OI–2
59273C	ABT CONT SEQ—SELECT INTERCNCT	OI–7
59274	LO2 BLEED VLVE CLOSE TIME I/L	19
59276	MPS DUMP SW NOMENCLATURE	19
59329A	VENT DOOR CMD AND FDBK MONITOR	19
59335A	OV–099 RCS QTY MON UPDATE	OI–2
59337	RCS QTY MON I–LOADS UPDATE	19
59368	VENT DOOR SEQUENCE COMMAND	OI–1
59384	SRB SEP TIME DELAY FOR ABORT	OI–6
59397	BIAS COMPUTATION RCS QTY MON	OI–6
59414A	EVENT TIMES RESET AT MECO	OI–5
59418	POST MECO NZ RCS CONTROL	OI–4
59432A	INHIBIT FDI FOR SSME TVC ACT	OI–6
59442B	MEC REDESIGN	OI–3
59470	BYPASS LO2 OVBD BLEED VLV CK	OI–2
59610	PTM LO2 LOW LEVEL I/L	OI–2
59631	STS–9 CY 1 ASC ABORT I–LOADS	OI–2
59654	CORRECT CR 28378A—OMS VLV MSG	OI–4
59689A	CORRECT CR 39863—D/L VENT DOOR	OI–4
59722	EVENT TIMER FLAG POST MECO	OI–5
59753A	MEC REDESIGN MSID CHANGES	OI–3
59754C	MCA OPTIMIZATION MSID CHANGES	OI–3
59765	LATCH RCS QTY DOWN ARROW	OI–6
59824	CLARIFY NZ LIMIT PROCESSING	OI–1

CR No.	Title	Release
59935	DELETE FLAG FROM ET SEP SEQ	OI–2
59957	I–LOAD SCRUB: VENT DOOR	OI–7
59973	I–LOAD SCRUB: MPS	OI–7
59996E	LO2 ECO SENSOR	OI–3
69063	SSME SOP CRIT PAIR EXCEPTION	OI–2
69074	SRB_SEP_ARM_BUFFER ASSIGNMENT	OI–3
69159A	CORRECT CR 59217C IN MM 304	OI–5
69177	CR 59077 CLEANUP	OI–6
69184A	MPS LOW LEVEL TIME DELAYS	OI–3
69220F	CENTAUR ABORT DUMP	OI–7C
69482A	DELETE PREVALVE ANTI–SLAM SW	OI–7
69555A	TAL/RTLS WEATHER ALTERNATE	OI–7
69600D	OMS GUIDANCE IMPROVEMENTS	OI–6
69635B	CORRECT CR 59273C	OI–7
69684B	ZFE CATEGORY CHANGE	OI–6
69780B	DELAYS OV–102 UNIQUE RCS I/LS	OI–6
69919	LH2 DUMP FOR RTLS	OI–4
69931B	STAGGERED SSME SHTDN PRIORITY (SUPERSEDED 69525)	OI–6
69951	DEL SRB PWR OFF AFTER SRB SEP	OI–4
69995D	DUMP LOX/LH2 RESIDUALS	OI–7
79010	DUMP LO2 RESIDUALS	OI–5
79028	RCS QTY MON—DOC ONLY FIX	OI–4
79067	MODIFIED RTLS LO2 DUMP	OI–5
79079B	MODIFIED OI–7 DUMP	OI–7
79134E	OMS BURN IN MM 304	OI–7C
79157	S/W FIX FOR HYD BRAKE LOCKUP	OI–4
79190D	OVERRIDE DISPLAY UPDATE	OI–7C
79209B	FWC SRB TIMING	OI–7
79302	CR 69635B CORRECTIONS	OI–7
79304B	OPS 3 DUMP CLEAN UP	OI–7C
79335D	OMS/RCS OPS DOWNLIST CHGS	OI–8A

CR No.	Title	Release
79406A	OVERRIDE DISPLAY CLEAN UP	OI–7C
79465A	VENT DOOR SEQ SOFTWARE RQMTS (SUPERSEDED 79291)	OI–5
79469	DOCUMENTATION CLEANUP FOR CR 69995D	OI–7
79497	OMS BURNTIME BIAS/SF	OI–7C
79498	OMS BURN TIME BIAS	OI–7
79499	FSSR UPDATE NO. 5 STS 83–0026A	OI–7
79562	CHECKSUM SOP SCRUB	OI–8A
79584C	MPS DUMP SSME IN STOW POSN	OI–8A
79643A	OMS DUMP WITH 3 SSME'S FAILED	OI–8A
79701A	CONT ME SHUTDN CMD FOR PAD ABT	OI–7C
79721	OMS BURN TIME BIAS FACTOR	OI–7C
79796	OI–11 OMS/RCS TIMER FIX	OI–8A
79797A	OMS/RCS INTCT TIMER FIX	OI–7C
79928	LASH–UP REQT'S FOR CR'S 59273C AND 69635B	OI–7
79928	AUTHORIZE SEQUENCER K–LOAD CHANGES	OI–8A
79931	BASELINE PCR'S 56951 AND 56060A FOR OI–8A	OI–8A
79933F	VENT DOOR SEQ SCRUB CR	OI–8A
79935H	SRB RGA RECHANNELIZATION	OI–8A
79964F	RCS REG FAIL PROTECT SEQ	OI–8A
79969A	GSOVEN SCRUB	OI–8A
79971D	ABORT/INTERCONNECT FLAG FIX	OI–8A
79972	INTERCONNECT TIMER FIX	OI–8A
79973	PAD DATA PATH FAIL CRITERIA	OI–8A
79980	I–LOAD UPDATE FOR 59126H	OI–8A
79987D	SRB SWQ–MDM FAILURES	OI–8A
79992B	STS 83–0026A LEVEL C FSSR SEQUENCING REQUIREMENT	OI–7C
79997A	INTCON MPS HELIUM PAD ABORT	OI–8A
89108A	ERRONEOUS ENG PHASE FLAG FIX	OI–8A
89140E	CENTAUR REQUIREMENTS DELETION	OI–8A
89142B	NZ LIMIT FOR MM 304 OMS DUMP	OI–8A
89149B	OI–8A VERSION OF CR 79596C	OI–8A

CR No.	Title	Release
89150H	ABORT CONTROL SEQ SCRUB	0I-8D
89154B	DUMP ITEM DISPLAY CLEANUP	OI-8A
89157A	SSME LIMIT EXCEEDANCE PAD ABORT	OI-8B
89165H	MPS FEED DISC LATCH LOGIC	OI-8B
89185A	ABT OMS/RCS INTRCNT MOD TRANS	OI-8A
89193D	ABT CNTL SEQ/OVERRIDE LASHUP	OI-8A
89201A	MAIN ENG SHUTDOWN INDICATION	OI-8A
89210B	SMART INTERCONNECT	OI-8B
89229G	TERMINATE OMS DUMP POST MECO	OI-8C
89237	OMS/RCS I/C DOC CHANGE	OI-8A
89238	ZERO THRUST AUTO DUMP START	OI-8B
89239B	CLEANUP OF CR 89210B	OI-8B
89246A	CLEANUP FOR CR 79946F	OI-8A
89278A	LH2 PREVALVE TIMER FOR FAST SEP	OI-8B
89287A	SSME OPS SCRUB	OI-8A
89313	CLOSE LH2 RECIRC DISC VLV FOR PAD ABORT	OI-8C
89320	OMS/RCS I/C DOC CHANGE	OI-8B
89325B	LOW LVL SNSR MON SGL SNSR DIS	OI-8B
89348B	MM 103 FAST SEY CORRECTION	OI-8C
89349A	PREVLV CLOSURE FOR PAD ABORT	OI-8C
89352C	AFT MANIFOLD JET INH RESET DELAY	OI-8B
89355C	SCRUB OUTBOARD FILL/DRAIN LCC FROM RSLS	OI-8D
89369B	PD 3 SAFING FOR INFLT SHUTDOWN	OI-8C
89389B	SSME CONTINUOUS COMMANDS	OI-8C
89392	RESTRUCTURE LOCAL DATA IN GSR	OI-8D
89399B	POST MECO LH2 VENT	OI-8C
89430	OI-8C IMPLEMENTATION OF CR 89313B	OI-8C
89436A	LG HYD ISOL VLV OPEN CMD TIME	OI-8C
89451C	ADDITION OF SRB IEA MEASUREMENTS	OI-8B
89454A	DELETE 3RD HPFTT DISCHRG TEMP	OI-8B
89456A	FSSR 26 ERRATA/DOC CLEANUP	OI-8B

CR No.	Title	Release
89465C	MPS LH2 DUMP RTLS CONTINGENCY	OI-8C
89479	CONTINGENCY DUMP POST-MECO MANUAL START	OI-8C
89487	ADDITION OF SRB IEA MEASUREMENTS	OI-8C
89505B	MODIFY MPS MECO HELIUM INTERCONNECT	OI-8D
89561A	RCS/RCS XFEED AFTER INCT RTN	OI-8B
89598A	OI-8B SEQUENCING FSSR ERRATA	OI-8B
89705	POST MECO OMS NZ TERMINATION CORRECTION	OI-8C
89809B	CR 89505B CLEANUP	OI-8D
89810	CORRECTION FOR 89150H	OI-8D
89819	QD FAILURE PROTECTION FOR RSLS ABORT	OI-8B
89835	PREVALVE CLOSE DELAY CHNGS STS 26	OI-8B
89846B	CR 89809B CLEANUP	OI-8D
89875	CLEANUP TO CR 89819	OI-8B
89956A	ABORT CONTROL SEQ CORRECTIONS	OI-8D
89968A	25 MICROSECOND TIMING REQ FOR MEC	OI-8D
90054A	ENTRY FCS ERRATA	OI-8D
90120	UPD GUIDANCE DOWNMODE REQUIREMENTS	OI-8D
90188	CHANGE ENGINE START TIME COMPUTATION	OI-8D
90277A	ET SEP SEQUENCE CLEANUP	OI-8D

THIS PAGE INTENTIONALLY LEFT BLANK

TABLE OF CONTENTS

Section			Page
1.0	INTRODUCTION		1 – 1
	1.1	PURPOSE	1 – 1
	1.2	SCOPE	1 – 1
	1.3	ORGANIZATION	1 – 1
2.0	APPLICABLE DOCUMENTS		2 – 1
	2.1	LEVEL A DOCUMENTS	2 – 1
	2.2	LEVEL B DOCUMENTS	2 – 1
	2.3	LEVEL C DOCUMENTS	2 – 1
	2.4	INTERFACE CONTROL DOCUMENTS	2 – 2
3.0	OVERVIEW		3 – 1
	3.1	DEFINITION	3 – 1
	3.2	DOCUMENT DESCRIPTION	3 – 1
		3.2.1 Introduction	3 – 1
		3.2.2 Overview	3 – 1
		3.2.3 Detailed Requirements	3 – 1
		3.2.4 Logic Flow Diagrams	3 – 1
		3.2.5 Parameter Tables	3 – 1
	3.3	TIMING	3 – 3
	3.4	DOCUMENTED REQUIREMENTS PRECEDENCE	3 – 4
4.0	DETAIL LEVEL REQUIREMENTS		4 – 1
	4.1	PRELAUNCH	4 – 1
		4.1.1 Redundant Set Launch Sequence (4.114)	4 – 1
		4.1.2 MPS Dedicated Drive Sequence (4.222)	4 – 63
		4.1.3 SRB MDM Data Acquisition (4.203)	4 – 83
	4.2	ASCENT	4 – 95
		4.2.1 SSME Operations Sequence (4.165)	4 – 95

TABLE OF CONTENTS (Continued)

Section			Page
	4.2.2	SRB Separation Sequence (4.115)	4 – 141
	4.2.3	ET Separation Sequence (4.116)	4 – 153
	4.2.4	MPS Dump Sequence (4.70)	4 – 183
4.3	ABORT		4 – 207
	4.3.1	Abort Control Sequence (4.192)	4 – 207
	4.3.2	Abort OMS/RCS Interconnect (4.184)	4 – 239
4.4	MECHANICAL SYSTEMS		4 – 275
	4.4.1	Vent Doors (4.161)	4 – 275
4.5	HYDRAULICS		4 – 307
	4.5.1	LDG VLV CNTL (4.215)	4 – 307
4.6	REACTION CONTROL SYSTEM (RCS)		4 – 323
	4.6.1	RCS/RCS Crossfeed and Reconfiguration (4.185)	4 – 323
	4.6.3	RCS Quantity Monitor (4.102)	4 – 345
	4.6.4	RCS Helium Regulator Failure Protection Sequence (4.189)	4 – 367
	4.7.2	Orbit OMS/RCS Conn (4.212)	4 – 385
	4.7.6	OMS Fire Sequence (4.182)	4 – 401
	4.7.9	OMS to RCS Gaging (4.101)	4 – 413
	4.8.1	Master Events Controller SOP (4.228)	4 – 423
	4.8.2	Space Shuttle Main Engine SOP (4.181)	4 – 445

ILLUSTRATIONS

Figure		Page
4.114	Redundant Set Launch Sequence (Sheet 1 of 13)	4 – 38
4.222	MPS D/D Drive Sequence (Sheet 1 of 6)	4 – 70
4.165	SSME Operations Sequence (Sheet 1 of 11)	4 – 121
4.115	SRB SEP SEQ (Sheet 1 of 2)	4 – 145
4.116	External Tank Separation Sequence Logic Flow Diagram (Sheet 1 of 8)	4 – 166
4.70	MPS Dump Sequence (1 of 5)	4 – 194
4.192	Abort Control Sequence (Sheet 1 of 7)	4 – 226
4.184	Abort OMS/RCS Interconnect Sequence (Sheet 1 of 7)	4 – 259
4.161	Vent Door Sequence (Sheet 1 of 7)	4 – 290
4.215	Hydraulic Systems Landing Gear Isolation Valve Control Logic (Sheet 1 of 2)	4 – 314
4.185	RCS/RCS XFEED (Sheet 1 of 5)	4 – 333
4.102	RCS Qty Mon (Sheet 1 of 2)	4 – 357
4.189	RCS He Regulator Failure Protection Sequence (Sheet 1 of 3)	4 – 376
4. 212	Orbit OMS/RCS Connect (Sheet 1 of 2)	4 – 391
4.182	OMS Fire Sequence (Sheet 1 of 2)	4 – 405
4.101	OMS to RCS Gaging	4 – 416
4.8.1–1	MEC SOP Functional Block Diagram	4 – 424
4.181.1	SSME SOP Functional Block Diagram	4 – 462

THIS PAGE INTENTIONALLY LEFT BLANK

TABLES

Table		Page
4.1–1	Orbiter Vent Doors Status Word – V90J8201	4 – 21
4.1–2	LPS Orbiter Vent Doors Override Word –V99J8836C	4 – 22
4.1.1.4–1	REDUNDANT SET LAUNCH SEQUENCE (G4.114) INPUT/OUTPUT FUNCTIONAL PARAMETERS	4 – 51
4.1.1.4–2	REDUNDANT SET LAUNCH SEQUENCE PROCESSING (G4.114) I–LOADS	4 – 58
4.1.1.4–3	REDUNDANT SET LAUNCH SEQUENCE PROCESSING (G4.114) K–LOADS	4 – 60
4.1.1.4–4	REDUNDANT SET LAUNCH SEQUENCE PROCESSING (G4.114) CONSTANTS	4 – 61
4.1.2.4–1	MAIN PROPULSION(MPS) DEDICATED DISPLAY DRIVE SEQ (G4.222) INPUT/OUTPUT FUNCTIONAL PARAMETERS	4 – 77
4.1.2.4–2	MAIN PROPULSION(MPS) DEDICATED DISPLAY DRIVESEQ (G4.222) I–LOADS	4 – 79
4.1.2.4–3	MAIN PROPULSION(MPS) DEDICATED DISPLAY DRIVESEQ (G4.222) K–LOADS	4 – 80
4.1.2.4–4	MAIN PROPULSION(MPS) DEDICATED DISPLAY DRIVESEQ (G4.222) CONSTANTS	4 – 81
4.1.3.4–1	SOLID ROCKET BOOSTER(SRB) DATA ACQUISITION (G4.203) INPUT/OUTPUT FUNCTIONAL PARAMETERS	4 – 85
4.1.3.4–2	SOLID ROCKET BOOSTER(SRB) DATA ACQUISITION (G4.203) I–LOADS	4 – 92
4.1.3.4–3	SOLID ROCKET BOOSTER(SRB) DATA ACQUISITION (G4.203) K–LOADS	4 – 93
4.1.3.4–4	SOLID ROCKET BOOSTER(SRB) DATA ACQUISITION (G4.203) CONSTANTS	4 – 94
4.2.1.4–1	SPACE SHUTTLE MAIN ENGINE(SSME) OPERATIONS SEQ (G4.165) INPUT/OUTPUT FUNCTIONAL PARAMETERS	4 – 133
4.2.1.4–2	SPACE SHUTTLE MAIN ENGINE(SSME) OPERATIONS SEQ (G4.165) I–LOADS	4 – 138
4.2.1.4–3	SPACE SHUTTLE MAIN ENGINE(SSME) OPERATIONS SEQ (G4.165) K–LOADS	4 – 139

TABLES (Continued)

Table		Page
4.2.1.4–4	SPACE SHUTTLE MAIN ENGINE(SSME) OPERATIONS SEQ (G4.165) CONSTANTS	4 – 140
4.2.2.4–1	SOLID ROCKET BOOSTER(SRB) SEP SEQUENCER (G4.115) INPUT/OUTPUT FUNCTIONAL PARAMETERS	4 – 147
4.2.2.4–2	SOLID ROCKET BOOSTER SEP (SRB) SEQUENCER (G4.115) I–LOADS	4 – 149
4.2.2.4–3	SOLID ROCKET BOOSTER SEP (SRB) SEQUENCER (G4.115) K–LOADS	4 – 150
4.2.2.4–4	SOLID ROCKET BOOSTER SEP (SRB) SEQUENCER (G4.115) CONSTANTS	4 – 151
4.2.3.4–1	EXTERNAL TANK(ET) SEPARATION SEQUENCER (G4.116) INPUT/OUTPUT FUNCTIONAL PARAMETERS	4 – 175
4.2.3.4–2	EXTERNAL TANK(ET) SEPARATION SEQUENCER (G4.116) I–LOADS	4 – 180
4.2.3.4–3	EXTERNAL TANK(ET) SEPARATION SEQUENCER (G4.116) K–LOADS	4 – 181
4.2.3.4–4	EXTERNAL TANK(ET) SEPARATION SEQUENCER (G4.116) CONSTANTS	4 – 182
4.2.4.4–1	MAIN PROPULSION SYSTEM(MPS) DUMP SEQUENCER (G4.70) INPUT/OUTPUT FUNCTIONAL PARAMETERS	4 – 199
4.2.4.4–2	MAIN PROPULSION SYSTEM(MPS) DUMP SEQUENCER (G4.70) I–LOADS	4 – 203
4.2.4.4–3	MAIN PROPULSION SYSTEM(MPS) DUMP SEQUENCER (G4.70) K–LOADS	4 – 204
4.2.4.4–4	MAIN PROPULSION SYSTEM(MPS) DUMP SEQUENCER (G4.70) CONSTANTS	4 – 205
4.3.1.4–1	ABORT CONTROL SEQUENCER (G4.192) INPUT/OUTPUT FUNCTIONAL PARAMETERS	4 – 233
4.3.1.4–2	ABORT CONTROL SEQUENCER (G4.192) I–LOADS	4 – 236
4.3.1.4–3	ABORT CONTROL SEQUENCER (G4.192) K–LOADS	4 – 237
4.3.1.4–4	ABORT CONTROL SEQUENCER (G4.192) CONSTANTS	4 – 238
4.3.2.4–1	ABORT OMS/RCS INTERCONNECT FUNCTION (G4.184) INPUT/OUTPUT FUNCTIONAL PARAMETERS	4 – 267

TABLES (Continued)

Table		Page
4.3.2.4–2	ABORT OMS/RCS INTERCONNECT FUNCTION (G4.184) I–LOADS . .	4 – 272
4.3.2.4–3	ABORT OMS/RCS INTERCONNECT FUNCTION (G4.184) K–LOADS .	4 – 273
4.3.2.4–4	ABORT OMS/RCS INTERCONNECT FUNCTION (G4.184) CONSTANTS	4 – 274
4.4–1	Vent Group Close Commands	4 – 284
4.4–2	Vent Group Open Commands	4 – 286
4.4–3	Vent Group Purge Configuration Commands	4 – 287
4.4–4	Vent Group Close Measurements	4 – 288
4.4–5	Vent Group Open Measurements	4 – 289
4.4.1.4–1	VENT DOOR CONTROL SEQUENCER (G4.161) INPUT/OUTPUT FUNCTIONAL PARAMETERS	4 – 297
4.4.1.4–2	VENT DOOR CONTROL SEQUENCER (G4.161) I–LOADS	4 – 304
4.4.1.4–3	VENT DOOR CONTROL SEQUENCER (G4.161) K–LOADS	4 – 305
4.4.1.4–4	VENT DOOR CONTROL SEQUENCER (G4.161) CONSTANTS	4 – 306
4.5.1.4–1	HYD SYS LANDING GEAR ISLN VLV CNTL SEQ (G4.215) INPUT/OUTPUT FUNCTIONAL PARAMETERS	4 – 317
4.5.1.4–2	HYD SYS LANDING GEAR ISLN VLV CNTL SEQ (G4.215) I–LOADS .	4 – 319
4.5.1.4–3	HYD SYS LANDING GEAR ISLN VLV CNTL SEQ (G4.215) K–LOADS	4 – 320
4.5.1.4–4	HYD SYS LANDING GEAR ISLN VLV CNTL SEQ (G4.215) CONSTANTS	4 – 321
4.6.1.4–1	RCS/RCS CROSSFEED AND RECONFIGURATION FUNCTION (G4.185) INPUT/OUTPUT FUNCTIONAL PARAMETERS	4 – 339
4.6.1.4–2	RCS/RCS CROSSFEED AND RECONFIGURATION FUNCTION (G4.185) I–LOADS	4 – 342
4.6.1.4–3	RCS/RCS CROSSFEED AND RECONFIGURATION FUNCTION (G4.185) K–LOADS	4 – 343
4.6.1.4–4	RCS/RCS CROSSFEED AND RECONFIGURATION FUNCTION (G4.185) CONSTANTS	4 – 344
4.6.3–1	RCS Propellant Transducer Limits	4 – 352

TABLES (Continued)

Table		Page
4.6.3–2	Forward RCS Propellant Quantity Primary/Substitute Parameters	4 – 353
4.6.3–3	Aft Left RCS Propellant Quantity Primary/Substitute Parameters	4 – 353
4.6.3–4	Aft Right RCS Propellant Quantity Primary/Substitute Parameters	4 – 354
4.6.3–5	RCS Propellant Quantity Constants	4 – 355
4.6.3–6	RCS Propellant Quantity I–Loads	4 – 356
4.6.3.4–1	RCS QUANTITY MONITOR (G4.102) INPUT/OUTPUT FUNCTIONAL PARAMETERS	4 – 359
4.6.3.4–2	RCS QUANTITY MONITOR (G4.102) I–LOADS	4 – 362
4.6.3.4–3	RCS QUANTITY MONITOR (G4.102) K–LOADS	4 – 363
4.6.3.4–4	RCS QUANTITY MONITOR (G4.102) CONSTANTS	4 – 364
4.6.4.4–1	RCS HELIUM REGULATOR FAILURE PROTECTION SEQUENCER (G4.189) INPUT/OUTPUT FUNCTIONAL PARAMETERS	4 – 379
4.6.4.4–2	RCS HELIUM REGULATOR FAILURE PROTECTION SEQUENCER (G4.189) I–LOADS	4 – 381
4.6.4.4–3	RCS HELIUM REGULATOR FAILURE PROTECTION SEQUENCER (G4.189) K–LOADS	4 – 382
4.6.4.4–4	RCS HELIUM REGULATOR FAILURE PROTECTION SEQUENCER (G4.189) CONSTANTS	4 – 383
4.7.2.4–1	ORBIT OMS/RCS INTERCONNECT (G4.212) INPUT/OUTPUT FUNCTIONAL PARAMETERS	4 – 393
4.7.2.4–2	ORBIT OMS/RCS INTERCONNECT (G4.212) I–LOADS	4 – 397
4.7.2.4–3	ORBIT OMS/RCS INTERCONNECT (G4.212) K–LOADS	4 – 398
4.7.2.4–4	ORBIT OMS/RCS INTERCONNECT (G4.212) CONSTANTS	4 – 399
4.7.6.4–1	OMS FIRE SEQUENCER (G4.182) INPUT/OUTPUT FUNCTIONAL PARAMETERS	4 – 407
4.7.6.4–2	OMS FIRING SEQUENCER (G4.182) I–LOADS	4 – 409
4.7.6.4–3	OMS FIRING SEQUENCER (G4.182) K–LOADS	4 – 410
4.7.6.4–4	OMS FIRING SEQUENCER (G4.182) CONSTANTS	4 – 411

TABLES (Continued)

Table		Page
4.7.9.4–1	OMS TO RCS QTY GAUGING (G4.101) INPUT/OUTPUT FUNCTIONAL PARAMETERS	4 – 417
4.7.9.4–2	OMS TO RCS QTY GAUGING (G4.101) I–LOADS	4 – 419
4.7.9.4–3	OMS TO RCS QTY GAUGING (G4.101) K–LOADS	4 – 420
4.7.9.4–4	OMS TO RCS QTY GAUGING (G4.101) CONSTANTS	4 – 421
4.8.1–1	MEC Critical Command Processing	4 – 425
4.8.1–2	MEC Noncritical Command Processing	4 – 428
4.8.1–3	MEC SOP Input Parameters	4 – 431
4.8.1–4	MEC SOP Output Parameters	4 – 434
4.8.1–5	MEC SOP Output Requirements	4 – 437
4.8.1.4–1	MASTER EVENTS CONTROLLER(MEC) SOP (G4.228) INPUT/OUTPUT FUNCTIONAL PARAMETERS	4 – 439
4.8.1.4–2	MASTER EVENTS CONTROLLER(MEC) SOP (G4.228) I–LOADS	4 – 442
4.8.1.4–3	MASTER EVENTS CONTROLLER(MEC) SOP (G4.228) K–LOADS	4 – 443
4.8.1.4–4	MASTER EVENTS CONTROLLER(MEC) SOP (G4.228) CONSTANTS	4 – 444
4.8.2–1	SSME SOP Command Processing	4 – 446
4.8.2–2	GPC Engine Status Word	4 – 453
4.8.2–3	Phase Mode Processing	4 – 461
4.8.2.4–1	SPACE SHUTTLE MAIN ENGINE(SSME) SOP (G4.181) INPUT/OUTPUT FUNCTIONAL PARAMETERS	4 – 463
4.8.2.4–2	SPACE SHUTTLE MAIN ENGINE(SSME) SOP (G4.181) I–LOADS	4 – 471
4.8.2.4–3	SPACE SHUTTLE MAIN ENGINE(SSME) SOP (G4.181) K–LOADS	4 – 472
4.8.2.4–4	SPACE SHUTTLE MAIN ENGINE(SSME) SOP (G4.181) CONSTANTS	4 – 473

1.0 INTRODUCTION

1.1 PURPOSE

The purpose of this document is to specify the requirement details and formulations of Sequence Level B functional requirements for orbiter GN&C flight software.

1.2 SCOPE

This document contains requirement details and formulations for sequencing functions that are operative during operational flight. The sequences described in this document are processed by the redundant computer set. They can be classified into the following two categories:

1. Mission events that are nonrepeating, but predictable occurrences and require software to initiate and/or control the subsystem hardware functions. The requirement to use software for this process can be the result of time- or mission-critical events, hardware mechanization complexity, or effective reduction of the crew's workload.

2. Special computations, such as consumables monitoring (quantity gaging).

1.3 ORGANIZATION

This document is organized into the following sections:

1. Introduction

2. Applicable Documents

3. Overview

4. Detail Level Requirements

Section 1 defines the purpose, scope, and organization of this document. Section 2 lists applicable documents. Section 3 describes the contents of Section 4. Section 4 specifies the requirement details for each sequence, and includes the associated input/output functional parameters (IDD), I-loads, K-loads, and constants.

THIS PAGE INTENTIONALLY LEFT BLANK

2.0 APPLICABLE DOCUMENTS

2.1 LEVEL A DOCUMENTS

SS–P–0002–140	Shuttle Downlist/Uplink Software Requirements
SS–P–0002–150	Shuttle Launch Data Bus Software Interface Requirements
SS–P–0002–170	Shuttle Systems Level Requirements, Software

2.2 LEVEL B DOCUMENTS

SS–P–0002–510	Shuttle Functional Level Requirements, GN&C
SS–P–0002–550	Shuttle Functional Level Requirements, Vehicle Utility – 02
SS–P–0002–580	Shuttle Functional Level Requirements, System Management

2.3 LEVEL C DOCUMENTS

STS 83–0001	Operational Flight Level C, Functional Subsystem Software Requirements; Guidance, Navigation, and Control, Part A, Entry Through Landing Guidance
STS 83–0002	Operational Flight Level C, Functional Subsystem Software Requirements; Guidance, Navigation, and Control, Part A, Guidance Ascent/RTLS
STS 83–0003	Operational Flight Level C, Functional Subsystem Software Requirements; Guidance, Navigation, and Control, Part A, Guidance On–Orbit/Deorbit
STS 83–0004	Operational Flight Level C, Functional Subsystem Software Requirements; Guidance, Navigation, and Control, Part B, Entry Through Landing Navigation
STS 83–0005	Operational Flight Level C, Functional Subsystem Software Requirements; Guidance, Navigation, and Control, Part B, Navigation Ascent/RTLS
STS 83–0006	Operational Flight Level C, Functional Subsystem Software Requirements; Guidance, Navigation, and Control, Part B, On-Orbit Navigation
STS 83–0007	Operational Flight Level C, Functional Subsystem Software Requirements; Guidance, Navigation, and Control, Part C, Flight Control Entry GRTLS
STS 83-0008	Operational Flight Level C, Functional Subsystem Software Requirements; Guidance, Navigation, and Control, Part C, Flight Control Volume 1, Ascent Flight Phase, Volume 2, Ascent
STS 83-0009	Operational Flight Level C, Functional Subsystem Software Requirements; Guidance, Navigation, and Control, Part C, Flight Control Orbit DAP
STS 83-0010	Operational Flight Level C, Functional Subsystem Software Requirements; Guidance, Navigation, and Control, Part D, Redundancy Management

STS 83-0013	Operational Flight Level C, Functional Subsystem Software Requirements; Guidance, Navigation, and Control, Part E, Inertial Measurement Unit Subsystem Operating Program
STS 83-0014	Operational Flight Level C, Functional Subsystem Software Requirements; Guidance, Navigation, and Control, Part E, Volume 1, Navigation Aids Subsystem Operating Program, Volume 2, Star Tracker Subsystem Operating Program
STS 83-0015	Operational Flight Level C, Functional Subsystem Software Requirements; Guidance, Navigation, and Control, Part E, Subsystem Operating Programs, FC Sensor/Controller
STS 83-0016	Operational Flight Level C, Functional Subsystem Software Requirements; Guidance, Navigation, and Control, Part E, Subsystem Operating Programs, FC Effector
STS 87-0017	Operational Flight Level C, Functional Subsystem Software Requirements; Remote Manipulator System
STS 83-0020	Operational Flight Level C, Functional Subsystem Software Requirements; Displays and Controls
STS 83-0026	Operational Flight Level C, Functional Subsystem Software Requirements; Guidance, Navigation, and Control, Sequencing
JSC-19350	Shuttle Flight Software Initialization Load
	• Volume I General Requirements
	• Volume II Mission I-Load Requirements
JSC-19478	Payload Management, Level C Flight Software Requirements
JSC-19590	Systems Management, Level C Flight Software Requirements

2.4 INTERFACE CONTROL DOCUMENTS

ICD 3-1011-02	GPC/DEU ICD
ICD 3-0068-03	PASS/BFS ICD

In the event of a conflict between the documents referenced herein and the contents of this specification, the precedence shall be determined as defined in paragraph 1.3 of CPDS SS-P-0002-170, Volume 1, System Level Requirements, Software.

3.0 OVERVIEW

3.1 DEFINITION

Subsystem sequencing is defined to be application processing in the avionics GPC's that is not a standard or self-contained portion of GN&C or SM application programs. Examples: IMU sequencing is a standard portion of GN&C; fault detection and annunciation (FDA) is a standard portion of SM; master timing unit (MTU) time management is contained in system software and, therefore, is not an application program. None of the examples is included in subsystem sequencing. Subsystem sequences are detailed in Section 4.

3.2 DOCUMENT DESCRIPTION

The detailed requirements described in Section 4 are organized according to subsystem disciplines; however, certain large sequences, e.g., launch, do not lend themselves to an individual subsystem approach and are defined as integrated sequences.

Each sequence contains the following five elements:

1. Introduction
2. Overview
3. Detailed requirements
4. Logic flow diagrams
5. Parameter tables

3.2.1 Introduction

This paragraph (4.X.X.1) contains a brief description of the sequence, when it is used, and how it interfaces with the crew, subsystem, and/or integrated mission event or events.

3.2.2 Overview

This paragraph (4.X.X.2) scopes the software requirements for the sequence. It expands the introduction to state when and how the sequence is initiated, how the sequence is controlled, and how it interfaces with the subsystem and mission events.

3.2.3 Detailed Requirements

This paragraph (4.X.X.3) contains the detailed step-by-step requirements for each principal function.

3.2.4 Logic Flow Diagrams

The logic diagrams show the logic flow of each principal function and are included for information only.

3.2.5 Parameter Tables

This section contains the following tables:

Input/output functional parameters (4.X.X.4-1)

This table contains a list of all input parameters from the GN&C Interface Definition Document (IDD) for each principal function. The table, in alphabetical order by FSSR parameter name, contains the following:

FSSR Name	–	Parameter name as defined by the source principal function
MSID	–	As defined by the Shuttle Data Integration Plan (SDIP)/measurement and stimulus system
Nomenclature	–	As provided by the principal function owner
Source/Destination	–	Source of input function, destination of output function
Units	–	The units of the parameter
Data Type	–	Designation of parameter as bit string, discrete, floating, or integer
Precision	–	Designation of parameter as single or double precision
Last CR(s)	–	Lists last of CR Number(s)

Signal Interfaces

The automated IDD tables provided herein define signal (parameter) interface requirements either between hardware (LRU) and software elements or between software elements and other software elements[1]. In the event of a conflict between the IDD tables and other internal text input/output tables, the SASCB data base controlled IDD tables take precedence.

NOTE

IDD output (destination) tables that reflect parameters going to "TLM" shall not be interpreted as a signal actually being downlisted. The parameter may only be available for downlist in COMPOOL and may not appear in a downlist format.

[1]A GN&C software element is either a sequenced principal function (PF), crew generated specialist/display function, or an operations display functions.

I-Load Table (4.X.X.4-2)

This table contains a list of all I-load parameters from JSC-19350, STS Flight Software Initialization Load, for each principal function. The table, in alphabetical order by FSSR name, contains the following:

FSSR Name	–	As defined by the source principal function
MSID	–	As defined by the Shuttle Data Integration Plan (SDIP)/measurement and stimulus system
Units	–	The units of the parameter
Data Type	–	Bit string, discrete, floating, or integer parameter
Precision	–	Single or double-precision parameter
Dependency	–	Design, mission, or LRU dependent I-load
Software	–	Common, PASS, BFS, primary driver, or converted parameter
PR FCTN	–	Principal Function
Category	–	Occurance of I–load values

K-Load Table (4.X.X.4-3)

This table contains a list of all K-load parameters for each principal function. The table is in alphabetical order by FSSR name. The table contains the following:

FSSR Name	–	As defined by the source principal function
MSID	–	As defined by the Shuttle Data Integration Plan (SDIP)/measurement and stimulus system
Value	–	The value of the K-load
Units	–	The units of the parameter
Data Type	–	Bit string, discrete, floating, or integer parameter
Precision	–	Single or double-precision parameter
Software	–	Common, PASS, BFS, primary driver, or converted parameter
PR FCTN	–	Principal Function
Last CR	–	The last CR against each load
EQTN MSID	–	Derived Equation

Constants (4.X.X.4-4)

This table contains a list of all constants for each principal function. The table is in alphabetical order by FSSR name. The table contains the following:

FSSR Name	–	As defined by the source principal function
MSID	–	As defined by the Shuttle Data Integration Plan(SDIP)/measurement and stimulus system
Value	–	The value of the K-load
Units	–	The units of the parameter
Data Type	–	Bit string, discrete, floating, or integer parameter
Precision	–	Single or double-precision parameter
Software	–	Common, PASS, BFS, primary driver, or converted parameter
PR FCTN	–	Principal Function
Last CR	–	The last CR against each load

3.3 TIMING

Timing in this document is related to error free processing conditions. See Level A CPDS SS-P-0002-170 paragraph 4.4.2A for timing related to error processing conditions.

3.4 DOCUMENTED REQUIREMENTS PRECEDENCE

Requirements precedence in this document shall be as follows:

1. If there is a conflict between the data in the function subtables and the standard principal function tables, the principal function tables shall have precedence.

2. If there is a conflict between the data in the flow diagrams and the written requirements, the written requirements shall have precedence.

4.0 DETAIL LEVEL REQUIREMENTS

4.1 PRELAUNCH

4.1.1 Redundant Set Launch Sequence (4.114)

4.1.1.1 Introduction

The redundant set (RS) launch sequence is used during the launch countdown in conjunction with the launch processing system (LPS) to perform the on–board automatic functions required in the last 28 seconds before SRB ignition. In addition, the RS launch sequence controls the on–board countdown clock from flight software initiation at the transition to OPS 1 until SRB ignition. The ability is also provided to call countdown holds; accept "hold" requests from LPS; and accept "resume count" or "recycle" commands from LPS. The SSME ignition commands are issued; and, after the required thrust level is reached and the required time delay has elapsed, the SRB's are ignited. Failure of the SSME's to reach the required thrust level will result in an inhibit of SRB ignition and a controlled SSME shutdown. The RS launch sequence terminates immediately after issuing SRB ignition and related commands.

4.1.1.2 Overview

The launch countdown is controlled by the LPS until 28 seconds before launch, at which time the on–board automatic RS launch sequence is enabled by LPS command. From this point, the on–board computer will perform functions by the on–board clock, but will honor "hold," "resume count," and "recycle" commands from LPS within the constraints of the auto recycle time.

The RS launch sequence sets flags to command the arming of the SRB ignition and hold–down release system PIC's and the T0 umbilical release PIC's. After a time delay, the SRB ignition PIC voltages are monitored for acceptable levels. The hold–down release system PIC's and the T0 umbilical release system PIC's are monitored by the LPS. The RS launch sequence logic provides for initiating a countdown "hold" if the SRB ignition PIC voltages fall below an acceptable level at any time prior to issuance of the SSME start commands. After the SSME start commands are issued, if the SRB ignition PIC voltages are not acceptable, the SSME's are shut down.

The RS launch sequence also controls certain critical main propulsion system valves and monitors the engine ready indications from the SSME's. After the main engine start commands are issued, the sequence monitors the thrust buildup of each engine; and unless all engines reach the required level within the required time, an orderly shutdown is commanded, and safing functions are initiated.

Normal thrust buildup to the required level will result in the SSME's being commanded to the lift–off position, the SRB ignition and hold–down release commands being issued, termination of LPS polling, reset of the master timing unit, commanding of T0 umbilical release, and start of the event timer.

4.1.1.3 Detailed Requirements

Step A – LPS Processing. This step addresses the LPS processing that is performed every minor cycle by the RS Launch Sequencer. It ensures that the LPS GMTLO, RECYCLE, and RESUME commands are accepted only during countdown holds.

Monitor the following:

(a)	LPS Countdown Hold Flag	V99X8829X
(b)	RS Countdown Hold Flag	V90X8667X
(c)	GMTLO Set Command	V99X8827X

If (a) and (b) are false, do not accept (1), (2), or (3).

If (a) or (b) is true and (c) has not been accepted since it last became true, do not accept (3).

(1)	GMTLO SET COMMAND	V99X8827X
(2)	RECYCLE COUNT CMD FLAG	V99X8830X
(3)	RESUME COUNT COMMAND FLAG	V99X8828X

Proceed to Step 1.

Step 1 – First Pass Check. This step provides a means of deactivating the FDI for MPS TVC CMD SOP and initializing the countdown clock on the first pass through the logic. The sequence is first called with OPS 101 PRO at T0–20 minutes in the count. The GMT of lift–off (GMTLO) is defined by the GMTLO_SET_COMMAND from LPS.

On the first pass through the logic issue (1) and (2) below, proceed to Step 9.

(1)	RS COUNTDOWN HOLD FLAG	V90X8667X
(2)	MPS TVC SERVO OVRD CMD	V90X8374X

On subsequent passes, if the countdown clock is being incremented, proceed to Step 1A, otherwise proceed to Step 9.

Step 1A – Termination of MEC Command Flags. This step provides for the termination of MEC commands, the issuance of the MEC master reset command, and the termination of the RS launch sequence.

Monitor the following:

(a)	TO UMB RELEASED FLAG	(INTERNAL)

If (a) = false, proceed to Step 1B.

If (a) = true, terminate the following outputs:

(1)	TO UMB RELEASE FIRE 1 FLAG	V90X8408X
(2)	T0 UMB RELEASE FIRE 2/3 FLAG	V90X8698X
(3)	SRM IGN ARM FLAG	V90X8404X
(4)	T0 UMB RELEASE ARM FLAG	V90X8407X
(5)	EVENT TIMER START FLAG	V90X8403X

and issue the following output:

(6)	MEC 1 AND 2 MASTER RESET FLAG	V90X8258X

and then terminate the RS launch sequence.

Step 1B – Initiation of T0 Umbilical Release. This step provides for the issuance of the T0 umbilical release fire 1 and fire 2/3 commands on the next pass through the logic after the SRB ignition commands are sent.

Monitor the following:

(a) SRB IGNITION CMD FLAG — V90X8377X

If (a) = false, proceed to Step 1C.

If (a) = true, terminate the following outputs:

(1) SRM IGN FIRE 1 FLAG — V90X8405X
(2) SRM IGN FIRE 2/3 FLAG — V90X8699X

and issue the following outputs:

(3) T0 UMB RELEASE FIRE 1 FLAG — V90X8408X
(4) T0 UMB RELEASE FIRE 2/3 FLAG — V90X8698X
(5) T0 UMBILICAL RELEASED FLAG — (INTERNAL)

and then return to Step A.

Step 1C – Launch Sequence Abort Check. This step monitors the LAUNCH SEQUENCE ABORT FLAG, which is set, by (1) any engine failing to achieve the required percent chamber pressure within the required number of seconds after the start commands are issued, (2) any engine going into auto shutdown, (3) loss of data path or command path to any engine, (4) hydraulic or electronic lockup of any engine, or (5) an LPS countdown hold flag being set prior to issuance of SRB ignition commands. If the LAUNCH SEQUENCE ABORT FLAG is set, this step terminates the SRB ignition and T0 umbilical PIC arming flags and invokes the engine shutdown logic.

Monitor the following:

(a) LAUNCH SEQUENCE ABORT FLAG — V90X8382X

If (a) = true, terminate the following:

(1) SRM IGN ARM FLAG — V90X8404X
(2) TO UMB RELEASE ARM FLAG — V90X8407X

issue the following one time only

(3) MEC 1 AND 2 MASTER RESET FLAG — V90X8258X

and terminate the following output:

(4) MPS–LH_2 RECIRC DISC VALVE OPEN CMD — V41K1421X

and issue the following output:

(5) MPS–LH_2 RECIRC DISC VALVE CLOSE CMD — V41K1422X

then proceed to Step 1D.

If (a) = false, proceed to Step 2.

Step 1D – Main Engine 1 Shutdown. This step controls pad abort helium interconnect and shutdown command toggling for ME–1.

Monitor the following:

(a)	ENG 1 SHUTDOWN FLAG C	(INTERNAL)
(b)	MPS E–1 SHUTDOWN ENABLE CMD	V90X8367X

If (a) is false, proceed to Step 1E.

If (a) is true, issue output (1) and monitor (b).

If (b) is false, issue output (2), terminate output (3), and proceed to Step 1E.

If (b) is true, issue output (3), terminate output (2), and proceed to Step 1E.

(1)	MPS E1 HE INTCON OUT/OPEN CMD A	V41K1168X
(2)	MPS E–1 SHUTDOWN ENABLE CMD	V90X8367X
(3)	MPS E–1 SHUTDOWN CMD	V90X8370X

Step 1E – Main Engine 2 Shutdown. This step controls pad abort helium interconnect and shutdown command toggling for ME–2.

Monitor the following:

(a)	ENG 2 SHUTDOWN FLAG B	(INTERNAL)
(b)	MPS E–2 SHUTDOWN ENABLE CMD	V90X8368X

If (a) is false, proceed to Step 1F.

If (a) is true, issue outputs (1) through (3) and monitor (b).

If (b) is false, issue output (4), terminate output (5), and proceed to Step 1F.

If (b) is true, issue output (5), terminate output (4), and proceed to Step 1F.

(1)	MPS E2 HE INTCON IN/OPEN CMD A	V41K1262X
(2)	MPS E2 HE INTCON IN/OPEN CMD B	V41K1263X
(3)	MPS PNEU CROSSOVER NO. 2 OPEN CMD	V41K1613X
(4)	MPS E–2 SHUTDOWN ENABLE CMD	V90X8368X
(5)	MPS E–2 SHUTDOWN CMD	V90X8371X

Step 1F – Main Engine 3 Shutdown. This step controls pad abort helium interconnect and shutdown command toggling for ME–3.

Monitor the following:

(a)	ENG 3 SHUTDOWN FLAG D	(INTERNAL)
(b)	MPS E–3 SHUTDOWN ENABLE CMD	V90X8369X

If (a) is false, proceed to Step 1G.

If (a) is true, issue output (1) and monitor (b).

If (b) is false, issue output (2), terminate output (3), and proceed to Step 1G.

If (b) is true, issue output (3), terminate output (2), and proceed to Step 1G.

(1)	MPS E–3 HE INTCON OUT/OPEN CMD A	V41K1368X
(2)	MPS E–3 SHUTDOWN ENABLE CMD	V90X8369X
(3)	MPS E–3 SHUTDOWN CMD	V90X8372X

Step 1G – Increment Previous Value of CRT Timer Base Time. This step increments the previous value of the CRT timer base time stored in User Interface compool to cause the displayed time–to–go to become static.

Add 0.04 second to the previous value of the CRT timer base time stored in User Interface compool.

Proceed to Step 30.

Step 2 – ME–1 Pad Data Path Fail Check. This step monitors for a flag from the SSME SOP indicating invalid data from either the primary or secondary channel of the EIU. If the ME–1 PAD DATA PATH FAIL FLAG is set, the RS launch sequence will either call a countdown hold or initiate shutdown for ME–1.

Monitor the following:

(a)	ME–1 PAD DATA PATH FAIL FLAG	V95X1217X

If (a) = false, proceed to Step 2A.

If (a) = true, issue the following output:

(1)	ME–1 PAD DATA PATH FAIL HOLD	V90X8670X

and proceed to Step 2D.

Step 2A – ME–1 Control Failure Check. This step monitors for the ME–1 controller indicating either an electronic lockup, a hydraulic lockup, a major component failure, or engine limit exceeded. If any of these indicators are present and the engine start flag has not been issued, then a countdown hold is called. If the engine start flag has been issued, then shutdown commands for ME–1 are initiated.

Monitor the following:

(a)	ME–1 ELECTRONIC LOCKUP MODE FLAG	V95X1194X
(b)	ME–1 HYDRAULIC LOCKUP MODE FLAG	V95X1198X
(c)	ME–1 MAJOR COMPONENT FAIL FLAG	V95X1230X
(d)	ME–1 ENGINE LIMIT EXCEEDED FLAG	V95X1190X

If (a), (b), (c), and (d) all = false, proceed to Step 2C.

If either (a), (b), (c), or (d) = true, issue the following output:

(1)	ME–1 CONTROL FAIL HOLD	V90X8679X

and then proceed to Step 2D.

Step 2B – Deleted.

Step 2C – ME–1 Channel Fail Check. This step monitors for a flag from the SSME SOP indicating that the engine controller has declared a failure in one or more of the three command channels. If the fail flag is true, a countdown hold or engine shutdown is initiated. This step prevents lift–off with one channel failed on the pad.

Monitor the following:

(a) ME–1 CHANNEL FAIL FLAG V95X1236X

If (a) = false, proceed to Step 3.

If (a) = true, issue the following output:

(1) ME–1 CONTROL FAIL HOLD V90X8679X

and then proceed to Step 3D.

Step 2D – Initiation of Countdown Hold/ME–1 Shutdown. This step monitors the start flag for the main engines, and if the engines have not been started, it will call a countdown hold. If they have been started, it will initiate ME–1 shutdown and set the launch sequence abort flag.

Monitor the following:

(a) ENG START CMD ISSUED FLAG (INTERNAL)

If (a) = false, then issue the following output and proceed to Step 9:

(1) RS COUNTDOWN HOLD FLAG V90X8667X

If (a) = true, then terminate the following outputs:

(2) PREP SSME's FOR LIFTOFF FLAG V90X8373X
(3) SRM IGN ARM FLAG V90X8404X
(4) TO UMB RELEASE ARM FLAG V90X8407X

and issue the following outputs:

(5) ENG 1 SHUTDOWN FLAG C (INTERNAL)
(6) CMD SSME's TO PRE–START POS FLAG V90X8412X
(7) MPS E1 SHUTDOWN ENABLE FLAG V90X8367X
(8) MPS SLEW COMP FLAG V90X8400X
(9) MPS TVC SERVO OVRD CMD V90X8374X
(10) LAUNCH SEQUENCE ABORT FLAG V90X8382X

and then return to Step A.

Step 3 – ME–2 Pad Data Path Fail Check. This step monitors for a flag from the SSME SOP indicating invalid data from either the primary or secondary channel of the EIU. If the ME–2 PAD DATA PATH FAIL FLAG is set, the RS launch sequence will either call a countdown hold or initiate shutdown for ME–2.

Monitor the following:

(a) ME–2 PAD DATA PATH FAIL FLAG V95X1218X

If (a) = false, proceed to Step 3A.

If (a) = true, issue the following output:

(1) ME–2 PAD DATA PATH FAIL HOLD V90X8671X

and proceed to Step 3D.

Step 3A – ME–2 Control Failure Check. This step monitors for the ME–2 controller indicating either an electronic lockup, a hydraulic lockup, a major component failure, or engine limit exceeded. If any of these indicators are present and the engine start flag has not been issued, then a countdown hold is called. If the engine start flag has been issued, then shutdown commands for ME–2 are initiated.

Monitor the following:

(a) ME–2 ELECTRONIC LOCKUP MODE FLAG V95X1195X
(b ME–2 HYDRAULIC LOCKUP MODE FLAG V95X1199X
(c) ME–2 MAJOR COMPONENT FAIL FLAG V95X1231X
(d) ME–2 ENGINE LIMIT EXCEEDED FLAG V95X1191X

If (a), (b), (c), and (d) all = false, proceed to Step 3C.

If either (a), (b), (c), or (d) = true, issue the following output:

(1) ME–2 CONTROL FAIL HOLD V90X8680X

and then proceed to Step 3D.

Step 3B – Deleted.

Step 3C – ME–2 Channel Fail Check. This step monitors for a flag from the SSME SOP indicating that the engine controller has declared a failure in one or more of the three command channels. If the fail flag is true, a countdown hold or engine shutdown is initiated. This step prevents lift–off with one channel failed on the pad.

Monitor the following:

(a) ME–2 CHANNEL FAIL FLAG V95X1237X

If (a) = false, proceed to Step 4.

If (a) = true, issue the following output:

(1) ME–2 CONTROL FAIL HOLD V90X8680X

and then proceed to Step 2D.

Step 3D – Initiation of Countdown Hold/ME–2 Shutdown. This step monitors the start flag for the main engines, and if the engines have not been started, it will call a countdown hold. If they have been started, it will initiate ME–2 shutdown and set the launch sequence abort flag.

Monitor the following:

(a) ENG START CMD ISSUED FLAG (INTERNAL)

If (a) = false, then issue the following output and proceed to Step 9.

(1) RS COUNTDOWN HOLD FLAG V90X8667X

If (a) = true, then terminate the following outputs:

(2) PREP SSME's FOR LIFTOFF FLAG V90X8373X
(3) SRM IGN ARM FLAG V90X8404X
(4) TO UMB RELEASE ARM FLAG V90X8407X

and issue the following outputs:

(5) ENG 2 SHUTDOWN FLAG B (INTERNAL)
(6) CMD SSME's TO PRE–START POS FLAG V90X8412X
(7) MPS E2 SHUTDOWN ENABLE FLAG V90X8368X
(8) MPS SLEW COMP FLAG V90X8400X
(9) MPS TVC SERVO OVRD CMD V90X8374X
(10) LAUNCH SEQUENCE ABORT FLAG V90X8382X

and then return to Step A.

Step 4 – ME–3 Pad Data Path Fail Check. This step monitors for a flag from the SSME SOP indicating invalid data from either the primary or secondary channel of the EIU. If the ME–3 PAD DATA PATH FAIL FLAG is set, the RS launch sequence will either call a countdown hold or initiate shutdown for ME–3.

Monitor the following:

(a) ME–3 PAD DATA PATH FAIL FLAG V95X1219X

If (a) = false, proceed to Step 4A.

If (a) = true, issue the following output:

(1) ME–3 PAD DATA PATH FAIL HOLD V90X8672X

and proceed to Step 4D.

Step 4A – ME–3 Control Failure Check. This step monitors for the ME–3 controller indicating either an electronic lockup, a hydraulic lockup, a major component failure, or engine limit exceeded. If any of these indicators are present and the engine start flag has not been issued, then a countdown hold is called. If the engine start flag has been issued, then shutdown commands for ME–3 are initiated.

Monitor the following:

(a) ME–3 ELECTRONIC LOCKUP MODE FLAG V95X1196X
(b) ME–3 HYDRAULIC LOCKUP MODE FLAG V95X1200X

(c) ME–3 MAJOR COMPONENT FAIL FLAG V95X1232X
(d) ME–3 ENGINE LIMIT EXCEEDED FLAG V95X1192X

If (a), (b), (c), and (d) all = false, proceed to Step 4C.

If either (a), (b), (c), or (d) = true, issue the following output:

(1) ME–3 CONTROL FAIL HOLD V90X8681X

and then proceed to Step 4D.

Step 4B – Deleted.

Step 4C – ME–3 Channel Fail Check. This step monitors for a flag from the SSME SOP indicating that the engine controller has declared a failure in one or more of the three command channels. If the fail flag is true, a countdown hold or engine shutdown is initiated. This step prevents lift–off with one channel failed on the pad.

Monitor the following:

(a) ME–3 CHANNEL FAIL FLAG V95X1238X

If (a) = false, proceed to Step 5.

If (a) = true, issue the following output:

(1) ME–3 CONTROL FAIL HOLD V90X8681X

and then proceed to Step 2D.

Step 4D – Initiation of Countdown Hold/ME–3 Shutdown. This step monitors the start flag for the main engines, and if the engines have not been started, it will call a countdown hold. If they have been started, it will initiate ME—3 shutdown and set the launch sequence abort flag.

Monitor the following:

(a) ENG START CMD ISSUED FLAG (INTERNAL)

If (a) = false, then issue the following output and proceed to Step 9.

(1) RS COUNTDOWN HOLD FLAG V90X8667X

If (a) = true, then terminate the following outputs:

(2) PREP SSME's FOR LIFTOFF FLAG V90X8373X
(3) SRM IGN ARM FLAG V90X8404X
(4) TO UMB RELEASE ARM FLAG V90X8407X

and issue the following outputs:

(5) ENG 3 SHUTDOWN FLAG D (INTERNAL)
(6) CMD SSME's TO PRE–START POS FLAG V90X8412X

(7)	MPS E3 SHUTDOWN ENABLE FLAG	V90X8369X
(8)	MPS SLEW COMP FLAG	V90X8400X
(9)	MPS TVC SERVO OVRD CMD	V90X8374X
(10)	LAUNCH SEQUENCE ABORT FLAG	V90X8382X

and then return to Step A.

Step 5 – Time for Arming PIC's for SRB Ignition. This step monitors the countdown clock; and at the proper time before SRB ignition, sets flags for the MEC SOP to initiate arming of the SRM ignition PIC's, hold–down release PIC's, and the T0 umbilical–release PIC's. The arm flags will remain set until (1) SRB ignition, (2) the LAUNCH SEQUENCE ABORT FLAG is set, (3) a main engine control problem develops, or (4) a recycle is initiated.

Monitor the following:

(a)	COUNTDOWN TIME	V90W8380C
(b)	SRB_IGN_ARM_T	V97U9701C

If (a) is less then (b) seconds, proceed to Step 9.

If (a) is greater than or equal to (b) seconds, issue the following output commands and proceed to Step 6.

(1)	SRM IGN ARM FLAG	V90X8404X
(2)	T0 UMB RELEASE ARM FLAG	V90X8407X

Step 6 – SRM Ignition Arm Voltage Check. This step monitors the countdown clock, and at the selected time before SRB ignition, starts checking the ignition PIC voltages and their associated commfaults. The logic requires two successive passes wherein either one or more of the ignition PIC voltages are low or a commfault exists before a countdown hold is called. If a low voltage or a commfault occurs on the last pass through the logic leading to the issuance of the SRB ignition commands, then a launch sequence abort (SSME shutdown and launch scrub) will not be initiated.

Monitor the following:

(a)	COUNTDOWN TIME	V90W8380C
(b)	SRB_PIC_VOLTS_CHK_T	V97U9702C
(c)	LH VOLTAGE IGN PIC CAP A	B55V1603C
(d)	LH VOLTAGE IGN PIC CAP B	B55V1604C
(e)	RH VOLTAGE IGN PIC CAP A	B55V2603C
(f)	RH VOLTAGE IGN PIC CAP B	B55V2604C
(g)	FA 1 INPUT PROM SEG 3, 10 STATUS (HFE)	V91X2845X
(h)	FA 2 INPUT PROM SEG 3, 10 STATUS (HFE)	V91X2846X
(i)	IGN CHECK FIRST PASS FLAG "D"	(INTERNAL)
(j)	SRB_IGN_PIC_LEVEL	V97U9853C

If (a) is less than (b) seconds, proceed to Step 9.

If (a) is greater than or equal to (b) seconds and (c), (d), (e), and (f) all equal or exceed (j) counts (normal level of 35.7 volts equals 438 counts), and (g) and (h) both are false, then set (i) true and proceed to Step 6A.

If (a) is greater than or equal to (b) seconds and (i) is true and either (c), (d), (e), or (f) is less than (j) counts, or if either (g) or (h) is true, then set (i) = false and proceed to Step 6A.

If (a) ≥ (b) seconds and (i) = false and either (c) < (j) counts or (g) is true, then issue the following output for downlist:

(1) LH IGN PIC CAP A HOLD V90X8383X

If (a) ≥ (b) seconds and (i) = false and either (d) < (j) counts or (h) is true, then issue the following output for downlist:

(2) LH IGN PIC CAP B HOLD V90X8384X

If (a) ≥ (b) seconds and (i) = false and either (e) < (j) counts or (g) is true, then issue the following output for downlist:

(3) RH IGN PIC CAP A HOLD V90X8385X

If (a) ≥ (b) seconds and (i) = false and either (f) < (j) counts or (h) is true, then issue the following output for downlist:

(4) RH IGN PIC CAP B HOLD V90X8386X

Proceed to Step 7.

Step 6A – Critical Systems Parameter Check. This step monitors parameters related to flight–critical MDM's. Upon detection of a failure, a launch hold or a pad shutdown will be called.

Monitor the following:

(a)	FF 1 MDM RETURN WORD BYPASS (HFE)	V91X2904X
(b)	FF 2 MDM RETURN WORD BYPASS (HFE)	V91X2905X
(c)	FF 3 MDM RETURN WORD BYPASS (HFE)	V91X2906X
(d)	FF 4 MDM RETURN WORD BYPASS (HFE)	V91X2907X
(e)	FA 1 MDM RETURN WORD BYPASS (HFE)	V91X2920X
(f)	FA 2 MDM RETURN WORD BYPASS (HFE)	V91X2921X
(g)	FA 3 MDM RETURN WORD BYPASS (HFE)	V91X2922X
(h)	FA 4 MDM RETURN WORD BYPASS (HFE)	V91X2923X

If (a) through (h) are all false, proceed to Step 8.

If any failure indication in (a) through (h) is true, then issue the outputs below and proceed to Step 7.

(1)	RS COUNTDOWN HOLD FLAG	V90X8667X
(2)	FLIGHT–CRITICAL MDM HOLD/ABORT	V90X8767X

Step 7 – Low PIC Voltage Initiation of Hold/ME–1 Shutdown. This step is entered if one or more of the ignition PIC voltages are low for two consecutive passes. This step monitors the start flag for the main engines and, if the engines have not been started, will call a countdown hold. If they have been started, it will initiate ME–1 shutdown and set the launch sequence abort flag.

Monitor the following:

(a)	ENG START CMD ISSUED FLAG	(INTERNAL)

If (a) = false, issue the following output and proceed to Step 9:

(1)	RS COUNTDOWN HOLD FLAG	V90X8667X

If (a) = true, terminate the following outputs:

(2)	PREP SSME's FOR LIFT–OFF FLAG	V90X8373X
(3)	SRM IGN ARM FLAG	V90X8404X
(4)	TO UMB RELEASE ARM FLAG	V90X8407X

and issue the following outputs:

(5)	ENG 1 SHUTDOWN FLAG C	(INTERNAL)
(6)	CMD SSME's TO PRE–START POS FLAG	V90X8412X
(7)	MPS E1 SHUTDOWN ENABLE FLAG	V90X8367X
(8)	MPS SLEW COMP FLAG	V90X8400X
(9)	MPS TVC SERVO OVRD CMD	V90X8374X
(10)	LAUNCH SEQUENCE ABORT FLAG	V90X8382X

and then return to Step A.

Step 8 – Main Engines Started Check. This step provides a bypass of the logic of Steps 9 through 28 inclusive, after the Main Engine 3 start command flag is issued in Step 28. After Engine 2 and Engine 1 start command flags are set true in Step 28A, this step also provides a bypass of Step 28A.

Monitor the following:

(a)	ENG START CMD ISSUED FLAG	(INTERNAL)
(b)	E1 START CMD ISSUED FLAG	(INTERNAL)

If (a) = false, proceed to Step 9.

If (a) = true and (b) = false, proceed to Step 28A.

If (a) = true and (b) = true, proceed to Step 29.

Step 9 – Monitor for Countdown Hold Requests. This step monitors for countdown hold requests from the launch processing system (LPS) as well as for countdown holds generated within the RS launch sequence. This provides a means of stopping the countdown clock and permits further checks for a resume count command or a recycle count command from the LPS. If a hold occurs later than the selected point in the count, an automatic recycle will occur.

Monitor the following:

(a)	LPS COUNTDOWN HOLD	V99X8829X
(b)	RS COUNTDOWN HOLD FLAG	V90X8667X
(c)	COUNTDOWN TIME	V90W8380C

(d) AUTO_RECYCLE_T V97U9705C

If both (a) and (b) = false, proceed to Step 12.

If (a) is true, issue output (5) and proceed.

If either (a) or (b) = true and (c) is ≤ (d) seconds, stop the countdown clock and proceed to Step 10.

If either (a) or (b) = true and (c) is > (d) seconds, terminate outputs (1) and (2) and issue outputs (3) and (4).

(1)	SRM IGN ARM FLAG	V90X8404X
(2)	T0 UMB RELEASE ARM FLAG	V90X8407X
(3)	MEC 1 AND 2 MASTER RESET FLAG	V90X8258X
(4)	ASCENT DAP RECYCLE FLAG	V90X8669X
(5)	LPS COUNTDOWN HOLD	V90X8768X

and perform the following functions:

(6) Reset the countdown clock to T0–540 seconds, and stop the clock.
(7) Re–initialize the RS launch sequence.

Proceed to Step 11A.

Step 10 – Monitor LPS Resume Count Command Flag. This step is made after a countdown hold has been called. The LPS has the sole authority to initiate resumption of the countdown. A resume count command will (1) cause a reset of the LPS and RS countdown hold flags of Step 9, (2) reset all downlist items generated by the RS LAUNCH SEQUENCE, (3) issue the SSME SOP recycle flag, and (4) cause the count to proceed.

Monitor the following:

(a) RESUME COUNT COMMAND FLAG V99X8828X

If (a) = false, proceed to Step 11.

If (a) = true, clear all RS launch sequence downlist items; set (1), (2), and (3) below = false; and set (4) true.

(1)	LPS COUNTDOWN HOLD FLAG	V99X8829X
(2)	RS COUNTDOWN HOLD FLAG	V90X8667X
(3)	RESUME COUNT CMD FLAG	V99X8828X
(4)	SSME SOP RECYCLE FLAG	V90X8668X

Proceed to Step 12.

Step 11 – LPS Recycle Count Check. This step monitors for a recycle count command from the LPS after a countdown hold has been called.

Monitor the following:

(a)	RECYCLE COUNT CMD FLAG	V99X8830X

If (a) = false, add 0.04 second to previous value of CRT timer base time in user interface compool and return to Step A.

If (a) = true, terminate outputs (1) and (2), and issue outputs (3) and (4).

(1)	SRM IGN ARM FLAG	V90X8404X
(2)	T0 UMB RELEASE ARM FLAG	V90X8407X
(3)	MEC 1 AND 2 MASTER RESET FLAG	V90X8258X
(4)	ASC DAP RECYCLE FLAG	V90X8669X

and perform the following functions:

(5) Reset the countdown clock to T0–540 seconds, and stop the clock.
(6) Re–initialize the RS launch sequence.

Proceed to Step 11A.

Step 11A – Provide New CRT Timer Base Time for a Count Recycle.

Monitor the following:

(a)	CLOCK–COMPUTER (GMT)	V91W5000C
(b)	SRB_IGN_TIME_DELAY	V97U9726C
(c)	START_SSMES_T	V97U9712C

Store [(a) + 540 + (b) + (c)], where (c) < 0, into CRT timer base time location in User Interface compool.

Return to Step A.

Step 12 – Monitor Countdown Clock Control. This step monitors for a flag from LPS to read the new GMT of lift–off data and reset the countdown clock.

Monitor the following:

(a)	GMTLO SET COMMAND	V99X8827X
(b)	PREDICTED GMT OF LIFT–OFF	V99W8801C
(c)	CLOCK–COMPUTER (GMT)	V91W5000C

If (a) = false, subtract (b) from (c), convert to seconds. Set this value in the countdown clock and proceed to Step 16B.

If (a) = true, subtract (b) from (c), and convert to seconds. Set this value in the countdown clock and start counting. Reset the GMTLO SET COMMAND V99X8827X and output COUNTDOWN TIME V90W8380C and PREDICTED GMT OF LIFT–OFF V99W8801C for downlist.

Proceed to Step 16B.

Step 13 – LPS Go for Auto Sequence Start. This step monitors the countdown clock and at the proper time looks for a flag from LPS to start the automatic on–board functions. If this flag is not received, a countdown hold is called.

Monitor the following:

(a)	COUNTDOWN TIME	V90W8380C
(b)	LPS GO FOR AUTO SEQUENCE START	V99X8803X
(c)	LPS_GO_FOR_AUTO_SEQ_T	V97U9700C

If (a) is ≤ (c) seconds, return to Step A.

If (a) is > (c) seconds and (b) = false, then set outputs (1) and (2) true, and return to Step A.

On the first pass that (a) is > (c) seconds and (b) = true, set output (3) = true and output (4) = false; then proceed to Step 15. On subsequent passes, proceed to Step 15.

(1)	LPS GO FOR AUTO SEQ START HOLD	V90X8393X
(2)	RS COUNTDOWN HOLD FLAG	V90X8667X
(3)	INDICATOR EVENT 6 R/S AUTO SEQ START	V90X8683X
(4)	MPS TVC SERVO OVRD CMD	V90X8374X

Step 14 – Deleted.

Step 15 – Command IMU to Inertial. This step monitors the countdown clock and, at the proper time, sets a flag for the IMU INT PROC.

Monitor the following:

(a)	COUNTDOWN TIME	V90W8380C
(b)	IMU_TO_INERTIAL_T	V97U9704C

If (a) ≤ (b) seconds, proceed to Step 16.

If (a) > (b) seconds, issue the following output and proceed to Step 16.

(1)	CMD IMU TO INERTIAL FLAG	V90X8411X

Step 16 – Time to Open LO_2 Accumulator Recirculation Valves. This step monitors the countdown clock and, at the proper time, terminates the LO_2 accumulator recirculation valve close commands, which permits the springloaded valves to open.

Monitor the following:

(a)	COUNTDOWN TIME	V90W8380C
(b)	OPN_LO_2_ACC_RECIRC_VLV_T	V97U9706C

If (a) ≤ (b) seconds, proceed to Step 16A

If (a) > (b) seconds, terminate the following commands and proceed to Step 16A.

(1)	MPS LO_2 ACC RECIRC VLV 1 CL CMD A	V41K1815X

(2)	MPS LO_2 ACC RECIRC VLV 1 CL CMD B	V41K1816X
(3)	MPS LO_2 ACC RECIRC VLV 2 CL CMD A	V41K1825X
(4)	MPS LO_2 ACC RECIRC VLV 2 CL CMD B	V41K1826X

Step 16A – Initialize the Navigation System. This step monitors the countdown clock and, at the proper time, sets a flag for the Ascent Nav Sequencer and the Ascent User Parameter Process Sequencer, and initializes the SSME throttle command.

Monitor the following:

(a)	COUNTDOWN TIME	V90W8380C
(b)	NAV_INIT_T	V97U9707C

If (a) ≤ (b) seconds, proceed to Step 17.

If (a) > (b) seconds and it is first pass, issue the following outputs and proceed to Step 17. Otherwise, proceed to Step 17.

(1)	NAV INIT FLAG	V90X8414X
(2)	K_CMD (100%)	V90U1948C

Step 16B – Update the CRT Timer Base Time and Configure Vent Doors for Launch. This step updates the CRT timer base time and then monitors the countdown clock and, at the proper time, sets a flag for the vent door sequence.

Monitor the following:

(a)	COUNTDOWN TIME	V90W8380C
(b)	CONFIG_VNT_DRS_FOR_LCH_T	V97U9708C
(c)	CLOCK–COMPUTER (GMT)	V91W5000C
(d)	SRB_IGN_TIME_DELAY	V97U9726C
(e)	START_SSMES_T	V97U9712C

Store [(c) – (a) + (d) + (e)], where (a) and (e) < 0, into the CRT timer base time location in User Interface compool. Then,

If (a) ≤ (b) seconds, proceed to Step 13.

If (a) > (b) seconds, issue the following output and proceed to Step 13.

(1)	CONFIGURE VENT DOORS FOR LAUNCH CMD	V90X8375X

Step 17 – Time to Verify MPS Ready. This step monitors the countdown clock and, at the proper time, checks for any commfault indications for the LO_2 accumulator recirculation valve inputs. If any commfaults are present, an internal counter is incremented; and, if the counter reaches a count of two, a countdown hold is called.

Monitor the following:

(a)	COUNTDOWN TIME	V90W8380C
(b)	FLAG A	(INTERNAL)

(c) DELETED
(d) FA3 INPUT PROM SEG 3, 10 STATUS (HFE) V91X2847X
(e) FA4 INPUT PROM SEG 3, 10 STATUS (HFE) V91X2848X
(f) CHECK_MPS_VLVS_POS_T V97U9709C

If (a) < (f) seconds, proceed to Step 20.

If (a) ≥ (f) seconds, and (b) is true, proceed to Step 20.

If (a) ≥ (f) seconds and (b), (d), and (e)are all false, then proceed to Step 19.

If (a) ≥ (f) seconds and (b) is false, and either (d), or (e) is true, then increment internal counter A by one count. If counter A is less than 2 counts, return to Step A. If counter A is equal to 2 counts, then issue the following outputs and return to Step A.

(1) RS COUNTDOWN HOLD FLAG V90X8667X
(2) MPS VALVE POS COMMFAULT HOLD V90X8769X

Step 17A – Deleted.

Step 18 – Deleted.

Step 19 – Check for Pogo Recirculation Valves Open. This step checks the two LO_2 Accum Recirc Valve positions and the appropriate LPS bypass flag. If either of the valves is not in the OPEN position and the LPS bypass flag is not set, then internal counter A is incremented by one count. If counter A is equal to 2 counts, a countdown hold is called.

Monitor the following:

(a) MPS LO_2 ACCUM RECIRC VLV 1 OPEN V41X1811X
(b) MPS LO_2 ACCUM RECIRC VLV 2 OPEN V41X1821X
(c) LPS BYPASS OF LO_2 ACCUM RECIRC VLV OP V99X8833X

If (a) and (b) are true or if (c) is true, then proceed to Step 19A.

If either (a) or (b) is false and (c) is false, then increment internal counter A by one count. If counter A is less than 2 counts, return to Step A. If counter A is equal to 2 counts, then issue the following outputs and return to Step A.

(1) MPS LOX ACC RECIRC VLV HOLD V90X8392X
(2) RS COUNTDOWN HOLD FLAG V90X8667X

Step 19A – Check SSME's READY INDICATION. This step checks for the engine ready mode of the start preparation phase for each main engine as determined by flags from the SSME SOP. If all engine controllers indicate engine ready in the status words, the MPS start enable flag is issued, and the LH_2 prevalves are opened; if not, a countdown hold will be called.

Monitor the following:

(a) MPS E–1 ENG READY IND V95X1182X
(b) MPS E–2 ENG READY IND V95X1183X

(c)	MPS E–3 ENG READY IND	V95X1184X

If either (a), (b), or (c) is false, issue the following outputs and return to Step A.

(1)	R/S SEQ SSME GO FOR LAUNCH HOLD	V90X8395X
(2)	R/S COUNTDOWN HOLD FLAG	V90X8667X

If (a), (b), and (c) are all true, then issue the following outputs:

(3)	MPS E–1 LH_2 PREVALVE OPEN CMD A	V41K1119X
(4)	MPS E–1 LH_2 PREVALVE OPEN CMD B	V41K1120X
(5)	MPS E–1 LH_2 PREVALVE OPEN CMD C	V41K1121X
(6)	MPS E–2 LH_2 PREVALVE OPEN CMD A	V41K1219X
(7)	MPS E–2 LH_2 PREVALVE OPEN CMD B	V41K1220X
(8)	MPS E–2 LH_2 PREVALVE OPEN CMD C	V41K1221X
(9)	MPS E–3 LH_2 PREVALVE OPEN CMD A	V41K1319X
(10)	MPS E–3 LH_2 PREVALVE OPEN CMD B	V41K1320X
(11)	MPS E–3 LH_2 PREVALVE OPEN CMD C	V41K1321X

and issue, one time only

(12)	MPS START ENABLE CMD FLAG	V90X8361X

and terminate the following:

(13)	MPS E–1 LH_2 PREVALVE CLOSE CMD A	V41K1122X
(14)	MPS E–1 LH_2 PREVALVE CLOSE CMD B	V41K1123X
(15)	MPS E–1 LH_2 PREVALVE CLOSE CMD C	V41K1124X
(16)	MPS E–2 LH_2 PREVALVE CLOSE CMD A	V41K1222X
(17)	MPS E–2 LH_2 PREVALVE CLOSE CMD B	V41K1223X
(18)	MPS E–2 LH_2 PREVALVE CLOSE CMD C	V41K1224X
(19)	MPS E–3 LH_2 PREVALVE CLOSE CMD A	V41K1322X
(20)	MPS E–3 LH_2 PREVALVE CLOSE CMD B	V41K1323X
(21)	MPS E–3 LH_2 PREVALVE CLOSE CMD C	V41K1324X

and set internal flag A true.

Proceed to Step 20.

Step 20 – Time to Close LO_2 Overboard Bleed Valve. This step monitors the countdown clock and, at the proper time, commands the LO_2 overboard bleed valve closed.

Monitor the following:

(a)	COUNTDOWN TIME	V90W8380C
(b)	CLSE_LO_2_OVBD_BV_T	V97U9710C

If (a) ≤ (b) seconds, proceed to Step 21.

If (a) > (b) seconds, issue the following outputs on each successive pass through Step 20:

(1)	MPS LO_2 OVERBOARD B/V CLOSE CMD A	V41K1584X
(2)	MPS LO_2 OVERBOARD B/V CLOSE CMD B	V41K1585X
(3)	MPS LO_2 OVERBOARD B/V CLOSE CMD C	V41K1586X

Proceed to Step 21.

Step 21 – Time To Check LH_2 Prevalves. This step monitors the countdown clock, and at the proper time, proceeds to Step 22.

Monitor the following:

(a)	COUNTDOWN TIME	V90W8380C
(b)	CHK_PREVLVS_OP_T	V97U9711C

If (a) ≤ (b) seconds, return to Step A.

If (a) > (b) seconds, then proceed to Step 22.

Step 22 – ME–1 LH_2 Prevalve Check. This step monitors the ME–1 LH_2 prevalve position sensors and their associated commfaults. If either sensor indicates OPEN and is not commfaulted, then the sequence proceeds. If a valid OPEN indication is not obtained, then a countdown hold is called.

Monitor the following:

(a)	MPS E–1 LH_2 PREVALVE OPEN A	V41X1104X
(b)	MPS E–1 LH_2 PREVALVE OPEN B	V41X1106X
(c)	FA1 INPUT PROM SEG 3, 10 STATUS (HFE)	V91X2845X
(d)	FA3 INPUT PROM SEG 3, 10 STATUS (HFE)	V91X2847X

If (a) is true and (c) is false, or if (b) is true and (d) is false, then proceed to Step 23; otherwise issue the following outputs and return to Step A.

(1)	MPS E–1 LH_2 PREVLV OPEN HOLD	V90X8396X
(2)	RS COUNTDOWN HOLD FLAG	V90X8667X

Step 23 – ME–2 LH_2 Prevalve Check. This step monitors the ME–2 LH_2 prevalve position sensors and their associated commfaults. If either sensor indicates OPEN and is not commfaulted, then the sequence proceeds. If a valid OPEN indication is not obtained, then a countdown hold is called.

Monitor the following:

(a)	MPS E–2 LH_2 PREVALVE OPEN A	V41X1204X
(b)	MPS E–2 LH_2 PREVALVE OPEN B	V41X1206X
(c)	FA2 INPUT PROM SEG 3, 10 STATUS (HFE)	V91X2846X
(d)	FA4 INPUT PROM SEG 3, 10 STATUS (HFE)	V91X2848X

If (a) is true and (c) is false, or if (b) is true and (d) is false, then proceed to Step 24; otherwise issue the following outputs and return to Step A.

(1)	MPS E–2 LH_2 PREVLV OPEN HOLD	V90X8397X
(2)	RS COUNTDOWN HOLD FLAG	V90X8667X

Step 24 – ME–3 LH_2 Prevalve Check. This step monitors the ME–3 LH_2 prevalve position sensors and their associated commfaults. If either sensor indicates OPEN and is not commfaulted, then the sequence proceeds. If a valid OPEN indication is not obtained, then a countdown hold is called.

Monitor the following:

(a)	MPS E–3 LH_2 PREVALVE OPEN A	V41X1304X
(b)	MPS E–3 LH_2 PREVALVE OPEN B	V41X1306X
(c)	FA4 INPUT PROM SEG 3, 10 STATUS (HFE)	V91X2848X
(d)	FA3 INPUT PROM SEG 3, 10 STATUS (HFE)	V91X2847X

If (a) is true and (c) is false, or if (b) is true and (d) is false, then proceed to Step 25; otherwise issue the following outputs and return to Step A.

(1)	MPS E–3 LH_2 PREVLV OPEN HOLD	V90X8398X
(2)	RS COUNTDOWN HOLD FLAG	V90X8667X

Step 25 – Orbiter Vent Doors Check. This step monitors for all vent doors achieving the desired position for launch within the required time period. The vent door sequence provides an indication of the status for each of the doors. If a door failure exists and an LPS override for that door has been previously set, then the RS launch sequence will proceed with the count. If an LPS override has not been previously set, then the RS launch sequence will call a countdown hold.

Monitor the following:

(a)	ORBITER VENT DOORS STATUS WORD	V90J8201C
(b)	LPS ORBITER VENT DOORS OVERRIDE WORD	V99J8836C

If all the indicators of (a) (Table 4.1–1) = true (no failures of any doors), then proceed to Step 26.

If any indicator(s) of (a) = false (one or more door failures), then read (b) (Table 4.1–2). If the corresponding override indicator in (b) = true for each specific door failure of (a), then proceed to Step 26.

If any indicator of (a) = false (door failure) and the corresponding override indicator in (b) = false, then issue the following outputs and return to Step A.

(1)	RS COUNTDOWN HOLD FLAG	V90X8667X
(2)	VENT DOOR POSITION HOLD	V90X8770X

Table 4.1–1. Orbiter Vent Doors Status Word– –V90J8201		
Vent Group	Item	
Vent group 1	a	L FWD VENTS 1&2
Left and right	b	L FWD VENTS 1&2
Forward vent	c	L FWD VENTS 1&2
Ports 1 and 2	d	L FWD VENTS 1&2
Vent Group 2	a	L PB VENT 3
Left and right	b	L PB VENT 3
Mid fuselage vent	c	R PB VENT 3
Port 3	d	R PB VENT 3
Vent group 3	a	L PB VENT 5
Left and right	b	L PB VENT 5
Mid fuselage	c	R PB VENT 5
Port 5	d	R PB VENT 5
Vent group 4	a	L PB/W VENTS 4&7
Left and right	b	L PB/W VENTS 4&7
Mid fuselage vent	c	R PB/W VENTS 4&7
Ports 4 and 7	d	R PB/W VENTS 4&7
Vent group 5	a	L PB VENT 6
Left and Right	b	L PB VENT 6
Aft payload vent	c	L PB VENT 6
Port 6	d	L PB VENT 6
Vent group 6	a	L AFT VENTS 8&9
Left and right	b	L AFT VENTS 8&9
Aft vent	c	R AFT VENTS 8&9
Ports 8 and 9	d	R AFT VENTS 8&9

Table 4.1–2. LPS Orbiter Vent Doors Override Word—V99J8836C

Vent Group	Item	
Vent group 1	a	L FWD VENTS 1&2
Left and right	b	L FWD VENTS 1&2
Forward vent	c	L FWD VENTS 1&2
Ports 1 and 2	d	L FWD VENTS 1&2
Vent Group 2	a	L PB VENT 3
Left and right	b	L PB VENT 3
Mid fuselage vent	c	R PB VENT 3
Port 3	d	R PB VENT 3
Vent group 3	a	L PB VENT 5
Left and right	b	L PB VENT 5
Mid fuselage	c	R PB VENT 5
Port 5	d	R PB VENT 5
Vent group 4	a	L PB/W VENTS 4&7
Left and right	b	L PB/W VENTS 4&7
Mid fuselage vent	c	R PB/W VENTS 4&7
Ports 4 and 7	d	R PB/W VENTS 4&7
Vent group 5	a	L PB VENT 6
Left and Right	b	L PB VENT 6
Aft payload vent	c	L PB VENT 6
Port 6	d	L PB VENT 6
Vent group 6	a	L AFT VENTS 8&9
Left and right	b	L AFT VENTS 8&9
Aft vent	c	R AFT VENTS 8&9
Ports 8 and 9	d	R AFT VENTS 8&9

Step 26 – SSME's Ready for Start. This step monitors the engine ready mode of the start preparation phase for each main engine as determined by flags from the SSME SOP. If all engine controllers provide engine ready indications in the status words, then the sequence will proceed; if not, a countdown hold will be called.

Monitor the following conditions:

(a)	MPS E–1 READY IND	V95X1182X
(b)	MPS E–2 READY IND	V95X1183X
(c)	MPS E–3 READY IND	V95X1184X

If (a) and (b) and (c) all = true, proceed to Step 27.

If either (a) or (b) or (c) = false, then issue the following outputs and return to Step A.

(1)	RS SEQ SSME GO FOR LAUNCH HOLD	V90X8395X
(2)	RS COUNTDOWN HOLD FLAG	V90X8667X

Step 27 – LPS Go for Main Engine Start. This step looks for a flag set by LPS indicating a positive "go" for start of the main engines. If this flag is not set, a countdown hold is called.

Monitor the following conditions:

(a)	LPS GO FOR ENGINE START FLAG	V99X8804X

If (a) = true, proceed to Step 28.

If (a) = false, issue the following outputs and return to Step A.

(1)	LPS GO FOR ENGINE START HOLD	V90X8394X
(2)	RS COUNTDOWN HOLD FLAG	V90X8667X

Step 28 – Time to Start Main Engines. This step monitors the countdown clock, and, at the proper time, issues the main engine start command flag for Engine 3 and the MPS TVC SERVO OVRD CMD flag. In addition, the timer for checking engine performance, and the start delay timers for Engine 2 and Engine 1 are started.

Monitor the following:

(a)	COUNTDOWN TIME	V90W8380C
(b)	START_SSMES_T	V97U9712C

If (a) ≤ (b) seconds, return to Step A.

If (a) > (b) seconds, issue the following outputs:

(1)	MPS TVC SERVO OVRD CMD	V90X8374X
(2)	ENG START CMD ISSUED FLAG	(INTERNAL)

then issue the following output one time only:

(3)	MPS E–3 START CMD FLAG	V90X8360X

and start timers for the following:

(4)	ENG_TIMER_FOR_THRUST_OK	V97U9716C
(5)	SRB_IGN_TIME_DELAY	V97U9726C

and then return to Step A.

Step 28A – Start of Engine 2 and Engine 1. This step provides for a time delay before setting the start flag for Engine 2 and a time delay before setting the start flag for Engine 1. The time delays before setting the start flags shall have an accuracy tolerance of ±1 millisecond.

If 120 ± 1 milliseconds have not elapsed since output (3) was issued in Step 28, proceed to Step 29.

If 120 ± 1 milliseconds have elapsed since output (3) was issued in Step 28, set the following output true one time only:

(1)	MPS E–2 START CMD FLAG	V90X8359X

and set the following output true:

(2)	E2 START CMD ISSUED FLAG	(INTERNAL)

and then monitor for a 240 ± 1 millisecond time delay from issuance of output (3) in Step 28.

If 240 ± 1 milliseconds have not elapsed since output (3) in Step 28 was issued, proceed to Step 29.

If 240 ± 1 milliseconds have elapsed since output (3) in Step 28 was issued set the following output true one time only:

(3)	E–1 START CMD FLAG	V90X8358X
(4)	MPS E–1 START CMD FLAG	(INTERNAL)

and then proceed to Step 29.

Step 29 – Check for any Engine in Shutdown. This step monitors the operating phase of each main engine via flags from the SSME SOP. During the start phase, one or more of the engines could go into automatic shutdown. If this occurs, it is necessary to inhibit the SRB ignition and perform an orderly shutdown of the other two engines.

Monitor the following:

(a)	MPS E–1 SHUTDOWN PHASE	V95X1155X
(b)	MPS E–1 POST–SHUTDOWN PHASE	V95X1160X
(c)	MPS E–2 SHUTDOWN PHASE	V95X1156X
(d)	MPS E–2 POST–SHUTDOWN PHASE	V95X1161X
(e)	MPS E–3 SHUTDOWN PHASE	V95X1157X
(f)	MPS E–3 POST–SHUTDOWN PHASE	V95X1162X

If (a), (b), (c), (d), (e), and (f) are all false, then proceed to Step 37.

If (a) or (b) = true, set output (7) true.

If (c) or (d) = true, set output (8) true.

If (e) or (f) = true, set output (9) true.

If either (a), (b), (c), (d), (e), or (f) = true, then terminate the following output:

(1)	PREP SSME's FOR LIFT–OFF FLAG	V90X8373X

and issue outputs (2) through (6)

(2)	LAUNCH SEQUENCE ABORT FLAG	V90X8382X
(3)	CMD SSME's TO PRE–START POS FLAG	V90X8412X
(4)	MPS SLEW COMP FLAG	V90X8400X
(5)	MPS TVC SERVO OVRD CMD	V90X8374X
(6)	UNCOMMANDED ENGINE SHUTDOWN ABORT	V90X8771X
(7)	ENG 1 SHUTDOWN FLAG C	(INTERNAL)
(8)	ENG 2 SHUTDOWN FLAG B	(INTERNAL)
(9)	ENG 3 SHUTDOWN FLAG D	(INTERNAL)

Proceed to Step 30.

Step 30 – ME–1 Status Check. This step monitors the ME–1 status word via SSME SOP flags; and when ME–1 enters shutdown, appropriate time delays are provided before closing the prevalves.

Monitor the following:

(a)	MPS E–1 SHUTDOWN PHASE	V95X1155X
(b)	MPS E–1 POST–SHUTDOWN PHASE	V95X1160X

If (a) and (b) both = false, proceed to Step 31.

If either (a) or (b) = true, monitor the following:

(c)	ME1_LOX_PREVLV_CLSE_DELAY	V97U9720C

If (c) seconds have not elapsed, proceed to Step 30B.

If (c) seconds have elapsed, proceed to Step 30A.

Step 30A – Issuance of ME–1 Prevalve Close Commands. This step provides a time delay between issuance of the ME–1 LO_2 prevalve close commands and the ME–1 LH_2 prevalve close commands.

Issue the following outputs:

(1)	MPS E–1 LO_2 PREVALVE CLOSE CMD A	V41K1139X
(2)	MPS E–1 LO_2 PREVALVE CLOSE CMD B	V41K1140X
(3)	MPS E–1 LO_2 PREVALVE CLOSE CMD C	V41K1141X
(4)	MPS E–1 LO_2 PREVALVE CLOSE CMD D	V41K1142X

and terminate the following outputs:

(5)	MPS E–1 LO_2 PREVALVE OPEN CMD A	V41K1136X
(6)	MPS E–1 LO_2 PREVALVE OPEN CMD B	V41K1137X
(7)	MPS E–1 LO_2 PREVALVE OPEN CMD C	V41K1138X
(8)	MPS E–1 LO_2 PREVALVE OPEN CMD D	V41K1143X

and then monitor the following:

(a)	ME1_LH_2_PREVLV_CLSE_T_DELAY	V97U9727C

If (a) seconds have not elapsed, proceed to Step 31.

If (a) seconds have elapsed, issue the following outputs:

(9)	MPS E1 LH_2 PREVALVE CLOSE CMD A	V41K1122X
(10)	MPS E1 LH_2 PREVALVE CLOSE CMD B	V41K1123X
(11)	MPS E1 LH_2 PREVALVE CLOSE CMD C	V41K1124X

and terminate the following outputs:

(12)	MPS E1 LH_2 PREVALVE OPEN CMD A	V41K1119X
(13)	MPS E1 LH_2 PREVALVE OPEN CMD B	V41K1120X
(14)	MPS E1 LH_2 PREVALVE OPEN CMD C	V41K1121X

and then set the following flag = true:

(15)	ME–1 PREVALVES CMD'D CLOSED FLAG	(INTERNAL)

and proceed to Step 31.

Step 30B – Prevalve Closure for ME–1 If Unstarted During Pad Abort. If this engine has not been started prior to initiation of a pad abort, prevalve close delays are bypassed.

Monitor the following:

(a)	E1 START COMMAND ISSUED FLAG	(INTERNAL)

If (a) is true, proceed to Step 31.

If (a) is false, set V97U9727 ME_LH_2_PREVLV_CLS_T_DELAY equal to zero and proceed to Step 30A.

Step 31 – ME–2 Status Check. This step monitors the ME–2 status word via SSME SOP flags, and when ME–2 enters shutdown, appropriate time delays are provided before closing the prevalves.

Monitor the following:

(a)	MPS E–2 SHUTDOWN PHASE	V95X1156X
(b)	MPS E–2 POST–SHUTDOWN PHASE	V95X1161X

If (a) and (b) both = false, proceed to Step 32.

If either (a) or (b) = true, monitor the following:

(c) ME2_LOX_PREVLV_CLSE_DELAY V97U9721C

If (c) seconds have not elapsed, proceed to Step 31B.

If (c) seconds have elapsed, proceed to Step 31A.

Step 31A – Issuance of ME–2 Prevalve Close Commands. This step provides a time delay between issuance of the ME–2 LO_2 prevalve close commands and the ME–2 LH_2 prevalve close commands.

Issue the following outputs:

(1)	MPS E–2 LO_2 PREVALVE CLOSE CMD A	V41K1239X
(2)	MPS E–2 LO_2 PREVALVE CLOSE CMD B	V41K1240X
(3)	MPS E–2 LO_2 PREVALVE CLOSE CMD C	V41K1241X
(4)	MPS E–2 LO_2 PREVALVE CLOSE CMD D	V41K1242X

and terminate the following outputs:

(5)	MPS E–2 LO_2 PREVALVE OPEN CMD A	V41K1236X
(6)	MPS E–2 LO_2 PREVALVE OPEN CMD B	V41K1237X
(7)	MPS E–2 LO_2 PREVALVE OPEN CMD C	V41K1238X
(8)	MPS E–2 LO_2 PREVALVE OPEN CMD D	V41K1243X

and then monitor the following:

(a) ME2_LH_2_PREVLV_CLSE_T_DELAY V97U9728C

If (a) seconds have not elapsed, proceed to Step 32.

If (a) seconds have elapsed, issue the following outputs:

(9)	MPS E2 LH_2 PREVALVE CLOSE CMD A	V41K1222X
(10)	MPS E2 LH_2 PREVALVE CLOSE CMD B	V41K1223X
(11)	MPS E2 LH_2 PREVALVE CLOSE CMD C	V41K1224X

and terminate the following outputs:

(12)	MPS E2 LH_2 PREVALVE OPEN CMD A	V41K1219X
(13)	MPS E2 LH_2 PREVALVE OPEN CMD B	V41K1220X
(14)	MPS E2 LH_2 PREVALVE OPEN CMD C	V41K1221X

and then set the following flag = true:

(15) ME–2 PREVALVES CMD'D CLOSED FLAG (INTERNAL)

and proceed to Step 32.

Step 31B – Prevalve Closure for ME–2 If Unstarted During Pad Abort. If this engine has not been started prior to initiation of a pad abort, prevalve close delays are bypassed.

Monitor the following:

(a) E2 START COMMAND ISSUED FLAG (INTERNAL)

If (a) is true, proceed to Step 32.

If (a) is false, set V97U9728 ME2_LH_2_PREVLV_CLS_T_DELAY equal to zero and proceed to Step 31A.

Step 32 – ME–3 Status Check. This step monitors the ME–3 status word via SSME SOP flags, and when ME–3 enters shutdown, appropriate time delays are provided before closing the prevalves.

Monitor the following:

(a) MPS E–3 SHUTDOWN PHASE V95X1157X
(b) MPS E–3 POST–SHUTDOWN PHASE V95X1162X

If (a) and (b) both = false, proceed to Step 33.

If either (a) or (b) = true, monitor the following:

(c) ME3_LOX_PREVLV_CLSE_DELAY V97U9722C

If (c) seconds have not elapsed, proceed to Step 33.

If (c) seconds have elapsed, proceed to Step 32A.

Step 32A – Issuance of ME–3 Prevalve Close Commands. This step provides a time delay between issuance of the ME–3 LO_2 prevalve close commands and the ME–3 LH_2 prevalve close commands.

Issue the following outputs:

(1) MPS E–3 LO_2 PREVALVE CLOSE CMD A V41K1339X
(2) MPS E–3 LO_2 PREVALVE CLOSE CMD B V41K1340X
(3) MPS E–3 LO_2 PREVALVE CLOSE CMD C V41K1341X
(4) MPS E–3 LO_2 PREVALVE CLOSE CMD D V41K1342X

and terminate the following outputs:

(5) MPS E–3 LO_2 PREVALVE OPEN CMD A V41K1336X
(6) MPS E–3 LO_2 PREVALVE OPEN CMD B V41K1337X
(7) MPS E–3 LO_2 PREVALVE OPEN CMD C V41K1338X
(8) MPS E–3 LO_2 PREVALVE OPEN CMD D V41K1343X

and then monitor the following:

(a) ME3_LH_2_PREVLV_CLSE_T_DELAY V97U9729C

If (a) seconds have not elapsed, proceed to Step 33.

If (a) seconds have elapsed, issue the following outputs:

(9) MPS E3 LH_2 PREVALVE CLOSE CMD A V41K1322X
(10) MPS E3 LH_2 PREVALVE CLOSE CMD B V41K1323X

(11) MPS E3 LH_2 PREVALVE CLOSE CMD C V41K1324X

and terminate the following outputs:

(12) MPS E3 LH_2 PREVALVE OPEN CMD A V41K1319X
(13) MPS E3 LH_2 PREVALVE OPEN CMD B V41K1320X
(14) MPS E3 LH_2 PREVALVE OPEN CMD C V41K1321X

and then set the following flag = true:

(15) ME–3 PREVALVES CMD'D CLOSED FLAG (INTERNAL)

and proceed to Step 33.

Step 33 – Second and Third Engine Staggered Shutdown Priority Selection. This step establishes a priority for the second and third engine to be shut down in a staggered sequence. The engine priority is selected after a time delay has elapsed since the first engine was detected in shutdown phase or was commanded to shutdown.

Monitor the following:

(a) ENG 2 SHUTDOWN FLAG B (INTERNAL)
(b) TIMER_G_SHTDN_TIME_DELAY 1.12 (–0, + 0.08 SEC) (INTERNAL)
(c) TIMER_J_SHTDN_TIME_DELAY 2.40 (–0, + 0.08 SEC) (INTERNAL)

On the first pass through this step, start (b) Timer "G" and (c) Timer "J" and return to Step A.

On subsequent passes:
If (b) seconds have not elapsed since starting timers "G" and "J," then return to Step A.

If (c) seconds have elapsed since Timer "J" (c) started, set (1), (2), and (3) true and proceed to Step 34.

If (c) seconds have not elapsed since Timer "J" (c) started, monitor Timer "G" (b).

If (b) seconds have elapsed since Timer "G" (b) started and (a) = true on first pass, then set (3) true and return to Step A.

If (b) seconds have elapsed since Timer "G" (b) started and (a) = false on first pass, then set (2) true and return to Step A.

(1) ENG 1 SHUTDOWN FLAG C (INTERNAL)
(2) ENG 2 SHUTDOWN FLAG B (INTERNAL)
(3) ENG 3 SHUTDOWN FLAG D (INTERNAL)

Step 34 – Initiation of Engine Shutdown Verification Timer. This step initiates the timer, which is checked in Step 35 to alert the LPS that all engines have not entered shutdown within the required time period after shutdown commands were issued.

On the first pass through this step, start the following timer and return to Step A.

(1) VERIFY_ALL_ENG_SHTDN_TIMER V97U9719C

On all successive passes proceed to Step 35.

Step 35 – All SSME's in Shutdown. This step monitors the phase of each engine via flags from the SSME SOP, and determines when all engines have entered the shutdown phase. If this does not occur within the proper time after shutdown commands for all engines were issued in Step 33, then a countdown hold flag is set.

Monitor the following:

(a)	MPS E–1 SHUTDOWN PHASE	V95X1155X
(b)	MPS E–1 POST–SHUTDOWN PHASE	V95X1160X
(c)	MPS E–2 SHUTDOWN PHASE	V95X1156X
(d)	MPS E–2 POST–SHUTDOWN PHASE	V95X1161X
(e)	MPS E–3 SHUTDOWN PHASE	V95X1157X
(f)	MPS E–3 POST–SHUTDOWN PHASE	V95X1162X
(g)	VERIFY_ALL_ENG_SHTDN_TIMER	V97U9719C

If either (a) or (b) = true, and either (c) or (d) = true, and either (e) or (f) = true, then proceed to Step 36.

If both (a) and (b) = false, or both (c) and (d) = false, or both (e) and (f) = false, and (g) seconds have not elapsed, then return to Step A.

If both (a) and (b) = false, or both (c) and (d) = false, or both (e) and (f) = false, and (g) seconds have elapsed, then issue the following outputs and terminate the RS launch sequence.

(1)	ENGINE SHUTDOWN VERIFICATION HOLD	V90X8389X
(2)	RS COUNTDOWN HOLD FLAG	V90X8667X

Step 36 – Prevalves Commanded Closed Check. This step checks to see that all prevalves have been commanded closed before terminating the launch sequence. This assures that the time delays of Steps 30, 31, and 32 can occur and that all prevalves will be commanded closed before termination of the RS launch sequence.

Monitor the following:

(a)	ME–1 PREVALVES CMD'D CLOSED FLAG	(INTERNAL)
(b)	ME–2 PREVALVES CMD'D CLOSED FLAG	(INTERNAL)
(c)	ME–3 PREVALVES CMD'D CLOSED FLAG	(INTERNAL)

If either (a), (b), or (c) = false, return to Step A.

If (a), (b), and (c) all = true, set output (1) true and then terminate the redundant set launch sequence.

(1)	ASCENT DAP RECYCLE FLAG	V90X8669X

Step 37 – LPS Countdown Hold Check. This step monitors the LPS countdown hold flag and, if set after the main engine start commands have been issued, will set the LAUNCH SEQUENCE ABORT FLAG and initiate the shutdown of ME–1, which will be followed after a time delay by shutdown of ME–2 and ME–3.

Monitor the following:

(a)	LPS COUNTDOWN HOLD FLAG	V99X8829X

If (a) = false, proceed to Step 37A.

If (a) = true, terminate the following outputs:

(1)	PREP SSME's FOR LIFT–OFF FLAG	V90X8373X
(2)	SRM IGN ARM FLAG	V90X8404X
(3)	TO UMB RELEASE ARM FLAG	V90X8407X

and issue the following outputs:

(4)	CMD SSME's to PRE–START POS FLAG	V90X8412X
(5)	ENG 1 SHUTDOWN FLAG C	(INTERNAL)
(6)	MPS E–1 SHUTDOWN ENABLE CMD	V90X8367X
(7)	MPS SLEW COMP FLAG	V90X8400X
(8)	MPS TVC SERVO OVRD CMD	V90X8374X
(9)	LPS COUNTDOWN HOLD	V90X8768X
(10)	LAUNCH SEQUENCE ABORT FLAG	V90X8382X

and then return to Step A.

Step 37A – All Engines at Required Percent Thrust. This step monitors the percent chamber pressure for all engines via the SSME SOP. When all engines reach the required chamber pressure, then flags are set for the MPS TVC CMD SOP, the SRB TVC CMD SOP, and the ASC DAP.

Monitor the following:

(a)	MPS E–1 PERCENT CH PRESS	V95U1186C
(b)	MPS E–2 PERCENT CH PRESS	V95U1187C
(c)	MPS E–3 PERCENT CH PRESS	V95U1188C
(d)	ALL_ENG_PERCENT_CHB_PRS_CHK	V97U9713C

If either (a) or (b) or (c) ≤ (d) percent, then proceed to Step 38.

If (a), (b), and (c) all > (d) percent, then terminate the following output:

(1)	MPS TVC SERVO OVRD CMD	V90X8374X

and issue the following output:

(2)	PREP SSME's FOR LIFT–OFF FLAG	V90X8373X

and proceed to Step 37B.

Steps 37B – MPS Actuator Port Commfault Checks. This step checks for any commfault indications relative to the actuator port checks to be made in Steps 42, 43, and 44. The first time that a commfault occurs the actuator port checks in Steps 42, 43, and 44 are bypassed. If a commfault indication is present on two successive cycles, then the LAUNCH SEQUENCE ABORT FLAG is set and ME–1 is commanded to shut down.

Monitor the following:

(a)	FA1 INPUT PROM SEG 3, 10 STATUS (HFE)	V91X2845X
(b)	FA2 INPUT PROM SEG 3, 10 STATUS (HFE)	V91X2846X
(c)	FA3 INPUT PROM SEG 3, 10 STATUS (HFE)	V91X2847X
(d)	FA4 INPUT PROM SEG 3, 10 STATUS (HFE)	V91X2848X
(e)	COMMFAULT FIRST PASS FLAG "E"	(INTERNAL)

If (a), (b), (c), and (d) all = false, then set (e) = true and proceed to Step 42.

If either (a), (b), (c), or (d) = true, and (e) = true, then set (e) = false and proceed to Step 38.

If either (a), (b), (c), or (d) = true and (e) = false, then terminate the following outputs:

(1)	PREP SSME's FOR LIFT–OFF FLAG	V90X8373X
(2)	SRM IGN ARM FLAG	V90X8404X
(3)	T0 UMB RELEASE ARM FLAG	V90X8407X

and issue the following outputs:

(4)	CMD SSME's TO PRE–START POS FLAG	V90X8412X
(5)	ENG 1 SHUTDOWN FLAG C	(INTERNAL)
(6)	MPS E–1 SHUTDOWN ENABLE CMD	V90X8367X
(7)	MPS SLEW COMP FLAG	V90X8400X
(8)	MPS TVC SERVO OVRD CMD	V90X8374X
(9)	MPS ACT PORT COMMFAULT ABORT	V90X8772X
(10)	LAUNCH SEQUENCE ABORT FLAG	V90X8382X

and then return to Step A.

Step 38 – ME–1 at Required Percent Thrust. This step monitors the ME–1 chamber pressure via the SSME SOP. If the chamber pressure does not reach the required level within the required number of seconds from the time the start commands were issued in Step 28, then the launch sequence abort flag is set and ME–1 is commanded to shut down.

Monitor the following:

(a)	MPS E–1 PERCENT CH PRESS	V95U1186X
(b)	ENG_PERCENT_CH_PRS_FOR_GO	V97U9714C
(c)	ENG_TIMER_FOR_THRUST_OK	V97U9716C
(d)	ENG START CMDS ISSUED FLAG	(INTERNAL)

If (a) ≥ (b) percent, proceed to Step 39.

If (a) < (b) percent, but (c) seconds have not elapsed since (d) was set = true in Step 28, then return to Step A.

If (a) < (b) percent, and (c) seconds have elapsed since (d) was set = true in Step 28, then terminate the following outputs:

(1)	PREP SSME's FOR LIFT–OFF FLAG	V90X8373X

(2)	SRM IGN ARM FLAG	V90X8404X
(3)	T0 UMB RELEASE ARM FLAG	V90X8407X

and issue the following outputs:

(4)	CMD SSME's TO PRE–START POS FLAG	V90X8412X
(5)	ENG 1 SHUTDOWN FLAG C	(INTERNAL)
(6)	MPS E–1 SHUTDOWN ENABLE CMD	V90X8367X
(7)	MPS SLEW COMP FLAG	V90X8400X
(8)	MPS TVC SERVO OVRD CMD	V90X8374X
(9)	ME–1 LOW CHAMBER PRESSURE ABORT	V90X8773X
(10)	LAUNCH SEQUENCE ABORT FLAG	V90X8382X

and then return to Step A.

Step 39 – ME–2 at Required Percent Thrust. This step monitors the ME–2 percent chamber pressure via the SSME SOP. If the chamber pressure does not reach the required level within the required number of seconds from the time the start commands were issued in Step 28, then the launch sequence abort flag is set and ME–2 is commanded to shut down.

Monitor the following:

(a)	MPS E–2 PERCENT CH PRESS	V95U1187X
(b)	ENG_PERCENT_CH_PRS_FOR_GO	V97U9714C
(c)	ENG_TIMER_FOR_THRUST_OK	V97U9716C
(d)	ENG START CMDS ISSUED FLAG	(INTERNAL)

If (a) ≥ (b) percent, proceed to Step 40.

If (a) < (b) percent, but (c) seconds have not elapsed since (d) was set = true in Step 28, then return to Step A.

If (a) < (b) percent, and (c) seconds have elapsed since (d) was set = true in Step 28, then terminate the following outputs:

(1)	PREP SSME's FOR LIFT–OFF FLAG	V90X8373X
(2)	SRM IGN ARM FLAG	V90X8404X
(3)	T0 UMB RELEASE ARM FLAG	V90X8407X

and issue the following outputs:

(4)	ENG 2 SHUTDOWN FLAG B	(INTERNAL)
(5)	CMD SSME's TO PRE–START POS FLAG	V90X8412X
(6)	MPS E2 SHUTDOWN ENABLE CMD	V90X8368X
(7)	MPS SLEW COMP FLAG	V90X8400X
(8)	MPS TVC SERVO OVRD CMD	V90X8374X
(9)	ME–2 LOW CHAMBER PRESSURE ABORT	V90X8774X
(10)	LAUNCH SEQUENCE ABORT FLAG	V90X8382X

and then return to Step A.

Step 40 – ME–3 at Required Percent Thrust. This step monitors the ME–3 percent chamber pressure via the SSME SOP. If the chamber pressure does not reach the required level within the required number of seconds from the time the start commands were issued in Step 28, then the launch sequence abort flag is set and ME–3 is commanded to shut down.

Monitor the following:

(a)	MPS E–3 PERCENT CH PRESS	V95U1188X
(b)	ENG_PERCENT_CH_PRS_FOR_GO	V97U9714C
(c)	ENG_TIMER_FOR_THRUST_OK	V97U9716C
(d)	ENG START CMDS ISSUED FLAG	(INTERNAL)

If (a) ≥ (b) percent, proceed to Step 41.

If (a) < (b) percent, but (c) seconds have not elapsed since (d) was set = true in Step 28, then return to Step A.

If (a) < (b) percent, and (c) seconds have elapsed since (d) was set = true in Step 28, then terminate the following outputs:

(1)	PREP SSME's FOR LIFT–OFF FLAG	V90X8373X
(2)	SRM IGN ARM FLAG	V90X8404X
(3)	T0 UMB RELEASE ARM FLAG	V90X8407X

and issue the following outputs:

(4)	ENG 3 SHUTDOWN FLAG D	(INTERNAL)
(5)	CMD SSME's TO PRE–START POS FLAG	V90X8412X
(6)	MPS E–3 SHUTDOWN ENABLE CMD	V90X8369X
(7)	MPS SLEW COMP FLAG	V90X8400X
(8)	MPS TVC SERVO OVRD CMD	V90X8374X
(9)	ME–3 LOW CHAMBER PRESSURE ABORT	V90X8775X
(10)	LAUNCH SEQUENCE ABORT FLAG	V90X8382X

and then return to Step A.

Step 41 – Go for SRB Ignition Check. This step provides a time delay to permit critical SSME actuator checks after all engines have reached the required thrust level for re–enabling MPS TVC FDIR. The time delay is initiated on the first pass through Step 28. If any engine actuator has a port failure after all engines have reached 90 percent thrust, that engine will be shut down first followed by the other two engines after a time delay. This step also monitors the GROUND CHECKOUT ENABLE FLAG to determine if an actual flight firing of the engines should occur, or if a ground checkout test is being performed. If a ground checkout test is being performed, SRB ignition will not be commanded.

Monitor the following:

(a)	SRB_IGN_TIME_DELAY	V97U9726C
(b)	GNC GROUND CHECKOUT ENABLE	V93X5538X

If (a) seconds have not elapsed, return to Step A

If (a) seconds have elapsed and (b) is false, proceed to Step 41B.

If (a) seconds have elapsed, and (b) is true, return to Step A.

Step 41A – Deleted.

Step 41B – SRB Ignition. This step commands SRB ignition based on all previous checks having been passed.

Issue the following outputs:

(1)	SRM IGN FIRE 1 FLAG	V90X8405X
(2)	SRM IGN FIRE 2/3 FLAG	V90X8699X
(3)	TERMINATE LPS POLLING FLAG	V90X8378X
(4)	MODE CONTROL MET RESET CMD	V90X8401X
(5)	READ GMT & STORE FLAG	V90X8402X
(6)	EVENT TIMER START FLAG	V90X8403X
(7)	SRB IGNITION CMD FLAG	V90X8377X

and then return to Step A.

Steps 41C Through 41E – Deleted.

Step 42 – ME–1 Actuator Port Checks. This step provides a check of the actuator ports for ME–1. If any actuator port failure is present for two successive cycles, then the LAUNCH SEQUENCE ABORT FLAG is set and a shutdown of ME–1 is initiated.

Monitor the following:

(a)	MPS ENG 1 P ACTR A FAIL	V79X1170X
(b)	MPS ENG 1 Y ACTR A FAIL	V79X1171X
(c)	MPS ENG 1 P ACTR B FAIL	V79X1173X
(d)	MPS ENG 1 Y ACTR B FAIL	V79X1174X
(e)	MPS ENG 1 P ACTR C FAIL	V79X1176X
(f)	MPS ENG 1 Y ACTR C FAIL	V79X1177X
(g)	MPS ENG 1 P ACTR D FAIL	V79X1178X
(h)	MPS ENG 1 Y ACTR D FAIL	V79X1179X
(i)	ME–1 ACTR PORT FAIL FIRST PASS FLAG "F"	(INTERNAL)

If (a), (b), (c), (d), (e), (f), (g), and (h) all = false, then set (i) = true and proceed to Step 43.

If either (a) or (b) or (c) or (d) or (e) or (f) or (g) or (h) = true and (i) = true, then set (i) = false and proceed to Step 43.

If either (a) or (b) or (c) or (d) or (e) or (f) or (g) or (h) = true and (i) = false, then terminate the following outputs:

(1)	PREP SSME's FOR LIFT–OFF FLAG	V90X8373X
(2)	SRM IGN ARM FLAG	V90X8404X
(3)	T0 UMB RELEASE ARM FLAG	V90X8407X

and issue the following outputs:

(4)	ENG 1 SHUTDOWN FLAG C	(INTERNAL)
(5)	CMD SSME's TO PRE–START POS FLAG	V90X8412X
(6)	MPS E–1 SHUTDOWN ENABLE CMD	V90X8367X
(7)	MPS SLEW COMP FLAG	V90X8400X
(8)	MPS TVC SERVO OVRD CMD	V90X8374X
(9)	ME–1 ACT PORT FAIL ABORT	V90X8776X
(10)	LAUNCH SEQUENCE ABORT FLAG	V90X8382X

and then return to Step A.

Step 43– ME–2 Actuator Port Checks. This step provides a check of the actuator ports for ME–2. If any actuator port failure is present for two successive cycles, then the LAUNCH SEQUENCE ABORT FLAG is set and a shutdown of ME–2 is initiated.

Monitor the following:

(a)	MPS ENG 2 P ACTR A FAIL	V79X1270X
(b)	MPS ENG 2 Y ACTR A FAIL	V79X1271X
(c)	MPS ENG 2 P ACTR B FAIL	V79X1273X
(d)	MPS ENG 2 Y ACTR B FAIL	V79X1274X
(e)	MPS ENG 2 P ACTR C FAIL	V79X1276X
(f)	MPS ENG 2 Y ACTR C FAIL	V79X1277X
(g)	MPS ENG 2 P ACTR D FAIL	V79X1278X
(h)	MPS ENG 2 Y ACTR D FAIL	V79X1279X
(i)	ME–2 ACTR PORT FAIL FIRST PASS FLAG "G"	(INTERNAL)

If (a), (b), (c), (d), (e), (f), (g), and (h) all = false, then set (i) = true and proceed to Step 44.

If either (a) or (b) or (c) or (d) or (e) or (f) or (g) or (h) = true and (i) = true, then set (i) = false and proceed to Step 44.

If either (a) or (b) or (c) or (d) or (e) or (f) or (g) or (h) = true and (i) = false, then terminate the following outputs:

(1)	PREP SSME's FOR LIFT–OFF FLAG	V90X8373X
(2)	SRM IGN ARM FLAG	V90X8404X
(3)	T0 UMB RELEASE ARM FLAG	V90X8407X

and issue the following outputs:

(4)	ENG 2 SHUTDOWN FLAG B	(INTERNAL)
(5)	CMD SSME's TO PRE–START POS FLAG	V90X8412X
(6)	MPS E–2 SHUTDOWN ENABLE CMD	V90X8368X
(7)	MPS SLEW COMP FLAG	V90X8400X
(8)	MPS TVC SERVO OVRD CMD	V90X8374X
(9)	ME–2 ACT PORT FAIL ABORT	V90X8777X
(10)	LAUNCH SEQUENCE ABORT FLAG	V90X8382X

and then return to Step A.

Step 44 – ME–3 Actuator Port Checks. This step provides a check of the actuator ports for ME–3. If any actuator port failure is present for two successive cycles, then the LAUNCH SEQUENCE ABORT FLAG is set and a shutdown of ME–3 is initiated.

Monitor the following:

(a)	MPS ENG 3 P ACTR A FAIL	V79X1370X
(b)	MPS ENG 3 Y ACTR A FAIL	V79X1371X
(c)	MPS ENG 3 P ACTR B FAIL	V79X1373X
(d)	MPS ENG 3 Y ACTR B FAIL	V79X1374X
(e)	MPS ENG 3 P ACTR C FAIL	V79X1376X
(f)	MPS ENG 3 Y ACTR C FAIL	V79X1377X
(g)	MPS ENG 3 P ACTR D FAIL	V79X1378X
(h)	MPS ENG 3 Y ACTR D FAIL	V79X1379X
(i)	ME–3 ACTR PORT FAIL FIRST PASS FLAG "H"	(INTERNAL)

If (a), (b), (c), (d), (e), (f), (g), and (h) all = false, then set (i) = true and proceed to Step 38.

If either (a) or (b) or (c) or (d) or (e) or (f) or (g) or (h) = true and (i) = true, then set (i) = false and proceed to Step 38.

If either (a) or (b) or (c) or (d) or (e) or (f) or (g) or (h) = true and (i) = false, then terminate the following outputs:

(1)	PREP SSME's FOR LIFT–OFF FLAG	V90X8373X
(2)	SRM IGN ARM FLAG	V90X8404X
(3)	T0 UMB RELEASE ARM FLAG	V90X8407X

and issue the following outputs:

(4)	ENG 3 SHUTDOWN FLAG D	(INTERNAL)
(5)	CMD SSME's TO PRE–START POS FLAG	V90X8412X
(6)	MPS E3 SHUTDOWN ENABLE CMD	V90X8369X
(7)	MPS SLEW COMP FLAG	V90X8400X
(8)	MPS TVC SERVO OVRD CMD	V90X8374X
(9)	ME–3 ACT PORT FAIL ABORT	V90X8778X
(10)	LAUNCH SEQUENCE ABORT FLAG	V90X8382X

and then return to Step A.

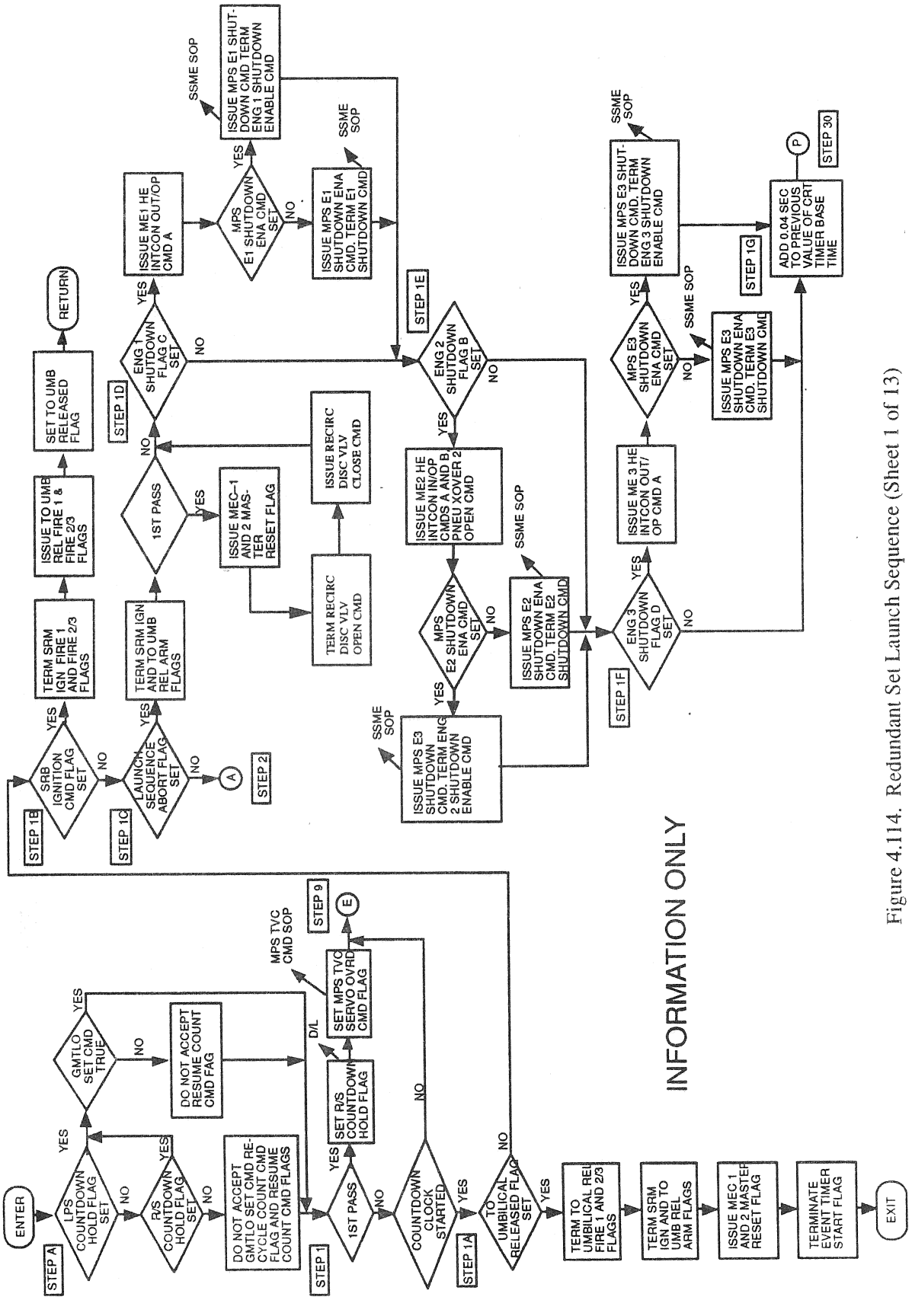

Figure 4.114. Redundant Set Launch Sequence (Sheet 1 of 13)

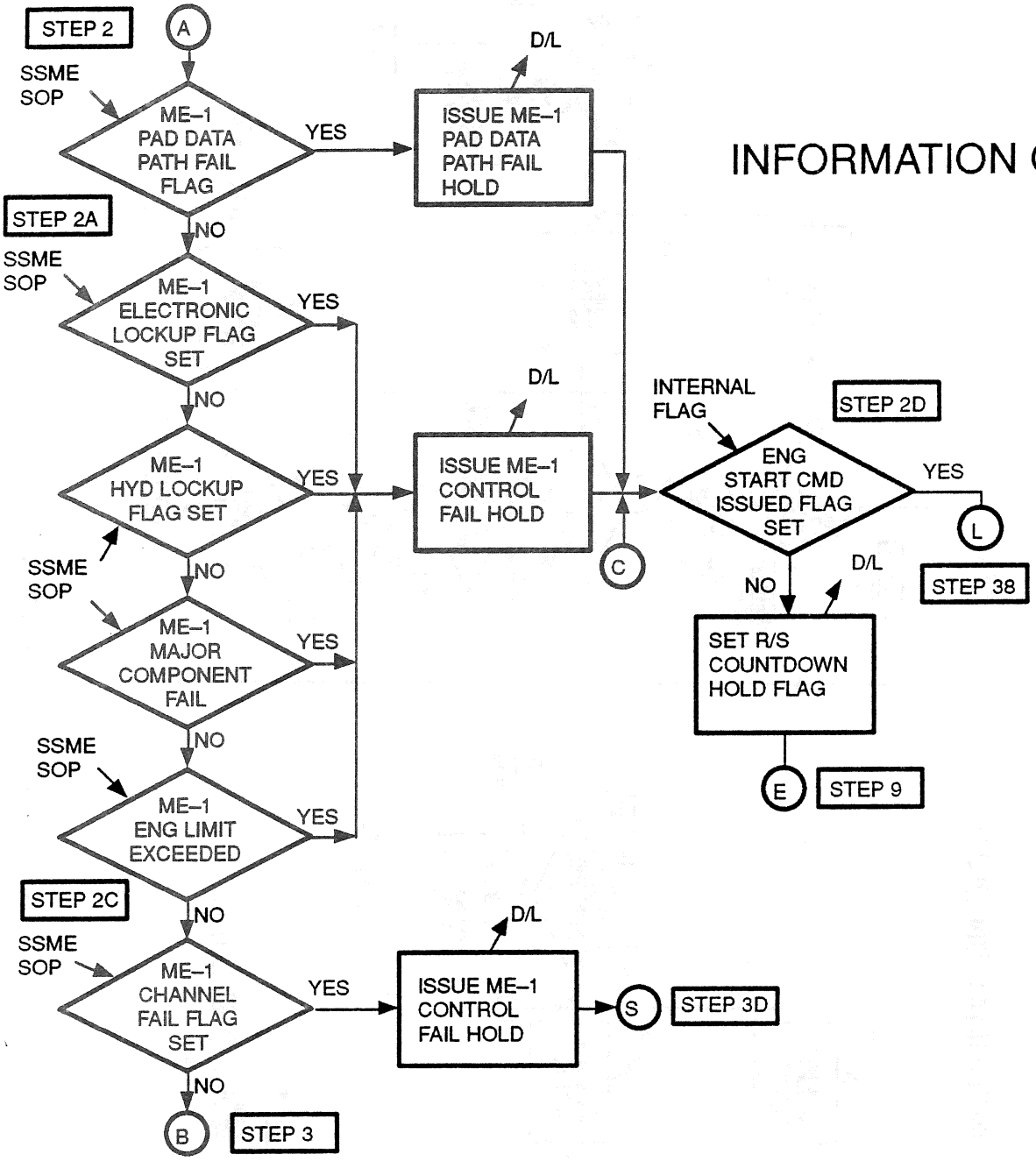

Figure 4.114. Redundant Set Launch Sequence (Sheet 2 of 13)

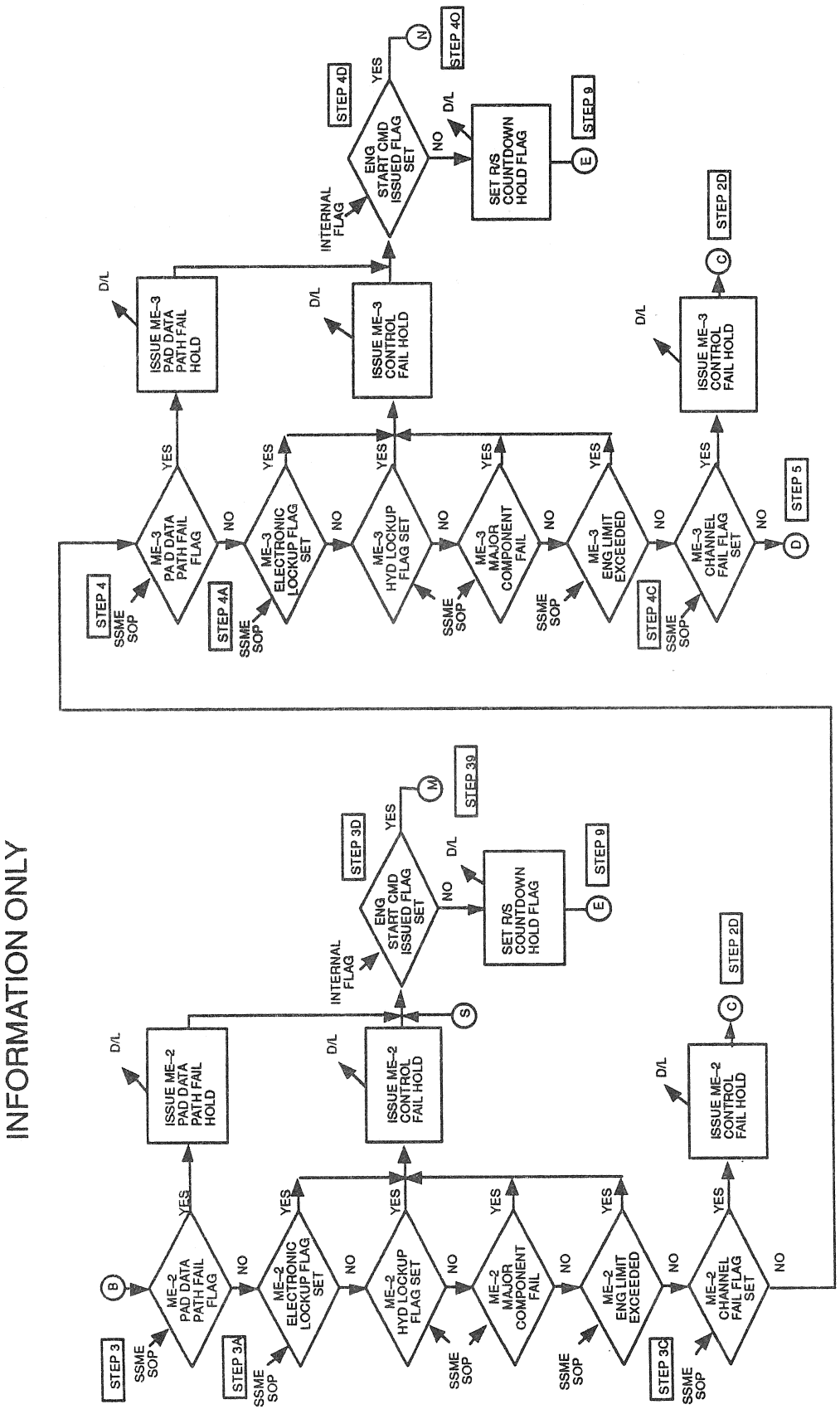

Figure 4.114. Redundant Set Launch Sequence (Sheet 3 of 13)

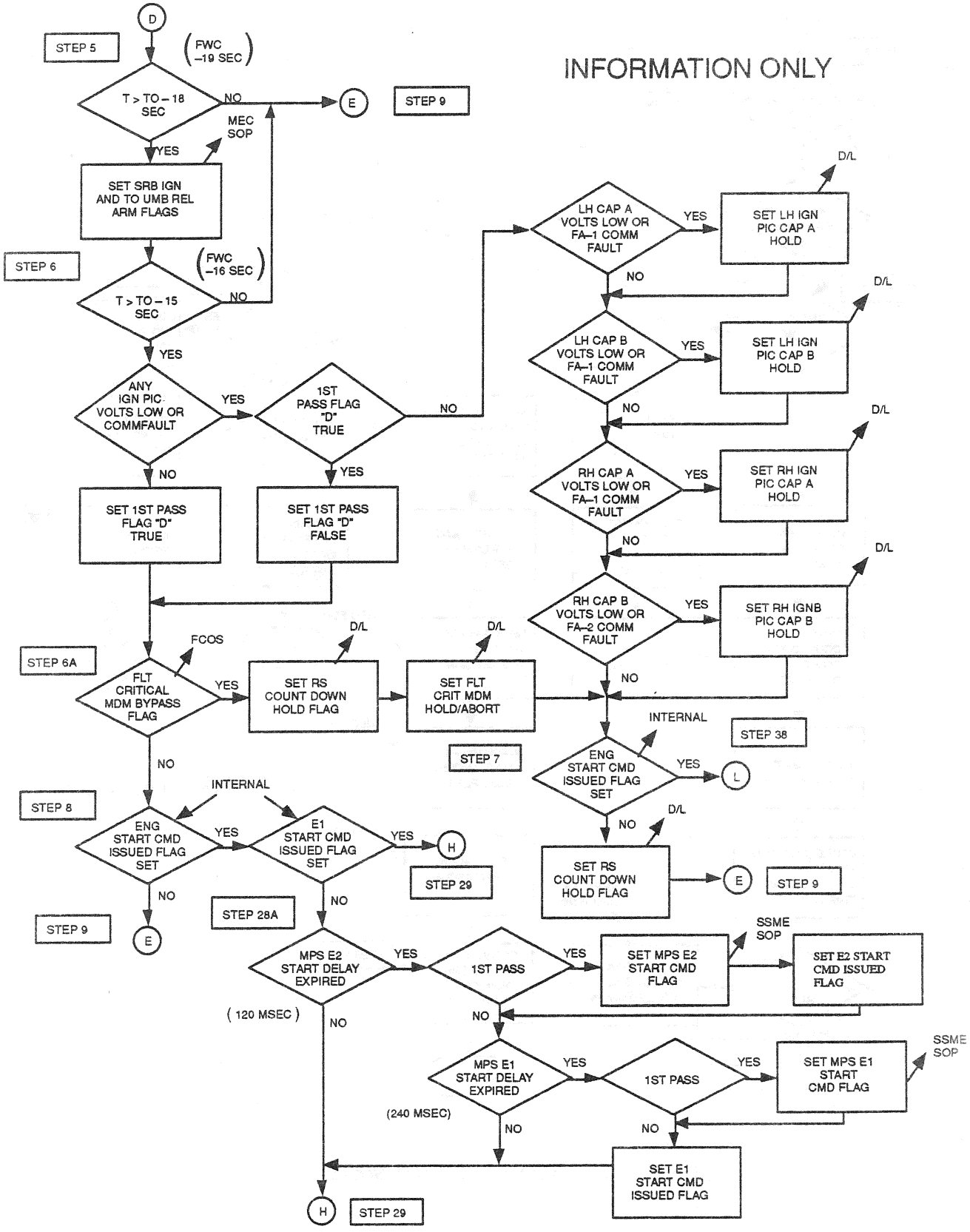

Figure 4.11–4. Redundant Set Launch Sequence (Sheet 4 of 13)

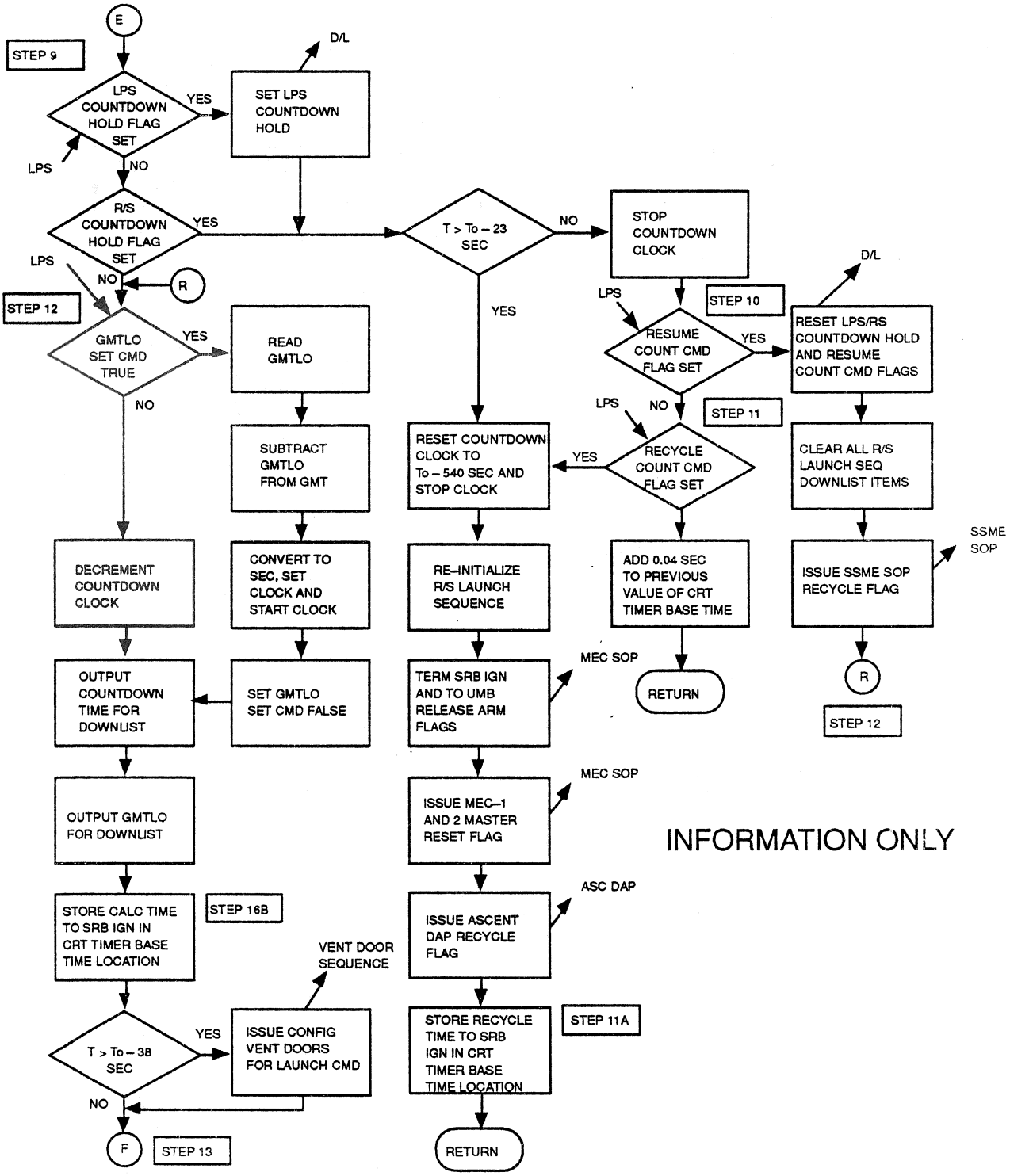

Figure 4.114. Redundant Set Launch Sequence (Sheet 5 of 13)

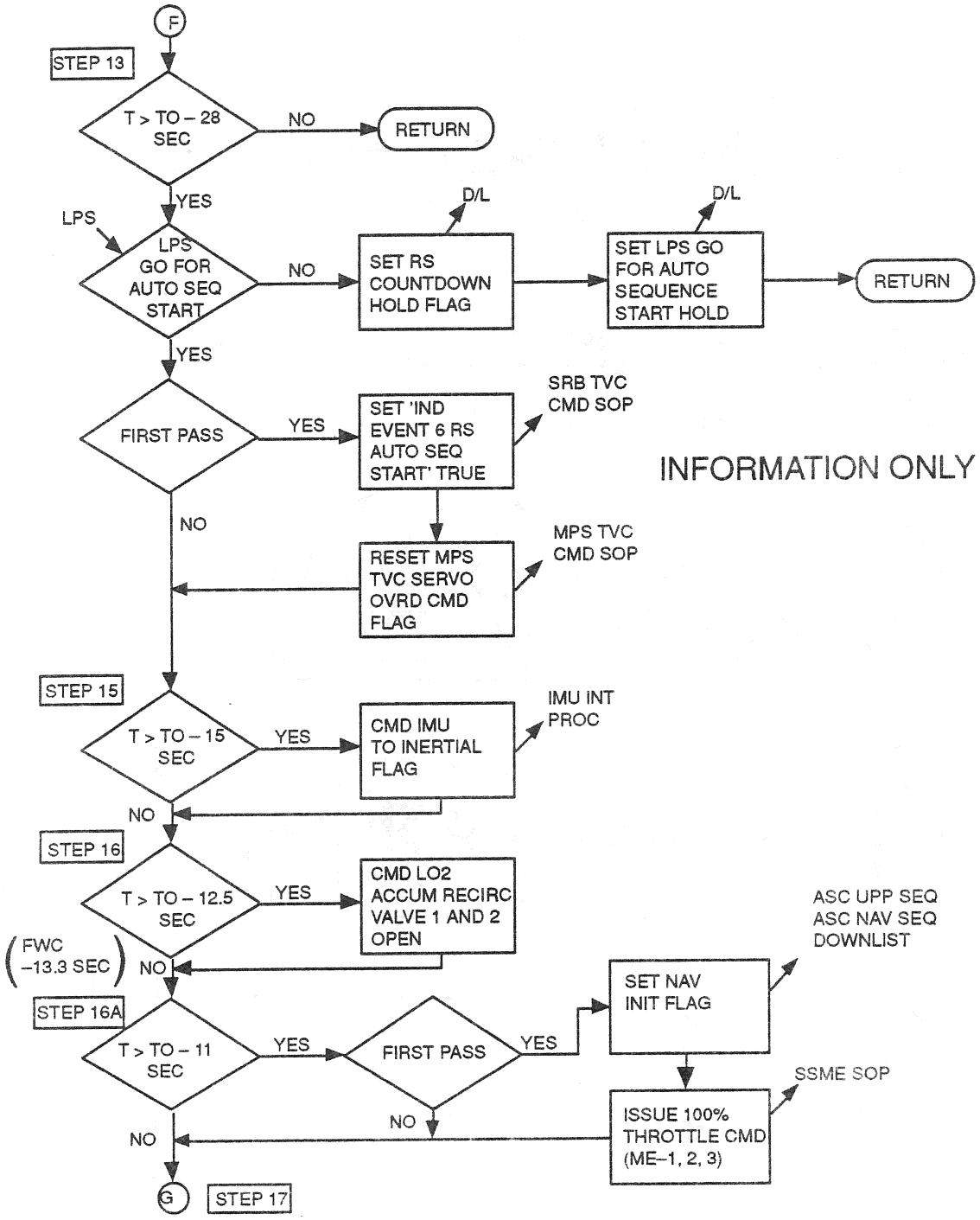

Figure 4.11–4. Redundant Set Launch Sequence (Sheet 6 of 13)

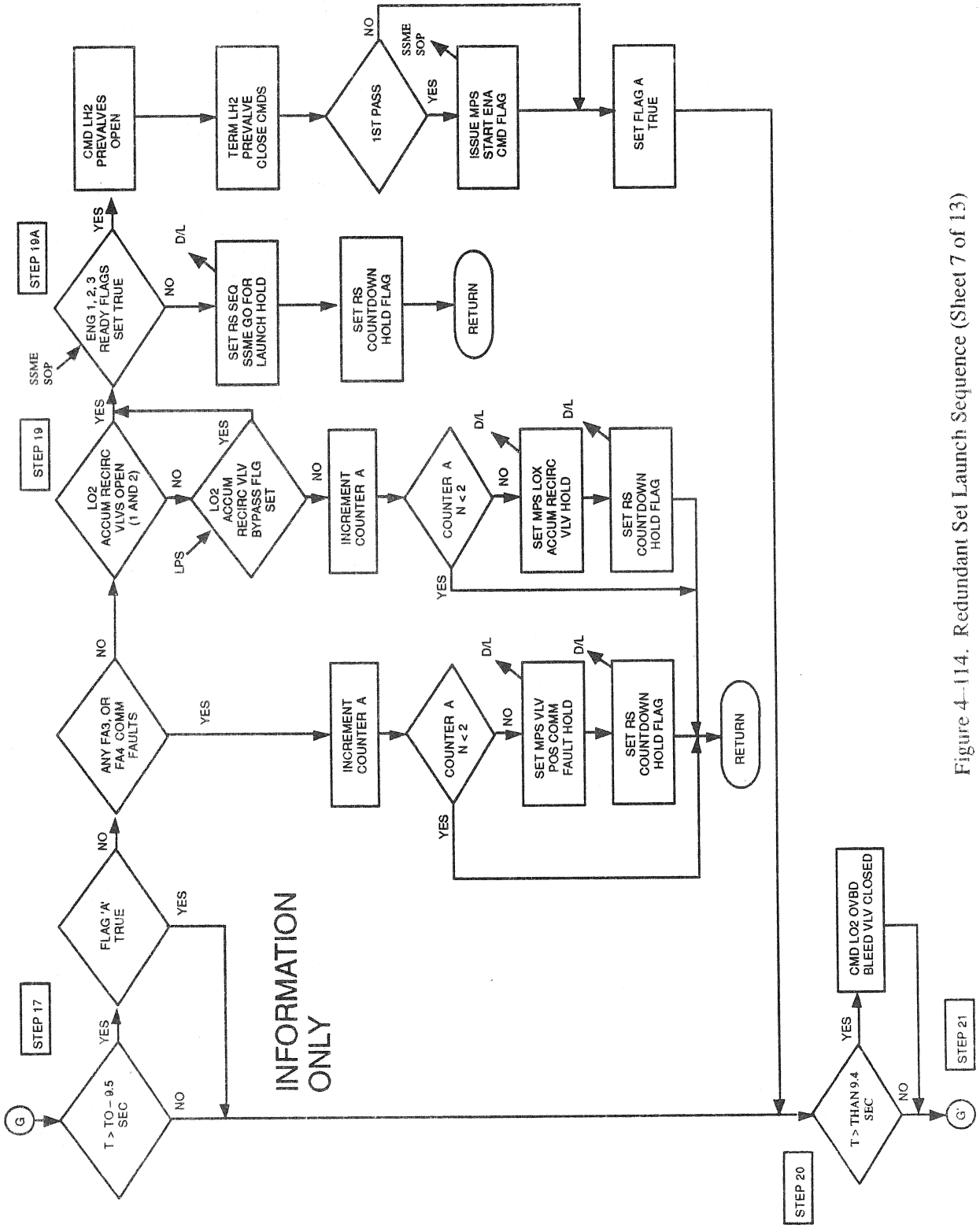

Figure 4–114. Redundant Set Launch Sequence (Sheet 7 of 13)

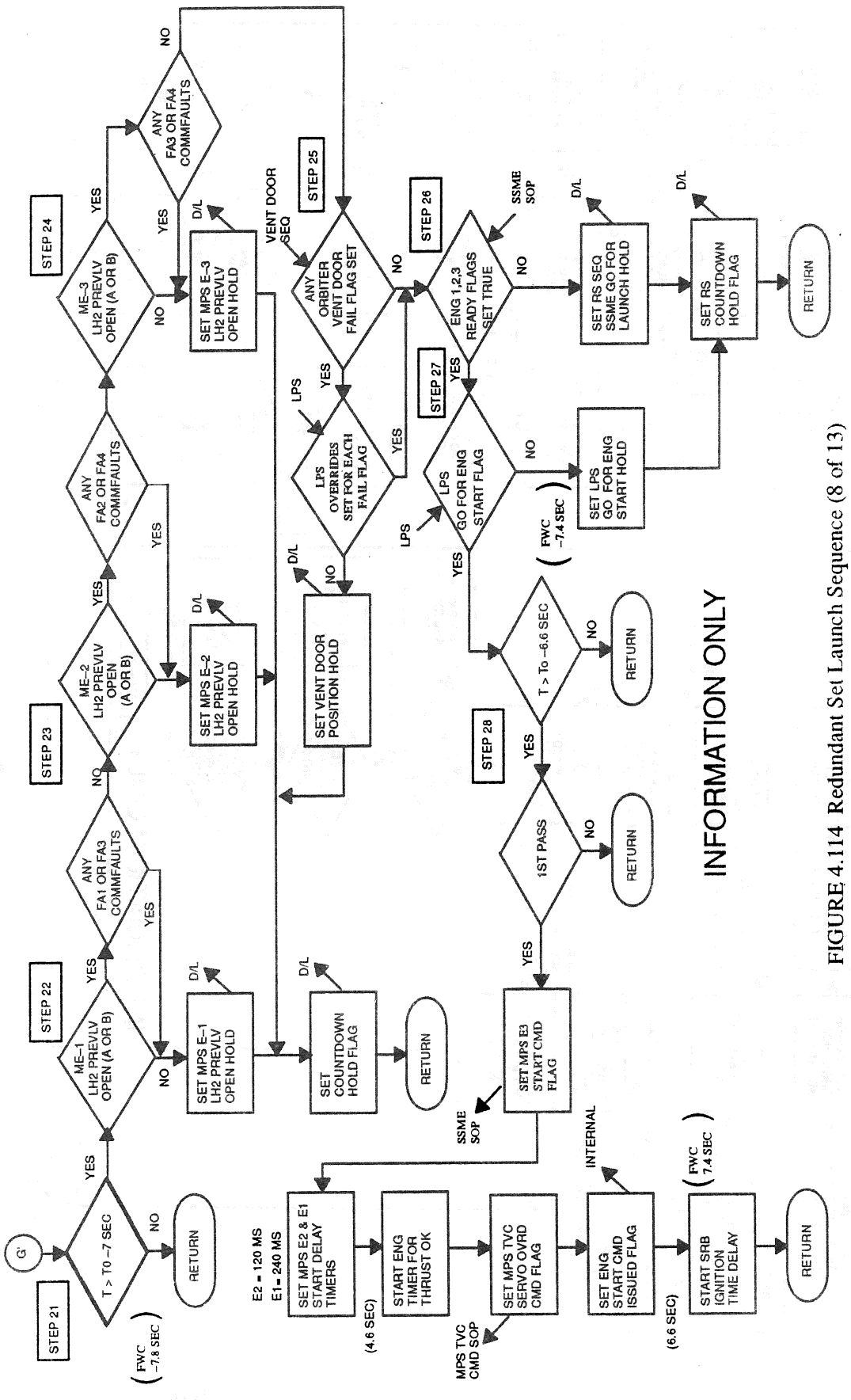

FIGURE 4.114 Redundant Set Launch Sequence (8 of 13)

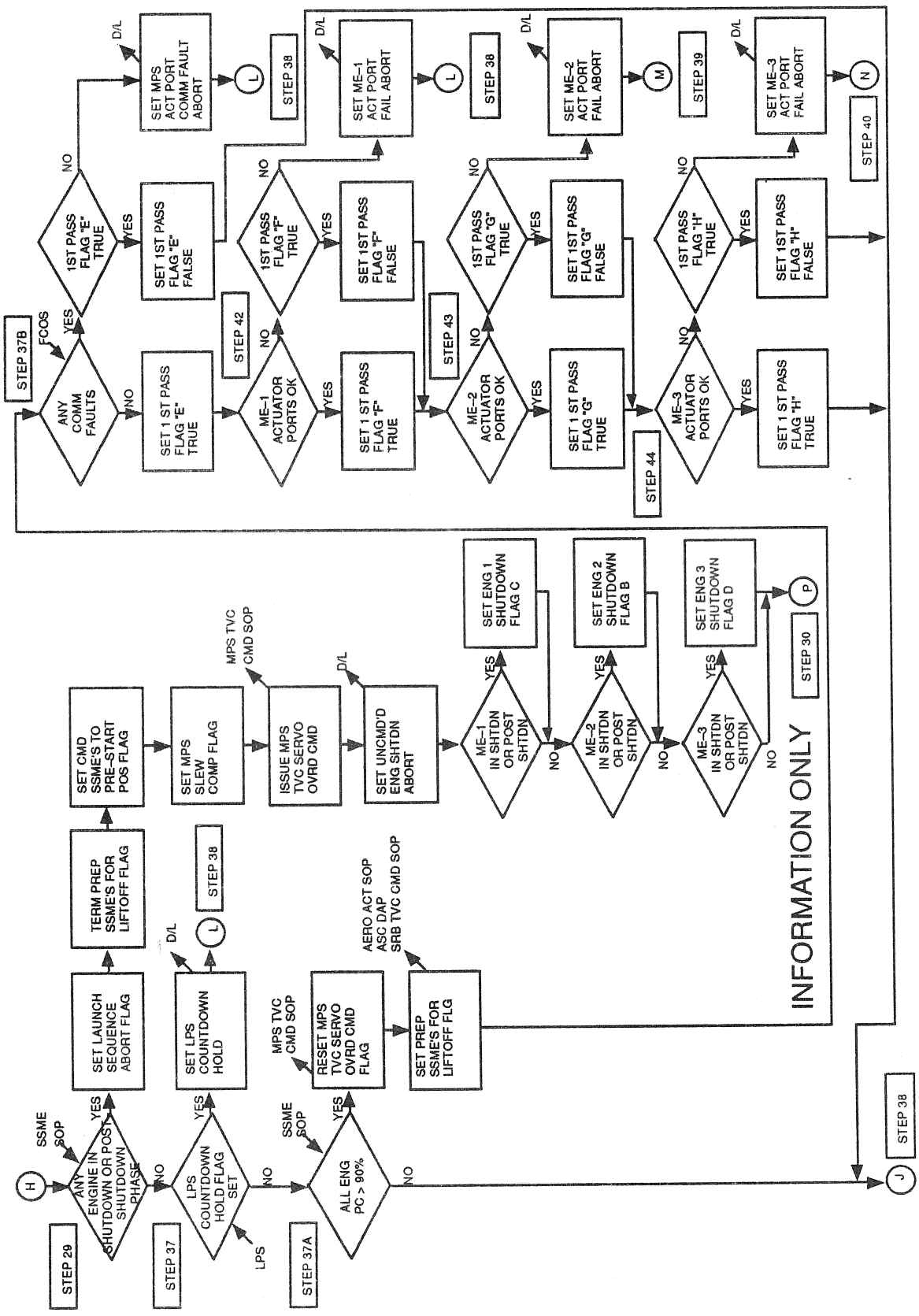

Figure 4.114. Redundant Set Launch Sequence (Sheet 9 of 13)

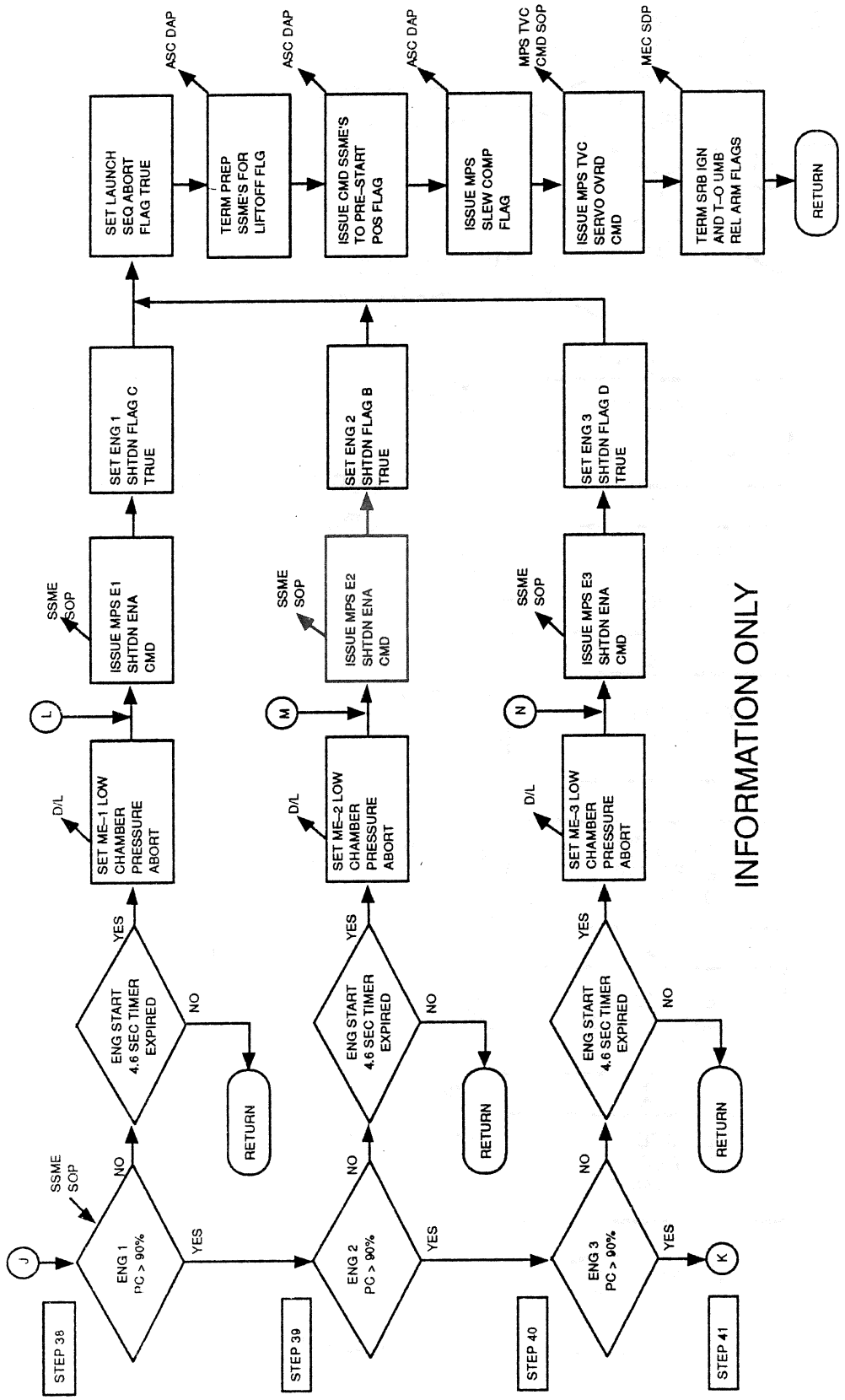

Figure 4.114. Redundant Set Launch Sequence (Sheet 10 of 13)

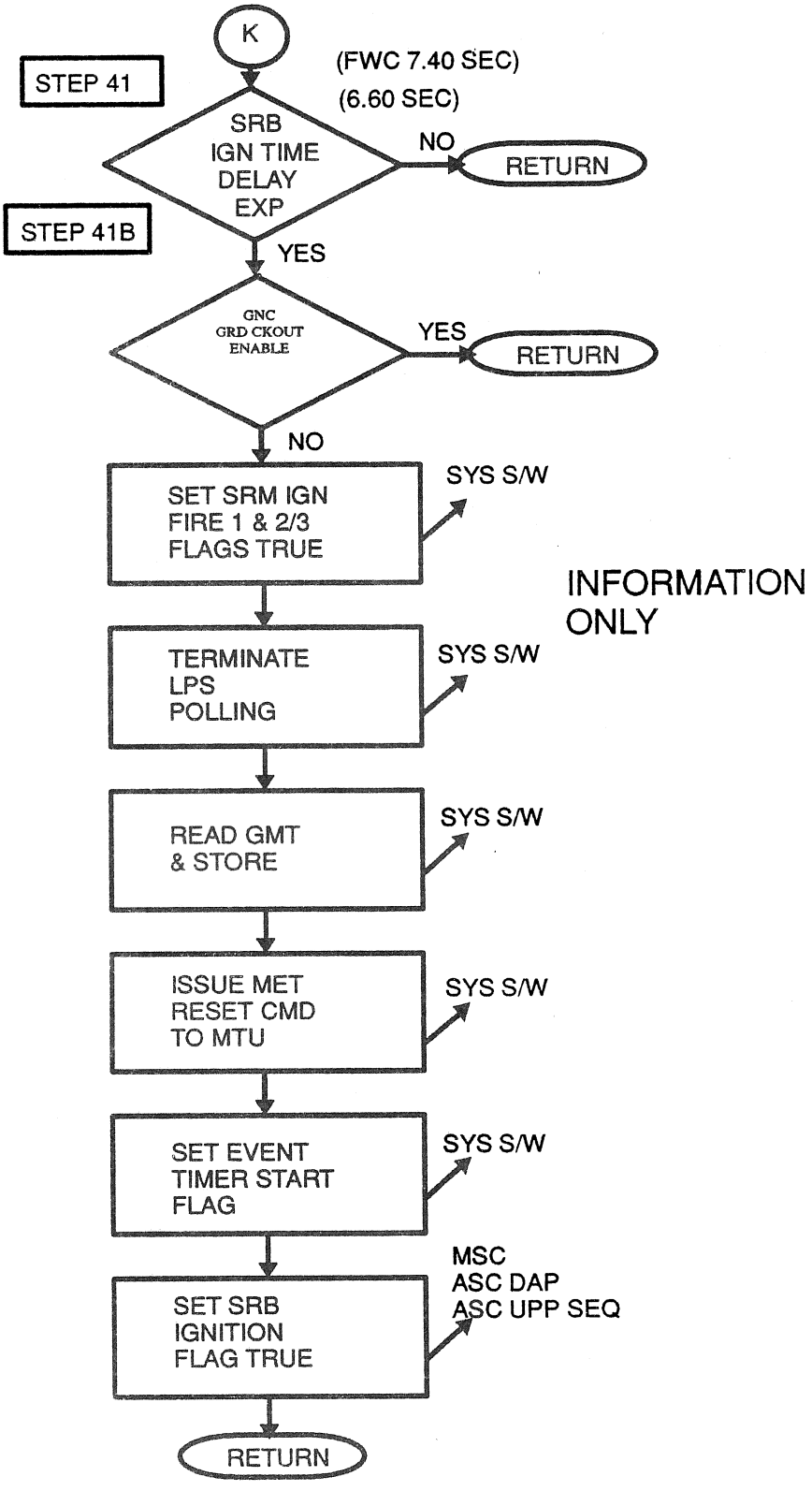

Figure 4.114 Redundant Set Launch Sequence (11 of 13)

INFORMATION ONLY

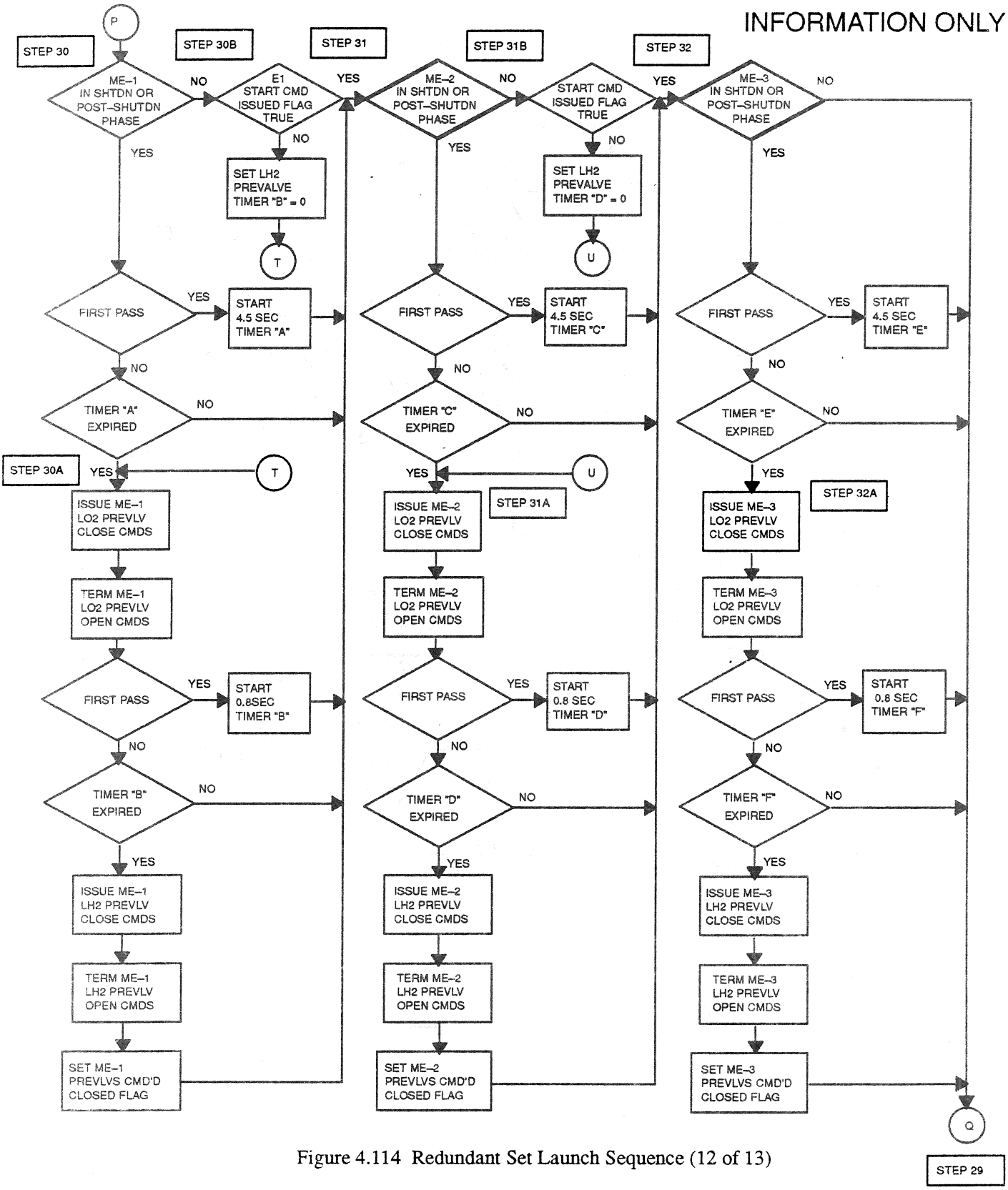

Figure 4.114 Redundant Set Launch Sequence (12 of 13)

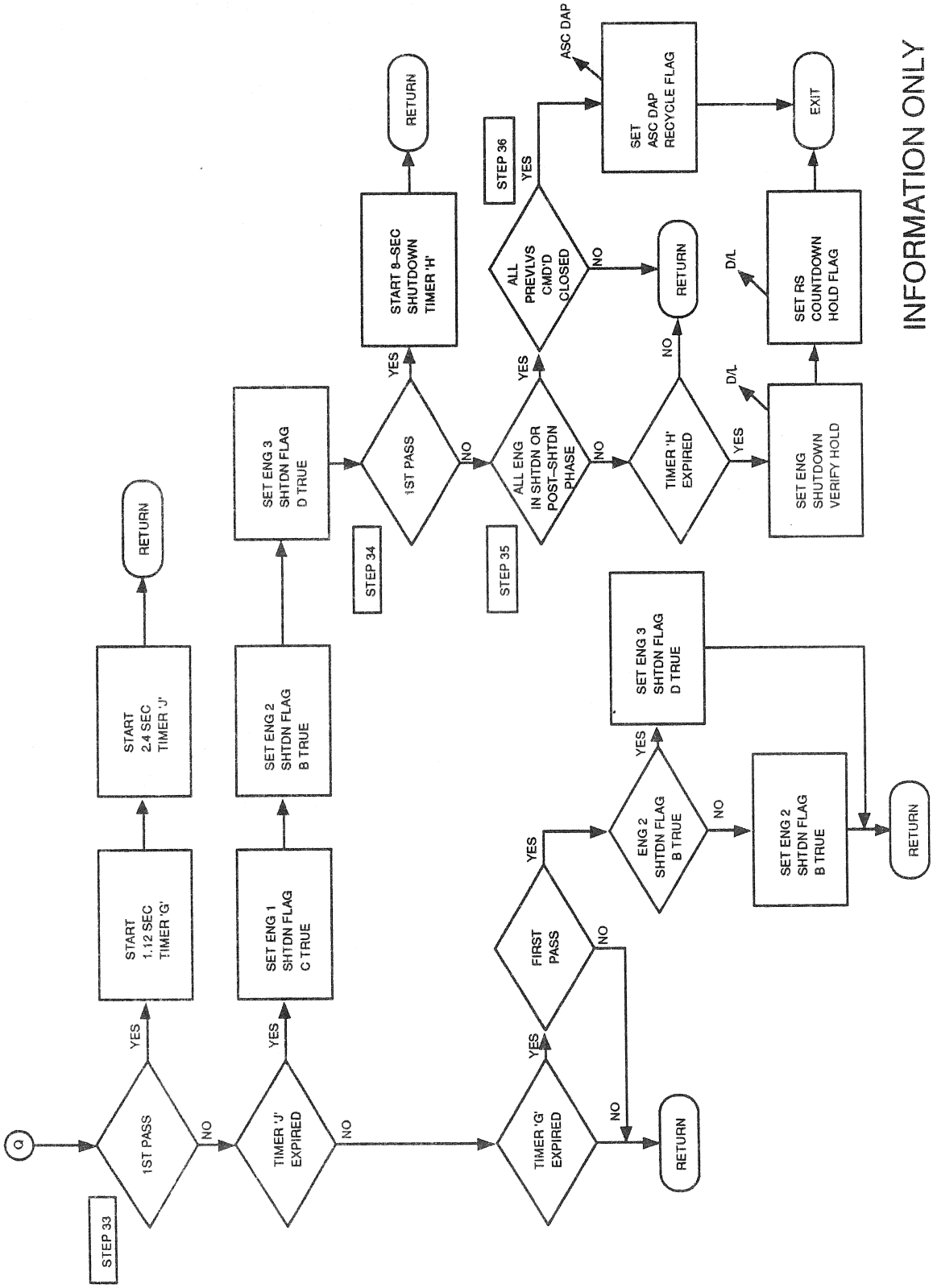

Figure 4.114. Redundant Set Launch Sequence (Sheet 13 of 13)

TABLE 4.1.1.4–1. REDUNDANT SET LAUNCH SEQUENCE (G4.114) INPUT/OUTPUT FUNCTIONAL PARAMETERS

DBFN: D3B027-F PN: VP707100049P00L INPUT FUNCTIONAL PARAMETERS FOR R/S LCH SEQ

FSSR NAME	M/S ID	NOMENCLATURE	SOURCE	UNITS	DATA TYPE	PREC	LAST CRS
CLOCK/CLOCKTIME	V91W5000C	CLOCK-COMPUTER(GMT)	FCOS	S			
ME_ELEC_LOCKUP(1)	V95X1194X	ME-1 ELECTRONIC LOCKUP MODE FLAG	SSME SOP				
ME_ELEC_LOCKUP(2)	V95X1195X	ME-2 ELECTRONIC LOCKUP MODE FLAG	SSME SOP				
ME_ELEC_LOCKUP(3)	V95X1196X	ME-3 ELECTRONIC LOCKUP MODE FLAG	SSME SOP				
ME_HYD_LOCKUP(1)	V95X1198X	ME-1 HYDRAULIC LOCKUP MODE FLAG	SSME SOP				
ME_HYD_LOCKUP(2)	V95X1199X	ME-2 HYDRAULIC LOCKUP MODE FLAG	SSME SOP				
ME_HYD_LOCKUP(3)	V95X1200X	ME-3 HYDRAULIC LOCKUP MODE FLAG	SSME SOP				
ME_LIM_EX(1)	V95X1190X	ME-1 ENGINE LIMIT EXCEEDED FLAG	SSME SOP				89672A 89157A
ME_LIM_EX(2)	V95X1191X	ME-2 ENGINE LIMIT EXCEEDED FLAG	SSME SOP				89672A 89157A
ME_LIM_EX(3)	V95X1192X	ME-3 ENGINE LIMIT EXCEEDED FLAG	SSME SOP				89672A 89157A
ME_READY(1)	V95X1182X	MPS E-1 ENG READY IND	SSME SOP				
ME_READY(2)	V95X1183X	MPS E-2 ENG READY IND	SSME SOP				
ME_READY(3)	V95X1184X	MPS E-3 ENG READY IND	SSME SOP				
MEPSTSHDN(1)	V95X1160X	MPS E1 POST-SHUTDOWN PHASE	SSME SOP				
MEPSTSHDN(2)	V95X1161X	MPS E2 POST-SHUTDOWN PHASE	SSME SOP				
MEPSTSHDN(3)	V95X1162X	MPS E3 POST-SHUTDOWN PHASE	SSME SOP				
MESHDN(1)	V95X1155X	MPS E1 SHUTDOWN PHASE	SSME SOP				
MESHDN(2)	V95X1156X	MPS E2 SHUTDOWN PHASE	SSME SOP				
MESHDN(3)	V95X1157X	MPS E3 SHUTDOWN PHASE	SSME SOP				
ME1_CH_PRESS_FDBK	V95U1186C	MPS E-1 PERCENT CH PRESS	SSME SOP	PCT			
ME2_CH_PRESS_FDBK	V95U1187C	MPS E-2 PERCENT CH PRESS	SSME SOP	PCT			
ME3_CH_PRESS_FDBK	V95U1188C	MPS E-3 PERCENT CH PRESS	SSME SOP	PCT			
R/S_AUTO_SEQ_START	V99X8803X	LPS GO FOR AUTO SEQUENCE START	LPS				89599C
RECYCLE_COUNT	V99X8830X	RECYCLE COUNT CMD FLAG	LPS				89599C
RESUME_COUNT	V99X8828X	RESUME COUNT CMD FLAG	LPS				89599C
	B55V1603C	LH VOLTAGE IGN PIC CAP A	LF IEA		AMU		
	B55V1604C	LH VOLTAGE IGN PIC CAP B	LF IEA		AMU		
	B55V2603C	RH VOLTAGE IGN PIC CAP A	RF IEA		AMU		
	B55V2604C	RH VOLTAGE IGN PIC CAP B	RF IEA		AMU		
	V41X1104X	MPS E1 LH2 PREVLV (PV4) OP IND A	HDWR		BD		89554A
	V41X1106X	MPS E1 LH2 PREVLV (PV4) OP IND B	HDWR		BD		89554A
	V41X1204X	MPS E2 LH2 PREVLV (PV5) OP IND A	HDWR		BD		89554A
	V41X1206X	MPS E2 LH2 PREVLV (PV5) OP IND B	HDWR		BD		89554A
	V41X1304X	MPS E3 LH2 PREVLV (PV6) OP IND A	HDWR		BD		89554A
	V41X1306X	MPS E3 LH2 PREVLV (PV6) OP IND B	HDWR		BD		89554A
	V41X1811X	MPS LO2 POGO RECRC 1 (PV20) OP IND	HDWR		BD		89554A
	V41X1821X	MPS LO2 POGO RECRC 2 (PV21) OP IND	HDWR		BD		89554A
	V79X1170X	MPS ENG 1 P ACTR A FAIL	ATVC 1		BD		79556D
	V79X1171X	MPS ENG 1 Y ACTR A FAIL	ATVC 1		BD		79556D
	V79X1173X	MPS ENG 1 P ACTR B FAIL	ATVC 2		BD		79556D

TABLE 4.1.1.4–1. REDUNDANT SET LAUNCH SEQUENCE (G4.114) INPUT/OUTPUT FUNCTIONAL PARAMETERS

DBFN: D3B027-F PN: VP707100049P00L INPUT FUNCTIONAL PARAMETERS FOR R/S LCH SEQ

FSSR NAME	M/S ID	NOMENCLATURE	SOURCE	UNITS	DATA TYPE	PREC	LAST CRS
	V79X1174X	MPS ENG 1 Y ACTR B FAIL	ATVC 2		BD		79556D
	V79X1176X	MPS ENG 1 P ACTR C FAIL	ATVC 3		BD		79556D
	V79X1177X	MPS ENG 1 Y ACTR C FAIL	ATVC 3		BD		79556D
	V79X1178X	MPS ENG 1 P ACTR D FAIL	ATVC 4		BD		79556D
	V79X1179X	MPS ENG 1 Y ACTR D FAIL	ATVC 4		BD		79556D
	V79X1270X	MPS ENG 2 P ACTR A FAIL	ATVC 1		BD		79556D
	V79X1271X	MPS ENG 2 Y ACTR A FAIL	ATVC 1		BD		79556D
	V79X1273X	MPS ENG 2 P ACTR B FAIL	ATVC 2		BD		79556D
	V79X1274X	MPS ENG 2 Y ACTR B FAIL	ATVC 2		BD		79556D
	V79X1276X	MPS ENG 2 P ACTR C FAIL	ATVC 3		BD		79556D
	V79X1277X	MPS ENG 2 Y ACTR C FAIL	ATVC 3		BD		79556D
	V79X1278X	MPS ENG 2 P ACTR D FAIL	ATVC 4		BD		79556D
	V79X1279X	MPS ENG 2 Y ACTR D FAIL	ATVC 4		BD		79556D
	V79X1370X	MPS ENG 3 P ACTR A FAIL	ATVC 1		BD		79556D
	V79X1371X	MPS ENG 3 Y ACTR A FAIL	ATVC 1		BD		79556D
	V79X1373X	MPS ENG 3 P ACTR B FAIL	ATVC 2		BD		79556D
	V79X1374X	MPS ENG 3 Y ACTR B FAIL	ATVC 2		BD		79556D
	V79X1376X	MPS ENG 3 P ACTR C FAIL	ATVC 3		BD		79556D
	V79X1377X	MPS ENG 3 Y ACTR C FAIL	ATVC 3		BD		79556D
	V79X1378X	MPS ENG 3 P ACTR D FAIL	ATVC 4		BD		79556D
	V79X1379X	MPS ENG 3 Y ACTR D FAIL	ATVC 4		BD		79556D
	V90J8201C	ORBITER VENT DOORS STATUS WORD	VENT CNTL SEQ		BSU		
	V91X2845X	FA1 INPUT PROM SEG3,10 STATUS(HFE)	FCOS				89991E
							89598A
	V91X2846X	FA2 INPUT PROM SEG3,10 STATUS(HFE)	FCOS				89991E
							89598A
	V91X2847X	FA3 INPUT PROM SEG3,10 STATUS(HFE)	FCOS				89991E
							89598A
	V91X2848X	FA4 INPUT PROM SEG3,10 STATUS(HFE)	FCOS				89598A
							59126H
	V91X2904X	FF1 MDM RETURN WORD BYPASS (HFE)	FCOS				
	V91X2905X	FF2 MDM RETURN WORD BYPASS (HFE)	FCOS				
	V91X2906X	FF3 MDM RETURN WORD BYPASS (HFE)	FCOS				
	V91X2907X	FF4 MDM RETURN WORD BYPASS (HFE)	FCOS				
	V91X2920X	FA1 MDM RETURN WORD BYPASS (HFE)	FCOS				
	V91X2921X	FA2 MDM RETURN WORD BYPASS (HFE)	FCOS				
	V91X2922X	FA3 MDM RETURN WORD BYPASS (HFE)	FCOS				
	V91X2923X	FA4 MDM RETURN WORD BYPASS (HFE)	FCOS				
	V93X5538X	GNC GROUND CHECKOUT ENABLE	UI		BD		90023A
	V95X1217X	ME-1 PAD DATA PATH FAIL FLAG	SSME SOP				
	V95X1218X	ME-2 PAD DATA PATH FAIL FLAG	SSME SOP				
	V95X1219X	ME-3 PAD DATA PATH FAIL FLAG	SSME SOP				
	V95X1230X	ME-1 MAJOR COMPONENT FAIL FLAG	SSME SOP				

TABLE 4.1.1.4–1. REDUNDANT SET LAUNCH SEQUENCE (G4.114) INPUT/OUTPUT FUNCTIONAL PARAMETERS

DBFN: D3B027-F PN: VP707100049P00L INPUT FUNCTIONAL PARAMETERS FOR R/S LCH SEQ

FSSR NAME	M/S ID	NOMENCLATURE	SOURCE	UNITS	DATA TYPE	PREC	LAST CRS
	V95X1231X	ME-2 MAJOR COMPONENT FAIL FLAG	SSME SOP				
	V95X1232X	ME-3 MAJOR COMPONENT FAIL FLAG	SSME SOP				
	V95X1236X	ME-1 CHANNEL FAIL FLAG	SSME SOP				
	V95X1237X	ME-2 CHANNEL FAIL FLAG	SSME SOP				
	V95X1238X	ME-3 CHANNEL FAIL FLAG	SSME SOP				
	V99W8801CA	PREDICTED GMT OF LIFTOFF	LPS				
	V99X8804X	LPS GO FOR ENGINE START FLAG	LPS				
	V99X8827X	GMTLO SET COMMAND	LPS				
	V99X8829X	LPS COUNTDOWN HOLD FLAG	LPS				
	V99X8833X	LPS BYPASS LO2 ACCUM RECIRC VLV OP	LPS				
	V99J8836CA	LPS ORBITER VENT DOORS OVRD WORD	LPS		BSU		89981A

TABLE 4.1.1.4–1. REDUNDANT SET LAUNCH SEQUENCE (G4.114) INPUT/OUTPUT FUNCTIONAL PARAMETERS

DBFN: D3B027-F PN: VP707100049P00L OUTPUT FUNCTIONAL PARAMETERS FROM R/S LCH SEQ

FSSR NAME	M/S ID	NOMENCLATURE	DESTINATION	UNITS	DATA TYPE	PREC	LAST CRS
A_D_RECYCLE_COUNT	V90X8669X	ASC DAP RECYCLE FLAG	ASC DAP				
AUTO_SEQ_IND	V90X8683X	INDICATOR EVENT 6 AUTO SEQ START	ASC DAP,SRB TVC CMD SOP, MSC				89599C
CMD_IMU_TO_INERTIAL_FLAG	V90X8411X	CMD IMU TO INERTIAL FLAG	IMU INT PROC				89599C
CONF_VENT_DOORS	V90X8375X	CONFIG VENT DOORS FOR LAUNCH CMD	VENT CNTL SEQ				89599C
HOLD_COUNT	V90X8667X	RS COUNTDOWN HOLD FLAG	TLM		BD		89599C
K_CMD	V90U1948CD	COMMANDED SSME THROTTLE SETTING	SSME SOP	PCT			
M_RSET_USER	V90X8258XC	MEC 1&2 MASTER RESET FLAG	MEC SOP				89456A
MESHDNCMD(1)	V90X8370XA	MPS E1 SHUTDOWN CMD	SSME SOP				
MESHDNCMD(2)	V90X8371XA	MPS E2 SHUTDOWN CMD	SSME SOP				
MESHDNCMD(3)	V90X8372XA	MPS E3 SHUTDOWN CMD	SSME SOP				
MESHDNENA(1)	V90X8367XA	MPS E1 SHUTDOWN ENABLE CMD	SSME SOP				
MESHDNENA(2)	V90X8368XA	MPS E2 SHUTDOWN ENABLE CMD	SSME SOP				
MESHDNENA(3)	V90X8369XA	MPS E3 SHUTDOWN ENABLE CMD	SSME SOP				
MESTRTCMD(1)	V90X8358X	MPS E1 START CMD FLAG	SSME SOP				
MESTRTCMD(2)	V90X8359X	MPS E2 START CMD FLAG	SSME SOP				
MESTRTCMD(3)	V90X8360X	MPS E3 START CMD FLAG	SSME SOP,SRB TVC CMD SOP				
MESTRTENA	V90X8361X	MPS START ENABLE CMD FLAG	SSME SOP				
MPS_OVRD_CMD	V90X8374XA	MPS TVC SERVO OVRD CMD	MPS TVC CMD SOP				
MPS_SLEW_COMPLETE	V90X8400XA	MPS SLEW CHECK COMPLETE FLAG	ASC DAP				89599C
NAV_INIT_FLAG	V90X8414X	NAV INIT FLAG	ASC UPP SEQ,ASC NAV SEQ,TLM		BD		89599C
PREP_SSMES	V90X8373X	PREP SSME'S FOR LIFTOFF FLAG	ASC DAP,AERO ACT SOP,TLM		BD		89599C
RETURN_SSME_TO_START_POS	V90X8412X	CMD SSME'S TO PRE-START POS FLAG	ASC DAP,TLM		BD		
SRB_IGNITION_CMD	V90X8377X	SRB IGNITION CMD FLAG	ASC DAP,ASC UPP SEQ,MSC, SSME SOP,TLM		BD		
SRM_IGN_ARM	V90X8404X	SRM IGN ARM FLAG	MEC SOP				89456A
SRM_IGN_FIRE1	V90X8405X	SRM IGN FIRE 1 FLAG	MEC SOP				89456A
SRM_IGN_FIRE2/3	V90X8699X	SRM IGN FIRE 2/3 FLAG	MEC SOP,TLM		BD		89456A
TO_UMB_ARM	V90X8407X	T-0 UMB RELEASE ARM FLAG	MEC SOP				89456A
TO_UMB_FIRE 2/3	V90X8698X	T-0 UMB RELEASE FIRE 2/3 FLAG	MEC SOP				89599C
							89456A
TO_UMB_FIRE1	V90X8408X	T-0 UMB RELEASE FIRE 1 FLAG	MEC SOP				89456A
	V41K1119XC	MPS E1 LH2 PREVLV (PV4) OP CMD A	PCA A1				89554A
	V41K1120XC	MPS E1 LH2 PREVLV (PV4) OP CMD B	LCA A1				89554A
	V41K1121XC	MPS E1 LH2 PREVLV (PV4) OP CMD C	LCA A2				89554A
	V41K1122XC	MPS E1 LH2 PREVLV (PV4) CL CMD A	PCA A1				89554A
	V41K1123XC	MPS E1 LH2 PREVLV (PV4) CL CMD B	LCA A1				89554A
	V41K1124XC	MPS E1 LH2 PREVLV (PV4) CL CMD C	LCA A2				89554A
	V41K1136XC	MPS E1 LO2 PREVLV (PV1) OP CMD A	PCA A1				89554A
	V41K1137XC	MPS E1 LO2 PREVLV (PV1) OP CMD B	LCA A1				89554A
	V41K1138XC	MPS E1 LO2 PREVLV (PV1) OP CMD C	LCA A2				89554A
	V41K1139XC	MPS E1 LO2 PREVLV (PV1) CL CMD A	PCA A1				89554A
	V41K1140XC	MPS E1 LO2 PREVLV (PV1) CL CMD B	LCA A1				89554A

TABLE 4.1.1.4–1. REDUNDANT SET LAUNCH SEQUENCE (G4.114) INPUT/OUTPUT FUNCTIONAL PARAMETERS

DBFN: D3B027-F PN: VP707100049P00L OUTPUT FUNCTIONAL PARAMETERS FROM R/S LCH SEQ

FSSR NAME	M/S ID	NOMENCLATURE	DESTINATION	UNITS	DATA TYPE	PREC	LAST CRS
	V41K1141XC	MPS E1 LO2 PREVLV (PV1) CL CMD C	LCA A2				89554A
	V41K1142XB	MPS E1 LO2 PREVLV (PV1) CL CMD D	HDWR				89554A
	V41K1143XB	MPS E1 LO2 PREVLV (PV1) OP CMD D	HDWR				89554A
	V41K1168XC	MPS E1 HE INTCN OUT(LV60) OP CMD A	HDWR				89554A
							79997A
	V41K1219XC	MPS E2 LH2 PREVLV (PV5) OP CMD A	PCA A2				89554A
	V41K1220XC	MPS E2 LH2 PREVLV (PV5) OP CMD B	LCA A2				89554A
	V41K1221XC	MPS E2 LH2 PREVLV (PV5) OP CMD C	LCA A3				89554A
	V41K1222XC	MPS E2 LH2 PREVLV (PV5) CL CMD A	PCA A2				89554A
	V41K1223XC	MPS E2 LH2 PREVLV (PV5) CL CMD B	LCA A2				89554A
	V41K1224XC	MPS E2 LH2 PREVLV (PV5) CL CMD C	LCA A3				89554A
	V41K1236XC	MPS E2 LO2 PREVLV (PV2) OP CMD A	PCA A2				89554A
	V41K1237XC	MPS E2 LO2 PREVLV (PV2) OP CMD B	LCA A2				89554A
	V41K1238XC	MPS E2 LO2 PREVLV (PV2) OP CMD C	LCA A3				89554A
	V41K1239XC	MPS E2 LO2 PREVLV (PV2) CL CMD A	PCA A2				89554A
	V41K1240XC	MPS E2 LO2 PREVLV (PV2) CL CMD B	LCA A2				89554A
	V41K1241XC	MPS E2 LO2 PREVLV (PV2) CL CMD C	LCA A3				89554A
	V41K1242XB	MPS E2 LO2 PREVLV (PV2) CL CMD D	HDWR				89554A
	V41K1243XB	MPS E2 LO2 PREVLV (PV2) OP CMD D	HDWR				89554A
	V41K1262XC	MPS E2 HE INTCN IN (LV61) OP CMD A	HDWR				89554A
							79997A
	V41K1263XC	MPS E2 HE INTCN IN (LV61) OP CMD B	HDWR				89554A
							79997A
	V41K1319XC	MPS E3 LH2 PREVLV (PV6) OP CMD A	PCA A3				89554A
	V41K1320XC	MPS E3 LH2 PREVLV (PV6) OP CMD B	LCA A3				89554A
	V41K1321XC	MPS E3 LH2 PREVLV (PV6) OP CMD C	LCA A1				89554A
	V41K1322XC	MPS E3 LH2 PREVLV (PV6) CL CMD A	PCA A3				89554A
	V41K1323XC	MPS E3 LH2 PREVLV (PV6) CL CMD B	LCA A3				89554A
	V41K1324XC	MPS E3 LH2 PREVLV (PV6) CL CMD C	LCA A1				89554A
	V41K1336XC	MPS E3 LO2 PREVLV (PV3) OP CMD A	PCA A3				89554A
	V41K1337XC	MPS E3 LO2 PREVLV (PV3) OP CMD B	LCA A3				89554A
	V41K1338XC	MPS E3 LO2 PREVLV (PV3) OP CMD C	LCA A1				89554A
	V41K1339XC	MPS E3 LO2 PREVLV (PV3) CL CMD A	PCA A3				89554A
	V41K1340XC	MPS E3 LO2 PREVLV (PV3) CL CMD B	LCA A3				89554A
	V41K1341XC	MPS E3 LO2 PREVLV (PV3) CL CMD C	LCA A1				89554A
	V41K1342XB	MPS E3 LO2 PREVLV (PV3) CL CMD D	HDWR				89554A
	V41K1343XB	MPS E3 LO2 PREVLV (PV3) OP CMD D	HDWR				89554A
	V41K1368XC	MPS E3 HE INTCN OUT(LV64) OP CMD A	HDWR				89554A
							79997A
	V41K1421XB	MPS LH2 RECIRC DISC VLV OPEN CMD	HDWR		BD		89313A
	V41K1422XC	MPS LH2 RECIRC DISC VLV CLOSE CMD	HDWR		BD		89313A
	V41K1584XA	MPS LO2 OVBD B/V (PV19) CL CMD A	PCA A3				89554A
	V41K1585XA	MPS LO2 OVBD B/V (PV19) CL CMD B	LCA A3				89554A

TABLE 4.1.1.4–1. REDUNDANT SET LAUNCH SEQUENCE (G4.114) INPUT/OUTPUT FUNCTIONAL PARAMETERS

DBFN: D3B027-F PN: VP707100049P00L OUTPUT FUNCTIONAL PARAMETERS FROM R/S LCH SEQ

FSSR NAME	M/S ID	NOMENCLATURE	DESTINATION	UNITS	DATA TYPE	PREC	LAST CRS
	V41K1586XA	MPS LO2 OVBD B/V (PV19) CL CMD C	LCA A2				89554A
	V41K1613XD	MPS REG HE XOVER VLV (LV10) OP CMD	HDWR				89554A
							79997A
	V41K1815X	MPS LO2 POGO RECRC 1(PV20)CL CMD A	LCA A1		BD		89554A
	V41K1816X	MPS LO2 POGO RECRC 1(PV20)CL CMD B	LCA A1		BD		89554A
	V41K1825X	MPS LO2 POGO RECRC 2(PV21)CL CMD A	LCA A2		BD		89554A
	V41K1826X	MPS LO2 POGO RECRC 2(PV21)CL CMD B	LCA A2		BD		89554A
	V90X8378X	TERMINATE LPS POLLING FLAG	SYS S/W				
	V90W8380C	COUNTDOWN TIME	TLM	S	SPL		89598A
	V90X8382X	LAUNCH SEQUENCE ABORT FLAG	TLM		BD		89819
	V90X8383X	LH IGN PIC CAP A HOLD	TLM		BD		
	V90X8384X	LH IGN PIC CAP B HOLD	TLM		BD		
	V90X8385X	RH IGN PIC CAP A HOLD	TLM		BD		
	V90X8386X	RH IGN PIC CAP B HOLD	TLM		BD		
	V90X8389X	ENGINE SHUTDOWN VERIFICATION HOLD	TLM		BD		
	V90X8390X	MPS LH2 OUTBD FILL VLV HOLD	TLM		BD		89355C
	V90X8391X	MPS LOX OUTBD FILL VLV HOLD	TLM		BD		89355C
	V90X8392X	MPS LOX ACC RECIRC VLV HOLD	TLM		BD		
	V90X8393X	LPS GO FOR AUTO SEQ START HOLD	TLM		BD		
	V90X8394X	LPS GO FOR ENGINE START HOLD	TLM		BD		
	V90X8395X	R/S SEQ SSME GO FOR LAUNCH HOLD	TLM		BD		
	V90X8396X	MPS E-1 LH2 PREVLV OPEN HOLD	TLM		BD		
	V90X8397X	MPS E-2 LH2 PREVLV OPEN HOLD	TLM		BD		
	V90X8398X	MPS E-3 LH2 PREVLV OPEN HOLD	TLM		BD		
	V90X8401X	MODE CONTROL MET RESET CMD	SYS S/W				
	V90X8402X	READ GMT & STORE FLAG	SYS S/W				
	V90X8403XA	EVENT TIMER START FLAG	SYS S/W				
	V90X8668X	SSME SOP RECYCLE FLAG	SSME SOP				
	V90X8670X	ME-1 PAD DATA PATH FAIL HOLD	TLM		BD		
	V90X8671X	ME-2 PAD DATA PATH FAIL HOLD	TLM		BD		
	V90X8672X	ME-3 PAD DATA PATH FAIL HOLD	TLM		BD		
	V90X8679X	ME-1 CONTROL FAIL HOLD	TLM		BD		
	V90X8680X	ME-2 CONTROL FAIL HOLD	TLM		BD		
	V90X8681X	ME-3 CONTROL FAIL HOLD	TLM		BD		
	V90X8767X	FLIGHT CRITICAL MDM HOLD/ABORT	TLM		BD		
	V90X8768X	LPS COUNTDOWN HOLD	TLM		BD		
	V90X8769X	MPS VALVE POS COMMFAULT HOLD	TLM		BD		
	V90X8770X	VENT DOOR POSITION HOLD	TLM		BD		
	V90X8771X	UNCOMMANDED ENGINE SHUTDOWN ABORT	TLM		BD		
	V90X8772X	MPS ACT PORT COMMFAULT ABORT	TLM		BD		
	V90X8773X	ME-1 LOW CHAMBER PRESSURE ABORT	TLM		BD		
	V90X8774X	ME-2 LOW CHAMBER PRESSURE ABORT	TLM		BD		
	V90X8775X	ME-3 LOW CHAMBER PRESSURE ABORT	TLM		BD		

TABLE 4.1.1.4–1. REDUNDANT SET LAUNCH SEQUENCE (G4.114) INPUT/OUTPUT FUNCTIONAL PARAMETERS

DBFN: D3B027-F PN: VP707100049P00L OUTPUT FUNCTIONAL PARAMETERS FROM R/S LCH SEQ

FSSR NAME	M/S ID	NOMENCLATURE	DESTINATION	UNITS	DATA TYPE	PREC	LAST CRS
	V90X8776X	ME-1 ACT PORT FAIL ABORT	TLM		BD		
	V90X8777X	ME-2 ACT PORT FAIL ABORT	TLM		BD		
	V90X8778X	ME-3 ACT PORT FAIL ABORT	TLM		BD		
	V99W8801CB	PREDICTED GMT OF LIFTOFF	TLM				
	V99J8836CB	LPS ORBITER VENT DOORS OVRD WORD	TLM		BSU		89981A

TABLE 4.1.1.4–2. REDUNDANT SET LAUNCH SEQUENCE PROCESSING (G4.114) I–LOADS

DBFN:0484

FSSR NAME	MSID	ENG UNIT	DT	PR	D	S	PR	FCTN	CAT
ALL_ENG_PERCENT_CHB_PRS_CHK	V97U9713C	PCT	F	S	D	P	G4.114		ZSZ7
AUTO_RECYCLE_T	V97U9705C	SEC	F	S	D	P	G4.114		ZSZ7
CHK_MPS_VLVS_POS_T	V97U9709C	SEC	F	S	D	P	G4.114		QSA0
CHK_PREVLVS_OPN_T	V97U9711C	SEC	F	S	D	P	G4.114		QSA0
CLSE_LO2_OVBD_BV_T	V97U9710C	SEC	F	S	D	P	G4.114		QSA0
CONFIG_VNT_DRS_FOR_LCH_T	V97U9708C	SEC	F	S	D	P	G4.114		ZFZ1
ENG_PERCENT_CHB_PRS_FOR_GO	V97U9714C	PCT	F	S	D	P	G4.114		ZFZ1
ENG_TIMER_FOR_THRUST_OK	V97U9716C	SEC	F	S	D	P	G4.114		ZFZ1
IMU_TO_INERTIAL_T	V97U9704C	SEC	F	S	D	P	G4.114		ZSZ7
LPS_GO_FOR_AUTO_SEQ_T	V97U9700C	SEC	F	S	D	P	G4.114		ZSZ7
ME1_LH2_PREVLV_CLSE_T_DELAY	V97U9727C	SEC	F	D	D	P	G4.114		ZSZ7
ME1_LOX_PREVLV_CLSE_DELAY	V97U9720C	SEC	F	S	D	P	G4.114		ZSZ7
ME2_LH2_PREVLV_CLSE_T_DELAY	V97U9728C	SEC	F	D	D	P	G4.114		ZSZ7
ME2_LOX_PREVLV_CLSE_DELAY	V97U9721C	SEC	F	S	D	P	G4.114		ZSZ7
ME3_LH2_PREVLV_CLSE_T_DELAY	V97U9729C	SEC	F	D	D	P	G4.114		ZSZ7
ME3_LOX_PREVLV_CLSE_DELAY	V97U9722C	SEC	F	S	D	P	G4.114		ZSZ7
NAV_INIT_T	V97U9707C	SEC	F	S	D	P	G4.114		ZSZ7
OPN_LO2_ACC_RECIRC_VLV_T	V97U9706C	SEC	F	S	D	P	G4.114		QSA0
SRB_IGN_ARM_T	V97U9701C	SEC	F	S	D	P	G4.114		QSA0
SRB_IGN_PIC_LEVEL	V97U9853C	COUNTS	I	S	D	P	G4.114		ZFZ1
SRB_IGN_TIME_DELAY	V97U9726C	SEC	F	S	D	P	G4.114		QSA0
SRB_PIC_VOLTS_CHK_T	V97U9702C	SEC	F	S	D	P	G4.114		QSA0
START_SSMES_T	V97U9712C	SEC	F	S	D	P	G4.114		QSA0

TABLE 4.1.1.4–2. REDUNDANT SET LAUNCH SEQUENCE PROCESSING (G4.114) I–LOADS

DBFN:0484

FSSR NAME	MSID	ENG UNIT	DT	PR	D	S	PR	FCTN	CAT
VERIFY_ALL_ENG_SHTDN_TIMER	V97U9719C	SEC	F	S	D	P	G4.114		ZSZ7

TABLE 4.1.1.4–3. REDUNDANT SET LAUNCH SEQUENCE PROCESSING (G4.114) K–LOADS

DBFN:0558

FSSR NAME DESCRIPTION	MSID	MC KLOAD VALUE	ENG UNIT	DT PR S PR FCTN	LAST CR EQTN MSID
NO REQUIREMENTS					

TABLE 4.1.1.4–4. REDUNDANT SET LAUNCH SEQUENCE PROCESSING (G4.114) CONSTANTS

DBFN:0558

FSSR NAME DESCRIPTION	MSID	MC	CONSTANT VALUE	ENG UNIT	DT	PR	S	PR FCTN	LAST CR
TIMER_G_SHTDN_TIME_DELAY TIMER "G" SHTDN TIME DELAY	V97U6242C		+1.12 E+00	SEC	F	D	P	G4.114	90374
TIMER_J_SHTDN_TIME_DELAY TIMER "J" SHTDN TIME DELAY	V97U6243C		+2.40 E+00	SEC	F	D	P	G4.114	90374

THIS PAGE INTENTIONALLY LEFT BLANK

4.1.2 MPS Dedicated Drive Sequence (4.222)

4.1.2.1 Introduction

The main propulsion system (MPS) dedicated display drive sequence is used during prelaunch and ascent to monitor certain MPS data and drive the appropriate MPS dedicated displays. The sequence is initiated at the transition to OPS 1 and runs continuously until structural separation of the external tank (ET). The sequence provides outputs for driving the MPS chamber pressure (Pc) meter and the MPS status lights for each SSME. In addition, the sequence issues the prevalve close inhibit commands when the chamber pressure for each engine reaches the appropriate level during engine start. Likewise, these commands are removed at the proper level during shutdown of each main engine. The prevalve close inhibit commands are issued through flight-critical MDM's to load control assemblies, which prevent closure of the prevalves any time the chamber pressure is above a certain level.

4.1.2.2 Overview

The MPS dedicated display drive sequence monitors the SSME status via SSME SOP flags for each engine; and, if an engine limit is exceeded or an engine enters the shutdown phase, it will turn on the red status light for that engine. It also monitors for indication of an electronic lockup, hydraulic lockup, flight data path fail, or the command path fail. Any one of these will turn on the amber status light for that engine. After main engine cutoff and ET separation, the red and amber status lights for all engines are commanded off.

The sequence also monitors the averaged chamber pressure data from each SSME via the SSME SOP and drives the dedicated meters. In addition, the sequence issues the prevalve close inhibit Commands A, B, C for each SSME prevalve when that engine reaches a particular percent thrust. Likewise, these commands are removed when the pressure decreases below that level during SSME shutdown and tail-off, or after MECO COMMAND. When the loss of valid data from an engine occurs, the SSME SOP sets the flight data path fail flag, and the prevalve close inhibit commands are removed. The chamber pressure (Pc) meter is also driven to zero if the flight data path fail flag is set.

4.1.2.3 Detailed Requirements

Step 1 – ET Structural Separation Command Check. This step monitors for a flag from the ET separation sequence, which indicates that structural separation commands have been issued. When the flag is set, all of the MPS red and amber status lights are commanded off.

Monitor the following

(a) ET SEPARATION CMD FLAG — V90X8250X

If (a) = false, proceed to Step 2.

If (a) = true, terminate the following commands and then terminate this sequence:

(1)	MPS E-1 STATUS/RED LITE ON	V72X0030X
(2)	MPS E-1 STATUS/AMBER LITE ON	V72X0035X
(3)	MPS E-2 STATUS/RED LITE ON	V72X0031X
(4)	MPS E-2 STATUS/AMBER LITE ON	V72X0036X
(5)	MPS E-3 STATUS/RED LITE ON	V72X0032X
(6)	MPS E-3 STATUS/AMBER LITE ON	V72X0037X

Step 2 – ME-1 Red Status Light Control. This step monitors the ME-1 engine status; and if the engine limit is exceeded or if the engine enters shutdown, then the red status light is commanded on.

Monitor the following:

(a)	ME-1 ENGINE LIMIT EXCEEDED FLAG	V95X1190X
(b)	MPS E-1 SHUTDOWN PHASE	V95X1155X
(c)	MPS E-1 POSTSHUTDOWN PHASE	V95X1160X

If neither (a) nor (b) nor (c) = true, then terminate output (1) below and proceed to Step 3.

If either (a) or (b) or (c) = true, then issue the following output and proceed to Step 3.

(l)	MPS E-1 STATUS/RED LITE ON	V72X0030X

Step 3 – ME-1 Amber Status Light Control. This step monitors the ME-1 engine status via flags from the SSME SOP; and if either electronic lockup or hydraulic lockup mode is indicated or if the engine data path or command path is lost, then the amber status light is turned on.

Monitor the following:

(a)	ME-1 ELECTRONIC LOCKUP MODE FLAG	V95X1194X
(b)	ME-1 HYDRAULIC LOCKUP MODE FLAG	V95X1198X
(c)	ME-1 FLIGHT DATA PATH FAIL FLAG	V95X1150X
(d)	ME-1 CMD PATH FAIL FLAG	V95X1202X

If neither (a) nor (b) nor (c) nor (d) = true, terminate output (1) below and proceed to Step 4.

If either (a) or (b) or (c) or (d) = true, then issue the following output and proceed to Step 4.

(1)	MPS E-1 STATUS/AMBER LITE ON	V72X0035X

Step 4 – ME-2 Red Status Light Control. This step monitors the ME-2 engine status, and if the engine limit is exceeded or if the engine enters shutdown, then the red status light is commanded on.

Monitor the following:

(a)	ME-2 ENGINE LIMIT EXCEEDED FLAG	V95X1191X
(b)	MPS E-2 SHUTDOWN PHASE	V95X1156X
(c)	MPS E-2 POST-SHUTDOWN PHASE	V95X1161X

If neither (a) nor (b) nor (c) a true, terminate output (1) below and then proceed to Step 5.

If either (a) or (b) or (c) = true, then issue the following output and proceed to Step 5.

(1)	MPS E-2 STATUS/RED LITE ON	V72X0031X

Step 5 – ME-2 Amber Status Light Control. This step monitors the ME-2 engine status via flags from the SSME SOP; and if either electronic lockup or hydraulic lockup mode is indicated or if the engine data path or command path is lost, then the amber status light is turned on.

Monitor the following:

(a)	ME-2 ELECTRONIC LOCKUP MODE FLAG	V95X1195X
(b)	ME-2 HYDRAULIC LOCKUP MODE FLAG	V95X1199X
(c)	ME-2 FLIGHT DATA PATH FAIL FLAG	V95X1151X
(d)	ME-2 CMD PATH FAIL FLAG	V95X1203X

If neither (a) nor (b) nor (c) nor (d) = true, terminate output (1) below and proceed to Step 6.

If either (a) or (b) or (c) or (d) = true, then issue the following output and proceed to Step 6.

(1)	MPS E-2 STATUS/AMBER LITE ON	V72X0036X

Step 6 – ME-3 Red Status Light Control. This step monitors the ME-3 engine status, and if the engine limit is exceeded or if the engine enters shutdown, then the red status light is commanded on.

Monitor the following:

(a)	ME-3 ENGINE LIMIT EXCEEDED FLAG	V95X1192X
(b)	MPS E-3 SHUTDOWN PHASE	V95X1157X
(c)	MPS E-3 POST-SHUTDOWN PHASE	V95X1162X

If neither (a) nor (b) nor (c) = true, terminate output (1) below and then proceed to Step 7.

If either (a) or (b) or (c) = true, then issue the following output and proceed to Step 7.

(1)	MPS E-3 STATUS/RED LITE ON	V72X0032X

Step 7 – ME-3 Amber Status Light Control. This step monitors the ME-3 engine status via flags from the SSME SOP; and if either electronic lockup or hydraulic lockup mode is indicated or if the engine data path or command path is lost, then the amber status light is turned on.

Monitor the following:

(a)	ME-3 ELECTRONIC LOCKUP MODE FLAG	V95X1196X
(b)	ME-3 HYDRAULIC LOCKUP MODE FLAG	V95X1200X
(c)	ME-3 FLIGHT DATA PATH FAIL FLAG	V95X1152X
(d)	ME-3 CMD PATH FAIL FLAG	V95X1204X

If neither (a) nor (b) nor (c) nor (d) = true, terminate output (1) below and proceed to Step 8.

If either (a) or (b) or (c) or (d) = true, then issue the following output and proceed to Step 8.

(1)	MPS E-3 STATUS/AMBER LITE ON	V72X0037X

Step 8 – ME-1 Data Path Fail Check. This step monitors the ME-1 FLT DATA PATH FAIL FLAG from the SSME SOP, and if set, the ME-1 prevalve close inhibit commands are removed and the ME-1 chamber pressure (Pc) meter is driven to zero scale.

Monitor the following:

(a)	ME-1 FLIGHT DATA PATH FAIL FLAG	V95X1150X

If (a) = false, then proceed to Step 9.

If (a) = true, then terminate the following commands:

(I)	MPS E-1 PVLV CLOSE INH CMD A	V41K1125X
(2)	MPS E-1 PVLV CLOSE INH CMD B	V41K1126X
(3)	MPS E-1 PVLV CLOSE INH CMD C	V41K1127X

and drive the Pc meter to zero scale (0 Vdc) with the following output:

(4)	MPS E-1 MAIN CHAMBER-PR/CMPT	V72P0040C

Then proceed to Step 11.

Step 9 – Normal Control of ME-1 Prevalve Close Inhibit Commands. This step monitors ME-1 main chamber pressure in percent via the SSME SOP and at the appropriate level will either issue or remove the prevalve close inhibit commands for Engine 1.

Monitor the following:

(a)	MPS E-1 PERCENT CH PRESS	V95U1186C

If (a) is equal to or greater than 30 percent, then issue the following outputs and proceed to Step 10.

(1)	MPS E-1 PVLV CLOSE INH CMD A	V41K1125X
(2)	MPS E-1 PVLV CLOSE INH CMD B	V41K1126X
(3)	MPS E-1 PVLV CLOSE INH CMD C	V41K1127X

If (a) is less than 30 percent, then terminate outputs (1), (2), and (3), and proceed to Step 10.

Step 10 – ME-1 Chamber Pressure Meter Drive. This step provides the output to the ME-1 chamber pressure (Pc) meter. The SSME SOP converts ME-1 main chamber pressure to percent and provides this as an input to this sequence. This step scales the percent input to 0 to 5 Vdc and outputs to the Pc meter.

Monitor the following:

(a)	MPS E-1 PERCENT CH PRESS	V95U1186C

Output (a) in volts (0 to 115 percent scaled to 0 to 5 Vdc) as follows:

(1)	MPS E-1 MAIN CHAMBER-PR/CMPT	V72P0040C

Proceed to Step 11.

Step 11 – ME-2 Data Path Fail Check. This step monitors the ME –2 data path fail flag from the SSME SOP, and if set, the ME –2 prevalve close inhibit commands are removed and the ME-2 chamber pressure (Pc) meter is driven to zero scale.

Monitor the following:

(a)	ME-2 FLT DATA PATH FAIL FLAG	V95X1151X

If (a) = false, then proceed to Step 12.

If (a) = true, then terminate the following commands:

(1)	MPS E-2 PVLV CLOSE INH CMD A	V41K1225X
(2)	MPS E-2 PVLV CLOSE INH CMD B	V41K1226X
(3)	MPS E-2 PLVL CLOSE INH CMD C	V41K1227X

and drive the Pc meter to zero scale (0 Vdc) with the following output:

(4)	MPS E-2 MAIN CHAMBER-PR/CMPT	V72P0041C

Then proceed to Step 14.

Step 12 – Normal Control of ME-2 Main Stage Commands. This step monitors ME-2 main chamber pressure in percent via the SSME SOP and at the appropriate Level will either issue or remove the pre-valve close inhibit commands for Engine 2.

Monitor the following:

(a)	MPS E-2 PERCENT CH PRESS	V95U1187C

If (a) is equal to or greater than 30 percent, then issue the following outputs and proceed to Step 13.

(l)	MPS E-2 PVLV CLOSE INH CMD A	V41K1225X
(2)	MPS E-2 PVLV CLOSE INH CMD B	V41K1226X
(3)	MPS E-2 PVLV CLOSE INH CMD C	V41K1227X

If (a) is less than 30 percent, then terminate outputs (I), (2), and (3) and proceed to Step 13.

Step 13 – ME-2 Chamber Pressure Meter Drive. This step provides the output to the ME-2 chamber pressure (Pc) meter. The SSME SOP converts ME-2 main chamber pressure to percent and provides this as an input to this sequence. This step scales the percent input to 0 to 5 Vdc and outputs to the Pc meter.

Monitor the following:

(a)	MPS E-2 PERCENT CH PRESS	V95U1187C

Output (a) in volts (0 to 115 percent scales to 0 to 5 Vdc) as follows:

(1)	MPS E-2 MAIN CHAMBER-PR/CMPT	V72P0041C

Proceed to Step 14.

Step 14 – ME-3 Data Path Fail Check. This step monitors the ME-3 data path fail flag from the SSME SOP, and if set, the ME-3 prevalve close inhibit commands are removed, and the ME-3 chamber pressure (Pc) meter is driven to zero scale.

Monitor the following:

(a)	ME-3 FLT DATA PATH FAIL FLAG	V95X1152X

If (a) = false, then proceed to Step 15.

If (a) = true, then terminate the following commands:

(1)	MPS E-3 PVLV CLOSE INH CMD A	V41K1325X
(2)	MPS E-3 PVLV CLOSE INH CMD B	V41K1326X
(3)	MPS E-3 PVLV CLOSE INH CMD C	V41K1327X

and drive the Pc meter to zero scale (0 Vdc) with the following output:

(4)	MPS E-3 MAIN CHAMBER-PR/CMPT	V72P0042C

Then proceed to Step 17.

Step 15 – Normal Control of ME-3 Main Stage Commands. This step monitors ME-3 main chamber pressure in percent via the SSME SOP and at the appropriate level will either issue or remove the prevalve close inhibit commands for Engine 3.

Monitor the following:

(a)	MPS E-3 PERCENT CH PRESS	V95U1188C

If (a) is equal to or greater than 30 percent, then issue the following outputs and proceed to Step 16.

(1)	MPS E-3 PVLV CLOSE INH CMD A	V41K1325X
(2)	MPS E-3 PVLV CLOSE INH CMD B	V41K1326X
(3)	MPS E-3 PVLV CLOSE INH CMD C	V41K1327X

If (a) is less than 30 percent, then terminate outputs (1), (2), and (3) and proceed to Step 16.

Step 16 – ME-3 Chamber Pressure Meter Drive. This step provides the output to the ME-3 chamber pressure (Pc) meter. The SSME SOP converts ME-3 main chamber pressure to percent and provides this as an input to this sequence. This step scales the percent input to 0 to 5 Vdc and outputs to the Pc meter.

Monitor the following:

(a)	MPS E-3 PERCENT CH PRESS	V95U1188C

Output (a) in volts (0 to 115 percent scaled to 0 to 5 Vdc) as follows:

(1)	MPS E-3 MAIN CHAMBER-PR/CMPT	V72P0042C

Proceed to Step 17.

Step 17 – MECO Command Monitor. This step monitors for the issuance of the MECO COMMAND FLAG and terminates the prevalve close inhibit commands after the appropriate time delay if flag is set true.

Monitor the following:

(a)	MECO COMMAND FLAG	V90X8569X
(b)	MECO_PREVLV_CLOSE_DELAY	V96U9761C

If (a) is true and (b) seconds have elapsed after detecting (a) true, terminate outputs (1) through (9) below and return to Step 1.

(1)	MPS E-1 PVLV CLOSE INH CMD A	V41K1125X
(2)	MPS E-1 PVLV CLOSE INH CMD B	V41K1126X
(3)	MPS E-2 PVLV CLOSE INH CMD A	V41K1225X
(4)	MPS E-2 PVLV CLOSE INH CMD B	V41K1226X
(5)	MPS E-3 PVLV CLOSE INH CMD A	V41K1325X
(6)	MPS E-3 PVLV CLOSE INH CMD B	V41K1326X
(7)	MPS E-1 PVLV CLOSE INH CMD C	V41K1127X
(8)	MPS E-2 PVLV CLOSE INH CMD C	V41K1227X
(9)	MPS E-3 PVLV CLOSE INH CMD C	V41K1327X

Otherwise, return to Step 1.

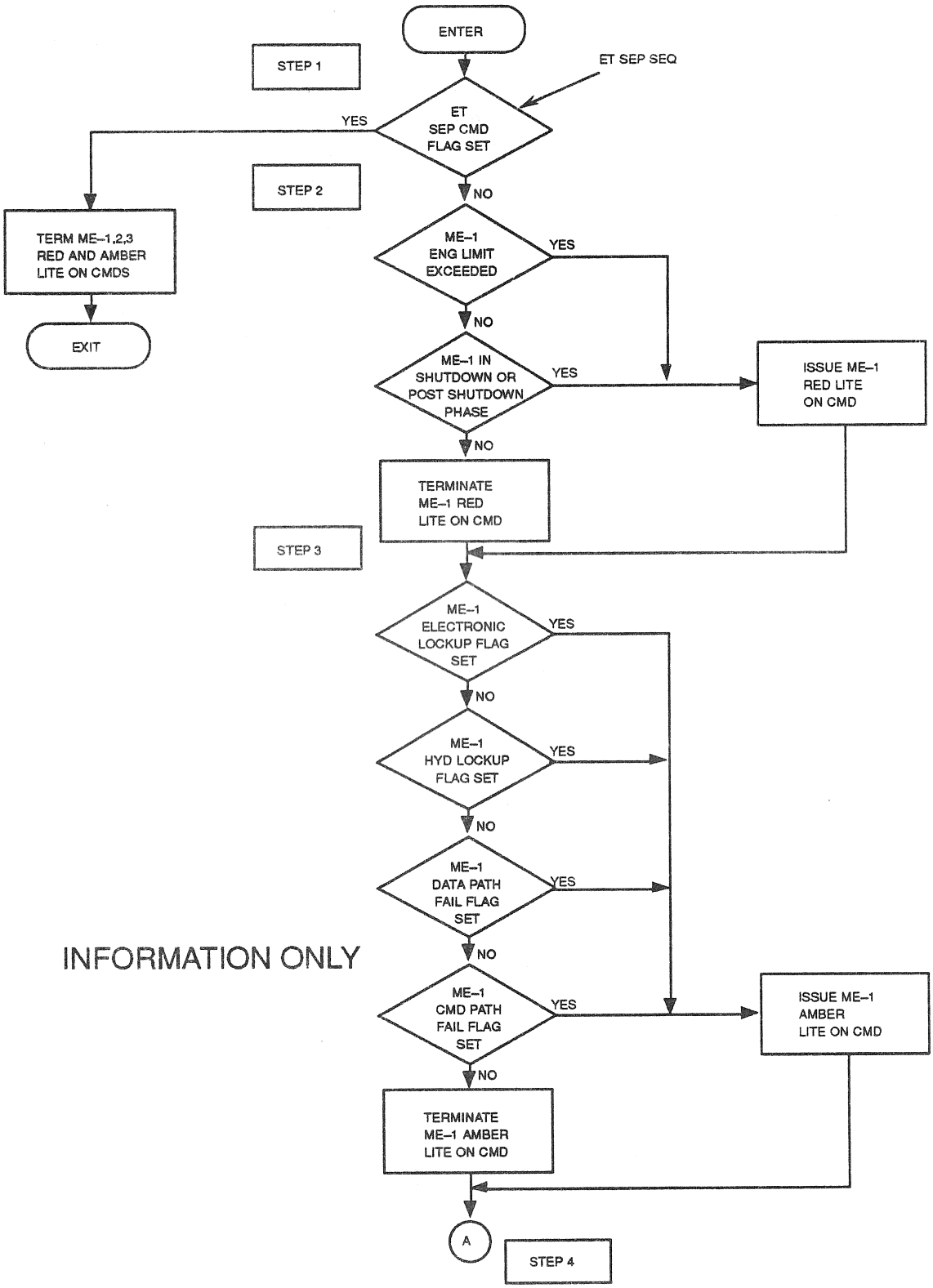

Figure 4.222. MPS D/D Drive Sequence (Sheet 1 of 6)

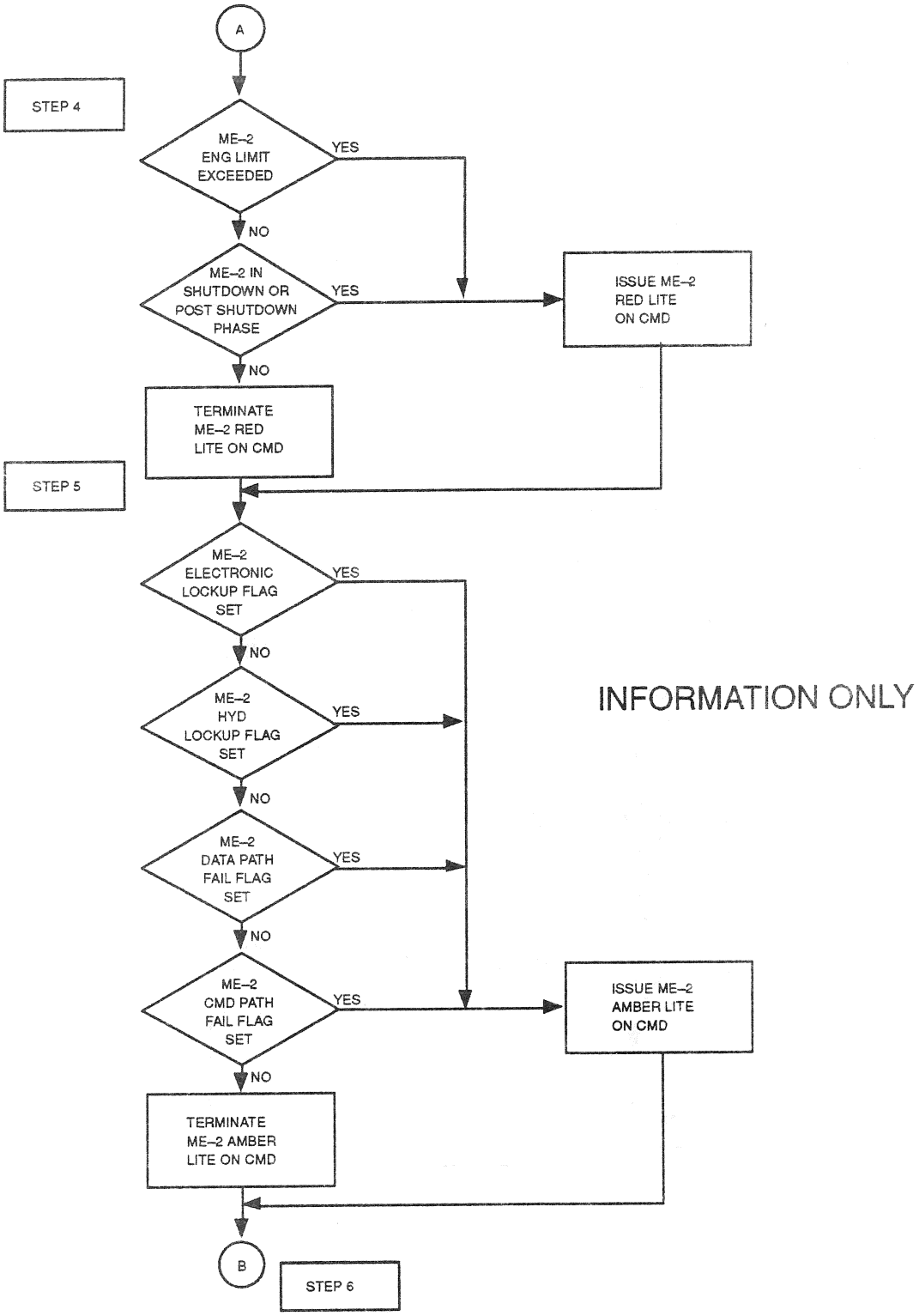

Figure 4.222. MPS D/D Drive Sequence (Sheet 2 of 6)

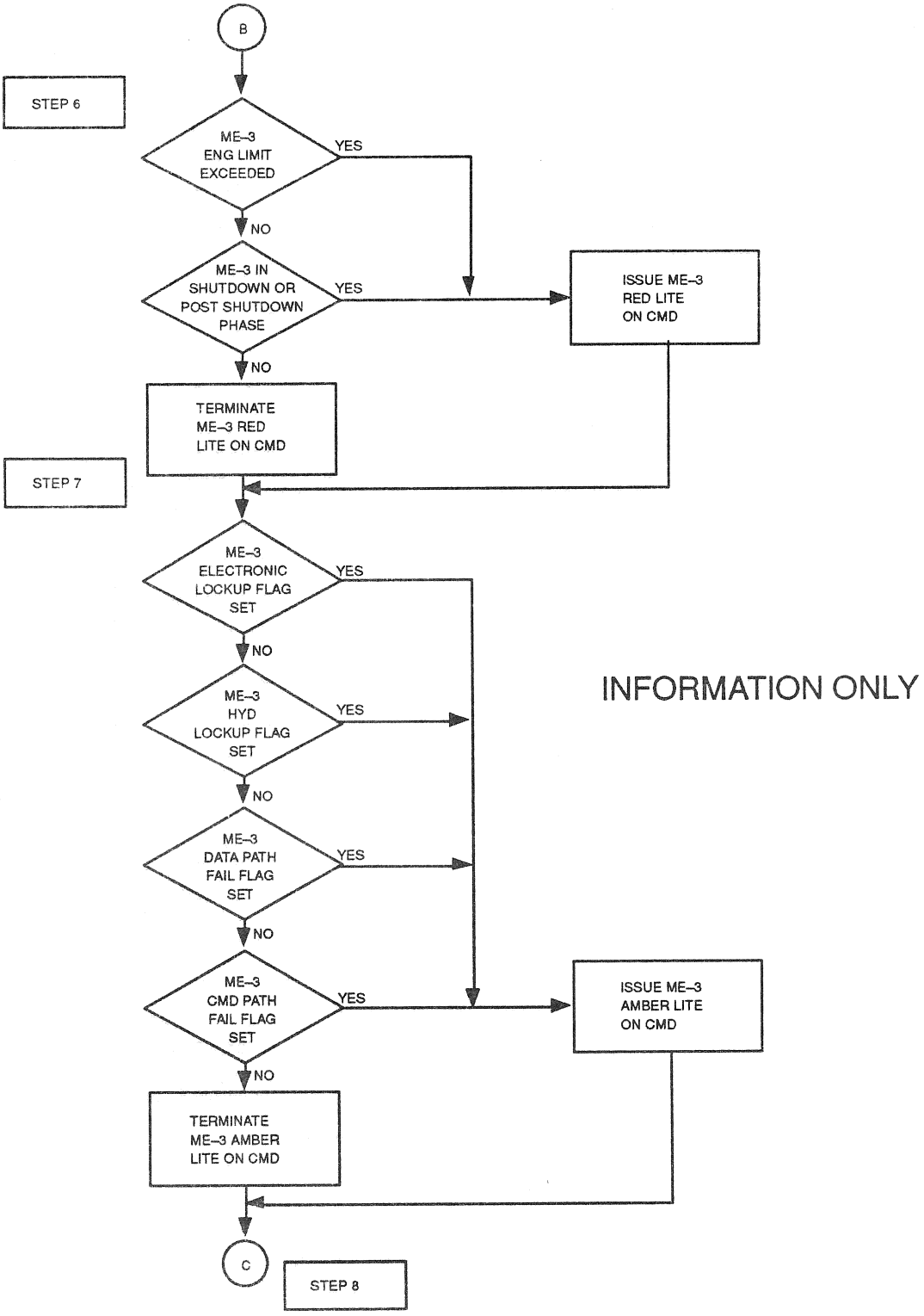

Figure 4.222. MPS D/D Drive Sequence (Sheet 3 of 6)

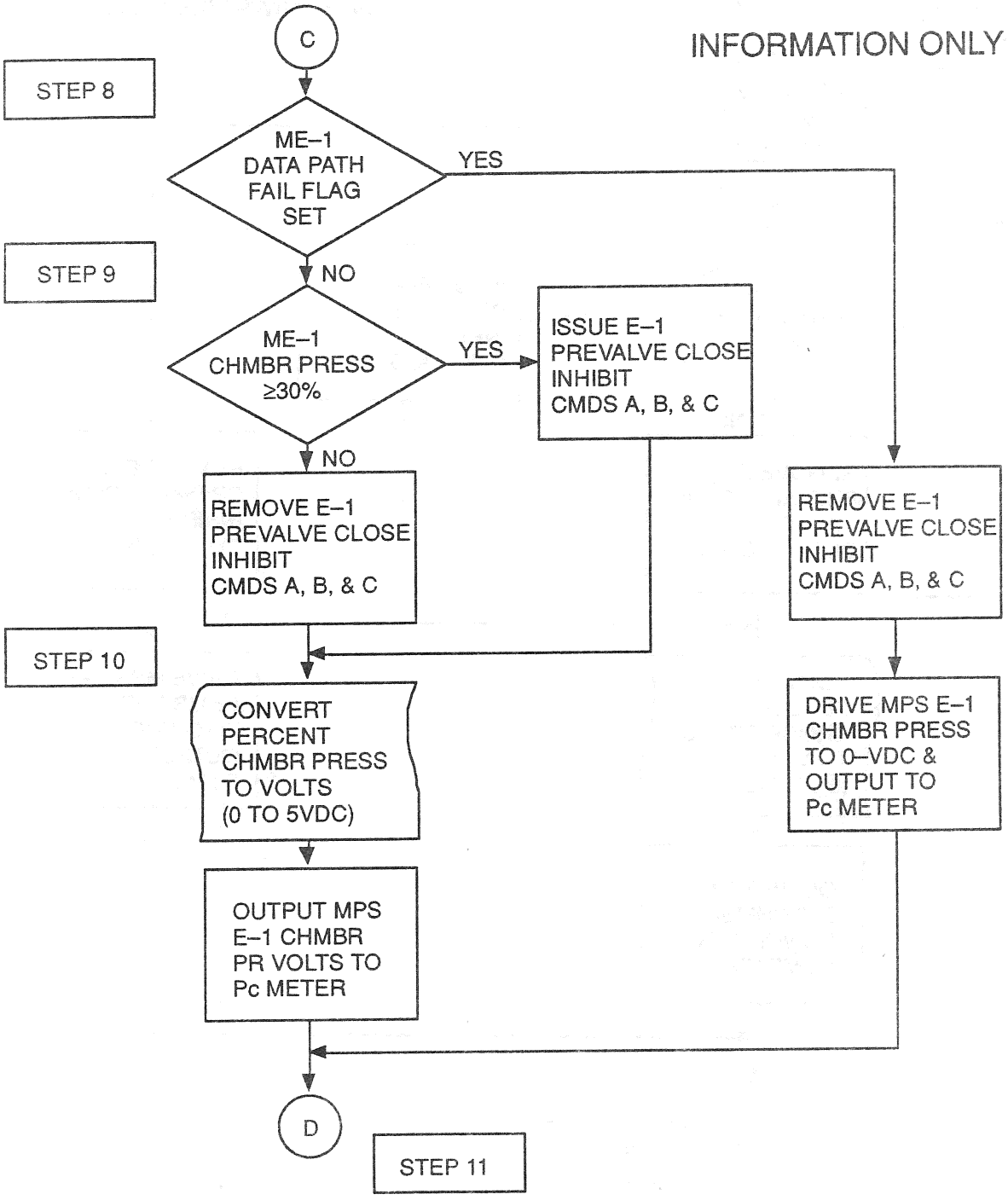

Figure 4.222. MPS D/D Drive Sequence (Sheet 4 of 6)

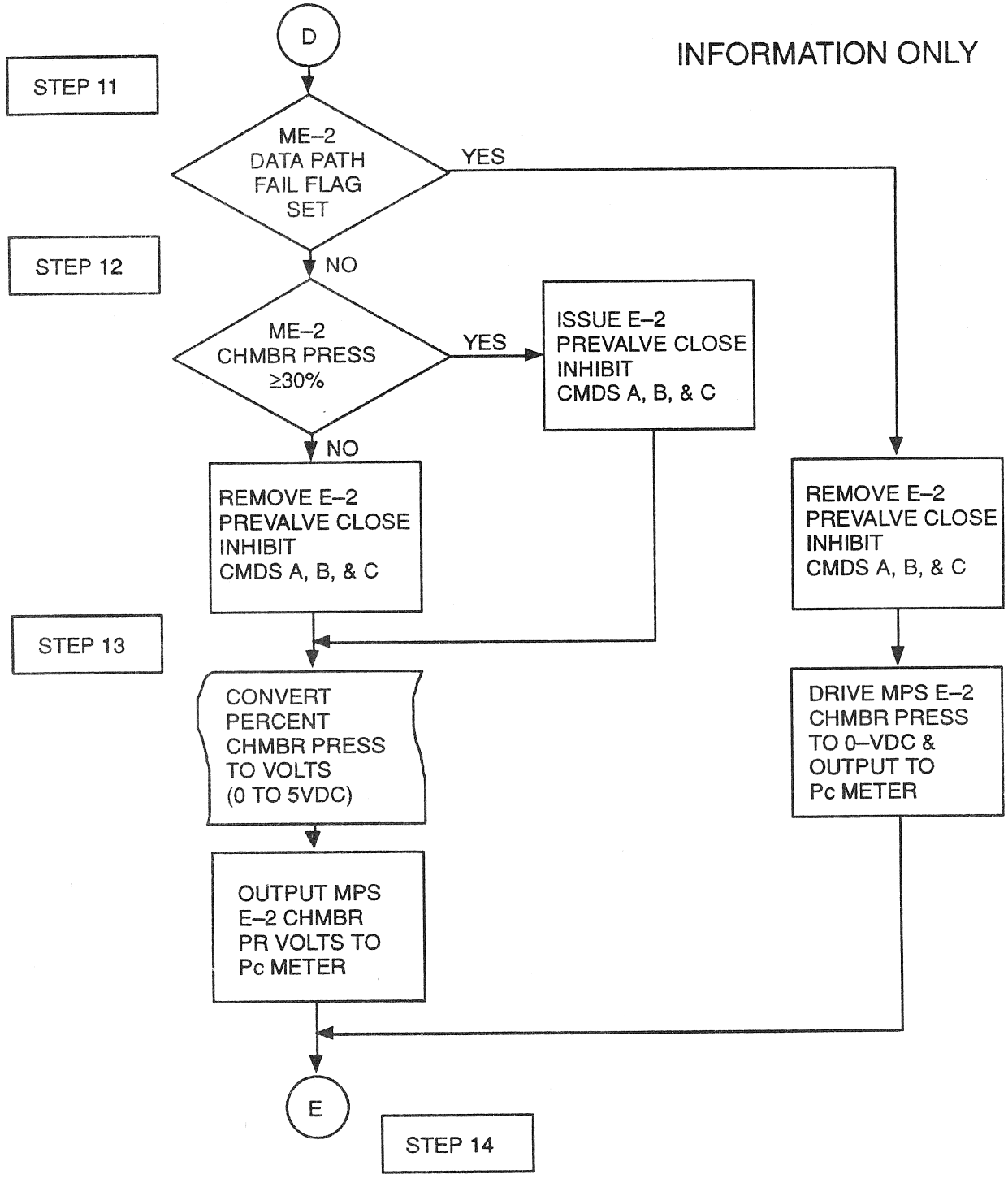

Figure 4.222. MPS D/D Drive Sequence (Sheet 5 of 6)

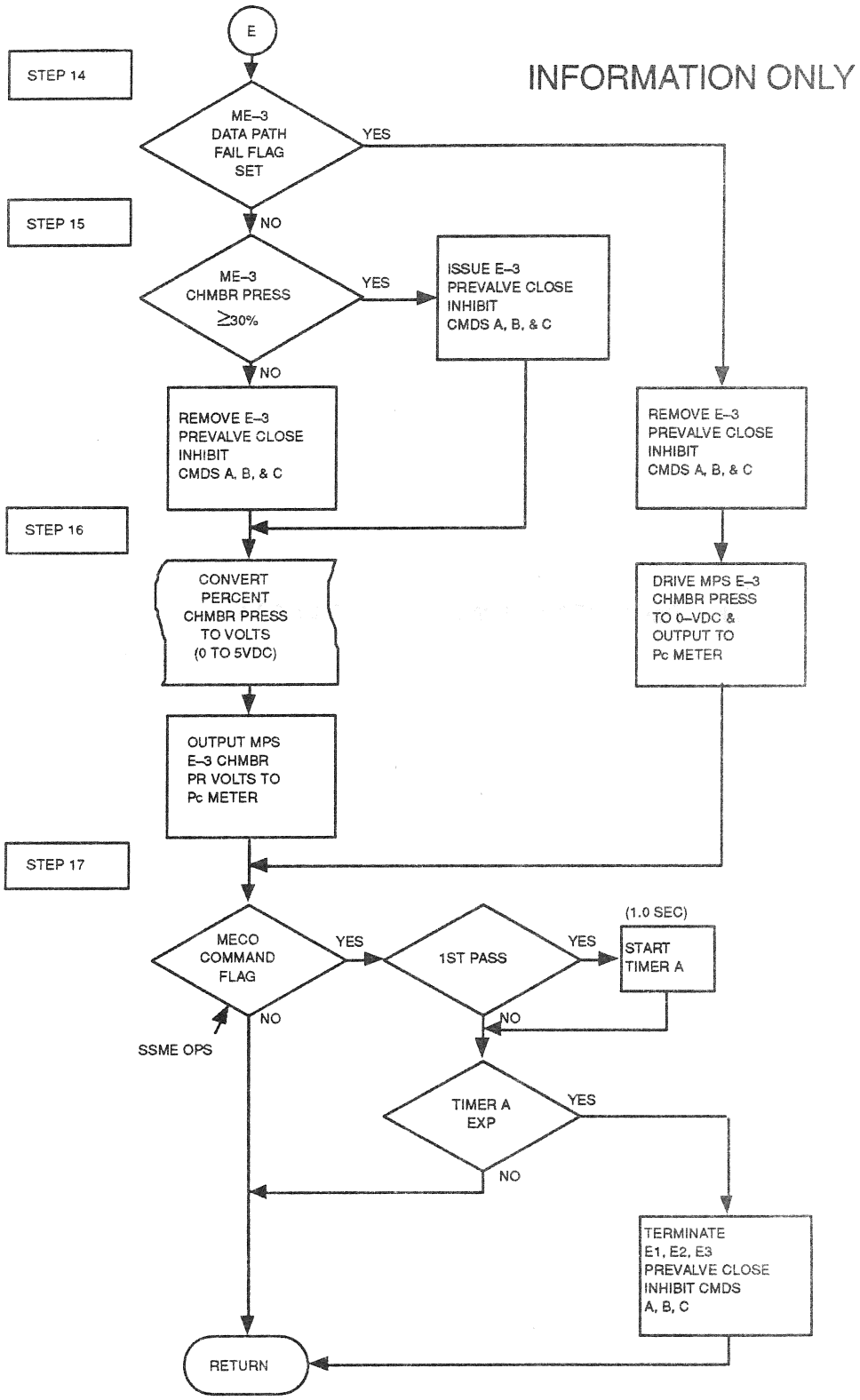

Figure 4.222. MPS D/D Drive Sequence (Sheet 6 of 6)

THIS PAGE INTENTIONALLY LEFT BLANK

TABLE 4.1.2.4–1. MAIN PROPULSION(MPS) DEDICATED DISPLAY DRIVE SEQ (G4.222) INPUT/OUTPUT FUNCTIONAL PARAMETERS

DBFN: D3B027-F PN: VP707100049P00L INPUT FUNCTIONAL PARAMETERS FOR MPS D/D SEQ

FSSR NAME	M/S ID	NOMENCLATURE	SOURCE	UNITS	DATA TYPE	PREC	LAST CRS
ET_SEP_CMD	V90X8250X	ET SEPARATION CMD FLAG	ET SEP SEQ		BD		89990E 90054A
ME_CMD_PATH_FAIL(1)	V95X1202X	ME-1 COMMAND PATH FAIL FLAG	SSME SOP		BD		
ME_CMD_PATH_FAIL(2)	V95X1203X	ME-2 COMMAND PATH FAIL FLAG	SSME SOP		BD		
ME_CMD_PATH_FAIL(3)	V95X1204X	ME-3 COMMAND PATH FAIL FLAG	SSME SOP		BD		
ME_ELEC_LOCKUP(1)	V95X1194X	ME-1 ELECTRONIC LOCKUP MODE FLAG	SSME SOP				
ME_ELEC_LOCKUP(2)	V95X1195X	ME-2 ELECTRONIC LOCKUP MODE FLAG	SSME SOP				
ME_ELEC_LOCKUP(3)	V95X1196X	ME-3 ELECTRONIC LOCKUP MODE FLAG	SSME SOP				
ME_FLT_DATA_PATH_FAIL(1)	V95X1150X	ME-1 FLIGHT DATA PATH FAIL FLAG	SSME SOP				
ME_FLT_DATA_PATH_FAIL(2)	V95X1151X	ME-2 FLIGHT DATA PATH FAIL FLAG	SSME SOP				
ME_FLT_DATA_PATH_FAIL(3)	V95X1152X	ME-3 FLIGHT DATA PATH FAIL FLAG	SSME SOP				
ME_HYD_LOCKUP(1)	V95X1198X	ME-1 HYDRAULIC LOCKUP MODE FLAG	SSME SOP				
ME_HYD_LOCKUP(2)	V95X1199X	ME-2 HYDRAULIC LOCKUP MODE FLAG	SSME SOP				
ME_HYD_LOCKUP(3)	V95X1200X	ME-3 HYDRAULIC LOCKUP MODE FLAG	SSME SOP				
ME_LIM_EX(1)	V95X1190X	ME-1 ENGINE LIMIT EXCEEDED FLAG	SSME SOP				89672A 89157A
ME_LIM_EX(2)	V95X1191X	ME-2 ENGINE LIMIT EXCEEDED FLAG	SSME SOP				89672A 89157A
ME_LIM_EX(3)	V95X1192X	ME-3 ENGINE LIMIT EXCEEDED FLAG	SSME SOP				89672A 89157A
MECO_CMD	V90X8569XA	MECO COMMAND FLAG	SSME OPS				90114B
MEPSTSHDN(1)	V95X1160X	MPS E1 POST-SHUTDOWN PHASE	SSME SOP				
MEPSTSHDN(2)	V95X1161X	MPS E2 POST-SHUTDOWN PHASE	SSME SOP				
MEPSTSHDN(3)	V95X1162X	MPS E3 POST-SHUTDOWN PHASE	SSME SOP				
MESHDN(1)	V95X1155X	MPS E1 SHUTDOWN PHASE	SSME SOP				
MESHDN(2)	V95X1156X	MPS E2 SHUTDOWN PHASE	SSME SOP				
MESHDN(3)	V95X1157X	MPS E3 SHUTDOWN PHASE	SSME SOP				
ME1_CH_PRESS_FDBK	V95U1186C	MPS E-1 PERCENT CH PRESS	SSME SOP	PCT			
ME2_CH_PRESS_FDBK	V95U1187C	MPS E-2 PERCENT CH PRESS	SSME SOP	PCT			
ME3_CH_PRESS_FDBK	V95U1188C	MPS E-3 PERCENT CH PRESS	SSME SOP	PCT			

TABLE 4.1.2.4–1. MAIN PROPULSION(MPS) DEDICATED DISPLAY DRIVE SEQ (G4.222) INPUT/OUTPUT FUNCTIONAL PARAMETERS

DBFN: D3B027-F PN: VP707100049P00L OUTPUT FUNCTIONAL PARAMETERS FROM MPS D/D SEQ

FSSR NAME	M/S ID	NOMENCLATURE	DESTINATION	UNITS	DATA TYPE	PREC	LAST CRS
	V41K1125X	MPS E1 MAINSTAGE CMD A	HDWR		BD		89554A
	V41K1126X	MPS E1 MAINSTAGE CMD B	HDWR		BD		89554A
	V41K1127X	MPS E1 MAINSTAGE CMD C	HDWR		BD		89554A
	V41K1225X	MPS E2 MAINSTAGE CMD A	HDWR		BD		89554A
	V41K1226X	MPS E2 MAINSTAGE CMD B	HDWR		BD		89554A
	V41K1227X	MPS E2 MAINSTAGE CMD C	HDWR		BD		89554A
	V41K1325X	MPS E3 MAINSTAGE CMD A	HDWR		BD		89554A
	V41K1326X	MPS E3 MAINSTAGE CMD B	HDWR		BD		89554A
	V41K1327X	MPS E3 MAINSTAGE CMD C	HDWR		BD		89554A
	V72X0030X	MPS E-1 STATUS/RED LITE ON	D&C PNL		BD		
	V72X0031X	MPS E-2 STATUS/RED LITE ON	D&C PNL		BD		
	V72X0032X	MPS E-3 STATUS/RED LITE ON	D&C PNL		BD		
	V72X0035X	MPS E-1 STATUS/AMBER LITE ON	D&C PNL		BD		
	V72X0036X	MPS E-2 STATUS/AMBER LITE ON	D&C PNL		BD		
	V72X0037X	MPS E-3 STATUS/AMBER LITE ON	D&C PNL		BD		
	V72P0040C	MPS E-1 MAIN CHAMBER-PR/CMPT	D&C PNL	VDC	AMU		
	V72P0041C	MPS E-2 MAIN CHAMBER-PR/CMPT	D&C PNL	VDC	AMU		
	V72P0042C	MPS E-3 MAIN CHAMBER-PR/CMPT	D&C PNL	VDC	AMU		

TABLE 4.1.2.4–2. MAIN PROPULSION(MPS) DEDICATED DISPLAY DRIVESEQ (G4.222) I–LOADS

DBFN:0484

FSSR NAME	MSID	ENG UNIT	DT PR	D S PR	FCTN	CAT
NO REQUIREMENTS						

TABLE 4.1.2.4–3. MAIN PROPULSION(MPS) DEDICATED DISPLAY DRIVESEQ (G4.222) K–LOADS

DBFN:0558

FSSR NAME DESCRIPTION	MSID	MC KLOAD VALUE	ENG UNIT	DT PR S PR FCTN	LAST CR EQTN MSID
MECO_PREVLV_CLOSE_DELAY	V96U9761C	+1.0 E+00	SEC	F S C G4.222	29855B

TABLE 4.1.2.4–4. MAIN PROPULSION(MPS) DEDICATED DISPLAY DRIVESEQ (G4.222) CONSTANTS

DBFN:0558

FSSR NAME DESCRIPTION	MSID	MC	CONSTANT VALUE	ENG UNIT	DT	PR	S	LAST CR PR FCTN

NO REQUIREMENTS

THIS PAGE INTENTIONALLY LEFT BLANK

4.1.3 SRB MDM Data Acquisition (4.203)

4.1.3.1 Introduction

SRB MDM data must be obtained form the SRB's during prelaunch operations and during SRB-powered flight portions of the mission. Data are used for two purposes.

1. Prelaunch Control of the SRB's
2. Downlist operations to place the data on Telemetry and on-board recorders

4.1.3.2 Overview

The GPC shall contain provisions to acquire data from all four (two each SRB) MDM's. This data shall be periodically updated in COMPOOL and thereby made available to system software for downlist processing. The acquisition of the SRB MDM data shall be initiated with the transition to OPS 1 approximately 20 minutes prior to launch and shall be terminated by the SRB Separation Sequence.

NOTE: Before the transition to GNC OPS 1, the SRB MDM data acquisition is accomplished by the V.U. function (GNC-9 and/or SM-9).

4.1.3.3 Detailed Requirements

Step 1. The IDD table contains the SRB MDM data listed by the principle function (4.203) to be acquired for use in GNC MM 101 and 102. Acquire the signals listed in the table and place them in main memory.

THIS PAGE INTENTIONALLY LEFT BLANK

TABLE 4.1.3.4–1. SOLID ROCKET BOOSTER(SRB) DATA ACQUISITION (G4.203) INPUT/OUTPUT FUNCTIONAL PARAMETERS

DBFN: D3P)27-F PN: VP707100049P00L INPUT FUNCTIONAL PARAMETERS FOR SRB DATA ACQ

FSSR NAME	M/S ID	NOMENCLATURE	SOURCE	UNITS	DATA TYPE	PREC	LAST CRS
	B46P1305C	LH PRESS N2H4/GN2 BOTTLE OUT SYS A	LA IEA		AMU		
	B46P1306C	LH PRESS N2H4/GN2 BOTTLE OUT SYS B	LA IEA		AMU		
	B46R1406C	LH RATE APU A TURBINE SPEED SNSR 1	LA IEA		AMU		
	B46R1407C	LH RATE APU B TURBINE SPEED SNSR 1	LA IEA		AMU		
	B46R1408C	LH RATE APU A TURBINE SPEED SNSR 2	LA IEA		AMU		
	B46R1409C	LH RATE APU B TURBINE SPEED SNSR 2	LA IEA		AMU		
	B46T1501C	LH TEMP GAS N2H4/GN2 BOTTLE SYS A	LA IEA		AMU		
	B46T1502C	LH TEMP GAS N2H4/GN2 BOTTLE SYS B	LA IEA		AMU		
	B46T1503C	LH TEMP GAS GENERATOR BED SYS A	LA IEA		AMU		
	B46T1504C	LH TEMP GAS GENERATOR BED SYS B	LA IEA		AMU		
	B46X1851X	LH EVENT APU A ISLN VALVE OPEN	LA IEA		BD		
	B46X1852X	LH EVENT APU B ISLN VALVE OPEN	LA IEA		BD		
	B46X1853X	LH EVENT APU A ISLN VALVE CLOSED	LA IEA		BD		
	B46X1854X	LH EVENT APU B ISLN VALVE CLOSED	LA IEA		BD		
	B46X1861X	LH EV APU SEC SP CON VLV CLD,SYS A	LF IEA		BD		
	B46X1862X	LH EV APU PRI SP CON VLV OP,SYS A	LF IEA		BD		
	B46X1863X	LH EV APU SEC SP CON VLV CLD,SYS B	LF IEA		BD		
	B46X1864X	LH EV APU PRI SP CON VLV OP,SYS B	LF IEA		BD		
	B46X1908X	LH EVENT APU-A GG HEATER 1 ON CMD	LA IEA		BD		
	B46X1909X	LH EVENT APU-A GG HEATER 2 ON CMD	LA IEA		BD		
	B46X1910X	LH EVENT APU-B GG HEATER 1 ON CMD	LA IEA		BD		
	B46X1911X	LH EVENT APU-B GG HEATER 2 ON CMD	LA IEA		BD		
	B46P2305C	RH PRESS N2H4/GN2 BOTTLE OUT SYS A	RA IEA		AMU		
	B46P2306C	RH PRESS N2H4/GN2 BOTTLE OUT SYS B	RA IEA		AMU		
	B46R2406C	RH RATE APU A TURBINE SPEED SNSR 1	RA IEA		AMU		
	B46R2407C	RH RATE APU B TURBINE SPEED SNSR 1	RA IEA		AMU		
	B46R2408C	RH RATE APU A TURBINE SPEED SNSR 2	RA IEA		AMU		
	B46R2409C	RH RATE APU B TURBINE SPEED SNSR 2	RA IEA		AMU		
	B46T2501C	RH TEMP GAS N2H4/GN2 BOTTLE SYS A	RA IEA		AMU		
	B46T2502C	RH TEMP GAS N2H4/GN2 BOTTLE SYS B	RA IEA		AMU		
	B46T2503C	RH TEMP GAS GENERATOR BED SYS A	RA IEA		AMU		
	B46T2504C	RH TEMP GAS GENERATOR BED SYS B	RA IEA		AMU		
	B46X2851X	RH EVENT APU A ISLN VALVE OPEN	RA IEA		BD		
	B46X2852X	RH EVENT APU B ISLN VALVE OPEN	RA IEA		BD		
	B46X2853X	RH EVENT APU A ISLN VALVE CLOSED	RA IEA		BD		
	B46X2854X	RH EVENT APU B ISLN VALVE CLOSED	RA IEA		BD		
	B46X2861X	RH EV APU SEC SP CON VLV CLD,SYS A	RF IEA		BD		
	B46X2862X	RH EV APU PRI SP CON VLV OP,SYS A	RF IEA		BD		
	B46X2863X	RH EV APU SEC SP CON VLV CLD,SYS B	RF IEA		BD		
	B46X2864X	RH EV APU PRI SP CON VLV OP,SYS B	RF IEA		BD		
	B46X2908X	RH EVENT APU-A GG HEATER 1 ON CMD	RA IEA		BD		
	B46X2909X	RH EVENT APU-A GG HEATER 2 ON CMD	RA IEA		BD		
	B46X2910X	RH EVENT APU-B GG HEATER 1 ON CMD	RA IEA		BD		

TABLE 4.1.3.4–1. SOLID ROCKET BOOSTER(SRB) DATA ACQUISITION (G4.203) INPUT/OUTPUT FUNCTIONAL PARAMETERS

DBFN: D3B027-F PN: VP707100049P00L INPUT FUNCTIONAL PARAMETERS FOR SRB DATA ACQ

FSSR NAME	M/S ID	NOMENCLATURE	SOURCE	UNITS	DATA TYPE	PREC	LAST CRS
	B46X2911X	RH EVENT APU-B GG HEATER 2 ON CMD	RA IEA		BD		
	B47X1901X	LH EVENT SRM CHMBR PRESS A SIM CMD	LF IEA		BD		
	B47X1902X	LH EVENT SRM CHMBR PRESS B SIM CMD	LF IEA		BD		
	B47X1903X	LH EVENT SRM CHMBR PRESS C SIM CMD	LF IEA		BD		
	B47X2901X	RH EVENT SRM CHMBR PRESS A SIM CMD	RF IEA		BD		
	B47X2902X	RH EVENT SRM CHMBR PRESS B SIM CMD	RF IEA		BD		
	B47X2903X	RH EVENT SRM CHMBR PRESS C SIM CMD	RF IEA		BD		
	B52X1904X	LH EVENT BARO SW HIGH ALT SIM CMD	LA IEA		BD		90004B
	B52X1905X	LH EVENT BARO SW LOW ALT SIM CMD	LA IEA		BD		90004B
	B52X1907X	LH EVENT RECOVERY SYSTEM RESET CMD	LA IEA		BD		90004B
	B52X1939X	LH EV WATER IMPACT SW SIM A CMD	LA IEA		BD		90004B
							89487
	B52X1940X	LH EV WATER IMPACT SW SIM B CMD	LA IEA		BD		90004B
							89487
	B52X2904X	RH EVENT BARO SW HIGH ALT SIM CMD	RA IEA		BD		90004B
	B52X2905X	RH EVENT BARO SW LOW ALT SIM CMD	RA IEA		BD		90004B
	B52X2907X	RH EVENT RECOVERY SYSTEM RESET CMD	RA IEA		BD		90004B
	B52X2939X	RH EV WATER IMPACT SW SIM A CMD	RA IEA		BD		90004B
							89487
	B52X2940X	RH EV WATER IMPACT SW SIM B CMD	RA IEA		BD		90004B
							89487
	B55C1051C	LH CURRENT RSS BATTERY NO 1	L RSS		AMU		90004B
	B55E1100C	LH POWER RSS RCVR SIG STRENGTH A	L RSS		AMU		90004B
	B55E1101C	LH POWER RSS RCVR SIG STRENGTH B	L RSS		AMU		90004B
	B55T1505C	LH TEMP SRB BATTERY	L RSS	DEGF	AMU		90004B
	B55V1605C	LH VOLTAGE FWD THR PIN PIC CAP A	LF IEA		AMU		
	B55V1606C	LH VOLTAGE FWD THR PIN PIC CAP B	LF IEA		AMU		
	B55V1607C	LH VOLTAGE AFT UPR BRC PIC CAP A	LA IEA		AMU		
	B55V1608C	LH VOLTAGE AFT UPR BRC PIC CAP B	LA IEA		AMU		
	B55V1609C	LH VOLTAGE AFT MID BRC PIC CAP A	LA IEA		AMU		
	B55V1610C	LH VOLTAGE AFT MID BRC PIC CAP B	LA IEA		AMU		
	B55V1611C	LH VOLTAGE AFT LWR BRC PIC CAP A	LA IEA		AMU		
	B55V1612C	LH VOLTAGE AFT LWR BRC PIC CAP B	LA IEA		AMU		
	B55V1613C	LH VOLTAGE FWD SEPN MOT PIC CAP A	LA IEA		AMU		
	B55V1614C	LH VOLTAGE FWD SEPN MOT PIC CAP B	LA IEA		AMU		
	B55V1615C	LH VOLTAGE AFT SEPN MOT PIC CAP A	LA IEA		AMU		
	B55V1616C	LH VOLTAGE AFT SEPN MOT PIC CAP B	LA IEA		AMU		
	B55V1623C	LH VOLTAGE RSS PIC CAP A	L RSS		AMU		
	B55V1624C	LH VOLTAGE RSS PIC CAP B	L RSS		AMU		
	B55V1625C	LH VOLTAGE RSS BATTERY NO 1	L RSS		AMU		90004B
	B55X1806X	LH EVENT IGN PIC A RTST OK	LF IEA		BD		
	B55X1807X	LH EVENT IGN PIC B RTST OK	LF IEA		BD		
	B55X1818X	LH EVENT AFT SEP MOT PIC A RTST OK	LF IEA		BD		

TABLE 4.1.3.4–1. SOLID ROCKET BOOSTER(SRB) DATA ACQUISITION (G4.203) INPUT/OUTPUT FUNCTIONAL PARAMETERS

DBFN: D3B027-F PN: VP707100049P00L INPUT FUNCTIONAL PARAMETERS FOR SRB DATA ACQ

FSSR NAME	M/S ID	NOMENCLATURE	SOURCE	UNITS	DATA TYPE	PREC	LAST CRS
	B55X1819X	LH EVENT AFT SEP MOT PIC B RTST OK	LF IEA		BD		
	B55X1823X	LH EVENT MN CHUTE DISC PIC RTST OK	LF IEA		BD		89451C
	B55X1841X	LH EVENT MN CHUTE DISC PIC L/T OK	LF IEA		BD		89451C
	B55X1842X	LH EVENT IGN S&A DEVICE ARMED	LF IEA		BD		
	B55X1843X	LH EVENT IGN S&A DEVICE SAFED	LF IEA		BD		
	B55X1865X	LH EVENT RSS PIC A ARMED	L RSS		BD		
	B55X1866X	LH EVENT RSS PIC B ARMED	L RSS		BD		
	B55X1867X	LH EVENT RSS PIC A FIRED	L RSS		BD		
	B55X1868X	LH EVENT RSS PIC B FIRED	L RSS		BD		
	B55X1869X	LH EVENT RSS S&A DEVICE SAFED	L RSS		BD		
	B55X1870X	LH EVENT RSS S&A DEVICE ARMED	L RSS		BD		
	B55X1871X	LH EV RSS DCDR A ON/CHK TONE OFF	L RSS		BD		90004B
	B55X1872X	LH EV RSS DCDR B ON/CHK TONE OFF	L RSS		BD		90004B
	B55X1877X	LH EV RSS ARM CMD FROM DCDR A	L RSS		BD		
	B55X1878X	LH EV RSS ARM CMD FROM DCDR B	L RSS		BD		
	B55X1879X	LH EV RSS FIRE CMD FROM DCDR A	L RSS		BD		
	B55X1880X	LH EV RSS FIRE CMD FROM DCDR B	L RSS		BD		
	B55X1881X	LH EVENT RSS A INHIBIT	L RSS		BD		
	B55X1882X	LH EVENT RSS B INHIBIT	L RSS		BD		
	B55C2051C	RH CURRENT RSS BATTERY NO 1	R RSS		AMU		90004B
	B55E2100C	RH POWER RSS RCVR SIG STRENGTH A	R RSS		AMU		90004B
	B55E2101C	RH POWER RSS RCVR SIG STRENGTH B	R RSS		AMU		90004B
	B55T2505C	RH TEMP SRB BATTERY	R RSS	DEGF	AMU		90004B
	B55V2605C	RH VOLTAGE FWD THRU PIN PIC CAP A	RF IEA		AMU		
	B55V2606C	RH VOLTAGE FWD THRU PIN PIC CAP B	RF IEA		AMU		
	B55V2607C	RH VOLTAGE AFT UPR BRC PIC CAP A	RA IEA		AMU		
	B55V2608C	RH VOLTAGE AFT UPR BRC PIC CAP B	RA IEA		AMU		
	B55V2609C	RH VOLTAGE AFT MID BRC PIC CAP A	RA IEA		AMU		
	B55V2610C	RH VOLTAGE AFT MID BRC PIC CAP B	RA IEA		AMU		
	B55V2611C	RH VOLTAGE AFT LWR BRC PIC CAP A	RA IEA		AMU		
	B55V2612C	RH VOLTAGE AFT LWR BRC PIC CAP B	RA IEA		AMU		
	B55V2613C	RH VOLTAGE FWD SEPN MOT PIC CAP A	RF IEA		AMU		
	B55V2614C	RH VOLTAGE FWD SEPN MOT PIC CAP B	RF IEA		AMU		
	B55V2615C	RH VOLTAGE AFT SEPN MOT PIC CAP A	RA IEA		AMU		
	B55V2616C	RH VOLTAGE AFT SEPN MOT PIC CAP B	RA IEA		AMU		
	B55V2623C	RH VOLTAGE RSS PIC CAP A	R RSS		AMU		
	B55V2624C	RH VOLTAGE RSS PIC CAP B	R RSS		AMU		
	B55V2625C	RH VOLTAGE RSS BATTERY NO 1	R RSS		AMU		90004B
	B55X2806X	RH EVENT IGN PIC A RTST OK	RF IEA		BD		
	B55X2807X	RH EVENT IGN PIC B RTST OK	RF IEA		BD		
	B55X2818X	RH EVENT AFT SEP MOT PIC A RTST OK	RF IEA		BD		
	B55X2819X	RH EVENT AFT SEP MOT PIC B RTST OK	RF IEA		BD		
	B55X2823X	RH EVENT MN CHUTE DISC PIC RTST OK	RF IEA		BD		89451C

TABLE 4.1.3.4–1. SOLID ROCKET BOOSTER(SRB) DATA ACQUISITION (G4.203) INPUT/OUTPUT FUNCTIONAL PARAMETERS

DBFN: D3B027-F PN: VP707100049P00L INPUT FUNCTIONAL PARAMETERS FOR SRB DATA ACQ

FSSR NAME	M/S ID	NOMENCLATURE	SOURCE	UNITS	DATA TYPE	PREC	LAST CRS
	B55X2841X	RH EVENT MN CHUTE DISC PIC L/T OK	RF IEA		BD		89451C
	B55X2842X	RH EVENT IGN S&A DEVICE ARMED	RF IEA		BD		
	B55X2843X	RH EVENT IGN S&A DEVICE SAFED	RF IEA		BD		
	B55X2865X	RH EVENT RSS PIC A ARMED	R RSS		BD		
	B55X2866X	RH EVENT RSS PIC B ARMED	R RSS		BD		
	B55X2867X	RH EVENT RSS PIC A FIRED	R RSS		BD		
	B55X2868X	RH EVENT RSS PIC B FIRED	R RSS		BD		
	B55X2869X	RH EVENT RSS S&A DEVICE SAFED	R RSS		BD		
	B55X2870X	RH EVENT RSS S&A DEVICE ARMED	R RSS		BD		
	B55X2871X	RH EV RSS DCDR A ON/CHK TONE OFF	R RSS		BD		90004B
	B55X2872X	RH EV RSS DCDR B ON/CHK TONE OFF	R RSS		BD		90004B
	B55X2877X	RH EV RSS ARM CMD FROM DCDR A	R RSS		BD		
	B55X2878X	RH EV RSS ARM CMD FROM DCDR B	R RSS		BD		
	B55X2879X	RH EV RSS FIRE CMD FROM DCDR A	R RSS		BD		
	B55X2880X	RH EV RSS FIRE CMD FROM DCDR B	R RSS		BD		
	B55X2881X	RH EVENT RSS A INHIBIT	R RSS		BD		
	B55X2882X	RH EVENT RSS B INHIBIT	R RSS		BD		
	B58H1150C	LH POSITION TVC ROCK ACTUATOR	L TVC R ACT		AMU		
	B58H1151C	LH POSITION TVC TILT ACTUATOR	L TVC T ACT		AMU		
	B58P1303C	LH PRESS HYDR FLUID SUPPLY 1	LA IEA		AMU		
	B58P1304C	LH PRESS HYDR FLUID SUPPLY 2	LA IEA		AMU		
	B58Q1350C	LH LEVEL HYDR FLUID RSVR SYS A	L HYD RES A		AMU		
	B58Q1351C	LH LEVEL HYDR FLUID RSVR SYS B	L HYD RES B		AMU		
	B58X1859X	LH EV TILT SERVO PWR SW V PRI POSN	LA IEA		BD		
	B58X1860X	LH EV ROCK SERVO PWR SW V PRI POSN	LA IEA		BD		
	B58X1912X	LH EV TVC SYS A PRESS SNSR CAL CMD	LA IEA		BD		90004B
	B58X1913X	LH EV TVC SYS B PRESS SNSR CAL CMD	LA IEA		BD		90004B
	B58H2150C	RH POSITION TVC ROCK ACTUATOR	R TVC R ACT		AMU		
	B58H2151C	RH POSITION TVC TILT ACTUATOR	R TVC T ACT		AMU		
	B58P2303C	RH PRESS HYDR FLUID SUPPLY 1	RA IEA		AMU		90004B
	B58P2304C	RH PRESS HYDR FLUID SUPPLY 2	RA IEA		AMU		90004B
	B58Q2350C	RH LEVEL HYDR FLUID RSVR SYS A	R HYD RES A		AMU		
	B58Q2351C	RH LEVEL HYDR FLUID RSVR SYS B	R HYD RES B		AMU		
	B58X2859X	RH EV TILT SERVO PWR SW V PRI POSN	RA IEA		BD		90004B
	B58X2860X	RH EV ROCK SERVO PWR SW V PRI POSN	RA IEA		BD		90004B
	B58X2912X	RH EV TVC SYS A PRESS SNSR CAL CMD	RA IEA		BD		90004B
	B58X2913X	RH EV TVC SYS B PRESS SNSR CAL CMD	RA IEA		BD		90004B
	B76C1050C	LH CURRENT RECOVERY BATTERY	LF IEA		AMU		
	B76T1500C	LH TEMPERATURE RECOVERY BATTERY	LF IEA		AMU		
	B76V1600C	LH VOLTAGE OPERATIONAL BUS A	LF IEA		AMU		
	B76V1601C	LH VOLTAGE OPERATIONAL BUS B	LF IEA		AMU		
	B76V1602C	LH VOLTAGE RECOVERY BATTERY	LF IEA		AMU		
	B76C2050C	RH CURRENT RECOVERY BATTERY	RF IEA		AMU		

TABLE 4.1.3.4–1. SOLID ROCKET BOOSTER(SRB) DATA ACQUISITION (G4.203) INPUT/OUTPUT FUNCTIONAL PARAMETERS

DBFN: D3B027-F PN: VP707100049P00L INPUT FUNCTIONAL PARAMETERS FOR SRP DATA ACQ

FSSR NAME	M/S ID	NOMENCLATURE	SOURCE	UNITS	DATA TYPE	PREC	LAST CRS
	B76T2500C	RH TEMPERATURE RECOVERY BATTERY	RF IEA		AMU		
	B76V2600C	RH VOLTAGE OPERATIONAL BUS A	RF IEA		AMU		
	B76V2601C	RH VOLTAGE OPERATIONAL BUS B	RF IEA		AMU		
	B76V2602C	RH VOLTAGE RECOVERY BATTERY	RF IEA		AMU		
	B76C7050C	LH CURRENT DEVELOPMENT FLT BATTERY	LF IEA		AMU		
	B76T7529C	LH TEMP DEVELOPMENT FLT BATTERY	LF IEA		AMU		
	B76V7730C	LH VOLTAGE DEVELOPMENT FLT BATTERY	LF IEA		AMU		
	B76C8050C	RH CURRENT DEVELOPMENT FLT BATTERY	RF IEA		AMU		
	B76T8529C	RH TEMP DEVELOPMENT FLT BATTERY	RF IEA		AMU		
	B76V8730C	RH VOLTAGE DEVELOPMENT FLT BATTERY	RF IEA		AMU		
	B78T7530C	LH TEMP, FLT RECORDER	LF IEA	DEG	AMU		
	B78X7887X	LH EVENT FLT RCDR MALFUNCTION	LF IEA	EVENT	BD		
	B78X7888X	LH EVENT FLT RCDR RECORD IND	LF IEA	EVENT	BD		
	B78X7914X	LH EVENT TIME CODE GENERATOR OK	LF IEA	EVENT	BD		
	B78X7918X	LH EV FDM 1 MUXR 1 OUT-ORB RCDR OK	LF IEA	EVENT	BD		
	B78X7925X	LH EVENT FLT RCDR REVERSE CMD	LF IEA	EVENT	BD		
	B78X7926X	LH EVENT FDM AUTO CALIBRATION CMD	LF IEA	EVENT	BD		
	B78X7929X	LH EV PCM MASTER OK	LF IEA		BD		89451C
	B78X7930X	LH EV PCM REMOTE 1 OK	LF IEA		BD		89451C
	B78X7931X	LH EV PCM REMOTE 2 OK	LF IEA		BD		89451C
	B78X7932X	LH EV PCM SUBSET 1 OK	LF IEA		BD		89451C
	B78X7933X	LH EV PCM SUBSET 2 OK	LF IEA		BD		89451C
	B78X7934X	LH EV PCM SUBSET 3 OK	LF IEA		BD		89451C
	B78X7935X	LH EV FDM 1 MUX 1 OK	LF IEA		BD		89451C
	B78X7936X	LH EV FDM 1 MUX 2 OK	LF IEA		BD		89451C
	B78X7937X	LH EV FDM 2 MUX 1 OK	LF IEA		BD		89451C
	B78X7938X	LH EV FDM 2 MUX 2 OK	LF IEA		BD		89451C
	B78X7939X	LH EV WBSC 1 OK	LF IEA		BD		89451C
	B78X7940X	LH EV WBSC 2 OK	LF IEA		BD		89451C
	B78X7943X	LH EV PCM REMOTE 3 OK	LF IEA		BD		89451C
	B78T8530C	RH TEMP, FLT RCDR	RF IEA	DEG F	AMU		
	B78X8887X	RH EVENT FLT RCDR MALFUNCTION	RF IEA	EVENT	BD		
	B78X8888X	RH EVENT FLT RCDR RECORD IND	RF IEA	EVENT	BD		
	B78X8914X	RH EVENT TIME CODE GENERATOR OK	RF IEA	EVENT	BD		
	B78X8918X	RH EV FDM 1 MUXR 1 OUT-ORB RCDR OK	RF IEA	EVENT	BD		
	B78X8925X	RH EVENT FLT RCDR REVERSE CMD	RF IEA	EVENT	BD		
	B78X8926X	RH EVENT FDM AUTO CALIBRATION CMD	RF IEA	EVENT	BD		
	B78X8929X	RH EV PCM MASTER OK	RF IEA		BD		89451C
	B78X8930X	RH EV PCM REMOTE 1 OK	RF IEA		BD		89451C
	B78X8931X	RH EV PCM REMOTE 2 OK	RF IEA		BD		89451C
	B78X8932X	RH EV PCM SUBSET 1 OK	RF IEA		BD		89451C
	B78X8933X	RH EV PCM SUBSET 2 OK	RF IEA		BD		89451C
	B78X8934X	RH EV PCM SUBSET 3 OK	RF IEA		BD		89451C

TABLE 4.1.3.4–1. SOLID ROCKET BOOSTER(SRB) DATA ACQUISITION (G4.203) INPUT/OUTPUT FUNCTIONAL PARAMETERS

DBFN: D3B027-F PN: VP707100049P00L INPUT FUNCTIONAL PARAMETERS FOR SRB DATA ACQ

FSSR NAME	M/S ID	NOMENCLATURE	SOURCE	UNITS	DATA TYPE	PREC	LAST CRS
	B78X8935X	RH EV FDM 1 MUX 1 OK	RF IEA		BD		89451C
	B78X8936X	RH EV FDM 1 MUX 2 OK	RF 1EA		BD		89451C
	B78X8937X	RH EV FDM 2 MUX 1 OK	RF IEA		BD		89451C
	B78X8938X	RH EV FDM 2 MUX 2 OK	RF IEA		BD		89451C
	B78X8939X	RH EV WBSC 1 OK	RF IEA		BD		89451C
	B78X8940X	RH EV WBSC 2 OK	RF IEA		BD		89451C
	B78X8943X	RH EV PCM REMOTE 3 OK	RF IEA		BD		89451C
	B79X1845X	SRGA 1 PITCH SMRD	SRGA 1		BD		79935H
	B79X1846X	SRGA 3 PITCH SMRD	SRGA 3		BD		79935H
	B79X1848X	SRGA 1 YAW SMRD	SRGA 1		BD		79935H
	B79X1849X	SRGA 3 YAW SMRD	SRGA 3		BD		79935H
	B79X1890X	SRGA 1 PITCH POS TORQUE CMD	LF IEA		BD		90004B 79935H
	B79X1891X	SRGA 3 PITCH POS TORQUE CMD	LF IEA		BD		90004B 79935H
	B79X1893X	SRGA 1 YAW POS TORQUE CMD	LF IEA		BD		90004B 79935H
	B79X1894X	SRGA 3 YAW POS TORQUE CMD	LF IEA		BD		90004B 79935H
	B79X1896X	SRGA 1 PITCH MEG TORQUE CMD	LF IEA		BD		90004B 79935H
	B79X1897X	SRGA 3 PITCH MEG TORQUE CMD	LF IEA		BD		90004B 79935H
	B79X1899X	SRGA 1 YAW NEG TORQUE CMD	LF IEA		BD		90004B 79935H
	B79X1900X	SRGA 3 YAW NEG TORQUE CMD	LF IEA		BD		90004B 79935H
	B79X2845X	SRGA 2 PITCH SMRD	SRGA 2		BD		79935H
	B79X2846X	SRGA 4 PITCH SMRD	SRGA 4		BD		79935H
	B79X2848X	SRGA 2 YAW SMRD	SRGA 2		BD		79935H
	B79X2849X	SRGA 4 YAW SMRD	SRGA 4		BD		79935H
	B79X2890X	SRGA 2 PITCH POS TORQUE CMD	RF IEA		BD		90004B 79935H
	B79X2891X	SRGA 4 PITCH POS TORQUE CMD	RF IEA		BD		90004B 79935H
	B79X2893X	SRGA 2 YAW POS TORQUE CMD	RF IEA		BD		90004B 79935H
	B79X2894X	SRGA 4 YAW POS TORQUE CMD	RF IEA		BD		90004B 79935H
	B79X2896X	SRGA 2 PITCH NEG TORQUE CMD	RF IEA		BD		90004B 79935H
	B79X2897X	SRGA 4 PITCH NEG TORQUE CMD	RF IEA		BD		90004B 79935H

TABLE 4.1.3.4–1. SOLID ROCKET BOOSTER(SRB) DATA ACQUISITION (G4.203) INPUT/OUTPUT FUNCTIONAL PARAMETERS

DBFN: D3B027-F PN: VP707100049P00L INPUT FUNCTIONAL PARAMETERS FOR SRB DATA ACQ

FSSR NAME	M/S ID	NOMENCLATURE	SOURCE	UNITS	DATA TYPE	PREC	LAST CRS
	B79X2899X	SRGA 2 YAW NEG TORQUE CMD	RF IEA		BD		90004B 79935H
	B79X2900X	SRGA 4 YAW NEG TORQUE CMD	RF IEA		BD		90004B 79935H
	T55T1200C	TEMP ET RSS BATTERY A	HDWR	DEGF	AMU		90004B
	T55X1867X	ET RSS PIC A FIRED	LF IEA		BD		
	T55X1869X	ET RSS S&A DVC SAFED	HDWR		BD		
	T55X1870X	ET RSS S&A DVC ARMED	HDWR		BD		
	T55X1885X	ET RSS A INHIBIT IND	HDWR		BD		
	T55T2200C	TEMP ET RSS BATTERY B	HDWR	DEGF	AMU		90004B
	T55X2868X	ET RSS PIC B FIRED	RF IEA		BD		
	T55X2888X	ET RSS B INHIBIT IND	HDWR		BD		

TABLE 4.1.3.4–2. SOLID ROCKET BOOSTER(SRB) DATA ACQUISITION (G4.203) I–LOADS

DBFN:0484

FSSR NAME	MSID	ENG UNIT	DT PR	D S PR FCTN	CAT

NO REQUIREMENTS

TABLE 4.1.3.4-3. SOLID ROCKET BOOSTER(SRB) DATA ACQUISITION (G4.203) K-LOADS

DBFN:0558

FSSR NAME DESCRIPTION	MSID	MC KLOAD VALUE	ENG UNIT	DT PR S PR FCTN	LAST CR EQTN MSID

NO REQUIREMENTS

TABLE 4.1.3.4–4. SOLID ROCKET BOOSTER(SRB) DATA ACQUISITION (G4.203) CONSTANTS

DBFN:0558

FSSR NAME DESCRIPTION	MSID	MC	CONSTANT VALUE	ENG UNIT	DT	PR	S	PR FCTN	LAST CR

NO REQUIREMENTS

4.2 ASCENT

4.2.1 SSME Operations Sequence (4.165)

4.2.1.1 Introduction

The SSME operations sequence is initiated at TO/SRB IGNITION, and is used during the ascent phase to:

1. Monitor the operating phase of each main engine
2. Issue inhibit commands to prevent a second engine from automatically shutting down if one shutdown has already occurred
3. Monitor the state of cockpit switches via flags from the switch processor and issue appropriate commands
4. Monitor a flag from GNC software for proper time to check the LO_2 and LH_2 low–level sensors and provide a single pass health check of these sensors.
5. Monitor a cut–off timing request flag from GNC software for proper time for MECO, to meet the desired time for start of thrust tailoff with accuracy requirements of ±40 msec
6. Issue main engine shutdown commands when required
7. Close LO_2 and LH_2 prevalves for each engine after shutdown has occurred
8. Restart the event timer at MECO

In addition, an SSME data path fail flag from the SSME SOP is checked and if set and shutdown commands have been issued for that engine, then its prevalves are closed after a time delay. A MECO confirmed flag is set by the SSME operations sequence after it has been confirmed that all engines have shut down. Also a flag is set for the external tank (ET) separation sequence after the prevalves for all engines are commanded closed. This is necessary since shutdown times may differ.

4.2.1.2 Overview

The SSME operations sequence is initiated when the RS launch sequence fires the SRB's and sets the TO flag. At this point, the main engines are at or above the required thrust, and the engine controllers will have entered the main stage phase 5.O seconds after receipt of the start commands. The SSME OPS sequence operates cyclically at 25 Hz from initiation at TO until MECO is verified and a few seconds after the prevalves are commanded closed. Under normal operation through ascent, there are no commands to issue until the end of second stage when the engines must be shut down and certain main propulsion system (MPS) valves are closed.

Continuous monitoring of certain inputs is required in the event that an automatic shutdown by one engine occurs, the crew operates any of the manual switches, data from any of the main engines is lost, or, near the end of boost, either the LH_2 or LO_2 level sensors indicate fuel or oxidizer depletion.

If shutdown of an engine occurs for any reason, the LO_2 and LH_2 prevalves for that engine must be closed after appropriate time delays, and the remaining two engines are inhibited from performing an automatic shutdown.

The switch processor software monitors the position of several crew station switches for the MPS and sets flags which are monitored by SSME OPS. The MPS switches being monitored are the three shutdown push–button switches and the limit shutdown switch, which can override the automatic inhibit logic and inhibit or enable engine automatic shutdown.

The SSME OPS sequence monitors the main engine chamber pressure and manual shutdown switches. If shutdown is confirmed, the appropriate MPS valves are closed. The operating phase and mode within a phase are determined from the engine status word by the SSME SOP, which gathers the engine data from the EIU, decodes it, and sets applicable flags for the various user software packages. If valid data is not available from the engine, the SSME SOP sets a data path fail flag. If this flag is set and shutdown commands have been issued, SSME OPS proceeds, after a time delay, to close the engine prevalves.

SSME OPS, upon receiving a flag from guidance, begins monitoring the fuel and oxidizer low–level sensors. A first pass health check will be made to protect against premature SSME shutdown resulting from failed dry sensors. If any two LO_2 low–level sensors, which have been disabled, indicate a dry condition, the logic will issue the MECO commands. Likewise, two LH_2 low–level sensors, which indicate dry and have not been previously disabled, will cause the issuance of MECO commands.

Normal engine shutdown, MECO, is triggered by the vehicle achieving the desired velocity and a flag being set by guidance software. The MECO commands issued include shutdown enable and shutdown commands through the EIU's to each of the three main engine controllers. The MECO commands are issued until it is determined that each engine has shutdown. At this point a MECO confirmed flag is set for GNC applications and to initiate the external tank separation sequence. After MECO confirmed, a command is sent to restart the event timer.

SSME OPS continues to operate until the required time after prevalves for each engine are commanded closed and the close commands are removed. Nominal MECO and shutdown during "G" conditions require different time delays for prevalve closure. When LO_2 and LH_2 prevalves for all engines have been commanded closed a flag is set for the ET separation sequence. This is required to prevent initiation of ET disconnect valve closure prior to initiation of all prevalves closures. When the prevalves' close commands have been removed and the flag set, the SSME OPS sequence is terminated.

4.2.1.3 Detailed Requirements.

Step 1 – Main Engine (ME) 1 Prevalves Closed Check. This step provides a bypass of the logic in Steps 2 and 3 if ME–1 is in either shutdown or post shutdown phase and the prevalves have been commanded closed.

Monitor the following:

(a) ME–1 PREVALVES CMD'D CLOSED FLAG (INTERNAL)

If (a) = false proceed to Step 2.

If (a) = true proceed to Step 4.

Step 2 – ME–1 Data Path Fail Flag Check. This step monitors for an ME–1 DATA PATH FAIL FLAG which is set by the SSME SOP when valid engine data is not available. If the ME–1 DATA PATH FAIL FLAG is set and ME–1 safing or shutdown commands have been issued, then the LH_2 recirculation disconnect valve is commanded closed and the prevalves are commanded closed after appropriate time delays. If safing or shutdown commands have not been issued, then no action is taken.

Monitor the following:

(a)	ME–1 FLIGHT DATA PATH FAIL FLAG	V95X1150X
(b)	ME–1 SAFING CMD	V90X3443X
(c)	ME–1 SHUTDOWN CMD ISSUED FLAG	(INTERNAL)
(d)	MECO COMMAND FLAG	V90X8569X
(e)	MPS_E1_T_DELAY_A	V97U9738C

If (a) = false, proceed to Step 3.

If (a) = true and (b) and (c) = false, then proceed to Step 5.

If (a) = true and (b) or (c) = true and (d) = true, issue output (2), terminate output (3), and monitor (e).

If (a) = true and (b) or (c) = true and (d) = false, then issue outputs (1) and (2), and terminate output (3).

(1)	MPS E–1 FAIL FLAG	V95X1207X
(2)	MPS LH_2 RECIRC DISC VLV CLOSE CMD	V41K1422X
(3)	MPS LH_2 RECIRC DISC VLV OPEN CMD	V41K1421X

and then monitor (e).

If (e) seconds have not elapsed, proceed to Step 5.

If (e) seconds have elapsed, proceed to Step 3A.

Step 3 – ME–1 Status Check. This step monitors the ME–1 status word via SSME SOP flags and, if shutdown occurs, issues a fail flag for flight control and guidance functions. The LH_2 recirculation and disconnect valve is commanded closed and provides appropriate time delays before prevalve closure.

Monitor the following:

(a)	MPS E1 SHUTDOWN PHASE	V95X1155X
(b)	MPS E1 POST–SHUTDOWN PHASE	V95X1160X
(c)	MECO COMMAND FLAG	V90X8569X
(d)	MPS_E1_T_DELAY_A	V97U9738C

If (a) and (b) both = false, then proceed to Step 5.

If either (a) or (b) = true and (c) = true, issue output (2), terminate output (3), and monitor (d).

If either (a) or (b) = true and (c) = false, then issue outputs (1) and (2), terminate output (3), and monitor (d).

(1)	MPS E1 FAIL FLAG	V95X1207X
(2)	MPS LH_2 RECIRC DISC VLV CLOSE CMD	V41K1422X
(3)	MPS LH_2 RECIRC DISC VLV OPEN CMD	V41K1421X

If (d) seconds have not elapsed, proceed to Step 5.

If (d) seconds have elapsed, proceed to Step 3A.

Step 3A – Issuance of ME–1 Prevalve Close Commands. This step provides a time delay between issuance of the ME–1 LO_2 PREVALVE CLOSE COMMANDS and the ME–1 LH_2 PREVALVE CLOSE COMMANDS.

Issue the following outputs:

(1)	MPS E–1 LO_2 PREVALVE CLOSE CMD A	V41K1139X
(2)	MPS E–1 LO_2 PREVALVE CLOSE CMD B	V41K1140X
(3)	MPS E–1 LO_2 PREVALVE CLOSE CMD C	V41K1141X
(4)	MPS E–1 LO_2 PREVALVE CLOSE CMD D	V41K1142X

and terminate the following outputs:

(5)	MPS E–1 LO_2 PREVALVE OPEN CMD A	V41K1136X
(6)	MPS E–1 LO_2 PREVALVE OPEN CMD B	V41K1137X
(7)	MPS E–1 LO_2 PREVALVE OPEN CMD C	V41K1138X
(8)	MPS E–1 LO_2 PREVALVE OPEN CMD D	V41K1143X

and then monitor the following:

(a)	ME1_LH_2_PREVLV_CLSE_T_DELAY	V97U9741C

If (a) seconds have not elapsed, proceed to Step 5.

If (a) seconds have elapsed, issue the following outputs:

(9)	MPS E1 LH_2 PREVALVE CLOSE CMD A	V41K1122X
(10)	MPS E1 LH_2 PREVALVE CLOSE CMD B	V41K1123X
(11)	MPS E1 LH_2 PREVALVE CLOSE CMD C	V41K1124X

and terminate the following outputs:

(12)	MPS E–1 LH_2 PREVALVE OPEN CMD A	V41K1119X
(13)	MPS E–1 LH_2 PREVALVE OPEN CMD B	V41K1120X
(14)	MPS E–1 LH_2 PREVALVE OPEN CMD C	V41K1121X

and then set the following flag = true:

(15)	ME1 PREVALVES CMD'D CLOSED FLAG	(INTERNAL)

Step 4 – Removal of ME–1 Prevalve Close Commands. This step provides for the termination of the ME–1 PREVALVE CLOSE COMMANDS after an appropriate time delay.

Monitor the following:

(a)	ME1 PREVALVES CLOSE CMDS REMOVED FLAG	(INTERNAL)

If (a) = true, proceed to Step 5.

If (a) = false, monitor the following:

(b) MPS_E1_T_DELAY_C V97U9740C

If (b) seconds have not elapsed, proceed to Step 5.

If (b) seconds have elapsed, then terminate the following outputs:

(1)	MPS E–1 LH_2 PREVALVE CLOSE CMD A	V41K1122X
(2)	MPS E–1 LH_2 PREVALVE CLOSE CMD B	V41K1123X
(3)	MPS E–1 LH_2 PREVALVE CLOSE CMD C	V41K1124X
(4)	MPS E–1 LO_2 PREVALVE CLOSE CMD A	V41K1139X
(5)	MPS E–1 LO_2 PREVALVE CLOSE CMD B	V41K1140X
(6)	MPS E–1 LO_2 PREVALVE CLOSE CMD C	V41K1141X
(7)	MPS E–1 LO_2 PREVALVE CLOSE CMD D	V41K1142X

and then set the following flag = true:

(8)	ME–1 PREVALVES CLOSE CMDS REMOVED FLAG	(INTERNAL)

Proceed to Step 5.

Step 5 – ME–2 Prevalves Closed Check. This step provides a bypass of the logic in Steps 6 and 7 if ME–2 is in either the shutdown or post–shutdown phase and the prevalves have been commanded closed.

Monitor the following:

(a) ME–2 PREVALVES CMD'D CLOSED FLAG (INTERNAL)

If (a) = false, proceed to Step 6.

If (a) = true, proceed to Step 8.

Step 6 – ME–2 Data Path Fail Flag Check. This step monitors for an ME–2 DATA PATH FAIL FLAG, which is set by the SSME SOP when valid engine data is not available. If the ME–2 DATA PATH FAIL FLAG is set and ME–2 safing or shutdown commands have been issued, then the LH_2 recirculation disconnect valve is commanded closed and the prevalves are commanded closed after appropriate time delays. If safing or shutdown commands have not been issued, then no action is taken.

Monitor the following:

(a)	ME–2 FLIGHT DATA PATH FAIL FLAG	V95X1151X
(b)	ME–2 SAFING CMD	V90X3444X
(c)	ME–2 SHUTDOWN CMD ISSUED FLAG	(INTERNAL)
(d)	MECO COMMAND FLAG	V90X8569X
(e)	MPS_E2_T_DELAY_D	V97U9742C

If (a) = false, proceed to Step 7.

If (a) = true and (b) and (c) = false, then proceed to Step 9.

If (a) = true and (b) or (c) = true and (d) = true, issue output (2), terminate output (3) and monitor (e).

If (a) = true and (b) or (c) = true and (d) = false, then issue outputs (1) and (2), and terminate output (3):

(1)	MPS E2 FAIL FLAG	V95X1208X
(2)	MPS LH_2 RECIRC DISC VLV CLOSE CMD	V41K1422X
(3)	MPS LH_2 RECIRC DISC VLV OPEN CMD	V41K1421X

and then monitor (e).

If (e) seconds have not elapsed, proceed to Step 9.

If (e) seconds have elapsed, proceed to Step 7A.

Step 7 – ME–2 Status Check. This step monitors the ME–2 status word via SSME SOP flags and, if shutdown occurs, issues a fail flag for flight control and guidance functions. The LH_2 recirculation and disconnect valve is commanded closed and provides appropriate time delays before prevalve closure.

Monitor the following:

(a)	MPS E2 SHUTDOWN PHASE	V95X1156X
(b)	MPS E2 POST–SHUTDOWN PHASE	V95X1161X
(c)	MECO COMMAND FLAG	V90X8569X
(d)	MPS_E2_T_DELAY_D	V97U9742C

If (a) and (b) both = false, then proceed to Step 9.

If either (a) or (b) = true and (c) = true, issue output (2), terminate output (3), and monitor (d).

If either (a) or (b) = true and (c) = false, then issue outputs (1) and (2), terminate output (3), and monitor (d).

(1)	MPS E2 FAIL FLAG	V95X1208X
(2)	MPS LH_2 RECIRC DISC VLV CLOSE CMD	V41K1422X
(3)	MPS LH_2 RECIRC DISC VLV OPEN CMD	V41K1421X

If (d) seconds have not elapsed, proceed to Step 9.

If (d) seconds have elapsed, proceed to Step 7A.

Step 7A – Issuance of ME–2 Prevalve Close Commands. This step provides a time delay between issuance of the ME–2 LO_2 PREVALVE CLOSE COMMANDS and the ME–2 LH_2 PREVALVE CLOSE COMMANDS.

Issue the following outputs:

(1)	MPS E–2 LO_2 PREVALVE CLOSE CMD A	V41K1239X
(2)	MPS E–2 LO_2 PREVALVE CLOSE CMD B	V41K1240X
(3)	MPS E–2 LO_2 PREVALVE CLOSE CMD C	V41K1241X
(4)	MPS E–2 LO_2 PREVALVE CLOSE CMD D	V41K1242X

and terminate the following outputs:

(5) MPS E-2 LO_2 PREVALVE OPEN CMD A V41K1236X
(6) MPS E-2 LO_2 PREVALVE OPEN CMD B V41K1237X
(7) MPS E-2 LO_2 PREVALVE OPEN CMD C V41K1238X
(8) MPS E-2 LO_2 PREVALVE OPEN CMD D V41K1243X

and then monitor the following:

(a) ME2_LH_2_PREVLV_CLSE_T_DELAY V97U9745C

If (a) seconds have not elapsed, proceed to Step 9.

If (a) seconds have elapsed, issue the following outputs:

(9) MPS E-2 LH_2 PREVALVE CLOSE CMD A V41K1222X
(10) MPS E-2 LH_2 PREVALVE CLOSE CMD B V41K1223X
(11) MPS E-2 LH_2 PREVALVE CLOSE CMD C V41K1224X

and terminate the following outputs:

(12) MPS E-2 LH_2 PREVALVE OPEN CMD A V41K1219X
(13) MPS E-2 LH_2 PREVALVE OPEN CMD B V41K1220X
(14) MPS E-2 LH_2 PREVALVE OPEN CMD C V41K1221X

and set the following flag = true:

(15) MPS E-2 LH_2 PREVALVE CLOSE CMDS REMOVED FLAG (INTERNAL)

and proceed to Step 9.

Step 8 -- Removal of ME-2 Prevalve Close Commands. This step provides for the termination of the ME-2 PREVALVE CLOSE COMMANDS after an appropriate time delay.

Monitor the following:

(a) ME-2 PREVALVE CLOSE CMDS REMOVED FLAG (INTERNAL)

If (a) = true, proceed to Step 9.

If (a) = false, monitor the following:

(b) MPS_E2_T_DELAY_F V97U9744C

If (b) seconds have not elapsed, proceed to Step 9.

If (b) seconds have elapsed, then terminate the following outputs:

(1) MPS E-2 LH_2 PREVALVE CLOSE CMD A V41K1222X
(2) MPS E-2 LH_2 PREVALVE CLOSE CMD B V41K1223X
(3) MPS E-2 LH_2 PREVALVE CLOSE CMD C V41K1224X
(4) MPS E-2 LO_2 PREVALVE CLOSE CMD A V41K1239X
(5) MPS E-2 LO_2 PREVALVE CLOSE CMD B V41K1240X

(6) MPS E–2 LO_2 PREVALVE CLOSE CMD C V41K1241X
(7) MPS E–2 LO_2 PREVALVE CLOSE CMD D V41K1242X

and then set the following flag = true:

(8) ME–2 PREVALVES CLOSE CMDS REMOVED FLAG (INTERNAL)

Proceed to Step 9.

Step 9 – ME–3 Prevalves Closed Check. This step provides a bypass of the logic in Steps 10 and 11 if ME–3 is in either shutdown or post–shutdown phase and the prevalves have been commanded closed.

Monitor the following:

(a) ME–3 PREVALVES CMD'D CLOSED FLAG (INTERNAL)

If (a) = false, proceed to Step 10.

If (a) = true, proceed to Step 12.

Step 10 – ME–3 Data Path Fail Flag Check. This step monitors for an ME–3 DATA PATH FAIL FLAG, which is set by the SSME SOP when valid engine data is not available. If the ME–3 DATA PATH FAIL FLAG is set and ME–3 safing or shutdown commands have been issued, then the LH_2 recirculation disconnect valve is commanded closed and the prevalves are commanded closed after appropriate time delays. If safing or shutdown commands have not been issued, then no action is taken.

Monitor the following:

(a) ME–3 FLIGHT DATA PATH FAIL FLAG V95X1152X
(b) ME–3 SAFING CMD V90X3445X
(c) ME–3 SHUTDOWN CMD ISSUED FLAG (INTERNAL)
(d) MECO COMMAND FLAG V90X8569X
(e) MPS_E3_T_DELAY_G V97U9746C

If (a) = false, proceed to Step 11.

If (a) = true and (b) and (c) = false, then proceed to Step 13.

If (a) = true and (b) or (c) = true and (d) = true, issue output (2), terminate output (3), and monitor (e).

If (a) = true and (b) or (c) = true and (d) = false, then issue outputs (1) and (2), terminate output (3), and monitor (e).

(1) MPS E3 FAIL FLAG V95X1209X
(2) MPS LH_2 RECIRC DISC VLV CLOSE CMD V41K1422X
(3) MPS LH_2 RECIRC DISC VLV OPEN CMD V41K1421X

If (e) seconds have not elapsed, proceed to Step 13.

If (e) seconds have elapsed, proceed to Step 11A.

Step 11 – ME–3 Status Check. This step monitors the ME–3 status word via SSME SOP flags and, if shutdown occurs, issues a fail flag for flight control and guidance functions, the LH_2 recirculation disconnect valve is commanded closed, and provides appropriate time delays before prevalve closure.

Monitor the following:

(a)	MPS E3 SHUTDOWN PHASE	V95X1157X
(b)	MPS E3 POST–SHUTDOWN PHASE	V95X1162X
(c)	MECO COMMAND FLAG	V90X8569X
(d)	MPS_E3_T_DELAY_G	V97U9746C

If either (a) and (b) both = false, proceed to Step 13.

If either (a) or (b) = true and (c) = true, issue output (2), terminate output (3), monitor (d).

If either (a) or (b) = true and (c) = false, then issue outputs (1) and (2), terminate output (3) and then monitor (d).

(1)	MPS E3 FAIL FLAG	V95X1209X
(2)	MPS LH_2 RECIRC DISC VLV CLOSE CMD	V41K1422X
(3)	MPS LH_2 RECIRC DISC VLV OPEN CMD	V41K1421X

If (d) seconds have not elapsed, proceed to Step 13.

If (d) seconds have elapsed, proceed to Step 11A.

Step 11A – Issuance of ME–3 Prevalve Close Commands. This step provides a time delay between issuance of the ME–3 LO_2 PREVALVE CLOSE COMMANDS and the ME–3 LH_2 PREVALVE CLOSE COMMANDS.

Issue the following outputs:

(1)	MPS E–3 LO_2 PREVALVE CLOSE CMD A	V41K1339X
(2)	MPS E–3 LO_2 PREVALVE CLOSE CMD B	V41K1340X
(3)	MPS E–3 LO_2 PREVALVE CLOSE CMD C	V41K1341X
(4)	MPS E–3 LO_2 PREVALVE CLOSE CMD D	V41K1342X

and terminate the following outputs:

(5)	MPS E–3 LO_2 PREVALVE OPEN CMD A	V41K1336X
(6)	MPS E–3 LO_2 PREVALVE OPEN CMD B	V41K1337X
(7)	MPS E–3 LO_2 PREVALVE OPEN CMD C	V41K1338X
(8)	MPS E–3 LO_2 PREVALVE OPEN CMD D	V41K1343X

and then monitor the following:

(a)	ME3_LH_2_PREVLV_CLSE_T_DELAY	V97U9749C

If (a) seconds have not elapsed, proceed to Step 13.

If (a) seconds have elapsed, issue the following outputs:

(9)	MPS E–3 LH_2 PREVALVE CLOSE CMD A	V41K1322X
(10)	MPS E–3 LH_2 PREVALVE CLOSE CMD B	V41K1323X
(11)	MPS E–3 LH_2 PREVALVE CLOSE CMD C	V41K1324X

and terminate the following outputs:

(12)	MPS E–3 LH_2 PREVALVE OPEN CMD A	V41K1319X
(13)	MPS E–3 LH_2 PREVALVE OPEN CMD B	V41K1320X
(14)	MPS E–3 LH_2 PREVALVE OPEN CMD C	V41K1321X

and then set the following flag = true:

(15)	ME–3 PREVALVES CMD'D CLOSED FLAG	(INTERNAL)

and proceed to Step 13.

Step 12 – Removal of ME–3 Prevalve Close Commands. This step provides for the termination of the ME–3 PREVALVE CLOSE COMMANDS after an appropriate time delay.

Monitor the following:

(a)	ME–3 PREVALVES CLOSE CMDS REMOVED FLAG	(INTERNAL)

If (a) = true, proceed to Step 13.

If (a) = false, monitor the following:

(b)	MPS_E3_T_DELAY_I	V97U9748C

If (b) seconds have not elapsed, proceed to Step 13.

If (b) seconds have elapsed, then terminate the following outputs:

(1)	MPS E–3 LH_2 PREVALVE CLOSE CMD A	V41K1322X
(2)	MPS E–3 LH_2 PREVALVE CLOSE CMD B	V41K1323X
(3)	MPS E–3 LH_2 PREVALVE CLOSE CMD C	V41K1324X
(4)	MPS E–3 LO_2 PREVALVE CLOSE CMD A	V41K1339X
(5)	MPS E–3 LO_2 PREVALVE CLOSE CMD B	V41K1340X
(6)	MPS E–3 LO_2 PREVALVE CLOSE CMD C	V41K1341X
(7)	MPS E–3 LO_2 PREVALVE CLOSE CMD D	V41K1342X

and then set the following flag = true:

(8)	ME–3 PREVLVS CLOSE CMDS REMOVED FLAG	(INTERNAL)

Proceed to Step 13.

Step 13 – ME–1, 2, and 3 Manual Shutdown Switch Checks. This step provides and monitors for a manually initiated shutdown of any engine by the crew. If any one of the three MPS engine shutdown switches is depressed, the GN&C switch processor sets a flag for SSME OPS indicating shutdown is required for that engine. SSME OPS then sets an internal flag, which is checked in later steps in the logic, for initiating the shutdown.

Monitor the following:

(a)	SEL MPS ME–1 SHUTDOWN CMD	V90X7551X
(b)	SEL MPS ME–2 SHUTDOWN CMD	V90X7552X
(c)	SEL MPS ME–3 SHUTDOWN CMD	V90X7553X

If (a), (b), and (c) all = false, proceed to Step 14.

If (a) = true, set internal flag (1) below = true.

If (b) = true, set internal flag (2) below = true.

If (c) = true, set internal flag (3) below = true.

(1)	ME–1 MANUAL SHUTDOWN FLAG	(INTERNAL)
(2)	ME–2 MANUAL SHUTDOWN FLAG	(INTERNAL)
(3)	ME–3 MANUAL SHUTDOWN FLAG	(INTERNAL)

Proceed to Step 14.

Step 14 – Main Engine Safing Cmd Check. This step monitors for main engine safing commands from the GN&C switch processor and latches the applicable safing commands in the on state.

Monitor the following:

(a)	ME–1 SAFING CMD	V90X3443X
(b)	ME–2 SAFING CMD	V90X3444X
(c)	ME–3 SAFING CMD	V90X3445X

If (a) is detected true, latch (a) = true for all subsequent passes.

If (b) is detected true, latch (b) = true for all subsequent passes.

If (c) is detected true, latch (c) = true for all subsequent passes.

Proceed to Step 17.

Step 15. Deleted.

Step 16. Deleted.

Step 17 – MECO Commanded Check. This step provides a bypass of the automatic and manual limit control logic in Step 18 through Step 22 and the guidance cutoff logic and low–level sensor cutoff logic of Steps 23 through 26 inclusive, if main engine cutoff (MECO) has been commanded. It also provides for a change in the LO_2 prevalve close time delays after MECO has been commanded to improve shutdown safety.

Monitor the following:

(a)	MECO COMMAND FLAG	V90X8569X

If (a) is false, proceed to Step 18.

If (a) is true, issue output (1) below one time only and perform the following functions:

Set V97U9738C MPS_E1_T_DELAY_A to the value contained in input (A) below.

Set V97U9742C MPS_E2_T_DELAY_D to the value contained in input (B) below.

Set V97U9746C MPS_E3_T_DELAY_G to the value contained in input (C) below.

Proceed to Step 17A.

INPUTS

(A)	MPS_MECO_E1_T_DELAY_A	V96U9769C
(B)	MPS_MECO_E2_T_DELAY_D	V97U9771C
(C)	MPS_MECO_E3_T_DELAY_G	V96U9773C

OUTPUTS

(1)	MPS PNEU CROSSOVER NO. 2 OPEN CMD	V41K1613X

Step 17A – MPS Helium Interconnect. This step initiates a 20–second timer and branches to the helium interconnect logic. On expiration of the time delay, the interconnect valve commands are terminated.

On the first pass, start a 20–second timer and proceed to Step 17B.

On the second and subsequent passes, monitor the 20–second time delay. If 20 seconds have not elapsed, proceed to Step 24A. When 20 seconds have elapsed, terminate outputs (1) through (6) and set output (7) = false. Then proceed to Step 24A.

(1)	MPS E1 HE INTCON IN/OPEN CMD A	V41K1162X
(2)	MPS E1 HE INTCON IN/OPEN CMD B	V41K1163X
(3)	MPS E2 HE INTCON IN/OPEN CMD A	V41K1262X
(4)	MPS E2 HE INTCON IN/OPEN CMD B	V41K1263X
(5)	MPS E3 HE INTCON IN/OPEN CMD A	V41K1362X
(6)	MPS E3 HE INTCON IN/OPEN CMD B	V41K1363X
(7)	HELIUM INTERCONNECT FLAG	(INTERNAL)

Step 17B – Issue of ME–1 Helium Interconnect Commands. This step is processed one time only and interconnects the pneumatic system helium supply to ME–1 during shutdown if the ME–1 FAIL FLAG has not previously been set true and either the confirmed ME–1 helium supply pressure is lower than or equal to the level that is required to support SSME shutdown helium usage or the pressure is comm-faulted.

Monitor the following:

(a)	MPS E1 FAIL FLAG	V95X1207X
(b)	MPS E1 HE SUPPLY BOTTLE PRESSURE	V41P1150C
(c)	MPS_HELIUM_SYSTEM_LOW_PRESSURE	V97U9735C
(d)	FA1 INPUT PROM SEG 1, 2 STATUS (MFE)	V91X2845X

If (a) = true, proceed to Step 17C. Otherwise, proceed to monitor (b), (c), and (d).

If (d) = false, and (b) > (c), proceed to Step 17C; otherwise, issue the following inputs (1) and (2) one time only and proceed to Step 17C.

(1)	MPS E1 HE INTCON IN/OPEN CMD A	V41K1162X
(2)	MPS E1 HE INTCON IN/OPEN CMD B	V41K1163X

Step 17C – Issue of ME–2 Helium Interconnect Commands. This step is processed one time only and interconnects the pneumatic system helium supply to ME–2 helium supply during shutdown if the ME–2 FAIL FLAG has not previously been set true and either the confirmed ME-1 helium supply pressure is lower than or equal to the level that is required to support SSME shutdown helium usage or the pressure input is commfaulted.

Monitor the following:

(a)	MPS E2 FAIL FLAG	V95X1208X
(b)	MPS E2 HE SUPPLY BOTTLE PRESSURE	V41P1250C
(c)	MPS_HELIUM_SYSTEM_LOW_PRESSURE	V97U9735C
(d)	FA2 INPUT PROM SEG 1, 2 STATUS (MFE)	V91X2842X

If (a) = true, or (b) > c, proceed to Step 17D. Otherwise, issue the following outputs (1) and (2) one time only and proceed to Step 17D.

(1)	MPS E2 HE INTCON IN/OPEN CMD A	V41K1262X
(2)	MPS E2 HE INTCON IN/OPEN CMD B	V41K1263X

Step 17D – Issue of ME–3 Helium Interconnect Commands. This step is processed one time only and interconnects the pneumatic system helium supply to ME–3 during shutdown if the ME–3 FAIL FLAG has not previously been set true and either the confirmed ME-3 helium supply pressure is lower than or equal to the level that is required to support SSME shutdown helium usage or the pressure input is commfaulted.

Monitor the following:

(a)	MPS E3 FAIL FLAG	V95X1209X
(b)	MPS E3 HE SUPPLY BOTTLE PRESSURE	V41P1350C
(c)	MPS_HELIUM_SYSTEM_LOW_PRESSURE	V97U9735C
(d)	FA3 INPUT PROM SEG 1, 2 STATUS (MFE)	V91X2843X

If (a) = true, set output (3) = true and proceed to Step 24A. Otherwise, proceed to monitor (b), (c) and (d).

If (d) = false and (b) > (c), set output (3) true and proceed to Step 24A. Otherwise, issue the following outputs (1) and (2) one time only, set output (3) true and proceed to Step 24A.

(1)	MPS E3 HE INTCON IN/OPEN CMD A	V41K1362X
(2)	MPS E3 HE INTCON IN/OPEN CMD B	V41K1363X
(3)	HELIUM INTERCONNECT FLAG	(INTERNAL)

Step 18 – Limit Shutdown Switch Auto/Manual Check. This step permits a manual override of the automatic limit control logic by the crew. If the switch is in AUTO, the automatic limit control logic is active; and if one engine shuts down, the remaining two are inhibited from automatic shutdown. If the switch is

in one of the manual positions, the crew overrides the automatic limit control logic and either enables or inhibits automatic shutdown by all engines.

Monitor the following:

(a) SEL MPS ENG LIMIT CONTROL AUTO V90X7548X

If (a) = true, set internal counters A and B to zero and proceed to Step 19.

If (a) = false, set internal counters C, D, E, F, G, and H to zero and proceed to Step 22.

Step 19 – Automatic Limit Shutdown Inhibit Control for ME–1. This step monitors the operating phase of ME–1 and the validity of ME–1 data via the FLIGHT DATA PATH FAIL FLAG from the SSME SOP. If ME–1 enters the shutdown phase or the ME–1 FLIGHT DATA PATH FAIL FLAG is set, the other two engines will be inhibited from performing an automatic shutdown.

Monitor the following:

(a) MPS E1 SHUTDOWN PHASE V95X1155X
(b) MPS E1 POST–SHUTDOWN PHASE V95X1160X
(c) ME–1 FLIGHT DATA PATH FAIL FLAG V95X1150X

If (a), (b), and (c) all = false, check internal counter C. If internal counter C is less than three counts, then issue the following output:

(1) MPS E1 LIMIT CNTL ENA V90X8573X

and increment counter C by one count and proceed to Step 20.

If (a), (b), and (c) all = false and internal counter C is greater than two counts, proceed to Step 20.

If either (a), (b), or (c) = true, check internal counter D. If internal counter D is less than three counts then issue the following outputs:

(2) MPS E2 LIMIT CNTL INH V90X8571X
(3) MPS E3 LIMIT CNTL INH V90X8572X

and increment counter D by one count and proceed to Step 20.

If either (a), (b), or (c) = true and internal counter D is greater than two counts, proceed to Step 20.

Step 20 – Automatic Limit Shutdown Inhibit Control for ME–2. This step monitors the operating phase of ME–2 and the validity of ME–2 data via the FLIGHT DATA PATH FAIL FLAG from the SSME SOP. If ME–2 enters the shutdown phase or the ME–2 FLIGHT DATA PATH FAIL FLAG is set, the other two engines will be inhibited from performing an automatic shutdown.

Monitor the following:

(a) MPS E2 SHUTDOWN PHASE V95X1156X
(b) MPS E2 POST–SHUTDOWN PHASE V95X1161X

(c) ME–2 FLIGHT DATA PATH FAIL FLAG V95X1151X

If (a), (b), and (c) all = false, check internal counter E. If internal counter E is less than three counts, then issue the following output:

(1) MPS E2 LIMIT CNTL ENA V90X8574X

and increment counter E by one count and proceed to Step 21.

If (a), (b), and (c) all = false and internal counter E is greater than two counts, proceed to Step 21.

If either (a), (b), or (c) = true, check internal counter F. If internal counter F is less than three counts, then issue the following outputs:

(2) MPS E1 LIMIT CNTL INH V90X8570X
(3) MPS E3 LIMIT CNTL INH V90X8572X

and increment counter F by one count and proceed to Step 21.

If either (a), (b), or (c) = true and internal counter F is greater than two counts, proceed to Step 21.

Step 21 – Automatic Limit Shutdown Inhibit Control for ME–3. This step monitors the operating phase of ME–3 and the validity of ME–3 data via the FLIGHT DATA PATH FAIL FLAG from the SSME SOP. If ME–3 enters the shutdown phase or the ME–3 FLIGHT DATA PATH FAIL FLAG is set, the other two engines will be inhibited from performing an automatic shutdown.

Monitor the following:

(a) MPS E3 SHUTDOWN PHASE V95X1157X
(b) MPS E3 POST–SHUTDOWN PHASE V95X1162X
(c) ME–3 FLIGHT DATA PATH FAIL FLAG V95X1152X

If (a), (b), and (c) all = false, check internal counter G. If internal counter G is less than three counts, then issue the following output:

(1) MPS E3 LIMIT CNTL ENA V90X8575X

and increment counter G by one count and proceed to Step 23.

If (a), (b), and (c) all = false and internal counter G is greater than two counts, proceed to Step 23.

If either (a), (b), or (c) = true, check internal counter H. If internal counter H is less than three counts, then issue the following outputs:

(2) MPS E1 LIMIT CNTL INH V90X8570X
(3) MPS E2 LIMIT CNTL INH V90X8571X

and increment counter H by one count and proceed to Step 23.

If either (a), (b), or (c) = true and internal counter H is greater than two counts, proceed to Step 23.

Steps 21A Through 21E – Deleted.

Step 22 – Limit Shutdown Switch Inhibit/Enable Check. This step monitors the manual positions of the limit shutdown switch via switch processor flags and permits the crew to enable automatic shutdown by all engines or inhibit automatic shutdown by any engine.

Monitor the following:

(a)	SEL MPS ENG LIMIT CONTROL ENABLE	V90X7549X
(b)	SEL MPS ENG LIMIT CONTROL INHIBIT	V90X7550X

If (a) is true and counter A is less than 3, increment counter A by one count, set counter B to zero, issue outputs (1) through (3) below, and proceed to Step 23.

If (a) is true and counter A is greater than 2, proceed to Step 23.

If (b) is true and counter B is less than 3, increment counter B by one count, set counter A to zero, issue outputs (4) through (6) below, and proceed to Step 23.

If (b) is true and counter B is greater than 2, proceed to Step 23.

(1)	MPS E1 LIMIT CNTL ENA	V90X8573X
(2)	MPS E2 LIMIT CNTL ENA	V90X8574X
(3)	MPS E3 LIMIT CNTL ENA	V90X8575X
(4)	MPS E1 LIMIT CNTL INH	V90X8570X
(5)	MPS E2 LIMIT CNTL INH	V90X8571X
(6)	MPS E3 LIMIT CNTL INH	V90X8572X

Steps 22A Through 22F – Deleted.

Step 23 – SSME Cutoff Request Check. This step monitors for a flag from guidance indicating it is time to read the desired SSME cutoff time and initiate MECO at the desired time. The shutdown commands sent as a result of the MECO command flag must be sent at the proper time to ensure a MECO accuracy of ±40 ms. Proper issuance of the shutdown commands is controlled by the MECO LEAD TIME I–load. The first shutdown command will be sent no sooner than 30 ms before desired cutoff time and no later than +30 ms from the desired cutoff time. Changes in software design, timing, will change the value of MECO LEAD TIME.

Monitor the following:

(a)	SSME C/O TIMING REQUEST FLAG	V90X1944X
(b)	DESIRED SSME C/O TIME	V90W1945C
(c)	GMT	V91W5000C
(d)	MECO_LEAD_TIME	V97U9829C

If (a) = false, proceed to Step 24.

If (a) = true, read (b) and subtract (c) from (b). When (b) – (c) is greater than (d), proceed to Step 24.

When (b) – (c) is less than or equal to (d), issue the following output and proceed to Step 24A.

(1) MECO COMMAND FLAG V90X8569X

Step 24 – Low–Level Sensor Monitor Check. This step monitors for a flag set by guidance indicating time to monitor the LO_2 and LH_2 low–level sensors.

Monitor the following conditions:

(a) ET LEVEL SENSOR ARM CMD V90X1942X

If (a) = false, proceed to Step 24A.

If (a) = true, proceed to Step 25.

Step 24A – ET Fast Separation Check. This step determines if a fast ET separation has been requested and, if so, sets the proper flags and delays to provide the proper engine shutdown sequence for a fast separation.

Monitor the following signals:

(a)	MM102 FLAG	V90X8158X
(b)	ET MAN SEP INITIATE	V90X7564X
(c)	ET SEP MAN INITIATE FLAG	V90X8584X
(d)	MM601 FLAG	V90X8194X
(e)	MM103 FLAG	V90X8156X
(f)	SECOND SSME FAIL CONFIRM	V90X1721X

If ((a) or (d) or [(e) and (f)]) and (b) are true or (c) is true, latch (c) true and perform the following functions; otherwise proceed to Step 27.

Set the following parameters to the value contained in input 2 below:

MPS_E1_T_DELAY_A	V97U9738C
MPS_E2_T_DELAY_D	V97U9742C
MPS_E3_T_DELAY_G	V97U9746C

Set the following parameters to the value contained in input 3 below:

ME1_LH_2_PREVALVE_CLSE_T_DELAY	V97U9741C
ME2_LH_2_PREVALVE_CLSE_T_DELAY	V97U9745C
ME3_LH_2_PREVALVE_CLSE_T_DELAY	V97U9749C

Set the following times to the value contained in 1 below:

ME–1 SHUTDOWN DELAY TIMER	(INTERNAL)
ME–2 SHUTDOWN DELAY TIMER	(INTERNAL)

Set the following flag true:

ME–1 MANUAL SHUTDOWN FLAG (INTERNAL)

Initiate ME–1 shutdown delay timer and proceed to Step 27. On subsequent passes, proceed to Step 27 until ME–1 shutdown delay timer expires.

Then set the following flag = true:

ME–2 MANUAL SHUTDOWN FLAG (INTERNAL)

Initiate ME–2 shutdown delay timer and proceed to Step 27. On subsequent passes, proceed to Step 27 until ME–2 shutdown timer expires.

Then set the following flags = true:

MECO COMMAND FLAG V90X8569X
MECO CONFIRMED FLAG V90X8561X

and set the following parameter to the value contained in input 4 below and proceed to Step 27.

TIME_TO_ZERO_THRUST V97U9655C

INPUTS

1. ME_SHTDN_DLY V97U9830C
2. FAST_SEP_LOX_PRVLV_DLY V97U9831C
3. FAST_SEP_LH_2_PRVLV_DLY V97U9832C
4. FAST_SEP_ZERO_THRUST_DLY V97U9833C

Step 25 – LO_2 Low–Level Sensor Dry Check. This step monitors for dry indications from four LO_2 low–level sensors, commfault indications for each sensor, and for a disable flag for each sensor. On the first pass that ET level sensor arm command is true, if a sensor indicates dry and the respective sensor commfault is false, and no previous LO_2 sensor has been disabled, then the associated sensor disable flag is latched true. On subsequent passes, if a sensor indicates dry, the respective commfault for that sensor is false, and the sensor has not been disabled, then an internal flag is latched true indicating that sensor is dry.

Monitor the following conditions:

(a) MPS LO_2 LEFT NO. 1 ECO SENSOR V41X1555X
(b) MPS LO_2 LEFT NO. 2 ECO SENSOR V41X1556X
(c) MPS LO_2 RIGHT NO. 2 ECO SENSOR V41X1557X
(d) MPS LO_2 RIGHT NO. 1 ECO SENSOR V41X1558X
(e) MPS_LOX_LO_LVL_LIQ_SES1_DSBL_FLG V99X8814X
(f) MPS_LOX_LO_LVL_LIQ_SES2_DSBL_FLG V99X8815X
(g) MPS_LOX_LO_LVL_LIQ_SES3_DSBL_FLG V99X8816X
(h) MPS_LOX_LO_LVL_LIQ_SES4_DSBL_FLG V99X8817X
(i) FA 3 INPUT PROM SEG 3, 10 STATUS (HFE) V91X2847X
(j) FA 2 INPUT PROM SEG 3, 10 STATUS (HFE) V91X2846X
(k) FA 4 INPUT PROM SEG 3, 10 STATUS (HFE) V91X2848X
(l) FA 1 INPUT PROM SEG 3, 10 STATUS (HFE) V91X2845X
(m) ARM CMD FIRST PASS FLAG (INTERNAL)
(n) LO_2 DSLB LIMIT FLAG (INTERNAL)

If (m) is true, check the following:

If (a) is true and (i) is false, then set outputs (1) and (5) true.

If (b) is true and (j) and (n) are false, then set outputs (2) and (5) true.

If (c) is true and (k) and (n) are false, then set outputs (3) and (5) true.

If (d) is true and (l) and (n) are false, then set output (4) true.

Else, check the following:

If (a) is true and (e) and (i) are both false, then set output (6) true.

If (b) is true and (f) and (j) are both false, then set output (7) true.

If (c) is true and (g) and (k) are both false, then set output (8) true.

If (d) is true and (h) and (l) are both false, then set output (9) true.

(1)	MPS_LOX_LO_LVL_LIQ_SES1_DSBL_FLG	V99X8814X
(2)	MPS_LOX_LO_LVL_LIQ_SES2_DSBL_FLG	V99X8815X
(3)	MPS_LOX_LO_LVL_LIQ–SES3_DSBL_FLG	V99X8816X
(4)	MPS_LOX_LO_LVL_LIQ_SES4_DSBL_FLG	V99X8817X
(5)	LO_2 DSBL LIMIT FLAG	(INTERNAL)
(6)	LO_2 SENSOR 1 DRY FLAG	(INTERNAL)
(7)	LO_2 SENSOR 2 DRY FLAG	(INTERNAL)
(8)	LO_2 SENSOR 3 DRY FLAG	(INTERNAL)
(9)	LO_2 SENSOR 4 DRY FLAG	(INTERNAL)

Proceed to Step 25A.

Step 25A – Check of LO_2 Sensor Dry Flags. This step monitors for any two LO_2 sensor flags latched true in Step 25. If any two flags are true and the required time delay has elapsed since two flags were first detected true, then MECO is initiated.

Monitor the following:

(a)	LO_2 SENSOR 1 DRY FLAG	(INTERNAL)
(b)	LO_2 SENSOR 2 DRY FLAG	(INTERNAL)
(c)	LO_2 SENSOR 3 DRY FLAG	(INTERNAL)
(d)	LO_2 SENSOR 4 DRY FLAG	(INTERNAL)
(e)	RTLS ABORT DECLARED	V90X8637X
(f)	MPS E1 FAIL FLAG	V95X1207X
(g)	MPS E2 FAIL FLAG	V95X1208X
(h)	MPS E3 FAIL FLAG	V95X1209X
(i)	NOM_LO_2_LL_T_DELAY_L	V97U9863C
(j)	RTLS_LO_2_LL_T_DELAY_M	V97U9864C
(k)	PTM_LO_2_LL_T_DELAY_N	V97U9865C

On the first pass that [(a) and (b)] or [(a) and (c)] or [(a) and (d)] or [(b) and (c)] or [(b) and (d)] or [(c) and (d)] are detected true, establish the appropriate time delay for setting the MECO COMMAND FLAG true as follows:

If (f), (g), and (h) all = false, set (i) as the time delay and proceed to Step 26.

If either (f) or (g) or (h) = true and (e) = true, set (j) as the time delay and proceed to Step 26.

If (f) or (g) or (h) = true and (e) = false, set (k) as the time delay and proceed to Step 26.

On the second and subsequent passes since two or more LO_2 sensor dry flags were detected true, monitor the time delay established above. When the selected time delay has elapsed, set output (1) true and proceed to Step 24A.

(1) MECO COMMAND FLAG V90X8569X

Otherwise, proceed to Step 26.

Step 26 – LH_2 Low–Level Sensor Dry Check. This step monitors for dry indications from four LH_2 low–level sensors, commfault indications for each sensor, and for a disable flag for each sensor. On the first pass that ET level sensor arm command is true, if a sensor indicates dry and the respective sensor commfault is false, and no previous LH_2 sensor has been disabled, then the associated sensor disable flag is latched true. On subsequent passes, if a sensor indicates dry, the respective commfault for that sensor is false, and the sensor has not been disabled, then an internal flag is latched true indicating that sensor is dry.

Monitor the following conditions:

(a)	ET LH_2 LOW LEVEL LIQ SENSOR NO. 1	T41X1730X
(b)	ET LH_2 LOW LEVEL LIQ SENSOR NO. 2	T41X1731X
(c)	ET LH_2 LOW LEVEL LIQ SENSOR NO. 3	T41X1732X
(d)	ET LH_2 LOW LEVEL LIQ SENSOR NO. 4	T41X1733X
(e)	ET_LH_2_LO_LVL_LIQ_SES1_DSBL_FLG	V99X8806X
(f)	ET_LH_2_LO_LVL_LIQ_SES2_DSBL_FLG	V99X8807X
(g)	ET_LH_2_LO_LVL_LIQ_SES3_DSBL_FLG	V99X8808X
(h)	ET_LH_2_LO_LVL_LIQ_SES4_DSBL_FLG	V99X8809X
(i)	FA3 INPUT PROM SEG 3, 10 STATUS (HFE)	V91X2847X
(j)	FA2 INPUT PROM SEG 3, 10 STATUS (HFE)	V91X2846X
(k)	FA4 INPUT PROM SEG 3, 10 STATUS (HFE)	V91X2848X
(l)	FA1 INPUT PROM SEG 3, 10 STATUS (HFE)	V91X2845X
(m)	ARM CMD FIRST PASS FLAG	(INTERNAL)
(n)	LH_2 DSBL LIMIT FLAG	(INTERNAL)

If (m) is true, check the following:

If (a) is true and (i) is false, then set outputs (1) and (5) true.

If (b) is true and (j) and (n) are false, then set outputs (2) and (5) true.

If (c) is true and (k) and (n) are false, then set outputs (3) and (5) true.

If (d) is true and (l) and (n) are false, then set output (4) true.

Else, check the following:

If (a) is true and (e) and (i) are both false, then set output (6) true.

If (b) is true and (f) and (j) are both false, then set output (7) true.

If (c) is true and (g) and (k) are both false, then set output (8) true.

If (d) is true and (h) and (l) are both false, then set output (9) true.

(1)	ET_LH_2_LO_LVL_LIQ_SES1_DSBL_FLG	V99X8806X
(2)	ET_LH_2_LO_LVL_LIQ_SES2_DSBL_FLG	V99X8807X
(3)	ET_LH_2_LO_LVL_LIQ_SES3_DSBL_FLG	V99X8808X
(4)	ET_LH_2_LO_LVL_LIQ_SES4_DSBL_FLG	V99X8809X
(5)	LH_2 DSBL LIMIT FLAG	(INTERNAL)
(6)	LH_2 SENSOR #1 DRY FLAG	(INTERNAL)
(7)	LH_2 SENSOR #2 DRY FLAG	(INTERNAL)
(8)	LH_2 SENSOR #3 DRY FLAG	(INTERNAL)
(9)	LH_2 SENSOR #4 DRY FLAG	(INTERNAL)

Proceed to Step 26A.

Step 26A – Check of LH_2 Sensor Dry Flags. This step monitors for any two LH_2 sensor dry flags latched true in Step 26. If any two flags are true and the required time delay has elapsed since two flags were first detected true, then MECO is initiated.

Monitor the following:

(a)	LH_2 SENSOR #1 DRY FLAG	(INTERNAL)
(b)	LH_2 SENSOR #2 DRY FLAG	(INTERNAL)
(c)	LH_2 SENSOR #3 DRY FLAG	(INTERNAL)
(d)	LH_2 SENSOR #4 DRY FLAG	(INTERNAL)
(e)	RTLS ABORT DECLARED	V90X8637X
(f)	MPS E1 FAIL FLAG	V95X1207X
(g)	MPS E2 FAIL FLAG	V95X1208X
(h)	MPS E3 FAIL FLAG	V95X1209X
(i)	LH_2_LL_TIME_DELAY_Q	V96U9535C
(j)	RTLS_LH_2_LL_TIME_DELAY_P	V96U9536C
(k)	ARM CMD FIRST PASS FLAG	(INTERNAL)

If (k) is true, then set (2) false.

On the first pass that [(a) and (b)] or [(a) and (c)] or [(a) and (d)] or [(b) and (c)] or [(b) and (d)] or [(c) and (d)] are detected true, establish the appropriate time delay for setting the MECO COMMAND FLAG true as follows:

If (e) = true and either (f) or (g) or (h) = true, then set (j) as the time delay and proceed to Step 24A.

Otherwise set (i) as the time delay and proceed to Step 24A.

On the second and subsequent passes since two or more LH_2 sensor dry flags were detected true, monitor the time delay established above. When the selected time delay has elapsed, set output (1) true and proceed to Step 24A.

(1)	MECO COMMAND FLAG	V90X8569X
(2)	ARM CMD FIRST PASS FLAG	(INTERNAL)

Otherwise, proceed to Step 24A.

Step 27 – ME–1 Shutdown Initiation. This step monitors for either an ME–1 MANUAL SHUTDOWN FLAG or a MECO COMMAND FLAG. If either flag is set true, this step will alternately issue the shutdown enable and shutdown commands until ME–1 is detected to be in the shutdown or post–shutdown phase.

Monitor the following:

(a)	ME–1 MANUAL SHUTDOWN FLAG	(INTERNAL)
(b)	MECO COMMAND FLAG	V90X8569X
(c)	MPS E1 SHUTDOWN PHASE	V95X1155X
(d)	MPS E1 POST–SHUTDOWN PHASE	V95X1160X

If (a) and (b) both = false, proceed to Step 28.

If either (a) or (b) = true and either (c) or (d) = true, then terminate outputs (1) and (2), set output (3) = true, and proceed to Step 28.

(1)	MPS E1 SHUTDOWN ENABLE CMD	V90X8367X
(2)	MPS E1 SHUTDOWN CMD	V90X8370X
(3)	ME–1 SHUTDOWN CMD ISSUED FLAG	(INTERNAL)

If either (a) or (b) = true and both (c) and (d) = false, then proceed to Step 27A.

Step 27A – Issuance of ME–1 Shutdown Commands. This step provides for alternately issuing the shutdown enable and shutdown commands for ME–1.

Monitor the following:

(a)	ME–1 SHUTDOWN FLAG "A"	(INTERNAL)

If (a) = false, then terminate the following output:

(1)	MPS E1 SHUTDOWN CMD	V90X8370X

and issue the following output:

(2)	MPS E1 SHUTDOWN ENABLE CMD	V90X8367X

and then set internal flag (3) below = true

(3)	ME–1 SHUTDOWN FLAG "A"	(INTERNAL)
(4)	ME–1 SHUTDOWN CMD ISSUED FLAG	(INTERNAL)

Proceed to Step 28.

If (a) = true, terminate output (2) above and issue output (1) above; and then set output (3) above = false and (4) = true.

Proceed to Step 28.

Step 28 – ME–2 Shutdown Initiation. This step monitors for either an ME–2 MANUAL SHUTDOWN FLAG or a MECO COMMAND FLAG. If either flag is set true, this step will alternately issue the shutdown enable and shutdown commands until ME–2 is detected to be in the shutdown or post–shutdown phase.

Monitor the following:

(a)	ME–2 MANUAL SHUTDOWN FLAG	(INTERNAL)
(b)	MECO COMMAND FLAG	V90X8569X
(c)	MPS E2 SHUTDOWN PHASE	V95X1156X
(d)	MPS E2 POST–SHUTDOWN PHASE	V95X1161X

If (a) and (b) both = false, proceed to Step 29.

If either (a) or (b) = true and either (c) or (d) = true, then terminate outputs (1) and (2) and set output (3) = true and proceed to Step 29.

(1)	MPS E2 SHUTDOWN ENABLE CMD	V90X8368X
(2)	MPS E2 SHUTDOWN CMD	V90X8371X
(3)	ME–2 SHUTDOWN CMD ISSUED FLAG	(INTERNAL)

If either (a) or (b) = true and both (c) and (d) = false, then proceed to Step 28A.

Step 28A – Issuance of ME–2 Shutdown Commands. This step provides for alternately issuing the shutdown enable and shutdown commands for ME–2.

Monitor the following:

(a)	ME–2 SHUTDOWN FLAG "B"	(INTERNAL)

If (a) = false, then terminate the following output:

(1)	MPS E2 SHUTDOWN CMD	V90X8371X

and issue the following output:

(2)	MPS E2 SHUTDOWN ENABLE CMD	V90X8368X

and then set internal flag (3) below = true

(3)	ME–2 SHUTDOWN FLAG "B"	(INTERNAL)
(4)	ME–2 SHUTDOWN CMD ISSUED FLAG	(INTERNAL)

Proceed to Step 29.

If (a) = true, terminate output (2) above and issue output (1) above; and then set output (3) above = false, and output (4) = true.

Proceed to Step 29.

Step 29 – ME–3 Shutdown Initiation. This step monitors for either an ME–3 MANUAL SHUTDOWN FLAG or a MECO COMMAND FLAG. If either flag is set true, this step will alternately issue the shutdown enable and shutdown commands until ME–3 is detected to be in the shutdown or post–shutdown phase.

Monitor the following:

(a)	ME–3 MANUAL SHUTDOWN FLAG	(INTERNAL)
(b)	MECO COMMAND FLAG	V90X8569X
(c)	MPS E3 SHUTDOWN PHASE	V95X1157X
(d)	MPS E3 POST–SHUTDOWN PHASE	V95X1162X

If (a) and (b) both = false, proceed to Step 30.

If either (a) or (b) = true and either (c) or (d) = true, then terminate outputs (1) and (2) and set output (3) = true and proceed to Step 30.

(1)	MPS E3 SHUTDOWN ENABLE CMD	V90X8369X
(2)	MPS E3 SHUTDOWN CMD	V90X8372X
(3)	ME–3 SHUTDOWN CMD ISSUED FLAG	(INTERNAL)

If either (a) or (b) = true and both (c) and (d) = false, then proceed to Step 29A.

Step 29A – Issuance of ME–3 Shutdown Commands. This step provides for alternately issuing the shutdown enable and shutdown commands for ME–3.

Monitor the following:

(a)	ME–3 SHUTDOWN FLAG "C"	(INTERNAL)

If (a) = false, then terminate the following output:

(1)	MPS E3 SHUTDOWN CMD	V90X8372X

and issue the following output:

(2)	MPS E3 SHUTDOWN ENABLE CMD	V90X8369X

and then set internal flag (3) below = true

(3)	ME–3 SHUTDOWN FLAG "C"	(INTERNAL)
(4)	ME–3 SHUTDOWN CMD ISSUED FLAG	(INTERNAL)

Proceed to Step 30.

If (a) = true, terminate output (2) above and issue output (1) above; and then set output (3) above = false and output (4) = true.

Proceed to Step 30.

Step 30 – All Engines Manual Shutdown Check. This step monitors for a crew–initiated manual shutdown of all engines. If all three of the internal manual shutdown flags are set true, then the MECO COMMAND FLAG is set true.

Monitor the following:

(a)	ME–1 MANUAL SHUTDOWN FLAG	(INTERNAL)
(b)	ME–2 MANUAL SHUTDOWN FLAG	(INTERNAL)
(c)	ME–3 MANUAL SHUTDOWN FLAG	(INTERNAL)

If (a), (b), and (c) all = true, then issue the following output and proceed to Step 31.

(1)	MECO COMMAND FLAG	V90X8569X

If either (a) or (b) or (c) = false, then proceed to Step 31.

Step 31 – All Engines Pc ≤30–Percent Check. This step monitors the thrust level of all engines via chamber pressure from the SSME SOP. Also monitored is whether the data from each engine is valid. If no engine remains above 30 percent chamber pressure, or MAJOR MODE 104 FLAG is true, or ME–1, ME–2, and ME–3 safing commands are all true, or an engine has a DATA PATH FAIL and the other two engines are less than or equal to 30 percent chamber pressure, the MECO COMMAND FLAG, the MECO CONFIRMED FLAG, and the EVENT TIMER START FLAG are all set true.Monitor the following:

(a)	MPS E1 PERCENT CH PRESS	V95U1186C
(b)	MPS E2 PERCENT CH PRESS	V95U1187C
(c)	MPS E3 PERCENT CH PRESS	V95U1188C
(d)	ME–1 FLIGHT DATA PATH FAIL FLAG	V95X1150X
(e)	ME–2 FLIGHT DATA PATH FAIL FLAG	V95X1151X
(f)	ME–3 FLIGHT DATA PATH FAIL FLAG	V95X1152X
(g)	MAJOR MODE 104 FLAG	V90X8152X
(h)	ME–1 SAFING CMD	V90X3443X
(i)	ME–2 SAFING CMD	V90X3444X
(j)	ME–3 SAFING CMD	V90X3445X

If (a), (b), and (c) are all ≤30 percent, then issue the following outputs and proceed to Step 32.

(1)	MECO COMMAND FLAG	V90X8569X
(2)	MECO CONFIRMED FLAG	V90X8561X
(3)	EVENT TIMER START FLAG	V90X8403X

If (g) = true, then issue outputs (1), (2), and (3) above and proceed to Step 32.

If (h) and (i) and (j) = true, then issue outputs (1), (2), and (3) above and proceed to Step 32.

If (d) = true and (b) and (c) are both ≤30 percent, then issue outputs (1), (2), and (3) above and proceed to Step 32.

If (e) = true and (a) and (c) are both ≤30 percent, then issue outputs (1), (2), and (3) above and proceed to Step 32.

If (f) = true and (a) and (b) are both ≤30 percent, then issue outputs (1), (2), and (3) above and proceed to Step 32.

Otherwise, return to Step 1.

Step 32 – All Prevalves Commanded Closed Check. This step checks that all prevalves have been commanded closed before setting a flag for the ET separation sequence and proceeding with the ET disconnect valve closure. The prevalves are closed by Steps 3A, 7A, and 11A after appropriate time delays.

Monitor the following:

(a)	ME–1 PREVALVES CMD'D CLOSED FLAG	(INTERNAL)
(b)	ME–2 PREVALVES CMD'D CLOSED FLAG	(INTERNAL)
(c)	ME–3 PREVALVES CMD'D CLOSED FLAG	(INTERNAL)

If either (a), (b), or (c) = false, return to Step 1.

If (a), (b), and (c) all = true, issue the following output and proceed to Step 33.

(1)	ALL PREVLVS COMMANDED CLOSE IND	V90X8568X

Step 33 – Termination of SSME OPS Sequence. This step keeps the SSME OPS sequence active until all PREVALVE CLOSE COMMANDS have been removed and the HELIUM INTERCONNECT FLAG is set to false. The PREVALVE CLOSE COMMANDS are removed in Steps 4, 8, and 12. The HELIUM INTERCONNECT FLAG is set to false, when appropriate, by Step 17A.

Monitor the following:

(a)	ME–1 PREVLVS CLOSE CMDS REMOVED FLAG	(INTERNAL)
(b)	ME–2 PREVLVS CLOSE CMDS REMOVED FLAG	(INTERNAL)
(c)	ME–3 PREVLVS CLOSE CMDS REMOVED FLAG	(INTERNAL)
(d)	HELIUM INTERCONNECT FLAG	(INTERNAL)

If either (a), (b), or (c) = false, return to Step 1.

If (a), (b), and (c) all = true, then set output (1) = false and monitor (d).

If (d) = true, return to Step 1.

If (d) = false, terminate the SSME OPS sequence.

(1)	EVENT TIMER START FLAG	V90X8403X

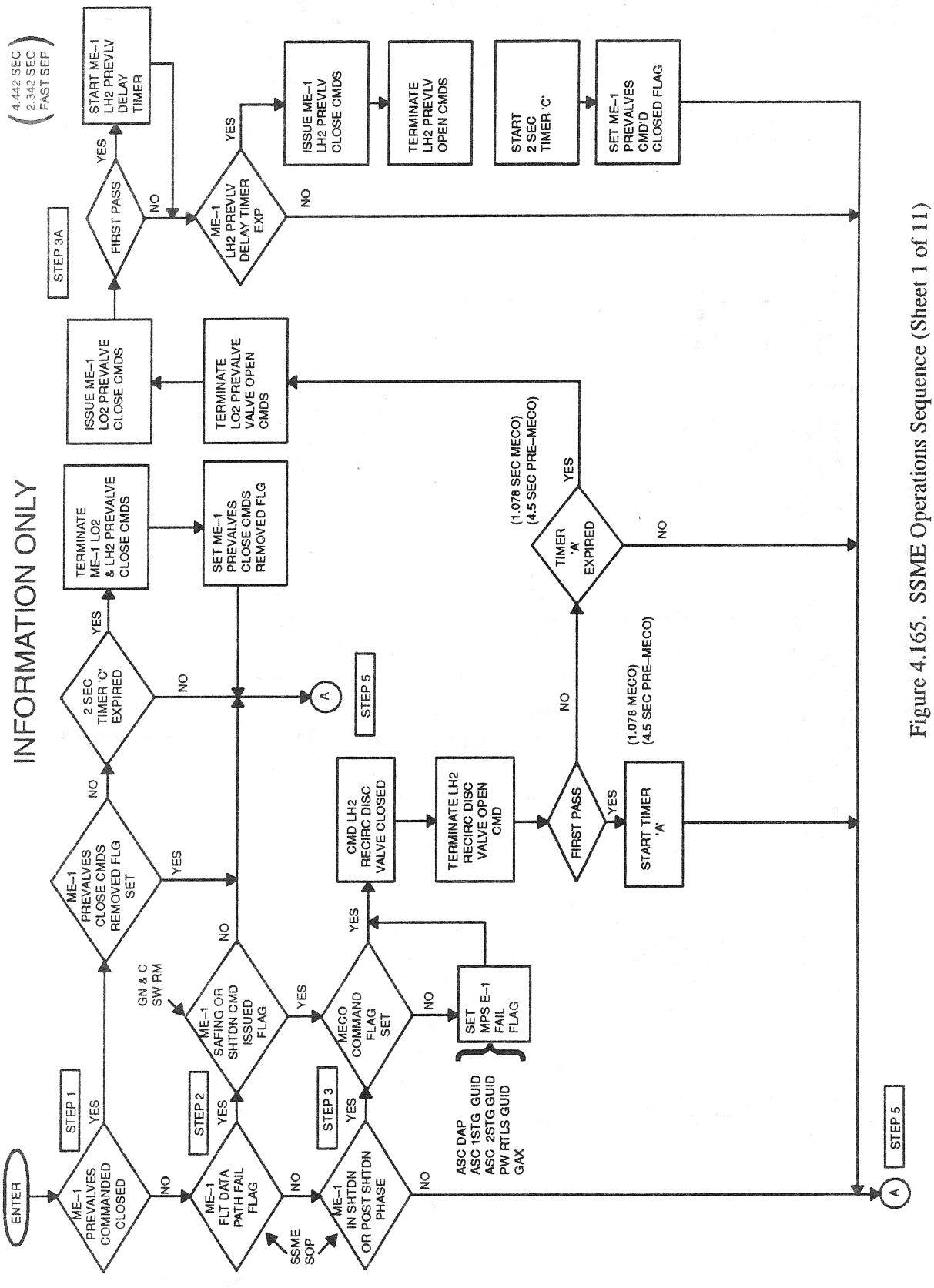

Figure 4.165. SSME Operations Sequence (Sheet 1 of 11)

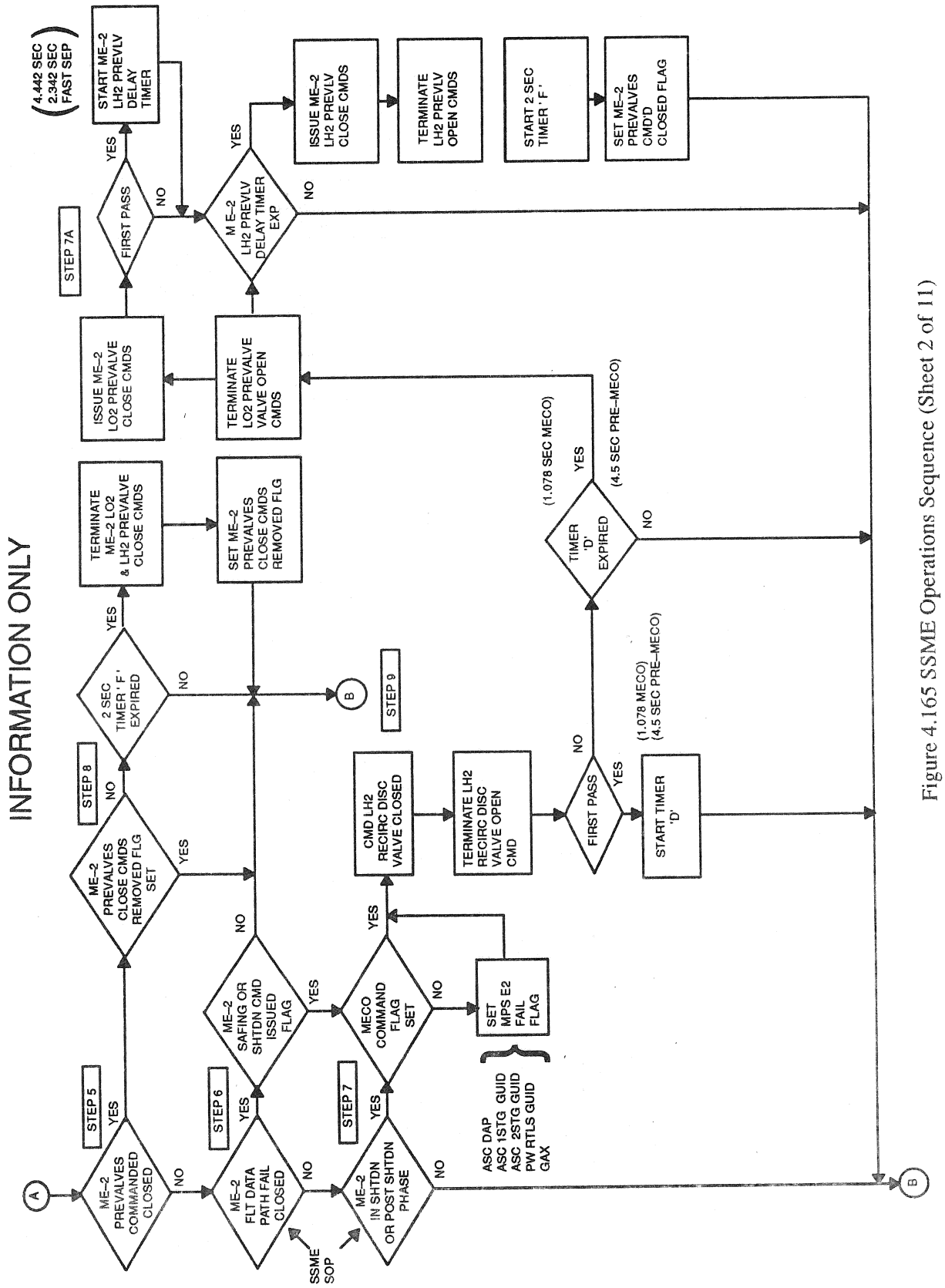

Figure 4.165 SSME Operations Sequence (Sheet 2 of 11)

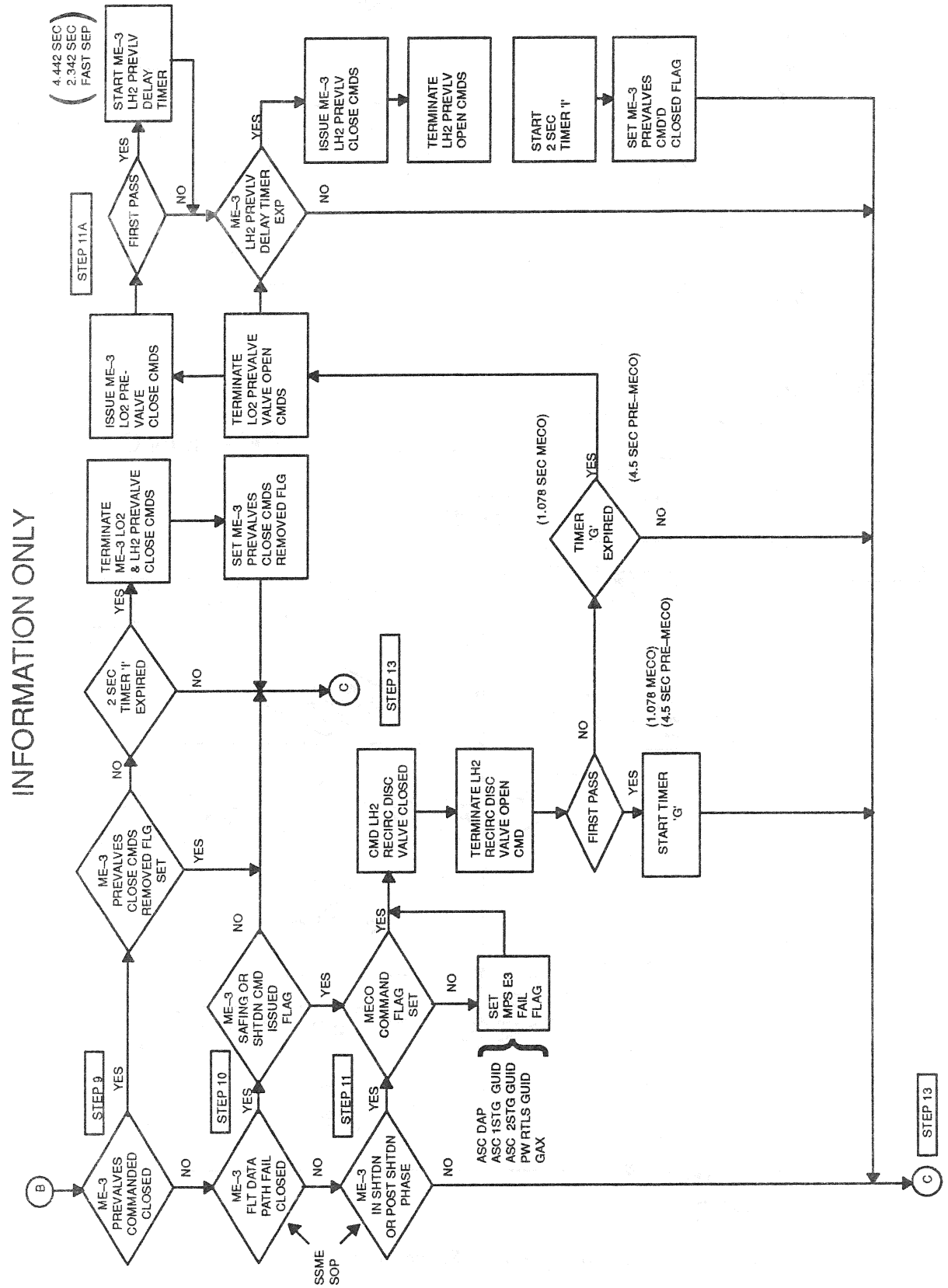

Figure 4.165 SSME Operations Sequence (Sheet 3 of 11)

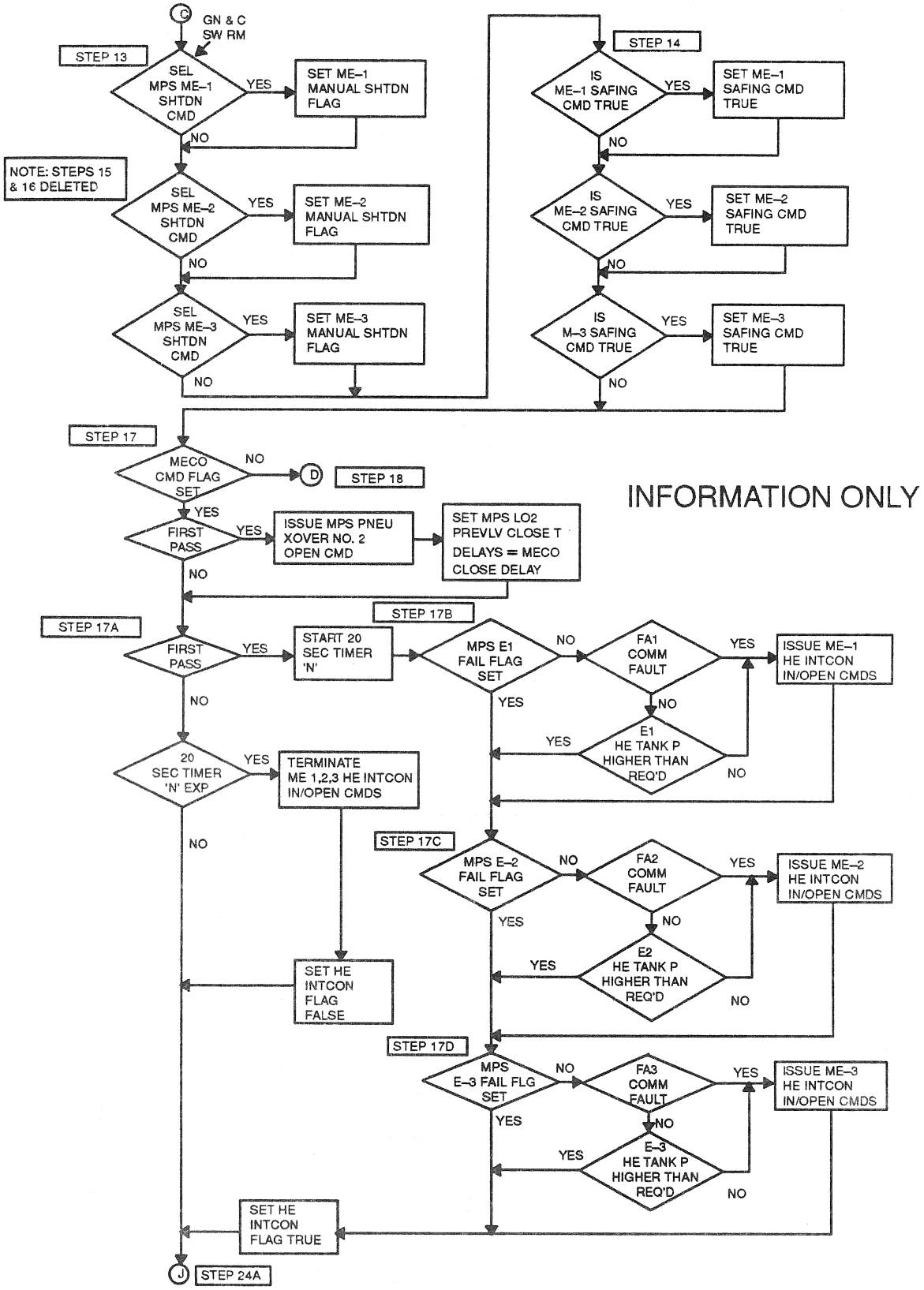

Figure 4.165 SSME Operations Sequence (Sheet 4 of 11)

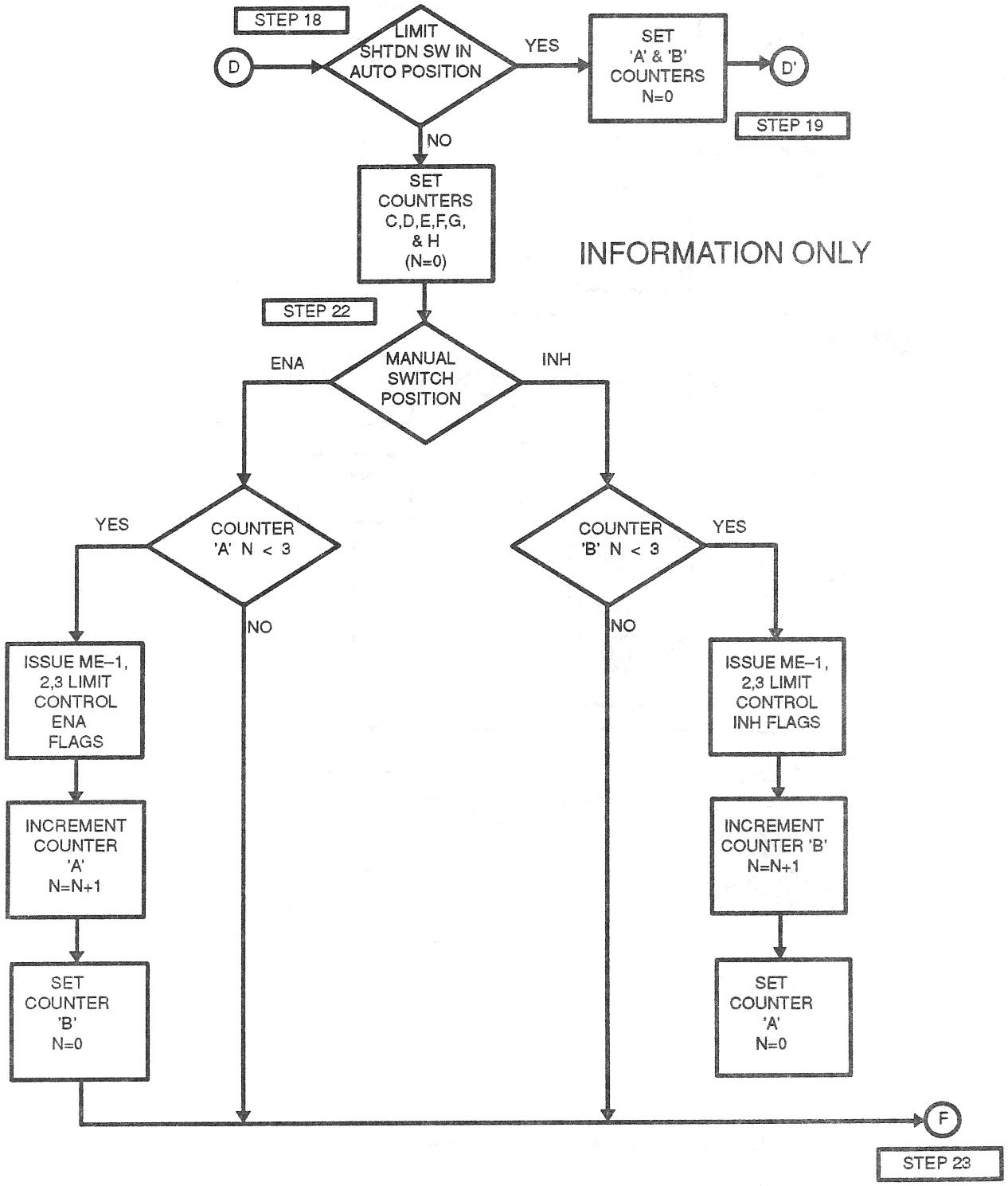

Figure 4.165. SSME Operations Sequence (Sheet 5 of 11)

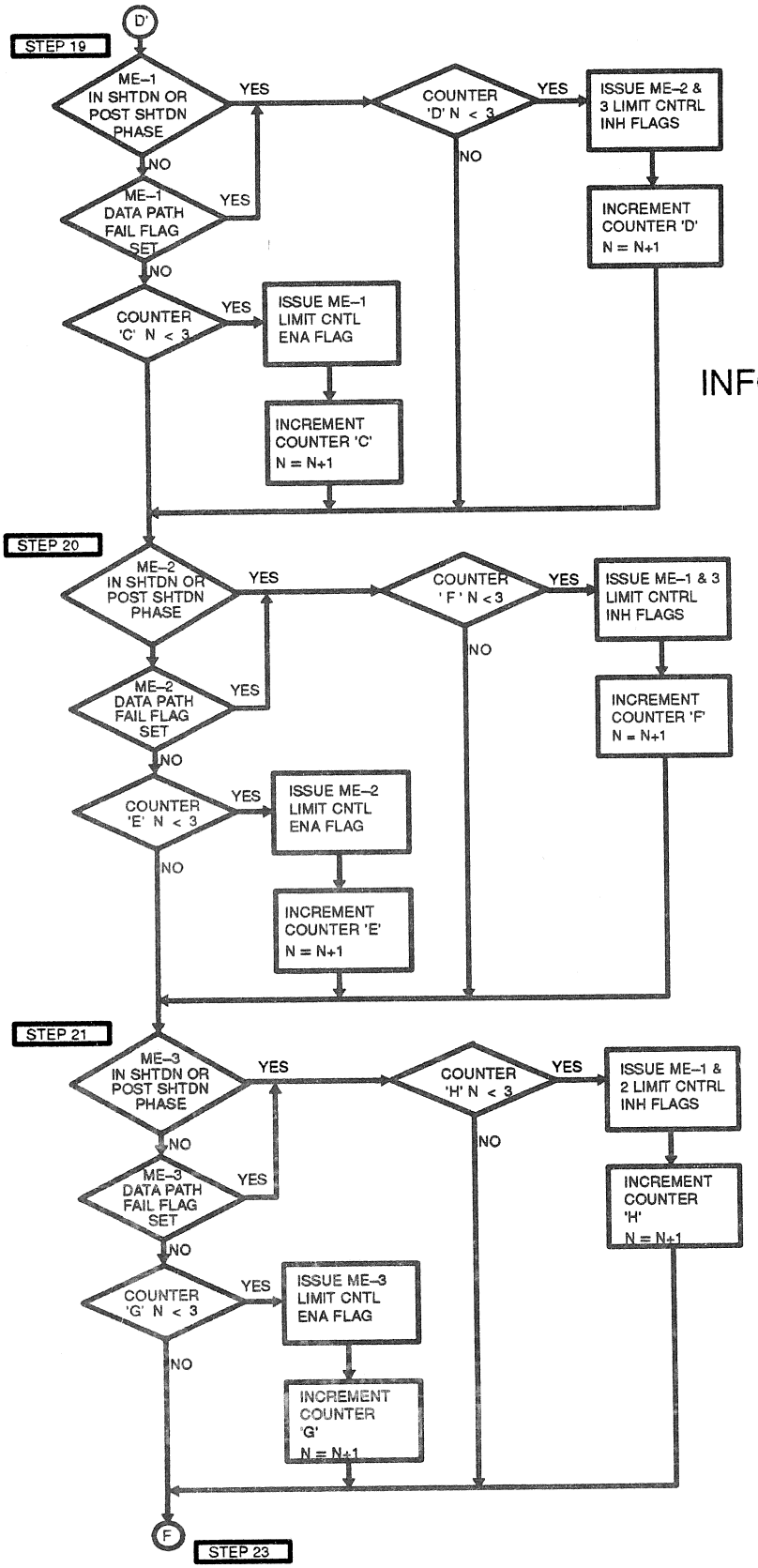

INFORMATION ONLY

Figure 4.165. SSME Operations Sequence (Sheet 6 of 11)

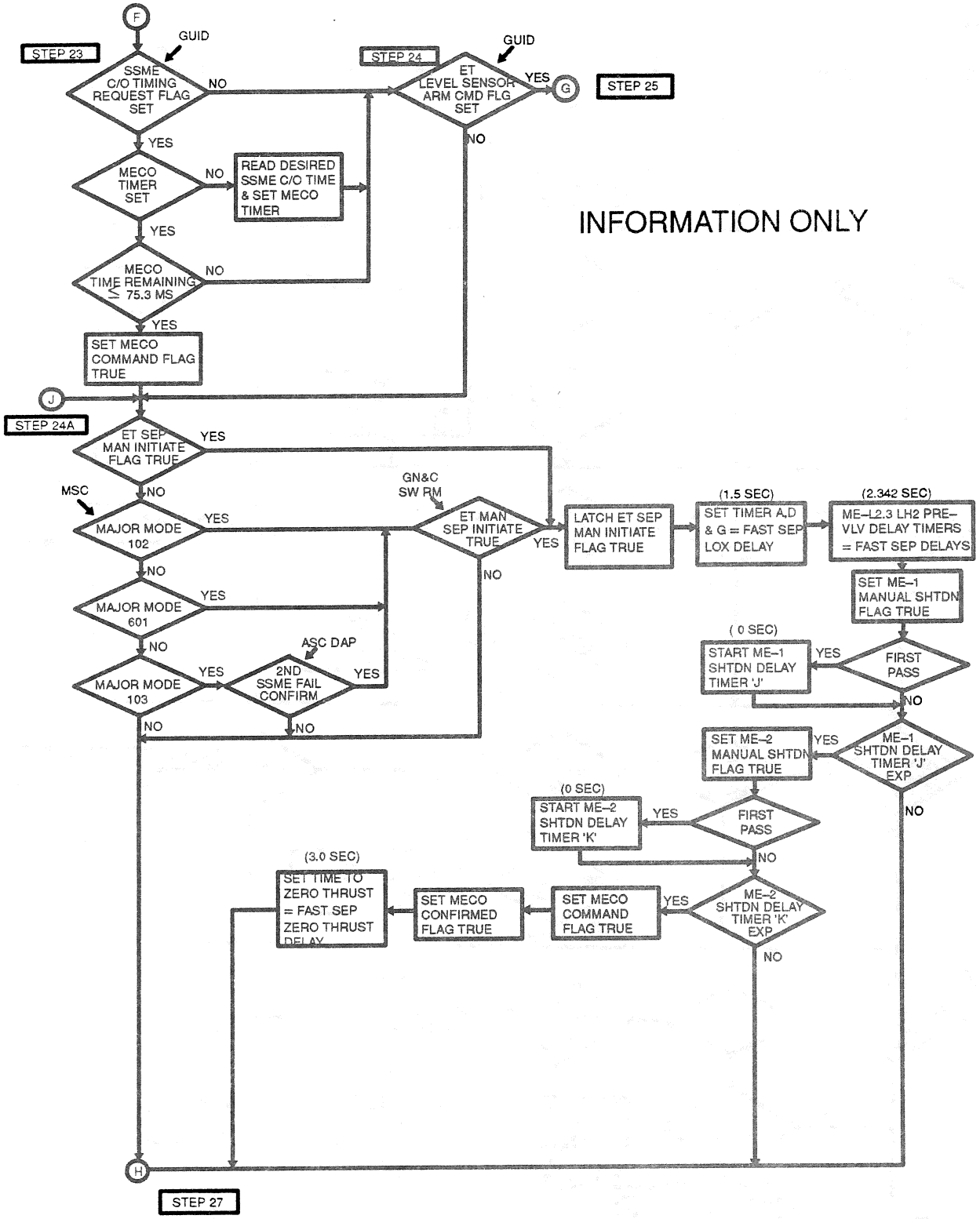

Figure 4.165 SSME Operations Sequence (Sheet 7 of 11)

INFORMATION ONLY

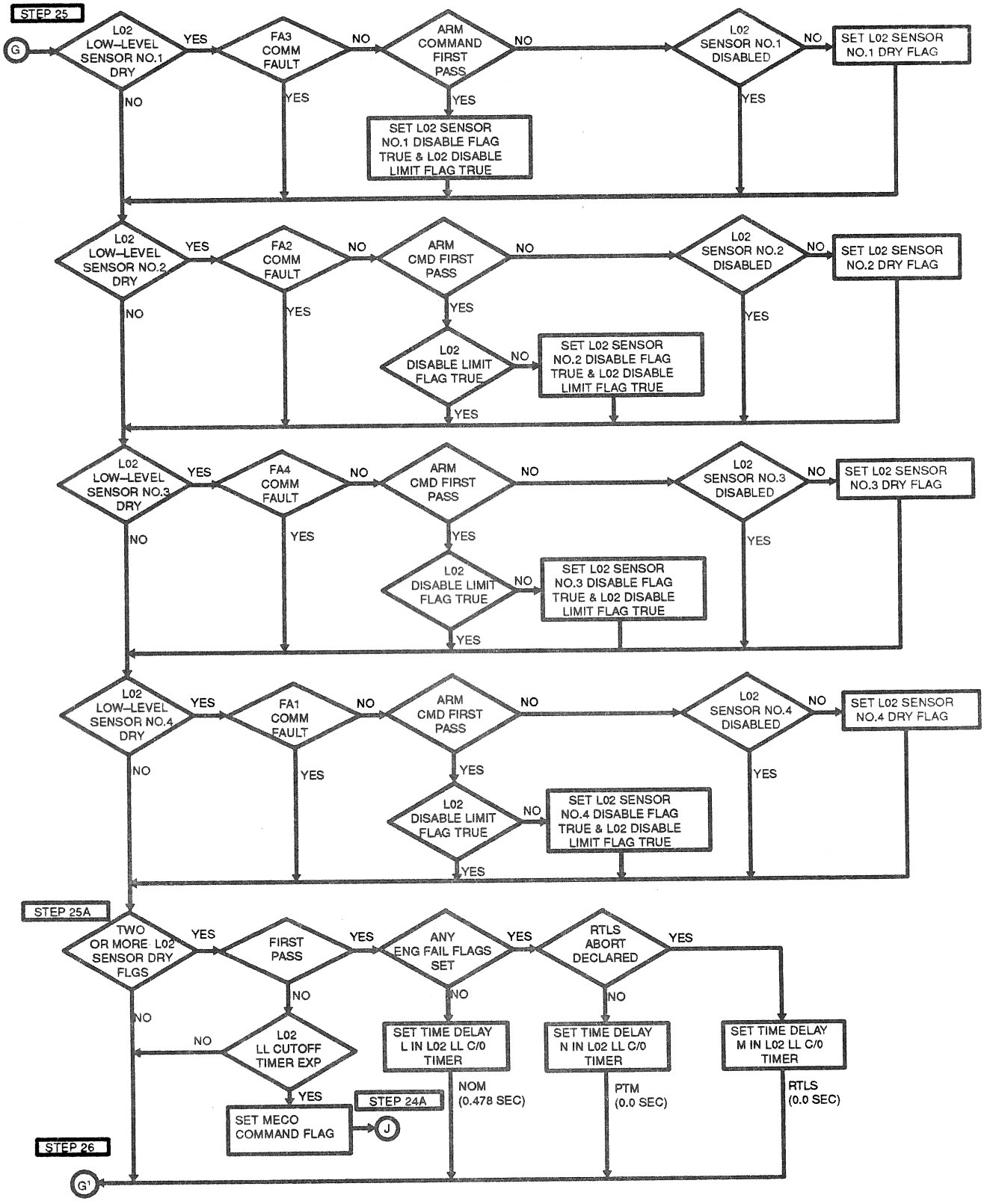

Figure 4.165 SSME Operations Sequence (Sheet 8 of 11)

INFORMATION ONLY

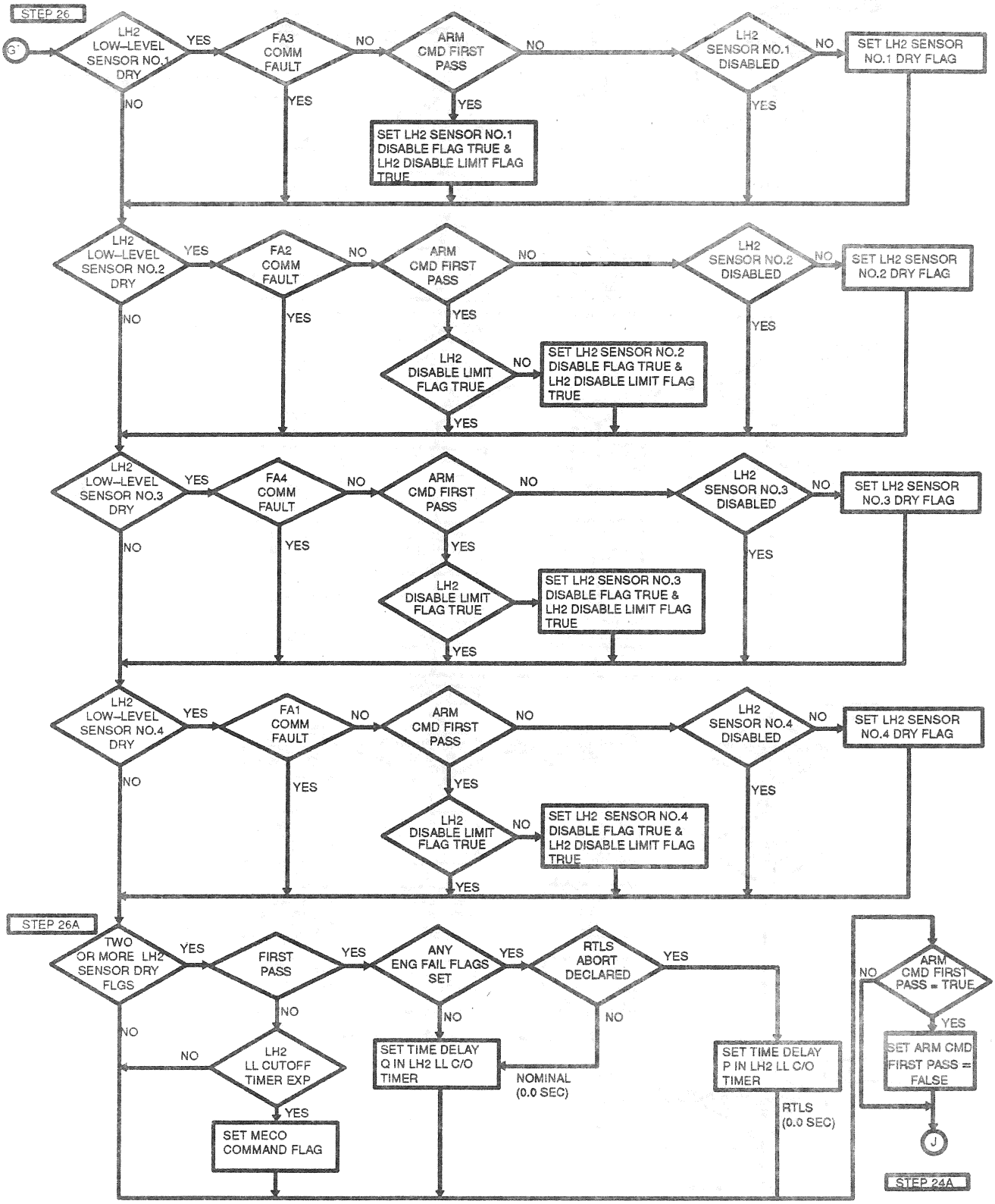

Figure 4.165 SSME Operations Sequence (Sheet 9 of 11)

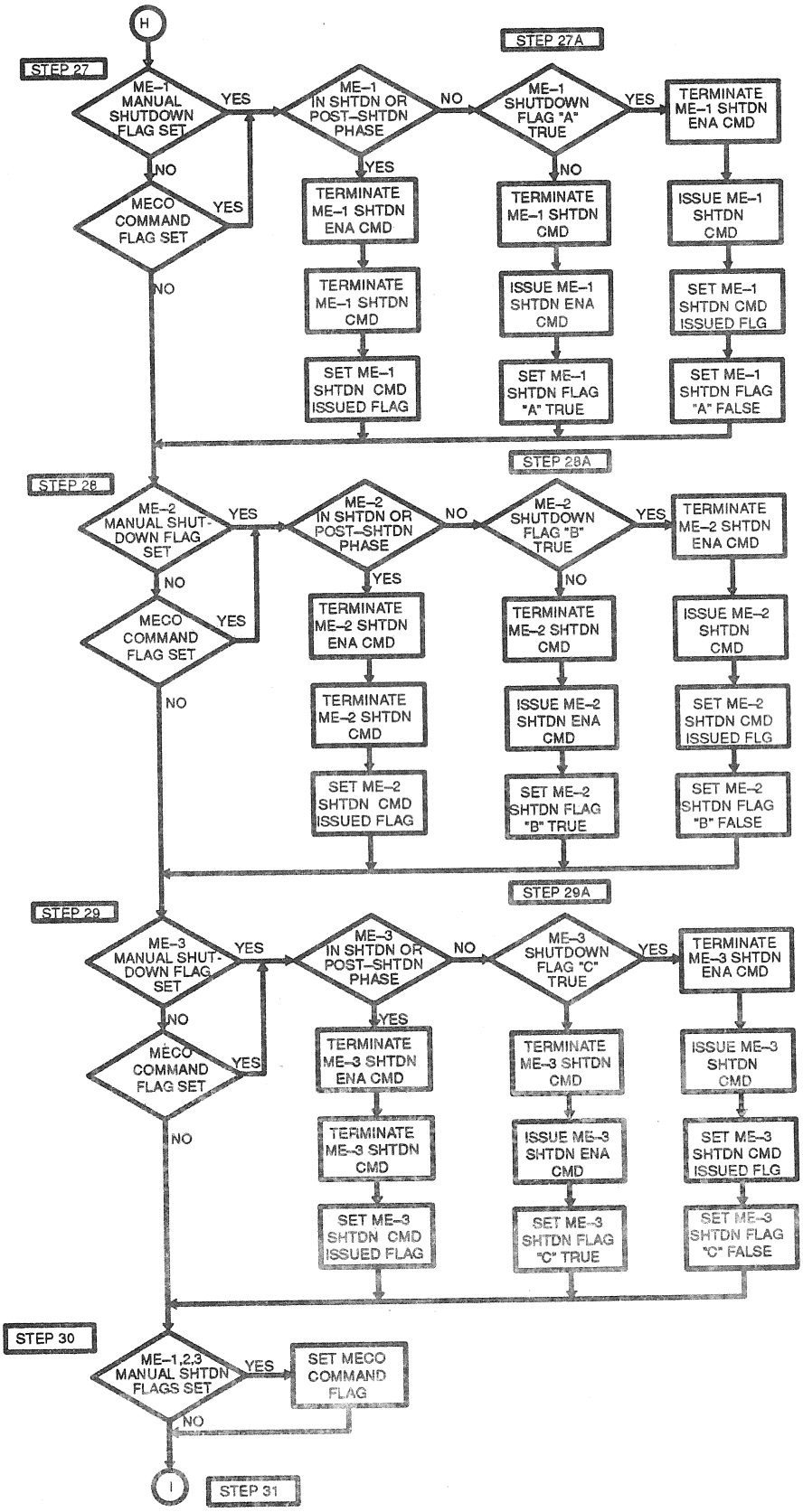

INFORMATION ONLY

Figure 4.165 SSME Operations Sequence (Sheet 10 of 11)

INFORMATION ONLY

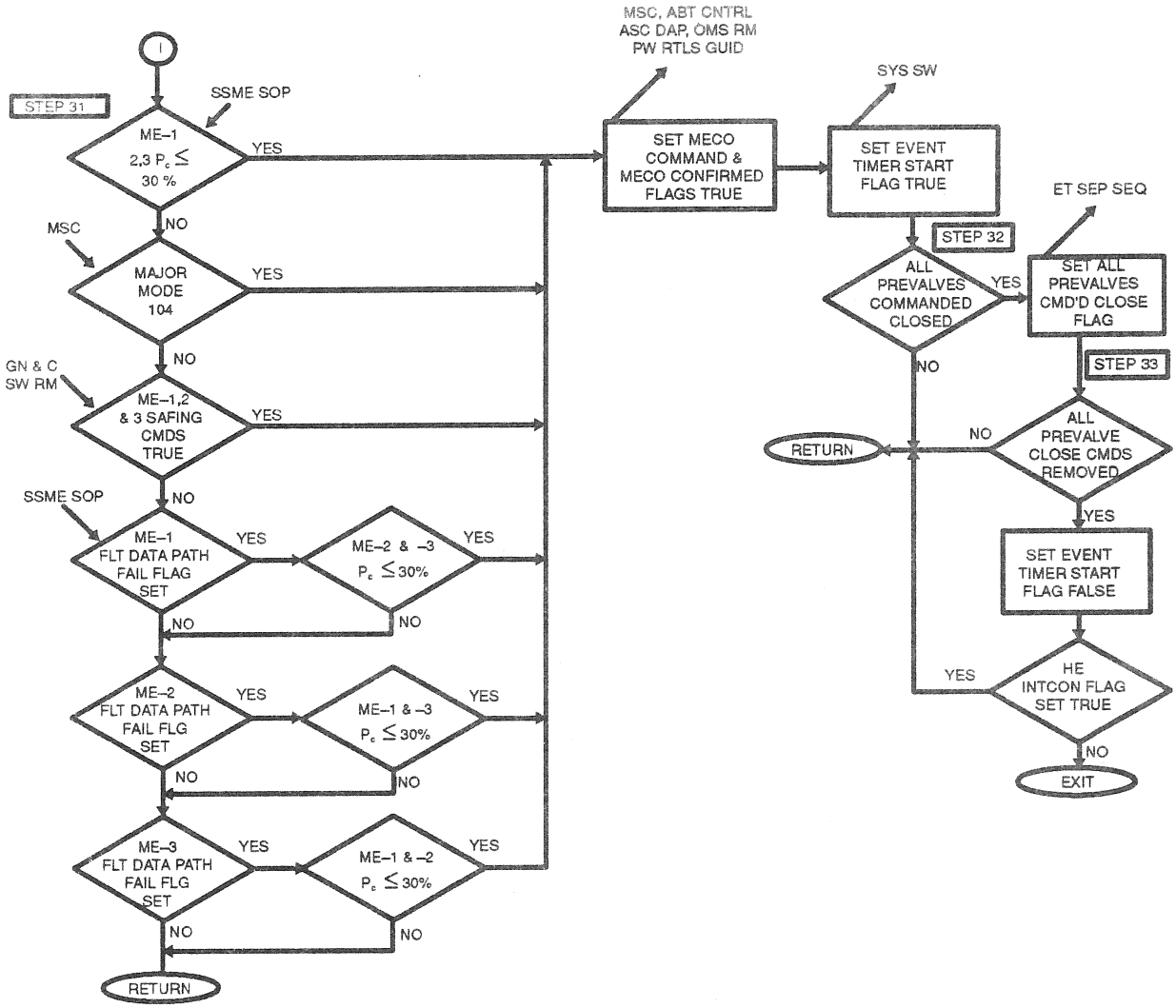

Figure 4.165. SSME Operations Sequence (Sheet 11 of 11)

THIS PAGE INTENTIONALLY LEFT BLANK

TABLE 4.2.1.4–1. SPACE SHUTTLE MAIN ENGINE(SSME) OPERATIONS SEQ (G4.165) INPUT/OUTPUT FUNCTIONAL PARAMETERS

DBFN: D3B027-F PN: VP707100049P00L INPUT FUNCTIONAL PARAMETERS FOR SSME OPS

FSSR NAME	M/S ID	NOMENCLATURE	SOURCE	UNITS	DATA TYPE	PREC	LAST CRS
CLOCK/CLOCKTIME	V91W5000C	CLOCK-COMPUTER(GMT)	FCOS	S			
ET_SEP_MAN_INITIATE	V90X8584XB	ET SEP MAN INITIATE FLAG	PW CONT GUID				89990E
ME_FLT_DATA_PATH_FAIL(1)	V95X1150X	ME-1 FLIGHT DATA PATH FAIL FLAG	SSME SOP				
ME_FLT_DATA_PATH_FAIL(2)	V95X1151X	ME-2 FLIGHT DATA PATH FAIL FLAG	SSME SOP				
ME_FLT_DATA_PATH_FAIL(3)	V95X1152X	ME-3 FLIGHT DATA PATH FAIL FLAG	SSME SOP				
MEPSTSHDN(1)	V95X1160X	MPS E1 POST-SHUTDOWN PHASE	SSME SOP				
MEPSTSHDN(2)	V95X1161X	MPS E2 POST-SHUTDOWN PHASE	SSME SOP				
MEPSTSHDN(3)	V95X1162X	MPS E3 POST-SHUTDOWN PHASE	SSME SOP				
MESHDN(1)	V95X1155X	MPS E1 SHUTDOWN PHASE	SSME SOP				
MESHDN(2)	V95X1156X	MPS E2 SHUTDOWN PHASE	SSME SOP				
MESHDN(3)	V95X1157X	MPS E3 SHUTDOWN PHASE	SSME SOP				
ME1_CH_PRESS_FDBK	V95U1186C	MPS E-1 PERCENT CH PRESS	SSME SOP	PCT			
ME2_CH_PRESS_FDBK	V95U1187C	MPS E-2 PERCENT CH PRESS	SSME SOP	PCT			
ME3_CH_PRESS_FDBK	V95U1188C	MPS E-3 PERCENT CH PRESS	SSME SOP	PCT			
MM_CODE_102/MM_102	V90X8158X	MAJOR MODE 102 FLAG	MSC				89990E
							90115
MM_CODE_103/MM_103	V90X8156X	MAJOR MODE 103 FLAG	MSC				89990E
							89599C
MM_CODE_104/MM_104	V90X8152X	MAJOR MODE 104 FLAG	MSC				90114B
							89599C
MM_CODE_601/MM_601	V90X8194X	MAJOR MODE 601 FLAG	MSC				89990E
S_LOW_LEVEL	V90X1942XA	ET LEVEL SENSOR ARM CMD	ASC 2STG GUID				
S_LOW_LEVEL	V90X1942XB	ET LEVEL SENSOR ARM CMD	PW RTLS GUID				
S_LOW_LEVEL	V90X1942XC	ET LEVEL SENSOR ARM CMD	PW CONT GUID				89990E
S_TMECO	V90X1944XA	SSME C/O TIMING REQUEST FLAG	ASC 2STG GUID				89461
S_TMECO	V90X1944XB	SSME C/O TIMING REQUEST FLAG	PW RTLS GUID				89990E
							89632A
S_TMECO	V90X1944XC	SSME C/O TIMING REQUEST FLAG	PW CONT GUID				89990E
SEC_ME_FL_CNFM	V90X1721X	2ND SSME FAIL CONFIRM	ASC DAP				89990E
T_GMTLO	V90W4380C	TIME OF LIFTOFF IN GMT	FCOS	S			89990E
							89461
T_MECO	V90W1945CA	DESIRED SSME C/O TIME	ASC 2STG GUID	S			
T_MECO	V90W1945CB	DESIRED SSME C/O TIME	PW RTLS GUID	S			
T_MECO	V90W1945CC	DESIRED SSME C/O TIME	PW CONT GUID	S			89990E
	T41X1730X	ET-LH2 LOW LEVEL LIQ SENSOR NO 1	HDWR		BD		
	T41X1731X	ET-LH2 LOW LEVEL LIQ SENSOR NO 2	HDWR		BD		
	T41X1732X	ET-LH2 LOW LEVEL LIQ SENSOR NO 3	HDWR		BD		
	T41X1733X	ET-LH2 LOW LEVEL LIQ SENSOR NO 4	HDWR		BD		
	V41P1150C	MPS E1 HE SUPPLY BOTTLE PRESS	HDWR		AMU		89505B
							89554A
	V41P1250C	MPS E2 HE SUPPLY BOTTLE PRESS	HDWR		AMU		89505B
							89554A

TABLE 4.2.1.4–1. SPACE SHUTTLE MAIN ENGINE(SSME) OPERATIONS SEQ (G4.165) INPUT/OUTPUT FUNCTIONAL PARAMETERS

DBFN: D3B027-F PN: VP707100049P00L INPUT FUNCTIONAL PARAMETERS FOR SSME OPS

FSSR NAME	M/S ID	NOMENCLATURE	SOURCE	UNITS	DATA TYPE	PREC	LAST CRS
	V41P1350C	MPS E3 HE SUPPLY BOTTLE PRESS	HDWR		AMU		89505B
							89554A
	V41X1555X	MPS LO2 LEFT ECO SENSOR 1	HDWR		BD		89554A
	V41X1556X	MPS LO2 LEFT ECO SENSOR 2	HDWR		BD		89554A
	V41X1557X	MPS LO2 RIGHT ECO SENSOR 2	HDWR		BD		89554A
	V41X1558X	MPS LO2 RIGHT ECO SENSOR 1	HDWR		BD		89554A
	V90X3439X	FASCOS AUTO RESET	GN&C SW RM				
	V90X3440X	FASCOS INHIBIT	GN&C SW RM				89598A
	V90X3443X	ME-1 SAFING CMD	GN&C SW RM				
	V90X3444X	ME-2 SAFING CMD	GN&C SW RM				
	V90X3445X	ME-3 SAFING CMD	GN&C SW RM				
	V90X7548X	SEL MPS ENG LIMIT CONTROL AUTO	GN&C SW RM		BD		
	V90X7549X	SEL MPS ENG LIMIT CONTROL ENABLE	GN&C SW RM				
	V90X7550X	SEL MPS ENG LIMIT CONTROL INHIBIT	GN&C SW RM				
	V90X7551X	SEL MPS ME-1 SHUTDOWN CMD	GN&C SW RM		BD		
	V90X7552X	SEL MPS ME-2 SHUTDOWN CMD	GN&C SW RM		BD		
	V90X7553X	SEL MPS ME-3 SHUTDOWN CMD	GN&C SW RM		BD		
	V90X7564X	SEL ET SEP INITIATE/WOW-WONG CMD	GN&C SW RM		BD		
	V90X8637XA	RTLS ABORT DECLARED	MSC				89991E
							89599C
	V90X8637XB	RTLS ABORT DECLARED	ET SEP SEQ				89991E
	V91X2841X	FA1 INPUT PROM SEG 1,2 STATUS(MFE)	FCOS				89846B
	V91X2842X	FA2 INPUT PROM SEG 1,2 STATUS(MFE)	FCOS				90114B
	V91X2843X	FA3 INPUT PROM SEG 1,2 STATUS(MFE)	FCOS				90114B
	V91X2845X	FA1 INPUT PROM SEG3,10 STATUS(HFE)	FCOS				89991E
							89598A
	V91X2846X	FA2 INPUT PROM SEG3,10 STATUS(HFE)	FCOS				89991E
							89598A
	V91X2847X	FA3 INPUT PROM SEG3,10 STATUS(HFE)	FCOS				89991E
							89598A
	V91X2848X	FA4 INPUT PROM SEG3,10 STATUS(HFE)	FCOS				89598A
							59126H
	V93X5340X	BACKUP ET SEP AUTO SEL	OVERRIDE DISP		BD		
	V99X8806X	ET_LH2_LO_LVL_LIQ_SES1_DSBL_FLG	VU				89325B
	V99X8807X	ET_LH2_LO_LVL_LIQ_SES2_DSBL_FLG	VU				89325B
	V99X8808X	ET_LH2_LO_LVL_LIQ_SES3_DSBL_FLG	VU				89325B
	V99X8809X	ET_LH2_LO_LVL_LIQ_SES4_DSBL_FLG	VU				89325B
	V99X8814X	MPS_LOX_LO_LVL_LIQ_SES1_DSBL_FLG	VU				89325B
	V99X8815X	MPS_LOX_LO_LVL_LIQ_SES2_DSBL_FLG	VU				89325B
	V99X8816X	MPS_LOX_LO_LVL_LIQ_SES3_DSBL_FLG	VU				89325B
	V99X8817X	MPS_LOX_LO_LVL_LIQ_SES4_DSBL_FLG	VU				89325B

TABLE 4.2.1.4-1. SPACE SHUTTLE MAIN ENGINE(SSME) OPERATIONS SEQ (G4.165) INPUT/OUTPUT FUNCTIONAL PARAMETERS

DBFN: D3B027-F PN: VP707100049P00L OUTPUT FUNCTIONAL PARAMETERS FROM SSME OPS

FSSR NAME	M/S ID	NOMENCLATURE	DESTINATION	UNITS	DATA TYPE	PREC	LAST CRS
ET_SEP_MAN_INITIATE	V90X8584XA	ET SEP MAN INITIATE FLAG	ET SEP SEQ		BD		89990E
MECO_CMD	V90X8569XA	MECO COMMAND FLAG	ASC UPP SEQ,ASC DAP,MSC,OMS RM, MPS D/D SEQ,GRTLS DAP, ASC ADI PROC,A/E ATT PROC,GAX, OVERRIDE SPEC,ABT CNTL SEQ,TLM				90114B
MECO_CONFIRMED	V90X8561X	MECO CONFIRMED FLAG	MSC,ABT CNTL SEQ,OMS RM, PW RTLS GUID,ASC DAP, HORIZ SIT SPEC,PW CONT GUID,TLM		BD		89990E 89599C
MESHDNCMD(1)	V90X8370XB	MPS E1 SHUTDOWN CMD	SSME SOP				
MESHDNCMD(2)	V90X8371XB	MPS E2 SHUTDOWN CMD	SSME SOP				
MESHDNCMD(3)	V90X8372XB	MPS E3 SHUTDOWN CMD	SSME SOP				
MESHDNENA(1)	V90X8367XB	MPS E1 SHUTDOWN ENABLE CMD	SSME SOP				
MESHDNENA(2)	V90X8368XB	MPS E2 SHUTDOWN ENABLE CMD	SSME SOP				
MESHDNENA(3)	V90X8369XB	MPS E3 SHUTDOWN ENABLE CMD	SSME SOP				
ME1_FAIL_SHUTDOWN	V95X1207X	MPS E1 FAIL FLAG	ASC 1STG GUID,ASC 2STG GUID, PW RTLS GUID,ASC DAP,MSC, SPTI SOP,GAX,SRB SEP SEQ, PW CONT GUID,XXXXXX TRAJ DISP, TLM		BD		89990E
ME2_FAIL_SHUTDOWN	V95X1208X	MPS E2 FAIL FLAG	ASC 1STG GUID,ASC 2STG GUID, PW RTLS GUID,ASC DAP,MSC, SPTI SOP,GAX,SRB SEP SEQ, PW CONT GUID,XXXXXX TRAJ DISP TLM		BD		89990E
ME3_FAIL_SHUTDOWN	V95X1209X	MPS E3 FAIL FLAG	ASC 1STG GUID,ASC 2STG GUID, PW RTLS GUID,ASC DAP,MSC, SPTI SOP,GAX,SRB SEP SEQ, PW CONT GUID,XXXXXX TRAJ DISP, TLM		BD		89990E
MPS_ENA(1)	V90X8573X	MPS E1 LIMIT CNTL ENA	SSME SOP				
MPS_ENA(2)	V90X8574X	MPS E2 LIMIT CNTL ENA	SSME SOP				
MPS_ENA(3)	V90X8575X	MPS E3 LIMIT CNTL ENA	SSME SOP				
MPS_INH(1)	V90X8570X	MPS E1 LIMIT CNTL INH	SSME SOP				
MPS_INH(2)	V90X8571X	MPS E2 LIMIT CNTL INH	SSME SOP				
MPS_INH(3)	V90X8572X	MPS E3 LIMIT CNTL INH	SSME SOP				
	V41K1119XA	MPS E1 LH2 PREVLV (PV4) OP CMD A	PCA A1				89554A
	V41K1120XA	MPS E1 LH2 PREVLV (PV4) OP CMD B	LCA A1				89554A
	V41K1121XA	MPS E1 LH2 PREVLV (PV4) OP CMD C	LCA A2				89554A
	V41K1122XA	MPS E1 LH2 PREVLV (PV4) CL CMD A	PCA A1				89554A
	V41K1123XA	MPS E1 LH2 PREVLV (PV4) CL CMD B	LCA A1				89554A
	V41K1124XA	MPS E1 LH2 PREVLV (PV4) CL CMD C	LCA A2				89554A
	V41K1136XA	MPS E1 LO2 PREVLV (PV1) OP CMD A	PCA A1				89554A
	V41K1137XA	MPS E1 LO2 PREVLV (PV1) OP CMD B	LCA A1				89554A

TABLE 4.2.1.4–1. SPACE SHUTTLE MAIN ENGINE(SSME) OPERATIONS SEQ (G4.165) INPUT/OUTPUT FUNCTIONAL PARAMETERS

DBFN: D3B027-F PN: VP707100049P00L OUTPUT FUNCTIONAL PARAMETERS FROM SSME OPS

FSSR NAME	M/S ID	NOMENCLATURE	DESTINATION	UNITS	DATA TYPE	PREC	LAST CRS
	V41K1138XA	MPS E1 LO2 PREVLV (PV1) OP CMD C	LCA A2				89554A
	V41K1139XA	MPS E1 LO2 PREVLV (PV1) CL CMD A	PCA A1				89554A
	V41K1140XA	MPS E1 LO2 PREVLV (PV1) CL CMD B	LCA A1				89554A
	V41K1141XA	MPS E1 LO2 PREVLV (PV1) CL CMD C	LCA A2				89554A
	V41K1142XA	MPS E1 LO2 PREVLV (PV1) CL CMD D	HDWR				89554A
	V41K1143XA	MPS E1 LO2 PREVLV (PV1) OP CMD D	HDWR				89554A
	V41K1162X	MPS E1 HE INTCN IN (LV59) OP CMD A	HDWR		BD		89554A
	V41K1163X	MPS E1 HE INTCN IN (LV59) OP CMD B	HDWR		BD		89554A
	V41K1219XA	MPS E2 LH2 PREVLV (PV5) OP CMD A	PCA A2				89554A
	V41K1220XA	MPS E2 LH2 PREVLV (PV5) OP CMD B	LCA A2				89554A
	V41K1221XA	MPS E2 LH2 PREVLV (PV5) OP CMD C	LCA A3				89554A
	V41K1222XA	MPS E2 LH2 PREVLV (PV5) CL CMD A	PCA A2				89554A
	V41K1223XA	MPS E2 LH2 PREVLV (PV5) CL CMD B	LCA A2				89554A
	V41K1224XA	MPS E2 LH2 PREVLV (PV5) CL CMD C	LCA A3				89554A
	V41K1236XA	MPS E2 LO2 PREVLV (PV2) OP CMD A	PCA A2				89554A
	V41K1237XA	MPS E2 LO2 PREVLV (PV2) OP CMD B	LCA A2				89554A
	V41K1238XA	MPS E2 LO2 PREVLV (PV2) OP CMD C	LCA A3				89554A
	V41K1239XA	MPS E2 LO2 PREVLV (PV2) CL CMD A	PCA A2				89554A
	V41K1240XA	MPS E2 LO2 PREVLV (PV2) CL CMD B	LCA A2				89554A
	V41K1241XA	MPS E2 LO2 PREVLV (PV2) CL CMD C	LCA A3				89554A
	V41K1242XA	MPS E2 LO2 PREVLV (PV2) CL CMD D	HDWR				89554A
	V41K1243XA	MPS E2 LO2 PREVLV (PV2) OP CMD D	HDWR				89554A
	V41K1262XA	MPS E2 HE INTCN IN (LV61) OP CMD A	HDWR				89554A
	V41K1263XA	MPS E2 HE INTCN IN (LV61) OP CMD B	HDWR				89554A
	V41K1319XA	MPS E3 LH2 PREVLV (PV6) OP CMD A	PCA A3				89554A
	V41K1320XA	MPS E3 LH2 PREVLV (PV6) OP CMD B	LCA A3				89554A
	V41K1321XA	MPS E3 LH2 PREVLV (PV6) OP CMD C	LCA A1				89554A
	V41K1322XA	MPS E3 LH2 PREVLV (PV6) CL CMD A	PCA A3				89554A
	V41K1323XA	MPS E3 LH2 PREVLV (PV6) CL CMD B	LCA A3				89554A
	V41K1324XA	MPS E3 LH2 PREVLV (PV6) CL CMD C	LCA A1				89554A
	V41K1336XA	MPS E3 LO2 PREVLV (PV3) OP CMD A	PCA A3				89554A
	V41K1337XA	MPS E3 LO2 PREVLV (PV3) OP CMD B	LCA A3				89554A
	V41K1338XA	MPS E3 LO2 PREVLV (PV3) OP CMD C	LCA A1				89554A
	V41K1339XA	MPS E3 LO2 PREVLV (PV3) CL CMD A	PCA A3				89554A
	V41K1340XA	MPS E3 LO2 PREVLV (PV3) CL CMD B	LCA A3				89554A
	V41K1341XA	MPS E3 LO2 PREVLV (PV3) CL CMD C	LCA A1				89554A
	V41K1342XA	MPS E3 LO2 PREVLV (PV3) CL CMD D	HDWR				89554A
	V41K1343XA	MPS E3 LO2 PREVLV (PV3) OP CMD D	HDWR				89554A
	V41K1362X	MPS E3 HE INTCN IN (LV63) OP CMD A	HDWR		BD		89554A
	V41K1363X	MPS E3 HE INTCN IN (LV63) OP CMD B	HDWR		BD		89554A
	V41K1421XA	MPS LH2 RECIRC DISC VLV OPEN CMD	HDWR		BD		89313A
	V41K1422XA	MPS LH2 4IN DISC VLV (PD3) CL CMD	HDWR		BD		89313A
							89554A

TABLE 4.2.1.4–1. SPACE SHUTTLE MAIN ENGINE(SSME) OPERATIONS SEQ (G4.165) INPUT/OUTPUT FUNCTIONAL PARAMETERS

DBFN: D3B027-F PN: VP707100049P00L OUTPUT FUNCTIONAL PARAMETERS FROM SSME OPS

FSSR NAME	M/S ID	NOMENCLATURE	DESTINATION	UNITS	DATA TYPE	PREC	LAST CRS
	V41K1613XB	MPS REG HE XOVER VLV (LV10) OP CMD	HDWR				89554A
	V90X8403XB	EVENT TIMER START FLAG	SYS S/W				
	V90X8568X	ALL PREVLVS COMMANDED CLOSE IND	ET SEP SEQ				
	V90X8577X	ZERO THRUST DELAY	MSC				

TABLE 4.2.1.4–2. SPACE SHUTTLE MAIN ENGINE(SSME) OPERATIONS SEQ (G4.165) I–LOADS

DBFN:0484

FSSR NAME	MSID	ENG UNIT	DT	PR	D	S	PR	FCTN	CAT
FAST_SEP_ZERO_THRUST_DLY	V97U9833C	SEC	F	D	D	C	G4.165		ZSZ7
LH2_LL_TIME_DELAY_Q	V96U9535C	SEC	F	D	D	C	G4.165		QME0
MECO_LEAD_TIME	V97U9829C	SEC	F	D	D	C	G4.165		ZSZ7
ME1_LH2_PREVLV_CLSE_T_DELAY	V97U9741C	SEC	F	D	L	C	G4.165		ZSZ7
ME2_LH2_PREVLV_CLSE_T_DELAY	V97U9745C	SEC	F	D	L	C	G4.165		ZSZ7
ME3_LH2_PREVLV_CLSE_T_DELAY	V97U9749C	SEC	F	D	L	C	G4.165		ZSZ7
MPS_E1_T_DELAY_A	V97U9738C	SEC	F	D	D	C	G4.165		ZSZ7
MPS_E1_T_DELAY_C	V97U9740C	SEC	F	D	M	C	G4.165		ZSZ7
MPS_E2_T_DELAY_D	V97U9742C	SEC	F	D	D	C	G4.165		ZSZ7
MPS_E2_T_DELAY_F	V97U9744C	SEC	F	D	M	C	G4.165		ZSZ7
MPS_E3_T_DELAY_G	V97U9746C	SEC	F	D	D	C	G4.165		ZSZ7
MPS_E3_T_DELAY_I	V97U9748C	SEC	F	D	M	C	G4.165		ZSZ7
MPS_HELIUM_SYSTEM_LOW_PRESSURE	V97U9735C	PSIA	F	S	D	C	G4.165		ZSZ7
NOM_LO2_LL_T_DELAY_L	V97U9863C	SEC	F	D	D	P	G4.165		QME0
PTM_LO2_LL_T_DELAY_N	V97U9865C	SEC	F	D	D	C	G4.165		QME0
RTLS_LH2_LL_TIME_DELAY_P	V96U9536C	SEC	F	D	D	C	G4.165		QME0
RTLS_LO2_LL_T_DELAY_M	V97U9864C	SEC	F	D	D	C	G4.165		QME0

TABLE 4.2.1.4-3. SPACE SHUTTLE MAIN ENGINE(SSME) OPERATIONS SEQ (G4.165) K-LOADS

DBFN:0558

FSSR NAME DESCRIPTION	MSID	MC KLOAD VALUE	ENG UNIT	DT	PR	S	PR FCTN	LAST CR EQTN MSID
ET_LH2_LO_LVL_LIQ_SES1_DSBL_FLG	V99X8806X	B'0000000000000000'	ND	BI			C G4.165	29551B
ET_LH2_LO_LVL_LIQ_SES2_DSBL_FLG	V99X8807X	B'0000000000000000'	ND	BI			C G4.165	29551B
ET_LH2_LO_LVL_LIQ_SES3_DSBL_FLG	V99X8808X	B'0000000000000000'	ND	BI			C G4.165	29551B
ET_LH2_LO_LVL_LIQ_SES4_DSBL_FLG	V99X8809X	B'0000000000000000'	ND	BI			C G4.165	29551B
FAST_SEP_LH2_PREVLV_DLY	V97U9832C	+2.342 E+00	SEC	F	S		C G4.165	89278A
FAST_SEP_LOX_PREVLV_DLY	V97U9831C	+1.5 E+00	SEC	F	S		C G4.165	29551B
ME_SHTDN_DLY	V97U9830C	+0.0 E+00	SEC	F	S		C G4.165	29551B
MPS_LOX_LO_LVL_LIQ_SES1_DSBL_FLG	V99X8814X	B'0000000000000000'	ND	BI			C G4.165	29551B
MPS_LOX_LO_LVL_LIQ_SES2_DSBL_FLG	V99X8815X	B'0000000000000000'	ND	BI			C G4.165	29551B
MPS_LOX_LO_LVL_LIQ_SES3_DSBL_FLG	V99X8816X	B'0000000000000000'	ND	BI			C G4.165	29551B
MPS_LOX_LO_LVL_LIQ_SES4_DSBL_FLG	V99X8817X	B'0000000000000000'	ND	BI			C G4.165	29551B
MPS_MECO_E1_T_DELAY_A	V96U9769C	+1.078 E+00	SEC	F	S		C G4.165	89108A
MPS_MECO_E2_T_DELAY_D	V96U9771C	+1.078 E+00	SEC	F	S		C G4.165	89108A
MPS_MECO_E3_T_DELAY_G	V96U9773C	+1.078 E+00	SEC	F	S		C G4.165	89108A

TABLE 4.2.1.4–4. SPACE SHUTTLE MAIN ENGINE(SSME) OPERATIONS SEQ (G4.165) CONSTANTS

DBFN:0558

FSSR NAME DESCRIPTION	MSID	MC	CONSTANT VALUE	ENG UNIT	DT	PR	S	PR FCTN	LAST CR

NO REQUIREMENTS

4.2.2 SRB Separation Sequence (4.115)

4.2.2.1 Introduction

The solid rocket booster (SRB) separation sequence (SEP SEQ) is used during the ascent phase to separate the expended boosters from the orbiter/external tank. The SRB separation sequence performs the functions of monitoring SRB thrust tailoff, via chamber pressure; controlling the SRB separation process; and generating indicators for proper GN&C moding. The separation process is normally automatic, but in the event of an automatic separation inhibit, the crew is given the capability to manually override the inhibit and to initiate separation.

4.2.2.2 Overview

The SRB separation sequence is initiated at SRB SEP SEQ INITIATION TIME; it is initiated only if MECO has not yet occurred. Upon initiation, the sequence monitors the selected left and right SRB chamber pressure measurements to determine if the primary separation cue has been reached; that is, to determine if both the left and right SRB chamber pressures have decayed to 50 psia. The backup separation cue is reached when the mission elapsed time (MET) exceeds the latest possible time (SRB SEP BACKUP CUE TIME) at which a chamber pressure of 50 psia could occur.

Protection is provided for dual failure in the flight aft MDM's A/D converters or COMMFAULTS in conjunction with MDM failures which would result in premature indication of both left and right SRB chamber pressure at or below 50 psia.

In the event of multiple chamber pressure sensor failures on one SRB to the high state, SRB SEP BACKUP CUE TIME serves as the separation cue. Protection against multiple sensor failures to the low state requires marking the times at which the selected left and right SRB chamber pressure measurements drop below 50 psia and calculating the resultant time differential. If this differential exceeds the predicted maximum (MAX SRB SEP CUE DIFFERENTIAL), the separation cue becomes SRB SEP BACKUP CUE TIME to prevent a separation attempt with excessive SRB thrust.

The separation process begins once either the primary or backup separation cue has been reached. PIC arm and GN&C moding indicators are then issued at appropriate times. Following delays to allow the SRM nozzle actuators time to null and SRB thrust time to decay to an acceptable level, the vehicle's dynamic state is compared with criteria which define the capability of the vehicle to perform a safe separation. If the criteria are met, separation is commanded automatically. If the state criteria are exceeded, automatic separation is inhibited. The crew may override this inhibit via the SRB separation mode switch and the SRB separation initiate push button.

4.2.2.3 Detailed Requirements

Step 1 – Monitor Separation Cues. The SRB separation sequence is initiated when mission elapsed time (MET) is ≥ SRB SEP SEQ INITIATION TIME, I–loaded, and MECO has not yet occurred. The initiation time is selected to be less than the earliest possible time that the sensed chamber pressure of a fast–burning SRB will be at 50 psia, minus MAX SRB SEP CUE DIFFERENTIAL seconds. This step monitors the selected chamber pressure of each SRB, from select filter, for the primary separation cue and monitors MET for the backup cue. This monitoring occurs only if the cue has not previously been established.

Monitor the following:

(a) SRB SEPARATION COMMAND FLAG V90X8331X

If (a) is true, proceed to Step 4. If (a) is not true, monitor the following:

(b) SRB SEPARATION INITIATION FLAG V90X8333X

If (b) is true, proceed to Step 2. If (b) is not true, monitor the following:

(c) SELECTED LEFT PRESS SRB CHAMBER V90P2535C
(d) SELECTED RIGHT PRESS SRB CHAMBER V90P2536C
(e) MAX_SRB_SEP_CUE_DIFRNTL (I–loaded) V97U9761C

If both (c) and (d) are ≤ 50 psia, each for four successive passes, subtract the time the first left or right SRB chamber pressure was first detected to be less than or equal to 50 psia in the set of four passes from the time that the second, left or right, SRB chamber pressure was first less than or equal to 50 psia in a set of four passes. If this differential is ≥ (e), set (1) true and proceed to Step 2. If this time differential is > (e), or either (c) or (d) > 50 psia, monitor the following:

(f) SRB_SEP_BACKUP_CUE_T (I–loaded) V97U9751C

If mission elapsed time < (f), return to the beginning of Step 1.

If mission elapsed time ≥ (f), proceed to Step 2.

(1) LH/RH SRB PC 50 PSI FLAG V90X8332X

Step 2 – Prepare for Separation. The separation cue having been reached, this step prepares the vehicle for separation by issuing flags which arm the appropriate PIC's, safe the SRB range safety system, null the SRM nozzle actuators, and transition the flight control system configuration. Time delays are incorporated to assure that SRM actuators have adequate time to nullify and that SRM thrust has decayed to an acceptable level before commanding separation in a subsequent step.

Set (1), (2), (3), and (4) true and monitor the following:

(a) SRB_SEP_MODING_T_DELAY (I–loaded) V97U9752C

If (a–0.48) seconds have not elapsed since (1) became true, return to Step 1.

If (a–0.48) seconds have elapsed since (1) became true, set (5) and (6) true and monitor the following:

(b) SRB_SEP_COMMAND_T_DELAY (I–loaded) V97U9753C
(c) SRB_SEP_CMD_T_DLY_ABORT (I–loaded) V99U7589C
(d) MPS E1 FAIL FLAG V95X1207X
(e) MPS E2 FAIL FLAG V95X1208X
(f) MPS E3 FAIL FLAG V95X1209X

If (d), (e), and (f) are false and (b–0.48) seconds have not elapsed since (1) became true or if (d), (e), or (f) is true and (c–0.48) seconds have not elapsed since (1) became true, return to Step 1.

If (d), (e), and (f) are false and (b–0.48) seconds have elapsed since (1) became true or if (d), (e), or (f) is true and (c–0.48) seconds have elapsed since (1) became true, set (7) true, set (8) false, and proceed to Step 3.

(1)	SRB SEPARATION INITIATION FLAG	V90X8333X
(2)	SRB RSS SAFE FLAG	V90X8337X
(3)	SRB RSS PWR OFF FLAG	V90X8336X
(4)	ET/ORB SEP CAMERAS ON CMD	V56K9000X
(5)	SRB SEP PICS ARM FLAG	V90X8335X
(6)	SRB SEP FUNCTION MODING FLAG	V90X8330X
(7)	ATVC SRB 26V AC DEADFACE FLAG	V90X8339X
(8)	ATVC SRB IVD PWR ON	V90X8338X

Step 3 – Check Separation Inhibits. The vehicle is now configured to separate the SRB's. This step compares the vehicle's dynamic state with criteria which define the capability of the vehicle to perform a safe separation. If these criteria are exceeded, an inhibit is imposed which is automatically released once the criteria have been met but which can also be overridden manually by the crew. The separation criteria are defined in terms of vehicle body rate and dynamic pressure limits.

Set (1) false and monitor the following:

(a)	SEL SRB SEP MNL/AUTO ENABLE CMD	V90X7571X
(b)	SEL SRB SEPARATION INITIATE CMD	V90X7572X

If (a) and (b) are both true, proceed to Step 4. Otherwise, monitor the following:

P:	SELECTED RGA ROLL RATE		V90R5301C
Q:	SELECTED RGA PITCH RATE		V90R5321C
R:	SELECTED RGA YAW RATE		V90R5341C
QBAR:	DERIVED ASCENT DYNAMIC PRESS		V95P0500C
AP–	ROLL_RATE_LMT SLOPE	(I–loaded)	V97U9754C
AQ–	PITCH_RATE_LMT SLOPE	(I–loaded)	V97U9755C
AR–	YAW_RATE_LMT SLOPE	(I–loaded)	V97U9756C
BP–	ROLL_RATE_LMT CONSTANT	(I–loaded)	V97U9757C
BQ–	PITCH_RATE_LMT CONSTANT	(I–loaded)	V97U9758C
BR–	YAW_RATE_LMT CONSTANT	(I–loaded)	V97U9759C
DPL:	DYNAMIC_PRS LIMIT	(I–loaded)	V97U9760C

If QBAR > DPL

or if P > AP(QBAR) + BP

or if Q > AQ(QBAR) + BQ

or if R > AR(QBAR) + BR, set (1) true and return to Step 1. Otherwise, proceed to Step 4.

(1)	SRB AUTO SEP INHIBIT CREW ALERT	V90X8340X

Step 4 – Command Separation. This step sets the separation fire flags which, through the MEC SOP, instruct the MEC's to issue fire commands to the separation PIC's. Before the sequence is descheduled, MEC SOP flags are terminated. The MEC SOP is then instructed to issue a MASTER RESET to the MEC's to complete the sequence.

Set (1), (2), and (3) true.

If 4 seconds have elapsed since (2) became true, set (1), (2), and (4) through (11) false. One pass later, set (12) true one time only. The sequence is now complete and ready to be descheduled.

(1)	SRB SEP FIRE 1 FLAG	V90X8341X
(2)	SRB SEP FIRE 2/3 FLAG	V90X8354X
(3)	SRB SEPARATION COMMAND FLAG	V90X8331X
(4)	L SRB PWR BUS C RPC A ON CMD	V76K6941X
(5)	R SRB PWR BUS C RPC A ON CMD	V76K6942X
(6)	L SRB PWR BUS C RPC C ON CMD	V76K6945X
(7)	R SRB PWR BUS C RPC C ON CMD	V76K6946X
(8)	SRB RSS PWR OFF FLAG	V90X8336X
(9)	SRB RSS SAFE FLAG	V90X8337X
(10)	SRB SEP PICS ARM FLAG	V90X8335X
(11)	ET/ORB SEP CAMERAS ON COMMAND	V56K9000X
(12)	MEC 1 & 2 MASTER RESET FLAG	V90X8258X

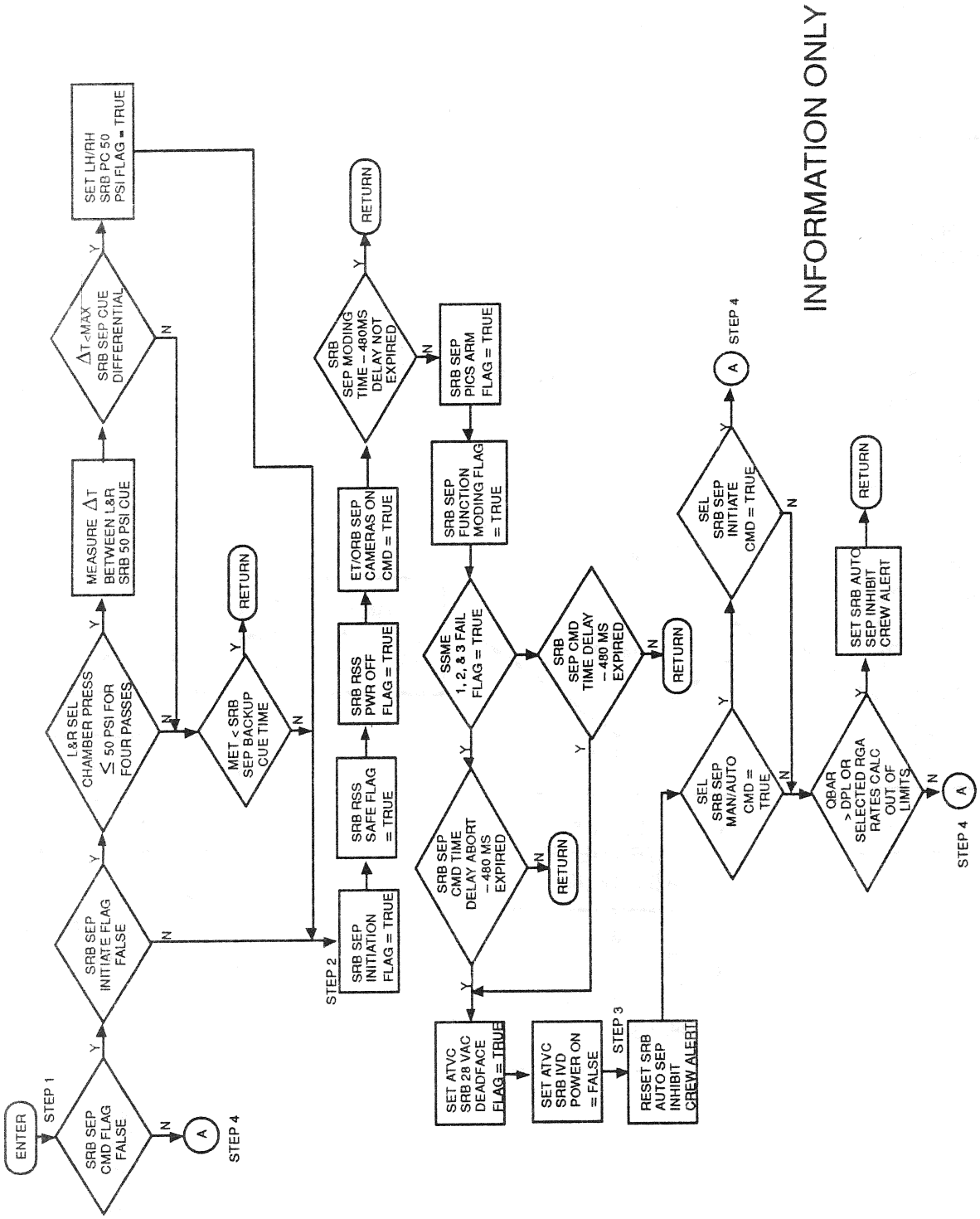

Figure 4.115. SRB SEP SEQ (Sheet 1 of 2)

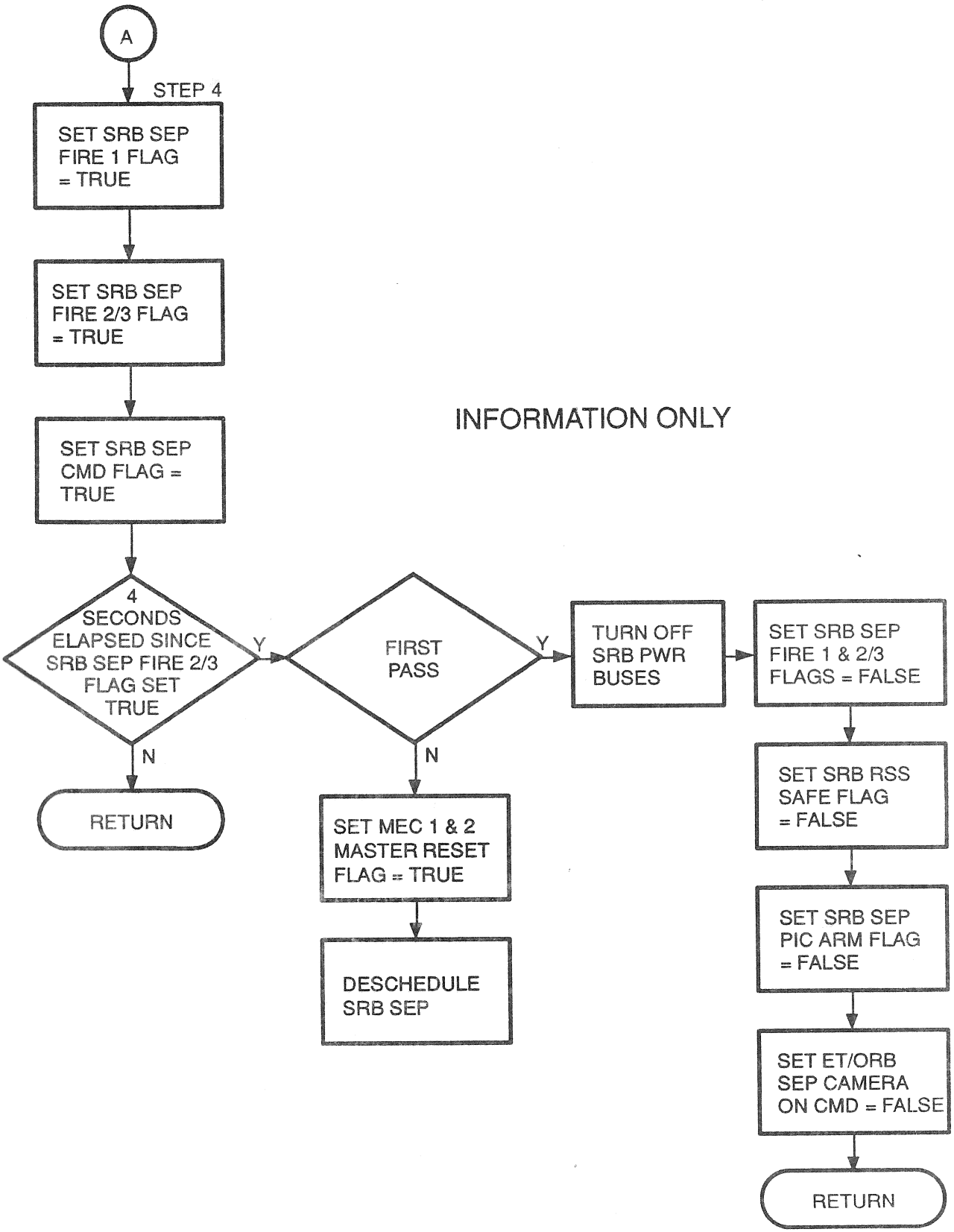

Figure 4.115. SRB SEP SEQ (Sheet 2 of 2)

TABLE 4.2.2.4–1. SOLID ROCKET BOOSTER(SRB) SEP SEQUENCER (G4.115) INPUT/OUTPUT FUNCTIONAL PARAMETERS

DBFN: D3B027-F PN: VP707100049P00L INPUT FUNCTIONAL PARAMETERS FOR SRB SEP SEQ

FSSR NAME	M/S ID	NOMENCLATURE	SOURCE	UNITS	DATA TYPE	PREC	LAST CRS
ME1_FAIL_SHUTDOWN	V95X1207X	MPS E1 FAIL FLAG	SSME OPS		BD		89990E
ME2_FAIL_SHUTDOWN	V95X1208X	MPS E2 FAIL FLAG	SSME OPS		BD		89990E
ME3_FAIL_SHUTDOWN	V95X1209X	MPS E3 FAIL FLAG	SSME OPS		BD		89990E
P_ORB	V90R5301CA	SELECTED RGA ROLL RATE	SF	DEG/S			90182
PC4	V90P2535C	SELECTED LEFT PRESS SRB CHAMBER	SF	PSIA			89494A
PC5	V90P2536C	SELECTED RIGHT PRESS SRB CHAMBER	SF	PSIA			89494A
Q_BAR_A	V95P0500C	DERIVED ASCENT DYNAMIC PRESS	ASC UPP	LB/FT2	SPL		79646D
Q_ORB/Q	V90R5321CA	SELECTED RGA PITCH RATE	SF	DEG/S			90182
							89990E
R_ORB	V90R5341CA	SELECTED RGA YAW RATE	SF	DEG/S			90182
	V90X7571X	SEL SRB SEPN MNL/AUTO ENABLE CMD	GN&C SW RM		BD		
	V90X7572X	SEL SRB SEP INITIATE/WOW-WONG CMD	GN&C SW RM		BD		

TABLE 4.2.2.4–1. SOLID ROCKET BOOSTER(SRB) SEP SEQUENCER (G4.115) INPUT/OUTPUT FUNCTIONAL PARAMETERS

DBFN: D3B027-F PN: VP707100049P00L OUTPUT FUNCTIONAL PARAMETERS FROM SRB SEP SEQ

FSSR NAME	M/S ID	NOMENCLATURE	DESTINATION	UNITS	DATA TYPE	PREC	LAST CRS
ATVC_IVD_PWR	V90X8338XA	ATVC SRB IVD PWR ON FLAG	MEC SOP				89456A
ATVC_26V_DDFACE	V90X8339XA	ATVC SRB 26V AC DEADFACE FLAG	MEC SOP				89456A
M_RSET_USER	V90X8258XB	MEC 1&2 MASTER RESET FLAG	MEC SOP				89456A
SRB_MODING_SEP	V90X8330XA	SRB SEP FUNCTION MODING FLAG	ASC DAP,MSC,TLM				89599C
SRB_RSS_OFF	V90X8336X	SRB RSS PWR OFF FLAG	MEC SOP				89456A
SRB_RSS_SAFE	V90X8337X	SRB RSS SAFE FLAG	MEC SOP				89456A
SRB_SEP_ARM	V90X8335X	SRB SEP PICS ARM FLAG	MEC SOP				89456A
SRB_SEP_CMD_FLAG	V90X8331XA	SRB SEPARATION COMMAND FLAG	AERO ACT SOP,ASC DAP,ASC UPP SEQ, RTLS UPP SEQ,MSC,TLM				79933F
SRB_SEP_FIRE1	V90X8341X	SRB SEP FIRE 1 FLAG	MEC SOP				89456A
SRB_SEP_FIRE2/3	V90X8354X	SRB SEP FIRE 2/3 FLAG	MEC SOP				89456A
SRB_SEP_INITIATION	V90X8333X	SRB SEPARATION INITIATION FLAG	ASC UPP SEQ,TLM		BD		79933F
	V56K9000XC	ET/ORB SEP CAMERAS ON CMD	HDWR				
	V76K6941XA	L SRB BUS C RPC A ON CMD	HDWR				79935H
	V76K6942XA	R SRB BUS C RPC A ON CMD	HDWR				79935H
	V76K6945XA	L SRB BUS C RPC C ON CMD	HDWR				
	V76K6946XA	R SRB BUS C RPC C ON CMD	HDWR				
	V90X8332X	LH/RH SRB PC 50 PSI FLAG	XXXXXX TRAJ DISP,TLM		BD		
	V90X8340X	SRB AUTO SEP INHIBIT CREW ALERT	XXXXXX TRAJ DISP,TLM		BD		

TABLE 4.2.2.4–2. SOLID ROCKET BOOSTER SEP (SRB) SEQUENCER (G4.115) I–LOADS

DBFN:0484

FSSR NAME	MSID	ENG UNIT	DT	PR	D	S	PR	FCTN	CAT
AP_ROLL_RATE_LMT_SLOPE	V97U9754C	DEG*FT**2/SEC*LB	F	S	D	C	G4.115		ZFE3
AQ_PITCH_RATE_LMT_SLOPE	V97U9755C	DEG*FT**2/SEC*LB	F	S	D	C	G4.115		ZFE3
AR_YAW_RATE_LMT_SLOPE	V97U9756C	DEG*FT**2/SEC*LB	F	S	D	C	G4.115		ZFE3
BP_ROLL_RATE_LMT_CONSTANT	V97U9757C	DEG/SEC	F	S	D	C	G4.115		ZFE3
BQ_PITCH_RATE_LMT_CONSTANT	V97U9758C	DEG/SEC	F	S	D	C	G4.115		ZFE3
BR_YAW_RATE_LMT_CONSTANT	V97U9759C	DEG/SEC	F	S	D	C	G4.115		ZFE3
DYNAMIC_PRS_LMT	V97U9760C	LB/FT**2	F	S	D	C	G4.115		ZFE3
MAX_SRB_SEP_CUE_DIFRNTL	V97U9761C	SEC	F	D	D	P	G4.115		ZFE3
SRB_SEP_BACKUP_CUE_T	V97U9751C	SEC	F	D	M	C	G4.115		QRB0
SRB_SEP_CMD_T_DLY_ABORT	V99U7589C	SEC	F	D	M	C	G4.115		QSA0
SRB_SEP_COMMAND_T_DELAY	V97U9753C	SEC	F	D	D	C	G4.115		QSA0
SRB_SEP_MODING_T_DELAY	V97U9752C	SEC	F	D	D	C	G4.115		QSA0

TABLE 4.2.2.4–3. SOLID ROCKET BOOSTER SEP (SRB) SEQUENCER (G4.115) K–LOADS

DBFN:0558

FSSR NAME DESCRIPTION	MSID	MC KLOAD VALUE	ENG UNIT	DT PR S PR FCTN	LAST CR EQTN MSID
NO REQUIREMENTS					

TABLE 4.2.2.4–4. SOLID ROCKET BOOSTER SEP (SRB) SEQUENCER (G4.115) CONSTANTS

DBFN:0558

FSSR NAME DESCRIPTION	MSID	MC	CONSTANT VALUE	ENG UNIT	DT	PR	S	PR FCTN	LAST CR
NO REQUIREMENTS									

THIS PAGE INTENTIONALLY LEFT BLANK

4.2.3 ET Separation Sequence (4.116)

4.2.3.1 Introduction

The external tank (ET) separation sequence is used during the ascent phase to separate the expended fuel tank from the orbiter vehicle. The separation normally occurs automatically, but the crew has the capability to manually inhibit the separation sequence at any point or to manually initiate the separation in the presence of automatic separation inhibits.

4.2.3.2 Overview

The ET separation sequence is initiated by the GN&C moding, sequencing, and control (MSC) function when the SSME OPS sequence has determined that all of the main engines (ME) are in the shutdown or post shutdown phase. It then sets the MECO confirmed flag. The sequence then operates cyclically until just after the ET structural separation fire commands are issued in a nominal/TAL/AOA/ATO mission or until the umbilical doors are closed and latched in an RTLS abort mode.

The sequence accomplishes several major functions. It determines the mode of separation or if the separation is to be manually inhibited, arms the umbilical plate to unlatch PIC's, arms and fires the tumble system after all of the main propulsion (MPS) prevalves have been commanded closed, closes the feed-line disconnect valves, gimbals the SSME nozzles to the proper position; deadfaces the ET-orbiter interface, and unlatches and retracts the umbilical plates.

The sequence arms the structural separation PIC's, performs some limit tests on certain body rates and/or angles, and tests for feed line disconnect valve closure before continuing with an automatic separation. If any of the tests are not satisfied, the separation is inhibited and can occur only if the out-of-tolerance parameter comes back within tolerance or if the crew elects to continue the separation by manually overriding the inhibit. When either of these conditions is satisfied, the structural separation PIC's are fired. If an RTLS abort mode has been requested, the ET SEP sequence performs the umbilical closeout door function and is then complete.

The ET SEP sequence also provides a fast separation mode which is activated only when manual separation is enabled and the ET SEP initiate push button is depressed. The fast separation mode bypasses delays for PIC arm and fire times, feed line disconnect close times, and ET/UMB door retract times. The SRB SEP CMD FLAG and RTLS ABORT DECLARED FLAG are set to initiate the proper software moding. The fast separation function also provides for deadfacing the SRB electrical interfaces.

4.2.3.3 Detailed Requirements

Step 1 – Initiation. When the ET SEP sequence is initiated by the MSC function, the ET SEPARATION CMD flag is monitored. If it has not yet been set, the sequence monitors the separation mode via the GN&C switch processor. If the automatic ET separation mode is selected, the sequence proceeds normally. If the manual enable mode is selected, the sequence will not proceed until the ET SEP INITIATE push button is depressed and latched in software or the automatic mode is selected. If the ET SEPARATION CMD flag has been set, the sequence sets the MEC 1 and 2 MASTER RESET flag, terminates LH_2 RTLS dump valve open command and the MEC critical command flags, and terminates the feed line disconnect valve close commands. If an RTLS abort has been requested or if a manual request is made, the sequence must also perform the ET umbilical well door-closing function. If a fast separation has been requested, additional moding flags are set and the sequence terminated.

Monitor the following signals:

(a)	ET SEPARATION CMD FLAG	V90X8250X
(b)	FAST SEP FLAG	V90X8267X
(c)	SEL ET SEP AUTO	V90X7554X
(d)	SEL ET SEP MNL ENABLE	V90X7556X
(e)	SEL ET SEP INITIATE	V90X7564X
(f)	ET SEP MAN INITIATE FLAG	V90X8584X
(g)	BACKUP ET MAN SEP CMD	V93X5341X
(h)	MAJOR MODE 102 FLAG	V90X8158X
(i)	RTLS ABORT DECLARED	V90X8637X
(j)	BACKUP ET UMB DOOR CLOSE	V93X5342X

If (a) and (b) are both false and (f) is false and (c) and (h) are true, return to Step 1.

If (a) and (b) are both false and (f) and (g) and (h) are false and (c) is true, proceed to Step 2.

If (a) and (b) are both false and (d) and (e) are true or if (f) or (g) is true, latch (f) true and proceed to Step 1A.

If (a) and (b) are both false and (d) is true and (e) and (f) and (g) are false, set output (11) false and return to the beginning of Step 1.

If (a), (b), and (h) are true, set outputs (10) and (12) true and deactivate the sequence.

If (a) and (b) are true and (h) is false, proceed to Step 8.

If (a) is false and (b) is true, proceed to Step 2.

If (a) is true and (b) is false, set outputs (1) through (9) false and return to the beginning of Step 1. On any subsequent passes through this logic, monitor (i) and (j).

If (i) is true, proceed to Step 8.

If (i) and (j) are false, issue output (10) one time only, wait 73 seconds, and terminate outputs (13) through (18) and proceed to Step 9.

If (j) is true, on the first pass through the logic, restart the timer from the ET/ORB STR SEPN FIRE 2 FLAG in Step 7. On subsequent passes, proceed to Step 8.

(1)	ET/ORB STR SEPN PICS ARM FLAG	V90X8265X
(2)	ET/ORB STR SEPN FIRE 1 FLAG	V90X8244X
(3)	ET/ORB STR SEPN FIRE 2/3 FLAG	V90X8241X
(4)	MPS LH_2 FEED DISC VALVE CL CMD A	V41K1416X
(5)	MPS LH_2 FEED DISC VALVE CL CMD B	V41K1417X
(6)	MPS LH_2 FEED DISC VALVE CL CMD C	V41K1418X
(7)	MPS LO_2 FEED DISC VALVE CL CMD A	V41K1524X
(8)	MPS LO_2 FEED DISC VALVE CL CMD B	V41K1525X
(9)	MPS LO_2 FEED DISC VALVE CL CMD C	V41K1526X
(10)	MEC 1&2 MASTER RESET FLAG	V90X8258X
(11)	ET/ORB SEP CAMERAS ON CMD	V56K9000X

(12)	SRB SEP CMD FLAG	V90X8331X
(13)	MPS LH_2 RTLS INBD D/V OPEN COMMAND A	V41K1923X
(14)	MPS LH_2 RTLS INBD D/V OPEN COMMAND B	V41K1924X
(15)	MPS LH_2 RTLS INBD D/V OPEN COMMAND C	V41K1925X
(16)	MPS LH_2 RTLS OTBD D/V OPEN COMMAND A	V41K1913X
(17)	MPS LH_2 RTLS OTBD D/V OPEN COMMAND B	V41K1914X
(18)	MPS LH_2 RTLS OTBD D/V OPEN COMMAND C	V41K1915X

Step 1a – Fast Separation Initiation. This step determines a fast separation has been requested, and, if so, sets the flags required to initiate the FAST SEP mode.

Monitor the following signal:

(a)	MM102 FLAG	V90X8158X
(b)	MM602 FLAG	V90X8194X
(c)	MM103 FLAG	V90X8156X
(d)	SECOND SSME FAIL CONFIRM	V90X1721X

If (c) and (d) are true, set Flags (1), (3), and (4) true and proceed to Step 2.

If (a) or (b) is true, set Flags (1), (2), (3), and (4) true and proceed to Step 2.

(1)	FAST SEP FLAG	V90X8267X
(2)	RTLS ABORT DECLARED	V90X8637X
(3)	ET/ORB STR SEPN PICS ARM FLAG	V90X8265X
(4)	ET UMB UNLATCH PIC ARM FLAG	V90X8247X

Proceed to Step 2.

Step 2 – Preparation and Umbilical Unlatch and Retract. The feed line relief shutoff valve close commands are terminated and the LH_2 RTLS inboard and outboard D/V are commanded open so that these valves can relieve any pressure buildup caused by trapped propellants in the feed line when the ME valves and feed line disconnect valves are closed. Also, the umbilical door centerline latch lock commands are terminated to allow subsequent closure of the umbilical closeout doors.

Monitor (a) and (b) below:

(a)	FLAG A	(INTERNAL)
(b)	FAST SEP FLAG	V90X8267X
(c)	RTLS ABORT DECLARED	V90X8637X

If (a) is false, set outputs (1) through (14) false and proceed to Step 3.

If (a) is true and (b) is false, set output (19) false and outputs (15) through (18) and (21) through (26) true on the first pass through this logic and return to Step 1. On the next pass, set outputs (15) through (18) false and return to Step 1. On all subsequent passes through the logic, proceed to Step 5.

If (a) and (b) are true, and it has been less than 1 second since (b) became true, return to Step 1.

If (a) and (b) are true, and it has been more than 1 second since (b) became true, on the first pass set output (19) false and outputs (15) and (17) true and proceed to monitor (c). If (c) is true, return to Step 1. Otherwise, set (27) true and return to Step 1. On subsequent passes, set outputs (15), (17), and (20) false, set outputs (16) and (18) true and proceed to Step 7.

(1)	MPS LH_2 FDLN RLF S/O VLV CL CMD A	V41K1447X
(2)	MPS LH_2 FDLN RLF S/O VLV CL CMD B	V41K1448X
(3)	MPS LH_2 FDLN RLF S/O VLV CL CMD C	V41K1450X
(4)	MPS LO_2 FDLN RLF S/O VLV CL CMD A	V41K1547X
(5)	MPS LO_2 FDLN RLF S/O VLV CL CMD B	V41K1548X
(6)	MPS LO_2 FDLN RLF S/O VLV CL CMD C	V41K1550X
(7)	ET DR C/L LCH 1B1/2B2 FA1 LOCK CMD	V56K1275X
(8)	ET DR C/L LCH 1B2/2B1 FA1 LOCK CMD	V56K1276X
(9)	ET DR C/L LCH 1B1/2B2 FA2 LOCK CMD	V56K1277X
(10)	ET DR C/L LCH 1B2/2B1 FA2 LOCK CMD	V56K1278X
(11)	ET DR C/L LCH 1B1/2B2 FA4 LOCK CMD	V56K1375X
(12)	ET DR C/L LCH 1B2/2B1 FA4 LOCK CMD	V56K1376X
(13)	ET DR C/L LCH 1B1/2B2 FA3 LOCK CMD	V56K1377X
(14)	ET DR C/L LCH 1B2/2B1 FA3 LOCK CMD	V56K1378X
(15)	ET/UMB UNLATCH FIRE 1 FLAG	V90X8256X
(16)	ET/UMB RETRACT FIRE 1 FLAG	V90X8263X
(17)	ET/UMB UNLATCH FIRE 2/3 FLAG	V90X8242X
(18)	ET/UMB RETRACT FIRE 2/3 FLAG	V90X8243X
(19)	ET/UMB UNLATCH PIC ARM FLAG	V90X8247X
(20)	ET/ORB STR SEPN PICS ARM FLAG	V90X8265X
(21)	MPS LH_2 RTLS INBD D/V OPEN COMMAND A	V41K1923X
(22)	MPS LH_2 RTLS INBD D/V OPEN COMMAND B	V41K1924X
(23)	MPS LH_2 RTLS INBD D/V OPEN COMMAND C	V41K1925X
(24)	MPS LH_2 RTLS OUTBD D/V OPEN COMMAND A	V41K1913X
(25)	MPS LH_2 RTLS OUTBD D/V OPEN COMMAND B	V41K1914X
(26)	MPS LH_2 RTLS OUTBD D/V OPEN COMMAND C	V41K1915X
(27)	SEP MINUS Z CMD	V90X8268X

Step 3 – Tumble System Arm/Fire and MPS Feed Line Valve Latch Unlock. This step monitors for a flag from the SSME-OPS sequence indicating that all MPS prevalves have been commanded closed. Upon receipt of this flag, the ET tumble system is armed, the MPS feed line disconnect latches are commanded to the unlock position, and one second delay is allowed for the LH_2 prevalves to close and the latches to unlock. After a one-second delay, the ET tumble system is fired, the ET/ORB SEP cameras are turned on, and the step is exited to perform voting on the latch position switches.

For ground checkout, ET TUMBLE SYSTEM ARM and ET TUMBLE SYSTEM FIRE flags are bypassed when GNC GROUND CHECKOUT ENABLE flag is set.

For FAST SEP missions, commanding of MPS feed line disconnect latches to the unlock position and voting on latch position switches are bypassed, feed line disconnect closure commands are not issued, and

the feed line disconnect closure will be accomplished by the backup mechanical feature at ET structural separation.

Monitor the following signals:

(a)	ALL PRE VLVS COMMANDED CLOSE IND	V90X8568X
(b)	FAST SEP FLAG	V90X8267X
(c)	GNC GROUND CHECKOUT ENABLE	V93X5538X

If (a) is false, return to Step 1.

If (a) is true, and (b) is false, set outputs (1) through (6) false and outputs (7) through (12) true and monitor time elapsed since (a) first became true. Otherwise, monitor time elapsed since (a) first became true.

If at least one second has not elapsed since (a) first became true and (c) is false, set output (13) true and return to Step 1.

If at least one second has not elapsed since (a) first became true and (c) is true, return to Step 1.

If at least one second has elapsed since (a) first became true and (c) is false, on first pass set outputs (14) and (15) true and monitor (b).

IF at least one second has elapsed since (a) first became true and (c) is true, on first pass set output (15) true and monitor (b).

If (b) is true, proceed to Step 3f. On subsequent passes proceed to Step 3f.

If (b) is false, proceed to Step 3b. On subsequent passes proceed to Step 3f.

(1)	MPS LO_2 FDLN DISC LATCH LOCK CMD A	V41K1881X
(2)	MPS LO_2 FDLN DISC LATCH LOCK CMD B	V41K1882X
(3)	MPS LO_2 FDLN DISC LATCH LOCK CMD C	V41K1883X
(4)	MPS LH_2 FDLN DISC LATCH LOCK CMD A	V41K1981X
(5)	MPS LH_2 FDLN DISC LATCH LOCK CMD B	V41K1982X
(6)	MPS LH_2 FDLN DISC LATCH LOCK CMD C	V41K1983X
(7)	LO_2 FDLN DISC LATCH UNLOCK CMD A	V41K1884X
(8)	LO_2 FDLN DISC LATCH UNLOCK CMD B	V41K1885X
(9)	LO_2 FDLN DISC LATCH UNLOCK CMD C	V41K1886X
(10)	LH_2 FDLN DISC LATCH UNLOCK CMD A	V41K1984X
(11)	LH_2 FDLN DISC LATCH UNLOCK CMD B	V41K1985X
(12)	LH_2 FDLN DISC LATCH UNLOCK CMD C	V41K1986X
(13)	ET TUMBLE SYSTEM ARM FLAG	V90X8251X
(14)	ET TUMBLE SYSTEM FIRE FLAG	V90X8252X
(15)	ET/ORB SEP CAMERAS ON CMD	V56K9000X

Step 3a – ET/UMB PIC ARM. The sequence next sets the ET/UMB UNLATCH PICS ARM FLAG for the MEC SOP, which then issues the proper four-digit hexadecimal code for the command data word arm commands.

Monitor (a) and (b) below:

(a)	FAST SEP FLAG	V90X8267X
(b)	ALL PRE VLVS COMMANDED CLOSE IND	V90X8568X

If (a) is false and at least 3.3 seconds have not elapsed since (b) first became true, return to Step 1; otherwise, set output (1) below true and proceed to Step 4.

(1)	ET/UMB UNLATCH PIC ARM FLAG	V90X8247X

Step 3b – LO_2, Feed Line Disconnect Latch Position Switch Voting. This step monitors the LO_2 latch position switches and their commfault indications.

Monitor the following signals:

(a)	MPS LO_2 FDLN DISC LATCH LOCKED A	V41X1891X
(b)	MPS LO_2 FDLN DISC LATCH LOCKED B	V41X1892X
(c)	MPS LO_2 FDLN DISC LATCH UNLOCKED A	V41X1893X
(d)	MPS LO_2 FDLN DISC LATCH UNLOCKED B	V41X1894X
(e)	FA1 INPUT PROM SEG 3, 10 STATUS (HFE)	V91X2845X
(f)	FA2 INPUT PROM SEG 3, 10 STATUS (HFE)	V91X2846X
(g)	FA3 INPUT PROM SEG 3, 10 STATUS (HFE)	V91X2847X
(h)	FA4 INPUT PROM SEG 3, 10 STATUS (HFE)	V91X2848X

If (a) and (e) are false, set output (1) true and monitor (b) and (f). Otherwise, monitor (b) and (f).

If (b) and (f) are false, set output (2) true and monitor (c) and (g). Otherwise, monitor (c) and (g).

If (c) is true and (g) is false, set output (3) true and monitor (d) and (h). Otherwise, monitor (d) and (h).

If (d) is true and (h) is false, set output (4) true and proceed to Step 3c. Otherwise, proceed to Step 3c.

(1)	LO_2 LATCH LOCKED A OK FLAG	(INTERNAL)
(2)	LO_2 LATCH LOCKED B OK FLAG	(INTERNAL)
(3)	LO_2 LATCH UNLOCKED A OK FLAG	(INTERNAL)
(4)	LO_2 LATCH UNLOCKED B OK FLAG	(INTERNAL)

Step 3c – LO_2, Feed Line Disconnect Valve Closure. This step closes the LO_2 feed line disconnect if 3 or more of the latch position switches indicate that the latch is unlocked or if an I-load indicates that the latch hardware has not been installed.

Monitor the following signals:

(a)	LO_2 LATCH LOCKED A OK FLAG	(INTERNAL)
(b)	LO_2 LATCH LOCKED B OK FLAG	(INTERNAL)
(c)	LO_2 LATCH UNLOCKED A OK FLAG	(INTERNAL)
(d)	LO_2 LATCH UNLOCKED B OK FLAG	(INTERNAL)

(e) FDLN_DISC_LATCH_INSTALLED_FLAG V99U9951C

If flag (e) is false or 3 or more of inputs (a) through (d) are true, set outputs (1) through (3) false and outputs (4) through (6) true and proceed to Step 3d. Otherwise, proceed to Step 3d.

(1) MPS LO_2 FEED DISC VALVE OP CMD A V41K1521X
(2) MPS LO_2 FEED DISC VALVE OP CMD B V41K1522X
(3) MPS LO_2 FEED DISC VALVE OP CMD C V41K1523X
(4) MPS LO_2 FEED DISC VALVE CL CMD A V41K1524X
(5) MPS LO_2 FEED DISC VALVE CL CMD B V41K1525X
(6) MPS LO_2 FEED DISC VALVE CL CMD C V41K1526X

Step 3d – LH_2 Feed Line Disconnect Latch Position Switch Voting. This step monitors the LH_2 latch position switches and their commfault indications.

Monitor the following signals:

(a) MPS LH_2 FDLN DISC LATCH LOCKED A V41Xl991X
(b) MPS LH_2 FDLN DISC LATCH LOCKED B V41X1992X
(c) MPS LH_2 FDLN DISC LATCH UNLOCKED A V41X1993X
(d) MPS LH_2 FDLN DISC LATCH UNLOCKED B V41X1994X
(e) FA1 INPUT PROM SEG 3, 10 STATUS (HFE) V91X2845X
(f) FA2 INPUT PROM SEG 3, 10 STATUS (HFE) V91X2846X
(g) FA3 INPUT PROM SEG 3, 10 STATUS (HFE) V91X2847X
(h) FA4 INPUT PROM SEG 3, 10 STATUS (HFE) V91X2848X

If (a) and (e) are false, set output (1) true and monitor (b) and (f). Otherwise, monitor (b) and (f).

If (b) and (f) are false, set output (2) true and monitor (c) and (g). Otherwise, monitor (c) and (g).

If (c) is true and (g) is false, set output (3) true and monitor (d) and (h). Otherwise, monitor (d) and (h).

If (d) is true and (h) is false, set output (4) true and proceed to Step 3e. Otherwise, proceed to Step 3e.

(1) LH_2 LATCH LOCKED A OK FLAG (INTERNAL)
(2) LH_2 LATCH LOCKED B OK FLAG (INTERNAL)
(3) LH_2 LATCH UNLOCKED A OK FLAG (INTERNAL)
(4) LH_2 LATCH UNLOCKED B OK FLAG (INTERNAL)

Step 3e – LH_2 Feed Line Disconnect Valve Closure. This step closes the LH_2 feed line disconnect if three or more of the latch position switches indicate that the latch is unlocked or if an I-load indicates that the latch hardware has not been installed.

Monitor the following signals:

(a) LH_2 LATCH LOCKED A OK FLAG (INTERNAL)
(b) LH_2 LATCH LOCKED B OK FLAG (INTERNAL)

(c)	LH_2 LATCH UNLOCKED A OK FLAG	(INTERNAL)
(d)	LH_2 LATCH UNLOCKED B OK FLAG	(INTERNAL)
(e)	FDLN_DISC_LATCH_INSTALLED_FLAG	V99U9951C

If flag (e) is false or three or more of inputs (a) through (d) are true, set outputs (1) through (3) false and outputs (4) through (6) true and proceed to Step 3f. Otherwise, proceed to Step 3f.

(1)	MPS LH_2 FEED DISC VALVE OP CMD A	V41K1413X
(2)	MPS LH_2 FEED DISC VALVE OP CMD B	V41K1414X
(3)	MPS LH_2 FEED DISC VALVE OP CMD C	V41K1415X
(4)	MPS LH_2 FEED DISC VALVE CL CMD A	V41K1416X
(5)	MPS LH_2 FEED DISC VALVE CL CMD B	V41K1417X
(6)	MPS LH_2 FEED DISC VALVE CL CMD C	V41K1418X

Step 3f – SRB Deadfacing and SSME Gimbal Position. This step deadfaces the SRB electrical interfaces if a FAST SEP is in progress and sends a flag to MPS TVC CMD SOP to position the SSME nozzles.

Monitor the following signals:

(a)	FAST SEP FLAG	V90X8267X
(b)	RTLS ABORT DECLARED	V90X8637X
(c)	TAL ABORT DECLARED	V90X8658X

If (a) is true, set outputs (1) through (4), (8), and (9) false and output (7) true and monitor (a), (b), and (c). Otherwise, monitor (a), (b), and (c).

If (a), (b), or (c) is true, set output (6) true and output (5) false and proceed to Step 3a. Otherwise, set output (5) true and output (6) false and proceed to Step 3a.

(1)	LH SRB PWR BUS C – RPC-A ON	V76K6941X
(2)	RH SRB PWR BUS C – RPC-A ON	V76K6942X
(3)	LH SRB PWR BUS C – RPC-C ON	V76K6945X
(4)	RH SRB PWR BUS C – RPC-C ON	V76K6946X
(5)	MPS DUMP GIMBAL POS FLAG	V90X8253X
(6)	ENTRY STOW GIMBAL POS FLAG	V90X8254X
(7)	SRB SEP FUNCTION MODING FLAG	V90X8330X
(8)	ATVC SRB IVD PWR ON	V90X8338X
(9)	SRB PWR ON	V90X8343X

Step 4 – Deadfacing. The sequence next looks for 3.8 seconds to elapse since the feed line disconnect valves were commanded closed to allow them time to fully close before continuing. If a FAST SEP has been requested, the sequence bypasses the feed line valve closure delays. The sequence then resets the ET tumble system arm and fire flags, resets the ET DFI PWR ON command, and terminates the MPS signal conditioner's power-on commands to deadface the power interface before plate separation.

Monitor signal (a) below:

(a)	FAST SEP FLAG	V90X8267X

If (a) is false and at least 1.5 seconds have not elapsed since the ET/UMB UNLATCH PIC ARM FLAG was set in Step 3a, return to Step 1.

If (a) is true or at least 1.5 seconds have elapsed since the ET/UMB UNLATCH PIC ARM FLAG was set, set outputs (1) through (6) false, set output (7) true, and return to Step 1.

(1)	ET TUMBLE SYS ARM FLAG	V90X8251X
(2)	ET TUMBLE SYS FIRE FLAG	V90X8252X
(3)	MPS SIG COND PWR 1 ON	V41K0075X
(4)	MPS SIG COND PWR 2 ON	V41K0076X
(5)	MPS SIG COND PWR 3 ON	V41K0077X
(6)	ET DFI PWR ON FLAG	V90X8255X
(7)	FLAG A	(INTERNAL)

Step 5 -- Automatic Separation Inhibit Checks. This step arms the ET/orbiter structural separation PIC's after a 5.5-second time delay has elapsed, since the umbilical retract fire commands were issued to allow time for the LO_2 and LH_2 umbilical plates to retract and latch. If an RTLS abort has been requested, this time delay is reduced to 1.2 seconds as the separation cannot be delayed longer due to the buildup of dynamic pressure caused by entry. After an additional 1.5-second delay for PIC charging, tests are made on some specific parameters to determine if separation can be performed safely with the automatic sequence. Parameters checked include roll, pitch, and yaw body rates and MPS feed line disconnect valve closed status. During RTLS aborts, angle of attack and sideslip angle are checked in addition to the other parameters. If any of these parameters fail to satisfy the predefined limits or if the MPS feed line disconnect valve is not closed, the crew is alerted and the sequence inhibits automatic separation from occurring. The crew may then elect to initiate the separation manually.

Monitor the following signal:

(a)	RTLS ABORT DECLARED	V90X8637X

If (a) is true and at least 1.2 seconds have not elapsed since the ET/umbilical retract fire 1 and fire 2/3 flags were set true, return to Step 1.

If (a) is true and 1.2 seconds have elapsed since the ET/umbilical retract fire 1 and fire 2/3 flags were set true, set output (1) below true and proceed.

If (a) is true and at least 1.5 seconds have not elapsed since output (1) was set true, return to Step 1.

If (a) is true and at least 1.5 seconds have elapsed since output (1) was set true, set output (2) false and then monitor signals (b) through (j) and (bb) through (dd) listed below.

If [(g) < (q) and (g) > (r)] and [(f) < (s) and (f) > (t)] and [(h) < (u) and (h) > (v)] and [(i) < (w) and (i) > (x)] and [(j) < (y) and (j) > (z)] and [[(b) is true and (bb) is false] or [(c) is true

and (cc) is false]] and [[(d) is true and (bb) is false] or [(e) is true and (dd) is false]], proceed to Step 6. Otherwise set output (2) true to generate a CRT message line and a Class 3 alert light and tone, set output (3) false one time only, and proceed to Step 6.

If (a) is false and at least 5.5 seconds have not elapsed since the ET/umbilical retract fire 2/3 flag was set true, return to Step 1.

If (a) is false and 5.5 seconds have elapsed since the ET/umbilical retract fire 2/3 flag was set true, set output (1) below true and monitor flag (aa).

(aa) FIRE SEQUENCE FL (INTERNAL)

If (aa) is true, proceed to Step 7.

If (aa) is false and at least 1.5 seconds have not elapsed since ET/ORB STR SEPN PICS ARM FLAG was set true, return to Step 1; otherwise set output (2) false and then monitor signals (b) through (h), (k) through (p), and (bb) through (dd) listed below.

If [[(b) is true and (bb) is false] or [(c) is true and (cc) is false]] and [[(d) is true and (bb) is false] or [(e) is true and (dd) is false]] and if [(g) < (k) and (g) > (l)] and [(f) < (m) and (f) > (n)] and [(h) < (o) and (h) > (p)], proceed to Step 6. Otherwise set output (2) true to generate a CRT message line and a Class 3 alert light and tone, set output (3) false one time only, and proceed to Step 6.

(b)	MPS LH_2 FEED DISC VLV CLOSED A	V41X1430X
(c)	MPS LH_2 FEED DISC VLV CLOSED B	V41X1434X
(d)	MPS LO_2 FEED DISC VLV CLOSED A	V41X1530X
(e)	MPS LO_2 FEED DISC VLV CLOSED B	V41X1534X
(f)	SELECTED RGA ROLL RATE	V90R5301C
(g)	SELECTED RGA PITCH RATE	V90R5321C
(h)	SELECTED RGA YAW RATE	V90R5341C
(i)	NAV DERIVED ANGLE OF ATTACK	V90H2246C
(j)	INERTIAL SIDESLIP ANGLE	V90H2249C
(k)	NOM_BODY_PLUS_PITCH_RATE_LMT	V97U9762C
(l)	NOM_BODY_NEG_PITCH_RATE_LMT	V97U9763C
(m)	NOM_BODY_PLUS_ROLL_RATE_LMT	V97U9764C
(n)	NOM_BODY_NEG_ROLL_RATE_LMT	V97U9765C
(o)	NOM_BODY_PLUS_YAW_RATE_LMT	V97U9766C
(p)	NOM_BODY_NEG_YAW_RATE_LMT	V97U9767C
(q)	RTLS_BODY_PLUS_PITCH_RATE_LMT	V97U9768C
(r)	RTLS_BODY_NEG_PITCH_RATE_LMT	V97U9769C
(s)	RTLS_BODY_PLUS_ROLL_RATE_LMT	V97U9770C
(t)	RTLS_BODY_NEG_ROLL_RATE_LMT	V97U9771C
(u)	RTLS_BODY_PLUS_YAW_RATE_LMT	V97U9772C
(v)	RTLS_BODY_NEG_YAW_RATE_LMT	V97U9773C
(w)	RTLS_PLUS_ANGLE_OF_ATTK_LMT	V97U9774C
(x)	RTLS_NEG_ANGLE_OF_ATTK_LMT	V97U9775C
(y)	RTLS_PLUS_SIDESLIP_ANGLE_LMT	V97U9776C
(z)	RTLS_NEG_SIDESLIP_ANGLE_LMT	V97U9777C
(bb)	FA2 INPUT PROM SEG 3, 10 STATUS (HFE)	V91X2846X
(cc)	FA4 INPUT PROM SEG 3, 10 STATUS (HFE)	V91X2848X
(dd)	FA3 INPUT PROM SEG 3, 10 STATUS (HFE)	V91X2847X

(1)	ET/ORB STR SEPN PICS ARM FLAG	V90X8265X
(2)	ET AUTO SEP INHIBIT CREW ALERT	V90X8259X
(3)	ET/ORB SEP CAMERAS ON CMD	V56K9000X

Step 6 – Auto/Manual Separation Mode. The sequence now monitors the position of the auto/manual ET separation switch, via the GN&C switch SOP, to determine what separation mode is to be employed. If the automatic mode is selected and none of the ET SEP inhibit test conditions failed, the sequence

proceeds with the structural separation. If any of the inhibit test conditions failed and an RTLS abort has not been requested, the sequence turns off the ET/ORB separation cameras to conserve film, but will not proceed until the test condition is satisfied or is manually overridden by the crew.

If an RTLS abort has been requested, the ET/ORB separation cameras are turned off and the sequence continues to test the automatic separation inhibits and monitor the SEP switches for 6 seconds. If the inhibit becomes satisfied within this time or the crew manually overrides, the separation is performed. If the separation inhibit is still present after 6 seconds, the sequence automatically bypasses the inhibit and performs the separation. The separation cannot be delayed longer due to the pressure buildup caused by entry.

In the manual separation mode, the sequence looks for the ET SEP MAN INITIATE FLAG, latched in software. If true, the structural separation is accomplished, bypassing the conditions that caused the automatic separation to be inhibited. If the ET SEP MAN INITIATE FLAG is false, the separation will not occur.

Monitor the following signals:

(a)	SEL ET SEP AUTO	V90X7554X
(b)	SEL ET SEP MNL ENABLE	V90X7556X
(c)	ET SEP MAN INITIATE FLAG	V90X8584X
(d)	RTLS ABORT DECLARED	V90X8637X
(e)	ET AUTO SEP INHIBIT CREW ALERT	V90X8259X

If (c) is true, proceed to Step 7.

If (c) is false and (a) is true and (e) is false, proceed to Step 7.

If (a) is true and (e) is true and (d) is false, or if (a) is true and (e) is true and (d) is true and 6 seconds have not elapsed since (e) first became true, set output (1) false, listed below, and return to Step 1.

If (a) is true and (e) is true and (d) is true and 6 seconds have elapsed since (e) first became true, proceed to Step 7.

If (b) is true and (c) is false, set output (1) false and return to Step 1.

(1)	ET/ORB SEP CAMERAS ON CMD	V56K9000X

Step 7 – ET Structural Separation. In this step, the sequence commands the ET/ORB separation cameras on to make certain they are on in the event that an automatic separation inhibit had caused them to be turned off previously. If an RTLS abort is not requested, a command is set for the Transition DAP to fire during structural separation to prevent possible recontact between the orbiter and ET.

The sequence then sets the ET/ORB structural separation fire 1 and 2/3 flags for the MEC SOP and the ET separation command flag. This flag is a cue to other functions that the ET separation has occurred.

Monitor the following:

(a)	RTLS ABORT DECLARED	V90X8637X
(b)	FAST SEP FLAG	V90X8267X

If (a) or (b) is true, set outputs (2) through (5) true and return to Step 1.

If (a) and (b) are false, set outputs (1) and (6) listed below true and return to Step 1. On next pass through this logic set flags (2) through (5) true and return to Step 1.

(1)	SEP MINUS Z CMD	V90X8268X
(2)	ET/ORB SEP CAMERAS ON CMD	V56K9000X
(3)	ET/ORB STR SEPN FIRE 1 FLAG	V90X8244X
(4)	ET/ORB STR SEPN FIRE 2/3 FLAG	V90X8241X
(5)	ET SEPARATION CMD FLAG	V90X8250X
(6)	FIRE SEQUENCE FL	(INTERNAL)

Step 8 – ET Umbilical Doors Closure. This function is accomplished when either a manual ET umbilical door closure is required or an RTLS abort has been requested. In this mode, the umbilical door centerline latches are stowed, the umbilical doors are closed, and the umbilical doors are latched, all with the proper timing constraints.

If less than 2 seconds have elapsed since the structural separation fire 2/3 flag was set true, return to Step 1.

If at least 2 seconds have elapsed since the structural separation fire 2/3 flag was set true, set output commands (1) through (8) to true (STOW). Six seconds later:

Set output commands (9) through (16) true (ARM/CLOSE).

If 12 seconds have elapsed since the stow commands, (1) through (8), were set true, set output commands (1) through (8) false.

If 48 seconds have elapsed since output commands (9) through (16) were set true, set output commands (12) through (16) false, and set output commands (17) through (24) true (LATCH).

If 12 seconds have elapsed since output commands (17) through (24) were set true, set output commands (9) through (11) and (17) through (24) false and (25) true.

Proceed to Step 9.

(1)	ET DR CL LCH 1B1/2B2 FA1 STOW CMD	V56K1271X
(2)	ET DR CL LCH 1B2/2B1 FA1 STOW CMD	V56K1272X
(3)	ET DR CL LCH 1B1/2B2 FA2 STOW CMD	V56K1273X
(4)	ET DR CL LCH 1B2/2B1 FA2 STOW CMD	V56K1274X
(5)	ET DR CL LCH 1B1/2B2 FA4 STOW CMD	V56K1371X
(6)	ET DR CL LCH 1B2/2B1 FA4 STOW CMD	V56K1372X
(7)	ET DR CL LCH 1B1/2B2 FA3 STOW CMD	V56K1373X
(8)	ET DR CL LCH 1B2/2B1 FA3 STOW CMD	V56K1374X
(9)	ET DR DRV & CL LCH DC ARM AMCA 1/2	V56K0141X
(10)	ET DR DRV & CL LCH DC ARM AMCA 1/3	V56K0142X
(11)	ET DR DRV & CL LCH DC ARM AMCA 2/3	V56K0143X
(12)	ET UMB DR L-B2/R-B1 CLOSE CMD	V56K3111X
(13)	ET UMB DR R-B2 CLOSE CMD	V56K3112X
(14)	ET UMB DR R-B1/B2 CLOSE CMD	V56K4121X
(15)	ET UMB DR L-B1 CLOSE CMD	V56K4122X

(16)	ET UMB DR L-B1/B2 CLOSE CMD	V56K0140X
(17)	ET L UMB COUT DOOR LATCH FA1 CMD	V56K3531X
(18)	ET R UMB COUT DOOR LATCH FA1 CMD	V56K3532X
(19)	ET L UMB COUT DOOR LATCH FA4 CMD	V56K3533X
(20)	ET R UMB COUT DOOR LATCH FA4 CMD	V56K3534X
(21)	ET L UMB COUT DOOR LATCH FA3 CMD	V56K4531X
(22)	ET R UMB COUT DOOR LATCH FA3 CMD	V56K4532X
(23)	ET L UMB COUT DOOR LATCH FA2 CMD	V56K4533X
(24)	ET R UMB COUT DOOR LATCH FA2 CMD	V56K4534X
(25)	MEC 1 & 2 MASTER RESET FLAG	V90X8258X

Step 9 – MPS Feed Line Disconnect Valve Command Cleanup. This step terminates unneeded feed line disconnect latch unlock commands. The ET SEP sequence is then terminated.

Set outputs (1) through (6) false and deschedule the ET SEP sequence.

(1)	LO_2 FDLN DISC LATCH UNLOCK CMD A	V41K1884X
(2)	LO_2 FDLN DISC LATCH UNLOCK CMD B	V41K1885X
(3)	LO_2 FDLN DISC LATCH UNLOCK CMD C	V41K1886X
(4)	LH_2 FDLN DISC LATCH UNLOCK CMD A	V41K1984X
(5)	LH_2 FDLN DISC LATCH UNLOCK CMD B	V41K1985X
(6)	LH_2 FDLN DISC LATCH UNLOCK CMD C	V41K1986X

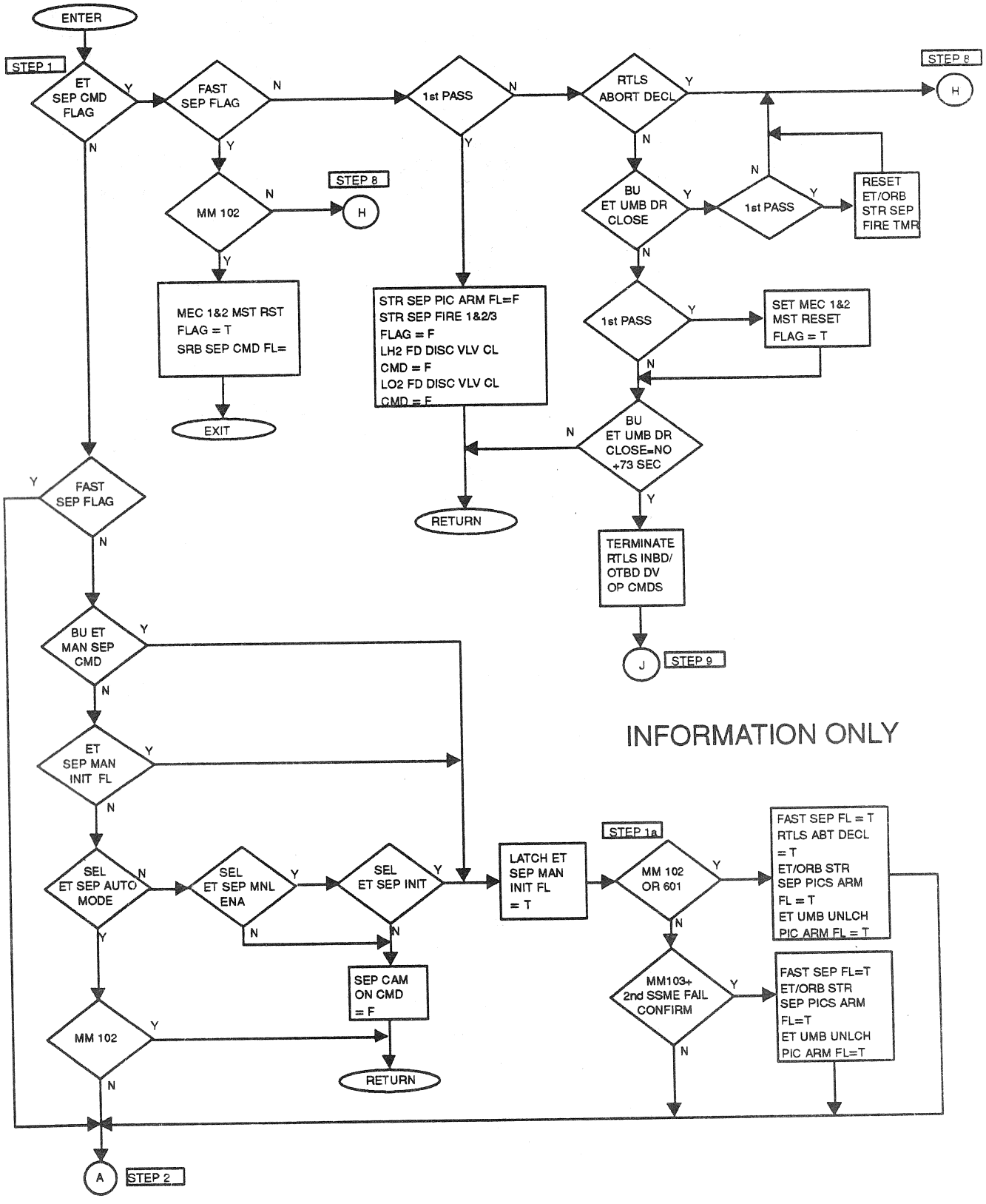

Figure 4.116. External Tank Separation Sequence Logic Flow Diagram (Sheet 1 of 8)

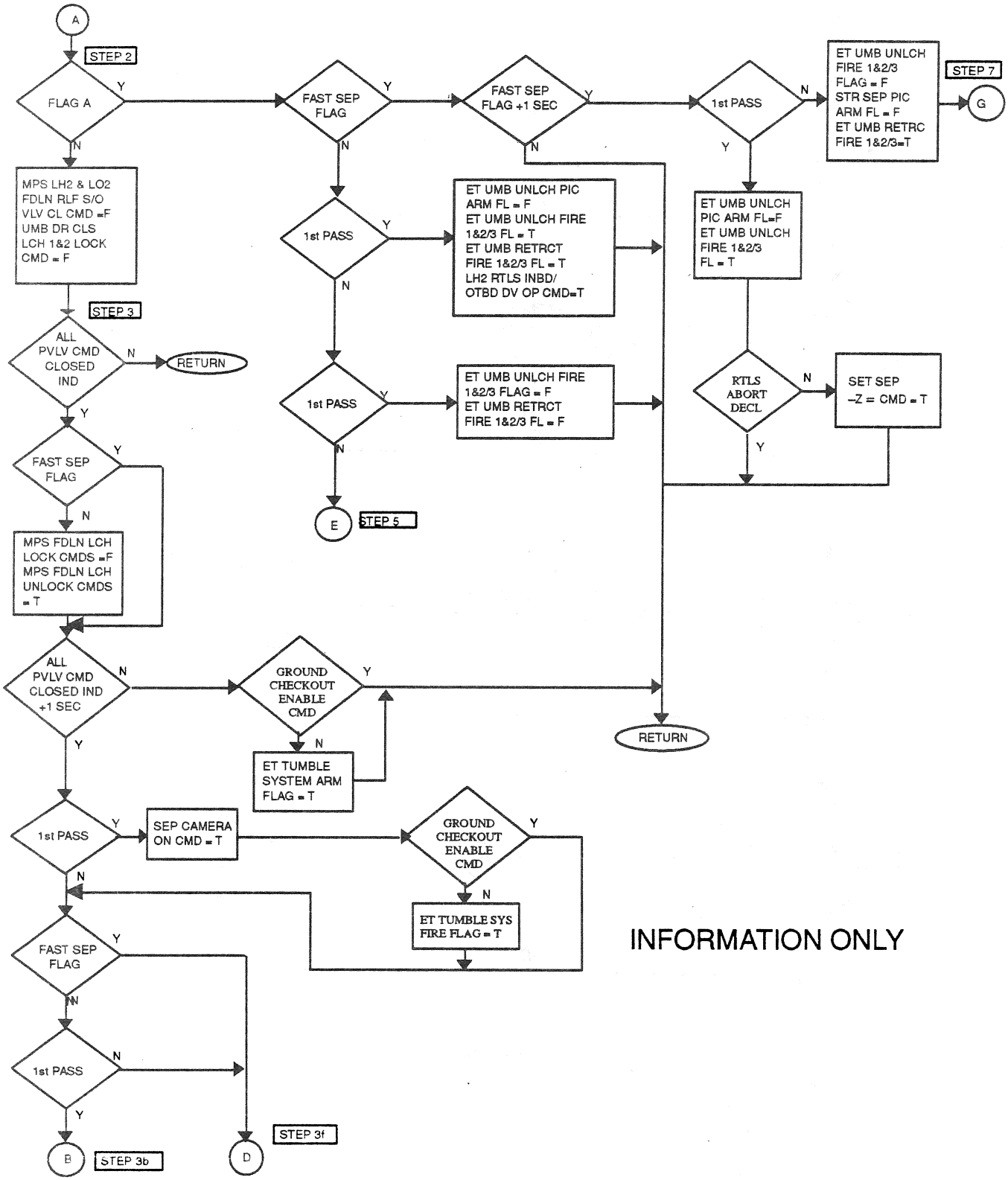

Figure 4.116. External Tank Separation Sequence Logic Flow Diagram (Sheet 2 of 8)

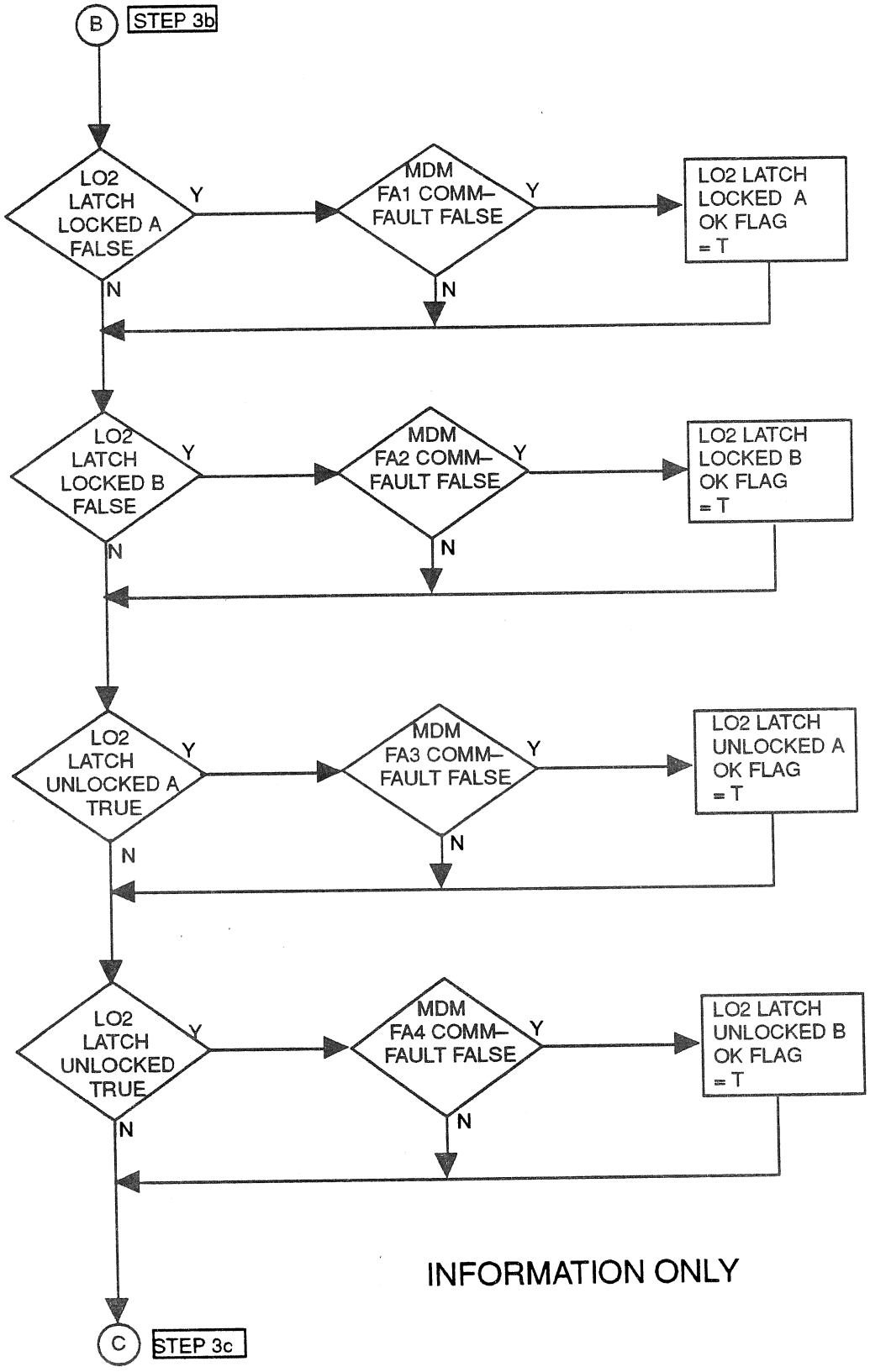

Figure 4.116. External Tank Separation Sequence Logic Flow Diagram (Sheet 3 of 8)

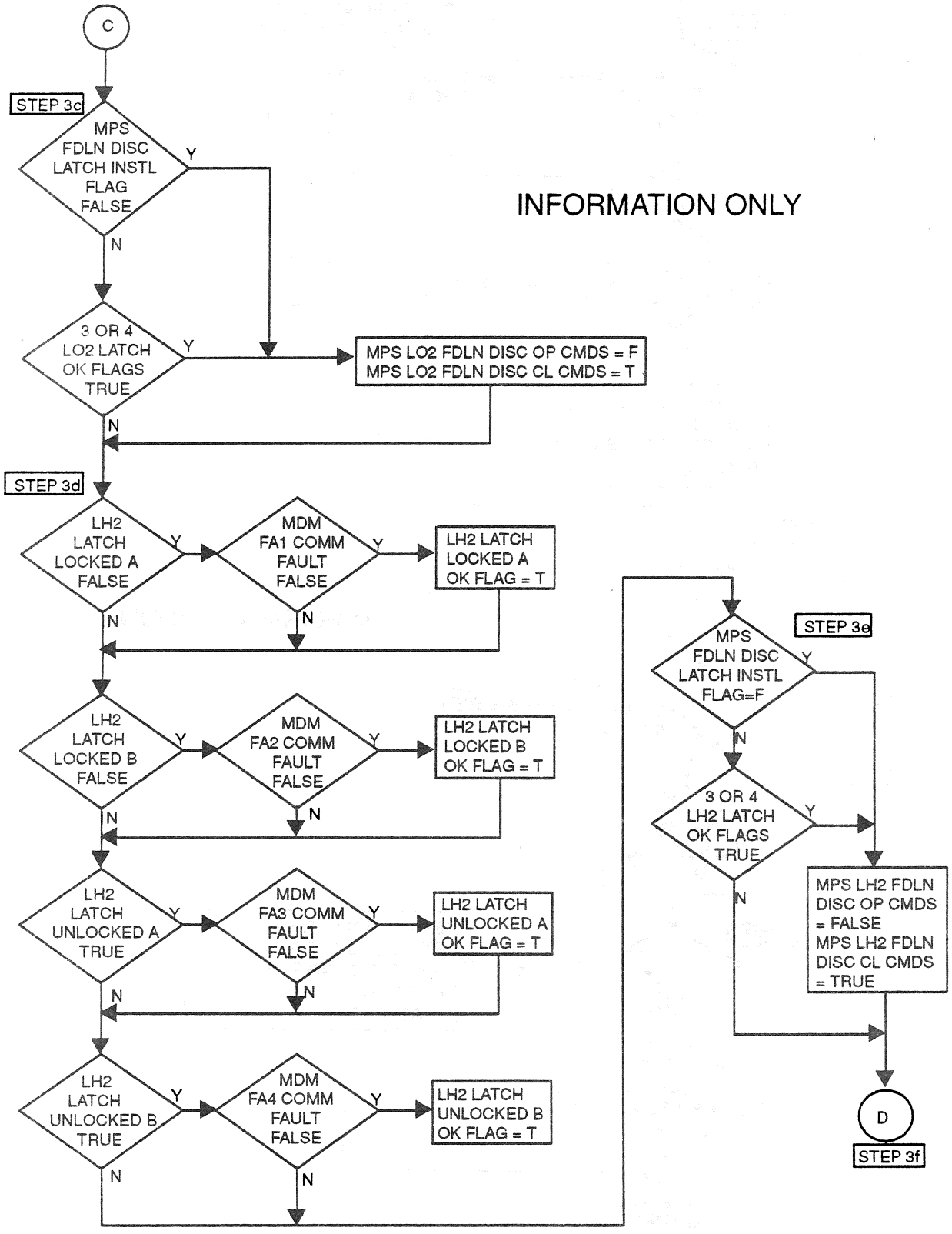

Figure 4.116. External Tank Separation Sequence Logic Flow Diagram (Sheet 4 of 8)

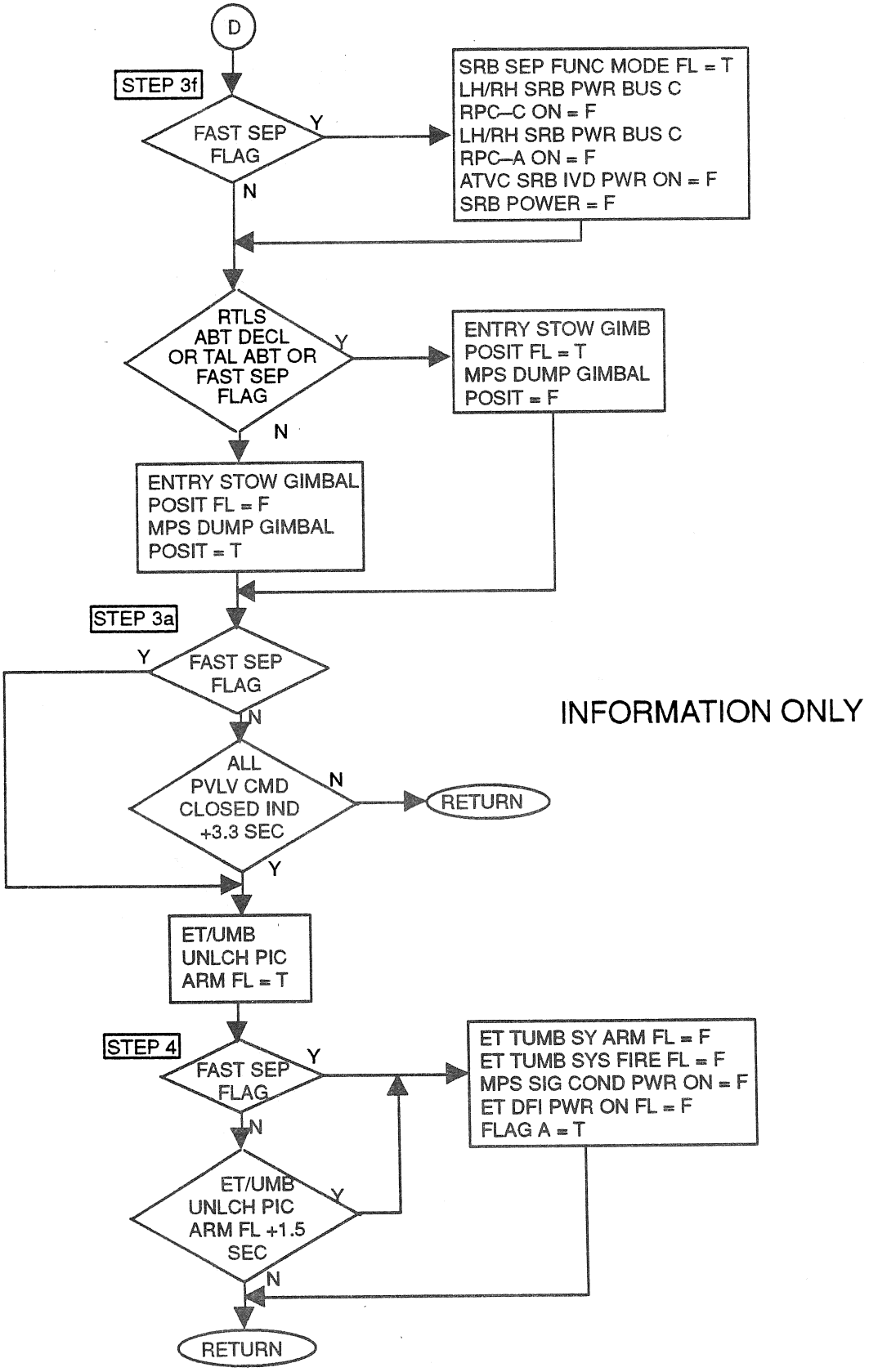

Figure 4.116. External Tank Separation Sequence Logic Flow Diagram (Sheet 5 of 8)

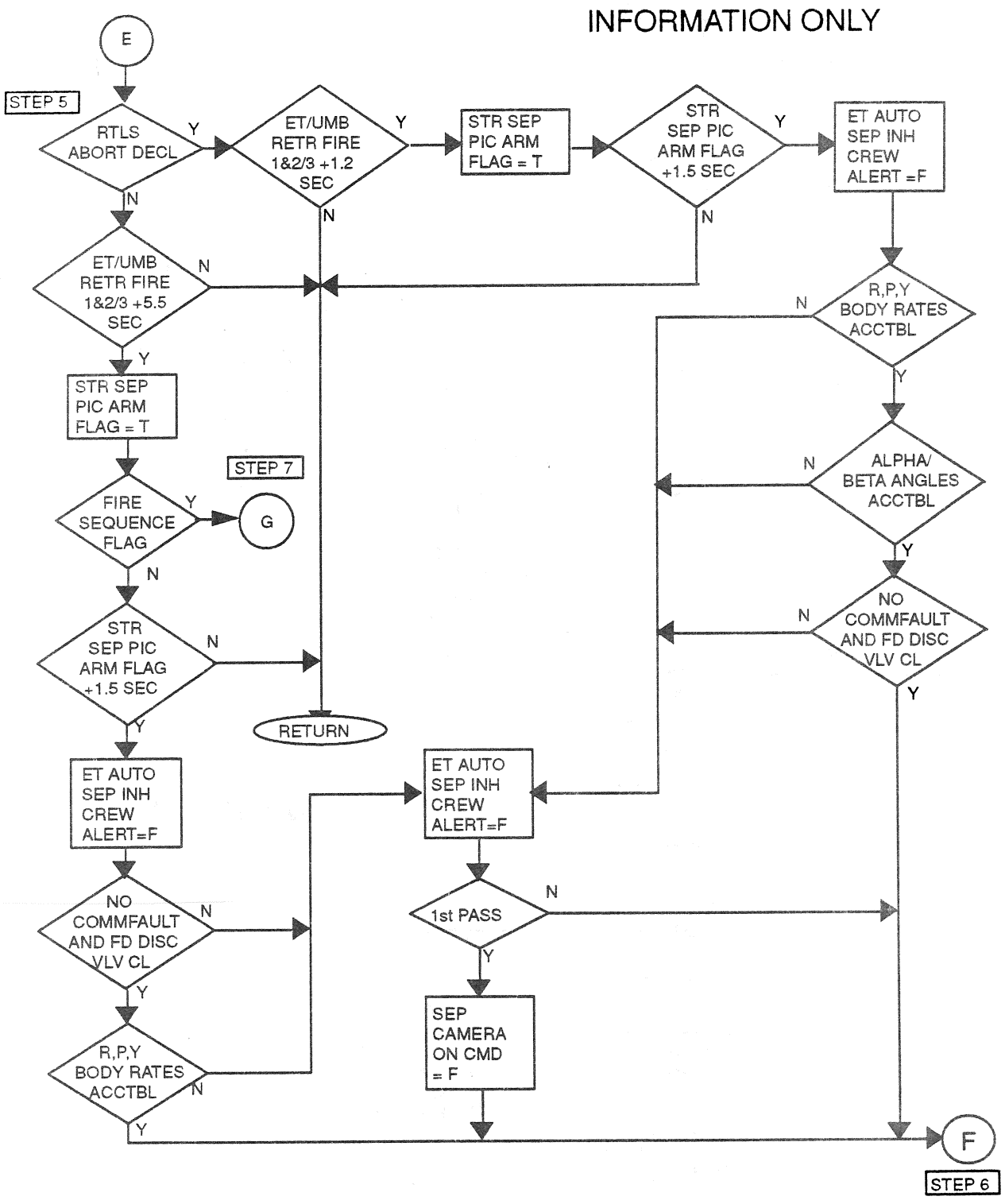

Figure 4.116. External Tank Separation Sequence Logic Flow Diagram (Sheet 6 of 8)

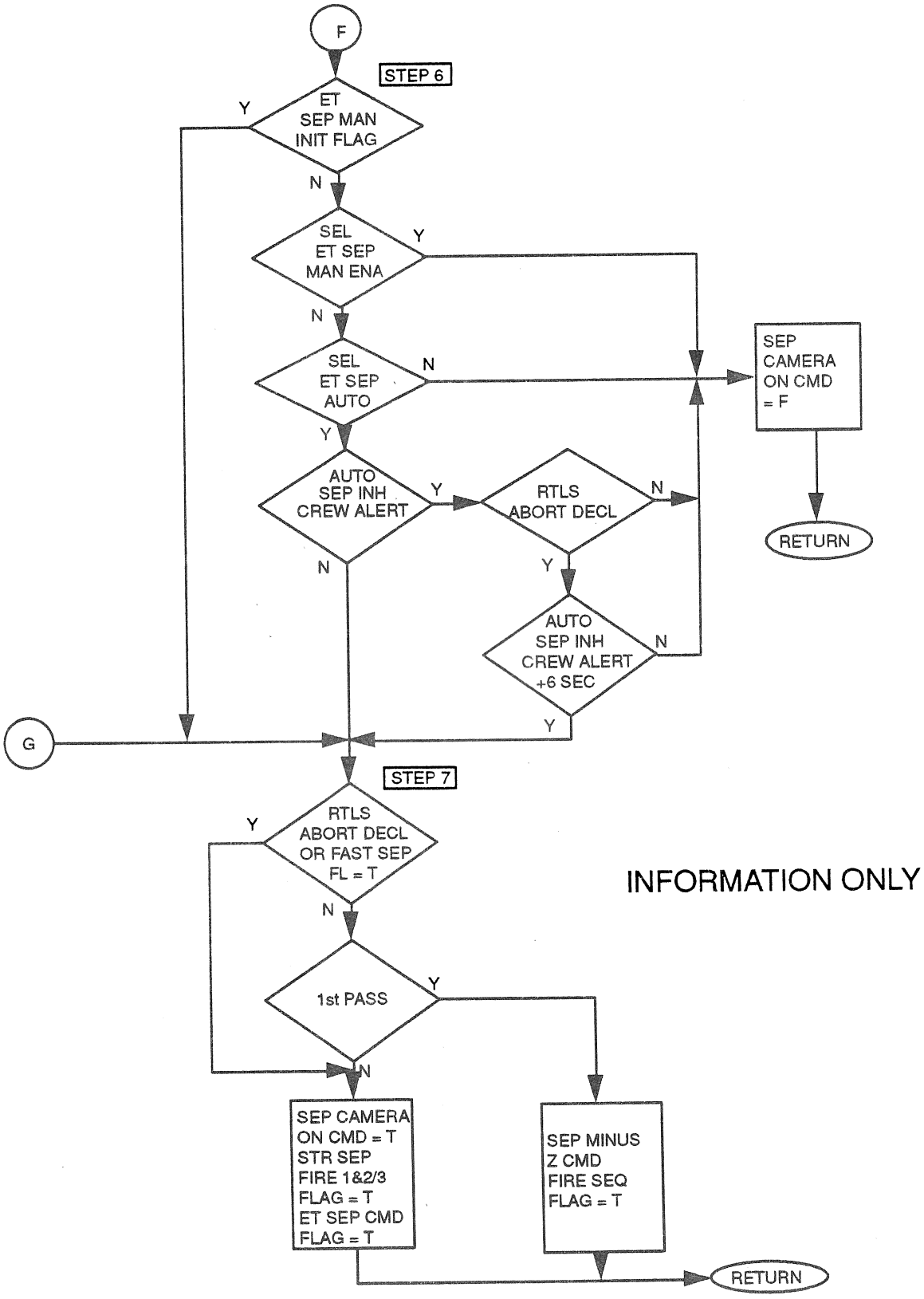

Figure 4.116 External Tank Separation Sequence Logic Flow Diagram (Sheet 7 of 8)

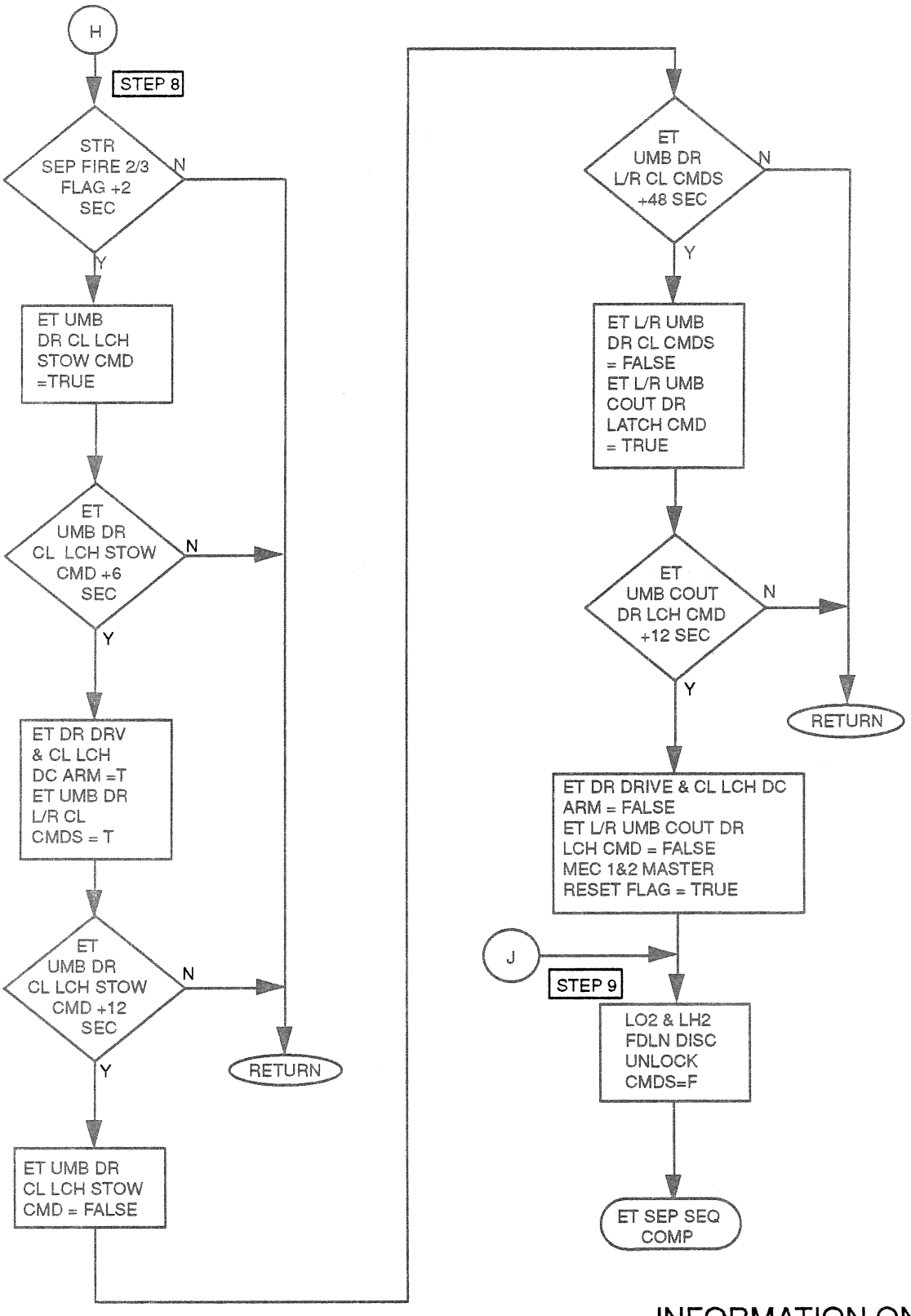

INFORMATION ONLY

Figure 4.116. External Tank Separation Sequence Logic Flow Diagram (Sheet 8 of 8)

THIS PAGE INTENTIONALLY LEFT BLANK

TABLE 4.2.3.4–1. EXTERNAL TANK(ET) SEPARATION SEQUENCER (G4.116) INPUT/OUTPUT FUNCTIONAL PARAMETERS

DBFN: D3B027-F PN: VP707100049P00L INPUT FUNCTIONAL PARAMETERS FOR ET SEP SEQ

FSSR NAME	M/S ID	NOMENCLATURE	SOURCE	UNITS	DATA TYPE	PREC	LAST CRS
ALPHA_N	V90H2246C	NAV DERIVED ANGLE OF ATTACK	A/E ATT PROC	DEG	SPL		89990E
BETA_N	V90H2249C	INERTIAL SIDESLIP ANGLE	A/E ATT PROC	DEG	SPL		
ET_SEP_MAN_INITIATE	V90X8584XA	ET SEP MAN INITIATE FLAG	SSME OPS		BD		89990E
ET_SEP_MAN_INITIATE	V90X8584XB	ET SEP MAN INITIATE FLAG	PW CONT GUID				89990E
MM_CODE_102/MM_102	V90X8158X	MAJOR MODE 102 FLAG	MSC				89990E
							90115
MM_CODE_103/MM_103	V90X8156X	MAJOR MODE 103 FLAG	MSC				89990E
							89599C
MM_CODE_601/MM_601	V90X8194X	MAJOR MODE 601 FLAG	MSC				89990E
P_ORB	V90R5301CA	SELECTED RGA ROLL RATE	SF	DEG/S			90182
Q_ORB/Q	V90R5321CA	SELECTED RGA PITCH RATE	SF	DEG/S			90182
							89990E
R_ORB	V90R5341CA	SELECTED RGA YAW RATE	SF	DEG/S			90182
SEC_ME_FL_CNFM	V90X1721X	2ND SSME FAIL CONFIRM	ASC DAP				89990E
TAL_ABORT_DECLARED	V90X8658X	TAL ABORT DECLARED	MSC				89245D
	V41X1430X	MPS LH2 17IN DISC VLV(PD2)CL IND A	HDWR		BD		89554A
	V41X1434X	MPS LH2 17IN DISC VLV(PD2)CL IND B	HDWR		BD		89554A
	V41X1530X	MPS LO2 17IN DISC VLV(PD1)CL IND A	HDWR		BD		89554A
	V41X1534X	MPS LO2 17IN DISC VLV(PD1)CL IND B	HDWR		BD		89554A
	V41X1891X	MPS LO2 17IN(PD1)LATCH LCKED IND A	HDWR		BD		89554A
							89218B
	V41X1892X	MPS LO2 17IN(PD1)LATCH LCKED IND B	HDWR		BD		89554A
							89218B
	V41X1893X	MPS LO2 17IN(PD1)LTCH UNLCKD IND A	HDWR		BD		89554A
							89218B
	V41X1894X	MPS LO2 17IN(PD1)LTCH UNLCKD IND B	HDWR		BD		89554A
							89218B
	V41X1991X	MPS LH2 17IN(PD2)LATCH LCKED IND A	HDWR		BD		89554A
							89218B
	V41X1992X	MPS LH2 17IN(PD2)LATCH LCKED IND B	HDWR		BD		89554A
							89218B
	V41X1993X	MPS LH2 17IN(PD2)LTCH UNLCKD IND A	HDWR		BD		89554A
							89218B
	V41X1994X	MPS LH2 17IN(PD2)LTCH UNLCKD IND B	HDWR		BD		89554A
							89218B
	V90X7554X	SEL ET SEP AUTO	GN&C SW RM		BD		
	V90X7556X	SEL ET SEP MNL ENABLE	GN&C SW RM		BD		
	V90X7564X	SEL ET SEP INITIATE/WOW-WONG CMD	GN&C SW RM		BD		
	V90X8568X	ALL PREVLVS COMMANDED CLOSE IND	SSME OPS				
	V90X8637XA	RTLS ABORT DECLARED	MSC				89991E
							89599C
	V91X2845X	FA1 INPUT PROM SEG3,10 STATUS(HFE)	FCOS				89991E
							89598A

TABLE 4.2.3.4–1. EXTERNAL TANK(ET) SEPARATION SEQUENCER (G4.116) INPUT/OUTPUT FUNCTIONAL PARAMETERS

DBFN: D3B027-F PN: VP707100049P00L INPUT FUNCTIONAL PARAMETERS FOR ET SEP SEQ

FSSR NAME	M/S ID	NOMENCLATURE	SOURCE	UNITS	DATA TYPE	PREC	LAST CRS
	V91X2846X	FA2 INPUT PROM SEG3,10 STATUS(HFE)	FCOS				89991E 89598A
	V91X2847X	FA3 INPUT PROM SEG3,10 STATUS(HFE)	FCOS				89991E 89598A
	V91X2848X	FA4 INPUT PROM SEG3,10 STATUS(HFE)	FCOS				89598A 59126H
	V93X5341X	BACKUP ET MAN SEP CMD	OVERRIDE DISP		BD		
	V93X5342X	BACKUP ET UMB DR CLOSE CMD	OVERRIDE DISP		BD		
	V93X5538X	GNC GROUND CHECKOUT ENABLE	UI		BD		90023A

TABLE 4.2.3.4–1. EXTERNAL TANK(ET) SEPARATION SEQUENCER (G4.116) INPUT/OUTPUT FUNCTIONAL PARAMETERS

DBFN: D3B027-F PN: VP707100049P00L OUTPUT FUNCTIONAL PARAMETERS FROM ET SEP SEQ

FSSR NAME	M/S ID	NOMENCLATURE	DESTINATION	UNITS	DATA TYPE	PREC	LAST CRS
ATVC_IVD_PWR	V90X8338XB	ATVC SRB IVD PWR ON FLAG	MEC SOP				89456A
ENT_STOW_GIM_POSN	V90X8254XB	ENTRY STOW GIMBAL POS FLAG	MPS TVC CMD SOP		BD		
ET_DFI_PWR	V90X8255X	ET DFI PWR ON FLAG	MEC SOP				89456A
ET_SEP_ARM	V90X8265X	ET/ORB STR SEPN PICS ARM FLAG	MEC SOP				89456A
ET_SEP_CMD	V90X8250X	ET SEPARATION CMD FLAG	TRANS DAP,MPS D/D SEQ, GRTLS DAP,PW RTLS GUID, G/C STEER,MSC,VENT CNTL SEQ, PW CONT GUID,TLM		BD		89990E 90054A
ET_SEP_FIRE1	V90X8244X	ET/ORB STR SEPN FIRE 1 FLAG	MEC SOP				89456A
ET_SEP_FIRE2/3	V90X8241X	ET/ORB STR SEPN FIRE 2/3 FLAG	MEC SOP				89456A
ET_TMBL_ARM	V90X8251X	ET TUMBLE SYS ARM FLAG	MEC SOP				89456A
ET_TMBL_FIRE	V90X8252X	ET TUMBLE SYS FIRE FLAG	MEC SOP				89456A
ET_UMB_RETR_CMD 1	V90X8263X	ET/UMB RETRACT FIRE 1 FLAG	MEC SOP				89456A
ET_UMB_RETR_CMD2/3	V90X8243X	ET/UMB RETRACT FIRE 2/3 FLAG	MEC SOP				89456A
ET_UMB_UNLCH FIRE1	V90X8256X	ET/UMB UNLATCH FIRE 1 FLAG	MEC SOP				89456A
ET_UMB_UNLCH FIRE2/3	V90X8242X	ET/UMB UNLATCH FIRE 2/3 FLAG	MEC SOP				89456A
ET_UMB_UNLCH_ARM	V90X8247X	ET/UMB UNLATCH PICS ARM FLAG	MEC SOP				89456A
FAST_SEP_FLAG	V90X8267X	FAST SEPARATION FLAG	GRTLS DAP,ASC DAP,ABT CNTL SEQ				79643A
M_RSET_USER	V90X8258XA	MEC 1&2 MASTER RESET FLAG	MEC SOP				89456A
SEP_MINUSZ_CMD	V90X8268X	SEPARATION MINUS Z CMD	TRANS DAP				
SRB_MODING_SEP	V90X8330XB	SRB SEP FUNCTION MODING FLAG	ASC DAP				
SRB_PWR_ON	V90X8343X	SRB POWER ON	MEC SOP				89456A
SRB_SEP_CMD_FLAG	V90X8331XB	SRB SEPARATION COMMAND FLAG	MSC,AERO ACT SOP,ASC UPP, ASC DAP,ASC UPP SEQ, RTLS UPP SEQ				
	V41K0075X	MPS SIG COND PWR 1 ON	LCA A1		BD		
	V41K0076X	MPS SIG COND PWR 2 ON	LCA A2		BD		
	V41K0077X	MPS SIG COND PWR 3 ON	LCA A3		BD		
	V41K1413X	MPS LH2 17IN DISC VLV(PD2)OP CMD A	HDWR		BD		89554A
	V41K1414X	MPS LH2 17IN DISC VLV(PD2)OP CMD B	HDWR		BD		89554A
	V41K1415X	MPS LH2 17IN DISC VLV(PD2)OP CMD C	HDWR		BD		89554A
	V41K1416XA	MPS LH2 17IN DISC VLV(PD2)CL CMD A	HDWR				89554A
	V41K1417XA	MPS LH2 17IN DISC VLV(PD2)CL CMD B	HDWR				89554A
	V41K1418XA	MPS LH2 17IN DISC VLV(PD2)CL CMD C	HDWR				89554A
	V41K1447X	MPS LH2 FDLN RLF SOV(PV8)CL CMD A	LCA A3		BD		89554A
	V41K1448X	MPS LH2 FDLN RLF SOV(PV8)CL CMD B	HDWR		BD		89554A
	V41K1450X	MPS LH2 FDLN RLF SOV(PV8)CL CMD C	HDWR		BD		89554A
	V41K1521X	MPS LO2 17IN DISC VLV(PD1)OP CMD A	HDWR		BD		89554A
	V41K1522X	MPS LO2 17IN DISC VLV(PD1)OP CMD B	HDWR		BD		89554A
	V41K1523X	MPS LO2 17IN DISC VLV(PD1)OP CMD C	HDWR		BD		89554A
	V41K1524XB	MPS LO2 17IN DISC VLV(PD1)CL CMD A	HDWR				89554A
	V41K1525XB	MPS LO2 17IN DISC VLV(PD1)CL CMD B	HDWR				89554A
	V41K1526XB	MPS LO2 17IN DISC VLV(PD1)CL CMD C	HDWR				89554A

TABLE 4.2.3.4–1. EXTERNAL TANK(ET) SEPARATION SEQUENCER (G4.116) INPUT/OUTPUT FUNCTIONAL PARAMETERS

DBFN: D3B027-F PN: VP707100049P00L OUTPUT FUNCTIONAL PARAMETERS FROM ET SEP SEQ

FSSR NAME	M/S ID	NOMENCLATURE	DESTINATION	UNITS	DATA TYPE	PREC	LAST CRS
	V41K1547X	MPS LO2 FDLN RLF SOV(PV7)CL CMD A	HDWR		BD		89554A
	V41K1548X	MPS LO2 FDLN RLF SOV(PV7)CL CMD B	LCA A1		BD		89554A
	V41K1550X	MPS LO2 FDLN RLF SOV(PV7)CL CMD C	HDWR		BD		89554A
	V41K1881X	MPS LO2 17IN(PD1) LATCH LOCK CMD A	HDWR				89554A
							89165H
	V41K1882X	MPS LO2 17IN(PD1) LATCH LOCK CMD B	HDWR				89554A
							89165H
	V41K1883X	MPS LO2 17IN(PD1) LATCH LOCK CMD C	HDWR				89554A
							89165H
	V41K1884X	MPS LO2 17IN(PD1)LTCH UNLOCK CMD A	HDWR				89554A
							89165H
	V41K1885X	MPS LO2 17IN(PD1)LTCH UNLOCK CMD B	HDWR				89554A
							89165H
	V41K1886X	MPS LO2 17IN(PD1)LTCH UNLOCK CMD C	HDWR				89554A
							89165H
	V41K1913XB	MPS LH2 RTLS OTBD DV(PV18)OP CMD A	HDWR				89554A
	V41K1914XB	MPS LH2 RTLS OTBD DV(PV18)OP CMD B	HDWR				89554A
	V41K1915XB	MPS LH2 RTLS OTBD DV(PV18)OP CMD C	HDWR				89554A
	V41K1923XB	MPS LH2 RTLS INBD DV(PV17)OP CMD A	HDWR				89554A
	V41K1924XB	MPS LH2 RTLS INBD DV(PV17)OP CMD B	HDWR				89554A
	V41K1925XB	MPS LH2 RTLS INBD DV(PV17)OP CMD C	HDWR				89554A
	V41K1981X	MPS LH2 17IN(PD2) LATCH LOCK CMD A	HDWR				89554A
							89165H
	V41K1982X	MPS LH2 17IN(PD2) LATCH LOCK CMD B	HDWR				89554A
							89165H
	V41K1983X	MPS LH2 17IN(PD2) LATCH LOCK CMD C	HDWR				89554A
							89165H
	V41K1984X	MPS LH2 17IN(PD2)LTCH UNLOCK CMD A	HDWR				89554A
							89165H
	V41K1985X	MPS LH2 17IN(PD2)LTCH UNLOCK CMD B	HDWR				89554A
							89165H
	V41K1986X	MPS LH2 17IN(PD2)LTCH UNLOCK CMD C	HDWR				89554A
							89165H
	V56K0140X	ET UMB DR L-B1/B2 CLOSE CMD	HDWR,TLM		BD		89599C
	V56K0141X	ET DR DVR & CL LCH DC ARM A MCA1/2	HDWR		BD		89599C
	V56K0142X	ET DR DVR & CL LCH DC ARM A MCA1/3	HDWR		BD		89599C
	V56K0143X	ET DR DVR & CL LCH DC ARM A MCA2/3	HDWR		BD		
	V56K1271X	ET DR C/L LCH 1A1/2A2 FA1 STOW CMD	HDWR		BD		
	V56K1272X	ET DR C/L LCH 1A2/2A1 FA1 STOW CMD	HDWR		BD		
	V56K1273X	ET DR C/L LCH 1A1/2B2 FA2 STOW CMD	HDWR		BD		
	V56K1274X	ET DR C/L LCH 1B2/2B1 FA2 STOW CMD	HDWR		BD		
	V56K1275X	ET DR C/L LCH 1A1/2A2 FA1 LOCK CMD	HDWR		BD		
	V56K1276X	ET DR C/L LCH 1A2/2B1 FA1 LOCK CMD	HDWR		BD		

TABLE 4.2.3.4–1. EXTERNAL TANK(ET) SEPARATION SEQUENCER (G4.116) INPUT/OUTPUT FUNCTIONAL PARAMETERS

DBFN: D3B027-F PN: VP707100049P00L OUTPUT FUNCTIONAL PARAMETERS FROM ET SEP SEQ

FSSR NAME	M/S ID	NOMENCLATURE	DESTINATION	UNITS	DATA TYPE	PREC	LAST CRS
	V56K1277X	ET DR C/L LCH 1A1/2B2 FA2 LOCK CMD	HDWR		BD		
	V56K1278X	ET DR C/L LCH 1B2/2A1 FA2 LOCK CMD	HDWR		BD		
	V56K1371X	ET DR C/L LCH 1B1/2A2 FA4 STOW CMD	HDWR		BD		
	V56K1372X	ET DR C/L LCH 1A2/2B1 FA4 STOW CMD	HDWR		BD		
	V56K1373X	ET DR C/L LCH 1B1/2B2 FA3 STOW CMD	HDWR		BD		
	V56K1374X	ET DR C/L LCH 1B2/2A1 FA3 STOW CMD	HDWR		BD		
	V56K1375X	ET DR C/L LCH 1B1/2A2 FA4 LOCK CMD	HDWR		BD		
	V56K1376X	ET DR C/L LCH 1A2/2A1 FA4 LOCK CMD	HDWR		BD		
	V56K1377X	ET DR C/L LCH 1B1/2B2 FA3 LOCK CMD	HDWR		BD		
	V56K1378X	ET DR C/L LCH 1B2/2B1 FA3 LOCK CMD	HDWR		BD		
	V56K3111X	ET UMB DR L-B2/R-B1 CLOSE CMD	HDWR		BD		
	V56K3112X	ET UMB DR R-B2 CLOSE CMD	HDWR		BD		
	V56K3531X	ET L UMB COUT DOOR LATCH FA1 CMD	HDWR		BD		
	V56K3532X	ET R UMB COUT DOOR LATCH FA1 CMD	HDWR		BD		
	V56K3533X	ET L UMB COUT DOOR LATCH FA4 CMD	HDWR		BD		
	V56K3534X	ET R UMB COUT DOOR LATCH FA4 CMD	HDWR		BD		
	V56K4121X	ET UMB DR R-B1/B2 CLOSE CMD	HDWR		BD		
	V56K4122X	ET UMB DR L-B1 CLOSE CMD	HDWR		BD		
	V56K4531X	ET L UMB COUT DOOR LATCH FA3 CMD	HDWR		BD		
	V56K4532X	ET R UMB COUT DOOR LATCH FA3 CMD	HDWR		BD		
	V56K4533X	ET L UMB COUT DOOR LATCH FA2 CMD	HDWR		BD		
	V56K4534X	ET R UMB COUT DOOR LATCH FA2 CMD	HDWR		BD		
	V56K9000XA	ET/ORB SEP CAMERAS ON CMD	HDWR				
	V76K6941XB	L SRB BUS C RPC A ON CMD	HDWR				79935H
	V76K6942XB	R SRB BUS C RPC A ON CMD	HDWR				79935H
	V76K6945XB	L SRB BUS C RPC C ON CMD	HDWR				
	V76K6946XB	R SRB BUS C RPC C ON CMD	HDWR				
	V90X8253X	MPS DUMP GIMBAL POS FLAG	MPS TVC CMD SOP				
	V90X8259X	ET AUTO SEP INHIBIT CREW ALERT	XXXXXX TRAJ DISP,GAX,TLM		BD		
	V90X8637XB	RTLS ABORT DECLARED	XXXXXX TRAJ DIP,MPS DUMP, SSME OPS,ABT CNTL SEQ,MSC, MPS TVC CMD SOP				89991E

TABLE 4.2.3.4–2. EXTERNAL TANK(ET) SEPARATION SEQUENCER (G4.116) I–LOADS

DBFN:0484

FSSR NAME	MSID	ENG UNIT	DT	PR	D	S	PR	FCTN	CAT
FDLN_DISC_LATCH_INSTALLED_FLAG	V99U9951C	ND	D		L	C	G4.116		MES2

TABLE 4.2.3.4–3. EXTERNAL TANK(ET) SEPARATION SEQUENCER (G4.116) K–LOADS

DBFN:0558

FSSR NAME DESCRIPTION	MSID	MC KLOAD VALUE		ENG UNIT	DT	PR	S	PR FCTN	LAST CR EQTN MSID
NOM_BODY_NEG_PITCH_RATE_LMT	V97U9763C	-7.0	E-01	DEG/SEC	F	S	C	G4.116	79928
NOM_BODY_NEG_ROLL_RATE_LMT	V97U9765C	-7.0	E-01	DEG/SEC	F	S	C	G4.116	79928
NOM_BODY_NEG_YAW_RATE_LMT	V97U9767C	-7.0	E-01	DEG/SEC	F	S	C	G4.116	79928
NOM_BODY_PLUS_PITCH_RATE_LMT	V97U9762C	+7.0	E-01	DEG/SEC	F	S	C	G4.116	79928
NOM_BODY_PLUS_ROLL_RATE_LMT	V97U9764C	+7.0	E-01	DEG/SEC	F	S	C	G4.116	79928
NOM_BODY_PLUS_YAW_RATE_LMT	V97U9766C	+7.0	E-01	DEG/SEC	F	S	C	G4.116	79928
RTLS_BODY_NEG_PITCH_RATE_LMT	V97U9769C	-5.0	E+00	DEG/SEC	F	S	C	G4.116	29597A
RTLS_BODY_NEG_ROLL_RATE_LMT	V97U9771C	-5.0	E+00	DEG/SEC	F	S	C	G4.116	29597A
RTLS_BODY_NEG_YAW_RATE_LMT	V97U9773C	-5.0	E-01	DEG/SEC	F	S	C	G4.116	29597A
RTLS_BODY_PLUS_PITCH_RATE_LMT	V97U9768C	+2.5	E-01	DEG/SEC	F	S	C	G4.116	29597A
RTLS_BODY_PLUS_ROLL_RATE_LMT	V97U9770C	+5.0	E+00	DEG/SEC	F	S	C	G4.116	29597A
RTLS_BODY_PLUS_YAW_RATE_LMT	V97U9772C	+5.0	E-01	DEG/SEC	F	S	C	G4.116	29597A
RTLS_NEG_ANGLE_OF_ATTK_LMT	V97U9775C	-8.90	E+01	DEG	F	S	C	G4.116	29597A
RTLS_NEG_SIDESLIP_ANGLE_LMT	V97U9777C	-2.0	E+00	DEG	F	S	C	G4.116	29597A
RTLS_PLUS_ANGLE_OF_ATTK_LMT	V97U9774C	-2.0	E+00	DEG	F	S	C	G4.116	29597A
RTLS_PLUS_SIDESLIP_ANGLE_LMT	V97U9776C	+2.0	E+00	DEG	F	S	C	G4.116	29597A

TABLE 4.2.3.4-4. EXTERNAL TANK(ET) SEPARATION SEQUENCER (G4.116) CONSTANTS

DBFN:0558

FSSR NAME DESCRIPTION	MSID	MC	CONSTANT VALUE	ENG UNIT	DT	PR	S	PR FCTN	LAST CR
NO REQUIREMENTS									

4.2.4 MPS Dump Sequence (4.70)

4.2.4.1 Introduction

The MPS dump sequence performs the function of expelling the LO_2 and LH_2 contained in the orbiter and SSME LO_2 and LH_2 main feed lines.

For the nominal mission, this sequence commences automatically at the initiation of OMS-1 burn. The crew, however, has the capability to manually initiate, through the GPC, and control dump intervals for both the LO_2 and LH_2 propellants after MECO confirmed + 20 seconds. If the sequence is activated manually during a transatlantic abort landing (TAL) mode, the LH_2 dump time I-load is set to 30 seconds.

For RTLS, the MPS dump sequence will automatically initiate and control LO_2 and LH_2 line propellant dump after the transition to Major Mode 602. During a TAL abort mode, the LO_2 and LH_2 dump will be terminated after expiration of the TAL abort LH_2 30-second dump time.

4.2.4.2 Overview

The MPS dump sequence is initiated by the GNC moding, sequencing, and control (MSC) function. For non-RTLS modes, the sequence is scheduled when MECO confirmed + 20 seconds has occurred. In an RTLS abort mode, the sequence is initiated by the transition to Major Mode 602.

The OMS-1 burn is the normal cue to start actual MPS dumping. This burn produces the required ullage for the predefined dump time intervals needed to expel the residual LH_2 and LO_2 in the engine supply lines. Manual activation of this sequence may occur after MECO confirmed plus a 20-second time interval required for engine cool-down prior to actual LO_2 dump.

Regardless of sequence entry, i.e., automatically (nominal or RTLS) or manually, the following seven subfunctions occur:

1. Start LO_2 dump. The automatic LO_2 dump start is a GPC command initiated at OMS insertion burn or RTLS mode activation.

   Manual LO_2 dump start may be initiated by placing the MPS propellant dump sequence switch on the D&C panel, R2, to the START position. In either the automatic or manual position, the GPC command requests the engine controllers to open the SSME LO_2 valves, open the LO_2 manifold repressurization valves, and open the LO_2 prevalves. During an RTLS abort, the LO_2 prevalves and SSME LO_2 valves are opened at MM 602 transition. During these aborts, the LO_2 manifold is not pressurized and LO_2 is allowed to boil out. The LO_2 inboard and outboard fill/ drain valves are opened at a dynamic pressure of 20 lb per ft^2.

2. Stop LO_2 dump. The LO_2 dump stop command is initiated by either time or panel switch position. For the non-RTLS automatic dump sequence, the expiration of a preset time delay initiates dump stop. This time delay will be I-loadable.

   The RTLS LO_2 and LH_2 dump will be terminated at a ground relative velocity of 3,800 ft/sec. At this time, the LO_2 outboard fill/drain valves and LO_2 prevalves are closed and the LO_2 manifold is pressurized.

   During a TAL abort, the LO_2 and LH_2 dump will be terminated after expiration of the TAL abort 30-second dump time.

The manual initiation of the dump stop is via the MPS propellant dump sequence switch on D&C Panel R2. Placing the switch in the STOP position will initiate the LO_2 dump stop command 32 seconds after expiration of LH_2 dump timer. In the automatic non-RTLS mode or manual mode, the GPC dump stop command closes the LO_2 manifold repressurization valves, allows 20 seconds for manifold pressure to decay, and terminates the LO_2 prevalve open commands, leaving the LO_2 prevalves open. During a TAL abort, the 20-second pressure-decay timer is bypassed.

3. Start LH_2 dump. The non-RTLS LH_2 dump starts concurrently with the LO_2 at OMS insertion burn or at manual mode LO_2 dump initiation. In the manual mode, the dump is initiated by the MPS propellant dump sequence switch on Panel R2. The LH_2 dump consists of opening the LH_2 manifold repressurization valves and the LH_2 inboard and outboard fill and drain valves. LH_2 is forced out of the LH_2 inboard and outboard fill and drain valves by the helium pressure in the manifold. At a pre-established time, the LH_2 inboard fill and drain valve is closed, and the LH_2 topping valve and prevalves are opened. LH_2 is forced out of the LH_2 outboard fill and drain valve via the SSME bleed valves, prevalves, and topping valve by the helium pressure in the manifold.

   The LH_2 may be vented through the RTLS dump valves and is controlled by the MPS propellant dump backup LH_2 valve switch on Panel R2. This causes the LH_2 to be vented overboard through an opening on the left side between the wing and OMS pod.

   The LH_2 dump start for the RTLS mode commences concurrently with the LO_2 dump, automatically at MM 602 transition. The LH_2 dump consists of opening RTLS dump valves and RTLS manifold repressurization valves. This causes the LH_2 to be dumped overboard through an opening on the left side between the wing and OMS pod. The LH_2 RTLS dump occurs while the LO_2 is being dumped through the SSME's and the LO_2 inboard and outboard fill/drain valves. At MM 602 plus 80 seconds, the LH_2 RTLS manifold is depressurized. The LH_2 topping valve and inboard and outboard fill/drain valves are opened.

4. Stop LH_2 dump. For the automatic non-RTLS mode, the LH_2 dump command is initiated by the GPC at a preset time delay from the start of LH_2 dump. The manual MPS propellant dump backup LH_2 valve switch on D&C Panel R2 terminates the RTLS inboard and outboard dump valve commands. The GPC command closes the LH_2 manifold repressurization valves, and allows 32 seconds for LO_2 to vent, then issues the LH_2 outboard fill/drain valve close command. During a TAL abort, the 32-second LH_2 vent timer is bypassed. The GPC then commands the LH_2 prevalves de-energized, leaving the LH_2 prevalves open.

   The LH_2 RTLS dump stop is automatically initiated upon reaching a ground relative velocity of 3,800 ft/sec. At this velocity, the LH_2 outboard fill/drain valve is closed and the LH_2 manifold is pressurized.

5. Gimbal SSME's. The SSME's are GPC commanded to the stow position at the conclusion of the MPS propellant dump sequence. In the RTLS mode, the SSME's are left in the stow position throughout the sequence.

6. MPS deactivation. The MPS deactivation is initiated after the SSME nozzles have been commanded to the stow position via setting of the entry stow gimbal position flag.

7. Vacuum inerting and repressurization. The vacuum inerting is manually initiated and manually controlled requiring no GPC commands. The vacuum inerting is initiated anytime

post-MPS dump to vent the MPS manifolds and feed lines. This allows any residual H2 and O2 gases to disperse in space. The MPS manifolds and feed lines are automatically repressurized, prior to entry, to avoid ingress of contaminants.

8. During an RTLS contingency abort (invoked by taking the dump sequence switch to the START position), the LO_2 dump is inhibited and a 20 second unpressurized LH_2 venting is performed via the LH_2 RTLS dump valves and the LH_2 inboard and outboard fill/drain valves.

4.2.4.3 Detailed Requirements

Step 1. This step controls initial branching within the MPS dump sequence. On first entry, set outputs (4) through (7) true.

Monitor the following signal:

(a) RTLS ABORT DECLARED V90X8637X

If (a) is true, proceed to Step 2.

If (a) is false, monitor signals (f) and (g) below.

If (g) is false and (f) is true, set outputs (9) through (14) below true and monitor signals (b) and (h) below.

If (f) is false and (g) is true, set outputs (9) through (14) below false and monitor signals (b) and (h) below.

If (f) and (g) are false, monitor signals (b) and (h) below.

(b) NOM LO_2 DUMP COMPLETE FLAG (INTERNAL)

If (b) is true, set outputs (1) and (2) false; and if (h) is true proceed to Step 6.

If (b) is true, set outputs (1) and (2) false; and if (h) is false, repeat the logic in Step 1 until a 20-second time delay elapses. This 20-second time delay is to allow the LO_2 manifold to bleed down. Upon expiration of the time delay, proceed to Step 6. During a TAL abort, the 20-second LO_2 manifold bleed-down time is bypassed.

If (b) is false, monitor signals (c), (d), and (e) below:

(c) SEL MPS PRPLT DUMP SEQUENCE STOP V90X7567X
(d) SEL MPS PRPLT DUMP SEQUENCE START V90X7559X
(e) MPS LO_2 DUMP START V90X8301X
(f) SEL MPS PRPLT DUMP BKUP LH_2 VLV OPEN V90X7557X
(g) SEL MPS PRPLT DUMP BKUP LH_2 VLV CLOSE V90X7558X
(h) TAL ABORT DECLARED V90X8658X

If (c) is true and (e) has ever been set true, set output (3) true and return to Step 1.

If (c) is true and (e) has never been set true, the crew has elected to inhibit the sequence. The logic in Step 1 is repeated.

If (c) is false and (d) is false, the GPC mode has been selected. Proceed to Step 3.

If (d) is true and (h) is false, proceed to Step 4.

If (d) and (h) are both true, then on first pass, set (8) below to 30 seconds and return to Step 1. On subsequent passes, proceed to Step 4.

(1)	MPS LO_2 MANF REPRESS NO. 1 OPEN CMD	V41K1535X
(2)	MPS LO_2 MANF REPRESS NO. 2 OPEN CMD	V41K1537X
(3)	NOM LO_2 DUMP COMPLETE FLAG	(INTERNAL)
(4)	MPS E1 HE INTCON OUT/OPEN CMDS A	V41K1168X
(5)	MPS E2 HE INTCON OUT/OPEN CMDS A	V41K1268X
(6)	MPS E3 HE INTCON OUT/OPEN CMDS A	V41K1368X
(7)	MPS PNEU CROSSOVER NO. 2 OPEN CMD	V41K1613X
(8)	LH_2_DUMP_TIME	V97U9779C
(9)	MPS LH_2 RTLS INBD D/V OPEN CMD A	V41K1923X
(10)	MPS LH_2 RTLS INBD D/V OPEN CMD B	V41K1924X
(11)	MPS LH_2 RTLS INBD D/V OPEN CMD C	V41K1925X
(12)	MPS LH_2 RTLS OTBD D/V OPEN CMD A	V41K1913X
(13)	MPS LH_2 RTLS OTBD D/V OPEN CMD B	V41K1914X
(14)	MPS LH_2 RTLS OTBD D/V OPEN CMD C	V41K1915X

Step 2. This step controls entry into the RTLS abort LO_2 and LH_2 dump mode. GPC or manual, control logic is bypassed.

On the first pass through the logic in this step, set outputs (3) and (4) false and set outputs (5) through (16) true, start timer (b), and then monitor signal (a). On subsequent passes through the logic monitor signal (a).

(a)	GN&C DYNAMIC PRESSURE	V95P3011C
(b)	LH_2_FILL_DRAIN_VALVE_OP_TIME_DLY (80 seconds)	(INTERNAL)
(c)	GND REL VEL MAGNITUDE IN M50 SYS	V95L0151C
(d)	SEL MPS PRPLT DUMP SEQUENCE START	V90X7559X
(e)	LH2_CONTINGENCY_DUMP_TIME (20 seconds)	(INTERNAL)

If (a) $\geq$ 20 lb/ft^2, and (d) is false on first pass, set outputs (1) and (2) false, set outputs (17) through (19) true, then proceed to monitor (b) and (d); otherwise monitor (b) and (d).

If (b) seconds have elapsed since starting timer (b) or (d) is true, on first pass, set outputs (11) through (16) false, set outputs (20) through (23) true, then monitor signal (c); otherwise monitor signal (c).

If (c) $\leq$ 4,500 ft/sec, on first pass, proceed to Step 12A; otherwise monitor (c), (d) and (e).

If ((c) $\leq$ 3,800 ft/sec and (d) is false) or ((d) is true and (e) seconds have elapsed since starting timer (e)), set outputs (5) through (10), (17), and (20) false; set outputs (2), (4), and (24) through (27) true; and proceed to Step 6. Otherwise monitor (d).

If (d) is true, proceed to Step 11. If (d) is false, proceed to Step 4.

(1)	MPS LO_2 INBD FILL VALVE CLOSE CMD	V41K1512X
(2)	MPS LO_2 OTBD FILL VALVE CLOSE CMD	V41K1515X
(3)	MPS LH_2 INBD FILL VALVE CLOSE CMD	V41K1412X

(4)	MPS LH_2 OTBD FILL VALVE CLOSE CMD	V41K1393X
(5)	MPS LH_2 RTLS INBD D/V OPEN CMD A	V41K1923X
(6)	MPS LH_2 RTLS INBD D/V OPEN CMD B	V41K1924X
(7)	MPS LH_2 RTLS INBD D/V OPEN CMD C	V41K1925X
(8)	MPS LH_2 RTLS OTBD D/V OPEN CMD A	V41K1913X
(9)	MPS LH_2 RTLS OTBD D/V OPEN CMD B	V41K1914X
(10)	MPS LH_2 RTLS OTBD D/V OPEN CMD C	V41K1915X
(11)	LH_2 RTLS MANF REPRESS 1 OPEN CMD A	V41K1905X
(12)	LH_2 RTLS MANF REPRESS 2 OPEN CMD A	V41K1906X
(13)	LH_2 RTLS MANF REPRESS 1 OPEN CMD B	V41K1907X
(14)	LH_2 RTLS MANF REPRESS 2 OPEN CMD B	V41K1908X
(15)	LH_2 RTLS MANF REPRESS 1 OPEN CMD C	V41K1909X
(16)	LH_2 RTLS MANF REPRESS 2 OPEN CMD C	V41K1910X
(17)	MPS LO_2 OTBD FILL VALVE OPEN CMD	V41K1518X
(18)	MPS LO_2 INBD FILL VALVE OPEN CMD A	V41K1501X
(19)	MPS LO_2 INBD FILL VALVE OPEN CMD B	V41K1502X
(20)	MPS LH_2 OUTBD FILL VALVE OPEN CMD	V41K1391X
(21)	MPS LH_2 INBD FILL VALVE OPEN CMD A	V41K1401X
(22)	MPS LH_2 INBD FILL VALVE OPEN CMD B	V41K1402X
(23)	MPS LH_2 TOPPING VALVE OPEN CMD	V41K1411X
(24)	MPS LH_2 MANF REPRESS NO. 1 OPEN CMD	V41K1435X
(25)	MPS LH_2 MANF REPRESS NO. 2 OPEN CMD	V41K1437X
(26)	MPS LO_2 MANF REPRESS NO. 1 OPEN CMD	V41K1535X
(27)	MPS LO_2 MANF REPRESS NO. 2 OPEN CMD	V41K1537X

Step 3. This step monitors for the start of the OMS burn. The OMS burn provides the propellant settling for the nominal MPS dump. The automatic LO_2 dump continues for LO_2 DUMP TIME seconds (K-load). This time interval controls the LO_2 dump duration as long as the cockpit switch remains in the GPC position. If the switch is placed in the START position, the LO_2 dump continues until the switch is placed in the STOP position, per Step 1. If the LO_2 dump is initiated in the START position, but the switch is moved to the GPC position before LO_2 DUMP TIME seconds have elapsed, then the LO_2 dump will be terminated at the expiration of the LO_2 DUMP TIME.

Monitor the following signal:

(a)	OMS IGNITION COMMAND FLAG	V90X8190X

If (a) is false, monitor signals (b) and (c) listed below:

(b)	OMS 1 BURN FLAG	(INTERNAL)
(c)	LO_2_DUMP_TIME	V97U9778C

If (b) is false, return to Step 1.

If (b) is true and (c) seconds have not elapsed since output (3) below became true, proceed to Step 4.

If (b) is true and (c) seconds have elapsed since output (3) below became true, set output (2) true and return to Step 1.

(1)	OMS 1 BURN FLAG	(INTERNAL)

(2)	NOM LO_2 DUMP COMPLETE FLAG	(INTERNAL)
(3)	MPS LO_2 DUMP START	V90X8301X

Step 4. This step opens the LO_2 prevalves for the three main engines and issues the LO_2 dump start command to the engine controllers.

Issue the following outputs (1) through (12), then set (13) true and proceed to Step 5.

(1)	MPS E-1 LO_2 PREVALVE OPEN CMD A	V41K1136X
(2)	MPS E-1 LO_2 PREVALVE OPEN CMD B	V41K1137X
(3)	MPS E-1 LO_2 PREVALVE OPEN CMD C	V41K1138X
(4)	MPS E-1 LO_2 PREVALVE OPEN CMD D	V41K1143X
(5)	MPS E-2 LO_2 PREVALVE OPEN CMD A	V41K1236X
(6)	MPS E-2 LO_2 PREVALVE OPEN CMD B	V41K1237X
(7)	MPS E-2 LO_2 PREVALVE OPEN CMD C	V41K1238X
(8)	MPS E-2 LO_2 PREVALVE OPEN CMD D	V41K1243X
(9)	MPS E-3 LO_2 PREVALVE OPEN CMD A	V41K1336X
(10)	MPS E-3 LO_2 PREVALVE OPEN CMD B	V41K1337X
(11)	MPS E-3 LO_2 PREVALVE OPEN CMD C	V41K1338X
(12)	MPS E-3 LO_2 PREVALVE OPEN CMD D	V41K1343X
(13)	MPS LO_2 DUMP START	V90X8301X

Step 5. This step turns on the LO_2 manifold helium pressure for the LO_2 dump if an RTLS abort has not been requested, and the sequence proceeds to the LH_2 dump start logic. If an RTLS abort has been requested, the sequence proceeds to the LH_2 prevalve control logic.

(a)	RTLS ABORT DECLARED	V90X8637X

If (a) is true, proceed to Step 11.

If (a) is false, set outputs (1) and (2) below true and proceed to Step 8.

(1)	MPS-LO_2 MANF REPRESS NO. 1 OPEN CMD	V41K1535X
(2)	MPS-LO_2 MANF REPRESS NO. 2 OPEN CMD	V41K1537X

Step 6. This step controls the termination of the LO_2 dump.

Set outputs (1) through (13), listed below, false and proceed to Step 7.

(1)	MPS E-1 LO_2 PREVALVE OPEN CMD A	V41K1136X
(2)	MPS E-1 LO_2 PREVALVE OPEN CMD B	V41K1137X
(3)	MPS E-1 LO_2 PREVALVE OPEN CMD C	V41K1138X
(4)	MPS E-1 LO_2 PREVALVE OPEN CMD D	V41K1143X
(5)	MPS E-2 LO_2 PREVALVE OPEN CMD A	V41K1236X
(6)	MPS E-2 LO_2 PREVALVE OPEN CMD B	V41K1237X
(7)	MPS E-2 LO_2 PREVALVE OPEN CMD C	V41K1338X
(8)	MPS E-2 LO_2 PREVALVE OPEN CMD D	V41K1243X
(9)	MPS E-3 LO_2 PREVALVE OPEN CMD A	V41K1336X
(10)	MPS E-3 LO_2 PREVALVE OPEN CMD B	V41K1337X
(11)	MPS E-3 LO_2 PREVALVE OPEN CMD C	V41K1338X
(12)	MPS E-3 LO_2 PREVALVE OPEN CMD D	V41K1343X

(13) MPS LO_2 DUMP START V90X8301X

Step 7. This step controls termination of the RTLS LH_2 dump mode and closes the LO_2 prevalves during an RTLS abort. If RTLS is not declared, the sequence proceeds to monitoring of the LH_2 dump timer logic.

Monitor the following signal:

(a) RTLS ABORT DECLARED V90X8637X

If (a) is false, proceed to Step 8.

If (a) is true, on first pass, set outputs (1) through (12) true and monitor for a 2-second time delay to elapse since setting outputs (1) through (12) true.

If the 2-second time delay has not elapsed, proceed to Step 12a.

If the 2-second time delay has elapsed, set outputs (1) through (12) false and proceed to Step 12.

(1) MPS E-1 LO_2 PREVALVE CLOSE CMD A V41K1139X
(2) MPS E-1 LO_2 PREVALVE CLOSE CMD B V41K1140X
(3) MPS E-1 LO_2 PREVALVE CLOSE CMD C V41K1141X
(4) MPS E-1 LO_2 PREVALVE CLOSE CMD D V41K1142X
(5) MPS E-2 LO_2 PREVALVE CLOSE CMD A V41K1239X
(6) MPS E-2 LO_2 PREVALVE CLOSE CMD B V41K1240X
(7) MPS E-2 LO_2 PREVALVE CLOSE CMD C V41K1241X
(8) MPS E-2 LO_2 PREVALVE CLOSE CMD D V41K1242X
(9) MPS E-3 LO_2 PREVALVE CLOSE CMD A V41K1339X
(10) MPS E-3 LO_2 PREVALVE CLOSE CMD B V41K1340X
(11) MPS E-3 LO_2 PREVALVE CLOSE CMD C V41K1341X
(12) MPS E-3 LO_2 PREVALVE CLOSE CMD D V41K1342X

Step 8. This step controls the initiation and termination of the LH_2 dump. The nominal time interval for the dump, LH_2 dump time (K-load). This step pressurizes the LH_2 feed lines and opens the LH_2 inboard and outboard fill and drain valves.

Monitor the following:

(a) LH_2_DUMP_TIME V97U9779C

If (a) seconds have not elapsed since output (1) below was first set true, on first pass set outputs (7) and (8) false, set outputs (1) through (6) true, and return to Step 1.

If (a) seconds have elapsed since output (1) below was first set true, set outputs (2) and (3) false and proceed to Step 10.

If (a) seconds have not elapsed since output (1) below was first set true, proceed to Step 9.

(1) MPS-LH_2 FILL/DRAIN DUMP START (INTERNAL)
(2) MPS-LH_2 MANF REPRESS NO. 1 OPEN CMD V41K1435X

(3)	MPS-LH_2 MANF REPRESS NO. 2 OPEN CMD	V41K1437X
(4)	MPS-LH_2 OTBD FILL VALVE OPEN CMD	V41K1391X
(5)	MPS-LH_2 INBD FILL VALVE OPEN CMD A	V41K1401X
(6)	MPS-LH_2 INBD FILL VALVE OPEN CMD B	V41K1402X
(7)	MPS-LH_2 OTBD FILL VALVE CLOSE CMD	V41K1393X
(8)	MPS-LH_2 INBD FILL VALVE CLOSE CMD	V41K1412X

Step 9. This step allows 6 seconds for the LH_2 to be dumped through the LH_2 inboard and outboard fill and drain valves. After 6 seconds, the LH_2 inboard fill and drain valve is closed and the LH_2 topping valve is opened. LH_2 continues to be dumped through the LH_2 outboard fill and drain valve via the LH_2 topping valve and SSME bleed valves.

Monitor for a 6-second time delay to elapse since output (5) below was set true.

If the 6-second time delay has not elapsed, return to Step 1.

If the 6-second time delay has elapsed, set outputs (1) and (2) false, set outputs (3) and (4) true, and proceed to Step 11.

(1)	MPS-LH_2 INBD FILL VALVE OPEN CMD A	V41K1401X
(2)	MPS-LH_2 INBD FILL VALVE OPEN CMD B	V41K1402X
(3)	MPS-LH_2 INBD FILL VALVE CLOSE CMD	V41K1412X
(4)	MPS-LH_2 TOPPING VALVE OPEN CMD	V41K1411X
(5)	MPS-LH_2 FILL/DRAIN DUMP START	(INTERNAL)

Step 10. This step allows 32 seconds for the LH_2 feed line to become depressurized and LH_2 to vent after the LH_2 dump time has elapsed. The LH_2 topping valve and outboard fill and drain valve are closed after expiration of the 32-second timer. During a TAL abort, the 32-second LH_2 vent timer is bypassed.

If (a) below is false and if 32 seconds have not elapsed since the LH_2 DUMP TIME time delay in Step 8 elapsed, return to Step 1.

If (a) below is true or if 32 seconds have elapsed since the LH_2 DUMP TIME time delay in Step 8 elapsed and if first pass, set (4) below true and return to Step 1; if not first pass, set outputs (1) and (2) below false, set outputs (3) below true, and proceed to Step 12.

(a)	TAL ABORT DECLARED	V90X8658X
	(1) MPS-LH_2 OUTBD FILL VALVE OPEN CMD	V41K1391X
	(2) MPS-LH_2 TOPPING VLV OPEN CMD	V41K1411X
	(3) MPS-LH_2 OUTBD FILL VALVE CLOSE CMD	V41K1393X
	(4) NOM LO_2 DUMP COMPLETE FLAG	(INTERNAL)

Step 11. This step opens the LH_2 prevalves for the three main engines.

Issue the following outputs (1) through (9), then return to Step 1.

(1)	MPS E-1 LH_2 PREVALVE OPEN CMD A	V41K1119X
(2)	MPS E-1 LH_2 PREVALVE OPEN CMD B	V41K1120X
(3)	MPS E-1 LH_2 PREVALVE OPEN CMD C	V41K1121X
(4)	MPS E-2 LH_2 PREVALVE OPEN CMD A	V41K1219X
(5)	MPS E-2 LH_2 PREVALVE OPEN CMD B	V41K1220X

(6)	MPS E-2 LH_2 PREVALVE OPEN CMD C	V41K1221X
(7)	MPS E-3 LH_2 PREVALVE OPEN CMD A	V41K1319X
(8)	MPS E-3 LH_2 PREVALVE OPEN CMD B	V41K1320X
(9)	MPS E-3 LH_2 PREVALVE OPEN CMD C	V41K1321X

Step 12. This step de-energizes a portion of the MPS.

Set outputs (1) and (51) true, set outputs (2) through (18), (20), and (22) through (50) false. Ten seconds later, set outputs (19) and (21) false and proceed to Step 12A. If 10 seconds have not elapsed since output (1) set true, proceed to Step 12A.

(1)	ENTRY STOW GIMBAL POS FLAG	V90X8254X
(2)	MPS E-1 LH_2 PREVALVE OPEN CMD A	V41K1119X
(3)	MPS E-1 LH_2 PREVALVE OPEN CMD B	V41K1120X
(4)	MPS E-1 LH_2 PREVALVE OPEN CMD C	V41K1121X
(5)	MPS E-2 LH_2 PREVALVE OPEN CMD A	V41K1219X
(6)	MPS E-2 LH_2 PREVALVE OPEN CMD B	V41K1220X
(7)	MPS E-2 LH_2 PREVALVE OPEN CMD C	V41K1221X
(8)	MPS E-3 LH_2 PREVALVE OPEN CMD A	V41K1319X
(9)	MPS E-3 LH_2 PREVALVE OPEN CMD B	V41K1320X
(10)	MPS E-3 LH_2 PREVALVE OPEN CMD C	V41K1321X
(11)	MPS LO_2 FEED DISC VALVE CL CMD A	V41K1524X
(12)	MPS LO_2 FEED DISC VALVE CL CMD B	V41K1525X
(13)	MPS LO_2 FEED DISC VALVE CL CMD C	V41K1526X
(14)	MPS LH_2 FEED DISC VALVE CL CMD A	V41K1416X
(15)	MPS LH_2 FEED DISC VALVE CL CMD B	V41K1417X
(16)	MPS LH_2 FEED DISC VALVE CL CMD C	V41K1418X
(17)	MPS LH_2 RECIRC DISC VLV CLOSE CMD	V41K1422X
(18)	MPS LO_2 INBD FILL VALVE CLOSE CMD	V41K1512X
(19)	MPS LO_2 OTBD FILL VALVE CLOSE CMD	V41K1515X
(20)	MPS LH_2 INBD FILL VALVE CLOSE CMD	V41K1412X
(21)	MPS LH_2 OTBD FILL VALVE CLOSE CMD	V41K1393X
(22)	REPLACE LH_2 ULLAGE PRESS 1 XDCR	V41K1700X
(23)	REPLACE LH_2 ULLAGE PRESS 2 XDCR	V41K1701X
(24)	REPLACE LH_2 ULLAGE PRESS 3 XDCR	V41K1702X
(25)	REPLACE LO_2 ULLAGE PRESS 1 XDCR	V41K1750X
(26)	REPLACE LO_2 ULLAGE PRESS 2 XDCR	V41K1751X
(27)	REPLACE LO_2 ULLAGE PRESS 3 XDCR	V41K1752X
(28)	ET/ORB SEP CAMERAS ON CMD	V56K9000X
(29)	ET/ORB SEP CAMERAS HTRS ON CMD	V56K9010X
(30)	MPS LO_2 OVERBOARD B/V CLOSE CMD A	V41K1584X
(31)	MPS LO_2 OVERBOARD B/V CLOSE CMD B	V41K1585X
(32)	MPS LO_2 OVERBOARD B/V CLOSE CMD C	V41K1586X
(33)	MPS E-1 LH_2 PREVALVE CLOSE CMD A	V41K1122X
(34)	MPS E-1 LH_2 PREVALVE CLOSE CMD B	V41K1123X

(35)	MPS E-1 LH_2 PREVALVE CLOSE CMD C	V41K1124X
(36)	MPS E-2 LH_2 PREVALVE CLOSE CMD A	V41K1222X
(37)	MPS E-2 LH_2 PREVALVE CLOSE CMD B	V41K1223X
(38)	MPS E-2 LH_2 PREVALVE CLOSE CMD C	V41K1224X
(39)	MPS E-3 LH_2 PREVALVE CLOSE CMD A	V41K1322X
(40)	MPS E-3 LH_2 PREVALVE CLOSE CMD B	V41K1323X
(41)	MPS E-3 LH_2 PREVALVE CLOSE CMD C	V41K1324X
(42)	MPS-E1 FASCOS PWR CMD A	E41K0196X
(43)	MPS-E1 FASCOS PWR CMD B	E41K0197X
(44)	MPS-E1 FASCOS PWR CMD C	E41K0198X
(45)	MPS-E2 FASCOS PWR CMD A	E41K0296X
(46)	MPS-E2 FASCOS PWR CMD B	E41K0297X
(47)	MPS-E2 FASCOS PWR CMD C	E41K0298X
(48)	MPS-E3 FASCOS PWR CMD A	E41K0396X
(49)	MPS-E3 FASCOS PWR CMD B	E41K0397X
(50)	MPS-E3 FASCOS PWR CMD C	E41K0398X
(51)	MPS LO_2 DUMP STOP	V90X8302X

NOTE: There are two sets of four transducers that are utilized for ullage pressure sensing; one set for LO_2 and one set for LH_2. Operationally, only three in each set are energized. If one of the three operational transducers fails, the fourth transducer can be switched in via the energization of a relay. For example, if ullage pressure 2 XDCR fails, issuance of the replace ullage pressure 2 XDCR command will cause energization of a relay, causing ullage pressure 4 XDCR to replace ullage pressure 2 XDCR. The termination of the replace commands causes the de-energization of a relay in the event a failure had occurred.

Step 12A – RTLS Helium Purge and MPS Dump Sequence Termination. This step provides for a helium purge of the aft compartment, OMS pod and ET UMb cavity for an RTLS abort after the MPS dump is complete. It also de–energizes the remainder of the MPS and terminates the sequence.

Monitor the following:

(a)	RTLS ABORT DECLARED	V90X8637X
(b)	GND REL VEL MAGNITUDE IN M50 SYS	V95L0151C
(c)	HE_PURGE_VEL	V96U8958C
(d)	HE_PURGE_TIME	V96U8959C

If (a) is false, set outputs (3) through (17) false and return to Step 1.

If (a) is true and (b) > (c) (ft/sec), return to Step 1.

On the first pass that (a) is true and (b) $\leq$ (c) (ft/sec), set outputs (1) and (2) true, start the timer for (d), and return to Step 1.

On subsequent passes, if (d) seconds have not elapsed since outputs (1) and (2) were set true, return to Step 1.

When (d) seconds have elapsed since outputs (1) and (2) were set true, then set outputs (1) through (17) false and deschedule the MPS dump sequence.

(1)	MPS HE SPLY BLOWDOWN NO. 1 OPEN CMD	V41K1631X
(2)	MPS HE SPLY BLOWDOWN NO. 2 OPEN CMD	V41K1633X
(3)	MPS E1 HE INTCON OUT/OPEN CMD A	V41K1168X
(4)	MPS E2 HE INTCON OUT/OPEN CMD A	V41K1268X
(5)	MPS E3 HE INTCON OUT/OPEN CMD A	V41K1368X
(6)	MPS PNEU CROSSOVER NO. 2 OPEN CMD	V41K1613X
(7)	MPS PNEU VLV HE ISLN NO. 1 OP CMD	V41K1607X
(8)	MPS PNEU VLV HE ISLN NO. 2 OP CMD	V41K1608X
(9)	MPS E-2 HELIUM SUPPLY B OPEN CMD A	V41K1256X
(10)	MPS E-2 HELIUM SUPPLY B OPEN CMD B	V41K1257X
(11)	MPS E-2 HELIUM SUPPLY A OPEN CMD	V41K1255X
(12)	MPS E-1 HELIUM SUPPLY B OPEN CMD A	V41K1156X
(13)	MPS E-1 HELIUM SUPPLY B OPEN CMD B	V41K1157X
(14)	MPS E-1 HELIUM SUPPLY A OPEN CMD	V41K1155X
(15)	MPS E-3 HELIUM SUPPLY B OPEN CMD A	V41K1356X
(16)	MPS E-3 HELIUM SUPPLY B OPEN CMD B	V41K1357X
(17)	MPS E-3 HELIUM SUPPLY A OPEN CMD	V41K1355X

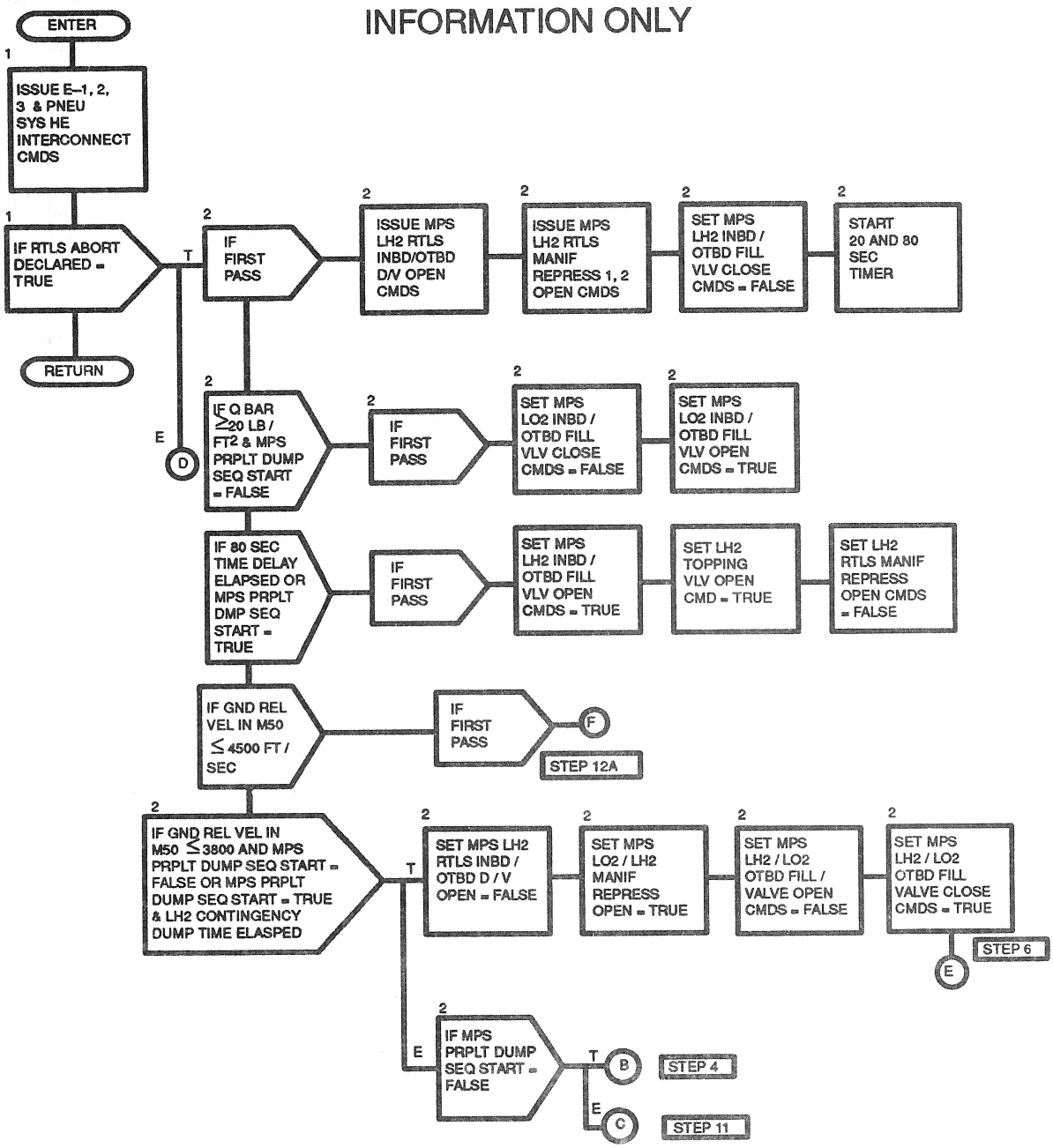

Figure 4.70. MPS Dump Sequence (1 of 5)

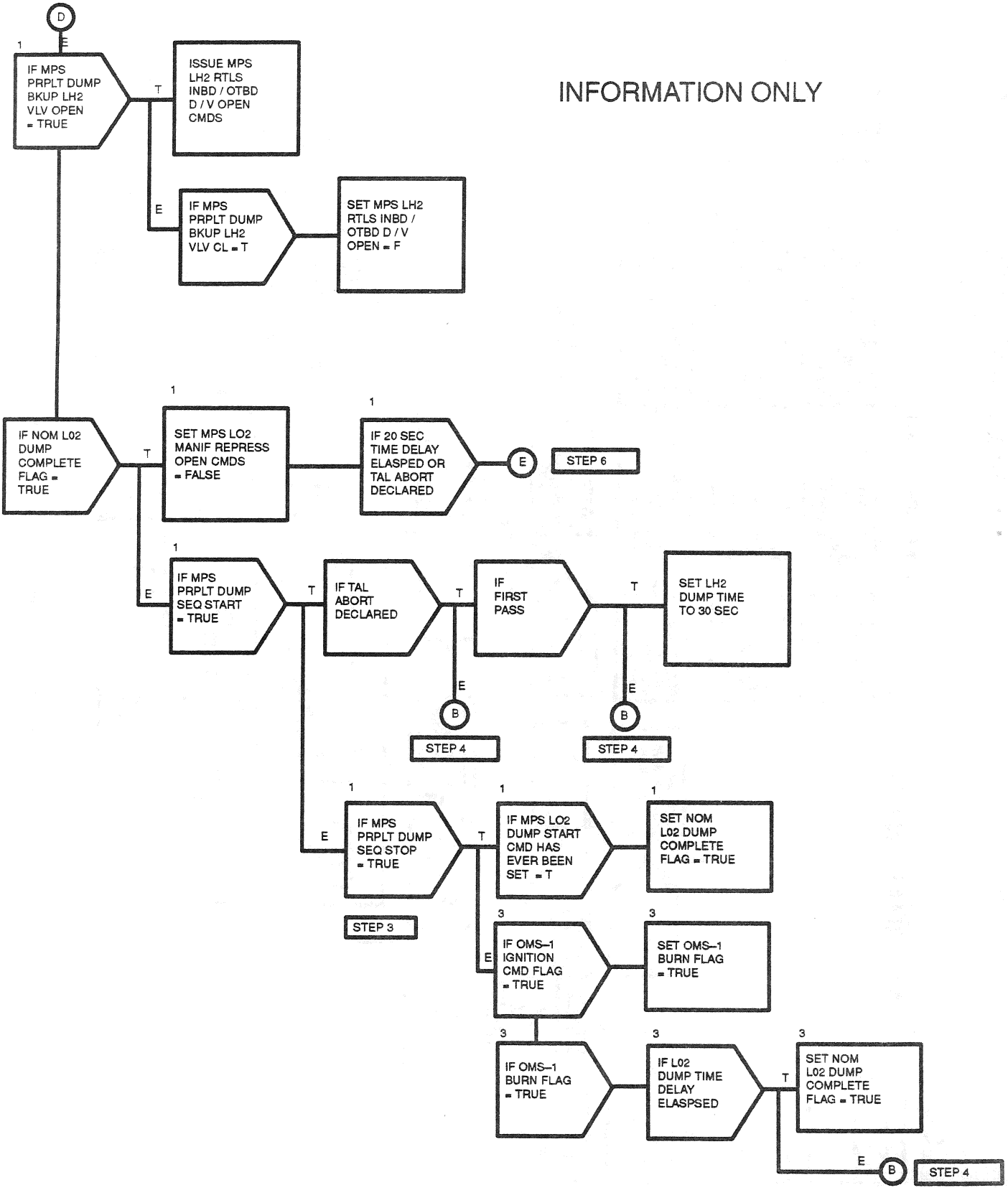

Figure 4.70 MPS Dump Sequence (2 of 5)

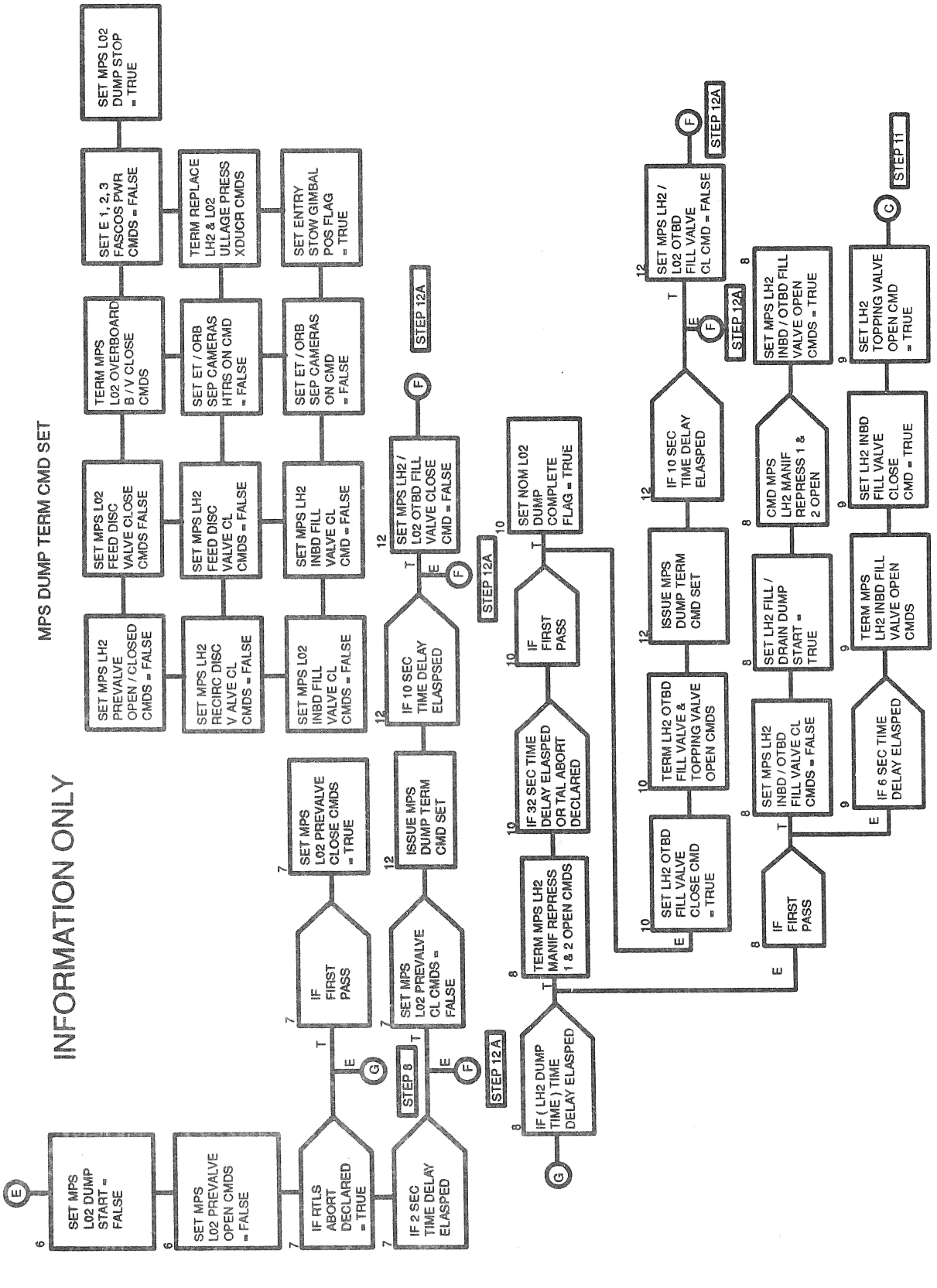

Figure 4.70 MPS Dump Sequence (3 of 5)

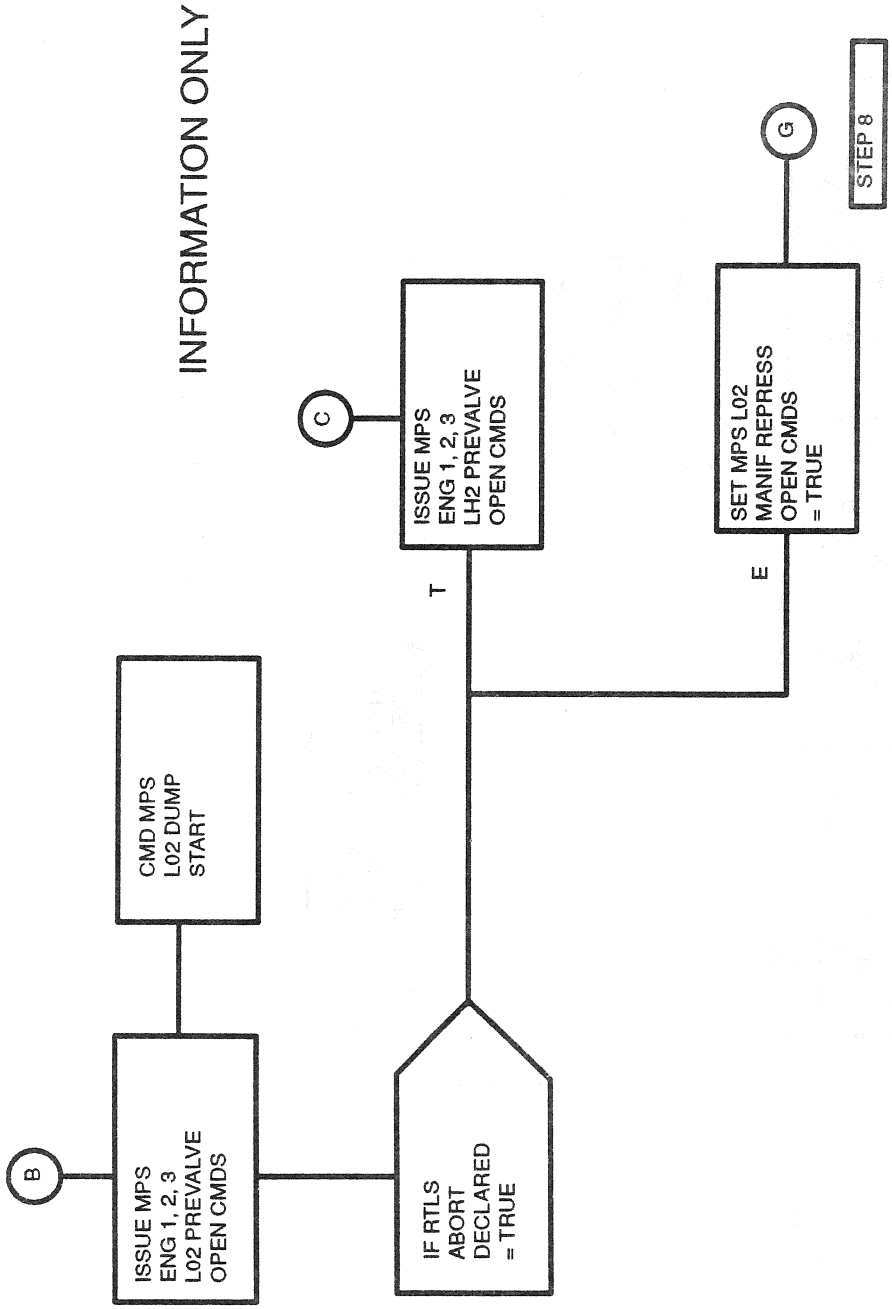

Figure 4.70 MPS Dump Sequence (4 of 5)

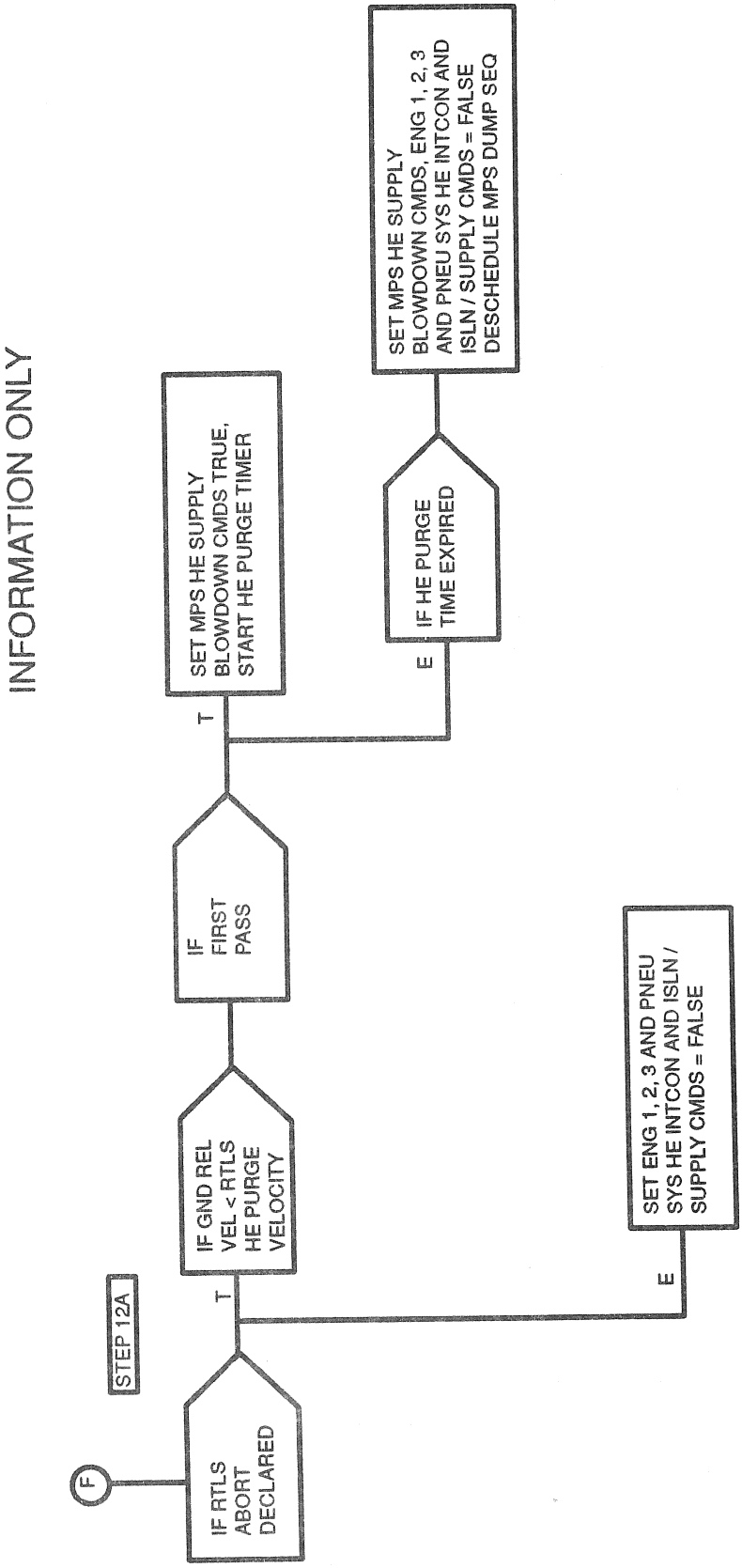

Figure 4.70 MPS Dump Sequence (5 of 5)

TABLE 4.2.4.4–1. MAIN PROPULSION SYSTEM(MPS) DUMP SEQUENCER (G4.70) INPUT/OUTPUT FUNCTIONAL PARAMETERS

DBFN: D3B027-F PN: VP707100049P00L INPUT FUNCTIONAL PARAMETERS FOR MPS DUMP

FSSR NAME	M/S ID	NOMENCLATURE	SOURCE	UNITS	DATA TYPE	PREC	LAST CRS
OMS_IGNITION_CMD	V90X8190XA	OMS IGNITION COMMAND FLAG	MSC		BD		90120B
OMS_IGNITION_CMD	V90X8190XB	OMS IGNITION COMMAND FLAG	ORB INS GUID		BD		90120B
QBAR/QBAR_AD	V95P3011C	GN&C DYNAMIC PRESSURE	ADTA SOP	LB/FT2	SPL		89250B
REL_VEL_MAG/V	V95L0151CA	GND REL VEL MAGNITUDE IN M50 SYS	RTLS UPP	FT/S			89990E
							89250B
TAL_ABORT_DECLARED	V90X8658X	TAL ABORT DECLARED	MSC				89245D
	V90X7557X	SEL MPS PRPLT DUMP BU LH2 VLV OP	GN&C SW RM				
	V90X7558X	SEL MPS PRPLT DUMP BU LH2 VLV CL	GN&C SW RM				
	V90X7559X	SEL MPS PRPLT DUMP SEQ START	GN&C SW RM				
	V90X7567X	SEL MPS PRPLT DUMP SEQ STOP	GN&C SW RM				
	V90X8637XA	RTLS ABORT DECLARED	MSC				89991E
							89599C
	V90X8637XB	RTLS ABORT DECLARED	ET SEP SEQ				89991E

TABLE 4.2.4.4–1. MAIN PROPULSION SYSTEM(MPS) DUMP SEQUENCER (G4.70) INPUT/OUTPUT FUNCTIONAL PARAMETERS

DBFN: D3B027-F PN: VP707100049P00L OUTPUT FUNCTIONAL PARAMETERS FROM MPS DUMP

FSSR NAME	M/S ID	NOMENCLATURE	DESTINATION	UNITS	DATA TYPE	PREC	LAST CRS
ENT_STOW_GIM_POSN	V90X8254XA	ENTRY STOW GIMBAL POS FLAG	MPS TVC CMD SOP,MSC,TLM		BD		
MPS_LO2_DUMP_START	V90X8301X	MPS LO2 DUMP START	SSME SOP,ASC DAP				89598A
MPS_LO2_DUMP_STOP	V90X8302X	MPS LO2 DUMP STOP	SSME SOP,ASC DAP				
	E41K0196X	MPS-E1 FASCOS PWR CMD A	HDWR				
	E41K0197X	MPS-E1 FASCOS PWR CMD B	HDWR		BD		
	E41K0198X	MPS-E1 FASCOS PWR CMD C	HDWR		BD		
	E41K0296X	MPS-E2 FASCOS PWR CMD A	HDWR		BD		
	E41K0297X	MPS-E2 FASCOS PWR CMD B	HDWR				
	E41K0298X	MPS-E2 FASCOS PWR CMD C	HDWR		BD		
	E41K0396X	MPS-E3 FASCOS PWR CMD A	HDWR		BD		
	E41K0397X	MPS-E3 FASCOS PWR CMD B	HDWR		BD		
	E41K0398X	MPS-E3 FASCOS PWR CMD C	HDWR				
	V41K1119XB	MPS E1 LH2 PREVLV (PV4) OP CMD A	PCA A1				89554A
	V41K1120XB	MPS E1 LH2 PREVLV (PV4) OP CMD B	LCA A1				89554A
	V41K1121XB	MPS E1 LH2 PREVLV (PV4) OP CMD C	LCA A2				89554A
	V41K1122XB	MPS E1 LH2 PREVLV (PV4) CL CMD A	PCA A1				89554A
	V41K1123XB	MPS E1 LH2 PREVLV (PV4) CL CMD B	LCA A1				89554A
	V41K1124XB	MPS E1 LH2 PREVLV (PV4) CL CMD C	LCA A2				89554A
	V41K1136XB	MPS E1 LO2 PREVLV (PV1) OP CMD A	PCA A1				89554A
	V41K1137XB	MPS E1 LO2 PREVLV (PV1) OP CMD B	LCA A1				89554A
	V41K1138XB	MPS E1 LO2 PREVLV (PV1) OP CMD C	LCA A2				89554A
	V41K1139XB	MPS E1 LO2 PREVLV (PV1) CL CMD A	PCA A1				89554A
	V41K1140XB	MPS E1 LO2 PREVLV (PV1) CL CMD B	LCA A1				89554A
	V41K1141XB	MPS E1 LO2 PREVLV (PV1) CL CMD C	LCA A2				89554A
	V41K1142XC	MPS E1 LO2 PREVLV (PV1) CL CMD D	HDWR				89554A
	V41K1143XC	MPS E1 LO2 PREVLV (PV1) OP CMD D	HDWR				89554A
	V41K1155X	MPS E1 HE ISO VLV A (LV1) OP CMD	HDWR		BD		89554A
	V41K1156X	MPS E1 HE ISO VLV B (LV2) OP CMD A	HDWR		BD		89554A
	V41K1157X	MPS E1 HE ISO VLV B (LV2) OP CMD B	HDWR		BD		89554A
	V41K1168XA	MPS E1 HE INTCN OUT(LV60) OP CMD A	HDWR				89554A
	V41K1219XB	MPS E2 LH2 PREVLV (PV5) OP CMD A	PCA A2				89554A
	V41K1220XB	MPS E2 LH2 PREVLV (PV5) OP CMD B	LCA A2				89554A
	V41K1221XB	MPS E2 LH2 PREVLV (PV5) OP CMD C	LCA A3				89554A
	V41K1222XB	MPS E2 LH2 PREVLV (PV5) CL CMD A	PCA A2				89554A
	V41K1223XB	MPS E2 LH2 PREVLV (PV5) CL CMD B	LCA A2				89554A
	V41K1224XB	MPS E2 LH2 PREVLV (PV5) CL CMD C	LCA A3				89554A
	V41K1236XB	MPS E2 LO2 PREVLV (PV2) OP CMD A	PCA A2				89554A
	V41K1237XB	MPS E2 LO2 PREVLV (PV2) OP CMD B	LCA A2				89554A
	V41K1238XB	MPS E2 LO2 PREVLV (PV2) OP CMD C	LCA A3				89554A
	V41K1239XB	MPS E2 LO2 PREVLV (PV2) CL CMD A	PCA A2				89554A
	V41K1240XB	MPS E2 LO2 PREVLV (PV2) CL CMD B	LCA A2				89554A
	V41K1241XB	MPS E2 LO2 PREVLV (PV2) CL CMD C	LCA A3				89554A
	V41K1242XC	MPS E2 LO2 PREVLV (PV2) CL CMD D	HDWR				

TABLE 4.2.4.4–1. MAIN PROPULSION SYSTEM(MPS) DUMP SEQUENCER (G4.70) INPUT/OUTPUT FUNCTIONAL PARAMETERS

DBFN: D3B027-F PN: VP707100049P00L OUTPUT FUNCTIONAL PARAMETERS FROM MPS DUMP

FSSR NAME	M/S ID	NOMENCLATURE	DESTINATION	UNITS	DATA TYPE	PREC	LAST CRS
	V41K1243XC	MPS E2 LO2 PREVLV (PV2) OP CMD D	HDWR				89554A
	V41K1255X	MPS E2 HE ISO VLV A (LV3) OP CMD	HDWR		BD		89554A
	V41K1256XA	MPS E2 HE ISO VLV B (LV4) OP CMD A	HDWR				89554A
	V41K1257XA	MPS E2 HE ISO VLV B (LV4) OP CMD B	HDWR				89554A
	V41K1268XA	MPS E2 HE INTCN OUT(LV62) OP CMD A	HDWR				89554A
	V41K1319XB	MPS E3 LH2 PREVLV (PV6) OP CMD A	PCA A3				89554A
	V41K1320XB	MPS E3 LH2 PREVLV (PV6) OP CMD B	LCA A3				89554A
	V41K1321XB	MPS E3 LH2 PREVLV (PV6) OP CMD C	LCA A1				89554A
	V41K1322XB	MPS E3 LH2 PREVLV (PV6) CL CMD A	PCA A3				89554A
	V41K1323XB	MPS E3 LH2 PREVLV (PV6) CL CMD B	LCA A3				89554A
	V41K1324XB	MPS E3 LH2 PREVLV (PV6) CL CMD C	LCA A1				89554A
	V41K1336XB	MPS E3 LO2 PREVLV (PV3) OP CMD A	PCA A3				89554A
	V41K1337XB	MPS E3 LO2 PREVLV (PV3) OP CMD B	LCA A3				89554A
	V41K1338XB	MPS E3 LO2 PREVLV (PV3) OP CMD C	LCA A1				89554A
	V41K1339XB	MPS E3 LO2 PREVLV (PV3) CL CMD A	PCA A3				89554A
	V41K1340XB	MPS E3 LO2 PREVLV (PV3) CL CMD B	LCA A3				89554A
	V41K1341XB	MPS E3 LO2 PREVLV (PV3) CL CMD C	LCA A1				89554A
	V41K1342XC	MPS E3 LO2 PREVLV (PV3) CL CMD D	HDWR				89554A
	V41K1343XC	MPS E3 LO2 PREVLV (PV3) OP CMD D	HDWR				89554A
	V41K1355X	MPS E3 HE ISO VLV A (LV5) OP CMD	HDWR		BD		89554A
	V41K1356X	MPS E3 HE ISO VLV B (LV6) OP CMD A	HDWR		BD		89554A
	V41K1357X	MPS E3 HE ISO VLV B (LV6) OP CMD B	HDWR		BD		89554A
	V41K1368XA	MPS E3 HE INTCN OUT(LV64) OP CMD A	HDWR				89554A
	V41K1391XB	MPS LH2 OTBD F/D VLV (PV11) OP CMD	LCA A2				89554A
	V41K1393XA	MPS LH2 OTBD F/D VLV (PV11) CL CMD	LCA A2				89554A
	V41K1401XA	MPS LH2 INBD F/D (PV12) OP CMD A	LCA A1				89554A
	V41K1402XA	MPS LH2 INBD F/D (PV12) OP CMD B	LCA A1				89554A
	V41K1411XA	MPS LH2 TOPPING VLV (PV13) OP CMD	LCA A1				89554A
	V41K1412XA	MPS LH2 INBD F/D (PV12) CL CMD	LCA A1				89554A
	V41K1416XB	MPS LH2 17IN DISC VLV(PD2)CL CMD A	HDWR				89554A
	V41K1417XB	MPS LH2 17IN DISC VLV(PD2)CL CMD B	HDWR				89554A
	V41K1418XB	MPS LH2 17IN DISC VLV(PD2)CL CMD C	HDWR				89554A
	V41K1422XB	MPS LH2 4IN DISC VLV (PD3) CL CMD	HDWR		BD		89313A
							89554A
	V41K1435XA	MPS LH2 MANF REPRSS 1(LV42) OP CMD	LCA A2				89554A
	V41K1437XA	MPS LH2 MANF REPRSS 2(LV43) OP CMD	LCA A2				89554A
	V41K1501XA	MPS LO2 INBD F/D (PV10) OP CMD A	LCA A2				89554A
	V41K1502XA	MPS LO2 INBD F/D (PV10) OP CMD B	LCA A2				89554A
	V41K1512XA	MPS LO2 INBD F/D VLV (PV10) CL CMD	LCA A2				89554A
	V41K1515XA	MPS LO2 OTBD F/D VLV (PV9) CL CMD	LCA A3				89554A
	V41K1518XA	MPS LO2 OTBD F/D VLV (PV9) OP CMD	LCA A3				89554A
	V41K1524XA	MPS LO2 17IN DISC VLV(PD1)CL CMD A	HDWR				89554A
	V41K1525XA	MPS LO2 17IN DISC VLV(PD1)CL CMD B	HDWR				89554A

TABLE 4.2.4.4–1. MAIN PROPULSION SYSTEM(MPS) DUMP SEQUENCER (G4.70) INPUT/OUTPUT FUNCTIONAL PARAMETERS

DBFN: D3B027-F PN: VP707100049P00L OUTPUT FUNCTIONAL PARAMETERS FROM MPS DUMP

FSSR NAME	M/S ID	NOMENCLATURE	DESTINATION	UNITS	DATA TYPE	PREC	LAST CRS
	V41K1526XA	MPS LO2 17IN DISC VLV(PD1)CL CMD C	HDWR				89554A
	V41K1535XA	MPS LO2 MANF REPRSS 1(LV40) OP CMD	LCA A3				89554A
	V41K1537XA	MPS LO2 MANF REPRSS 2(LV41) OP CMD	LCA A3				89554A
	V41K1584XB	MPS LO2 OVBD B/V (PV19) CL CMD A	PCA A3				89554A
	V41K1585XB	MPS LO2 OVBD B/V (PV19) CL CMD B	LCA A3				89554A
	V41K1586XB	MPS LO2 OVBD B/V (PV19) CL CMD C	LCA A2				89554A
	V41K1607XA	MPS PNEU HE ISO VLV 1 (LV7) OP CMD	HDWR				89554A
	V41K1608XA	MPS PNEU HE ISO VLV 2 (LV8) OP CMD	HDWR				89554A
	V41K1613XA	MPS REG HE XOVER VLV (LV10) OP CMD	HDWR				89554A
	V41K1631XA	MPS HE SPLY BLWDWN 1 (LV26) OP CMD	HDWR				89554A
	V41K1633XA	MPS HE SPLY BLWDWN 2 (LV27) OP CMD	HDWR				89554A
	V41K1700X	REPLACE LH2 ULL PRESS XDCR 1 CMD	LCA A1		BD		89554A
	V41K1701X	REPLACE LH2 ULL PRESS XDCR 2 CMD	LCA A2		BD		89554A
	V41K1702X	REPLACE LH2 ULL PRESS XDCR 3 CMD	LCA A3		BD		89554A
	V41K1750X	REPLACE LO2 ULL PRESS XDCR 1 CMD	LCA A1		BD		89554A
	V41K1751X	REPLACE LO2 ULL PRESS XDCR 2 CMD	LCA A2		BD		89554A
	V41K1752X	REPLACE LO2 ULL PRESS XDCR 3 CMD	LCA A3		BD		89554A
	V41K1905X	MPS LH2 RTLS REPRS 1(LV74)OP CMD A	PCA A3		BD		89554A
	V41K1906X	MPS LH2 RTLS REPRS 2(LV75)OP CMD A	PCA A3		BD		89554A
	V41K1907X	MPS LH2 RTLS REPRS 1(LV74)OP CMD B	PCA A1		BD		89554A
	V41K1908X	MPS LH2 RTLS REPRS 2(LV75)OP CMD B	PCA A1		BD		89554A
	V41K1909X	MPS LH2 RTLS REPRS 1(LV74)OP CMD C	LCA A1		BD		89554A
	V41K1910X	MPS LH2 RTLS REPRS 2(LV75)OP CMD C	LCA A1		BD		89554A
	V41K1913XA	MPS LH2 RTLS OTBD DV(PV18)OP CMD A	HDWR				89554A
	V41K1914XA	MPS LH2 RTLS OTBD DV(PV18)OP CMD B	HDWR				89554A
	V41K1915XA	MPS LH2 RTLS OTBD DV(PV18)OP CMD C	HDWR				89554A
	V41K1923XA	MPS LH2 RTLS INBD DV(PV17)OP CMD A	HDWR				89554A
	V41K1924XA	MPS LH2 RTLS INBD DV(PV17)OP CMD B	HDWR				89554A
	V41K1925XA	MPS LH2 RTLS INBD DV(PV17)OP CMD C	HDWR				89554A
	V56K9000XB	ET/ORB SEP CAMERAS ON CMD	HDWR				
	V56K9010XB	ET/ORB SEP CAMERAS-HTR ON CMD	HDWR				

TABLE 4.2.4.4–2. MAIN PROPULSION SYSTEM(MPS) DUMP SEQUENCER (G4.70) I–LOADS

DBFN:0484

FSSR NAME	MSID	ENG UNIT	DT PR	D S PR FCTN	CAT
NO REQUIREMENTS					

TABLE 4.2.4.4–3. MAIN PROPULSION SYSTEM(MPS) DUMP SEQUENCER (G4.70) K–LOADS

DBFN:0558

FSSR NAME DESCRIPTION	MSID	MC KLOAD VALUE	ENG UNIT	DT PR S PR FCTN	LAST CR EQTN MSID
HE_PURGE_TIME	V96U8959C	+6.50 E+02	SEC	F D C G4.70 G4.161	59973
HE_PURGE_VEL	V96U8958C	+4.5 E+03	FT/SEC	F S C G4.70 G4.161	59973
LH2_DUMP_TIME LH2 DUMP TIME	V97U9779C	+8.8 E+01	SEC	F D C G4.70	59973
LO2_DUMP_TIME LO2 DUMP TIME	V97U9778C	+9.0 E+01	SEC	F D C G4.70	69482

TABLE 4.2.4.4–4. MAIN PROPULSION SYSTEM(MPS) DUMP SEQUENCER (G4.70) CONSTANTS

DBFN:0558

FSSR NAME DESCRIPTION	MSID	MC	CONSTANT VALUE	ENG UNIT	DT	PR	S	PR FCTN	LAST CR
LH2_FILL/DRAIN_VALVE_OP_TIME_DLY LH2 FILL/DRAIN VALVE OPEN TIME DELAY	V97U6143C		+8.0 E+01	SEC	F	S	P	G4.70	90374

THIS PAGE INTENTIONALLY LEFT BLANK

4.3 ABORT

4.3.1 Abort Control Sequence (4.192)

4.3.1.1 Introduction

It may be necessary to burn OMS/RCS propellants for systems management or when an abort has been selected by the crew, to maintain the necessary c.g. control and/or landing weight conditions to successfully abort. The amount of OMS/RCS propellant loaded and the vehicle center of gravity are mission dependent. The quantity of OMS or RCS propellant which will be burned is controlled by burn timers used in the Abort Control Sequence. The OMS burn time is based on the time required to burn the desired quantity using two OMS engines, and the RCS timer is based on a 4 + X jet burn. Premission–determined parameters are provided for the OMS/RCS burn control. For abort to orbit (ATO), only the OMS burn time is provided and that initial value is modified to provide improved mission capability as a function of the velocity at the time of failure. Both OMS and RCS values are provided for the return to landing site (RTLS) or transatlantic landing (TAL) aborts. In addition to the values determined by the abort selection, there is a capability for the crew to manually initiate the burns and modify an initial value of the OMS and/or RCS timers through keyboard entry. If OMS propellant loading quantities require a higher burn rate than available through the OMS engines, an OMS/RCS interconnect can provide for burning OMS propellant through the RCS jets. This interconnected capability will be selected premission for each abort by an I–load. The crew has the capability to manually select or inhibit this interconnect.

For an ATO abort downmode to a TAL abort in MM103, the initially selected ATO abort OMS propellant burn time will be replaced automatically with the TAL abort OMS propellant burn time. The dump method can be changed from OMS only to an interconnected dump through the OMS and RCS by means of the manual inputs via the Override Display.

4.3.1.2 Overview

Pre-MECO. For situations where the quantity of OMS propellants required to be burned cannot be accomplished in the allowable time using the OMS engines only, the RCS jets can be employed to assist in burning the OMS propellants through a crew selectable interconnect mode (toggle capability). When RCS jets are to be employed in this manner, the RCS propellant tank isolation valves are closed in both pods, and the OMS propellants are interconnected to the RCS jets. If the attempt to interconnect the OMS propellant tanks to either or both sets of RCS manifolds (1/2 and/or 3/4/5) is unsuccessful, those manifolds will be returned to feed from the RCS tanks and the resulting OMS propellant burn rate will be adjusted accordingly to provide an accurate value of propellant burned. After the necessary burn has been accomplished, all propellant feed paths are returned to the normal configuration.

Post-MECO. It may be necessary to burn OMS propellants post–MECO for systems management or to maintain the necessary c.g. control. For situations where the quantity of OMS propellants required to be burned cannot be accomplished in the allowable time using the OMS engines only, the RCS jets can be employed to assist in burning the OMS propellants through a crew selectable interconnect mode. When RCS jets are to be employed in this manner, the RCS propellant tank isolation valves are closed in both pods, and the OMS propellants are interconnected to the RCS jets. If the attempt to interconnect the OMS propellant tanks to either or both sets of RCS manifolds (1/2 and/or 3/4/5) is unsuccessful, those manifolds will be returned to feed from the RCS tanks. After the necessary burn has been accomplished, all propellant feed paths are returned to the normal configuration.

For an ATO abort selected post–MECO, no propellant dumping is required. If an RTLS abort has been selected, a dump of RCS propellants through the 4 RCS + X jets is initiated after 20 seconds has elapsed

in MM602. The crew has the capability to control the aft RCS dump via the Override display. Capability is provided for the crew to manually request and/or modify the premission selected dump time for RCS propellants.

RCS roll control. For RCS roll control (selected automatically at SRB tailoff for two or three SSME failures in MM102 or a second SSME failure prior to MECO–Prep or Contingency MECO–Prep or by crew request of CONTINGENCY SE ROLL CONTROL FLAG via the XXXXXXTRAJ display), and OMS to RCS interconnect is initiated. This allows the use of OMS propellants by the RCS for vehicle control unless MECO–Prep or Contingency MECO–Prep has occurred. If the attempt to interconnect the OMS propellant tanks to either or both sets of manifolds (1/2 and/or 3/4/5) is unsuccessful, those manifolds will be returned to feed from the RCS tanks.

For pre–MECO the OMS propellants remain interconnected to the RCS jets until MECO commanded occurs and then are reconnected to normal by a Mode 2 return to normal process which provides a continuous propellant path to the RCS jets.

MM 304 OMS Propellant Burn. During MM 304, an OMS propellant-wasting burn will be initiated manually by crew request via the override display or automatically by guidance after the pitch–up maneuver has been completed to reduce the orbiter's landing weight and provide extra orbiter delta V after ET separation.

At the initiation of this sequence, the OMS engines will be commanded to the c.g. trim position and both sets of OMS helium/vapor isolation values will be commanded open. The selection to interconnect the OMS propellants to the RCS jets will then be determined by the crew's manual item entry or automatically when the OMS equivalent on time is less than or equal to a predefined interconnect initiation fuel time (I–load). When an interconnected dump has been selected, the OMS/RCS interconnect is requested and a c.g. trim delay is started. if an interconnect dump is not selected, a RCS 4 + X settling burn is initiated, a settling burn timer is started, and a flag for dumping through the OMS engines only is set.

The OMS propellant burn via the OMS engines and 24 aft RCS jets (4 +X and 20 nulls), will occur as follows: The OMS ignition will be initiated after the expiration of the c.g. trim delay and the OMS/RCS interconnect sequence has completed its processing. The dump through the 24 aft RCS jets will be initiated after the expiration of an ignition press delay which starts at the ignition of the OMS engines.

The OMS propellant burn via the OMS engines only will occur after 15 seconds of the 4 + X settling burn. The 4 + X settling burn will be terminated after 20 seconds.

The OMS propellant–wasting burn via the 24 aft RCS jets will be terminated automatically when, (1) the OMS equivalent on time is greater than or equal to a predefined interconnect termination fuel time (I–load), (2) the normal acceleration exceeds a predefined limit (I–load) for more than one second period of continuous processing, or (3) manually by crew item entry.

The entry OMS fuel burn time I–load represents the time required to burn available OMS fuel at a pre-MECO two-OMS-engine flow rate. The OMS equivalent on time used during pre–MECO operations will be transferred to OPS 3 to support a MM304 OMS propellant burn. This timer is incremented during each cycle that an OMS burn is active to reflect the OMS fuel flow at a two–OMS–engine rate and also the delta fuel flow rate between 2 OMS engines and 10 or 24 RCS jets when the null jets are active. The 10 or 24 RCS jets delta fuel flow rate will be determined by the state of the aft manifold inhibit flags from the OMS/RCS interconnect sequence.

MM304 AFT RCS PROPELLANT BURN. When the ground relative velocity reaches a predefined threshold (I–load), a dump of RCS propellants through the RCS 4 + X jets is initiated if enabled by the

crew via item entry. Capability is provided for the crew to manually request and/or modify the premission selected dump time for RCS propellants.

4.3.1.3 Detail Requirements—Abort Control Sequence

Step 1. This step sets the scale factor for the OMS burn time display and provides the appropriate branching for the MM304 or OPS 1/6 abort functions.

The following signals are monitored:

(a)	MAJOR MODE 304 FLAG	V90X8161X
(b)	SECOND SSME FAIL CONFIRM	V90X1721X
(c)	CONT_SERC	V93X6682X
(d)	SERC FLAG	V90X8913X

Set (1) equal to 1.0 and monitor (a).

If (a) is true, proceed to Step 24. Otherwise, if (a) is false, proceed to monitor (b), (c), and (d).

If (b) or (c) or (d) is true, set (2) true and proceed to Step 1A. Otherwise, if (b) and (c) and (d) are all false, proceed to Step 18.

(1)	OMS TIME SCALE FACTOR	V94J3755C
(2)	SERC FLAG	V90X8913X

Step 1A. This step initiates the abort OMS/RCS interconnect command and the OMS Helium and Vapor isolation valve open commands to support single engine roll control when a second SSME fails prior to contingency MECO PREP and terminates the 24 AFT RCS jet commands.

The following signals are monitored:

(a)	MECO CONFIRMED FLAG	V90X8561X
(b)	OMS TO RCS INTERCONNECT CMD	V90X8312X
(c)	MECO PREPARATION DISCRETE	V90X1989X
(d)	CONTINGENCY MECO PREP DISCRETE	V90X8480X

If (a) is true, set (14) true and proceed to Step 1B. Otherwise, if (a) is false, proceed to monitor (b).

If (b) is true, issue (6) through (13), and proceed to monitor (c) and (d). Otherwise, if (b) is false, proceed to monitor (c) and (d).

If (c) and (d) are both false, on first pass, terminate (1) through (3), set (4) true (ENABLE), issue (5), and proceed to Step 1B. On subsequent passes, proceed to Step 1B. Otherwise, if either (c) or (d) is true, set (14) true, and proceed to Step 1B.

(1)	ABORT RCS + X ON CMD	V90X8314X
(2)	20 RCS NULL JETS ON CMD	V90X8317X
(3)	OMS TO RCS RTRN TO NORMAL CONFIG CMD	V90X8313X
(4)	OMS/RCS INTERCONNECT INH/ENA CMD	V93X5348X
(5)	OMS TO RCS INTERCONNECT CMD	V90X8312X
(6)	OMS L POD HE ISLN VLV A OP	V43K4180X
(7)	OMS L POD VAPOR ISLN VLV 1 OP	V43K4182X
(8)	OMS R POD HE ISLN VLV A OP	V43K5180X
(9)	OMS R POD VAPOR ISLN VLV 1 OP	V43K5182X
(10)	OMS L POD HE ISLN VLV B OP	V43K4181X

(8)	OMS R POD HE ISLN VLV A OP	V43K5180X
(9)	OMS R POD VAPOR ISLN VLV 1 OP	V43K5182X
(10)	OMS L POD HE ISLN VLV B OP	V43K4181X
(11)	OMS L POD VAPOR ISLN VLV 2 OP	V43K4183X
(12)	OMS R POD HE ISLN VLV B OP	V43K5181X
(13)	OMS R POD VAPOR ISLN VLV 2 OP	V43K5183X
(14)	PRE MECO ICNCT COMPLETE FLAG	(INTERNAL)

Step 1B. This step controls selection of the OMS burn time for a manually initiated OMS propellant dump and for an abort which has been down–moded from an ATO abort to a TAL abort.

The following signals are monitored:

(a)	ORBITER DUMP ENABLE	V93X6980X
(b)	ATO ABORT SELECTED	(INTERNAL)
(c)	TAL ABORT DECLARED	V90X8658X

If (a) is true, on first pass, set (1) true, set (2) equal to (3), and proceed to Step 2. On subsequent passes, proceed to Step 2. Otherwise, if (a) is false, proceed to monitor (b).

If (b) is true, proceed to monitor (c). Otherwise, if (b) is false, proceed to Step 2.

If (c) is true, on first pass, set (2) equal to (4), and proceed to Step 2. On subsequent passes, proceed to Step 2. Otherwise, if (c) is false, proceed to Step 2.

(1)	BURN TIME SEL COMPLETE FLAG	(INTERNAL)
(2)	OMS DELTA T COMPUTED	V90W8325C
(3)	MANUAL_OMS_DT	V99U9717C
(4)	TAL_OMS_DT	V97U9786C

Step 2. This step determines if the abort burn table selection has been completed or pre–MECO interconnect operation is completed for second SSME failure situations.

The following signals are monitored:

(a)	BURN TIME SEL COMPLETE FLAG	(INTERNAL)
(b)	PRE–MECO ICNCT COMPLETE FLAG	(INTERNAL)

If (a) or (b) is true, proceed to Step 7.

If (a) and (b) are false, proceed to Step 3.

Step 3. This step controls the selection of the appropriate table values to be used in the control of the OMS and RCS abort burns.

The following signals are monitored:

(a)	RTLS ABORT DECLARED	V90X8637X
(b)	TAL ABORT DECLARED	V90X8658X
(c)	TGT COMPLETE FLAG	V90X8504X

If (a) is true, proceed to Step 4.

If (a) is false, and (b) is true, proceed to Step 5.

If (a) and (b) are both false, and (c) is true, proceed to Step 6.

If (a) and (b) and (c) are all false, return to Step 1.

Step 4. This step selects the RTLS I–load value for use in control of the OMS propellant abort burn during an RTLS abort.

The computed burn value and OMS/RCS interconnect initial selection are set equal to RTLS I–load table values as follows:

(a)	RTLS_OMS_DT	V97U9780C
(b)	RTLS_ICNCT_SEL	V99U9991C
(c)	SERC FLAG	V90X8913X

Set (1) below equal to (a), set (2) true, and proceed to the next if statement.

If (b) is true (ENABLE), or (c) is true, return to Step 1. Otherwise, set (3) false (INHIBIT), and return to Step 1.

(1)	OMS DELTA T COMPUTED	V90W8325C
(2)	BURN TIME SEL COMPLETE FLAG	(INTERNAL)
(3)	OMS/RCS INTERCONNECT INH/ENA CMD	V93X5348X

Step 5. This step selects the TAL I–load values for use in control of the OMS propellant abort burn during TAL abort.

The computed burn value and OMS/RCS interconnect initial selection are set equal to the TAL I–load values as follows:

(a)	TAL_OMS_DT	V97U9786C
(b)	TAL_ICNCT_SEL	V99U9992C
(c)	SERC FLAG	V90X8913X

Set (1) below equal to (a), (2) true, and proceed to the next if statement.

If (b) is true (ENABLE), or (c) is true, return to Step 1. Otherwise, set (3) false (INHIBIT), and return to Step 1.

(1)	OMS DELTA T COMPUTED	V90W3825C
(2)	BURN TIME SEL COMPLETE FLAG	(INTERNAL)
(3)	OMS/RCS INTERCONNECT INH/ENA CMD	V93X5348X

Step 6. This step selects the ATO I–load table values for use in control of the OMS propellant abort burn during ATO abort.

(a)	SCALE FACTOR 2	V90J8517C
(b)	ATO_OMS_DT	V97U9798C
(c)	ATO_ICNCT_SEL	V99U9993C
(d)	SERC FLAG	V90X8913X

The computed burn value and OMS/RCS interconnect initial selection are set equal to the ATO I–load value as follows:

Set (1) below equal to the product of (a) and (b), set (3) and (4) equal to true, and proceed to the next if statement.

If (c) is true (ENABLE), or (d) is true, return to Step 1. Otherwise, set (2) false (INHIBIT), and return to Step 1.

(1)	OMS DELTA T COMPUTED	V90W8325C
(2)	OMS/RCS INTERCONNECT INH/ENA CMD	V93X5348X
(3)	BURN TIME SEL COMPLETE FLAG	(INTERNAL)
(4)	ATO ABORT SELECTED	(INTERNAL)

Step 7. All abort functions are suspended during the ET separation maneuver.

The following signals are monitored:

(a)	MECO PREPARATION DISCRETE	V90X1989X
(b)	MECO CONFIRMED FLAG	V90X8561X

If (a) and (b) are both false, proceed to Step 8.

If (a) or (b) is true, proceed to Step 12.

Step 8. This step controls the abort OMS burn.

The following parameters are monitored:

(a)	ORBITER DUMP INHIBIT	V93X6981X
(b)	OMS DELTA T COMPUTED	V90W8325C
(c)	OMS EQUIVALENT ON TIME	V90W8320C
(d)	OMS–L ON CMD IND	V90X8271X
(e)	OMS–R ON CMD IND	V90X8272X
(f)	SERC FLAG	V90X8913X
(g)	OMS TO RCS INTERCONNECT COMPLETE FLAG	V90X8282X

If (a) is false and (b) > (c), proceed to Step 9.

If (a) is true or (b) ≤ (c) proceed to monitor (d) and (e).

If (d) or (e) is true, terminate (1), (3), and (4), issue (2), set (8) false, and proceed to monitor (f). Otherwise, proceed to monitor (f).

If (f) is true, return to Step 1. Otherwise, proceed to monitor (g).

If (g) is true, terminate (5), issue (6), set (7) false (INHIBIT), and return Step 1. Otherwise, return to Step 1.

(1)	ABORT OMS IGN CMD	V90X8319X
(2)	OMS CUTOFF CMD	V90X8318X
(3)	ABORT RCS +X ON CMD	V90X8314X
(4)	20 RCS NULL JETS ON CMD	V90X8317X
(5)	OMS TO RCS INTERCONNECT CMD	V90X8312X
(6)	OMS TO RCS RETURN TO NORMAL CONFIG CMD	V90X8313X

(7)	OMS/RCS INTERCONNECT INH/ENA CMD	V93X5348X
(8)	ORBITER DUMP ENABLE	V93X6980X

Step 9. This step increments the OMS dump timer and determines if OMS propellants are to be dumped with RCS jets.

The following signals are monitored:

(a)	OMS–L ON CMD IND	V90X8271X
(b)	OMS–R ON CMD IND	V90X8272X
(c)	SERC FLAG	V90X8913X
(d)	ORBITER DUMP ENABLE	V93X6980X
(e)	OMS/RCS INTERCONNECT INH/ENA CMD	V93X5348X
(f)	OMS TO RCS INTERCONNECT COMPLETE FLAG	V90X8282X

If (a) and (b) are both false, issue (1), terminate (2), and proceed to monitor (c) and (d). Otherwise, if (a) or (b) is true, increment (3) by 80 msec and proceed to monitor (c) and (d).

If (c) is true and (d) is false, return to Step 1. Otherwise, proceed to monitor (e).

If (e) is true (ENABLE), proceed to Step 10. Otherwise, proceed to monitor (f).

If (f) is true, terminate (4) through (6) below, issue (7), and return to Step 1. Otherwise, return to Step 1.

(1)	ABORT OMS IGN CMD	V90X8319X
(2)	OMS CUTOFF CMD	V90X8318X
(3)	OMS EQUIVALENT ON TIME	V90W8320X
(4)	ABORT RCS +X ON CMD	V90X8314X
(5)	20 RCS NULL JETS ON CMD	V90X8317X
(6)	OMS TO RCS INTERCONNECT CMD	V90X8312X
(7)	OMS TO RCS RTRN TO NORMAL CONFIG CMD	V90X8313X

Step 10. This step assures that the OMS propellants are connected to the RCS jets.

The following signal is monitored:

(a)	OMS TO RCS INTERCONNECT COMPLETE FLAG	V90X8282X

If (a) is false, issue (1) below, terminate (2), and return to Step 1.

If (a) is true and at least [(5) below] seconds have elapsed since (a) was last set true, issue (3) and (4) below, and proceed to Step 11. Otherwise return to Step 1.

(1)	OMS TO RCS INTERCONNECT CMD	V90X8312X
(2)	OMS TO RCS RTRN TO NORMAL CONFIG CMD	V90X8313X
(3)	ABORT RCS +X ON CMD	V90X8314X
(4)	20 RCS NULL JETS ON CMD	V90X8317X
(5)	ICNCT_DELAY	V99U9786C

Step 11. This step controls the OMS propellant burn timer and scale factors when using RCS null jets.

The following signals are monitored:

(a)	AFT MANIFOLD 1/2 JET INH FLAG	V90X8285X
(b)	AFT MANIFOLD 3/4/5 JET INH FLAG	V90X8286X
(c)	OMS EQUIVALENT ON TIME	V90W832OC

If (a) and (b) are both false, increment (c) by (2), set (1) equal to (3), and return to Step 1.

If (a) or (b) is true, increment (c) by (4), set (1) equal to (5), and return to Step 1.

(1)	OMS TIME SCALE FACTOR	V94J3755C
(2)	RCS_24_JET_FU_BIAS	V99U9772C
(3)	RCS_24_JET_FU_SCALE	V99U9773C
(4)	RCS_10_JET_FU_BIAS	V99U9775C
(5)	RCS_10_JET_FU_SCALE	V99U9776C

Step 12. This step controls the MM102 interconnected OMS dump and terminates the abort functions in preparation for ET separation in MM103 or MM601.

The following signal is monitored:

(a)	MAJOR MODE 102 FLAG	V90X8158X

If (a) is true, on first pass, terminate (3), issue (4), set (5) true (ENABLE), and proceed to Step 13; on subsequent passes, proceed to Step 13. Otherwise, on first pass, terminate (1), (6), and (7), issue (2) and proceed to Step 14. On subsequent passes, proceed to Step 14.

(1)	ABORT OMS IGN CMD	V90X8319X
(2)	OMS CUTOFF CMD	V90X8318X
(3)	OMS TO RCS RETURN TO NORMAL CONFIG CMD	V90X8313X
(4)	OMS TO RCS INTERCONNECT CMD	V90X8312X
(5)	OMS/RCS INTERCONNECT INH/ENA CMD	V93X5348X
(6)	ABORT RCS + X ON CMD	V90X8314X
(7)	20 RCS NULL JETS ON CMD	V90X8317X

Step 13. This step determines whether to initiate or terminate contingency rapid dump in MM102. At termination for fast separation, a Mode 2 type interconnect return to normal is commanded.

The following signals are monitored:

(a)	FAST SEPARATION FLAG	V90X8267X
(b)	ORBITER DUMP INHIBIT	V93X6981X
(c)	OMS DELTA T COMPUTED	V90W8325X
(d)	OMS EQUIVALENT ON TIME	V90W8320C
(e)	ORBITER DUMP ENABLE	V93X6980X

If (a) is true, on first pass, set (1) true and proceed to Step 20. On subsequent passes, proceed to Step 20. Otherwise, proceed to monitor (b), (c), and (d).

If (b) is true or (c) $\leq$ (d), proceed to Step 20; otherwise, proceed to monitor (e).

If (e) is true proceed to Step 17. Otherwise, return to Step 1.

(1)	MODE 2 INDICATOR	V90X8308X

Step 14. This step selects a Mode 2 OMS/RCS Return–to–Normal to be initiated at MECO Command and terminates the Orbiter Dump Enable and Orbiter Dump Inhibit commands. The OMS He/Vaport Isolation Op commands are terminated at the completion of the interconnect return–to–normal sequence.

The following signals are monitored:

(a)	MECO COMMAND FLAG	V90X8569X
(b)	OMS TO RCS INTERCONNECT COMPLETE FLAG	V90X8282X

If (a) is false, return to Step 1.

If (a) is true, one time only, terminate (3), issue (4), set (13) true, set (1), (2), and (14) false (INHIBIT), and proceed to Step 15. On subsequent passes, proceed to monitor (b).

If (b) is false, one time only, terminate (5) through (12), set (13) false, and proceed to Step 15. On subsequent passes, proceed to Step 15. Otherwise, proceed to Step 15.

(1)	ORBITER DUMP ENABLE	V93X6980X
(2)	ORBITER DUMP INHIBIT	V93X6981X
(3)	OMS TO RCS INTERCONNECT CMD	V90X8312X
(4)	OMS TO RCS RETURN TO NORMAL CONFIG CMD	V90X8313X
(5)	OMS L POD HE ISLN VLV A OP	V43K4180X
(6)	OMS L POD VAPOR ISLN VLV 1 OP	V43K4182X
(7)	OMS R POD HE ISLN VLV A OP	V43K5180X
(8)	OMS R POD VAPOR ISLN VLV 1 OP	V43K5182X
(9)	OMS L POD HE ISLN VLV B OP	V43K4181X
(10)	OMS L POD VAPOR ISLN VLV 2 OP	V43K4183X
(11)	OMS R POD HE ISLN VLV B OP	V43K5181X
(12)	OMS R POD VAPOR ISLN VLV 2 OP	V43K5183X
(13)	MODE 2 INDICATOR	V90X8308X
(14)	OMS/RCS INTERCONNECT INH/ENA CMD	V93X5348X

Step 15. This step determines if a post–MECO dump has been manually inhibited, or terminated by completion.

The following signals are monitored:

(a)	ORBITER DUMP ENABLE	V93X6980X
(b)	ORBITER DUMP INHIBIT	V93X6981X
(c)	OMS DELTA T COMPUTED	V90W8325C
(d)	OMS EQUIVALENT ON TIME	V90W8320C

If (a) is true and (c) > (d), proceed to Step 16.

If (a) is true and (c) ≤ (d), proceed to Step 20.

If (a) is false and (b) is true, proceed to Step 20.

If (a) and (b) are false, proceed to Step 23.

Step 16. This step assures the flight control system constraints and OMS system Nz constraints are satisfied in MM 602 prior to interconnecting OMS propellants to the RCS jets.

The following signals are monitored:

(a)	MM 602 DUMP INIT FLAG	(INTERNAL)
(b)	MAJOR MODE 602 FLAG	V90X8174X
(c)	NZ	V90A5381C
(d)	OMS_NZ_LIM	V99U9697C
(e)	OMS/RCS INTERCONNECT INH/ENA CMD	V93X5348X
(f)	FCS_ACCEPT_ICNCT	V90X8296X

If (a) is false, proceed to monitor (b). Otherwise, if (a) is true, proceed to Step 16A.

If (b) is true, proceed to monitor (c). Otherwise, if (b) is false, return to Step 1.

If $|(c)| \leq (d)$, issue (1) below, set (2) true, start timer (3), and proceed to monitor (e). Otherwise, if $|(c)| > (d)$, set (4) false, set (5) true, and return to Step 1.

If (e) is true (ENABLE), proceed to monitor (f). Otherwise, if (e) is false (INHIBIT), set (6) true, and return to Step 1.

If (f) is true, issue (8), terminate (9) and (10), and return to Step 1. If (f) is false, set (6) true and (7) false (INHIBIT), and return to Step 1.

(1)	CG TRIM CMD	V90X8309X
(2)	MM 602 DUMP INIT FLAG	(INTERNAL)
(3)	CG TRIM DELAY TIMER	(INTERNAL)
(4)	ORBITER DUMP ENABLE	V93X6980X
(5)	ORBITER DUMP INHIBIT	V93X6981X
(6)	OME ONLY FLAG	V90X8051X
(7)	OMS/RCS INTERCONNECT INH/ENA CMD	V93X5348X
(8)	OMS TO RCS INTERCONNECT CMD	V90X8312X
(9)	OMS TO RCS RTRN TO NORM CONFIG CMD	V90X8313X
(10)	ABORT RCS + X ON CMD	V90X8314X

Step 16A. This step insures the OMS/RCS interconnect sequence has completed before continuing the execution of an OMS propellant dump if an interconnect is requested. This step also issues the 4+ X jet command to provide propellant settling, and insures the OMS system NZ constraints are satisfied prior to OMS ignition.

The following signals are monitored:

(a)	OMS/RCS INTERCONNECT INH/ENA CMD	V93X5348X
(b)	OMS TO RCS INTERCONNECT COMPLETE FLAG	V90X8282X
(c)	CG_TRIM_DELAY	V97U9836C
(d)	CG TRIM DELAY TIMER	(INTERNAL)
(e)	NZ	V90A5381C
(f)	OMS_NZ_LIM	V99U9697C

If (a) is true (ENABLE), proceed to monitor (b). Otherwise, if (a) is false (INHIBIT), issue (1) and proceed to monitor (c).

If (b) is true, issue (1) and proceed to monitor (c). Otherwise, if (b) is false, return to Step 1.

If (c) is ≤ (d), on first pass, proceed to monitor (e) and (f). On subsequent passes, proceed to Step 17. Otherwise, if (c) > (d), return to Step 1.

If (e) is ≤ (f), proceed to Step 17. Otherwise, if (e) is > (f), set (2) true and proceed to Step 18.

(1)	ABORT RCS + X ON CMD	V90X8314X
(2)	OMS NZ DUMP INHIBIT FLAG	(INTERNAL)

Step 17. This step initiates the contingency dumping on OMS propellant through the OMS engines in OPS 1 and OPS 6 and increments the OMS dump timer.

The following signals are monitored:

(a)	IGN PRESS DELAY INIT FLAG	(INTERNAL)
(b)	OMS–L ON CMD IND	V90X8271X
(c)	OMS–R ON CMD IND	V90X8272X
(d)	IGN_PRESS_DELAY	V97U9838C
(e)	IGN PRESS DELAY TIMER	(INTERNAL)
(f)	20 RCS NULL JETS ON CMD	V90X8317X
(g)	MAJOR MODE 102 FLAG	V90X8158X

If (a) is true, proceed to monitor (b) and (c). Otherwise, start timer (e), set (4) true, and proceed to monitor (b) and (c).

If (b) and (c) are both false, terminate (2), issue (3), and return to Step 1.

If either (b) or (c) is true, increment (1) by 80 msec and proceed to monitor (d).

If (d) ≤ (e) or (f) is true, proceed to monitor (g). Otherwise, return to Step 1.

If (g) is true, proceed to Step 19. Otherwise, proceed to Step 18.

(1)	OMS EQUIVALENT ON TIME	V90W8320C
(2)	OMS CUTOFF CMD	V90X8318X
(3)	ABORT OMS IGN CMD	V90X8319X
(4)	IGN PRESS DELAY INIT FLAG	(INTERNAL)

Step 18. This step controls the termination of the contingency dumping of OMS propellants based on OMS and/or RCS system constraints in MM602.

The following signals are monitored:

(a)	NZ	V90A5381C
(b)	OMS_NZ_LIMIT	V99U9697C
(c)	OME ONLY FLAG	V90X8051X
(d)	OMS/RCS INTERCONNECT INH/ENA CMD	V93X5348X

(e)	CONTINGENCY_NZ_LIMIT	V97U9837C
(f)	OMS EQUIVALENT ON TIME	V90W8320C
(g)	CONT_OMS_RCS_ICNCT_TERM_FU_TIME	V99U9718C
(h)	OMS NZ DUMP INHIBIT FLAG	(INTERNAL)

If | (a) | > (b) for three consecutive passes, or (h) is true, terminate (1), (3), (4), (5), and (13). Issue (2) and (6), set (7), (11), and (12) false, set (8) and (9) true, set (10) false (INHIBIT), reset (14) and (15), and proceed to Step 22. Otherwise go to the next if statement.

If (c) is true or (d) is false (INHIBIT) or [| (a) | > (e) for three consecutive passes] or (f) ≥ (g), terminate (3) through (5), issue (6), set (9) true and (10) false (INHIBIT), and proceed to Step 22. Otherwise, proceed to Step 19.

(1)	ABORT OMS IGN CMD	V90X8319X
(2)	OMS CUTOFF CMD	V90X8318X
(3)	ABORT RCS +X ON CMD	V90X8314X
(4)	20 RCS NULL JETS ON CMD	V90X8317X
(5)	OMS TO RCS INTERCONNECT CMD	V90X8312X
(6)	OMS TO RCS RETURN TO NORMAL CONFIG CMD	V90X8313X
(7)	ORBITER DUMP ENABLE	V93X6980X
(8)	ORBITER DUMP INHIBIT	V93X6981X
(9)	OME ONLY FLAG	V90X8051X
(10)	OMS/RCS INTERCONNECT INH/ENA CMD	V93X5348X
(11)	MM602 DUMP INIT FLAG	(INTERNAL)
(12)	IGN PRESS DELAY INIT FLAG	(INTERNAL)
(13)	C.G. TRIM CMD	V90X8309X
(14)	IGN PRESS DELAY TIMER	(INTERNAL)
(15)	C.G. TRIM DELAY TIMER	(INTERNAL)

Step 19. This step issues the abort dump commands and determines the proper bias and scale factor to be used based on the Manifold Jet Inhibit flags from the OMS/RCS Interconnect Sequence.

Monitor the following signals:

(a)	AFT MANIFOLD 1/2 JET INH FLAG	V90X8285X
(b)	AFT MANIFOLD 3/4/5 JET INH FLAG	V90X8286X
(c)	OMS EQUIVALENT ON TIME	V90W8320C
(d)	OMS TIME SCALE FACTOR	V94J3755C
(e)	OMS TO RCS INTERCONNECT COMPLETE FLAG	V90X8282X

If (e) is true, issue (5) and (6), and proceed to monitor (a) and (b). Otherwise, return to Step 1.

If (a) and (b) are both false, increment (c) by (1), set (d) equal to (2), and return to Step 1.

If (a) or (b) is true, increment (c) by (3), set (d) equal to (4), and return to Step 1.

(1)	RCS_24_JET_FU_BIAS	V99U9772C
(2)	RCS_24_JET_FU_SCALE	V99U9773C
(3)	RCS_10_JET_FU_BIAS	V99U9775C
(4)	RCS_10_JET_FU_SCALE	V99U9776C

(5)	ABORT RCS +X ON CMD	V90X8314X
(6)	20 RCS NULL JETS ON CMD	V90X8317X

Step 20. This step is the first step of a common routine ending at Step 22 which performs those functions associated with completion or termination of the manually selected dump for post–MECO (MM102 and 602).

The following signals are monitored:

(a)	OMS–L ON CMD IND	V90X8271X
(b)	OMS–R ON CMD IND	V90X8272X

If (a) or (b) is true, terminate (1) through (4) and (6), issue (7) and (8), set (9) true, set (5), (11), and (12) false, set (10) false (INHIBIT), reset (13) and (14), and proceed to Step 21.

If (a) and (b) are both false, proceed to Step 21.

(1)	C.G. TRIM CMD	V90X8309X
(2)	ABORT OMS IGN CMD	V90X8319X
(3)	ABORT RCS + X ON CMD	V90X8314X
(4)	20 RCS NULL JETS ON CMD	V90X8317X
(5)	ORBITER DUMP ENABLE	V93X6980X
(6)	OMS TO RCS INTERCONNECT CMD	V90X8312X
(7)	OMS CUTOFF CMD	V90X8318X
(8)	OMS TO RCS RETURN TO NORMAL CONFIG CMD	V90X8313X
(9)	ORBITER DUMP INHIBIT	V93X6981X
(10)	OMS/RCS INTERCONNECT INH/ENA CMD	V93X5348X
(11)	MM602 DUMP INIT FLAG	(INTERNAL)
(12)	IGN PRESS DELAY INIT FLAG	(INTERNAL)
(13)	IGN PRESS DELAY TIMER	(INTERNAL)
(14)	C.G. TRIM DELAY TIMER	(INTERNAL)

Step 21. This step determines if post–MECO functions are to be performed.

The following signals are monitored:

(a)	MAJOR MODE 602 FLAG	V90X8174X
(b)	NZ	V90A5381C
(c)	CONTINGENCY_NZ_LIM	V97U9837C

If (a) is true, and $|(b)| > (c)$, proceed to Step 22. Otherwise, if (a) is false or $|(b)| \leq (c)$, return to Step 1.

Step 22. This step selects the manual post–MECO RCS propellant burn timer.

The following signals are monitored:

(a)	OMS TO RCS INTERCONNECT COMPLETE FLAG	V90X8282X

If (a) is false, then one time only, set (1) equal to (2), and proceed to Step 23.

If (a) is true, return to Step 1.

(1)	AFT RCS DUMP DURATION	V93W6958C
(2)	T_RCS_REF	V97U9828C

Step 23. This step controls the RTLS post–MECO RCS propellant burn. The crew has the capability to terminate RCS propellant burn via override display.

The following signals are monitored:

(a)	MM 602 FLAG	V90X8174X
(b)	MM 603 FLAG	V93X0013X
(c)	AFT RCS DUMP COUNTER	V90W8229C
(d)	AFT RCS DUMP DURATION	V93W6958C
(e)	AFT RCS DUMP ENABLE	V93X6949X

If (a) is true and 20 seconds have elapsed since (a) was true, or (b) is true, proceed to the next if statement; otherwise, return to Step 1.

If (d) $\leq$ (c), terminate output (1), reset output (2) and return to Step 1.

If (d) > (c) and (e) is true, issue output (1), increment (c) by 80 msec and return to Step 1.

If (d) > (c) and (e) is false, terminate output (1) and return to Step 1.

(1)	ABORT RCS + X ON CMD	V90X8314X
(2)	AFT RCS DUMP ENABLE	V93X6949X

Step 24. This step initializes the ENTRY OMS FUEL BURN TIME, and determines if an OMS/RCS Interconnect is required. This step will also initiate an automatic OMS dump in a TAL abort, or a manual OMS dump by the crew via the Override display (if all constraints are satisfied), and pressurizes the OMS tanks.

The following signals are monitored:

(a)	START_DUMP_VELOCITY	V99U9573C
(b)	GND REL VEL MAGNITUDE IN M50 SYS	V95L0151C
(c)	ORBITER DUMP ENABLE	V93X6980X
(d)	OMS/RCS INTERCONNECT INH/ENA CMD	V93X5348X
(e)	OMS_RCS_INTERCON_INIT_FU_TIME	V99U9716C
(f)	OMS EQUIVALENT ON TIME	V90W8320C
(g)	OMS DELTA T COMPUTED	V90W8325C
(h)	ENTRY_OMS_FUEL_BURN_TIME	V99U9571C
(i)	FCS_ACCEPT_ICNCT	V90X8296X
(j)	ORBITER DUMP INHIBIT	V93X6981X
(k)	DUMP ENA INIT FLAG	(INTERNAL)

If (a) $\geq$ (b) proceed to Step 29. Otherwise, if (a) < (b), proceed to the next if statement.

If first pass, set (g) equal to (h) and if (e) > (f), set (15) equal to true (ENABLE), and proceed to monitor (i) and (j). Otherwise, if first pass and (e) $\leq$ (f), proceed to monitor (i) and (j). On subsequent passes, proceed to monitor (i) and (j).

If (i) is true and (j) is false, on first pass, set (c) true and proceed to monitor (c). On subsequent passes, proceed to monitor (c). Otherwise, proceed to monitor (c).

If (c) is false, proceed to Step 28. Otherwise, if (c) is true, proceed to monitor (k).

If (k) is false, issue outputs (1) through (9), set (17) true, and proceed to monitor (d) and (i). Otherwise, if (k) is true, proceed to Step 25.

If (d) is true (ENABLE) and (i) is true, issue (13), terminate (14), start timer (16), and proceed to Step 28. Otherwise, issue (10), set (11) and (18) true, set (15) false (INHIBIT), start timer (12), and proceed to Step 28.

(1)	C.G. TRIM CMD	V90X8309X
(2)	OMS L POD HE ISLN VLV A OP	V43K4180X
(3)	OMS L POD VAPOR ISLN VLV 1 OP	V43K4182X
(4)	OMS R POD HE ISLN VLV A OP	V43K5180X
(5)	OMS R POD VAPOR ISLN VLV 1 OP	V43K5182X
(6)	OMS L POD HE ISLN VLV B OP	V43K4181X
(7)	OMS L POD VAPOR ISLN VLV 2 OP	V43K4183X
(8)	OMS R POD HE ISLN VLV B OP	V43K5181X
(9)	OMS R POD VAPOR ISLN VLV 2 OP	V43K5183X
(10)	ABORT RCS + X ON CMD	V90X8314X
(11)	OME ONLY FLAG	V90X8051X
(12)	RCS 4 + X ON TIME	(INTERNAL)
(13)	OMS TO RCS INTERCONNECT CMD	V90X8312X
(14)	OMS TO RCS RETURN TO NORMAL CONFIG CMD	V90X8313X
(15)	OMS/RCS INTERCONNECT INH/ENA CMD	V93X5348X
(16)	C.G. TRIM DELAY TIMER	(INTERNAL)
(17)	DUMP ENA INIT FLAG	(INTERNAL)
(18)	TWO OME DUMP FLAG	(INTERNAL)

Step 25. This step monitors the TWO OME DUMP FLAG to determine if an OMS only dump is to be processed and will monitor the RCS 4 + X ON TIME and issue the dump commands at the proper intervals.

The following signals are monitored:

(a)	TWO OME DUMP FLAG	(INTERNAL)
(b)	RCS 4 + X ON TIMER	(INTERNAL)

If (a) is false, proceed to Step 26.

If (a) is true and (b) $\geq$ 15 seconds, one time only, issue (1), terminate (2), and proceed to the next if statement. Otherwise, proceed to the next if statement.

If (a) is true and (b) $\geq$ 20 seconds, one time only, terminate (3), and proceed to Step 28. Otherwise, proceed to Step 28.

(1)	ABORT OMS IGN CMD	V90X8319X
(2)	OMS CUTOFF CMD	V90X8318X
(3)	ABORT RCS + X ON CMD	V90X8314X

Step 26. This monitors the OMS/RCS I/C ENA/INH flag to determine if the interconnect is to terminated either by crew selection or upon burn completion or for exceedance of systems constraints in OPS 3.

The following signals are monitored:

(a)	OMS/RCS INTERCONNECT INH/ENA CMD	V93X5348X
(b)	NZ	V90A5381C
(c)	CONTINGENCY_NZ_LIM	V97U9837C
(d)	OMS EQUIVALENT ON TIME	V90W8320C
(e)	OMS_RCS_INTERCON_TERM_FU_TIME	V99U9952C
(f)	OMS TO RCS INTERCONNECT COMPLETE FLAG	V90X8282X

If [(a) is false (INHIBIT) or | (b) | > (c) continuously for more than 1 second or (d) is ≥ (e)], terminate (1), (2), and (4), issue (3), set (5) false (INHIBIT), set (6) true, and proceed to Step 27. Otherwise, proceed to monitor (f).

If (f) is true, proceed to Step 27. Otherwise, proceed to Step 28.

(1)	ABORT RCS + X ON CMD	V90X8314X
(2)	20 RCS NULL JETS ON CMD	V90X8317X
(3)	OMS TO RCS RETURN TO NORMAL CONFIG CMD	V90X8313X
(4)	OMS TO RCS INTERCONNECT CMD	V90X8312X
(5)	OMS/RCS INTERCONNECT INH/ENA CMD	V93X5348X
(6)	OME ONLY FLAG	V90X8051X

Step 27. This step initiates the OMS plus 24 RCS jet dump after the designed time delays.

The following signals are monitored:

(a)	CG_TRIM_DELAY	V97U9836C
(b)	CG TRIM DELAY TIMER	(INTERNAL)
(c)	OMS/RCS INTERCONNECT INH/ENA CMD	V93X5348X
(d)	IGN_PRESS_DELAY	V97U9838C
(e)	IGN PRESS DELAY TIMER	(INTERNAL)
(f)	AFT MANIFOLD 1/2 JET INH FLAG	V90X8285X
(g)	AFT MANIFOLD 3/4/5 JET INH FLAG	V90X8286X
(h)	OMS EQUIVALENT ON TIME	V90W8320C
(i)	OMS TIME SCALE FACTOR	V94J3755C
(j)	OMS–L ON CMD IND	V90X8271X
(k)	OMS–R ON CMD IND	V90X8272X

If (a) ≤ (b), proceed to monitor (j) and (k). Otherwise, proceed to Step 28.

If both (j) and (k) are false, issue (1), terminate (2), start timer (e), and proceed to monitor (c), (d), and (e). Otherwise, proceed to monitor (c), (d), and (e).

If (c) is true (ENABLE) and (d) ≤ (e), issue (3) and (4), and proceed to monitor (f) and (g). Otherwise, proceed to Step 28.

If (f) or (g) is true, increment (h) by (7), set (i) equal to (8), and proceed to Step 28. Otherwise, increment (h) by (5), set (i) equal to (6), and proceed to Step 28.

(1)	ABORT OMS IGN CMD	V90X8319X
(2)	OMS CUTOFF CMD	V90X8318X
(3)	ABORT RCS + X OM CMD	V90X8314X
(4)	20 RCS NULL JETS ON CMD	V90X8317X
(5)	RCS_24_JET_FU_BIAS	V99U9772C
(6)	RCS_24_JET_FU_SCALE	V99U9773C
(7)	RCS_10_JET_FU_BIAS	V99U9775C
(8)	RCS_10_JET_FU_SCALE	V99U9776C

Step 28. This step increments the OMS dump timer and terminates the OMS propellant dump by crew input, dump completion or OMS system constraints in OPS 3.

The following signals are monitored:

(a)	ORBITER DUMP INHIBIT	V93X6981X
(b)	OMS EQUIVALENT ON TIME	V90W8320C
(c)	OMS DELTA T COMPUTED	V90W8325C
(d)	NZ	V90A5381C
(e)	OMS_NZ_LIM	V99U9697C
(f)	OMS–L ON CMD IND	V90X8271X
(g)	OMS–R ON CMD IND	V90X8272X

If [(a) is true] or [(b) is $\geq$ (c)] or [| (d) | > (e) continuously for more than 1.0 sec], terminate outputs (1) through (13), issue (14) and (15) set (21) true, set (16) and (18) false and (17) false (INHIBIT), set (22) true, reset (19), (20), and (23), and return to Step 1. Otherwise, go to the next if statement.

If (f) or (g) is true, increment (b) by 80 msec, and return to Step 1. Otherwise, return to Step 1.

(1)	C.G. TRIM CMD	V90X8309X
(2)	ABORT OMS IGN CMD	V90X8319X
(3)	ABORT RCS + X ON CMD	V90X8314X
(4)	20 RCS NULL JETS ON CMD	V90X8317X
(5)	OMS TO RCS INTERCONNECT CMD	V90X8312X
(6)	OMS L POD HE ISLN VLV A OP	V43K4180X
(7)	OMS L POD VAPOR ISLN VLV 1 OP	V43K4182X
(8)	OMS R POD HE ISLN VLV A OP	V43K5180X
(9)	OMS R POD VAPOR ISLN VLV 1 OP	V43K5182X
(10)	OMS L POD HE ISLN VLV B OP	V43K4181X
(11)	OMS L POD VAPOR ISLN VLV 2 OP	V43K4183X
(12)	OMS R POD HE ISLN VLV B OP	V43K5181X
(13)	OMS R POD VAPOR ISLN VLV 2 OP	V43K5183X
(14)	OMS CUTOFF CMD	V90X8318X
(15)	OMS TO RCS RETURN TO NORMAL CONFIG CMD	V90X8313X
(16)	ORBITER DUMP ENABLE	V93X6980X
(17)	OMS/RCS INTERCONNECT INH/ENA CMD	V93X5348X
(18)	DUMP ENA INIT FLAG	(INTERNAL)
(19)	IGN PRESS DELAY TIMER	(INTERNAL)
(20)	RCS 4 + X ON TIMER	(INTERNAL)
(21)	ORBITER DUMP INHIBIT	V93X6981X
(22)	OME ONLY FLAG	V90X8051X

(23) C.G. TRIM DELAY TIMER (INTERNAL)

Step 29. This step controls the MM304 RCS propellant dump via the RCS 4 + X jets.

The following signals are monitored:

(a)	AFT RCS DUMP ENABLE	V93X6849X
(b)	AFT RCS DUMP DURATION	V93W6958C
(c)	AFT RCS DUMP COUNTER	V90W8229C
(d)	AFT RCS TTG SF	V94J3757C

If (a) is true, proceed to the next if statement. Otherwise, terminate (1), and return to Step 1.

If (b) > (c), issue (1) below, increment (c) by the product of (d) and 80 msec, and return to Step 1.

If (b) ≤ (c), terminate (1), set (a) = false, and return to Step 1.

(1) ABORT RCS + X ON CMD V90X8314C

ABORT CONTROL SEQUENCE INITIALIZATION

NOMENCLATURE	INITIAL VALUE	UNITS
BURN TIME SEL COMPLETE FLAG	FALSE	
ATO ABORT SELECTED	FALSE	
MM602 DUMP INIT FLAG	FALSE	
CG TRIM DELAY TIMER	0.0	SEC
IGN PRESS DELAY TIMER	0.0	SEC
DUMP ENA INIT FLAG	FALSE	
RCS 4 + X ON TIMER	0.0	SEC
OME ONLY FLAG	FALSE	
PREMECO ICNCT COMPLETE FLAG	FALSE	
IGN PRESS DELAY INIT	FALSE	
2 OME DUMP FLAG	FALSE	
OMS NZ DUMP INHIBIT FLAG	FALSE	
SERC FLAG	FALSE	

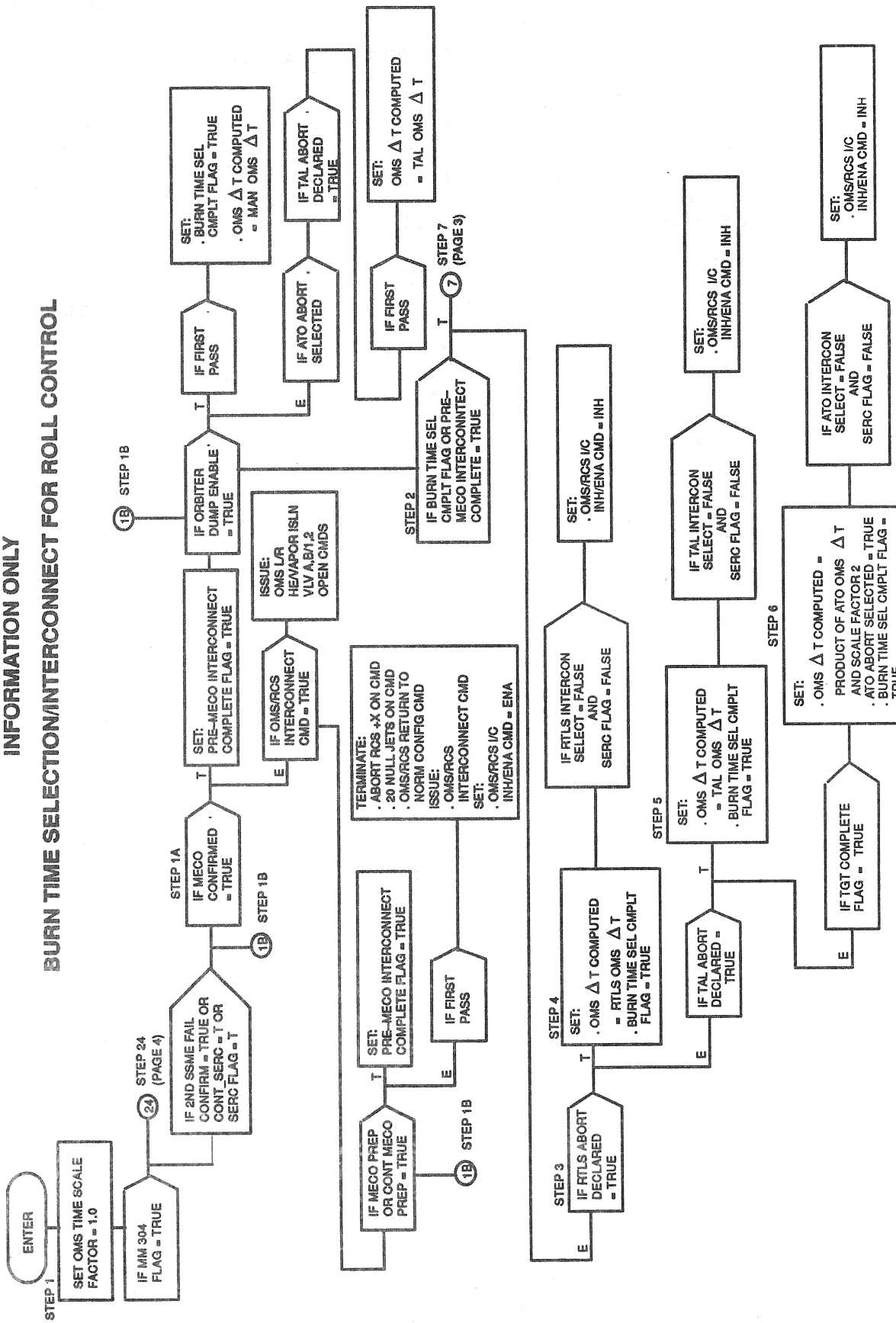

Figure 4.192. Abort Control Sequence (Sheet 1 of 7)

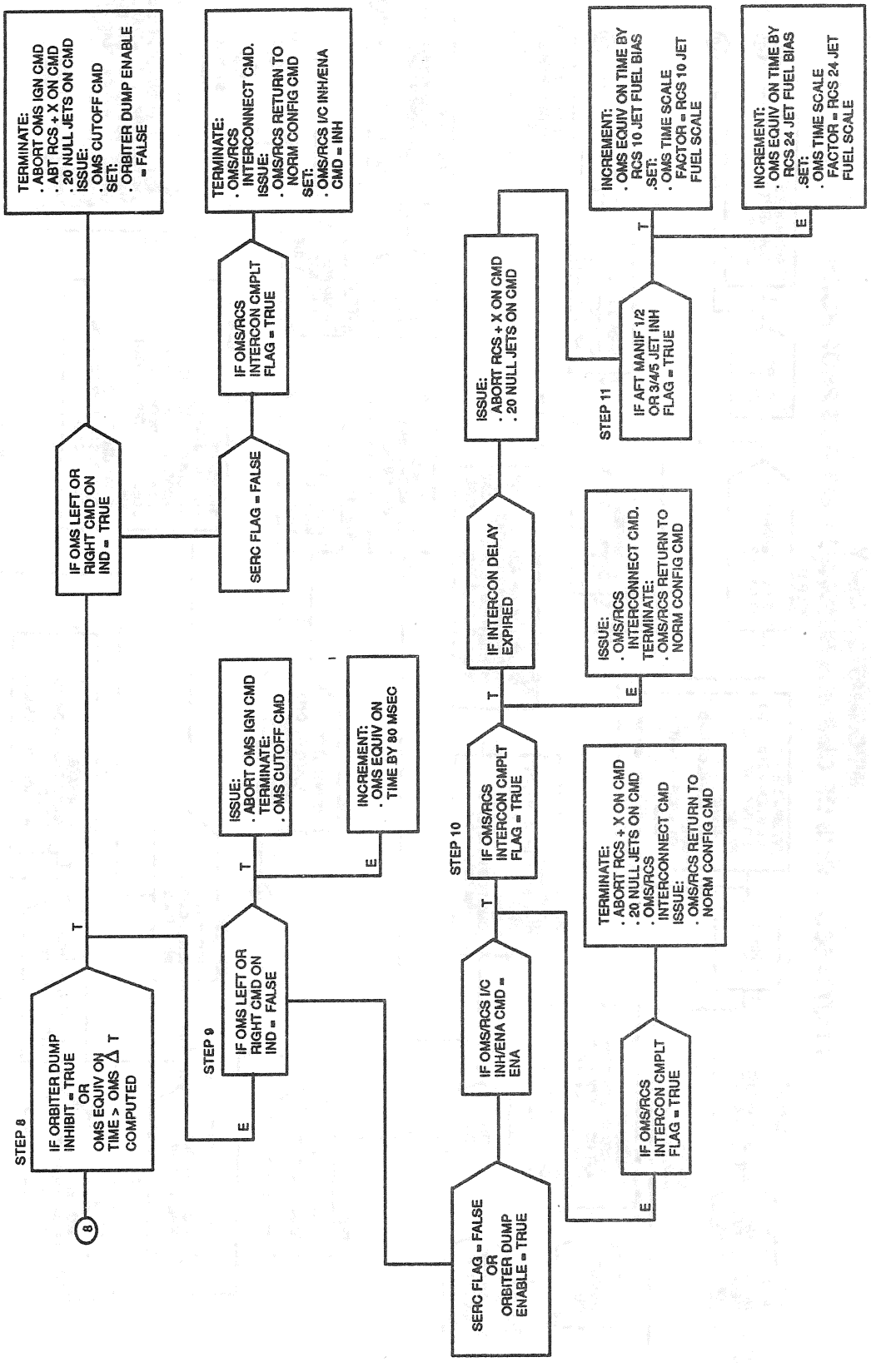

Figure 4.192. Abort Control Sequence (Sheet 2 of 7)

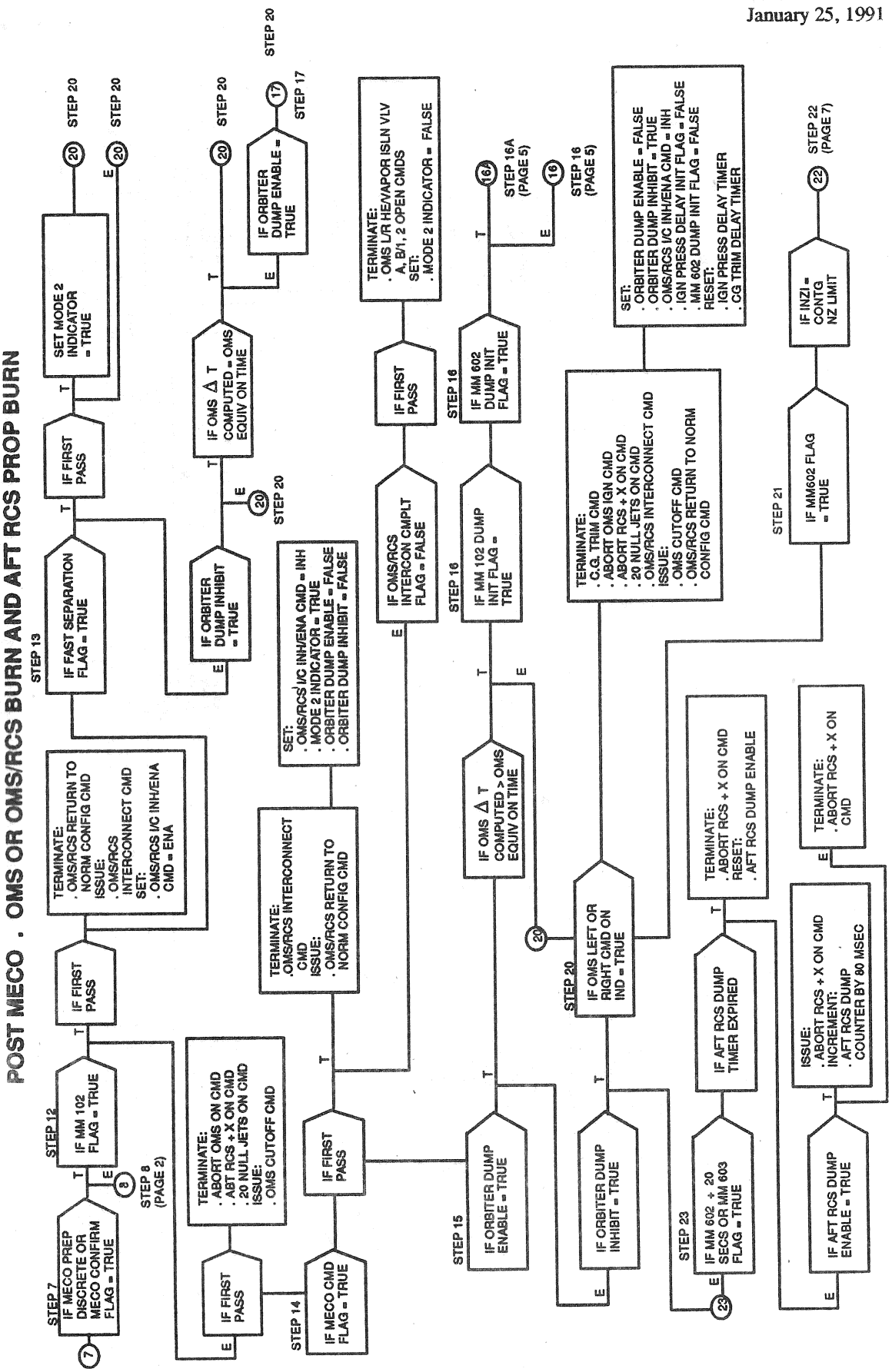

Figure 4.192. Abort Control Sequence (Sheet 3 of 7)

MAJOR MODE 304 – OMS OR OMS/RCS BURN AND AFT RCS PROP BURN

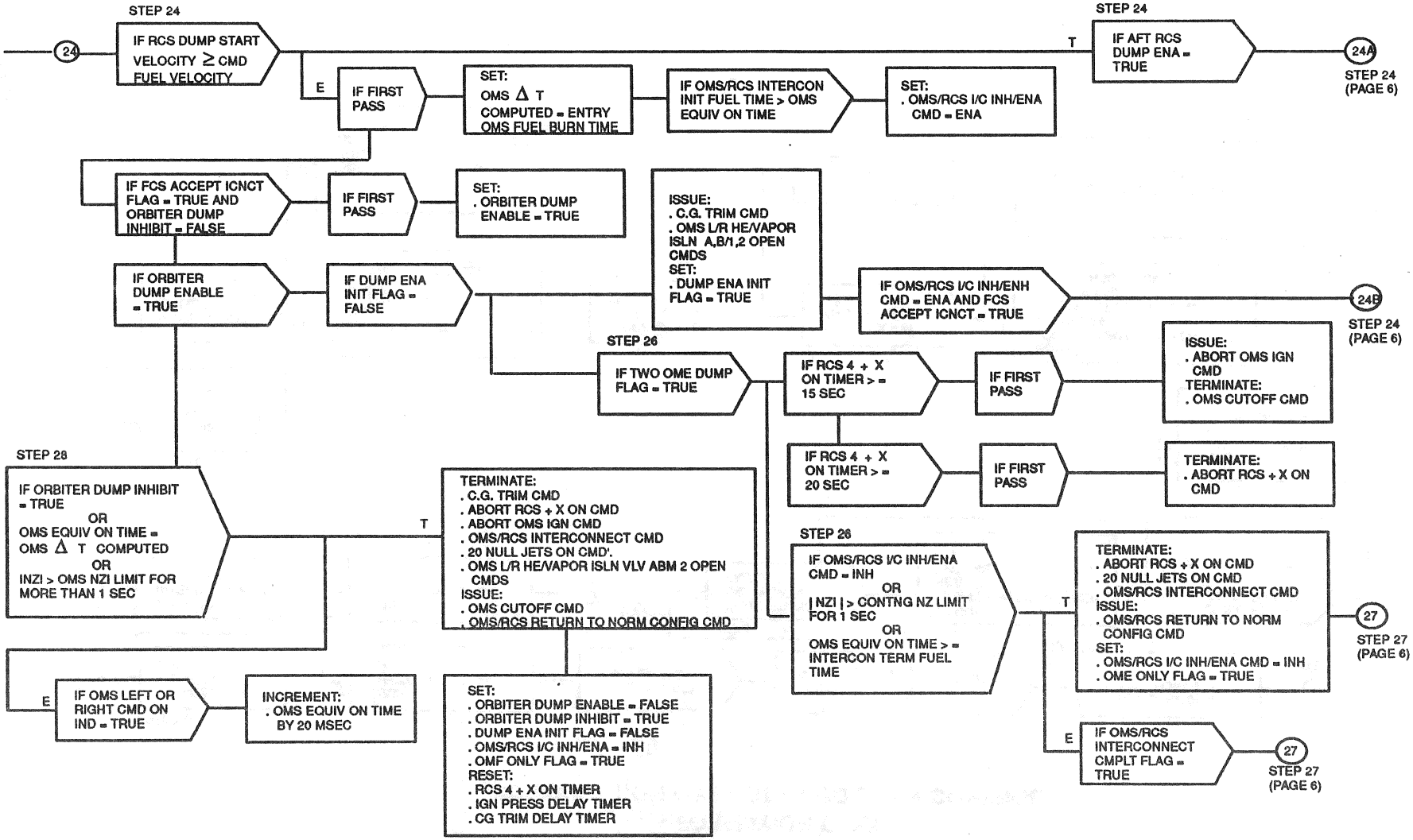

Figure 4.192. Abort Control Sequence (Sheet 4 of 7)

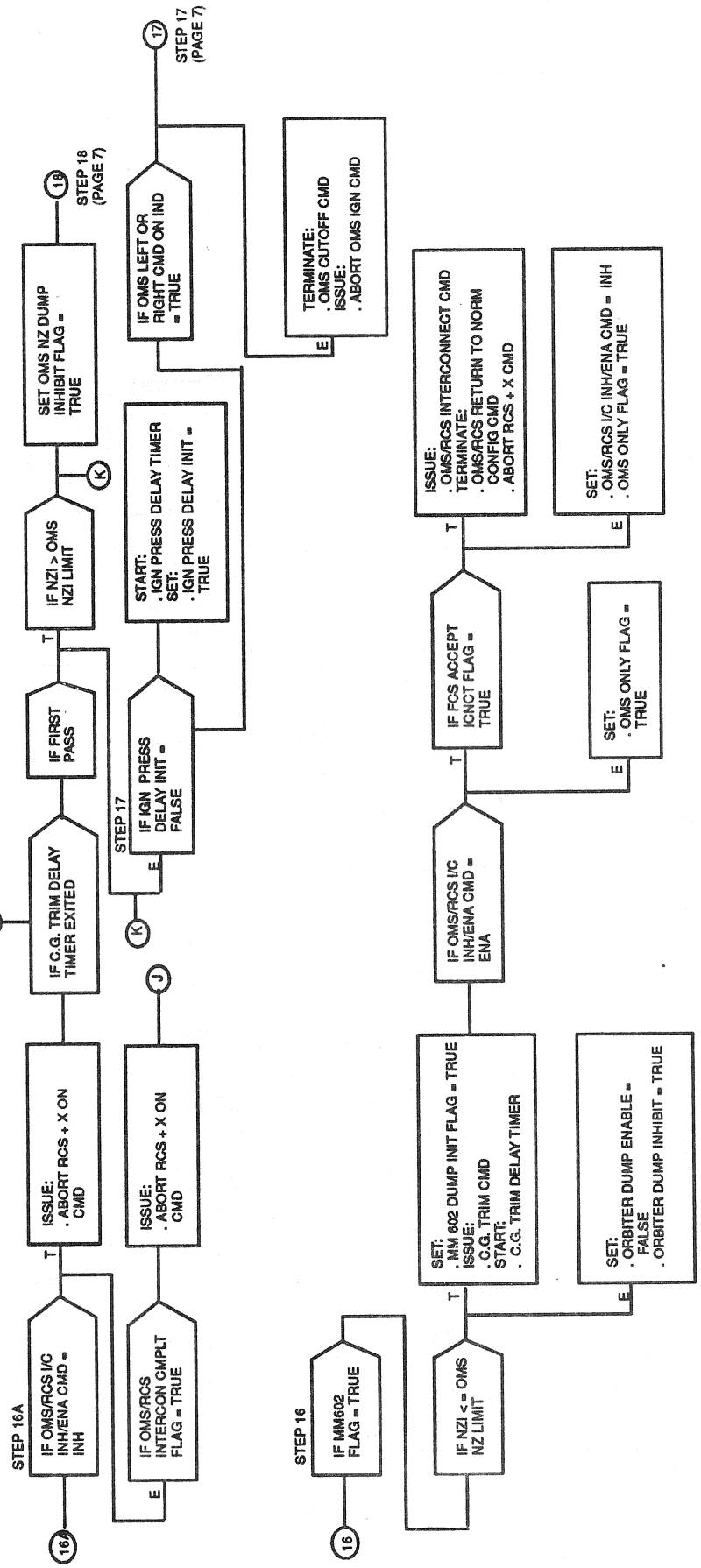

Figure 4.192. Abort Control Sequence (Sheet 5 of 7)

CONTINUATION OF MM304 BURN CONTROL

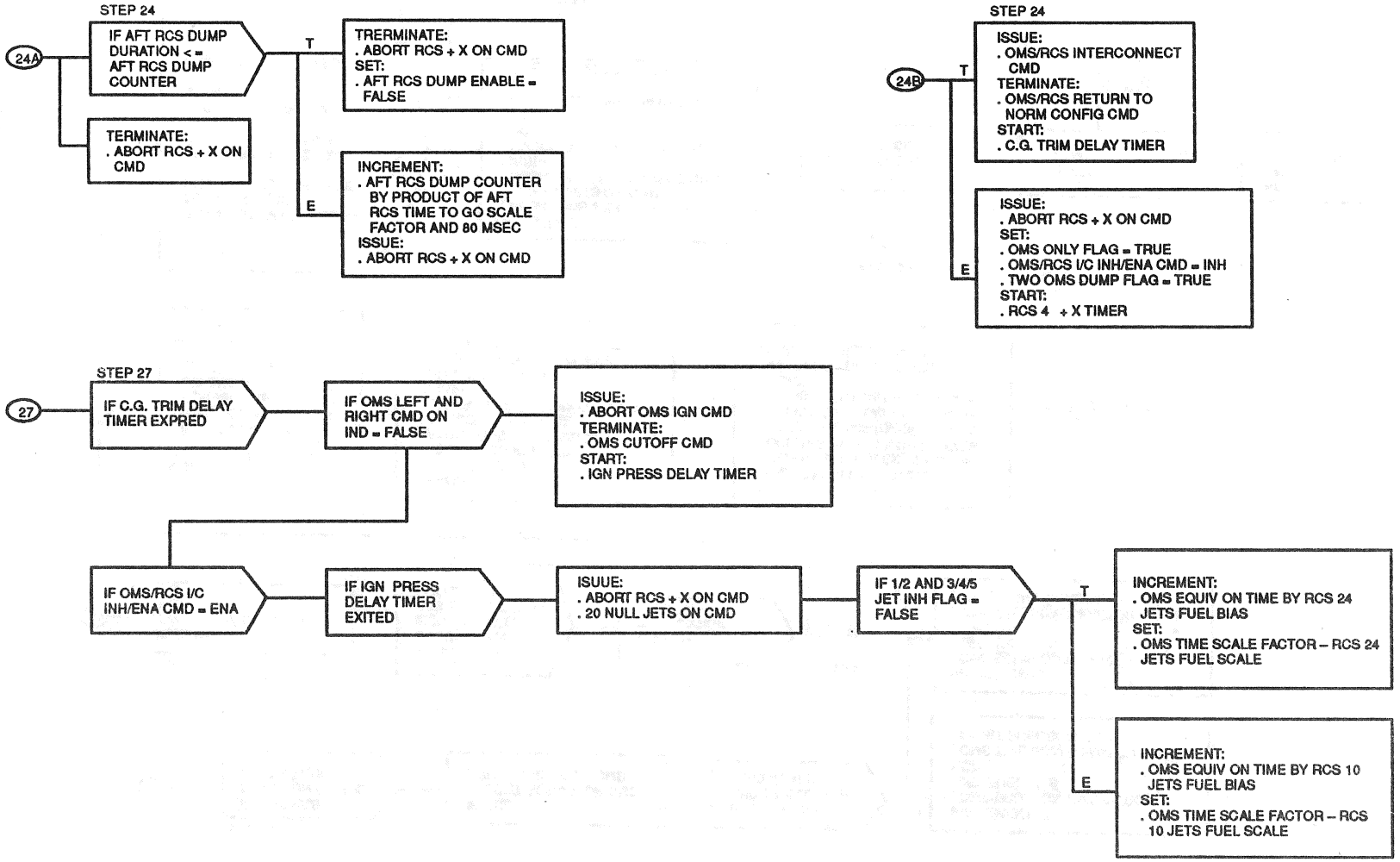

Figure 4.192. Abort Control Sequence (Sheet 6 of 7)

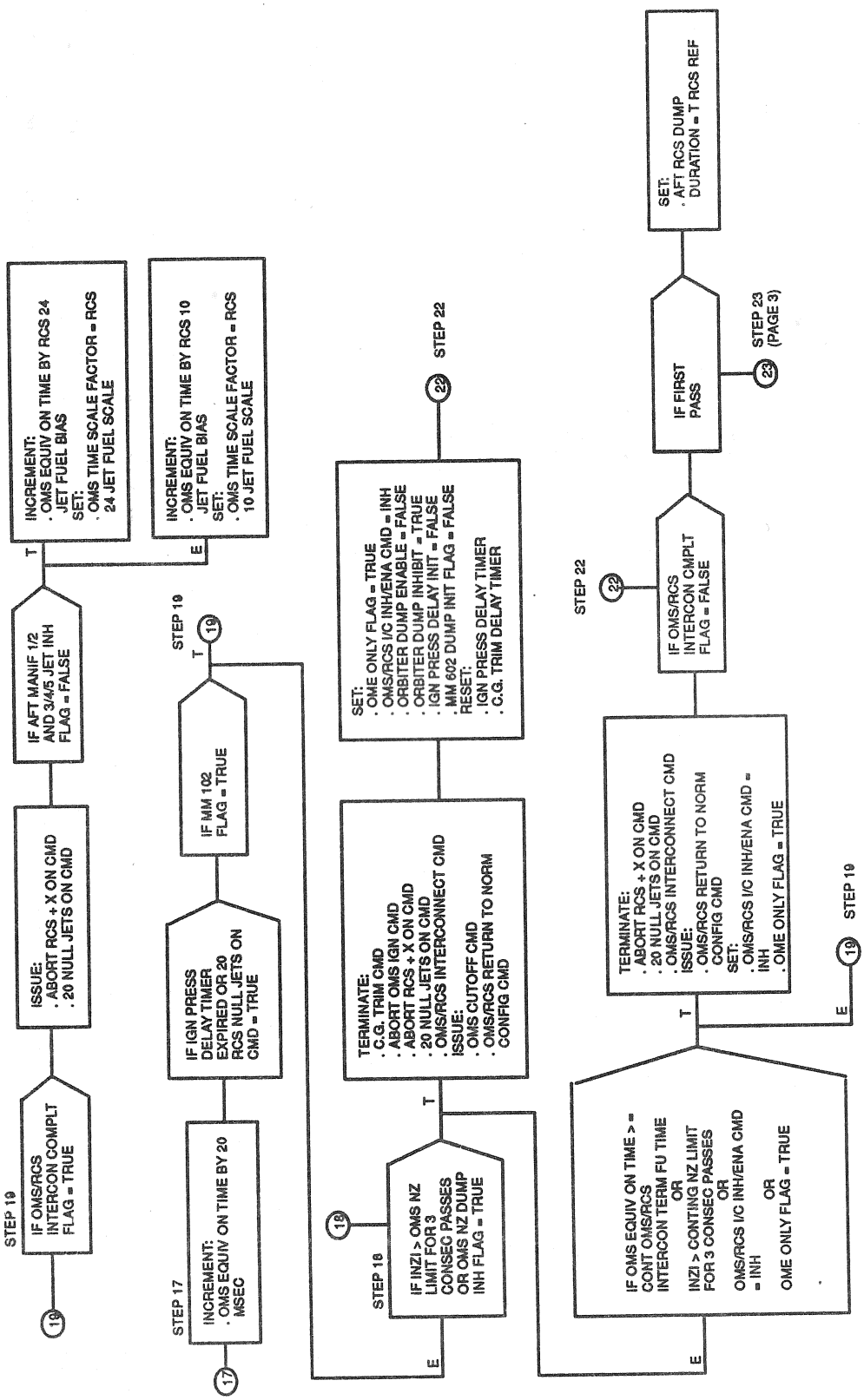

Figure 4.192. Abort Control Sequence (Sheet 7 of 7)

TABLE 4.3.1.4–1. ABORT CONTROL SEQUENCER (G4.192) INPUT/OUTPUT FUNCTIONAL PARAMETERS

DBFN: D3B027-F PN: VP707100049P00L INPUT FUNCTIONAL PARAMETERS FOR ABT CNTL SEQ

FSSR NAME	M/S ID	NOMENCLATURE	SOURCE	UNITS	DATA TYPE	PREC	LAST CRS
AFT_RCS_DUMP_ENABLE	V93X6949XA	AFT RCS DUMP ENABLE	OVERRIDE DISP		BD		90114B
							89149B
AFT_RCS_TTG_SF	V94J3757CA	AFT RCS TIME SCALE FACTOR	E/L RCS CMD SOP				90114B
CLOCK/CLOCKTIME	V91W5000C	CLOCK-COMPUTER(GMT)	FCOS	S			
CONT_MECO_PREP_FLAG	V90X8480XA	CONTINGENCY MECO PREP DISCRETE	PW RTLS GUID				90114B
CONT_MECO_PREP_FLAG	V90X8480XB	CONTINGENCY MECO PREP DISCRETE	XXXXXX TRAJ DISP				89990E
CONT_SERC	V93X6682X	CONT SINGLE ENG ROLL CNTL FLAG	XXXXXX TRAJ DISP		BD		89990E
FAST_SEP_FLAG	V90X8267X	FAST SEPARATION FLAG	ET SEP SEQ				79643A
FCS_ACCEPT_ICNCT	V90X8296XB	INTERCONNECTED DUMP CONSTRAINT	GRTLS DAP				90114B
FCS_ACCEPT_ICNCT	V90X8296XA	INTERCONNECTED DUMP CONSTRAINT	AEROJET DAP				90114B
GUID_MECO_PREP_FLAG	V90X1989XA	MECO PREPARATION DISCRETE	ASC 2STG GUID				
GUID_MECO_PREP_FLAG	V90X1989XB	MECO PREPARATION DISCRETE	PW RTLS GUID				
K2	V90J8517C	SCALE FACTOR 2	AOA/ATO TGT				
MECO_CMD	V90X8569XA	MECO COMMAND FLAG	SSME OPS				90114B
MECO_CONFIRMED	V90X8561X	MECO CONFIRMED FLAG	SSME OPS		BD		89990E
							89599C
MM_CODE_102/MM_102	V90X8158X	MAJOR MODE 102 FLAG	MSC				89990E
							90115
MM_CODE_304/MM_304	V90X8161X	MAJOR MODE 304 FLAG	MSC				89991E
MM_CODE_602/MM_602	V90X8174X	MAJOR MODE 602 FLAG	MSC				89599C
MM_CODE_603/MM_603	V90X8122X	MAJOR MODE 603 FLAG	MSC				89599C
NZ	V90A5381C	SELECTED AA NORMAL ACCEL	SF	G	SPL		89474B
OMS_L_ON_CMD_IND	V90X8271X	OMS-L ON CMD IND	OMS FIRE SEQ				90120B
							89461
OMS_R_ON_CMD_IND	V90X8272X	OMS-R ON CMD IND	OMS FIRE SEQ				90120B
							89461
ORBITER_DUMP_ENA	V93X6980XA	ORBITER DUMP ENABLE	OVERRIDE SPEC				89449
ORBITER_DUMP_ENA	V93X6980XD	ORBITER DUMP ENABLE	XXXXXX TRAJ DISP				89990E
ORBITER_DUMP_INH	V93X6981XA	ORBITER DUMP INHIBIT	OVERRIDE SPEC				89449
ORBITER_DUMP_INH	V93X6981XB	ORBITER DUMP INHIBIT	XXXXXX TRAJ DISP				89990E
REL_VEL_MAG/V	V95L0151CC	GND REL VEL MAGNITUDE IN M50 SYS	ENT UPP	FT/S			90114B
							89250B
S_ABORT_CONTROL	V90X8504X	TGT COMPLETE FLAG	AOA/ATO TGT				
SEC_ME_FL_CNFM	V90X1721X	2ND SSME FAIL CONFIRM	ASC DAP				89990E
TAL_ABORT_DECLARED	V90X8658X	TAL ABORT DECLARED	MSC				89245D
	V90X8282X	OMS TO RCS INTERCONNECT COMP FLAG	ABT OMS/RCS CONN		BD		90114B
							89561A
	V90X8285X	AFT MANIFOLD 1/2 JET INH FLAG *	ABT OMS/RCS CONN		BD		90114B
							59126H
	V90X8286X	AFT MANIFOLD 3/4/5 JET INH FLAG	ABT OMS/RCS CONN		BD		90114B
							59126H
	V90W8325CB	OMS DELTA T COMPUTED	OVERRIDE SPEC	S	SPL		90114B

TABLE 4.3.1.4–1. ABORT CONTROL SEQUENCER (G4.192) INPUT/OUTPUT FUNCTIONAL PARAMETERS

DBFN: D3B027-F PN: VP707100049P00L INPUT FUNCTIONAL PARAMETERS FOR ABT CNTL SEQ

FSSR NAME	M/S ID	NOMENCLATURE	SOURCE	UNITS	DATA TYPE	PREC	LAST CRS
	V90X8637XA	RTLS ABORT DECLARED	MSC				89991E
							89599C
	V90X8637XB	RTLS ABORT DECLARED	ET SEP SEQ				89991E
	V93X5348XA	OMS/RCS INTERCONNECT INH/ENA CMD	OVERRIDE DISP				
	V93X5348XC	OMS/RCS INTERCONNECT INH/ENA CMD	ABT OMS/RCS CONN				89210B
	V93W6958C	AFT RCS DUMP DURATION	OVERRIDE DISP	SEC			90114B
	V93W8325CB	OMS DELTA T COMPUTED	OVERRIDE SPEC				90114B

TABLE 4.3.1.4–1. ABORT CONTROL SEQUENCER (G4.192) INPUT/OUTPUT FUNCTIONAL PARAMETERS

DBFN: D3B027-F PN: VP707100049P00L OUTPUT FUNCTIONAL PARAMETERS FROM ABT CNTL SEQ

FSSR NAME	M/S ID	NOMENCLATURE	DESTINATION	UNITS	DATA TYPE	PREC	LAST CRS
AFT_RCS_DUMP_CNTR	V90W8229C	AFT RCS DUMP COUNTER	OVERRIDE SPEC	S			90114B
AFT_RCS_DUMP_ENABLE	V93X6949XB	AFT RCS DUMP ENABLE	OVERRIDE DISP		BD		89149B
OME_ONLY_FLAG	V90X8051X	OME ONLY FLAG	OVERRIDE DISP				90114B
S_OMS_CUTOFF	V90X8318XA	OMS CUTOFF CMD	ASC 2STG GUID,PW RTLS GUID,MSC, OMS FIRE SEQ,PW CONT GUID				89990E 89461
S_OMS_IGN	V90X8319X	ABORT OMS IGNITION CMD	MSC,ASC 2STG GUID,PW RTLS GUID, PW CONT GUID				89990E 89598A
S_RCS_IGN	V90X8314X	ABORT RCS +X ON CMD	ASC 2STG GUID,PW RTLS GUID, ASC RCS CMD SOP,PW CONT GUID, E/L RCS CMD SOP,TLM		BD		89990E
S_RCS_NULL20	V90X8317X	20 RCS NULL JETS ON CMD	ASC 2STG GUID,PW RTLS GUID, ASC RCS CMD SOP,PW CONT GUID, E/L RCS CMD SOP,TLM		BD		89990E
T1	V90W8320C	OMS EQUIVALENT ON TIME	AOA/ATO TGT,TLM,OVERRIDE SPEC	S	SPL		
	V43K4180XC	OMS-L POD HE ISLN VLV A OP	HDWR				
	V43K4181XC	OMS-L POD HE ISLN VLV B OP	HDWR				90114B
	V43K4182XC	OMS-L POD VAPOR ISLN VLV 1 OP	PCA A1				
	V43K4183XC	OMS-L POD VAPOR ISLN VLV 2 OP	PCA A3				90114B
	V43K5180XC	OMS-R POD HE ISLN VLV A OP	HDWR				
	V43K5181XC	OMS-R POD HE ISLN VLV B OP	HDWR				90114B
	V43K5182XC	OMS-R POD VAPOR ISLN VLV 1 OP	PCA A1				
	V43K5183XC	OMS-R POD VAPOR ISLN VLV 2 OP	PCA A3				90114B
	V90X8308X	MODE 2 INDICATOR	ABT OMS/RCS CONN				
	V90X8309X	C.G. TRIM	OMS TVC CMD SOP				
	V90X8312X	OMS TO RCS INTERCONNECT CMD	ABT OMS/RCS CONN,RCS REG SEQ, RCS/RCS XFEED,MSC,TLM		BD		89599C
	V90X8313X	OMS TO RCS RTRN TO NORM CONFIG CMD	ABT OMS/RCS CONN,MSC,TLM		BD		89599C
	V90W8325CA	OMS DELTA T COMPUTED	OVERRIDE SPEC,TLM	S	SPL		90114B
	V90X8913X	SERC FLAG	OVERRIDE DISP				89990E
	V93X5348XB	OMS/RCS INTERCONNECT INH/ENA CMD	OVERRIDE DISP,TLM				
	V94J3755C	OMS TIME SCALE FACTOR	OVERRIDE SPEC				

TABLE 4.3.1.4–2. ABORT CONTROL SEQUENCER (G4.192) I–LOADS

DBFN:0484

FSSR NAME	MSID	ENG UNIT	DT	PR	D	S	PR	FCTN	CAT
ATO_ICNCT_SEL	V99U9993C	ND	D		M	C	G4.192		AAD7
ATO_OMS_DT	V97U9798C	SEC	F	S	M	C	G4.192		AAD7
CONT_OMS_RCS_ICNCT_TERM_FU_TIME	V99U9718C	SEC	F	S	M	P	G4.192		QTO8
CONTINGENCY_NZ_LMT	V97U9837C	G	F	S	M	C	G4.192		QTO8
ENTRY_OMS_FUEL_BURN_TIME	V99U9571C	SEC	F	S	M	C	G4.192 G6.47		QTO8
ICNCT_DELAY	V99U9786C	SEC	F	S	M	C	G4.192		QID0
MANUAL_OMS_DT	V99U9717C	SEC	F	S	M	C	G4.192		QRP3
OMS_NZ_LIM	V99U9697C	G	F	S	M	C	G4.192		QTO8 QTO8
OMS_RCS_INTERCON_INIT_FU_TIME	V99U9716C	SEC	F	S	M	C	G4.192		QTO8
OMS_RCS_INTERCON_TERM_FU_TIME	V99U9952C	SEC	F	S	M	C	G4.192		QTO8
RCS_10_JET_FU_BIAS	V99U9775C	SEC	F	S	M	C	G4.192		QRD1
RCS_10_JET_FU_SCALE	V99U9776C	ND	F	S	M	C	G4.192		QRD1
RCS_24_JET_FU_BIAS	V99U9772C	SEC	F	S	M	C	G4.192		QRD1
RCS_24_JET_FU_SCALE	V99U9773C	ND	F	S	M	C	G4.192		QRD1
RTLS_ICNCT_SEL	V99U9991C	ND	D		M	C	G4.192		QRP3
RTLS_OMS_DT	V97U9780C	SEC	F	S	M	C	G4.192		QRP3
START_DUMP_VELOCITY	V99U9573C	FT/SEC	F	S	M	C	G4.192		QTR2
T_RCS_REF	V97U9828C	SEC	F	S	M	C	G4.192		QAC0
TAL_ICNCT_SEL	V99U9992C	ND	D		M	C	G4.192		QTP4
TAL_OMS_DT	V97U9786C	SEC	F	S	M	C	G4.192		QTP4

TABLE 4.3.1.4–3. ABORT CONTROL SEQUENCER (G4.192) K–LOADS

DBFN:0558

FSSR NAME DESCRIPTION	MSID	MC KLOAD VALUE		ENG UNIT	DT PR S PR FCTN	LAST CR EQTN MSID
CG_TRIM_DELAY	V97U9836C	+4.5	E+00	SEC	F S C G4.192	29551B
IGN_PRESS_DELAY	V97U9838C	+2.0	E+00	SEC	F S C G4.192	29551B

TABLE 4.3.1.4–4. ABORT CONTROL SEQUENCER (G4.192) CONSTANTS

DBFN:0558

FSSR NAME DESCRIPTION	MSID	MC	CONSTANT VALUE	ENG UNIT	DT	PR	S	PR FCTN	LAST CR
NO REQUIREMENTS									

4.3.2 Abort OMS/RCS Interconnect (4.184)

4.3.2.1 Introduction

The OMS/RCS interconnect function provides the control necessary to feed OMS propellants to RCS jets when required by an abort. In addition, after completion of the burn, controls are provided for reconfiguration to the normal RCS and OMS propellant feed from their respective tanks.

4.3.2.2 Overview

When the abort control sequence has issued a request for an interconnect, the OMS/RCS interconnect sequence performs the following functions. On the first pass, the AFT MANIFOLD JET INHIBIT 1/2 and 3/4/5 FLAGS are set false, and all affected OMS/ RCS propellant valve commands are removed to establish a known condition. The RCS 1/2 and 3/4/5 ALL JET INHIBIT FLAGS are set to true to inhibit all AFT RCS jet firings during the interconnect process. Then the RCS propellant tank isolation valves are commanded closed.

Prior to opening the RCS crossfeed valves, the status of the RCS tank isolation valves is monitored. If any of the tank isolation valves do not indicate closed, or the associated COMMFAULT status indicates true, the corresponding AFT MANIFOLD JET INHIBIT FLAG is set true to inhibit the use of jets on those manifolds for dumping OMS propellants. The RCS crossfeed valves are commanded closed and a set of RCS tank isolation valves are commanded open for those manifolds whose jets are inhibited. If any of the RCS aft crossfeed valves have been commanded opened, the OMS pod crossfeed "B" valves are commanded open.

If all the jets have been inhibited in the above process, the RCS tank isolation valves are opened, the OMS TO RCS INTERCONNECT CMD set false, the OMS TO RCS RTRN TO NORM CONFIG CMD set true, the OMS TO RCS INTERCONNECT COMPLETE FLAG is set false to allow proper sequencing of the Abort Control Sequence, and the OMS/RCS INTERCONNECT INH/ENA CMD set false (INHIBIT), and the sequence is terminated.

The sequence monitors the RCS crossfeed valves which have been commanded open. If all of the valves which were commanded open indicate open, and none of the associated COMMFAULT status indicates true, the OMS pod crossfeed valves "B" are checked and the OMS pod crossfeed "A" valves commanded open if any "B" valve fails to open. If any of the OMS pod crossfeed "A" valves do not indicate open, the OMS TO RCS INTERCONNECT CMD is set false, the OMS TO RCS RTRN TO NORM CONFIG CMD is set true, and the OMS TO RCS INTERCONNECT COMPLETE FLAG is set true to allow for the proper sequencing of the ABT CNTL sequence and the OMS/RCS INH/ENA CMD is set false (INHIBIT) and the interconnect sequence returns to begin the return to normal process. If all OMS pod crossfeed "B" or "A" valves indicate open, then the OMS TO RCS INTERCONNECT COMPLETE FLAG is set true. If any of the jets have been inhibited, the RCS crossfeed valves for that manifold are closed and after a delay of 1.5 seconds the RCS tank isolation valves are opened. Then, after another 1.5 second delay, the OMS TO RCS INTERCONNECT COMPLETE FLAG is set true, and the sequence is terminated.

When the OMS/RCS interconnect is complete and if none of the jets have been inhibited, the sequence monitors the status of the RCS tank isolation valves. If any RCS tank isolation valve closed indication is lost for three consecutive passes, an internal flag is set to indicate which manifold requires reconfiguration and the RCS crossfeed valves for the affected manifolds are commanded closed. After a delay of 1.5 seconds the RCS tank isolation valves for those manifolds are commanded open. While the valves are

being reconfigured, a flag is set to inhibit all jet firings from that manifold until the propellant feed from the RCS tanks can be established. The sequence will then be terminated. If a COMMFAULT status for the RCS tank isolation valves indicates true for three consecutive cycles, the manifold jet inhibit flag for those manifolds is set true for those manifolds, and the monitor function is terminated.

When the abort control sequence requests a return to normal configuration the following functions are performed. All affected OMS/RCS propellant valve commands are set false to establish a known condition. If a Mode 2 return to normal has not been requested, then the ALL JET INHIBIT FLAGS are set true to inhibit all aft jet firings during the return to normal process if the respective AFT MANIFOLD JET INHIBIT FLAGS are false. Then, sequentially, the OMS pod crossfeed valves are commanded closed, and the RCS tank isolation valves are commanded open. Prior to closing the RCS crossfeed valves, the 1/2 manifold RCS tank isolation valves are monitored. If any of the 1/2 tank isolation valves does not indicate open, or the associated COMMFAULT status indicates true, the RCS crossfeed valves between that manifold and the companion 3/4/5 manifold will not be closed, providing RCS propellants to the affected 1/2 manifold. Finally, as determined by the above check, those RCS crossfeed valves to be closed are commanded closed and the OMS/RCS INTERCONNECT COMPLETE FLAG, AFT MANIFOLD JET INHIBIT FLAGS, and the ALL JET INHIBIT FLAGS are set false, and the sequence is terminated.

During a Mode 2 return to normal sequence, continuous propellant flow is provided to the RCS for flight control and the ALL JET INHIBIT FLAGS remain false. The sequential order of the valve commands begins with the opening of all RCS tank isolation valves. Prior to closing the RCS crossfeed valves, the 1/2 manifold RCS tank isolation valves are monitored. If any of the 1/2 tank isolation valves do not indicate open, or the associated COMMFAULT status indicates true, the RCS crossfeed valves between that manifold and the companion 3/4/5 manifold will be commanded open providing RCS propellants to the affected 1/2 manifold. Finally, as determined by the above check, those RCS crossfeed valves are commanded closed, OMS crossfeed valves are commanded closed and the OMS/RCS INTERCONNECT COMPLETE FLAG and AFT MANIFOLD INHIBIT FLAGS are set false and the sequence is terminated.

When either an OMS/RCS interconnect or return to normal configuration has been requested by the Abort Control Sequence, the Abort OMS/RCS Interconnect Sequence will perform the requested function to completion prior to recognizing another request. RCS jet firing commands will be inhibited during an interconnect and a non–Mode 2 return to normal while the sequence is providing the requested function. This is controlled by the sequence setting RCS 1/2(3/4/5) ALL JET INHIBIT FLAGS true to be used by the Ascent and Entry/Landing RCS Command SOP.

4.3.2.3 DETAIL REQUIREMENTS

Step 1. This step determines if the OMS–to–RCS interconnect or return–to–normal process is required.

When either an OMS/RCS interconnect or return to normal configuration has been requested by the Abort Control Sequence, the Abort OMS/RCS Interconnect Sequence will perform the requested function to completion prior to recognizing another request. In this step, use is made of two internal flags to control the process, these are the OMS/RCS I/C IN PROGRESS FLAG and the OMS/RCS RTRN TO NORM IN PROGRESS FLAG. Both of these flags are initialized to the false state.

The following signals are monitored:

(a)	OMS TO RCS INTERCONNECT CMD	V90X8312X
(b)	OMS TO RCS RTRN TO NORM CONFIG CMD	V90X8313X

(c)	OMS TO RCS INTERCONNECT COMPLETE FLAG	V90X8282X
(d)	INTERCONNECT MONITOR FLAG	INTERNAL
(e)	OMS/RCS I/C IN PROGRESS FLAG	INTERNAL
(f)	OMS/RCS RTRN TO NORM IN PROGRESS FLAG	INTERNAL
(g)	MODE 2 INDICATOR	V90X8308X

If (e) is true, proceed to the next steps as required to complete the interconnect sequence, otherwise, go to the next if statement.

If (f) is true, proceed to the next steps as required to complete the return to normal configuration sequence, otherwise, go to the next if statement.

If (a) is true, and (c) is false, terminate (1) thru (76) below, upon completion of termination of all commands, change set and reset discretes for commands (63) thru (76) to false, set (77), (78), (79), and (82) false, set (80), (81), and (83) true, set (85) through (101) equal to zero, and go to Step 2. Otherwise go to the next if statement.

If (b) is true, and (c) is true, terminate (1) thru (76) below, set (79) and (82) false, set (84) true, and proceed to monitor (g). Otherwise, proceed to monitor (c) and (d).

If (g) is true, proceed to Step 12. Otherwise, set (80) and (81) true and proceed to Step 9.

If (c) and (d) are both true, proceed to Step 7. Otherwise, terminate the sequence.

(1)	OMS–L POD XFD VLVS A CMD 1 CL	V43K4283X
(2)	OMS–L POD OXDZR XFD VLV A CMD 2 CL	V43K4285X
(3)	OMS–L POD FUEL XFD VLV A CMD 2 CL	V43K4385X
(4)	OMS–L POD XFD VLVS B CMD 1 CL	V43K4287X
(5)	OMS–L POD OXDZR XFD VLV B CMD 2 CL	V43K4289X
(6)	OMS–L POD FUEL XFD VLV B CMD 2 CL	V43K4389X
(7)	OMS–R POD XFD VLVS A CMD 1 CL	V43K5283X
(8)	OMS–R POD OXDZR XFD VLV A CMD 2 CL	V43K5285X
(9)	OMS–R POD FUEL XFD VLV A CMD 2 CL	V43K5385X
(10)	OMS–R POD XFD VLVS B CMD 1 CL	V43K5287X
(11)	OMS–R POD OXDZR XFD VLV B CMD 2 CL	V43K5289X
(12)	OMS–R POD FUEL XFD VLV B CMD 2 CL	V43K5389X
(13)	RCS–L AFT XFD VLV–1/2 GPC CL A	V42K2416X
(14)	RCS–L AFT OX XFD VLV–1/2 GPC CL B	V42K2418X
(15)	RCS–L AFT FU XFD VLV–1/2 GPC CL B	V42K2422X
(16)	RCS–L AFT XFD VLV–3/4/5 GPC CL A	V42K2428X
(17)	RCS–L AFT OX XFD V–3/4/5 GPC CL B	V42K2430X
(18)	RCS–L AFT FU XFD V–3/4/5 GPC CL B	V42K2434X
(19)	RCS–R AFT XFD VLV–1/2 GPC CLOSE A	V42K3416X
(20)	RCS–R AFT OX XFD V–1/2 GPC CLOSE B	V42K3418X
(21)	RCS–R AFT FU XFD V–1/2 GPC CLOSE B	V42K3422X
(22)	RCS–R AFT XFD VLV–3/4/5 GPC CL A	V42K3428X
(23)	RCS–R AFT OX XFD V–3/4/5 GPC CL B	V42K3430X

(24)	RCS–R AFT FU XFD V–3/4/5 GPC CL B	V42K3434X
(25)	RCS–L AFT TK ISLN V–1/2 GPC CL A	V42K2353X
(26)	RCS–L AFT OX TK ISLN V1/2 GPC CL B	V42K2354X
(27)	RCS–L AFT FU TK ISLN V1/2 GPC CL B	V42K2355X
(28)	RCS–L AFT OX TK ISLN V3/4/5 A GPC CL	V42K2357X
(29)	RCS–L AFT FU TK ISLN V3/4/5 A GPC CL	V42K2358X
(30)	RCS–L AFT OX TK ISLN V3/4/5 B GPC CL	V42K2360X
(31)	RCS–L AFT FU TK ISLN V3/4/5 B GPC CL	V42K2361X
(32)	RCS–R AFT TK ISLN V–1/2 GPC CL A	V42K3353X
(33)	RCS–R AFT OX TK ISLN V–1/2 GPC CL B	V42K3354X
(34)	RCS–R AFT FU TK ISLN V–1/2 GPC CL B	V42K3355X
(35)	RCS–R AFT OX TK ISLN V3/4/5 A GPC CL	V42K3357X
(36)	RCS–R AFT FU TK ISLN V3/4/5 A GPC CL	V42K3358X
(37)	RCS–R AFT OX TK ISLN V3/4/5 B GPC CL	V42K3360X
(38)	RCS–R AFT FU TK ISLN V3/4/5 B GPC CL	V42K3361X
(39)	OMS–L POD XFD VLVS A CMD 1 OP	V43K4282X
(40)	OMS–L POD OXDZR XFD VLV A CMD 2 OP	V43K4284X
(41)	OMS–L POD FUEL XFD VLV A CMD 2 OP	V43K4384X
(42)	OMS–L POD XFD VLVS B CMD 1 OP	V43K4286X
(43)	OMS–L POD OXDZR XFD VLV B CMD 2 OP	V43K4288X
(44)	OMS–L POD FUEL XFD VLV B CMD 2 OP	V43K4388X
(45)	OMS–R POD XFD VLVS A CMD 1 OP	V43K5282X
(46)	OMS–R POD OXDZR XFD VLV A CMD 2 OP	V43K5284X
(47)	OMS–R POD FUEL XFD VLV A CMD 2 OP	V43K5384X
(48)	OMS–R POD XFD VLVS B CMD 1 OP	V43K5286X
(49)	OMS–R POD OXDZR XFD VLV B CMD 2 0P	V43K5288X
(50)	OMS–R POD FUEL XFD VLV B CMD 2 OP	V43K5388X
(51)	RCS–L AFT XFD VLV–1/2 GPC OP A	V42K2402X
(52)	RCS–L AFT OX XFD VLV–1/2 GPC OP B	V42K2403X
(53)	RCS–L AFT FU XFD VLV–1 /2 GPC OP B	V42K2404X
(54)	RCS–L AFT XFD VLV3/4/5 GPC OP A	V42K2408X
(55)	RCS–L AFT OX XFD V–3/4/5 GPC OP B	V42K2409X
(56)	RCS–L AFT FU XFD V–3/4/5 GPC OP B	V42K2410X
(57)	RCS–R AFT XFD VLV–1/2 GPC OPEN A	V42K3402X
(58)	RCS–R AFT OX XFD V–1/2 GPC OPEN B	V42K3403X
(59)	RCS–R AFT FU XFD V–1/2 GPC OPEN B	V42K3404X
(60)	RCS–R AFT XFD VLV–3/4/5 GPC OPEN A	V42K3408X
(61)	RCS–R AFT OX XFD V–3/4/5 GPC OP B	V42K3409X
(62)	RCS–R AFT FU XFD V–3/4/5 GPC OP B	V42K3410X
(63)	RCS–L AFT TK ISLN V–1/2 GPC OP A	V42K2342X
(64)	RCS–L AFT OX TK ISLN V1/2 GPC OP B	V42K2343X
(65)	RCS–L AFT FU TK ISLN V1/2 GPC OP B	V42K2344X

(66)	RCS–L AFT OX TK ISLN V3/4/5 A GPC OP	V42K2346X
(67)	RCS–L AFT FU TK ISLN V3/4/5 A GPC OP	V42K2347X
(68)	RCS–L AFT OX TK ISLN V3/4/5 B GPC OP	V42K2349X
(69)	RCS–L AFT FU TK ISLN V3/4/5 B GPC OP	V42K2350X
(70)	RCS–R AFT TK ISLN V–1/2 GPC OP A	V42K3342X
(71)	RCS–R AFT OX TK ISLN V–1/2 GPC OP B	V42K3343X
(72)	RCS–R AFT FU TK ISLN V–1/2 GPC OP B	V42K3344X
(73)	RCS–R AFT OX TK ISLN V3/4/5 A GPC OP	V42K3346X
(74)	RCS–R AFT FU TK ISLN V3/4/5 A GPC OP	V42K3347X
(75)	RCS–R AFT OX TK ISLN V3/4/5 B GPC OP	V42K3349X
(76)	RCS–R AFT FU TK ISLN V3/4/5 B GPC OP	V42K3350X
(77)	AFT MANIFOLD 1/2 JET INH FLAG	V90X8285X
(78)	AFT MANIFOLD 3/4/5 JET INH FLAG	V90X8286X
(79)	INTERCONNECT MONITOR FLAG	INTERNAL
(80)	RCS 1/2 ALL JET INHIBIT FLAG	V90X8290X
(81)	RCS 3/4/5 ALL JET INHIBIT FLAG	V90X8291X
(82)	1/2 XFD/ISO FAIL FLAG	INTERNAL
(83)	OMS/RCS I/C IN PROGRESS FLAG	INTERNAL
(84)	OMS/RCS RTRN TO NORM IN PROGRESS FLAG	INTERNAL
(85)	I/C FAIL COUNTER	INTERNAL
(86)	FA 1 COMMFAULT CYC COUNTER	INTERNAL
(87)	RCS L OX TK POSN CYC COUNTER	INTERNAL
(88)	RCS L FU TK POSN CYC COUNTER	INTERNAL
(89)	FA3 COMMFAULT CYC COUNTER	INTERNAL
(90)	RCS R OX TK POSN CYC COUNTER	INTERNAL
(91)	RCS R FU TK POSN CYC COUNTER	INTERNAL
(92)	FA 2 COMMFAULT CYC COUNTER	INTERNAL
(93)	RCS L A OX TK POSN CYC COUNTER	INTERNAL
(94)	RCS L B OX TK POSN CYC COUNTER	INTERNAL
(95)	RCS L A FU TK POSN CYC COUNTER	INTERNAL
(96)	RCS L B FU TK POSN CYC COUNTER	INTERNAL
(97)	FA 4 COMMFAULT CYC COUNTER	INTERNAL
(98)	RCS R A OX TK POSN CYC COUNTER	INTERNAL
(99)	RCS R B OX TK POSN CYC COUNTER	INTERNAL
(100)	RCS R A FU TK POSN CYC COUNTER	INTERNAL
(101)	RCS R B FU TK POSN CYC COUNTER	INTERNAL

Step 2. This step commands RCS propellant tank isolation valves closed on initiation of the interconnect sequence.

Issue the following commands and return to Step 1 until at least 1.5 seconds have elapsed. Then proceed to Step 3.

RCS–L AFT TK ISLN V–1/2 GPC CL A	V42K2353X
RCS–L AFT OX TK ISLN V1/2 GPC CL B	V42K2354X
RCS–L AFT FU TK ISLN V1/2 GPC CL B	V42K2355X
RCS–L AFT OX TK ISLN V3/4/5 A GPC CL	V42K2357X
RCS–L AFT FU TK ISLN V3/4/5 A GPC CL	V42K2358X

RCS–L AFT OX TK ISLN V3/4/5 B GPC CL	V42K2360X
RCS–L AFT FU TK ISLN V3/4/5 B GPC CL	V42K2361X
RCS–R AFT TK ISLN V–1/2 GPC CL A	V42K3353X
RCS–R AFT OX TK ISLN V–1/2 GPC CL B	V42K3354X
RCS–R AFT FU TK ISLN V–1/2 GPC CL B	V42K3355X
RCS–R AFT OX TK ISLN V3/4/5 A GPC CL	V42K3357X
RCS–R AFT FU TK ISLN V3/4/5 A GPC CL	V42K3358X
RCS–R AFT OX TK ISLN V3/4/5 B GPC CL	V42K3360X
RCS–R AFT FU TK ISLN V3/4/5 B GPC CL	V42K3361X

Step 3. This step monitors the position of the RCS tank isolation valves, opening the RCS crossfeed valves for those manifolds with all tank isolation valves configured correctly. If any tank isolation valve (1/2 or 3/4/5) indicates not closed, an I/C fail counter will be incremented for processing in Step 5 and Step 6. If any RCS crossfeed valve is commanded open, the OMS pod crossfeed valves "B" are also commanded open.

The following signals are monitored:

(a)	RCS L AFT OX TANK ISLN VLV 1/2 CL	V42X2221X
(b)	RCS L AFT FU TANK ISLN VLV 1/2 CL	V42X2321X
(c)	RCS R AFT OX TANK ISLN VLV 1/2 CL	V42X3221X
(d)	RCS R AFT FU TANK ISLN VLV 1/2 CL	V42X3321X
(e)	RCS L AFT OX TANK ISLN VLV 1/2 OP	V42X2220X
(f)	RCS L AFT FU TANK ISLN VLV 1/2 OP	V42X2320X
(g)	RCS R AFT OX TANK ISLN VLV 1/2 OP	V42X3220X
(h)	RCS R AFT FU TANK ISLN VLV 1/2 OP	V42X3320X
(i)	RCS L AFT OX TANK ISLN VLV 3/4/5 A CL	V42X2223X
(j)	RCS L AFT OX TANK ISLN VLV 3/4/5 B CL	V42X2225X
(k)	RCS L AFT FU TANK ISLN VLV 3/4/5 A CL	V42X2323X
(l)	RCS L AFT FU TANK ISLN VLV 3/4/5 B CL	V42X2325X
(m)	RCS R AFT OX TANK ISLN VLV 3/4/5 A CL	V42X3223X
(n)	RCS R AFT OX TANK ISLN VLV 3/4/5 B CL	V42X3225X
(o)	RCS R AFT FU TANK ISLN VLV 3/4/5 A CL	V42X3323X
(p)	RCS R AFT FU TANK ISLN VLV 3/4/5 B CL	V42X3325X
(q)	FA 1 INPUT PROM SEG 3, 10 STATUS	V91X2845X
(r)	FA 3 INPUT PROM SEG 3, 10 STATUS	V91X2847X
(s)	FA 2 INPUT PROM SEG 3, 10 STATUS	V91X2846X
(t)	FA 4 INPUT PROM SEG 3, 10 STATUS	V91X2848X
(u)	I/C FAIL COUNTER	INTERNAL

If (a) thru (d) are not all true, or (e) thru (h) are not all false, or (q) or (r) is true, set (1) true, increment (3) by 1, and go to the next if statement. Otherwise, issue (4) thru (9) and go to the next if statement.

If (i) thru (p) are not all true, or if (s) or (t) is true, set (2) true, increment (3) by 1, and go to the next if statement. Otherwise, issue (10) thru (15) and go to the next if statement.

If (u) > 1 proceed to Step 6. Otherwise, Issue (16) thru (21) and return to Step 1 until at least 1.5 seconds have elapsed. Then proceed to Step 4.

(1)	APT MANIFOLD 1/2 JET INH FLAG	V90X8285X
(2)	AFT MANIFOLD 3/4/5 JET INH FLAG	V90X8286X
(3)	I/C FAIL COUNTER	INTERNAL
(4)	RCS–L AFT XFD VLV–1/2 GPC OP A	V42K2402X
(5)	RCS–L AFT OX XFD VLV–1/2 GPC OP B	V42K2403X
(6)	RCS–L AFT FU XFD VLV–1/2 GPC OP B	V42K2404X
(7)	RCS–R AFT XFD VLV–1/2 GPC OP A	V42K3402X
(8)	RCS–R AFT OX XFD VLV–1/2 GPC OP B	V42K3403X
(9)	RCS–R AFT FU XFD VLV–1/2 GPC OP B	V42K3404X
(10)	RCS–L AFT XFD VLV–3/4/5 GPC OP A	V42K2408X
(11)	RCS–L AFT OX XFD VLV–3/4/5 GPC OP B	V42K2409X
(12)	RCS–L AFT FU XFD VLV–3/4/5 GPC OP B	V42K2410X
(13)	RCS–R AFT XFD VLV–3/4/5 GPC OPEN A	V42K3408X
(14)	RCS–R AFT OX XFD V–3/4/5 GPC OP B	V42K3409X
(15)	RCS–R AFT FU XFD V–3/4/5 GPC OP B	V42K3410X
(16)	OMS–L POD XFD VLVS B CMD 1 OP	V43K4286X
(17)	OMS–L POD OXDZR XFD VLV B CMD 2 OP	V43K4288X
(18)	OMS–L POD FUEL XFD VLV B CMD 2 OP	V43K4388X
(19)	OMS–R POD XFD VLVS B CMD 1 OP	V43K5286X
(20)	OMS–R POD OXDZR XFD VLV B CMD 2 OP	V43K5288X
(21)	OMS–R POD FUEL XFD VLV B CMD 2 OP	V43K5388X

Step 4. This step checks the response of the RCS crossfeed valves which have been commanded open during the interconnect sequence. If any RCS crossfeed valve (1/2 or 3/4/5) failed to open, the sequence is directed to the step which will reconfigure the system to furnish propellants to those manifolds (1/2 or 3/4/5) from the RCS tanks.

The following signals are monitored:

(a)	RCS–L AFT OX XFD VLV 1/2 OP	V42X2236X
(b)	RCS–L AFT FU XFD VLV 1/2 OP	V42X2336X
(c)	RCS–R AFT OX XFD VLV 1/2 OP	V42X3236X
(d)	RCS–R AFT FU XFD VLV 1/2 OP	V42X3336X
(e)	RCS–L OX/FU XFD VLV 1/2 OP	V42X2251X
(f)	RCS–R OX/FU XFD VLV 1/2 OP	V42X2252X

(g)	RCS L AFT OX XFD VLV 3/4/5 OP	V42X2238X
(h)	RCS L AFT FU XFD VLV 3/4/5 OP	V42X2338X
(i)	RCS R AFT OX XFD VLV 3/4/5 OP	V42X3238X
(j)	RCS R AFT FU XFD VLV 3/4/5 OP	V42X3338X
(k)	RCS L OX/FU XFD VLV 3/4/5 OP	V42X2253X
(l)	RCS R OX/FU XFD VLV 3/4/5 OP	V42X2254X
(m)	AFT MANIFOLD 1/2 JET INH FLAG	V90X8285X
(n)	AFT MANIFOLD 3/4/5 JET INH FLAG	V90X8286X
(o)	FA 3 INPUT PROM SEG 3, 10 STATUS	V91X2847X
(p)	FA 4 INPUT PROM SEG 3, 10 STATUS	V91X2848X
(q)	I/C FAIL COUNTER	INTERNAL

If [(m) is false] and [(a) or (b) or (f) is false, or (o) is true] and [(c) or (d) or (e) is false, or (p) is true], increment (2) by 1, set (1) true, and go to the next if statement. Otherwise, go to the next if statement.

If [(n) is false] and [(g) or (h) or (l) is false, or (p) is true] and [(i) or (j) or (k) is false, or (o) is true], increment (2) by 1, and go to the next if statement. Otherwise, go to the next if statement.

If (q) = 0, proceed to Step 11, otherwise go to Step 5.

(1)	1/2 XFD/ISO FAIL FLAG	INTERNAL
(2)	I/C FAIL COUNTER	INTERNAL

Step 5. This step controls the reconfiguration process for returning propellant feed from the RCS tanks for those manifolds (1/2 and/or 3/4/5) whose interconnect to the OMS tanks was unsuccessful, or those manifolds for which the monitor function had lost the indication of RCS tank isolation valve closed.

The following signals are monitored:

(a)	AFT MANIFOLD 1/2 JET INH FLAG	V90X8285X
(b)	AFT MANIFOLD 3/4/5 JET INH FLAG	V90X8286X
(c)	I/C FAIL COUNTER	INTERNAL
(d)	1/2 XFD/ISO FAIL FLAG	INTERNAL

If (c) > 1, terminate (1) thru (18) below, issue (19) thru (36), then return to Step 1 until 1.5 seconds have elapsed. Then proceed to Step 6. Otherwise go to the next if statement.

If (a) or (b) is true, proceed to Step 6. Otherwise, go to the next if statement.

If (d) = true, terminate (1) thru (6) below, issue (19) thru (24), set (37) equal true, and return to Step 1 until at least 1.5 seconds has elapsed. Then proceed to Step 6. Otherwise, proceed to the next if statement.

If (d) is false, terminate (7) thru (12) below, issue (25) thru (30), set (38) equal true, and return to Step 1 until at least 1.5 seconds has elapsed. Then proceed to Step 6.

(1)	RCS–L AFT XFD VLV–1/2 GPC OP A	V42K2402X
(2)	RCS–L AFT OX XFD VLV–1/2 GPC OP B	V42K2403X
(3)	RCS–L AFT FU XFD VLV–1/2 GPC OP B	V42K2404X
(4)	RCS–R AFT XFD VLV–1/2 GPC OPEN A	V42K3402X
(5)	RCS–R AFT OX XFD V–1/2 GPC OPEN B	V42K3403X
(6)	RCS–R AFT FU XFD V–1/2 GPC OPEN B	V42K3404X
(7)	RCS–L AFT XFD VLV–3/4/5 GPC OP A	V42K2408X
(8)	RCS–L AFT OX XFD V–3/4/5 GPC OP B	V42K2409X
(9)	RCS–L AFT FU XFD V–3/4/5 GPC OP B	V42K2410X
(10)	RCS–R AFT XFD VLV–3/4/5 GPC OPEN A	V42K3408X
(11)	RCS–R AFT OX XFD V–3/4/5 GPC OP B	V42K3409X
(12)	RCS–R AFT FU XFD V–3/4/5 GPC OP B	V42K3410X
(13)	OMS–L POD XFD VLVS B CMD 1 OP	V43K4286X
(14)	OMS–L POD OXDZR XFD VLV B CMD 2 OP	V43K4288X
(15)	OMS–L POD FUEL XFD VLV B CMD 2 OP	V43K4388X
(16)	OMS–R POD XFD VLVS B CMD 1 OP	V43K5286X
(17)	OMS–R POD OXDZR XFD VLV B CMD 2 OP	V43K5288X
(18)	OMS–R POD FUEL XFD VLV B CMD 2 OP	V43K5388X
(19)	RCS–L AFT XFD VLV–1/2 GPC CL A	V42K2416X
(20)	RCS–L AFT OX XFD VLV–1/2 GPC CL B	V42K2418X
(21)	RCS–L AFT FU XFD VLV–1/2 GPC CL B	V42K2422X
(22)	RCS–R AFT XFD VLV–1/2 GPC CLOSE A	V42K3416X
(23)	RCS–R AFT OX XFD V–1/2 GPC CLOSE B	V42K3418X
(24)	RCS–R AFT FU XFD V–1/2 GPC CLOSE B	V42K3422X
(25)	RCS–L AFT XFD VLV–3/4/5 GPC CL A	V42K2428X
(26)	RCS–L AFT OX XFD V–3/4/5 GPC CL B	V42K2430X
(27)	RCS–L AFT FU XFD V–3/4/5 GPC CL B	V42K2434X
(28)	RCS–R AFT XFD VLV–3/4/5 GPC CL A	V42K3428X
(29)	RCS–R AFT OX XFD V–3/4/5 GPC CL B	V42K3430X
(30)	RCS–R AFT FU XFD V–3/4/5 GPC CL B	V42K3434X
(31)	OMS–L POD XFD VLVS B CMD 1 CL	V43K4287X
(32)	OMS–L POD OXDZR XFD VLV B CMD 2 CL	V43K4289X
(33)	OMS–L POD FUEL XFD VLV B CMD 2 CL	V43K4389X
(34)	OMS–R POD XFD VLVS B CMD 1 CL	V43K5287X
(35)	OMS–R POD OXDZR XFD VLV B CMD 2 CL	V43K5289X
(36)	OMS–R POD FUEL XFD VLV B CMD 2 CL	V43K5389X

(37)	AFT MANIFOLD 1/2 JET INH FLAG	V90X8285X
(38)	AFT MANIFOLD 3/4/5 JET INH FLAG	V90X8286X

Step 6. This step commands the RCS tank isolation valves open in the OMS TO RCS return to normal configuration and as part of an unsuccessful attempt to accomplish the OMS/RCS interconnect sequence. If both 1/2 and 3/4/5 manifold tank isolation valves have been commanded open, the OMS/RCS interconnect is inhibited and OMS propellant burn via RCS jets will not occur.

The following signals are monitored:

(a)	OMS TO RCS RTRN TO NORM IN PROGRESS FLAG	(INTERNAL)
(b)	I/C FAIL COUNTER	(INTERNAL)
(c)	AFT MANIFOLD 1/2 JET INH FLAG	V90X8285X

If (a) is true, issue (15) thru (28) below, and return to Step 1 until at least 1.5 seconds have elapsed. Then proceed to Step 10. Otherwise, go to the next if statement.

If (b) > 1, terminate (1) thru (14), issue (15) thru (28) below, and return to Step 1 until at least 1.5 seconds have elapsed. Then proceed to Step 11. Otherwise go to the next if statement.

If (c) is true, terminate (1) thru (6), issue (15) thru (20) below and return to Step 1 until at least 1.5 seconds have elapsed. Then proceed to Step 11. Otherwise, terminate (7) thru (14), issue (21) thru (28) below and return to Step 1 until at least 1.5 seconds have elapsed. Then proceed to Step 11.

(1)	RCS–L AFT TK ISLN V–1/2 GPC CL A	V42K2353X
(2)	RCS–L AFT OX TK ISLN V1/2 GPC CL B	V42K2354X
(3)	RCS–L AFT FU TK ISLN V1/2 GPC CL B	V42K2355X
(4)	RCS–R AFT TK ISLN V–1/2 GPC CL A	V42K3353X
(5)	RCS–R AFT OX TK ISLN V–1/2 GPC CL B	V42K3354X
(6)	RCS–R AFT FU TK ISLN V–1/2 GPC CL B	V42K3355X
(7)	RCS–L AFT OX TK ISLN V3/4/5 A GPC CL	V42K2357X
(8)	RCS–L AFT FU TK ISLN V3/4/5 A GPC CL	V42K2358X
(9)	RCS–R AFT OX TK ISLN V3/4/5 A GPC CL	V42K3357X
(10)	RCS–R AFT FU TK ISLN V3/4/5 A GPC CL	V42K3358X
(11)	RCS–L AFT OX TK ISLN V3/4/5 B GPC CL	V42K2360X
(12)	RCS–L AFT FU TK ISLN V3/4/5 B GPC CL	V42K2361X
(13)	RCS–R AFT OX TK ISLN V3/4/5 B GPC CL	V42K3360X
(14)	RCS–R AFT FU TK ISLN V3/4/5 B GPC CL	V42K3361X
(15)	RCS–L AFT TK ISLN V–1/2 GPC OP A	V42K2342X
(16)	RCS–L AFT OX TK ISLN V1/2 GPC OP B	V42K2343X
(17)	RCS–L AFT FU TK ISLN V1/2 GPC OP B	V42K2344X
(18)	RCS–R AFT TK ISLN V–1/2 GPC OP A	V42K3342X
(19)	RCS–R AFT OX TK ISLN V–1/2 GPC OP B	V42K3343X

(20)	RCS–R AFT FU TK ISLN V–1/2 GPC OP B	V42K3344X
(21)	RCS–L AFT OX TK ISLN V3/4/5 A GPC OP	V42K2346X
(22)	RCS–L AFT FU TK ISLN V3/4/5 A GPC OP	V42K2347X
(23)	RCS–R AFT OX TK ISLN V3/4/5 A GPC OP	V42K3346X
(24)	RCS–R AFT FU TK ISLN V3/4/5 A GPC OP	V42K3347X
(25)	RCS–L AFT OX TK ISLN V3/4/5 B GPC OP	V42K2349X
(26)	RCS–L AFT FU TK ISLN V3/4/5 B GPC OP	V42X2350X
(27)	RCS–R AFT OX TK ISLN V3/4/5 B GPC OP	V42K3349X
(28)	RCS–R AFT FU TX ISLN V3/4/5 B GPC OP	V42K3350X

Step 7. This step monitors the status of the left RCS tank isolation valves 1/2 when the OMS to RCS interconnect has been successfully completed. If any RCS left tank isolation valve 1/2 closed status becomes false for three consecutive cycles, the RCS 1/2 ALL JET INHIBIT FLAG is set true to inhibit all 1/2 jet firings and the 1/2 XFD/ISO FAIL FLAG is set true for use in the RCS crossfeed reconfiguration process. If the COMMFAULT status for the left 1/2 tank isolation valves indicates true for three consecutive cycles, the AFT MANIFOLD 1/2 JET INHIBIT FLAG is set true to inhibit dumping through that manifold. The monitor function is then terminated.

The following signals are monitored:

(a)	FA 1 INPUT PROM SEG 3, 10 STATUS	V91X2845X
(b)	FA 1 COMMFAULT CYC COUNTER	(INTERNAL)
(c)	RCS L AFT OX TANK ISLN VLV 1/2 CL	V42X2221X
(d)	RCS L AFT FU TANK ISLN VLV 1/2 CL	V42X2321X
(e)	RCS L OX TK POSN CYC COUNTER	(INTERNAL)
(f)	RCS L FU TK POSN CYC COUNTER	(INTERNAL)

If (a) is true, increment (b) by 1, set (e) and (f) to zero, and proceed to monitor (b). Otherwise, if (a) is false, set (b) to zero, and proceed to monitor (c).

If (b) is equal to three, set (1) true, (2) false, and return to Step 1. Otherwise, proceed to Step 7A.

If (c) is false, increment (e) by 1, and proceed to monitor (e). Otherwise, set (e) to zero, and proceed to monitor (d).

If (e) is equal to three, set (2) false, (3) through (5) true, increment (6) by 1, and proceed to Step 5. Otherwise, proceed to monitor (d).

If (d) is false, increment (f) by 1, and proceed to monitor (f). Otherwise, set (f) to zero, and proceed to Step 7A.

If (f) is equal to three, set (2) false, (3) through (5) true, increment (6) by 1, and proceed to Step 5. Otherwise, proceed to Step 7A.

(1)	AFT MANIFOLD 1/2 JET INH FLAG	V90X8285X

(2)	INTERCONNECT MONITOR FLAG	(INTERNAL)
(3)	1/2 XFD/ISO FAIL FLAG	(INTERNAL)
(4)	RCS 1/2 ALL JET INHIBIT FLAG	V90X8290X
(5)	OMS/RCS I/C IN PROGRESS FLAG	(INTERNAL)
(6)	I/C FAIL COUNTER	(INTERNAL)

Step 7A. This step monitors the status of the right RCS tank isolation valves 1/2 when the OMS to RCS interconnect has been successfully completed. If any RCS right tank isolation valve 1/2 closed status becomes false for three consecutive cycles, the RCS 1/2 ALL JET INHIBIT FLAG is set true to inhibit all 1/2 jet firings and the 1/2 XFD/ISO FAIL FLAG is set true for use in the RCS crossfeed reconfiguration process. If the COMMFAULT status for the right 1/2 tank isolation valves indicates true for three consecutive cycles, the AFT MANIFOLD 1/2 JET INHIBIT FLAG is set true to inhibit dumping through that manifold. The monitor function is then terminated.

The following signals are monitored:

(a)	FA 3 INPUT PROM SEG 3, 10 STATUS	V91X2847X
(b)	FA 3 COMMFAULT CYC COUNTER	(INTERNAL)
(c)	RCS R AFT OX TANK ISLN VLV 1/2 CL	V42X3221X
(d)	RCS R AFT FU TANK ISLN VLV 1/2 CL	V42X3321X
(e)	RCS R OX TK POSN CYC COUNTER	(INTERNAL)
(f)	RCS R FU TK POSN CYC COUNTER	(INTERNAL)

If (a) is true, increment (b) by 1, set (e) and (f) to zero, and proceed to monitor (b). Otherwise, if (a) is false, set (b) to zero, and proceed to monitor (c).

If (b) is equal to three, set (1) true, (2) false, and return to Step 1. Otherwise, proceed to Step 8.

If (c) is false, increment (e) by 1, and proceed to monitor (e). Otherwise, set (e) to zero, and proceed to monitor (d).

If (e) is equal to three, set (2) false, (3) through (5) true, increment (6) by 1, and proceed to Step 5. Otherwise, proceed to monitor (d).

If (d) is false, increment (f) by 1, and proceed to monitor (f). Otherwise, set (f) to zero, and proceed to Step 8.

If (f) is equal to three, set (2) false, (3) through (5) true, increment (6) by 1, and proceed to Step 5. Otherwise, proceed to Step 8.

(1)	AFT MANIFOLD 1/2 JET INH FLAG	V90X8285X
(2)	INTERCONNECT MONITOR FLAG	(INTERNAL)
(3)	1/2 XFD/ISO FAIL FLAG	(INTERNAL)
(4)	RCS 1/2 ALL JET INHIBIT FLAG	V90X8290X
(5)	OMS/RCS I/C IN PROGRESS FLAG	(INTERNAL)
(6)	I/C FAIL COUNTER	(INTERNAL)

Step 8. This step monitors the status of the 3/4/5A RCS tank isolation valves when the OMS to RCS interconnect has been successfully completed. If any 3/4/5A RCS tank isolation valve closed status be-

comes false for three consecutive cycles, the RCS 3/4/5 ALL JET INHIBIT FLAG is set true to inhibit all 3/4/5 jet firings. If the COMMFAULT status for the 3/4/5A tank isolation valves indicates true for three consecutive cycles the AFT MANIFOLD 3/4/5 JET INHIBIT FLAG is set true to inhibit dumping through that manifold. The monitor function is then terminated.

The following signals are monitored:

(a)	FA 2 INPUT PROM SEG 3, 10 STATUS	V91X2846X
(b)	FA 2 COMMFAULT CYC COUNTER	(INTERNAL)
(c)	RCS L AFT OX TANK ISLN VLV 3/4/5 A CL	V42X2223X
(d)	RCS R AFT OX TANK ISLN VLV 3/4/5 A CL	V42X3223X
(e)	RCS L AFT FU TANK ISLN VLV 3/4/5 A CL	V42X2323X
(f)	RCS R AFT FU TANK ISLN VLV 3/4/5 A CL	V42X3323X
(g)	RCS L A OX TK POSN CYC COUNTER	(INTERNAL)
(h)	RCS R A OX TK POSN CYC COUNTER	(INTERNAL)
(i)	RCS L A FU TK POSN CYC COUNTER	(INTERNAL)
(j)	RCS R A FU TK POSN CYC COUNTER	(INTERNAL)

If (a) is true, increment (b) by 1, set (g), (h), (i), and j) to zero, and proceed to monitor (b). Otherwise, if (a) is false, set (b) to zero, and proceed to monitor (c).

If (b) is equal to three, set (1) true, (2) false, and return to Step 1. Otherwise, proceed to Step 8A.

If (c) is false, increment (g) by 1, and proceed to monitor (g). Otherwise, set (g) to zero, and proceed to monitor (d).

If (g) is equal to three, set (2) false, (3) and (4) true, increment (5) by 1, and proceed to Step 5. Otherwise, proceed to monitor (d).

If (d) is false, increment (h) by 1, and proceed to monitor (h). Otherwise, set (h) to zero, and proceed to monitor (e).

If (h) is equal to three, set (2) false, (3) and (4) true, increment (5) by 1, and proceed to Step 5. Otherwise, proceed to monitor (e).

If (e) is false, increment (i) by 1, and proceed to monitor (i). Otherwise, set (i) to zero, and proceed to monitor (f).

If (i) is equal to three, set (2) false, (3) and (4) true, increment (5) by 1, and proceed to Step 5. Otherwise proceed to monitor (f).

If (f) is false, increment (j) by 1, and proceed to monitor (i). Otherwise, set (i) to zero, and proceed to Step 8A.

If (j) is equal to three, set (2) false, (3) and (4) true, increment (5) by 1, and proceed to Step 5. Otherwise, proceed to Step 8A.

(1)	AFT MANIFOLD 3/4/5 JET INH FLAG	V90X8286X
(2)	INTERCONNECT MONITOR FLAG	(INTERNAL)
(3)	RCS 3/4/5 ALL JET INHIBIT FLAG	V90X8291X

(4)	OMS/RCS I/C IN PROGRESS FLAG	(INTERNAL)
(5)	1/C FAIL COUNTER	(INTERNAL)

Step 8A. This step monitors the status of the 3/4/5B RCS tank isolation valves when the OMS to RCS interconnect has been successfully completed. If any 3/4/5B RCS tank isolation valve closed status becomes false for three consecutive cycles, the RCS 3/4/5 ALL JET INHIBIT FLAG is set true to inhibit all 3/4/5 jet firings. If the COMMFAULT status for the 3//4/5B tank isolation valves indicates true for three consecutive cycles, the AFT MANIFOLD 3/4/5 JET INHIBIT FLAG is set true to inhibit dumping through that manifold. The monitor function is then terminated.

The following signals are monitored:

(a)	FA 4 INPUT PROM SEQ 3, 10 STATUS	V91X2848X
(b)	FA 4 COMMFAULT CYC COUNTER	(INTERNAL)
(c)	RCS L AFT OX TANK ISLN VLV 3/4/5 B CL	V42X2225X
(d)	RCS R AFT OX TANK ISLN VLV 3/4/5 B CL	V42X3225X
(e)	RCS L AFT FU TANK ISLN VLV 3/4/5 B CL	V42X2325X
(f)	RCS R AFT FU TANK ISLN VLV 3/4/5 B CL	V42X3325X
(g)	RCS L B OX TK POSN CYC COUNTER	(INTERNAL)
(h)	RCS R B OX TK POSN CYC COUNTER	(INTERNAL)
(i)	RCS L B FU TK POSN CYC COUNTER	(INTERNAL)
(j)	RCS R B FU TK POSN CYC COUNTER	(INTERNAL)

If (a) is true, increment (b) by 1, set (g), (h), (i), and (j) to zero, and proceed to monitor (b). Otherwise. if (a) is false, set (b) to zero, and proceed to monitor (c).

If (b) is equal to three, set (1) true, (2) false, and return to Step 1. Otherwise, return to Step 1.

If (c) is false, increment (g) by 1, and proceed to monitor (g). Otherwise, set (g) to zero, and proceed to monitor (d).

If (g) is equal to three, set (2) false, (3) and (4) true, increment (5) by 1, and proceed to Step 5. Otherwise, proceed to monitor (d).

If (d) is false, increment (h) by 1, and proceed to monitor (h). Otherwise, set (h) to zero, and proceed to monitor (e).

If (h) is equal to three, set (2) false, (3) and (4) true, increment (5) by 1, and proceed to Step 5. Otherwise, proceed to monitor (e).

If (e) is false, increment (i) by 1, and proceed to monitor (i). Otherwise, set (i) to zero, and proceed to monitor (f).

If (i) is equal to three, set (2) false, (3) and (4) true, increment (5) by 1, and proceed to Step 5. Otherwise, proceed to monitor (f).

If (f) is false, increment (j) by 1, and proceed to monitor (i). Otherwise, set (i) to zero, and return to Step 1.

If (j) is equal to three, set (2) false, (3) and (4) true, increment (5) by 1, and proceed to Step 5. Otherwise, return to Step 1.

(1)	AFT MANIFOLD 3/4/5 JET INH FLAG	V90X8286X
(2)	INTERCONNECT MONITOR FLAG	(INTERNAL)
(3)	RCS 3/4/5 ALL JET INHIBIT FLAG	V90X8291X
(4)	OMS/RCS I/C IN PROGRESS FLAG	(INTERNAL)
(5)	I/C FAIL COUNTER	(INTERNAL)

Step 9. This step commands the OMS pod crossfeed valves closed on initiation of the return to normal configuration sequence.

Issue the following commands and return to Step 1 until at least 1.5 seconds have elapsed. Then proceed to Step 6.

(1)	OMS–L POD XFD VLVS A CMD 1 CL	V43K4283X
(2)	OMS–L POD OXDZR XFD VLV A CMD 2 CL	V43K4285X
(3)	OMS–L POD FUEL XFD VLV A CMD 2 CL	V43K4385X
(4)	OMS–L POD XFD VLVS B CMD 1 CL	V43K4287X
(5)	OMS–L POD OXDZR XFD VLV B CMD 2 CL	V43K4289X
(6)	OMS–L POD FUEL XFD VLV B CMD 2 CL	V43K4389X
(7)	OMS–R POD XFD VLVS A CMD 1 CL	V43K5283X
(8)	OMS–R POD OXDZR XFD VLV A CMD 2 CL	V43K5285X
(9)	OMS–R POD FUEL XFD VLV A CMD 2 CL	V43K5385X
(10)	OMS–R POD XFD VLVS B CMD 1 CL	V43K5287X
(11)	OMS–R POD OXDZR XFD VLV B CMD 2 CL	V43K5289X
(12)	OMS–R POD FUEL XFD VLV B CMD 2 CL	V43K5389X

Step 10. This step monitors the response of the RCS left and right tank isolation valves on the 1/2 manifolds in the OMS/RCS return to normal configuration sequence. If any left or right 1/2 tank isolation valve fails to open, the RCS crossfeed valves between that manifold pair (OX and FU) and the corresponding 3/4/5 manifold will be left open to provide RCS propellant through the crossfeed valve.

The following signals are monitored:

(a)	RCS L AFT OX TANK ISLN VLV 1/2 OP	V42X2220X
(b)	RCS L AFT FU TANK ISLN VLV 1/2 OP	V42X2320X
(c)	RCS R AFT OX TANK ISLN VLV 1/2 OP	V42X3220X
(d)	RCS R AFT FU TANK ISLN VLV 1/2 OP	V42X3320X
(e)	RCS L AFT OX TANK ISLN VLV 1/2 CL	V42X2221X
(f)	RCS L AFT FU TANK ISLN VLV 1/2 CL	V42X2321X
(g)	RCS R AFT OX TANK ISLN VLV 1/2 CL	V42X3221X
(h)	RCS R AFT FU TANK ISLN VLV 1/2 CL	V42X3321X
(i)	FA 1 INPUT PROM SEG 3, 10 STATUS	V91X2845X
(j)	FA 3 INPUT PROM SEG 3, 10 STATUS	V91X2847X

If (a) and (b) are true, and (e), (f) and (i) are false, issue (1) thru (6) below, and go to the next if statement. Otherwise, issue (13) through (18) and go to the next if statement,

If (c) and (d) are true, and (g), (h) and (j) are false, issue (7) thru (12) below, and go to the next statement, otherwise, issue (19) through (24) and go to the next statement.

Set (25) ad (26) false and return to Step 1 until at least 1.5 seconds have elapsed and then proceed to Step 16.

(1)	RCS–L AFT XFD VLV–1/2 GPC CL A	V42K2416X
(2)	RCS–L AFT OX XFD VLV–1/2 GPC CL B	V42K2418X
(3)	RCS–L AFT FU XFD VLV–1/2 GPC CL B	V42K2422X
(4)	RCS–L AFT XFD VLV–3/4/5 GPC CL A	V42K2428X
(5)	RCS–L AFT OX XFD V–3/4/5 GPC CL B	V42K2430X
(6)	RCS–L AFT FU XFD V–3/4/5 GPC CL B	V42K2434X
(7)	RCS–R AFT XFD VLV–1/2 GPC CLOSE A	V42K3416X
(8)	RCS–R AFT OX XFD V–1/2 GPC CLOSE B	V42K3418X
(9)	RCS–R AFT FU XFD V–1/2 GPC CLOSE B	V42K3422X
(10)	RCS–R AFT XFD VLV–3/4/5 GPC CL A	V42K3428X
(11)	RCS–R AFT OX XFD V–3/4/5 GPC CL B	V42K3430X
(12)	RCS–R AFT FU XFD V–3/4/5 GPC CL B	V42K3434X
(13)	RCS–L AFT XFD VLV–1/2 GPC OP A	V42K2402X
(14)	RCS–L AFT OX XFD VLV–1/2 GPC OP B	V42K2403X
(15)	RCS–L AFT FU XFD VLV–1/2 GPC OP B	V42K2404X
(16)	RCS–L AFT XFD VLV–3/4/5 GPC OP A	V42K2408X
(17)	RCS–L AFT OX XFD V–3/4/5 GPC OP B	V42K2409X
(18)	RCS–L AFT FU XFD V–3/4/5 GPC OP B	V42K2410X
(19)	RCS–R AFT XFD VLV–1/2 GPC OPEN A	V42K3402X
(20)	RCS–R AFT OX XFD V–1/2 GPC OPEN B	V42K3403X
(21)	RCS–R AFT FU XFD V–1/2 GPC OPEN B	V42K3404X
(22)	RCS–R AFT XFD VLV–3/4/5 GPC OPEN A	V42K3408X
(23)	RCS–R AFT OX XFD V–3/4/5 GPC OPEN B	V42K3409X
(24)	RCS–R AFT FU XFD V–3/4/5 GPC OPEN B	V42K3410X
(25)	RCS 1/2 ALL JET INHIBIT FLAG	V90X8290X
(26)	RCS 3/4/5 ALL JET INHIBIT FLAG	V90X8291X

Step 11. This step completes the interconnect sequence. In addition, the interconnect monitor is requested for those interconnects which were completed with no commfaults or RCS isolation valves open or crossfeed valves closed.

The following signals are monitored:

(a)	OMS L POD OX XFD VLV B POSN OP	V43X4258X
(b)	OMS L POD FU XFD VLV B POSN OP	V43X4358X

(c)	OMS R POD OX XFD VLV B POSN OP	V43X5258X
(d)	OMS R POD FU XFD VLV B POSN OP	V43X5358X
(e)	OMS L POD OX XFD VLV A POSN OP	V43X4256X
(f)	OMS L POD FU XFD VLV A POSN OP	V43X4356X
(g)	OMS R POD OX XFD VLV A POSN OP	V43X5256X
(h)	OMS R POD FU XFD VLV A POSN OP	V43X5356X
(i)	FA 1 INPUT PROM SEG 3, 10 STATUS	V91X2845X
(j)	FA 2 INPUT PROM SEG 3, 10 STATUS	V91X2846X
(k)	OMS/RCS I/C IN PROGRESS FLAG	INTERNAL
(l)	I/C FAIL COUNTER	INTERNAL
(m)	OMS TO RCS INTERCONNECT COMPLETE FLAG	V90X8282X

If (l) > 1, set (8) = false (INHIBIT), set (9) and (11) = false, set (12) true and proceed to Step 16. Otherwise, go to the next if statement.

If [(k) is true and (m) is false], and [(a) or (b) or (c) or (d) is false, or (j) is true], issue (1) through (6), and return to Step 1 until at least 1.5 seconds have elapsed, then proceed to the next if statement. Otherwise proceed to monitor (l).

If [(e) or (f) or (g) or (h) is false] or (i) is true, set (8) = false (INHIBIT), set (9) and (11) = false, set (7) and (12) = true, and return to Step 1. Otherwise, go to the next if statement.

If (l) = 0 and (k) is true, set (7) and (10) = true, set (9), (13), and (14) = false and go to Step 7. Otherwise, go to the next statement.

Set (7) = true, set (9), (13), and (14) = false and return to Step 1.

(1)	OMS–L POD XFD VLVS A CMD 1 OP	V43K4282X
(2)	OMS–L POD OXDZR XFD VLV A CMD 2 OP	V43K4284X
(3)	OMS–L POD FUEL XFD VLV A CMD 2 OP	V43K4384X
(4)	OMS–R POD XFD VLVS A CMD 1 OP	V43K5282X
(5)	OMS–R POD OXDZR XFD VLV A CMD 2 OP	V43K5284X
(6)	OMS–R POD FUEL XFD VLV A CMD 2 OP	V43K5384X
(7)	OMS TO RCS INTERCONNECT COMPLETE FLAG	V90X8282X
(8)	OMS/RCS INTERCONNECT INH/ENA CMD	V93X5348X
(9)	OMS/RCS I/C IN PROGRESS FLAG	INTERNAL
(10)	INTERCONNECT MONITOR FLAG	INTERNAL
(11)	OMS TO RCS INTERCONNECT CMD	V90X8312X
(12)	OMS TO RCS RTRN TO NORM CONFIG CMD	V90X8313X
(13)	RCS 1/2 ALL JET INHIBIT FLAG	V90X8290X

(14) RCS 3/4/5 ALL JET INHIBIT FLAG V90X8291X

Step 12. This step is the first procedure in the execution of the Mode 2 return–to–normal for a contingency situation. The RCS tank isolation valves are commanded to the open position and then 1.5 seconds delay is satisfied before proceeding to the next step.

Issue commands (1) through (14) below and return to Step 1 until 1.5 seconds have expired, then proceed to Step 13.

(1)	RCS–L AFT TK ISLN V–1/2 GPC OP A	V42K2342X
(2)	RCS–L AFT OX TK ISLN V1/2 GPC OP B	V42K2343X
(3)	RCS–L AFT FU TK ISLN V1/2 GPC OP B	V42K2344X
(4)	RCS–R AFT TK ISLN V–1/2 GPC OP A	V42K3342X
(5)	RCS–R AFT OX TK ISLN V–1/2 GPC OP B	V42K3343X
(6)	RCS–R AFT FU TK ISLN V–1/2 GPC OP B	V42K3344X
(7)	RCS–L AFT OX TK ISLN V3/4/5 A GPC OP	V42K2346X
(8)	RCS–L AFT FU TK ISLN V3/4/5 A GPC OP	V42K2347X
(9)	RCS–R AFT OX TK ISLN V3/4/5 A GPC OP	V42K3346X
(10)	RCS–R AFT FU TK ISLN V3/4/5 A GPC OP	V42K3347X
(11)	RCS–L AFT OX TK ISLN V3/4/5 B GPC OP	V42K2349X
(12)	RCS–L AFT FU TK ISLN V3/4/5 B GPC OP	V42K2350X
(13)	RCS–R AFT OX TK ISLN V3/4/5 B GPC OP	V42K3349X
(14)	RCS–R AFT FU TK ISLN V3/4/5 B GPC OP	V42K3350X

Step 13. This step monitors the response of the left RCS tank isolation valves on the 1/2 manifolds during the Mode 2 OMS/RCS return–to–normal configuration sequence. If any left 1/2 tank isolation valve fails to open or it's associated commfault is true, the left 1/2 RCS crossfeed valves between that manifold pair (OX and FU) and the left 3/4/5 manifold will be commanded open to provide RCS propellant through the crossfeed valves. If the left 1/2 RCS tank isolation valves are open, the left 1/2 and 3/4/5 RCS crossfeed valves will be commanded closed.

Monitor the following signals:

(a)	RCS L AFT OX TANK ISLN VLV 1/2 OP	V42X2220X
(b)	RCS L AFT FU TANK ISLN VLV 1/2 OP	V42X2320X
(c)	RCS L AFT OX TANK ISLN VLV 1/2 CL	V42X2221X
(d)	RCS L AFT FU TANK ISLN VLV 1/2 CL	V42X2321X
(e)	FA 1 INPUT PROM SEG 3, 10 STATUS	V91X2845X

If [(a) and (b) are both true] and [(c), (d), and (e) are all false], issue (7) through (12) and proceed to Step 14.

If [(a) or (b) is false) or [(c) or (d) or (e) is true], issue (1) through (6) and proceed to Step 14.

(1)	RCS–L AFT XFD VLV–1/2 GPC OP A	V42K2402X
(2)	RCS–L AFT OX XFD VLV–1/2 GPC OP B	V42K2403X
(3)	RCS–L AFT FU XFD VLV–1/2 GPC OP B	V42K2404X
(4)	RCS–L AFT XFD VLV–3/4/5 GPC OP A	V42K2408X
(5)	RCS–L AFT OX XFD V–3/4/5 GPC OP B	V42K2409X
(6)	RCS–L AFT FU XFD V–3/4/5 GPC OP B	V42K2410X
(7)	RCS–L AFT XFD VLV–1/2 GPC CL A	V42K2416X
(8)	RCS–L AFT OX XFD VLV–1/2 GPC CL B	V42K2418X
(9)	RCS–L AFT FU XFD VLV–1/2 GPC CL B	V42K2422X
(10)	RCS–L AFT XFD VLV–3/4/5 GPC CL A	V42K2428X
(11)	RCS–L AFT OX XFD V–3/4/5 GPC CL B	V42K2430X
(12)	RCS–L AFT FU XFD V–3/4/5 GPC CL B	V42K2434X

Step 14. This step monitors the response of the right RCS tank isolation valves on the 1/2 manifolds during the Mode 2 OMS/RCS return–to–normal configuration sequence. If any right 1/2 tank isolation valve fails to open or it's associated commfault is true, the right 1/2 RCS crossfeed valves between that manifold pair (OX and FU) and the right 3/4/5 manifold will be commanded open to provide RCS propellant through the crossfeed valves. If the right 1/2 RCS tank isolation valves are open, the right 1/2 and 3/4/5 RCS crossfeed valves will be commanded closed.

Monitor the following signals:

(a)	RCS R AFT OX TANK ISLN VLV 1/2 OP	V42X3220X
(b)	RCS R AFT FU TANK ISLN VLV 1/2 OP	V42X3320X
(c)	RCS R AFT OX TANK ISLN VLV 1/2 CL	V42X3221X
(d)	RCS R AFT FU TANK ISLN VLV 1/2 CL	V42X3321X
(e)	FA 3 INPUT PROM SEG 3, 10 STATUS	V91X2847X

If [(a) and (b) are both true] and [(c), (d), and (e) are all false], issue (7) through (12) and return to Step 1 until 1.5 seconds has expired, then proceed to Step 15.

If [(a) or (b) is false] or [(c) or (d) or (e) is true], issue (1) through (6) and return to Step 1 until 1.5 seconds has expired, then proceed to Step 15.

(1)	RCS–R AFT XFD VLV–1/2 GPC OPEN A	V42K3402X
(2)	RCS–R AFT OX XFD VLV–1/2 GPC OPEN B	V42K3403X
(3)	RCS–R AFT FU XFD VLV–1/2 GPC OPEN B	V42K3404X
(4)	RCS–R AFT XFD VLV–3/4/5 GPC OPEN A	V42K3408X
(5)	RCS–R AFT OX XFD V–3/4/5 GPC OP B	V42K3409X
(6)	RCS–R AFT FU XFD V–3/4/5 GPC OP B	V42K3410X
(7)	RCS–R AFT XFD VLV–1/2 GPC CLOSE A	V42K3416X
(8)	RCS–R AFT OX XFD V–1/2 GPC CLOSE B	V42K3418X
(9)	RCS–R AFT FU XFD V–1/2 GPC CLOSE B	V42K3422X

(10)	RCS–R AFT XFD VLV–3/4/5 GPC CL A	V42K3428X
(11)	RCS–R AFT OX XFD V–3/4/5 GPC CL B	V42K3430X
(12)	RCS–R AFT FU XFD V–3/4/5 GPC CL B	V42K3434X

Step 15. This step commands the OMS propellant crossfeed valves closed.

Issue commands (1) through (12), and return to Step 1 until 1.5 seconds have elapsed, then proceed to Step 16.

(1)	OMS–L POD XFD VLVS A CMD 1 CL	V43K4283X
(2)	OMS–L POD OXDZR XFD VLV A CMD 2 CL	V43K4285X
(3)	OMS–L POD FUEL XFD VLV A CMD 2 CL	V43K4385X
(4)	OMS–L POD XFD VLVS B CMD 1 CL	V43K4287X
(5)	OMS–L POD OXDZR XFD VLV B CMD 2 CL	V43K4289X
(6)	OMS–L POD FUEL XFD VLV B CMD 2 CL	V43K4389X
(7)	OMS–R POD XFD VLVS A CMD 1 CL	V43K5283X
(8)	OMS–R POD OXDZR XFD VLV A CMD 2 CL	V43K5285X
(9)	OMS–R ROD FUEL XFD VLV A CMD 2 CL	V43K5385X
(10)	OMS–R POD XFD VLVS B CMD 1 CL	V43K5287X
(11)	OMS–R POD OXDZR XFD VLV B CMD 2 CL	V43K5289X
(12)	OMS–R POD FUEL XFD VLV B CMD 2 CL	V43K5389X

Step 16. This step completes the intact abort and Mode 2 return to normal sequence.

Set (1) through (6) false and return to Step 1.

(1)	RCS 1/2 ALL JET INHIBIT FLAG	V90X8290X
(2)	RCS 3/4/5 ALL JET INHIBIT FLAG	V90X8291X
(3)	AFT MANIFOLD 1/2 JET INH FLAG	V90X8285X
(4)	AFT MANIFOLD 3/4/5 JET INH FLAG	V90X8286X
(5)	OMS TO RCS INTERCONNECT COMPLETE FLAG	V90X8282X
(6)	OMS/RCS RTRN TO NORM IN PROGRESS FLAG	(INTERNAL)

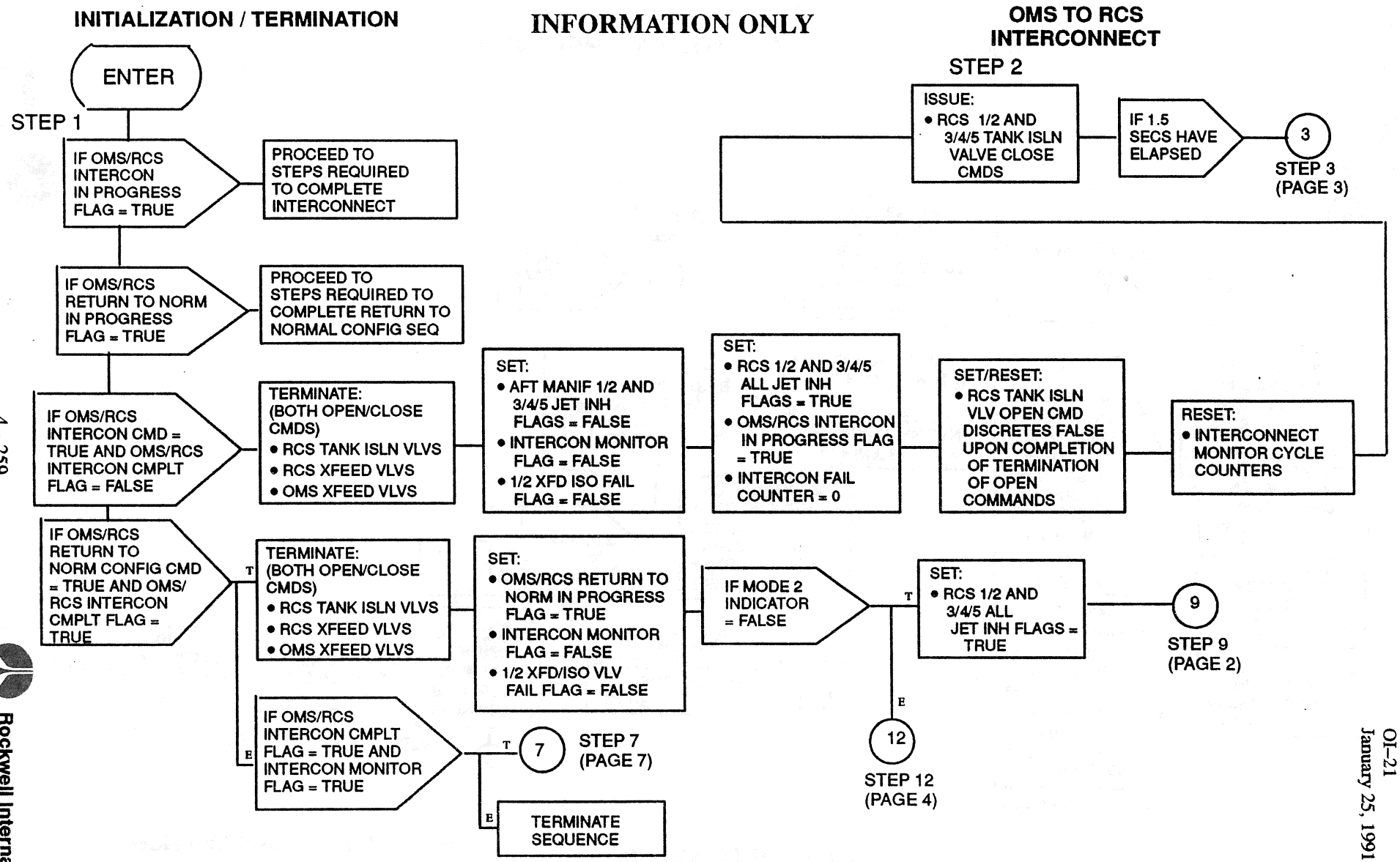

Figure 4.184. Abort OMS/RCS Interconnect Sequence (Sheet 1 of 7)

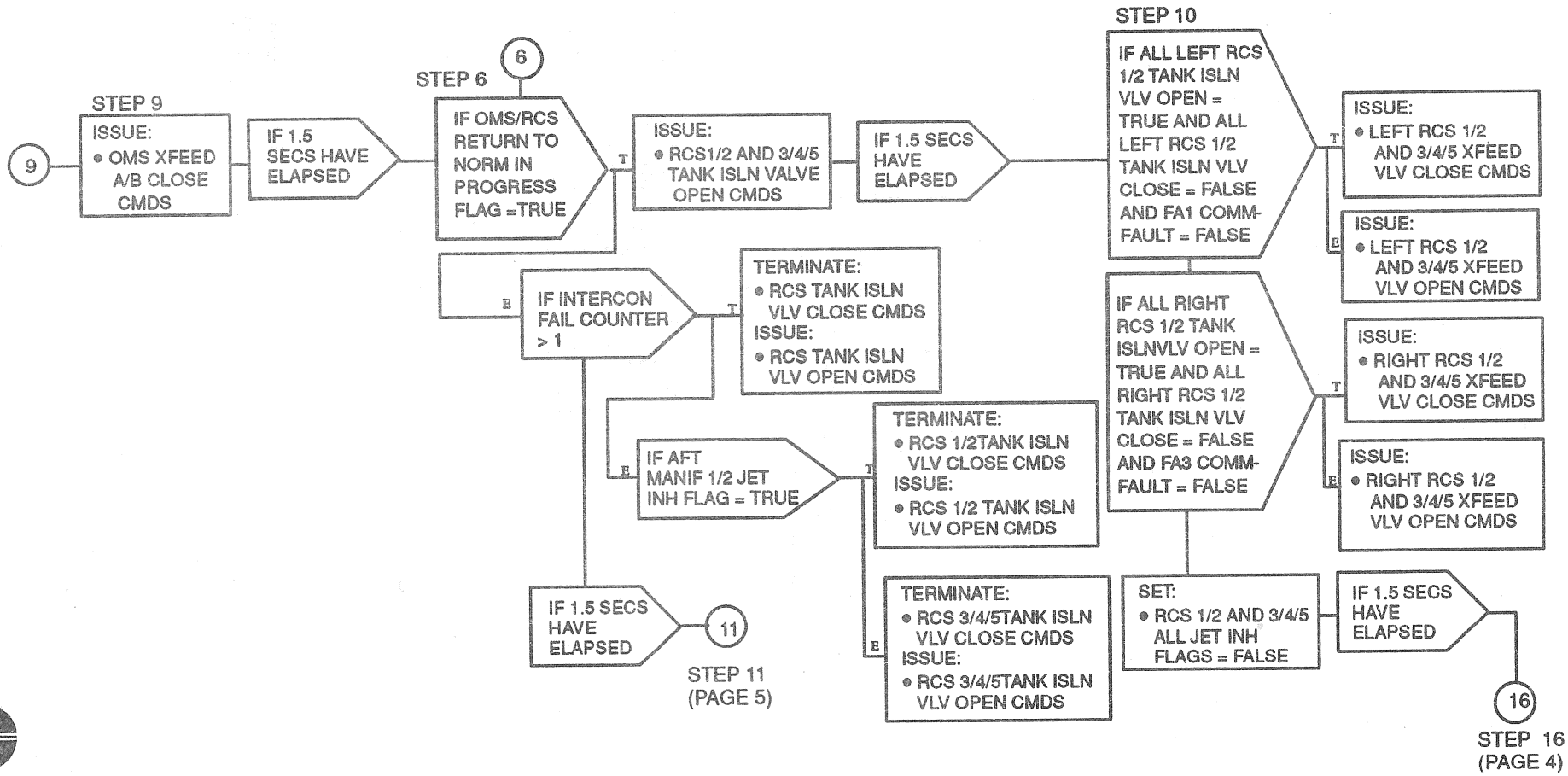

Figure 4.184. Abort OMS/RCS Interconnect Sequence (Sheet 2 of 7)

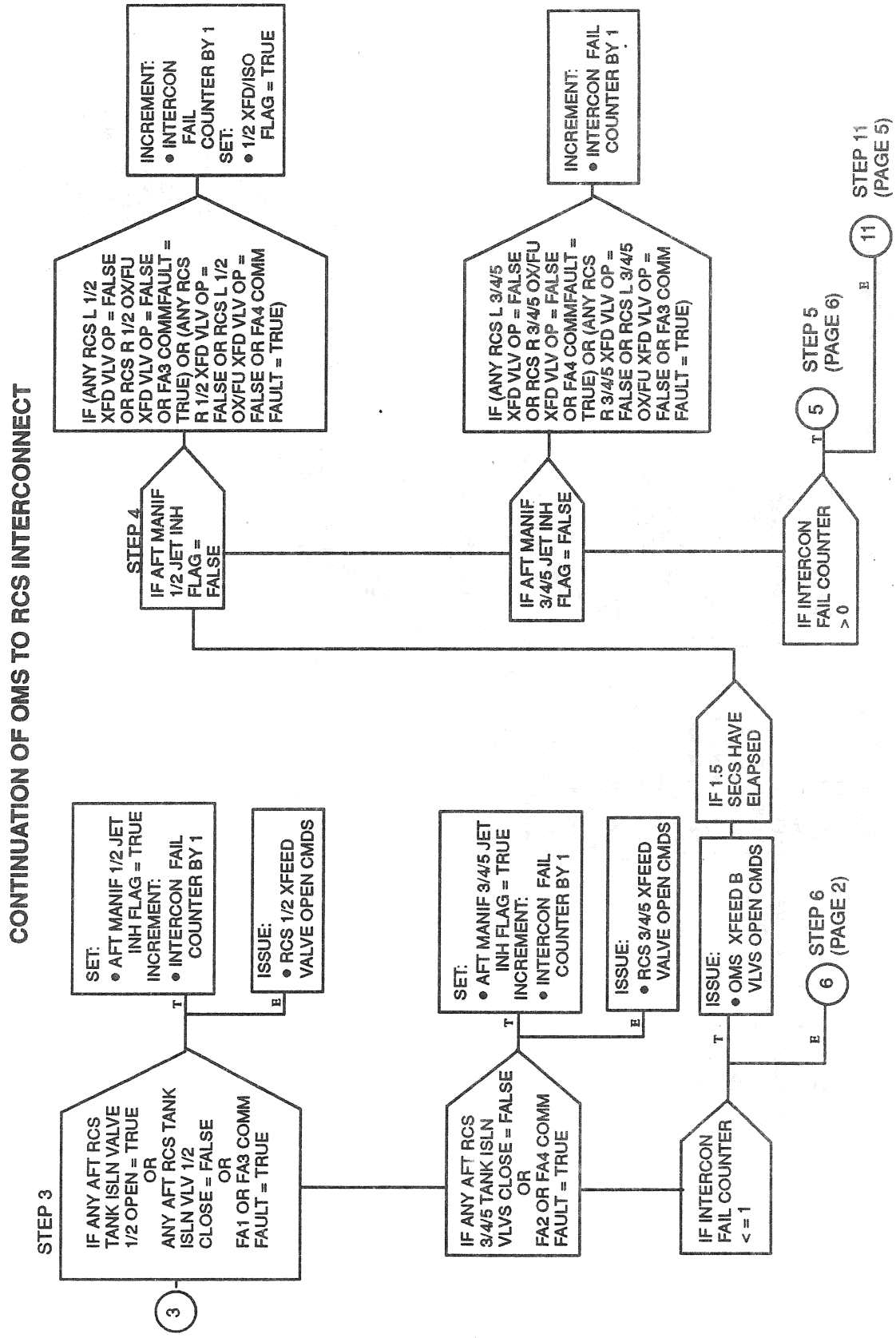

Figure 4.184. Abort OMS/RCS Interconnect Sequence (Sheet 3 of 7)

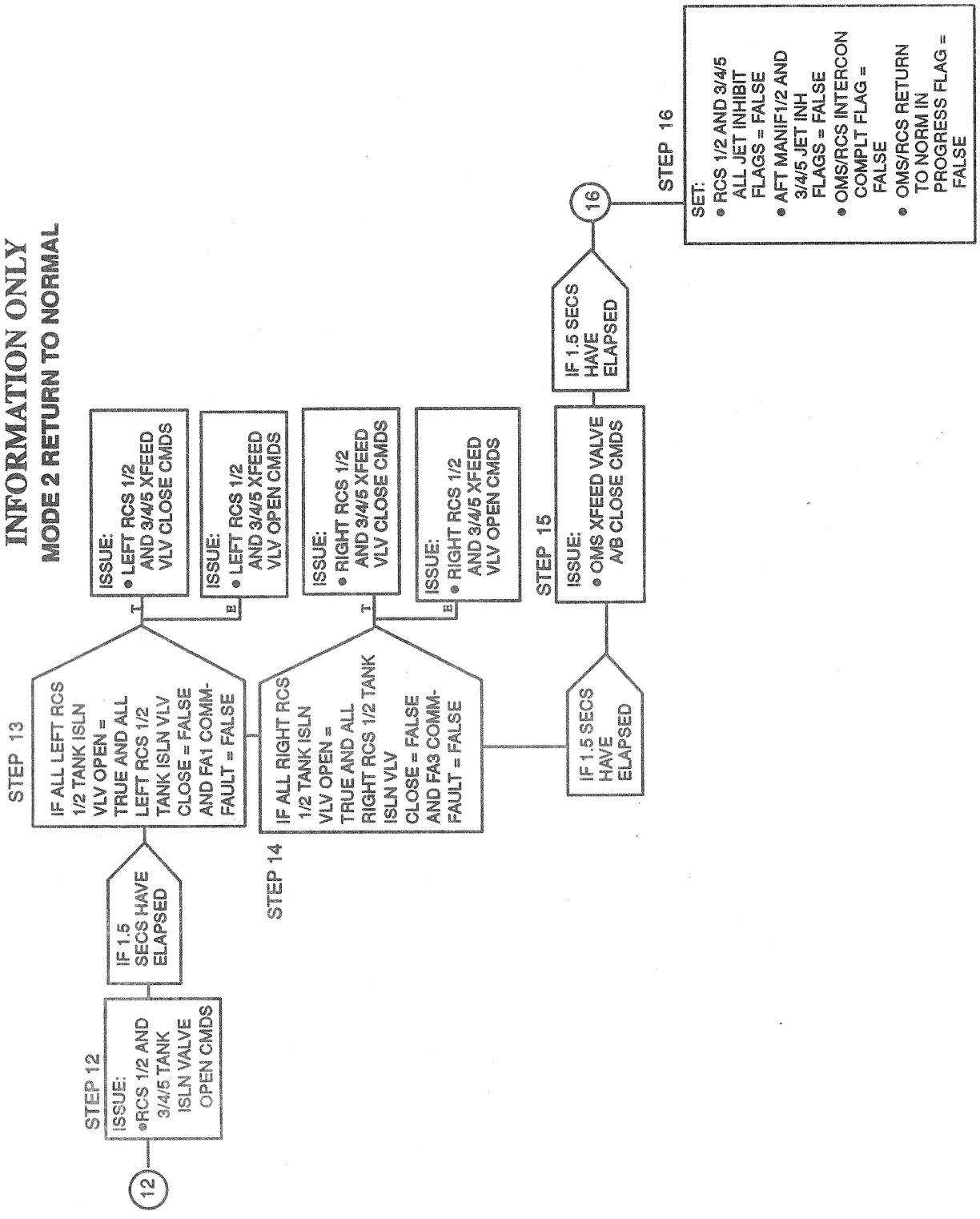

Figure 4.184. Abort OMS/RCS Interconnect Sequence (Sheet 4 of 7)

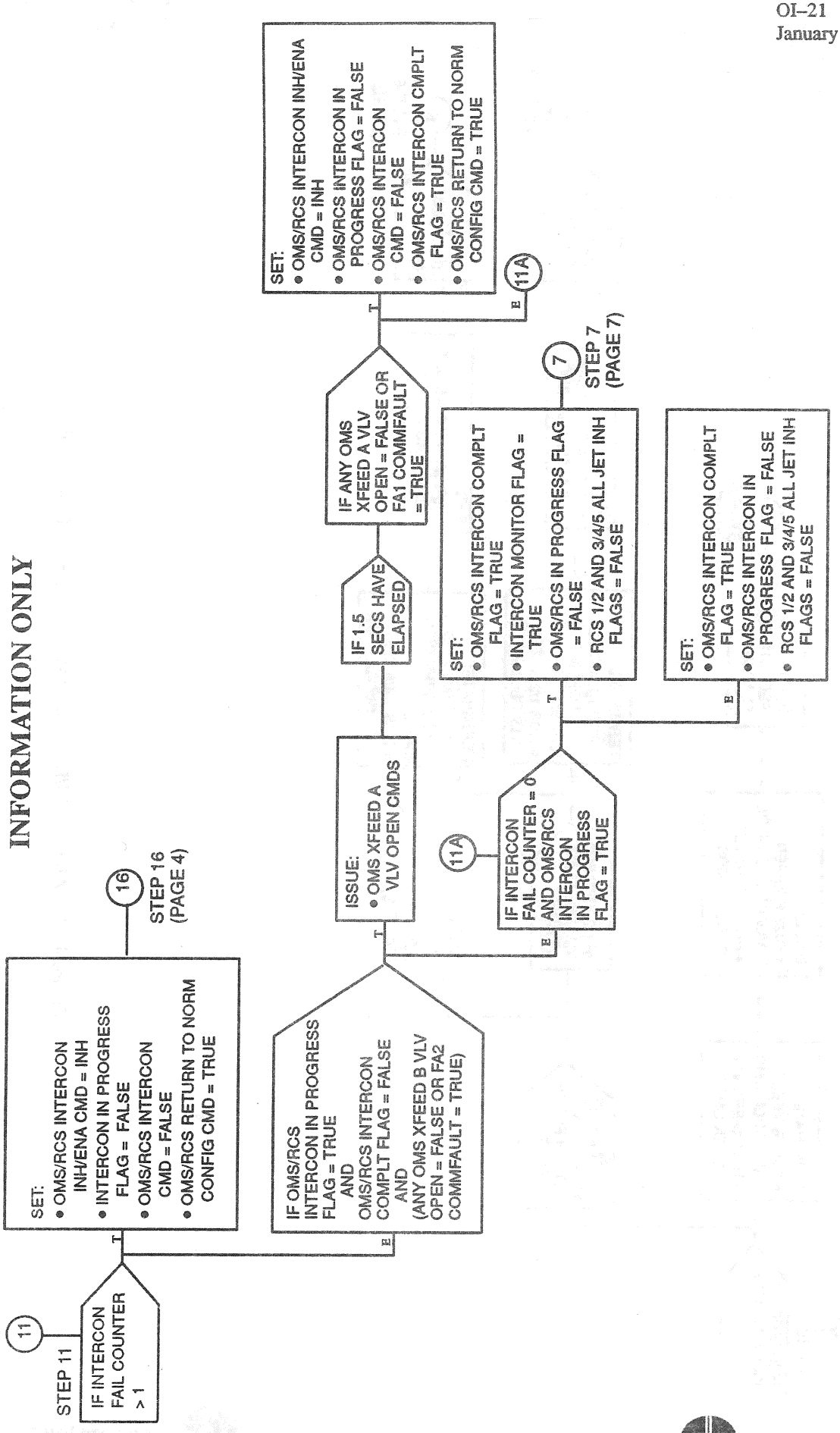

Figure 4.184. Abort OMS/RCS Interconnect Sequence (Sheet 5 of 7)

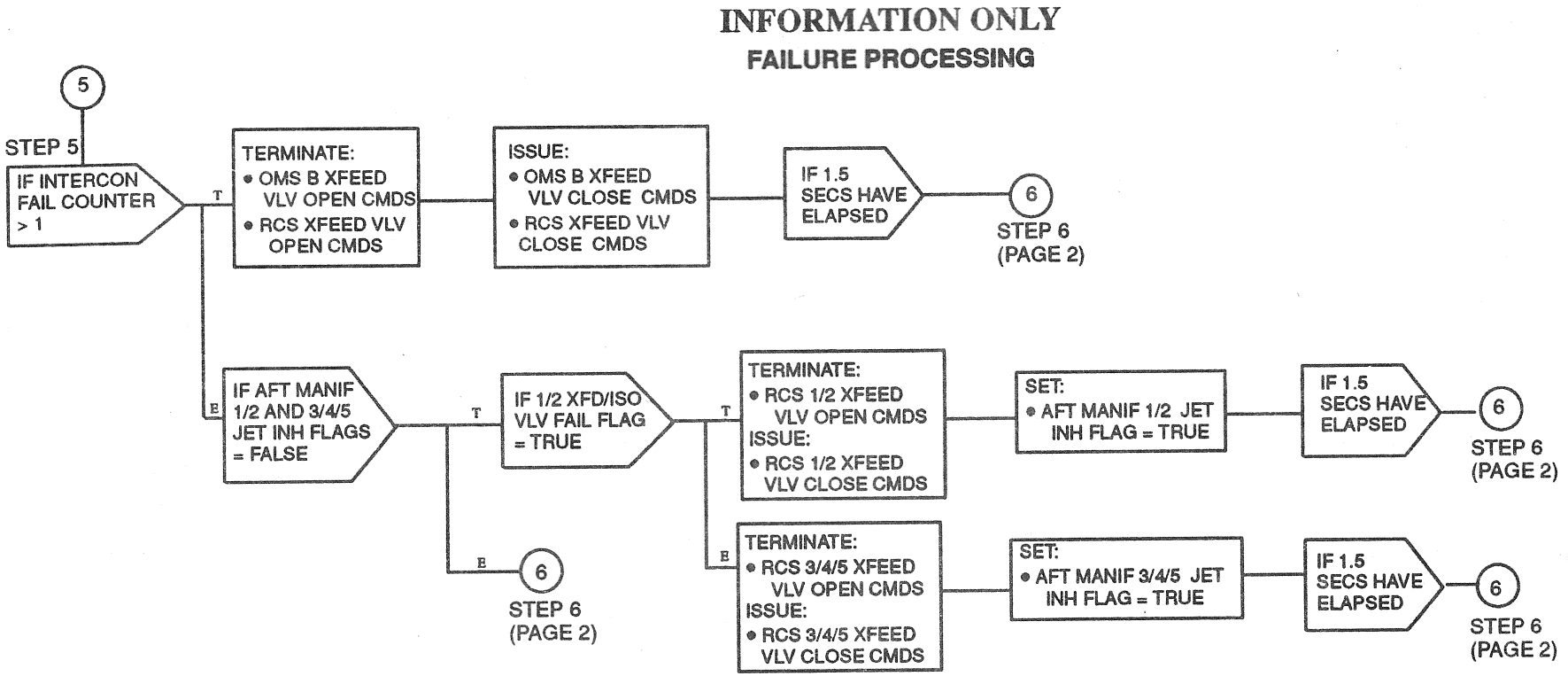

Figure 4.184. Abort OMS/RCS Interconnect Sequence (Sheet 6 of 7)

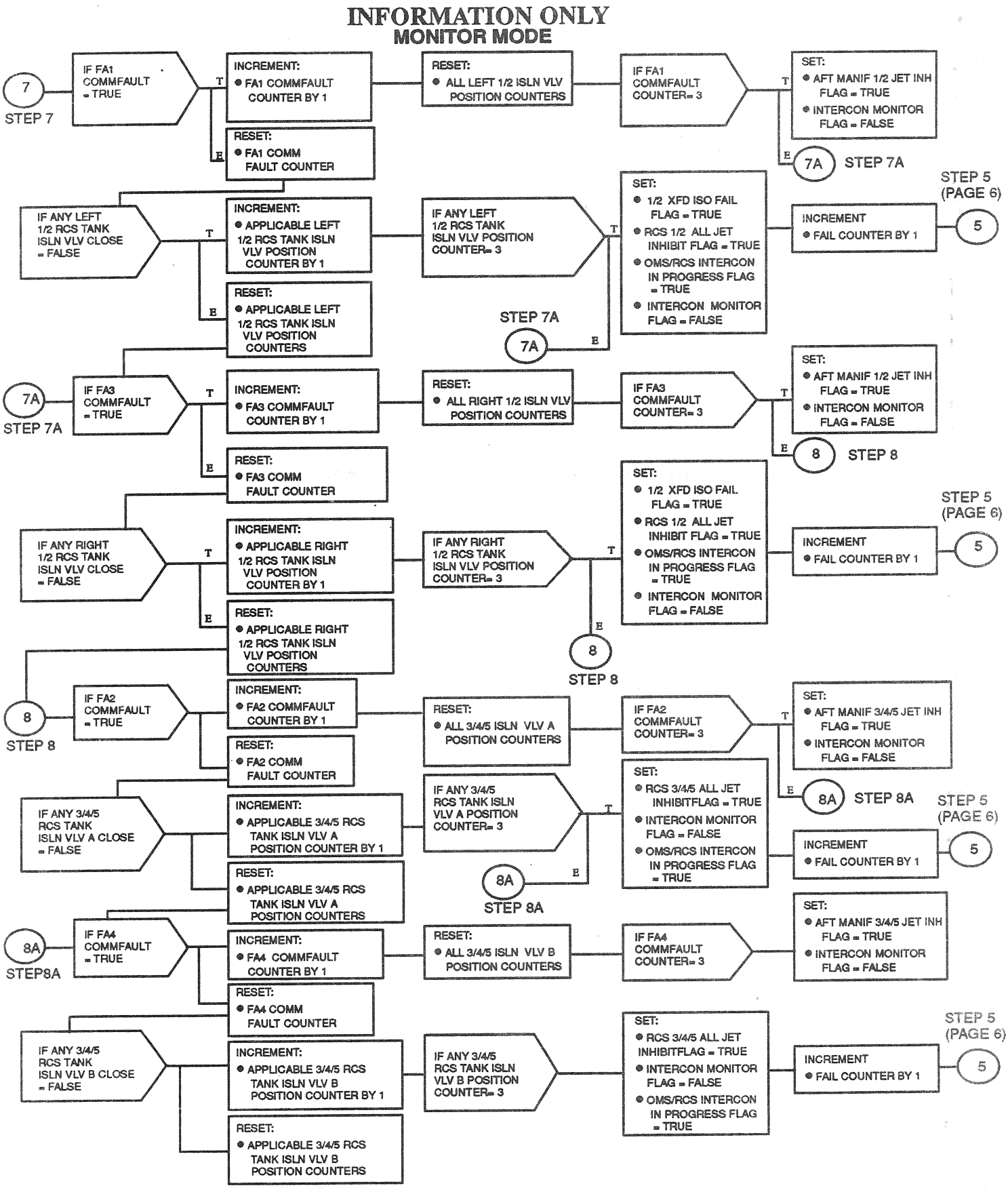

Figure 4.184. Abort OMS/RCS Interconnect Sequence (Sheet 7 of 7)

THIS PAGE INTENTIONALLY LEFT BLANK

TABLE 4.3.2.4–1. ABORT OMS/RCS INTERCONNECT FUNCTION (G4.184) INPUT/OUTPUT FUNCTIONAL PARAMETERS

DBFN: D3B027-F PN: VP707100049P00L INPUT FUNCTIONAL PARAMETERS FOR ABT OMS/RCS CONN

FSSR NAME	M/S ID	NOMENCLATURE	SOURCE	UNITS	DATA TYPE	PREC	LAST CRS
	V42X2220X	RCS-L AFT OX TANK ISLN VLV-1/2 OP	MCA A3		BD		59126H
	V42X2221X	RCS-L AFT OX TANK ISLN VLV-1/2 CL	MCA A3		BD		59126H
	V42X2223X	RCS-L AFT OX TK ISLN VLV-3/4/5A CL	MCA A1		BD		59126H
	V42X2225X	RCS-L AFT OX TK ISLN VLV-3/4/5B CL	MCA A2		BD		59126H
	V42X2236X	RCS L AFT OX XFD VLV-1/2 OP	MCA A3		BD		59126H
	V42X2238X	RCS L AFT OX XFD VLV-3/4/5 OP	MCA A2		BD		59126H
	V42X2251X	RCS L OX/FU XFD VLV 1/2 OP	MCA A3		BD		89210B
	V42X2252X	RCS R OX/FU XFD VLV 1/2 OP	MCA A3		BD		89210B
	V42X2253X	RCS L OX/FU XFD VLV 3/4/5 OP	MCA A1		BD		89210B
	V42X2254X	RCS R OX/FU XFD VLV 3/4/5 OP	MCA A1				89210B
	V42X2320X	RCS-L AFT FU TANK ISLN VLV-1/2 OP	MCA A3		BD		59126H
	V42X2321X	RCS-L AFT FU TANK ISLN VLV-1/2 CL	MCA A3		BD		59126H
	V42X2323X	RCS-L AFT FU TK ISLN VLV-3/4/5A CL	MCA A1		BD		59126H
	V42X2325X	RCS-L AFT FU TK ISLN VLV-3/4/5B CL	MCA A2		BD		59126H
	V42X2336X	RCS L AFT FU XFD VLV-1/2 OP	MCA A3		BD		59126H
	V42X2338X	RCS L AFT FU XFD VLV-3/4/5 OP	MCA A2		BD		59126H
	V42X3220X	RCS-R AFT OX TANK ISLN VLV-1/2 OP	MCA A3		BD		59126H
	V42X3221X	RCS-R AFT OX TANK ISLN VLV-1/2 CL	MCA A3		BD		59126H
	V42X3223X	RCS-R AFT OX TK ISLN VLV-3/4/5A CL	MCA A1		BD		59126H
	V42X3225X	RCS-R AFT OX TK ISLN VLV-3/4/5B CL	MCA A2		BD		59126H
	V42X3236X	RCS-R AFT OX XFD VLV-1/2 OP	MCA A3		BD		59126H
	V42X3238X	RCS R AFT OX XFD VLV-3/4/5 OP	MCA A1		BD		59126H
	V42X3320X	RCS-R AFT FU TK ISLN VLV-1/2 OP	MCA A3		BD		59126H
	V42X3321X	RCS-R AFT FU TK ISLN VLV-1/2 CL	MCA A3		BD		59126H
	V42X3323X	RCS-R AFT FU TK ISLN VLV-3/4/5A CL	MCA A1		BD		59126H
	V42X3325X	RCS-R AFT FU TK ISLN VLV-3/4/5B CL	MCA A2		BD		59126H
	V42X3336X	RCS R AFT FU XFD VLV-1/2 OP	MCA A3		BD		59126H
	V42X3338X	RCS R AFT FU XFD VLV-3/4/5 OP	MCA A1		BD		59126H
	V43X4256X	OMS-L POD OX XFD VLV A POSN OP	MCA A1		BD		90114B
							89598A
	V43X4258X	OMS-L POD OX XFD VLV B POSN OP	MCA A2		BD		89598A
	V43X4356X	OMS-L POD FU XFD VLV A POSN OP	MCA A1		BD		90114B
							89598A
	V43X4358X	OMS-L POD FU XFD VLV B POSN OP	MCA A2		BD		89598A
	V43X5256X	OMS-R POD OX XFD VLV A POSN OP	MCA A3		BD		90114B
							89598A
	V43X5258X	OMS-R POD OX XFD VLV B POSN OP	MCA A2		BD		89598A
	V43X5356X	OMS-R POD FU XFD VLV A POSN OP	MCA A3		BD		90114B
							89598A
	V43X5358X	OMS-R POD FU XFD VLV B POSN OP	MCA A2		BD		89598A
	V90X8308X	MODE 2 INDICATOR	ABT CNTL SEQ				
	V90X8312X	OMS TO RCS INTERCONNECT CMD	ABT CNTL SEQ		BD		89599C
	V90X8313X	OMS TO RCS RTRN TO NORM CONFIG CMD	ABT CNTL SEQ		BD		89599C

TABLE 4.3.2.4–1. ABORT OMS/RCS INTERCONNECT FUNCTION (G4.184) INPUT/OUTPUT FUNCTIONAL PARAMETERS

DBFN: D3B027-F PN: VP707100049P00L INPUT FUNCTIONAL PARAMETERS FOR ABT OMS/RCS CONN

FSSR NAME	M/S ID	NOMENCLATURE	SOURCE	UNITS	DATA TYPE	PREC	LAST CRS
	V91X2845X	FA1 INPUT PROM SEG3,10 STATUS(HFE)	FCOS				89991E 89598A
	V91X2846X	FA2 INPUT PROM SEG3,10 STATUS(HFE)	FCOS				89991E 89598A
	V91X2847X	FA3 INPUT PROM SEG3,10 STATUS(HFE)	FCOS				89991E 89598A
	V91X2848X	FA4 INPUT PROM SEG3,10 STATUS(HFE)	FCOS				89598A 59126H

TABLE 4.3.2.4–1. ABORT OMS/RCS INTERCONNECT FUNCTION (G4.184) INPUT/OUTPUT FUNCTIONAL PARAMETERS

DBFN: D3B027-F PN: VP707100049P00L OUTPUT FUNCTIONAL PARAMETERS FROM ABT OMS/RCS CONN

FSSR NAME	M/S ID	NOMENCLATURE	DESTINATION	UNITS	DATA TYPE	PREC	LAST CRS
	V42K2342XB	RCS-L AFT TK ISLN V-1/2 GPC OP A	MCA A3				
	V42K2343XB	RCS-L AFT OX TK ISLN V1/2 GPC OP B	MCA A3				
	V42K2344XB	RCS-L AFT FU TK ISLN V1/2 GPC OP B	MCA A3				
	V42K2346XA	RCS-L AFT OX TK ISLN V3/4/5AGPC OP	MCA A1				
	V42K2347XA	RCS-L AFT FU TK ISLN V3/4/5AGPC OP	MCA A1				
	V42K2349XA	RCS-L AFT OX TK ISLN V3/4/5BGPC OP	MCA A2				
	V42K2350XA	RCS-L AFT FU TK ISLN V3/4/5BGPC OP	MCA A2				
	V42K2353XA	RCS-L AFT TK ISLN V-1/2 GPC CL A	MCA A3				
	V42K2354XA	RCS-L AFT OX TK ISLN V1/2 GPC CL B	MCA A3				
	V42K2355XA	RCS-L AFT FU TK ISLN V1/2 GPC CL B	MCA A3				
	V42K2357XA	RCS-L AFT OX TK ISLN V3/4/5AGPC CL	MCA A1				
	V42K2358XA	RCS-L AFT FU TK ISLN V3/4/5AGPC CL	MCA A1				
	V42K2360XA	RCS-L AFT OX TK ISLN V3/4/5BGPC CL	MCA A2				
	V42K2361XA	RCS-L AFT FU TK ISLN V3/4/5BGPC CL	MCA A2				
	V42K2402XB	RCS-L AFT XFD VLV 1/2 GPC OP A	MCA A3				
	V42K2403XB	RCS-L AFT OX XFD VLV-1/2 GPC OP B	MCA A3				
	V42K2404XB	RCS-L AFT FU XFD VLV 1/2 GPC OP B	MCA A3				
	V42K2408XB	RCS-L AFT XFD VLV 3/4/5 GPC OP A	MCA A2				
	V42K2409XB	RCS-L AFT OX XFD V-3/4/5 GPC OP B	MCA A2				
	V42K2410XB	RCS-L AFT FU XFD V-3/4/5 GPC OP B	MCA A2				
	V42K2416XB	RCS-L AFT XFD VLV-1/2 GPC CL A	MCA A3				
	V42K2418XB	RCS-L AFT OX XFD VLV-1/2 GPC CL B	MCA A3				
	V42K2422XB	RCS-L AFT FU XFD VLV-1/2 GPC CL B	MCA A3				
	V42K2428XB	RCS-L AFT XFD V-3/4/5 GPC CL A	MCA A2				
	V42K2430XB	RCS-L AFT OX XFD V-3/4/5 GPC CL B	MCA A2				
	V42K2434XB	RCS-L AFT FU XFD V-3/4/5 GPC CL B	MCA A2				
	V42K3342XA	RCS-R AFT TK ISLN V-1/2 GPC OP A	MCA A3				
	V42K3343XA	RCS-R AFT OX TK ISLN V-1/2 GPC OPB	MCA A3				
	V42K3344XA	RCS-R AFT FU TK ISLN V-1/2 GPC OPB	MCA A3				
	V42K3346XA	RCS-R AFT OX TK ISLN V3/4/5AGPC OP	MCA A1				
	V42K3347XA	RCS-R AFT FU TK ISLN V3/4/5AGPC OP	MCA A1				
	V42K3349XA	RCS-R AFT OX TK ISLN V3/4/5BGPC OP	MCA A2				
	V42K3350XA	RCS-R AFT FU TK ISLN V3/4/5BGPC OP	MCA A2				
	V42K3353XA	RCS-R AFT TK ISLN V-1/2 GPC CL A	MCA A3				
	V42K3354XA	RCS-R AFT OX TK ISLN V-1/2 GPC CLB	MCA A3				
	V42K3355XA	RCS-R AFT FU TK ISLN V-1/2 GPC CLB	MCA A3				
	V42K3357XA	RCS-R AFT OX TK ISLN V3/4/5AGPC CL	MCA A1				
	V42K3358XA	RCS-R AFT FU TK ISLN V3/4/5AGPC CL	MCA A1				
	V42K3360XA	RCS-R AFT OX TK ISLN V3/4/5BGPC CL	MCA A2				
	V42K3361XA	RCS-R AFT FU TK ISLN V3/4/5BGPC CL	MCA A2				
	V42K3402XB	RCS R AFT XFD VLV-1/2 GPC OPEN A	MCA A3				
	V42K3403XB	RCS R AFT OX XFD V-1/2 GPC OPEN B	MCA A3				
	V42K3404XB	RCS R AFT FU XFD V-1/2 GPC OPEN B	MCA A3				

TABLE 4.3.2.4–1. ABORT OMS/RCS INTERCONNECT FUNCTION (G4.184) INPUT/OUTPUT FUNCTIONAL PARAMETERS

DBFN: D3B027-F PN: VP707100049P00L OUTPUT FUNCTIONAL PARAMETERS FROM ABT OMS/RCS CONN

FSSR NAME	M/S ID	NOMENCLATURE	DESTINATION	UNITS	DATA TYPE	PREC	LAST CRS
	V42K3408XB	RCS R AFT XFD VLV-3/4/5 GPC OPEN A	MCA A1				
	V42K3409XB	RCS R AFT OX XFD V-3/4/5 GPC OP B	MCA A1				
	V42K3410XB	RCS R AFT FU XFD V-3/4/5 GPC OP B	MCA A1				
	V42K3416XB	RCS R AFT XFD VLV-1/2 GPC CLOSE A	MCA A3				
	V42K3418XB	RCS R AFT OX XFD V-1/2 GPC CLOSE B	MCA A3				
	V42K3422XB	RCS R AFT FU XFD V-1/2 GPC CLOSE B	MCA A3				
	V42K3428XB	RCS R AFT XFD VLV-3/4/5 GPC CL A	MCA A1				
	V42K3430XB	RCS-R AFT OX XFD V-3/4/5 GPC CL B	MCA A1				
	V42K3434XB	RCS-R AFT FU XFD V-3/4/5 GPC CL B	MCA A1				
	V43K4282XB	OMS-L POD XFD VLVS A CMD 1 OP	MCA A1				
	V43K4283XB	OMS-L POD XFD VLVS A CMD 1 CL	MCA A1				
	V43K4284XB	OMS-L POD OXDZR XFD VLV A CMD 2 OP	MCA A1				
	V43K4285XB	OMS-L POD OXDZR XFD VLV A CMD 2 CL	MCA A1				
	V43K4286XB	OMS-L POD XFD VLVS B CMD 1 OP	MCA A2				
	V43K4287XB	OMS-L POD XFD VLVS B CMD 1 CL	MCA A2				
	V43K4288XB	OMS-L POD OXDZR XFD VLV B CMD 2 OP	MCA A2				
	V43K4289XB	OMS-L POD OXDZR XFD VLV B CMD 2 CL	MCA A2				
	V43K4384XB	OMS-L POD FUEL XFD VLV A CMD 2 OP	MCA A1				
	V43K4385XB	OMS-L POD FUEL XFD VLV A CMD 2 CL	MCA A1				
	V43K4388XB	OMS-L POD FUEL XFD VLV B CMD 2 OP	MCA A2				
	V43K4389XB	OMS-L POD FUEL XFD VLV B CMD 2 CL	MCA A2				
	V43K5282XB	OMS-R POD XFD VLVS A CMD 1 OP	MCA A3				
	V43K5283XB	OMS-R POD XFD VLVS A CMD 1 CL	MCA A3				
	V43K5284XB	OMS-R POD OXDZR XFD VLV A CMD 2 OP	MCA A3				
	V43K5285XB	OMS-R POD OXDZR XFD VLV A CMD 2 CL	MCA A3				
	V43K5286XB	OMS-R POD XFD VLVS B CMD 1 OP	MCA A2				
	V43K5287XB	OMS-R POD XFD VLVS B CMD 1 CL	MCA A2				
	V43K5288XB	OMS-R POD OXDZR XFD VLV B CMD 2 OP	MCA A2				
	V43K5289XB	OMS-R POD OXDZR XFD VLV B CMD 2 CL	MCA A2				
	V43K5384XB	OMS-R POD FUEL XFD VLV A CMD 2 OP	MCA A3				
	V43K5385XB	OMS-R POD FUEL XFD VLV A CMD 2 CL	MCA A3				
	V43K5388XB	OMS-R POD FUEL XFD VLV B CMD 2 OP	MCA A2				
	V43K5389XB	OMS-R POD FUEL XFD VLV B CMD 2 CL	MCA A2				
	V90X8282X	OMS TO RCS INTERCONNECT COMP FLAG	ABT CNTL SEQ,RCS REG SEQ, RCS/RCS XFEED,ASC RCS CMD SOP, E/L RCS CMD SOP,OVERRIDE DISP, MSC,TLM		BD		90114B 89561A
	V90X8285X	AFT MANIFOLD 1/2 JET INH FLAG	ABT CNTL SEQ,ASC RCS CMD SOP, E/L RCS CMD SOP,TLM		BD		90114B 59126H
	V90X8286X	AFT MANIFOLD 3/4/5 JET INH FLAG	ABT CNTL SEQ,ASC RCS CMD SOP, E/L RCS CMD SOP,TLM		BD		90114B 59126H
	V90X8290X	RCS 1/2 ALL JET INHIBIT FLAG	ASC RCS CMD SOP,E/L RCS CMD SOP		BD		90114B
	V90X8291X	RCS 3/4/5 ALL JET INHIBIT FLAG	ASC RCS CMD SOP,E/L RCS CMD SOP		BD		90114B

TABLE 4.3.2.4–1. ABORT OMS/RCS INTERCONNECT FUNCTION (G4.184) INPUT/OUTPUT FUNCTIONAL PARAMETERS

DBFN: D3B027-F PN: VP707100049P00L OUTPUT FUNCTIONAL PARAMETERS FROM ABT OMS/RCS CONN

FSSR NAME	M/S ID	NOMENCLATURE	DESTINATION	UNITS	DATA TYPE	PREC	LAST CRS
	V93X5348XC	OMS/RCS INTERCONNECT INH/ENA CMD	ABT CNTL SEQ,OVERRIDE DISP				89210B

TABLE 4.3.2.4–2. ABORT OMS/RCS INTERCONNECT FUNCTION (G4.184) I–LOADS

DBFN:0484

FSSR NAME	MSID	ENG UNIT	DT	PR	D	S	PR	FCTN	CAT

NO REQUIREMENTS

TABLE 4.3.2.4–3. ABORT OMS/RCS INTERCONNECT FUNCTION (G4.184) K–LOADS

DBFN:0558

FSSR NAME DESCRIPTION	MSID	MC KLOAD VALUE	ENG UNIT	DT PR S PR FCTN	LAST CR EQTN MSID
NO REQUIREMENTS					

TABLE 4.3.2.4–4. ABORT OMS/RCS INTERCONNECT FUNCTION (G4.184) CONSTANTS

DBFN:0558

FSSR NAME DESCRIPTION	MSID	MC	CONSTANT VALUE	ENG UNIT	DT	PR	S	PR FCTN	LAST CR

NO REQUIREMENTS

4.4 MECHANICAL SYSTEMS

4.4.1 Vent Doors (4.161)

4.4.1.1 Introduction

The orbiter's vent and purge system is made up of 18 active doors and is divided into the following six groups: left and right doors 1 and 2, left and right doors 3, left and right doors 5, left and right doors 4 and 7, left and right doors 6, and left and right doors 8 and 9.

All vent doors have a purge position with the exception of left and right vents 3, 4, 5, and 7.

The purge position is required to maintain a positive pressure in the orbiter's payload bay area to prevent contamination and to vent any residue gases in the orbiter and for overall vehicle thermal control during ground turnaround phase. During the ascent and entry phases, the active vent doors are open to vent/repressurize the orbiter to preclude damaging pressures across the structure. On orbit, the vent doors remain open to permit molecular venting of the vehicle cavities and insulation blankets to achieve the required low internal blanket pressure.

Operation of the vent system is controlled exclusively through software.

4.4.1.2 Overview

The sequencing of the active doors is by the software program in the redundant set computer. The doors are cycled to the open, close, or purge position as required in each mission phase. Positioning of the active doors is performed by the software based on mission times or mission events during ascent, entry, and aborts and by keyboard entry during nominal and abort entry phases. The ALL VENTS CLOSE CMD will be used for the open/close status of the vent doors on SPEC 51.

Upon receipt of a cue from the RS launch sequence, this sequence will configure the vent doors for launch. The launch configuration will be all doors in the open position. The status of the vent doors position will be all outputs to the RS launch sequence to determine that the vent doors have achieved the desired open positions. If during the pre-SRB ignition phase a launch abort has occurred, the vent door system will be reconfigured to the prelaunch configuration by LPS.

In an RTLS abort mode upon entering MM 602 or in a TAL abort at ET SEP, the vent doors are commanded to the closed position to prevent ingestion of propellant during propellant dump. In the entry phase, the vent doors are in the closed position and will be commanded to the open position when a predetermined ground relative velocity value has been attained. (This is also true for entry in abort cases.)

Upon entering MM 304, the main propulsion system LO_2 and LH_2 prevalves, LH_2 inboard and outboard fill/drain valves, LH_2 topping valve, LH_2 RTLS inboard and outboard dump valves, helium interconnect and crossover valves, and main engine oxidizer valves are commanded open to vacuum inert residual propellants. The main engine oxidizer valves will only be open during those mission phases when the EIU and main engine controllers are activated. The LO_2 inboard and outboard fill/drain valves are opened in MM 304 at a ground relative velocity of 20,000 ft/sec (Mach 20). The sequence will also perform an automatic closure of the ET umbilical doors upon entering MM 304 if a TAL abort has been declared.

Termination of commands after performing any specific vent door activity will place both A and B SET commands equal to false. For open commands, the A and B RESET command will be set equal to true,

and then the A RESET command will be set equal to false and the B RESET command will remain equal to true. For termination following closure, the A and B RESET commands will be set first to true, then to the values specified in Table 4.4-1. These configurations define the dormant state of the active vent system functional software sequence. RTC mode can only be used to control individual vent doors on orbit.

When the ground relative velocity becomes less than a predetermined velocity (K-load), a helium purge of the aft compartment, OMS pod, and ET umbilical cavity is initiated to dilute the hydrogen concentrations in these areas. The purge function is terminated upon the expiration of a purge timer (K-load).

The LH_2/LO_2 outboard fill/drain valves, LO_2 prevalves, LH_2 RTLS inboard and outboard dump valves, and main engine oxidizer valves are commanded closed, and the LH_2/LO_2 manifolds are pressurized.

4.4.1.3 Detail Requirements

This sequence controls the operation of the doors based on mission times and mission events.

Tables 4.4-1 and 4.4-2 list the commands to position the vent doors to a closed and open position.

Table 4.4-3 lists the purge 1 and 2 commands for vent group 5.

Tables 4.4-4 and 4.4-5 list the feedback signals of the vent doors closed and open configurations. Although the vent control sequence was deleted from OPS-2 after OFT-1, the parameters listed in Tables 4.4-4 and 4.4-5 are required to support telemetry requirements in MC 1, 2, and 3 for all missions.

For times that are greater than six times the process execution time (reciprocal of the execution cycle), the accuracy shall be ±1 execution time; otherwise, the accuracy shall be +1, –0 execution times.

Main engine oxidizer dump and terminate sequence output commands with corresponding binary/BCH command words will be generated in two 16-bit words for output to the EIU, in accordance with the main engine command requirements specified in Section 4.8.2.3.8 and Table 4.8.2-1 of the SSME SOP (4.181).

The following logic steps, once started, must be completed prior to starting another.

Step 1. This step determines if the vent doors are to be configured for launch.

The following signals are monitored:

(a)	CONFIGURE VENT DOOR FOR LAUNCH CMD	V90X8375X
(b)	MISSION ELAPSED TIME	V91W1990C

If (b) < 0.00 sec, monitor (a) above; otherwise proceed to Step 2.

If (a) is true, set the group 5 (vent 6) purge 1 and purge 2 A RESET CMDS equal to false (see Table 4.4-3), and proceed to Step 9; otherwise, return to Step 1.

Step 2. This step determines if the vent doors are to be automatically closed for an RTLS or TAL abort.

The following signals are monitored:

(a)	MISSION ELAPSED TIME	V91W1990C
(b)	MAJOR MODE 602 FLAG	V90X8174X
(c)	ET SEPARATION CMD FLAG	V90X8250X

(d) TAL ABORT DECLARED V90X8658X

If (a) > 100 sec and [(b) is true, or if (c) and (d) are both true], one time only set (1) equal to 0.48 sec and proceed to Step 8; otherwise proceed to Step 2a.

(1) VENT_CMDS_TIME_DELAY V97U9859C

Step 2a. This step checks for MM 304 and upon entry, if a TAL abort has been declared, provides for the automatic closure of the ET umbilical doors.

Monitor the following signals:

(a) MAJOR MODE 304 FLAG V90X8161X
(b) TAL ABORT DECLARED V90X8652X

If (a) or (b) is false, proceed to Step 3.

If (a) and (b) are both true, on first pass, start an ET umbilical door timer and set (1) through (8) below true, and proceed to Step 3. On subsequent passes, proceed to the next if statement.

If 66 seconds have elapsed since the ET umbilical door timer was started, on first pass, set (9) through (11) and (17) though (24) false, and proceed to Step 3. On subsequent passes, proceed to Step 3. Otherwise, proceed to the next if statement.

If 54 seconds have elapsed since the ET umbilical door timer was started, on first pass, set (12) through (16) false, (17) through (24) true, and proceed to Step 3. On subsequent passes, proceed to Step 3. Otherwise, proceed to the next if statement.

If 12 seconds have elapsed since the ET umbilical door timer was started, on first pass, set (1) through (8) false and proceed to Step 3. Otherwise, proceed to the next if statement.

If 6 seconds have elapsed since the ET umbilical door timer was started, on first pass, set (9) through (16) true and proceed to Step 3. On subsequent passes, proceed to Step 3. Otherwise, proceed to Step 3.

(1) ET DR CL LCH 1B1/2B2 FA1 STOW CMD V56K1271X
(2) ET DR CL LCH 1B2/2B1 FAI STOW CMD V56K1272X
(3) ET DR CL LCH 1B1/2B2 FA2 STOW CMD V56K1273X
(4) ET DR CL LCH 1B2/2B1 FA2 STOW CMD V56K1274X
(5) ET DR CL LCH 1B1/2B2 FA4 STOW CMD V56K1371X
(6) ET DR CL LCH 1B2/2B1 FA4 STOW CMD V56K1343X
(7) ET DR CL LCH 1B1/2B2 FA3 STOW CMD V56K1373X
(8) ET DR CL LCH 1B2/2B1 FA3 STOW CMD V56K1374X
(9) ET DR DRV & CL LCH DC ARM AMCA 1/2 V56K0141X
(10) ET DR DRV & CL LCH DC ARM AMCA 1/3 V56K0142X
(11) ET DR DRV & CL LCH DC ARM AMCA 2/3 V56K0143X
(12) ET UMB DR L–B2/R–B1 CLOSE CMD V56K3111X
(13) ET UMB DR R–B2 CLOSE CMD V56K3112X
(14) ET UMB DR R–B1/B2 CLOSE CMD V56K4121X
(15) ET UMB DR L–B1 CLOSE CMD V56K4122X
(16) ET UMB DR L–B1/B2 CLOSE CMD V56K0140X

(17)	ET L UMB COUT DOOR LATCH FA1 CMD	V56K3531X
(18)	ET R UMB COUT DOOR LATCH FA1 CMD	V56K3532X
(19)	ET L UMB COUT DOOR LATCH FA4 CMD	V56K3533X
(20)	ET R UMB COUT DOOR LATCH FA4 CMD	V56K3534X
(21)	ET L UMB COUT DOOR LATCH FA3 CMD	V56K4531X
(22)	ET R UMB COUT DOOR LATCH FA3 CMD	V56K4532X
(23)	ET L UMB COUT DOOR LATCH FA2 CMD	V56K4533X
(24)	ET R UMB COUT DOOR LATCH FA2 CMD	V56K4534X

Step 3. This step provides for automatic opening of the LH_2 and LO_2 prevalves, the LH_2 inboard and outboard fill and drain valves, LH_2 topping valve, LH_2 RTLS inboard and outboard dump valves, helium interconnect and crossover valves, and the main engine oxidizer valves if the EIU and main engine controllers are active, to vacuum inert residual propellant upon entry into MM 304. At Mach 20, the LO_2 inboard and outboard fill/drain valves are opened in MM 304.

The following signals are monitored:

(a)	MAJOR MODE 304 FLAG	V90X8161X
(b)	GND REL VEL MAGNITUDE IN M50 SYS	V95L0151C

If (a) is false, proceed to Step 4.

If (a) is true, on first pass, set outputs (1) through (4), (7) through (10), (14) through (18), and (34) through (60) true; generate (61) through (63); set outputs (5), (19) through (30), (32), and (33) false; and proceed to Step 4. On subsequent passes, monitor (b).

If (b) $\leq$ 20,000 ft/sec, on first pass, set outputs (11) through (13) true, set outputs (6) and (31) false, and proceed to Step 4. Otherwise proceed to Step 4.

(1)	MPS PNEU VLV HE ISLN NO. 1 OPEN CMD	V41K1607X
(2)	MPS PNEU VLV HE ISLN NO. 2 OPEN CMD	V41K1608X
(3)	MPS L HE ISOV B OP CMD A	V41K1256X
(4)	MPS L HE ISOV B OP CMD B	V41K1257X
(5)	MPS LH_2 OTBD FILL VALVE CLOSE CMD	V41K1393X
(6)	MPS LO_2 OTBD FILL VALVE CLOSE CMD	V41K1515X
(7)	MPS LH_2 OTBD FILL VALVE OPEN CMD	V41K1391X
(8)	MPS LH_2 INBD FILL VALVE OPEN CMD A	V41K1401X
(9)	MPS LH_2 INBD FILL VALVE OPEN CMD B	V41K1402X
(10)	MPS LH_2 TOPPING VALVE OPEN CMD	V41K1411X
(11)	MPS LO_2 OTBD FILL VALVE OPEN CMD	V41K1518X
(12)	MPS LO_2 INBD FILL VALVE OPEN CMD A	V41K1501X
(13)	MPS LH_2 INBD FILL VALVE OPEN CMD B	V41K1502X
(14)	MPS E1 HE INTCON OUT/OPEN CMD A	V41K1168X
(15)	MPS E3 HE INTCON OUT/OPEN CMD A	V41K1368X
(16)	MPS PNEU CROSSOVER NO. 2 OPEN CMD	V41K1613X
(17)	MPS E2 HE INTCON IN/OPEN CMD A	V41K1262X
(18)	MPS E2 HE INTCON IN/OPEN CMD B	V41K1263X
(19)	MPS E-1 LO_2 PREVALVE CLOSE CMD A	V41K1139X
(20)	MPS E-1 LO_2 PREVALVE CLOSE CMD B	V41K1140X
(21)	MPS E-1 LO_2 PREVALVE CLOSE CMD C	V41K1141X

(22)	MPS E-1 LO_2 PREVALVE CLOSE CMD D	V41K1142X
(23)	MPS E-2 LO_2 PREVALVE CLOSE CMD A	V41K1239X
(24)	MPS E-2 LO_2 PREVALVE CLOSE CMD B	V41K1240X
(25)	MPS E-2 LO_2 PREVALVE CLOSE CMD C	V41K1241X
(26)	MPS E-2 LO_2 PREVALVE CLOSE CMD D	V41K1242X
(27)	MPS E-3 LO_2 PREVALVE CLOSE CMD A	V41K1339X
(28)	MPS E-3 LO_2 PREVALVE CLOSE CMD B	V41K1340X
(29)	MPS E-3 LO_2 PREVALVE CLOSE CMD C	V41K1341X
(30)	MPS E-3 LO_2 PREVALVE CLOSE CMD D	V41K1342X
(31)	MPS LO_2 INBD FILL VALVE CLOSE CMD	V41K1512X
(32)	MPS LH_2 INBD FILL VALVE CLOSE CMD	V41K1412X
(33)	MPS E2 HE INTCON OUT/OPEN CMD A	V41K1268X
(34)	MPS E-1 LH_2 PREVALVE OPEN CMD A	V41K1119X
(35)	MPS E-1 LH_2 PREVALVE OPEN CMD B	V41K1120X
(36)	MPS E-1 LH_2 PREVALVE OPEN CMD C	V41K1121X
(37)	MPS E-2 LH_2 PREVALVE OPEN CMD A	V41K1219X
(38)	MPS E-2 LH_2 PREVALVE OPEN CMD B	V41K1220X
(39)	MPS E-2 LH_2 PREVALVE OPEN CMD C	V41K1221X
(40)	MPS E-3 LH_2 PREVALVE OPEN CMD A	V41K1319X
(41)	MPS E-3 LH_2 PREVALVE OPEN CMD B	V41K1320X
(42)	MPS E-3 LH_2 PREVALVE OPEN CMD C	V41K1321X
(43)	MPS E-1 LO_2 PREVALVE OPEN CMD A	V41K1136X
(44)	MPS E-1 LO_2 PREVALVE OPEN CMD B	V41K1137X
(45)	MPS E-1 LO_2 PREVALVE OPEN CMD C	V41K1138X
(46)	MPS E-1 LO_2 PREVALVE OPEN CMD D	V41K1143X
(47)	MPS E-2 LO_2 PREVALVE OPEN CMD A	V41K1236X
(48)	MPS E-2 LO_2 PREVALVE OPEN CMD B	V41K1237X
(49)	MPS E-2 LO_2 PREVALVE OPEN CMD C	V41K1238X
(50)	MPS E-2 LO_2 PREVALVE OPEN CMD D	V41K1243X
(51)	MPS E-3 LO_2 PREVALVE OPEN CMD A	V41K1336X
(52)	MPS E-3 LO_2 PREVALVE OPEN CMD B	V41K1337X
(53)	MPS E-3 LO_2 PREVALVE OPEN CMD C	V41K1338X
(54)	MPS E-3 LO_2 PREVALVE OPEN CMD D	V41K1343X
(55)	MPS LH_2 RTLS INBD D/V OPEN CMD A	V41K1923X
(56)	MPS LH_2 RTLS INBD D/V OPEN CMD B	V41K1924X
(57)	MPS LH_2 RTLS INBD D/V OPEN CMD C	V41K1925X
(58)	MPS LH_2 RTLS OTBD D/V OPEN CMD A	V41K1913X
(59)	MPS LH_2 RTLS OTBD D/V OPEN CMD B	V41K1914X
(60)	MPS LH_2 RTLS OTBD D/V OPEN CMD C	V41K1915X
(61)	ME-1 OXIDIZER DUMP CMD	E41K1219B
(62)	ME-2 OXIDIZER DUMP CMD	E41K2219B
(63)	ME-3 OXIDIZER DUMP CMD	E41K3219B

Step 4. This step provides an automatic He purge of the aft compartment OMS pod and ET umbilical cavity during MM 304 or MM 305. The LH_2/LO_2 outboard fill/drain valves, LO_2 prevalves, LH_2 RTLS inboard and outboard dump valves, and main engine oxidizer valves are commanded closed; and the LH_2/LO_2 manifolds are pressurized.

The following signals are monitored:

(a)	GND REL VEL MAGNITUDE IN M50 SYS	V95L0151C
(b)	HE_PURGE_VEL	V96U8958C
(c)	MAJOR MODE 304 FLAG	V90X8161X
(d)	MAJOR MODE 305 FLAG	V90X8162X
(e)	HE_PURGE_TIME	V96U8959C
(f)	HE PURGE TIMER	(INTERNAL)

If (a) > (b) or if (c) and (d) are both false, proceed to Step 5.

If (a) $\leq$ (b) and (c) or (d) is true, on first pass, set outputs (1) through (8) and (11) through (22) below true; set (9), (10), and (23) through (40) false; terminate (41) through (43); generate (44) through (46); start timer (f); and proceed to Step 5. On subsequent passes, monitor (e).

If (e) seconds have not elapsed since (f) started, proceed. Otherwise proceed to Step 5.

If (e) seconds have elapsed since (f) started, set outputs (1) and (2) false and proceed to Step 5.

(1)	MPS HE SPLY BLOWDOWN NO. 1 OPEN CMD	V41K1631X
(2)	MPS HE SPLY BLOWDOWN NO. 2 OPEN CMD	V41K1633X
(3)	MPS LH_2 OTBD FILL VALVE CLOSE CMD	V41K1393X
(4)	MPS LH_2 MANF REPRESS NO. 1 OPEN CMD	V41K1435X
(5)	MPS LH_2 MANF REPRESS NO. 2 OPEN CMD	V41K1437X
(6)	MPS LO_2 OTBD FILL VALVE CLOSE CMD	V41K1515X
(7)	MPS LO_2 MANF REPRESS NO. 1 OPEN CMD	V41K1535X
(8)	MPS LO_2 MANF REPRESS NO. 2 OPEN CMD	V41K1537X
(9)	MPS LH_2 OTBD FILL VALVE OPEN CMD	V41K1391X
(10)	MPS LO_2 OTBD FILL VALVE OPEN CMD	V41K1518X
(11)	MPS E-1 LO_2 PREVALVE CLOSE CMD A	V41K1139X
(12)	MPS E-1 LO_2 PREVALVE CLOSE CMD B	V41K1140X
(13)	MPS E-1 LO_2 PREVALVE CLOSE CMD C	V41K1141X
(14)	MPS E-1 LO_2 PREVALVE CLOSE CMD D	V41K1142X
(15)	MPS E-2 LO_2 PREVALVE CLOSE CMD A	V41K1239X
(16)	MPS E-2 LO_2 PREVALVE CLOSE CMD B	V41K1240X
(17)	MPS E-2 LO_2 PREVALVE CLOSE CMD C	V41K1241X
(18)	MPS E-2 LO_2 PREVALVE CLOSE CMD D	V41K1242X
(19)	MPS E-3 LO_2 PREVALVE CLOSE CMD A	V41K1339X
(20)	MPS E-3 LO_2 PREVALVE CLOSE CMD B	V41K1340X
(21)	MPS E-3 LO_2 PREVALVE CLOSE CMD C	V41K1341X
(22)	MPS E-3 LO_2 PREVALVE CLOSE CMD D	V41K1342X
(23)	MPS E-1 LO_2 PREVALVE OPEN CMD A	V41K1136X
(24)	MPS E-1 LO_2 PREVALVE OPEN CMD B	V41K1137X
(25)	MPS E-1 LO_2 PREVALVE OPEN CMD C	V41K1138X
(26)	MPS E-1 LO_2 PREVALVE OPEN CMD D	V41K1143X
(27)	MPS E-2 LO_2 PREVALVE OPEN CMD A	V41K1236X
(28)	MPS E-2 LO_2 PREVALVE OPEN CMD B	V41K1237X
(29)	MPS E-2 LO_2 PREVALVE OPEN CMD C	V41K1238X
(30)	MPS E-2 LO_2 PREVALVE OPEN CMD D	V41K1243X
(31)	MPS E-3 LO_2 PREVALVE OPEN CMD A	V41K1336X

(32)	MPS E-3 LO_2 PREVALVE OPEN CMD B	V41K1337X
(33)	MPS E-3 LO_2 PREVALVE OPEN CMD C	V41K1338X
(34)	MPS E-3 LO_2 PREVALVE OPEN CMD D	V41K1343X
(35)	MPS LH_2 RTLS INBD D/V OPEN CMD A	V41K1923X
(36)	MPS LH_2 RTLS INBD D/V OPEN CMD B	V41K1924X
(37)	MPS LH_2 RTLS INBD D/V OPEN CMD C	V41K1925X
(38)	MPS LH_2 RTLS OTBD D/V OPEN CMD A	V41K1913X
(39)	MPS LH_2 RTLS OTBD D/V OPEN CMD B	V41K1914X
(40)	MPS LH_2 RTLS OTBD D/V OPEN CMD C	V41K1915X
(41)	ME-1 OXIDIZER DUMP CMD	E41K1219B
(42)	ME-2 OXIDIZER DUMP CMD	E41K2219B
(43)	ME-3 OXIDIZER DUMP CMD	E41K3219B
(44)	ME-1 TERMINATE SEQUENCE CMD	E41K1218B
(45)	ME-2 TERMINATE SEQUENCE CMD	E41K2218B
(46)	ME-3 TERMINATE SEQUENCE CMD	E41K3218B

Step 5. This step determines if left vent groups 1 and 6 are to be opened in response to an open command during MM 304 and provides auto closure capability for all vent doors upon transition into MM 304.

The following signals are monitored:

(a)	ALL VENT CLOSE CMD	V93X7201X
(b)	MAJOR MODE 304 FLAG	V90X8161X
(c)	VENT DOOR SEQUENCE INIT	V95X0235X
(d)	LEFT VENTS 1 AND 6 OPEN FLAG	(INTERNAL)

If (b) is true and (c) and (d) are false, proceed to Step 8.

If (b) and (c) are true and (a) is false, issue the following groups of commands, maintaining the commands to each group for 10 seconds. Then set A and B OPEN SET CMDS = false and A and B OPEN RESET CMDS = true. Then, three minor cycles later, set A OPEN RESET CMDS = false. Set (d) = true and proceed to Step 6.

Table 4.4-2, Group 1 left vents
Table 4.4-2, Group 6 left vents

If none of the above conditions are met, proceed to Step 6.

Step 6. This step initiates the automatic vent door opening in MM 304, MM 305, MM 602, or MM 603 when the vehicle reaches a predetermined velocity.

The following signals are monitored:

(a)	ALL VENT CLOSE CMD	V93X7201X
(b)	GND REL VEL MAGNITUDE IN M50 SYS	V95L0151C
(c)	MAJOR MODE 304 FLAG	V90X8161X
(d)	MAJOR MODE 602 FLAG	V90X8174X
(e)	MAJOR MODE 305 FLAG	V90X8162X
(f)	MAJOR MODE 603 FLAG	V90X0013X
(g)	GROUND_REL_VEL_THRESHOLD	V97U9806C
(h)	VENT DOOR SEQ INIT	V95X0235X

If (b) $\leq$ (g) and [(c) or (d) or (e) or (f)] is true and (h) is false, proceed to Step 9; otherwise proceed to Step 7.

Step 7. This step provides manual control of vent door operations during OPS 3.

The following signals are monitored:

(a)	ALL VENT CLOSE CMD	V93X7201X
(b)	MAJOR MODE 304 FLAG	V90X8161X
(c)	VENT DOOR SEQ INIT	V95X0235X

If (c) is true and (a) and (b) are false, proceed to Step 9.

If (a) and (c) are true, proceed to Step 8. Otherwise return to Step 1.

Step 8. This step initiates the vent door close activities. On first entry into this step, using (a) below, do the following:

(a) VENT CMDS TIME DELAY V97U9859C

Issue the following groups of commands at intervals of (a) seconds, maintaining the commands to each group for 10 seconds. Then set the A and B CLOSE SET CMDS equal to false, and A and B CLOSE RESET CMDS equal to true. Then, three minor cycles later, set the A CLOSE RESET CMD equal to Table 4.4-1 DORMANT STATE before proceeding.

Table 4.4-1, Group 1
Table 4.4-1, Group 2
Table 4.4-1, Group 3
Table 4.4-1, Group 4
Table 4.4-1, Group 5
Table 4.4-1, Group 6

Then monitor for (b) below:

(b) MM 301 FLAG V90X8183X

If (b) is true, then issue open commands to the following groups of doors, maintaining commands to each group for 10 seconds. Then set A and B OPEN SET CMDS equal to false and A and B OPEN RESET CMDS equal to true. Then, three minor cycles later, set A OPEN RESET CMDS equal to false and return to Step 1.

Table 4.4-2, Group 1 left vents
Table 4.4-2, Group 6 left vents

If (b) is false, set ALL VENT CLOSE CMD to true and return to Step 1.

Step 9. This step initiates the vent door open activities. On first entry into this step, using (a) below, do the following:

(a) VENT CMDS TIME DELAY V97U9859C

Issue the following groups of commands at intervals of (a) seconds, maintaining the commands to each group for 10 seconds. Then set the A and B OPEN SET CMDS equal to false

and A and B OPEN RESET CMDS equal to true. Then, three minor cycles later, set A OPEN RESET CMDS equal to false before proceeding.

Table 4.4-2, Group 4
Table 4.4-2, Group 2
Table 4.4-2, Group 5
Table 4.4-2, Group 3
Table 4.4-2, Group 1
Table 4.4-2, Group 6

On the first pass, initialize the status word (b) below to all zeros, and for 5 seconds after issuing the Group 6 command above, monitor the corresponding parameters in Table 4.4-5 for status word updates. For each vent door (L,R), the status shall be set true if either one of the dual redundant status discretes is true; otherwise, the status shall be set false. If any of the commfaults (c) through (j) below occur, use the latest noncommfaulted values for subsequent status word update.

(b)	ORBITER VENT DOOR STATUS WORD 1	V90J8201C
(c)	FF1 INPUT PROM SEG 2, 6 STATUS (HFE)	V91X2288X
(d)	FF2 INPUT PROM SEG 2, 6 STATUS (HFE)	V91X2289X
(e)	FF3 INPUT PROM SEG 2, 6 STATUS (HFE)	V91X2290X
(f)	FF4 INPUT PROM SEG 2, 6 STATUS (HFE)	V91X2291X
(g)	FA1 INPUT PROM SEG 3, 10 STATUS (HFE)	V91X2845X
(h)	FA2 INPUT PROM SEG 3, 10 STATUS (HFE)	V91X2846X
(i)	FA3 INPUT PROM SEG 3, 10 STATUS (HFE)	V91X2847X
(j)	FA4 INPUT PROM SEG 3, 10 STATUS (HFE)	V91X2848X

When all commands have been issued, set the ALL VENT CLOSE CMD to false and return to step 1.

Table 4.4–1. Vent Group Close Commands

			RESET DORMANT STATE	
Vent Group 1	a	V59K3000X	0	L FWD VENTS 1&2 CLOSE CMD 1A
Left & Right	b	V59K3001X	1	L FWD VENTS 1&2 CLOSE CMD 1B
Fwd Vent	c	V59K3010X	0	L FWD VENTS 1&2 CLOSE CMD 2A
Port 1 & 2	d	V59K3011X	1	L FWD VENTS 1&2 CLOSE CMD 2B
	e	V59K4000X	0	R FWD VENTS 1&2 CLOSE CMD 1A
	f	V59K4001X	0	R FWD VENTS 1&2 CLOSE CMD 1B
	g	V59K4010X	1	R FWD VENTS 1&2 CLOSE CMD 2A
	h	V59K4011X	1	R FWD VENTS 1&2 CLOSE CMD 2B
Vent Group 2	a	V59K3200X	0	L PB VENT 3 CLOSE CMD 1A
Left & Right	b	V59K3201X	1	L PB VENT 3 CLOSE CMD 1B
Mid Fus Vent	c	V59K3210X	0	L PB VENT 3 CLOSE CMD 2A
Port 3	d	V59K3211X	1	L PB VENT 3 CLOSE CMD 2B
	e	V59K4200X	0	R PB VENT 3 CLOSE CMD 1A
	f	V59K4201X	0	R PB VENT 3 CLOSE CMD 1B
	g	V59K4210X	1	R PB VENT 3 CLOSE CMD 2A
	h	V59K4211X	1	R PB VENT 3 CLOSE CMD 2B
Vent Group 3	a	V59K3400X	1	L PB VENT 5 CLOSE CMD 1A
Left & Right	b	V59K3401X	1	L PB VENT 5 CLOSE CMD 1B
Mid Fus Vent	c	V59K3410X	1	L PB VENT 5 CLOSE CMD 2A
Port 5	d	V59K3411X	1	L PB VENT 5 CLOSE CMD 2B
	e	V59K4400X	0	R PB VENT 5 CLOSE CMD 1A
	f	V59K4401X	0	R PB VENT 5 CLOSE CMD 1B
	g	V59K4410X	0	R PB VENT 5 CLOSE CMD 2A
	h	V59K4411X	0	R PB VENT 5 CLOSE CMD 2B
Vent Group 4	a	V59K3300X	1	L PB/W VENTS 4&7 CLOSE CMD 1A
Left & Right	b	V59K3301X	1	L PB/W VENTS 4&7 CLOSE CMD 1B
Mid Fus Vent	c	V59K3310X	0	L PB/W VENTS 4&7 CLOSE CMD 2A
Port 4 & 7	d	V59K3311X	1	L PB/W VENTS 4&7 CLOSE CMD 2B
	e	V59K4300X	0	R PB/W VENTS 4&7 CLOSE CMD 1A
	f	V59K4301X	1	R PB/W VENTS 4&7 CLOSE CMD 1B
	g	V59K4310X	0	R PB/W VENTS 4&7 CLOSE CMD 2A
	h	V59K4311X	0	R PB/W VENTS 4&7 CLOSE CMD 2B

Table 4.4–1. Vent Group Close Commands

			RESET DORMANT STATE	
Vent Group 5	a	V59K3500X	0	L PB VENT 6 CLOSE CMD 1A
Left & Right	b	V59K3501X	0	L PB VENT 6 CLOSE CMD 1B
Aft Pld Vent	c	V59K3510X	0	L PB VENT 6 CLOSE CMD 2A
Port 6	d	V59K3511X	1	L PB VENT 6 CLOSE CMD 2B
	e	V59K4500X	1	R PB VENT 6 CLOSE CMD 1A
	f	V59K4501X	1	R PB VENT 6 CLOSE CMD 1B
	g	V59K4510X	0	R PB VENT 6 CLOSE CMD 2A
	h	V59K4511X	1	R PB VENT 6 CLOSE CMD 2B
Vent Group 6	a	V59K3800X	0	L AFT VENTS 8&9 CLOSE CMD 1A
Left & Right	b	V59K3801X	1	L AFT VENTS 8&9 CLOSE CMD 1B
Aft Vent	c	V59K3810X	0	L AFT VENTS 8&9 CLOSE CMD 2A
Port 8 & 9	d	V59K3811X	1	L AFT VENTS 8&9 CLOSE CMD 2B
	e	V59K4800X	1	R AFT VENTS 8&9 CLOSE CMD 1A
	f	V59K4801X	1	R AFT VENTS 8&9 CLOSE CMD 1B
	g	V59K4810X	0	R AFT VENTS 8&9 CLOSE CMD 2A
	h	V59K4811X	0	R AFT VENTS 8&9 CLOSE CMD 2B

Table 4.4–2. Vent Group Open Commands

Vent Group 1	a	V59K3050X	L FWD VENTS 1&2 OPEN CMD 1A
Left & Right	b	V59K3051X	L FWD VENTS 1&2 OPEN CMD 1B
Fwd Vent	c	V59K3060X	L FWD VENTS 1&2 OPEN CMD 2A
Port 1 & 2	d	V59K3061X	L FWD VENTS 1&2 OPEN CMD 2B
	e	V59K4050X	R FWD VENTS 1&2 OPEN CMD 1A
	f	V59K4051X	R FWD VENTS 1&2 OPEN CMD 1B
	g	V59K4060X	R FWD VENTS 1&2 OPEN CMD 2A
	h	V59K4061X	R FWD VENTS 1&2 OPEN CMD 2B
Vent Group 2	a	V59K3250X	L PB VENT 3 OPEN CMD 1A
Left & Right	b	V59K3251X	L PB VENT 3 OPEN CMD 1B
Mid Fus Vent	c	V59K3260X	L PB VENT 3 OPEN CMD 2A
Port 3	d	V59K3261X	L PB VENT 3 OPEN CMD 2B
	e	V59K4250X	R PB VENT 3 OPEN CMD 1A
	f	V59K4251X	R PB VENT 3 OPEN CMD 1B
	g	V59K4260X	R PB VENT 3 OPEN CMD 2A
	h	V59K4261X	R PB VENT 3 OPEN CMD 2B
Vent Group 3	a	V59K3450X	L PB VENT 5 OPEN CMD 1A
Left & Right	b	V59K3451X	L PB VENT 5 OPEN CMD 1B
Mid Fus Vent	c	V59K3460X	L PB VENT 5 OPEN CMD 2A
Port 5	d	V59K3461X	L PB VENT 5 OPEN CMD 2B
	e	V59K4450X	R PB VENT 5 OPEN CMD 1A
	f	V59K4451X	R PB VENT 5 OPEN CMD 1B
	g	V59K4460X	R PB VENT 5 OPEN CMD 2A
	h	V59K4461X	R PB VENT 5 OPEN CMD 2B
Vent Group 4	a	V59K3350X	L PB/W VENTS 4&7 OPEN CMD 1A
Left & Right	b	V59K3351X	L PB/W VENTS 4&7 OPEN CMD 1B
Mid Fus Vent	c	V59K3360X	L PB/W VENTS 4&7 OPEN CMD 2A
Port 4 & 7	d	V59K3361X	L PB/W VENTS 4&7 OPEN CMD 2B
	e	V59K4350X	R PB/W VENTS 4&7 OPEN CMD 1A
	f	V59K4351X	R PB/W VENTS 4&7 OPEN CMD 1B
	g	V59K4360X	R PB/W VENTS 4&7 OPEN CMD 2A
	h	V59K4361X	R PB/W VENTS 4&7 OPEN CMD 2B
Vent Group 5	a	V59K3550X	L PB VENT 6 OPEN CMD 1A
Left & Right	b	V59K3551X	L PB VENT 6 OPEN CMD 1B
Aft Pld Vent	c	V59K3560X	L PB VENT 6 OPEN CMD 2A

Table 4.4–2. Vent Group Open Commands

Port 6	d	V59K3561X	L PB VENT 6 OPEN CMD 2B
	e	V59K4550X	R PB VENT 6 OPEN CMD 1A
	f	V59K4551X	R PB VENT 6 OPEN CMD 1B
	g	V59K4560X	R PB VENT 6 OPEN CMD 2A
	h	V59K4561X	R PB VENT 6 OPEN CMD 2B
Vent Group 6	a	V59K3850X	L AFT VENTS 8&9 OPEN CMD 1A
Left & Right	b	V59K3851X	L AFT VENTS 8&9 OPEN CMD 1B
Aft Vent	c	V59K3860X	L AFT VENTS 8&9 OPEN CMD 2A
Port 8 & 9	d	V59K3861X	L AFT VENTS 8&9 OPEN CMD 2B
	e	V59K4850X	R AFT VENTS 8&9 OPEN CMD 1A
	f	V59K4851X	R AFT VENTS 8&9 OPEN CMD 1B
	g	V59K4860X	R AFT VENTS 8&9 OPEN CMD 2A
	h	V59K4861X	R AFT VENTS 8&9 OPEN CMD 2B

Table 4.4–3. Vent Group Purge Configuration Commands

Vent Group 5	a	V59K3600X	LPB VENT 6 PURGE 1 CMD 1A
Left & Right	b	V59K3700X	LPB VENT 6 PURGE 2 CMD 1A
Purge 1 and 2	c	V59K4610X	RPB VENT 6 PURGE 1 CMD 2A
Port 6	d	V59K4710X	RPB VENT 6 PURGE 2 CMD 2A
	e	V59K4600X	RPB VENT 6 PURGE 1 CMD 1A
	f	V59K4700X	RPB VENT 6 PURGE 2 CMD 1A
	g	V59K3610X	LPB VENT 6 PURGE 1 CMD 2A
	h	V59K3710X	LPB VENT 6 PURGE 2 CMD 2A

Table 4.4–4. Vent Group Close Measurements

Vent Group 1	a	V59X3005X	L FWD VENTS 1&2 CLOSED 1
Left & Right	b	V59X3015X	L FWD VENTS 1&2 CLOSED 2
Fwd Vent	c	V59X4005X	R FWD VENTS 1&2 CLOSED 1
Port 1 & 2	d	V59X4015X	R FWD VENTS 1&2 CLOSED 2
Vent Group 2	a	V59X3205X	L PB VENT 3 CLOSED 1
Left & Right	b	V59X3215X	L PB VENT 3 CLOSED 2
Mid Fus Vent	c	V59X4205X	R PB VENT 3 CLOSED 1
Port 3	d	V59X4215X	R PB VENT 3 CLOSED 2
Vent Group 3	a	V59X3405X	L PB VENT 5 CLOSED 1
Left & Right	b	V59X3415X	L PB VENT 5 CLOSED 2
Mid Fus Vent	c	V59X4405X	R PB VENT 5 CLOSED 1
Port 5	d	V59X4415X	R PB VENT 5 CLOSED 2
Vent Group 4	a	V59X3305X	L PB/W VENT 4&7 CLOSED 1
Left & Right	b	V59X3315X	L PB/W VENT 4&7 CLOSED 2
Mid Fus Vent	c	V59X4305X	R PB/W VENT 4&7 CLOSED 1
Port 4 & 7	d	V59X4315X	R PB/W VENT 4&7 CLOSED 2
Vent Group 5	a	V59X3505X	L PB VENT 6 CLOSED 1
Left & Right	b	V59X3515X	L PB VENT 6 CLOSED 2
Aft Pld Vent	c	V59X4505X	R PB VENT 6 CLOSED 1
Port 6	d	V59X4515X	R PB VENT 6 CLOSED 2
Vent Group 6	a	V59X3805X	L AFT VENTS 8&9 CLOSED 1
Left & Right	b	V59X3815X	L AFT VENTS 8&9 CLOSED 2
Aft Vent	c	V59X4805X	R AFT VENTS 8&9 CLOSED 1
Port 8 & 9	d	V59X4815X	R AFT VENTS 8&9 CLOSED 2

Table 4.4–5. Vent Group Open Measurements

Vent Group 1	a	V59X3055X	L FWD VENTS 1&2 OPEN 1
Left and Right	b	V59X3065X	L FWD VENTS 1&2 OPEN 2
Forward Vent	c	V59X4055X	L FWD VENTS 1&2 OPEN 1
Ports 1 and 2	d	V59X4065X	L FWD VENTS 1&2 OPEN 2
Vent Group 2	a	V59X3255X	L PB VENT 3 OPEN 1
Left and Right	b	V59X3265X	L PB VENT 3 OPEN 2
Mid Fuselage Vent	c	V59X4255X	R PB VENT 3 OPEN 1
Port 3	d	V59X4265X	R PB VENT 3 OPEN 2
Vent Group 3	a	V59X3455X	L PB VENT 5 OPEN 1
Left and Right	b	V59X3465X	L PB VENT 5 OPEN 2
Mid Fuselage Vent	c	V59X4455X	R PB VENT 5 OPEN 1
Port 5	d	V59X4465X	R PB VENT 5 OPEN 2
Vent Group 4	a	V59X3355X	L PB/W VENTS 4&7 OPEN 1
Left and Right	b	V59X3365X	L PB/W VENTS 4&7 OPEN 2
Mid Fuselage Vent	c	V59X4355X	R PB/W VENTS 4&7 OPEN 1
Ports 4 and 7	d	V59X4365X	R PB/W VENTS 4&7 OPEN 2
Vent Group 5	a	V59X3555X	L PB VENT 6 OPEN 1
Left and Right	b	V59X3565X	L PB VENT 6 OPEN 2
Aft Payload Vent	c	V59X4555X	L PB VENT 6 OPEN 1
Port 6	d	V59X4565X	L PB VENT 6 OPEN 2
Vent Group 6	a	V59X3855X	L AFT VENTS 8&9 OPEN 1
Left and Right	b	V59X3865X	L AFT VENTS 8&9 OPEN 2
Aft Vent	c	V59X4855X	R AFT VENTS 8&9 OPEN 1
Ports 8 and 9	d	V59X4865X	R AFT VENTS 8&9 OPEN 2

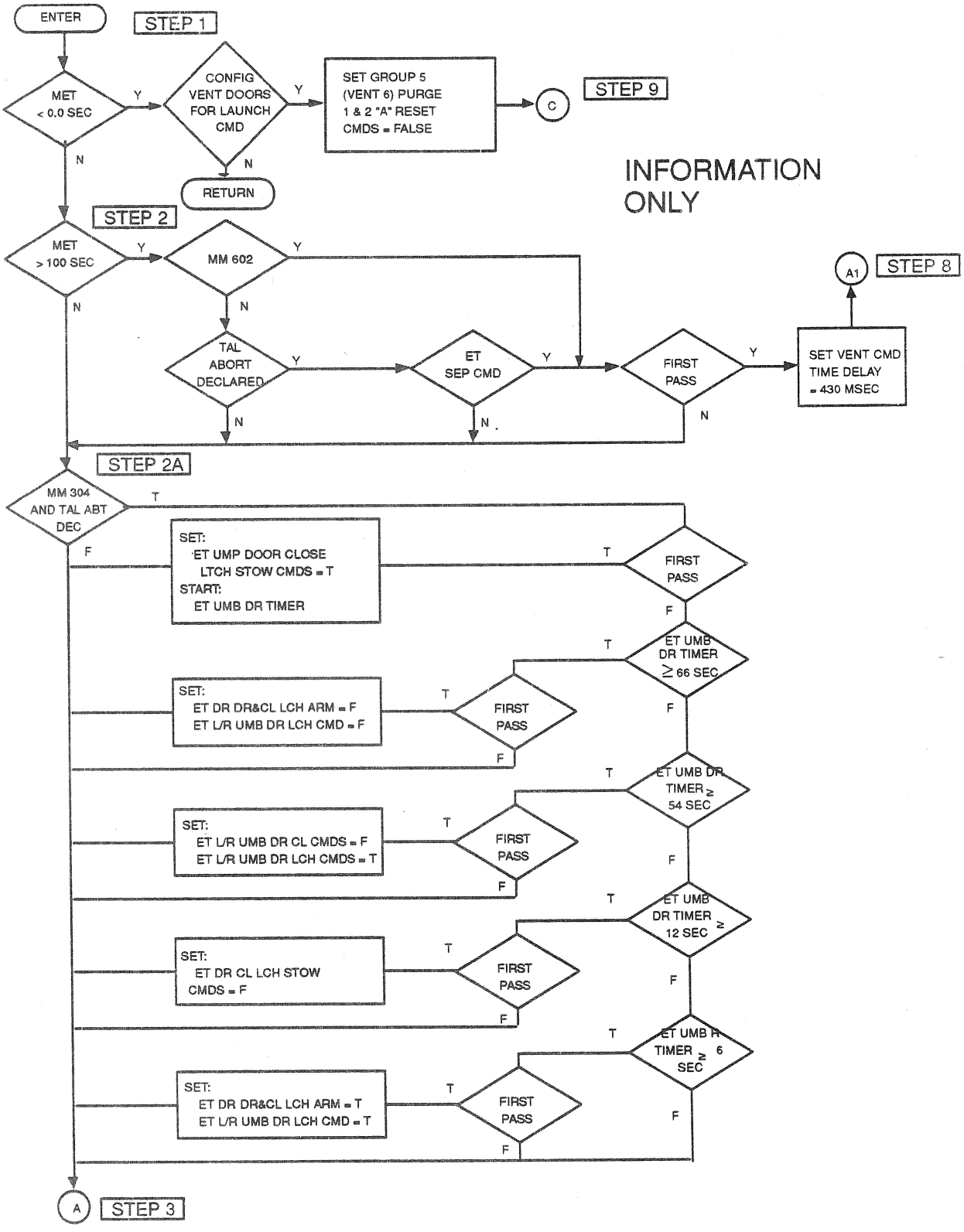

Figure 4.161. Vent Door Sequence (Sheet 1 of 7)

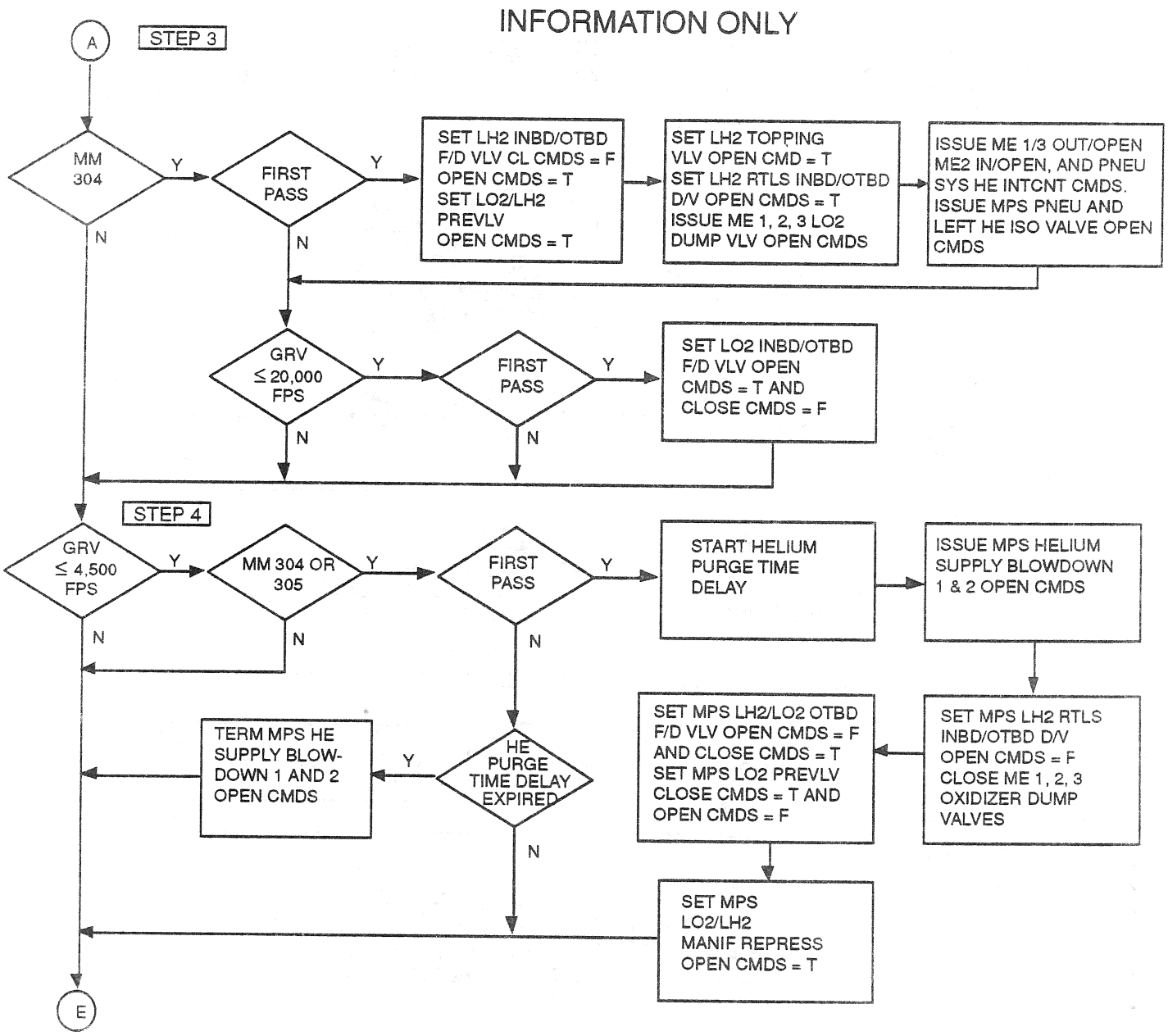

Figure 4.161. Vent Door Sequence (Sheet 2 of 7)

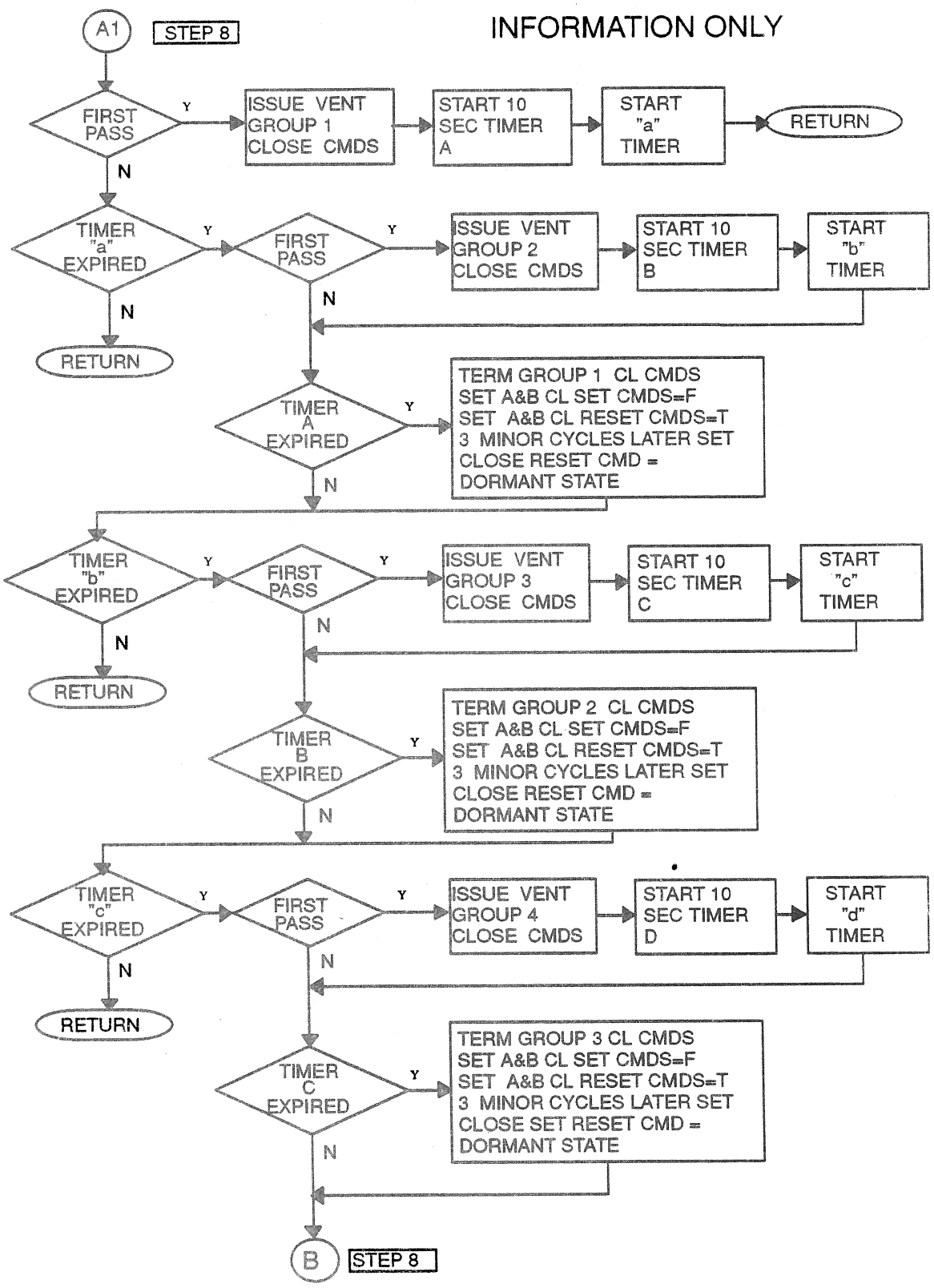

FIGURE 4.161 Vent Door Sequence (Sheet 3 of 7)

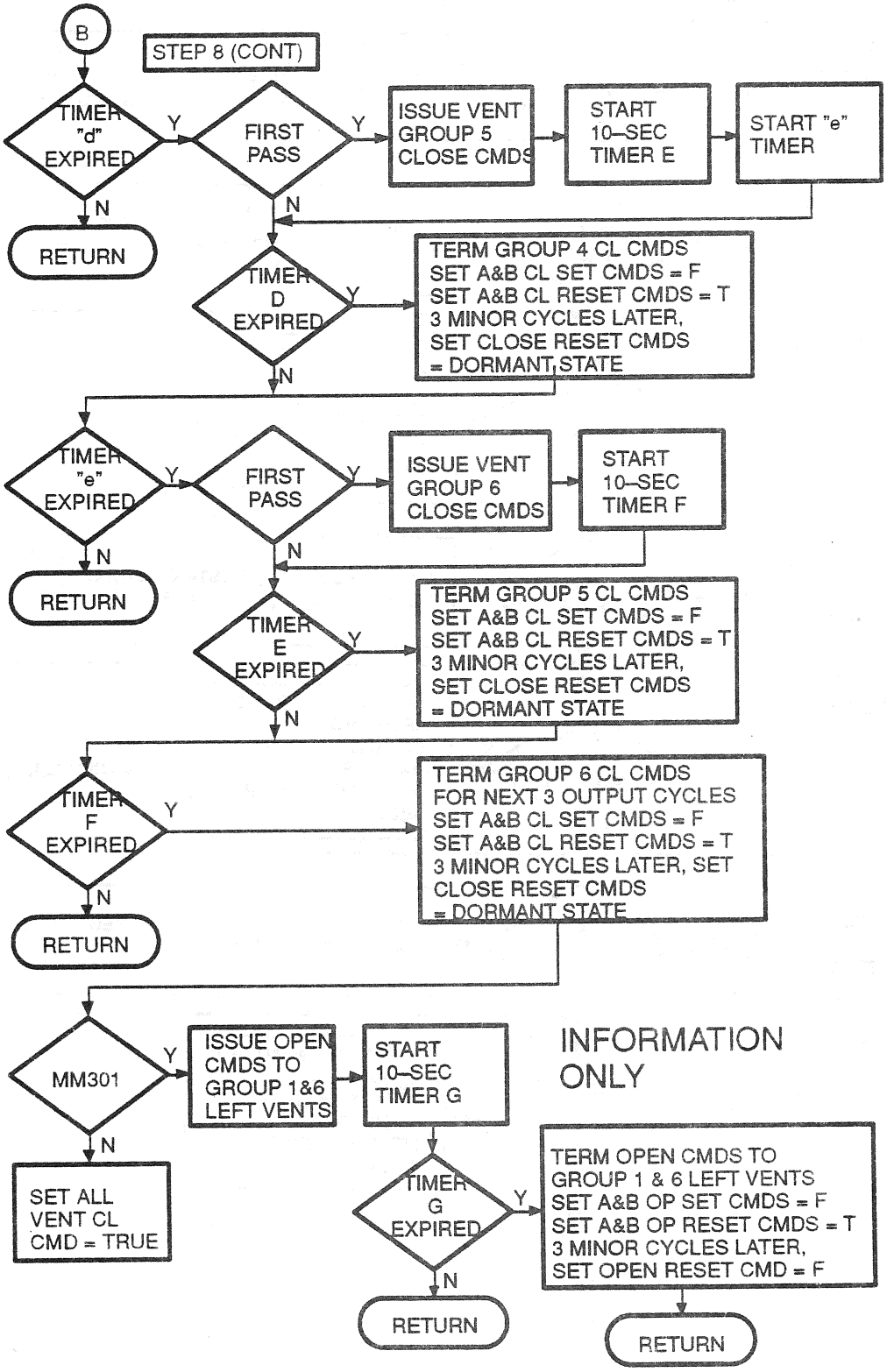

Figure 4.161. Vent Door Sequence (Sheet 4 of 7)

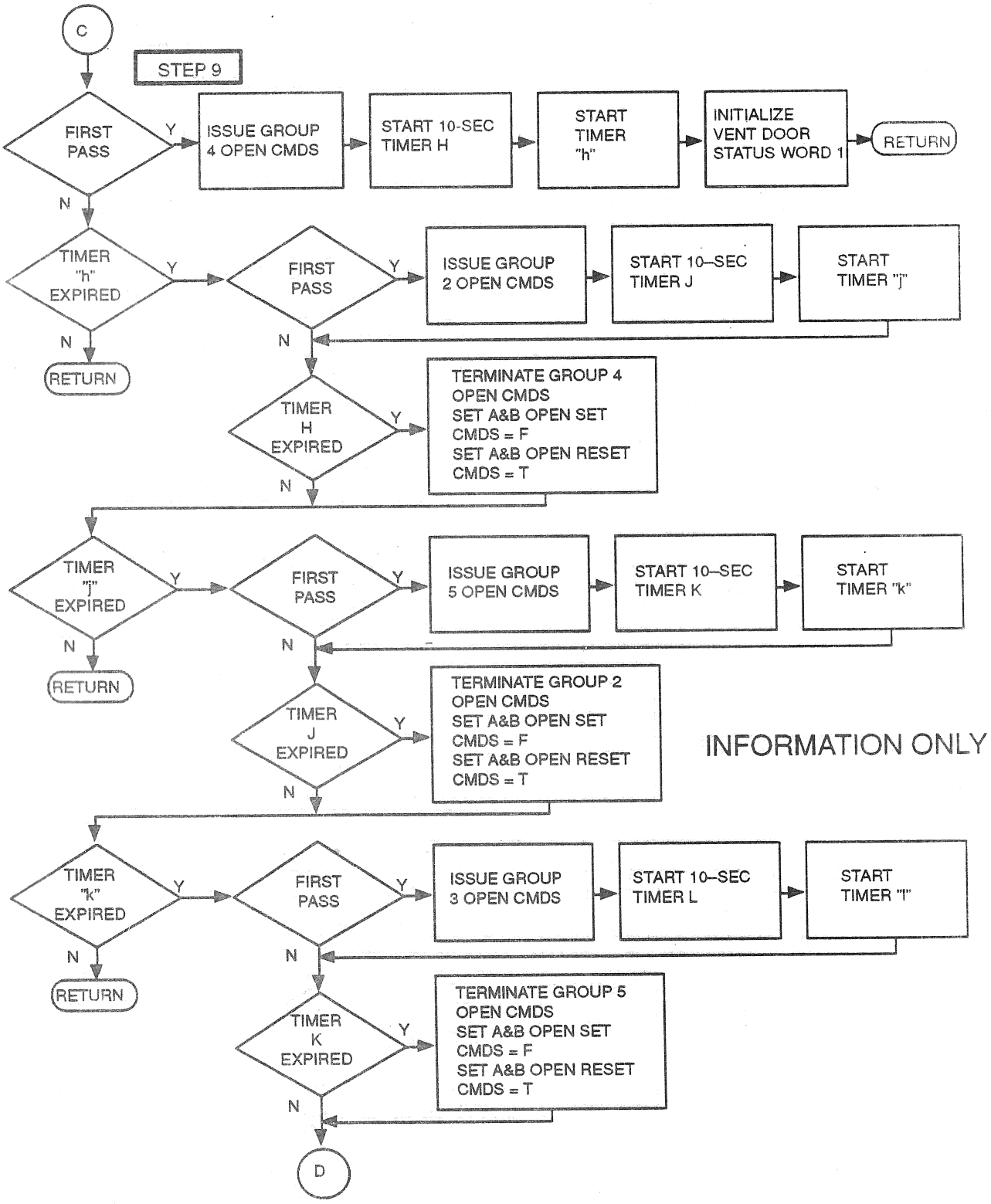

Figure 4.161. Vent Door Sequence (Sheet 5 of 7)

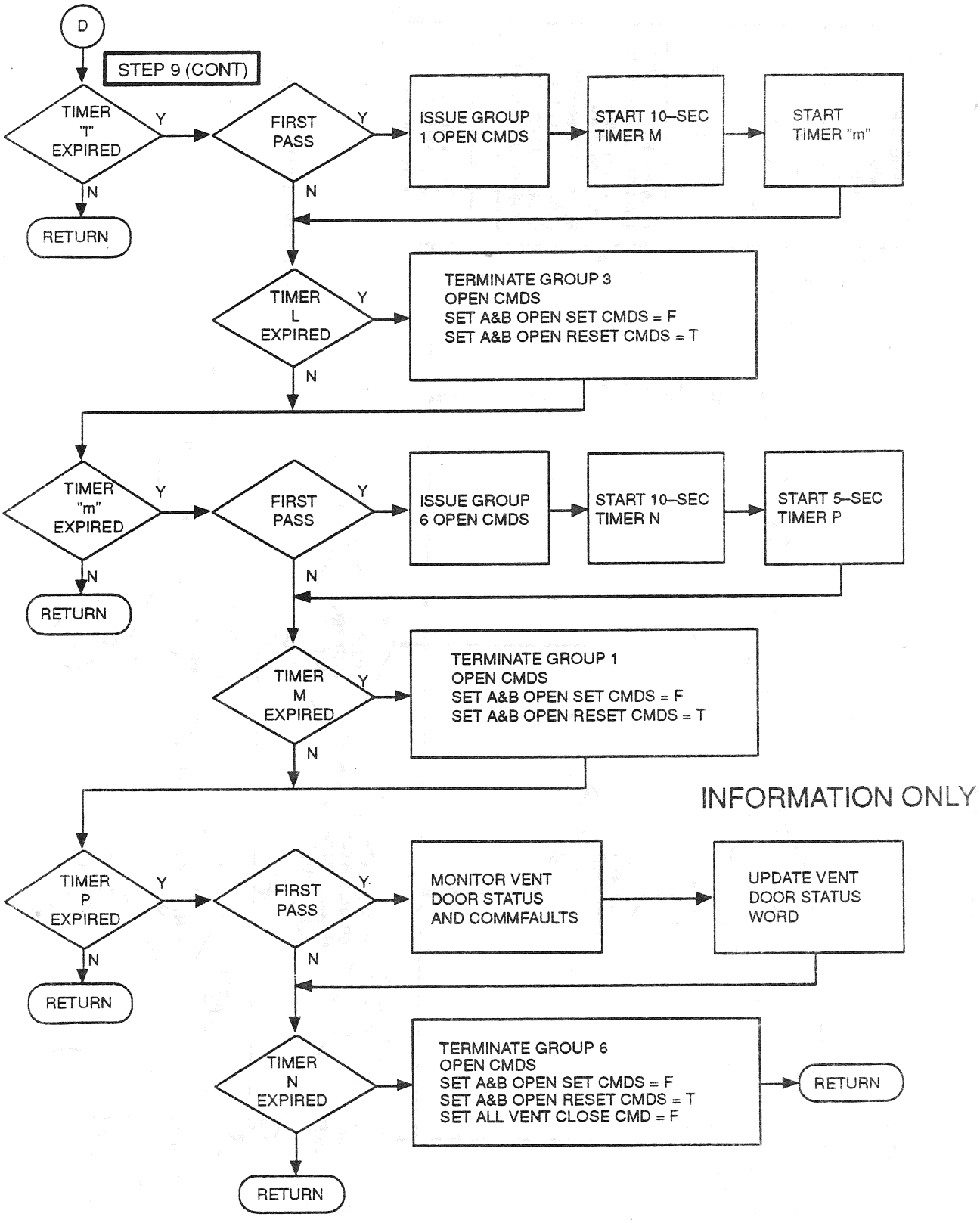

Figure 4.161. Vent Door Sequence (Sheet 6 of 7)

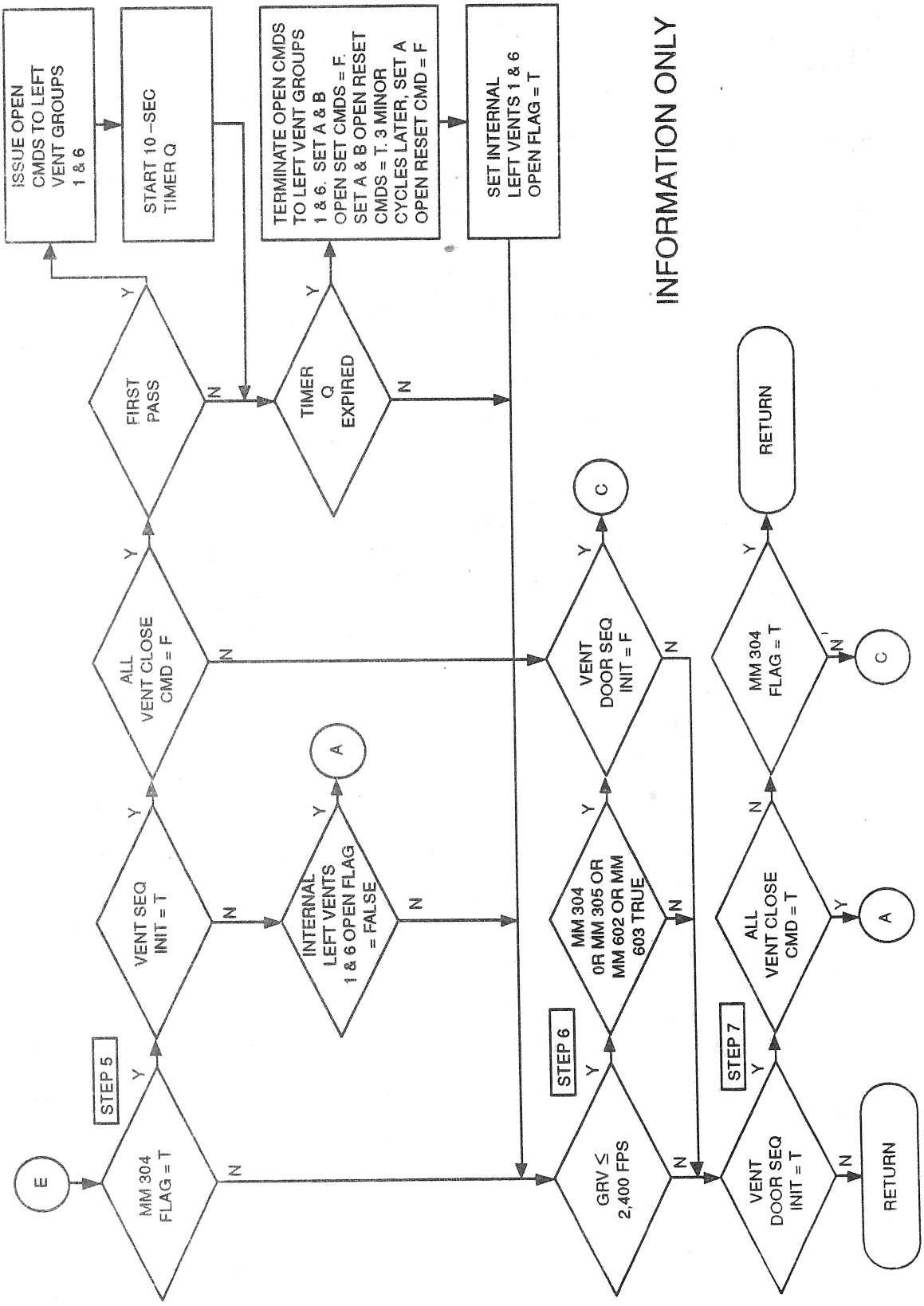

Figure 4.161. Vent Door Sequence (Sheet 7 of 7)

TABLE 4.4.1.4–1. VENT DOOR CONTROL SEQUENCER (G4.161) INPUT/OUTPUT FUNCTIONAL PARAMETERS

DBFN: D3B027-F PN: VP707100049P00L INPUT FUNCTIONAL PARAMETERS FOR VENT CNTL SEQ

FSSR NAME	M/S ID	NOMENCLATURE	SOURCE	UNITS	DATA TYPE	PREC	LAST CRS
(MT)	V91W1990C	DISPLAY MSN TIME	FCOS	S	VAR		89890E
							89598A
CLOCK/CLOCKTIME	V91W5000C	CLOCK-COMPUTER(GMT)	FCOS	S			
CONF_VENT_DOORS	V90X8375X	CONFIG VENT DOORS FOR LAUNCH CMD	R/S LCH SEQ				89599C
ET_SEP_CMD	V90X8250X	ET SEPARATION CMD FLAG	ET SEP SEQ		BD		89990E
							90054A
MM_CODE_303/MM_303	V90X8182X	MAJOR MODE 303 FLAG	MSC				89991E
							89599C
MM_CODE_304/MM_304	V90X8161X	MAJOR MODE 304 FLAG	MSC				89991E
MM_CODE_305/MM_305	V90X8162X	MAJOR MODE 305 FLAG	MSC				90102D
MM_CODE_602/MM_602	V90X8174X	MAJOR MODE 602 FLAG	MSC				89599C
MM_CODE_603/MM_603	V90X8122X	MAJOR MODE 603 FLAG	MSC				89599C
REL_VEL_MAG	V95L0151CD	GND REL VEL MAGNITUDE IN M50 SYS	TAEM UPP	FT/S			
REL_VEL_MAG/V	V95L0151CA	GND REL VEL MAGNITUDE IN M50 SYS	RTLS UPP	FT/S			89990E
							89250B
REL_VEL_MAG/V	V95L0151CC	GND REL VEL MAGNITUDE IN M50 SYS	ENT UPP	FT/S			90114B
							89250B
TAL_ABORT_DECLARED	V90X8658X	TAL ABORT DECLARED	MSC				89245D
	V59X3005X	L FWD VENTS 1&2 CLOSED 1	MCA F3		BD		
	V59X3015X	L FWD VENTS 1&2 CLOSED 2	MCA F2		BD		
	V59X3055X	L FWD VENTS 1&2 OPEN 1	MCA F3		BD		
	V59X3065X	L FWD VENTS 1&2 OPEN 2	MCA F2		BD		
	V59X3205X	L PB VENT 3 CLOSED 1	MCA M3		BD		
	V59X3215X	L PB VENT 3 CLOSED 2	MCA M2		BD		
	V59X3255X	L PB VENT 3 OPEN 1	MCA M3		BD		
	V59X3265X	L PB VENT 3 OPEN 2	MCA M2		BD		
	V59X3305X	L PB/W VENTS 4&7 CLOSED 1	MCA M2		BD		
	V59X3315X	L PB/W VENTS 4&7 CLOSED 2	MCA M4		BD		
	V59X3355X	L PB/W VENTS 4&7 OPEN 1	MCA M2		BD		
	V59X3365X	L PB/W VENTS 4&7 OPEN 2	MCA M4		BD		
	V59X3405X	L PB VENT 5 CLOSED 1	MCA M3		BD		
	V59X3415X	L PB VENT 5 CLOSED 2	MCA M1		BD		
	V59X3455X	L PB VENT 5 OPEN 1	MCA M3		BD		
	V59X3465X	L PB VENT 5 OPEN 2	MCA M1		BD		
	V59X3505X	L PB VENT 6 CLOSED 1	MCA M3		BD		
	V59X3515X	L PB VENT 6 CLOSED 2	MCA M2		BD		
	V59X3555X	L PB VENT 6 OPEN 1	MCA M3		BD		
	V59X3565X	L PB VENT 6 OPEN 2	MCA M2		BD		
	V59X3805X	L AFT VENTS 8&9 CLOSED 1	MCA A1		BD		
	V59X3815X	L AFT VENTS 8&9 CLOSED 2	MCA A2		BD		
	V59X3855X	L AFT VENTS 8&9 OPEN 1	MCA A1		BD		
	V59X3865X	L AFT VENTS 8&9 OPEN 2	MCA A2		BD		
	V59X4005X	R FWD VENTS 1&2 CLOSED 1	MCA F1		BD		

TABLE 4.4.1.4–1. VENT DOOR CONTROL SEQUENCER (G4.161) INPUT/OUTPUT FUNCTIONAL PARAMETERS

DBFN: D3B027-F PN: VP707100049P00L INPUT FUNCTIONAL PARAMETERS FOR VENT CNTL SEQ

FSSR NAME	M/S ID	NOMENCLATURE	SOURCE	UNITS	DATA TYPE	PREC	LAST CRS
	V59X4015X	R FWD VENTS 1&2 CLOSED 2	MCA F2		BD		
	V59X4055X	R FWD VENTS 1&2 OPEN 1	MCA F1		BD		
	V59X4065X	R FWD VENTS 1&2 OPEN 2	MCA F2		BD		
	V59X4205X	R PB VENT 3 CLOSED 1	MCA M1		BD		
	V59X4215X	R PB VENT 3 CLOSED 2	MCA M4		BD		
	V59X4255X	R PB VENT 3 OPEN 1	MCA M1		BD		
	V59X4265X	R PB VENT 3 OPEN 2	MCA M4		BD		
	V59X4305X	R PB/W VENTS 4&7 CLOSED 1	MCA M2		BD		
	V59X4315X	R PB/W VENTS 4&7 CLOSED 2	MCA M3		BD		
	V59X4355X	R PB/W VENTS 4&7 OPEN 1	MCA M2		BD		
	V59X4365X	R PB/W VENTS 4&7 OPEN 2	MCA M3		BD		
	V59X4405X	R PB VENT 5 CLOSED 1	MCA M1		BD		
	V59X4415X	R PB VENT 5 CLOSED 2	MCA M4		BD		
	V59X4455X	R PB VENT 5 OPEN 1	MCA M1		BD		
	V59X4465X	R PB VENT 5 OPEN 2	MCA M4		BD		
	V59X4505X	R PB VENT 6 CLOSED 1	MCA M1		BD		
	V59X4515X	R PB VENT 6 CLOSED 2	MCA M4		BD		
	V59X4555X	R PB VENT 6 OPEN 1	MCA M1		BD		
	V59X4565X	R PB VENT 6 OPEN 2	MCA M4		BD		
	V59X4805X	R AFT VENTS 8&9 CLOSED 1	MCA A3		BD		
	V59X4815X	R AFT VENTS 8&9 CLOSED 2	MCA A2		BD		
	V59X4855X	R AFT VENTS 8&9 OPEN 1	MCA A3		BD		
	V59X4865X	R AFT VENTS 8&9 OPEN 2	MCA A2		BD		
	V91X2288X	FF1 INPUT PROM SEG 2,6 STATUS(HFE)	FCOS				89598A 79933F
	V91X2289X	FF2 INPUT PROM SEG 2,6 STATUS(HFE)	FCOS				89598A 79933F
	V91X2290X	FF3 INPUT PROM SEG 2,6 STATUS(HFE)	FCOS				89598A 79933F
	V91X2291X	FF4 INPUT PROM SEG 2,6 STATUS(HFE)	FCOS				89598A 79933F
	V91X2845X	FA1 INPUT PROM SEG3,10 STATUS(HFE)	FCOS				89991E 89598A
	V91X2846X	FA2 INPUT PROM SEG3,10 STATUS(HFE)	FCOS				89991E 89598A
	V91X2847X	FA3 INPUT PROM SEG3,10 STATUS(HFE)	FCOS				89991E 89598A
	V91X2848X	FA4 INPUT PROM SEG3,10 STATUS(HFE)	FCOS				89598A 59126H
	V93X7201XB	ALL VENT CLOSE CMD	OVERRIDE DISP		BD		89599C
	V95X0235XF	VENT DOOR SEQ INIT	MSC				

TABLE 4.4.1.4–1. VENT DOOR CONTROL SEQUENCER (G4.161) INPUT/OUTPUT FUNCTIONAL PARAMETERS

DBFN: D3B027-F PN: VP707100049P00L OUTPUT FUNCTIONAL PARAMETERS FROM VENT CNTL SEQ

FSSR NAME	M/S ID	NOMENCLATURE	DESTINATION	UNITS	DATA TYPE	PREC	LAST CRS
ME1_LO2_DUMP	E41K1219BB	ME-1 OXIDIZER DUMP CMD	EIU 1				
ME1_TERM_SEQ	E41K1218BB	ME-1 TERMINATE SEQUENCE CMD	EIU 1				
ME2_LO2_DUMP	E41K2219BB	ME-2 OXIDIZER DUMP CMD	EIU 2				
ME2_TERM_SEQ	E41K2218BB	ME-2 TERMINATE SEQUENCE CMD	EIU 2				
ME3_LO2_DUMP	E41K3219BB	ME-3 OXIDIZER DUMP CMD	EIU 3				
ME3_TERM_SEQ	E41K3218BB	ME-3 TERMINATE SEQUENCE CMD	EIU 3				
	V41K1119XD	MPS E1 LH2 PREVLV (PV4) OP CMD A	PCA A1				89554A
	V41K1120XD	MPS E1 LH2 PREVLV (PV4) OP CMD B	LCA A1				89554A
	V41K1121XD	MPS E1 LH2 PREVLV (PV4) OP CMD C	LCA A2				89554A
	V41K1136XD	MPS E1 LO2 PREVLV (PV1) OP CMD A	PCA A1				89554A
	V41K1137XD	MPS E1 LO2 PREVLV (PV1) OP CMD B	LCA A1				89554A
	V41K1138XD	MPS E1 LO2 PREVLV (PV1) OP CMD C	LCA A2				89554A
	V41K1139XD	MPS E1 LO2 PREVLV (PV1) CL CMD A	PCA A1				89554A
	V41K1140XD	MPS E1 LO2 PREVLV (PV1) CL CMD B	LCA A1				89554A
	V41K1141XD	MPS E1 LO2 PREVLV (PV1) CL CMD C	LCA A2				89554A
	V41K1142XD	MPS E1 LO2 PREVLV (PV1) CL CMD D	HDWR				89554A
	V41K1143XD	MPS E1 LO2 PREVLV (PV1) OP CMD D	HDWR				89554A
	V41K1168XB	MPS E1 HE INTCN OUT(LV60) OP CMD A	HDWR				89554A
	V41K1219XD	MPS E2 LH2 PREVLV (PV5) OP CMD A	PCA A2				89554A
	V41K1220XD	MPS E2 LH2 PREVLV (PV5) OP CMD B	LCA A2				89554A
	V41K1221XD	MPS E2 LH2 PREVLV (PV5) OP CMD C	LCA A3				89554A
	V41K1236XD	MPS E2 LO2 PREVLV (PV2) OP CMD A	PCA A2				89554A
	V41K1237XD	MPS E2 LO2 PREVLV (PV2) OP CMD B	LCA A2				89554A
	V41K1238XD	MPS E2 LO2 PREVLV (PV2) OP CMD C	LCA A3				89554A
	V41K1239XD	MPS E2 LO2 PREVLV (PV2) CL CMD A	PCA A2				89554A
	V41K1240XD	MPS E2 LO2 PREVLV (PV2) CL CMD B	LCA A2				89554A
	V41K1241XD	MPS E2 LO2 PREVLV (PV2) CL CMD C	LCA A3				89554A
	V41K1242XD	MPS E2 LO2 PREVLV (PV2) CL CMD D	HDWR				89554A
	V41K1243XD	MPS E2 LO2 PREVLV (PV2) OP CMD D	HDWR				89554A
	V41K1256XB	MPS E2 HE ISO VLV B (LV4) OP CMD A	HDWR				89554A
	V41K1257XB	MPS E2 HE ISO VLV B (LV4) OP CMD B	HDWR				89554A
	V41K1262XB	MPS E2 HE INTCN IN (LV61) OP CMD A	HDWR				89554A
	V41K1263XB	MPS E2 HE INTCN IN (LV61) OP CMD B	HDWR				89554A
	V41K1268XB	MPS E2 HE INTCN OUT(LV62) OP CMD A	HDWR				89554A
	V41K1319XD	MPS E3 LH2 PREVLV (PV6) OP CMD A	PCA A3				89554A
	V41K1320XD	MPS E3 LH2 PREVLV (PV6) OP CMD B	LCA A3				89554A
	V41K1321XD	MPS E3 LH2 PREVLV (PV6) OP CMD C	LCA A1				89554A
	V41K1336XD	MPS E3 LO2 PREVLV (PV3) OP CMD A	PCA A3				89554A
	V41K1337XD	MPS E3 LO2 PREVLV (PV3) OP CMD B	LCA A3				89554A
	V41K1338XD	MPS E3 LO2 PREVLV (PV3) OP CMD C	LCA A1				89554A
	V41K1339XD	MPS E3 LO2 PREVLV (PV3) CL CMD A	PCA A3				89554A
	V41K1340XD	MPS E3 LO2 PREVLV (PV3) CL CMD B	LCA A3				89554A
	V41K1341XD	MPS E3 LO2 PREVLV (PV3) CL CMD C	LCA A1				89554A

TABLE 4.4.1.4–1. VENT DOOR CONTROL SEQUENCER (G4.161) INPUT/OUTPUT FUNCTIONAL PARAMETERS

DBFN: D3B027-F PN: VP707100049P00L OUTPUT FUNCTIONAL PARAMETERS FROM VENT CNTL SEQ

FSSR NAME	M/S ID	NOMENCLATURE	DESTINATION	UNITS	DATA TYPE	PREC	LAST CRS
	V41K1342XD	MPS E3 LO2 PREVLV (PV3) CL CMD D	HDWR				89554A
	V41K1343XD	MPS E3 LO2 PREVLV (PV3) OP CMD D	HDWR				89554A
	V41K1368XB	MPS E3 HE INTCN OUT(LV64) OP CMD A	HDWR				89554A
	V41K1391XC	MPS LH2 OTBD F/D VLV (PV11) OP CMD	LCA A2				89554A
	V41K1393XC	MPS LH2 OTBD F/D VLV (PV11) CL CMD	LCA A2				89554A
	V41K1401XB	MPS LH2 INBD F/D (PV12) OP CMD A	LCA A1				89554A
	V41K1402XB	MPS LH2 INBD F/D (PV12) OP CMD B	LCA A1				89554A
	V41K1411XB	MPS LH2 TOPPING VLV (PV13) OP,CMD	LCA A1				89554A
	V41K1412XB	MPS LH2 INBD F/D (PV12) CL CMD	LCA A1				89554A
	V41K1435XB	MPS LH2 MANF REPRSS 1(LV42) OP CMD	LCA A2				89554A
	V41K1437XB	MPS LH2 MANF REPRSS 2(LV43) OP CMD	LCA A2				89554A
	V41K1501XB	MPS LO2 INBD F/D (PV10) OP CMD A	LCA A2				89554A
	V41K1502XB	MPS LO2 INBD F/D (PV10) OP CMD B	LCA A2				89554A
	V41K1512XB	MPS LO2 INBD F/D VLV (PV10) CL CMD	LCA A2				89554A
	V41K1515XC	MPS LO2 OTBD F/D VLV (PV9) CL CMD	LCA A3				89554A
	V41K1518XC	MPS LO2 OTBD F/D VLV (PV9) OP CMD	LCA A3				89554A
	V41K1535XB	MPS LO2 MANF REPRSS 1(LV40) OP CMD	LCA A3				89554A
	V41K1537XB	MPS LO2 MANF REPRSS 2(LV41) OP CMD	LCA A3				89554A
	V41K1607XB	MPS PNEU HE ISO VLV 1 (LV7) OP CMD	HDWR				89554A
	V41K1608XB	MPS PNEU HE ISO VLV 2 (LV8) OP CMD	HDWR				89554A
	V41K1613XC	MPS REG HE XOVER VLV (LV10) OP CMD	HDWR				89554A
	V41K1631XB	MPS HE SPLY BLWDWN 1 (LV26) OP CMD	HDWR				89554A
	V41K1633XB	MPS HE SPLY BLWDWN 2 (LV27) OP CMD	HDWR				89554A
	V41K1913XC	MPS LH2 RTLS OTBD DV(PV18)OP CMD A	HDWR				89554A
	V41K1914XC	MPS LH2 RTLS OTBD DV(PV18)OP CMD B	HDWR				89554A
	V41K1915XC	MPS LH2 RTLS OTBD DV(PV18)OP CMD C	HDWR				89554A
	V41K1923XC	MPS LH2 RTLS INBD DV(PV17)OP CMD A	HDWR				89554A
	V41K1924XC	MPS LH2 RTLS INBD DV(PV17)OP CMD B	HDWR				89554A
	V41K1925XC	MPS LH2 RTLS INBD DV(PV17)OP CMD C	HDWR				89554A
	V56K0140XA	ET UMB DR L-B1/B2 CLOSE CMD	HDWR,TLM		BD		89354G
	V56K0141XA	ET DR DVR & CL LCH DC ARM A MCA1/2	HDWR		BD		89354G
	V56K0142XA	ET DR DVR & CL LCH DC ARM A MCA1/3	HDWR		BD		89354G
	V56K0143XA	ET DR DVR & CL LCH DC ARM A MCA2/3	HDWR		BD		89354G
	V56K1271XA	ET DR C/L LCH 1A1/2A2 FA1 STOW CMD	HDWR		BD		89354G
	V56K1272XA	ET DR C/L LCH 1A2/2A1 FA1 STOW CMD	HDWR		BD		89354G
	V56K1273XA	ET DR C/L LCH 1A1/2B2 FA2 STOW CMD	HDWR		BD		89354G
	V56K1274XA	ET DR C/L LCH 1B2/2B1 FA2 STOW CMD	HDWR		BD		89354G
	V56K1275XA	ET DR C/L LCH 1A1/2A2 FA1 LOCK CMD	HDWR		BD		89354G
	V56K1276XA	ET DR C/L LCH 1A2/2B1 FA1 LOCK CMD	HDWR		BD		89354G
	V56K1277XA	ET DR C/L LCH 1A1/2B2 FA2 LOCK CMD	HDWR		BD		89354G
	V56K1278XA	ET DR C/L LCH 1B2/2A1 FA2 LOCK CMD	HDWR		BD		89354G
	V56K1371XA	ET DR C/L LCH 1B1/2A2 FA4 STOW CMD	HDWR		BD		89354G
	V56K1372XA	ET DR C/L LCH 1A2/2B1 FA4 STOW CMD	HDWR		BD		89354G

TABLE 4.4.1.4–1. VENT DOOR CONTROL SEQUENCER (G4.161) INPUT/OUTPUT FUNCTIONAL PARAMETERS

DBFN: D3B027-F PN: VP707100049P00L OUTPUT FUNCTIONAL PARAMETERS FROM VENT CNTL SEQ

FSSR NAME	M/S ID	NOMENCLATURE	DESTINATION	UNITS	DATA TYPE	PREC	LAST CRS
	V56K1373XA	ET DR C/L LCH 1B1/2B2 FA3 STOW CMD	HDWR		BD		89354G
	V56K1374XA	ET DR C/L LCH 1B2/2A1 FA3 STOW CMD	HDWR		BD		89354G
	V56K1375XA	ET DR C/L LCH 1B1/2A2 FA4 LOCK CMD	HDWR		BD		89354G
	V56K1376XA	ET DR C/L LCH 1A2/2A1 FA4 LOCK CMD	HDWR		BD		89354G
	V56K1377XA	ET DR C/L LCH 1B1/2B2 FA3 LOCK CMD	HDWR		BD		89354G
	V56K1378XA	ET DR C/L LCH 1B2/2B1 FA3 LOCK CMD	HDWR		BD		89354G
	V56K3111XA	ET UMB DR L-B2/R-B1 CLOSE CMD	HDWR		BD		89354G
	V56K3112XA	ET UMB DR R-B2 CLOSE CMD	HDWR		BD		89354G
	V56K3531XA	ET L UMB COUT DOOR LATCH FA1 CMD	HDWR		BD		89354G
	V56K3532XA	ET R UMB COUT DOOR LATCH FA1 CMD	HDWR		BD		89354G
	V56K3533XA	ET L UMB COUT DOOR LATCH FA4 CMD	HDWR		BD		89354G
	V56K3534XA	ET R UMB COUT DOOR LATCH FA4 CMD	HDWR		BD		89354G
	V56K4121XA	ET UMB DR R-B1/B2 CLOSE CMD	HDWR		BD		89354G
	V56K4122XA	ET UMB DR L-B1 CLOSE CMD	HDWR		BD		89354G
	V56K4531XA	ET L UMB COUT DOOR LATCH FA3 CMD	HDWR		BD		89354G
	V56K4532XA	ET R UMB COUT DOOR LATCH FA3 CMD	HDWR		BD		89354G
	V56K4533XA	ET L UMB COUT DOOR LATCH FA2 CMD	HDWR		BD		89354G
	V56K4534XA	ET R UMB COUT DOOR LATCH FA2 CMD	HDWR		BD		89354G
	V59K3000X	L FWD VENTS 1&2 CLOSE CMD 1A	MCA F3,TLM		BD		
	V59K3001X	L FWD VENTS 1&2 CLOSE CMD 1B	MCA F3,TLM		BD		
	V59K3010X	L FWD VENTS 1&2 CLOSE CMD 2A	MCA F2,TLM		BD		
	V59K3011X	L FWD VENTS 1&2 CLOSE CMD 2B	MCA F2,TLM		BD		
	V59K3050X	L FWD VENTS 1&2 OPEN CMD 1A	MCA F3,TLM		BD		
	V59K3051X	L FWD VENTS 1&2 OPEN CMD 1B	MCA F3,TLM		BD		
	V59K3060X	L FWD VENTS 1&2 OPEN CMD 2A	MCA F2,TLM		BD		
	V59K3061X	L FWD VENTS 1&2 OPEN CMD 2B	MCA F2,TLM		BD		
	V59K3200X	L PB VENT 3 CLOSE CMD 1A	MCA M3,TLM		BD		
	V59K3201X	L PB VENT 3 CLOSE CMD 1B	MCA M3,TLM		BD		
	V59K3210X	L PB VENT 3 CLOSE CMD 2A	MCA M2,TLM		BD		
	V59K3211X	L PB VENT 3 CLOSE CMD 2B	MCA M2,TLM		BD		
	V59K3250X	L PB VENT 3 OPEN CMD 1A	MCA M3,TLM		BD		
	V59K3251X	L PB VENT 3 OPEN CMD 1B	MCA M3,TLM		BD		
	V59K3260X	L PB VENT 3 OPEN CMD 2A	MCA M2,TLM		BD		
	V59K3261X	L PB VENT 3 OPEN CMD 2B	MCA M2,TLM		BD		
	V59K3300X	L PB/W VENTS 4&7 CLOSE CMD 1A	MCA M2,TLM		BD		
	V59K3301X	L PB/W VENTS 4&7 CLOSE CMD 1B	MCA M2,TLM		BD		
	V59K3310X	L PB/W VENTS 4&7 CLOSE CMD 2A	MCA M4,TLM		BD		
	V59K3311X	L PB/W VENTS 4&7 CLOSE CMD 2B	MCA M4,TLM		BD		
	V59K3350X	L PB/W VENTS 4&7 OPEN CMD 1A	MCA M2,TLM		BD		
	V59K3351X	L PB/W VENTS 4&7 OPEN CMD 1B	MCA M2,TLM		BD		
	V59K3360X	L PB/W VENTS 4&7 OPEN CMD 2A	MCA M4,TLM		BD		
	V59K3361X	L PB/W VENTS 4&7 OPEN CMD 2B	MCA M4,TLM		BD		
	V59K3400X	L PB VENT 5 CLOSE CMD 1A	MCA M3,TLM		BD		

TABLE 4.4.1.4–1. VENT DOOR CONTROL SEQUENCER (G4.161) INPUT/OUTPUT FUNCTIONAL PARAMETERS

DBFN: D3B027-F PN: VP707100049P00L OUTPUT FUNCTIONAL PARAMETERS FROM VENT CNTL SEQ

FSSR NAME	M/S ID	NOMENCLATURE	DESTINATION	UNITS	DATA TYPE	PREC	LAST CRS
	V59K3401X	L PB VENT 5 CLOSE CMD 1B	MCA M3,TLM		BD		
	V59K3410X	L PB VENT 5 CLOSE CMD 2A	MCA M1,TLM		BD		
	V59K3411X	L PB VENT 5 CLOSE CMD 2B	MCA M1,TLM		BD		
	V59K3450X	L PB VENT 5 OPEN CMD 1A	MCA M3,TLM		BD		
	V59K3451X	L PB VENT 5 OPEN CMD 1B	MCA M3,TLM		BD		
	V59K3460X	L PB VENT 5 OPEN CMD 2A	MCA M1,TLM		BD		
	V59K3461X	L PB VENT 5 OPEN CMD 2B	MCA M1,TLM		BD		
	V59K3500X	L PB VENT 6 CLOSE CMD 1A	MCA M3,TLM		BD		
	V59K3501X	L PB VENT 6 CLOSE CMD 1B	MCA M3,TLM		BD		
	V59K3510X	L PB VENT 6 CLOSE CMD 2A	MCA M2,TLM		BD		
	V59K3511X	L PB VENT 6 CLOSE CMD 2B	MCA M2,TLM		BD		
	V59K3550X	L PB VENT 6 OPEN CMD 1A	MCA M3,TLM		BD		
	V59K3551X	L PB VENT 6 OPEN CMD 1B	MCA M3,TLM		BD		
	V59K3560X	L PB VENT 6 OPEN CMD 2A	MCA M2,TLM		BD		
	V59K3561X	L PB VENT 6 OPEN CMD 2B	MCA M2,TLM		BD		
	V59K3600X	L PB VENT 6 PURGE 1 CMD 1A	MCA M3		BD		89598A
	V59K3610X	L PB VENT 6 PURGE 1 CMD 2A	MCA M2		BD		89598A
	V59K3700X	L PB VENT 6 PURGE 2 CMD 1A	MCA M3		BD		89598A
	V59K3710X	L PB VENT 6 PURGE 2 CMD 2A	MCA M2		BD		89598A
	V59K3800X	L AFT VENTS 8&9 CLOSE CMD 1A	MCA A1,TLM		BD		
	V59K3801X	L AFT VENTS 8&9 CLOSE CMD 1B	MCA A1,TLM		BD		
	V59K3810X	L AFT VENTS 8&9 CLOSE CMD 2A	MCA A2,TLM		BD		
	V59K3811X	L AFT VENTS 8&9 CLOSE CMD 2B	MCA A2,TLM		BD		
	V59K3850X	L AFT VENTS 8&9 OPEN CMD 1A	MCA A1,TLM		BD		
	V59K3851X	L AFT VENTS 8&9 OPEN CMD 1B	MCA A1,TLM		BD		
	V59K3860X	L AFT VENTS 8&9 OPEN CMD 2A	MCA A2,TLM		BD		
	V59K3861X	L AFT VENTS 8&9 OPEN CMD 2B	MCA A2,TLM		BD		
	V59K4000X	R FWD VENTS 1&2 CLOSE CMD 1A	MCA F1,TLM		BD		
	V59K4001X	R FWD VENTS 1&2 CLOSE CMD 1B	MCA F1,TLM		BD		
	V59K4010X	R FWD VENTS 1&2 CLOSE CMD 2A	MCA F2,TLM		BD		
	V59K4011X	R FWD VENTS 1&2 CLOSE CMD 2B	MCA F2,TLM		BD		
	V59K4050X	R FWD VENTS 1&2 OPEN CMD 1A	MCA F1,TLM		BD		
	V59K4051X	R FWD VENTS 1&2 OPEN CMD 1B	MCA F1,TLM		BD		
	V59K4060X	R FWD VENTS 1&2 OPEN CMD 2A	MCA F2,TLM		BD		
	V59K4061X	R FWD VENTS 1&2 OPEN CMD 2B	MCA F2,TLM		BD		
	V59K4200X	R PB VENT 3 CLOSE CMD 1A	MCA M1,TLM		BD		
	V59K4201X	R PB VENT 3 CLOSE CMD 1B	MCA M1,TLM		BD		
	V59K4210X	R PB VENT 3 CLOSE CMD 2A	MCA M4,TLM		BD		
	V59K4211X	R PB VENT 3 CLOSE CMD 2B	MCA M4,TLM		BD		
	V59K4250X	R PB VENT 3 OPEN CMD 1A	MCA M1,TLM		BD		
	V59K4251X	R PB VENT 3 OPEN CMD 1B	MCA M1,TLM		BD		
	V59K4260X	R PB VENT 3 OPEN CMD 2A	MCA M4,TLM		BD		
	V59K4261X	R PB VENT 3 OPEN CMD 2B	MCA M4,TLM		BD		

TABLE 4.4.1.4–1. VENT DOOR CONTROL SEQUENCER (G4.161) INPUT/OUTPUT FUNCTIONAL PARAMETERS

DBFN: D3B027-F PN: VP707100049P00L OUTPUT FUNCTIONAL PARAMETERS FROM VENT CNTL SEQ

FSSR NAME	M/S ID	NOMENCLATURE	DESTINATION	UNITS	DATA TYPE	PREC	LAST CRS
	V59K4300X	R PB/W VENTS 4&7 CLOSE CMD 1A	MCA M2,TLM		BD		
	V59K4301X	R PB/W VENTS 4&7 CLOSE CMD 1B	MCA M2,TLM		BD		
	V59K4310X	R PB/W VENTS 4&7 CLOSE CMD 2A	MCA M3,TLM		BD		
	V59K4311X	R PB/W VENTS 4&7 CLOSE CMD 2B	MCA M3,TLM		BD		
	V59K4350X	R PB/W VENTS 4&7 OPEN CMD 1A	MCA M2,TLM		BD		
	V59K4351X	R PB/W VENTS 4&7 OPEN CMD 1B	MCA M2,TLM		BD		
	V59K4360X	R PB/W VENTS 4&7 OPEN CMD 2A	MCA M3,TLM		BD		
	V59K4361X	R PB/W VENTS 4&7 OPEN CMD 2B	MCA M3,TLM		BD		
	V59K4400X	R PB VENT 5 CLOSE CMD 1A	MCA M1,TLM		BD		
	V59K4401X	R PB VENT 5 CLOSE CMD 1B	MCA M1,TLM		BD		
	V59K4410X	R PB VENT 5 CLOSE CMD 2A	MCA M4,TLM		BD		
	V59K4411X	R PB VENT 5 CLOSE CMD 2B	MCA M4,TLM		BD		
	V59K4450X	R PB VENT 5 OPEN CMD 1A	MCA M1,TLM		BD		
	V59K4451X	R PB VENT 5 OPEN CMD 1B	MCA M1,TLM		BD		
	V59K4460X	R PB VENT 5 OPEN CMD 2A	MCA M4,TLM		BD		
	V59K4461X	R PB VENT 5 OPEN CMD 2B	MCA M4,TLM		BD		
	V59K4500X	R PB VENT 6 CLOSE CMD 1A	MCA M1,TLM		BD		
	V59K4501X	R PB VENT 6 CLOSE CMD 1B	MCA M1,TLM		BD		
	V59K4510X	R PB VENT 6 CLOSE CMD 2A	MCA M4,TLM		BD		
	V59K4511X	R PB VENT 6 CLOSE CMD 2B	MCA M4,TLM		BD		
	V59K4550X	R PB VENT 6 OPEN CMD 1A	MCA M1,TLM		BD		
	V59K4551X	R PB VENT 6 OPEN CMD 1B	MCA M1,TLM		BD		
	V59K4560X	R PB VENT 6 OPEN CMD 2A	MCA M4,TLM		BD		
	V59K4561X	R PB VENT 6 OPEN CMD 2B	MCA M4,TLM		BD		
	V59K4600X	R PB VENT 6 PURGE 1 CMD 1A	MCA M1		BD		89598A
	V59K4610X	R PB VENT 6 PURGE 1 CMD 2A	MCA M4		BD		89598A
	V59K4700X	R PB VENT 6 PURGE 2 CMD 1A	MCA M1		BD		89598A
	V59K4710X	R PB VENT 6 PURGE 2 CMD 2A	MCA M4		BD		89598A
	V59K4800X	R AFT VENTS 8&9 CLOSE CMD 1A	MCA A3,TLM		BD		
	V59K4801X	R AFT VENTS 8&9 CLOSE CMD 1B	MCA A3,TLM		BD		
	V59K4810X	R AFT VENTS 8&9 CLOSE CMD 2A	MCA A2,TLM		BD		
	V59K4811X	R AFT VENTS 8&9 CLOSE CMD 2B	MCA A2,TLM		BD		
	V59K4850X	R AFT VENTS 8&9 OPEN CMD 1A	MCA A3,TLM		BD		
	V59K4851X	R AFT VENTS 8&9 OPEN CMD 1B	MCA A3,TLM		BD		
	V59K4860X	R AFT VENTS 8&9 OPEN CMD 2A	MCA A2,TLM		BD		
	V59K4861X	R AFT VENTS 8&9 OPEN CMD 2B	MCA A2,TLM		BD		
	V90J8201C	ORBITER VENT DOORS STATUS WORD	R/S LCH SEQ,TLM		BSU		
	V93X7201XA	ALL VENT CLOSE CMD	OVERRIDE DISP				

TABLE 4.4.1.4–2. VENT DOOR CONTROL SEQUENCER (G4.161) I–LOADS

DBFN:0484

FSSR NAME	MSID	ENG UNIT	DT	PR	D	S	PR	FCTN	CAT
VENT_CMDS_TIME_DELAY	V97U9859C	SEC	F	D	M	C	G4.161		ZFF1 ZFF1

TABLE 4.4.1.4–3. VENT DOOR CONTROL SEQUENCER (G4.161) K–LOADS

DBFN:0558

FSSR NAME DESCRIPTION	MSID	MC KLOAD VALUE		ENG UNIT	DT	PR	S	PR FCTN	LAST CR EQTN MSID
GROUND_REL_VEL_THRESHOLD GROUND REL VEL THRESHOLD	V97U9806C	+2.4000000	E+03	FT/SEC	F	S	C	G4.161	59957
HE_PURGE_TIME	V96U8959C	+6.50	E+02	SEC	F	D	C	G4.70 G4.161	59973
HE_PURGE_VEL	V96U8958C	+4.5	E+03	FT/SEC	F	S	C	G4.70 G4.161	59973

TABLE 4.4.1.4–4. VENT DOOR CONTROL SEQUENCER (G4.161) CONSTANTS

DBFN:0558

FSSR NAME DESCRIPTION	MSID	MC	CONSTANT VALUE	ENG UNIT	DT	PR	S	PR FCTN	LAST CR
NO REQUIREMENTS									

4.5 HYDRAULICS

4.5.1 LDG VLV CNTL (4.215)

4.5.1.1 Introduction

This sequence is used during entry to provide automatic control of the three hydraulic system brake isolation valves, a hydraulic system landing gear extend isolation valve, and the three hydraulic system MPS thrust vector control valves. These valves are latching valves.

The hydraulic system 1 landing gear isolation valve is opened by the sequence at a specified ground relative velocity cue to provide hydraulic pressure to deploy the landing gear. The hydraulic system landing brake isolation valves are commanded open upon receiving a Brake Isolation Valve Open Flag from the Landing SOP. A momentary switch is provided for manual control of each hydraulic system landing brake isolation valve and hydraulic system landing gear isolation valve. The center position of the manual switch is nonfunctional but is designated GPC to remind the crew that the valves will be automatically opened during entry.

During MM 304, the sequence opens the three hydraulic system MPS thrust vector control isolation valves to allow repositioning of the SSMEs to enable deployment of the drag chute without path interference from the SSMEs. The automatic control of the three hydraulic system MPS thrust vector control isolation valves can be bypassed by a crew SSME reposition inhibit item 19 entry on the Override Spec 051.

4.5.1.2 Overview

In Nominal Entry, the sequence is initiated when the Orbiter ground relative velocity is 8000 fps. During a RTLS Entry, the sequence is initiated upon transition into MM 603.

During MM 304, the automatic control of the three MPS thrust vector control (TVC) valves is initiated when the Orbiter ground relative velocity is between 3,500 fps and 8,000 fps and the crew has not inhibited the sequence via Override Spec 051. The Auxiliary Power Units (APU's) are checked when the orbiter relative velocity has diminished to 8,000 fps. If at least two out of three APU's are operational, the sequence proceeds to command the three hydraulic system MPS thrust vector control isolation valves open simultaneously. The valves will not be opened below a orbiter relative velocity of 3500 fps. The sequence will command the MPS thrust vector control valves closed upon: completion of SSME repositioning for chute deploy; or when less than two operational APU's are available; or if less than two valves are opened when commanded open. In the event of halted repositioning, a CRT message line and a Class 3 alert light and tone is provided.

During either MM 305 or MM 603, when the Orbiter ground relative velocity has decreased to 800 fps, the hydraulic system landing gear valve is commanded open. The hydraulic system brake isolation valves are then commanded open upon receiving a Brake Isolation Valve Open Flag from the Landing SOP.

The sequence terminates the open and close commands 5 or more seconds after each isolation valve is commanded and the valve will remain latched in its commanded position.

4.5.1.3 Detailed Requirements

Step 1. In MM 304 this step opens hydraulic system 1, 2, and 3 MPS TVC isolation valves during a predefined ground relative velocity if the crew has not inhibited this function. This step also indicates a crew alert if the crew has inhibited the SSME reposition while it was in progress.

Monitor the following signals:

(a)	MAJOR MODE 304 FLAG	V90X8161X
(b)	CREW SSME REPOSITION	V93X5480X
(c)	SSME REPOSITION START FLAG	(INTERNAL)
(d)	GROUND REL VEL MAGNITUDE IN M50 SYS	V95L0151C
(e)	SSME REPOSITION STOP FLAG	V95X1623X
(f)	SSME CHUTE DEPLOY POSITION CMPLT	V95X1624X

If (a) is true, proceed to monitor (b). Otherwise, proceed to Step 8.

If (b) is true, proceed to monitor (c) and (d). Otherwise, proceed to monitor (c), (e), and (f).

If (c) is true or 8000 fps ≥ (d) ≥ 3500 fps, on first pass, set (1) through (9) true, start (12), and proceed to Step 2. On subsequent passes, proceed to Step 2. Otherwise, return to Step 1.

If (c) is true and both (e) and (f) are false, set (10) true to generate a CRT message line and Class 3 alert light and tone, set (11) false, and proceed to Step 5. Otherwise, proceed to Step 5.

(1)	HYD SYS 1 ME/TVC ISLN V OP/CL ENA A	V58K1129X
(2)	HYD SYS 1 ME/TVC ISLN V OP/CL ENA B	V58K1132X
(3)	HYD SYS 1 ME/TVC ISLN V OP	V58K1134X
(4)	HYD SYS 2 ME/TVC ISLN V OP/CL ENA A	V58K1229X
(5)	HYD SYS 2 ME/TVC ISLN V OP/CL ENA B	V58K1232X
(6)	HYD SYS 2 ME/TVC ISLN V OP	V58K1234X
(7)	HYD SYS 3 ME/TVC ISLN V OP/CL ENA	V58K1332X
(8)	HYD SYS 3 ME/TVC ISLN V OP	V58K1334X
(9)	SSME REPOSITION START FLAG	(INTERNAL)
(10)	SSME REPOSITION STOP FLAG	V95X1623X
(11)	DRAG CHUTE GIMBAL POSITION FLAG	V90X5521X
(12)	MPS TVC VLV OPEN TIMER	(INTERNAL)

Step 2. This step terminates the open commands to the hydraulic system 1, 2, and 3 MPS TVC isolation valves.

Monitor the following signals:

(a)	SSME REPOSITION STOP FLAG	V95X1623X
(b)	MPS TVC VLV OPEN TIMER	(INTERNAL)

If (a) is true or less than 5 seconds have elapsed since (b) started, proceed to Step 4.

If (a) is false and 5 or more seconds have elapsed since (b) started, on first pass, set (1) through (8) false and proceed to Step 3. On subsequent passes, proceed to Step 4.

(1)	HYD SYS 1 ME/TVC ISLN V OP/CL ENA A	V58K1129X
(2)	HYD SYS 1 ME/TVC ISLN V OP/CL ENA B	V58K1132X
(3)	HYD SYS 1 ME/TVC ISLN V OP	V58K1134X
(4)	HYD SYS 2 ME/TVC ISLN V OP/CL ENA A	V58K1229X
(5)	HYD SYS 2 ME/TVC ISLN V OP/CL ENA B	V58K1232X
(6)	HYD SYS 2 ME/TVC ISLN V OP	V58K1234X

(7)	HYD SYS 3 ME/TVC ISLN V OP/CL ENA	V58K1332X
(8)	HYD SYS 3 ME/TVC ISLN V OP	V58K1334X

Step 3. This step provides a crew alert if at least two MPS TVC isolation valves fail to open, and provides a flag for priority rate limiting and for SSME repositioning if 2 or 3 MPS TVC isolation valves are opened within 5 seconds of being commanded.

Monitor the following signals:

(a)	HYD SYS 1 ME/TVC ISLN V OP IND	V58X1136X
(b)	HYD SYS 2 ME/TVC ISLN V OP IND	V58X1236X
(c)	HYD SYS 3 ME/TVC ISLN V OP IND	V58X1336X
(d)	FA1 INPUT PROM SEG 3, 10 STATUS (HFE)	V91X2845X
(e)	FA2 INPUT PROM SEG 3, 10 STATUS (HFE)	V91X2846X
(f)	FA3 INPUT PROM SEG 3, 10 STATUS (HFE)	V91X2847X
(g)	MPS TVC ISO VLV CLOSE COUNTER	(INTERNAL)

If (a) is false or (d) is true, increment (g) by one and proceed to monitor (b) and (e). Otherwise, proceed to monitor (b) and (e).

If (b) is false or (e) is true, increment (g) by one and proceed to monitor (c) and (f). Otherwise, proceed to monitor (c) and (f).

If (c) is false or (f) is true, increment (g) by one and proceed to monitor (g). Otherwise, proceed to monitor (g).

If (g) > 1, set (1) true to generate a CRT message line and Class 3 alert light and tone, and proceed to Step 4. Otherwise, set (2) and (3) true and proceed to Step 4.

(1)	SSME REPOSITION STOP FLAG	V95X1623X
(2)	DRAG CHUTE GIMBAL POSITION FLAG	V90X5521X
(3)	PRL TVC ISO VLV OPEN FLAG	V90X5522X

Step 4. This step monitors the hydraulic good status to ensure that at least two APU's remain good. A flag will be set to initiate MPS TVC isolation valve closure and a crew alert when less than two APU's are good and the SSME repositioning has not been completed.

Monitor the following signals:

(a)	HYDR SYS GOOD STATUS	V96Q3001C
(b)	SSME CHUTE DEPLOY POSITION CMPLT	V95X1624X

If (a) < 2 and (b) is false, set (1) true to generate a CRT message line and Class 3 alert light and tone and proceed to Step 5. Otherwise, proceed to Step 5.

(1)	SSME REPOSITION STOP FLAG	V95X1623X

Step 5. This step commands MPS TVC isolation valves closed if SSME repositioning will not occur or if SSME repositioning for drag chute deploy is complete.

Monitor the following signals:

(a)	SSME CHUTE DEPLOY POSITION CMPLT	V95X1624X
(b)	SSME REPOSITION STOP FLAG	V95X1623X

If (a) or (b) is true, on first pass, set (1) through (8) true, set (9) through (11) false, start (12) and proceed to Step 6. On subsequent passes, proceed to Step 6. Otherwise, return to Step 1.

(1)	HYD SYS 1 ME/TVC ISLN V OP/CL ENA A	V58K1129X
(2)	HYD SYS 1 ME/TVC ISLN V OP/CL ENA B	V58K1132X
(3)	HYD SYS 1 ME/TVC ISLN V CL	V58K1135X
(4)	HYD SYS 2 ME/TVC ISLN V OP/CL ENA A	V58K1229X
(5)	HYD SYS 2 ME/TVC ISLN V OP/CL ENA B	V58K1232X
(6)	HYD SYS 2 ME/TVC ISLN V CL	V58K1235X
(7)	HYD SYS 3 ME/TVC ISLN V OP/CL ENA	V58K1332X
(8)	HYD SYS 3 ME/TVC ISLN V CL	V58K1335X
(9)	HYD SYS 1 ME/TVC ISLN V OP	V58K1134X
(10)	HYD SYS 2 ME/TVC ISLN V OP	V58K1234X
(11)	HYD SYS 3 ME/TVC ISLN V OP	V58K1334X
(12)	MPS TVS ISO VLV CLOSE TIMER	(INTERNAL)

Step 6. This step terminates the close commands to the hydraulic system MPS TVC isolation valves.

Monitor the following signal:

(a)	MPS TVC ISO VLV CLOSE TIMER	(INTERNAL)

If less than 5 seconds have elapsed since (a) started, return to Step 1.

If 5 or more seconds have elapsed since (a) started, on first pass, set (1) through (8) false and proceed to Step 7. On subsequent passes, return to Step 1.

(1)	HYD SYS 1 ME/TVC ISLN V OP/CL ENA A	V58K1129X
(2)	HYD SYS 1 ME/TVC ISLN V OP/CL ENA B	V58K1132X
(3)	HYD SYS 1 ME/TVC ISLN V CL	V58K1135X
(4)	HYD SYS 2 ME/TVC ISLN V OP/CL ENA A	V58K1229X
(5)	HYD SYS 1 ME/TVC ISLN V OP/CL ENA B	V58K1232X
(6)	HYD SYS 1 ME/TVC ISLN V CL	V58K1235X
(7)	HYD SYS 1 ME/TVC ISLN V OP/CL ENA B	V58K1332X
(8)	HYD SYS 1 ME/TVC ISLN V CL	V58K1335X

Step 7. This step provides a flag for priority rate limiting if all three MPS TVC isolation valves are not closed after being commanded closed.

Monitor the following signals:

(a)	HYD SYS 1 ME/TVC ISLN V OP IND	V58X1136X
(b)	HYD SYS 2 ME/TVC ISLN V OP IND	V58X1236X
(c)	HYD SYS 3 ME/TVC ISLN V OP IND	V58X1336X
(d)	FA1 INPUT PROM SEG 3, 10 STATUS (HFE)	V91X2845X
(e)	FA2 INPUT PROM SEG 3, 10 STATUS (HFE)	V91X2846X
(f)	FA3 INPUT PROM SEG 3, 10 STATUS (HFE)	V91X2847X
(g)	MPS TVC ISO VLV OPEN COUNTER	(INTERNAL)

If (a) or (d) is true, increment (g) by 1 and proceed to monitor (b) and (e). Otherwise proceed to monitor (b) and (e).

If (b) or (e) is true, increment (g) by 1 and proceed to monitor (c) and (f). Otherwise proceed to monitor (c) and (f).

If (c) or (f) is true, increment (g) by 1 and proceed to monitor (g). Otherwise proceed to monitor (g).

If (g) < 1, then set (1) and (2) false and proceed to Step 1. Otherwise set (1) true, set (2) false, and return to Step 1.

(1)	PRL TVC ISO VLV OPEN FLAG	V90X5522X
(2)	SSME REPOSITION START FLAG	(INTERNAL)

Step 8. This step opens the hydraulic system 1 isolation valve for extension of the landing gear in MM 603 and MM 305.

Monitor the following signals:

(a)	MAJOR MODE 603 FLAG	V93X0013X
(b)	MAJOR MODE 305 FLAG	V90X8162X
(c)	GROUND REL VELOCITY MAGNITUDE IN M50 SYS	V95L0151C

If (a) or (b) is true, and (c) is ≤ 800 fps, on first pass, set (1) true, start (2), and return to Step 1. On subsequent passes, proceed to Step 9. Otherwise, return to Step 1.

(1)	HYDR SYS 1 LDG GR ISLN VLV OPEN	V58K0195X
(2)	LND GEAR ISO VLV OP CMD TIMER	(INTERNAL)

Step 9. This step terminates the hydraulic system 1 landing gear isolation valve open command.

Monitor the following signal:

(a)	LND GEAR ISO VLV OP CMD TIMER	(INTERNAL)

If less than 5 seconds have elapsed since (a) started, proceed to Step 10.

If 5 or more seconds have elapsed since (a) started, set (1) false, and proceed to Step 10.

(1)	HYDR SYS 1 LDG GR ISLN VLV OPEN	V58K0195X

Step 10. This step opens the hydraulic system brake isolation valves.

Monitor the following signal:

(a)	BRAKE ISO VLV OPEN FLAG	V96X0060X

If (a) is true, on first pass, set (1), (2), and (3) true, start (4) and return to Step 1. On subsequent passes, proceed to Step 11. Otherwise, return to Step 1.

(1)	HYD SYS 1 BRAKE ISLN VLV OPEN	V58K0197X
(2)	HYD SYS 2 BRAKE ISLN VLV OPEN	V58K0295X

(3)	HYD SYS 3 BRAKE ISLN VLV OPEN	V58K0395X
(4)	BRAKE ISO VLV OP CMD TIMER	(INTERNAL)

Step 11. This step terminates the hydraulic system brake isolation valves open commands.

Monitor the following signal:

(a)	BRAKE ISO VLV OP CMD TIMER	(INTERNAL)

If less than 5 seconds have elapsed since (a) started, return to Step 1.

If 5 or more seconds have elapsed since (a) started, terminate (1), (2), and (3), and return to Step 1.

(1)	HYD SYS 1 BRAKE ISLN VLV OPEN	V58K0197X
(2)	HYD SYS 2 BRAKE ISLN VLV OPEN	V58K0295X
(3)	HYD SYS 3 BRAKE ISLN VLV OPEN	V58K0395X

LANDING GEAR VALVE CONTROL INITIATION

NOMENCLATURE	INITIAL VALUE	UNITS
SSME REPOSITION START FLAG	OFF	
MPS TVC VLV OPEN TIMER	0.0	SEC
MPS TVC ISO VLV CLOSE COUNTER	0	
MPS TVC ISO VLV CLOSE TIMER	0.0	SEC
MPS TVC ISO VLV OPEN COUNTER	0	
LND GEAR ISO VLV OP CMD TIMER	0.0	SEC
BRAKE ISO VLV OP CMD TIMER	0.0	SEC
SSME REPOSITION STOP FLAG	OFF	
DRAG CHUTE GIMBAL POSITION FLAG	OFF	
PRL TVC ISO VLV OPEN FLAG	OFF	

FOR INFO ONLY

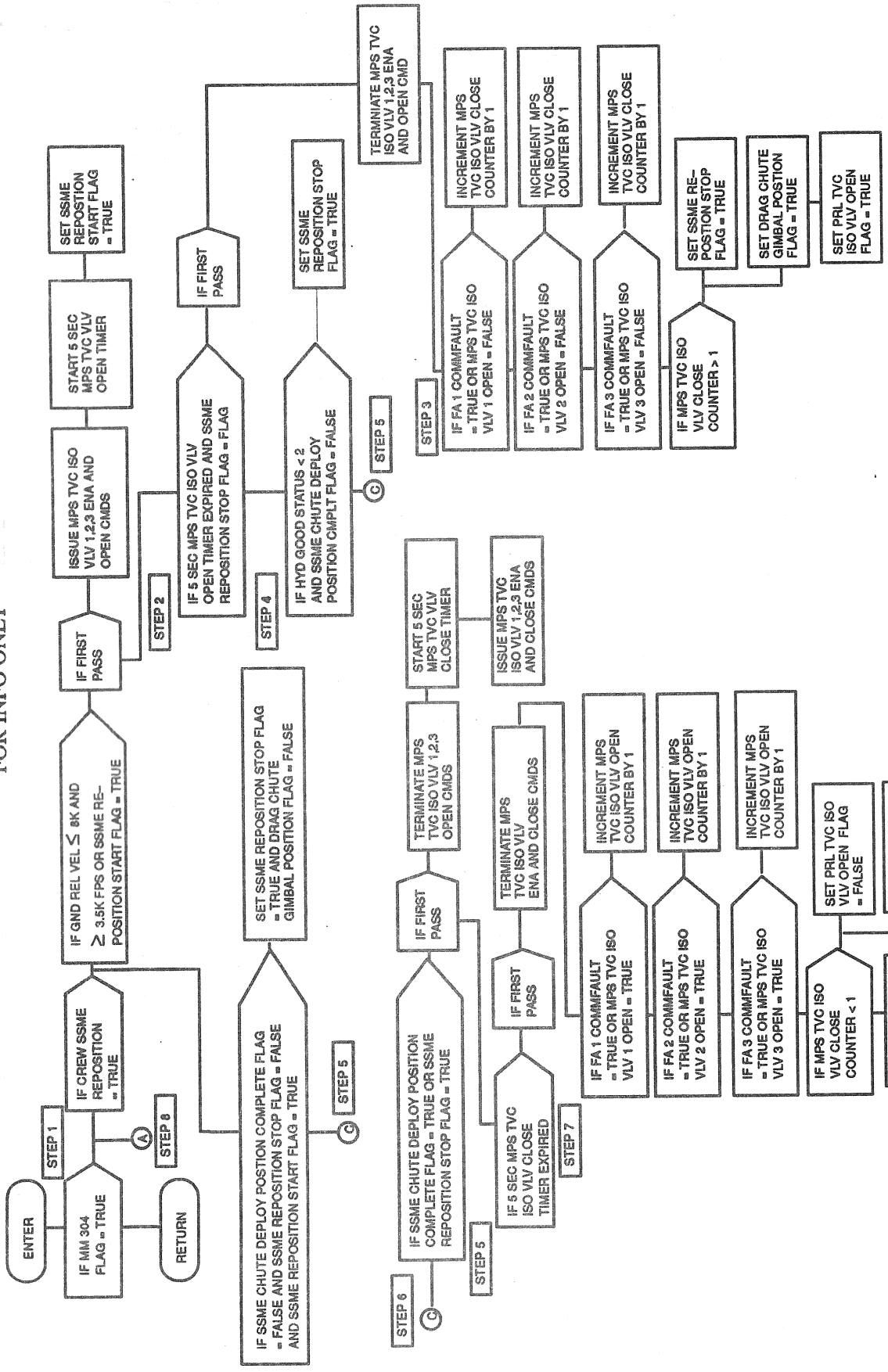

Figure 4.215. Hydraulic Systems Landing Gear Isolation Valve Control Logic (Sheet 1 of 2)

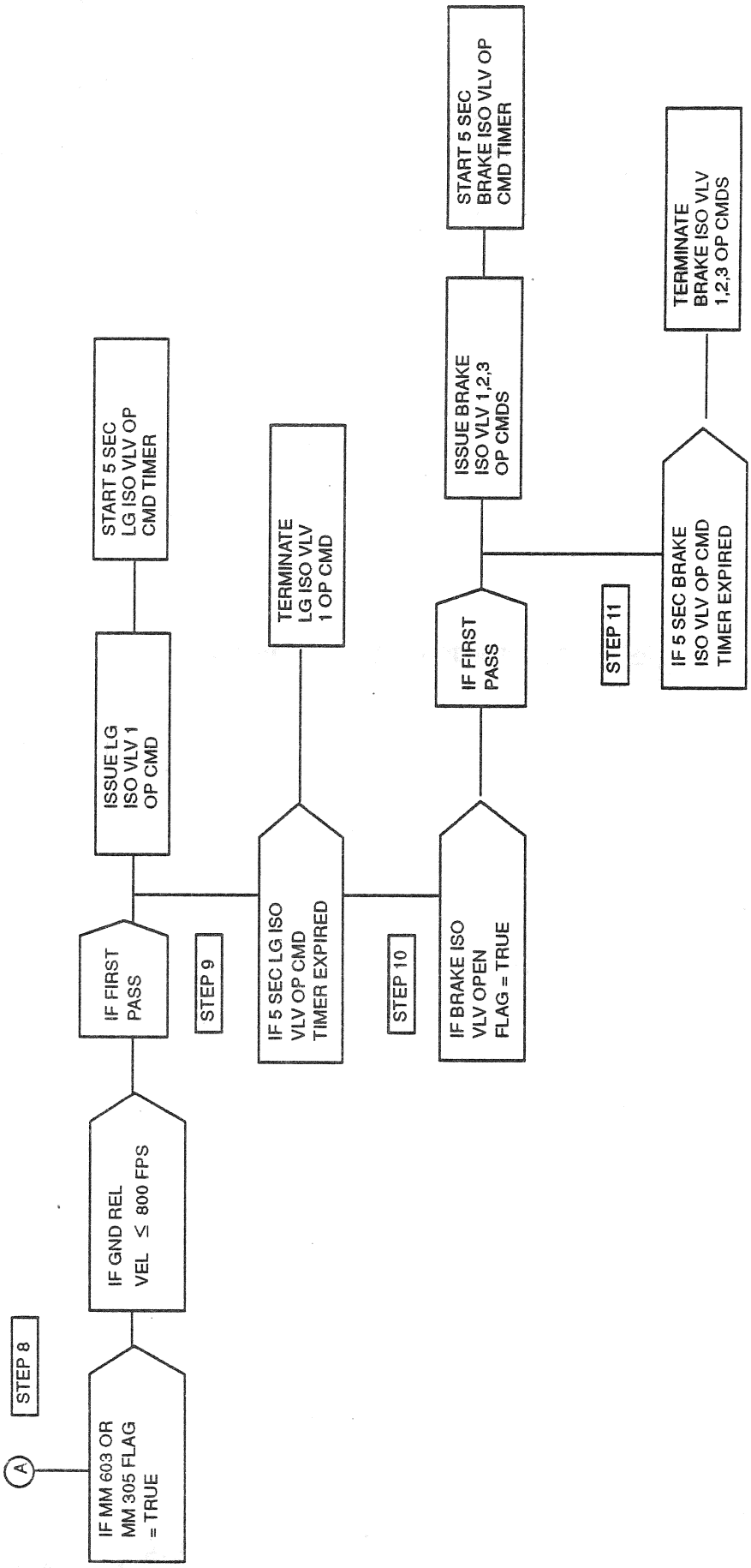

Figure 4.215 Hydraulic Systems Landing Gear Isolation Valve Control Logic (Sheet 2 of 2)

THIS PAGE INTENTIONALLY LEFT BLANK

TABLE 4.5.1.4–1. HYD SYS LANDING GEAR ISLN VLV CNTL SEQ (G4.215) INPUT/OUTPUT FUNCTIONAL PARAMETERS

DBFN: D3B027-F PN: VP707100049P00L INPUT FUNCTIONAL PARAMETERS FOR LDG GEAR VLV CNTL

FSSR NAME	M/S ID	NOMENCLATURE	SOURCE	UNITS	DATA TYPE	PREC	LAST CRS
BRK_VLV_OP	V96X0060X	BRAKE ISO VLV OPEN FLAG	LANDING SOP		BD		90102D
MM_CODE_304/MM_304	V90X8161X	MAJOR MODE 304 FLAG	MSC				89991E
MM_CODE_305/MM_305	V90X8162X	MAJOR MODE 305 FLAG	MSC				90102D
MM_CODE_603/MM_603	V90X8122X	MAJOR MODE 603 FLAG	MSC				89599C
N_HYDRAULIC_GOOD	V96Q3001C	HYDR SYS GOOD STATUS	HYD SYS SOP		HXS		89991E
REL_VEL_MAG	V95L0151CD	GND REL VEL MAGNITUDE IN M50 SYS	TAEM UPP	FT/S			
REL_VEL_MAG/V	V95L0151CA	GND REL VEL MAGNITUDE IN M50 SYS	RTLS UPP	FT/S			89990E
							89250B
REL_VEL_MAG/V	V95L0151CC	GND REL VEL MAGNITUDE IN M50 SYS	ENT UPP	FT/S			90114B
							89250B
SSME_REPOS	V93X5480X	CREW SSME REPOSITION	OVERRIDE DISP		BD		89991E
SSME_REPOS_CMPLT	V95X1624X	SSME CHUTE DEPLOY POSITION CMPLT	MPS TVC CMD SOP		BD		89991E
	V58X1136X	HYD SYS 1 ME/TVC ISLN V OP IND	HDWR				89991E
	V58X1236X	HYD SYS 2 ME/TVC ISLN V OP IND	HDWR				89991E
	V58X1336X	HYD SYS 3 ME/TVC ISLN V OP IND	HDWR				89991E
	V91X2845X	FA1 INPUT PROM SEG3,10 STATUS(HFE)	FCOS				89991E
							89598A
	V91X2846X	FA2 INPUT PROM SEG3,10 STATUS(HFE)	FCOS				89991E
							89598A
	V91X2847X	FA3 INPUT PROM SEG3,10 STATUS(HFE)	FCOS				89991E
							89598A

TABLE 4.5.1.4–1. HYD SYS LANDING GEAR ISLN VLV CNTL SEQ (G4.215) INPUT/OUTPUT FUNCTIONAL PARAMETERS

DBFN: D3B027-F PN: VP707100049P00L OUTPUT FUNCTIONAL PARAMETERS FROM LDG GEAR VLV CNTL

FSSR NAME	M/S ID	NOMENCLATURE	DESTINATION	UNITS	DATA TYPE	PREC	LAST CRS
PRL_TVC_ISOL_VLV_OP	V90X5522X	PRL TVC ISO VLV OPEN FLAG	AEROJET DAP				89991E
SSME_GMBL_FOS	V90X5521X	DRAG CHUTE GIMBAL POSITION FLAG	MPS TVC CMD SOP				89991E
SSME_REPOS_STOP	V95X1623X	SSME REPOSITION STOP FLAG	GAX				89991E
	V58K0195X	HYDR SYS 1 LDG GR ISLN VLV OPEN	HYDR SYS 1		BD		
	V58K0197X	HYDR SYS 1 BRAKE ISLN VLV OPEN	HYDR SYS 1		BD		90102D
	V58K0295X	HYDR SYS 2 BRAKE ISLN VLV OPEN	HYDR SYS 2		BD		90102D
	V58K0395X	HYDR SYS 3 BRAKE ISLN VLV OPEN	HYDR SYS 3		BD		90102D
	V58K1129X	HYD SYS1 ME/TVC ISLN V OP/CL ENA A	HYDR SYS 1				89991E
	V58K1132X	HYD SYS1 ME/TVC ISLN V OP/CL ENA B	HYDR SYS 1				89991E
	V58K1134X	HYD SYS1 ME/TVC ISLN V OP	HYDR SYS 1				89991E
	V58K1135X	HYD SYS1 ME/TVC ISLN V CL	HYDR SYS 1				89991E
	V58K1229X	HYD SYS2 ME/TVC ISLN V OP/CL ENA A	HYDR SYS 2				89991E
	V58K1232X	HYD SYS2 ME/TVC ISLN V OP/CL ENA B	HYDR SYS 2				89991E
	V58K1234X	HYD SYS2 ME/TVC ISLN V OP	HYDR SYS 2				89991E
	V58K1235X	HYD SYS2 ME/TVC ISLN V CL	HYDR SYS 2				89991E
	V58K1332X	HYD SYS3 ME/TVC ISLN V OP/CL ENA	HYDR SYS 3				89991E
	V58K1334X	HYD SYS3 ME/TVC ISLN V OP	HYDR SYS 3				89991E
	V58K1335X	HYD SYS3 ME/TVC ISLN V OP	HYDR SYS 3				89991E

TABLE 4.5.1.4–2. HYD SYS LANDING GEAR ISLN VLV CNTL SEQ (G4.215) I–LOADS

DBFN:0484

FSSR NAME	MSID	ENG UNIT	DT	PR	D	S	PR	FCTN	CAT
NO REQUIREMENTS									

TABLE 4.5.1.4–3. HYD SYS LANDING GEAR ISLN VLV CNTL SEQ (G4.215) K–LOADS

DBFN:0558

FSSR NAME DESCRIPTION	MSID	MC KLOAD VALUE	ENG UNIT	DT PR S PR FCTN	LAST CR EQTN MSID
NO REQUIREMENTS					

STS83–0026D
OI–21

SPACE SHUTTLE ORBITER

OPERATIONAL

LEVEL C

FUNCTIONAL SUBSYSTEM SOFTWARE REQUIREMENTS

SEQUENCE REQUIREMENTS

January 25, 1991

Contract NAS9–18500

IRD SE–694D1

WBS 39

Approved by

M. J. Kronfly, Director

Flight Systems and Performance

Rockwell International
Space Systems Division

FOREWORD

The primary avionics software system (PASS) requirements for the computer programs that execute in the Shuttle general–purpose computers (GPC's) are specified in the Computer Program Development Specifications (CPDS's) and the Functional Subsystem Software Requirements (FSSR) documents. The requirements are specified at three levels:

- Level A CPDS — System–level constraints and capabilities
- Level B CPDS — Functional requirements
- Level C FSSR — Detailed–level requirements

The Level A CPDS specifies system–level constraints and capabilities that are not oriented toward any particular program end item. The Level B CPDS specifies system–level requirements for guidance, navigation, and control (GN&C) and detailed requirements for systems management (SM) and vehicle utility (VU). The Level C FSSR's specify the detailed requirements for GN&C and display/controls. The Level C reconfigurable requirements are specified in the systems management and payload documents. The Level A, Level B, and Level C requirements documents are listed in Section 2, Applicable Documents.

DOCUMENT CHANGE RECORD

The following tabulation summarizes the change activity to Revision D dated January 25, 1991.

Issue and Date	Change Summary/Effectivity
Revision D January 25, 1991	This baseline release for effectivity OI–21 and subs includes CR's 89319C, 8990E, 90102D and 90114B.

CHANGE REQUEST SUMMARY

The following tabulation lists the paragraphs, figures (F), and tables (T) that have been changed as a result of approved change requests commencing with OI-8A. Changes incorporated prior to OI-8A are listed in the Historical Change Request Summary.

Paragraph	CR No.	OI-	Title
4.1.1.3			
Step 1C	89313A	OI-8C	CLOSE LH2 RECIRC DISC VLV FOR PAD ABORT
Step 1D	79997A	OI-8A	INTCON MPS HELIUM PAD ABORT
Step 1E	79997A	OI-8A	INTCON MPS HELIUM PAD ABORT
Step 1F	79997A	OI-8A	INTCON MPS HELIUM PAD ABORT
Step 2A	89157A	OI-8B	SSME LIMIT EXCEEDANCE PAD ABORT
Step 3A	89157A	OI-8B	SSME LIMIT EXCEEDANCE PAD ABORT
Step 4A	89157A	OI-8B	SSME LIMIT EXCEEDANCE PAD ABORT
Step 13	89355B	OI-8D	SCRUB OUTBOARD FILL/DRAIN LCC FROM RSLS
Step 14	89355B	OI-8D	SCRUB OUTBOARD FILL/DRAIN LCC FROM RSLS
Step 17	89355B	OI-8D	SCRUB OUTBOARD FILL/DRAIN LCC FROM RSLS
Step 17A	89355B	OI-8D	SCRUB OUTBOARD FILL/DRAIN LCC FROM RSLS
Step 18	89355B	OI-8D	SCRUB OUTBOARD FILL/DRAIN LCC FROM RSLS
Step 28A	89348B	OI-8C	MM103 FAST SEP CORRECTION
	90188	OI-8D	CHANGE ENGINE START TIME COMPUTATION
Step 30	89349A	OI-8C	PREVLV CLOSEURE FOR PAD ABORT
Step 30B	89349A	OI-8C	PREVLV CLOSEURE FOR PAD ABORT
Step 31	89349A	OI-8C	PREVLV CLOSEURE FOR PAD ABORT
Step 31B	89349A	OI-8C	PREVLV CLOSEURE FOR PAD ABORT
4.114(F)	79997A	OI-8A	INTCON MPS HELIUM PAD ABORT
	89157A	OI-8B	SSME LIMIT EXCEEDANCE PAD ABORT
	89313A	OI-8C	CLOSE LH2 RECIRC DISC VLV FOR PAD ABORT
	89348B	OI-8C	MM103 FAST SEP CORRECTION
	89349A	OI-8C	PREVLV CLOSEURE FOR PAD ABORT
	89355B	OI-8D	SCRUB OUTBOARD FILL/DRAIN LCC FROM RSLS
4.1.1.4 (T)	89875A	OI-8B	CLEANUP TO CR 89819
	90054A	OI-8D	ENTRY FCS ERRATA

Paragraph	CR No.	OI–	Title
4.1.2.2	89875A	OI–8B	CLEANUP TO CR 89819
4.1.2.3			
Step 17	89819	OI–8B	QD FAILURE PROTECTION FOR RSLS ABORT
Step 17	89875A	OI–8B	CLEANUP TO CR 89819
4.222 (F)	89819	OI–8B	QD FAILURE PROTECTION FOR RSLS ABORT
4.1.2.4 (T)	89875A	OI–8B	CLEANUP TO CR 89819
4.2.1.1	89325B	OI–8B	LOW LVL SNSR MOW SGL SNSR DIS
4.2.1.2	89325B	OI–8B	LOW LVL SNSR MOW SGL SNSR DIS
4.2.1.3			
Step 2	89369B	OI–8C	PD3 SAFING FOR INFLT SHUTDOWN
Step 3	89369B	OI–8C	PD3 SAFING FOR INFLT SHUTDOWN
Step 3A	89369B	OI–8C	PD3 SAFING FOR INFLT SHUTDOWN
Step 6	89369B	OI–8C	PD3 SAFING FOR INFLT SHUTDOWN
Step 7	89369B	OI–8C	PD3 SAFING FOR INFLT SHUTDOWN
Step 7A	89369B	OI–8C	PD3 SAFING FOR INFLT SHUTDOWN
Step 10	89369B	OI–8C	PD3 SAFING FOR INFLT SHUTDOWN
Step 11	89369B	OI–8C	PD3 SAFING FOR INFLT SHUTDOWN
Step 11A	89369B	OI–8C	PD3 SAFING FOR INFLT SHUTDOWN
Step 17	89108A	OI–8A	ERRONEOUS ENG PHASE FLAG FIX
Step 17B	89505B	OI–8D	MODIFY MPS MECO HELIUM INTERCONNECT
	89809B	OI–8D	CR 89505B CLEANUP
	89846B	OI–8D	CR 89809B CLEANUP
Step 17C	89505B	OI–8D	MODIFY MPS MECO HELIUM INTERCONNECT
	89809B	OI–8D	CR 89505B CLEANUP
	89846B	OI–8D	CR 89809B CLEANUP
Step 17D	89505B	OI–8D	MODIFY MPS MECO HELIUM INTERCONNECT
	89809B	OI–8D	CR 89505B CLEANUP
	89846B	OI–8D	CR 89809B CLEANUP
Step 22	89287	OI–8A	SSME OPS SCRUB
Step 22A	89287	OI–8A	SSME OPS SCRUB
Step 22B	89287	OI–8A	SSME OPS SCRUB

Paragraph	CR No.	OI–	Title
Step 22C	89287	OI–8A	SSME OPS SCRUB
Step 22D	89287	OI–8A	SSME OPS SCRUB
Step 22E	89287	OI–8A	SSME OPS SCRUB
Step 22F	89287	OI–8A	SSME OPS SCRUB
Step 24A	89278A	OI–8B	LH2 PREVALVE TIMER FOR FAST SEP
	89325B	OI–8B	LOW LVL SNSR MON SGL SNSR DIS
Step 25	89325B	OI–8B	LOW LVL SNSR MON SGL SNSR DIS
Step 25A	89325B	OI–8B	LOW LVL SNSR MON SGL SNSR DIS
Step 26	89325B	OI–8B	LOW LVL SNSR MON SGL SNSR DIS
Step 26A	89325B	OI–8B	LOW LVL SNSR MON SGL SNSR DIS
4.2.1.4–1(T)	89990E	OI–21	SINGLE ENGINE AUTO CONTINGENCY ABORT
4.165(F)	89278A	OI–8B	LH2 PREVALVE TIMER FOR FAST SEP
	89325B	OI–8B	LOW LVL SNSR MON SGL SNSR DIS
	89369B	OI–8C	PD3 SAFING FOR INFLT SHUTDOWN
	89505B	OI–8D	MODIFY MPS MECO HELIUM INTERCONNECT
	89809B	OI–8D	CR 89505B CLEANUP
4.2.2.2			
Step 1	79987D	OI–8A	SRB SEQ–MDM FAILURES
Step 2	79987D	OI–8A	SRB SEQ–MDM FAILURES
Step 4	79935H	OI–8A	SRB RGA RECHANNELIZATION
4.115(F)	79987D	OI–8A	SRB SEQ–MDM FAILURES
4.2.3.3			
Step 1	89165H	OI–8B	MPS FEED DISC LATCH LOGIC
	89399B	OI–8C	POST MECO LH2 VENT
Step 2	89348B	OI–8C	MM103 FAST SEP CORRECTION
Step 3	89165H	OI–8B	MPS FEED DISC LATCH LOGIC
Step 3a	89165H	OI–8B	MPS FEED DISC LATCH LOGIC
Step 3b	89165H	OI–8B	MPS FEED DISC LATCH LOGIC
Step 3c	89165H	OI–8B	MPS FEED DISC LATCH LOGIC
Step 3d	89165H	OI–8B	MPS FEED DISC LATCH LOGIC
Step 3e	89165H	OI–8B	MPS FEED DISC LATCH LOGIC

Paragraph	CR No.	OI–	Title
Step 3f	79935M	OI–8A	SRB RGA RECHANNELIZATION
	89165H	OI–8B	MPS FEED DISC LATCH LOGIC
Step 5/5a	90277A	OI–8D	ET SEP SEQUENCE CLEANUP
Step 5a	79928	OI–8B	AUTHORIZED SEQUENCER K–LOAD CHANGES
	79935H	OI–8B	SRB RGA RECHANNELIZATION
	89165H	OI–8B	MPS FEED DISC LATCH LOGIC
Step 7	89348B	OI–8C	MM103 FAST SEP CORRECTION
Step 8	89165H	OI–8B	MPS FEED DISC LATCH LOGIC
Step 9	89165H	OI–8B	MPS FEED DISC LATCH LOGIC
4.116(F)	89165H	OI–8B	MPS FEED DISC LATCH LOGIC
	89348B	OI–8C	MM103 FAST SEP CORRECTION
	89399B	OI–8C	POST MECO LH2 VENT
	90277A	OI–8D	ET SEP SEQUENCE CLEANUP
4.2.3.4(T)	89465C	OI–8C	MPS LH2 DUMP RTLS CONTINGENCY
4.2.3	89319E	OI–21	ORBITER SOFTWARE CHANGE REQUEST
4.2.3.4–1(T)	89990E	OI–21	SINGLE ENGINE AUTO CONTINGENCY ABORT
4.2.3.4–2(T)	89319E	OI–21	ORBITER SOFTWARE CHANGE REQUEST
4.2.3.4–1(T)	90114B	OI–21	ABORT SEQUENCING REDESIGN
4.2.4.1	89465C	OI–8C	MPS LHZ DUMP RTLS CONTINGENCY
Step 2	89465C	OI–8C	MPS LH2 DUMP RTLS CONTINGENCY
4.2.4.4(T)	90120B	OI–8D	UPDATE GUIDANCE DOWNMODE RQMTS
4.70(F)	89465C	OI–8C	MPS LH2 DUMP RTLS CONTINGENCY
4.3.1.1	89140E	OI–8A	CENTAUR REQUIREMENTS DELETION
	89150H	OI–8D	ABORT CONTROL SEQ SCRUB
4.3.1.2	59126H	OI–8A	RCS XFEED MCA OPTIMIZATION
	89140E	OI–8A	CENTAUR REQUIREMENTS DELETION
	89150H	OI–8D	ABORT CONTROL SEQ SCRUB
4.3.1.3			
Step 1	89140E	OI–8A	CENTAUR REQUIREMENTS DELETION
	89154B	OI–8A	DUMP ITEM DISPLAY CLEANUP
	89193D	OI–8A	ABT CNTR SEQ/OVERRIDE LASHUP

Paragraph	CR No.	OI–	Title
	89150H	OI–8D	ABORT CONTROL SEQ SCRUB
	89956	OI–8D	ABORT CONTROL SEQ CORRECTIONS
Step 1A	89140E	OI–8A	CENTAUR REQUIREMENTS DELETION
	89150H	OI–8D	ABORT CONTROL SEQ SCRUB
Step 3	89150H	OI–8D	ABORT CONTROL SEQ SCRUB
Step 4	59126H	OI–8A	RCS XFEED MCA OPTIMIZATION
	89150H	OI–8D	ABORT CONTROL SEQ SCRUB
Step 4A	59126H	OI–8A	RCS XFEED MCA OPTIMIZATION
	89150H	OI–8D	ABORT CONTROL SEQ SCRUB
Step 5	59126H	OI–8A	RCS XFEED MCA OPTIMIZATION
	89150H	OI–8D	ABORT CONTROL SEQ SCRUB
Step 6	59126H	OI–8A	RCS XFEED MCA OPTIMIZATION
	89150H	OI–8D	ABORT CONTROL SEQ SCRUB
Step 7	89150H	OI–8D	ABORT CONTROL SEQ SCRUB
Step 7A	89150H	OI–8D	ABORT CONTROL SEQ SCRUB
Step 7B	59126H	OI–8A	RCS XFEED MCA OPTIMIZATION
	89154B	OI–8A	DUMP ITEM DISPLAY CLEANUP
	89193D	OI–8A	ABT CNTL SEQ/OVERRIDE LASHUP
	89150H	OI–8D	ABORT CONTROL SEQ SCRUB
Step 7C	89150H	OI–8D	ABORT CONTROL SEQ SCRUB
Step 8	59126H	OI–8A	RCS XFEED MCA OPTIMIZATION
	89154B	OI–8A	DUMP ITEM DISPLAY CLEANUP
	89193D	OI–8A	ABT CNTL SEQ/OVERRIDE LASHUP
	89150H	OI–8D	ABORT CONTROL SEQ SCRUB
	89956	OI–8D	ABORT CONTROL SEQ CORRECTIONS
Step 9	59126H	OI–8A	RCS XFEED MCA OPTIMIZATION
	79971D	OI–8A	ABORT/INTERCONNECT FLAG FIX
	89150H	OI–8D	ABORT CONTROL SEQ SCRUB
Step 9A	59126H	OI–8A	RCS XFEED MCA OPTIMIZATION
	89150H	OI–8D	ABORT CONTROL SEQ SCRUB
Step 10	59126H	OI–8A	RCS XFEED MCA OPTIMIZATION

Paragraph	CR No.	OI–	Title
	89150H	OI–8D	ABORT CONTROL SEQ SCRUB
Step 10A	59126H	OI–8A	RCS XFEED MCA OPTIMIZATION
	89150H	OI–8D	ABORT CONTROL SEQ SCRUB
Step 11	59126H	OI–8A	RCS XFEED MCA OPTIMIZATION
	89150H	OI–8D	ABORT CONTROL SEQ SCRUB
Step 12	59126H	OI–8A	RCS XFEED MCA OPTIMIZATION
	89150H	OI–8D	ABORT CONTROL SEQ SCRUB
Step 13	89150H	OI–8D	ABORT CONTROL SEQ SCRUB
	89956	OI–8D	ABORT CONTROL SEQ CORRECTIONS
Step 14	89150H	OI–8D	ABORT CONTROL SEQ SCRUB
Step 15	89150H	OI–8D	ABORT CONTROL SEQ SCRUB
Step 16	89150H	OI–8D	ABORT CONTROL SEQ SCRUB
Step 17	89150H	OI–8D	ABORT CONTROL SEQ SCRUB
Step 18	89150H	OI–8D	ABORT CONTROL SEQ SCRUB
Step 19	89150H	OI–8D	ABORT CONTROL SEQ SCRUB
	89810	OI–8D	CORRECTION FOR 89150H
Step 20	89149B	OI–8A	OI–8A VERSION OF CR 79596C
	89193D	OI–8A	ABT CNTL SEQ/OVERRIDE LASHUP
	89150H	OI–8D	ABORT CONTROL SEQ SCRUB
	89956	OI–8D	ABORT CONTROL SEQ CORRECTIONS
Step 21	89150H	OI–8D	ABORT CONTROL SEQ SCRUB
Step 22	79643A	OI–8A	OMS DUMP WITH 3 SSME'S FAILED
Step 23	89150H	OI–8D	ABORT CONTROL SEQ SCRUB
Step 24	89150H	OI–8D	ABORT CONTROL SEQ SCRUB
Step 25	89238	OI–8B	ZERO THRUST AUTO DUMP START
	89479	OI–8C	CONTINGENCY DUMP POST–MECO MANUAL START
	89150H	OI–8D	ABORT CONTROL SEQ SCRUB
Step 26	89150H	OI–8D	ABORT CONTROL SEQ SCRUB
Step 27	89705	OI–8C	POST MECO NZ TERMINATION CORRECTION
	89150H	OI–8D	ABORT CONTROL SEQ SCRUB
Step 28	89150H	OI–8D	ABORT CONTROL SEQ SCRUB

Paragraph	CR No.	OI–	Title
Step 29	89150H	OI–8D	ABORT CONTROL SEQ SCRUB
	89810	OI–8D	CORRECTION FOR 89150H
Step 30	89150H	OI–8D	ABORT CONTROL SEQ SCRUB
Step 31	89150H	OI–8D	ABORT CONTROL SEQ SCRUB
Step 32	79643A	OI–8A	OMS DUMP WITH 3 SSME'S FAILED
	89154B	OI–8A	DUMP ITEM DISPLAY CLEANUP
	89193D	OI–8A	ABT CNTL SEQ/OVERRIDE LASHUP
	89229G	OI–8C	TERMINATE OMS–DUMP POST–MECO
	89150H	OI–8D	ABORT CONTROL SEQ SCRUB
Step 33	89142B	OI–8A	NZ LIMIT FOR MM304 OMS DUMP
	89154B	OI–8A	DUMP ITEM DISPLAY CLEANUP
	89193D	OI–8A	ABT CNTL SEQ/OVERRIDE LASHUP
	89229G	OI–8C	TERMINATE OMS–DUMP POST–MECO
	89705	OI–8C	POST MECO NZ TERMINATION CORRECTION
	89150H	OI–8D	ABORT CONTROL SEQ SCRUB
Step 34	89150H	OI–8D	ABORT CONTROL SEQ SCRUB
Step 35	89150H	OI–8D	ABORT CONTROL SEQ SCRUB
Step 36	89150H	OI–8D	ABORT CONTROL SEQ SCRUB
4.192(F)	59126H	OI–8A	RCS XFEED MCA OPTIMIZATION
	79643A	OI–8A	OMS DUMP WITH 3 SSME'S FAILED
	79971D	OI–8A	ABORT/INTERCONNECT FLAG FIX
	89140E	OI–8A	CENTAUR REQUIREMENTS DELETION
	89142B	OI–8A	NZ LIMIT FOR MM304 OMS DUMP
	89149B	OI–8A	OI–8A VERSION OF CR 79596C
	89154B	OI–8A	DUMP ITEM DISPLAY CLEANUP
	89193D	OI–8A	ABT CNTL SEQ/OVERRIDE LASHUP
	89229G	OI–8C	TERMINATE OMS–DUMP POST–MECO
	89238	OI–8B	ZERO THRUST AUTO DUMP START
	89479	OI–8C	CONTINGENCY DUMP POST–MECO MANUAL START
	89705	OI–8C	POST MECO NZ TERMINATION CORRECTION
	89150H	OI–8D	ABORT CONTROL SEQ SCRUB

Paragraph	CR No.	OI–	Title
	89956	OI–8D	ABORT CONTROL SEQ CORRECTIONS
4.3.2.2	59126H	OI–8A	RCS XFEED MCA OPTIMIZATION
	89237	OI–8B	OMS/RCS I/C DOC CHANGE
	89239B	OI–8B	CLEANUP OF CR 89210B
	89352C	OI–8B	AFT MANIFOLD JET INH RESET DELAY
4.3.2.3			
Step 1	59126H	OI–8A	RCS XFEED MCA OPTIMIZATION
	79971D	OI–8A	ABORT/INTERCONNECT FLAG FIX
	89185A	OI–8A	ABT OMS/RCS INTRCNT MODE TRANS
	89237	OI–8B	OMS/RCS I/C DOC CHANGE
Step 1A	59126H	OI–8A	RCS XFEED MCA OPTIMIZATION
Step 1B	59126H	OI–8A	RCS XFEED MCA OPTIMIZATION
Step 2	59126H	OI–8A	RCS XFEED MCA OPTIMIZATION
	79971D	OI–8A	ABORT/INTERCONNECT FLAG FIX
Step 4	79971D	OI–8A	ABORT/INTERCONNECT FLAG FIX
Step 6	79971D	OI–8A	ABORT/INTERCONNECT FLAG FIX
	89320	OI–8B	OMS/RCS I/C DOC CHANGE
Step 7	59126H	OI–8A	RCS XFEED MCA OPTIMIZATION
	79971D	OI–8A	ABORT/INTERCONNECT FLAG FIX
	89352C	OI–8B	AFT MANIFOLD JET INH RESET DELAY
Step 11	89352C	OI–8B	AFT MANIFOLD JET INH RESET DELAY
Step 13	59126H	OI–8A	RCS XFEED MCA OPTIMIZATION
Step 14	59126H	OI–8A	RCS XFEED MCA OPTIMIZATION
	79971D	OI–8A	ABORT/INTERCONNECT FLAG FIX
	89210B	OI–8B	SMART INTERCONNECT
Step 14A	59126H	OI–8A	RCS XFEED MCA OPTIMIZATION
	79971D	OI–8A	ABORT/INTERCONNECT FLAG FIX
Step 17	59126H	OI–8A	RCS XFEED MCA OPTIMIZATION
	79971D	OI–8A	ABORT/INTERCONNECT FLAG FIX
	89210B	OI–8B	SMART INTERCONNECT
	89239B	OI–8B	CLEANUP OF CR 89210B

Paragraph	CR No.	OI–	Title
Step 19	59126H	OI–8A	RCS XFEED MCA OPTIMIZATION
	79971D	OI–8A	ABORT/INTERCONNECT FLAG FIX
	89210B	OI–8B	SMART INTERCONNECT
	89239B	OI–8B	CLEANUP OF CR 89210B
Step 20	59126H	OI–8A	RCS XFEED MCA OPTIMIZATION
	79972	OI–8A	INTERCONNECT TIMER FIX
	89210B	OI–8B	SMART INTERCONNECT
	89239B	OI–8B	CLEANUP OF CR 89210B
Step 21	59126H	OI–8A	RCS XFEED MCA OPTIMIZATION
Step 22	59126H	OI–8A	RCS XFEED MCA OPTIMIZATION
	79971D	OI–8A	ABORT/INTERCONNECT FLAG FIX
	89352C	OI–8B	AFT MANIFOLD JET INH RESET DELAY
4.181(F)	59126H	OI–8A	RCS XFEED MCA OPTIMIZATION
	79971D	OI–8A	ABORT/INTERCONNECT FLAG FIX
	89210B	OI–8B	SMART INTERCONNECT
	89239B	OI–8B	CLEANUP OF CR 89210B
	89352C	OI–8B	AFT MANIFOLD JET INH RESET DELAY
4.3	90114B	OI–21	ABORT SEQUENCING REDESIGN
4.3.1.4–1(T)			
4.3.1.4–2(T)			
4.3.1.4–3(T)			
4.3.2	90114B	OI–21	ABORT SEQUENCING REDESIGN
4.3.2.4–1(T)			
4.4.1.2	79933F	OI–8A	VENT DOOR SEQ SCRUB CR
	89140E	OI–8A	CENTAUR REQUIREMENTS DELETION
4.4.1.3	79933F	OI–8A	VENT DOOR SEQ SCRUB CR
	89140E	OI–8A	CENTAUR REQUIREMENTS DELETION
Step 1	79933F	OI–8A	VENT DOOR SEQ SCRUB CR
Step 2	79933F	OI–8A	VENT DOOR SEQ SCRUB CR
	89140E	OI–8A	CENTAUR REQUIREMENTS DELETION
Step 9	79933F	OI–8A	VENT DOOR SEQ SCRUB CR

Paragraph	CR No.	OI–	Title
4.161(F)	79933F	OI–8A	VENT DOOR SEQ SCRUB CR
	89140E	OI–8A	CENTAUR REQUIREMENTS DELETION
4.4.1.4(T)	90054A	OI–8D	ENTRY FCS ERRATA
4.5.1.2	89436A	OI–8C	LG HYD ISOL VLV OPEN CMD TIME
4.5.1.3			
4.5	90102	OI–21	LDG GEAR EXTENSION ISOLATION VALVE
4.5.1			
4.5.1.3			
4.5.1.4–1(T)			
Step 2	89436A	OI–8C	LG HYD ISOL VLV OPEN CMD TIME
Step 6	89436A	OI–8C	LG HYD ISOL VLV OPEN CMD TIME
Step 8	89436A	OI–8C	LG HYD ISOL VLV OPEN CMD TIME
Step 9	89436A	OI–8C	LG HYD ISOL VLV OPEN CMD TIME
4.215(F)	89436A	OI–8C	LG HYD ISOL VLV OPEN CMD TIME
4.6.1.1	79964F	OI–8A	RCS REG FAIL PROTECT SEQ
4.6.1.2	79964F	OI–8A	RCS REG FAIL PROTECT SEQ
	89246A	OI–8A	CLEANUP FOR CR 79964F
4.6.1.3	79964F	OI–8A	RCS REG FAIL PROTECT SEQ
Step 1	79964F	OI–8A	RCS REG FAIL PROTECT SEQ
Step 2	79964F	OI–8A	RCS REG FAIL PROTECT SEQ
Step 3	79964F	OI–8A	RCS REG FAIL PROTECT SEQ
Step 4	79964F	OI–8A	RCS REG FAIL PROTECT SEQ
Step 5	79964F	OI–8A	RCS REG FAIL PROTECT SEQ
Sub A	79964F	OI–8A	RCS REG FAIL PROTECT SEQ
Sub B	79964F	OI–8A	RCS REG FAIL PROTECT SEQ
Sub B1	79964F	OI–8A	RCS REG FAIL PROTECT SEQ
Sub B2	79964F	OI–8A	RCS REG FAIL PROTECT SEQ
Sub C	79964F	OI–8A	RCS REG FAIL PROTECT SEQ
4.185(F)	79964F	OI–8A	RCS REG FAIL PROTECT SEQ
4.6.4.1	79964F	OI–8A	RCS REG FAIL PROTECT SEQ
4.6.4.2	79964F	OI–8A	RCS REG FAIL PROTECT SEQ

Paragraph	CR No.	OI–	Title
	89246A	OI–8A	CLEANUP FOR CR 79964F
4.6.4.3	79964F	OI–8A	RCS REG FAIL PROTECT SEQ
	89246A	OI–8A	CLEANUP FOR CR 79964F
Step 1	79964F	OI–8A	RCS REG FAIL PROTECT SEQ
Step 2	79964F	OI–8A	RCS REG FAIL PROTECT SEQ
Step 3	79964F	OI–8A	RCS REG FAIL PROTECT SEQ
Step 4	79964F	OI–8A	RCS REG FAIL PROTECT SEQ
Sub A	79964F	OI–8A	RCS REG FAIL PROTECT SEQ
Step A1	79964F	OI–8A	RCS REG FAIL PROTECT SEQ
Step A2	79964F	OI–8A	RCS REG FAIL PROTECT SEQ
Step A3	79964F	OI–8A	RCS REG FAIL PROTECT SEQ
Step A4	79964F	OI–8A	RCS REG FAIL PROTECT SEQ
Step A5	79964F	OI–8A	RCS REG FAIL PROTECT SEQ
Step A6	79964F	OI–8A	RCS REG FAIL PROTECT SEQ
Step A7	79964F	OI–8A	RCS REG FAIL PROTECT SEQ
Step A8	79964F	OI–8A	RCS REG FAIL PROTECT SEQ
Step A9	79964F	OI–8A	RCS REG FAIL PROTECT SEQ
Sub B	79964F	OI–8A	RCS REG FAIL PROTECT SEQ
Step B1	79964F	OI–8A	RCS REG FAIL PROTECT SEQ
Step B2	79964F	OI–8A	RCS REG FAIL PROTECT SEQ
Step B3	79964F	OI–8A	RCS REG FAIL PROTECT SEQ
Step B4	79964F	OI–8A	RCS REG FAIL PROTECT SEQ
4.189(F)	79964F	OI–8A	RCS REG FAIL PROTECT SEQ
4.7.6.4(T)	90120B	OI–8D	UPDATE GUIDANCE DOWNMODE RQMTS
4.8.1.1	89968A	OI–8C	25 MS TIMING REQ FOR MEC NON–CRIT CMDS
4.8.1.2	89968A	OI–8C	25 MS TIMING REQ FOR MEC NON–CRIT CMDS
4.8.1.4	89968A	OI–8C	25 MS TIMING REQ FOR MEC NON–CRIT CMDS
4.8.2.3.4	79973A	OI–8A	PAD DATA PATH FAIL CRITERIA
4.8.2.3.5	89389B	OI–8C	SSME CONTINUOUS COMMANDS
4.8.2.3.6	89108A	OI–8A	ERRONEOUS ENG PHASE FLAG FIX
	89201A	OI–8A	MAIN ENG SHUTDOWN INDICATION

Paragraph	CR No.	OI–	Title
	89456A	OI–8B	FSSR 26 ERRATA/DOC CLEANUP
4.8.2.3.8	89389B	OI–8C	SSME CONTINUOUS COMMANDS
	89201A	OI–8A	MAIN ENG SHUTDOWN INDICATION
	89456A	OI–8B	FSSR 26 ERRATA/DOC CLEANUP
4.8.2.4–1(T)	89990E	OI–21	SINGLE ENGINE AUTO CONTINGENCY ABORT
4.1.1	90023A	20	GN&C CHECKOUT CONFIGURATION
Step 41			
4.114(F)			
4.2.3			
Step 3			
4.116(F)			
4.6.3	90271	20	CLOSE RCS HELIUM VALVES BASED ON HIGH TANK OUTLET PRESSURE
Step 6			
4.1.1.4–1	89981	20	ADD DOWNLIST REQ FOR LPS ORBITER DOORS
4.116(F)	90114B	OI–21	ABORT SEQUENCING REDESIGN
4.184(F)	90114B	OI–21	ABORT SEQUENCING REDESIGN
4.192(F)	90114B	OI–21	ABORT SEQUENCING REDESIGN
4.215(F)	90102D	OI–21	LDG GEAR EXTENSION ISOLATION VALUE

HISTORICAL CHANGE REQUEST SUMMARY

The following tabulation is a historical record of the approved software change requests incorporated in this document by software release.

CR No.	Title	Release
02166	OFT GNC ENTRY FUNCTIONS UPDATE	16
02173A	ABORT MODE RESELECTION (G021)	16
02313A	SRB MON FCN/SEL FILTER/SRB SEP SEQ	16
02340D	ATTITUDE DATA, IMU DATA	16
02449D	ADD OFT CONTINGENCY ABORT RQT	16
02486B	SRB TVD FDIR ACTIVATION/DEACTIVATION	16
02607A	UPDATE TO D&C BOOK II	16
12008	REDUCE SSME RATE	16
12019	STAND FSSR PRINCIPAL FUNCT	16
12028B	SSME OPERATIONS SEQUENCE	16
12033A	ABORT CONTROL SEQ	16
12034	OMS ENGINE FIRING SEQ REV	16
12037A	ABORT OMS/RCS INTERCONNECT	16
12045	OMS TO RCS GAGING REVISIONS	16
12046A	OMS TO OMS CROSSFEED SEQ	16
12047	VENT DOOR SEQUENCE	16
12071A	MNVR EXECUTE (6.35 AND 6.46) DISPLAY CHANGES	16
12073A	O. OMS/RCS CONN	16
12074A	ET SEPARATION SEQUENCE REVISION	16
12075	HYD SYS LND GEAR ISOL VLV	16
12076A	RCS PROPELLANT CROSSFEED	16
12077A	MPS DUMP SEQUENCE REVISION	16
12078A	SRB MDM DATA ACQUISITION	16
12119	ON ORB I/O UPDT	16
12112	GAX–ANNUNCIATION REWRITE	16
12137	OMS/OMS CONN, RCS/RCS XFEED RATE CHG	16
12160A	RS LAUNCH SEQ REV (4.114)	16
12161	SRB SEP SEQUENCE REVISION	16

CR No.	Title	Release
12162	RCS QUANTITY MONITOR	16
12190D	ASC/RTLS GUID, PFG MODE TEAM	16
12217	SRB AND ET SEP SEQ RATE REDUCTION	16
12218C	AERO ACTUATOR COMMAND SOP	16
12239	GPC/SSME DATA FETCH	16
12240	MEC SOP DOCUMENTATION CHG	16
12241	SSME SOP DOCUMENTATION CHG	16
12248	GAX–RATE TABLE UPDATE	16
12270A	BLOCK UPDT TO OPS 3	16
12313C	ADDITION OF TLM REQMTS	16
12316	GNC SWITCH RM PROC RATE RED	16
12336	I–LD OFT MISS AND LRU DEP	16
12337	I–LD OFT DES DEP PARM	16
12411B	OMS ENGINE FDI SIMPLIFICATION	16
12414C	R/S LCH SEQ AND SSME SOP REV	16
12442A	INTEGRATED ENT NAV, ASC NAV, AND ORB	16
12443	I–LOAD FOR ENTRY FACI	16
12449B	VENT DOOR CONTROL SEQ	16
12455	SSME SOP SWITCH OF EIU 60 KBPS OUTPUT	18
12473B	RCS QUAN MONITOR	16
12480B	SSME OPERATIONS SEQ	16
12481A	MPS DUMP SEQ	16
12482A	ET SEPARATION SEQ	16
12483B	SRB SEPARATION SEQ	16
12484A	MPS DEDICATED DISPLAY DRIVE SEQ	16
12491	OMS FIRE SEQ	16
12494	OMS TO RCS GAGING	16
12495	OMS TO OMS XFEED AND RECONFIGURATION	16
12496	RCS	16
12497	OMS/RCS CONNECT SEQ	16
12508	HYDRAULICS	16

CR No.	Title	Release
12510	PEG TIME-TO-GO AND THRUST INTEGRAL	16
12523	SRB SEPARATION INHIBIT	16
12586	INTEGRATED SIGNAL INTERFACES	18
12639	BACKUP SRB PWR ADDITIONS TO MEC	16
12644C	LAUNCH SEQ COMMAND CODE UPDATE	16
12658A	ASCENT DISPLAYS UPDT	16
12672C	JAN SEQ MODE TEAM MAKE WORK	16
12673A	REDUNDANT SET LAUNCH SEQ	16
12691A	MPS HELIUM REDESIGN	16
12699A	ADDITION OF FAST SEP MODE	16
12704B	RELOCATION OF MPS ACTUATOR PORT CH	16
12716A	MNVR EXEC DISPLAY REFORMAT	18
12722	MANUAL OPEN VENT DOORS DURING ENTRY	16
12745	DELETION OF OMS/OMS INTERCONNECT SEQ	16
12771A	PRINCIPAL FUNCTION DELETIONS	18
12826A	VENT DOOR CONTROL UPDATE	16
12836	RCS RCS XFEED AND RECONFIGURATION	16
12868A	I-LOAD CHG TO REFLECT MODE TEAM	16
12881A	ABORT VENT DOOR	16
12896A	ET SEP SEQ CLEANUP	16
12897A	MPS DUMP SEQ LOX AND LH2 INLET PRESS	16
12901	ORBIT OMS/RCS INTERCONNECT SEQ	18
12928A	SSME OPS SEQ	16
12938A	XXXXXX TRAJ IDD	16
12942A	MPS TVC ACTUATOR BYPASS/OVERRIDE	16
12977	OMS FIRE SEQ CORRECTIONS	18
12981D	ON ORBIT FLIGHT CONTROL	18
12993	I-LOAD FACI	16
12994	I-LOADS OFT-1 FACI U/D	16
12997	ET FAST SEP (MEC SOP IMPACTS)	16
19016	SEQ INTERFACE CLEANUP	16

CR No.	Title	Release
19039C	ASCENT/ENTRY STRUCTURAL PTI'S	17
19040	MANEUV EXEC DOC CLEANUP	16
19048	SRB TVC RST/OVRD SCHEDULING	16
19053A	SRB SEPARATION SEQ LASH UP	16
19060C	VENT DOOR SEQ	16
19061A	FAST SEP CHG TO GRTLS FSSR	16
19066B	CORRECT AND DEFINE MECO ACCURACY RQMT	16
19068A	MAIN ENGINE SHUT DOWN SWITCH RM	17
19081	MPS DED DIS DRIVE SEQ MOD	16
19091B	O. OMS/RCS CONN FAULT CHECKS	16
19092	OMS FIRE SEQ COMMFAULT CHECKS	18
19097A	ADDITION TO M PAD (I–LOAD)	16
19100	FSSR UPDATE	16
19103A	ABORT CONT SEQ MAKE WORK CHANGES (CONTINGENCY ABORT)	16
19107C	MM 102 3 ENGINE OUT MODING PREVENTION	16
19108A	OMS TO RCS GAGING CONSTANTS	16
19142A	BACKUP TO MECO CONFIRMED	16
19147	ET SEP SEQ COMMFAULT PROCESSING	16
19148	SSME SOP COMMFAULT PROCESSING	16
19149	SSME OPS COMMFAULT PROCESSING	16
19163A	RSLS CLEANUP	16
19165	RCS QTY MON (4.102)	16
19173	RS LCH SEQ I–LOAD CHG	16
19176	RTLS ABORT MPS DUMP TERM SOFTWARE	16
19208A	OMS/RCS ADDITIONS TO D/L	16
19222	ET SEP SWITCH DEFAULT AND OVERRIDE POS	16
19224B	SSME OPS PREVALVE I–LOAD	16
19232	R/S LAUNCH SEQUENCE ADDITIONS FOR FRF	16
19237	FLT ACCEL SAFETY CUTOFF SYSTEM (FASCOS)	16
19238	R/S LCH ACTUATOR PORT CHECKS MOD	16
19239	FAST SEP FOR MM 601	16

CR No.	Title	Release
19240	FAST SEP I–LOADS	16
19300	FSSR UPDATE II	16
19358	DELETE ET SEP IDD	16
19371A	FSSR SD 76–SH–0026A I–LOAD	16
19404A	VENT DOOR SEQ	16
19412	SRB IGN DELAY I–LOAD	16
19416A	OMS/RCS I/C REPRESS FUNCTION MOD STS–2	18
19420	ET SEP DOC CHANGE	16
19440	MPS FUEL DUMP LOGIC CORRECTION	16
19455	MEASUREMENT ATTRIBUTE CORRECTIONS	16
19464	INCORRECT BCH CODE	16
19475	SSME SOP DOCUMENTATION CHG	16
19476	R/S LCH SEQ CLARIFICATION	16
19496	GPC CMD PRIORITY TO SSME	16
19500	FSSR UPDATE 3	16
19507	VENT DOOR SEQ ON ORBIT/ENTRY I–LOAD	16
19532A	ET SRB SEQ/UMB RETRACT TIME–DELAY CHG	16
19533A	ADDITION OF "C" CMD TO LO2 AND LH2 FEEDLINE RELIEF S/O VALVE CLOSE COMMANDS	16
19534A	ADDITION OF "C" CMD TO LH2 RTLS MAN REPRESS OPEN CMDS MEC NON–CRITICAL COMM	16
19541	MEC NON–CRITICAL COMMAND CONSTRAINTS	16
19553C	CREW OVERRIDE OF OMS TARGETS VIA ITEM ENTRY (STS–2)	18
19558	SSME SOP FASCOS CHANGE	17
19598A	ATVC DEADFACE REQUIREMENTS IN SRB SEP SEQ	16
19623B	REMOVAL OF 30% CHAMBER PRESSURE INTERLOCK ON PREVALVE CLOSE COMMANDS	16
19626	I–LOAD CORRECTION	16
19632	INCORRECT BCH CODE SPECIFIED FOR GPC TO EIU COMMAND WORDS	16
19651	R/S LCH SEQ RECYCLE I–LOAD	16
19657	OMS BURN AFTER RCS ROLL CONTROL	16

CR No.	Title	Release
19659	VENT DOOR SEQUENCE	16
19664	ABORT CONTROL SEQ CONTINUATION OF INTACT OMS DUMP	18
19665	ABORT CONTROL SEQ CONTINUATION OF INTACT OMS DUMP	17
19681A	SOFTWARE CHANGES TO ACCOMMODATE LO2 LOW LEVEL SENSOR RELOCATION	16
19686A	FRF I–LOAD	16
19698A	RCS QUANTITY MONITOR (STS–2 & SUBS)	17
19713	MAKE WORK CORRECTION CR 19280 AND CR 12899A	16
19736	MAKE WORK LASHUP OF GRTLS DAP REQMTS TO CR 19239 (MM 601 FAST SEP)	16
19738A	RCS QUANTITY MONITOR SEQUENCE ALGORITHM CONSTANTS AND I–LOAD VALUES	17
19770A	ET SEP SEQ CHANGES FOR FAST SEP AFTER RTLS MECO	16
19800	UPDATE OMS/RCS GAGING SCALE FACTOR	19
19823A	VENT DOOR SEQUENCE COMMANDS TERMINATION	16
19824A	ET UMBILICAL DOORS COMMAND ON CHANGE ONLY SEQUENCE TERMINATION	16
19827A	–Z MANEUVER INITIATION MODIFICATION	16
19836	CLOSE OMS TK ISO VALVES FOR RTLS (OPS SINGLE POINT FAILURE)	16
19837A	AFT COMPT RTLS HELIUM PURGE	16
19844	STS–1 RTLS PROPELLANT BURN TIME I–LOAD CHANGES	16
19853A	FAST SEP I–LOAD FOR ME LH2 PREVALVE	16
19857B	UPP I–LOAD REQ CHANGE AGREE WITH IMPLEMENTATION	16
19893A	SEQ FSSR I–LOAD SYMBOLIC NAME CHANGE	16
19900	FSSR UPDATE NO. 5	16
19922	R/S LAUNCH SEQ 90% CHECK I–LOAD CHANGE	16
19923	MOD TO CR 19664 – ABORT SEQUENCE, STS–2 OMS FUEL QUANTITY COMMFAULT MONITORING	18
19946A	STS–1 VENT DOOR I–LOADS	16
19958A	ASCENT FLIGHT CONTROL DOCUMENTATION CLEAN UP	16
19964	SSME COMMAND PATH FAILURE (STS–1)	17
19970	DELETION OF KI–SCALE FACTOR 1 FLAG	17
19973	OMS LEFT/RIGHT AND OMS/RCS VALVE MISCOMPARE RESET	19

CR No.	Title	Release
19998A	SSME STAGGER START	16
29022	REDUCTION OF LOX RESIDUALS FOR ENGINE OUT LOW LEVEL SHUTDOWN	17
29025B	PRE-SRB IGNITION MONITORING OF FASCOS	16
29037	RELOCATE LO2 LOW LEVEL SENSOR	16
29049	FRF I-LOAD CHANGES	16
29081	VENT DOOR SEQUENCE, CORRECTION TO CR 19823A	17
29095	SSME SOP COMMAND CHANGE	16
29099B	POST MECO RCS DUMP DURING RTLS	18
29106B	EIU 60 KBPS OUTPUT SWITCH	16
29119B	SRB SEQUENCE I-LOAD UPDATE	16
29142B	MPAD I-LOAD UPDATE NO. 4 FOR STS-1 CYCLE 3	16
29154B	STS-1 RTLS PROPELLANT BURN TIME I-LOAD CHANGE	16
29162A	I-LOAD CHANGES 'OWNER AUDIT'	16
29192	VENT DOOR COMMAND STAGGER TIME FOR	16
29207	MODIFICATION OF CR 19998A	16
29211	SSME LIMIT CONTROL INHIBIT/ENABLE (STS-2)	18
29216	OMS/RCS DOWNLIST REQUIREMENTS UPDATE	16
29323A	COMPUTER CG TRIM AND IGN PRESS	16
29328A	FAST SEP LW LVL SEN ARM 601	16
29333B	I-LOAD CHANGES RESULTING FROM OWNERS AUDIT	16
29343	RESET EVENT TIME START FLAG	16
29377	VENT DOOR STATUS AND OVERRIDE WORDS	16
29378A	OMS VALVE MISCOMPARE MESSAGE CLEANUP	OI-4
29405A	MPS PREVALVE OPER TO PRECLUDE POSSIBLE HARDWARE DAMAGE	16
29429	MPS LH2 FEEDLINE PRESS RELIEF	18
29433	RCS QUANTITY MONITOR UPDATE	18
29457	SSME STAGGER START TOLERANCE	16
29471B	HFE OVERRUN DEFINITION	16
29480B	MEC SOP NON-CRITICAL CMDS INIT	18
29481A	SSME CHAMBER PRESSURE	16

CR No.	Title	Release
29503A	RTLS ET SEP	16
29548B	ENG TIMER FOR THRUST OK (I–LOAD)	16
29551B	I–LOAD SCRUB – SEQ	19
29552B	SRB IGN TIME DELAY	18
29562	MPS TVC OVRD FOR PRE SRB FTS	18
29574A	LAUNCH SEQ ABORT LOGIC STS–1	16
29582	RTLS HELIUM PURGE I–LOAD	16
29597A	DELETE I–LOADS: ET SEP	19
29603A	SSME DOWNLIST DATA	18
29607A	MPS LH2 LOW LEVEL DELAYS	19
29619A	CALCULATION OF COUNTDOWN TIME	16
29664	LATCH ME–X TVC SERVO OVRD CMD	16
29668A	CMD PATH FAIL	16
29675	SSME STAGGER START TOL	16
29720	FAST SEP/MM103/TWO SSME FAIL	18
29725	AOA I–LOAD TITLE CORRECTION	16
29737A	AFT COMP/OMS POD AOA HELIUM PURGE	16
29749B	LPS COMMAND PROCESSING	19
29762A	ATT PROC IDD CLEAN UP	16
29775	SELECTIVE INHIBIT OF SSME S/D FOR DATA FAIL	OI–4
29783	SRB SEP BACK–UP CUE TIME I–LOAD	16
29793	ET UMBILICAL DOOR CLOSURE	18
29797C	LH2 DUMP VIA FILL/DRAIN VALVE	16
29800	FSSR UPDATE 8	16
29851	DELETE CR 29211C – SSME LIM CNTL	18
29855B	HPOTP OVERSPEED AT MECO	16
29870C	ADD GMTLO TO DOWNLIST	19
29872	CLEAN–UP OF CR 29552B	18
29877B	MPS ENTRY HELIUM PURGE	18
29879	TRANS DAP RATE AND ATT D/B I–LOAD	16
29880	ET FAST SEP I–LOAD CHANGE	16

CR No.	Title	Release
29883	MPS LO2 LOW LVL CUTOFF DELAY	16
29891A	RTLS OMS PROP DUMP I-LOAD CHANGES	16
29943A	CRT TIME TO GO TO SRB IGN (SUPERSEDES 29421)	19
29970C	VENT DOOR PURGE COMMAND TERM	18
29987	POST MECO RCS DUMP-RTLS	18
29996A	CORRECT CR 29720 - FAST SEP/MM103	18
39000	FSSR UPDATE 9	16
39022	LPS - RESUME COUNT COMMAND	19
39065A	LOX LOW LEVEL CUTOFF DELAY	16
39079	LO2 PREVALVE MECO I/L CHANGE	16
39080	FRF THROTTLE CMD	16
39091E	BACKUP MECO CONFIRMED	18
39103A	OMS RTLS PROP DUMP	16
39110A	ADD LO2 PREVALVE CLOSE CMDS	19
39137D	SSME FAIL MESSAGES	OI-2
39220A	OMS RTLS PROP DUMP	16
39244A	MEC SOP ET TUMBLE	18
39253A	SSME CMD PATH FAIL CHECK	18
39261	RTLS PURGE INITIATION	19
39265	RCS QTY MONITOR DOCUMENTATION	16
39323A	STS-2 CYCLE 1 MPAD ABORT I/L	18
39326	ET DOOR LATCH CMD RESET	18
39328B	DELETE FRF REQUIREMENTS	18
39358A	RCS QTY MONITOR UPDATE I/L	18
39370	RCS QTY MONITOR UPDATE	18
39394	MPS LO2 PREVALVE CMDS TO RSLS	OI-2
39400	FSSR UDATE NO. 10/R18 AND R19	18
39401	TRANSATLANTIC ABORT LANDING	18
39430	LATCH MAIN ENGINE SAFING CMDS	OI-3
39447C	SINGLE SSME OMS PRESS	19
39452D	LPS CONTROL—SRB RSC SAFE COND	18

CR No.	Title	Release
39470A	SRB SEP SEQ AND MEC SOP DOC	18
39475A	DELETE MECO HE INJECTION CMDS	OI–6
39477	LAUNCH VENT DOOR SEQUENCE	19
39478	OMS/RCS CONNECT PRIOR TO RRA	18
39492A	DELETE FASCOS LOGIC	OI–6
39503	SSME & SB POSN–ABORTED LAUNCH	OI–4
39520	DELETE HE VLV CK–OMS FIRE SEQ	OI–4
39530F	STS CYCLE 2 I–LOADS	18
39564	THIRD LO2 LL CUTOFF TIMER	18
39575	LO2 LOW LEVEL CUTOFF MOD	18
39579A	CLARIFY RCS/RCS XFEED AND RECON	18
39585	STS–2 CYCLES 2 RTLS DUMP I/L	18
39612	ELIM OF SRP–SEP–MODE FLAG	19
39614	SRB STAGGER START CONSTANT	19
39624	PREVENT EARLY GEAR DEPLOY	18
39630	OMS DUMP TIME FOR UPDATED CG	18
39651	TAL ABORT PRE MECO BURN	18
39681A	FAST SEP IN MM 103/I–LOAD CHANGE	18
39694	ORB OMS/RCS CONN REPRESS FLAG	OI–4
39718A	SRB IGNTION/SEPARATION CMD	18
39721B	ENABLE GEAR DEPLOY AT 800 FPS	18
39732B	ABORT DOWNMODE IN MM 103	18
39846	RTLS OMS PROP DUMP DELAY	18
39848A	DELETE AUTO RECYCLE–SSME SOP	OI–4
39850	DECEMBER BASELINE	18
39851A	SRB TVC FDIR AT ME START	OI–4
39863C	COUNTDOWN HOLD/ABORT IND	OI–4
39877	LH2 LL CUTOFF DOCUMENTATION	19
39964	ABORT CONTROL OMS ON TIME	OI–3
39965	RTLS POST MECO 4 + X CONTROL	19
39968A	LO2/LH2 DUMP TIME REDUCTION	19

CR No.	Title	Release
39977	MECO DOCUMENTATION CLEANUP	18
59019A	HE ISO VLV OPEN CMD TERMINATE	OI–6
59077	PAD DATA PATH FAIL	OI–6
59112B	ET UMB DOOR/RCS XFEED CNTL	OI–3
59126H	RCS XFEED MCA OPTIMIZATION	OI–8A
59216	RTLS LO2 LOW LEVEL–SSME = 104%	19
59217C	VENT DOOR ENTRY CONFIG	OI–5
59224	DATA PATH FAIL FLAG CHECK	OI–2
59273C	ABT CONT SEQ—SELECT INTERCNCT	OI–7
59274	LO2 BLEED VLVE CLOSE TIME I/L	19
59276	MPS DUMP SW NOMENCLATURE	19
59329A	VENT DOOR CMD AND FDBK MONITOR	19
59335A	OV–099 RCS QTY MON UPDATE	OI–2
59337	RCS QTY MON I–LOADS UPDATE	19
59368	VENT DOOR SEQUENCE COMMAND	OI–1
59384	SRB SEP TIME DELAY FOR ABORT	OI–6
59397	BIAS COMPUTATION RCS QTY MON	OI–6
59414A	EVENT TIMES RESET AT MECO	OI–5
59418	POST MECO NZ RCS CONTROL	OI–4
59432A	INHIBIT FDI FOR SSME TVC ACT	OI–6
59442B	MEC REDESIGN	OI–3
59470	BYPASS LO2 OVBD BLEED VLV CK	OI–2
59610	PTM LO2 LOW LEVEL I/L	OI–2
59631	STS–9 CY 1 ASC ABORT I–LOADS	OI–2
59654	CORRECT CR 28378A—OMS VLV MSG	OI–4
59689A	CORRECT CR 39863—D/L VENT DOOR	OI–4
59722	EVENT TIMER FLAG POST MECO	OI–5
59753A	MEC REDESIGN MSID CHANGES	OI–3
59754C	MCA OPTIMIZATION MSID CHANGES	OI–3
59765	LATCH RCS QTY DOWN ARROW	OI–6
59824	CLARIFY NZ LIMIT PROCESSING	OI–1

CR No.	Title	Release
59935	DELETE FLAG FROM ET SEP SEQ	OI–2
59957	I–LOAD SCRUB: VENT DOOR	OI–7
59973	I–LOAD SCRUB: MPS	OI–7
59996E	LO2 ECO SENSOR	OI–3
69063	SSME SOP CRIT PAIR EXCEPTION	OI–2
69074	SRB_SEP_ARM_BUFFER ASSIGNMENT	OI–3
69159A	CORRECT CR 59217C IN MM 304	OI–5
69177	CR 59077 CLEANUP	OI–6
69184A	MPS LOW LEVEL TIME DELAYS	OI–3
69220F	CENTAUR ABORT DUMP	OI–7C
69482A	DELETE PREVALVE ANTI–SLAM SW	OI–7
69555A	TAL/RTLS WEATHER ALTERNATE	OI–7
69600D	OMS GUIDANCE IMPROVEMENTS	OI–6
69635B	CORRECT CR 59273C	OI–7
69684B	ZFE CATEGORY CHANGE	OI–6
69780B	DELAYS OV–102 UNIQUE RCS I/LS	OI–6
69919	LH2 DUMP FOR RTLS	OI–4
69931B	STAGGERED SSME SHTDN PRIORITY (SUPERSEDED 69525)	OI–6
69951	DEL SRB PWR OFF AFTER SRB SEP	OI–4
69995D	DUMP LOX/LH2 RESIDUALS	OI–7
79010	DUMP LO2 RESIDUALS	OI–5
79028	RCS QTY MON—DOC ONLY FIX	OI–4
79067	MODIFIED RTLS LO2 DUMP	OI–5
79079B	MODIFIED OI–7 DUMP	OI–7
79134E	OMS BURN IN MM 304	OI–7C
79157	S/W FIX FOR HYD BRAKE LOCKUP	OI–4
79190D	OVERRIDE DISPLAY UPDATE	OI–7C
79209B	FWC SRB TIMING	OI–7
79302	CR 69635B CORRECTIONS	OI–7
79304B	OPS 3 DUMP CLEAN UP	OI–7C
79335D	OMS/RCS OPS DOWNLIST CHGS	OI–8A

CR No.	Title	Release
79406A	OVERRIDE DISPLAY CLEAN UP	OI–7C
79465A	VENT DOOR SEQ SOFTWARE RQMTS (SUPERSEDED 79291)	OI–5
79469	DOCUMENTATION CLEANUP FOR CR 69995D	OI–7
79497	OMS BURNTIME BIAS/SF	OI–7C
79498	OMS BURN TIME BIAS	OI–7
79499	FSSR UPDATE NO. 5 STS 83–0026A	OI–7
79562	CHECKSUM SOP SCRUB	OI–8A
79584C	MPS DUMP SSME IN STOW POSN	OI–8A
79643A	OMS DUMP WITH 3 SSME'S FAILED	OI–8A
79701A	CONT ME SHUTDN CMD FOR PAD ABT	OI–7C
79721	OMS BURN TIME BIAS FACTOR	OI–7C
79796	OI–11 OMS/RCS TIMER FIX	OI–8A
79797A	OMS/RCS INTCT TIMER FIX	OI–7C
79928	LASH–UP REQT'S FOR CR'S 59273C AND 69635B	OI–7
79928	AUTHORIZE SEQUENCER K–LOAD CHANGES	OI–8A
79931	BASELINE PCR'S 56951 AND 56060A FOR OI–8A	OI–8A
79933F	VENT DOOR SEQ SCRUB CR	OI–8A
79935H	SRB RGA RECHANNELIZATION	OI–8A
79964F	RCS REG FAIL PROTECT SEQ	OI–8A
79969A	GSOVEN SCRUB	OI–8A
79971D	ABORT/INTERCONNECT FLAG FIX	OI–8A
79972	INTERCONNECT TIMER FIX	OI–8A
79973	PAD DATA PATH FAIL CRITERIA	OI–8A
79980	I–LOAD UPDATE FOR 59126H	OI–8A
79987D	SRB SWQ–MDM FAILURES	OI–8A
79992B	STS 83–0026A LEVEL C FSSR SEQUENCING REQUIREMENT	OI–7C
79997A	INTCON MPS HELIUM PAD ABORT	OI–8A
89108A	ERRONEOUS ENG PHASE FLAG FIX	OI–8A
89140E	CENTAUR REQUIREMENTS DELETION	OI–8A
89142B	NZ LIMIT FOR MM 304 OMS DUMP	OI–8A
89149B	OI–8A VERSION OF CR 79596C	OI–8A

CR No.	Title	Release
89150H	ABORT CONTROL SEQ SCRUB	0I-8D
89154B	DUMP ITEM DISPLAY CLEANUP	OI-8A
89157A	SSME LIMIT EXCEEDANCE PAD ABORT	OI-8B
89165H	MPS FEED DISC LATCH LOGIC	OI-8B
89185A	ABT OMS/RCS INTRCNT MOD TRANS	OI-8A
89193D	ABT CNTL SEQ/OVERRIDE LASHUP	OI-8A
89201A	MAIN ENG SHUTDOWN INDICATION	OI-8A
89210B	SMART INTERCONNECT	OI-8B
89229G	TERMINATE OMS DUMP POST MECO	OI-8C
89237	OMS/RCS I/C DOC CHANGE	OI-8A
89238	ZERO THRUST AUTO DUMP START	OI-8B
89239B	CLEANUP OF CR 89210B	OI-8B
89246A	CLEANUP FOR CR 79946F	OI-8A
89278A	LH2 PREVALVE TIMER FOR FAST SEP	OI-8B
89287A	SSME OPS SCRUB	OI-8A
89313	CLOSE LH2 RECIRC DISC VLV FOR PAD ABORT	OI-8C
89320	OMS/RCS I/C DOC CHANGE	OI-8B
89325B	LOW LVL SNSR MON SGL SNSR DIS	OI-8B
89348B	MM 103 FAST SEY CORRECTION	OI-8C
89349A	PREVLV CLOSURE FOR PAD ABORT	OI-8C
89352C	AFT MANIFOLD JET INH RESET DELAY	OI-8B
89355C	SCRUB OUTBOARD FILL/DRAIN LCC FROM RSLS	OI-8D
89369B	PD 3 SAFING FOR INFLT SHUTDOWN	OI-8C
89389B	SSME CONTINUOUS COMMANDS	OI-8C
89392	RESTRUCTURE LOCAL DATA IN GSR	OI-8D
89399B	POST MECO LH2 VENT	OI-8C
89430	OI-8C IMPLEMENTATION OF CR 89313B	OI-8C
89436A	LG HYD ISOL VLV OPEN CMD TIME	OI-8C
89451C	ADDITION OF SRB IEA MEASUREMENTS	OI-8B
89454A	DELETE 3RD HPFTT DISCHRG TEMP	OI-8B
89456A	FSSR 26 ERRATA/DOC CLEANUP	OI-8B

CR No.	Title	Release
89465C	MPS LH2 DUMP RTLS CONTINGENCY	OI-8C
89479	CONTINGENCY DUMP POST-MECO MANUAL START	OI-8C
89487	ADDITION OF SRB IEA MEASUREMENTS	OI-8C
89505B	MODIFY MPS MECO HELIUM INTERCONNECT	OI-8D
89561A	RCS/RCS XFEED AFTER INCT RTN	OI-8B
89598A	OI-8B SEQUENCING FSSR ERRATA	OI-8B
89705	POST MECO OMS NZ TERMINATION CORRECTION	OI-8C
89809B	CR 89505B CLEANUP	OI-8D
89810	CORRECTION FOR 89150H	OI-8D
89819	QD FAILURE PROTECTION FOR RSLS ABORT	OI-8B
89835	PREVALVE CLOSE DELAY CHNGS STS 26	OI-8B
89846B	CR 89809B CLEANUP	OI-8D
89875	CLEANUP TO CR 89819	OI-8B
89956A	ABORT CONTROL SEQ CORRECTIONS	OI-8D
89968A	25 MICROSECOND TIMING REQ FOR MEC	OI-8D
90054A	ENTRY FCS ERRATA	OI-8D
90120	UPD GUIDANCE DOWNMODE REQUIREMENTS	OI-8D
90188	CHANGE ENGINE START TIME COMPUTATION	OI-8D
90277A	ET SEP SEQUENCE CLEANUP	OI-8D

THIS PAGE INTENTIONALLY LEFT BLANK

TABLE OF CONTENTS

Section			Page
1.0	INTRODUCTION		1 – 1
	1.1	PURPOSE	1 – 1
	1.2	SCOPE	1 – 1
	1.3	ORGANIZATION	1 – 1
2.0	APPLICABLE DOCUMENTS		2 – 1
	2.1	LEVEL A DOCUMENTS	2 – 1
	2.2	LEVEL B DOCUMENTS	2 – 1
	2.3	LEVEL C DOCUMENTS	2 – 1
	2.4	INTERFACE CONTROL DOCUMENTS	2 – 2
3.0	OVERVIEW		3 – 1
	3.1	DEFINITION	3 – 1
	3.2	DOCUMENT DESCRIPTION	3 – 1
		3.2.1 Introduction	3 – 1
		3.2.2 Overview	3 – 1
		3.2.3 Detailed Requirements	3 – 1
		3.2.4 Logic Flow Diagrams	3 – 1
		3.2.5 Parameter Tables	3 – 1
	3.3	TIMING	3 – 3
	3.4	DOCUMENTED REQUIREMENTS PRECEDENCE	3 – 4
4.0	DETAIL LEVEL REQUIREMENTS		4 – 1
	4.1	PRELAUNCH	4 – 1
		4.1.1 Redundant Set Launch Sequence (4.114)	4 – 1
		4.1.2 MPS Dedicated Drive Sequence (4.222)	4 – 63
		4.1.3 SRB MDM Data Acquisition (4.203)	4 – 83
	4.2	ASCENT	4 – 95
		4.2.1 SSME Operations Sequence (4.165)	4 – 95

TABLE OF CONTENTS (Continued)

Section			Page
	4.2.2	SRB Separation Sequence (4.115)	4 – 141
	4.2.3	ET Separation Sequence (4.116)	4 – 153
	4.2.4	MPS Dump Sequence (4.70)	4 – 183
4.3	ABORT		4 – 207
	4.3.1	Abort Control Sequence (4.192)	4 – 207
	4.3.2	Abort OMS/RCS Interconnect (4.184)	4 – 239
4.4	MECHANICAL SYSTEMS		4 – 275
	4.4.1	Vent Doors (4.161)	4 – 275
4.5	HYDRAULICS		4 – 307
	4.5.1	LDG VLV CNTL (4.215)	4 – 307
4.6	REACTION CONTROL SYSTEM (RCS)		4 – 323
	4.6.1	RCS/RCS Crossfeed and Reconfiguration (4.185)	4 – 323
	4.6.3	RCS Quantity Monitor (4.102)	4 – 345
	4.6.4	RCS Helium Regulator Failure Protection Sequence (4.189)	4 – 367
	4.7.2	Orbit OMS/RCS Conn (4.212)	4 – 385
	4.7.6	OMS Fire Sequence (4.182)	4 – 401
	4.7.9	OMS to RCS Gaging (4.101)	4 – 413
	4.8.1	Master Events Controller SOP (4.228)	4 – 423
	4.8.2	Space Shuttle Main Engine SOP (4.181)	4 – 445

ILLUSTRATIONS

Figure		Page
4.114	Redundant Set Launch Sequence (Sheet 1 of 13)	4 – 38
4.222	MPS D/D Drive Sequence (Sheet 1 of 6)	4 – 70
4.165	SSME Operations Sequence (Sheet 1 of 11)	4 – 121
4.115	SRB SEP SEQ (Sheet 1 of 2)	4 – 145
4.116	External Tank Separation Sequence Logic Flow Diagram (Sheet 1 of 8)	4 – 166
4.70	MPS Dump Sequence (1 of 5)	4 – 194
4.192	Abort Control Sequence (Sheet 1 of 7)	4 – 226
4.184	Abort OMS/RCS Interconnect Sequence (Sheet 1 of 7)	4 – 259
4.161	Vent Door Sequence (Sheet 1 of 7)	4 – 290
4.215	Hydraulic Systems Landing Gear Isolation Valve Control Logic (Sheet 1 of 2)	4 – 314
4.185	RCS/RCS XFEED (Sheet 1 of 5)	4 – 333
4.102	RCS Qty Mon (Sheet 1 of 2)	4 – 357
4.189	RCS He Regulator Failure Protection Sequence (Sheet 1 of 3)	4 – 376
4. 212	Orbit OMS/RCS Connect (Sheet 1 of 2)	4 – 391
4.182	OMS Fire Sequence (Sheet 1 of 2)	4 – 405
4.101	OMS to RCS Gaging	4 – 416
4.8.1–1	MEC SOP Functional Block Diagram	4 – 424
4.181.1	SSME SOP Functional Block Diagram	4 – 462

THIS PAGE INTENTIONALLY LEFT BLANK

TABLES

Table		Page
4.1–1	Orbiter Vent Doors Status Word – V90J8201	4 – 21
4.1–2	LPS Orbiter Vent Doors Override Word –V99J8836C	4 – 22
4.1.1.4–1	REDUNDANT SET LAUNCH SEQUENCE (G4.114) INPUT/OUTPUT FUNCTIONAL PARAMETERS	4 – 51
4.1.1.4–2	REDUNDANT SET LAUNCH SEQUENCE PROCESSING (G4.114) I–LOADS	4 – 58
4.1.1.4–3	REDUNDANT SET LAUNCH SEQUENCE PROCESSING (G4.114) K–LOADS	4 – 60
4.1.1.4–4	REDUNDANT SET LAUNCH SEQUENCE PROCESSING (G4.114) CONSTANTS	4 – 61
4.1.2.4–1	MAIN PROPULSION(MPS) DEDICATED DISPLAY DRIVE SEQ (G4.222) INPUT/OUTPUT FUNCTIONAL PARAMETERS	4 – 77
4.1.2.4–2	MAIN PROPULSION(MPS) DEDICATED DISPLAY DRIVESEQ (G4.222) I–LOADS	4 – 79
4.1.2.4–3	MAIN PROPULSION(MPS) DEDICATED DISPLAY DRIVESEQ (G4.222) K–LOADS	4 – 80
4.1.2.4–4	MAIN PROPULSION(MPS) DEDICATED DISPLAY DRIVESEQ (G4.222) CONSTANTS	4 – 81
4.1.3.4–1	SOLID ROCKET BOOSTER(SRB) DATA ACQUISITION (G4.203) INPUT/OUTPUT FUNCTIONAL PARAMETERS	4 – 85
4.1.3.4–2	SOLID ROCKET BOOSTER(SRB) DATA ACQUISITION (G4.203) I–LOADS	4 – 92
4.1.3.4–3	SOLID ROCKET BOOSTER(SRB) DATA ACQUISITION (G4.203) K–LOADS	4 – 93
4.1.3.4–4	SOLID ROCKET BOOSTER(SRB) DATA ACQUISITION (G4.203) CONSTANTS	4 – 94
4.2.1.4–1	SPACE SHUTTLE MAIN ENGINE(SSME) OPERATIONS SEQ (G4.165) INPUT/OUTPUT FUNCTIONAL PARAMETERS	4 – 133
4.2.1.4–2	SPACE SHUTTLE MAIN ENGINE(SSME) OPERATIONS SEQ (G4.165) I–LOADS	4 – 138
4.2.1.4–3	SPACE SHUTTLE MAIN ENGINE(SSME) OPERATIONS SEQ (G4.165) K–LOADS	4 – 139

TABLES (Continued)

Table		Page
4.2.1.4–4	SPACE SHUTTLE MAIN ENGINE(SSME) OPERATIONS SEQ (G4.165) CONSTANTS	4 – 140
4.2.2.4–1	SOLID ROCKET BOOSTER(SRB) SEP SEQUENCER (G4.115) INPUT/OUTPUT FUNCTIONAL PARAMETERS	4 – 147
4.2.2.4–2	SOLID ROCKET BOOSTER SEP (SRB) SEQUENCER (G4.115) I–LOADS	4 – 149
4.2.2.4–3	SOLID ROCKET BOOSTER SEP (SRB) SEQUENCER (G4.115) K–LOADS	4 – 150
4.2.2.4–4	SOLID ROCKET BOOSTER SEP (SRB) SEQUENCER (G4.115) CONSTANTS	4 – 151
4.2.3.4–1	EXTERNAL TANK(ET) SEPARATION SEQUENCER (G4.116) INPUT/OUTPUT FUNCTIONAL PARAMETERS	4 – 175
4.2.3.4–2	EXTERNAL TANK(ET) SEPARATION SEQUENCER (G4.116) I–LOADS	4 – 180
4.2.3.4–3	EXTERNAL TANK(ET) SEPARATION SEQUENCER (G4.116) K–LOADS	4 – 181
4.2.3.4–4	EXTERNAL TANK(ET) SEPARATION SEQUENCER (G4.116) CONSTANTS	4 – 182
4.2.4.4–1	MAIN PROPULSION SYSTEM(MPS) DUMP SEQUENCER (G4.70) INPUT/OUTPUT FUNCTIONAL PARAMETERS	4 – 199
4.2.4.4–2	MAIN PROPULSION SYSTEM(MPS) DUMP SEQUENCER (G4.70) I–LOADS	4 – 203
4.2.4.4–3	MAIN PROPULSION SYSTEM(MPS) DUMP SEQUENCER (G4.70) K–LOADS	4 – 204
4.2.4.4–4	MAIN PROPULSION SYSTEM(MPS) DUMP SEQUENCER (G4.70) CONSTANTS	4 – 205
4.3.1.4–1	ABORT CONTROL SEQUENCER (G4.192) INPUT/OUTPUT FUNCTIONAL PARAMETERS	4 – 233
4.3.1.4–2	ABORT CONTROL SEQUENCER (G4.192) I–LOADS	4 – 236
4.3.1.4–3	ABORT CONTROL SEQUENCER (G4.192) K–LOADS	4 – 237
4.3.1.4–4	ABORT CONTROL SEQUENCER (G4.192) CONSTANTS	4 – 238
4.3.2.4–1	ABORT OMS/RCS INTERCONNECT FUNCTION (G4.184) INPUT/OUTPUT FUNCTIONAL PARAMETERS	4 – 267

TABLES (Continued)

Table		Page
4.3.2.4–2	ABORT OMS/RCS INTERCONNECT FUNCTION (G4.184) I–LOADS . .	4 – 272
4.3.2.4–3	ABORT OMS/RCS INTERCONNECT FUNCTION (G4.184) K–LOADS .	4 – 273
4.3.2.4–4	ABORT OMS/RCS INTERCONNECT FUNCTION (G4.184) CONSTANTS	4 – 274
4.4–1	Vent Group Close Commands	4 – 284
4.4–2	Vent Group Open Commands	4 – 286
4.4–3	Vent Group Purge Configuration Commands	4 – 287
4.4–4	Vent Group Close Measurements	4 – 288
4.4–5	Vent Group Open Measurements	4 – 289
4.4.1.4–1	VENT DOOR CONTROL SEQUENCER (G4.161) INPUT/OUTPUT FUNCTIONAL PARAMETERS	4 – 297
4.4.1.4–2	VENT DOOR CONTROL SEQUENCER (G4.161) I–LOADS	4 – 304
4.4.1.4–3	VENT DOOR CONTROL SEQUENCER (G4.161) K–LOADS	4 – 305
4.4.1.4–4	VENT DOOR CONTROL SEQUENCER (G4.161) CONSTANTS	4 – 306
4.5.1.4–1	HYD SYS LANDING GEAR ISLN VLV CNTL SEQ (G4.215) INPUT/OUTPUT FUNCTIONAL PARAMETERS	4 – 317
4.5.1.4–2	HYD SYS LANDING GEAR ISLN VLV CNTL SEQ (G4.215) I–LOADS .	4 – 319
4.5.1.4–3	HYD SYS LANDING GEAR ISLN VLV CNTL SEQ (G4.215) K–LOADS	4 – 320
4.5.1.4–4	HYD SYS LANDING GEAR ISLN VLV CNTL SEQ (G4.215) CONSTANTS	4 – 321
4.6.1.4–1	RCS/RCS CROSSFEED AND RECONFIGURATION FUNCTION (G4.185) INPUT/OUTPUT FUNCTIONAL PARAMETERS	4 – 339
4.6.1.4–2	RCS/RCS CROSSFEED AND RECONFIGURATION FUNCTION (G4.185) I–LOADS	4 – 342
4.6.1.4–3	RCS/RCS CROSSFEED AND RECONFIGURATION FUNCTION (G4.185) K–LOADS	4 – 343
4.6.1.4–4	RCS/RCS CROSSFEED AND RECONFIGURATION FUNCTION (G4.185) CONSTANTS	4 – 344
4.6.3–1	RCS Propellant Transducer Limits	4 – 352

TABLES (Continued)

Table		Page
4.6.3–2	Forward RCS Propellant Quantity Primary/Substitute Parameters	4 – 353
4.6.3–3	Aft Left RCS Propellant Quantity Primary/Substitute Parameters	4 – 353
4.6.3–4	Aft Right RCS Propellant Quantity Primary/Substitute Parameters	4 – 354
4.6.3–5	RCS Propellant Quantity Constants	4 – 355
4.6.3–6	RCS Propellant Quantity I–Loads	4 – 356
4.6.3.4–1	RCS QUANTITY MONITOR (G4.102) INPUT/OUTPUT FUNCTIONAL PARAMETERS	4 – 359
4.6.3.4–2	RCS QUANTITY MONITOR (G4.102) I–LOADS	4 – 362
4.6.3.4–3	RCS QUANTITY MONITOR (G4.102) K–LOADS	4 – 363
4.6.3.4–4	RCS QUANTITY MONITOR (G4.102) CONSTANTS	4 – 364
4.6.4.4–1	RCS HELIUM REGULATOR FAILURE PROTECTION SEQUENCER (G4.189) INPUT/OUTPUT FUNCTIONAL PARAMETERS	4 – 379
4.6.4.4–2	RCS HELIUM REGULATOR FAILURE PROTECTION SEQUENCER (G4.189) I–LOADS	4 – 381
4.6.4.4–3	RCS HELIUM REGULATOR FAILURE PROTECTION SEQUENCER (G4.189) K–LOADS	4 – 382
4.6.4.4–4	RCS HELIUM REGULATOR FAILURE PROTECTION SEQUENCER (G4.189) CONSTANTS	4 – 383
4.7.2.4–1	ORBIT OMS/RCS INTERCONNECT (G4.212) INPUT/OUTPUT FUNCTIONAL PARAMETERS	4 – 393
4.7.2.4–2	ORBIT OMS/RCS INTERCONNECT (G4.212) I–LOADS	4 – 397
4.7.2.4–3	ORBIT OMS/RCS INTERCONNECT (G4.212) K–LOADS	4 – 398
4.7.2.4–4	ORBIT OMS/RCS INTERCONNECT (G4.212) CONSTANTS	4 – 399
4.7.6.4–1	OMS FIRE SEQUENCER (G4.182) INPUT/OUTPUT FUNCTIONAL PARAMETERS	4 – 407
4.7.6.4–2	OMS FIRING SEQUENCER (G4.182) I–LOADS	4 – 409
4.7.6.4–3	OMS FIRING SEQUENCER (G4.182) K–LOADS	4 – 410
4.7.6.4–4	OMS FIRING SEQUENCER (G4.182) CONSTANTS	4 – 411

TABLES (Continued)

Table		Page
4.7.9.4–1	OMS TO RCS QTY GAUGING (G4.101) INPUT/OUTPUT FUNCTIONAL PARAMETERS	4 – 417
4.7.9.4–2	OMS TO RCS QTY GAUGING (G4.101) I–LOADS	4 – 419
4.7.9.4–3	OMS TO RCS QTY GAUGING (G4.101) K–LOADS	4 – 420
4.7.9.4–4	OMS TO RCS QTY GAUGING (G4.101) CONSTANTS	4 – 421
4.8.1–1	MEC Critical Command Processing	4 – 425
4.8.1–2	MEC Noncritical Command Processing	4 – 428
4.8.1–3	MEC SOP Input Parameters	4 – 431
4.8.1–4	MEC SOP Output Parameters	4 – 434
4.8.1–5	MEC SOP Output Requirements	4 – 437
4.8.1.4–1	MASTER EVENTS CONTROLLER(MEC) SOP (G4.228) INPUT/OUTPUT FUNCTIONAL PARAMETERS	4 – 439
4.8.1.4–2	MASTER EVENTS CONTROLLER(MEC) SOP (G4.228) I–LOADS	4 – 442
4.8.1.4–3	MASTER EVENTS CONTROLLER(MEC) SOP (G4.228) K–LOADS	4 – 443
4.8.1.4–4	MASTER EVENTS CONTROLLER(MEC) SOP (G4.228) CONSTANTS	4 – 444
4.8.2–1	SSME SOP Command Processing	4 – 446
4.8.2–2	GPC Engine Status Word	4 – 453
4.8.2–3	Phase Mode Processing	4 – 461
4.8.2.4–1	SPACE SHUTTLE MAIN ENGINE(SSME) SOP (G4.181) INPUT/OUTPUT FUNCTIONAL PARAMETERS	4 – 463
4.8.2.4–2	SPACE SHUTTLE MAIN ENGINE(SSME) SOP (G4.181) I–LOADS	4 – 471
4.8.2.4–3	SPACE SHUTTLE MAIN ENGINE(SSME) SOP (G4.181) K–LOADS	4 – 472
4.8.2.4–4	SPACE SHUTTLE MAIN ENGINE(SSME) SOP (G4.181) CONSTANTS	4 – 473

1.0 INTRODUCTION

1.1 PURPOSE

The purpose of this document is to specify the requirement details and formulations of Sequence Level B functional requirements for orbiter GN&C flight software.

1.2 SCOPE

This document contains requirement details and formulations for sequencing functions that are operative during operational flight. The sequences described in this document are processed by the redundant computer set. They can be classified into the following two categories:

1. Mission events that are nonrepeating, but predictable occurrences and require software to initiate and/or control the subsystem hardware functions. The requirement to use software for this process can be the result of time- or mission-critical events, hardware mechanization complexity, or effective reduction of the crew's workload.

2. Special computations, such as consumables monitoring (quantity gaging).

1.3 ORGANIZATION

This document is organized into the following sections:

1. Introduction

2. Applicable Documents

3. Overview

4. Detail Level Requirements

Section 1 defines the purpose, scope, and organization of this document. Section 2 lists applicable documents. Section 3 describes the contents of Section 4. Section 4 specifies the requirement details for each sequence, and includes the associated input/output functional parameters (IDD), I-loads, K-loads, and constants.

THIS PAGE INTENTIONALLY LEFT BLANK

2.0 APPLICABLE DOCUMENTS

2.1 LEVEL A DOCUMENTS

SS–P–0002–140	Shuttle Downlist/Uplink Software Requirements
SS–P–0002–150	Shuttle Launch Data Bus Software Interface Requirements
SS–P–0002–170	Shuttle Systems Level Requirements, Software

2.2 LEVEL B DOCUMENTS

SS–P–0002–510	Shuttle Functional Level Requirements, GN&C
SS–P–0002–550	Shuttle Functional Level Requirements, Vehicle Utility – 02
SS–P–0002–580	Shuttle Functional Level Requirements, System Management

2.3 LEVEL C DOCUMENTS

STS 83–0001	Operational Flight Level C, Functional Subsystem Software Requirements; Guidance, Navigation, and Control, Part A, Entry Through Landing Guidance
STS 83–0002	Operational Flight Level C, Functional Subsystem Software Requirements; Guidance, Navigation, and Control, Part A, Guidance Ascent/RTLS
STS 83–0003	Operational Flight Level C, Functional Subsystem Software Requirements; Guidance, Navigation, and Control, Part A, Guidance On–Orbit/Deorbit
STS 83–0004	Operational Flight Level C, Functional Subsystem Software Requirements; Guidance, Navigation, and Control, Part B, Entry Through Landing Navigation
STS 83–0005	Operational Flight Level C, Functional Subsystem Software Requirements; Guidance, Navigation, and Control, Part B, Navigation Ascent/RTLS
STS 83–0006	Operational Flight Level C, Functional Subsystem Software Requirements; Guidance, Navigation, and Control, Part B, On-Orbit Navigation
STS 83–0007	Operational Flight Level C, Functional Subsystem Software Requirements; Guidance, Navigation, and Control, Part C, Flight Control Entry GRTLS
STS 83-0008	Operational Flight Level C, Functional Subsystem Software Requirements; Guidance, Navigation, and Control, Part C, Flight Control Volume 1, Ascent Flight Phase, Volume 2, Ascent
STS 83-0009	Operational Flight Level C, Functional Subsystem Software Requirements; Guidance, Navigation, and Control, Part C, Flight Control Orbit DAP
STS 83-0010	Operational Flight Level C, Functional Subsystem Software Requirements; Guidance, Navigation, and Control, Part D, Redundancy Management

STS 83-0013	Operational Flight Level C, Functional Subsystem Software Requirements; Guidance, Navigation, and Control, Part E, Inertial Measurement Unit Subsystem Operating Program
STS 83-0014	Operational Flight Level C, Functional Subsystem Software Requirements; Guidance, Navigation, and Control, Part E, Volume 1, Navigation Aids Subsystem Operating Program, Volume 2, Star Tracker Subsystem Operating Program
STS 83-0015	Operational Flight Level C, Functional Subsystem Software Requirements; Guidance, Navigation, and Control, Part E, Subsystem Operating Programs, FC Sensor/Controller
STS 83-0016	Operational Flight Level C, Functional Subsystem Software Requirements; Guidance, Navigation, and Control, Part E, Subsystem Operating Programs, FC Effector
STS 87-0017	Operational Flight Level C, Functional Subsystem Software Requirements; Remote Manipulator System
STS 83-0020	Operational Flight Level C, Functional Subsystem Software Requirements; Displays and Controls
STS 83-0026	Operational Flight Level C, Functional Subsystem Software Requirements; Guidance, Navigation, and Control, Sequencing
JSC-19350	Shuttle Flight Software Initialization Load
	• Volume I General Requirements
	• Volume II Mission I-Load Requirements
JSC-19478	Payload Management, Level C Flight Software Requirements
JSC-19590	Systems Management, Level C Flight Software Requirements

2.4 INTERFACE CONTROL DOCUMENTS

ICD 3-1011-02	GPC/DEU ICD
ICD 3-0068-03	PASS/BFS ICD

In the event of a conflict between the documents referenced herein and the contents of this specification, the precedence shall be determined as defined in paragraph 1.3 of CPDS SS-P-0002-170, Volume 1, System Level Requirements, Software.

3.0 OVERVIEW

3.1 DEFINITION

Subsystem sequencing is defined to be application processing in the avionics GPC's that is not a standard or self-contained portion of GN&C or SM application programs. Examples: IMU sequencing is a standard portion of GN&C; fault detection and annunciation (FDA) is a standard portion of SM; master timing unit (MTU) time management is contained in system software and, therefore, is not an application program. None of the examples is included in subsystem sequencing. Subsystem sequences are detailed in Section 4.

3.2 DOCUMENT DESCRIPTION

The detailed requirements described in Section 4 are organized according to subsystem disciplines; however, certain large sequences, e.g., launch, do not lend themselves to an individual subsystem approach and are defined as integrated sequences.

Each sequence contains the following five elements:

1. Introduction
2. Overview
3. Detailed requirements
4. Logic flow diagrams
5. Parameter tables

3.2.1 Introduction

This paragraph (4.X.X.1) contains a brief description of the sequence, when it is used, and how it interfaces with the crew, subsystem, and/or integrated mission event or events.

3.2.2 Overview

This paragraph (4.X.X.2) scopes the software requirements for the sequence. It expands the introduction to state when and how the sequence is initiated, how the sequence is controlled, and how it interfaces with the subsystem and mission events.

3.2.3 Detailed Requirements

This paragraph (4.X.X.3) contains the detailed step-by-step requirements for each principal function.

3.2.4 Logic Flow Diagrams

The logic diagrams show the logic flow of each principal function and are included for information only.

3.2.5 Parameter Tables

This section contains the following tables:

Input/output functional parameters (4.X.X.4-1)

This table contains a list of all input parameters from the GN&C Interface Definition Document (IDD) for each principal function. The table, in alphabetical order by FSSR parameter name, contains the following:

FSSR Name	–	Parameter name as defined by the source principal function
MSID	–	As defined by the Shuttle Data Integration Plan (SDIP)/measurement and stimulus system
Nomenclature	–	As provided by the principal function owner
Source/Destination	–	Source of input function, destination of output function
Units	–	The units of the parameter
Data Type	–	Designation of parameter as bit string, discrete, floating, or integer
Precision	–	Designation of parameter as single or double precision
Last CR(s)	–	Lists last of CR Number(s)

Signal Interfaces

The automated IDD tables provided herein define signal (parameter) interface requirements either between hardware (LRU) and software elements or between software elements and other software elements[1]. In the event of a conflict between the IDD tables and other internal text input/output tables, the SASCB data base controlled IDD tables take precedence.

NOTE

IDD output (destination) tables that reflect parameters going to "TLM" shall not be interpreted as a signal actually being downlisted. The parameter may only be available for downlist in COMPOOL and may not appear in a downlist format.

[1]A GN&C software element is either a sequenced principal function (PF), crew generated specialist/display function, or an operations display functions.

I-Load Table (4.X.X.4-2)

This table contains a list of all I-load parameters from JSC-19350, STS Flight Software Initialization Load, for each principal function. The table, in alphabetical order by FSSR name, contains the following:

FSSR Name	–	As defined by the source principal function
MSID	–	As defined by the Shuttle Data Integration Plan (SDIP)/measurement and stimulus system
Units	–	The units of the parameter
Data Type	–	Bit string, discrete, floating, or integer parameter
Precision	–	Single or double-precision parameter
Dependency	–	Design, mission, or LRU dependent I-load
Software	–	Common, PASS, BFS, primary driver, or converted parameter
PR FCTN	–	Principal Function
Category	–	Occurance of I–load values

K-Load Table (4.X.X.4-3)

This table contains a list of all K-load parameters for each principal function. The table is in alphabetical order by FSSR name. The table contains the following:

FSSR Name	–	As defined by the source principal function
MSID	–	As defined by the Shuttle Data Integration Plan (SDIP)/measurement and stimulus system
Value	–	The value of the K-load
Units	–	The units of the parameter
Data Type	–	Bit string, discrete, floating, or integer parameter
Precision	–	Single or double-precision parameter
Software	–	Common, PASS, BFS, primary driver, or converted parameter
PR FCTN	–	Principal Function
Last CR	–	The last CR against each load
EQTN MSID	–	Derived Equation

Constants (4.X.X.4-4)

This table contains a list of all constants for each principal function. The table is in alphabetical order by FSSR name. The table contains the following:

FSSR Name	–	As defined by the source principal function
MSID	–	As defined by the Shuttle Data Integration Plan(SDIP)/measurement and stimulus system
Value	–	The value of the K-load
Units	–	The units of the parameter
Data Type	–	Bit string, discrete, floating, or integer parameter
Precision	–	Single or double-precision parameter
Software	–	Common, PASS, BFS, primary driver, or converted parameter
PR FCTN	–	Principal Function
Last CR	–	The last CR against each load

3.3 TIMING

Timing in this document is related to error free processing conditions. See Level A CPDS SS-P-0002-170 paragraph 4.4.2A for timing related to error processing conditions.

3.4 DOCUMENTED REQUIREMENTS PRECEDENCE

Requirements precedence in this document shall be as follows:

1. If there is a conflict between the data in the function subtables and the standard principal function tables, the principal function tables shall have precedence.

2. If there is a conflict between the data in the flow diagrams and the written requirements, the written requirements shall have precedence.

4.0 DETAIL LEVEL REQUIREMENTS

4.1 PRELAUNCH

4.1.1 Redundant Set Launch Sequence (4.114)

4.1.1.1 Introduction

The redundant set (RS) launch sequence is used during the launch countdown in conjunction with the launch processing system (LPS) to perform the on–board automatic functions required in the last 28 seconds before SRB ignition. In addition, the RS launch sequence controls the on–board countdown clock from flight software initiation at the transition to OPS 1 until SRB ignition. The ability is also provided to call countdown holds; accept "hold" requests from LPS; and accept "resume count" or "recycle" commands from LPS. The SSME ignition commands are issued; and, after the required thrust level is reached and the required time delay has elapsed, the SRB's are ignited. Failure of the SSME's to reach the required thrust level will result in an inhibit of SRB ignition and a controlled SSME shutdown. The RS launch sequence terminates immediately after issuing SRB ignition and related commands.

4.1.1.2 Overview

The launch countdown is controlled by the LPS until 28 seconds before launch, at which time the on–board automatic RS launch sequence is enabled by LPS command. From this point, the on–board computer will perform functions by the on–board clock, but will honor "hold," "resume count," and "recycle" commands from LPS within the constraints of the auto recycle time.

The RS launch sequence sets flags to command the arming of the SRB ignition and hold–down release system PIC's and the T0 umbilical release PIC's. After a time delay, the SRB ignition PIC voltages are monitored for acceptable levels. The hold–down release system PIC's and the T0 umbilical release system PIC's are monitored by the LPS. The RS launch sequence logic provides for initiating a countdown "hold" if the SRB ignition PIC voltages fall below an acceptable level at any time prior to issuance of the SSME start commands. After the SSME start commands are issued, if the SRB ignition PIC voltages are not acceptable, the SSME's are shut down.

The RS launch sequence also controls certain critical main propulsion system valves and monitors the engine ready indications from the SSME's. After the main engine start commands are issued, the sequence monitors the thrust buildup of each engine; and unless all engines reach the required level within the required time, an orderly shutdown is commanded, and safing functions are initiated.

Normal thrust buildup to the required level will result in the SSME's being commanded to the lift–off position, the SRB ignition and hold–down release commands being issued, termination of LPS polling, reset of the master timing unit, commanding of T0 umbilical release, and start of the event timer.

4.1.1.3 Detailed Requirements

Step A – LPS Processing. This step addresses the LPS processing that is performed every minor cycle by the RS Launch Sequencer. It ensures that the LPS GMTLO, RECYCLE, and RESUME commands are accepted only during countdown holds.

Monitor the following:

(a)	LPS Countdown Hold Flag	V99X8829X
(b)	RS Countdown Hold Flag	V90X8667X
(c)	GMTLO Set Command	V99X8827X

If (a) and (b) are false, do not accept (1), (2), or (3).

If (a) or (b) is true and (c) has not been accepted since it last became true, do not accept (3).

(1)	GMTLO SET COMMAND	V99X8827X
(2)	RECYCLE COUNT CMD FLAG	V99X8830X
(3)	RESUME COUNT COMMAND FLAG	V99X8828X

Proceed to Step 1.

Step 1 – First Pass Check. This step provides a means of deactivating the FDI for MPS TVC CMD SOP and initializing the countdown clock on the first pass through the logic. The sequence is first called with OPS 101 PRO at T0–20 minutes in the count. The GMT of lift–off (GMTLO) is defined by the GMTLO_SET_COMMAND from LPS.

On the first pass through the logic issue (1) and (2) below, proceed to Step 9.

(1)	RS COUNTDOWN HOLD FLAG	V90X8667X
(2)	MPS TVC SERVO OVRD CMD	V90X8374X

On subsequent passes, if the countdown clock is being incremented, proceed to Step 1A, otherwise proceed to Step 9.

Step 1A – Termination of MEC Command Flags. This step provides for the termination of MEC commands, the issuance of the MEC master reset command, and the termination of the RS launch sequence.

Monitor the following:

(a)	TO UMB RELEASED FLAG	(INTERNAL)

If (a) = false, proceed to Step 1B.

If (a) = true, terminate the following outputs:

(1)	TO UMB RELEASE FIRE 1 FLAG	V90X8408X
(2)	T0 UMB RELEASE FIRE 2/3 FLAG	V90X8698X
(3)	SRM IGN ARM FLAG	V90X8404X
(4)	T0 UMB RELEASE ARM FLAG	V90X8407X
(5)	EVENT TIMER START FLAG	V90X8403X

and issue the following output:

(6)	MEC 1 AND 2 MASTER RESET FLAG	V90X8258X

and then terminate the RS launch sequence.

Step 1B – Initiation of T0 Umbilical Release. This step provides for the issuance of the T0 umbilical release fire 1 and fire 2/3 commands on the next pass through the logic after the SRB ignition commands are sent.

Monitor the following:

(a) SRB IGNITION CMD FLAG — V90X8377X

If (a) = false, proceed to Step 1C.

If (a) = true, terminate the following outputs:

(1) SRM IGN FIRE 1 FLAG — V90X8405X
(2) SRM IGN FIRE 2/3 FLAG — V90X8699X

and issue the following outputs:

(3) T0 UMB RELEASE FIRE 1 FLAG — V90X8408X
(4) T0 UMB RELEASE FIRE 2/3 FLAG — V90X8698X
(5) T0 UMBILICAL RELEASED FLAG — (INTERNAL)

and then return to Step A.

Step 1C – Launch Sequence Abort Check. This step monitors the LAUNCH SEQUENCE ABORT FLAG, which is set, by (1) any engine failing to achieve the required percent chamber pressure within the required number of seconds after the start commands are issued, (2) any engine going into auto shutdown, (3) loss of data path or command path to any engine, (4) hydraulic or electronic lockup of any engine, or (5) an LPS countdown hold flag being set prior to issuance of SRB ignition commands. If the LAUNCH SEQUENCE ABORT FLAG is set, this step terminates the SRB ignition and T0 umbilical PIC arming flags and invokes the engine shutdown logic.

Monitor the following:

(a) LAUNCH SEQUENCE ABORT FLAG — V90X8382X

If (a) = true, terminate the following:

(1) SRM IGN ARM FLAG — V90X8404X
(2) TO UMB RELEASE ARM FLAG — V90X8407X

issue the following one time only

(3) MEC 1 AND 2 MASTER RESET FLAG — V90X8258X

and terminate the following output:

(4) MPS–LH_2 RECIRC DISC VALVE OPEN CMD — V41K1421X

and issue the following output:

(5) MPS–LH_2 RECIRC DISC VALVE CLOSE CMD — V41K1422X

then proceed to Step 1D.

If (a) = false, proceed to Step 2.

Step 1D – Main Engine 1 Shutdown. This step controls pad abort helium interconnect and shutdown command toggling for ME–1.

Monitor the following:

(a)	ENG 1 SHUTDOWN FLAG C	(INTERNAL)
(b)	MPS E–1 SHUTDOWN ENABLE CMD	V90X8367X

If (a) is false, proceed to Step 1E.

If (a) is true, issue output (1) and monitor (b).

If (b) is false, issue output (2), terminate output (3), and proceed to Step 1E.

If (b) is true, issue output (3), terminate output (2), and proceed to Step 1E.

(1)	MPS E1 HE INTCON OUT/OPEN CMD A	V41K1168X
(2)	MPS E–1 SHUTDOWN ENABLE CMD	V90X8367X
(3)	MPS E–1 SHUTDOWN CMD	V90X8370X

Step 1E – Main Engine 2 Shutdown. This step controls pad abort helium interconnect and shutdown command toggling for ME–2.

Monitor the following:

(a)	ENG 2 SHUTDOWN FLAG B	(INTERNAL)
(b)	MPS E–2 SHUTDOWN ENABLE CMD	V90X8368X

If (a) is false, proceed to Step 1F.

If (a) is true, issue outputs (1) through (3) and monitor (b).

If (b) is false, issue output (4), terminate output (5), and proceed to Step 1F.

If (b) is true, issue output (5), terminate output (4), and proceed to Step 1F.

(1)	MPS E2 HE INTCON IN/OPEN CMD A	V41K1262X
(2)	MPS E2 HE INTCON IN/OPEN CMD B	V41K1263X
(3)	MPS PNEU CROSSOVER NO. 2 OPEN CMD	V41K1613X
(4)	MPS E–2 SHUTDOWN ENABLE CMD	V90X8368X
(5)	MPS E–2 SHUTDOWN CMD	V90X8371X

Step 1F – Main Engine 3 Shutdown. This step controls pad abort helium interconnect and shutdown command toggling for ME–3.

Monitor the following:

(a)	ENG 3 SHUTDOWN FLAG D	(INTERNAL)
(b)	MPS E–3 SHUTDOWN ENABLE CMD	V90X8369X

If (a) is false, proceed to Step 1G.

If (a) is true, issue output (1) and monitor (b).

If (b) is false, issue output (2), terminate output (3), and proceed to Step 1G.

If (b) is true, issue output (3), terminate output (2), and proceed to Step 1G.

(1)	MPS E–3 HE INTCON OUT/OPEN CMD A	V41K1368X
(2)	MPS E–3 SHUTDOWN ENABLE CMD	V90X8369X
(3)	MPS E–3 SHUTDOWN CMD	V90X8372X

Step 1G – Increment Previous Value of CRT Timer Base Time. This step increments the previous value of the CRT timer base time stored in User Interface compool to cause the displayed time–to–go to become static.

Add 0.04 second to the previous value of the CRT timer base time stored in User Interface compool.

Proceed to Step 30.

Step 2 – ME–1 Pad Data Path Fail Check. This step monitors for a flag from the SSME SOP indicating invalid data from either the primary or secondary channel of the EIU. If the ME–1 PAD DATA PATH FAIL FLAG is set, the RS launch sequence will either call a countdown hold or initiate shutdown for ME–1.

Monitor the following:

(a)	ME–1 PAD DATA PATH FAIL FLAG	V95X1217X

If (a) = false, proceed to Step 2A.

If (a) = true, issue the following output:

(1)	ME–1 PAD DATA PATH FAIL HOLD	V90X8670X

and proceed to Step 2D.

Step 2A – ME–1 Control Failure Check. This step monitors for the ME–1 controller indicating either an electronic lockup, a hydraulic lockup, a major component failure, or engine limit exceeded. If any of these indicators are present and the engine start flag has not been issued, then a countdown hold is called. If the engine start flag has been issued, then shutdown commands for ME–1 are initiated.

Monitor the following:

(a)	ME–1 ELECTRONIC LOCKUP MODE FLAG	V95X1194X
(b)	ME–1 HYDRAULIC LOCKUP MODE FLAG	V95X1198X
(c)	ME–1 MAJOR COMPONENT FAIL FLAG	V95X1230X
(d)	ME–1 ENGINE LIMIT EXCEEDED FLAG	V95X1190X

If (a), (b), (c), and (d) all = false, proceed to Step 2C.

If either (a), (b), (c), or (d) = true, issue the following output:

(1)	ME–1 CONTROL FAIL HOLD	V90X8679X

and then proceed to Step 2D.

Step 2B – Deleted.

Step 2C – ME–1 Channel Fail Check. This step monitors for a flag from the SSME SOP indicating that the engine controller has declared a failure in one or more of the three command channels. If the fail flag is true, a countdown hold or engine shutdown is initiated. This step prevents lift–off with one channel failed on the pad.

Monitor the following:

(a) ME–1 CHANNEL FAIL FLAG V95X1236X

If (a) = false, proceed to Step 3.

If (a) = true, issue the following output:

(1) ME–1 CONTROL FAIL HOLD V90X8679X

and then proceed to Step 3D.

Step 2D – Initiation of Countdown Hold/ME–1 Shutdown. This step monitors the start flag for the main engines, and if the engines have not been started, it will call a countdown hold. If they have been started, it will initiate ME–1 shutdown and set the launch sequence abort flag.

Monitor the following:

(a) ENG START CMD ISSUED FLAG (INTERNAL)

If (a) = false, then issue the following output and proceed to Step 9:

(1) RS COUNTDOWN HOLD FLAG V90X8667X

If (a) = true, then terminate the following outputs:

(2) PREP SSME's FOR LIFTOFF FLAG V90X8373X
(3) SRM IGN ARM FLAG V90X8404X
(4) TO UMB RELEASE ARM FLAG V90X8407X

and issue the following outputs:

(5) ENG 1 SHUTDOWN FLAG C (INTERNAL)
(6) CMD SSME's TO PRE–START POS FLAG V90X8412X
(7) MPS E1 SHUTDOWN ENABLE FLAG V90X8367X
(8) MPS SLEW COMP FLAG V90X8400X
(9) MPS TVC SERVO OVRD CMD V90X8374X
(10) LAUNCH SEQUENCE ABORT FLAG V90X8382X

and then return to Step A.

Step 3 – ME–2 Pad Data Path Fail Check. This step monitors for a flag from the SSME SOP indicating invalid data from either the primary or secondary channel of the EIU. If the ME–2 PAD DATA PATH FAIL FLAG is set, the RS launch sequence will either call a countdown hold or initiate shutdown for ME–2.

Monitor the following:

(a) ME–2 PAD DATA PATH FAIL FLAG V95X1218X

If (a) = false, proceed to Step 3A.

If (a) = true, issue the following output:

(1) ME–2 PAD DATA PATH FAIL HOLD V90X8671X

and proceed to Step 3D.

Step 3A – ME–2 Control Failure Check. This step monitors for the ME–2 controller indicating either an electronic lockup, a hydraulic lockup, a major component failure, or engine limit exceeded. If any of these indicators are present and the engine start flag has not been issued, then a countdown hold is called. If the engine start flag has been issued, then shutdown commands for ME–2 are initiated.

Monitor the following:

(a) ME–2 ELECTRONIC LOCKUP MODE FLAG V95X1195X
(b ME–2 HYDRAULIC LOCKUP MODE FLAG V95X1199X
(c) ME–2 MAJOR COMPONENT FAIL FLAG V95X1231X
(d) ME–2 ENGINE LIMIT EXCEEDED FLAG V95X1191X

If (a), (b), (c), and (d) all = false, proceed to Step 3C.

If either (a), (b), (c), or (d) = true, issue the following output:

(1) ME–2 CONTROL FAIL HOLD V90X8680X

and then proceed to Step 3D.

Step 3B – Deleted.

Step 3C – ME–2 Channel Fail Check. This step monitors for a flag from the SSME SOP indicating that the engine controller has declared a failure in one or more of the three command channels. If the fail flag is true, a countdown hold or engine shutdown is initiated. This step prevents lift–off with one channel failed on the pad.

Monitor the following:

(a) ME–2 CHANNEL FAIL FLAG V95X1237X

If (a) = false, proceed to Step 4.

If (a) = true, issue the following output:

(1) ME–2 CONTROL FAIL HOLD V90X8680X

and then proceed to Step 2D.

Step 3D – Initiation of Countdown Hold/ME–2 Shutdown. This step monitors the start flag for the main engines, and if the engines have not been started, it will call a countdown hold. If they have been started, it will initiate ME–2 shutdown and set the launch sequence abort flag.

Monitor the following:

(a) ENG START CMD ISSUED FLAG (INTERNAL)

If (a) = false, then issue the following output and proceed to Step 9.

(1) RS COUNTDOWN HOLD FLAG V90X8667X

If (a) = true, then terminate the following outputs:

(2) PREP SSME's FOR LIFTOFF FLAG V90X8373X
(3) SRM IGN ARM FLAG V90X8404X
(4) TO UMB RELEASE ARM FLAG V90X8407X

and issue the following outputs:

(5) ENG 2 SHUTDOWN FLAG B (INTERNAL)
(6) CMD SSME's TO PRE–START POS FLAG V90X8412X
(7) MPS E2 SHUTDOWN ENABLE FLAG V90X8368X
(8) MPS SLEW COMP FLAG V90X8400X
(9) MPS TVC SERVO OVRD CMD V90X8374X
(10) LAUNCH SEQUENCE ABORT FLAG V90X8382X

and then return to Step A.

Step 4 – ME–3 Pad Data Path Fail Check. This step monitors for a flag from the SSME SOP indicating invalid data from either the primary or secondary channel of the EIU. If the ME–3 PAD DATA PATH FAIL FLAG is set, the RS launch sequence will either call a countdown hold or initiate shutdown for ME–3.

Monitor the following:

(a) ME–3 PAD DATA PATH FAIL FLAG V95X1219X

If (a) = false, proceed to Step 4A.

If (a) = true, issue the following output:

(1) ME–3 PAD DATA PATH FAIL HOLD V90X8672X

and proceed to Step 4D.

Step 4A – ME–3 Control Failure Check. This step monitors for the ME–3 controller indicating either an electronic lockup, a hydraulic lockup, a major component failure, or engine limit exceeded. If any of these indicators are present and the engine start flag has not been issued, then a countdown hold is called. If the engine start flag has been issued, then shutdown commands for ME–3 are initiated.

Monitor the following:

(a) ME–3 ELECTRONIC LOCKUP MODE FLAG V95X1196X
(b) ME–3 HYDRAULIC LOCKUP MODE FLAG V95X1200X

(c) ME–3 MAJOR COMPONENT FAIL FLAG V95X1232X
(d) ME–3 ENGINE LIMIT EXCEEDED FLAG V95X1192X

If (a), (b), (c), and (d) all = false, proceed to Step 4C.

If either (a), (b), (c), or (d) = true, issue the following output:

(1) ME–3 CONTROL FAIL HOLD V90X8681X

and then proceed to Step 4D.

Step 4B – Deleted.

Step 4C – ME–3 Channel Fail Check. This step monitors for a flag from the SSME SOP indicating that the engine controller has declared a failure in one or more of the three command channels. If the fail flag is true, a countdown hold or engine shutdown is initiated. This step prevents lift–off with one channel failed on the pad.

Monitor the following:

(a) ME–3 CHANNEL FAIL FLAG V95X1238X

If (a) = false, proceed to Step 5.

If (a) = true, issue the following output:

(1) ME–3 CONTROL FAIL HOLD V90X8681X

and then proceed to Step 2D.

Step 4D – Initiation of Countdown Hold/ME–3 Shutdown. This step monitors the start flag for the main engines, and if the engines have not been started, it will call a countdown hold. If they have been started, it will initiate ME—3 shutdown and set the launch sequence abort flag.

Monitor the following:

(a) ENG START CMD ISSUED FLAG (INTERNAL)

If (a) = false, then issue the following output and proceed to Step 9.

(1) RS COUNTDOWN HOLD FLAG V90X8667X

If (a) = true, then terminate the following outputs:

(2) PREP SSME's FOR LIFTOFF FLAG V90X8373X
(3) SRM IGN ARM FLAG V90X8404X
(4) TO UMB RELEASE ARM FLAG V90X8407X

and issue the following outputs:

(5) ENG 3 SHUTDOWN FLAG D (INTERNAL)
(6) CMD SSME's TO PRE–START POS FLAG V90X8412X

(7)	MPS E3 SHUTDOWN ENABLE FLAG	V90X8369X
(8)	MPS SLEW COMP FLAG	V90X8400X
(9)	MPS TVC SERVO OVRD CMD	V90X8374X
(10)	LAUNCH SEQUENCE ABORT FLAG	V90X8382X

and then return to Step A.

Step 5 – Time for Arming PIC's for SRB Ignition. This step monitors the countdown clock; and at the proper time before SRB ignition, sets flags for the MEC SOP to initiate arming of the SRM ignition PIC's, hold–down release PIC's, and the T0 umbilical–release PIC's. The arm flags will remain set until (1) SRB ignition, (2) the LAUNCH SEQUENCE ABORT FLAG is set, (3) a main engine control problem develops, or (4) a recycle is initiated.

Monitor the following:

(a)	COUNTDOWN TIME	V90W8380C
(b)	SRB_IGN_ARM_T	V97U9701C

If (a) is less then (b) seconds, proceed to Step 9.

If (a) is greater than or equal to (b) seconds, issue the following output commands and proceed to Step 6.

(1)	SRM IGN ARM FLAG	V90X8404X
(2)	T0 UMB RELEASE ARM FLAG	V90X8407X

Step 6 – SRM Ignition Arm Voltage Check. This step monitors the countdown clock, and at the selected time before SRB ignition, starts checking the ignition PIC voltages and their associated commfaults. The logic requires two successive passes wherein either one or more of the ignition PIC voltages are low or a commfault exists before a countdown hold is called. If a low voltage or a commfault occurs on the last pass through the logic leading to the issuance of the SRB ignition commands, then a launch sequence abort (SSME shutdown and launch scrub) will not be initiated.

Monitor the following:

(a)	COUNTDOWN TIME	V90W8380C
(b)	SRB_PIC_VOLTS_CHK_T	V97U9702C
(c)	LH VOLTAGE IGN PIC CAP A	B55V1603C
(d)	LH VOLTAGE IGN PIC CAP B	B55V1604C
(e)	RH VOLTAGE IGN PIC CAP A	B55V2603C
(f)	RH VOLTAGE IGN PIC CAP B	B55V2604C
(g)	FA 1 INPUT PROM SEG 3, 10 STATUS (HFE)	V91X2845X
(h)	FA 2 INPUT PROM SEG 3, 10 STATUS (HFE)	V91X2846X
(i)	IGN CHECK FIRST PASS FLAG "D"	(INTERNAL)
(j)	SRB_IGN_PIC_LEVEL	V97U9853C

If (a) is less than (b) seconds, proceed to Step 9.

If (a) is greater than or equal to (b) seconds and (c), (d), (e), and (f) all equal or exceed (j) counts (normal level of 35.7 volts equals 438 counts), and (g) and (h) both are false, then set (i) true and proceed to Step 6A.

If (a) is greater than or equal to (b) seconds and (i) is true and either (c), (d), (e), or (f) is less than (j) counts, or if either (g) or (h) is true, then set (i) = false and proceed to Step 6A.

If (a) ≥ (b) seconds and (i) = false and either (c) < (j) counts or (g) is true, then issue the following output for downlist:

(1) LH IGN PIC CAP A HOLD V90X8383X

If (a) ≥ (b) seconds and (i) = false and either (d) < (j) counts or (h) is true, then issue the following output for downlist:

(2) LH IGN PIC CAP B HOLD V90X8384X

If (a) ≥ (b) seconds and (i) = false and either (e) < (j) counts or (g) is true, then issue the following output for downlist:

(3) RH IGN PIC CAP A HOLD V90X8385X

If (a) ≥ (b) seconds and (i) = false and either (f) < (j) counts or (h) is true, then issue the following output for downlist:

(4) RH IGN PIC CAP B HOLD V90X8386X

Proceed to Step 7.

Step 6A – Critical Systems Parameter Check. This step monitors parameters related to flight–critical MDM's. Upon detection of a failure, a launch hold or a pad shutdown will be called.

Monitor the following:

(a)	FF 1 MDM RETURN WORD BYPASS (HFE)	V91X2904X
(b)	FF 2 MDM RETURN WORD BYPASS (HFE)	V91X2905X
(c)	FF 3 MDM RETURN WORD BYPASS (HFE)	V91X2906X
(d)	FF 4 MDM RETURN WORD BYPASS (HFE)	V91X2907X
(e)	FA 1 MDM RETURN WORD BYPASS (HFE)	V91X2920X
(f)	FA 2 MDM RETURN WORD BYPASS (HFE)	V91X2921X
(g)	FA 3 MDM RETURN WORD BYPASS (HFE)	V91X2922X
(h)	FA 4 MDM RETURN WORD BYPASS (HFE)	V91X2923X

If (a) through (h) are all false, proceed to Step 8.

If any failure indication in (a) through (h) is true, then issue the outputs below and proceed to Step 7.

(1)	RS COUNTDOWN HOLD FLAG	V90X8667X
(2)	FLIGHT–CRITICAL MDM HOLD/ABORT	V90X8767X

Step 7 – Low PIC Voltage Initiation of Hold/ME–1 Shutdown. This step is entered if one or more of the ignition PIC voltages are low for two consecutive passes. This step monitors the start flag for the main engines and, if the engines have not been started, will call a countdown hold. If they have been started, it will initiate ME–1 shutdown and set the launch sequence abort flag.

Monitor the following:

(a)	ENG START CMD ISSUED FLAG	(INTERNAL)

If (a) = false, issue the following output and proceed to Step 9:

(1)	RS COUNTDOWN HOLD FLAG	V90X8667X

If (a) = true, terminate the following outputs:

(2)	PREP SSME's FOR LIFT–OFF FLAG	V90X8373X
(3)	SRM IGN ARM FLAG	V90X8404X
(4)	TO UMB RELEASE ARM FLAG	V90X8407X

and issue the following outputs:

(5)	ENG 1 SHUTDOWN FLAG C	(INTERNAL)
(6)	CMD SSME's TO PRE–START POS FLAG	V90X8412X
(7)	MPS E1 SHUTDOWN ENABLE FLAG	V90X8367X
(8)	MPS SLEW COMP FLAG	V90X8400X
(9)	MPS TVC SERVO OVRD CMD	V90X8374X
(10)	LAUNCH SEQUENCE ABORT FLAG	V90X8382X

and then return to Step A.

Step 8 – Main Engines Started Check. This step provides a bypass of the logic of Steps 9 through 28 inclusive, after the Main Engine 3 start command flag is issued in Step 28. After Engine 2 and Engine 1 start command flags are set true in Step 28A, this step also provides a bypass of Step 28A.

Monitor the following:

(a)	ENG START CMD ISSUED FLAG	(INTERNAL)
(b)	E1 START CMD ISSUED FLAG	(INTERNAL)

If (a) = false, proceed to Step 9.

If (a) = true and (b) = false, proceed to Step 28A.

If (a) = true and (b) = true, proceed to Step 29.

Step 9 – Monitor for Countdown Hold Requests. This step monitors for countdown hold requests from the launch processing system (LPS) as well as for countdown holds generated within the RS launch sequence. This provides a means of stopping the countdown clock and permits further checks for a resume count command or a recycle count command from the LPS. If a hold occurs later than the selected point in the count, an automatic recycle will occur.

Monitor the following:

(a)	LPS COUNTDOWN HOLD	V99X8829X
(b)	RS COUNTDOWN HOLD FLAG	V90X8667X
(c)	COUNTDOWN TIME	V90W8380C

(d) AUTO_RECYCLE_T V97U9705C

If both (a) and (b) = false, proceed to Step 12.

If (a) is true, issue output (5) and proceed.

If either (a) or (b) = true and (c) is ≤ (d) seconds, stop the countdown clock and proceed to Step 10.

If either (a) or (b) = true and (c) is > (d) seconds, terminate outputs (1) and (2) and issue outputs (3) and (4).

(1)	SRM IGN ARM FLAG	V90X8404X
(2)	T0 UMB RELEASE ARM FLAG	V90X8407X
(3)	MEC 1 AND 2 MASTER RESET FLAG	V90X8258X
(4)	ASCENT DAP RECYCLE FLAG	V90X8669X
(5)	LPS COUNTDOWN HOLD	V90X8768X

and perform the following functions:

(6) Reset the countdown clock to T0–540 seconds, and stop the clock.
(7) Re–initialize the RS launch sequence.

Proceed to Step 11A.

Step 10 – Monitor LPS Resume Count Command Flag. This step is made after a countdown hold has been called. The LPS has the sole authority to initiate resumption of the countdown. A resume count command will (1) cause a reset of the LPS and RS countdown hold flags of Step 9, (2) reset all downlist items generated by the RS LAUNCH SEQUENCE, (3) issue the SSME SOP recycle flag, and (4) cause the count to proceed.

Monitor the following:

(a) RESUME COUNT COMMAND FLAG V99X8828X

If (a) = false, proceed to Step 11.

If (a) = true, clear all RS launch sequence downlist items; set (1), (2), and (3) below = false; and set (4) true.

(1)	LPS COUNTDOWN HOLD FLAG	V99X8829X
(2)	RS COUNTDOWN HOLD FLAG	V90X8667X
(3)	RESUME COUNT CMD FLAG	V99X8828X
(4)	SSME SOP RECYCLE FLAG	V90X8668X

Proceed to Step 12.

Step 11 – LPS Recycle Count Check. This step monitors for a recycle count command from the LPS after a countdown hold has been called.

Monitor the following:

(a)	RECYCLE COUNT CMD FLAG	V99X8830X

If (a) = false, add 0.04 second to previous value of CRT timer base time in user interface compool and return to Step A.

If (a) = true, terminate outputs (1) and (2), and issue outputs (3) and (4).

(1)	SRM IGN ARM FLAG	V90X8404X
(2)	T0 UMB RELEASE ARM FLAG	V90X8407X
(3)	MEC 1 AND 2 MASTER RESET FLAG	V90X8258X
(4)	ASC DAP RECYCLE FLAG	V90X8669X

and perform the following functions:

(5) Reset the countdown clock to T0–540 seconds, and stop the clock.
(6) Re–initialize the RS launch sequence.

Proceed to Step 11A.

Step 11A – Provide New CRT Timer Base Time for a Count Recycle.

Monitor the following:

(a)	CLOCK–COMPUTER (GMT)	V91W5000C
(b)	SRB_IGN_TIME_DELAY	V97U9726C
(c)	START_SSMES_T	V97U9712C

Store [(a) + 540 + (b) + (c)], where (c) < 0, into CRT timer base time location in User Interface compool.

Return to Step A.

Step 12 – Monitor Countdown Clock Control. This step monitors for a flag from LPS to read the new GMT of lift–off data and reset the countdown clock.

Monitor the following:

(a)	GMTLO SET COMMAND	V99X8827X
(b)	PREDICTED GMT OF LIFT–OFF	V99W8801C
(c)	CLOCK–COMPUTER (GMT)	V91W5000C

If (a) = false, subtract (b) from (c), convert to seconds. Set this value in the countdown clock and proceed to Step 16B.

If (a) = true, subtract (b) from (c), and convert to seconds. Set this value in the countdown clock and start counting. Reset the GMTLO SET COMMAND V99X8827X and output COUNTDOWN TIME V90W8380C and PREDICTED GMT OF LIFT–OFF V99W8801C for downlist.

Proceed to Step 16B.

Step 13 – LPS Go for Auto Sequence Start. This step monitors the countdown clock and at the proper time looks for a flag from LPS to start the automatic on–board functions. If this flag is not received, a countdown hold is called.

Monitor the following:

(a)	COUNTDOWN TIME	V90W8380C
(b)	LPS GO FOR AUTO SEQUENCE START	V99X8803X
(c)	LPS_GO_FOR_AUTO_SEQ_T	V97U9700C

If (a) is ≤ (c) seconds, return to Step A.

If (a) is > (c) seconds and (b) = false, then set outputs (1) and (2) true, and return to Step A.

On the first pass that (a) is > (c) seconds and (b) = true, set output (3) = true and output (4) = false; then proceed to Step 15. On subsequent passes, proceed to Step 15.

(1)	LPS GO FOR AUTO SEQ START HOLD	V90X8393X
(2)	RS COUNTDOWN HOLD FLAG	V90X8667X
(3)	INDICATOR EVENT 6 R/S AUTO SEQ START	V90X8683X
(4)	MPS TVC SERVO OVRD CMD	V90X8374X

Step 14 – Deleted.

Step 15 – Command IMU to Inertial. This step monitors the countdown clock and, at the proper time, sets a flag for the IMU INT PROC.

Monitor the following:

(a)	COUNTDOWN TIME	V90W8380C
(b)	IMU_TO_INERTIAL_T	V97U9704C

If (a) ≤ (b) seconds, proceed to Step 16.

If (a) > (b) seconds, issue the following output and proceed to Step 16.

(1)	CMD IMU TO INERTIAL FLAG	V90X8411X

Step 16 – Time to Open LO_2 Accumulator Recirculation Valves. This step monitors the countdown clock and, at the proper time, terminates the LO_2 accumulator recirculation valve close commands, which permits the springloaded valves to open.

Monitor the following:

(a)	COUNTDOWN TIME	V90W8380C
(b)	OPN_LO_2_ACC_RECIRC_VLV_T	V97U9706C

If (a) ≤ (b) seconds, proceed to Step 16A

If (a) > (b) seconds, terminate the following commands and proceed to Step 16A.

(1)	MPS LO_2 ACC RECIRC VLV 1 CL CMD A	V41K1815X

(2)	MPS LO_2 ACC RECIRC VLV 1 CL CMD B	V41K1816X
(3)	MPS LO_2 ACC RECIRC VLV 2 CL CMD A	V41K1825X
(4)	MPS LO_2 ACC RECIRC VLV 2 CL CMD B	V41K1826X

Step 16A – Initialize the Navigation System. This step monitors the countdown clock and, at the proper time, sets a flag for the Ascent Nav Sequencer and the Ascent User Parameter Process Sequencer, and initializes the SSME throttle command.

Monitor the following:

(a)	COUNTDOWN TIME	V90W8380C
(b)	NAV_INIT_T	V97U9707C

If (a) ≤ (b) seconds, proceed to Step 17.

If (a) > (b) seconds and it is first pass, issue the following outputs and proceed to Step 17. Otherwise, proceed to Step 17.

(1)	NAV INIT FLAG	V90X8414X
(2)	K_CMD (100%)	V90U1948C

Step 16B – Update the CRT Timer Base Time and Configure Vent Doors for Launch. This step updates the CRT timer base time and then monitors the countdown clock and, at the proper time, sets a flag for the vent door sequence.

Monitor the following:

(a)	COUNTDOWN TIME	V90W8380C
(b)	CONFIG_VNT_DRS_FOR_LCH_T	V97U9708C
(c)	CLOCK–COMPUTER (GMT)	V91W5000C
(d)	SRB_IGN_TIME_DELAY	V97U9726C
(e)	START_SSMES_T	V97U9712C

Store [(c) – (a) + (d) + (e)], where (a) and (e) < 0, into the CRT timer base time location in User Interface compool. Then,

If (a) ≤ (b) seconds, proceed to Step 13.

If (a) > (b) seconds, issue the following output and proceed to Step 13.

(1)	CONFIGURE VENT DOORS FOR LAUNCH CMD	V90X8375X

Step 17 – Time to Verify MPS Ready. This step monitors the countdown clock and, at the proper time, checks for any commfault indications for the LO_2 accumulator recirculation valve inputs. If any commfaults are present, an internal counter is incremented; and, if the counter reaches a count of two, a countdown hold is called.

Monitor the following:

(a)	COUNTDOWN TIME	V90W8380C
(b)	FLAG A	(INTERNAL)

(c) DELETED
(d) FA3 INPUT PROM SEG 3, 10 STATUS (HFE) V91X2847X
(e) FA4 INPUT PROM SEG 3, 10 STATUS (HFE) V91X2848X
(f) CHECK_MPS_VLVS_POS_T V97U9709C

If (a) < (f) seconds, proceed to Step 20.

If (a) ≥ (f) seconds, and (b) is true, proceed to Step 20.

If (a) ≥ (f) seconds and (b), (d), and (e)are all false, then proceed to Step 19.

If (a) ≥ (f) seconds and (b) is false, and either (d), or (e) is true, then increment internal counter A by one count. If counter A is less than 2 counts, return to Step A. If counter A is equal to 2 counts, then issue the following outputs and return to Step A.

(1) RS COUNTDOWN HOLD FLAG V90X8667X
(2) MPS VALVE POS COMMFAULT HOLD V90X8769X

Step 17A – Deleted.

Step 18 – Deleted.

Step 19 – Check for Pogo Recirculation Valves Open. This step checks the two LO_2 Accum Recirc Valve positions and the appropriate LPS bypass flag. If either of the valves is not in the OPEN position and the LPS bypass flag is not set, then internal counter A is incremented by one count. If counter A is equal to 2 counts, a countdown hold is called.

Monitor the following:

(a) MPS LO_2 ACCUM RECIRC VLV 1 OPEN V41X1811X
(b) MPS LO_2 ACCUM RECIRC VLV 2 OPEN V41X1821X
(c) LPS BYPASS OF LO_2 ACCUM RECIRC VLV OP V99X8833X

If (a) and (b) are true or if (c) is true, then proceed to Step 19A.

If either (a) or (b) is false and (c) is false, then increment internal counter A by one count. If counter A is less than 2 counts, return to Step A. If counter A is equal to 2 counts, then issue the following outputs and return to Step A.

(1) MPS LOX ACC RECIRC VLV HOLD V90X8392X
(2) RS COUNTDOWN HOLD FLAG V90X8667X

Step 19A – Check SSME's READY INDICATION. This step checks for the engine ready mode of the start preparation phase for each main engine as determined by flags from the SSME SOP. If all engine controllers indicate engine ready in the status words, the MPS start enable flag is issued, and the LH_2 prevalves are opened; if not, a countdown hold will be called.

Monitor the following:

(a) MPS E–1 ENG READY IND V95X1182X
(b) MPS E–2 ENG READY IND V95X1183X

(c)	MPS E–3 ENG READY IND	V95X1184X

If either (a), (b), or (c) is false, issue the following outputs and return to Step A.

(1)	R/S SEQ SSME GO FOR LAUNCH HOLD	V90X8395X
(2)	R/S COUNTDOWN HOLD FLAG	V90X8667X

If (a), (b), and (c) are all true, then issue the following outputs:

(3)	MPS E–1 LH_2 PREVALVE OPEN CMD A	V41K1119X
(4)	MPS E–1 LH_2 PREVALVE OPEN CMD B	V41K1120X
(5)	MPS E–1 LH_2 PREVALVE OPEN CMD C	V41K1121X
(6)	MPS E–2 LH_2 PREVALVE OPEN CMD A	V41K1219X
(7)	MPS E–2 LH_2 PREVALVE OPEN CMD B	V41K1220X
(8)	MPS E–2 LH_2 PREVALVE OPEN CMD C	V41K1221X
(9)	MPS E–3 LH_2 PREVALVE OPEN CMD A	V41K1319X
(10)	MPS E–3 LH_2 PREVALVE OPEN CMD B	V41K1320X
(11)	MPS E–3 LH_2 PREVALVE OPEN CMD C	V41K1321X

and issue, one time only

(12)	MPS START ENABLE CMD FLAG	V90X8361X

and terminate the following:

(13)	MPS E–1 LH_2 PREVALVE CLOSE CMD A	V41K1122X
(14)	MPS E–1 LH_2 PREVALVE CLOSE CMD B	V41K1123X
(15)	MPS E–1 LH_2 PREVALVE CLOSE CMD C	V41K1124X
(16)	MPS E–2 LH_2 PREVALVE CLOSE CMD A	V41K1222X
(17)	MPS E–2 LH_2 PREVALVE CLOSE CMD B	V41K1223X
(18)	MPS E–2 LH_2 PREVALVE CLOSE CMD C	V41K1224X
(19)	MPS E–3 LH_2 PREVALVE CLOSE CMD A	V41K1322X
(20)	MPS E–3 LH_2 PREVALVE CLOSE CMD B	V41K1323X
(21)	MPS E–3 LH_2 PREVALVE CLOSE CMD C	V41K1324X

and set internal flag A true.

Proceed to Step 20.

Step 20 – Time to Close LO_2 Overboard Bleed Valve. This step monitors the countdown clock and, at the proper time, commands the LO_2 overboard bleed valve closed.

Monitor the following:

(a)	COUNTDOWN TIME	V90W8380C
(b)	CLSE_LO_2_OVBD_BV_T	V97U9710C

If (a) ≤ (b) seconds, proceed to Step 21.

If (a) > (b) seconds, issue the following outputs on each successive pass through Step 20:

(1)	MPS LO_2 OVERBOARD B/V CLOSE CMD A	V41K1584X
(2)	MPS LO_2 OVERBOARD B/V CLOSE CMD B	V41K1585X
(3)	MPS LO_2 OVERBOARD B/V CLOSE CMD C	V41K1586X

Proceed to Step 21.

Step 21 – Time To Check LH_2 Prevalves. This step monitors the countdown clock, and at the proper time, proceeds to Step 22.

Monitor the following:

(a)	COUNTDOWN TIME	V90W8380C
(b)	CHK_PREVLVS_OP_T	V97U9711C

If (a) ≤ (b) seconds, return to Step A.

If (a) > (b) seconds, then proceed to Step 22.

Step 22 – ME–1 LH_2 Prevalve Check. This step monitors the ME–1 LH_2 prevalve position sensors and their associated commfaults. If either sensor indicates OPEN and is not commfaulted, then the sequence proceeds. If a valid OPEN indication is not obtained, then a countdown hold is called.

Monitor the following:

(a)	MPS E–1 LH_2 PREVALVE OPEN A	V41X1104X
(b)	MPS E–1 LH_2 PREVALVE OPEN B	V41X1106X
(c)	FA1 INPUT PROM SEG 3, 10 STATUS (HFE)	V91X2845X
(d)	FA3 INPUT PROM SEG 3, 10 STATUS (HFE)	V91X2847X

If (a) is true and (c) is false, or if (b) is true and (d) is false, then proceed to Step 23; otherwise issue the following outputs and return to Step A.

(1)	MPS E–1 LH_2 PREVLV OPEN HOLD	V90X8396X
(2)	RS COUNTDOWN HOLD FLAG	V90X8667X

Step 23 – ME–2 LH_2 Prevalve Check. This step monitors the ME–2 LH_2 prevalve position sensors and their associated commfaults. If either sensor indicates OPEN and is not commfaulted, then the sequence proceeds. If a valid OPEN indication is not obtained, then a countdown hold is called.

Monitor the following:

(a)	MPS E–2 LH_2 PREVALVE OPEN A	V41X1204X
(b)	MPS E–2 LH_2 PREVALVE OPEN B	V41X1206X
(c)	FA2 INPUT PROM SEG 3, 10 STATUS (HFE)	V91X2846X
(d)	FA4 INPUT PROM SEG 3, 10 STATUS (HFE)	V91X2848X

If (a) is true and (c) is false, or if (b) is true and (d) is false, then proceed to Step 24; otherwise issue the following outputs and return to Step A.

(1)	MPS E–2 LH_2 PREVLV OPEN HOLD	V90X8397X
(2)	RS COUNTDOWN HOLD FLAG	V90X8667X

Step 24 – ME–3 LH_2 Prevalve Check. This step monitors the ME–3 LH_2 prevalve position sensors and their associated commfaults. If either sensor indicates OPEN and is not commfaulted, then the sequence proceeds. If a valid OPEN indication is not obtained, then a countdown hold is called.

Monitor the following:

(a)	MPS E–3 LH_2 PREVALVE OPEN A	V41X1304X
(b)	MPS E–3 LH_2 PREVALVE OPEN B	V41X1306X
(c)	FA4 INPUT PROM SEG 3, 10 STATUS (HFE)	V91X2848X
(d)	FA3 INPUT PROM SEG 3, 10 STATUS (HFE)	V91X2847X

If (a) is true and (c) is false, or if (b) is true and (d) is false, then proceed to Step 25; otherwise issue the following outputs and return to Step A.

(1)	MPS E–3 LH_2 PREVLV OPEN HOLD	V90X8398X
(2)	RS COUNTDOWN HOLD FLAG	V90X8667X

Step 25 – Orbiter Vent Doors Check. This step monitors for all vent doors achieving the desired position for launch within the required time period. The vent door sequence provides an indication of the status for each of the doors. If a door failure exists and an LPS override for that door has been previously set, then the RS launch sequence will proceed with the count. If an LPS override has not been previously set, then the RS launch sequence will call a countdown hold.

Monitor the following:

(a)	ORBITER VENT DOORS STATUS WORD	V90J8201C
(b)	LPS ORBITER VENT DOORS OVERRIDE WORD	V99J8836C

If all the indicators of (a) (Table 4.1–1) = true (no failures of any doors), then proceed to Step 26.

If any indicator(s) of (a) = false (one or more door failures), then read (b) (Table 4.1–2). If the corresponding override indicator in (b) = true for each specific door failure of (a), then proceed to Step 26.

If any indicator of (a) = false (door failure) and the corresponding override indicator in (b) = false, then issue the following outputs and return to Step A.

(1)	RS COUNTDOWN HOLD FLAG	V90X8667X
(2)	VENT DOOR POSITION HOLD	V90X8770X

Table 4.1–1. Orbiter Vent Doors Status Word– –V90J8201		
Vent Group	Item	
Vent group 1	a	L FWD VENTS 1&2
Left and right	b	L FWD VENTS 1&2
Forward vent	c	L FWD VENTS 1&2
Ports 1 and 2	d	L FWD VENTS 1&2
Vent Group 2	a	L PB VENT 3
Left and right	b	L PB VENT 3
Mid fuselage vent	c	R PB VENT 3
Port 3	d	R PB VENT 3
Vent group 3	a	L PB VENT 5
Left and right	b	L PB VENT 5
Mid fuselage	c	R PB VENT 5
Port 5	d	R PB VENT 5
Vent group 4	a	L PB/W VENTS 4&7
Left and right	b	L PB/W VENTS 4&7
Mid fuselage vent	c	R PB/W VENTS 4&7
Ports 4 and 7	d	R PB/W VENTS 4&7
Vent group 5	a	L PB VENT 6
Left and Right	b	L PB VENT 6
Aft payload vent	c	L PB VENT 6
Port 6	d	L PB VENT 6
Vent group 6	a	L AFT VENTS 8&9
Left and right	b	L AFT VENTS 8&9
Aft vent	c	R AFT VENTS 8&9
Ports 8 and 9	d	R AFT VENTS 8&9

Table 4.1–2. LPS Orbiter Vent Doors Override Word—V99J8836C

Vent Group	Item	
Vent group 1	a	L FWD VENTS 1&2
Left and right	b	L FWD VENTS 1&2
Forward vent	c	L FWD VENTS 1&2
Ports 1 and 2	d	L FWD VENTS 1&2
Vent Group 2	a	L PB VENT 3
Left and right	b	L PB VENT 3
Mid fuselage vent	c	R PB VENT 3
Port 3	d	R PB VENT 3
Vent group 3	a	L PB VENT 5
Left and right	b	L PB VENT 5
Mid fuselage	c	R PB VENT 5
Port 5	d	R PB VENT 5
Vent group 4	a	L PB/W VENTS 4&7
Left and right	b	L PB/W VENTS 4&7
Mid fuselage vent	c	R PB/W VENTS 4&7
Ports 4 and 7	d	R PB/W VENTS 4&7
Vent group 5	a	L PB VENT 6
Left and Right	b	L PB VENT 6
Aft payload vent	c	L PB VENT 6
Port 6	d	L PB VENT 6
Vent group 6	a	L AFT VENTS 8&9
Left and right	b	L AFT VENTS 8&9
Aft vent	c	R AFT VENTS 8&9
Ports 8 and 9	d	R AFT VENTS 8&9

Step 26 – SSME's Ready for Start. This step monitors the engine ready mode of the start preparation phase for each main engine as determined by flags from the SSME SOP. If all engine controllers provide engine ready indications in the status words, then the sequence will proceed; if not, a countdown hold will be called.

Monitor the following conditions:

(a)	MPS E–1 READY IND	V95X1182X
(b)	MPS E–2 READY IND	V95X1183X
(c)	MPS E–3 READY IND	V95X1184X

If (a) and (b) and (c) all = true, proceed to Step 27.

If either (a) or (b) or (c) = false, then issue the following outputs and return to Step A.

(1)	RS SEQ SSME GO FOR LAUNCH HOLD	V90X8395X
(2)	RS COUNTDOWN HOLD FLAG	V90X8667X

Step 27 – LPS Go for Main Engine Start. This step looks for a flag set by LPS indicating a positive "go" for start of the main engines. If this flag is not set, a countdown hold is called.

Monitor the following conditions:

(a)	LPS GO FOR ENGINE START FLAG	V99X8804X

If (a) = true, proceed to Step 28.

If (a) = false, issue the following outputs and return to Step A.

(1)	LPS GO FOR ENGINE START HOLD	V90X8394X
(2)	RS COUNTDOWN HOLD FLAG	V90X8667X

Step 28 – Time to Start Main Engines. This step monitors the countdown clock, and, at the proper time, issues the main engine start command flag for Engine 3 and the MPS TVC SERVO OVRD CMD flag. In addition, the timer for checking engine performance, and the start delay timers for Engine 2 and Engine 1 are started.

Monitor the following:

(a)	COUNTDOWN TIME	V90W8380C
(b)	START_SSMES_T	V97U9712C

If (a) ≤ (b) seconds, return to Step A.

If (a) > (b) seconds, issue the following outputs:

(1)	MPS TVC SERVO OVRD CMD	V90X8374X
(2)	ENG START CMD ISSUED FLAG	(INTERNAL)

then issue the following output one time only:

(3)	MPS E–3 START CMD FLAG	V90X8360X

and start timers for the following:

(4)	ENG_TIMER_FOR_THRUST_OK	V97U9716C
(5)	SRB_IGN_TIME_DELAY	V97U9726C

and then return to Step A.

Step 28A – Start of Engine 2 and Engine 1. This step provides for a time delay before setting the start flag for Engine 2 and a time delay before setting the start flag for Engine 1. The time delays before setting the start flags shall have an accuracy tolerance of ±1 millisecond.

If 120 ± 1 milliseconds have not elapsed since output (3) was issued in Step 28, proceed to Step 29.

If 120 ± 1 milliseconds have elapsed since output (3) was issued in Step 28, set the following output true one time only:

(1)	MPS E–2 START CMD FLAG	V90X8359X

and set the following output true:

(2)	E2 START CMD ISSUED FLAG	(INTERNAL)

and then monitor for a 240 ± 1 millisecond time delay from issuance of output (3) in Step 28.

If 240 ± 1 milliseconds have not elapsed since output (3) in Step 28 was issued, proceed to Step 29.

If 240 ± 1 milliseconds have elapsed since output (3) in Step 28 was issued set the following output true one time only:

(3)	E–1 START CMD FLAG	V90X8358X
(4)	MPS E–1 START CMD FLAG	(INTERNAL)

and then proceed to Step 29.

Step 29 – Check for any Engine in Shutdown. This step monitors the operating phase of each main engine via flags from the SSME SOP. During the start phase, one or more of the engines could go into automatic shutdown. If this occurs, it is necessary to inhibit the SRB ignition and perform an orderly shutdown of the other two engines.

Monitor the following:

(a)	MPS E–1 SHUTDOWN PHASE	V95X1155X
(b)	MPS E–1 POST–SHUTDOWN PHASE	V95X1160X
(c)	MPS E–2 SHUTDOWN PHASE	V95X1156X
(d)	MPS E–2 POST–SHUTDOWN PHASE	V95X1161X
(e)	MPS E–3 SHUTDOWN PHASE	V95X1157X
(f)	MPS E–3 POST–SHUTDOWN PHASE	V95X1162X

If (a), (b), (c), (d), (e), and (f) are all false, then proceed to Step 37.

If (a) or (b) = true, set output (7) true.

If (c) or (d) = true, set output (8) true.

If (e) or (f) = true, set output (9) true.

If either (a), (b), (c), (d), (e), or (f) = true, then terminate the following output:

(1)	PREP SSME's FOR LIFT–OFF FLAG	V90X8373X

and issue outputs (2) through (6)

(2)	LAUNCH SEQUENCE ABORT FLAG	V90X8382X
(3)	CMD SSME's TO PRE–START POS FLAG	V90X8412X
(4)	MPS SLEW COMP FLAG	V90X8400X
(5)	MPS TVC SERVO OVRD CMD	V90X8374X
(6)	UNCOMMANDED ENGINE SHUTDOWN ABORT	V90X8771X
(7)	ENG 1 SHUTDOWN FLAG C	(INTERNAL)
(8)	ENG 2 SHUTDOWN FLAG B	(INTERNAL)
(9)	ENG 3 SHUTDOWN FLAG D	(INTERNAL)

Proceed to Step 30.

Step 30 – ME–1 Status Check. This step monitors the ME–1 status word via SSME SOP flags; and when ME–1 enters shutdown, appropriate time delays are provided before closing the prevalves.

Monitor the following:

(a)	MPS E–1 SHUTDOWN PHASE	V95X1155X
(b)	MPS E–1 POST–SHUTDOWN PHASE	V95X1160X

If (a) and (b) both = false, proceed to Step 31.

If either (a) or (b) = true, monitor the following:

(c)	ME1_LOX_PREVLV_CLSE_DELAY	V97U9720C

If (c) seconds have not elapsed, proceed to Step 30B.

If (c) seconds have elapsed, proceed to Step 30A.

Step 30A – Issuance of ME–1 Prevalve Close Commands. This step provides a time delay between issuance of the ME–1 LO_2 prevalve close commands and the ME–1 LH_2 prevalve close commands.

Issue the following outputs:

(1)	MPS E–1 LO_2 PREVALVE CLOSE CMD A	V41K1139X
(2)	MPS E–1 LO_2 PREVALVE CLOSE CMD B	V41K1140X
(3)	MPS E–1 LO_2 PREVALVE CLOSE CMD C	V41K1141X
(4)	MPS E–1 LO_2 PREVALVE CLOSE CMD D	V41K1142X

and terminate the following outputs:

(5)	MPS E–1 LO_2 PREVALVE OPEN CMD A	V41K1136X
(6)	MPS E–1 LO_2 PREVALVE OPEN CMD B	V41K1137X
(7)	MPS E–1 LO_2 PREVALVE OPEN CMD C	V41K1138X
(8)	MPS E–1 LO_2 PREVALVE OPEN CMD D	V41K1143X

and then monitor the following:

(a)	ME1_LH_2_PREVLV_CLSE_T_DELAY	V97U9727C

If (a) seconds have not elapsed, proceed to Step 31.

If (a) seconds have elapsed, issue the following outputs:

(9)	MPS E1 LH_2 PREVALVE CLOSE CMD A	V41K1122X
(10)	MPS E1 LH_2 PREVALVE CLOSE CMD B	V41K1123X
(11)	MPS E1 LH_2 PREVALVE CLOSE CMD C	V41K1124X

and terminate the following outputs:

(12)	MPS E1 LH_2 PREVALVE OPEN CMD A	V41K1119X
(13)	MPS E1 LH_2 PREVALVE OPEN CMD B	V41K1120X
(14)	MPS E1 LH_2 PREVALVE OPEN CMD C	V41K1121X

and then set the following flag = true:

(15)	ME–1 PREVALVES CMD'D CLOSED FLAG	(INTERNAL)

and proceed to Step 31.

Step 30B – Prevalve Closure for ME–1 If Unstarted During Pad Abort. If this engine has not been started prior to initiation of a pad abort, prevalve close delays are bypassed.

Monitor the following:

(a)	E1 START COMMAND ISSUED FLAG	(INTERNAL)

If (a) is true, proceed to Step 31.

If (a) is false, set V97U9727 ME_LH_2_PREVLV_CLS_T_DELAY equal to zero and proceed to Step 30A.

Step 31 – ME–2 Status Check. This step monitors the ME–2 status word via SSME SOP flags, and when ME–2 enters shutdown, appropriate time delays are provided before closing the prevalves.

Monitor the following:

(a)	MPS E–2 SHUTDOWN PHASE	V95X1156X
(b)	MPS E–2 POST–SHUTDOWN PHASE	V95X1161X

If (a) and (b) both = false, proceed to Step 32.

If either (a) or (b) = true, monitor the following:

(c) ME2_LOX_PREVLV_CLSE_DELAY V97U9721C

If (c) seconds have not elapsed, proceed to Step 31B.

If (c) seconds have elapsed, proceed to Step 31A.

Step 31A – Issuance of ME–2 Prevalve Close Commands. This step provides a time delay between issuance of the ME–2 LO_2 prevalve close commands and the ME–2 LH_2 prevalve close commands.

Issue the following outputs:

(1)	MPS E–2 LO_2 PREVALVE CLOSE CMD A	V41K1239X
(2)	MPS E–2 LO_2 PREVALVE CLOSE CMD B	V41K1240X
(3)	MPS E–2 LO_2 PREVALVE CLOSE CMD C	V41K1241X
(4)	MPS E–2 LO_2 PREVALVE CLOSE CMD D	V41K1242X

and terminate the following outputs:

(5)	MPS E–2 LO_2 PREVALVE OPEN CMD A	V41K1236X
(6)	MPS E–2 LO_2 PREVALVE OPEN CMD B	V41K1237X
(7)	MPS E–2 LO_2 PREVALVE OPEN CMD C	V41K1238X
(8)	MPS E–2 LO_2 PREVALVE OPEN CMD D	V41K1243X

and then monitor the following:

(a) ME2_LH_2_PREVLV_CLSE_T_DELAY V97U9728C

If (a) seconds have not elapsed, proceed to Step 32.

If (a) seconds have elapsed, issue the following outputs:

(9)	MPS E2 LH_2 PREVALVE CLOSE CMD A	V41K1222X
(10)	MPS E2 LH_2 PREVALVE CLOSE CMD B	V41K1223X
(11)	MPS E2 LH_2 PREVALVE CLOSE CMD C	V41K1224X

and terminate the following outputs:

(12)	MPS E2 LH_2 PREVALVE OPEN CMD A	V41K1219X
(13)	MPS E2 LH_2 PREVALVE OPEN CMD B	V41K1220X
(14)	MPS E2 LH_2 PREVALVE OPEN CMD C	V41K1221X

and then set the following flag = true:

(15) ME–2 PREVALVES CMD'D CLOSED FLAG (INTERNAL)

and proceed to Step 32.

Step 31B – Prevalve Closure for ME–2 If Unstarted During Pad Abort. If this engine has not been started prior to initiation of a pad abort, prevalve close delays are bypassed.

Monitor the following:

(a) E2 START COMMAND ISSUED FLAG (INTERNAL)

If (a) is true, proceed to Step 32.

If (a) is false, set V97U9728 ME2_LH_2_PREVLV_CLS_T_DELAY equal to zero and proceed to Step 31A.

Step 32 – ME–3 Status Check. This step monitors the ME–3 status word via SSME SOP flags, and when ME–3 enters shutdown, appropriate time delays are provided before closing the prevalves.

Monitor the following:

(a) MPS E–3 SHUTDOWN PHASE V95X1157X
(b) MPS E–3 POST–SHUTDOWN PHASE V95X1162X

If (a) and (b) both = false, proceed to Step 33.

If either (a) or (b) = true, monitor the following:

(c) ME3_LOX_PREVLV_CLSE_DELAY V97U9722C

If (c) seconds have not elapsed, proceed to Step 33.

If (c) seconds have elapsed, proceed to Step 32A.

Step 32A – Issuance of ME–3 Prevalve Close Commands. This step provides a time delay between issuance of the ME–3 LO_2 prevalve close commands and the ME–3 LH_2 prevalve close commands.

Issue the following outputs:

(1) MPS E–3 LO_2 PREVALVE CLOSE CMD A V41K1339X
(2) MPS E–3 LO_2 PREVALVE CLOSE CMD B V41K1340X
(3) MPS E–3 LO_2 PREVALVE CLOSE CMD C V41K1341X
(4) MPS E–3 LO_2 PREVALVE CLOSE CMD D V41K1342X

and terminate the following outputs:

(5) MPS E–3 LO_2 PREVALVE OPEN CMD A V41K1336X
(6) MPS E–3 LO_2 PREVALVE OPEN CMD B V41K1337X
(7) MPS E–3 LO_2 PREVALVE OPEN CMD C V41K1338X
(8) MPS E–3 LO_2 PREVALVE OPEN CMD D V41K1343X

and then monitor the following:

(a) ME3_LH_2_PREVLV_CLSE_T_DELAY V97U9729C

If (a) seconds have not elapsed, proceed to Step 33.

If (a) seconds have elapsed, issue the following outputs:

(9) MPS E3 LH_2 PREVALVE CLOSE CMD A V41K1322X
(10) MPS E3 LH_2 PREVALVE CLOSE CMD B V41K1323X

(11) MPS E3 LH_2 PREVALVE CLOSE CMD C V41K1324X

and terminate the following outputs:

(12) MPS E3 LH_2 PREVALVE OPEN CMD A V41K1319X
(13) MPS E3 LH_2 PREVALVE OPEN CMD B V41K1320X
(14) MPS E3 LH_2 PREVALVE OPEN CMD C V41K1321X

and then set the following flag = true:

(15) ME–3 PREVALVES CMD'D CLOSED FLAG (INTERNAL)

and proceed to Step 33.

Step 33 – Second and Third Engine Staggered Shutdown Priority Selection. This step establishes a priority for the second and third engine to be shut down in a staggered sequence. The engine priority is selected after a time delay has elapsed since the first engine was detected in shutdown phase or was commanded to shutdown.

Monitor the following:

(a) ENG 2 SHUTDOWN FLAG B (INTERNAL)
(b) TIMER_G_SHTDN_TIME_DELAY 1.12 (–0, + 0.08 SEC) (INTERNAL)
(c) TIMER_J_SHTDN_TIME_DELAY 2.40 (–0, + 0.08 SEC) (INTERNAL)

On the first pass through this step, start (b) Timer "G" and (c) Timer "J" and return to Step A.

On subsequent passes:
If (b) seconds have not elapsed since starting timers "G" and "J," then return to Step A.

If (c) seconds have elapsed since Timer "J" (c) started, set (1), (2), and (3) true and proceed to Step 34.

If (c) seconds have not elapsed since Timer "J" (c) started, monitor Timer "G" (b).

If (b) seconds have elapsed since Timer "G" (b) started and (a) = true on first pass, then set (3) true and return to Step A.

If (b) seconds have elapsed since Timer "G" (b) started and (a) = false on first pass, then set (2) true and return to Step A.

(1) ENG 1 SHUTDOWN FLAG C (INTERNAL)
(2) ENG 2 SHUTDOWN FLAG B (INTERNAL)
(3) ENG 3 SHUTDOWN FLAG D (INTERNAL)

Step 34 – Initiation of Engine Shutdown Verification Timer. This step initiates the timer, which is checked in Step 35 to alert the LPS that all engines have not entered shutdown within the required time period after shutdown commands were issued.

On the first pass through this step, start the following timer and return to Step A.

(1) VERIFY_ALL_ENG_SHTDN_TIMER V97U9719C

On all successive passes proceed to Step 35.

Step 35 – All SSME's in Shutdown. This step monitors the phase of each engine via flags from the SSME SOP, and determines when all engines have entered the shutdown phase. If this does not occur within the proper time after shutdown commands for all engines were issued in Step 33, then a countdown hold flag is set.

Monitor the following:

(a)	MPS E–1 SHUTDOWN PHASE	V95X1155X
(b)	MPS E–1 POST–SHUTDOWN PHASE	V95X1160X
(c)	MPS E–2 SHUTDOWN PHASE	V95X1156X
(d)	MPS E–2 POST–SHUTDOWN PHASE	V95X1161X
(e)	MPS E–3 SHUTDOWN PHASE	V95X1157X
(f)	MPS E–3 POST–SHUTDOWN PHASE	V95X1162X
(g)	VERIFY_ALL_ENG_SHTDN_TIMER	V97U9719C

If either (a) or (b) = true, and either (c) or (d) = true, and either (e) or (f) = true, then proceed to Step 36.

If both (a) and (b) = false, or both (c) and (d) = false, or both (e) and (f) = false, and (g) seconds have not elapsed, then return to Step A.

If both (a) and (b) = false, or both (c) and (d) = false, or both (e) and (f) = false, and (g) seconds have elapsed, then issue the following outputs and terminate the RS launch sequence.

(1)	ENGINE SHUTDOWN VERIFICATION HOLD	V90X8389X
(2)	RS COUNTDOWN HOLD FLAG	V90X8667X

Step 36 – Prevalves Commanded Closed Check. This step checks to see that all prevalves have been commanded closed before terminating the launch sequence. This assures that the time delays of Steps 30, 31, and 32 can occur and that all prevalves will be commanded closed before termination of the RS launch sequence.

Monitor the following:

(a)	ME–1 PREVALVES CMD'D CLOSED FLAG	(INTERNAL)
(b)	ME–2 PREVALVES CMD'D CLOSED FLAG	(INTERNAL)
(c)	ME–3 PREVALVES CMD'D CLOSED FLAG	(INTERNAL)

If either (a), (b), or (c) = false, return to Step A.

If (a), (b), and (c) all = true, set output (1) true and then terminate the redundant set launch sequence.

(1)	ASCENT DAP RECYCLE FLAG	V90X8669X

Step 37 – LPS Countdown Hold Check. This step monitors the LPS countdown hold flag and, if set after the main engine start commands have been issued, will set the LAUNCH SEQUENCE ABORT FLAG and initiate the shutdown of ME–1, which will be followed after a time delay by shutdown of ME–2 and ME–3.

Monitor the following:

(a)	LPS COUNTDOWN HOLD FLAG	V99X8829X

If (a) = false, proceed to Step 37A.

If (a) = true, terminate the following outputs:

(1)	PREP SSME's FOR LIFT–OFF FLAG	V90X8373X
(2)	SRM IGN ARM FLAG	V90X8404X
(3)	TO UMB RELEASE ARM FLAG	V90X8407X

and issue the following outputs:

(4)	CMD SSME's to PRE–START POS FLAG	V90X8412X
(5)	ENG 1 SHUTDOWN FLAG C	(INTERNAL)
(6)	MPS E–1 SHUTDOWN ENABLE CMD	V90X8367X
(7)	MPS SLEW COMP FLAG	V90X8400X
(8)	MPS TVC SERVO OVRD CMD	V90X8374X
(9)	LPS COUNTDOWN HOLD	V90X8768X
(10)	LAUNCH SEQUENCE ABORT FLAG	V90X8382X

and then return to Step A.

Step 37A – All Engines at Required Percent Thrust. This step monitors the percent chamber pressure for all engines via the SSME SOP. When all engines reach the required chamber pressure, then flags are set for the MPS TVC CMD SOP, the SRB TVC CMD SOP, and the ASC DAP.

Monitor the following:

(a)	MPS E–1 PERCENT CH PRESS	V95U1186C
(b)	MPS E–2 PERCENT CH PRESS	V95U1187C
(c)	MPS E–3 PERCENT CH PRESS	V95U1188C
(d)	ALL_ENG_PERCENT_CHB_PRS_CHK	V97U9713C

If either (a) or (b) or (c) ≤ (d) percent, then proceed to Step 38.

If (a), (b), and (c) all > (d) percent, then terminate the following output:

(1)	MPS TVC SERVO OVRD CMD	V90X8374X

and issue the following output:

(2)	PREP SSME's FOR LIFT–OFF FLAG	V90X8373X

and proceed to Step 37B.

Steps 37B – MPS Actuator Port Commfault Checks. This step checks for any commfault indications relative to the actuator port checks to be made in Steps 42, 43, and 44. The first time that a commfault occurs the actuator port checks in Steps 42, 43, and 44 are bypassed. If a commfault indication is present on two successive cycles, then the LAUNCH SEQUENCE ABORT FLAG is set and ME–1 is commanded to shut down.

Monitor the following:

(a)	FA1 INPUT PROM SEG 3, 10 STATUS (HFE)	V91X2845X
(b)	FA2 INPUT PROM SEG 3, 10 STATUS (HFE)	V91X2846X
(c)	FA3 INPUT PROM SEG 3, 10 STATUS (HFE)	V91X2847X
(d)	FA4 INPUT PROM SEG 3, 10 STATUS (HFE)	V91X2848X
(e)	COMMFAULT FIRST PASS FLAG "E"	(INTERNAL)

If (a), (b), (c), and (d) all = false, then set (e) = true and proceed to Step 42.

If either (a), (b), (c), or (d) = true, and (e) = true, then set (e) = false and proceed to Step 38.

If either (a), (b), (c), or (d) = true and (e) = false, then terminate the following outputs:

(1)	PREP SSME's FOR LIFT–OFF FLAG	V90X8373X
(2)	SRM IGN ARM FLAG	V90X8404X
(3)	T0 UMB RELEASE ARM FLAG	V90X8407X

and issue the following outputs:

(4)	CMD SSME's TO PRE–START POS FLAG	V90X8412X
(5)	ENG 1 SHUTDOWN FLAG C	(INTERNAL)
(6)	MPS E–1 SHUTDOWN ENABLE CMD	V90X8367X
(7)	MPS SLEW COMP FLAG	V90X8400X
(8)	MPS TVC SERVO OVRD CMD	V90X8374X
(9)	MPS ACT PORT COMMFAULT ABORT	V90X8772X
(10)	LAUNCH SEQUENCE ABORT FLAG	V90X8382X

and then return to Step A.

Step 38 – ME–1 at Required Percent Thrust. This step monitors the ME–1 chamber pressure via the SSME SOP. If the chamber pressure does not reach the required level within the required number of seconds from the time the start commands were issued in Step 28, then the launch sequence abort flag is set and ME–1 is commanded to shut down.

Monitor the following:

(a)	MPS E–1 PERCENT CH PRESS	V95U1186X
(b)	ENG_PERCENT_CH_PRS_FOR_GO	V97U9714C
(c)	ENG_TIMER_FOR_THRUST_OK	V97U9716C
(d)	ENG START CMDS ISSUED FLAG	(INTERNAL)

If (a) ≥ (b) percent, proceed to Step 39.

If (a) < (b) percent, but (c) seconds have not elapsed since (d) was set = true in Step 28, then return to Step A.

If (a) < (b) percent, and (c) seconds have elapsed since (d) was set = true in Step 28, then terminate the following outputs:

(1)	PREP SSME's FOR LIFT–OFF FLAG	V90X8373X

(2)	SRM IGN ARM FLAG	V90X8404X
(3)	T0 UMB RELEASE ARM FLAG	V90X8407X

and issue the following outputs:

(4)	CMD SSME's TO PRE–START POS FLAG	V90X8412X
(5)	ENG 1 SHUTDOWN FLAG C	(INTERNAL)
(6)	MPS E–1 SHUTDOWN ENABLE CMD	V90X8367X
(7)	MPS SLEW COMP FLAG	V90X8400X
(8)	MPS TVC SERVO OVRD CMD	V90X8374X
(9)	ME–1 LOW CHAMBER PRESSURE ABORT	V90X8773X
(10)	LAUNCH SEQUENCE ABORT FLAG	V90X8382X

and then return to Step A.

Step 39 – ME–2 at Required Percent Thrust. This step monitors the ME–2 percent chamber pressure via the SSME SOP. If the chamber pressure does not reach the required level within the required number of seconds from the time the start commands were issued in Step 28, then the launch sequence abort flag is set and ME–2 is commanded to shut down.

Monitor the following:

(a)	MPS E–2 PERCENT CH PRESS	V95U1187X
(b)	ENG_PERCENT_CH_PRS_FOR_GO	V97U9714C
(c)	ENG_TIMER_FOR_THRUST_OK	V97U9716C
(d)	ENG START CMDS ISSUED FLAG	(INTERNAL)

If (a) ≥ (b) percent, proceed to Step 40.

If (a) < (b) percent, but (c) seconds have not elapsed since (d) was set = true in Step 28, then return to Step A.

If (a) < (b) percent, and (c) seconds have elapsed since (d) was set = true in Step 28, then terminate the following outputs:

(1)	PREP SSME's FOR LIFT–OFF FLAG	V90X8373X
(2)	SRM IGN ARM FLAG	V90X8404X
(3)	T0 UMB RELEASE ARM FLAG	V90X8407X

and issue the following outputs:

(4)	ENG 2 SHUTDOWN FLAG B	(INTERNAL)
(5)	CMD SSME's TO PRE–START POS FLAG	V90X8412X
(6)	MPS E2 SHUTDOWN ENABLE CMD	V90X8368X
(7)	MPS SLEW COMP FLAG	V90X8400X
(8)	MPS TVC SERVO OVRD CMD	V90X8374X
(9)	ME–2 LOW CHAMBER PRESSURE ABORT	V90X8774X
(10)	LAUNCH SEQUENCE ABORT FLAG	V90X8382X

and then return to Step A.

Step 40 – ME–3 at Required Percent Thrust. This step monitors the ME–3 percent chamber pressure via the SSME SOP. If the chamber pressure does not reach the required level within the required number of seconds from the time the start commands were issued in Step 28, then the launch sequence abort flag is set and ME–3 is commanded to shut down.

Monitor the following:

(a)	MPS E–3 PERCENT CH PRESS	V95U1188X
(b)	ENG_PERCENT_CH_PRS_FOR_GO	V97U9714C
(c)	ENG_TIMER_FOR_THRUST_OK	V97U9716C
(d)	ENG START CMDS ISSUED FLAG	(INTERNAL)

If (a) ≥ (b) percent, proceed to Step 41.

If (a) < (b) percent, but (c) seconds have not elapsed since (d) was set = true in Step 28, then return to Step A.

If (a) < (b) percent, and (c) seconds have elapsed since (d) was set = true in Step 28, then terminate the following outputs:

(1)	PREP SSME's FOR LIFT–OFF FLAG	V90X8373X
(2)	SRM IGN ARM FLAG	V90X8404X
(3)	T0 UMB RELEASE ARM FLAG	V90X8407X

and issue the following outputs:

(4)	ENG 3 SHUTDOWN FLAG D	(INTERNAL)
(5)	CMD SSME's TO PRE–START POS FLAG	V90X8412X
(6)	MPS E–3 SHUTDOWN ENABLE CMD	V90X8369X
(7)	MPS SLEW COMP FLAG	V90X8400X
(8)	MPS TVC SERVO OVRD CMD	V90X8374X
(9)	ME–3 LOW CHAMBER PRESSURE ABORT	V90X8775X
(10)	LAUNCH SEQUENCE ABORT FLAG	V90X8382X

and then return to Step A.

Step 41 – Go for SRB Ignition Check. This step provides a time delay to permit critical SSME actuator checks after all engines have reached the required thrust level for re–enabling MPS TVC FDIR. The time delay is initiated on the first pass through Step 28. If any engine actuator has a port failure after all engines have reached 90 percent thrust, that engine will be shut down first followed by the other two engines after a time delay. This step also monitors the GROUND CHECKOUT ENABLE FLAG to determine if an actual flight firing of the engines should occur, or if a ground checkout test is being performed. If a ground checkout test is being performed, SRB ignition will not be commanded.

Monitor the following:

(a)	SRB_IGN_TIME_DELAY	V97U9726C
(b)	GNC GROUND CHECKOUT ENABLE	V93X5538X

If (a) seconds have not elapsed, return to Step A

If (a) seconds have elapsed and (b) is false, proceed to Step 41B.

If (a) seconds have elapsed, and (b) is true, return to Step A.

Step 41A – Deleted.

Step 41B – SRB Ignition. This step commands SRB ignition based on all previous checks having been passed.

Issue the following outputs:

(1)	SRM IGN FIRE 1 FLAG	V90X8405X
(2)	SRM IGN FIRE 2/3 FLAG	V90X8699X
(3)	TERMINATE LPS POLLING FLAG	V90X8378X
(4)	MODE CONTROL MET RESET CMD	V90X8401X
(5)	READ GMT & STORE FLAG	V90X8402X
(6)	EVENT TIMER START FLAG	V90X8403X
(7)	SRB IGNITION CMD FLAG	V90X8377X

and then return to Step A.

Steps 41C Through 41E – Deleted.

Step 42 – ME–1 Actuator Port Checks. This step provides a check of the actuator ports for ME–1. If any actuator port failure is present for two successive cycles, then the LAUNCH SEQUENCE ABORT FLAG is set and a shutdown of ME–1 is initiated.

Monitor the following:

(a)	MPS ENG 1 P ACTR A FAIL	V79X1170X
(b)	MPS ENG 1 Y ACTR A FAIL	V79X1171X
(c)	MPS ENG 1 P ACTR B FAIL	V79X1173X
(d)	MPS ENG 1 Y ACTR B FAIL	V79X1174X
(e)	MPS ENG 1 P ACTR C FAIL	V79X1176X
(f)	MPS ENG 1 Y ACTR C FAIL	V79X1177X
(g)	MPS ENG 1 P ACTR D FAIL	V79X1178X
(h)	MPS ENG 1 Y ACTR D FAIL	V79X1179X
(i)	ME–1 ACTR PORT FAIL FIRST PASS FLAG "F"	(INTERNAL)

If (a), (b), (c), (d), (e), (f), (g), and (h) all = false, then set (i) = true and proceed to Step 43.

If either (a) or (b) or (c) or (d) or (e) or (f) or (g) or (h) = true and (i) = true, then set (i) = false and proceed to Step 43.

If either (a) or (b) or (c) or (d) or (e) or (f) or (g) or (h) = true and (i) = false, then terminate the following outputs:

(1)	PREP SSME's FOR LIFT–OFF FLAG	V90X8373X
(2)	SRM IGN ARM FLAG	V90X8404X
(3)	T0 UMB RELEASE ARM FLAG	V90X8407X

and issue the following outputs:

(4)	ENG 1 SHUTDOWN FLAG C	(INTERNAL)
(5)	CMD SSME's TO PRE–START POS FLAG	V90X8412X
(6)	MPS E–1 SHUTDOWN ENABLE CMD	V90X8367X
(7)	MPS SLEW COMP FLAG	V90X8400X
(8)	MPS TVC SERVO OVRD CMD	V90X8374X
(9)	ME–1 ACT PORT FAIL ABORT	V90X8776X
(10)	LAUNCH SEQUENCE ABORT FLAG	V90X8382X

and then return to Step A.

Step 43– ME–2 Actuator Port Checks. This step provides a check of the actuator ports for ME–2. If any actuator port failure is present for two successive cycles, then the LAUNCH SEQUENCE ABORT FLAG is set and a shutdown of ME–2 is initiated.

Monitor the following:

(a)	MPS ENG 2 P ACTR A FAIL	V79X1270X
(b)	MPS ENG 2 Y ACTR A FAIL	V79X1271X
(c)	MPS ENG 2 P ACTR B FAIL	V79X1273X
(d)	MPS ENG 2 Y ACTR B FAIL	V79X1274X
(e)	MPS ENG 2 P ACTR C FAIL	V79X1276X
(f)	MPS ENG 2 Y ACTR C FAIL	V79X1277X
(g)	MPS ENG 2 P ACTR D FAIL	V79X1278X
(h)	MPS ENG 2 Y ACTR D FAIL	V79X1279X
(i)	ME–2 ACTR PORT FAIL FIRST PASS FLAG "G"	(INTERNAL)

If (a), (b), (c), (d), (e), (f), (g), and (h) all = false, then set (i) = true and proceed to Step 44.

If either (a) or (b) or (c) or (d) or (e) or (f) or (g) or (h) = true and (i) = true, then set (i) = false and proceed to Step 44.

If either (a) or (b) or (c) or (d) or (e) or (f) or (g) or (h) = true and (i) = false, then terminate the following outputs:

(1)	PREP SSME's FOR LIFT–OFF FLAG	V90X8373X
(2)	SRM IGN ARM FLAG	V90X8404X
(3)	T0 UMB RELEASE ARM FLAG	V90X8407X

and issue the following outputs:

(4)	ENG 2 SHUTDOWN FLAG B	(INTERNAL)
(5)	CMD SSME's TO PRE–START POS FLAG	V90X8412X
(6)	MPS E–2 SHUTDOWN ENABLE CMD	V90X8368X
(7)	MPS SLEW COMP FLAG	V90X8400X
(8)	MPS TVC SERVO OVRD CMD	V90X8374X
(9)	ME–2 ACT PORT FAIL ABORT	V90X8777X
(10)	LAUNCH SEQUENCE ABORT FLAG	V90X8382X

and then return to Step A.

Step 44 – ME–3 Actuator Port Checks. This step provides a check of the actuator ports for ME–3. If any actuator port failure is present for two successive cycles, then the LAUNCH SEQUENCE ABORT FLAG is set and a shutdown of ME–3 is initiated.

Monitor the following:

(a)	MPS ENG 3 P ACTR A FAIL	V79X1370X
(b)	MPS ENG 3 Y ACTR A FAIL	V79X1371X
(c)	MPS ENG 3 P ACTR B FAIL	V79X1373X
(d)	MPS ENG 3 Y ACTR B FAIL	V79X1374X
(e)	MPS ENG 3 P ACTR C FAIL	V79X1376X
(f)	MPS ENG 3 Y ACTR C FAIL	V79X1377X
(g)	MPS ENG 3 P ACTR D FAIL	V79X1378X
(h)	MPS ENG 3 Y ACTR D FAIL	V79X1379X
(i)	ME–3 ACTR PORT FAIL FIRST PASS FLAG "H"	(INTERNAL)

If (a), (b), (c), (d), (e), (f), (g), and (h) all = false, then set (i) = true and proceed to Step 38.

If either (a) or (b) or (c) or (d) or (e) or (f) or (g) or (h) = true and (i) = true, then set (i) = false and proceed to Step 38.

If either (a) or (b) or (c) or (d) or (e) or (f) or (g) or (h) = true and (i) = false, then terminate the following outputs:

(1)	PREP SSME's FOR LIFT–OFF FLAG	V90X8373X
(2)	SRM IGN ARM FLAG	V90X8404X
(3)	T0 UMB RELEASE ARM FLAG	V90X8407X

and issue the following outputs:

(4)	ENG 3 SHUTDOWN FLAG D	(INTERNAL)
(5)	CMD SSME's TO PRE–START POS FLAG	V90X8412X
(6)	MPS E3 SHUTDOWN ENABLE CMD	V90X8369X
(7)	MPS SLEW COMP FLAG	V90X8400X
(8)	MPS TVC SERVO OVRD CMD	V90X8374X
(9)	ME–3 ACT PORT FAIL ABORT	V90X8778X
(10)	LAUNCH SEQUENCE ABORT FLAG	V90X8382X

and then return to Step A.

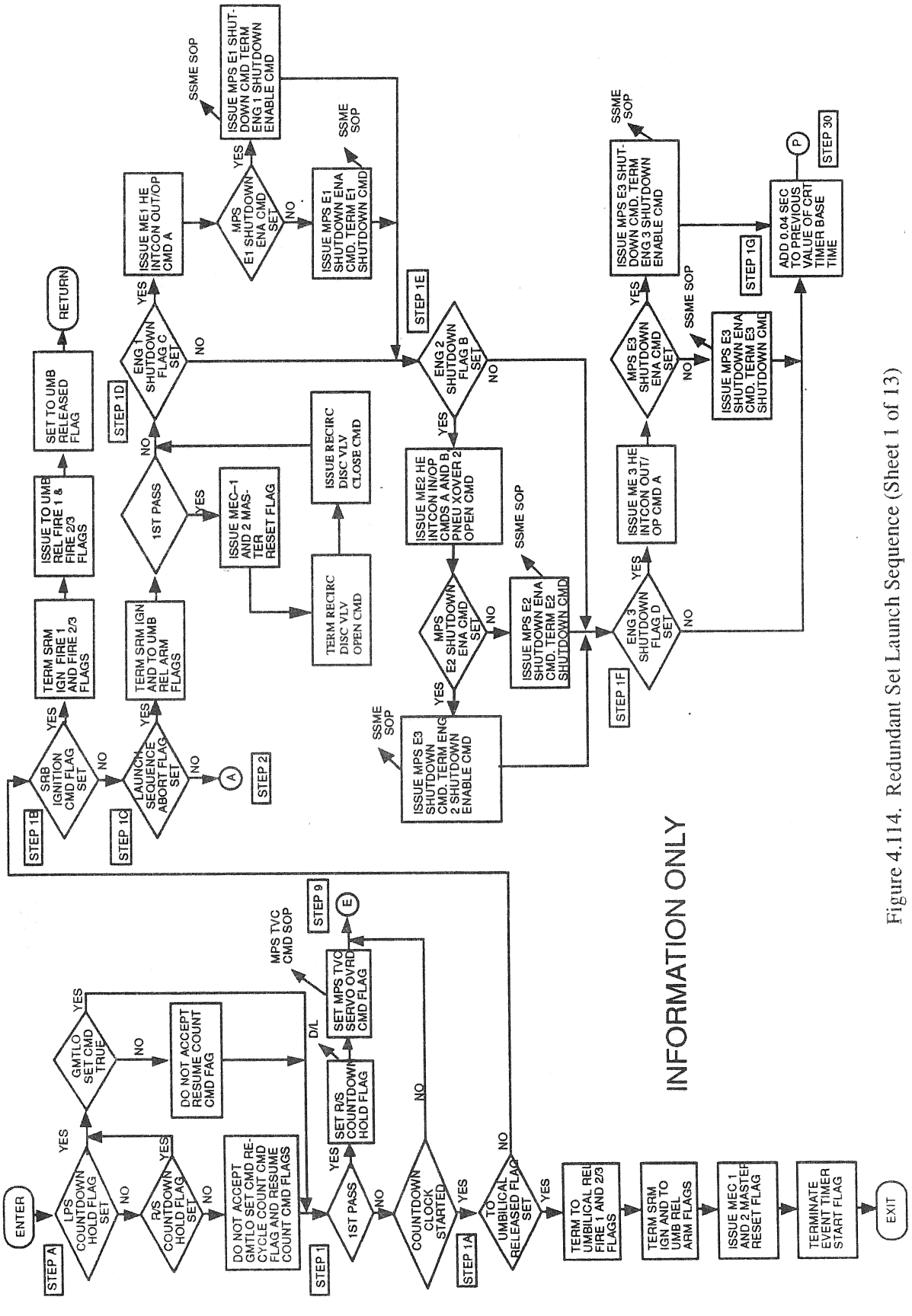

Figure 4.114. Redundant Set Launch Sequence (Sheet 1 of 13)

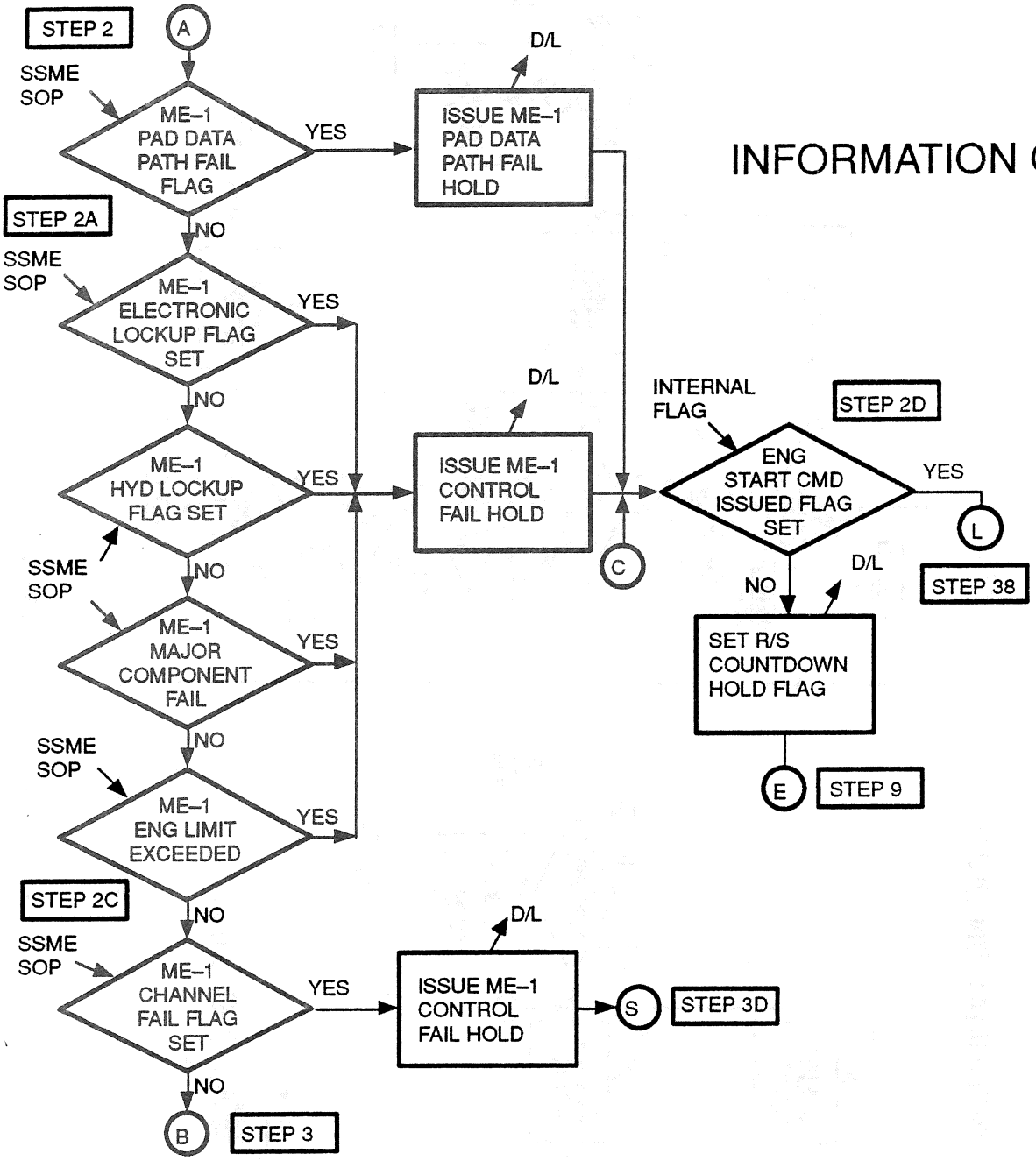

Figure 4.114. Redundant Set Launch Sequence (Sheet 2 of 13)

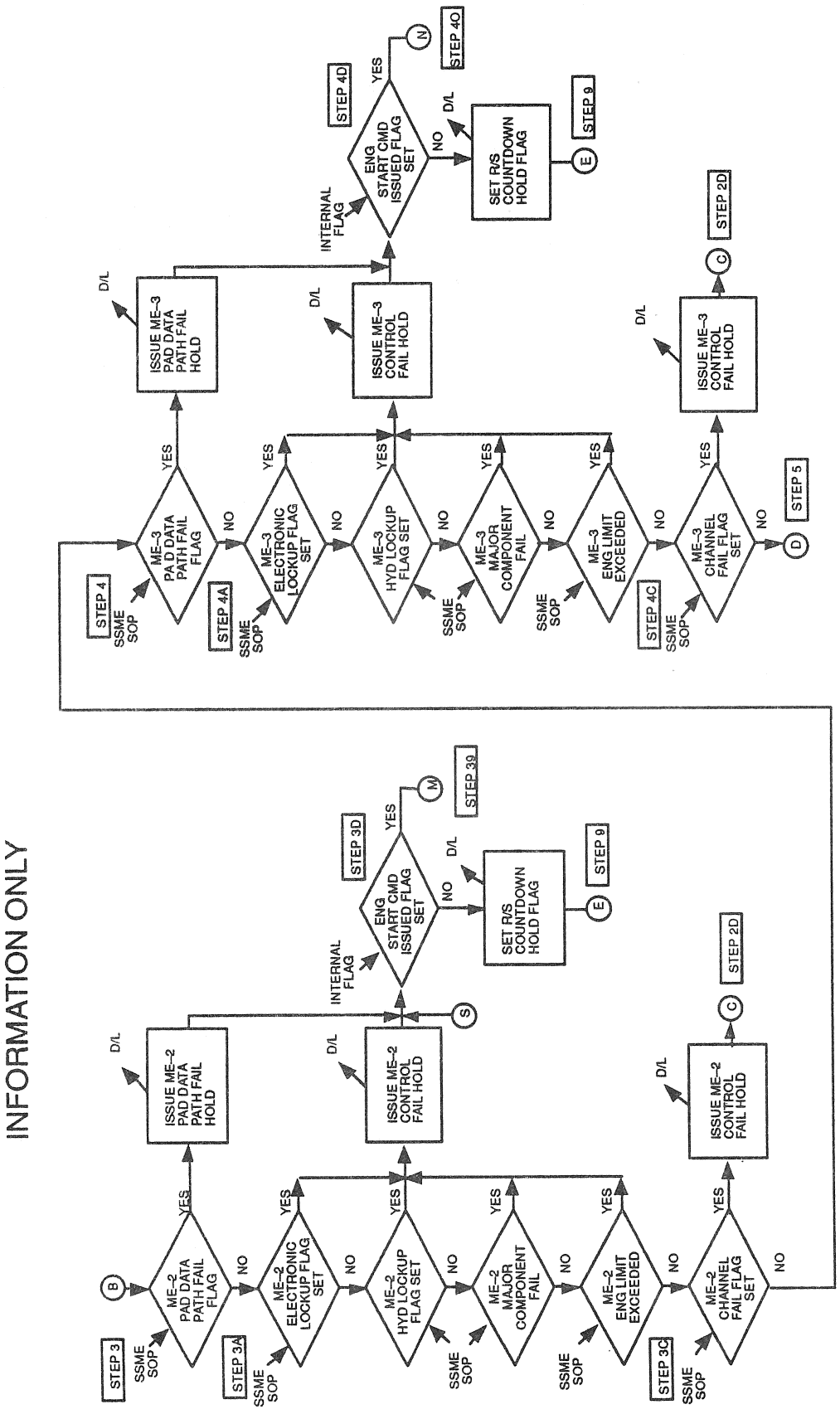

Figure 4.114. Redundant Set Launch Sequence (Sheet 3 of 13)

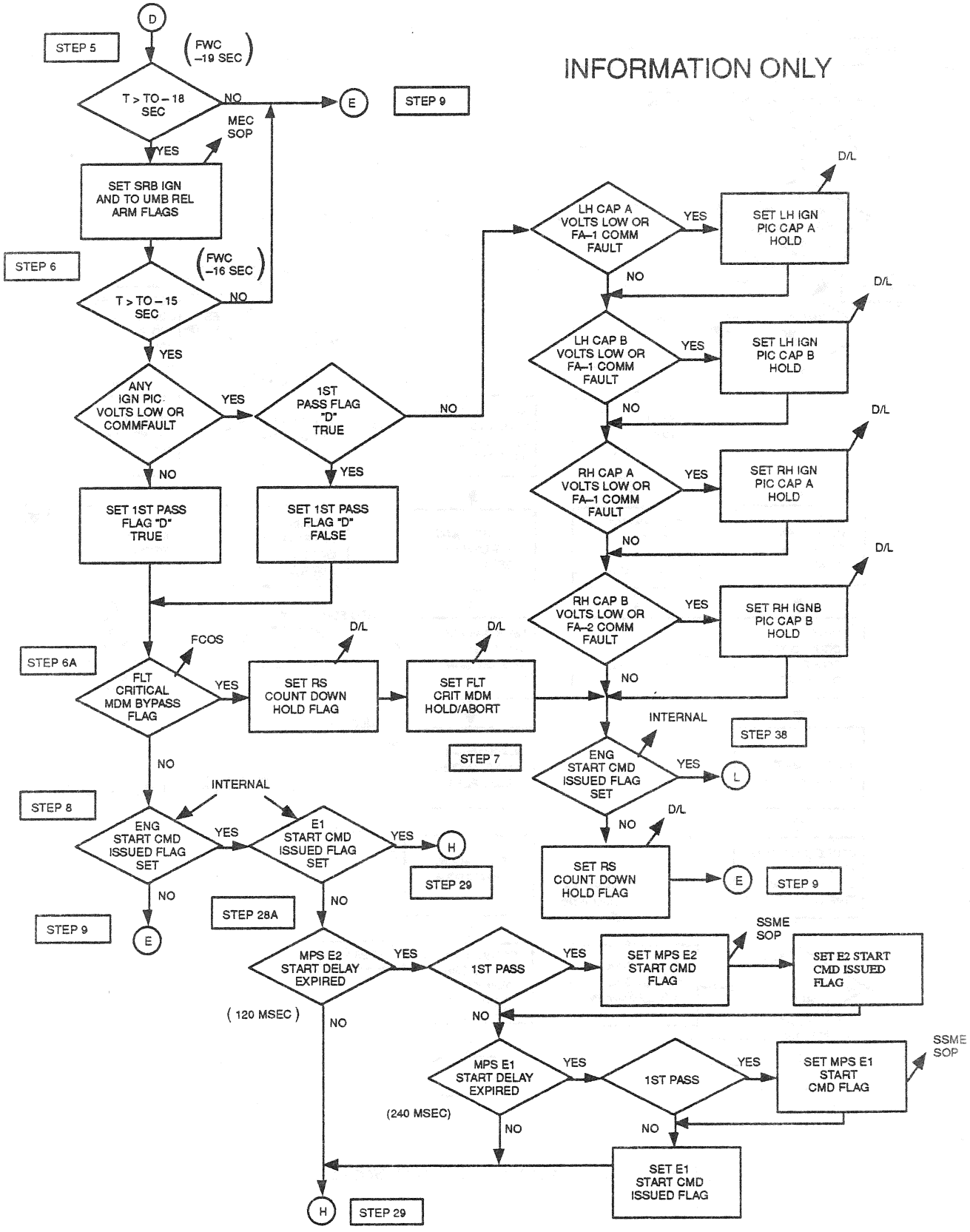

Figure 4.11–4. Redundant Set Launch Sequence (Sheet 4 of 13)

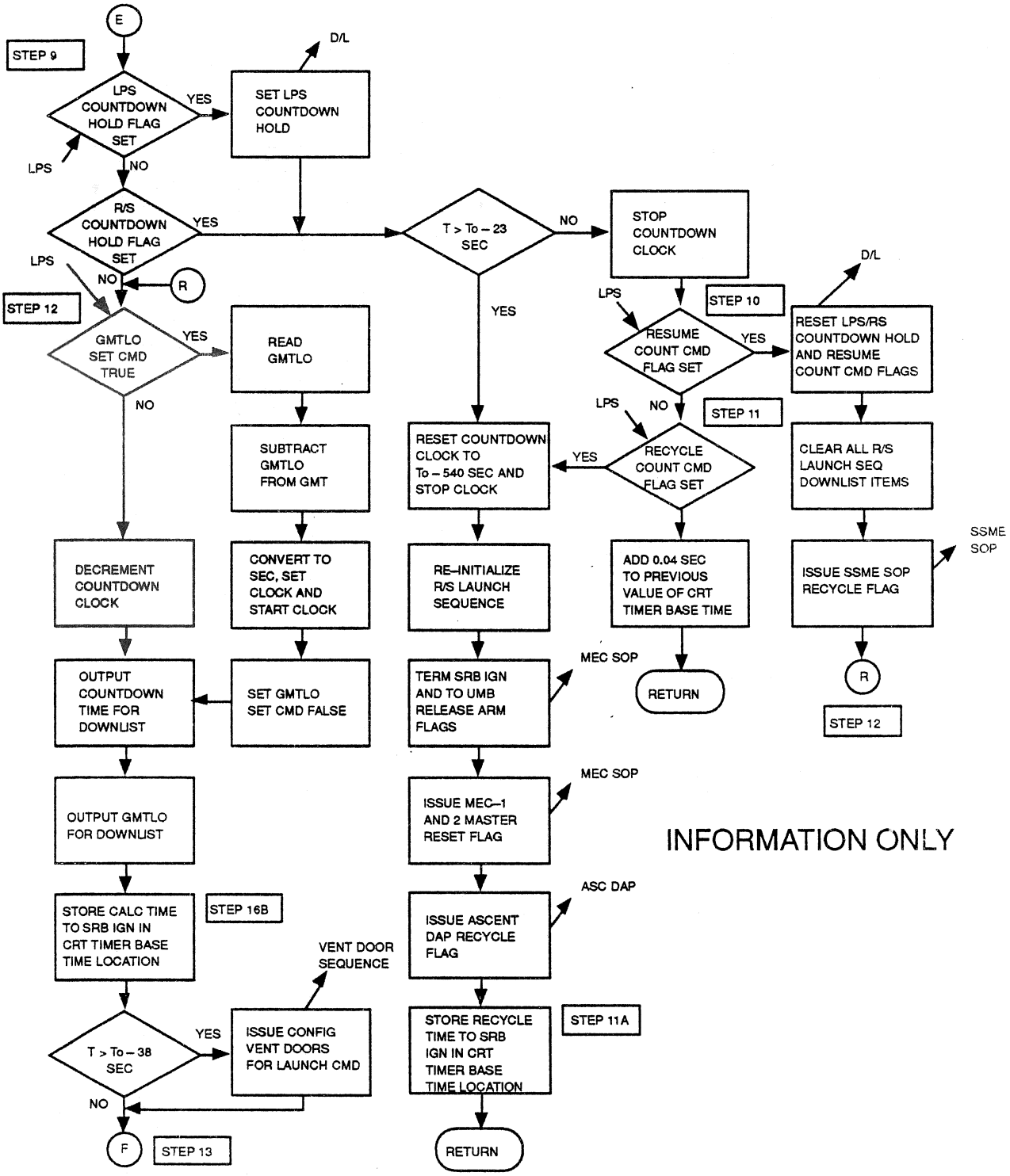

Figure 4.114. Redundant Set Launch Sequence (Sheet 5 of 13)

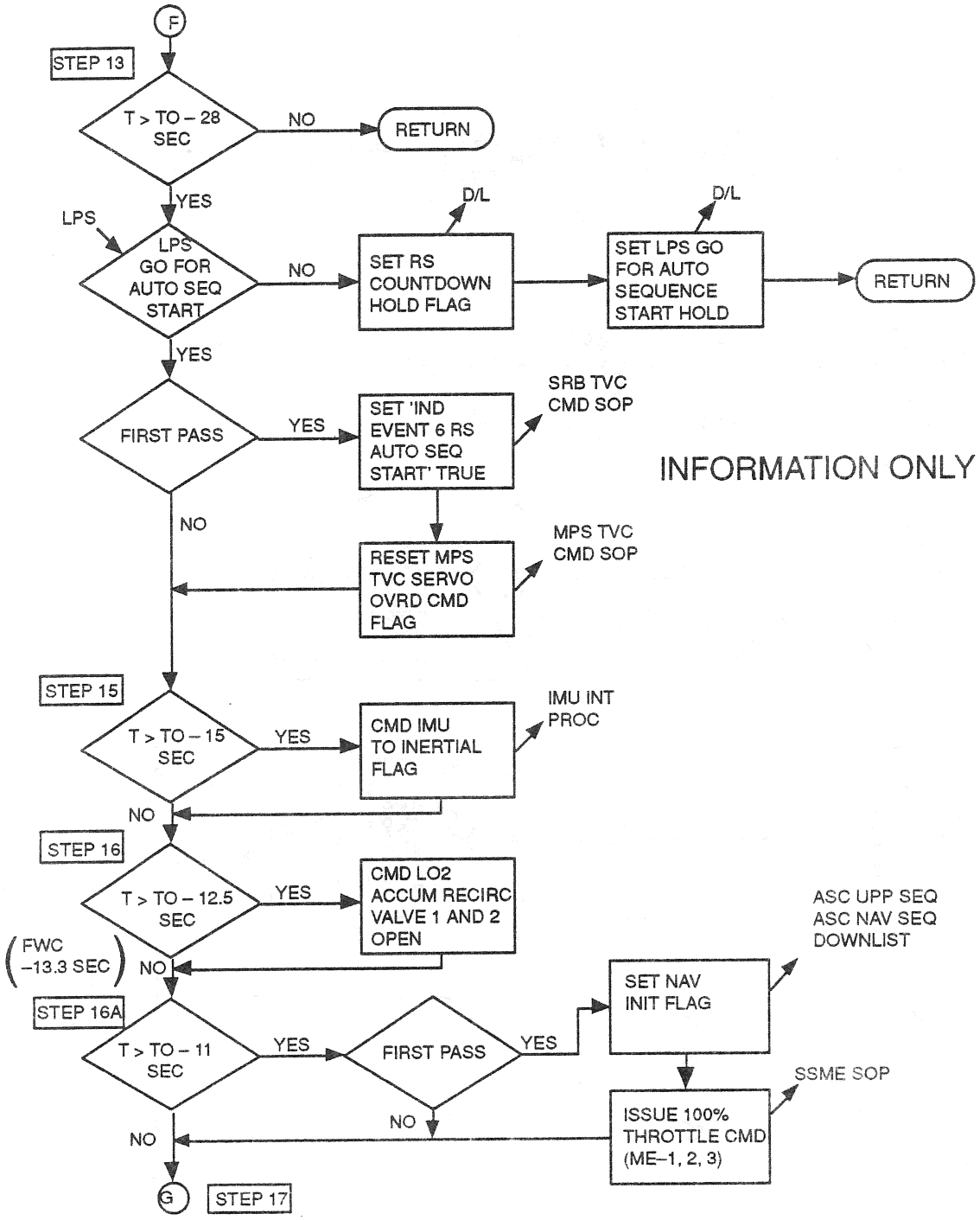

Figure 4.11–4. Redundant Set Launch Sequence (Sheet 6 of 13)

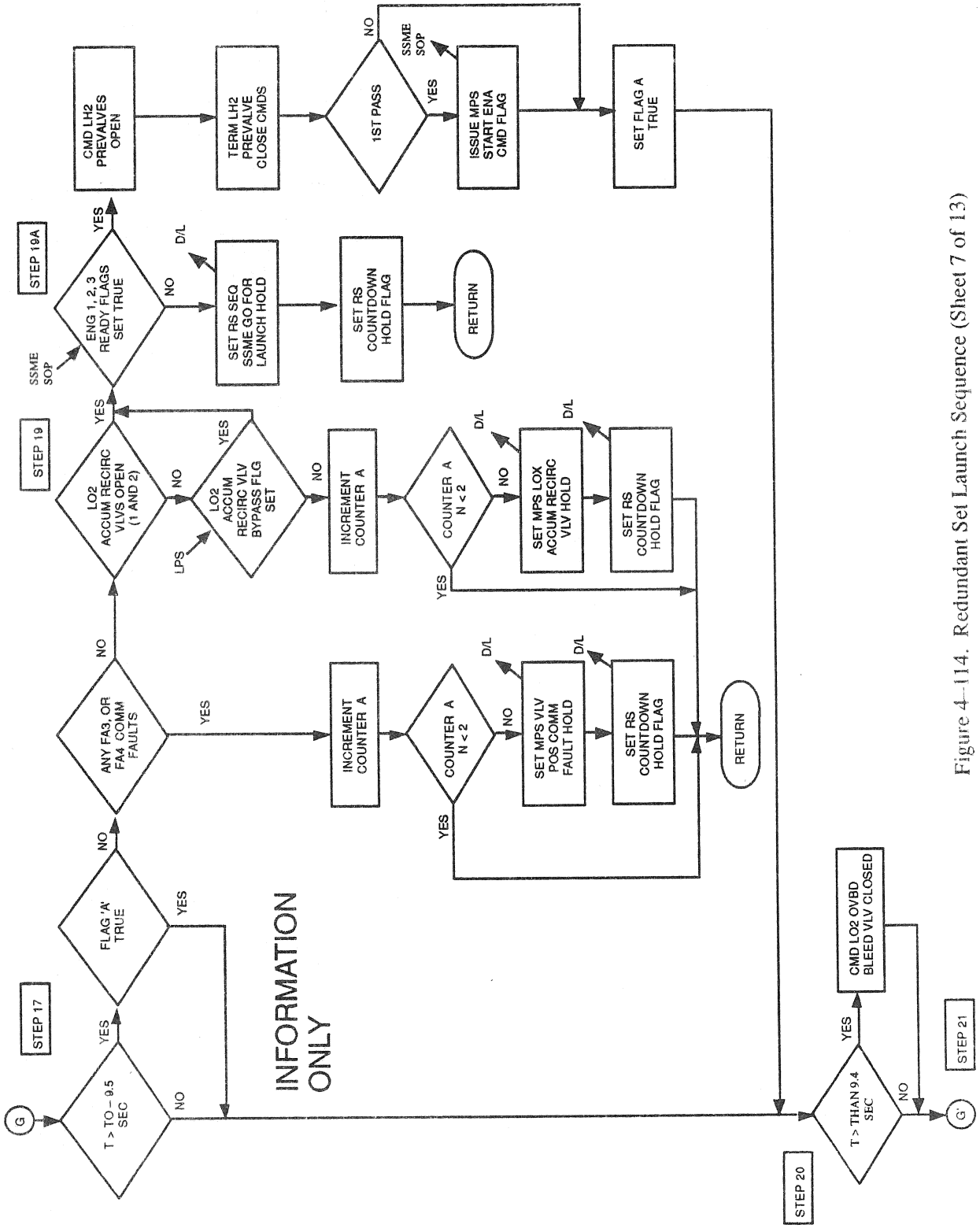

Figure 4–114. Redundant Set Launch Sequence (Sheet 7 of 13)

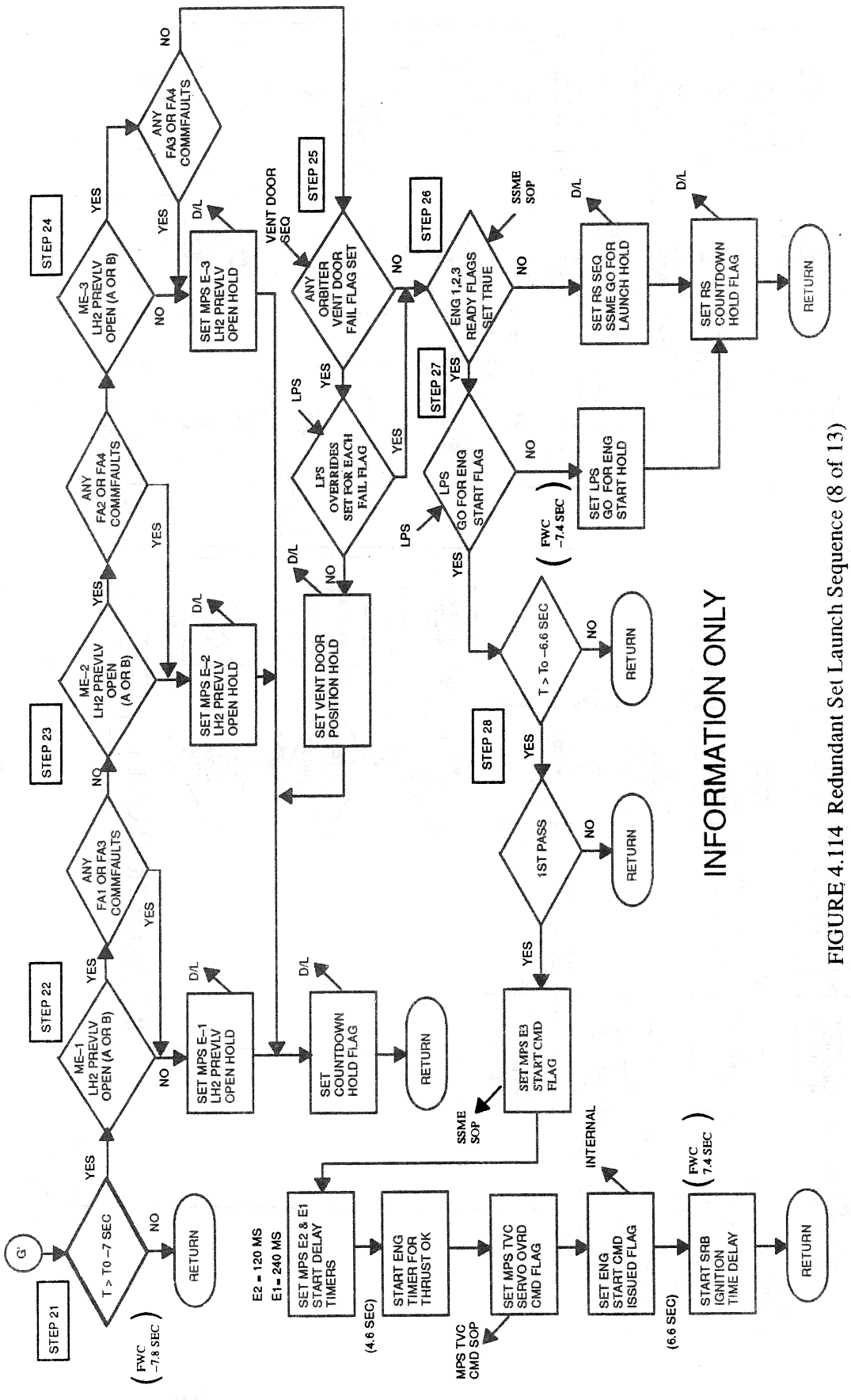

FIGURE 4.114 Redundant Set Launch Sequence (8 of 13)

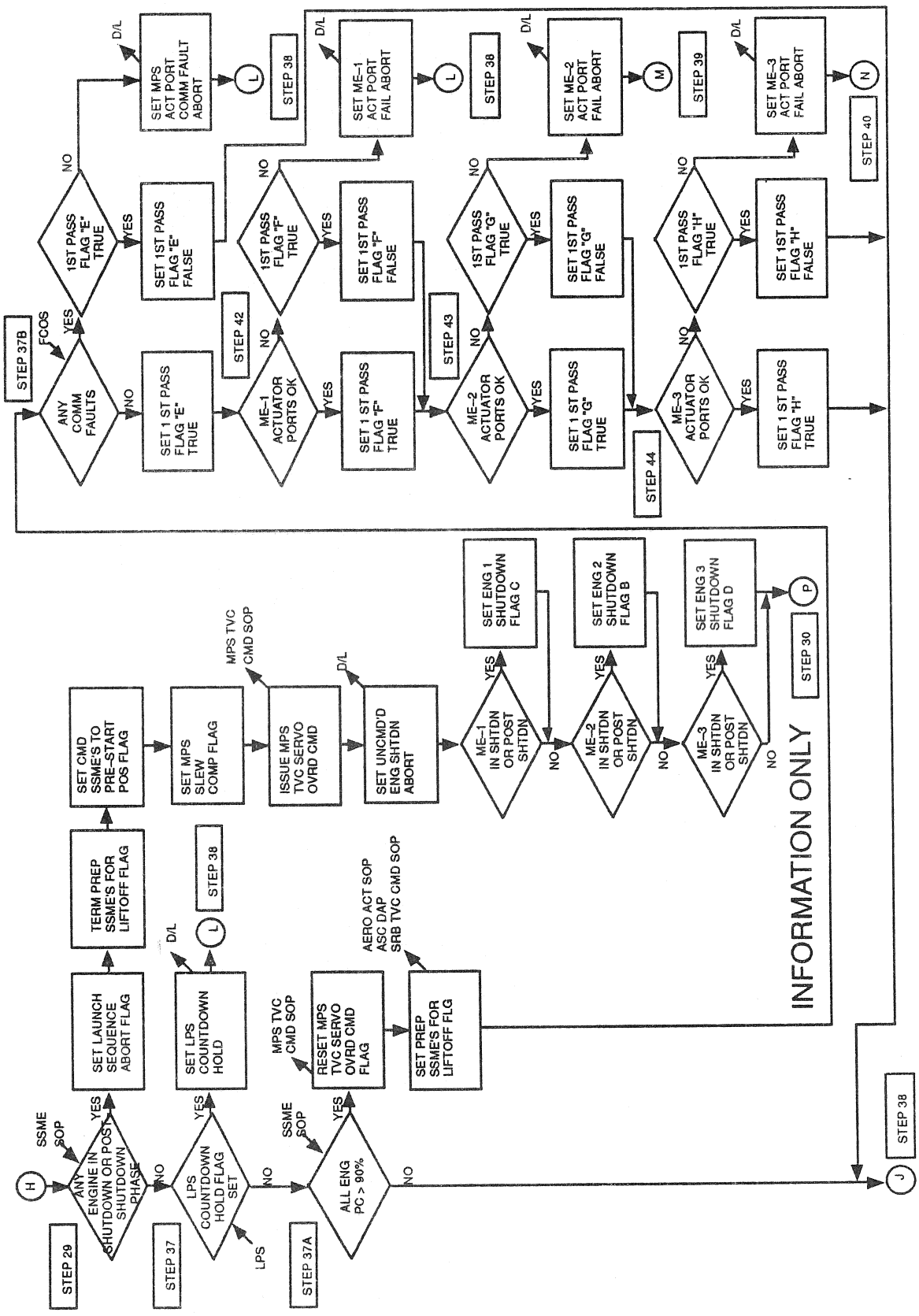

Figure 4.114. Redundant Set Launch Sequence (Sheet 9 of 13)

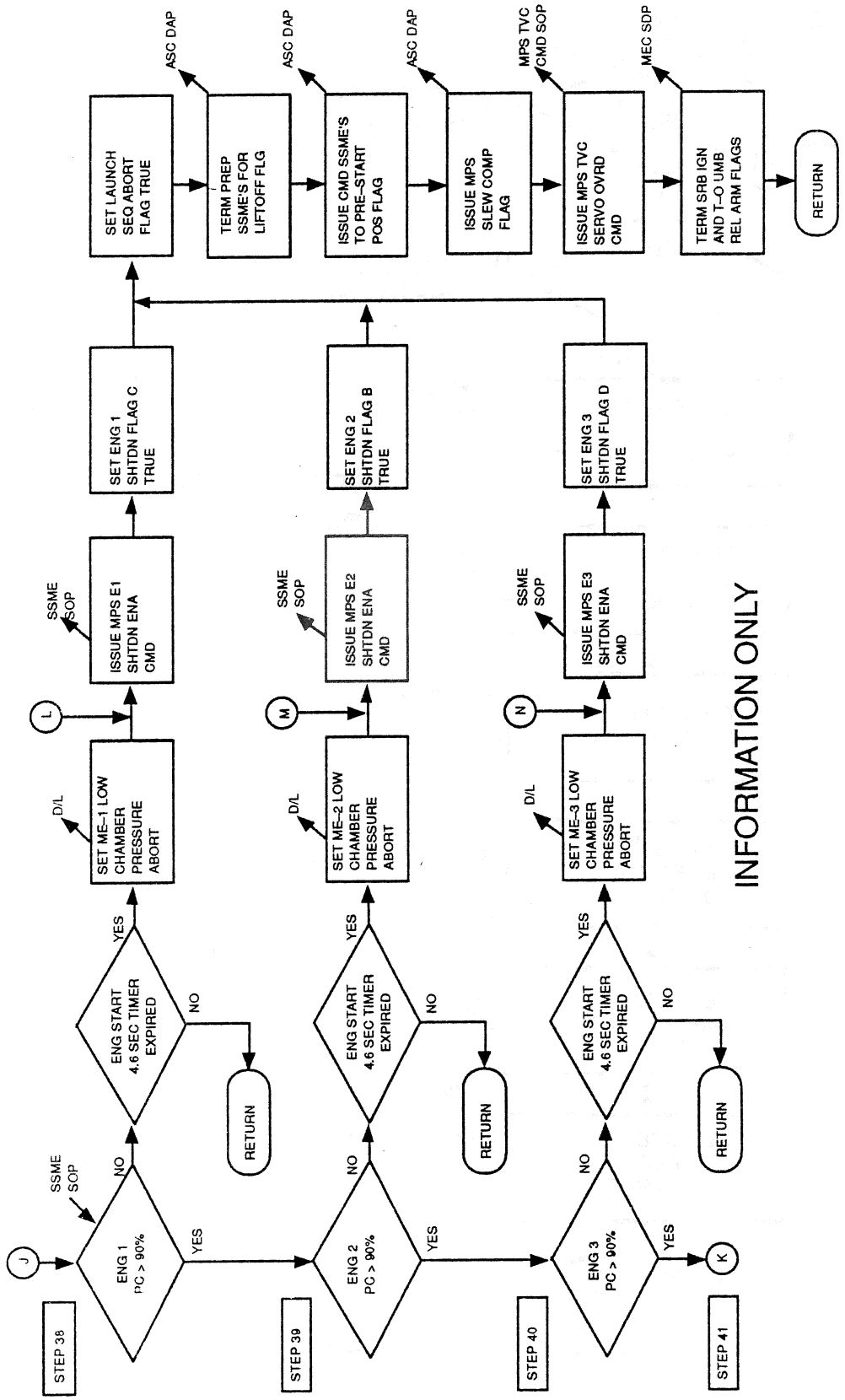

Figure 4.114. Redundant Set Launch Sequence (Sheet 10 of 13)

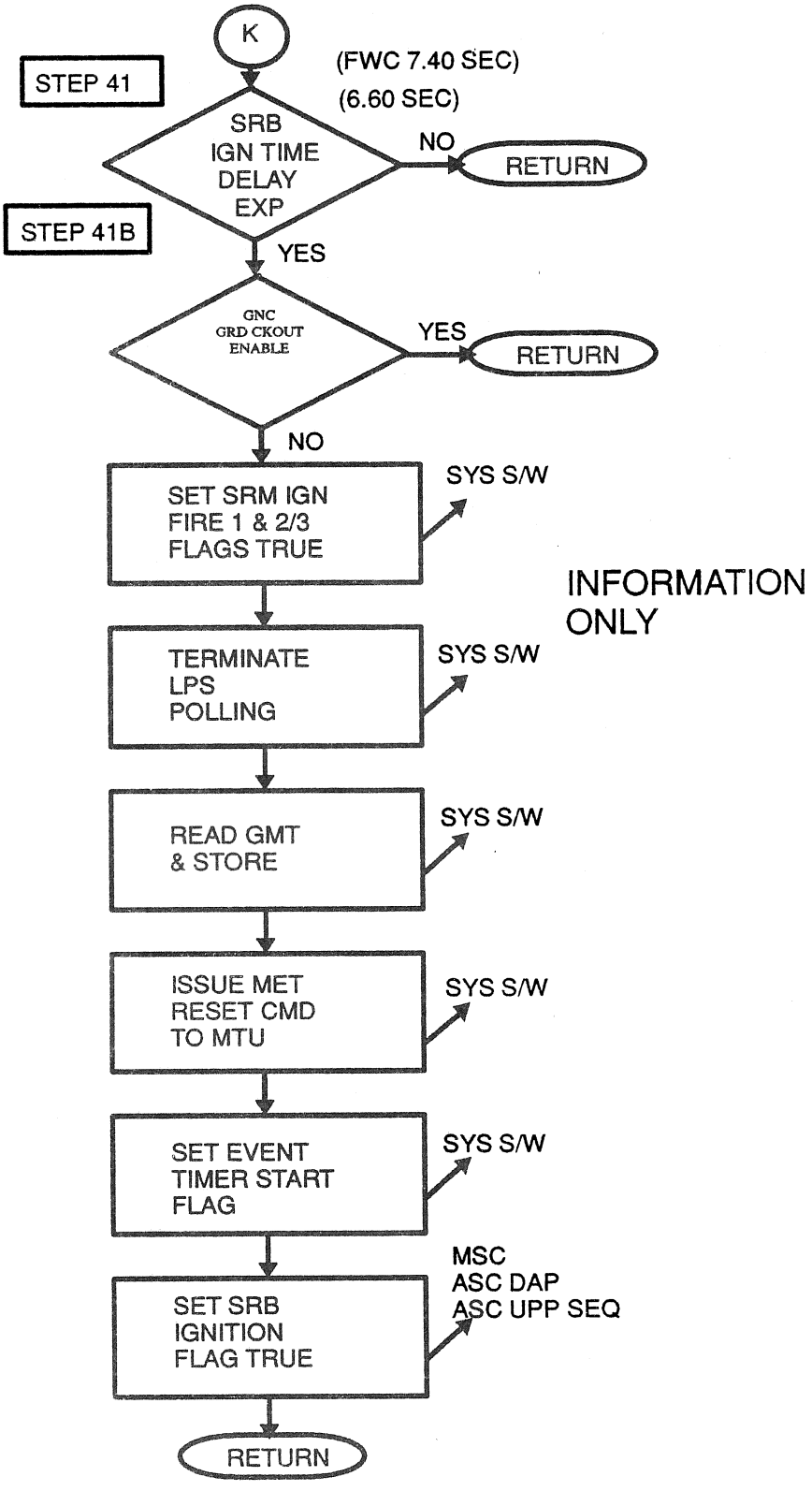

Figure 4.114 Redundant Set Launch Sequence (11 of 13)

INFORMATION ONLY

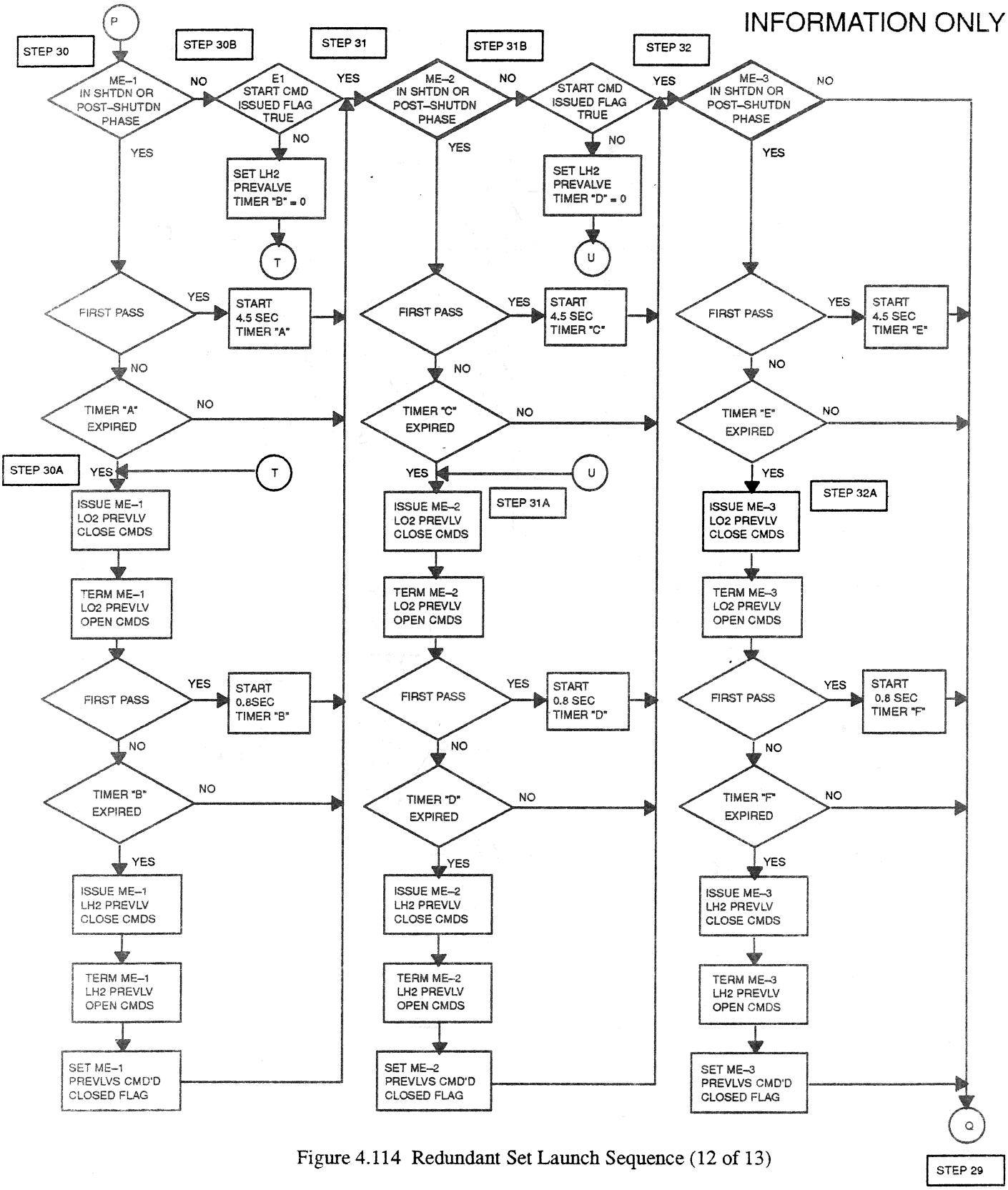

Figure 4.114 Redundant Set Launch Sequence (12 of 13)

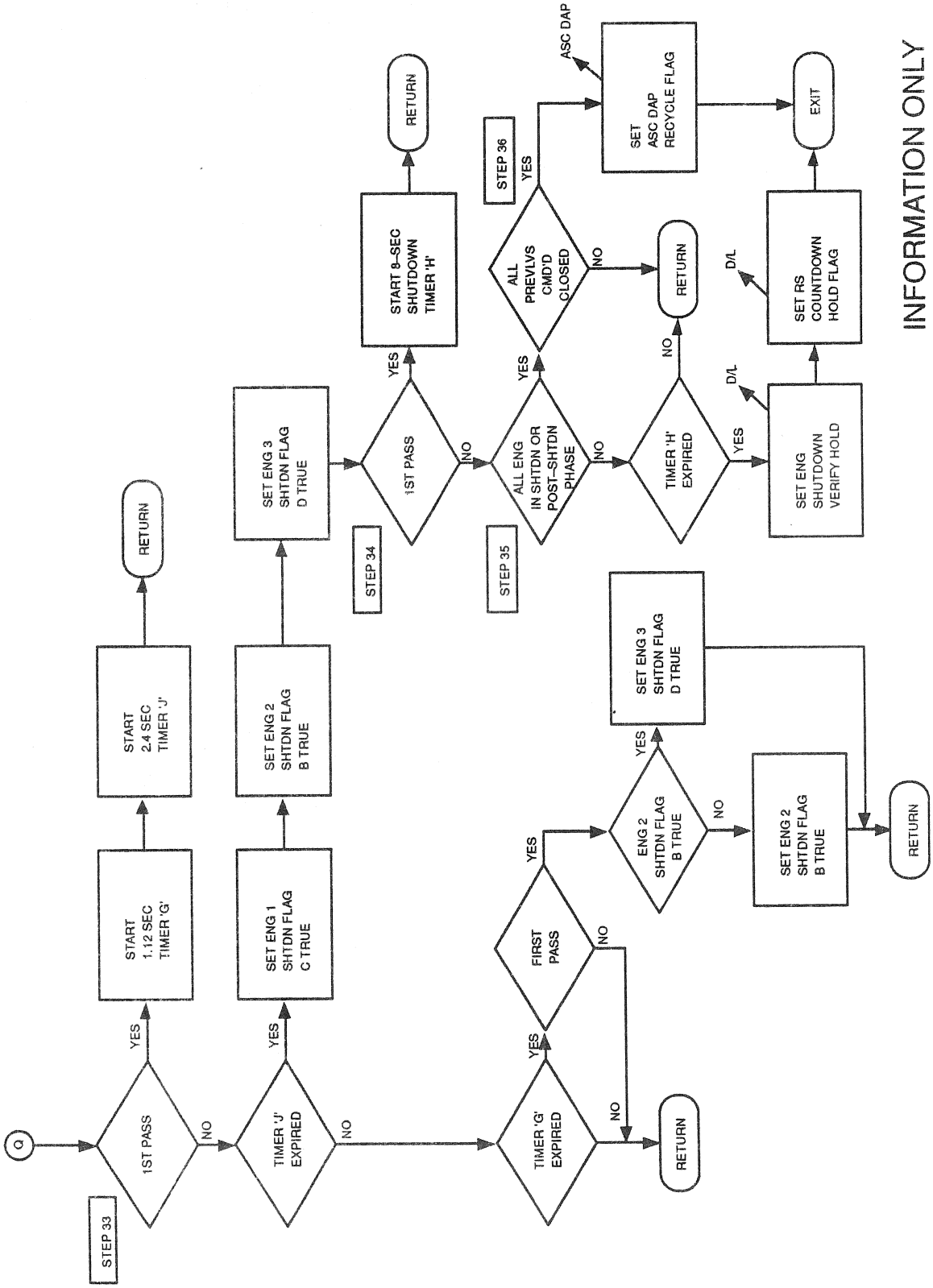

Figure 4.114. Redundant Set Launch Sequence (Sheet 13 of 13)

TABLE 4.1.1.4–1. REDUNDANT SET LAUNCH SEQUENCE (G4.114) INPUT/OUTPUT FUNCTIONAL PARAMETERS

DBFN: D3B027-F PN: VP707100049P00L INPUT FUNCTIONAL PARAMETERS FOR R/S LCH SEQ

FSSR NAME	M/S ID	NOMENCLATURE	SOURCE	UNITS	DATA TYPE	PREC	LAST CRS
CLOCK/CLOCKTIME	V91W5000C	CLOCK-COMPUTER(GMT)	FCOS	S			
ME_ELEC_LOCKUP(1)	V95X1194X	ME-1 ELECTRONIC LOCKUP MODE FLAG	SSME SOP				
ME_ELEC_LOCKUP(2)	V95X1195X	ME-2 ELECTRONIC LOCKUP MODE FLAG	SSME SOP				
ME_ELEC_LOCKUP(3)	V95X1196X	ME-3 ELECTRONIC LOCKUP MODE FLAG	SSME SOP				
ME_HYD_LOCKUP(1)	V95X1198X	ME-1 HYDRAULIC LOCKUP MODE FLAG	SSME SOP				
ME_HYD_LOCKUP(2)	V95X1199X	ME-2 HYDRAULIC LOCKUP MODE FLAG	SSME SOP				
ME_HYD_LOCKUP(3)	V95X1200X	ME-3 HYDRAULIC LOCKUP MODE FLAG	SSME SOP				
ME_LIM_EX(1)	V95X1190X	ME-1 ENGINE LIMIT EXCEEDED FLAG	SSME SOP				89672A 89157A
ME_LIM_EX(2)	V95X1191X	ME-2 ENGINE LIMIT EXCEEDED FLAG	SSME SOP				89672A 89157A
ME_LIM_EX(3)	V95X1192X	ME-3 ENGINE LIMIT EXCEEDED FLAG	SSME SOP				89672A 89157A
ME_READY(1)	V95X1182X	MPS E-1 ENG READY IND	SSME SOP				
ME_READY(2)	V95X1183X	MPS E-2 ENG READY IND	SSME SOP				
ME_READY(3)	V95X1184X	MPS E-3 ENG READY IND	SSME SOP				
MEPSTSHDN(1)	V95X1160X	MPS E1 POST-SHUTDOWN PHASE	SSME SOP				
MEPSTSHDN(2)	V95X1161X	MPS E2 POST-SHUTDOWN PHASE	SSME SOP				
MEPSTSHDN(3)	V95X1162X	MPS E3 POST-SHUTDOWN PHASE	SSME SOP				
MESHDN(1)	V95X1155X	MPS E1 SHUTDOWN PHASE	SSME SOP				
MESHDN(2)	V95X1156X	MPS E2 SHUTDOWN PHASE	SSME SOP				
MESHDN(3)	V95X1157X	MPS E3 SHUTDOWN PHASE	SSME SOP				
ME1_CH_PRESS_FDBK	V95U1186C	MPS E-1 PERCENT CH PRESS	SSME SOP	PCT			
ME2_CH_PRESS_FDBK	V95U1187C	MPS E-2 PERCENT CH PRESS	SSME SOP	PCT			
ME3_CH_PRESS_FDBK	V95U1188C	MPS E-3 PERCENT CH PRESS	SSME SOP	PCT			
R/S_AUTO_SEQ_START	V99X8803X	LPS GO FOR AUTO SEQUENCE START	LPS				89599C
RECYCLE_COUNT	V99X8830X	RECYCLE COUNT CMD FLAG	LPS				89599C
RESUME_COUNT	V99X8828X	RESUME COUNT CMD FLAG	LPS				89599C
	B55V1603C	LH VOLTAGE IGN PIC CAP A	LF IEA		AMU		
	B55V1604C	LH VOLTAGE IGN PIC CAP B	LF IEA		AMU		
	B55V2603C	RH VOLTAGE IGN PIC CAP A	RF IEA		AMU		
	B55V2604C	RH VOLTAGE IGN PIC CAP B	RF IEA		AMU		
	V41X1104X	MPS E1 LH2 PREVLV (PV4) OP IND A	HDWR		BD		89554A
	V41X1106X	MPS E1 LH2 PREVLV (PV4) OP IND B	HDWR		BD		89554A
	V41X1204X	MPS E2 LH2 PREVLV (PV5) OP IND A	HDWR		BD		89554A
	V41X1206X	MPS E2 LH2 PREVLV (PV5) OP IND B	HDWR		BD		89554A
	V41X1304X	MPS E3 LH2 PREVLV (PV6) OP IND A	HDWR		BD		89554A
	V41X1306X	MPS E3 LH2 PREVLV (PV6) OP IND B	HDWR		BD		89554A
	V41X1811X	MPS LO2 POGO RECRC 1 (PV20) OP IND	HDWR		BD		89554A
	V41X1821X	MPS LO2 POGO RECRC 2 (PV21) OP IND	HDWR		BD		89554A
	V79X1170X	MPS ENG 1 P ACTR A FAIL	ATVC 1		BD		79556D
	V79X1171X	MPS ENG 1 Y ACTR A FAIL	ATVC 1		BD		79556D
	V79X1173X	MPS ENG 1 P ACTR B FAIL	ATVC 2		BD		79556D

TABLE 4.1.1.4–1. REDUNDANT SET LAUNCH SEQUENCE (G4.114) INPUT/OUTPUT FUNCTIONAL PARAMETERS

DBFN: D3B027-F PN: VP707100049P00L INPUT FUNCTIONAL PARAMETERS FOR R/S LCH SEQ

FSSR NAME	M/S ID	NOMENCLATURE	SOURCE	UNITS	DATA TYPE	PREC	LAST CRS
	V79X1174X	MPS ENG 1 Y ACTR B FAIL	ATVC 2		BD		79556D
	V79X1176X	MPS ENG 1 P ACTR C FAIL	ATVC 3		BD		79556D
	V79X1177X	MPS ENG 1 Y ACTR C FAIL	ATVC 3		BD		79556D
	V79X1178X	MPS ENG 1 P ACTR D FAIL	ATVC 4		BD		79556D
	V79X1179X	MPS ENG 1 Y ACTR D FAIL	ATVC 4		BD		79556D
	V79X1270X	MPS ENG 2 P ACTR A FAIL	ATVC 1		BD		79556D
	V79X1271X	MPS ENG 2 Y ACTR A FAIL	ATVC 1		BD		79556D
	V79X1273X	MPS ENG 2 P ACTR B FAIL	ATVC 2		BD		79556D
	V79X1274X	MPS ENG 2 Y ACTR B FAIL	ATVC 2		BD		79556D
	V79X1276X	MPS ENG 2 P ACTR C FAIL	ATVC 3		BD		79556D
	V79X1277X	MPS ENG 2 Y ACTR C FAIL	ATVC 3		BD		79556D
	V79X1278X	MPS ENG 2 P ACTR D FAIL	ATVC 4		BD		79556D
	V79X1279X	MPS ENG 2 Y ACTR D FAIL	ATVC 4		BD		79556D
	V79X1370X	MPS ENG 3 P ACTR A FAIL	ATVC 1		BD		79556D
	V79X1371X	MPS ENG 3 Y ACTR A FAIL	ATVC 1		BD		79556D
	V79X1373X	MPS ENG 3 P ACTR B FAIL	ATVC 2		BD		79556D
	V79X1374X	MPS ENG 3 Y ACTR B FAIL	ATVC 2		BD		79556D
	V79X1376X	MPS ENG 3 P ACTR C FAIL	ATVC 3		BD		79556D
	V79X1377X	MPS ENG 3 Y ACTR C FAIL	ATVC 3		BD		79556D
	V79X1378X	MPS ENG 3 P ACTR D FAIL	ATVC 4		BD		79556D
	V79X1379X	MPS ENG 3 Y ACTR D FAIL	ATVC 4		BD		79556D
	V90J8201C	ORBITER VENT DOORS STATUS WORD	VENT CNTL SEQ		BSU		
	V91X2845X	FA1 INPUT PROM SEG3,10 STATUS(HFE)	FCOS				89991E
							89598A
	V91X2846X	FA2 INPUT PROM SEG3,10 STATUS(HFE)	FCOS				89991E
							89598A
	V91X2847X	FA3 INPUT PROM SEG3,10 STATUS(HFE)	FCOS				89991E
							89598A
	V91X2848X	FA4 INPUT PROM SEG3,10 STATUS(HFE)	FCOS				89598A
							59126H
	V91X2904X	FF1 MDM RETURN WORD BYPASS (HFE)	FCOS				
	V91X2905X	FF2 MDM RETURN WORD BYPASS (HFE)	FCOS				
	V91X2906X	FF3 MDM RETURN WORD BYPASS (HFE)	FCOS				
	V91X2907X	FF4 MDM RETURN WORD BYPASS (HFE)	FCOS				
	V91X2920X	FA1 MDM RETURN WORD BYPASS (HFE)	FCOS				
	V91X2921X	FA2 MDM RETURN WORD BYPASS (HFE)	FCOS				
	V91X2922X	FA3 MDM RETURN WORD BYPASS (HFE)	FCOS				
	V91X2923X	FA4 MDM RETURN WORD BYPASS (HFE)	FCOS				
	V93X5538X	GNC GROUND CHECKOUT ENABLE	UI		BD		90023A
	V95X1217X	ME-1 PAD DATA PATH FAIL FLAG	SSME SOP				
	V95X1218X	ME-2 PAD DATA PATH FAIL FLAG	SSME SOP				
	V95X1219X	ME-3 PAD DATA PATH FAIL FLAG	SSME SOP				
	V95X1230X	ME-1 MAJOR COMPONENT FAIL FLAG	SSME SOP				

TABLE 4.1.1.4–1. REDUNDANT SET LAUNCH SEQUENCE (G4.114) INPUT/OUTPUT FUNCTIONAL PARAMETERS

DBFN: D3B027-F PN: VP707100049P00L INPUT FUNCTIONAL PARAMETERS FOR R/S LCH SEQ

FSSR NAME	M/S ID	NOMENCLATURE	SOURCE	UNITS	DATA TYPE	PREC	LAST CRS
	V95X1231X	ME-2 MAJOR COMPONENT FAIL FLAG	SSME SOP				
	V95X1232X	ME-3 MAJOR COMPONENT FAIL FLAG	SSME SOP				
	V95X1236X	ME-1 CHANNEL FAIL FLAG	SSME SOP				
	V95X1237X	ME-2 CHANNEL FAIL FLAG	SSME SOP				
	V95X1238X	ME-3 CHANNEL FAIL FLAG	SSME SOP				
	V99W8801CA	PREDICTED GMT OF LIFTOFF	LPS				
	V99X8804X	LPS GO FOR ENGINE START FLAG	LPS				
	V99X8827X	GMTLO SET COMMAND	LPS				
	V99X8829X	LPS COUNTDOWN HOLD FLAG	LPS				
	V99X8833X	LPS BYPASS LO2 ACCUM RECIRC VLV OP	LPS				
	V99J8836CA	LPS ORBITER VENT DOORS OVRD WORD	LPS		BSU		89981A

TABLE 4.1.1.4–1. REDUNDANT SET LAUNCH SEQUENCE (G4.114) INPUT/OUTPUT FUNCTIONAL PARAMETERS

DBFN: D3B027-F PN: VP707100049P00L OUTPUT FUNCTIONAL PARAMETERS FROM R/S LCH SEQ

FSSR NAME	M/S ID	NOMENCLATURE	DESTINATION	UNITS	DATA TYPE	PREC	LAST CRS
A_D_RECYCLE_COUNT	V90X8669X	ASC DAP RECYCLE FLAG	ASC DAP				
AUTO_SEQ_IND	V90X8683X	INDICATOR EVENT 6 AUTO SEQ START	ASC DAP,SRB TVC CMD SOP, MSC				89599C
CMD_IMU_TO_INERTIAL_FLAG	V90X8411X	CMD IMU TO INERTIAL FLAG	IMU INT PROC				89599C
CONF_VENT_DOORS	V90X8375X	CONFIG VENT DOORS FOR LAUNCH CMD	VENT CNTL SEQ				89599C
HOLD_COUNT	V90X8667X	RS COUNTDOWN HOLD FLAG	TLM		BD		89599C
K_CMD	V90U1948CD	COMMANDED SSME THROTTLE SETTING	SSME SOP	PCT			
M_RSET_USER	V90X8258XC	MEC 1&2 MASTER RESET FLAG	MEC SOP				89456A
MESHDNCMD(1)	V90X8370XA	MPS E1 SHUTDOWN CMD	SSME SOP				
MESHDNCMD(2)	V90X8371XA	MPS E2 SHUTDOWN CMD	SSME SOP				
MESHDNCMD(3)	V90X8372XA	MPS E3 SHUTDOWN CMD	SSME SOP				
MESHDNENA(1)	V90X8367XA	MPS E1 SHUTDOWN ENABLE CMD	SSME SOP				
MESHDNENA(2)	V90X8368XA	MPS E2 SHUTDOWN ENABLE CMD	SSME SOP				
MESHDNENA(3)	V90X8369XA	MPS E3 SHUTDOWN ENABLE CMD	SSME SOP				
MESTRTCMD(1)	V90X8358X	MPS E1 START CMD FLAG	SSME SOP				
MESTRTCMD(2)	V90X8359X	MPS E2 START CMD FLAG	SSME SOP				
MESTRTCMD(3)	V90X8360X	MPS E3 START CMD FLAG	SSME SOP,SRB TVC CMD SOP				
MESTRTENA	V90X8361X	MPS START ENABLE CMD FLAG	SSME SOP				
MPS_OVRD_CMD	V90X8374XA	MPS TVC SERVO OVRD CMD	MPS TVC CMD SOP				
MPS_SLEW_COMPLETE	V90X8400XA	MPS SLEW CHECK COMPLETE FLAG	ASC DAP				89599C
NAV_INIT_FLAG	V90X8414X	NAV INIT FLAG	ASC UPP SEQ,ASC NAV SEQ,TLM		BD		89599C
PREP_SSMES	V90X8373X	PREP SSME'S FOR LIFTOFF FLAG	ASC DAP,AERO ACT SOP,TLM		BD		89599C
RETURN_SSME_TO_START_POS	V90X8412X	CMD SSME'S TO PRE-START POS FLAG	ASC DAP,TLM		BD		
SRB_IGNITION_CMD	V90X8377X	SRB IGNITION CMD FLAG	ASC DAP,ASC UPP SEQ,MSC, SSME SOP,TLM		BD		
SRM_IGN_ARM	V90X8404X	SRM IGN ARM FLAG	MEC SOP				89456A
SRM_IGN_FIRE1	V90X8405X	SRM IGN FIRE 1 FLAG	MEC SOP				89456A
SRM_IGN_FIRE2/3	V90X8699X	SRM IGN FIRE 2/3 FLAG	MEC SOP,TLM		BD		89456A
TO_UMB_ARM	V90X8407X	T-0 UMB RELEASE ARM FLAG	MEC SOP				89456A
TO_UMB_FIRE 2/3	V90X8698X	T-0 UMB RELEASE FIRE 2/3 FLAG	MEC SOP				89599C
							89456A
TO_UMB_FIRE1	V90X8408X	T-0 UMB RELEASE FIRE 1 FLAG	MEC SOP				89456A
	V41K1119XC	MPS E1 LH2 PREVLV (PV4) OP CMD A	PCA A1				89554A
	V41K1120XC	MPS E1 LH2 PREVLV (PV4) OP CMD B	LCA A1				89554A
	V41K1121XC	MPS E1 LH2 PREVLV (PV4) OP CMD C	LCA A2				89554A
	V41K1122XC	MPS E1 LH2 PREVLV (PV4) CL CMD A	PCA A1				89554A
	V41K1123XC	MPS E1 LH2 PREVLV (PV4) CL CMD B	LCA A1				89554A
	V41K1124XC	MPS E1 LH2 PREVLV (PV4) CL CMD C	LCA A2				89554A
	V41K1136XC	MPS E1 LO2 PREVLV (PV1) OP CMD A	PCA A1				89554A
	V41K1137XC	MPS E1 LO2 PREVLV (PV1) OP CMD B	LCA A1				89554A
	V41K1138XC	MPS E1 LO2 PREVLV (PV1) OP CMD C	LCA A2				89554A
	V41K1139XC	MPS E1 LO2 PREVLV (PV1) CL CMD A	PCA A1				89554A
	V41K1140XC	MPS E1 LO2 PREVLV (PV1) CL CMD B	LCA A1				89554A

TABLE 4.1.1.4–1. REDUNDANT SET LAUNCH SEQUENCE (G4.114) INPUT/OUTPUT FUNCTIONAL PARAMETERS

DBFN: D3B027-F PN: VP707100049P00L OUTPUT FUNCTIONAL PARAMETERS FROM R/S LCH SEQ

FSSR NAME	M/S ID	NOMENCLATURE	DESTINATION	UNITS	DATA TYPE	PREC	LAST CRS
	V41K1141XC	MPS E1 LO2 PREVLV (PV1) CL CMD C	LCA A2				89554A
	V41K1142XB	MPS E1 LO2 PREVLV (PV1) CL CMD D	HDWR				89554A
	V41K1143XB	MPS E1 LO2 PREVLV (PV1) OP CMD D	HDWR				89554A
	V41K1168XC	MPS E1 HE INTCN OUT(LV60) OP CMD A	HDWR				89554A
							79997A
	V41K1219XC	MPS E2 LH2 PREVLV (PV5) OP CMD A	PCA A2				89554A
	V41K1220XC	MPS E2 LH2 PREVLV (PV5) OP CMD B	LCA A2				89554A
	V41K1221XC	MPS E2 LH2 PREVLV (PV5) OP CMD C	LCA A3				89554A
	V41K1222XC	MPS E2 LH2 PREVLV (PV5) CL CMD A	PCA A2				89554A
	V41K1223XC	MPS E2 LH2 PREVLV (PV5) CL CMD B	LCA A2				89554A
	V41K1224XC	MPS E2 LH2 PREVLV (PV5) CL CMD C	LCA A3				89554A
	V41K1236XC	MPS E2 LO2 PREVLV (PV2) OP CMD A	PCA A2				89554A
	V41K1237XC	MPS E2 LO2 PREVLV (PV2) OP CMD B	LCA A2				89554A
	V41K1238XC	MPS E2 LO2 PREVLV (PV2) OP CMD C	LCA A3				89554A
	V41K1239XC	MPS E2 LO2 PREVLV (PV2) CL CMD A	PCA A2				89554A
	V41K1240XC	MPS E2 LO2 PREVLV (PV2) CL CMD B	LCA A2				89554A
	V41K1241XC	MPS E2 LO2 PREVLV (PV2) CL CMD C	LCA A3				89554A
	V41K1242XB	MPS E2 LO2 PREVLV (PV2) CL CMD D	HDWR				89554A
	V41K1243XB	MPS E2 LO2 PREVLV (PV2) OP CMD D	HDWR				89554A
	V41K1262XC	MPS E2 HE INTCN IN (LV61) OP CMD A	HDWR				89554A
							79997A
	V41K1263XC	MPS E2 HE INTCN IN (LV61) OP CMD B	HDWR				89554A
							79997A
	V41K1319XC	MPS E3 LH2 PREVLV (PV6) OP CMD A	PCA A3				89554A
	V41K1320XC	MPS E3 LH2 PREVLV (PV6) OP CMD B	LCA A3				89554A
	V41K1321XC	MPS E3 LH2 PREVLV (PV6) OP CMD C	LCA A1				89554A
	V41K1322XC	MPS E3 LH2 PREVLV (PV6) CL CMD A	PCA A3				89554A
	V41K1323XC	MPS E3 LH2 PREVLV (PV6) CL CMD B	LCA A3				89554A
	V41K1324XC	MPS E3 LH2 PREVLV (PV6) CL CMD C	LCA A1				89554A
	V41K1336XC	MPS E3 LO2 PREVLV (PV3) OP CMD A	PCA A3				89554A
	V41K1337XC	MPS E3 LO2 PREVLV (PV3) OP CMD B	LCA A3				89554A
	V41K1338XC	MPS E3 LO2 PREVLV (PV3) OP CMD C	LCA A1				89554A
	V41K1339XC	MPS E3 LO2 PREVLV (PV3) CL CMD A	PCA A3				89554A
	V41K1340XC	MPS E3 LO2 PREVLV (PV3) CL CMD B	LCA A3				89554A
	V41K1341XC	MPS E3 LO2 PREVLV (PV3) CL CMD C	LCA A1				89554A
	V41K1342XB	MPS E3 LO2 PREVLV (PV3) CL CMD D	HDWR				89554A
	V41K1343XB	MPS E3 LO2 PREVLV (PV3) OP CMD D	HDWR				89554A
	V41K1368XC	MPS E3 HE INTCN OUT(LV64) OP CMD A	HDWR				89554A
							79997A
	V41K1421XB	MPS LH2 RECIRC DISC VLV OPEN CMD	HDWR		BD		89313A
	V41K1422XC	MPS LH2 RECIRC DISC VLV CLOSE CMD	HDWR		BD		89313A
	V41K1584XA	MPS LO2 OVBD B/V (PV19) CL CMD A	PCA A3				89554A
	V41K1585XA	MPS LO2 OVBD B/V (PV19) CL CMD B	LCA A3				89554A

TABLE 4.1.1.4–1. REDUNDANT SET LAUNCH SEQUENCE (G4.114) INPUT/OUTPUT FUNCTIONAL PARAMETERS

DBFN: D3B027-F PN: VP707100049P00L OUTPUT FUNCTIONAL PARAMETERS FROM R/S LCH SEQ

FSSR NAME	M/S ID	NOMENCLATURE	DESTINATION	UNITS	DATA TYPE	PREC	LAST CRS
	V41K1586XA	MPS LO2 OVBD B/V (PV19) CL CMD C	LCA A2				89554A
	V41K1613XD	MPS REG HE XOVER VLV (LV10) OP CMD	HDWR				89554A
							79997A
	V41K1815X	MPS LO2 POGO RECRC 1(PV20)CL CMD A	LCA A1		BD		89554A
	V41K1816X	MPS LO2 POGO RECRC 1(PV20)CL CMD B	LCA A1		BD		89554A
	V41K1825X	MPS LO2 POGO RECRC 2(PV21)CL CMD A	LCA A2		BD		89554A
	V41K1826X	MPS LO2 POGO RECRC 2(PV21)CL CMD B	LCA A2		BD		89554A
	V90X8378X	TERMINATE LPS POLLING FLAG	SYS S/W				
	V90W8380C	COUNTDOWN TIME	TLM	S	SPL		89598A
	V90X8382X	LAUNCH SEQUENCE ABORT FLAG	TLM		BD		89819
	V90X8383X	LH IGN PIC CAP A HOLD	TLM		BD		
	V90X8384X	LH IGN PIC CAP B HOLD	TLM		BD		
	V90X8385X	RH IGN PIC CAP A HOLD	TLM		BD		
	V90X8386X	RH IGN PIC CAP B HOLD	TLM		BD		
	V90X8389X	ENGINE SHUTDOWN VERIFICATION HOLD	TLM		BD		
	V90X8390X	MPS LH2 OUTBD FILL VLV HOLD	TLM		BD		89355C
	V90X8391X	MPS LOX OUTBD FILL VLV HOLD	TLM		BD		89355C
	V90X8392X	MPS LOX ACC RECIRC VLV HOLD	TLM		BD		
	V90X8393X	LPS GO FOR AUTO SEQ START HOLD	TLM		BD		
	V90X8394X	LPS GO FOR ENGINE START HOLD	TLM		BD		
	V90X8395X	R/S SEQ SSME GO FOR LAUNCH HOLD	TLM		BD		
	V90X8396X	MPS E-1 LH2 PREVLV OPEN HOLD	TLM		BD		
	V90X8397X	MPS E-2 LH2 PREVLV OPEN HOLD	TLM		BD		
	V90X8398X	MPS E-3 LH2 PREVLV OPEN HOLD	TLM		BD		
	V90X8401X	MODE CONTROL MET RESET CMD	SYS S/W				
	V90X8402X	READ GMT & STORE FLAG	SYS S/W				
	V90X8403XA	EVENT TIMER START FLAG	SYS S/W				
	V90X8668X	SSME SOP RECYCLE FLAG	SSME SOP				
	V90X8670X	ME-1 PAD DATA PATH FAIL HOLD	TLM		BD		
	V90X8671X	ME-2 PAD DATA PATH FAIL HOLD	TLM		BD		
	V90X8672X	ME-3 PAD DATA PATH FAIL HOLD	TLM		BD		
	V90X8679X	ME-1 CONTROL FAIL HOLD	TLM		BD		
	V90X8680X	ME-2 CONTROL FAIL HOLD	TLM		BD		
	V90X8681X	ME-3 CONTROL FAIL HOLD	TLM		BD		
	V90X8767X	FLIGHT CRITICAL MDM HOLD/ABORT	TLM		BD		
	V90X8768X	LPS COUNTDOWN HOLD	TLM		BD		
	V90X8769X	MPS VALVE POS COMMFAULT HOLD	TLM		BD		
	V90X8770X	VENT DOOR POSITION HOLD	TLM		BD		
	V90X8771X	UNCOMMANDED ENGINE SHUTDOWN ABORT	TLM		BD		
	V90X8772X	MPS ACT PORT COMMFAULT ABORT	TLM		BD		
	V90X8773X	ME-1 LOW CHAMBER PRESSURE ABORT	TLM		BD		
	V90X8774X	ME-2 LOW CHAMBER PRESSURE ABORT	TLM		BD		
	V90X8775X	ME-3 LOW CHAMBER PRESSURE ABORT	TLM		BD		

TABLE 4.1.1.4–1. REDUNDANT SET LAUNCH SEQUENCE (G4.114) INPUT/OUTPUT FUNCTIONAL PARAMETERS

DBFN: D3B027-F PN: VP707100049P00L OUTPUT FUNCTIONAL PARAMETERS FROM R/S LCH SEQ

FSSR NAME	M/S ID	NOMENCLATURE	DESTINATION	UNITS	DATA TYPE	PREC	LAST CRS
	V90X8776X	ME-1 ACT PORT FAIL ABORT	TLM		BD		
	V90X8777X	ME-2 ACT PORT FAIL ABORT	TLM		BD		
	V90X8778X	ME-3 ACT PORT FAIL ABORT	TLM		BD		
	V99W8801CB	PREDICTED GMT OF LIFTOFF	TLM				
	V99J8836CB	LPS ORBITER VENT DOORS OVRD WORD	TLM		BSU		89981A

TABLE 4.1.1.4–2. REDUNDANT SET LAUNCH SEQUENCE PROCESSING (G4.114) I–LOADS

DBFN:0484

FSSR NAME	MSID	ENG UNIT	DT	PR	D	S	PR	FCTN	CAT
ALL_ENG_PERCENT_CHB_PRS_CHK	V97U9713C	PCT	F	S	D	P	G4.114		ZSZ7
AUTO_RECYCLE_T	V97U9705C	SEC	F	S	D	P	G4.114		ZSZ7
CHK_MPS_VLVS_POS_T	V97U9709C	SEC	F	S	D	P	G4.114		QSA0
CHK_PREVLVS_OPN_T	V97U9711C	SEC	F	S	D	P	G4.114		QSA0
CLSE_LO2_OVBD_BV_T	V97U9710C	SEC	F	S	D	P	G4.114		QSA0
CONFIG_VNT_DRS_FOR_LCH_T	V97U9708C	SEC	F	S	D	P	G4.114		ZFZ1
ENG_PERCENT_CHB_PRS_FOR_GO	V97U9714C	PCT	F	S	D	P	G4.114		ZFZ1
ENG_TIMER_FOR_THRUST_OK	V97U9716C	SEC	F	S	D	P	G4.114		ZFZ1
IMU_TO_INERTIAL_T	V97U9704C	SEC	F	S	D	P	G4.114		ZSZ7
LPS_GO_FOR_AUTO_SEQ_T	V97U9700C	SEC	F	S	D	P	G4.114		ZSZ7
ME1_LH2_PREVLV_CLSE_T_DELAY	V97U9727C	SEC	F	D	D	P	G4.114		ZSZ7
ME1_LOX_PREVLV_CLSE_DELAY	V97U9720C	SEC	F	S	D	P	G4.114		ZSZ7
ME2_LH2_PREVLV_CLSE_T_DELAY	V97U9728C	SEC	F	D	D	P	G4.114		ZSZ7
ME2_LOX_PREVLV_CLSE_DELAY	V97U9721C	SEC	F	S	D	P	G4.114		ZSZ7
ME3_LH2_PREVLV_CLSE_T_DELAY	V97U9729C	SEC	F	D	D	P	G4.114		ZSZ7
ME3_LOX_PREVLV_CLSE_DELAY	V97U9722C	SEC	F	S	D	P	G4.114		ZSZ7
NAV_INIT_T	V97U9707C	SEC	F	S	D	P	G4.114		ZSZ7
OPN_LO2_ACC_RECIRC_VLV_T	V97U9706C	SEC	F	S	D	P	G4.114		QSA0
SRB_IGN_ARM_T	V97U9701C	SEC	F	S	D	P	G4.114		QSA0
SRB_IGN_PIC_LEVEL	V97U9853C	COUNTS	I	S	D	P	G4.114		ZFZ1
SRB_IGN_TIME_DELAY	V97U9726C	SEC	F	S	D	P	G4.114		QSA0
SRB_PIC_VOLTS_CHK_T	V97U9702C	SEC	F	S	D	P	G4.114		QSA0
START_SSMES_T	V97U9712C	SEC	F	S	D	P	G4.114		QSA0

TABLE 4.1.1.4–2. REDUNDANT SET LAUNCH SEQUENCE PROCESSING (G4.114) I–LOADS

DBFN:0484

FSSR NAME	MSID	ENG UNIT	DT	PR	D	S	PR	FCTN	CAT
VERIFY_ALL_ENG_SHTDN_TIMER	V97U9719C	SEC	F	S	D	P	G4.114		ZSZ7

TABLE 4.1.1.4–3. REDUNDANT SET LAUNCH SEQUENCE PROCESSING (G4.114) K–LOADS

DBFN:0558

FSSR NAME DESCRIPTION	MSID	MC KLOAD VALUE	ENG UNIT	DT PR S PR FCTN	LAST CR EQTN MSID
NO REQUIREMENTS					

TABLE 4.1.1.4–4. REDUNDANT SET LAUNCH SEQUENCE PROCESSING (G4.114) CONSTANTS

DBFN:0558

FSSR NAME DESCRIPTION	MSID	MC	CONSTANT VALUE	ENG UNIT	DT	PR	S	PR FCTN	LAST CR
TIMER_G_SHTDN_TIME_DELAY TIMER "G" SHTDN TIME DELAY	V97U6242C		+1.12 E+00	SEC	F	D	P	G4.114	90374
TIMER_J_SHTDN_TIME_DELAY TIMER "J" SHTDN TIME DELAY	V97U6243C		+2.40 E+00	SEC	F	D	P	G4.114	90374

THIS PAGE INTENTIONALLY LEFT BLANK

4.1.2 MPS Dedicated Drive Sequence (4.222)

4.1.2.1 Introduction

The main propulsion system (MPS) dedicated display drive sequence is used during prelaunch and ascent to monitor certain MPS data and drive the appropriate MPS dedicated displays. The sequence is initiated at the transition to OPS 1 and runs continuously until structural separation of the external tank (ET). The sequence provides outputs for driving the MPS chamber pressure (Pc) meter and the MPS status lights for each SSME. In addition, the sequence issues the prevalve close inhibit commands when the chamber pressure for each engine reaches the appropriate level during engine start. Likewise, these commands are removed at the proper level during shutdown of each main engine. The prevalve close inhibit commands are issued through flight-critical MDM's to load control assemblies, which prevent closure of the prevalves any time the chamber pressure is above a certain level.

4.1.2.2 Overview

The MPS dedicated display drive sequence monitors the SSME status via SSME SOP flags for each engine; and, if an engine limit is exceeded or an engine enters the shutdown phase, it will turn on the red status light for that engine. It also monitors for indication of an electronic lockup, hydraulic lockup, flight data path fail, or the command path fail. Any one of these will turn on the amber status light for that engine. After main engine cutoff and ET separation, the red and amber status lights for all engines are commanded off.

The sequence also monitors the averaged chamber pressure data from each SSME via the SSME SOP and drives the dedicated meters. In addition, the sequence issues the prevalve close inhibit Commands A, B, C for each SSME prevalve when that engine reaches a particular percent thrust. Likewise, these commands are removed when the pressure decreases below that level during SSME shutdown and tail-off, or after MECO COMMAND. When the loss of valid data from an engine occurs, the SSME SOP sets the flight data path fail flag, and the prevalve close inhibit commands are removed. The chamber pressure (Pc) meter is also driven to zero if the flight data path fail flag is set.

4.1.2.3 Detailed Requirements

Step 1 – ET Structural Separation Command Check. This step monitors for a flag from the ET separation sequence, which indicates that structural separation commands have been issued. When the flag is set, all of the MPS red and amber status lights are commanded off.

Monitor the following

(a) ET SEPARATION CMD FLAG — V90X8250X

If (a) = false, proceed to Step 2.

If (a) = true, terminate the following commands and then terminate this sequence:

(1)	MPS E-1 STATUS/RED LITE ON	V72X0030X
(2)	MPS E-1 STATUS/AMBER LITE ON	V72X0035X
(3)	MPS E-2 STATUS/RED LITE ON	V72X0031X
(4)	MPS E-2 STATUS/AMBER LITE ON	V72X0036X
(5)	MPS E-3 STATUS/RED LITE ON	V72X0032X
(6)	MPS E-3 STATUS/AMBER LITE ON	V72X0037X

Step 2 – ME-1 Red Status Light Control. This step monitors the ME-1 engine status; and if the engine limit is exceeded or if the engine enters shutdown, then the red status light is commanded on.

Monitor the following:

(a)	ME-1 ENGINE LIMIT EXCEEDED FLAG	V95X1190X
(b)	MPS E-1 SHUTDOWN PHASE	V95X1155X
(c)	MPS E-1 POSTSHUTDOWN PHASE	V95X1160X

If neither (a) nor (b) nor (c) = true, then terminate output (1) below and proceed to Step 3.

If either (a) or (b) or (c) = true, then issue the following output and proceed to Step 3.

(l)	MPS E-1 STATUS/RED LITE ON	V72X0030X

Step 3 – ME-1 Amber Status Light Control. This step monitors the ME-1 engine status via flags from the SSME SOP; and if either electronic lockup or hydraulic lockup mode is indicated or if the engine data path or command path is lost, then the amber status light is turned on.

Monitor the following:

(a)	ME-1 ELECTRONIC LOCKUP MODE FLAG	V95X1194X
(b)	ME-1 HYDRAULIC LOCKUP MODE FLAG	V95X1198X
(c)	ME-1 FLIGHT DATA PATH FAIL FLAG	V95X1150X
(d)	ME-1 CMD PATH FAIL FLAG	V95X1202X

If neither (a) nor (b) nor (c) nor (d) = true, terminate output (1) below and proceed to Step 4.

If either (a) or (b) or (c) or (d) = true, then issue the following output and proceed to Step 4.

(1)	MPS E-1 STATUS/AMBER LITE ON	V72X0035X

Step 4 – ME-2 Red Status Light Control. This step monitors the ME-2 engine status, and if the engine limit is exceeded or if the engine enters shutdown, then the red status light is commanded on.

Monitor the following:

(a)	ME-2 ENGINE LIMIT EXCEEDED FLAG	V95X1191X
(b)	MPS E-2 SHUTDOWN PHASE	V95X1156X
(c)	MPS E-2 POST-SHUTDOWN PHASE	V95X1161X

If neither (a) nor (b) nor (c) a true, terminate output (1) below and then proceed to Step 5.

If either (a) or (b) or (c) = true, then issue the following output and proceed to Step 5.

(1)	MPS E-2 STATUS/RED LITE ON	V72X0031X

Step 5 – ME-2 Amber Status Light Control. This step monitors the ME-2 engine status via flags from the SSME SOP; and if either electronic lockup or hydraulic lockup mode is indicated or if the engine data path or command path is lost, then the amber status light is turned on.

Monitor the following:

(a)	ME-2 ELECTRONIC LOCKUP MODE FLAG	V95X1195X
(b)	ME-2 HYDRAULIC LOCKUP MODE FLAG	V95X1199X
(c)	ME-2 FLIGHT DATA PATH FAIL FLAG	V95X1151X
(d)	ME-2 CMD PATH FAIL FLAG	V95X1203X

If neither (a) nor (b) nor (c) nor (d) = true, terminate output (1) below and proceed to Step 6.

If either (a) or (b) or (c) or (d) = true, then issue the following output and proceed to Step 6.

(1)	MPS E-2 STATUS/AMBER LITE ON	V72X0036X

Step 6 – ME-3 Red Status Light Control. This step monitors the ME-3 engine status, and if the engine limit is exceeded or if the engine enters shutdown, then the red status light is commanded on.

Monitor the following:

(a)	ME-3 ENGINE LIMIT EXCEEDED FLAG	V95X1192X
(b)	MPS E-3 SHUTDOWN PHASE	V95X1157X
(c)	MPS E-3 POST-SHUTDOWN PHASE	V95X1162X

If neither (a) nor (b) nor (c) = true, terminate output (1) below and then proceed to Step 7.

If either (a) or (b) or (c) = true, then issue the following output and proceed to Step 7.

(1)	MPS E-3 STATUS/RED LITE ON	V72X0032X

Step 7 – ME-3 Amber Status Light Control. This step monitors the ME-3 engine status via flags from the SSME SOP; and if either electronic lockup or hydraulic lockup mode is indicated or if the engine data path or command path is lost, then the amber status light is turned on.

Monitor the following:

(a)	ME-3 ELECTRONIC LOCKUP MODE FLAG	V95X1196X
(b)	ME-3 HYDRAULIC LOCKUP MODE FLAG	V95X1200X
(c)	ME-3 FLIGHT DATA PATH FAIL FLAG	V95X1152X
(d)	ME-3 CMD PATH FAIL FLAG	V95X1204X

If neither (a) nor (b) nor (c) nor (d) = true, terminate output (1) below and proceed to Step 8.

If either (a) or (b) or (c) or (d) = true, then issue the following output and proceed to Step 8.

(1)	MPS E-3 STATUS/AMBER LITE ON	V72X0037X

Step 8 – ME-1 Data Path Fail Check. This step monitors the ME-1 FLT DATA PATH FAIL FLAG from the SSME SOP, and if set, the ME-1 prevalve close inhibit commands are removed and the ME-1 chamber pressure (Pc) meter is driven to zero scale.

Monitor the following:

(a)	ME-1 FLIGHT DATA PATH FAIL FLAG	V95X1150X

If (a) = false, then proceed to Step 9.

If (a) = true, then terminate the following commands:

(I)	MPS E-1 PVLV CLOSE INH CMD A	V41K1125X
(2)	MPS E-1 PVLV CLOSE INH CMD B	V41K1126X
(3)	MPS E-1 PVLV CLOSE INH CMD C	V41K1127X

and drive the Pc meter to zero scale (0 Vdc) with the following output:

(4)	MPS E-1 MAIN CHAMBER-PR/CMPT	V72P0040C

Then proceed to Step 11.

Step 9 – Normal Control of ME-1 Prevalve Close Inhibit Commands. This step monitors ME-1 main chamber pressure in percent via the SSME SOP and at the appropriate level will either issue or remove the prevalve close inhibit commands for Engine 1.

Monitor the following:

(a)	MPS E-1 PERCENT CH PRESS	V95U1186C

If (a) is equal to or greater than 30 percent, then issue the following outputs and proceed to Step 10.

(1)	MPS E-1 PVLV CLOSE INH CMD A	V41K1125X
(2)	MPS E-1 PVLV CLOSE INH CMD B	V41K1126X
(3)	MPS E-1 PVLV CLOSE INH CMD C	V41K1127X

If (a) is less than 30 percent, then terminate outputs (1), (2), and (3), and proceed to Step 10.

Step 10 – ME-1 Chamber Pressure Meter Drive. This step provides the output to the ME-1 chamber pressure (Pc) meter. The SSME SOP converts ME-1 main chamber pressure to percent and provides this as an input to this sequence. This step scales the percent input to 0 to 5 Vdc and outputs to the Pc meter.

Monitor the following:

(a)	MPS E-1 PERCENT CH PRESS	V95U1186C

Output (a) in volts (0 to 115 percent scaled to 0 to 5 Vdc) as follows:

(1)	MPS E-1 MAIN CHAMBER-PR/CMPT	V72P0040C

Proceed to Step 11.

Step 11 – ME-2 Data Path Fail Check. This step monitors the ME –2 data path fail flag from the SSME SOP, and if set, the ME –2 prevalve close inhibit commands are removed and the ME-2 chamber pressure (Pc) meter is driven to zero scale.

Monitor the following:

(a)	ME-2 FLT DATA PATH FAIL FLAG	V95X1151X

If (a) = false, then proceed to Step 12.

If (a) = true, then terminate the following commands:

(1)	MPS E-2 PVLV CLOSE INH CMD A	V41K1225X
(2)	MPS E-2 PVLV CLOSE INH CMD B	V41K1226X
(3)	MPS E-2 PLVL CLOSE INH CMD C	V41K1227X

and drive the Pc meter to zero scale (0 Vdc) with the following output:

(4)	MPS E-2 MAIN CHAMBER-PR/CMPT	V72P0041C

Then proceed to Step 14.

Step 12 – Normal Control of ME-2 Main Stage Commands. This step monitors ME-2 main chamber pressure in percent via the SSME SOP and at the appropriate Level will either issue or remove the pre-valve close inhibit commands for Engine 2.

Monitor the following:

(a)	MPS E-2 PERCENT CH PRESS	V95U1187C

If (a) is equal to or greater than 30 percent, then issue the following outputs and proceed to Step 13.

(l)	MPS E-2 PVLV CLOSE INH CMD A	V41K1225X
(2)	MPS E-2 PVLV CLOSE INH CMD B	V41K1226X
(3)	MPS E-2 PVLV CLOSE INH CMD C	V41K1227X

If (a) is less than 30 percent, then terminate outputs (I), (2), and (3) and proceed to Step 13.

Step 13 – ME-2 Chamber Pressure Meter Drive. This step provides the output to the ME-2 chamber pressure (Pc) meter. The SSME SOP converts ME-2 main chamber pressure to percent and provides this as an input to this sequence. This step scales the percent input to 0 to 5 Vdc and outputs to the Pc meter.

Monitor the following:

(a)	MPS E-2 PERCENT CH PRESS	V95U1187C

Output (a) in volts (0 to 115 percent scales to 0 to 5 Vdc) as follows:

(1)	MPS E-2 MAIN CHAMBER-PR/CMPT	V72P0041C

Proceed to Step 14.

Step 14 – ME-3 Data Path Fail Check. This step monitors the ME-3 data path fail flag from the SSME SOP, and if set, the ME-3 prevalve close inhibit commands are removed, and the ME-3 chamber pressure (Pc) meter is driven to zero scale.

Monitor the following:

(a)	ME-3 FLT DATA PATH FAIL FLAG	V95X1152X

If (a) = false, then proceed to Step 15.

If (a) = true, then terminate the following commands:

(1)	MPS E-3 PVLV CLOSE INH CMD A	V41K1325X
(2)	MPS E-3 PVLV CLOSE INH CMD B	V41K1326X
(3)	MPS E-3 PVLV CLOSE INH CMD C	V41K1327X

and drive the Pc meter to zero scale (0 Vdc) with the following output:

(4)	MPS E-3 MAIN CHAMBER-PR/CMPT	V72P0042C

Then proceed to Step 17.

Step 15 – Normal Control of ME-3 Main Stage Commands. This step monitors ME-3 main chamber pressure in percent via the SSME SOP and at the appropriate level will either issue or remove the prevalve close inhibit commands for Engine 3.

Monitor the following:

(a)	MPS E-3 PERCENT CH PRESS	V95U1188C

If (a) is equal to or greater than 30 percent, then issue the following outputs and proceed to Step 16.

(1)	MPS E-3 PVLV CLOSE INH CMD A	V41K1325X
(2)	MPS E-3 PVLV CLOSE INH CMD B	V41K1326X
(3)	MPS E-3 PVLV CLOSE INH CMD C	V41K1327X

If (a) is less than 30 percent, then terminate outputs (1), (2), and (3) and proceed to Step 16.

Step 16 – ME-3 Chamber Pressure Meter Drive. This step provides the output to the ME-3 chamber pressure (Pc) meter. The SSME SOP converts ME-3 main chamber pressure to percent and provides this as an input to this sequence. This step scales the percent input to 0 to 5 Vdc and outputs to the Pc meter.

Monitor the following:

(a)	MPS E-3 PERCENT CH PRESS	V95U1188C

Output (a) in volts (0 to 115 percent scaled to 0 to 5 Vdc) as follows:

(1)	MPS E-3 MAIN CHAMBER-PR/CMPT	V72P0042C

Proceed to Step 17.

Step 17 – MECO Command Monitor. This step monitors for the issuance of the MECO COMMAND FLAG and terminates the prevalve close inhibit commands after the appropriate time delay if flag is set true.

Monitor the following:

(a)	MECO COMMAND FLAG	V90X8569X
(b)	MECO_PREVLV_CLOSE_DELAY	V96U9761C

If (a) is true and (b) seconds have elapsed after detecting (a) true, terminate outputs (1) through (9) below and return to Step 1.

(1)	MPS E-1 PVLV CLOSE INH CMD A	V41K1125X
(2)	MPS E-1 PVLV CLOSE INH CMD B	V41K1126X
(3)	MPS E-2 PVLV CLOSE INH CMD A	V41K1225X
(4)	MPS E-2 PVLV CLOSE INH CMD B	V41K1226X
(5)	MPS E-3 PVLV CLOSE INH CMD A	V41K1325X
(6)	MPS E-3 PVLV CLOSE INH CMD B	V41K1326X
(7)	MPS E-1 PVLV CLOSE INH CMD C	V41K1127X
(8)	MPS E-2 PVLV CLOSE INH CMD C	V41K1227X
(9)	MPS E-3 PVLV CLOSE INH CMD C	V41K1327X

Otherwise, return to Step 1.

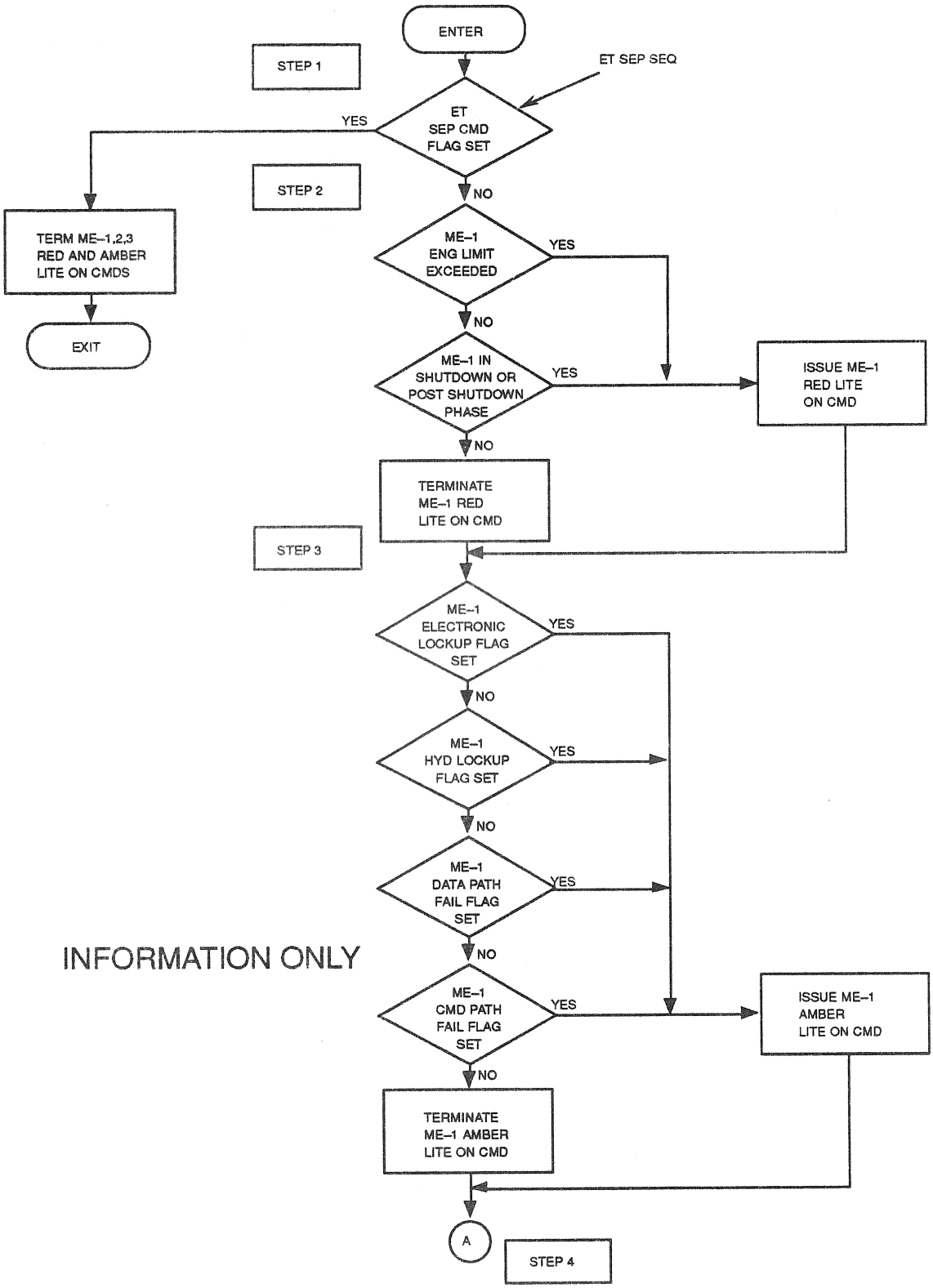

Figure 4.222. MPS D/D Drive Sequence (Sheet 1 of 6)

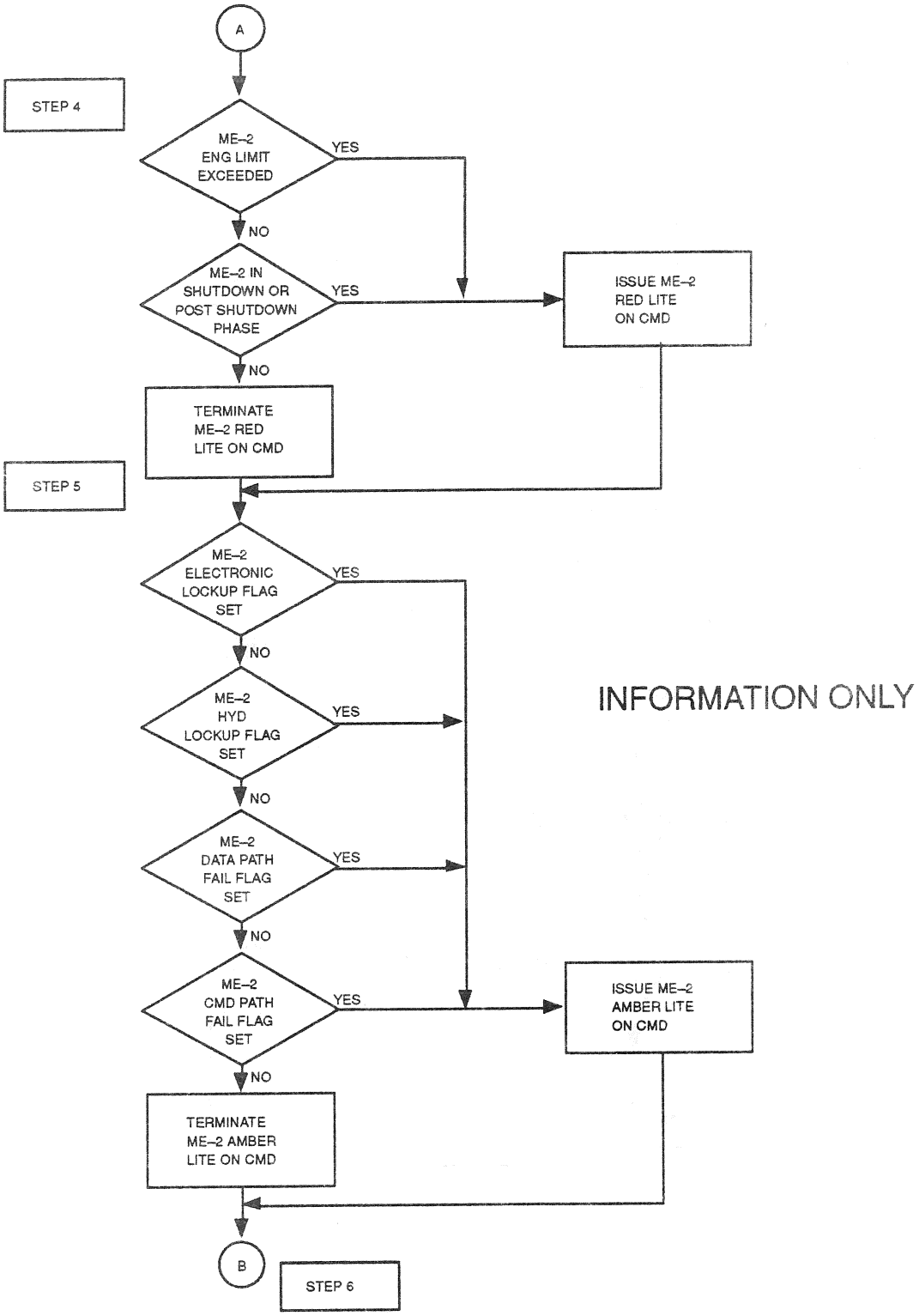

Figure 4.222. MPS D/D Drive Sequence (Sheet 2 of 6)

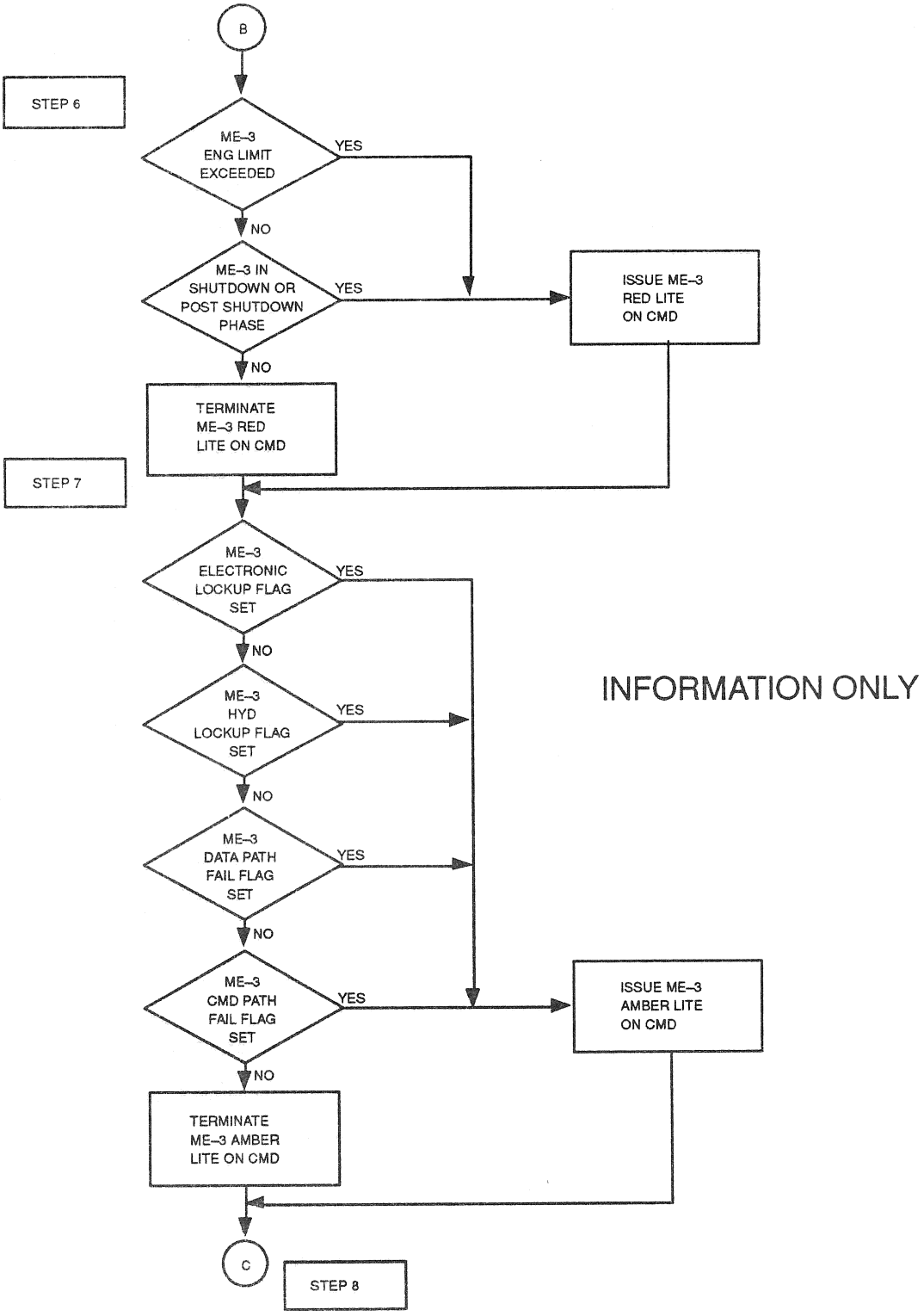

Figure 4.222. MPS D/D Drive Sequence (Sheet 3 of 6)

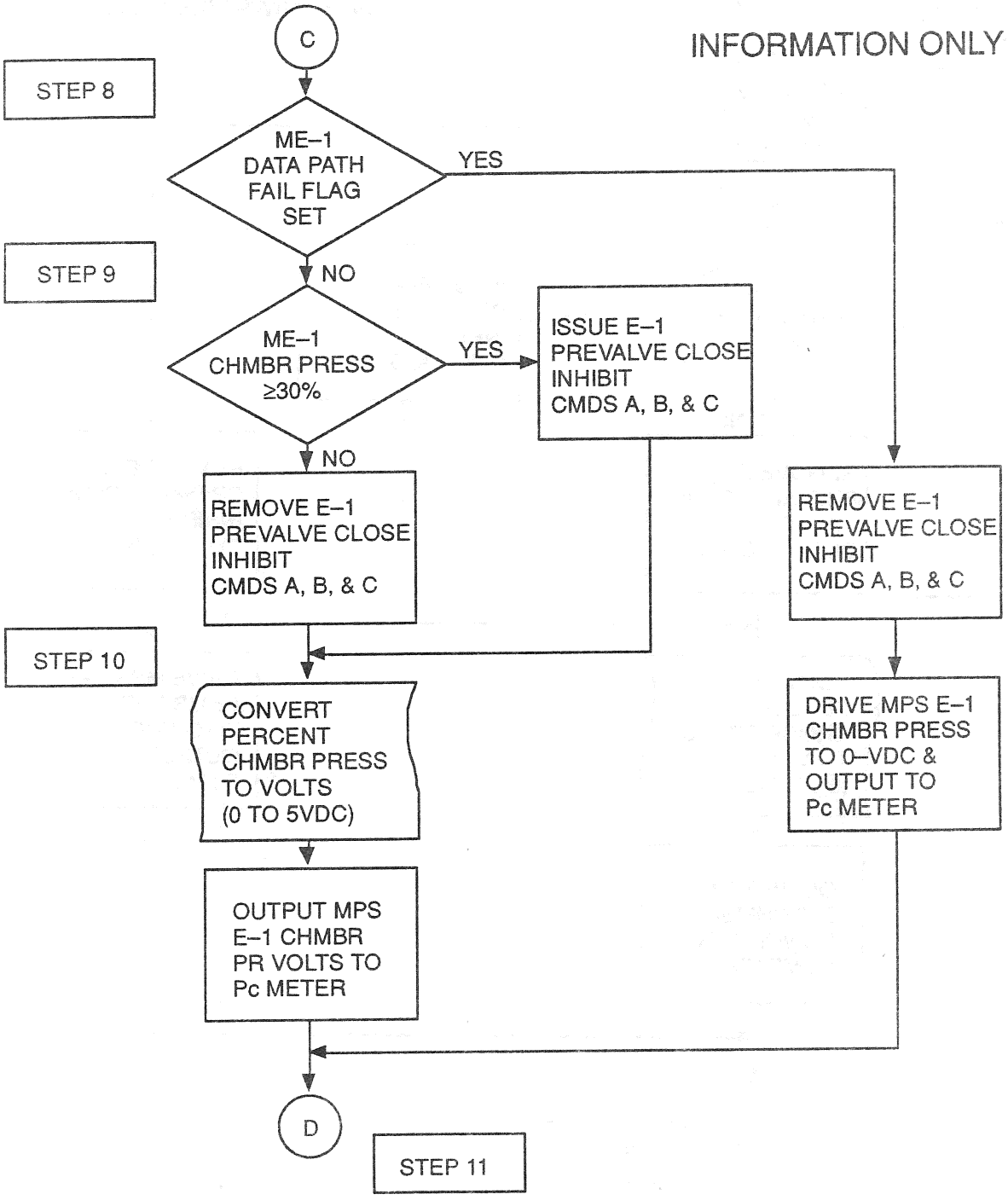

Figure 4.222. MPS D/D Drive Sequence (Sheet 4 of 6)

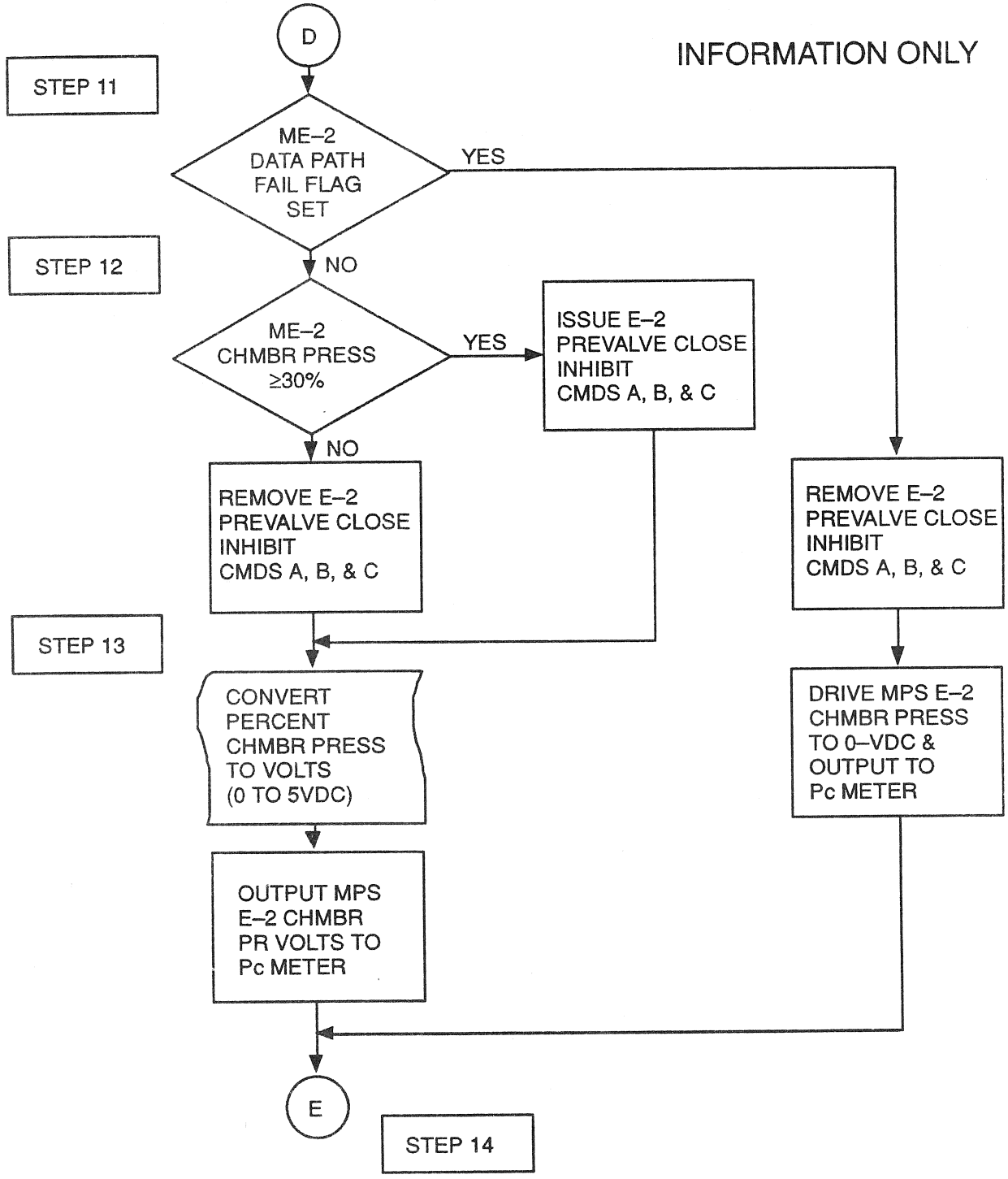

Figure 4.222. MPS D/D Drive Sequence (Sheet 5 of 6)

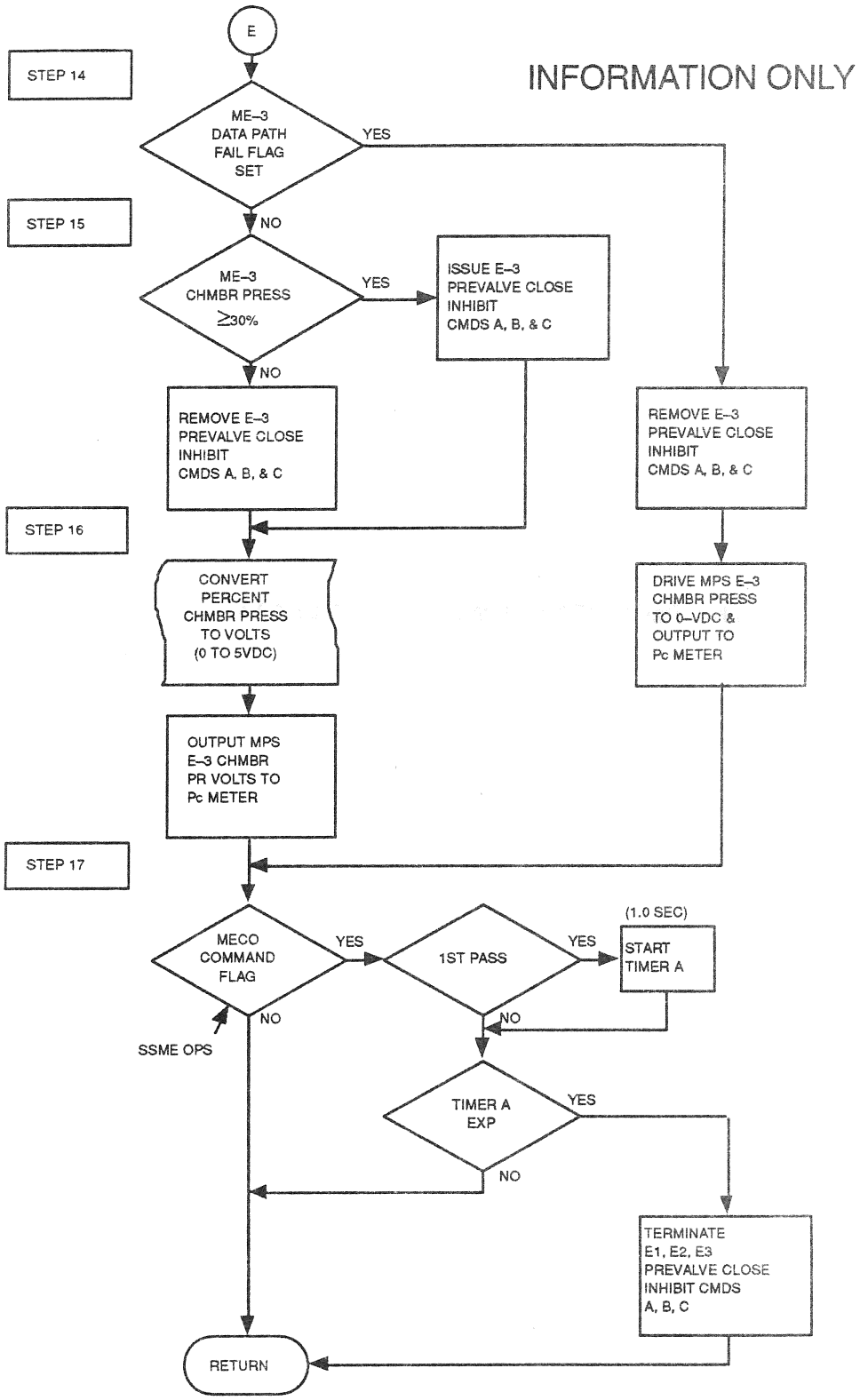

Figure 4.222. MPS D/D Drive Sequence (Sheet 6 of 6)

THIS PAGE INTENTIONALLY LEFT BLANK

TABLE 4.1.2.4–1. MAIN PROPULSION(MPS) DEDICATED DISPLAY DRIVE SEQ (G4.222) INPUT/OUTPUT FUNCTIONAL PARAMETERS

DBFN: D3B027-F PN: VP707100049P00L INPUT FUNCTIONAL PARAMETERS FOR MPS D/D SEQ

FSSR NAME	M/S ID	NOMENCLATURE	SOURCE	UNITS	DATA TYPE	PREC	LAST CRS
ET_SEP_CMD	V90X8250X	ET SEPARATION CMD FLAG	ET SEP SEQ		BD		89990E 90054A
ME_CMD_PATH_FAIL(1)	V95X1202X	ME-1 COMMAND PATH FAIL FLAG	SSME SOP		BD		
ME_CMD_PATH_FAIL(2)	V95X1203X	ME-2 COMMAND PATH FAIL FLAG	SSME SOP		BD		
ME_CMD_PATH_FAIL(3)	V95X1204X	ME-3 COMMAND PATH FAIL FLAG	SSME SOP		BD		
ME_ELEC_LOCKUP(1)	V95X1194X	ME-1 ELECTRONIC LOCKUP MODE FLAG	SSME SOP				
ME_ELEC_LOCKUP(2)	V95X1195X	ME-2 ELECTRONIC LOCKUP MODE FLAG	SSME SOP				
ME_ELEC_LOCKUP(3)	V95X1196X	ME-3 ELECTRONIC LOCKUP MODE FLAG	SSME SOP				
ME_FLT_DATA_PATH_FAIL(1)	V95X1150X	ME-1 FLIGHT DATA PATH FAIL FLAG	SSME SOP				
ME_FLT_DATA_PATH_FAIL(2)	V95X1151X	ME-2 FLIGHT DATA PATH FAIL FLAG	SSME SOP				
ME_FLT_DATA_PATH_FAIL(3)	V95X1152X	ME-3 FLIGHT DATA PATH FAIL FLAG	SSME SOP				
ME_HYD_LOCKUP(1)	V95X1198X	ME-1 HYDRAULIC LOCKUP MODE FLAG	SSME SOP				
ME_HYD_LOCKUP(2)	V95X1199X	ME-2 HYDRAULIC LOCKUP MODE FLAG	SSME SOP				
ME_HYD_LOCKUP(3)	V95X1200X	ME-3 HYDRAULIC LOCKUP MODE FLAG	SSME SOP				
ME_LIM_EX(1)	V95X1190X	ME-1 ENGINE LIMIT EXCEEDED FLAG	SSME SOP				89672A 89157A
ME_LIM_EX(2)	V95X1191X	ME-2 ENGINE LIMIT EXCEEDED FLAG	SSME SOP				89672A 89157A
ME_LIM_EX(3)	V95X1192X	ME-3 ENGINE LIMIT EXCEEDED FLAG	SSME SOP				89672A 89157A
MECO_CMD	V90X8569XA	MECO COMMAND FLAG	SSME OPS				90114B
MEPSTSHDN(1)	V95X1160X	MPS E1 POST-SHUTDOWN PHASE	SSME SOP				
MEPSTSHDN(2)	V95X1161X	MPS E2 POST-SHUTDOWN PHASE	SSME SOP				
MEPSTSHDN(3)	V95X1162X	MPS E3 POST-SHUTDOWN PHASE	SSME SOP				
MESHDN(1)	V95X1155X	MPS E1 SHUTDOWN PHASE	SSME SOP				
MESHDN(2)	V95X1156X	MPS E2 SHUTDOWN PHASE	SSME SOP				
MESHDN(3)	V95X1157X	MPS E3 SHUTDOWN PHASE	SSME SOP				
ME1_CH_PRESS_FDBK	V95U1186C	MPS E-1 PERCENT CH PRESS	SSME SOP	PCT			
ME2_CH_PRESS_FDBK	V95U1187C	MPS E-2 PERCENT CH PRESS	SSME SOP	PCT			
ME3_CH_PRESS_FDBK	V95U1188C	MPS E-3 PERCENT CH PRESS	SSME SOP	PCT			

TABLE 4.1.2.4–1. MAIN PROPULSION(MPS) DEDICATED DISPLAY DRIVE SEQ (G4.222) INPUT/OUTPUT FUNCTIONAL PARAMETERS

DBFN: D3B027-F PN: VP707100049P00L OUTPUT FUNCTIONAL PARAMETERS FROM MPS D/D SEQ

FSSR NAME	M/S ID	NOMENCLATURE	DESTINATION	UNITS	DATA TYPE	PREC	LAST CRS
	V41K1125X	MPS E1 MAINSTAGE CMD A	HDWR		BD		89554A
	V41K1126X	MPS E1 MAINSTAGE CMD B	HDWR		BD		89554A
	V41K1127X	MPS E1 MAINSTAGE CMD C	HDWR		BD		89554A
	V41K1225X	MPS E2 MAINSTAGE CMD A	HDWR		BD		89554A
	V41K1226X	MPS E2 MAINSTAGE CMD B	HDWR		BD		89554A
	V41K1227X	MPS E2 MAINSTAGE CMD C	HDWR		BD		89554A
	V41K1325X	MPS E3 MAINSTAGE CMD A	HDWR		BD		89554A
	V41K1326X	MPS E3 MAINSTAGE CMD B	HDWR		BD		89554A
	V41K1327X	MPS E3 MAINSTAGE CMD C	HDWR		BD		89554A
	V72X0030X	MPS E-1 STATUS/RED LITE ON	D&C PNL		BD		
	V72X0031X	MPS E-2 STATUS/RED LITE ON	D&C PNL		BD		
	V72X0032X	MPS E-3 STATUS/RED LITE ON	D&C PNL		BD		
	V72X0035X	MPS E-1 STATUS/AMBER LITE ON	D&C PNL		BD		
	V72X0036X	MPS E-2 STATUS/AMBER LITE ON	D&C PNL		BD		
	V72X0037X	MPS E-3 STATUS/AMBER LITE ON	D&C PNL		BD		
	V72P0040C	MPS E-1 MAIN CHAMBER-PR/CMPT	D&C PNL	VDC	AMU		
	V72P0041C	MPS E-2 MAIN CHAMBER-PR/CMPT	D&C PNL	VDC	AMU		
	V72P0042C	MPS E-3 MAIN CHAMBER-PR/CMPT	D&C PNL	VDC	AMU		

TABLE 4.1.2.4–2. MAIN PROPULSION(MPS) DEDICATED DISPLAY DRIVESEQ (G4.222) I–LOADS

DBFN:0484

FSSR NAME	MSID	ENG UNIT	DT PR	D S PR	FCTN	CAT
NO REQUIREMENTS						

TABLE 4.1.2.4–3. MAIN PROPULSION(MPS) DEDICATED DISPLAY DRIVESEQ (G4.222) K–LOADS

DBFN:0558

FSSR NAME DESCRIPTION	MSID	MC KLOAD VALUE	ENG UNIT	DT PR S PR FCTN	LAST CR EQTN MSID
MECO_PREVLV_CLOSE_DELAY	V96U9761C	+1.0 E+00	SEC	F S C G4.222	29855B

TABLE 4.1.2.4–4. MAIN PROPULSION(MPS) DEDICATED DISPLAY DRIVESEQ (G4.222) CONSTANTS

DBFN:0558

FSSR NAME DESCRIPTION	MSID	MC	CONSTANT VALUE	ENG UNIT	DT	PR	S	LAST CR PR FCTN

NO REQUIREMENTS

THIS PAGE INTENTIONALLY LEFT BLANK

4.1.3 SRB MDM Data Acquisition (4.203)

4.1.3.1 Introduction

SRB MDM data must be obtained form the SRB's during prelaunch operations and during SRB-powered flight portions of the mission. Data are used for two purposes.

1. Prelaunch Control of the SRB's
2. Downlist operations to place the data on Telemetry and on-board recorders

4.1.3.2 Overview

The GPC shall contain provisions to acquire data from all four (two each SRB) MDM's. This data shall be periodically updated in COMPOOL and thereby made available to system software for downlist processing. The acquisition of the SRB MDM data shall be initiated with the transition to OPS 1 approximately 20 minutes prior to launch and shall be terminated by the SRB Separation Sequence.

NOTE: Before the transition to GNC OPS 1, the SRB MDM data acquisition is accomplished by the V.U. function (GNC-9 and/or SM-9).

4.1.3.3 Detailed Requirements

Step 1. The IDD table contains the SRB MDM data listed by the principle function (4.203) to be acquired for use in GNC MM 101 and 102. Acquire the signals listed in the table and place them in main memory.

THIS PAGE INTENTIONALLY LEFT BLANK

TABLE 4.1.3.4–1. SOLID ROCKET BOOSTER(SRB) DATA ACQUISITION (G4.203) INPUT/OUTPUT FUNCTIONAL PARAMETERS

DBFN: D3P)27-F PN: VP707100049P00L INPUT FUNCTIONAL PARAMETERS FOR SRB DATA ACQ

FSSR NAME	M/S ID	NOMENCLATURE	SOURCE	UNITS	DATA TYPE	PREC	LAST CRS
	B46P1305C	LH PRESS N2H4/GN2 BOTTLE OUT SYS A	LA IEA		AMU		
	B46P1306C	LH PRESS N2H4/GN2 BOTTLE OUT SYS B	LA IEA		AMU		
	B46R1406C	LH RATE APU A TURBINE SPEED SNSR 1	LA IEA		AMU		
	B46R1407C	LH RATE APU B TURBINE SPEED SNSR 1	LA IEA		AMU		
	B46R1408C	LH RATE APU A TURBINE SPEED SNSR 2	LA IEA		AMU		
	B46R1409C	LH RATE APU B TURBINE SPEED SNSR 2	LA IEA		AMU		
	B46T1501C	LH TEMP GAS N2H4/GN2 BOTTLE SYS A	LA IEA		AMU		
	B46T1502C	LH TEMP GAS N2H4/GN2 BOTTLE SYS B	LA IEA		AMU		
	B46T1503C	LH TEMP GAS GENERATOR BED SYS A	LA IEA		AMU		
	B46T1504C	LH TEMP GAS GENERATOR BED SYS B	LA IEA		AMU		
	B46X1851X	LH EVENT APU A ISLN VALVE OPEN	LA IEA		BD		
	B46X1852X	LH EVENT APU B ISLN VALVE OPEN	LA IEA		BD		
	B46X1853X	LH EVENT APU A ISLN VALVE CLOSED	LA IEA		BD		
	B46X1854X	LH EVENT APU B ISLN VALVE CLOSED	LA IEA		BD		
	B46X1861X	LH EV APU SEC SP CON VLV CLD,SYS A	LF IEA		BD		
	B46X1862X	LH EV APU PRI SP CON VLV OP,SYS A	LF IEA		BD		
	B46X1863X	LH EV APU SEC SP CON VLV CLD,SYS B	LF IEA		BD		
	B46X1864X	LH EV APU PRI SP CON VLV OP,SYS B	LF IEA		BD		
	B46X1908X	LH EVENT APU-A GG HEATER 1 ON CMD	LA IEA		BD		
	B46X1909X	LH EVENT APU-A GG HEATER 2 ON CMD	LA IEA		BD		
	B46X1910X	LH EVENT APU-B GG HEATER 1 ON CMD	LA IEA		BD		
	B46X1911X	LH EVENT APU-B GG HEATER 2 ON CMD	LA IEA		BD		
	B46P2305C	RH PRESS N2H4/GN2 BOTTLE OUT SYS A	RA IEA		AMU		
	B46P2306C	RH PRESS N2H4/GN2 BOTTLE OUT SYS B	RA IEA		AMU		
	B46R2406C	RH RATE APU A TURBINE SPEED SNSR 1	RA IEA		AMU		
	B46R2407C	RH RATE APU B TURBINE SPEED SNSR 1	RA IEA		AMU		
	B46R2408C	RH RATE APU A TURBINE SPEED SNSR 2	RA IEA		AMU		
	B46R2409C	RH RATE APU B TURBINE SPEED SNSR 2	RA IEA		AMU		
	B46T2501C	RH TEMP GAS N2H4/GN2 BOTTLE SYS A	RA IEA		AMU		
	B46T2502C	RH TEMP GAS N2H4/GN2 BOTTLE SYS B	RA IEA		AMU		
	B46T2503C	RH TEMP GAS GENERATOR BED SYS A	RA IEA		AMU		
	B46T2504C	RH TEMP GAS GENERATOR BED SYS B	RA IEA		AMU		
	B46X2851X	RH EVENT APU A ISLN VALVE OPEN	RA IEA		BD		
	B46X2852X	RH EVENT APU B ISLN VALVE OPEN	RA IEA		BD		
	B46X2853X	RH EVENT APU A ISLN VALVE CLOSED	RA IEA		BD		
	B46X2854X	RH EVENT APU B ISLN VALVE CLOSED	RA IEA		BD		
	B46X2861X	RH EV APU SEC SP CON VLV CLD,SYS A	RF IEA		BD		
	B46X2862X	RH EV APU PRI SP CON VLV OP,SYS A	RF IEA		BD		
	B46X2863X	RH EV APU SEC SP CON VLV CLD,SYS B	RF IEA		BD		
	B46X2864X	RH EV APU PRI SP CON VLV OP,SYS B	RF IEA		BD		
	B46X2908X	RH EVENT APU-A GG HEATER 1 ON CMD	RA IEA		BD		
	B46X2909X	RH EVENT APU-A GG HEATER 2 ON CMD	RA IEA		BD		
	B46X2910X	RH EVENT APU-B GG HEATER 1 ON CMD	RA IEA		BD		

TABLE 4.1.3.4–1. SOLID ROCKET BOOSTER(SRB) DATA ACQUISITION (G4.203) INPUT/OUTPUT FUNCTIONAL PARAMETERS

DBFN: D3B027-F PN: VP707100049P00L INPUT FUNCTIONAL PARAMETERS FOR SRB DATA ACQ

FSSR NAME	M/S ID	NOMENCLATURE	SOURCE	UNITS	DATA TYPE	PREC	LAST CRS
	B46X2911X	RH EVENT APU-B GG HEATER 2 ON CMD	RA IEA		BD		
	B47X1901X	LH EVENT SRM CHMBR PRESS A SIM CMD	LF IEA		BD		
	B47X1902X	LH EVENT SRM CHMBR PRESS B SIM CMD	LF IEA		BD		
	B47X1903X	LH EVENT SRM CHMBR PRESS C SIM CMD	LF IEA		BD		
	B47X2901X	RH EVENT SRM CHMBR PRESS A SIM CMD	RF IEA		BD		
	B47X2902X	RH EVENT SRM CHMBR PRESS B SIM CMD	RF IEA		BD		
	B47X2903X	RH EVENT SRM CHMBR PRESS C SIM CMD	RF IEA		BD		
	B52X1904X	LH EVENT BARO SW HIGH ALT SIM CMD	LA IEA		BD		90004B
	B52X1905X	LH EVENT BARO SW LOW ALT SIM CMD	LA IEA		BD		90004B
	B52X1907X	LH EVENT RECOVERY SYSTEM RESET CMD	LA IEA		BD		90004B
	B52X1939X	LH EV WATER IMPACT SW SIM A CMD	LA IEA		BD		90004B
							89487
	B52X1940X	LH EV WATER IMPACT SW SIM B CMD	LA IEA		BD		90004B
							89487
	B52X2904X	RH EVENT BARO SW HIGH ALT SIM CMD	RA IEA		BD		90004B
	B52X2905X	RH EVENT BARO SW LOW ALT SIM CMD	RA IEA		BD		90004B
	B52X2907X	RH EVENT RECOVERY SYSTEM RESET CMD	RA IEA		BD		90004B
	B52X2939X	RH EV WATER IMPACT SW SIM A CMD	RA IEA		BD		90004B
							89487
	B52X2940X	RH EV WATER IMPACT SW SIM B CMD	RA IEA		BD		90004B
							89487
	B55C1051C	LH CURRENT RSS BATTERY NO 1	L RSS		AMU		90004B
	B55E1100C	LH POWER RSS RCVR SIG STRENGTH A	L RSS		AMU		90004B
	B55E1101C	LH POWER RSS RCVR SIG STRENGTH B	L RSS		AMU		90004B
	B55T1505C	LH TEMP SRB BATTERY	L RSS	DEGF	AMU		90004B
	B55V1605C	LH VOLTAGE FWD THR PIN PIC CAP A	LF IEA		AMU		
	B55V1606C	LH VOLTAGE FWD THR PIN PIC CAP B	LF IEA		AMU		
	B55V1607C	LH VOLTAGE AFT UPR BRC PIC CAP A	LA IEA		AMU		
	B55V1608C	LH VOLTAGE AFT UPR BRC PIC CAP B	LA IEA		AMU		
	B55V1609C	LH VOLTAGE AFT MID BRC PIC CAP A	LA IEA		AMU		
	B55V1610C	LH VOLTAGE AFT MID BRC PIC CAP B	LA IEA		AMU		
	B55V1611C	LH VOLTAGE AFT LWR BRC PIC CAP A	LA IEA		AMU		
	B55V1612C	LH VOLTAGE AFT LWR BRC PIC CAP B	LA IEA		AMU		
	B55V1613C	LH VOLTAGE FWD SEPN MOT PIC CAP A	LA IEA		AMU		
	B55V1614C	LH VOLTAGE FWD SEPN MOT PIC CAP B	LA IEA		AMU		
	B55V1615C	LH VOLTAGE AFT SEPN MOT PIC CAP A	LA IEA		AMU		
	B55V1616C	LH VOLTAGE AFT SEPN MOT PIC CAP B	LA IEA		AMU		
	B55V1623C	LH VOLTAGE RSS PIC CAP A	L RSS		AMU		
	B55V1624C	LH VOLTAGE RSS PIC CAP B	L RSS		AMU		
	B55V1625C	LH VOLTAGE RSS BATTERY NO 1	L RSS		AMU		90004B
	B55X1806X	LH EVENT IGN PIC A RTST OK	LF IEA		BD		
	B55X1807X	LH EVENT IGN PIC B RTST OK	LF IEA		BD		
	B55X1818X	LH EVENT AFT SEP MOT PIC A RTST OK	LF IEA		BD		

TABLE 4.1.3.4–1. SOLID ROCKET BOOSTER(SRB) DATA ACQUISITION (G4.203) INPUT/OUTPUT FUNCTIONAL PARAMETERS

DBFN: D3B027-F PN: VP707100049P00L INPUT FUNCTIONAL PARAMETERS FOR SRB DATA ACQ

FSSR NAME	M/S ID	NOMENCLATURE	SOURCE	UNITS	DATA TYPE	PREC	LAST CRS
	B55X1819X	LH EVENT AFT SEP MOT PIC B RTST OK	LF IEA		BD		
	B55X1823X	LH EVENT MN CHUTE DISC PIC RTST OK	LF IEA		BD		89451C
	B55X1841X	LH EVENT MN CHUTE DISC PIC L/T OK	LF IEA		BD		89451C
	B55X1842X	LH EVENT IGN S&A DEVICE ARMED	LF IEA		BD		
	B55X1843X	LH EVENT IGN S&A DEVICE SAFED	LF IEA		BD		
	B55X1865X	LH EVENT RSS PIC A ARMED	L RSS		BD		
	B55X1866X	LH EVENT RSS PIC B ARMED	L RSS		BD		
	B55X1867X	LH EVENT RSS PIC A FIRED	L RSS		BD		
	B55X1868X	LH EVENT RSS PIC B FIRED	L RSS		BD		
	B55X1869X	LH EVENT RSS S&A DEVICE SAFED	L RSS		BD		
	B55X1870X	LH EVENT RSS S&A DEVICE ARMED	L RSS		BD		
	B55X1871X	LH EV RSS DCDR A ON/CHK TONE OFF	L RSS		BD		90004B
	B55X1872X	LH EV RSS DCDR B ON/CHK TONE OFF	L RSS		BD		90004B
	B55X1877X	LH EV RSS ARM CMD FROM DCDR A	L RSS		BD		
	B55X1878X	LH EV RSS ARM CMD FROM DCDR B	L RSS		BD		
	B55X1879X	LH EV RSS FIRE CMD FROM DCDR A	L RSS		BD		
	B55X1880X	LH EV RSS FIRE CMD FROM DCDR B	L RSS		BD		
	B55X1881X	LH EVENT RSS A INHIBIT	L RSS		BD		
	B55X1882X	LH EVENT RSS B INHIBIT	L RSS		BD		
	B55C2051C	RH CURRENT RSS BATTERY NO 1	R RSS		AMU		90004B
	B55E2100C	RH POWER RSS RCVR SIG STRENGTH A	R RSS		AMU		90004B
	B55E2101C	RH POWER RSS RCVR SIG STRENGTH B	R RSS		AMU		90004B
	B55T2505C	RH TEMP SRB BATTERY	R RSS	DEGF	AMU		90004B
	B55V2605C	RH VOLTAGE FWD THRU PIN PIC CAP A	RF IEA		AMU		
	B55V2606C	RH VOLTAGE FWD THRU PIN PIC CAP B	RF IEA		AMU		
	B55V2607C	RH VOLTAGE AFT UPR BRC PIC CAP A	RA IEA		AMU		
	B55V2608C	RH VOLTAGE AFT UPR BRC PIC CAP B	RA IEA		AMU		
	B55V2609C	RH VOLTAGE AFT MID BRC PIC CAP A	RA IEA		AMU		
	B55V2610C	RH VOLTAGE AFT MID BRC PIC CAP B	RA IEA		AMU		
	B55V2611C	RH VOLTAGE AFT LWR BRC PIC CAP A	RA IEA		AMU		
	B55V2612C	RH VOLTAGE AFT LWR BRC PIC CAP B	RA IEA		AMU		
	B55V2613C	RH VOLTAGE FWD SEPN MOT PIC CAP A	RF IEA		AMU		
	B55V2614C	RH VOLTAGE FWD SEPN MOT PIC CAP B	RF IEA		AMU		
	B55V2615C	RH VOLTAGE AFT SEPN MOT PIC CAP A	RA IEA		AMU		
	B55V2616C	RH VOLTAGE AFT SEPN MOT PIC CAP B	RA IEA		AMU		
	B55V2623C	RH VOLTAGE RSS PIC CAP A	R RSS		AMU		
	B55V2624C	RH VOLTAGE RSS PIC CAP B	R RSS		AMU		
	B55V2625C	RH VOLTAGE RSS BATTERY NO 1	R RSS		AMU		90004B
	B55X2806X	RH EVENT IGN PIC A RTST OK	RF IEA		BD		
	B55X2807X	RH EVENT IGN PIC B RTST OK	RF IEA		BD		
	B55X2818X	RH EVENT AFT SEP MOT PIC A RTST OK	RF IEA		BD		
	B55X2819X	RH EVENT AFT SEP MOT PIC B RTST OK	RF IEA		BD		
	B55X2823X	RH EVENT MN CHUTE DISC PIC RTST OK	RF IEA		BD		89451C

TABLE 4.1.3.4–1. SOLID ROCKET BOOSTER(SRB) DATA ACQUISITION (G4.203) INPUT/OUTPUT FUNCTIONAL PARAMETERS

DBFN: D3B027-F PN: VP707100049P00L INPUT FUNCTIONAL PARAMETERS FOR SRB DATA ACQ

FSSR NAME	M/S ID	NOMENCLATURE	SOURCE	UNITS	DATA TYPE	PREC	LAST CRS
	B55X2841X	RH EVENT MN CHUTE DISC PIC L/T OK	RF IEA		BD		89451C
	B55X2842X	RH EVENT IGN S&A DEVICE ARMED	RF IEA		BD		
	B55X2843X	RH EVENT IGN S&A DEVICE SAFED	RF IEA		BD		
	B55X2865X	RH EVENT RSS PIC A ARMED	R RSS		BD		
	B55X2866X	RH EVENT RSS PIC B ARMED	R RSS		BD		
	B55X2867X	RH EVENT RSS PIC A FIRED	R RSS		BD		
	B55X2868X	RH EVENT RSS PIC B FIRED	R RSS		BD		
	B55X2869X	RH EVENT RSS S&A DEVICE SAFED	R RSS		BD		
	B55X2870X	RH EVENT RSS S&A DEVICE ARMED	R RSS		BD		
	B55X2871X	RH EV RSS DCDR A ON/CHK TONE OFF	R RSS		BD		90004B
	B55X2872X	RH EV RSS DCDR B ON/CHK TONE OFF	R RSS		BD		90004B
	B55X2877X	RH EV RSS ARM CMD FROM DCDR A	R RSS		BD		
	B55X2878X	RH EV RSS ARM CMD FROM DCDR B	R RSS		BD		
	B55X2879X	RH EV RSS FIRE CMD FROM DCDR A	R RSS		BD		
	B55X2880X	RH EV RSS FIRE CMD FROM DCDR B	R RSS		BD		
	B55X2881X	RH EVENT RSS A INHIBIT	R RSS		BD		
	B55X2882X	RH EVENT RSS B INHIBIT	R RSS		BD		
	B58H1150C	LH POSITION TVC ROCK ACTUATOR	L TVC R ACT		AMU		
	B58H1151C	LH POSITION TVC TILT ACTUATOR	L TVC T ACT		AMU		
	B58P1303C	LH PRESS HYDR FLUID SUPPLY 1	LA IEA		AMU		
	B58P1304C	LH PRESS HYDR FLUID SUPPLY 2	LA IEA		AMU		
	B58Q1350C	LH LEVEL HYDR FLUID RSVR SYS A	L HYD RES A		AMU		
	B58Q1351C	LH LEVEL HYDR FLUID RSVR SYS B	L HYD RES B		AMU		
	B58X1859X	LH EV TILT SERVO PWR SW V PRI POSN	LA IEA		BD		
	B58X1860X	LH EV ROCK SERVO PWR SW V PRI POSN	LA IEA		BD		
	B58X1912X	LH EV TVC SYS A PRESS SNSR CAL CMD	LA IEA		BD		90004B
	B58X1913X	LH EV TVC SYS B PRESS SNSR CAL CMD	LA IEA		BD		90004B
	B58H2150C	RH POSITION TVC ROCK ACTUATOR	R TVC R ACT		AMU		
	B58H2151C	RH POSITION TVC TILT ACTUATOR	R TVC T ACT		AMU		
	B58P2303C	RH PRESS HYDR FLUID SUPPLY 1	RA IEA		AMU		90004B
	B58P2304C	RH PRESS HYDR FLUID SUPPLY 2	RA IEA		AMU		90004B
	B58Q2350C	RH LEVEL HYDR FLUID RSVR SYS A	R HYD RES A		AMU		
	B58Q2351C	RH LEVEL HYDR FLUID RSVR SYS B	R HYD RES B		AMU		
	B58X2859X	RH EV TILT SERVO PWR SW V PRI POSN	RA IEA		BD		90004B
	B58X2860X	RH EV ROCK SERVO PWR SW V PRI POSN	RA IEA		BD		90004B
	B58X2912X	RH EV TVC SYS A PRESS SNSR CAL CMD	RA IEA		BD		90004B
	B58X2913X	RH EV TVC SYS B PRESS SNSR CAL CMD	RA IEA		BD		90004B
	B76C1050C	LH CURRENT RECOVERY BATTERY	LF IEA		AMU		
	B76T1500C	LH TEMPERATURE RECOVERY BATTERY	LF IEA		AMU		
	B76V1600C	LH VOLTAGE OPERATIONAL BUS A	LF IEA		AMU		
	B76V1601C	LH VOLTAGE OPERATIONAL BUS B	LF IEA		AMU		
	B76V1602C	LH VOLTAGE RECOVERY BATTERY	LF IEA		AMU		
	B76C2050C	RH CURRENT RECOVERY BATTERY	RF IEA		AMU		

TABLE 4.1.3.4–1. SOLID ROCKET BOOSTER(SRB) DATA ACQUISITION (G4.203) INPUT/OUTPUT FUNCTIONAL PARAMETERS

DBFN: D3B027-F PN: VP707100049P00L INPUT FUNCTIONAL PARAMETERS FOR SRP DATA ACQ

FSSR NAME	M/S ID	NOMENCLATURE	SOURCE	UNITS	DATA TYPE	PREC	LAST CRS
	B76T2500C	RH TEMPERATURE RECOVERY BATTERY	RF IEA		AMU		
	B76V2600C	RH VOLTAGE OPERATIONAL BUS A	RF IEA		AMU		
	B76V2601C	RH VOLTAGE OPERATIONAL BUS B	RF IEA		AMU		
	B76V2602C	RH VOLTAGE RECOVERY BATTERY	RF IEA		AMU		
	B76C7050C	LH CURRENT DEVELOPMENT FLT BATTERY	LF IEA		AMU		
	B76T7529C	LH TEMP DEVELOPMENT FLT BATTERY	LF IEA		AMU		
	B76V7730C	LH VOLTAGE DEVELOPMENT FLT BATTERY	LF IEA		AMU		
	B76C8050C	RH CURRENT DEVELOPMENT FLT BATTERY	RF IEA		AMU		
	B76T8529C	RH TEMP DEVELOPMENT FLT BATTERY	RF IEA		AMU		
	B76V8730C	RH VOLTAGE DEVELOPMENT FLT BATTERY	RF IEA		AMU		
	B78T7530C	LH TEMP, FLT RECORDER	LF IEA	DEG	AMU		
	B78X7887X	LH EVENT FLT RCDR MALFUNCTION	LF IEA	EVENT	BD		
	B78X7888X	LH EVENT FLT RCDR RECORD IND	LF IEA	EVENT	BD		
	B78X7914X	LH EVENT TIME CODE GENERATOR OK	LF IEA	EVENT	BD		
	B78X7918X	LH EV FDM 1 MUXR 1 OUT-ORB RCDR OK	LF IEA	EVENT	BD		
	B78X7925X	LH EVENT FLT RCDR REVERSE CMD	LF IEA	EVENT	BD		
	B78X7926X	LH EVENT FDM AUTO CALIBRATION CMD	LF IEA	EVENT	BD		
	B78X7929X	LH EV PCM MASTER OK	LF IEA		BD		89451C
	B78X7930X	LH EV PCM REMOTE 1 OK	LF IEA		BD		89451C
	B78X7931X	LH EV PCM REMOTE 2 OK	LF IEA		BD		89451C
	B78X7932X	LH EV PCM SUBSET 1 OK	LF IEA		BD		89451C
	B78X7933X	LH EV PCM SUBSET 2 OK	LF IEA		BD		89451C
	B78X7934X	LH EV PCM SUBSET 3 OK	LF IEA		BD		89451C
	B78X7935X	LH EV FDM 1 MUX 1 OK	LF IEA		BD		89451C
	B78X7936X	LH EV FDM 1 MUX 2 OK	LF IEA		BD		89451C
	B78X7937X	LH EV FDM 2 MUX 1 OK	LF IEA		BD		89451C
	B78X7938X	LH EV FDM 2 MUX 2 OK	LF IEA		BD		89451C
	B78X7939X	LH EV WBSC 1 OK	LF IEA		BD		89451C
	B78X7940X	LH EV WBSC 2 OK	LF IEA		BD		89451C
	B78X7943X	LH EV PCM REMOTE 3 OK	LF IEA		BD		89451C
	B78T8530C	RH TEMP, FLT RCDR	RF IEA	DEG F	AMU		
	B78X8887X	RH EVENT FLT RCDR MALFUNCTION	RF IEA	EVENT	BD		
	B78X8888X	RH EVENT FLT RCDR RECORD IND	RF IEA	EVENT	BD		
	B78X8914X	RH EVENT TIME CODE GENERATOR OK	RF IEA	EVENT	BD		
	B78X8918X	RH EV FDM 1 MUXR 1 OUT-ORB RCDR OK	RF IEA	EVENT	BD		
	B78X8925X	RH EVENT FLT RCDR REVERSE CMD	RF IEA	EVENT	BD		
	B78X8926X	RH EVENT FDM AUTO CALIBRATION CMD	RF IEA	EVENT	BD		
	B78X8929X	RH EV PCM MASTER OK	RF IEA		BD		89451C
	B78X8930X	RH EV PCM REMOTE 1 OK	RF IEA		BD		89451C
	B78X8931X	RH EV PCM REMOTE 2 OK	RF IEA		BD		89451C
	B78X8932X	RH EV PCM SUBSET 1 OK	RF IEA		BD		89451C
	B78X8933X	RH EV PCM SUBSET 2 OK	RF IEA		BD		89451C
	B78X8934X	RH EV PCM SUBSET 3 OK	RF IEA		BD		89451C

TABLE 4.1.3.4–1. SOLID ROCKET BOOSTER(SRB) DATA ACQUISITION (G4.203) INPUT/OUTPUT FUNCTIONAL PARAMETERS

DBFN: D3B027-F PN: VP707100049P00L INPUT FUNCTIONAL PARAMETERS FOR SRB DATA ACQ

FSSR NAME	M/S ID	NOMENCLATURE	SOURCE	UNITS	DATA TYPE	PREC	LAST CRS
	B78X8935X	RH EV FDM 1 MUX 1 OK	RF IEA		BD		89451C
	B78X8936X	RH EV FDM 1 MUX 2 OK	RF 1EA		BD		89451C
	B78X8937X	RH EV FDM 2 MUX 1 OK	RF IEA		BD		89451C
	B78X8938X	RH EV FDM 2 MUX 2 OK	RF IEA		BD		89451C
	B78X8939X	RH EV WBSC 1 OK	RF IEA		BD		89451C
	B78X8940X	RH EV WBSC 2 OK	RF IEA		BD		89451C
	B78X8943X	RH EV PCM REMOTE 3 OK	RF IEA		BD		89451C
	B79X1845X	SRGA 1 PITCH SMRD	SRGA 1		BD		79935H
	B79X1846X	SRGA 3 PITCH SMRD	SRGA 3		BD		79935H
	B79X1848X	SRGA 1 YAW SMRD	SRGA 1		BD		79935H
	B79X1849X	SRGA 3 YAW SMRD	SRGA 3		BD		79935H
	B79X1890X	SRGA 1 PITCH POS TORQUE CMD	LF IEA		BD		90004B 79935H
	B79X1891X	SRGA 3 PITCH POS TORQUE CMD	LF IEA		BD		90004B 79935H
	B79X1893X	SRGA 1 YAW POS TORQUE CMD	LF IEA		BD		90004B 79935H
	B79X1894X	SRGA 3 YAW POS TORQUE CMD	LF IEA		BD		90004B 79935H
	B79X1896X	SRGA 1 PITCH MEG TORQUE CMD	LF IEA		BD		90004B 79935H
	B79X1897X	SRGA 3 PITCH MEG TORQUE CMD	LF IEA		BD		90004B 79935H
	B79X1899X	SRGA 1 YAW NEG TORQUE CMD	LF IEA		BD		90004B 79935H
	B79X1900X	SRGA 3 YAW NEG TORQUE CMD	LF IEA		BD		90004B 79935H
	B79X2845X	SRGA 2 PITCH SMRD	SRGA 2		BD		79935H
	B79X2846X	SRGA 4 PITCH SMRD	SRGA 4		BD		79935H
	B79X2848X	SRGA 2 YAW SMRD	SRGA 2		BD		79935H
	B79X2849X	SRGA 4 YAW SMRD	SRGA 4		BD		79935H
	B79X2890X	SRGA 2 PITCH POS TORQUE CMD	RF IEA		BD		90004B 79935H
	B79X2891X	SRGA 4 PITCH POS TORQUE CMD	RF IEA		BD		90004B 79935H
	B79X2893X	SRGA 2 YAW POS TORQUE CMD	RF IEA		BD		90004B 79935H
	B79X2894X	SRGA 4 YAW POS TORQUE CMD	RF IEA		BD		90004B 79935H
	B79X2896X	SRGA 2 PITCH NEG TORQUE CMD	RF IEA		BD		90004B 79935H
	B79X2897X	SRGA 4 PITCH NEG TORQUE CMD	RF IEA		BD		90004B 79935H

TABLE 4.1.3.4–1. SOLID ROCKET BOOSTER(SRB) DATA ACQUISITION (G4.203) INPUT/OUTPUT FUNCTIONAL PARAMETERS

DBFN: D3B027-F PN: VP707100049P00L INPUT FUNCTIONAL PARAMETERS FOR SRB DATA ACQ

FSSR NAME	M/S ID	NOMENCLATURE	SOURCE	UNITS	DATA TYPE	PREC	LAST CRS
	B79X2899X	SRGA 2 YAW NEG TORQUE CMD	RF IEA		BD		90004B 79935H
	B79X2900X	SRGA 4 YAW NEG TORQUE CMD	RF IEA		BD		90004B 79935H
	T55T1200C	TEMP ET RSS BATTERY A	HDWR	DEGF	AMU		90004B
	T55X1867X	ET RSS PIC A FIRED	LF IEA		BD		
	T55X1869X	ET RSS S&A DVC SAFED	HDWR		BD		
	T55X1870X	ET RSS S&A DVC ARMED	HDWR		BD		
	T55X1885X	ET RSS A INHIBIT IND	HDWR		BD		
	T55T2200C	TEMP ET RSS BATTERY B	HDWR	DEGF	AMU		90004B
	T55X2868X	ET RSS PIC B FIRED	RF IEA		BD		
	T55X2888X	ET RSS B INHIBIT IND	HDWR		BD		

TABLE 4.1.3.4–2. SOLID ROCKET BOOSTER(SRB) DATA ACQUISITION (G4.203) I–LOADS

DBFN:0484

FSSR NAME	MSID	ENG UNIT	DT PR	D S PR FCTN	CAT

NO REQUIREMENTS

TABLE 4.1.3.4-3. SOLID ROCKET BOOSTER(SRB) DATA ACQUISITION (G4.203) K-LOADS

DBFN:0558

FSSR NAME DESCRIPTION	MSID	MC KLOAD VALUE	ENG UNIT	DT PR S PR FCTN	LAST CR EQTN MSID

NO REQUIREMENTS

TABLE 4.1.3.4–4. SOLID ROCKET BOOSTER(SRB) DATA ACQUISITION (G4.203) CONSTANTS

DBFN:0558

FSSR NAME DESCRIPTION	MSID	MC	CONSTANT VALUE	ENG UNIT	DT	PR	S	PR FCTN	LAST CR

NO REQUIREMENTS

4.2 ASCENT

4.2.1 SSME Operations Sequence (4.165)

4.2.1.1 Introduction

The SSME operations sequence is initiated at TO/SRB IGNITION, and is used during the ascent phase to:

1. Monitor the operating phase of each main engine
2. Issue inhibit commands to prevent a second engine from automatically shutting down if one shutdown has already occurred
3. Monitor the state of cockpit switches via flags from the switch processor and issue appropriate commands
4. Monitor a flag from GNC software for proper time to check the LO_2 and LH_2 low–level sensors and provide a single pass health check of these sensors.
5. Monitor a cut–off timing request flag from GNC software for proper time for MECO, to meet the desired time for start of thrust tailoff with accuracy requirements of ±40 msec
6. Issue main engine shutdown commands when required
7. Close LO_2 and LH_2 prevalves for each engine after shutdown has occurred
8. Restart the event timer at MECO

In addition, an SSME data path fail flag from the SSME SOP is checked and if set and shutdown commands have been issued for that engine, then its prevalves are closed after a time delay. A MECO confirmed flag is set by the SSME operations sequence after it has been confirmed that all engines have shut down. Also a flag is set for the external tank (ET) separation sequence after the prevalves for all engines are commanded closed. This is necessary since shutdown times may differ.

4.2.1.2 Overview

The SSME operations sequence is initiated when the RS launch sequence fires the SRB's and sets the TO flag. At this point, the main engines are at or above the required thrust, and the engine controllers will have entered the main stage phase 5.O seconds after receipt of the start commands. The SSME OPS sequence operates cyclically at 25 Hz from initiation at TO until MECO is verified and a few seconds after the prevalves are commanded closed. Under normal operation through ascent, there are no commands to issue until the end of second stage when the engines must be shut down and certain main propulsion system (MPS) valves are closed.

Continuous monitoring of certain inputs is required in the event that an automatic shutdown by one engine occurs, the crew operates any of the manual switches, data from any of the main engines is lost, or, near the end of boost, either the LH_2 or LO_2 level sensors indicate fuel or oxidizer depletion.

If shutdown of an engine occurs for any reason, the LO_2 and LH_2 prevalves for that engine must be closed after appropriate time delays, and the remaining two engines are inhibited from performing an automatic shutdown.

The switch processor software monitors the position of several crew station switches for the MPS and sets flags which are monitored by SSME OPS. The MPS switches being monitored are the three shutdown push–button switches and the limit shutdown switch, which can override the automatic inhibit logic and inhibit or enable engine automatic shutdown.

The SSME OPS sequence monitors the main engine chamber pressure and manual shutdown switches. If shutdown is confirmed, the appropriate MPS valves are closed. The operating phase and mode within a phase are determined from the engine status word by the SSME SOP, which gathers the engine data from the EIU, decodes it, and sets applicable flags for the various user software packages. If valid data is not available from the engine, the SSME SOP sets a data path fail flag. If this flag is set and shutdown commands have been issued, SSME OPS proceeds, after a time delay, to close the engine prevalves.

SSME OPS, upon receiving a flag from guidance, begins monitoring the fuel and oxidizer low–level sensors. A first pass health check will be made to protect against premature SSME shutdown resulting from failed dry sensors. If any two LO_2 low–level sensors, which have been disabled, indicate a dry condition, the logic will issue the MECO commands. Likewise, two LH_2 low–level sensors, which indicate dry and have not been previously disabled, will cause the issuance of MECO commands.

Normal engine shutdown, MECO, is triggered by the vehicle achieving the desired velocity and a flag being set by guidance software. The MECO commands issued include shutdown enable and shutdown commands through the EIU's to each of the three main engine controllers. The MECO commands are issued until it is determined that each engine has shutdown. At this point a MECO confirmed flag is set for GNC applications and to initiate the external tank separation sequence. After MECO confirmed, a command is sent to restart the event timer.

SSME OPS continues to operate until the required time after prevalves for each engine are commanded closed and the close commands are removed. Nominal MECO and shutdown during "G" conditions require different time delays for prevalve closure. When LO_2 and LH_2 prevalves for all engines have been commanded closed a flag is set for the ET separation sequence. This is required to prevent initiation of ET disconnect valve closure prior to initiation of all prevalves closures. When the prevalves' close commands have been removed and the flag set, the SSME OPS sequence is terminated.

4.2.1.3 Detailed Requirements.

Step 1 – Main Engine (ME) 1 Prevalves Closed Check. This step provides a bypass of the logic in Steps 2 and 3 if ME–1 is in either shutdown or post shutdown phase and the prevalves have been commanded closed.

Monitor the following:

(a) ME–1 PREVALVES CMD'D CLOSED FLAG (INTERNAL)

If (a) = false proceed to Step 2.

If (a) = true proceed to Step 4.

Step 2 – ME–1 Data Path Fail Flag Check. This step monitors for an ME–1 DATA PATH FAIL FLAG which is set by the SSME SOP when valid engine data is not available. If the ME–1 DATA PATH FAIL FLAG is set and ME–1 safing or shutdown commands have been issued, then the LH_2 recirculation disconnect valve is commanded closed and the prevalves are commanded closed after appropriate time delays. If safing or shutdown commands have not been issued, then no action is taken.

Monitor the following:

(a)	ME–1 FLIGHT DATA PATH FAIL FLAG	V95X1150X
(b)	ME–1 SAFING CMD	V90X3443X
(c)	ME–1 SHUTDOWN CMD ISSUED FLAG	(INTERNAL)
(d)	MECO COMMAND FLAG	V90X8569X
(e)	MPS_E1_T_DELAY_A	V97U9738C

If (a) = false, proceed to Step 3.

If (a) = true and (b) and (c) = false, then proceed to Step 5.

If (a) = true and (b) or (c) = true and (d) = true, issue output (2), terminate output (3), and monitor (e).

If (a) = true and (b) or (c) = true and (d) = false, then issue outputs (1) and (2), and terminate output (3).

(1)	MPS E–1 FAIL FLAG	V95X1207X
(2)	MPS LH_2 RECIRC DISC VLV CLOSE CMD	V41K1422X
(3)	MPS LH_2 RECIRC DISC VLV OPEN CMD	V41K1421X

and then monitor (e).

If (e) seconds have not elapsed, proceed to Step 5.

If (e) seconds have elapsed, proceed to Step 3A.

Step 3 – ME–1 Status Check. This step monitors the ME–1 status word via SSME SOP flags and, if shutdown occurs, issues a fail flag for flight control and guidance functions. The LH_2 recirculation and disconnect valve is commanded closed and provides appropriate time delays before prevalve closure.

Monitor the following:

(a)	MPS E1 SHUTDOWN PHASE	V95X1155X
(b)	MPS E1 POST–SHUTDOWN PHASE	V95X1160X
(c)	MECO COMMAND FLAG	V90X8569X
(d)	MPS_E1_T_DELAY_A	V97U9738C

If (a) and (b) both = false, then proceed to Step 5.

If either (a) or (b) = true and (c) = true, issue output (2), terminate output (3), and monitor (d).

If either (a) or (b) = true and (c) = false, then issue outputs (1) and (2), terminate output (3), and monitor (d).

(1)	MPS E1 FAIL FLAG	V95X1207X
(2)	MPS LH_2 RECIRC DISC VLV CLOSE CMD	V41K1422X
(3)	MPS LH_2 RECIRC DISC VLV OPEN CMD	V41K1421X

If (d) seconds have not elapsed, proceed to Step 5.

If (d) seconds have elapsed, proceed to Step 3A.

Step 3A – Issuance of ME–1 Prevalve Close Commands. This step provides a time delay between issuance of the ME–1 LO_2 PREVALVE CLOSE COMMANDS and the ME–1 LH_2 PREVALVE CLOSE COMMANDS.

Issue the following outputs:

(1)	MPS E–1 LO_2 PREVALVE CLOSE CMD A	V41K1139X
(2)	MPS E–1 LO_2 PREVALVE CLOSE CMD B	V41K1140X
(3)	MPS E–1 LO_2 PREVALVE CLOSE CMD C	V41K1141X
(4)	MPS E–1 LO_2 PREVALVE CLOSE CMD D	V41K1142X

and terminate the following outputs:

(5)	MPS E–1 LO_2 PREVALVE OPEN CMD A	V41K1136X
(6)	MPS E–1 LO_2 PREVALVE OPEN CMD B	V41K1137X
(7)	MPS E–1 LO_2 PREVALVE OPEN CMD C	V41K1138X
(8)	MPS E–1 LO_2 PREVALVE OPEN CMD D	V41K1143X

and then monitor the following:

(a)	ME1_LH_2_PREVLV_CLSE_T_DELAY	V97U9741C

If (a) seconds have not elapsed, proceed to Step 5.

If (a) seconds have elapsed, issue the following outputs:

(9)	MPS E1 LH_2 PREVALVE CLOSE CMD A	V41K1122X
(10)	MPS E1 LH_2 PREVALVE CLOSE CMD B	V41K1123X
(11)	MPS E1 LH_2 PREVALVE CLOSE CMD C	V41K1124X

and terminate the following outputs:

(12)	MPS E–1 LH_2 PREVALVE OPEN CMD A	V41K1119X
(13)	MPS E–1 LH_2 PREVALVE OPEN CMD B	V41K1120X
(14)	MPS E–1 LH_2 PREVALVE OPEN CMD C	V41K1121X

and then set the following flag = true:

(15)	ME1 PREVALVES CMD'D CLOSED FLAG	(INTERNAL)

Step 4 – Removal of ME–1 Prevalve Close Commands. This step provides for the termination of the ME–1 PREVALVE CLOSE COMMANDS after an appropriate time delay.

Monitor the following:

(a)	ME1 PREVALVES CLOSE CMDS REMOVED FLAG	(INTERNAL)

If (a) = true, proceed to Step 5.

If (a) = false, monitor the following:

(b) MPS_E1_T_DELAY_C V97U9740C

If (b) seconds have not elapsed, proceed to Step 5.

If (b) seconds have elapsed, then terminate the following outputs:

(1)	MPS E–1 LH_2 PREVALVE CLOSE CMD A	V41K1122X
(2)	MPS E–1 LH_2 PREVALVE CLOSE CMD B	V41K1123X
(3)	MPS E–1 LH_2 PREVALVE CLOSE CMD C	V41K1124X
(4)	MPS E–1 LO_2 PREVALVE CLOSE CMD A	V41K1139X
(5)	MPS E–1 LO_2 PREVALVE CLOSE CMD B	V41K1140X
(6)	MPS E–1 LO_2 PREVALVE CLOSE CMD C	V41K1141X
(7)	MPS E–1 LO_2 PREVALVE CLOSE CMD D	V41K1142X

and then set the following flag = true:

(8)	ME–1 PREVALVES CLOSE CMDS REMOVED FLAG	(INTERNAL)

Proceed to Step 5.

Step 5 – ME–2 Prevalves Closed Check. This step provides a bypass of the logic in Steps 6 and 7 if ME–2 is in either the shutdown or post–shutdown phase and the prevalves have been commanded closed.

Monitor the following:

(a) ME–2 PREVALVES CMD'D CLOSED FLAG (INTERNAL)

If (a) = false, proceed to Step 6.

If (a) = true, proceed to Step 8.

Step 6 – ME–2 Data Path Fail Flag Check. This step monitors for an ME–2 DATA PATH FAIL FLAG, which is set by the SSME SOP when valid engine data is not available. If the ME–2 DATA PATH FAIL FLAG is set and ME–2 safing or shutdown commands have been issued, then the LH_2 recirculation disconnect valve is commanded closed and the prevalves are commanded closed after appropriate time delays. If safing or shutdown commands have not been issued, then no action is taken.

Monitor the following:

(a)	ME–2 FLIGHT DATA PATH FAIL FLAG	V95X1151X
(b)	ME–2 SAFING CMD	V90X3444X
(c)	ME–2 SHUTDOWN CMD ISSUED FLAG	(INTERNAL)
(d)	MECO COMMAND FLAG	V90X8569X
(e)	MPS_E2_T_DELAY_D	V97U9742C

If (a) = false, proceed to Step 7.

If (a) = true and (b) and (c) = false, then proceed to Step 9.

If (a) = true and (b) or (c) = true and (d) = true, issue output (2), terminate output (3) and monitor (e).

If (a) = true and (b) or (c) = true and (d) = false, then issue outputs (1) and (2), and terminate output (3):

(1)	MPS E2 FAIL FLAG	V95X1208X
(2)	MPS LH_2 RECIRC DISC VLV CLOSE CMD	V41K1422X
(3)	MPS LH_2 RECIRC DISC VLV OPEN CMD	V41K1421X

and then monitor (e).

If (e) seconds have not elapsed, proceed to Step 9.

If (e) seconds have elapsed, proceed to Step 7A.

Step 7 – ME–2 Status Check. This step monitors the ME–2 status word via SSME SOP flags and, if shutdown occurs, issues a fail flag for flight control and guidance functions. The LH_2 recirculation and disconnect valve is commanded closed and provides appropriate time delays before prevalve closure.

Monitor the following:

(a)	MPS E2 SHUTDOWN PHASE	V95X1156X
(b)	MPS E2 POST–SHUTDOWN PHASE	V95X1161X
(c)	MECO COMMAND FLAG	V90X8569X
(d)	MPS_E2_T_DELAY_D	V97U9742C

If (a) and (b) both = false, then proceed to Step 9.

If either (a) or (b) = true and (c) = true, issue output (2), terminate output (3), and monitor (d).

If either (a) or (b) = true and (c) = false, then issue outputs (1) and (2), terminate output (3), and monitor (d).

(1)	MPS E2 FAIL FLAG	V95X1208X
(2)	MPS LH_2 RECIRC DISC VLV CLOSE CMD	V41K1422X
(3)	MPS LH_2 RECIRC DISC VLV OPEN CMD	V41K1421X

If (d) seconds have not elapsed, proceed to Step 9.

If (d) seconds have elapsed, proceed to Step 7A.

Step 7A – Issuance of ME–2 Prevalve Close Commands. This step provides a time delay between issuance of the ME–2 LO_2 PREVALVE CLOSE COMMANDS and the ME–2 LH_2 PREVALVE CLOSE COMMANDS.

Issue the following outputs:

(1)	MPS E–2 LO_2 PREVALVE CLOSE CMD A	V41K1239X
(2)	MPS E–2 LO_2 PREVALVE CLOSE CMD B	V41K1240X
(3)	MPS E–2 LO_2 PREVALVE CLOSE CMD C	V41K1241X
(4)	MPS E–2 LO_2 PREVALVE CLOSE CMD D	V41K1242X

and terminate the following outputs:

(5) MPS E-2 LO_2 PREVALVE OPEN CMD A V41K1236X
(6) MPS E-2 LO_2 PREVALVE OPEN CMD B V41K1237X
(7) MPS E-2 LO_2 PREVALVE OPEN CMD C V41K1238X
(8) MPS E-2 LO_2 PREVALVE OPEN CMD D V41K1243X

and then monitor the following:

(a) ME2_LH_2_PREVLV_CLSE_T_DELAY V97U9745C

If (a) seconds have not elapsed, proceed to Step 9.

If (a) seconds have elapsed, issue the following outputs:

(9) MPS E-2 LH_2 PREVALVE CLOSE CMD A V41K1222X
(10) MPS E-2 LH_2 PREVALVE CLOSE CMD B V41K1223X
(11) MPS E-2 LH_2 PREVALVE CLOSE CMD C V41K1224X

and terminate the following outputs:

(12) MPS E-2 LH_2 PREVALVE OPEN CMD A V41K1219X
(13) MPS E-2 LH_2 PREVALVE OPEN CMD B V41K1220X
(14) MPS E-2 LH_2 PREVALVE OPEN CMD C V41K1221X

and set the following flag = true:

(15) MPS E-2 LH_2 PREVALVE CLOSE CMDS REMOVED FLAG (INTERNAL)

and proceed to Step 9.

Step 8 -- Removal of ME-2 Prevalve Close Commands. This step provides for the termination of the ME-2 PREVALVE CLOSE COMMANDS after an appropriate time delay.

Monitor the following:

(a) ME-2 PREVALVE CLOSE CMDS REMOVED FLAG (INTERNAL)

If (a) = true, proceed to Step 9.

If (a) = false, monitor the following:

(b) MPS_E2_T_DELAY_F V97U9744C

If (b) seconds have not elapsed, proceed to Step 9.

If (b) seconds have elapsed, then terminate the following outputs:

(1) MPS E-2 LH_2 PREVALVE CLOSE CMD A V41K1222X
(2) MPS E-2 LH_2 PREVALVE CLOSE CMD B V41K1223X
(3) MPS E-2 LH_2 PREVALVE CLOSE CMD C V41K1224X
(4) MPS E-2 LO_2 PREVALVE CLOSE CMD A V41K1239X
(5) MPS E-2 LO_2 PREVALVE CLOSE CMD B V41K1240X

(6) MPS E–2 LO_2 PREVALVE CLOSE CMD C V41K1241X
(7) MPS E–2 LO_2 PREVALVE CLOSE CMD D V41K1242X

and then set the following flag = true:

(8) ME–2 PREVALVES CLOSE CMDS REMOVED FLAG (INTERNAL)

Proceed to Step 9.

Step 9 – ME–3 Prevalves Closed Check. This step provides a bypass of the logic in Steps 10 and 11 if ME–3 is in either shutdown or post–shutdown phase and the prevalves have been commanded closed.

Monitor the following:

(a) ME–3 PREVALVES CMD'D CLOSED FLAG (INTERNAL)

If (a) = false, proceed to Step 10.

If (a) = true, proceed to Step 12.

Step 10 – ME–3 Data Path Fail Flag Check. This step monitors for an ME–3 DATA PATH FAIL FLAG, which is set by the SSME SOP when valid engine data is not available. If the ME–3 DATA PATH FAIL FLAG is set and ME–3 safing or shutdown commands have been issued, then the LH_2 recirculation disconnect valve is commanded closed and the prevalves are commanded closed after appropriate time delays. If safing or shutdown commands have not been issued, then no action is taken.

Monitor the following:

(a) ME–3 FLIGHT DATA PATH FAIL FLAG V95X1152X
(b) ME–3 SAFING CMD V90X3445X
(c) ME–3 SHUTDOWN CMD ISSUED FLAG (INTERNAL)
(d) MECO COMMAND FLAG V90X8569X
(e) MPS_E3_T_DELAY_G V97U9746C

If (a) = false, proceed to Step 11.

If (a) = true and (b) and (c) = false, then proceed to Step 13.

If (a) = true and (b) or (c) = true and (d) = true, issue output (2), terminate output (3), and monitor (e).

If (a) = true and (b) or (c) = true and (d) = false, then issue outputs (1) and (2), terminate output (3), and monitor (e).

(1) MPS E3 FAIL FLAG V95X1209X
(2) MPS LH_2 RECIRC DISC VLV CLOSE CMD V41K1422X
(3) MPS LH_2 RECIRC DISC VLV OPEN CMD V41K1421X

If (e) seconds have not elapsed, proceed to Step 13.

If (e) seconds have elapsed, proceed to Step 11A.

Step 11 – ME–3 Status Check. This step monitors the ME–3 status word via SSME SOP flags and, if shutdown occurs, issues a fail flag for flight control and guidance functions, the LH_2 recirculation disconnect valve is commanded closed, and provides appropriate time delays before prevalve closure.

Monitor the following:

(a)	MPS E3 SHUTDOWN PHASE	V95X1157X
(b)	MPS E3 POST–SHUTDOWN PHASE	V95X1162X
(c)	MECO COMMAND FLAG	V90X8569X
(d)	MPS_E3_T_DELAY_G	V97U9746C

If either (a) and (b) both = false, proceed to Step 13.

If either (a) or (b) = true and (c) = true, issue output (2), terminate output (3), monitor (d).

If either (a) or (b) = true and (c) = false, then issue outputs (1) and (2), terminate output (3) and then monitor (d).

(1)	MPS E3 FAIL FLAG	V95X1209X
(2)	MPS LH_2 RECIRC DISC VLV CLOSE CMD	V41K1422X
(3)	MPS LH_2 RECIRC DISC VLV OPEN CMD	V41K1421X

If (d) seconds have not elapsed, proceed to Step 13.

If (d) seconds have elapsed, proceed to Step 11A.

Step 11A – Issuance of ME–3 Prevalve Close Commands. This step provides a time delay between issuance of the ME–3 LO_2 PREVALVE CLOSE COMMANDS and the ME–3 LH_2 PREVALVE CLOSE COMMANDS.

Issue the following outputs:

(1)	MPS E–3 LO_2 PREVALVE CLOSE CMD A	V41K1339X
(2)	MPS E–3 LO_2 PREVALVE CLOSE CMD B	V41K1340X
(3)	MPS E–3 LO_2 PREVALVE CLOSE CMD C	V41K1341X
(4)	MPS E–3 LO_2 PREVALVE CLOSE CMD D	V41K1342X

and terminate the following outputs:

(5)	MPS E–3 LO_2 PREVALVE OPEN CMD A	V41K1336X
(6)	MPS E–3 LO_2 PREVALVE OPEN CMD B	V41K1337X
(7)	MPS E–3 LO_2 PREVALVE OPEN CMD C	V41K1338X
(8)	MPS E–3 LO_2 PREVALVE OPEN CMD D	V41K1343X

and then monitor the following:

(a)	ME3_LH_2_PREVLV_CLSE_T_DELAY	V97U9749C

If (a) seconds have not elapsed, proceed to Step 13.

If (a) seconds have elapsed, issue the following outputs:

(9)	MPS E–3 LH_2 PREVALVE CLOSE CMD A	V41K1322X
(10)	MPS E–3 LH_2 PREVALVE CLOSE CMD B	V41K1323X
(11)	MPS E–3 LH_2 PREVALVE CLOSE CMD C	V41K1324X

and terminate the following outputs:

(12)	MPS E–3 LH_2 PREVALVE OPEN CMD A	V41K1319X
(13)	MPS E–3 LH_2 PREVALVE OPEN CMD B	V41K1320X
(14)	MPS E–3 LH_2 PREVALVE OPEN CMD C	V41K1321X

and then set the following flag = true:

(15)	ME–3 PREVALVES CMD'D CLOSED FLAG	(INTERNAL)

and proceed to Step 13.

Step 12 – Removal of ME–3 Prevalve Close Commands. This step provides for the termination of the ME–3 PREVALVE CLOSE COMMANDS after an appropriate time delay.

Monitor the following:

(a)	ME–3 PREVALVES CLOSE CMDS REMOVED FLAG	(INTERNAL)

If (a) = true, proceed to Step 13.

If (a) = false, monitor the following:

(b)	MPS_E3_T_DELAY_I	V97U9748C

If (b) seconds have not elapsed, proceed to Step 13.

If (b) seconds have elapsed, then terminate the following outputs:

(1)	MPS E–3 LH_2 PREVALVE CLOSE CMD A	V41K1322X
(2)	MPS E–3 LH_2 PREVALVE CLOSE CMD B	V41K1323X
(3)	MPS E–3 LH_2 PREVALVE CLOSE CMD C	V41K1324X
(4)	MPS E–3 LO_2 PREVALVE CLOSE CMD A	V41K1339X
(5)	MPS E–3 LO_2 PREVALVE CLOSE CMD B	V41K1340X
(6)	MPS E–3 LO_2 PREVALVE CLOSE CMD C	V41K1341X
(7)	MPS E–3 LO_2 PREVALVE CLOSE CMD D	V41K1342X

and then set the following flag = true:

(8)	ME–3 PREVLVS CLOSE CMDS REMOVED FLAG	(INTERNAL)

Proceed to Step 13.

Step 13 – ME–1, 2, and 3 Manual Shutdown Switch Checks. This step provides and monitors for a manually initiated shutdown of any engine by the crew. If any one of the three MPS engine shutdown switches is depressed, the GN&C switch processor sets a flag for SSME OPS indicating shutdown is required for that engine. SSME OPS then sets an internal flag, which is checked in later steps in the logic, for initiating the shutdown.

Monitor the following:

(a)	SEL MPS ME–1 SHUTDOWN CMD	V90X7551X
(b)	SEL MPS ME–2 SHUTDOWN CMD	V90X7552X
(c)	SEL MPS ME–3 SHUTDOWN CMD	V90X7553X

If (a), (b), and (c) all = false, proceed to Step 14.

If (a) = true, set internal flag (1) below = true.

If (b) = true, set internal flag (2) below = true.

If (c) = true, set internal flag (3) below = true.

(1)	ME–1 MANUAL SHUTDOWN FLAG	(INTERNAL)
(2)	ME–2 MANUAL SHUTDOWN FLAG	(INTERNAL)
(3)	ME–3 MANUAL SHUTDOWN FLAG	(INTERNAL)

Proceed to Step 14.

Step 14 – Main Engine Safing Cmd Check. This step monitors for main engine safing commands from the GN&C switch processor and latches the applicable safing commands in the on state.

Monitor the following:

(a)	ME–1 SAFING CMD	V90X3443X
(b)	ME–2 SAFING CMD	V90X3444X
(c)	ME–3 SAFING CMD	V90X3445X

If (a) is detected true, latch (a) = true for all subsequent passes.

If (b) is detected true, latch (b) = true for all subsequent passes.

If (c) is detected true, latch (c) = true for all subsequent passes.

Proceed to Step 17.

Step 15. Deleted.

Step 16. Deleted.

Step 17 – MECO Commanded Check. This step provides a bypass of the automatic and manual limit control logic in Step 18 through Step 22 and the guidance cutoff logic and low–level sensor cutoff logic of Steps 23 through 26 inclusive, if main engine cutoff (MECO) has been commanded. It also provides for a change in the LO_2 prevalve close time delays after MECO has been commanded to improve shutdown safety.

Monitor the following:

(a)	MECO COMMAND FLAG	V90X8569X

If (a) is false, proceed to Step 18.

If (a) is true, issue output (1) below one time only and perform the following functions:

Set V97U9738C MPS_E1_T_DELAY_A to the value contained in input (A) below.

Set V97U9742C MPS_E2_T_DELAY_D to the value contained in input (B) below.

Set V97U9746C MPS_E3_T_DELAY_G to the value contained in input (C) below.

Proceed to Step 17A.

INPUTS

(A)	MPS_MECO_E1_T_DELAY_A	V96U9769C
(B)	MPS_MECO_E2_T_DELAY_D	V97U9771C
(C)	MPS_MECO_E3_T_DELAY_G	V96U9773C

OUTPUTS

(1)	MPS PNEU CROSSOVER NO. 2 OPEN CMD	V41K1613X

Step 17A – MPS Helium Interconnect. This step initiates a 20–second timer and branches to the helium interconnect logic. On expiration of the time delay, the interconnect valve commands are terminated.

On the first pass, start a 20–second timer and proceed to Step 17B.

On the second and subsequent passes, monitor the 20–second time delay. If 20 seconds have not elapsed, proceed to Step 24A. When 20 seconds have elapsed, terminate outputs (1) through (6) and set output (7) = false. Then proceed to Step 24A.

(1)	MPS E1 HE INTCON IN/OPEN CMD A	V41K1162X
(2)	MPS E1 HE INTCON IN/OPEN CMD B	V41K1163X
(3)	MPS E2 HE INTCON IN/OPEN CMD A	V41K1262X
(4)	MPS E2 HE INTCON IN/OPEN CMD B	V41K1263X
(5)	MPS E3 HE INTCON IN/OPEN CMD A	V41K1362X
(6)	MPS E3 HE INTCON IN/OPEN CMD B	V41K1363X
(7)	HELIUM INTERCONNECT FLAG	(INTERNAL)

Step 17B – Issue of ME–1 Helium Interconnect Commands. This step is processed one time only and interconnects the pneumatic system helium supply to ME–1 during shutdown if the ME–1 FAIL FLAG has not previously been set true and either the confirmed ME–1 helium supply pressure is lower than or equal to the level that is required to support SSME shutdown helium usage or the pressure is comm-faulted.

Monitor the following:

(a)	MPS E1 FAIL FLAG	V95X1207X
(b)	MPS E1 HE SUPPLY BOTTLE PRESSURE	V41P1150C
(c)	MPS_HELIUM_SYSTEM_LOW_PRESSURE	V97U9735C
(d)	FA1 INPUT PROM SEG 1, 2 STATUS (MFE)	V91X2845X

If (a) = true, proceed to Step 17C. Otherwise, proceed to monitor (b), (c), and (d).

If (d) = false, and (b) > (c), proceed to Step 17C; otherwise, issue the following inputs (1) and (2) one time only and proceed to Step 17C.

(1)	MPS E1 HE INTCON IN/OPEN CMD A	V41K1162X
(2)	MPS E1 HE INTCON IN/OPEN CMD B	V41K1163X

Step 17C – Issue of ME–2 Helium Interconnect Commands. This step is processed one time only and interconnects the pneumatic system helium supply to ME–2 helium supply during shutdown if the ME–2 FAIL FLAG has not previously been set true and either the confirmed ME-1 helium supply pressure is lower than or equal to the level that is required to support SSME shutdown helium usage or the pressure input is commfaulted.

Monitor the following:

(a)	MPS E2 FAIL FLAG	V95X1208X
(b)	MPS E2 HE SUPPLY BOTTLE PRESSURE	V41P1250C
(c)	MPS_HELIUM_SYSTEM_LOW_PRESSURE	V97U9735C
(d)	FA2 INPUT PROM SEG 1, 2 STATUS (MFE)	V91X2842X

If (a) = true, or (b) > c, proceed to Step 17D. Otherwise, issue the following outputs (1) and (2) one time only and proceed to Step 17D.

(1)	MPS E2 HE INTCON IN/OPEN CMD A	V41K1262X
(2)	MPS E2 HE INTCON IN/OPEN CMD B	V41K1263X

Step 17D – Issue of ME–3 Helium Interconnect Commands. This step is processed one time only and interconnects the pneumatic system helium supply to ME–3 during shutdown if the ME–3 FAIL FLAG has not previously been set true and either the confirmed ME-3 helium supply pressure is lower than or equal to the level that is required to support SSME shutdown helium usage or the pressure input is commfaulted.

Monitor the following:

(a)	MPS E3 FAIL FLAG	V95X1209X
(b)	MPS E3 HE SUPPLY BOTTLE PRESSURE	V41P1350C
(c)	MPS_HELIUM_SYSTEM_LOW_PRESSURE	V97U9735C
(d)	FA3 INPUT PROM SEG 1, 2 STATUS (MFE)	V91X2843X

If (a) = true, set output (3) = true and proceed to Step 24A. Otherwise, proceed to monitor (b), (c) and (d).

If (d) = false and (b) > (c), set output (3) true and proceed to Step 24A. Otherwise, issue the following outputs (1) and (2) one time only, set output (3) true and proceed to Step 24A.

(1)	MPS E3 HE INTCON IN/OPEN CMD A	V41K1362X
(2)	MPS E3 HE INTCON IN/OPEN CMD B	V41K1363X
(3)	HELIUM INTERCONNECT FLAG	(INTERNAL)

Step 18 – Limit Shutdown Switch Auto/Manual Check. This step permits a manual override of the automatic limit control logic by the crew. If the switch is in AUTO, the automatic limit control logic is active; and if one engine shuts down, the remaining two are inhibited from automatic shutdown. If the switch is

in one of the manual positions, the crew overrides the automatic limit control logic and either enables or inhibits automatic shutdown by all engines.

Monitor the following:

(a) SEL MPS ENG LIMIT CONTROL AUTO V90X7548X

If (a) = true, set internal counters A and B to zero and proceed to Step 19.

If (a) = false, set internal counters C, D, E, F, G, and H to zero and proceed to Step 22.

Step 19 – Automatic Limit Shutdown Inhibit Control for ME–1. This step monitors the operating phase of ME–1 and the validity of ME–1 data via the FLIGHT DATA PATH FAIL FLAG from the SSME SOP. If ME–1 enters the shutdown phase or the ME–1 FLIGHT DATA PATH FAIL FLAG is set, the other two engines will be inhibited from performing an automatic shutdown.

Monitor the following:

(a) MPS E1 SHUTDOWN PHASE V95X1155X
(b) MPS E1 POST–SHUTDOWN PHASE V95X1160X
(c) ME–1 FLIGHT DATA PATH FAIL FLAG V95X1150X

If (a), (b), and (c) all = false, check internal counter C. If internal counter C is less than three counts, then issue the following output:

(1) MPS E1 LIMIT CNTL ENA V90X8573X

and increment counter C by one count and proceed to Step 20.

If (a), (b), and (c) all = false and internal counter C is greater than two counts, proceed to Step 20.

If either (a), (b), or (c) = true, check internal counter D. If internal counter D is less than three counts then issue the following outputs:

(2) MPS E2 LIMIT CNTL INH V90X8571X
(3) MPS E3 LIMIT CNTL INH V90X8572X

and increment counter D by one count and proceed to Step 20.

If either (a), (b), or (c) = true and internal counter D is greater than two counts, proceed to Step 20.

Step 20 – Automatic Limit Shutdown Inhibit Control for ME–2. This step monitors the operating phase of ME–2 and the validity of ME–2 data via the FLIGHT DATA PATH FAIL FLAG from the SSME SOP. If ME–2 enters the shutdown phase or the ME–2 FLIGHT DATA PATH FAIL FLAG is set, the other two engines will be inhibited from performing an automatic shutdown.

Monitor the following:

(a) MPS E2 SHUTDOWN PHASE V95X1156X
(b) MPS E2 POST–SHUTDOWN PHASE V95X1161X

(c) ME–2 FLIGHT DATA PATH FAIL FLAG V95X1151X

If (a), (b), and (c) all = false, check internal counter E. If internal counter E is less than three counts, then issue the following output:

(1) MPS E2 LIMIT CNTL ENA V90X8574X

and increment counter E by one count and proceed to Step 21.

If (a), (b), and (c) all = false and internal counter E is greater than two counts, proceed to Step 21.

If either (a), (b), or (c) = true, check internal counter F. If internal counter F is less than three counts, then issue the following outputs:

(2) MPS E1 LIMIT CNTL INH V90X8570X
(3) MPS E3 LIMIT CNTL INH V90X8572X

and increment counter F by one count and proceed to Step 21.

If either (a), (b), or (c) = true and internal counter F is greater than two counts, proceed to Step 21.

Step 21 – Automatic Limit Shutdown Inhibit Control for ME–3. This step monitors the operating phase of ME–3 and the validity of ME–3 data via the FLIGHT DATA PATH FAIL FLAG from the SSME SOP. If ME–3 enters the shutdown phase or the ME–3 FLIGHT DATA PATH FAIL FLAG is set, the other two engines will be inhibited from performing an automatic shutdown.

Monitor the following:

(a) MPS E3 SHUTDOWN PHASE V95X1157X
(b) MPS E3 POST–SHUTDOWN PHASE V95X1162X
(c) ME–3 FLIGHT DATA PATH FAIL FLAG V95X1152X

If (a), (b), and (c) all = false, check internal counter G. If internal counter G is less than three counts, then issue the following output:

(1) MPS E3 LIMIT CNTL ENA V90X8575X

and increment counter G by one count and proceed to Step 23.

If (a), (b), and (c) all = false and internal counter G is greater than two counts, proceed to Step 23.

If either (a), (b), or (c) = true, check internal counter H. If internal counter H is less than three counts, then issue the following outputs:

(2) MPS E1 LIMIT CNTL INH V90X8570X
(3) MPS E2 LIMIT CNTL INH V90X8571X

and increment counter H by one count and proceed to Step 23.

If either (a), (b), or (c) = true and internal counter H is greater than two counts, proceed to Step 23.

Steps 21A Through 21E – Deleted.

Step 22 – Limit Shutdown Switch Inhibit/Enable Check. This step monitors the manual positions of the limit shutdown switch via switch processor flags and permits the crew to enable automatic shutdown by all engines or inhibit automatic shutdown by any engine.

Monitor the following:

(a)	SEL MPS ENG LIMIT CONTROL ENABLE	V90X7549X
(b)	SEL MPS ENG LIMIT CONTROL INHIBIT	V90X7550X

If (a) is true and counter A is less than 3, increment counter A by one count, set counter B to zero, issue outputs (1) through (3) below, and proceed to Step 23.

If (a) is true and counter A is greater than 2, proceed to Step 23.

If (b) is true and counter B is less than 3, increment counter B by one count, set counter A to zero, issue outputs (4) through (6) below, and proceed to Step 23.

If (b) is true and counter B is greater than 2, proceed to Step 23.

(1)	MPS E1 LIMIT CNTL ENA	V90X8573X
(2)	MPS E2 LIMIT CNTL ENA	V90X8574X
(3)	MPS E3 LIMIT CNTL ENA	V90X8575X
(4)	MPS E1 LIMIT CNTL INH	V90X8570X
(5)	MPS E2 LIMIT CNTL INH	V90X8571X
(6)	MPS E3 LIMIT CNTL INH	V90X8572X

Steps 22A Through 22F – Deleted.

Step 23 – SSME Cutoff Request Check. This step monitors for a flag from guidance indicating it is time to read the desired SSME cutoff time and initiate MECO at the desired time. The shutdown commands sent as a result of the MECO command flag must be sent at the proper time to ensure a MECO accuracy of ±40 ms. Proper issuance of the shutdown commands is controlled by the MECO LEAD TIME I–load. The first shutdown command will be sent no sooner than 30 ms before desired cutoff time and no later than +30 ms from the desired cutoff time. Changes in software design, timing, will change the value of MECO LEAD TIME.

Monitor the following:

(a)	SSME C/O TIMING REQUEST FLAG	V90X1944X
(b)	DESIRED SSME C/O TIME	V90W1945C
(c)	GMT	V91W5000C
(d)	MECO_LEAD_TIME	V97U9829C

If (a) = false, proceed to Step 24.

If (a) = true, read (b) and subtract (c) from (b). When (b) – (c) is greater than (d), proceed to Step 24.

When (b) – (c) is less than or equal to (d), issue the following output and proceed to Step 24A.

(1) MECO COMMAND FLAG V90X8569X

Step 24 – Low–Level Sensor Monitor Check. This step monitors for a flag set by guidance indicating time to monitor the LO_2 and LH_2 low–level sensors.

Monitor the following conditions:

(a) ET LEVEL SENSOR ARM CMD V90X1942X

If (a) = false, proceed to Step 24A.

If (a) = true, proceed to Step 25.

Step 24A – ET Fast Separation Check. This step determines if a fast ET separation has been requested and, if so, sets the proper flags and delays to provide the proper engine shutdown sequence for a fast separation.

Monitor the following signals:

(a)	MM102 FLAG	V90X8158X
(b)	ET MAN SEP INITIATE	V90X7564X
(c)	ET SEP MAN INITIATE FLAG	V90X8584X
(d)	MM601 FLAG	V90X8194X
(e)	MM103 FLAG	V90X8156X
(f)	SECOND SSME FAIL CONFIRM	V90X1721X

If ((a) or (d) or [(e) and (f)]) and (b) are true or (c) is true, latch (c) true and perform the following functions; otherwise proceed to Step 27.

Set the following parameters to the value contained in input 2 below:

MPS_E1_T_DELAY_A	V97U9738C
MPS_E2_T_DELAY_D	V97U9742C
MPS_E3_T_DELAY_G	V97U9746C

Set the following parameters to the value contained in input 3 below:

ME1_LH_2_PREVALVE_CLSE_T_DELAY	V97U9741C
ME2_LH_2_PREVALVE_CLSE_T_DELAY	V97U9745C
ME3_LH_2_PREVALVE_CLSE_T_DELAY	V97U9749C

Set the following times to the value contained in 1 below:

ME–1 SHUTDOWN DELAY TIMER	(INTERNAL)
ME–2 SHUTDOWN DELAY TIMER	(INTERNAL)

Set the following flag true:

ME–1 MANUAL SHUTDOWN FLAG (INTERNAL)

Initiate ME–1 shutdown delay timer and proceed to Step 27. On subsequent passes, proceed to Step 27 until ME–1 shutdown delay timer expires.

Then set the following flag = true:

ME–2 MANUAL SHUTDOWN FLAG (INTERNAL)

Initiate ME–2 shutdown delay timer and proceed to Step 27. On subsequent passes, proceed to Step 27 until ME–2 shutdown timer expires.

Then set the following flags = true:

MECO COMMAND FLAG V90X8569X
MECO CONFIRMED FLAG V90X8561X

and set the following parameter to the value contained in input 4 below and proceed to Step 27.

TIME_TO_ZERO_THRUST V97U9655C

INPUTS

1. ME_SHTDN_DLY V97U9830C
2. FAST_SEP_LOX_PRVLV_DLY V97U9831C
3. FAST_SEP_LH_2_PRVLV_DLY V97U9832C
4. FAST_SEP_ZERO_THRUST_DLY V97U9833C

Step 25 – LO_2 Low–Level Sensor Dry Check. This step monitors for dry indications from four LO_2 low–level sensors, commfault indications for each sensor, and for a disable flag for each sensor. On the first pass that ET level sensor arm command is true, if a sensor indicates dry and the respective sensor commfault is false, and no previous LO_2 sensor has been disabled, then the associated sensor disable flag is latched true. On subsequent passes, if a sensor indicates dry, the respective commfault for that sensor is false, and the sensor has not been disabled, then an internal flag is latched true indicating that sensor is dry.

Monitor the following conditions:

(a) MPS LO_2 LEFT NO. 1 ECO SENSOR V41X1555X
(b) MPS LO_2 LEFT NO. 2 ECO SENSOR V41X1556X
(c) MPS LO_2 RIGHT NO. 2 ECO SENSOR V41X1557X
(d) MPS LO_2 RIGHT NO. 1 ECO SENSOR V41X1558X
(e) MPS_LOX_LO_LVL_LIQ_SES1_DSBL_FLG V99X8814X
(f) MPS_LOX_LO_LVL_LIQ_SES2_DSBL_FLG V99X8815X
(g) MPS_LOX_LO_LVL_LIQ_SES3_DSBL_FLG V99X8816X
(h) MPS_LOX_LO_LVL_LIQ_SES4_DSBL_FLG V99X8817X
(i) FA 3 INPUT PROM SEG 3, 10 STATUS (HFE) V91X2847X
(j) FA 2 INPUT PROM SEG 3, 10 STATUS (HFE) V91X2846X
(k) FA 4 INPUT PROM SEG 3, 10 STATUS (HFE) V91X2848X
(l) FA 1 INPUT PROM SEG 3, 10 STATUS (HFE) V91X2845X
(m) ARM CMD FIRST PASS FLAG (INTERNAL)
(n) LO_2 DSLB LIMIT FLAG (INTERNAL)

If (m) is true, check the following:

If (a) is true and (i) is false, then set outputs (1) and (5) true.

If (b) is true and (j) and (n) are false, then set outputs (2) and (5) true.

If (c) is true and (k) and (n) are false, then set outputs (3) and (5) true.

If (d) is true and (l) and (n) are false, then set output (4) true.

Else, check the following:

If (a) is true and (e) and (i) are both false, then set output (6) true.

If (b) is true and (f) and (j) are both false, then set output (7) true.

If (c) is true and (g) and (k) are both false, then set output (8) true.

If (d) is true and (h) and (l) are both false, then set output (9) true.

(1)	MPS_LOX_LO_LVL_LIQ_SES1_DSBL_FLG	V99X8814X
(2)	MPS_LOX_LO_LVL_LIQ_SES2_DSBL_FLG	V99X8815X
(3)	MPS_LOX_LO_LVL_LIQ–SES3_DSBL_FLG	V99X8816X
(4)	MPS_LOX_LO_LVL_LIQ_SES4_DSBL_FLG	V99X8817X
(5)	LO_2 DSBL LIMIT FLAG	(INTERNAL)
(6)	LO_2 SENSOR 1 DRY FLAG	(INTERNAL)
(7)	LO_2 SENSOR 2 DRY FLAG	(INTERNAL)
(8)	LO_2 SENSOR 3 DRY FLAG	(INTERNAL)
(9)	LO_2 SENSOR 4 DRY FLAG	(INTERNAL)

Proceed to Step 25A.

Step 25A – Check of LO_2 Sensor Dry Flags. This step monitors for any two LO_2 sensor flags latched true in Step 25. If any two flags are true and the required time delay has elapsed since two flags were first detected true, then MECO is initiated.

Monitor the following:

(a)	LO_2 SENSOR 1 DRY FLAG	(INTERNAL)
(b)	LO_2 SENSOR 2 DRY FLAG	(INTERNAL)
(c)	LO_2 SENSOR 3 DRY FLAG	(INTERNAL)
(d)	LO_2 SENSOR 4 DRY FLAG	(INTERNAL)
(e)	RTLS ABORT DECLARED	V90X8637X
(f)	MPS E1 FAIL FLAG	V95X1207X
(g)	MPS E2 FAIL FLAG	V95X1208X
(h)	MPS E3 FAIL FLAG	V95X1209X
(i)	NOM_LO_2_LL_T_DELAY_L	V97U9863C
(j)	RTLS_LO_2_LL_T_DELAY_M	V97U9864C
(k)	PTM_LO_2_LL_T_DELAY_N	V97U9865C

On the first pass that [(a) and (b)] or [(a) and (c)] or [(a) and (d)] or [(b) and (c)] or [(b) and (d)] or [(c) and (d)] are detected true, establish the appropriate time delay for setting the MECO COMMAND FLAG true as follows:

If (f), (g), and (h) all = false, set (i) as the time delay and proceed to Step 26.

If either (f) or (g) or (h) = true and (e) = true, set (j) as the time delay and proceed to Step 26.

If (f) or (g) or (h) = true and (e) = false, set (k) as the time delay and proceed to Step 26.

On the second and subsequent passes since two or more LO_2 sensor dry flags were detected true, monitor the time delay established above. When the selected time delay has elapsed, set output (1) true and proceed to Step 24A.

(1) MECO COMMAND FLAG V90X8569X

Otherwise, proceed to Step 26.

Step 26 – LH_2 Low–Level Sensor Dry Check. This step monitors for dry indications from four LH_2 low–level sensors, commfault indications for each sensor, and for a disable flag for each sensor. On the first pass that ET level sensor arm command is true, if a sensor indicates dry and the respective sensor commfault is false, and no previous LH_2 sensor has been disabled, then the associated sensor disable flag is latched true. On subsequent passes, if a sensor indicates dry, the respective commfault for that sensor is false, and the sensor has not been disabled, then an internal flag is latched true indicating that sensor is dry.

Monitor the following conditions:

(a)	ET LH_2 LOW LEVEL LIQ SENSOR NO. 1	T41X1730X
(b)	ET LH_2 LOW LEVEL LIQ SENSOR NO. 2	T41X1731X
(c)	ET LH_2 LOW LEVEL LIQ SENSOR NO. 3	T41X1732X
(d)	ET LH_2 LOW LEVEL LIQ SENSOR NO. 4	T41X1733X
(e)	ET_LH_2_LO_LVL_LIQ_SES1_DSBL_FLG	V99X8806X
(f)	ET_LH_2_LO_LVL_LIQ_SES2_DSBL_FLG	V99X8807X
(g)	ET_LH_2_LO_LVL_LIQ_SES3_DSBL_FLG	V99X8808X
(h)	ET_LH_2_LO_LVL_LIQ_SES4_DSBL_FLG	V99X8809X
(i)	FA3 INPUT PROM SEG 3, 10 STATUS (HFE)	V91X2847X
(j)	FA2 INPUT PROM SEG 3, 10 STATUS (HFE)	V91X2846X
(k)	FA4 INPUT PROM SEG 3, 10 STATUS (HFE)	V91X2848X
(l)	FA1 INPUT PROM SEG 3, 10 STATUS (HFE)	V91X2845X
(m)	ARM CMD FIRST PASS FLAG	(INTERNAL)
(n)	LH_2 DSBL LIMIT FLAG	(INTERNAL)

If (m) is true, check the following:

If (a) is true and (i) is false, then set outputs (1) and (5) true.

If (b) is true and (j) and (n) are false, then set outputs (2) and (5) true.

If (c) is true and (k) and (n) are false, then set outputs (3) and (5) true.

If (d) is true and (l) and (n) are false, then set output (4) true.

Else, check the following:

If (a) is true and (e) and (i) are both false, then set output (6) true.

If (b) is true and (f) and (j) are both false, then set output (7) true.

If (c) is true and (g) and (k) are both false, then set output (8) true.

If (d) is true and (h) and (l) are both false, then set output (9) true.

(1)	ET_LH_2_LO_LVL_LIQ_SES1_DSBL_FLG	V99X8806X
(2)	ET_LH_2_LO_LVL_LIQ_SES2_DSBL_FLG	V99X8807X
(3)	ET_LH_2_LO_LVL_LIQ_SES3_DSBL_FLG	V99X8808X
(4)	ET_LH_2_LO_LVL_LIQ_SES4_DSBL_FLG	V99X8809X
(5)	LH_2 DSBL LIMIT FLAG	(INTERNAL)
(6)	LH_2 SENSOR #1 DRY FLAG	(INTERNAL)
(7)	LH_2 SENSOR #2 DRY FLAG	(INTERNAL)
(8)	LH_2 SENSOR #3 DRY FLAG	(INTERNAL)
(9)	LH_2 SENSOR #4 DRY FLAG	(INTERNAL)

Proceed to Step 26A.

Step 26A – Check of LH_2 Sensor Dry Flags. This step monitors for any two LH_2 sensor dry flags latched true in Step 26. If any two flags are true and the required time delay has elapsed since two flags were first detected true, then MECO is initiated.

Monitor the following:

(a)	LH_2 SENSOR #1 DRY FLAG	(INTERNAL)
(b)	LH_2 SENSOR #2 DRY FLAG	(INTERNAL)
(c)	LH_2 SENSOR #3 DRY FLAG	(INTERNAL)
(d)	LH_2 SENSOR #4 DRY FLAG	(INTERNAL)
(e)	RTLS ABORT DECLARED	V90X8637X
(f)	MPS E1 FAIL FLAG	V95X1207X
(g)	MPS E2 FAIL FLAG	V95X1208X
(h)	MPS E3 FAIL FLAG	V95X1209X
(i)	LH_2_LL_TIME_DELAY_Q	V96U9535C
(j)	RTLS_LH_2_LL_TIME_DELAY_P	V96U9536C
(k)	ARM CMD FIRST PASS FLAG	(INTERNAL)

If (k) is true, then set (2) false.

On the first pass that [(a) and (b)] or [(a) and (c)] or [(a) and (d)] or [(b) and (c)] or [(b) and (d)] or [(c) and (d)] are detected true, establish the appropriate time delay for setting the MECO COMMAND FLAG true as follows:

If (e) = true and either (f) or (g) or (h) = true, then set (j) as the time delay and proceed to Step 24A.

Otherwise set (i) as the time delay and proceed to Step 24A.

On the second and subsequent passes since two or more LH_2 sensor dry flags were detected true, monitor the time delay established above. When the selected time delay has elapsed, set output (1) true and proceed to Step 24A.

(1)	MECO COMMAND FLAG	V90X8569X
(2)	ARM CMD FIRST PASS FLAG	(INTERNAL)

Otherwise, proceed to Step 24A.

Step 27 – ME–1 Shutdown Initiation. This step monitors for either an ME–1 MANUAL SHUTDOWN FLAG or a MECO COMMAND FLAG. If either flag is set true, this step will alternately issue the shutdown enable and shutdown commands until ME–1 is detected to be in the shutdown or post–shutdown phase.

Monitor the following:

(a)	ME–1 MANUAL SHUTDOWN FLAG	(INTERNAL)
(b)	MECO COMMAND FLAG	V90X8569X
(c)	MPS E1 SHUTDOWN PHASE	V95X1155X
(d)	MPS E1 POST–SHUTDOWN PHASE	V95X1160X

If (a) and (b) both = false, proceed to Step 28.

If either (a) or (b) = true and either (c) or (d) = true, then terminate outputs (1) and (2), set output (3) = true, and proceed to Step 28.

(1)	MPS E1 SHUTDOWN ENABLE CMD	V90X8367X
(2)	MPS E1 SHUTDOWN CMD	V90X8370X
(3)	ME–1 SHUTDOWN CMD ISSUED FLAG	(INTERNAL)

If either (a) or (b) = true and both (c) and (d) = false, then proceed to Step 27A.

Step 27A – Issuance of ME–1 Shutdown Commands. This step provides for alternately issuing the shutdown enable and shutdown commands for ME–1.

Monitor the following:

(a)	ME–1 SHUTDOWN FLAG "A"	(INTERNAL)

If (a) = false, then terminate the following output:

(1)	MPS E1 SHUTDOWN CMD	V90X8370X

and issue the following output:

(2)	MPS E1 SHUTDOWN ENABLE CMD	V90X8367X

and then set internal flag (3) below = true

(3)	ME–1 SHUTDOWN FLAG "A"	(INTERNAL)
(4)	ME–1 SHUTDOWN CMD ISSUED FLAG	(INTERNAL)

Proceed to Step 28.

If (a) = true, terminate output (2) above and issue output (1) above; and then set output (3) above = false and (4) = true.

Proceed to Step 28.

Step 28 – ME–2 Shutdown Initiation. This step monitors for either an ME–2 MANUAL SHUTDOWN FLAG or a MECO COMMAND FLAG. If either flag is set true, this step will alternately issue the shutdown enable and shutdown commands until ME–2 is detected to be in the shutdown or post–shutdown phase.

Monitor the following:

(a)	ME–2 MANUAL SHUTDOWN FLAG	(INTERNAL)
(b)	MECO COMMAND FLAG	V90X8569X
(c)	MPS E2 SHUTDOWN PHASE	V95X1156X
(d)	MPS E2 POST–SHUTDOWN PHASE	V95X1161X

If (a) and (b) both = false, proceed to Step 29.

If either (a) or (b) = true and either (c) or (d) = true, then terminate outputs (1) and (2) and set output (3) = true and proceed to Step 29.

(1)	MPS E2 SHUTDOWN ENABLE CMD	V90X8368X
(2)	MPS E2 SHUTDOWN CMD	V90X8371X
(3)	ME–2 SHUTDOWN CMD ISSUED FLAG	(INTERNAL)

If either (a) or (b) = true and both (c) and (d) = false, then proceed to Step 28A.

Step 28A – Issuance of ME–2 Shutdown Commands. This step provides for alternately issuing the shutdown enable and shutdown commands for ME–2.

Monitor the following:

(a)	ME–2 SHUTDOWN FLAG "B"	(INTERNAL)

If (a) = false, then terminate the following output:

(1)	MPS E2 SHUTDOWN CMD	V90X8371X

and issue the following output:

(2)	MPS E2 SHUTDOWN ENABLE CMD	V90X8368X

and then set internal flag (3) below = true

(3)	ME–2 SHUTDOWN FLAG "B"	(INTERNAL)
(4)	ME–2 SHUTDOWN CMD ISSUED FLAG	(INTERNAL)

Proceed to Step 29.

If (a) = true, terminate output (2) above and issue output (1) above; and then set output (3) above = false, and output (4) = true.

Proceed to Step 29.

Step 29 – ME–3 Shutdown Initiation. This step monitors for either an ME–3 MANUAL SHUTDOWN FLAG or a MECO COMMAND FLAG. If either flag is set true, this step will alternately issue the shutdown enable and shutdown commands until ME–3 is detected to be in the shutdown or post–shutdown phase.

Monitor the following:

(a)	ME–3 MANUAL SHUTDOWN FLAG	(INTERNAL)
(b)	MECO COMMAND FLAG	V90X8569X
(c)	MPS E3 SHUTDOWN PHASE	V95X1157X
(d)	MPS E3 POST–SHUTDOWN PHASE	V95X1162X

If (a) and (b) both = false, proceed to Step 30.

If either (a) or (b) = true and either (c) or (d) = true, then terminate outputs (1) and (2) and set output (3) = true and proceed to Step 30.

(1)	MPS E3 SHUTDOWN ENABLE CMD	V90X8369X
(2)	MPS E3 SHUTDOWN CMD	V90X8372X
(3)	ME–3 SHUTDOWN CMD ISSUED FLAG	(INTERNAL)

If either (a) or (b) = true and both (c) and (d) = false, then proceed to Step 29A.

Step 29A – Issuance of ME–3 Shutdown Commands. This step provides for alternately issuing the shutdown enable and shutdown commands for ME–3.

Monitor the following:

(a)	ME–3 SHUTDOWN FLAG "C"	(INTERNAL)

If (a) = false, then terminate the following output:

(1)	MPS E3 SHUTDOWN CMD	V90X8372X

and issue the following output:

(2)	MPS E3 SHUTDOWN ENABLE CMD	V90X8369X

and then set internal flag (3) below = true

(3)	ME–3 SHUTDOWN FLAG "C"	(INTERNAL)
(4)	ME–3 SHUTDOWN CMD ISSUED FLAG	(INTERNAL)

Proceed to Step 30.

If (a) = true, terminate output (2) above and issue output (1) above; and then set output (3) above = false and output (4) = true.

Proceed to Step 30.

Step 30 – All Engines Manual Shutdown Check. This step monitors for a crew–initiated manual shutdown of all engines. If all three of the internal manual shutdown flags are set true, then the MECO COMMAND FLAG is set true.

Monitor the following:

(a)	ME–1 MANUAL SHUTDOWN FLAG	(INTERNAL)
(b)	ME–2 MANUAL SHUTDOWN FLAG	(INTERNAL)
(c)	ME–3 MANUAL SHUTDOWN FLAG	(INTERNAL)

If (a), (b), and (c) all = true, then issue the following output and proceed to Step 31.

(1)	MECO COMMAND FLAG	V90X8569X

If either (a) or (b) or (c) = false, then proceed to Step 31.

Step 31 – All Engines Pc ≤30–Percent Check. This step monitors the thrust level of all engines via chamber pressure from the SSME SOP. Also monitored is whether the data from each engine is valid. If no engine remains above 30 percent chamber pressure, or MAJOR MODE 104 FLAG is true, or ME–1, ME–2, and ME–3 safing commands are all true, or an engine has a DATA PATH FAIL and the other two engines are less than or equal to 30 percent chamber pressure, the MECO COMMAND FLAG, the MECO CONFIRMED FLAG, and the EVENT TIMER START FLAG are all set true.Monitor the following:

(a)	MPS E1 PERCENT CH PRESS	V95U1186C
(b)	MPS E2 PERCENT CH PRESS	V95U1187C
(c)	MPS E3 PERCENT CH PRESS	V95U1188C
(d)	ME–1 FLIGHT DATA PATH FAIL FLAG	V95X1150X
(e)	ME–2 FLIGHT DATA PATH FAIL FLAG	V95X1151X
(f)	ME–3 FLIGHT DATA PATH FAIL FLAG	V95X1152X
(g)	MAJOR MODE 104 FLAG	V90X8152X
(h)	ME–1 SAFING CMD	V90X3443X
(i)	ME–2 SAFING CMD	V90X3444X
(j)	ME–3 SAFING CMD	V90X3445X

If (a), (b), and (c) are all ≤30 percent, then issue the following outputs and proceed to Step 32.

(1)	MECO COMMAND FLAG	V90X8569X
(2)	MECO CONFIRMED FLAG	V90X8561X
(3)	EVENT TIMER START FLAG	V90X8403X

If (g) = true, then issue outputs (1), (2), and (3) above and proceed to Step 32.

If (h) and (i) and (j) = true, then issue outputs (1), (2), and (3) above and proceed to Step 32.

If (d) = true and (b) and (c) are both ≤30 percent, then issue outputs (1), (2), and (3) above and proceed to Step 32.

If (e) = true and (a) and (c) are both ≤30 percent, then issue outputs (1), (2), and (3) above and proceed to Step 32.

If (f) = true and (a) and (b) are both ≤30 percent, then issue outputs (1), (2), and (3) above and proceed to Step 32.

Otherwise, return to Step 1.

Step 32 – All Prevalves Commanded Closed Check. This step checks that all prevalves have been commanded closed before setting a flag for the ET separation sequence and proceeding with the ET disconnect valve closure. The prevalves are closed by Steps 3A, 7A, and 11A after appropriate time delays.

Monitor the following:

(a)	ME–1 PREVALVES CMD'D CLOSED FLAG	(INTERNAL)
(b)	ME–2 PREVALVES CMD'D CLOSED FLAG	(INTERNAL)
(c)	ME–3 PREVALVES CMD'D CLOSED FLAG	(INTERNAL)

If either (a), (b), or (c) = false, return to Step 1.

If (a), (b), and (c) all = true, issue the following output and proceed to Step 33.

(1)	ALL PREVLVS COMMANDED CLOSE IND	V90X8568X

Step 33 – Termination of SSME OPS Sequence. This step keeps the SSME OPS sequence active until all PREVALVE CLOSE COMMANDS have been removed and the HELIUM INTERCONNECT FLAG is set to false. The PREVALVE CLOSE COMMANDS are removed in Steps 4, 8, and 12. The HELIUM INTERCONNECT FLAG is set to false, when appropriate, by Step 17A.

Monitor the following:

(a)	ME–1 PREVLVS CLOSE CMDS REMOVED FLAG	(INTERNAL)
(b)	ME–2 PREVLVS CLOSE CMDS REMOVED FLAG	(INTERNAL)
(c)	ME–3 PREVLVS CLOSE CMDS REMOVED FLAG	(INTERNAL)
(d)	HELIUM INTERCONNECT FLAG	(INTERNAL)

If either (a), (b), or (c) = false, return to Step 1.

If (a), (b), and (c) all = true, then set output (1) = false and monitor (d).

If (d) = true, return to Step 1.

If (d) = false, terminate the SSME OPS sequence.

(1)	EVENT TIMER START FLAG	V90X8403X

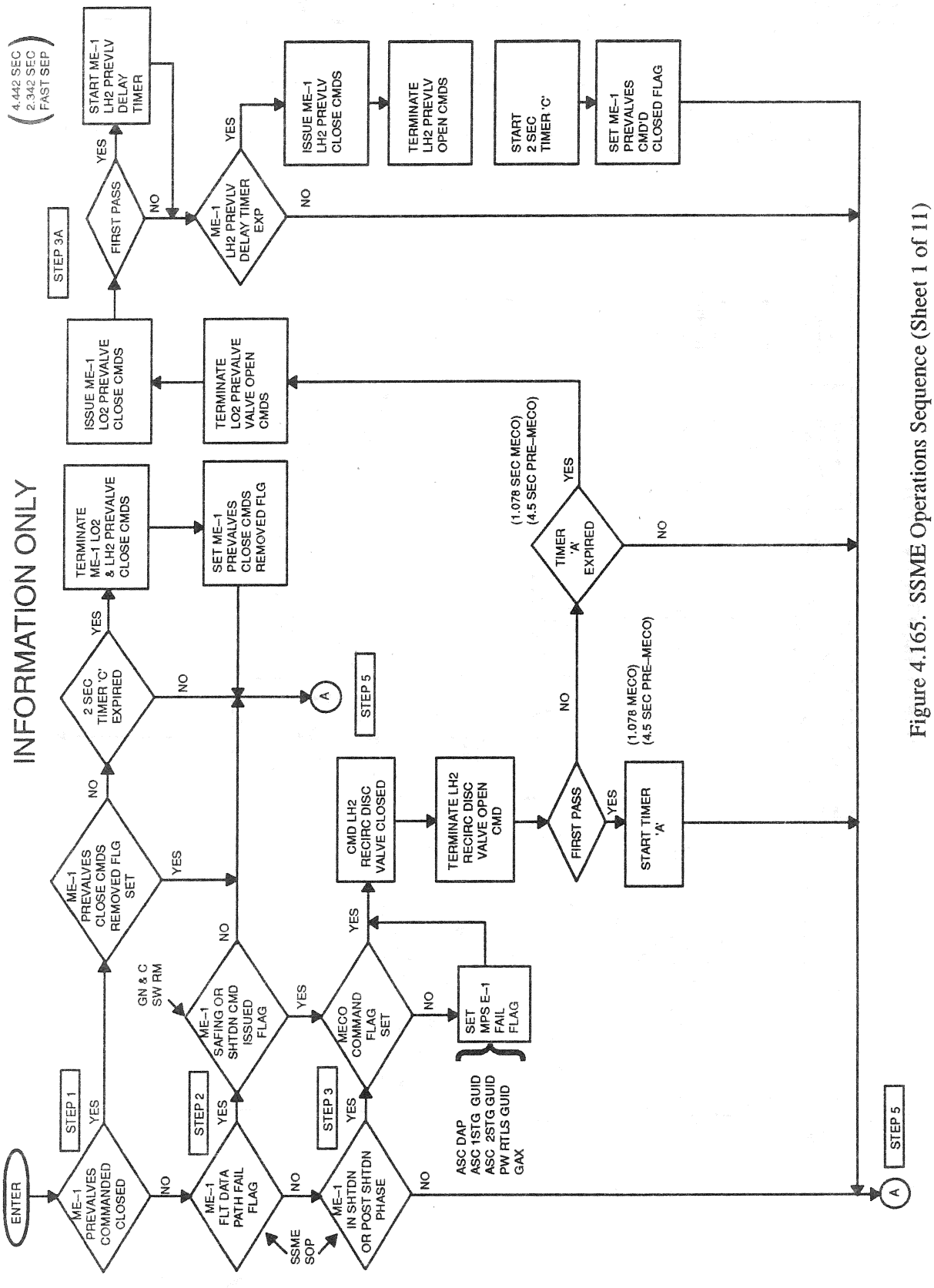

Figure 4.165. SSME Operations Sequence (Sheet 1 of 11)

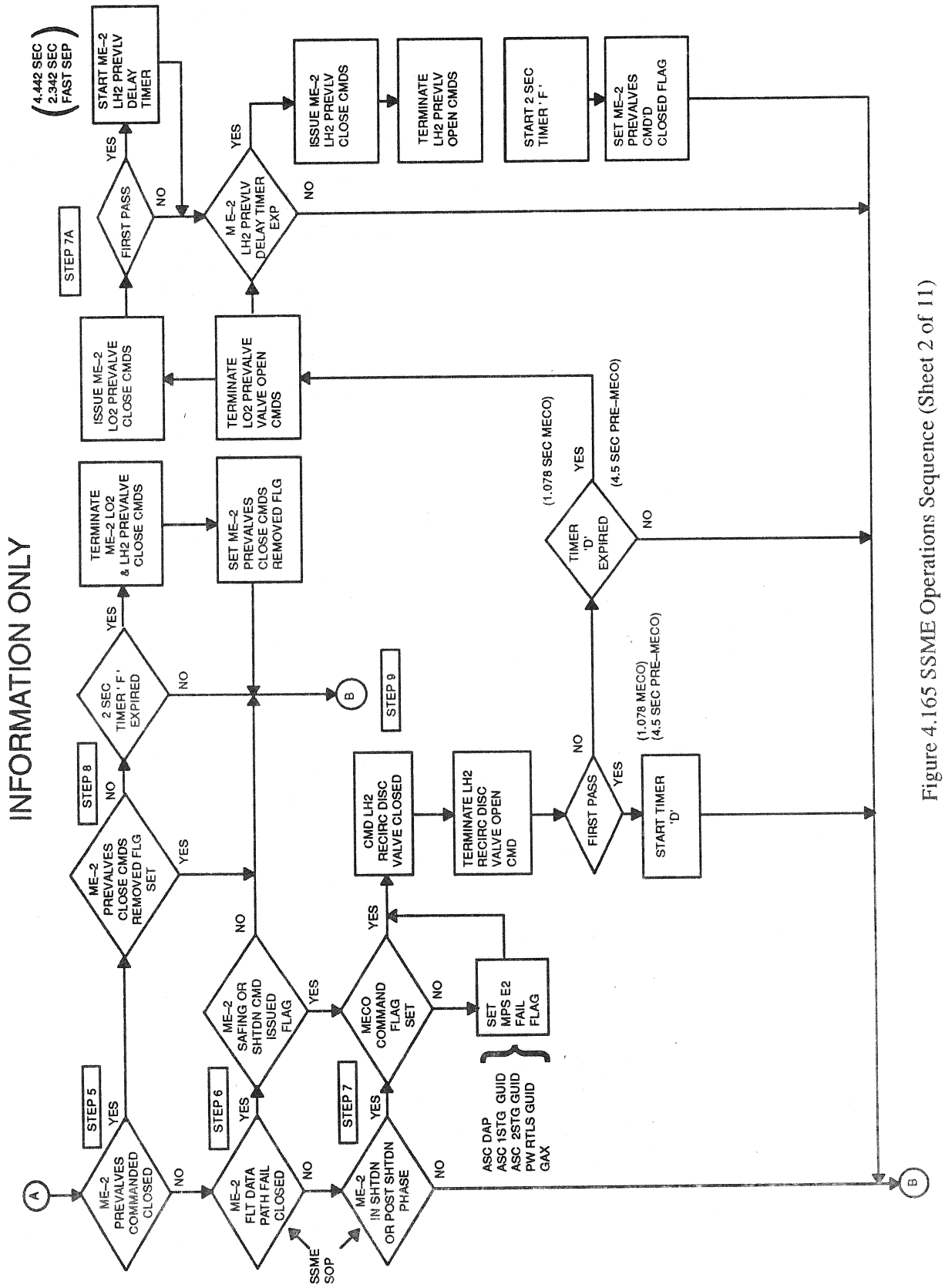

Figure 4.165 SSME Operations Sequence (Sheet 2 of 11)

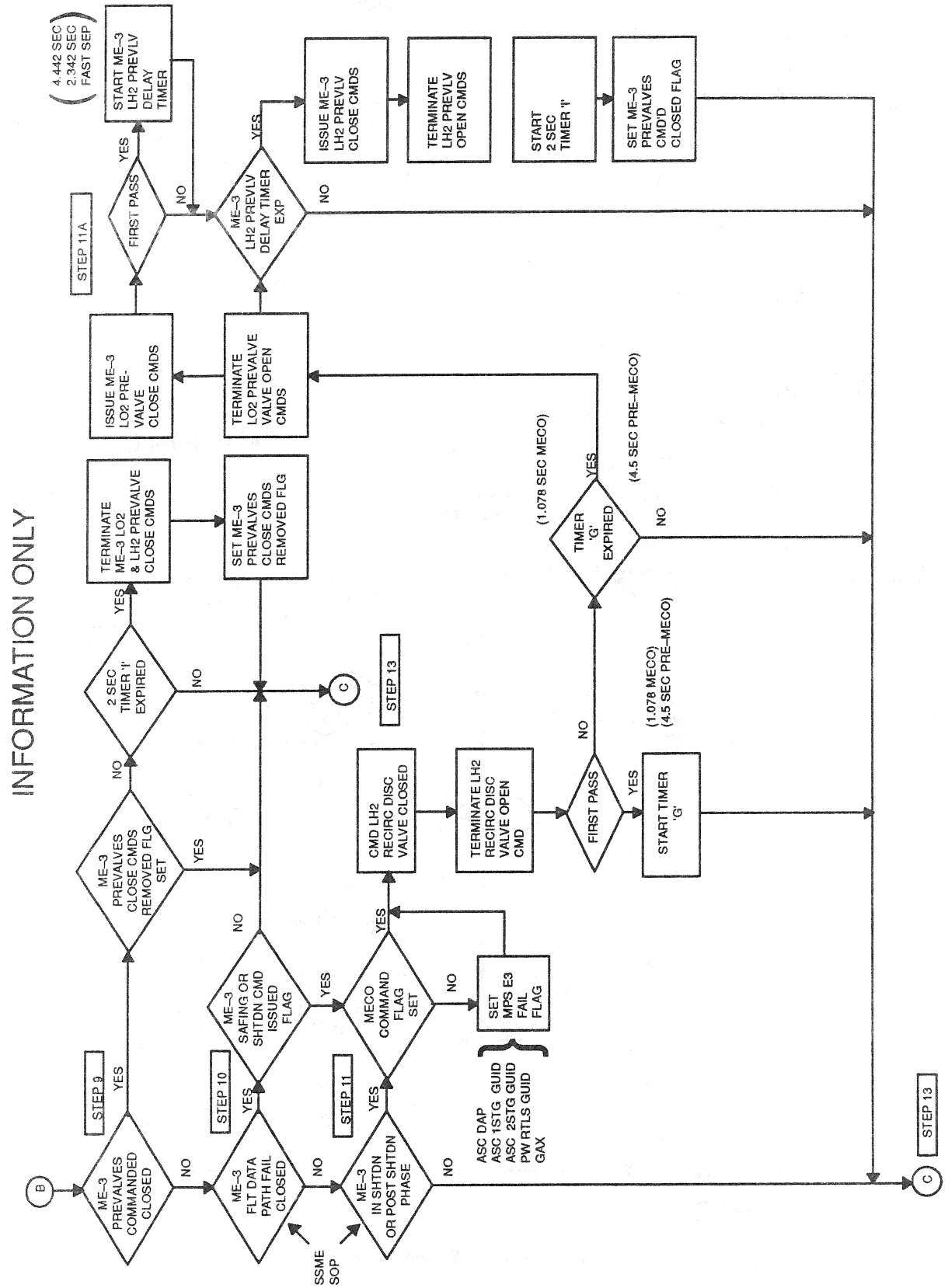

Figure 4.165 SSME Operations Sequence (Sheet 3 of 11)

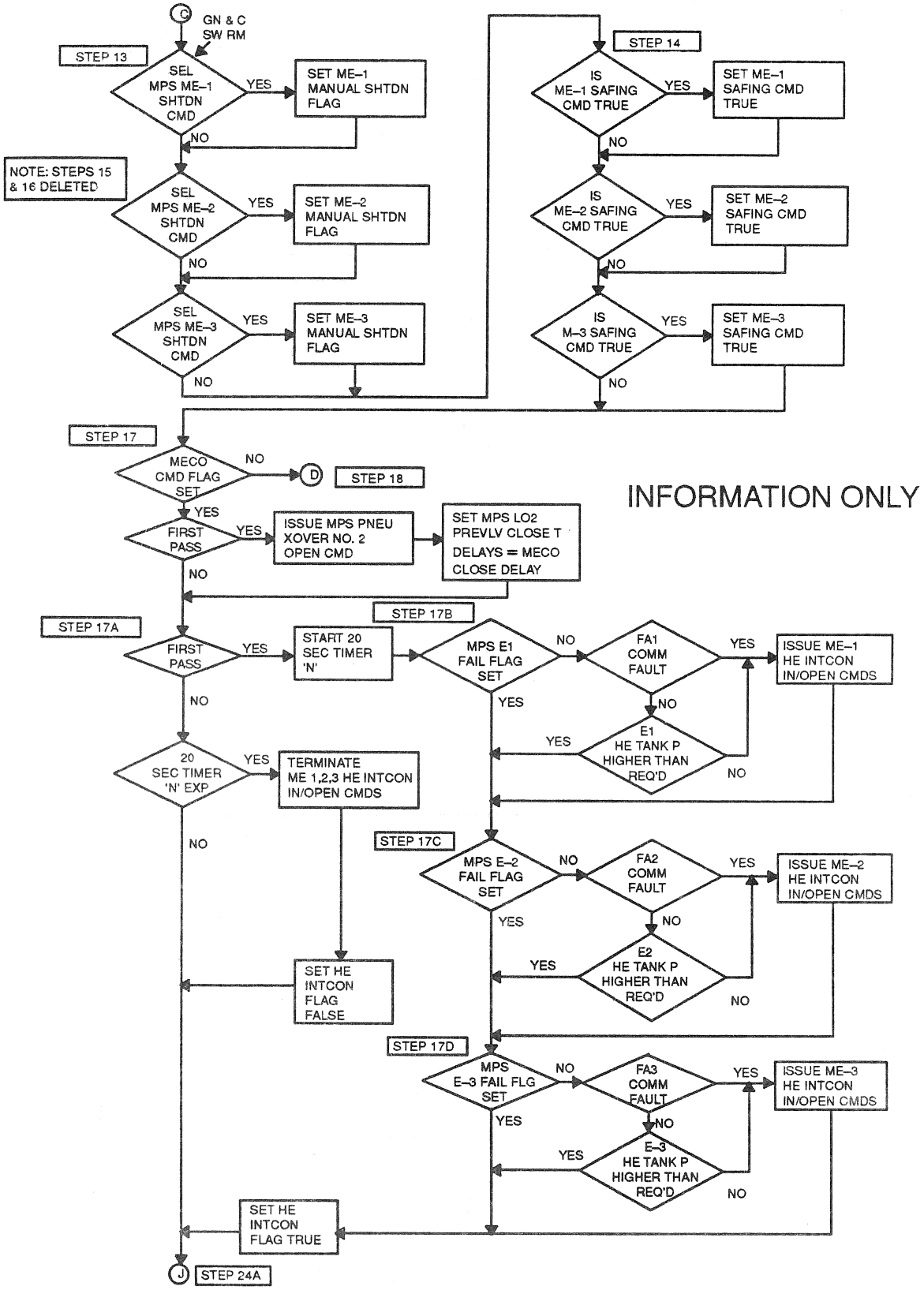

Figure 4.165 SSME Operations Sequence (Sheet 4 of 11)

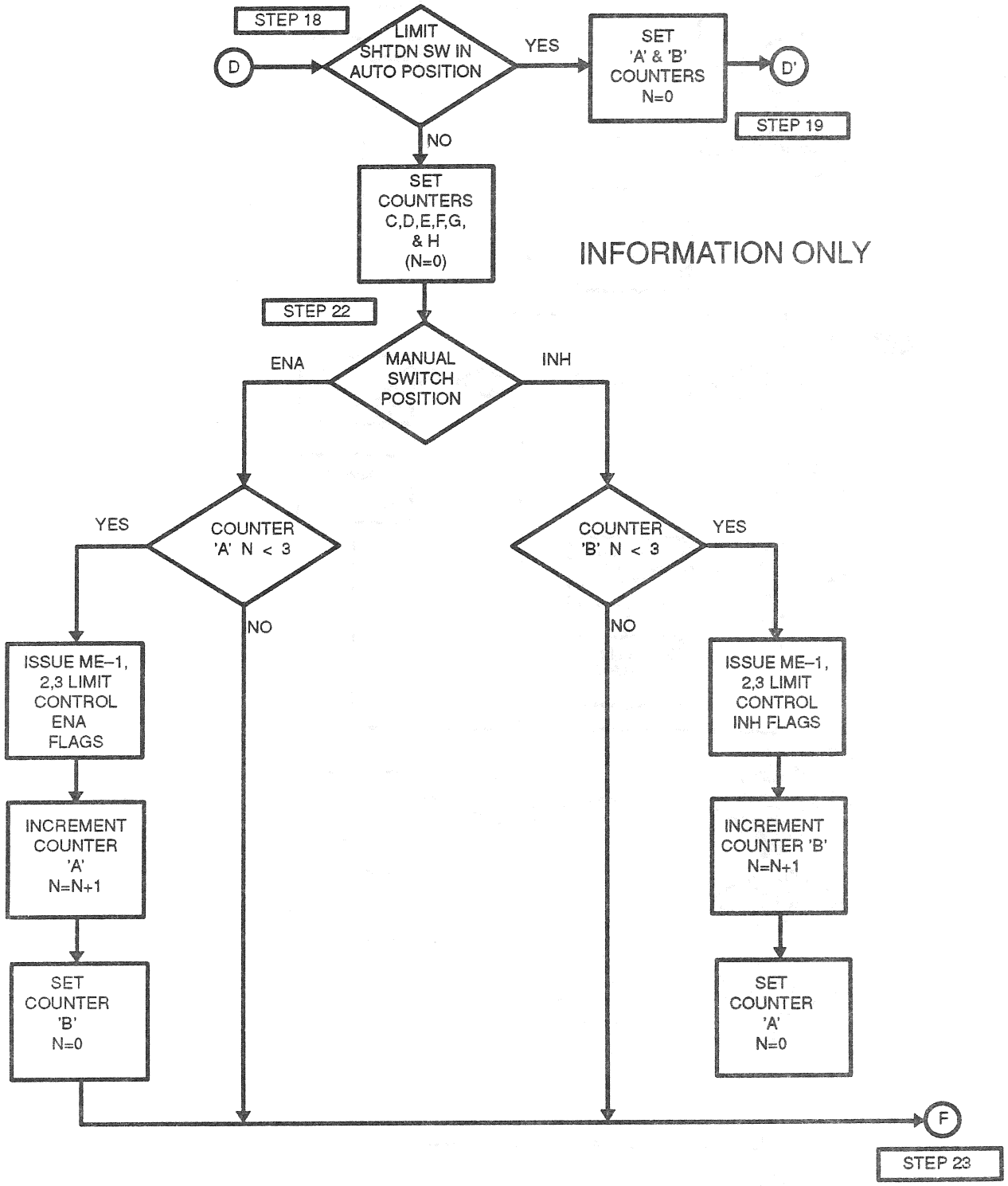

Figure 4.165. SSME Operations Sequence (Sheet 5 of 11)

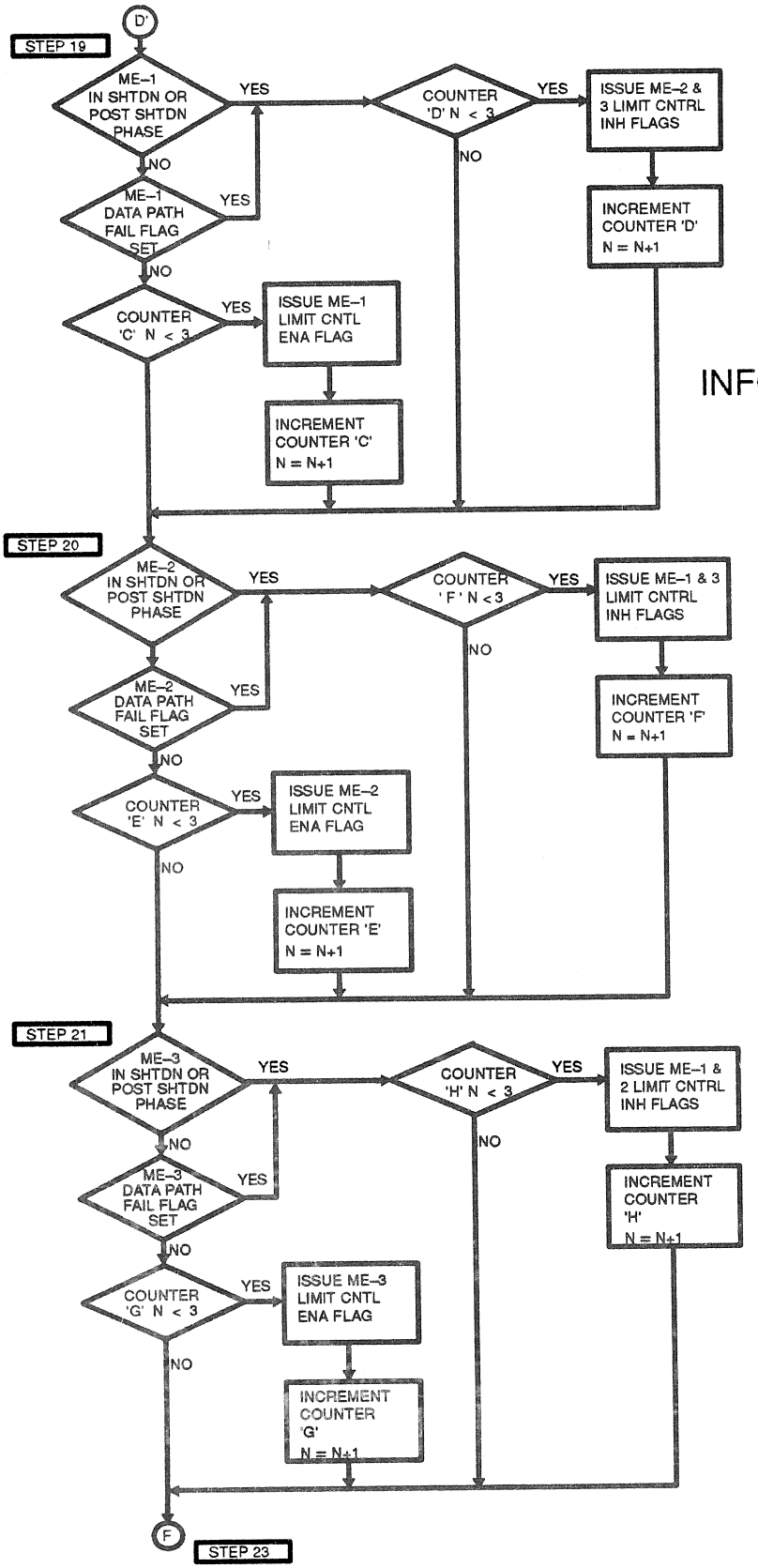

INFORMATION ONLY

Figure 4.165. SSME Operations Sequence (Sheet 6 of 11)

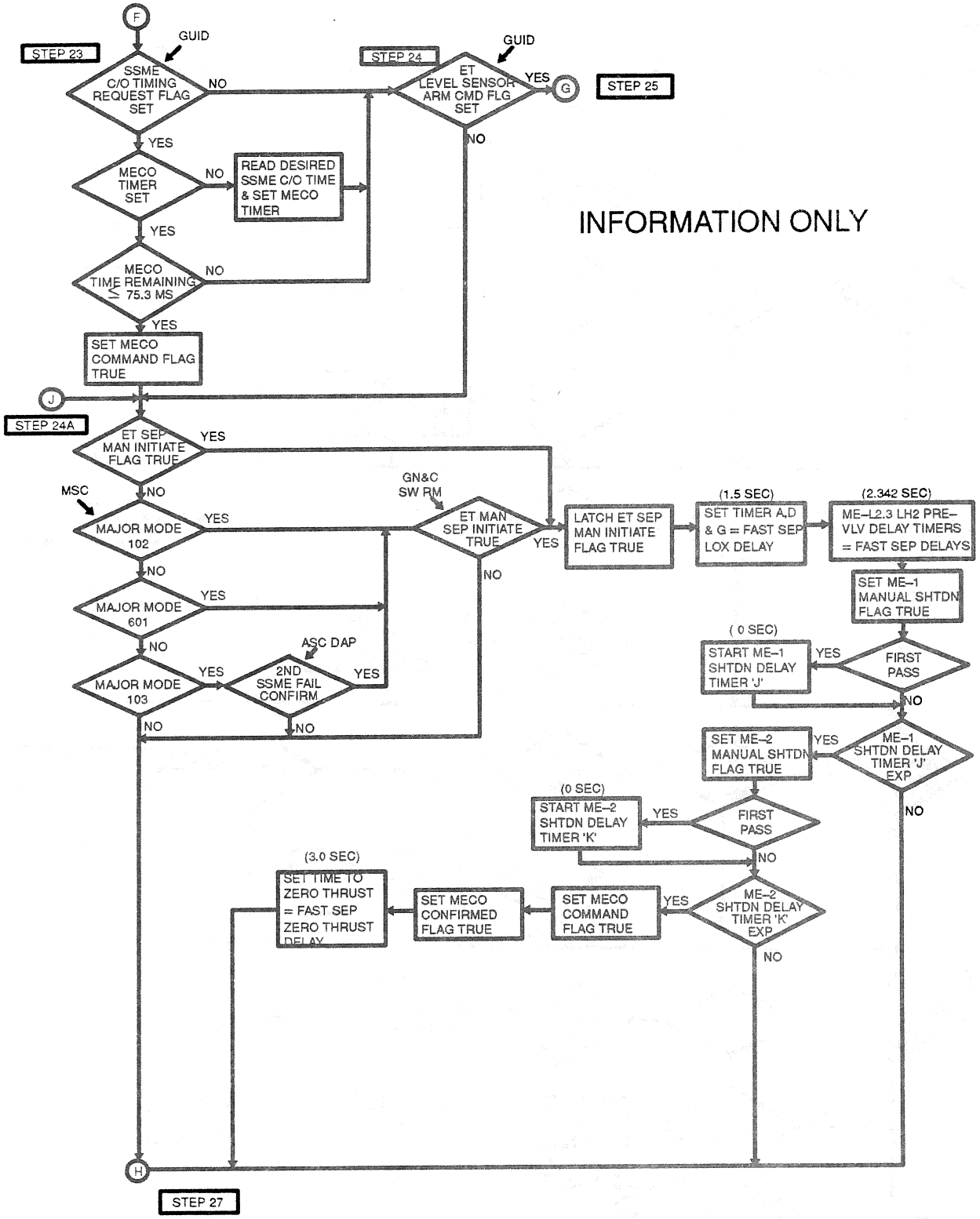

Figure 4.165 SSME Operations Sequence (Sheet 7 of 11)

INFORMATION ONLY

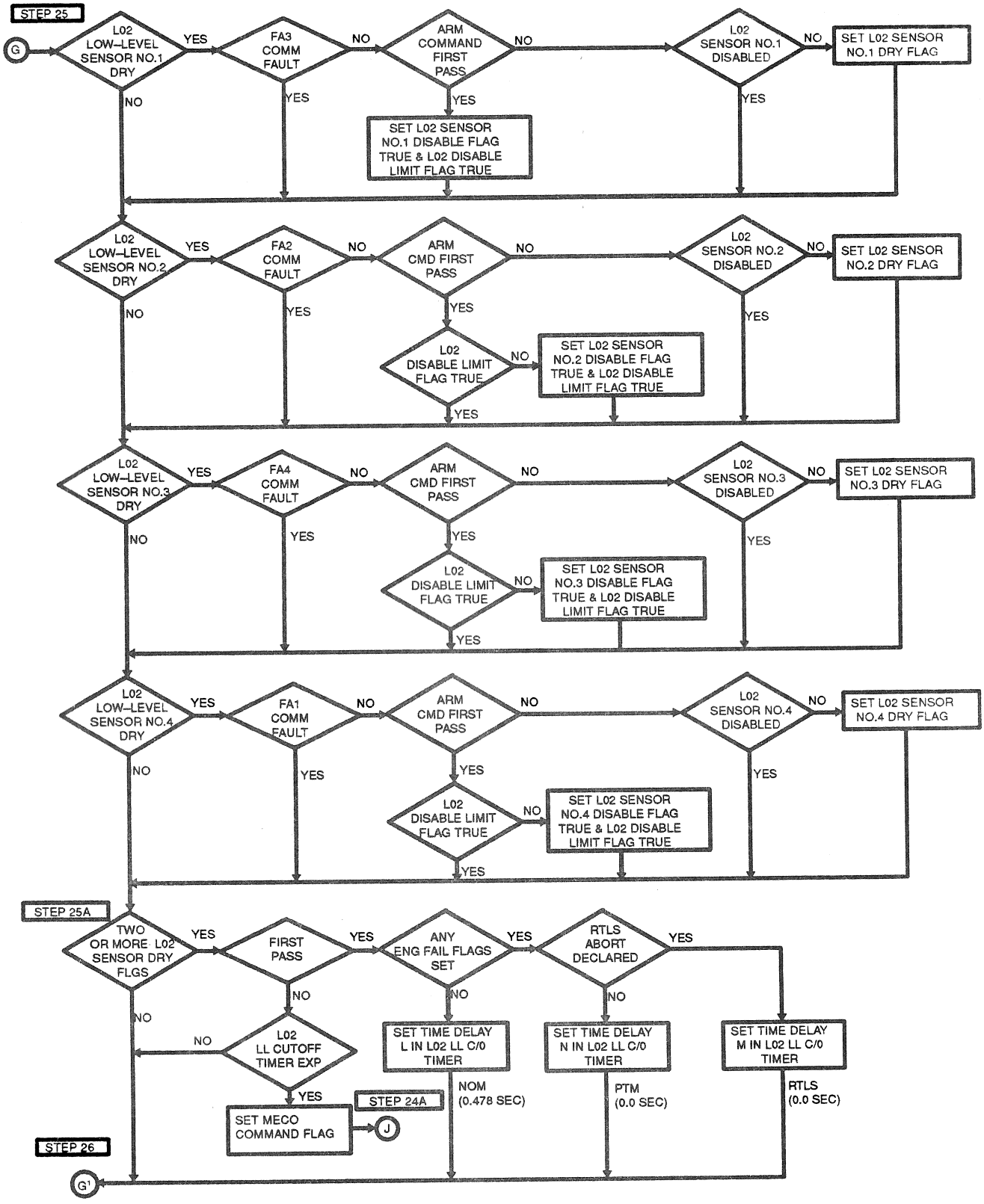

Figure 4.165 SSME Operations Sequence (Sheet 8 of 11)

INFORMATION ONLY

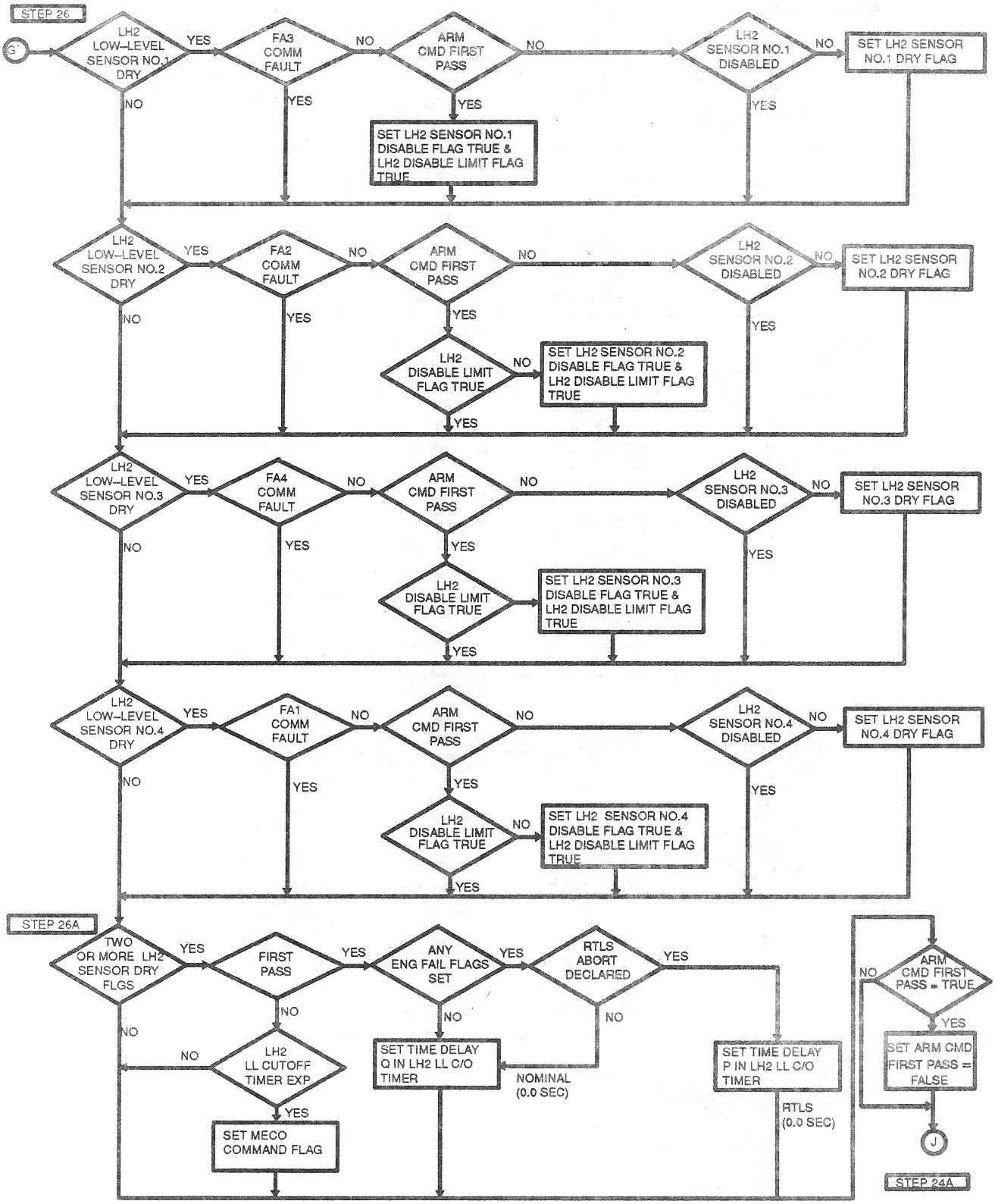

Figure 4.165 SSME Operations Sequence (Sheet 9 of 11)

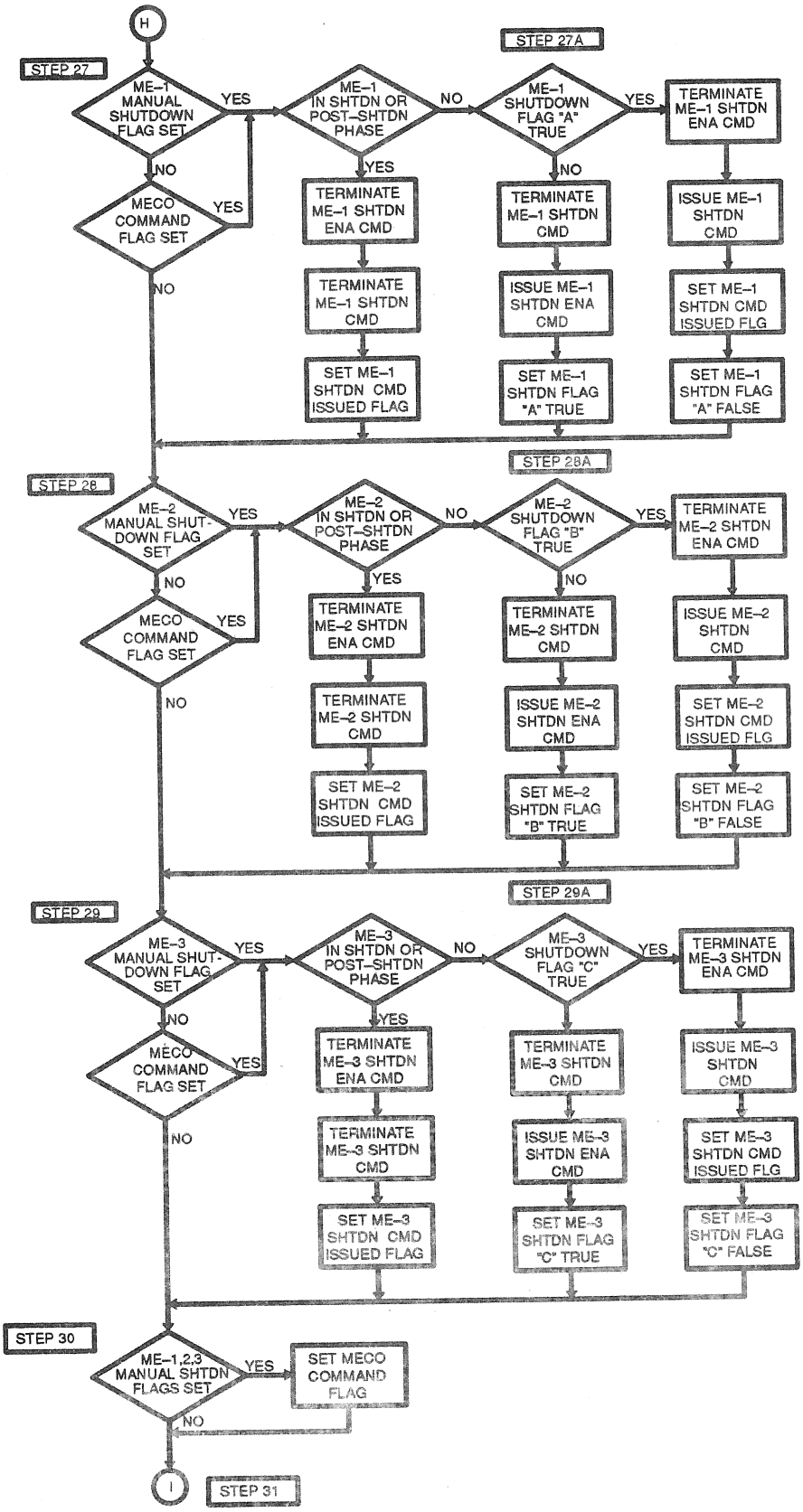

INFORMATION ONLY

Figure 4.165 SSME Operations Sequence (Sheet 10 of 11)

INFORMATION ONLY

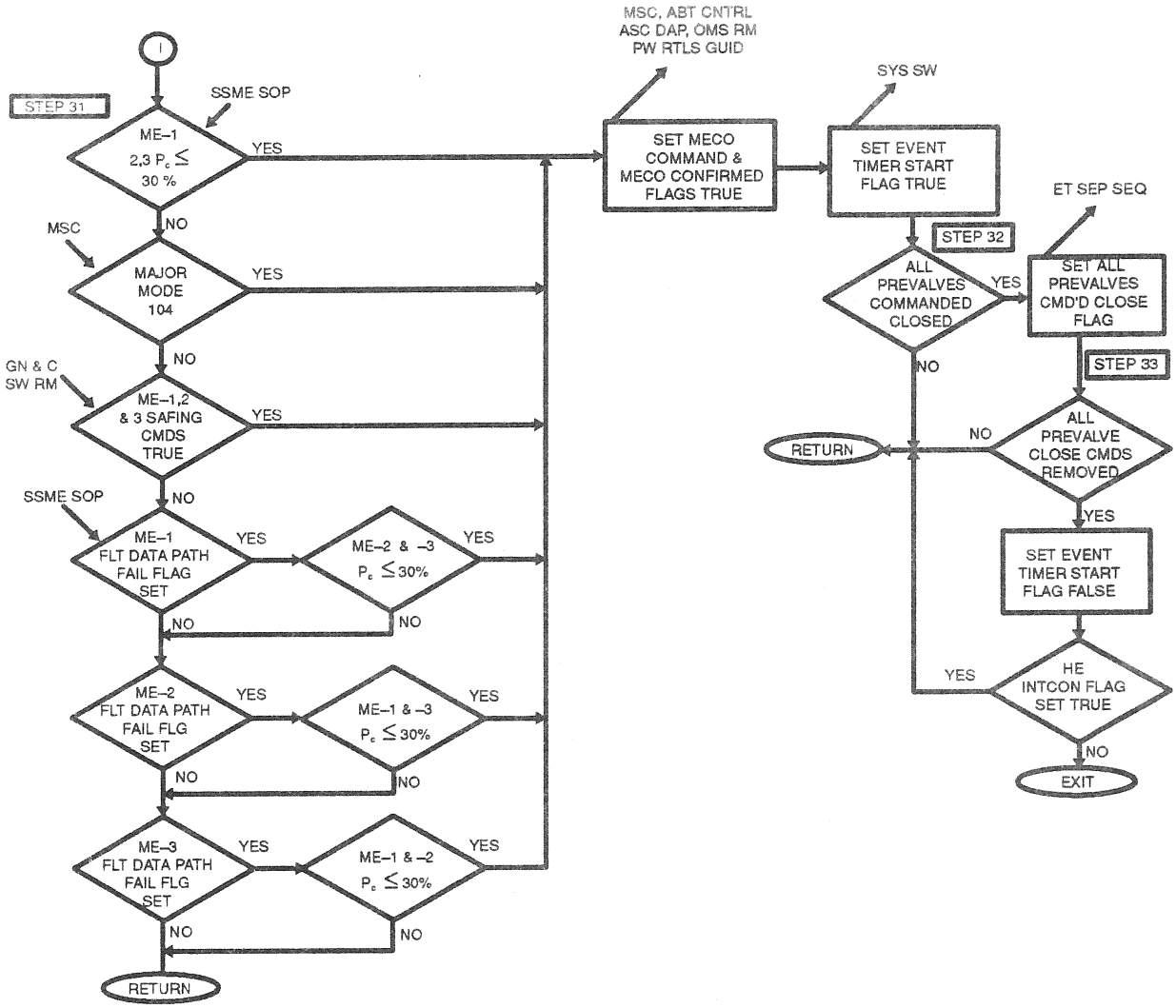

Figure 4.165. SSME Operations Sequence (Sheet 11 of 11)

THIS PAGE INTENTIONALLY LEFT BLANK

TABLE 4.2.1.4–1. SPACE SHUTTLE MAIN ENGINE(SSME) OPERATIONS SEQ (G4.165) INPUT/OUTPUT FUNCTIONAL PARAMETERS

DBFN: D3B027-F PN: VP707100049P00L INPUT FUNCTIONAL PARAMETERS FOR SSME OPS

FSSR NAME	M/S ID	NOMENCLATURE	SOURCE	UNITS	DATA TYPE	PREC	LAST CRS
CLOCK/CLOCKTIME	V91W5000C	CLOCK-COMPUTER(GMT)	FCOS	S			
ET_SEP_MAN_INITIATE	V90X8584XB	ET SEP MAN INITIATE FLAG	PW CONT GUID				89990E
ME_FLT_DATA_PATH_FAIL(1)	V95X1150X	ME-1 FLIGHT DATA PATH FAIL FLAG	SSME SOP				
ME_FLT_DATA_PATH_FAIL(2)	V95X1151X	ME-2 FLIGHT DATA PATH FAIL FLAG	SSME SOP				
ME_FLT_DATA_PATH_FAIL(3)	V95X1152X	ME-3 FLIGHT DATA PATH FAIL FLAG	SSME SOP				
MEPSTSHDN(1)	V95X1160X	MPS E1 POST-SHUTDOWN PHASE	SSME SOP				
MEPSTSHDN(2)	V95X1161X	MPS E2 POST-SHUTDOWN PHASE	SSME SOP				
MEPSTSHDN(3)	V95X1162X	MPS E3 POST-SHUTDOWN PHASE	SSME SOP				
MESHDN(1)	V95X1155X	MPS E1 SHUTDOWN PHASE	SSME SOP				
MESHDN(2)	V95X1156X	MPS E2 SHUTDOWN PHASE	SSME SOP				
MESHDN(3)	V95X1157X	MPS E3 SHUTDOWN PHASE	SSME SOP				
ME1_CH_PRESS_FDBK	V95U1186C	MPS E-1 PERCENT CH PRESS	SSME SOP	PCT			
ME2_CH_PRESS_FDBK	V95U1187C	MPS E-2 PERCENT CH PRESS	SSME SOP	PCT			
ME3_CH_PRESS_FDBK	V95U1188C	MPS E-3 PERCENT CH PRESS	SSME SOP	PCT			
MM_CODE_102/MM_102	V90X8158X	MAJOR MODE 102 FLAG	MSC				89990E
							90115
MM_CODE_103/MM_103	V90X8156X	MAJOR MODE 103 FLAG	MSC				89990E
							89599C
MM_CODE_104/MM_104	V90X8152X	MAJOR MODE 104 FLAG	MSC				90114B
							89599C
MM_CODE_601/MM_601	V90X8194X	MAJOR MODE 601 FLAG	MSC				89990E
S_LOW_LEVEL	V90X1942XA	ET LEVEL SENSOR ARM CMD	ASC 2STG GUID				
S_LOW_LEVEL	V90X1942XB	ET LEVEL SENSOR ARM CMD	PW RTLS GUID				
S_LOW_LEVEL	V90X1942XC	ET LEVEL SENSOR ARM CMD	PW CONT GUID				89990E
S_TMECO	V90X1944XA	SSME C/O TIMING REQUEST FLAG	ASC 2STG GUID				89461
S_TMECO	V90X1944XB	SSME C/O TIMING REQUEST FLAG	PW RTLS GUID				89990E
							89632A
S_TMECO	V90X1944XC	SSME C/O TIMING REQUEST FLAG	PW CONT GUID				89990E
SEC_ME_FL_CNFM	V90X1721X	2ND SSME FAIL CONFIRM	ASC DAP				89990E
T_GMTLO	V90W4380C	TIME OF LIFTOFF IN GMT	FCOS	S			89990E
							89461
T_MECO	V90W1945CA	DESIRED SSME C/O TIME	ASC 2STG GUID	S			
T_MECO	V90W1945CB	DESIRED SSME C/O TIME	PW RTLS GUID	S			
T_MECO	V90W1945CC	DESIRED SSME C/O TIME	PW CONT GUID	S			89990E
	T41X1730X	ET-LH2 LOW LEVEL LIQ SENSOR NO 1	HDWR		BD		
	T41X1731X	ET-LH2 LOW LEVEL LIQ SENSOR NO 2	HDWR		BD		
	T41X1732X	ET-LH2 LOW LEVEL LIQ SENSOR NO 3	HDWR		BD		
	T41X1733X	ET-LH2 LOW LEVEL LIQ SENSOR NO 4	HDWR		BD		
	V41P1150C	MPS E1 HE SUPPLY BOTTLE PRESS	HDWR		AMU		89505B
							89554A
	V41P1250C	MPS E2 HE SUPPLY BOTTLE PRESS	HDWR		AMU		89505B
							89554A

TABLE 4.2.1.4–1. SPACE SHUTTLE MAIN ENGINE(SSME) OPERATIONS SEQ (G4.165) INPUT/OUTPUT FUNCTIONAL PARAMETERS

DBFN: D3B027-F PN: VP707100049P00L INPUT FUNCTIONAL PARAMETERS FOR SSME OPS

FSSR NAME	M/S ID	NOMENCLATURE	SOURCE	UNITS	DATA TYPE	PREC	LAST CRS
	V41P1350C	MPS E3 HE SUPPLY BOTTLE PRESS	HDWR		AMU		89505B
							89554A
	V41X1555X	MPS LO2 LEFT ECO SENSOR 1	HDWR		BD		89554A
	V41X1556X	MPS LO2 LEFT ECO SENSOR 2	HDWR		BD		89554A
	V41X1557X	MPS LO2 RIGHT ECO SENSOR 2	HDWR		BD		89554A
	V41X1558X	MPS LO2 RIGHT ECO SENSOR 1	HDWR		BD		89554A
	V90X3439X	FASCOS AUTO RESET	GN&C SW RM				
	V90X3440X	FASCOS INHIBIT	GN&C SW RM				89598A
	V90X3443X	ME-1 SAFING CMD	GN&C SW RM				
	V90X3444X	ME-2 SAFING CMD	GN&C SW RM				
	V90X3445X	ME-3 SAFING CMD	GN&C SW RM				
	V90X7548X	SEL MPS ENG LIMIT CONTROL AUTO	GN&C SW RM		BD		
	V90X7549X	SEL MPS ENG LIMIT CONTROL ENABLE	GN&C SW RM				
	V90X7550X	SEL MPS ENG LIMIT CONTROL INHIBIT	GN&C SW RM				
	V90X7551X	SEL MPS ME-1 SHUTDOWN CMD	GN&C SW RM		BD		
	V90X7552X	SEL MPS ME-2 SHUTDOWN CMD	GN&C SW RM		BD		
	V90X7553X	SEL MPS ME-3 SHUTDOWN CMD	GN&C SW RM		BD		
	V90X7564X	SEL ET SEP INITIATE/WOW-WONG CMD	GN&C SW RM		BD		
	V90X8637XA	RTLS ABORT DECLARED	MSC				89991E
							89599C
	V90X8637XB	RTLS ABORT DECLARED	ET SEP SEQ				89991E
	V91X2841X	FA1 INPUT PROM SEG 1,2 STATUS(MFE)	FCOS				89846B
	V91X2842X	FA2 INPUT PROM SEG 1,2 STATUS(MFE)	FCOS				90114B
	V91X2843X	FA3 INPUT PROM SEG 1,2 STATUS(MFE)	FCOS				90114B
	V91X2845X	FA1 INPUT PROM SEG3,10 STATUS(HFE)	FCOS				89991E
							89598A
	V91X2846X	FA2 INPUT PROM SEG3,10 STATUS(HFE)	FCOS				89991E
							89598A
	V91X2847X	FA3 INPUT PROM SEG3,10 STATUS(HFE)	FCOS				89991E
							89598A
	V91X2848X	FA4 INPUT PROM SEG3,10 STATUS(HFE)	FCOS				89598A
							59126H
	V93X5340X	BACKUP ET SEP AUTO SEL	OVERRIDE DISP		BD		
	V99X8806X	ET_LH2_LO_LVL_LIQ_SES1_DSBL_FLG	VU				89325B
	V99X8807X	ET_LH2_LO_LVL_LIQ_SES2_DSBL_FLG	VU				89325B
	V99X8808X	ET_LH2_LO_LVL_LIQ_SES3_DSBL_FLG	VU				89325B
	V99X8809X	ET_LH2_LO_LVL_LIQ_SES4_DSBL_FLG	VU				89325B
	V99X8814X	MPS_LOX_LO_LVL_LIQ_SES1_DSBL_FLG	VU				89325B
	V99X8815X	MPS_LOX_LO_LVL_LIQ_SES2_DSBL_FLG	VU				89325B
	V99X8816X	MPS_LOX_LO_LVL_LIQ_SES3_DSBL_FLG	VU				89325B
	V99X8817X	MPS_LOX_LO_LVL_LIQ_SES4_DSBL_FLG	VU				89325B

TABLE 4.2.1.4-1. SPACE SHUTTLE MAIN ENGINE(SSME) OPERATIONS SEQ (G4.165) INPUT/OUTPUT FUNCTIONAL PARAMETERS

DBFN: D3B027-F PN: VP707100049P00L OUTPUT FUNCTIONAL PARAMETERS FROM SSME OPS

FSSR NAME	M/S ID	NOMENCLATURE	DESTINATION	UNITS	DATA TYPE	PREC	LAST CRS
ET_SEP_MAN_INITIATE	V90X8584XA	ET SEP MAN INITIATE FLAG	ET SEP SEQ		BD		89990E
MECO_CMD	V90X8569XA	MECO COMMAND FLAG	ASC UPP SEQ,ASC DAP,MSC,OMS RM, MPS D/D SEQ,GRTLS DAP, ASC ADI PROC,A/E ATT PROC,GAX, OVERRIDE SPEC,ABT CNTL SEQ,TLM				90114B
MECO_CONFIRMED	V90X8561X	MECO CONFIRMED FLAG	MSC,ABT CNTL SEQ,OMS RM, PW RTLS GUID,ASC DAP, HORIZ SIT SPEC,PW CONT GUID,TLM		BD		89990E 89599C
MESHDNCMD(1)	V90X8370XB	MPS E1 SHUTDOWN CMD	SSME SOP				
MESHDNCMD(2)	V90X8371XB	MPS E2 SHUTDOWN CMD	SSME SOP				
MESHDNCMD(3)	V90X8372XB	MPS E3 SHUTDOWN CMD	SSME SOP				
MESHDNENA(1)	V90X8367XB	MPS E1 SHUTDOWN ENABLE CMD	SSME SOP				
MESHDNENA(2)	V90X8368XB	MPS E2 SHUTDOWN ENABLE CMD	SSME SOP				
MESHDNENA(3)	V90X8369XB	MPS E3 SHUTDOWN ENABLE CMD	SSME SOP				
ME1_FAIL_SHUTDOWN	V95X1207X	MPS E1 FAIL FLAG	ASC 1STG GUID,ASC 2STG GUID, PW RTLS GUID,ASC DAP,MSC, SPTI SOP,GAX,SRB SEP SEQ, PW CONT GUID,XXXXXX TRAJ DISP, TLM		BD		89990E
ME2_FAIL_SHUTDOWN	V95X1208X	MPS E2 FAIL FLAG	ASC 1STG GUID,ASC 2STG GUID, PW RTLS GUID,ASC DAP,MSC, SPTI SOP,GAX,SRB SEP SEQ, PW CONT GUID,XXXXXX TRAJ DISP TLM		BD		89990E
ME3_FAIL_SHUTDOWN	V95X1209X	MPS E3 FAIL FLAG	ASC 1STG GUID,ASC 2STG GUID, PW RTLS GUID,ASC DAP,MSC, SPTI SOP,GAX,SRB SEP SEQ, PW CONT GUID,XXXXXX TRAJ DISP, TLM		BD		89990E
MPS_ENA(1)	V90X8573X	MPS E1 LIMIT CNTL ENA	SSME SOP				
MPS_ENA(2)	V90X8574X	MPS E2 LIMIT CNTL ENA	SSME SOP				
MPS_ENA(3)	V90X8575X	MPS E3 LIMIT CNTL ENA	SSME SOP				
MPS_INH(1)	V90X8570X	MPS E1 LIMIT CNTL INH	SSME SOP				
MPS_INH(2)	V90X8571X	MPS E2 LIMIT CNTL INH	SSME SOP				
MPS_INH(3)	V90X8572X	MPS E3 LIMIT CNTL INH	SSME SOP				
	V41K1119XA	MPS E1 LH2 PREVLV (PV4) OP CMD A	PCA A1				89554A
	V41K1120XA	MPS E1 LH2 PREVLV (PV4) OP CMD B	LCA A1				89554A
	V41K1121XA	MPS E1 LH2 PREVLV (PV4) OP CMD C	LCA A2				89554A
	V41K1122XA	MPS E1 LH2 PREVLV (PV4) CL CMD A	PCA A1				89554A
	V41K1123XA	MPS E1 LH2 PREVLV (PV4) CL CMD B	LCA A1				89554A
	V41K1124XA	MPS E1 LH2 PREVLV (PV4) CL CMD C	LCA A2				89554A
	V41K1136XA	MPS E1 LO2 PREVLV (PV1) OP CMD A	PCA A1				89554A
	V41K1137XA	MPS E1 LO2 PREVLV (PV1) OP CMD B	LCA A1				89554A

TABLE 4.2.1.4–1. SPACE SHUTTLE MAIN ENGINE(SSME) OPERATIONS SEQ (G4.165) INPUT/OUTPUT FUNCTIONAL PARAMETERS

DBFN: D3B027-F PN: VP707100049P00L OUTPUT FUNCTIONAL PARAMETERS FROM SSME OPS

FSSR NAME	M/S ID	NOMENCLATURE	DESTINATION	UNITS	DATA TYPE	PREC	LAST CRS
	V41K1138XA	MPS E1 LO2 PREVLV (PV1) OP CMD C	LCA A2				89554A
	V41K1139XA	MPS E1 LO2 PREVLV (PV1) CL CMD A	PCA A1				89554A
	V41K1140XA	MPS E1 LO2 PREVLV (PV1) CL CMD B	LCA A1				89554A
	V41K1141XA	MPS E1 LO2 PREVLV (PV1) CL CMD C	LCA A2				89554A
	V41K1142XA	MPS E1 LO2 PREVLV (PV1) CL CMD D	HDWR				89554A
	V41K1143XA	MPS E1 LO2 PREVLV (PV1) OP CMD D	HDWR				89554A
	V41K1162X	MPS E1 HE INTCN IN (LV59) OP CMD A	HDWR		BD		89554A
	V41K1163X	MPS E1 HE INTCN IN (LV59) OP CMD B	HDWR		BD		89554A
	V41K1219XA	MPS E2 LH2 PREVLV (PV5) OP CMD A	PCA A2				89554A
	V41K1220XA	MPS E2 LH2 PREVLV (PV5) OP CMD B	LCA A2				89554A
	V41K1221XA	MPS E2 LH2 PREVLV (PV5) OP CMD C	LCA A3				89554A
	V41K1222XA	MPS E2 LH2 PREVLV (PV5) CL CMD A	PCA A2				89554A
	V41K1223XA	MPS E2 LH2 PREVLV (PV5) CL CMD B	LCA A2				89554A
	V41K1224XA	MPS E2 LH2 PREVLV (PV5) CL CMD C	LCA A3				89554A
	V41K1236XA	MPS E2 LO2 PREVLV (PV2) OP CMD A	PCA A2				89554A
	V41K1237XA	MPS E2 LO2 PREVLV (PV2) OP CMD B	LCA A2				89554A
	V41K1238XA	MPS E2 LO2 PREVLV (PV2) OP CMD C	LCA A3				89554A
	V41K1239XA	MPS E2 LO2 PREVLV (PV2) CL CMD A	PCA A2				89554A
	V41K1240XA	MPS E2 LO2 PREVLV (PV2) CL CMD B	LCA A2				89554A
	V41K1241XA	MPS E2 LO2 PREVLV (PV2) CL CMD C	LCA A3				89554A
	V41K1242XA	MPS E2 LO2 PREVLV (PV2) CL CMD D	HDWR				89554A
	V41K1243XA	MPS E2 LO2 PREVLV (PV2) OP CMD D	HDWR				89554A
	V41K1262XA	MPS E2 HE INTCN IN (LV61) OP CMD A	HDWR				89554A
	V41K1263XA	MPS E2 HE INTCN IN (LV61) OP CMD B	HDWR				89554A
	V41K1319XA	MPS E3 LH2 PREVLV (PV6) OP CMD A	PCA A3				89554A
	V41K1320XA	MPS E3 LH2 PREVLV (PV6) OP CMD B	LCA A3				89554A
	V41K1321XA	MPS E3 LH2 PREVLV (PV6) OP CMD C	LCA A1				89554A
	V41K1322XA	MPS E3 LH2 PREVLV (PV6) CL CMD A	PCA A3				89554A
	V41K1323XA	MPS E3 LH2 PREVLV (PV6) CL CMD B	LCA A3				89554A
	V41K1324XA	MPS E3 LH2 PREVLV (PV6) CL CMD C	LCA A1				89554A
	V41K1336XA	MPS E3 LO2 PREVLV (PV3) OP CMD A	PCA A3				89554A
	V41K1337XA	MPS E3 LO2 PREVLV (PV3) OP CMD B	LCA A3				89554A
	V41K1338XA	MPS E3 LO2 PREVLV (PV3) OP CMD C	LCA A1				89554A
	V41K1339XA	MPS E3 LO2 PREVLV (PV3) CL CMD A	PCA A3				89554A
	V41K1340XA	MPS E3 LO2 PREVLV (PV3) CL CMD B	LCA A3				89554A
	V41K1341XA	MPS E3 LO2 PREVLV (PV3) CL CMD C	LCA A1				89554A
	V41K1342XA	MPS E3 LO2 PREVLV (PV3) CL CMD D	HDWR				89554A
	V41K1343XA	MPS E3 LO2 PREVLV (PV3) OP CMD D	HDWR				89554A
	V41K1362X	MPS E3 HE INTCN IN (LV63) OP CMD A	HDWR		BD		89554A
	V41K1363X	MPS E3 HE INTCN IN (LV63) OP CMD B	HDWR		BD		89554A
	V41K1421XA	MPS LH2 RECIRC DISC VLV OPEN CMD	HDWR		BD		89313A
	V41K1422XA	MPS LH2 4IN DISC VLV (PD3) CL CMD	HDWR		BD		89313A
							89554A

TABLE 4.2.1.4–1. SPACE SHUTTLE MAIN ENGINE(SSME) OPERATIONS SEQ (G4.165) INPUT/OUTPUT FUNCTIONAL PARAMETERS

DBFN: D3B027-F PN: VP707100049P00L OUTPUT FUNCTIONAL PARAMETERS FROM SSME OPS

FSSR NAME	M/S ID	NOMENCLATURE	DESTINATION	UNITS	DATA TYPE	PREC	LAST CRS
	V41K1613XB	MPS REG HE XOVER VLV (LV10) OP CMD	HDWR				89554A
	V90X8403XB	EVENT TIMER START FLAG	SYS S/W				
	V90X8568X	ALL PREVLVS COMMANDED CLOSE IND	ET SEP SEQ				
	V90X8577X	ZERO THRUST DELAY	MSC				

TABLE 4.2.1.4–2. SPACE SHUTTLE MAIN ENGINE(SSME) OPERATIONS SEQ (G4.165) I–LOADS

DBFN:0484

FSSR NAME	MSID	ENG UNIT	DT	PR	D	S	PR	FCTN	CAT
FAST_SEP_ZERO_THRUST_DLY	V97U9833C	SEC	F	D	D	C	G4.165		ZSZ7
LH2_LL_TIME_DELAY_Q	V96U9535C	SEC	F	D	D	C	G4.165		QME0
MECO_LEAD_TIME	V97U9829C	SEC	F	D	D	C	G4.165		ZSZ7
ME1_LH2_PREVLV_CLSE_T_DELAY	V97U9741C	SEC	F	D	L	C	G4.165		ZSZ7
ME2_LH2_PREVLV_CLSE_T_DELAY	V97U9745C	SEC	F	D	L	C	G4.165		ZSZ7
ME3_LH2_PREVLV_CLSE_T_DELAY	V97U9749C	SEC	F	D	L	C	G4.165		ZSZ7
MPS_E1_T_DELAY_A	V97U9738C	SEC	F	D	D	C	G4.165		ZSZ7
MPS_E1_T_DELAY_C	V97U9740C	SEC	F	D	M	C	G4.165		ZSZ7
MPS_E2_T_DELAY_D	V97U9742C	SEC	F	D	D	C	G4.165		ZSZ7
MPS_E2_T_DELAY_F	V97U9744C	SEC	F	D	M	C	G4.165		ZSZ7
MPS_E3_T_DELAY_G	V97U9746C	SEC	F	D	D	C	G4.165		ZSZ7
MPS_E3_T_DELAY_I	V97U9748C	SEC	F	D	M	C	G4.165		ZSZ7
MPS_HELIUM_SYSTEM_LOW_PRESSURE	V97U9735C	PSIA	F	S	D	C	G4.165		ZSZ7
NOM_LO2_LL_T_DELAY_L	V97U9863C	SEC	F	D	D	P	G4.165		QME0
PTM_LO2_LL_T_DELAY_N	V97U9865C	SEC	F	D	D	C	G4.165		QME0
RTLS_LH2_LL_TIME_DELAY_P	V96U9536C	SEC	F	D	D	C	G4.165		QME0
RTLS_LO2_LL_T_DELAY_M	V97U9864C	SEC	F	D	D	C	G4.165		QME0

TABLE 4.2.1.4-3. SPACE SHUTTLE MAIN ENGINE(SSME) OPERATIONS SEQ (G4.165) K-LOADS

DBFN:0558

FSSR NAME DESCRIPTION	MSID	MC KLOAD VALUE	ENG UNIT	DT	PR	S	PR FCTN	LAST CR EQTN MSID
ET_LH2_LO_LVL_LIQ_SES1_DSBL_FLG	V99X8806X	B'0000000000000000'	ND	BI			C G4.165	29551B
ET_LH2_LO_LVL_LIQ_SES2_DSBL_FLG	V99X8807X	B'0000000000000000'	ND	BI			C G4.165	29551B
ET_LH2_LO_LVL_LIQ_SES3_DSBL_FLG	V99X8808X	B'0000000000000000'	ND	BI			C G4.165	29551B
ET_LH2_LO_LVL_LIQ_SES4_DSBL_FLG	V99X8809X	B'0000000000000000'	ND	BI			C G4.165	29551B
FAST_SEP_LH2_PREVLV_DLY	V97U9832C	+2.342 E+00	SEC	F	S		C G4.165	89278A
FAST_SEP_LOX_PREVLV_DLY	V97U9831C	+1.5 E+00	SEC	F	S		C G4.165	29551B
ME_SHTDN_DLY	V97U9830C	+0.0 E+00	SEC	F	S		C G4.165	29551B
MPS_LOX_LO_LVL_LIQ_SES1_DSBL_FLG	V99X8814X	B'0000000000000000'	ND	BI			C G4.165	29551B
MPS_LOX_LO_LVL_LIQ_SES2_DSBL_FLG	V99X8815X	B'0000000000000000'	ND	BI			C G4.165	29551B
MPS_LOX_LO_LVL_LIQ_SES3_DSBL_FLG	V99X8816X	B'0000000000000000'	ND	BI			C G4.165	29551B
MPS_LOX_LO_LVL_LIQ_SES4_DSBL_FLG	V99X8817X	B'0000000000000000'	ND	BI			C G4.165	29551B
MPS_MECO_E1_T_DELAY_A	V96U9769C	+1.078 E+00	SEC	F	S		C G4.165	89108A
MPS_MECO_E2_T_DELAY_D	V96U9771C	+1.078 E+00	SEC	F	S		C G4.165	89108A
MPS_MECO_E3_T_DELAY_G	V96U9773C	+1.078 E+00	SEC	F	S		C G4.165	89108A

TABLE 4.2.1.4–4. SPACE SHUTTLE MAIN ENGINE(SSME) OPERATIONS SEQ (G4.165) CONSTANTS

DBFN:0558

FSSR NAME DESCRIPTION	MSID	MC	CONSTANT VALUE	ENG UNIT	DT	PR	S	PR FCTN	LAST CR

NO REQUIREMENTS

4.2.2 SRB Separation Sequence (4.115)

4.2.2.1 Introduction

The solid rocket booster (SRB) separation sequence (SEP SEQ) is used during the ascent phase to separate the expended boosters from the orbiter/external tank. The SRB separation sequence performs the functions of monitoring SRB thrust tailoff, via chamber pressure; controlling the SRB separation process; and generating indicators for proper GN&C moding. The separation process is normally automatic, but in the event of an automatic separation inhibit, the crew is given the capability to manually override the inhibit and to initiate separation.

4.2.2.2 Overview

The SRB separation sequence is initiated at SRB SEP SEQ INITIATION TIME; it is initiated only if MECO has not yet occurred. Upon initiation, the sequence monitors the selected left and right SRB chamber pressure measurements to determine if the primary separation cue has been reached; that is, to determine if both the left and right SRB chamber pressures have decayed to 50 psia. The backup separation cue is reached when the mission elapsed time (MET) exceeds the latest possible time (SRB SEP BACKUP CUE TIME) at which a chamber pressure of 50 psia could occur.

Protection is provided for dual failure in the flight aft MDM's A/D converters or COMMFAULTS in conjunction with MDM failures which would result in premature indication of both left and right SRB chamber pressure at or below 50 psia.

In the event of multiple chamber pressure sensor failures on one SRB to the high state, SRB SEP BACKUP CUE TIME serves as the separation cue. Protection against multiple sensor failures to the low state requires marking the times at which the selected left and right SRB chamber pressure measurements drop below 50 psia and calculating the resultant time differential. If this differential exceeds the predicted maximum (MAX SRB SEP CUE DIFFERENTIAL), the separation cue becomes SRB SEP BACKUP CUE TIME to prevent a separation attempt with excessive SRB thrust.

The separation process begins once either the primary or backup separation cue has been reached. PIC arm and GN&C moding indicators are then issued at appropriate times. Following delays to allow the SRM nozzle actuators time to null and SRB thrust time to decay to an acceptable level, the vehicle's dynamic state is compared with criteria which define the capability of the vehicle to perform a safe separation. If the criteria are met, separation is commanded automatically. If the state criteria are exceeded, automatic separation is inhibited. The crew may override this inhibit via the SRB separation mode switch and the SRB separation initiate push button.

4.2.2.3 Detailed Requirements

Step 1 – Monitor Separation Cues. The SRB separation sequence is initiated when mission elapsed time (MET) is ≥ SRB SEP SEQ INITIATION TIME, I–loaded, and MECO has not yet occurred. The initiation time is selected to be less than the earliest possible time that the sensed chamber pressure of a fast–burning SRB will be at 50 psia, minus MAX SRB SEP CUE DIFFERENTIAL seconds. This step monitors the selected chamber pressure of each SRB, from select filter, for the primary separation cue and monitors MET for the backup cue. This monitoring occurs only if the cue has not previously been established.

Monitor the following:

(a) SRB SEPARATION COMMAND FLAG V90X8331X

If (a) is true, proceed to Step 4. If (a) is not true, monitor the following:

(b) SRB SEPARATION INITIATION FLAG V90X8333X

If (b) is true, proceed to Step 2. If (b) is not true, monitor the following:

(c) SELECTED LEFT PRESS SRB CHAMBER V90P2535C
(d) SELECTED RIGHT PRESS SRB CHAMBER V90P2536C
(e) MAX_SRB_SEP_CUE_DIFRNTL (I–loaded) V97U9761C

If both (c) and (d) are ≤ 50 psia, each for four successive passes, subtract the time the first left or right SRB chamber pressure was first detected to be less than or equal to 50 psia in the set of four passes from the time that the second, left or right, SRB chamber pressure was first less than or equal to 50 psia in a set of four passes. If this differential is ≥ (e), set (1) true and proceed to Step 2. If this time differential is > (e), or either (c) or (d) > 50 psia, monitor the following:

(f) SRB_SEP_BACKUP_CUE_T (I–loaded) V97U9751C

If mission elapsed time < (f), return to the beginning of Step 1.

If mission elapsed time ≥ (f), proceed to Step 2.

(1) LH/RH SRB PC 50 PSI FLAG V90X8332X

Step 2 – Prepare for Separation. The separation cue having been reached, this step prepares the vehicle for separation by issuing flags which arm the appropriate PIC's, safe the SRB range safety system, null the SRM nozzle actuators, and transition the flight control system configuration. Time delays are incorporated to assure that SRM actuators have adequate time to nullify and that SRM thrust has decayed to an acceptable level before commanding separation in a subsequent step.

Set (1), (2), (3), and (4) true and monitor the following:

(a) SRB_SEP_MODING_T_DELAY (I–loaded) V97U9752C

If (a–0.48) seconds have not elapsed since (1) became true, return to Step 1.

If (a–0.48) seconds have elapsed since (1) became true, set (5) and (6) true and monitor the following:

(b) SRB_SEP_COMMAND_T_DELAY (I–loaded) V97U9753C
(c) SRB_SEP_CMD_T_DLY_ABORT (I–loaded) V99U7589C
(d) MPS E1 FAIL FLAG V95X1207X
(e) MPS E2 FAIL FLAG V95X1208X
(f) MPS E3 FAIL FLAG V95X1209X

If (d), (e), and (f) are false and (b–0.48) seconds have not elapsed since (1) became true or if (d), (e), or (f) is true and (c–0.48) seconds have not elapsed since (1) became true, return to Step 1.

If (d), (e), and (f) are false and (b–0.48) seconds have elapsed since (1) became true or if (d), (e), or (f) is true and (c–0.48) seconds have elapsed since (1) became true, set (7) true, set (8) false, and proceed to Step 3.

(1)	SRB SEPARATION INITIATION FLAG	V90X8333X
(2)	SRB RSS SAFE FLAG	V90X8337X
(3)	SRB RSS PWR OFF FLAG	V90X8336X
(4)	ET/ORB SEP CAMERAS ON CMD	V56K9000X
(5)	SRB SEP PICS ARM FLAG	V90X8335X
(6)	SRB SEP FUNCTION MODING FLAG	V90X8330X
(7)	ATVC SRB 26V AC DEADFACE FLAG	V90X8339X
(8)	ATVC SRB IVD PWR ON	V90X8338X

Step 3 – Check Separation Inhibits. The vehicle is now configured to separate the SRB's. This step compares the vehicle's dynamic state with criteria which define the capability of the vehicle to perform a safe separation. If these criteria are exceeded, an inhibit is imposed which is automatically released once the criteria have been met but which can also be overridden manually by the crew. The separation criteria are defined in terms of vehicle body rate and dynamic pressure limits.

Set (1) false and monitor the following:

(a)	SEL SRB SEP MNL/AUTO ENABLE CMD	V90X7571X
(b)	SEL SRB SEPARATION INITIATE CMD	V90X7572X

If (a) and (b) are both true, proceed to Step 4. Otherwise, monitor the following:

P:	SELECTED RGA ROLL RATE		V90R5301C
Q:	SELECTED RGA PITCH RATE		V90R5321C
R:	SELECTED RGA YAW RATE		V90R5341C
QBAR:	DERIVED ASCENT DYNAMIC PRESS		V95P0500C
AP–	ROLL_RATE_LMT SLOPE	(I–loaded)	V97U9754C
AQ–	PITCH_RATE_LMT SLOPE	(I–loaded)	V97U9755C
AR–	YAW_RATE_LMT SLOPE	(I–loaded)	V97U9756C
BP–	ROLL_RATE_LMT CONSTANT	(I–loaded)	V97U9757C
BQ–	PITCH_RATE_LMT CONSTANT	(I–loaded)	V97U9758C
BR–	YAW_RATE_LMT CONSTANT	(I–loaded)	V97U9759C
DPL:	DYNAMIC_PRS LIMIT	(I–loaded)	V97U9760C

If QBAR > DPL

or if P > AP(QBAR) + BP

or if Q > AQ(QBAR) + BQ

or if R > AR(QBAR) + BR, set (1) true and return to Step 1. Otherwise, proceed to Step 4.

(1)	SRB AUTO SEP INHIBIT CREW ALERT	V90X8340X

Step 4 – Command Separation. This step sets the separation fire flags which, through the MEC SOP, instruct the MEC's to issue fire commands to the separation PIC's. Before the sequence is descheduled, MEC SOP flags are terminated. The MEC SOP is then instructed to issue a MASTER RESET to the MEC's to complete the sequence.

Set (1), (2), and (3) true.

If 4 seconds have elapsed since (2) became true, set (1), (2), and (4) through (11) false. One pass later, set (12) true one time only. The sequence is now complete and ready to be descheduled.

(1)	SRB SEP FIRE 1 FLAG	V90X8341X
(2)	SRB SEP FIRE 2/3 FLAG	V90X8354X
(3)	SRB SEPARATION COMMAND FLAG	V90X8331X
(4)	L SRB PWR BUS C RPC A ON CMD	V76K6941X
(5)	R SRB PWR BUS C RPC A ON CMD	V76K6942X
(6)	L SRB PWR BUS C RPC C ON CMD	V76K6945X
(7)	R SRB PWR BUS C RPC C ON CMD	V76K6946X
(8)	SRB RSS PWR OFF FLAG	V90X8336X
(9)	SRB RSS SAFE FLAG	V90X8337X
(10)	SRB SEP PICS ARM FLAG	V90X8335X
(11)	ET/ORB SEP CAMERAS ON COMMAND	V56K9000X
(12)	MEC 1 & 2 MASTER RESET FLAG	V90X8258X

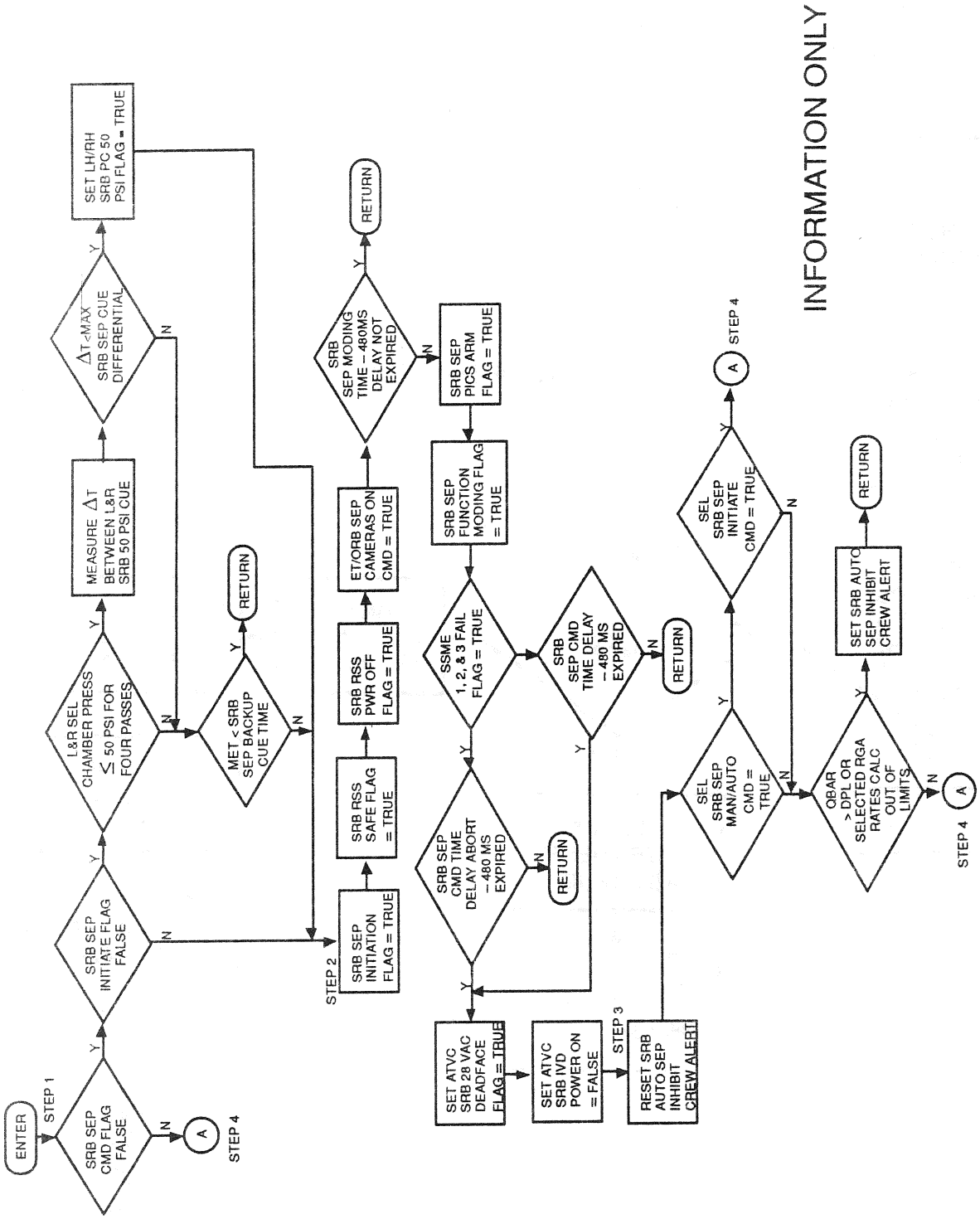

Figure 4.115. SRB SEP SEQ (Sheet 1 of 2)

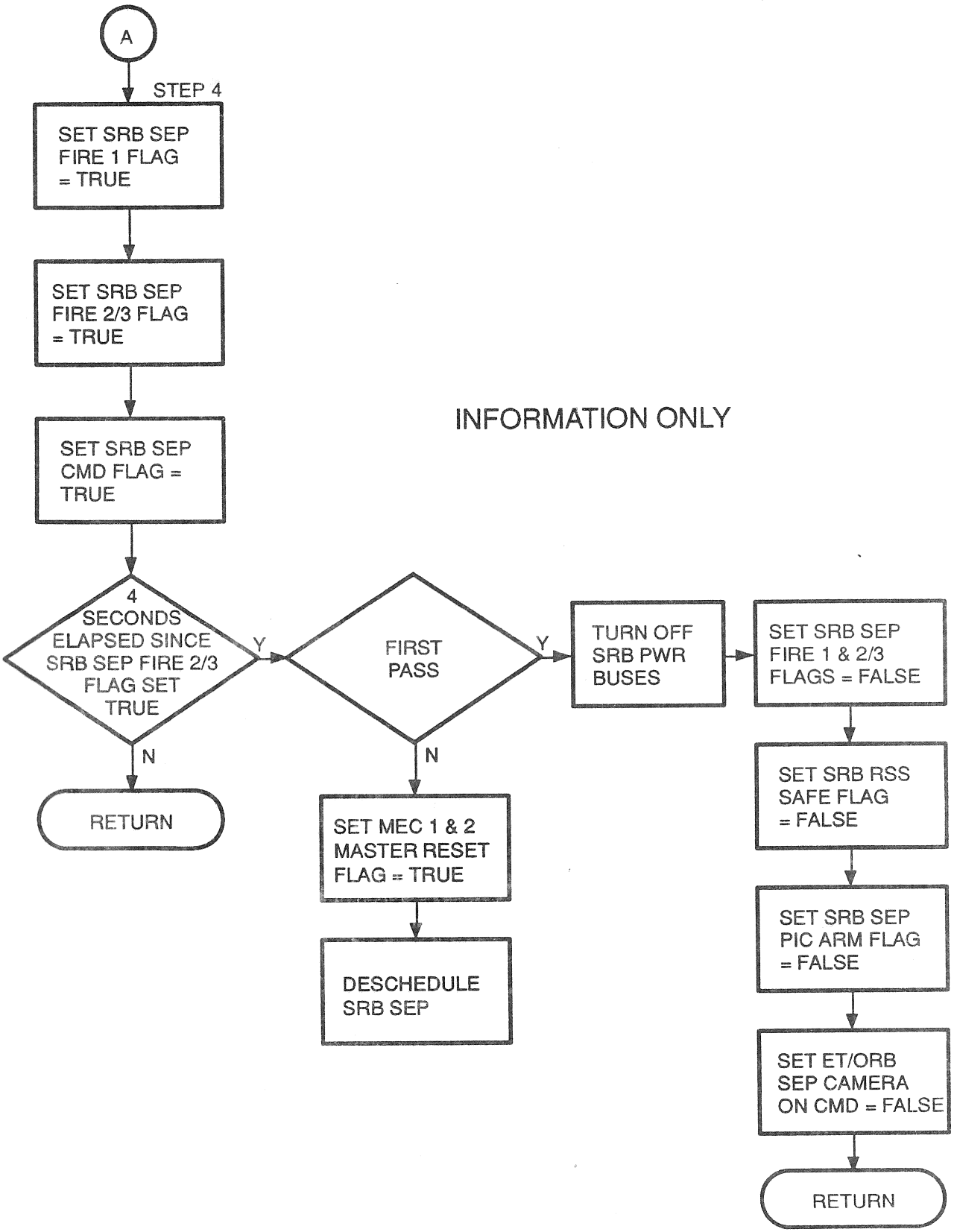

Figure 4.115. SRB SEP SEQ (Sheet 2 of 2)

TABLE 4.2.2.4–1. SOLID ROCKET BOOSTER(SRB) SEP SEQUENCER (G4.115) INPUT/OUTPUT FUNCTIONAL PARAMETERS

DBFN: D3B027-F PN: VP707100049P00L INPUT FUNCTIONAL PARAMETERS FOR SRB SEP SEQ

FSSR NAME	M/S ID	NOMENCLATURE	SOURCE	UNITS	DATA TYPE	PREC	LAST CRS
ME1_FAIL_SHUTDOWN	V95X1207X	MPS E1 FAIL FLAG	SSME OPS		BD		89990E
ME2_FAIL_SHUTDOWN	V95X1208X	MPS E2 FAIL FLAG	SSME OPS		BD		89990E
ME3_FAIL_SHUTDOWN	V95X1209X	MPS E3 FAIL FLAG	SSME OPS		BD		89990E
P_ORB	V90R5301CA	SELECTED RGA ROLL RATE	SF	DEG/S			90182
PC4	V90P2535C	SELECTED LEFT PRESS SRB CHAMBER	SF	PSIA			89494A
PC5	V90P2536C	SELECTED RIGHT PRESS SRB CHAMBER	SF	PSIA			89494A
Q_BAR_A	V95P0500C	DERIVED ASCENT DYNAMIC PRESS	ASC UPP	LB/FT2	SPL		79646D
Q_ORB/Q	V90R5321CA	SELECTED RGA PITCH RATE	SF	DEG/S			90182
							89990E
R_ORB	V90R5341CA	SELECTED RGA YAW RATE	SF	DEG/S			90182
	V90X7571X	SEL SRB SEPN MNL/AUTO ENABLE CMD	GN&C SW RM		BD		
	V90X7572X	SEL SRB SEP INITIATE/WOW-WONG CMD	GN&C SW RM		BD		

TABLE 4.2.2.4–1. SOLID ROCKET BOOSTER(SRB) SEP SEQUENCER (G4.115) INPUT/OUTPUT FUNCTIONAL PARAMETERS

DBFN: D3B027-F PN: VP707100049P00L OUTPUT FUNCTIONAL PARAMETERS FROM SRB SEP SEQ

FSSR NAME	M/S ID	NOMENCLATURE	DESTINATION	UNITS	DATA TYPE	PREC	LAST CRS
ATVC_IVD_PWR	V90X8338XA	ATVC SRB IVD PWR ON FLAG	MEC SOP				89456A
ATVC_26V_DDFACE	V90X8339XA	ATVC SRB 26V AC DEADFACE FLAG	MEC SOP				89456A
M_RSET_USER	V90X8258XB	MEC 1&2 MASTER RESET FLAG	MEC SOP				89456A
SRB_MODING_SEP	V90X8330XA	SRB SEP FUNCTION MODING FLAG	ASC DAP,MSC,TLM				89599C
SRB_RSS_OFF	V90X8336X	SRB RSS PWR OFF FLAG	MEC SOP				89456A
SRB_RSS_SAFE	V90X8337X	SRB RSS SAFE FLAG	MEC SOP				89456A
SRB_SEP_ARM	V90X8335X	SRB SEP PICS ARM FLAG	MEC SOP				89456A
SRB_SEP_CMD_FLAG	V90X8331XA	SRB SEPARATION COMMAND FLAG	AERO ACT SOP,ASC DAP,ASC UPP SEQ, RTLS UPP SEQ,MSC,TLM				79933F
SRB_SEP_FIRE1	V90X8341X	SRB SEP FIRE 1 FLAG	MEC SOP				89456A
SRB_SEP_FIRE2/3	V90X8354X	SRB SEP FIRE 2/3 FLAG	MEC SOP				89456A
SRB_SEP_INITIATION	V90X8333X	SRB SEPARATION INITIATION FLAG	ASC UPP SEQ,TLM		BD		79933F
	V56K9000XC	ET/ORB SEP CAMERAS ON CMD	HDWR				
	V76K6941XA	L SRB BUS C RPC A ON CMD	HDWR				79935H
	V76K6942XA	R SRB BUS C RPC A ON CMD	HDWR				79935H
	V76K6945XA	L SRB BUS C RPC C ON CMD	HDWR				
	V76K6946XA	R SRB BUS C RPC C ON CMD	HDWR				
	V90X8332X	LH/RH SRB PC 50 PSI FLAG	XXXXXX TRAJ DISP,TLM		BD		
	V90X8340X	SRB AUTO SEP INHIBIT CREW ALERT	XXXXXX TRAJ DISP,TLM		BD		

TABLE 4.2.2.4–2. SOLID ROCKET BOOSTER SEP (SRB) SEQUENCER (G4.115) I–LOADS

DBFN:0484

FSSR NAME	MSID	ENG UNIT	DT	PR	D	S	PR	FCTN	CAT
AP_ROLL_RATE_LMT_SLOPE	V97U9754C	DEG*FT**2/SEC*LB	F	S	D	C	G4.115		ZFE3
AQ_PITCH_RATE_LMT_SLOPE	V97U9755C	DEG*FT**2/SEC*LB	F	S	D	C	G4.115		ZFE3
AR_YAW_RATE_LMT_SLOPE	V97U9756C	DEG*FT**2/SEC*LB	F	S	D	C	G4.115		ZFE3
BP_ROLL_RATE_LMT_CONSTANT	V97U9757C	DEG/SEC	F	S	D	C	G4.115		ZFE3
BQ_PITCH_RATE_LMT_CONSTANT	V97U9758C	DEG/SEC	F	S	D	C	G4.115		ZFE3
BR_YAW_RATE_LMT_CONSTANT	V97U9759C	DEG/SEC	F	S	D	C	G4.115		ZFE3
DYNAMIC_PRS_LMT	V97U9760C	LB/FT**2	F	S	D	C	G4.115		ZFE3
MAX_SRB_SEP_CUE_DIFRNTL	V97U9761C	SEC	F	D	D	P	G4.115		ZFE3
SRB_SEP_BACKUP_CUE_T	V97U9751C	SEC	F	D	M	C	G4.115		QRB0
SRB_SEP_CMD_T_DLY_ABORT	V99U7589C	SEC	F	D	M	C	G4.115		QSA0
SRB_SEP_COMMAND_T_DELAY	V97U9753C	SEC	F	D	D	C	G4.115		QSA0
SRB_SEP_MODING_T_DELAY	V97U9752C	SEC	F	D	D	C	G4.115		QSA0

TABLE 4.2.2.4–3. SOLID ROCKET BOOSTER SEP (SRB) SEQUENCER (G4.115) K–LOADS

DBFN:0558

FSSR NAME DESCRIPTION	MSID	MC KLOAD VALUE	ENG UNIT	DT PR S PR FCTN	LAST CR EQTN MSID
NO REQUIREMENTS					

TABLE 4.2.2.4–4. SOLID ROCKET BOOSTER SEP (SRB) SEQUENCER (G4.115) CONSTANTS

DBFN:0558

FSSR NAME DESCRIPTION	MSID	MC	CONSTANT VALUE	ENG UNIT	DT	PR	S	PR FCTN	LAST CR
NO REQUIREMENTS									

THIS PAGE INTENTIONALLY LEFT BLANK

4.2.3 ET Separation Sequence (4.116)

4.2.3.1 Introduction

The external tank (ET) separation sequence is used during the ascent phase to separate the expended fuel tank from the orbiter vehicle. The separation normally occurs automatically, but the crew has the capability to manually inhibit the separation sequence at any point or to manually initiate the separation in the presence of automatic separation inhibits.

4.2.3.2 Overview

The ET separation sequence is initiated by the GN&C moding, sequencing, and control (MSC) function when the SSME OPS sequence has determined that all of the main engines (ME) are in the shutdown or post shutdown phase. It then sets the MECO confirmed flag. The sequence then operates cyclically until just after the ET structural separation fire commands are issued in a nominal/TAL/AOA/ATO mission or until the umbilical doors are closed and latched in an RTLS abort mode.

The sequence accomplishes several major functions. It determines the mode of separation or if the separation is to be manually inhibited, arms the umbilical plate to unlatch PIC's, arms and fires the tumble system after all of the main propulsion (MPS) prevalves have been commanded closed, closes the feed-line disconnect valves, gimbals the SSME nozzles to the proper position; deadfaces the ET-orbiter interface, and unlatches and retracts the umbilical plates.

The sequence arms the structural separation PIC's, performs some limit tests on certain body rates and/or angles, and tests for feed line disconnect valve closure before continuing with an automatic separation. If any of the tests are not satisfied, the separation is inhibited and can occur only if the out-of-tolerance parameter comes back within tolerance or if the crew elects to continue the separation by manually overriding the inhibit. When either of these conditions is satisfied, the structural separation PIC's are fired. If an RTLS abort mode has been requested, the ET SEP sequence performs the umbilical closeout door function and is then complete.

The ET SEP sequence also provides a fast separation mode which is activated only when manual separation is enabled and the ET SEP initiate push button is depressed. The fast separation mode bypasses delays for PIC arm and fire times, feed line disconnect close times, and ET/UMB door retract times. The SRB SEP CMD FLAG and RTLS ABORT DECLARED FLAG are set to initiate the proper software moding. The fast separation function also provides for deadfacing the SRB electrical interfaces.

4.2.3.3 Detailed Requirements

Step 1 – Initiation. When the ET SEP sequence is initiated by the MSC function, the ET SEPARATION CMD flag is monitored. If it has not yet been set, the sequence monitors the separation mode via the GN&C switch processor. If the automatic ET separation mode is selected, the sequence proceeds normally. If the manual enable mode is selected, the sequence will not proceed until the ET SEP INITIATE push button is depressed and latched in software or the automatic mode is selected. If the ET SEPARATION CMD flag has been set, the sequence sets the MEC 1 and 2 MASTER RESET flag, terminates LH_2 RTLS dump valve open command and the MEC critical command flags, and terminates the feed line disconnect valve close commands. If an RTLS abort has been requested or if a manual request is made, the sequence must also perform the ET umbilical well door-closing function. If a fast separation has been requested, additional moding flags are set and the sequence terminated.

Monitor the following signals:

(a)	ET SEPARATION CMD FLAG	V90X8250X
(b)	FAST SEP FLAG	V90X8267X
(c)	SEL ET SEP AUTO	V90X7554X
(d)	SEL ET SEP MNL ENABLE	V90X7556X
(e)	SEL ET SEP INITIATE	V90X7564X
(f)	ET SEP MAN INITIATE FLAG	V90X8584X
(g)	BACKUP ET MAN SEP CMD	V93X5341X
(h)	MAJOR MODE 102 FLAG	V90X8158X
(i)	RTLS ABORT DECLARED	V90X8637X
(j)	BACKUP ET UMB DOOR CLOSE	V93X5342X

If (a) and (b) are both false and (f) is false and (c) and (h) are true, return to Step 1.

If (a) and (b) are both false and (f) and (g) and (h) are false and (c) is true, proceed to Step 2.

If (a) and (b) are both false and (d) and (e) are true or if (f) or (g) is true, latch (f) true and proceed to Step 1A.

If (a) and (b) are both false and (d) is true and (e) and (f) and (g) are false, set output (11) false and return to the beginning of Step 1.

If (a), (b), and (h) are true, set outputs (10) and (12) true and deactivate the sequence.

If (a) and (b) are true and (h) is false, proceed to Step 8.

If (a) is false and (b) is true, proceed to Step 2.

If (a) is true and (b) is false, set outputs (1) through (9) false and return to the beginning of Step 1. On any subsequent passes through this logic, monitor (i) and (j).

If (i) is true, proceed to Step 8.

If (i) and (j) are false, issue output (10) one time only, wait 73 seconds, and terminate outputs (13) through (18) and proceed to Step 9.

If (j) is true, on the first pass through the logic, restart the timer from the ET/ORB STR SEPN FIRE 2 FLAG in Step 7. On subsequent passes, proceed to Step 8.

(1)	ET/ORB STR SEPN PICS ARM FLAG	V90X8265X
(2)	ET/ORB STR SEPN FIRE 1 FLAG	V90X8244X
(3)	ET/ORB STR SEPN FIRE 2/3 FLAG	V90X8241X
(4)	MPS LH_2 FEED DISC VALVE CL CMD A	V41K1416X
(5)	MPS LH_2 FEED DISC VALVE CL CMD B	V41K1417X
(6)	MPS LH_2 FEED DISC VALVE CL CMD C	V41K1418X
(7)	MPS LO_2 FEED DISC VALVE CL CMD A	V41K1524X
(8)	MPS LO_2 FEED DISC VALVE CL CMD B	V41K1525X
(9)	MPS LO_2 FEED DISC VALVE CL CMD C	V41K1526X
(10)	MEC 1&2 MASTER RESET FLAG	V90X8258X
(11)	ET/ORB SEP CAMERAS ON CMD	V56K9000X

(12)	SRB SEP CMD FLAG	V90X8331X
(13)	MPS LH_2 RTLS INBD D/V OPEN COMMAND A	V41K1923X
(14)	MPS LH_2 RTLS INBD D/V OPEN COMMAND B	V41K1924X
(15)	MPS LH_2 RTLS INBD D/V OPEN COMMAND C	V41K1925X
(16)	MPS LH_2 RTLS OTBD D/V OPEN COMMAND A	V41K1913X
(17)	MPS LH_2 RTLS OTBD D/V OPEN COMMAND B	V41K1914X
(18)	MPS LH_2 RTLS OTBD D/V OPEN COMMAND C	V41K1915X

Step 1a – Fast Separation Initiation. This step determines a fast separation has been requested, and, if so, sets the flags required to initiate the FAST SEP mode.

Monitor the following signal:

(a)	MM102 FLAG	V90X8158X
(b)	MM602 FLAG	V90X8194X
(c)	MM103 FLAG	V90X8156X
(d)	SECOND SSME FAIL CONFIRM	V90X1721X

If (c) and (d) are true, set Flags (1), (3), and (4) true and proceed to Step 2.

If (a) or (b) is true, set Flags (1), (2), (3), and (4) true and proceed to Step 2.

(1)	FAST SEP FLAG	V90X8267X
(2)	RTLS ABORT DECLARED	V90X8637X
(3)	ET/ORB STR SEPN PICS ARM FLAG	V90X8265X
(4)	ET UMB UNLATCH PIC ARM FLAG	V90X8247X

Proceed to Step 2.

Step 2 – Preparation and Umbilical Unlatch and Retract. The feed line relief shutoff valve close commands are terminated and the LH_2 RTLS inboard and outboard D/V are commanded open so that these valves can relieve any pressure buildup caused by trapped propellants in the feed line when the ME valves and feed line disconnect valves are closed. Also, the umbilical door centerline latch lock commands are terminated to allow subsequent closure of the umbilical closeout doors.

Monitor (a) and (b) below:

(a)	FLAG A	(INTERNAL)
(b)	FAST SEP FLAG	V90X8267X
(c)	RTLS ABORT DECLARED	V90X8637X

If (a) is false, set outputs (1) through (14) false and proceed to Step 3.

If (a) is true and (b) is false, set output (19) false and outputs (15) through (18) and (21) through (26) true on the first pass through this logic and return to Step 1. On the next pass, set outputs (15) through (18) false and return to Step 1. On all subsequent passes through the logic, proceed to Step 5.

If (a) and (b) are true, and it has been less than 1 second since (b) became true, return to Step 1.

If (a) and (b) are true, and it has been more than 1 second since (b) became true, on the first pass set output (19) false and outputs (15) and (17) true and proceed to monitor (c). If (c) is true, return to Step 1. Otherwise, set (27) true and return to Step 1. On subsequent passes, set outputs (15), (17), and (20) false, set outputs (16) and (18) true and proceed to Step 7.

(1)	MPS LH_2 FDLN RLF S/O VLV CL CMD A	V41K1447X
(2)	MPS LH_2 FDLN RLF S/O VLV CL CMD B	V41K1448X
(3)	MPS LH_2 FDLN RLF S/O VLV CL CMD C	V41K1450X
(4)	MPS LO_2 FDLN RLF S/O VLV CL CMD A	V41K1547X
(5)	MPS LO_2 FDLN RLF S/O VLV CL CMD B	V41K1548X
(6)	MPS LO_2 FDLN RLF S/O VLV CL CMD C	V41K1550X
(7)	ET DR C/L LCH 1B1/2B2 FA1 LOCK CMD	V56K1275X
(8)	ET DR C/L LCH 1B2/2B1 FA1 LOCK CMD	V56K1276X
(9)	ET DR C/L LCH 1B1/2B2 FA2 LOCK CMD	V56K1277X
(10)	ET DR C/L LCH 1B2/2B1 FA2 LOCK CMD	V56K1278X
(11)	ET DR C/L LCH 1B1/2B2 FA4 LOCK CMD	V56K1375X
(12)	ET DR C/L LCH 1B2/2B1 FA4 LOCK CMD	V56K1376X
(13)	ET DR C/L LCH 1B1/2B2 FA3 LOCK CMD	V56K1377X
(14)	ET DR C/L LCH 1B2/2B1 FA3 LOCK CMD	V56K1378X
(15)	ET/UMB UNLATCH FIRE 1 FLAG	V90X8256X
(16)	ET/UMB RETRACT FIRE 1 FLAG	V90X8263X
(17)	ET/UMB UNLATCH FIRE 2/3 FLAG	V90X8242X
(18)	ET/UMB RETRACT FIRE 2/3 FLAG	V90X8243X
(19)	ET/UMB UNLATCH PIC ARM FLAG	V90X8247X
(20)	ET/ORB STR SEPN PICS ARM FLAG	V90X8265X
(21)	MPS LH_2 RTLS INBD D/V OPEN COMMAND A	V41K1923X
(22)	MPS LH_2 RTLS INBD D/V OPEN COMMAND B	V41K1924X
(23)	MPS LH_2 RTLS INBD D/V OPEN COMMAND C	V41K1925X
(24)	MPS LH_2 RTLS OUTBD D/V OPEN COMMAND A	V41K1913X
(25)	MPS LH_2 RTLS OUTBD D/V OPEN COMMAND B	V41K1914X
(26)	MPS LH_2 RTLS OUTBD D/V OPEN COMMAND C	V41K1915X
(27)	SEP MINUS Z CMD	V90X8268X

Step 3 – Tumble System Arm/Fire and MPS Feed Line Valve Latch Unlock. This step monitors for a flag from the SSME-OPS sequence indicating that all MPS prevalves have been commanded closed. Upon receipt of this flag, the ET tumble system is armed, the MPS feed line disconnect latches are commanded to the unlock position, and one second delay is allowed for the LH_2 prevalves to close and the latches to unlock. After a one-second delay, the ET tumble system is fired, the ET/ORB SEP cameras are turned on, and the step is exited to perform voting on the latch position switches.

For ground checkout, ET TUMBLE SYSTEM ARM and ET TUMBLE SYSTEM FIRE flags are bypassed when GNC GROUND CHECKOUT ENABLE flag is set.

For FAST SEP missions, commanding of MPS feed line disconnect latches to the unlock position and voting on latch position switches are bypassed, feed line disconnect closure commands are not issued, and

the feed line disconnect closure will be accomplished by the backup mechanical feature at ET structural separation.

Monitor the following signals:

(a)	ALL PRE VLVS COMMANDED CLOSE IND	V90X8568X
(b)	FAST SEP FLAG	V90X8267X
(c)	GNC GROUND CHECKOUT ENABLE	V93X5538X

If (a) is false, return to Step 1.

If (a) is true, and (b) is false, set outputs (1) through (6) false and outputs (7) through (12) true and monitor time elapsed since (a) first became true. Otherwise, monitor time elapsed since (a) first became true.

If at least one second has not elapsed since (a) first became true and (c) is false, set output (13) true and return to Step 1.

If at least one second has not elapsed since (a) first became true and (c) is true, return to Step 1.

If at least one second has elapsed since (a) first became true and (c) is false, on first pass set outputs (14) and (15) true and monitor (b).

IF at least one second has elapsed since (a) first became true and (c) is true, on first pass set output (15) true and monitor (b).

If (b) is true, proceed to Step 3f. On subsequent passes proceed to Step 3f.

If (b) is false, proceed to Step 3b. On subsequent passes proceed to Step 3f.

(1)	MPS LO_2 FDLN DISC LATCH LOCK CMD A	V41K1881X
(2)	MPS LO_2 FDLN DISC LATCH LOCK CMD B	V41K1882X
(3)	MPS LO_2 FDLN DISC LATCH LOCK CMD C	V41K1883X
(4)	MPS LH_2 FDLN DISC LATCH LOCK CMD A	V41K1981X
(5)	MPS LH_2 FDLN DISC LATCH LOCK CMD B	V41K1982X
(6)	MPS LH_2 FDLN DISC LATCH LOCK CMD C	V41K1983X
(7)	LO_2 FDLN DISC LATCH UNLOCK CMD A	V41K1884X
(8)	LO_2 FDLN DISC LATCH UNLOCK CMD B	V41K1885X
(9)	LO_2 FDLN DISC LATCH UNLOCK CMD C	V41K1886X
(10)	LH_2 FDLN DISC LATCH UNLOCK CMD A	V41K1984X
(11)	LH_2 FDLN DISC LATCH UNLOCK CMD B	V41K1985X
(12)	LH_2 FDLN DISC LATCH UNLOCK CMD C	V41K1986X
(13)	ET TUMBLE SYSTEM ARM FLAG	V90X8251X
(14)	ET TUMBLE SYSTEM FIRE FLAG	V90X8252X
(15)	ET/ORB SEP CAMERAS ON CMD	V56K9000X

Step 3a – ET/UMB PIC ARM. The sequence next sets the ET/UMB UNLATCH PICS ARM FLAG for the MEC SOP, which then issues the proper four-digit hexadecimal code for the command data word arm commands.

Monitor (a) and (b) below:

(a)	FAST SEP FLAG	V90X8267X
(b)	ALL PRE VLVS COMMANDED CLOSE IND	V90X8568X

If (a) is false and at least 3.3 seconds have not elapsed since (b) first became true, return to Step 1; otherwise, set output (1) below true and proceed to Step 4.

(1)	ET/UMB UNLATCH PIC ARM FLAG	V90X8247X

Step 3b – LO_2, Feed Line Disconnect Latch Position Switch Voting. This step monitors the LO_2 latch position switches and their commfault indications.

Monitor the following signals:

(a)	MPS LO_2 FDLN DISC LATCH LOCKED A	V41X1891X
(b)	MPS LO_2 FDLN DISC LATCH LOCKED B	V41X1892X
(c)	MPS LO_2 FDLN DISC LATCH UNLOCKED A	V41X1893X
(d)	MPS LO_2 FDLN DISC LATCH UNLOCKED B	V41X1894X
(e)	FA1 INPUT PROM SEG 3, 10 STATUS (HFE)	V91X2845X
(f)	FA2 INPUT PROM SEG 3, 10 STATUS (HFE)	V91X2846X
(g)	FA3 INPUT PROM SEG 3, 10 STATUS (HFE)	V91X2847X
(h)	FA4 INPUT PROM SEG 3, 10 STATUS (HFE)	V91X2848X

If (a) and (e) are false, set output (1) true and monitor (b) and (f). Otherwise, monitor (b) and (f).

If (b) and (f) are false, set output (2) true and monitor (c) and (g). Otherwise, monitor (c) and (g).

If (c) is true and (g) is false, set output (3) true and monitor (d) and (h). Otherwise, monitor (d) and (h).

If (d) is true and (h) is false, set output (4) true and proceed to Step 3c. Otherwise, proceed to Step 3c.

(1)	LO_2 LATCH LOCKED A OK FLAG	(INTERNAL)
(2)	LO_2 LATCH LOCKED B OK FLAG	(INTERNAL)
(3)	LO_2 LATCH UNLOCKED A OK FLAG	(INTERNAL)
(4)	LO_2 LATCH UNLOCKED B OK FLAG	(INTERNAL)

Step 3c – LO_2, Feed Line Disconnect Valve Closure. This step closes the LO_2 feed line disconnect if 3 or more of the latch position switches indicate that the latch is unlocked or if an I-load indicates that the latch hardware has not been installed.

Monitor the following signals:

(a)	LO_2 LATCH LOCKED A OK FLAG	(INTERNAL)
(b)	LO_2 LATCH LOCKED B OK FLAG	(INTERNAL)
(c)	LO_2 LATCH UNLOCKED A OK FLAG	(INTERNAL)
(d)	LO_2 LATCH UNLOCKED B OK FLAG	(INTERNAL)

(e) FDLN_DISC_LATCH_INSTALLED_FLAG V99U9951C

If flag (e) is false or 3 or more of inputs (a) through (d) are true, set outputs (1) through (3) false and outputs (4) through (6) true and proceed to Step 3d. Otherwise, proceed to Step 3d.

(1) MPS LO_2 FEED DISC VALVE OP CMD A V41K1521X
(2) MPS LO_2 FEED DISC VALVE OP CMD B V41K1522X
(3) MPS LO_2 FEED DISC VALVE OP CMD C V41K1523X
(4) MPS LO_2 FEED DISC VALVE CL CMD A V41K1524X
(5) MPS LO_2 FEED DISC VALVE CL CMD B V41K1525X
(6) MPS LO_2 FEED DISC VALVE CL CMD C V41K1526X

Step 3d – LH_2 Feed Line Disconnect Latch Position Switch Voting. This step monitors the LH_2 latch position switches and their commfault indications.

Monitor the following signals:

(a) MPS LH_2 FDLN DISC LATCH LOCKED A V41Xl991X
(b) MPS LH_2 FDLN DISC LATCH LOCKED B V41X1992X
(c) MPS LH_2 FDLN DISC LATCH UNLOCKED A V41X1993X
(d) MPS LH_2 FDLN DISC LATCH UNLOCKED B V41X1994X
(e) FA1 INPUT PROM SEG 3, 10 STATUS (HFE) V91X2845X
(f) FA2 INPUT PROM SEG 3, 10 STATUS (HFE) V91X2846X
(g) FA3 INPUT PROM SEG 3, 10 STATUS (HFE) V91X2847X
(h) FA4 INPUT PROM SEG 3, 10 STATUS (HFE) V91X2848X

If (a) and (e) are false, set output (1) true and monitor (b) and (f). Otherwise, monitor (b) and (f).

If (b) and (f) are false, set output (2) true and monitor (c) and (g). Otherwise, monitor (c) and (g).

If (c) is true and (g) is false, set output (3) true and monitor (d) and (h). Otherwise, monitor (d) and (h).

If (d) is true and (h) is false, set output (4) true and proceed to Step 3e. Otherwise, proceed to Step 3e.

(1) LH_2 LATCH LOCKED A OK FLAG (INTERNAL)
(2) LH_2 LATCH LOCKED B OK FLAG (INTERNAL)
(3) LH_2 LATCH UNLOCKED A OK FLAG (INTERNAL)
(4) LH_2 LATCH UNLOCKED B OK FLAG (INTERNAL)

Step 3e – LH_2 Feed Line Disconnect Valve Closure. This step closes the LH_2 feed line disconnect if three or more of the latch position switches indicate that the latch is unlocked or if an I-load indicates that the latch hardware has not been installed.

Monitor the following signals:

(a) LH_2 LATCH LOCKED A OK FLAG (INTERNAL)
(b) LH_2 LATCH LOCKED B OK FLAG (INTERNAL)

(c)	LH_2 LATCH UNLOCKED A OK FLAG	(INTERNAL)
(d)	LH_2 LATCH UNLOCKED B OK FLAG	(INTERNAL)
(e)	FDLN_DISC_LATCH_INSTALLED_FLAG	V99U9951C

If flag (e) is false or three or more of inputs (a) through (d) are true, set outputs (1) through (3) false and outputs (4) through (6) true and proceed to Step 3f. Otherwise, proceed to Step 3f.

(1)	MPS LH_2 FEED DISC VALVE OP CMD A	V41K1413X
(2)	MPS LH_2 FEED DISC VALVE OP CMD B	V41K1414X
(3)	MPS LH_2 FEED DISC VALVE OP CMD C	V41K1415X
(4)	MPS LH_2 FEED DISC VALVE CL CMD A	V41K1416X
(5)	MPS LH_2 FEED DISC VALVE CL CMD B	V41K1417X
(6)	MPS LH_2 FEED DISC VALVE CL CMD C	V41K1418X

Step 3f – SRB Deadfacing and SSME Gimbal Position. This step deadfaces the SRB electrical interfaces if a FAST SEP is in progress and sends a flag to MPS TVC CMD SOP to position the SSME nozzles.

Monitor the following signals:

(a)	FAST SEP FLAG	V90X8267X
(b)	RTLS ABORT DECLARED	V90X8637X
(c)	TAL ABORT DECLARED	V90X8658X

If (a) is true, set outputs (1) through (4), (8), and (9) false and output (7) true and monitor (a), (b), and (c). Otherwise, monitor (a), (b), and (c).

If (a), (b), or (c) is true, set output (6) true and output (5) false and proceed to Step 3a. Otherwise, set output (5) true and output (6) false and proceed to Step 3a.

(1)	LH SRB PWR BUS C – RPC-A ON	V76K6941X
(2)	RH SRB PWR BUS C – RPC-A ON	V76K6942X
(3)	LH SRB PWR BUS C – RPC-C ON	V76K6945X
(4)	RH SRB PWR BUS C – RPC-C ON	V76K6946X
(5)	MPS DUMP GIMBAL POS FLAG	V90X8253X
(6)	ENTRY STOW GIMBAL POS FLAG	V90X8254X
(7)	SRB SEP FUNCTION MODING FLAG	V90X8330X
(8)	ATVC SRB IVD PWR ON	V90X8338X
(9)	SRB PWR ON	V90X8343X

Step 4 – Deadfacing. The sequence next looks for 3.8 seconds to elapse since the feed line disconnect valves were commanded closed to allow them time to fully close before continuing. If a FAST SEP has been requested, the sequence bypasses the feed line valve closure delays. The sequence then resets the ET tumble system arm and fire flags, resets the ET DFI PWR ON command, and terminates the MPS signal conditioner's power-on commands to deadface the power interface before plate separation.

Monitor signal (a) below:

(a)	FAST SEP FLAG	V90X8267X

If (a) is false and at least 1.5 seconds have not elapsed since the ET/UMB UNLATCH PIC ARM FLAG was set in Step 3a, return to Step 1.

If (a) is true or at least 1.5 seconds have elapsed since the ET/UMB UNLATCH PIC ARM FLAG was set, set outputs (1) through (6) false, set output (7) true, and return to Step 1.

(1)	ET TUMBLE SYS ARM FLAG	V90X8251X
(2)	ET TUMBLE SYS FIRE FLAG	V90X8252X
(3)	MPS SIG COND PWR 1 ON	V41K0075X
(4)	MPS SIG COND PWR 2 ON	V41K0076X
(5)	MPS SIG COND PWR 3 ON	V41K0077X
(6)	ET DFI PWR ON FLAG	V90X8255X
(7)	FLAG A	(INTERNAL)

Step 5 -- Automatic Separation Inhibit Checks. This step arms the ET/orbiter structural separation PIC's after a 5.5-second time delay has elapsed, since the umbilical retract fire commands were issued to allow time for the LO_2 and LH_2 umbilical plates to retract and latch. If an RTLS abort has been requested, this time delay is reduced to 1.2 seconds as the separation cannot be delayed longer due to the buildup of dynamic pressure caused by entry. After an additional 1.5-second delay for PIC charging, tests are made on some specific parameters to determine if separation can be performed safely with the automatic sequence. Parameters checked include roll, pitch, and yaw body rates and MPS feed line disconnect valve closed status. During RTLS aborts, angle of attack and sideslip angle are checked in addition to the other parameters. If any of these parameters fail to satisfy the predefined limits or if the MPS feed line disconnect valve is not closed, the crew is alerted and the sequence inhibits automatic separation from occurring. The crew may then elect to initiate the separation manually.

Monitor the following signal:

(a)	RTLS ABORT DECLARED	V90X8637X

If (a) is true and at least 1.2 seconds have not elapsed since the ET/umbilical retract fire 1 and fire 2/3 flags were set true, return to Step 1.

If (a) is true and 1.2 seconds have elapsed since the ET/umbilical retract fire 1 and fire 2/3 flags were set true, set output (1) below true and proceed.

If (a) is true and at least 1.5 seconds have not elapsed since output (1) was set true, return to Step 1.

If (a) is true and at least 1.5 seconds have elapsed since output (1) was set true, set output (2) false and then monitor signals (b) through (j) and (bb) through (dd) listed below.

If [(g) < (q) and (g) > (r)] and [(f) < (s) and (f) > (t)] and [(h) < (u) and (h) > (v)] and [(i) < (w) and (i) > (x)] and [(j) < (y) and (j) > (z)] and [[(b) is true and (bb) is false] or [(c) is true

and (cc) is false]] and [[(d) is true and (bb) is false] or [(e) is true and (dd) is false]], proceed to Step 6. Otherwise set output (2) true to generate a CRT message line and a Class 3 alert light and tone, set output (3) false one time only, and proceed to Step 6.

If (a) is false and at least 5.5 seconds have not elapsed since the ET/umbilical retract fire 2/3 flag was set true, return to Step 1.

If (a) is false and 5.5 seconds have elapsed since the ET/umbilical retract fire 2/3 flag was set true, set output (1) below true and monitor flag (aa).

(aa) FIRE SEQUENCE FL (INTERNAL)

If (aa) is true, proceed to Step 7.

If (aa) is false and at least 1.5 seconds have not elapsed since ET/ORB STR SEPN PICS ARM FLAG was set true, return to Step 1; otherwise set output (2) false and then monitor signals (b) through (h), (k) through (p), and (bb) through (dd) listed below.

If [[(b) is true and (bb) is false] or [(c) is true and (cc) is false]] and [[(d) is true and (bb) is false] or [(e) is true and (dd) is false]] and if [(g) < (k) and (g) > (l)] and [(f) < (m) and (f) > (n)] and [(h) < (o) and (h) > (p)], proceed to Step 6. Otherwise set output (2) true to generate a CRT message line and a Class 3 alert light and tone, set output (3) false one time only, and proceed to Step 6.

(b)	MPS LH_2 FEED DISC VLV CLOSED A	V41X1430X
(c)	MPS LH_2 FEED DISC VLV CLOSED B	V41X1434X
(d)	MPS LO_2 FEED DISC VLV CLOSED A	V41X1530X
(e)	MPS LO_2 FEED DISC VLV CLOSED B	V41X1534X
(f)	SELECTED RGA ROLL RATE	V90R5301C
(g)	SELECTED RGA PITCH RATE	V90R5321C
(h)	SELECTED RGA YAW RATE	V90R5341C
(i)	NAV DERIVED ANGLE OF ATTACK	V90H2246C
(j)	INERTIAL SIDESLIP ANGLE	V90H2249C
(k)	NOM_BODY_PLUS_PITCH_RATE_LMT	V97U9762C
(l)	NOM_BODY_NEG_PITCH_RATE_LMT	V97U9763C
(m)	NOM_BODY_PLUS_ROLL_RATE_LMT	V97U9764C
(n)	NOM_BODY_NEG_ROLL_RATE_LMT	V97U9765C
(o)	NOM_BODY_PLUS_YAW_RATE_LMT	V97U9766C
(p)	NOM_BODY_NEG_YAW_RATE_LMT	V97U9767C
(q)	RTLS_BODY_PLUS_PITCH_RATE_LMT	V97U9768C
(r)	RTLS_BODY_NEG_PITCH_RATE_LMT	V97U9769C
(s)	RTLS_BODY_PLUS_ROLL_RATE_LMT	V97U9770C
(t)	RTLS_BODY_NEG_ROLL_RATE_LMT	V97U9771C
(u)	RTLS_BODY_PLUS_YAW_RATE_LMT	V97U9772C
(v)	RTLS_BODY_NEG_YAW_RATE_LMT	V97U9773C
(w)	RTLS_PLUS_ANGLE_OF_ATTK_LMT	V97U9774C
(x)	RTLS_NEG_ANGLE_OF_ATTK_LMT	V97U9775C
(y)	RTLS_PLUS_SIDESLIP_ANGLE_LMT	V97U9776C
(z)	RTLS_NEG_SIDESLIP_ANGLE_LMT	V97U9777C
(bb)	FA2 INPUT PROM SEG 3, 10 STATUS (HFE)	V91X2846X
(cc)	FA4 INPUT PROM SEG 3, 10 STATUS (HFE)	V91X2848X
(dd)	FA3 INPUT PROM SEG 3, 10 STATUS (HFE)	V91X2847X

(1)	ET/ORB STR SEPN PICS ARM FLAG	V90X8265X
(2)	ET AUTO SEP INHIBIT CREW ALERT	V90X8259X
(3)	ET/ORB SEP CAMERAS ON CMD	V56K9000X

Step 6 – Auto/Manual Separation Mode. The sequence now monitors the position of the auto/manual ET separation switch, via the GN&C switch SOP, to determine what separation mode is to be employed. If the automatic mode is selected and none of the ET SEP inhibit test conditions failed, the sequence

proceeds with the structural separation. If any of the inhibit test conditions failed and an RTLS abort has not been requested, the sequence turns off the ET/ORB separation cameras to conserve film, but will not proceed until the test condition is satisfied or is manually overridden by the crew.

If an RTLS abort has been requested, the ET/ORB separation cameras are turned off and the sequence continues to test the automatic separation inhibits and monitor the SEP switches for 6 seconds. If the inhibit becomes satisfied within this time or the crew manually overrides, the separation is performed. If the separation inhibit is still present after 6 seconds, the sequence automatically bypasses the inhibit and performs the separation. The separation cannot be delayed longer due to the pressure buildup caused by entry.

In the manual separation mode, the sequence looks for the ET SEP MAN INITIATE FLAG, latched in software. If true, the structural separation is accomplished, bypassing the conditions that caused the automatic separation to be inhibited. If the ET SEP MAN INITIATE FLAG is false, the separation will not occur.

Monitor the following signals:

(a)	SEL ET SEP AUTO	V90X7554X
(b)	SEL ET SEP MNL ENABLE	V90X7556X
(c)	ET SEP MAN INITIATE FLAG	V90X8584X
(d)	RTLS ABORT DECLARED	V90X8637X
(e)	ET AUTO SEP INHIBIT CREW ALERT	V90X8259X

If (c) is true, proceed to Step 7.

If (c) is false and (a) is true and (e) is false, proceed to Step 7.

If (a) is true and (e) is true and (d) is false, or if (a) is true and (e) is true and (d) is true and 6 seconds have not elapsed since (e) first became true, set output (1) false, listed below, and return to Step 1.

If (a) is true and (e) is true and (d) is true and 6 seconds have elapsed since (e) first became true, proceed to Step 7.

If (b) is true and (c) is false, set output (1) false and return to Step 1.

(1)	ET/ORB SEP CAMERAS ON CMD	V56K9000X

Step 7 – ET Structural Separation. In this step, the sequence commands the ET/ORB separation cameras on to make certain they are on in the event that an automatic separation inhibit had caused them to be turned off previously. If an RTLS abort is not requested, a command is set for the Transition DAP to fire during structural separation to prevent possible recontact between the orbiter and ET.

The sequence then sets the ET/ORB structural separation fire 1 and 2/3 flags for the MEC SOP and the ET separation command flag. This flag is a cue to other functions that the ET separation has occurred.

Monitor the following:

(a)	RTLS ABORT DECLARED	V90X8637X
(b)	FAST SEP FLAG	V90X8267X

If (a) or (b) is true, set outputs (2) through (5) true and return to Step 1.

If (a) and (b) are false, set outputs (1) and (6) listed below true and return to Step 1. On next pass through this logic set flags (2) through (5) true and return to Step 1.

(1)	SEP MINUS Z CMD	V90X8268X
(2)	ET/ORB SEP CAMERAS ON CMD	V56K9000X
(3)	ET/ORB STR SEPN FIRE 1 FLAG	V90X8244X
(4)	ET/ORB STR SEPN FIRE 2/3 FLAG	V90X8241X
(5)	ET SEPARATION CMD FLAG	V90X8250X
(6)	FIRE SEQUENCE FL	(INTERNAL)

Step 8 – ET Umbilical Doors Closure. This function is accomplished when either a manual ET umbilical door closure is required or an RTLS abort has been requested. In this mode, the umbilical door centerline latches are stowed, the umbilical doors are closed, and the umbilical doors are latched, all with the proper timing constraints.

If less than 2 seconds have elapsed since the structural separation fire 2/3 flag was set true, return to Step 1.

If at least 2 seconds have elapsed since the structural separation fire 2/3 flag was set true, set output commands (1) through (8) to true (STOW). Six seconds later:

Set output commands (9) through (16) true (ARM/CLOSE).

If 12 seconds have elapsed since the stow commands, (1) through (8), were set true, set output commands (1) through (8) false.

If 48 seconds have elapsed since output commands (9) through (16) were set true, set output commands (12) through (16) false, and set output commands (17) through (24) true (LATCH).

If 12 seconds have elapsed since output commands (17) through (24) were set true, set output commands (9) through (11) and (17) through (24) false and (25) true.

Proceed to Step 9.

(1)	ET DR CL LCH 1B1/2B2 FA1 STOW CMD	V56K1271X
(2)	ET DR CL LCH 1B2/2B1 FA1 STOW CMD	V56K1272X
(3)	ET DR CL LCH 1B1/2B2 FA2 STOW CMD	V56K1273X
(4)	ET DR CL LCH 1B2/2B1 FA2 STOW CMD	V56K1274X
(5)	ET DR CL LCH 1B1/2B2 FA4 STOW CMD	V56K1371X
(6)	ET DR CL LCH 1B2/2B1 FA4 STOW CMD	V56K1372X
(7)	ET DR CL LCH 1B1/2B2 FA3 STOW CMD	V56K1373X
(8)	ET DR CL LCH 1B2/2B1 FA3 STOW CMD	V56K1374X
(9)	ET DR DRV & CL LCH DC ARM AMCA 1/2	V56K0141X
(10)	ET DR DRV & CL LCH DC ARM AMCA 1/3	V56K0142X
(11)	ET DR DRV & CL LCH DC ARM AMCA 2/3	V56K0143X
(12)	ET UMB DR L-B2/R-B1 CLOSE CMD	V56K3111X
(13)	ET UMB DR R-B2 CLOSE CMD	V56K3112X
(14)	ET UMB DR R-B1/B2 CLOSE CMD	V56K4121X
(15)	ET UMB DR L-B1 CLOSE CMD	V56K4122X

(16)	ET UMB DR L-B1/B2 CLOSE CMD	V56K0140X
(17)	ET L UMB COUT DOOR LATCH FA1 CMD	V56K3531X
(18)	ET R UMB COUT DOOR LATCH FA1 CMD	V56K3532X
(19)	ET L UMB COUT DOOR LATCH FA4 CMD	V56K3533X
(20)	ET R UMB COUT DOOR LATCH FA4 CMD	V56K3534X
(21)	ET L UMB COUT DOOR LATCH FA3 CMD	V56K4531X
(22)	ET R UMB COUT DOOR LATCH FA3 CMD	V56K4532X
(23)	ET L UMB COUT DOOR LATCH FA2 CMD	V56K4533X
(24)	ET R UMB COUT DOOR LATCH FA2 CMD	V56K4534X
(25)	MEC 1 & 2 MASTER RESET FLAG	V90X8258X

Step 9 – MPS Feed Line Disconnect Valve Command Cleanup. This step terminates unneeded feed line disconnect latch unlock commands. The ET SEP sequence is then terminated.

Set outputs (1) through (6) false and deschedule the ET SEP sequence.

(1)	LO_2 FDLN DISC LATCH UNLOCK CMD A	V41K1884X
(2)	LO_2 FDLN DISC LATCH UNLOCK CMD B	V41K1885X
(3)	LO_2 FDLN DISC LATCH UNLOCK CMD C	V41K1886X
(4)	LH_2 FDLN DISC LATCH UNLOCK CMD A	V41K1984X
(5)	LH_2 FDLN DISC LATCH UNLOCK CMD B	V41K1985X
(6)	LH_2 FDLN DISC LATCH UNLOCK CMD C	V41K1986X

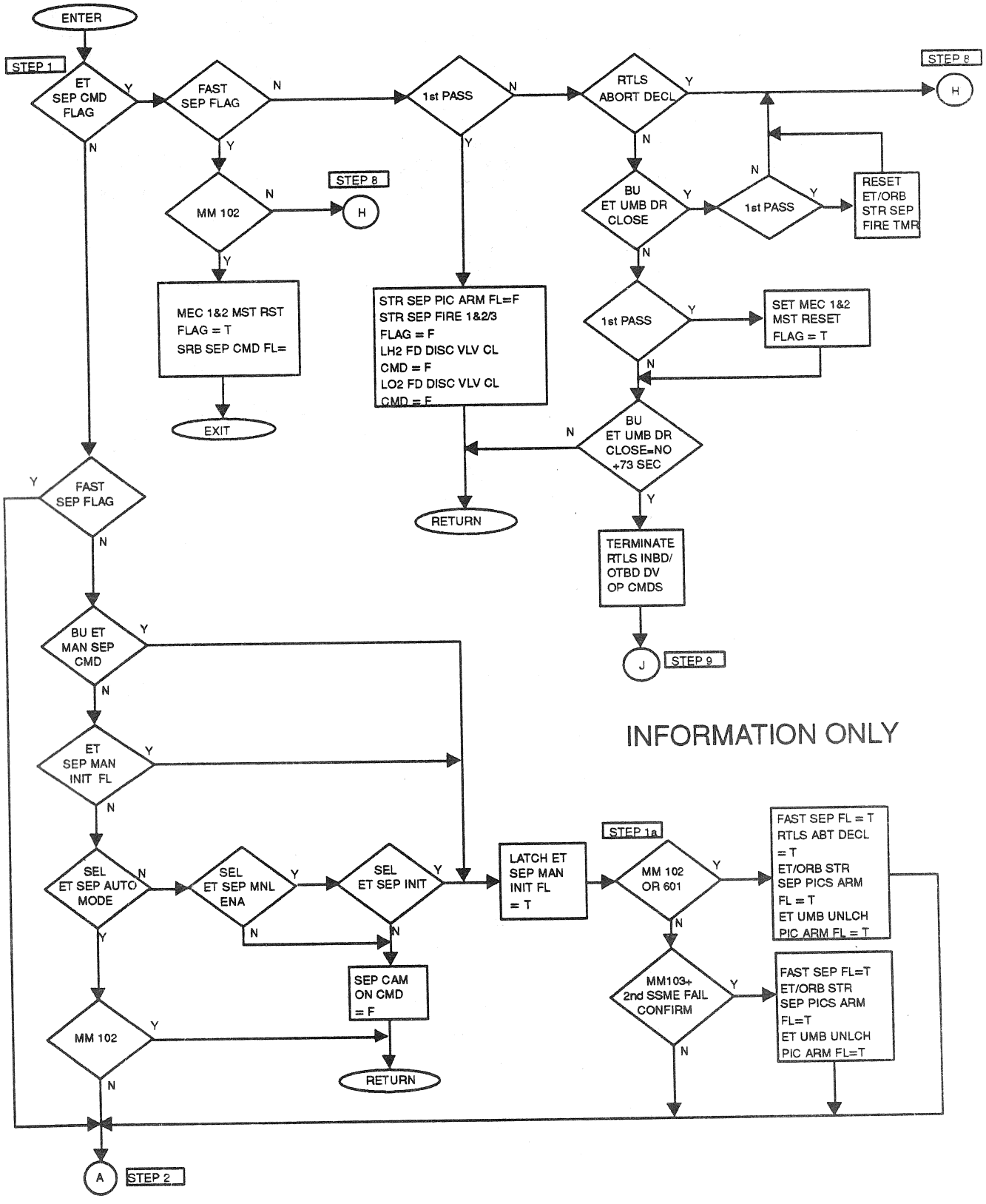

Figure 4.116. External Tank Separation Sequence Logic Flow Diagram (Sheet 1 of 8)

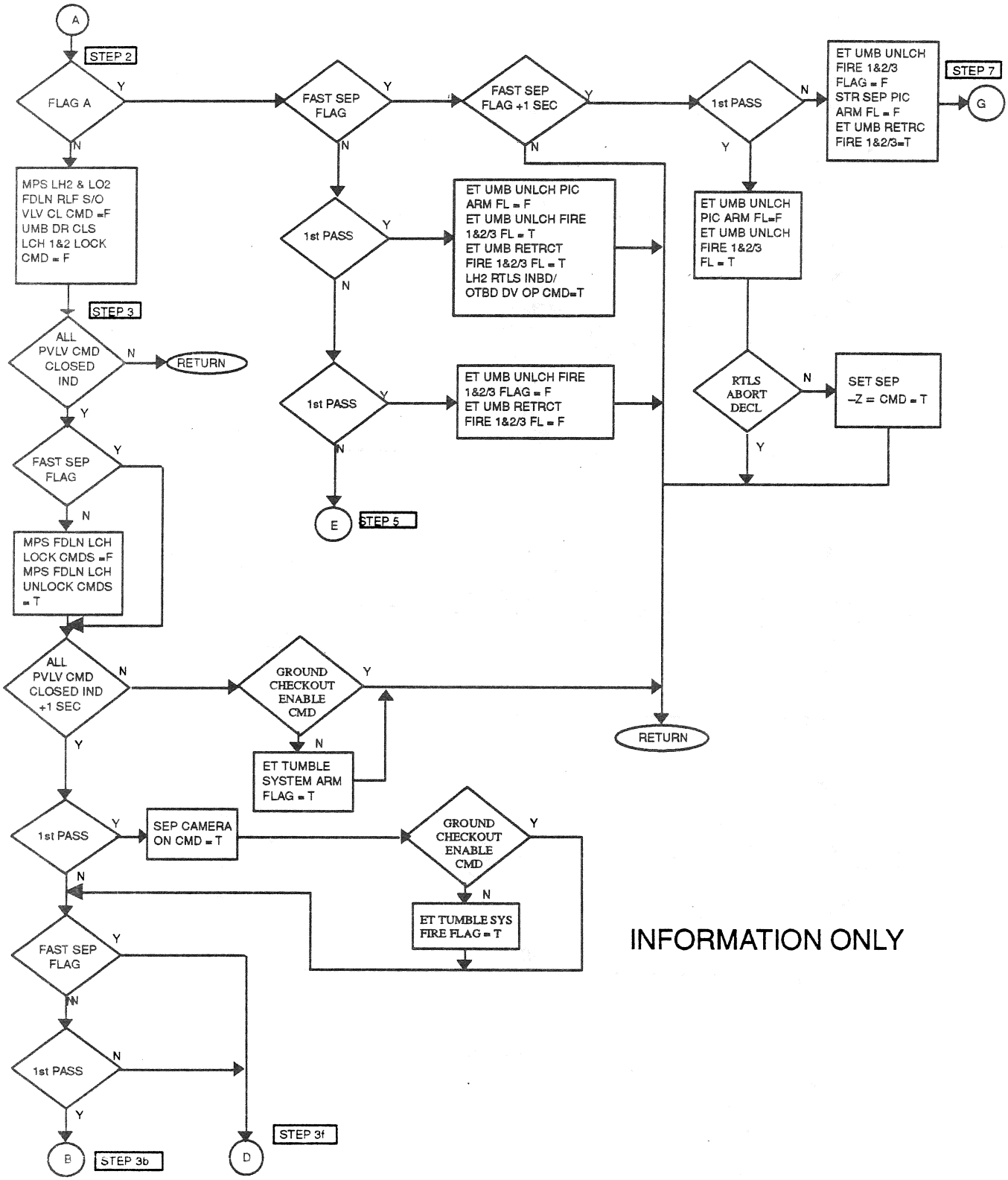

Figure 4.116. External Tank Separation Sequence Logic Flow Diagram (Sheet 2 of 8)

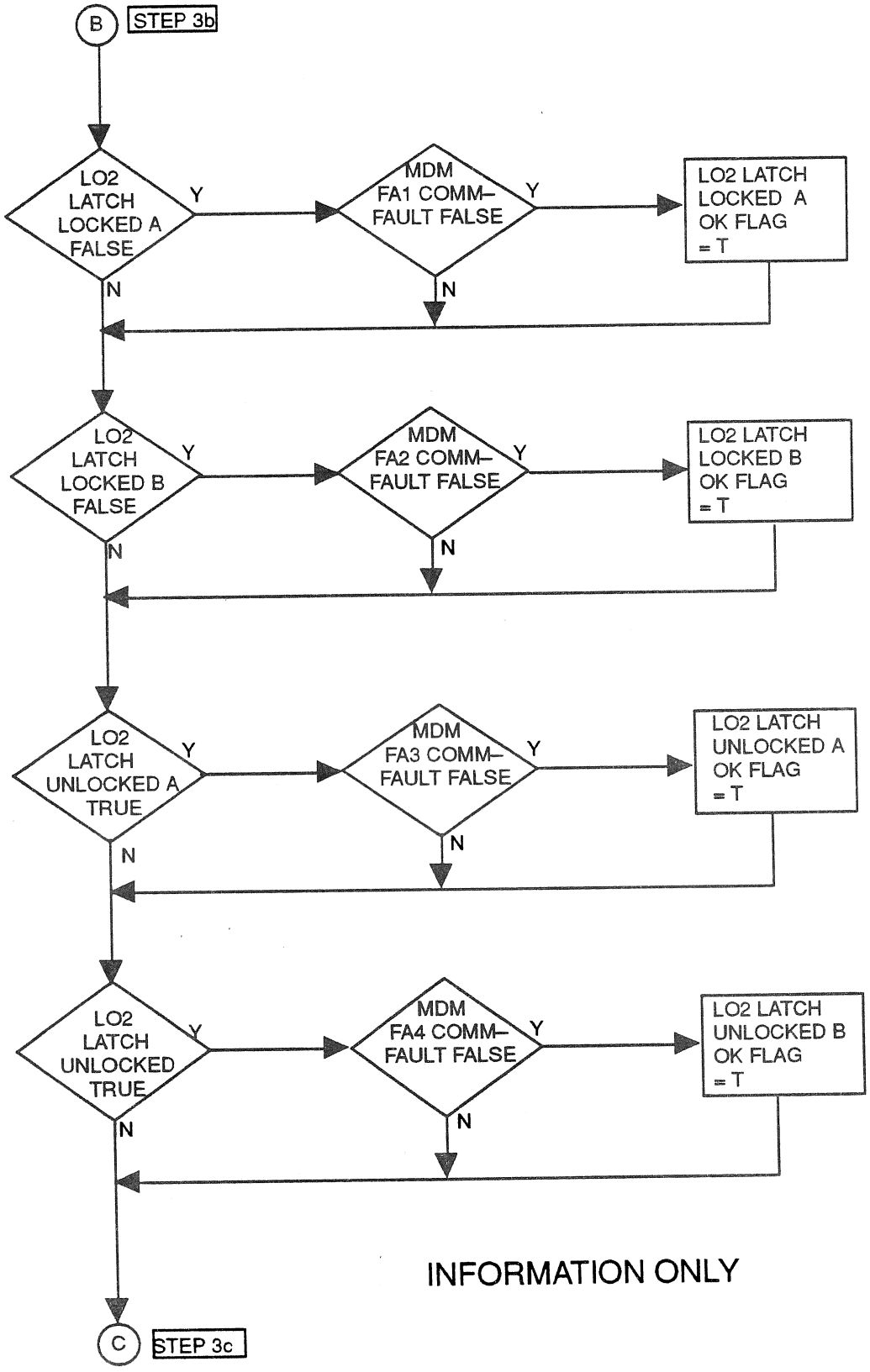

Figure 4.116. External Tank Separation Sequence Logic Flow Diagram (Sheet 3 of 8)

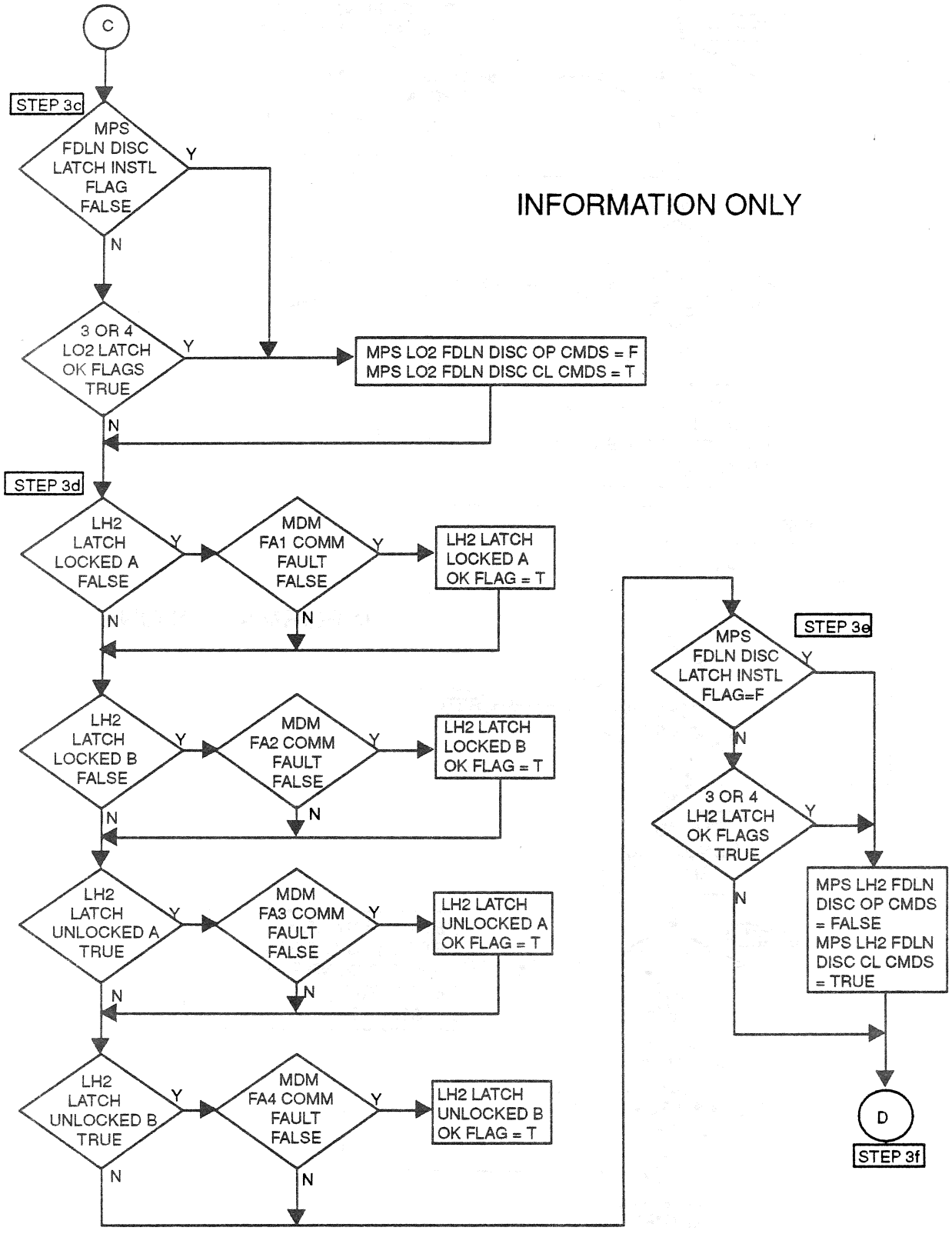

Figure 4.116. External Tank Separation Sequence Logic Flow Diagram (Sheet 4 of 8)

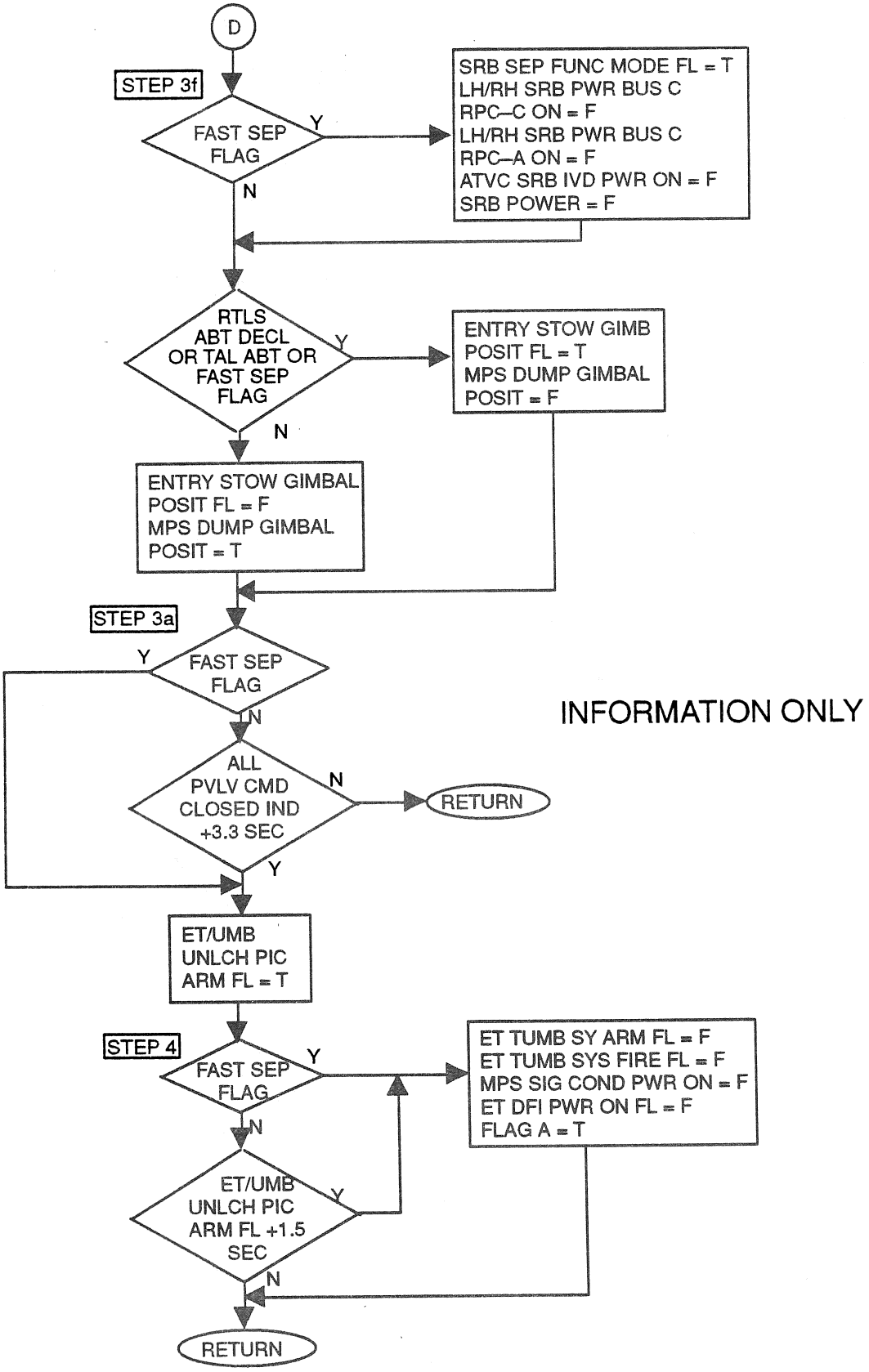

Figure 4.116. External Tank Separation Sequence Logic Flow Diagram (Sheet 5 of 8)

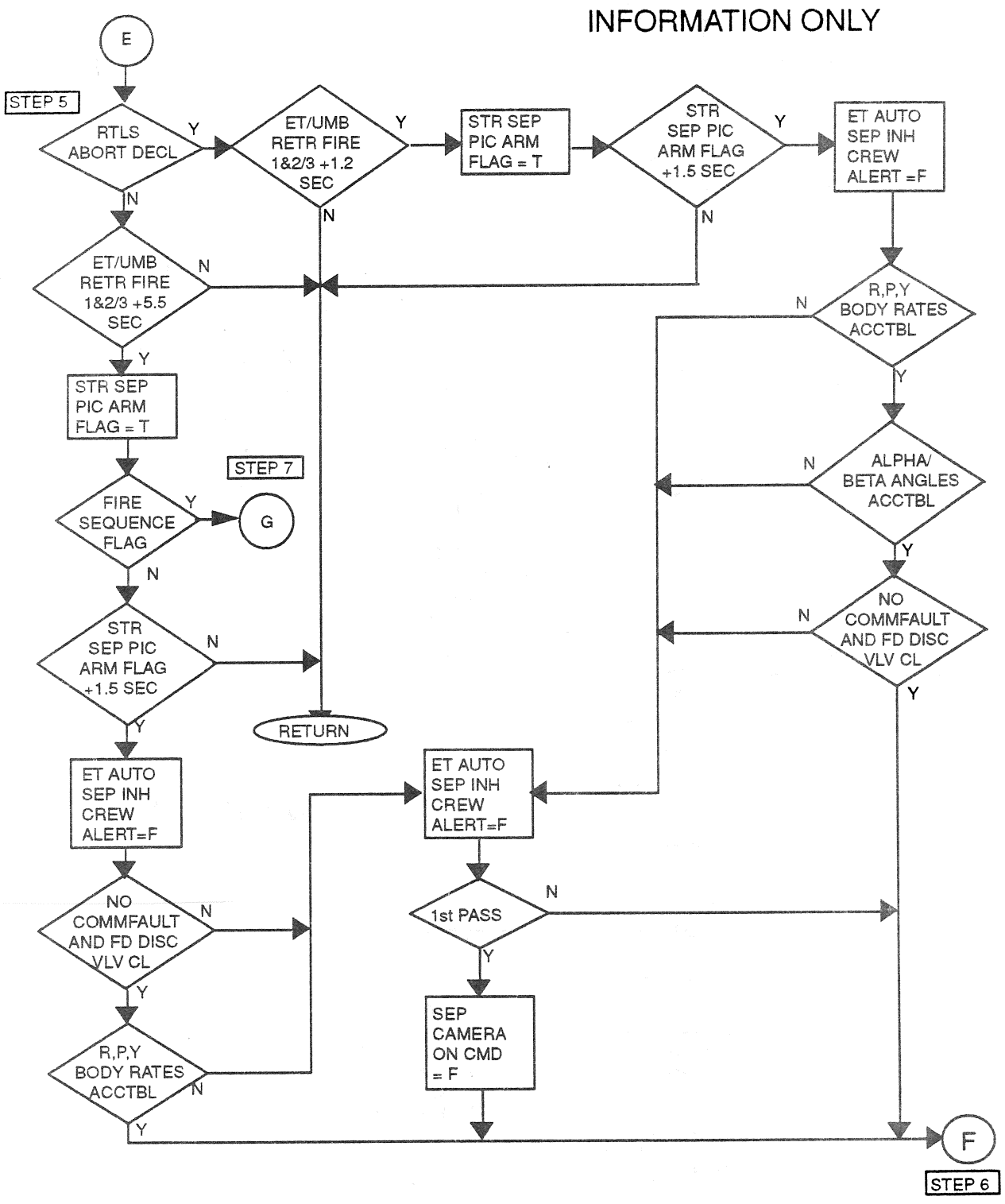

Figure 4.116. External Tank Separation Sequence Logic Flow Diagram (Sheet 6 of 8)

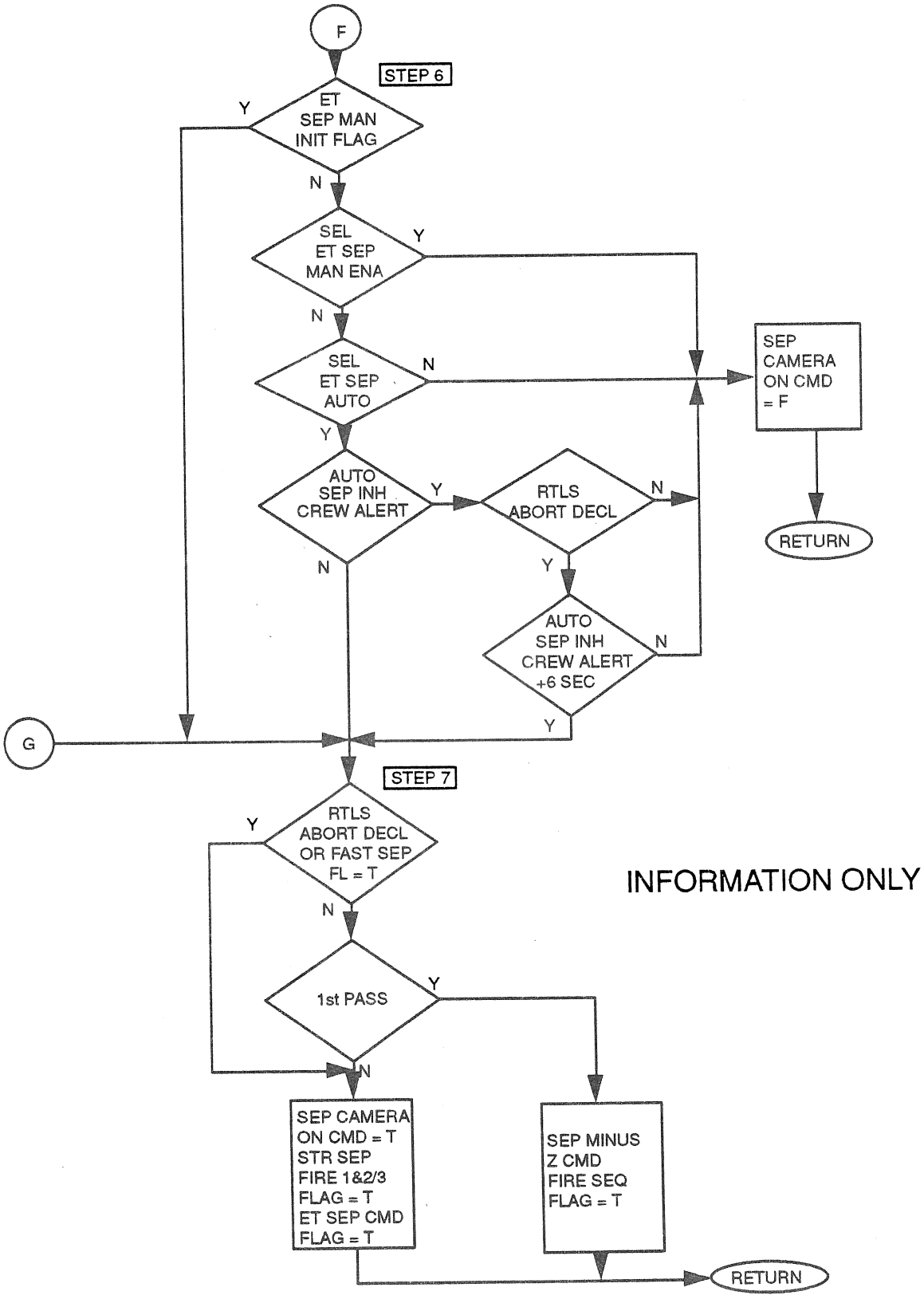

Figure 4.116 External Tank Separation Sequence Logic Flow Diagram (Sheet 7 of 8)

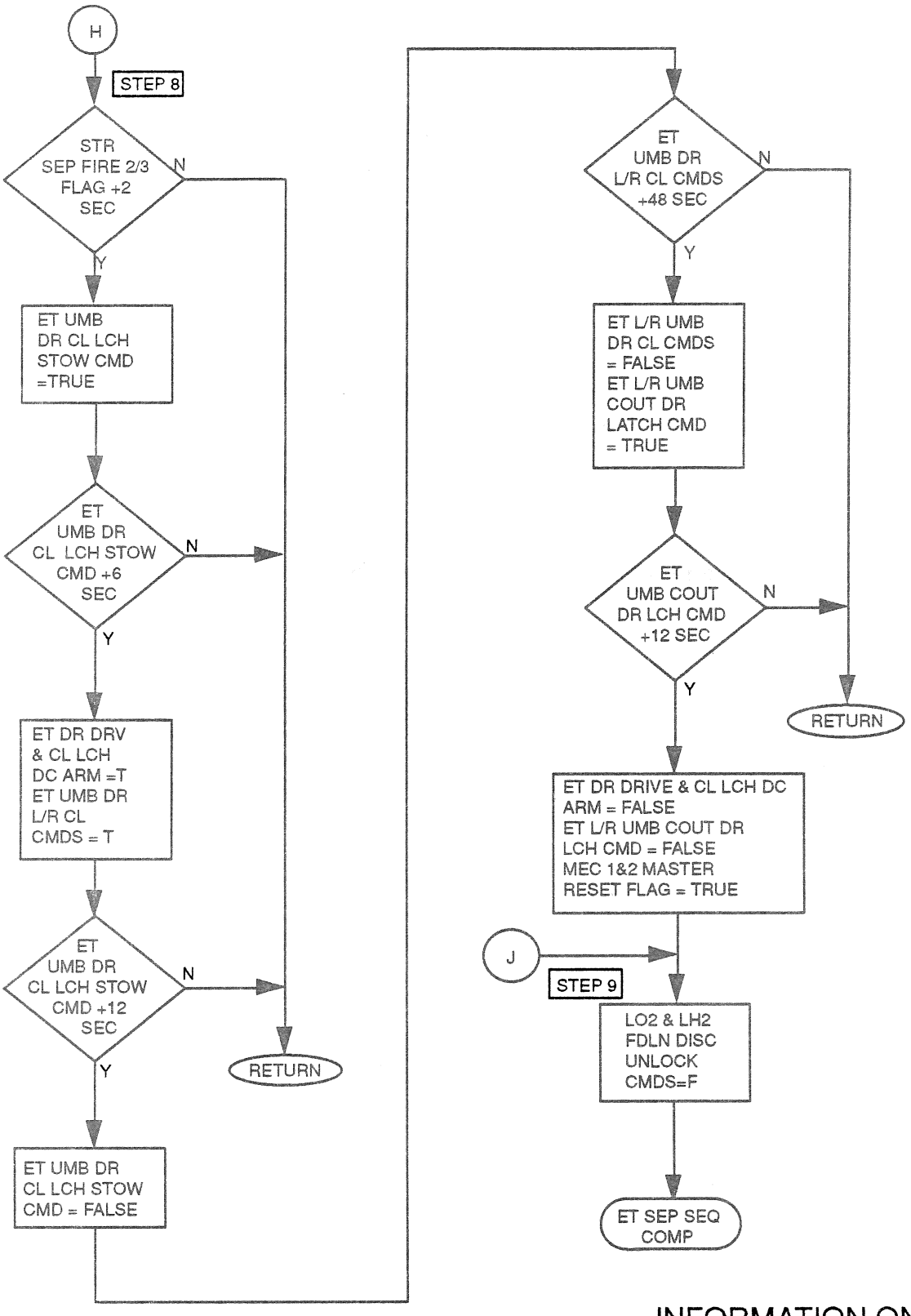

INFORMATION ONLY

Figure 4.116. External Tank Separation Sequence Logic Flow Diagram (Sheet 8 of 8)

THIS PAGE INTENTIONALLY LEFT BLANK

TABLE 4.2.3.4–1. EXTERNAL TANK(ET) SEPARATION SEQUENCER (G4.116) INPUT/OUTPUT FUNCTIONAL PARAMETERS

DBFN: D3B027-F PN: VP707100049P00L INPUT FUNCTIONAL PARAMETERS FOR ET SEP SEQ

FSSR NAME	M/S ID	NOMENCLATURE	SOURCE	UNITS	DATA TYPE	PREC	LAST CRS
ALPHA_N	V90H2246C	NAV DERIVED ANGLE OF ATTACK	A/E ATT PROC	DEG	SPL		89990E
BETA_N	V90H2249C	INERTIAL SIDESLIP ANGLE	A/E ATT PROC	DEG	SPL		
ET_SEP_MAN_INITIATE	V90X8584XA	ET SEP MAN INITIATE FLAG	SSME OPS		BD		89990E
ET_SEP_MAN_INITIATE	V90X8584XB	ET SEP MAN INITIATE FLAG	PW CONT GUID				89990E
MM_CODE_102/MM_102	V90X8158X	MAJOR MODE 102 FLAG	MSC				89990E
							90115
MM_CODE_103/MM_103	V90X8156X	MAJOR MODE 103 FLAG	MSC				89990E
							89599C
MM_CODE_601/MM_601	V90X8194X	MAJOR MODE 601 FLAG	MSC				89990E
P_ORB	V90R5301CA	SELECTED RGA ROLL RATE	SF	DEG/S			90182
Q_ORB/Q	V90R5321CA	SELECTED RGA PITCH RATE	SF	DEG/S			90182
							89990E
R_ORB	V90R5341CA	SELECTED RGA YAW RATE	SF	DEG/S			90182
SEC_ME_FL_CNFM	V90X1721X	2ND SSME FAIL CONFIRM	ASC DAP				89990E
TAL_ABORT_DECLARED	V90X8658X	TAL ABORT DECLARED	MSC				89245D
	V41X1430X	MPS LH2 17IN DISC VLV(PD2)CL IND A	HDWR		BD		89554A
	V41X1434X	MPS LH2 17IN DISC VLV(PD2)CL IND B	HDWR		BD		89554A
	V41X1530X	MPS LO2 17IN DISC VLV(PD1)CL IND A	HDWR		BD		89554A
	V41X1534X	MPS LO2 17IN DISC VLV(PD1)CL IND B	HDWR		BD		89554A
	V41X1891X	MPS LO2 17IN(PD1)LATCH LCKED IND A	HDWR		BD		89554A
							89218B
	V41X1892X	MPS LO2 17IN(PD1)LATCH LCKED IND B	HDWR		BD		89554A
							89218B
	V41X1893X	MPS LO2 17IN(PD1)LTCH UNLCKD IND A	HDWR		BD		89554A
							89218B
	V41X1894X	MPS LO2 17IN(PD1)LTCH UNLCKD IND B	HDWR		BD		89554A
							89218B
	V41X1991X	MPS LH2 17IN(PD2)LATCH LCKED IND A	HDWR		BD		89554A
							89218B
	V41X1992X	MPS LH2 17IN(PD2)LATCH LCKED IND B	HDWR		BD		89554A
							89218B
	V41X1993X	MPS LH2 17IN(PD2)LTCH UNLCKD IND A	HDWR		BD		89554A
							89218B
	V41X1994X	MPS LH2 17IN(PD2)LTCH UNLCKD IND B	HDWR		BD		89554A
							89218B
	V90X7554X	SEL ET SEP AUTO	GN&C SW RM		BD		
	V90X7556X	SEL ET SEP MNL ENABLE	GN&C SW RM		BD		
	V90X7564X	SEL ET SEP INITIATE/WOW-WONG CMD	GN&C SW RM		BD		
	V90X8568X	ALL PREVLVS COMMANDED CLOSE IND	SSME OPS				
	V90X8637XA	RTLS ABORT DECLARED	MSC				89991E
							89599C
	V91X2845X	FA1 INPUT PROM SEG3,10 STATUS(HFE)	FCOS				89991E
							89598A

TABLE 4.2.3.4–1. EXTERNAL TANK(ET) SEPARATION SEQUENCER (G4.116) INPUT/OUTPUT FUNCTIONAL PARAMETERS

DBFN: D3B027-F PN: VP707100049P00L INPUT FUNCTIONAL PARAMETERS FOR ET SEP SEQ

FSSR NAME	M/S ID	NOMENCLATURE	SOURCE	UNITS	DATA TYPE	PREC	LAST CRS
	V91X2846X	FA2 INPUT PROM SEG3,10 STATUS(HFE)	FCOS				89991E 89598A
	V91X2847X	FA3 INPUT PROM SEG3,10 STATUS(HFE)	FCOS				89991E 89598A
	V91X2848X	FA4 INPUT PROM SEG3,10 STATUS(HFE)	FCOS				89598A 59126H
	V93X5341X	BACKUP ET MAN SEP CMD	OVERRIDE DISP		BD		
	V93X5342X	BACKUP ET UMB DR CLOSE CMD	OVERRIDE DISP		BD		
	V93X5538X	GNC GROUND CHECKOUT ENABLE	UI		BD		90023A

TABLE 4.2.3.4–1. EXTERNAL TANK(ET) SEPARATION SEQUENCER (G4.116) INPUT/OUTPUT FUNCTIONAL PARAMETERS

DBFN: D3B027-F PN: VP707100049P00L OUTPUT FUNCTIONAL PARAMETERS FROM ET SEP SEQ

FSSR NAME	M/S ID	NOMENCLATURE	DESTINATION	UNITS	DATA TYPE	PREC	LAST CRS
ATVC_IVD_PWR	V90X8338XB	ATVC SRB IVD PWR ON FLAG	MEC SOP				89456A
ENT_STOW_GIM_POSN	V90X8254XB	ENTRY STOW GIMBAL POS FLAG	MPS TVC CMD SOP		BD		
ET_DFI_PWR	V90X8255X	ET DFI PWR ON FLAG	MEC SOP				89456A
ET_SEP_ARM	V90X8265X	ET/ORB STR SEPN PICS ARM FLAG	MEC SOP				89456A
ET_SEP_CMD	V90X8250X	ET SEPARATION CMD FLAG	TRANS DAP,MPS D/D SEQ, GRTLS DAP,PW RTLS GUID, G/C STEER,MSC,VENT CNTL SEQ, PW CONT GUID,TLM		BD		89990E 90054A
ET_SEP_FIRE1	V90X8244X	ET/ORB STR SEPN FIRE 1 FLAG	MEC SOP				89456A
ET_SEP_FIRE2/3	V90X8241X	ET/ORB STR SEPN FIRE 2/3 FLAG	MEC SOP				89456A
ET_TMBL_ARM	V90X8251X	ET TUMBLE SYS ARM FLAG	MEC SOP				89456A
ET_TMBL_FIRE	V90X8252X	ET TUMBLE SYS FIRE FLAG	MEC SOP				89456A
ET_UMB_RETR_CMD 1	V90X8263X	ET/UMB RETRACT FIRE 1 FLAG	MEC SOP				89456A
ET_UMB_RETR_CMD2/3	V90X8243X	ET/UMB RETRACT FIRE 2/3 FLAG	MEC SOP				89456A
ET_UMB_UNLCH FIRE1	V90X8256X	ET/UMB UNLATCH FIRE 1 FLAG	MEC SOP				89456A
ET_UMB_UNLCH FIRE2/3	V90X8242X	ET/UMB UNLATCH FIRE 2/3 FLAG	MEC SOP				89456A
ET_UMB_UNLCH_ARM	V90X8247X	ET/UMB UNLATCH PICS ARM FLAG	MEC SOP				89456A
FAST_SEP_FLAG	V90X8267X	FAST SEPARATION FLAG	GRTLS DAP,ASC DAP,ABT CNTL SEQ				79643A
M_RSET_USER	V90X8258XA	MEC 1&2 MASTER RESET FLAG	MEC SOP				89456A
SEP_MINUSZ_CMD	V90X8268X	SEPARATION MINUS Z CMD	TRANS DAP				
SRB_MODING_SEP	V90X8330XB	SRB SEP FUNCTION MODING FLAG	ASC DAP				
SRB_PWR_ON	V90X8343X	SRB POWER ON	MEC SOP				89456A
SRB_SEP_CMD_FLAG	V90X8331XB	SRB SEPARATION COMMAND FLAG	MSC,AERO ACT SOP,ASC UPP, ASC DAP,ASC UPP SEQ, RTLS UPP SEQ				
	V41K0075X	MPS SIG COND PWR 1 ON	LCA A1		BD		
	V41K0076X	MPS SIG COND PWR 2 ON	LCA A2		BD		
	V41K0077X	MPS SIG COND PWR 3 ON	LCA A3		BD		
	V41K1413X	MPS LH2 17IN DISC VLV(PD2)OP CMD A	HDWR		BD		89554A
	V41K1414X	MPS LH2 17IN DISC VLV(PD2)OP CMD B	HDWR		BD		89554A
	V41K1415X	MPS LH2 17IN DISC VLV(PD2)OP CMD C	HDWR		BD		89554A
	V41K1416XA	MPS LH2 17IN DISC VLV(PD2)CL CMD A	HDWR				89554A
	V41K1417XA	MPS LH2 17IN DISC VLV(PD2)CL CMD B	HDWR				89554A
	V41K1418XA	MPS LH2 17IN DISC VLV(PD2)CL CMD C	HDWR				89554A
	V41K1447X	MPS LH2 FDLN RLF SOV(PV8)CL CMD A	LCA A3		BD		89554A
	V41K1448X	MPS LH2 FDLN RLF SOV(PV8)CL CMD B	HDWR		BD		89554A
	V41K1450X	MPS LH2 FDLN RLF SOV(PV8)CL CMD C	HDWR		BD		89554A
	V41K1521X	MPS LO2 17IN DISC VLV(PD1)OP CMD A	HDWR		BD		89554A
	V41K1522X	MPS LO2 17IN DISC VLV(PD1)OP CMD B	HDWR		BD		89554A
	V41K1523X	MPS LO2 17IN DISC VLV(PD1)OP CMD C	HDWR		BD		89554A
	V41K1524XB	MPS LO2 17IN DISC VLV(PD1)CL CMD A	HDWR				89554A
	V41K1525XB	MPS LO2 17IN DISC VLV(PD1)CL CMD B	HDWR				89554A
	V41K1526XB	MPS LO2 17IN DISC VLV(PD1)CL CMD C	HDWR				89554A

TABLE 4.2.3.4–1. EXTERNAL TANK(ET) SEPARATION SEQUENCER (G4.116) INPUT/OUTPUT FUNCTIONAL PARAMETERS

DBFN: D3B027-F PN: VP707100049P00L OUTPUT FUNCTIONAL PARAMETERS FROM ET SEP SEQ

FSSR NAME	M/S ID	NOMENCLATURE	DESTINATION	UNITS	DATA TYPE	PREC	LAST CRS
	V41K1547X	MPS LO2 FDLN RLF SOV(PV7)CL CMD A	HDWR		BD		89554A
	V41K1548X	MPS LO2 FDLN RLF SOV(PV7)CL CMD B	LCA A1		BD		89554A
	V41K1550X	MPS LO2 FDLN RLF SOV(PV7)CL CMD C	HDWR		BD		89554A
	V41K1881X	MPS LO2 17IN(PD1) LATCH LOCK CMD A	HDWR				89554A
							89165H
	V41K1882X	MPS LO2 17IN(PD1) LATCH LOCK CMD B	HDWR				89554A
							89165H
	V41K1883X	MPS LO2 17IN(PD1) LATCH LOCK CMD C	HDWR				89554A
							89165H
	V41K1884X	MPS LO2 17IN(PD1)LTCH UNLOCK CMD A	HDWR				89554A
							89165H
	V41K1885X	MPS LO2 17IN(PD1)LTCH UNLOCK CMD B	HDWR				89554A
							89165H
	V41K1886X	MPS LO2 17IN(PD1)LTCH UNLOCK CMD C	HDWR				89554A
							89165H
	V41K1913XB	MPS LH2 RTLS OTBD DV(PV18)OP CMD A	HDWR				89554A
	V41K1914XB	MPS LH2 RTLS OTBD DV(PV18)OP CMD B	HDWR				89554A
	V41K1915XB	MPS LH2 RTLS OTBD DV(PV18)OP CMD C	HDWR				89554A
	V41K1923XB	MPS LH2 RTLS INBD DV(PV17)OP CMD A	HDWR				89554A
	V41K1924XB	MPS LH2 RTLS INBD DV(PV17)OP CMD B	HDWR				89554A
	V41K1925XB	MPS LH2 RTLS INBD DV(PV17)OP CMD C	HDWR				89554A
	V41K1981X	MPS LH2 17IN(PD2) LATCH LOCK CMD A	HDWR				89554A
							89165H
	V41K1982X	MPS LH2 17IN(PD2) LATCH LOCK CMD B	HDWR				89554A
							89165H
	V41K1983X	MPS LH2 17IN(PD2) LATCH LOCK CMD C	HDWR				89554A
							89165H
	V41K1984X	MPS LH2 17IN(PD2)LTCH UNLOCK CMD A	HDWR				89554A
							89165H
	V41K1985X	MPS LH2 17IN(PD2)LTCH UNLOCK CMD B	HDWR				89554A
							89165H
	V41K1986X	MPS LH2 17IN(PD2)LTCH UNLOCK CMD C	HDWR				89554A
							89165H
	V56K0140X	ET UMB DR L-B1/B2 CLOSE CMD	HDWR,TLM		BD		89599C
	V56K0141X	ET DR DVR & CL LCH DC ARM A MCA1/2	HDWR		BD		89599C
	V56K0142X	ET DR DVR & CL LCH DC ARM A MCA1/3	HDWR		BD		89599C
	V56K0143X	ET DR DVR & CL LCH DC ARM A MCA2/3	HDWR		BD		
	V56K1271X	ET DR C/L LCH 1A1/2A2 FA1 STOW CMD	HDWR		BD		
	V56K1272X	ET DR C/L LCH 1A2/2A1 FA1 STOW CMD	HDWR		BD		
	V56K1273X	ET DR C/L LCH 1A1/2B2 FA2 STOW CMD	HDWR		BD		
	V56K1274X	ET DR C/L LCH 1B2/2B1 FA2 STOW CMD	HDWR		BD		
	V56K1275X	ET DR C/L LCH 1A1/2A2 FA1 LOCK CMD	HDWR		BD		
	V56K1276X	ET DR C/L LCH 1A2/2B1 FA1 LOCK CMD	HDWR		BD		

TABLE 4.2.3.4–1. EXTERNAL TANK(ET) SEPARATION SEQUENCER (G4.116) INPUT/OUTPUT FUNCTIONAL PARAMETERS

DBFN: D3B027-F PN: VP707100049P00L OUTPUT FUNCTIONAL PARAMETERS FROM ET SEP SEQ

FSSR NAME	M/S ID	NOMENCLATURE	DESTINATION	UNITS	DATA TYPE	PREC	LAST CRS
	V56K1277X	ET DR C/L LCH 1A1/2B2 FA2 LOCK CMD	HDWR		BD		
	V56K1278X	ET DR C/L LCH 1B2/2A1 FA2 LOCK CMD	HDWR		BD		
	V56K1371X	ET DR C/L LCH 1B1/2A2 FA4 STOW CMD	HDWR		BD		
	V56K1372X	ET DR C/L LCH 1A2/2B1 FA4 STOW CMD	HDWR		BD		
	V56K1373X	ET DR C/L LCH 1B1/2B2 FA3 STOW CMD	HDWR		BD		
	V56K1374X	ET DR C/L LCH 1B2/2A1 FA3 STOW CMD	HDWR		BD		
	V56K1375X	ET DR C/L LCH 1B1/2A2 FA4 LOCK CMD	HDWR		BD		
	V56K1376X	ET DR C/L LCH 1A2/2A1 FA4 LOCK CMD	HDWR		BD		
	V56K1377X	ET DR C/L LCH 1B1/2B2 FA3 LOCK CMD	HDWR		BD		
	V56K1378X	ET DR C/L LCH 1B2/2B1 FA3 LOCK CMD	HDWR		BD		
	V56K3111X	ET UMB DR L-B2/R-B1 CLOSE CMD	HDWR		BD		
	V56K3112X	ET UMB DR R-B2 CLOSE CMD	HDWR		BD		
	V56K3531X	ET L UMB COUT DOOR LATCH FA1 CMD	HDWR		BD		
	V56K3532X	ET R UMB COUT DOOR LATCH FA1 CMD	HDWR		BD		
	V56K3533X	ET L UMB COUT DOOR LATCH FA4 CMD	HDWR		BD		
	V56K3534X	ET R UMB COUT DOOR LATCH FA4 CMD	HDWR		BD		
	V56K4121X	ET UMB DR R-B1/B2 CLOSE CMD	HDWR		BD		
	V56K4122X	ET UMB DR L-B1 CLOSE CMD	HDWR		BD		
	V56K4531X	ET L UMB COUT DOOR LATCH FA3 CMD	HDWR		BD		
	V56K4532X	ET R UMB COUT DOOR LATCH FA3 CMD	HDWR		BD		
	V56K4533X	ET L UMB COUT DOOR LATCH FA2 CMD	HDWR		BD		
	V56K4534X	ET R UMB COUT DOOR LATCH FA2 CMD	HDWR		BD		
	V56K9000XA	ET/ORB SEP CAMERAS ON CMD	HDWR				
	V76K6941XB	L SRB BUS C RPC A ON CMD	HDWR				79935H
	V76K6942XB	R SRB BUS C RPC A ON CMD	HDWR				79935H
	V76K6945XB	L SRB BUS C RPC C ON CMD	HDWR				
	V76K6946XB	R SRB BUS C RPC C ON CMD	HDWR				
	V90X8253X	MPS DUMP GIMBAL POS FLAG	MPS TVC CMD SOP				
	V90X8259X	ET AUTO SEP INHIBIT CREW ALERT	XXXXXX TRAJ DISP,GAX,TLM		BD		
	V90X8637XB	RTLS ABORT DECLARED	XXXXXX TRAJ DIP,MPS DUMP, SSME OPS,ABT CNTL SEQ,MSC, MPS TVC CMD SOP				89991E

TABLE 4.2.3.4–2. EXTERNAL TANK(ET) SEPARATION SEQUENCER (G4.116) I–LOADS

DBFN:0484

FSSR NAME	MSID	ENG UNIT	DT	PR	D	S	PR	FCTN	CAT
FDLN_DISC_LATCH_INSTALLED_FLAG	V99U9951C	ND	D		L	C	G4.116		MES2

TABLE 4.2.3.4–3. EXTERNAL TANK(ET) SEPARATION SEQUENCER (G4.116) K–LOADS

DBFN:0558

FSSR NAME DESCRIPTION	MSID	MC KLOAD VALUE		ENG UNIT	DT	PR	S	PR FCTN	LAST CR EQTN MSID
NOM_BODY_NEG_PITCH_RATE_LMT	V97U9763C	-7.0	E-01	DEG/SEC	F	S	C	G4.116	79928
NOM_BODY_NEG_ROLL_RATE_LMT	V97U9765C	-7.0	E-01	DEG/SEC	F	S	C	G4.116	79928
NOM_BODY_NEG_YAW_RATE_LMT	V97U9767C	-7.0	E-01	DEG/SEC	F	S	C	G4.116	79928
NOM_BODY_PLUS_PITCH_RATE_LMT	V97U9762C	+7.0	E-01	DEG/SEC	F	S	C	G4.116	79928
NOM_BODY_PLUS_ROLL_RATE_LMT	V97U9764C	+7.0	E-01	DEG/SEC	F	S	C	G4.116	79928
NOM_BODY_PLUS_YAW_RATE_LMT	V97U9766C	+7.0	E-01	DEG/SEC	F	S	C	G4.116	79928
RTLS_BODY_NEG_PITCH_RATE_LMT	V97U9769C	-5.0	E+00	DEG/SEC	F	S	C	G4.116	29597A
RTLS_BODY_NEG_ROLL_RATE_LMT	V97U9771C	-5.0	E+00	DEG/SEC	F	S	C	G4.116	29597A
RTLS_BODY_NEG_YAW_RATE_LMT	V97U9773C	-5.0	E-01	DEG/SEC	F	S	C	G4.116	29597A
RTLS_BODY_PLUS_PITCH_RATE_LMT	V97U9768C	+2.5	E-01	DEG/SEC	F	S	C	G4.116	29597A
RTLS_BODY_PLUS_ROLL_RATE_LMT	V97U9770C	+5.0	E+00	DEG/SEC	F	S	C	G4.116	29597A
RTLS_BODY_PLUS_YAW_RATE_LMT	V97U9772C	+5.0	E-01	DEG/SEC	F	S	C	G4.116	29597A
RTLS_NEG_ANGLE_OF_ATTK_LMT	V97U9775C	-8.90	E+01	DEG	F	S	C	G4.116	29597A
RTLS_NEG_SIDESLIP_ANGLE_LMT	V97U9777C	-2.0	E+00	DEG	F	S	C	G4.116	29597A
RTLS_PLUS_ANGLE_OF_ATTK_LMT	V97U9774C	-2.0	E+00	DEG	F	S	C	G4.116	29597A
RTLS_PLUS_SIDESLIP_ANGLE_LMT	V97U9776C	+2.0	E+00	DEG	F	S	C	G4.116	29597A

TABLE 4.2.3.4-4. EXTERNAL TANK(ET) SEPARATION SEQUENCER (G4.116) CONSTANTS

DBFN:0558

FSSR NAME DESCRIPTION	MSID	MC	CONSTANT VALUE	ENG UNIT	DT	PR	S	PR FCTN	LAST CR
NO REQUIREMENTS									

4.2.4 MPS Dump Sequence (4.70)

4.2.4.1 Introduction

The MPS dump sequence performs the function of expelling the LO_2 and LH_2 contained in the orbiter and SSME LO_2 and LH_2 main feed lines.

For the nominal mission, this sequence commences automatically at the initiation of OMS-1 burn. The crew, however, has the capability to manually initiate, through the GPC, and control dump intervals for both the LO_2 and LH_2 propellants after MECO confirmed + 20 seconds. If the sequence is activated manually during a transatlantic abort landing (TAL) mode, the LH_2 dump time I-load is set to 30 seconds.

For RTLS, the MPS dump sequence will automatically initiate and control LO_2 and LH_2 line propellant dump after the transition to Major Mode 602. During a TAL abort mode, the LO_2 and LH_2 dump will be terminated after expiration of the TAL abort LH_2 30-second dump time.

4.2.4.2 Overview

The MPS dump sequence is initiated by the GNC moding, sequencing, and control (MSC) function. For non-RTLS modes, the sequence is scheduled when MECO confirmed + 20 seconds has occurred. In an RTLS abort mode, the sequence is initiated by the transition to Major Mode 602.

The OMS-1 burn is the normal cue to start actual MPS dumping. This burn produces the required ullage for the predefined dump time intervals needed to expel the residual LH_2 and LO_2 in the engine supply lines. Manual activation of this sequence may occur after MECO confirmed plus a 20-second time interval required for engine cool-down prior to actual LO_2 dump.

Regardless of sequence entry, i.e., automatically (nominal or RTLS) or manually, the following seven subfunctions occur:

1. Start LO_2 dump. The automatic LO_2 dump start is a GPC command initiated at OMS insertion burn or RTLS mode activation.

   Manual LO_2 dump start may be initiated by placing the MPS propellant dump sequence switch on the D&C panel, R2, to the START position. In either the automatic or manual position, the GPC command requests the engine controllers to open the SSME LO_2 valves, open the LO_2 manifold repressurization valves, and open the LO_2 prevalves. During an RTLS abort, the LO_2 prevalves and SSME LO_2 valves are opened at MM 602 transition. During these aborts, the LO_2 manifold is not pressurized and LO_2 is allowed to boil out. The LO_2 inboard and outboard fill/ drain valves are opened at a dynamic pressure of 20 lb per ft^2.

2. Stop LO_2 dump. The LO_2 dump stop command is initiated by either time or panel switch position. For the non-RTLS automatic dump sequence, the expiration of a preset time delay initiates dump stop. This time delay will be I-loadable.

   The RTLS LO_2 and LH_2 dump will be terminated at a ground relative velocity of 3,800 ft/sec. At this time, the LO_2 outboard fill/drain valves and LO_2 prevalves are closed and the LO_2 manifold is pressurized.

   During a TAL abort, the LO_2 and LH_2 dump will be terminated after expiration of the TAL abort 30-second dump time.

The manual initiation of the dump stop is via the MPS propellant dump sequence switch on D&C Panel R2. Placing the switch in the STOP position will initiate the LO_2 dump stop command 32 seconds after expiration of LH_2 dump timer. In the automatic non-RTLS mode or manual mode, the GPC dump stop command closes the LO_2 manifold repressurization valves, allows 20 seconds for manifold pressure to decay, and terminates the LO_2 prevalve open commands, leaving the LO_2 prevalves open. During a TAL abort, the 20-second pressure-decay timer is bypassed.

3. Start LH_2 dump. The non-RTLS LH_2 dump starts concurrently with the LO_2 at OMS insertion burn or at manual mode LO_2 dump initiation. In the manual mode, the dump is initiated by the MPS propellant dump sequence switch on Panel R2. The LH_2 dump consists of opening the LH_2 manifold repressurization valves and the LH_2 inboard and outboard fill and drain valves. LH_2 is forced out of the LH_2 inboard and outboard fill and drain valves by the helium pressure in the manifold. At a pre-established time, the LH_2 inboard fill and drain valve is closed, and the LH_2 topping valve and prevalves are opened. LH_2 is forced out of the LH_2 outboard fill and drain valve via the SSME bleed valves, prevalves, and topping valve by the helium pressure in the manifold.

   The LH_2 may be vented through the RTLS dump valves and is controlled by the MPS propellant dump backup LH_2 valve switch on Panel R2. This causes the LH_2 to be vented overboard through an opening on the left side between the wing and OMS pod.

   The LH_2 dump start for the RTLS mode commences concurrently with the LO_2 dump, automatically at MM 602 transition. The LH_2 dump consists of opening RTLS dump valves and RTLS manifold repressurization valves. This causes the LH_2 to be dumped overboard through an opening on the left side between the wing and OMS pod. The LH_2 RTLS dump occurs while the LO_2 is being dumped through the SSME's and the LO_2 inboard and outboard fill/drain valves. At MM 602 plus 80 seconds, the LH_2 RTLS manifold is depressurized. The LH_2 topping valve and inboard and outboard fill/drain valves are opened.

4. Stop LH_2 dump. For the automatic non-RTLS mode, the LH_2 dump command is initiated by the GPC at a preset time delay from the start of LH_2 dump. The manual MPS propellant dump backup LH_2 valve switch on D&C Panel R2 terminates the RTLS inboard and outboard dump valve commands. The GPC command closes the LH_2 manifold repressurization valves, and allows 32 seconds for LO_2 to vent, then issues the LH_2 outboard fill/drain valve close command. During a TAL abort, the 32-second LH_2 vent timer is bypassed. The GPC then commands the LH_2 prevalves de-energized, leaving the LH_2 prevalves open.

   The LH_2 RTLS dump stop is automatically initiated upon reaching a ground relative velocity of 3,800 ft/sec. At this velocity, the LH_2 outboard fill/drain valve is closed and the LH_2 manifold is pressurized.

5. Gimbal SSME's. The SSME's are GPC commanded to the stow position at the conclusion of the MPS propellant dump sequence. In the RTLS mode, the SSME's are left in the stow position throughout the sequence.

6. MPS deactivation. The MPS deactivation is initiated after the SSME nozzles have been commanded to the stow position via setting of the entry stow gimbal position flag.

7. Vacuum inerting and repressurization. The vacuum inerting is manually initiated and manually controlled requiring no GPC commands. The vacuum inerting is initiated anytime

post-MPS dump to vent the MPS manifolds and feed lines. This allows any residual H2 and O2 gases to disperse in space. The MPS manifolds and feed lines are automatically repressurized, prior to entry, to avoid ingress of contaminants.

8. During an RTLS contingency abort (invoked by taking the dump sequence switch to the START position), the LO_2 dump is inhibited and a 20 second unpressurized LH_2 venting is performed via the LH_2 RTLS dump valves and the LH_2 inboard and outboard fill/drain valves.

4.2.4.3 Detailed Requirements

Step 1. This step controls initial branching within the MPS dump sequence. On first entry, set outputs (4) through (7) true.

Monitor the following signal:

(a) RTLS ABORT DECLARED V90X8637X

If (a) is true, proceed to Step 2.

If (a) is false, monitor signals (f) and (g) below.

If (g) is false and (f) is true, set outputs (9) through (14) below true and monitor signals (b) and (h) below.

If (f) is false and (g) is true, set outputs (9) through (14) below false and monitor signals (b) and (h) below.

If (f) and (g) are false, monitor signals (b) and (h) below.

(b) NOM LO_2 DUMP COMPLETE FLAG (INTERNAL)

If (b) is true, set outputs (1) and (2) false; and if (h) is true proceed to Step 6.

If (b) is true, set outputs (1) and (2) false; and if (h) is false, repeat the logic in Step 1 until a 20-second time delay elapses. This 20-second time delay is to allow the LO_2 manifold to bleed down. Upon expiration of the time delay, proceed to Step 6. During a TAL abort, the 20-second LO_2 manifold bleed-down time is bypassed.

If (b) is false, monitor signals (c), (d), and (e) below:

(c) SEL MPS PRPLT DUMP SEQUENCE STOP V90X7567X
(d) SEL MPS PRPLT DUMP SEQUENCE START V90X7559X
(e) MPS LO_2 DUMP START V90X8301X
(f) SEL MPS PRPLT DUMP BKUP LH_2 VLV OPEN V90X7557X
(g) SEL MPS PRPLT DUMP BKUP LH_2 VLV CLOSE V90X7558X
(h) TAL ABORT DECLARED V90X8658X

If (c) is true and (e) has ever been set true, set output (3) true and return to Step 1.

If (c) is true and (e) has never been set true, the crew has elected to inhibit the sequence. The logic in Step 1 is repeated.

If (c) is false and (d) is false, the GPC mode has been selected. Proceed to Step 3.

If (d) is true and (h) is false, proceed to Step 4.

If (d) and (h) are both true, then on first pass, set (8) below to 30 seconds and return to Step 1. On subsequent passes, proceed to Step 4.

(1)	MPS LO_2 MANF REPRESS NO. 1 OPEN CMD	V41K1535X
(2)	MPS LO_2 MANF REPRESS NO. 2 OPEN CMD	V41K1537X
(3)	NOM LO_2 DUMP COMPLETE FLAG	(INTERNAL)
(4)	MPS E1 HE INTCON OUT/OPEN CMDS A	V41K1168X
(5)	MPS E2 HE INTCON OUT/OPEN CMDS A	V41K1268X
(6)	MPS E3 HE INTCON OUT/OPEN CMDS A	V41K1368X
(7)	MPS PNEU CROSSOVER NO. 2 OPEN CMD	V41K1613X
(8)	LH_2_DUMP_TIME	V97U9779C
(9)	MPS LH_2 RTLS INBD D/V OPEN CMD A	V41K1923X
(10)	MPS LH_2 RTLS INBD D/V OPEN CMD B	V41K1924X
(11)	MPS LH_2 RTLS INBD D/V OPEN CMD C	V41K1925X
(12)	MPS LH_2 RTLS OTBD D/V OPEN CMD A	V41K1913X
(13)	MPS LH_2 RTLS OTBD D/V OPEN CMD B	V41K1914X
(14)	MPS LH_2 RTLS OTBD D/V OPEN CMD C	V41K1915X

Step 2. This step controls entry into the RTLS abort LO_2 and LH_2 dump mode. GPC or manual, control logic is bypassed.

On the first pass through the logic in this step, set outputs (3) and (4) false and set outputs (5) through (16) true, start timer (b), and then monitor signal (a). On subsequent passes through the logic monitor signal (a).

(a)	GN&C DYNAMIC PRESSURE	V95P3011C
(b)	LH_2_FILL_DRAIN_VALVE_OP_TIME_DLY (80 seconds)	(INTERNAL)
(c)	GND REL VEL MAGNITUDE IN M50 SYS	V95L0151C
(d)	SEL MPS PRPLT DUMP SEQUENCE START	V90X7559X
(e)	LH2_CONTINGENCY_DUMP_TIME (20 seconds)	(INTERNAL)

If (a) $\geq$ 20 lb/ft^2, and (d) is false on first pass, set outputs (1) and (2) false, set outputs (17) through (19) true, then proceed to monitor (b) and (d); otherwise monitor (b) and (d).

If (b) seconds have elapsed since starting timer (b) or (d) is true, on first pass, set outputs (11) through (16) false, set outputs (20) through (23) true, then monitor signal (c); otherwise monitor signal (c).

If (c) $\leq$ 4,500 ft/sec, on first pass, proceed to Step 12A; otherwise monitor (c), (d) and (e).

If ((c) $\leq$ 3,800 ft/sec and (d) is false) or ((d) is true and (e) seconds have elapsed since starting timer (e)), set outputs (5) through (10), (17), and (20) false; set outputs (2), (4), and (24) through (27) true; and proceed to Step 6. Otherwise monitor (d).

If (d) is true, proceed to Step 11. If (d) is false, proceed to Step 4.

(1)	MPS LO_2 INBD FILL VALVE CLOSE CMD	V41K1512X
(2)	MPS LO_2 OTBD FILL VALVE CLOSE CMD	V41K1515X
(3)	MPS LH_2 INBD FILL VALVE CLOSE CMD	V41K1412X

(4)	MPS LH_2 OTBD FILL VALVE CLOSE CMD	V41K1393X
(5)	MPS LH_2 RTLS INBD D/V OPEN CMD A	V41K1923X
(6)	MPS LH_2 RTLS INBD D/V OPEN CMD B	V41K1924X
(7)	MPS LH_2 RTLS INBD D/V OPEN CMD C	V41K1925X
(8)	MPS LH_2 RTLS OTBD D/V OPEN CMD A	V41K1913X
(9)	MPS LH_2 RTLS OTBD D/V OPEN CMD B	V41K1914X
(10)	MPS LH_2 RTLS OTBD D/V OPEN CMD C	V41K1915X
(11)	LH_2 RTLS MANF REPRESS 1 OPEN CMD A	V41K1905X
(12)	LH_2 RTLS MANF REPRESS 2 OPEN CMD A	V41K1906X
(13)	LH_2 RTLS MANF REPRESS 1 OPEN CMD B	V41K1907X
(14)	LH_2 RTLS MANF REPRESS 2 OPEN CMD B	V41K1908X
(15)	LH_2 RTLS MANF REPRESS 1 OPEN CMD C	V41K1909X
(16)	LH_2 RTLS MANF REPRESS 2 OPEN CMD C	V41K1910X
(17)	MPS LO_2 OTBD FILL VALVE OPEN CMD	V41K1518X
(18)	MPS LO_2 INBD FILL VALVE OPEN CMD A	V41K1501X
(19)	MPS LO_2 INBD FILL VALVE OPEN CMD B	V41K1502X
(20)	MPS LH_2 OUTBD FILL VALVE OPEN CMD	V41K1391X
(21)	MPS LH_2 INBD FILL VALVE OPEN CMD A	V41K1401X
(22)	MPS LH_2 INBD FILL VALVE OPEN CMD B	V41K1402X
(23)	MPS LH_2 TOPPING VALVE OPEN CMD	V41K1411X
(24)	MPS LH_2 MANF REPRESS NO. 1 OPEN CMD	V41K1435X
(25)	MPS LH_2 MANF REPRESS NO. 2 OPEN CMD	V41K1437X
(26)	MPS LO_2 MANF REPRESS NO. 1 OPEN CMD	V41K1535X
(27)	MPS LO_2 MANF REPRESS NO. 2 OPEN CMD	V41K1537X

Step 3. This step monitors for the start of the OMS burn. The OMS burn provides the propellant settling for the nominal MPS dump. The automatic LO_2 dump continues for LO_2 DUMP TIME seconds (K-load). This time interval controls the LO_2 dump duration as long as the cockpit switch remains in the GPC position. If the switch is placed in the START position, the LO_2 dump continues until the switch is placed in the STOP position, per Step 1. If the LO_2 dump is initiated in the START position, but the switch is moved to the GPC position before LO_2 DUMP TIME seconds have elapsed, then the LO_2 dump will be terminated at the expiration of the LO_2 DUMP TIME.

Monitor the following signal:

(a)	OMS IGNITION COMMAND FLAG	V90X8190X

If (a) is false, monitor signals (b) and (c) listed below:

(b)	OMS 1 BURN FLAG	(INTERNAL)
(c)	LO_2_DUMP_TIME	V97U9778C

If (b) is false, return to Step 1.

If (b) is true and (c) seconds have not elapsed since output (3) below became true, proceed to Step 4.

If (b) is true and (c) seconds have elapsed since output (3) below became true, set output (2) true and return to Step 1.

(1)	OMS 1 BURN FLAG	(INTERNAL)

(2)	NOM LO_2 DUMP COMPLETE FLAG	(INTERNAL)
(3)	MPS LO_2 DUMP START	V90X8301X

Step 4. This step opens the LO_2 prevalves for the three main engines and issues the LO_2 dump start command to the engine controllers.

Issue the following outputs (1) through (12), then set (13) true and proceed to Step 5.

(1)	MPS E-1 LO_2 PREVALVE OPEN CMD A	V41K1136X
(2)	MPS E-1 LO_2 PREVALVE OPEN CMD B	V41K1137X
(3)	MPS E-1 LO_2 PREVALVE OPEN CMD C	V41K1138X
(4)	MPS E-1 LO_2 PREVALVE OPEN CMD D	V41K1143X
(5)	MPS E-2 LO_2 PREVALVE OPEN CMD A	V41K1236X
(6)	MPS E-2 LO_2 PREVALVE OPEN CMD B	V41K1237X
(7)	MPS E-2 LO_2 PREVALVE OPEN CMD C	V41K1238X
(8)	MPS E-2 LO_2 PREVALVE OPEN CMD D	V41K1243X
(9)	MPS E-3 LO_2 PREVALVE OPEN CMD A	V41K1336X
(10)	MPS E-3 LO_2 PREVALVE OPEN CMD B	V41K1337X
(11)	MPS E-3 LO_2 PREVALVE OPEN CMD C	V41K1338X
(12)	MPS E-3 LO_2 PREVALVE OPEN CMD D	V41K1343X
(13)	MPS LO_2 DUMP START	V90X8301X

Step 5. This step turns on the LO_2 manifold helium pressure for the LO_2 dump if an RTLS abort has not been requested, and the sequence proceeds to the LH_2 dump start logic. If an RTLS abort has been requested, the sequence proceeds to the LH_2 prevalve control logic.

(a)	RTLS ABORT DECLARED	V90X8637X

If (a) is true, proceed to Step 11.

If (a) is false, set outputs (1) and (2) below true and proceed to Step 8.

(1)	MPS-LO_2 MANF REPRESS NO. 1 OPEN CMD	V41K1535X
(2)	MPS-LO_2 MANF REPRESS NO. 2 OPEN CMD	V41K1537X

Step 6. This step controls the termination of the LO_2 dump.

Set outputs (1) through (13), listed below, false and proceed to Step 7.

(1)	MPS E-1 LO_2 PREVALVE OPEN CMD A	V41K1136X
(2)	MPS E-1 LO_2 PREVALVE OPEN CMD B	V41K1137X
(3)	MPS E-1 LO_2 PREVALVE OPEN CMD C	V41K1138X
(4)	MPS E-1 LO_2 PREVALVE OPEN CMD D	V41K1143X
(5)	MPS E-2 LO_2 PREVALVE OPEN CMD A	V41K1236X
(6)	MPS E-2 LO_2 PREVALVE OPEN CMD B	V41K1237X
(7)	MPS E-2 LO_2 PREVALVE OPEN CMD C	V41K1338X
(8)	MPS E-2 LO_2 PREVALVE OPEN CMD D	V41K1243X
(9)	MPS E-3 LO_2 PREVALVE OPEN CMD A	V41K1336X
(10)	MPS E-3 LO_2 PREVALVE OPEN CMD B	V41K1337X
(11)	MPS E-3 LO_2 PREVALVE OPEN CMD C	V41K1338X
(12)	MPS E-3 LO_2 PREVALVE OPEN CMD D	V41K1343X

(13) MPS LO_2 DUMP START V90X8301X

Step 7. This step controls termination of the RTLS LH_2 dump mode and closes the LO_2 prevalves during an RTLS abort. If RTLS is not declared, the sequence proceeds to monitoring of the LH_2 dump timer logic.

Monitor the following signal:

(a) RTLS ABORT DECLARED V90X8637X

If (a) is false, proceed to Step 8.

If (a) is true, on first pass, set outputs (1) through (12) true and monitor for a 2-second time delay to elapse since setting outputs (1) through (12) true.

If the 2-second time delay has not elapsed, proceed to Step 12a.

If the 2-second time delay has elapsed, set outputs (1) through (12) false and proceed to Step 12.

(1) MPS E-1 LO_2 PREVALVE CLOSE CMD A V41K1139X
(2) MPS E-1 LO_2 PREVALVE CLOSE CMD B V41K1140X
(3) MPS E-1 LO_2 PREVALVE CLOSE CMD C V41K1141X
(4) MPS E-1 LO_2 PREVALVE CLOSE CMD D V41K1142X
(5) MPS E-2 LO_2 PREVALVE CLOSE CMD A V41K1239X
(6) MPS E-2 LO_2 PREVALVE CLOSE CMD B V41K1240X
(7) MPS E-2 LO_2 PREVALVE CLOSE CMD C V41K1241X
(8) MPS E-2 LO_2 PREVALVE CLOSE CMD D V41K1242X
(9) MPS E-3 LO_2 PREVALVE CLOSE CMD A V41K1339X
(10) MPS E-3 LO_2 PREVALVE CLOSE CMD B V41K1340X
(11) MPS E-3 LO_2 PREVALVE CLOSE CMD C V41K1341X
(12) MPS E-3 LO_2 PREVALVE CLOSE CMD D V41K1342X

Step 8. This step controls the initiation and termination of the LH_2 dump. The nominal time interval for the dump, LH_2 dump time (K-load). This step pressurizes the LH_2 feed lines and opens the LH_2 inboard and outboard fill and drain valves.

Monitor the following:

(a) LH_2_DUMP_TIME V97U9779C

If (a) seconds have not elapsed since output (1) below was first set true, on first pass set outputs (7) and (8) false, set outputs (1) through (6) true, and return to Step 1.

If (a) seconds have elapsed since output (1) below was first set true, set outputs (2) and (3) false and proceed to Step 10.

If (a) seconds have not elapsed since output (1) below was first set true, proceed to Step 9.

(1) MPS-LH_2 FILL/DRAIN DUMP START (INTERNAL)
(2) MPS-LH_2 MANF REPRESS NO. 1 OPEN CMD V41K1435X

(3)	MPS-LH_2 MANF REPRESS NO. 2 OPEN CMD	V41K1437X
(4)	MPS-LH_2 OTBD FILL VALVE OPEN CMD	V41K1391X
(5)	MPS-LH_2 INBD FILL VALVE OPEN CMD A	V41K1401X
(6)	MPS-LH_2 INBD FILL VALVE OPEN CMD B	V41K1402X
(7)	MPS-LH_2 OTBD FILL VALVE CLOSE CMD	V41K1393X
(8)	MPS-LH_2 INBD FILL VALVE CLOSE CMD	V41K1412X

Step 9. This step allows 6 seconds for the LH_2 to be dumped through the LH_2 inboard and outboard fill and drain valves. After 6 seconds, the LH_2 inboard fill and drain valve is closed and the LH_2 topping valve is opened. LH_2 continues to be dumped through the LH_2 outboard fill and drain valve via the LH_2 topping valve and SSME bleed valves.

Monitor for a 6-second time delay to elapse since output (5) below was set true.

If the 6-second time delay has not elapsed, return to Step 1.

If the 6-second time delay has elapsed, set outputs (1) and (2) false, set outputs (3) and (4) true, and proceed to Step 11.

(1)	MPS-LH_2 INBD FILL VALVE OPEN CMD A	V41K1401X
(2)	MPS-LH_2 INBD FILL VALVE OPEN CMD B	V41K1402X
(3)	MPS-LH_2 INBD FILL VALVE CLOSE CMD	V41K1412X
(4)	MPS-LH_2 TOPPING VALVE OPEN CMD	V41K1411X
(5)	MPS-LH_2 FILL/DRAIN DUMP START	(INTERNAL)

Step 10. This step allows 32 seconds for the LH_2 feed line to become depressurized and LH_2 to vent after the LH_2 dump time has elapsed. The LH_2 topping valve and outboard fill and drain valve are closed after expiration of the 32-second timer. During a TAL abort, the 32-second LH_2 vent timer is bypassed.

If (a) below is false and if 32 seconds have not elapsed since the LH_2 DUMP TIME time delay in Step 8 elapsed, return to Step 1.

If (a) below is true or if 32 seconds have elapsed since the LH_2 DUMP TIME time delay in Step 8 elapsed and if first pass, set (4) below true and return to Step 1; if not first pass, set outputs (1) and (2) below false, set outputs (3) below true, and proceed to Step 12.

(a)	TAL ABORT DECLARED	V90X8658X
	(1) MPS-LH_2 OUTBD FILL VALVE OPEN CMD	V41K1391X
	(2) MPS-LH_2 TOPPING VLV OPEN CMD	V41K1411X
	(3) MPS-LH_2 OUTBD FILL VALVE CLOSE CMD	V41K1393X
	(4) NOM LO_2 DUMP COMPLETE FLAG	(INTERNAL)

Step 11. This step opens the LH_2 prevalves for the three main engines.

Issue the following outputs (1) through (9), then return to Step 1.

(1)	MPS E-1 LH_2 PREVALVE OPEN CMD A	V41K1119X
(2)	MPS E-1 LH_2 PREVALVE OPEN CMD B	V41K1120X
(3)	MPS E-1 LH_2 PREVALVE OPEN CMD C	V41K1121X
(4)	MPS E-2 LH_2 PREVALVE OPEN CMD A	V41K1219X
(5)	MPS E-2 LH_2 PREVALVE OPEN CMD B	V41K1220X

(6)	MPS E-2 LH_2 PREVALVE OPEN CMD C	V41K1221X
(7)	MPS E-3 LH_2 PREVALVE OPEN CMD A	V41K1319X
(8)	MPS E-3 LH_2 PREVALVE OPEN CMD B	V41K1320X
(9)	MPS E-3 LH_2 PREVALVE OPEN CMD C	V41K1321X

Step 12. This step de-energizes a portion of the MPS.

Set outputs (1) and (51) true, set outputs (2) through (18), (20), and (22) through (50) false. Ten seconds later, set outputs (19) and (21) false and proceed to Step 12A. If 10 seconds have not elapsed since output (1) set true, proceed to Step 12A.

(1)	ENTRY STOW GIMBAL POS FLAG	V90X8254X
(2)	MPS E-1 LH_2 PREVALVE OPEN CMD A	V41K1119X
(3)	MPS E-1 LH_2 PREVALVE OPEN CMD B	V41K1120X
(4)	MPS E-1 LH_2 PREVALVE OPEN CMD C	V41K1121X
(5)	MPS E-2 LH_2 PREVALVE OPEN CMD A	V41K1219X
(6)	MPS E-2 LH_2 PREVALVE OPEN CMD B	V41K1220X
(7)	MPS E-2 LH_2 PREVALVE OPEN CMD C	V41K1221X
(8)	MPS E-3 LH_2 PREVALVE OPEN CMD A	V41K1319X
(9)	MPS E-3 LH_2 PREVALVE OPEN CMD B	V41K1320X
(10)	MPS E-3 LH_2 PREVALVE OPEN CMD C	V41K1321X
(11)	MPS LO_2 FEED DISC VALVE CL CMD A	V41K1524X
(12)	MPS LO_2 FEED DISC VALVE CL CMD B	V41K1525X
(13)	MPS LO_2 FEED DISC VALVE CL CMD C	V41K1526X
(14)	MPS LH_2 FEED DISC VALVE CL CMD A	V41K1416X
(15)	MPS LH_2 FEED DISC VALVE CL CMD B	V41K1417X
(16)	MPS LH_2 FEED DISC VALVE CL CMD C	V41K1418X
(17)	MPS LH_2 RECIRC DISC VLV CLOSE CMD	V41K1422X
(18)	MPS LO_2 INBD FILL VALVE CLOSE CMD	V41K1512X
(19)	MPS LO_2 OTBD FILL VALVE CLOSE CMD	V41K1515X
(20)	MPS LH_2 INBD FILL VALVE CLOSE CMD	V41K1412X
(21)	MPS LH_2 OTBD FILL VALVE CLOSE CMD	V41K1393X
(22)	REPLACE LH_2 ULLAGE PRESS 1 XDCR	V41K1700X
(23)	REPLACE LH_2 ULLAGE PRESS 2 XDCR	V41K1701X
(24)	REPLACE LH_2 ULLAGE PRESS 3 XDCR	V41K1702X
(25)	REPLACE LO_2 ULLAGE PRESS 1 XDCR	V41K1750X
(26)	REPLACE LO_2 ULLAGE PRESS 2 XDCR	V41K1751X
(27)	REPLACE LO_2 ULLAGE PRESS 3 XDCR	V41K1752X
(28)	ET/ORB SEP CAMERAS ON CMD	V56K9000X
(29)	ET/ORB SEP CAMERAS HTRS ON CMD	V56K9010X
(30)	MPS LO_2 OVERBOARD B/V CLOSE CMD A	V41K1584X
(31)	MPS LO_2 OVERBOARD B/V CLOSE CMD B	V41K1585X
(32)	MPS LO_2 OVERBOARD B/V CLOSE CMD C	V41K1586X
(33)	MPS E-1 LH_2 PREVALVE CLOSE CMD A	V41K1122X
(34)	MPS E-1 LH_2 PREVALVE CLOSE CMD B	V41K1123X

(35)	MPS E-1 LH_2 PREVALVE CLOSE CMD C	V41K1124X
(36)	MPS E-2 LH_2 PREVALVE CLOSE CMD A	V41K1222X
(37)	MPS E-2 LH_2 PREVALVE CLOSE CMD B	V41K1223X
(38)	MPS E-2 LH_2 PREVALVE CLOSE CMD C	V41K1224X
(39)	MPS E-3 LH_2 PREVALVE CLOSE CMD A	V41K1322X
(40)	MPS E-3 LH_2 PREVALVE CLOSE CMD B	V41K1323X
(41)	MPS E-3 LH_2 PREVALVE CLOSE CMD C	V41K1324X
(42)	MPS-E1 FASCOS PWR CMD A	E41K0196X
(43)	MPS-E1 FASCOS PWR CMD B	E41K0197X
(44)	MPS-E1 FASCOS PWR CMD C	E41K0198X
(45)	MPS-E2 FASCOS PWR CMD A	E41K0296X
(46)	MPS-E2 FASCOS PWR CMD B	E41K0297X
(47)	MPS-E2 FASCOS PWR CMD C	E41K0298X
(48)	MPS-E3 FASCOS PWR CMD A	E41K0396X
(49)	MPS-E3 FASCOS PWR CMD B	E41K0397X
(50)	MPS-E3 FASCOS PWR CMD C	E41K0398X
(51)	MPS LO_2 DUMP STOP	V90X8302X

NOTE: There are two sets of four transducers that are utilized for ullage pressure sensing; one set for LO_2 and one set for LH_2. Operationally, only three in each set are energized. If one of the three operational transducers fails, the fourth transducer can be switched in via the energization of a relay. For example, if ullage pressure 2 XDCR fails, issuance of the replace ullage pressure 2 XDCR command will cause energization of a relay, causing ullage pressure 4 XDCR to replace ullage pressure 2 XDCR. The termination of the replace commands causes the de-energization of a relay in the event a failure had occurred.

Step 12A – RTLS Helium Purge and MPS Dump Sequence Termination. This step provides for a helium purge of the aft compartment, OMS pod and ET UMb cavity for an RTLS abort after the MPS dump is complete. It also de–energizes the remainder of the MPS and terminates the sequence.

Monitor the following:

(a)	RTLS ABORT DECLARED	V90X8637X
(b)	GND REL VEL MAGNITUDE IN M50 SYS	V95L0151C
(c)	HE_PURGE_VEL	V96U8958C
(d)	HE_PURGE_TIME	V96U8959C

If (a) is false, set outputs (3) through (17) false and return to Step 1.

If (a) is true and (b) > (c) (ft/sec), return to Step 1.

On the first pass that (a) is true and (b) $\leq$ (c) (ft/sec), set outputs (1) and (2) true, start the timer for (d), and return to Step 1.

On subsequent passes, if (d) seconds have not elapsed since outputs (1) and (2) were set true, return to Step 1.

When (d) seconds have elapsed since outputs (1) and (2) were set true, then set outputs (1) through (17) false and deschedule the MPS dump sequence.

(1)	MPS HE SPLY BLOWDOWN NO. 1 OPEN CMD	V41K1631X
(2)	MPS HE SPLY BLOWDOWN NO. 2 OPEN CMD	V41K1633X
(3)	MPS E1 HE INTCON OUT/OPEN CMD A	V41K1168X
(4)	MPS E2 HE INTCON OUT/OPEN CMD A	V41K1268X
(5)	MPS E3 HE INTCON OUT/OPEN CMD A	V41K1368X
(6)	MPS PNEU CROSSOVER NO. 2 OPEN CMD	V41K1613X
(7)	MPS PNEU VLV HE ISLN NO. 1 OP CMD	V41K1607X
(8)	MPS PNEU VLV HE ISLN NO. 2 OP CMD	V41K1608X
(9)	MPS E-2 HELIUM SUPPLY B OPEN CMD A	V41K1256X
(10)	MPS E-2 HELIUM SUPPLY B OPEN CMD B	V41K1257X
(11)	MPS E-2 HELIUM SUPPLY A OPEN CMD	V41K1255X
(12)	MPS E-1 HELIUM SUPPLY B OPEN CMD A	V41K1156X
(13)	MPS E-1 HELIUM SUPPLY B OPEN CMD B	V41K1157X
(14)	MPS E-1 HELIUM SUPPLY A OPEN CMD	V41K1155X
(15)	MPS E-3 HELIUM SUPPLY B OPEN CMD A	V41K1356X
(16)	MPS E-3 HELIUM SUPPLY B OPEN CMD B	V41K1357X
(17)	MPS E-3 HELIUM SUPPLY A OPEN CMD	V41K1355X

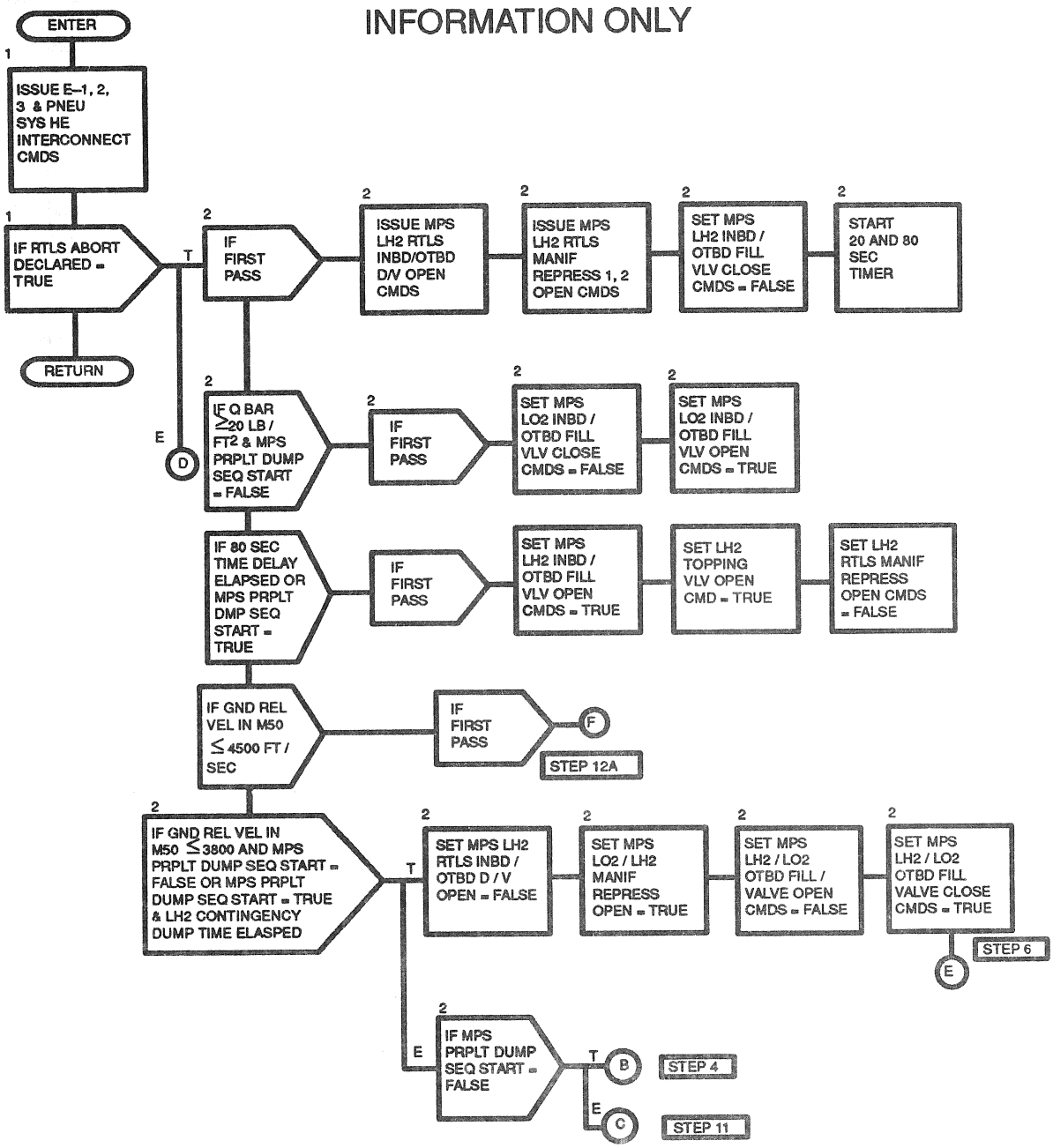

Figure 4.70. MPS Dump Sequence (1 of 5)

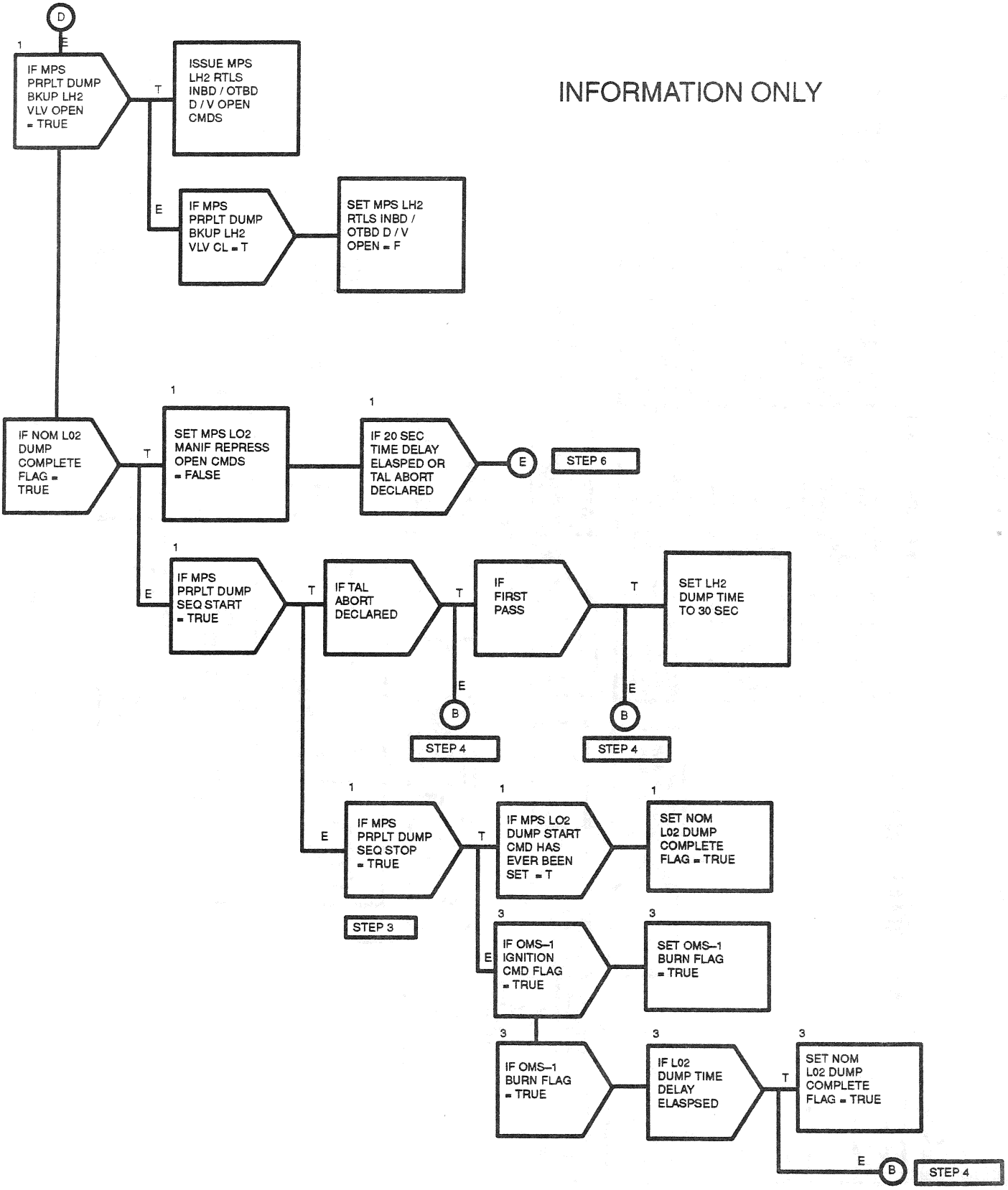

Figure 4.70 MPS Dump Sequence (2 of 5)

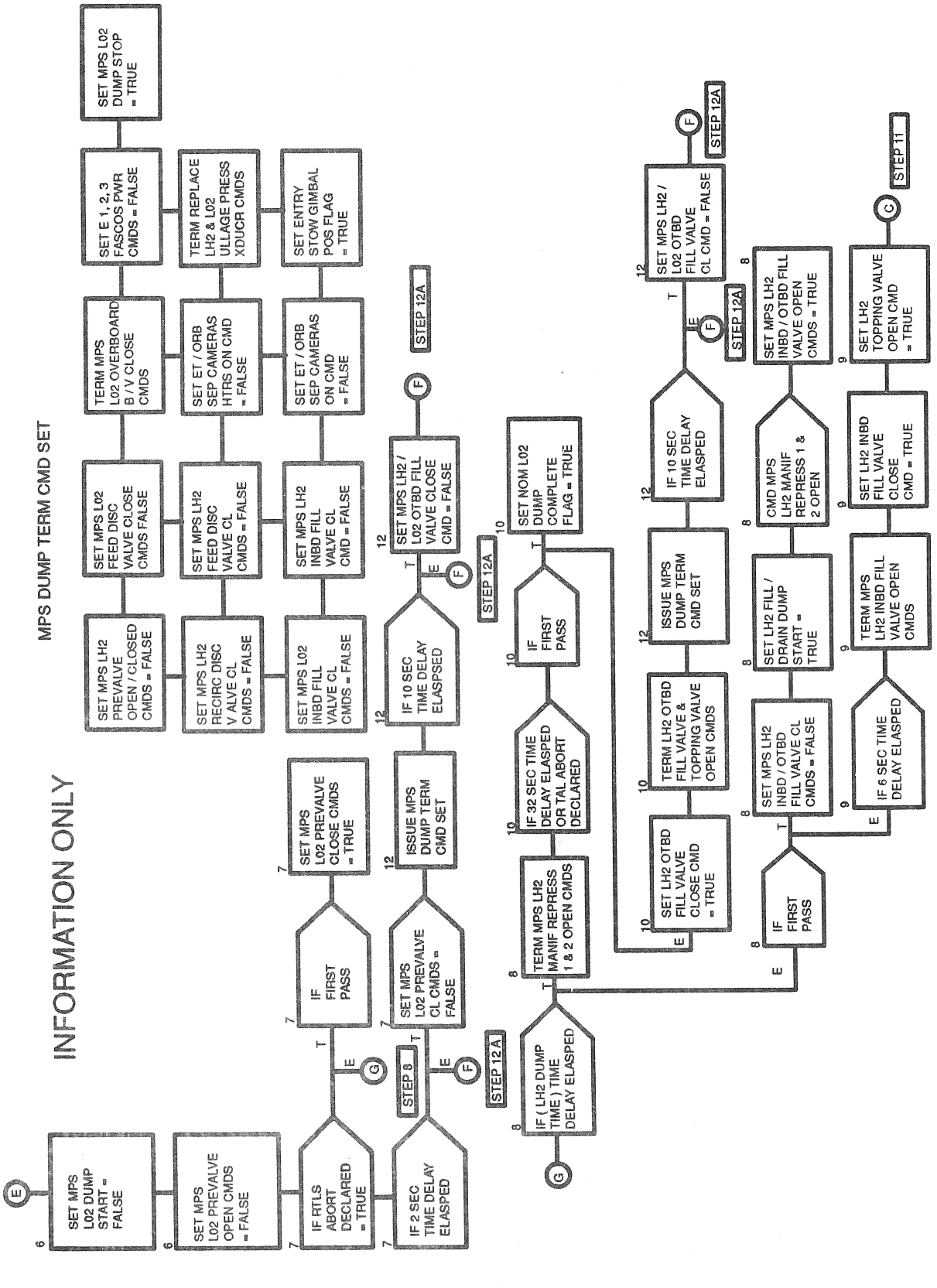

Figure 4.70 MPS Dump Sequence (3 of 5)

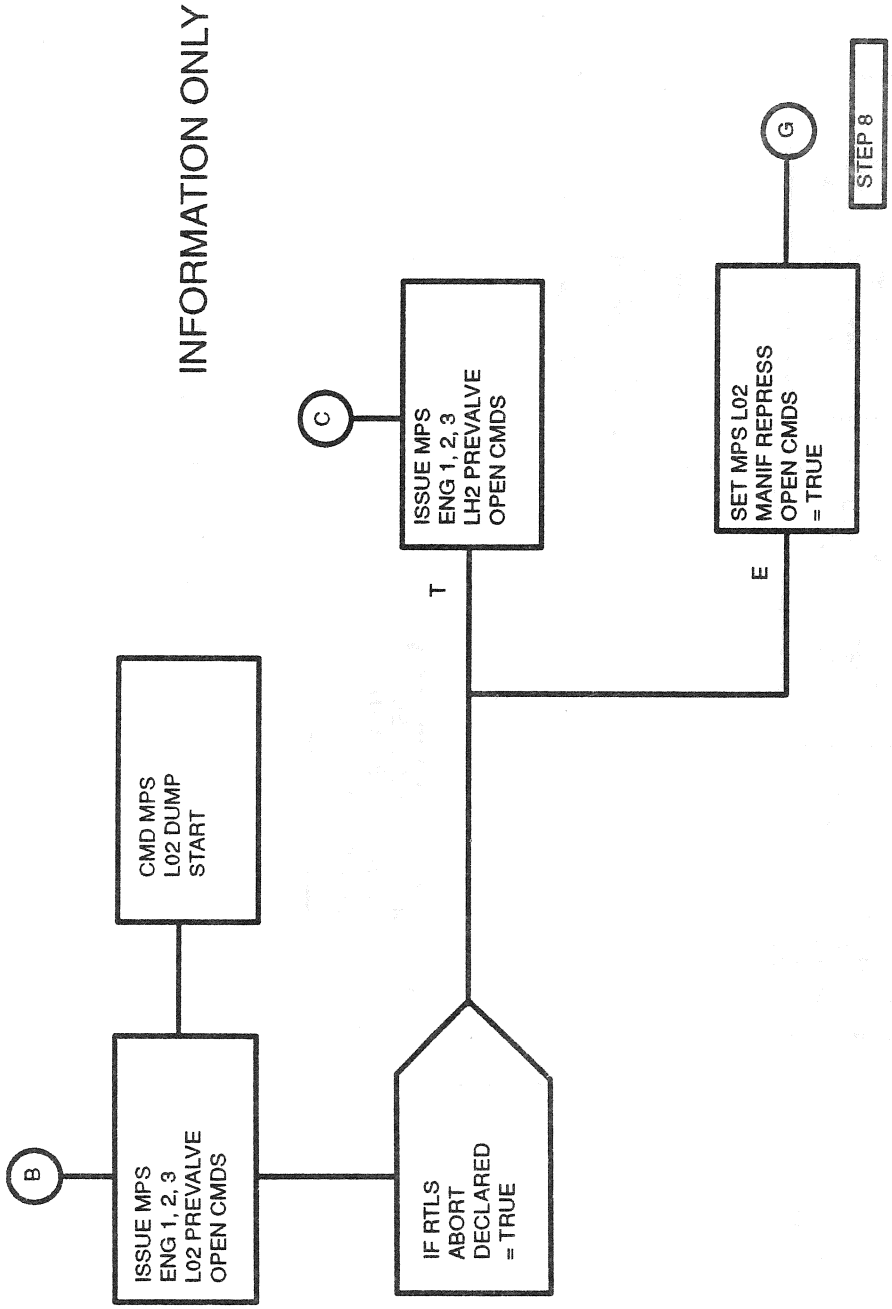

Figure 4.70 MPS Dump Sequence (4 of 5)

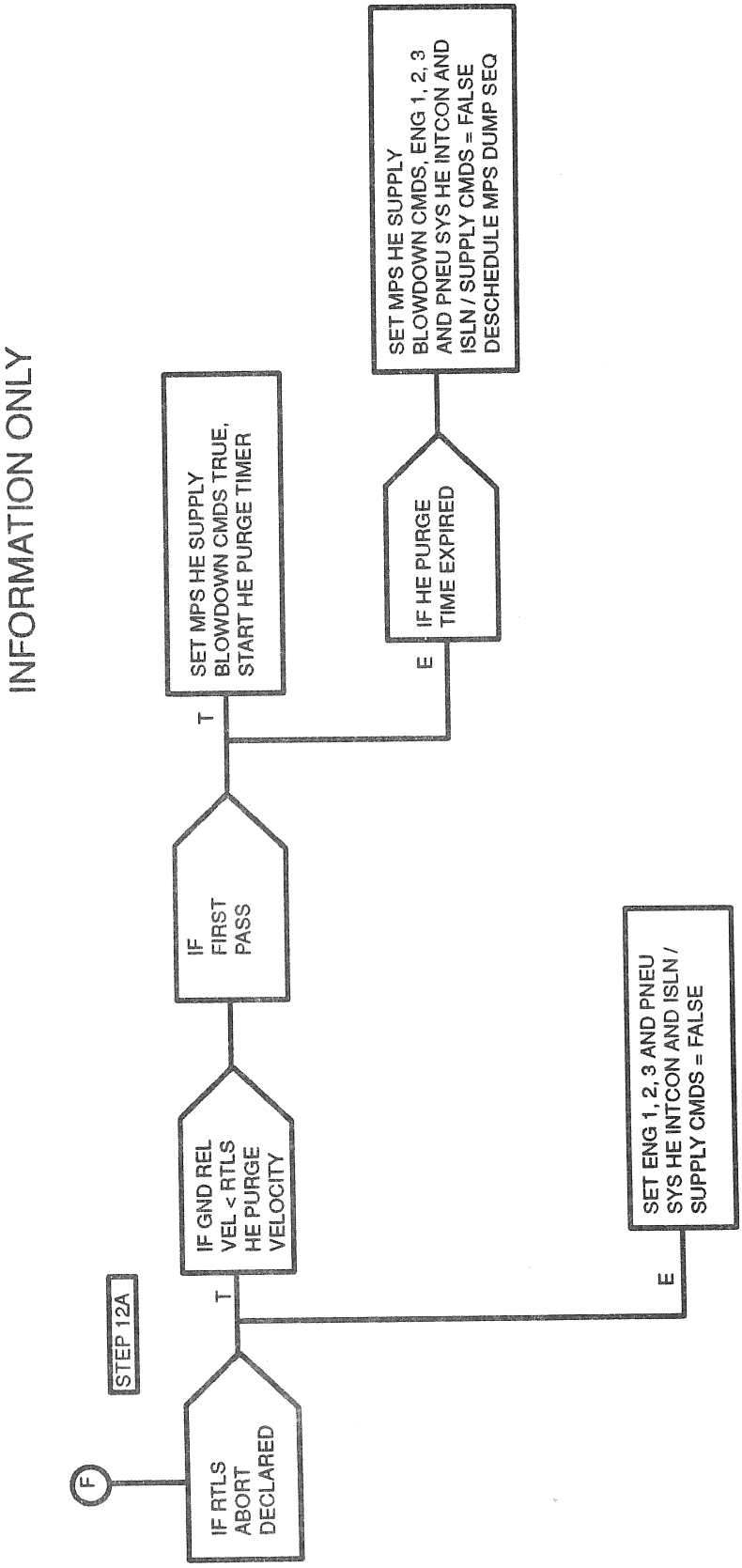

Figure 4.70 MPS Dump Sequence (5 of 5)

TABLE 4.2.4.4–1. MAIN PROPULSION SYSTEM(MPS) DUMP SEQUENCER (G4.70) INPUT/OUTPUT FUNCTIONAL PARAMETERS

DBFN: D3B027-F PN: VP707100049P00L INPUT FUNCTIONAL PARAMETERS FOR MPS DUMP

FSSR NAME	M/S ID	NOMENCLATURE	SOURCE	UNITS	DATA TYPE	PREC	LAST CRS
OMS_IGNITION_CMD	V90X8190XA	OMS IGNITION COMMAND FLAG	MSC		BD		90120B
OMS_IGNITION_CMD	V90X8190XB	OMS IGNITION COMMAND FLAG	ORB INS GUID		BD		90120B
QBAR/QBAR_AD	V95P3011C	GN&C DYNAMIC PRESSURE	ADTA SOP	LB/FT2	SPL		89250B
REL_VEL_MAG/V	V95L0151CA	GND REL VEL MAGNITUDE IN M50 SYS	RTLS UPP	FT/S			89990E
							89250B
TAL_ABORT_DECLARED	V90X8658X	TAL ABORT DECLARED	MSC				89245D
	V90X7557X	SEL MPS PRPLT DUMP BU LH2 VLV OP	GN&C SW RM				
	V90X7558X	SEL MPS PRPLT DUMP BU LH2 VLV CL	GN&C SW RM				
	V90X7559X	SEL MPS PRPLT DUMP SEQ START	GN&C SW RM				
	V90X7567X	SEL MPS PRPLT DUMP SEQ STOP	GN&C SW RM				
	V90X8637XA	RTLS ABORT DECLARED	MSC				89991E
							89599C
	V90X8637XB	RTLS ABORT DECLARED	ET SEP SEQ				89991E

TABLE 4.2.4.4–1. MAIN PROPULSION SYSTEM(MPS) DUMP SEQUENCER (G4.70) INPUT/OUTPUT FUNCTIONAL PARAMETERS

DBFN: D3B027-F PN: VP707100049P00L OUTPUT FUNCTIONAL PARAMETERS FROM MPS DUMP

FSSR NAME	M/S ID	NOMENCLATURE	DESTINATION	UNITS	DATA TYPE	PREC	LAST CRS
ENT_STOW_GIM_POSN	V90X8254XA	ENTRY STOW GIMBAL POS FLAG	MPS TVC CMD SOP,MSC,TLM		BD		
MPS_LO2_DUMP_START	V90X8301X	MPS LO2 DUMP START	SSME SOP,ASC DAP				89598A
MPS_LO2_DUMP_STOP	V90X8302X	MPS LO2 DUMP STOP	SSME SOP,ASC DAP				
	E41K0196X	MPS-E1 FASCOS PWR CMD A	HDWR				
	E41K0197X	MPS-E1 FASCOS PWR CMD B	HDWR		BD		
	E41K0198X	MPS-E1 FASCOS PWR CMD C	HDWR		BD		
	E41K0296X	MPS-E2 FASCOS PWR CMD A	HDWR		BD		
	E41K0297X	MPS-E2 FASCOS PWR CMD B	HDWR				
	E41K0298X	MPS-E2 FASCOS PWR CMD C	HDWR		BD		
	E41K0396X	MPS-E3 FASCOS PWR CMD A	HDWR		BD		
	E41K0397X	MPS-E3 FASCOS PWR CMD B	HDWR		BD		
	E41K0398X	MPS-E3 FASCOS PWR CMD C	HDWR				
	V41K1119XB	MPS E1 LH2 PREVLV (PV4) OP CMD A	PCA A1				89554A
	V41K1120XB	MPS E1 LH2 PREVLV (PV4) OP CMD B	LCA A1				89554A
	V41K1121XB	MPS E1 LH2 PREVLV (PV4) OP CMD C	LCA A2				89554A
	V41K1122XB	MPS E1 LH2 PREVLV (PV4) CL CMD A	PCA A1				89554A
	V41K1123XB	MPS E1 LH2 PREVLV (PV4) CL CMD B	LCA A1				89554A
	V41K1124XB	MPS E1 LH2 PREVLV (PV4) CL CMD C	LCA A2				89554A
	V41K1136XB	MPS E1 LO2 PREVLV (PV1) OP CMD A	PCA A1				89554A
	V41K1137XB	MPS E1 LO2 PREVLV (PV1) OP CMD B	LCA A1				89554A
	V41K1138XB	MPS E1 LO2 PREVLV (PV1) OP CMD C	LCA A2				89554A
	V41K1139XB	MPS E1 LO2 PREVLV (PV1) CL CMD A	PCA A1				89554A
	V41K1140XB	MPS E1 LO2 PREVLV (PV1) CL CMD B	LCA A1				89554A
	V41K1141XB	MPS E1 LO2 PREVLV (PV1) CL CMD C	LCA A2				89554A
	V41K1142XC	MPS E1 LO2 PREVLV (PV1) CL CMD D	HDWR				89554A
	V41K1143XC	MPS E1 LO2 PREVLV (PV1) OP CMD D	HDWR				89554A
	V41K1155X	MPS E1 HE ISO VLV A (LV1) OP CMD	HDWR		BD		89554A
	V41K1156X	MPS E1 HE ISO VLV B (LV2) OP CMD A	HDWR		BD		89554A
	V41K1157X	MPS E1 HE ISO VLV B (LV2) OP CMD B	HDWR		BD		89554A
	V41K1168XA	MPS E1 HE INTCN OUT(LV60) OP CMD A	HDWR				89554A
	V41K1219XB	MPS E2 LH2 PREVLV (PV5) OP CMD A	PCA A2				89554A
	V41K1220XB	MPS E2 LH2 PREVLV (PV5) OP CMD B	LCA A2				89554A
	V41K1221XB	MPS E2 LH2 PREVLV (PV5) OP CMD C	LCA A3				89554A
	V41K1222XB	MPS E2 LH2 PREVLV (PV5) CL CMD A	PCA A2				89554A
	V41K1223XB	MPS E2 LH2 PREVLV (PV5) CL CMD B	LCA A2				89554A
	V41K1224XB	MPS E2 LH2 PREVLV (PV5) CL CMD C	LCA A3				89554A
	V41K1236XB	MPS E2 LO2 PREVLV (PV2) OP CMD A	PCA A2				89554A
	V41K1237XB	MPS E2 LO2 PREVLV (PV2) OP CMD B	LCA A2				89554A
	V41K1238XB	MPS E2 LO2 PREVLV (PV2) OP CMD C	LCA A3				89554A
	V41K1239XB	MPS E2 LO2 PREVLV (PV2) CL CMD A	PCA A2				89554A
	V41K1240XB	MPS E2 LO2 PREVLV (PV2) CL CMD B	LCA A2				89554A
	V41K1241XB	MPS E2 LO2 PREVLV (PV2) CL CMD C	LCA A3				89554A
	V41K1242XC	MPS E2 LO2 PREVLV (PV2) CL CMD D	HDWR				

TABLE 4.2.4.4–1. MAIN PROPULSION SYSTEM(MPS) DUMP SEQUENCER (G4.70) INPUT/OUTPUT FUNCTIONAL PARAMETERS

DBFN: D3B027-F PN: VP707100049P00L OUTPUT FUNCTIONAL PARAMETERS FROM MPS DUMP

FSSR NAME	M/S ID	NOMENCLATURE	DESTINATION	UNITS	DATA TYPE	PREC	LAST CRS
	V41K1243XC	MPS E2 LO2 PREVLV (PV2) OP CMD D	HDWR				89554A
	V41K1255X	MPS E2 HE ISO VLV A (LV3) OP CMD	HDWR		BD		89554A
	V41K1256XA	MPS E2 HE ISO VLV B (LV4) OP CMD A	HDWR				89554A
	V41K1257XA	MPS E2 HE ISO VLV B (LV4) OP CMD B	HDWR				89554A
	V41K1268XA	MPS E2 HE INTCN OUT(LV62) OP CMD A	HDWR				89554A
	V41K1319XB	MPS E3 LH2 PREVLV (PV6) OP CMD A	PCA A3				89554A
	V41K1320XB	MPS E3 LH2 PREVLV (PV6) OP CMD B	LCA A3				89554A
	V41K1321XB	MPS E3 LH2 PREVLV (PV6) OP CMD C	LCA A1				89554A
	V41K1322XB	MPS E3 LH2 PREVLV (PV6) CL CMD A	PCA A3				89554A
	V41K1323XB	MPS E3 LH2 PREVLV (PV6) CL CMD B	LCA A3				89554A
	V41K1324XB	MPS E3 LH2 PREVLV (PV6) CL CMD C	LCA A1				89554A
	V41K1336XB	MPS E3 LO2 PREVLV (PV3) OP CMD A	PCA A3				89554A
	V41K1337XB	MPS E3 LO2 PREVLV (PV3) OP CMD B	LCA A3				89554A
	V41K1338XB	MPS E3 LO2 PREVLV (PV3) OP CMD C	LCA A1				89554A
	V41K1339XB	MPS E3 LO2 PREVLV (PV3) CL CMD A	PCA A3				89554A
	V41K1340XB	MPS E3 LO2 PREVLV (PV3) CL CMD B	LCA A3				89554A
	V41K1341XB	MPS E3 LO2 PREVLV (PV3) CL CMD C	LCA A1				89554A
	V41K1342XC	MPS E3 LO2 PREVLV (PV3) CL CMD D	HDWR				89554A
	V41K1343XC	MPS E3 LO2 PREVLV (PV3) OP CMD D	HDWR				89554A
	V41K1355X	MPS E3 HE ISO VLV A (LV5) OP CMD	HDWR		BD		89554A
	V41K1356X	MPS E3 HE ISO VLV B (LV6) OP CMD A	HDWR		BD		89554A
	V41K1357X	MPS E3 HE ISO VLV B (LV6) OP CMD B	HDWR		BD		89554A
	V41K1368XA	MPS E3 HE INTCN OUT(LV64) OP CMD A	HDWR				89554A
	V41K1391XB	MPS LH2 OTBD F/D VLV (PV11) OP CMD	LCA A2				89554A
	V41K1393XA	MPS LH2 OTBD F/D VLV (PV11) CL CMD	LCA A2				89554A
	V41K1401XA	MPS LH2 INBD F/D (PV12) OP CMD A	LCA A1				89554A
	V41K1402XA	MPS LH2 INBD F/D (PV12) OP CMD B	LCA A1				89554A
	V41K1411XA	MPS LH2 TOPPING VLV (PV13) OP CMD	LCA A1				89554A
	V41K1412XA	MPS LH2 INBD F/D (PV12) CL CMD	LCA A1				89554A
	V41K1416XB	MPS LH2 17IN DISC VLV(PD2)CL CMD A	HDWR				89554A
	V41K1417XB	MPS LH2 17IN DISC VLV(PD2)CL CMD B	HDWR				89554A
	V41K1418XB	MPS LH2 17IN DISC VLV(PD2)CL CMD C	HDWR				89554A
	V41K1422XB	MPS LH2 4IN DISC VLV (PD3) CL CMD	HDWR		BD		89313A
							89554A
	V41K1435XA	MPS LH2 MANF REPRSS 1(LV42) OP CMD	LCA A2				89554A
	V41K1437XA	MPS LH2 MANF REPRSS 2(LV43) OP CMD	LCA A2				89554A
	V41K1501XA	MPS LO2 INBD F/D (PV10) OP CMD A	LCA A2				89554A
	V41K1502XA	MPS LO2 INBD F/D (PV10) OP CMD B	LCA A2				89554A
	V41K1512XA	MPS LO2 INBD F/D VLV (PV10) CL CMD	LCA A2				89554A
	V41K1515XA	MPS LO2 OTBD F/D VLV (PV9) CL CMD	LCA A3				89554A
	V41K1518XA	MPS LO2 OTBD F/D VLV (PV9) OP CMD	LCA A3				89554A
	V41K1524XA	MPS LO2 17IN DISC VLV(PD1)CL CMD A	HDWR				89554A
	V41K1525XA	MPS LO2 17IN DISC VLV(PD1)CL CMD B	HDWR				89554A

TABLE 4.2.4.4–1. MAIN PROPULSION SYSTEM(MPS) DUMP SEQUENCER (G4.70) INPUT/OUTPUT FUNCTIONAL PARAMETERS

DBFN: D3B027-F PN: VP707100049P00L OUTPUT FUNCTIONAL PARAMETERS FROM MPS DUMP

FSSR NAME	M/S ID	NOMENCLATURE	DESTINATION	UNITS	DATA TYPE	PREC	LAST CRS
	V41K1526XA	MPS LO2 17IN DISC VLV(PD1)CL CMD C	HDWR				89554A
	V41K1535XA	MPS LO2 MANF REPRSS 1(LV40) OP CMD	LCA A3				89554A
	V41K1537XA	MPS LO2 MANF REPRSS 2(LV41) OP CMD	LCA A3				89554A
	V41K1584XB	MPS LO2 OVBD B/V (PV19) CL CMD A	PCA A3				89554A
	V41K1585XB	MPS LO2 OVBD B/V (PV19) CL CMD B	LCA A3				89554A
	V41K1586XB	MPS LO2 OVBD B/V (PV19) CL CMD C	LCA A2				89554A
	V41K1607XA	MPS PNEU HE ISO VLV 1 (LV7) OP CMD	HDWR				89554A
	V41K1608XA	MPS PNEU HE ISO VLV 2 (LV8) OP CMD	HDWR				89554A
	V41K1613XA	MPS REG HE XOVER VLV (LV10) OP CMD	HDWR				89554A
	V41K1631XA	MPS HE SPLY BLWDWN 1 (LV26) OP CMD	HDWR				89554A
	V41K1633XA	MPS HE SPLY BLWDWN 2 (LV27) OP CMD	HDWR				89554A
	V41K1700X	REPLACE LH2 ULL PRESS XDCR 1 CMD	LCA A1		BD		89554A
	V41K1701X	REPLACE LH2 ULL PRESS XDCR 2 CMD	LCA A2		BD		89554A
	V41K1702X	REPLACE LH2 ULL PRESS XDCR 3 CMD	LCA A3		BD		89554A
	V41K1750X	REPLACE LO2 ULL PRESS XDCR 1 CMD	LCA A1		BD		89554A
	V41K1751X	REPLACE LO2 ULL PRESS XDCR 2 CMD	LCA A2		BD		89554A
	V41K1752X	REPLACE LO2 ULL PRESS XDCR 3 CMD	LCA A3		BD		89554A
	V41K1905X	MPS LH2 RTLS REPRS 1(LV74)OP CMD A	PCA A3		BD		89554A
	V41K1906X	MPS LH2 RTLS REPRS 2(LV75)OP CMD A	PCA A3		BD		89554A
	V41K1907X	MPS LH2 RTLS REPRS 1(LV74)OP CMD B	PCA A1		BD		89554A
	V41K1908X	MPS LH2 RTLS REPRS 2(LV75)OP CMD B	PCA A1		BD		89554A
	V41K1909X	MPS LH2 RTLS REPRS 1(LV74)OP CMD C	LCA A1		BD		89554A
	V41K1910X	MPS LH2 RTLS REPRS 2(LV75)OP CMD C	LCA A1		BD		89554A
	V41K1913XA	MPS LH2 RTLS OTBD DV(PV18)OP CMD A	HDWR				89554A
	V41K1914XA	MPS LH2 RTLS OTBD DV(PV18)OP CMD B	HDWR				89554A
	V41K1915XA	MPS LH2 RTLS OTBD DV(PV18)OP CMD C	HDWR				89554A
	V41K1923XA	MPS LH2 RTLS INBD DV(PV17)OP CMD A	HDWR				89554A
	V41K1924XA	MPS LH2 RTLS INBD DV(PV17)OP CMD B	HDWR				89554A
	V41K1925XA	MPS LH2 RTLS INBD DV(PV17)OP CMD C	HDWR				89554A
	V56K9000XB	ET/ORB SEP CAMERAS ON CMD	HDWR				
	V56K9010XB	ET/ORB SEP CAMERAS-HTR ON CMD	HDWR				

TABLE 4.2.4.4–2. MAIN PROPULSION SYSTEM(MPS) DUMP SEQUENCER (G4.70) I–LOADS

DBFN:0484

FSSR NAME	MSID	ENG UNIT	DT PR	D S PR FCTN	CAT
NO REQUIREMENTS					

TABLE 4.2.4.4–3. MAIN PROPULSION SYSTEM(MPS) DUMP SEQUENCER (G4.70) K–LOADS

DBFN:0558

FSSR NAME DESCRIPTION	MSID	MC KLOAD VALUE	ENG UNIT	DT PR S PR FCTN	LAST CR EQTN MSID
HE_PURGE_TIME	V96U8959C	+6.50 E+02	SEC	F D C G4.70 G4.161	59973
HE_PURGE_VEL	V96U8958C	+4.5 E+03	FT/SEC	F S C G4.70 G4.161	59973
LH2_DUMP_TIME LH2 DUMP TIME	V97U9779C	+8.8 E+01	SEC	F D C G4.70	59973
LO2_DUMP_TIME LO2 DUMP TIME	V97U9778C	+9.0 E+01	SEC	F D C G4.70	69482

TABLE 4.2.4.4–4. MAIN PROPULSION SYSTEM(MPS) DUMP SEQUENCER (G4.70) CONSTANTS

DBFN:0558

FSSR NAME DESCRIPTION	MSID	MC	CONSTANT VALUE	ENG UNIT	DT	PR	S	PR FCTN	LAST CR
LH2_FILL/DRAIN_VALVE_OP_TIME_DLY LH2 FILL/DRAIN VALVE OPEN TIME DELAY	V97U6143C		+8.0 E+01	SEC	F	S	P	G4.70	90374

THIS PAGE INTENTIONALLY LEFT BLANK

4.3 ABORT

4.3.1 Abort Control Sequence (4.192)

4.3.1.1 Introduction

It may be necessary to burn OMS/RCS propellants for systems management or when an abort has been selected by the crew, to maintain the necessary c.g. control and/or landing weight conditions to successfully abort. The amount of OMS/RCS propellant loaded and the vehicle center of gravity are mission dependent. The quantity of OMS or RCS propellant which will be burned is controlled by burn timers used in the Abort Control Sequence. The OMS burn time is based on the time required to burn the desired quantity using two OMS engines, and the RCS timer is based on a 4 + X jet burn. Premission–determined parameters are provided for the OMS/RCS burn control. For abort to orbit (ATO), only the OMS burn time is provided and that initial value is modified to provide improved mission capability as a function of the velocity at the time of failure. Both OMS and RCS values are provided for the return to landing site (RTLS) or transatlantic landing (TAL) aborts. In addition to the values determined by the abort selection, there is a capability for the crew to manually initiate the burns and modify an initial value of the OMS and/or RCS timers through keyboard entry. If OMS propellant loading quantities require a higher burn rate than available through the OMS engines, an OMS/RCS interconnect can provide for burning OMS propellant through the RCS jets. This interconnected capability will be selected premission for each abort by an I–load. The crew has the capability to manually select or inhibit this interconnect.

For an ATO abort downmode to a TAL abort in MM103, the initially selected ATO abort OMS propellant burn time will be replaced automatically with the TAL abort OMS propellant burn time. The dump method can be changed from OMS only to an interconnected dump through the OMS and RCS by means of the manual inputs via the Override Display.

4.3.1.2 Overview

Pre-MECO. For situations where the quantity of OMS propellants required to be burned cannot be accomplished in the allowable time using the OMS engines only, the RCS jets can be employed to assist in burning the OMS propellants through a crew selectable interconnect mode (toggle capability). When RCS jets are to be employed in this manner, the RCS propellant tank isolation valves are closed in both pods, and the OMS propellants are interconnected to the RCS jets. If the attempt to interconnect the OMS propellant tanks to either or both sets of RCS manifolds (1/2 and/or 3/4/5) is unsuccessful, those manifolds will be returned to feed from the RCS tanks and the resulting OMS propellant burn rate will be adjusted accordingly to provide an accurate value of propellant burned. After the necessary burn has been accomplished, all propellant feed paths are returned to the normal configuration.

Post-MECO. It may be necessary to burn OMS propellants post–MECO for systems management or to maintain the necessary c.g. control. For situations where the quantity of OMS propellants required to be burned cannot be accomplished in the allowable time using the OMS engines only, the RCS jets can be employed to assist in burning the OMS propellants through a crew selectable interconnect mode. When RCS jets are to be employed in this manner, the RCS propellant tank isolation valves are closed in both pods, and the OMS propellants are interconnected to the RCS jets. If the attempt to interconnect the OMS propellant tanks to either or both sets of RCS manifolds (1/2 and/or 3/4/5) is unsuccessful, those manifolds will be returned to feed from the RCS tanks. After the necessary burn has been accomplished, all propellant feed paths are returned to the normal configuration.

For an ATO abort selected post–MECO, no propellant dumping is required. If an RTLS abort has been selected, a dump of RCS propellants through the 4 RCS + X jets is initiated after 20 seconds has elapsed

in MM602. The crew has the capability to control the aft RCS dump via the Override display. Capability is provided for the crew to manually request and/or modify the premission selected dump time for RCS propellants.

RCS roll control. For RCS roll control (selected automatically at SRB tailoff for two or three SSME failures in MM102 or a second SSME failure prior to MECO–Prep or Contingency MECO–Prep or by crew request of CONTINGENCY SE ROLL CONTROL FLAG via the XXXXXXTRAJ display), and OMS to RCS interconnect is initiated. This allows the use of OMS propellants by the RCS for vehicle control unless MECO–Prep or Contingency MECO–Prep has occurred. If the attempt to interconnect the OMS propellant tanks to either or both sets of manifolds (1/2 and/or 3/4/5) is unsuccessful, those manifolds will be returned to feed from the RCS tanks.

For pre–MECO the OMS propellants remain interconnected to the RCS jets until MECO commanded occurs and then are reconnected to normal by a Mode 2 return to normal process which provides a continuous propellant path to the RCS jets.

MM 304 OMS Propellant Burn. During MM 304, an OMS propellant-wasting burn will be initiated manually by crew request via the override display or automatically by guidance after the pitch–up maneuver has been completed to reduce the orbiter's landing weight and provide extra orbiter delta V after ET separation.

At the initiation of this sequence, the OMS engines will be commanded to the c.g. trim position and both sets of OMS helium/vapor isolation values will be commanded open. The selection to interconnect the OMS propellants to the RCS jets will then be determined by the crew's manual item entry or automatically when the OMS equivalent on time is less than or equal to a predefined interconnect initiation fuel time (I–load). When an interconnected dump has been selected, the OMS/RCS interconnect is requested and a c.g. trim delay is started. if an interconnect dump is not selected, a RCS 4 + X settling burn is initiated, a settling burn timer is started, and a flag for dumping through the OMS engines only is set.

The OMS propellant burn via the OMS engines and 24 aft RCS jets (4 +X and 20 nulls), will occur as follows: The OMS ignition will be initiated after the expiration of the c.g. trim delay and the OMS/RCS interconnect sequence has completed its processing. The dump through the 24 aft RCS jets will be initiated after the expiration of an ignition press delay which starts at the ignition of the OMS engines.

The OMS propellant burn via the OMS engines only will occur after 15 seconds of the 4 + X settling burn. The 4 + X settling burn will be terminated after 20 seconds.

The OMS propellant–wasting burn via the 24 aft RCS jets will be terminated automatically when, (1) the OMS equivalent on time is greater than or equal to a predefined interconnect termination fuel time (I–load), (2) the normal acceleration exceeds a predefined limit (I–load) for more than one second period of continuous processing, or (3) manually by crew item entry.

The entry OMS fuel burn time I–load represents the time required to burn available OMS fuel at a pre-MECO two-OMS-engine flow rate. The OMS equivalent on time used during pre–MECO operations will be transferred to OPS 3 to support a MM304 OMS propellant burn. This timer is incremented during each cycle that an OMS burn is active to reflect the OMS fuel flow at a two–OMS–engine rate and also the delta fuel flow rate between 2 OMS engines and 10 or 24 RCS jets when the null jets are active. The 10 or 24 RCS jets delta fuel flow rate will be determined by the state of the aft manifold inhibit flags from the OMS/RCS interconnect sequence.

MM304 AFT RCS PROPELLANT BURN. When the ground relative velocity reaches a predefined threshold (I–load), a dump of RCS propellants through the RCS 4 + X jets is initiated if enabled by the

crew via item entry. Capability is provided for the crew to manually request and/or modify the premission selected dump time for RCS propellants.

4.3.1.3 Detail Requirements—Abort Control Sequence

Step 1. This step sets the scale factor for the OMS burn time display and provides the appropriate branching for the MM304 or OPS 1/6 abort functions.

The following signals are monitored:

(a)	MAJOR MODE 304 FLAG	V90X8161X
(b)	SECOND SSME FAIL CONFIRM	V90X1721X
(c)	CONT_SERC	V93X6682X
(d)	SERC FLAG	V90X8913X

Set (1) equal to 1.0 and monitor (a).

If (a) is true, proceed to Step 24. Otherwise, if (a) is false, proceed to monitor (b), (c), and (d).

If (b) or (c) or (d) is true, set (2) true and proceed to Step 1A. Otherwise, if (b) and (c) and (d) are all false, proceed to Step 18.

(1)	OMS TIME SCALE FACTOR	V94J3755C
(2)	SERC FLAG	V90X8913X

Step 1A. This step initiates the abort OMS/RCS interconnect command and the OMS Helium and Vapor isolation valve open commands to support single engine roll control when a second SSME fails prior to contingency MECO PREP and terminates the 24 AFT RCS jet commands.

The following signals are monitored:

(a)	MECO CONFIRMED FLAG	V90X8561X
(b)	OMS TO RCS INTERCONNECT CMD	V90X8312X
(c)	MECO PREPARATION DISCRETE	V90X1989X
(d)	CONTINGENCY MECO PREP DISCRETE	V90X8480X

If (a) is true, set (14) true and proceed to Step 1B. Otherwise, if (a) is false, proceed to monitor (b).

If (b) is true, issue (6) through (13), and proceed to monitor (c) and (d). Otherwise, if (b) is false, proceed to monitor (c) and (d).

If (c) and (d) are both false, on first pass, terminate (1) through (3), set (4) true (ENABLE), issue (5), and proceed to Step 1B. On subsequent passes, proceed to Step 1B. Otherwise, if either (c) or (d) is true, set (14) true, and proceed to Step 1B.

(1)	ABORT RCS + X ON CMD	V90X8314X
(2)	20 RCS NULL JETS ON CMD	V90X8317X
(3)	OMS TO RCS RTRN TO NORMAL CONFIG CMD	V90X8313X
(4)	OMS/RCS INTERCONNECT INH/ENA CMD	V93X5348X
(5)	OMS TO RCS INTERCONNECT CMD	V90X8312X
(6)	OMS L POD HE ISLN VLV A OP	V43K4180X
(7)	OMS L POD VAPOR ISLN VLV 1 OP	V43K4182X
(8)	OMS R POD HE ISLN VLV A OP	V43K5180X
(9)	OMS R POD VAPOR ISLN VLV 1 OP	V43K5182X
(10)	OMS L POD HE ISLN VLV B OP	V43K4181X

(8)	OMS R POD HE ISLN VLV A OP	V43K5180X
(9)	OMS R POD VAPOR ISLN VLV 1 OP	V43K5182X
(10)	OMS L POD HE ISLN VLV B OP	V43K4181X
(11)	OMS L POD VAPOR ISLN VLV 2 OP	V43K4183X
(12)	OMS R POD HE ISLN VLV B OP	V43K5181X
(13)	OMS R POD VAPOR ISLN VLV 2 OP	V43K5183X
(14)	PRE MECO ICNCT COMPLETE FLAG	(INTERNAL)

Step 1B. This step controls selection of the OMS burn time for a manually initiated OMS propellant dump and for an abort which has been down–moded from an ATO abort to a TAL abort.

The following signals are monitored:

(a)	ORBITER DUMP ENABLE	V93X6980X
(b)	ATO ABORT SELECTED	(INTERNAL)
(c)	TAL ABORT DECLARED	V90X8658X

If (a) is true, on first pass, set (1) true, set (2) equal to (3), and proceed to Step 2. On subsequent passes, proceed to Step 2. Otherwise, if (a) is false, proceed to monitor (b).

If (b) is true, proceed to monitor (c). Otherwise, if (b) is false, proceed to Step 2.

If (c) is true, on first pass, set (2) equal to (4), and proceed to Step 2. On subsequent passes, proceed to Step 2. Otherwise, if (c) is false, proceed to Step 2.

(1)	BURN TIME SEL COMPLETE FLAG	(INTERNAL)
(2)	OMS DELTA T COMPUTED	V90W8325C
(3)	MANUAL_OMS_DT	V99U9717C
(4)	TAL_OMS_DT	V97U9786C

Step 2. This step determines if the abort burn table selection has been completed or pre–MECO interconnect operation is completed for second SSME failure situations.

The following signals are monitored:

(a)	BURN TIME SEL COMPLETE FLAG	(INTERNAL)
(b)	PRE–MECO ICNCT COMPLETE FLAG	(INTERNAL)

If (a) or (b) is true, proceed to Step 7.

If (a) and (b) are false, proceed to Step 3.

Step 3. This step controls the selection of the appropriate table values to be used in the control of the OMS and RCS abort burns.

The following signals are monitored:

(a)	RTLS ABORT DECLARED	V90X8637X
(b)	TAL ABORT DECLARED	V90X8658X
(c)	TGT COMPLETE FLAG	V90X8504X

If (a) is true, proceed to Step 4.

If (a) is false, and (b) is true, proceed to Step 5.

If (a) and (b) are both false, and (c) is true, proceed to Step 6.

If (a) and (b) and (c) are all false, return to Step 1.

Step 4. This step selects the RTLS I–load value for use in control of the OMS propellant abort burn during an RTLS abort.

The computed burn value and OMS/RCS interconnect initial selection are set equal to RTLS I–load table values as follows:

(a)	RTLS_OMS_DT	V97U9780C
(b)	RTLS_ICNCT_SEL	V99U9991C
(c)	SERC FLAG	V90X8913X

Set (1) below equal to (a), set (2) true, and proceed to the next if statement.

If (b) is true (ENABLE), or (c) is true, return to Step 1. Otherwise, set (3) false (INHIBIT), and return to Step 1.

(1)	OMS DELTA T COMPUTED	V90W8325C
(2)	BURN TIME SEL COMPLETE FLAG	(INTERNAL)
(3)	OMS/RCS INTERCONNECT INH/ENA CMD	V93X5348X

Step 5. This step selects the TAL I–load values for use in control of the OMS propellant abort burn during TAL abort.

The computed burn value and OMS/RCS interconnect initial selection are set equal to the TAL I–load values as follows:

(a)	TAL_OMS_DT	V97U9786C
(b)	TAL_ICNCT_SEL	V99U9992C
(c)	SERC FLAG	V90X8913X

Set (1) below equal to (a), (2) true, and proceed to the next if statement.

If (b) is true (ENABLE), or (c) is true, return to Step 1. Otherwise, set (3) false (INHIBIT), and return to Step 1.

(1)	OMS DELTA T COMPUTED	V90W3825C
(2)	BURN TIME SEL COMPLETE FLAG	(INTERNAL)
(3)	OMS/RCS INTERCONNECT INH/ENA CMD	V93X5348X

Step 6. This step selects the ATO I–load table values for use in control of the OMS propellant abort burn during ATO abort.

(a)	SCALE FACTOR 2	V90J8517C
(b)	ATO_OMS_DT	V97U9798C
(c)	ATO_ICNCT_SEL	V99U9993C
(d)	SERC FLAG	V90X8913X

The computed burn value and OMS/RCS interconnect initial selection are set equal to the ATO I–load value as follows:

Set (1) below equal to the product of (a) and (b), set (3) and (4) equal to true, and proceed to the next if statement.

If (c) is true (ENABLE), or (d) is true, return to Step 1. Otherwise, set (2) false (INHIBIT), and return to Step 1.

(1)	OMS DELTA T COMPUTED	V90W8325C
(2)	OMS/RCS INTERCONNECT INH/ENA CMD	V93X5348X
(3)	BURN TIME SEL COMPLETE FLAG	(INTERNAL)
(4)	ATO ABORT SELECTED	(INTERNAL)

Step 7. All abort functions are suspended during the ET separation maneuver.

The following signals are monitored:

(a)	MECO PREPARATION DISCRETE	V90X1989X
(b)	MECO CONFIRMED FLAG	V90X8561X

If (a) and (b) are both false, proceed to Step 8.

If (a) or (b) is true, proceed to Step 12.

Step 8. This step controls the abort OMS burn.

The following parameters are monitored:

(a)	ORBITER DUMP INHIBIT	V93X6981X
(b)	OMS DELTA T COMPUTED	V90W8325C
(c)	OMS EQUIVALENT ON TIME	V90W8320C
(d)	OMS–L ON CMD IND	V90X8271X
(e)	OMS–R ON CMD IND	V90X8272X
(f)	SERC FLAG	V90X8913X
(g)	OMS TO RCS INTERCONNECT COMPLETE FLAG	V90X8282X

If (a) is false and (b) > (c), proceed to Step 9.

If (a) is true or (b) ≤ (c) proceed to monitor (d) and (e).

If (d) or (e) is true, terminate (1), (3), and (4), issue (2), set (8) false, and proceed to monitor (f). Otherwise, proceed to monitor (f).

If (f) is true, return to Step 1. Otherwise, proceed to monitor (g).

If (g) is true, terminate (5), issue (6), set (7) false (INHIBIT), and return Step 1. Otherwise, return to Step 1.

(1)	ABORT OMS IGN CMD	V90X8319X
(2)	OMS CUTOFF CMD	V90X8318X
(3)	ABORT RCS +X ON CMD	V90X8314X
(4)	20 RCS NULL JETS ON CMD	V90X8317X
(5)	OMS TO RCS INTERCONNECT CMD	V90X8312X
(6)	OMS TO RCS RETURN TO NORMAL CONFIG CMD	V90X8313X

(7)	OMS/RCS INTERCONNECT INH/ENA CMD	V93X5348X
(8)	ORBITER DUMP ENABLE	V93X6980X

Step 9. This step increments the OMS dump timer and determines if OMS propellants are to be dumped with RCS jets.

The following signals are monitored:

(a)	OMS–L ON CMD IND	V90X8271X
(b)	OMS–R ON CMD IND	V90X8272X
(c)	SERC FLAG	V90X8913X
(d)	ORBITER DUMP ENABLE	V93X6980X
(e)	OMS/RCS INTERCONNECT INH/ENA CMD	V93X5348X
(f)	OMS TO RCS INTERCONNECT COMPLETE FLAG	V90X8282X

If (a) and (b) are both false, issue (1), terminate (2), and proceed to monitor (c) and (d). Otherwise, if (a) or (b) is true, increment (3) by 80 msec and proceed to monitor (c) and (d).

If (c) is true and (d) is false, return to Step 1. Otherwise, proceed to monitor (e).

If (e) is true (ENABLE), proceed to Step 10. Otherwise, proceed to monitor (f).

If (f) is true, terminate (4) through (6) below, issue (7), and return to Step 1. Otherwise, return to Step 1.

(1)	ABORT OMS IGN CMD	V90X8319X
(2)	OMS CUTOFF CMD	V90X8318X
(3)	OMS EQUIVALENT ON TIME	V90W8320X
(4)	ABORT RCS +X ON CMD	V90X8314X
(5)	20 RCS NULL JETS ON CMD	V90X8317X
(6)	OMS TO RCS INTERCONNECT CMD	V90X8312X
(7)	OMS TO RCS RTRN TO NORMAL CONFIG CMD	V90X8313X

Step 10. This step assures that the OMS propellants are connected to the RCS jets.

The following signal is monitored:

(a)	OMS TO RCS INTERCONNECT COMPLETE FLAG	V90X8282X

If (a) is false, issue (1) below, terminate (2), and return to Step 1.

If (a) is true and at least [(5) below] seconds have elapsed since (a) was last set true, issue (3) and (4) below, and proceed to Step 11. Otherwise return to Step 1.

(1)	OMS TO RCS INTERCONNECT CMD	V90X8312X
(2)	OMS TO RCS RTRN TO NORMAL CONFIG CMD	V90X8313X
(3)	ABORT RCS +X ON CMD	V90X8314X
(4)	20 RCS NULL JETS ON CMD	V90X8317X
(5)	ICNCT_DELAY	V99U9786C

Step 11. This step controls the OMS propellant burn timer and scale factors when using RCS null jets.

The following signals are monitored:

(a)	AFT MANIFOLD 1/2 JET INH FLAG	V90X8285X
(b)	AFT MANIFOLD 3/4/5 JET INH FLAG	V90X8286X
(c)	OMS EQUIVALENT ON TIME	V90W832OC

If (a) and (b) are both false, increment (c) by (2), set (1) equal to (3), and return to Step 1.

If (a) or (b) is true, increment (c) by (4), set (1) equal to (5), and return to Step 1.

(1)	OMS TIME SCALE FACTOR	V94J3755C
(2)	RCS_24_JET_FU_BIAS	V99U9772C
(3)	RCS_24_JET_FU_SCALE	V99U9773C
(4)	RCS_10_JET_FU_BIAS	V99U9775C
(5)	RCS_10_JET_FU_SCALE	V99U9776C

Step 12. This step controls the MM102 interconnected OMS dump and terminates the abort functions in preparation for ET separation in MM103 or MM601.

The following signal is monitored:

(a)	MAJOR MODE 102 FLAG	V90X8158X

If (a) is true, on first pass, terminate (3), issue (4), set (5) true (ENABLE), and proceed to Step 13; on subsequent passes, proceed to Step 13. Otherwise, on first pass, terminate (1), (6), and (7), issue (2) and proceed to Step 14. On subsequent passes, proceed to Step 14.

(1)	ABORT OMS IGN CMD	V90X8319X
(2)	OMS CUTOFF CMD	V90X8318X
(3)	OMS TO RCS RETURN TO NORMAL CONFIG CMD	V90X8313X
(4)	OMS TO RCS INTERCONNECT CMD	V90X8312X
(5)	OMS/RCS INTERCONNECT INH/ENA CMD	V93X5348X
(6)	ABORT RCS + X ON CMD	V90X8314X
(7)	20 RCS NULL JETS ON CMD	V90X8317X

Step 13. This step determines whether to initiate or terminate contingency rapid dump in MM102. At termination for fast separation, a Mode 2 type interconnect return to normal is commanded.

The following signals are monitored:

(a)	FAST SEPARATION FLAG	V90X8267X
(b)	ORBITER DUMP INHIBIT	V93X6981X
(c)	OMS DELTA T COMPUTED	V90W8325X
(d)	OMS EQUIVALENT ON TIME	V90W8320C
(e)	ORBITER DUMP ENABLE	V93X6980X

If (a) is true, on first pass, set (1) true and proceed to Step 20. On subsequent passes, proceed to Step 20. Otherwise, proceed to monitor (b), (c), and (d).

If (b) is true or (c) $\leq$ (d), proceed to Step 20; otherwise, proceed to monitor (e).

If (e) is true proceed to Step 17. Otherwise, return to Step 1.

(1)	MODE 2 INDICATOR	V90X8308X

Step 14. This step selects a Mode 2 OMS/RCS Return–to–Normal to be initiated at MECO Command and terminates the Orbiter Dump Enable and Orbiter Dump Inhibit commands. The OMS He/Vaport Isolation Op commands are terminated at the completion of the interconnect return–to–normal sequence.

The following signals are monitored:

(a)	MECO COMMAND FLAG	V90X8569X
(b)	OMS TO RCS INTERCONNECT COMPLETE FLAG	V90X8282X

If (a) is false, return to Step 1.

If (a) is true, one time only, terminate (3), issue (4), set (13) true, set (1), (2), and (14) false (INHIBIT), and proceed to Step 15. On subsequent passes, proceed to monitor (b).

If (b) is false, one time only, terminate (5) through (12), set (13) false, and proceed to Step 15. On subsequent passes, proceed to Step 15. Otherwise, proceed to Step 15.

(1)	ORBITER DUMP ENABLE	V93X6980X
(2)	ORBITER DUMP INHIBIT	V93X6981X
(3)	OMS TO RCS INTERCONNECT CMD	V90X8312X
(4)	OMS TO RCS RETURN TO NORMAL CONFIG CMD	V90X8313X
(5)	OMS L POD HE ISLN VLV A OP	V43K4180X
(6)	OMS L POD VAPOR ISLN VLV 1 OP	V43K4182X
(7)	OMS R POD HE ISLN VLV A OP	V43K5180X
(8)	OMS R POD VAPOR ISLN VLV 1 OP	V43K5182X
(9)	OMS L POD HE ISLN VLV B OP	V43K4181X
(10)	OMS L POD VAPOR ISLN VLV 2 OP	V43K4183X
(11)	OMS R POD HE ISLN VLV B OP	V43K5181X
(12)	OMS R POD VAPOR ISLN VLV 2 OP	V43K5183X
(13)	MODE 2 INDICATOR	V90X8308X
(14)	OMS/RCS INTERCONNECT INH/ENA CMD	V93X5348X

Step 15. This step determines if a post–MECO dump has been manually inhibited, or terminated by completion.

The following signals are monitored:

(a)	ORBITER DUMP ENABLE	V93X6980X
(b)	ORBITER DUMP INHIBIT	V93X6981X
(c)	OMS DELTA T COMPUTED	V90W8325C
(d)	OMS EQUIVALENT ON TIME	V90W8320C

If (a) is true and (c) > (d), proceed to Step 16.

If (a) is true and (c) ≤ (d), proceed to Step 20.

If (a) is false and (b) is true, proceed to Step 20.

If (a) and (b) are false, proceed to Step 23.

Step 16. This step assures the flight control system constraints and OMS system Nz constraints are satisfied in MM 602 prior to interconnecting OMS propellants to the RCS jets.

The following signals are monitored:

(a)	MM 602 DUMP INIT FLAG	(INTERNAL)
(b)	MAJOR MODE 602 FLAG	V90X8174X
(c)	NZ	V90A5381C
(d)	OMS_NZ_LIM	V99U9697C
(e)	OMS/RCS INTERCONNECT INH/ENA CMD	V93X5348X
(f)	FCS_ACCEPT_ICNCT	V90X8296X

If (a) is false, proceed to monitor (b). Otherwise, if (a) is true, proceed to Step 16A.

If (b) is true, proceed to monitor (c). Otherwise, if (b) is false, return to Step 1.

If $|(c)| \leq (d)$, issue (1) below, set (2) true, start timer (3), and proceed to monitor (e). Otherwise, if $|(c)| > (d)$, set (4) false, set (5) true, and return to Step 1.

If (e) is true (ENABLE), proceed to monitor (f). Otherwise, if (e) is false (INHIBIT), set (6) true, and return to Step 1.

If (f) is true, issue (8), terminate (9) and (10), and return to Step 1. If (f) is false, set (6) true and (7) false (INHIBIT), and return to Step 1.

(1)	CG TRIM CMD	V90X8309X
(2)	MM 602 DUMP INIT FLAG	(INTERNAL)
(3)	CG TRIM DELAY TIMER	(INTERNAL)
(4)	ORBITER DUMP ENABLE	V93X6980X
(5)	ORBITER DUMP INHIBIT	V93X6981X
(6)	OME ONLY FLAG	V90X8051X
(7)	OMS/RCS INTERCONNECT INH/ENA CMD	V93X5348X
(8)	OMS TO RCS INTERCONNECT CMD	V90X8312X
(9)	OMS TO RCS RTRN TO NORM CONFIG CMD	V90X8313X
(10)	ABORT RCS + X ON CMD	V90X8314X

Step 16A. This step insures the OMS/RCS interconnect sequence has completed before continuing the execution of an OMS propellant dump if an interconnect is requested. This step also issues the 4+ X jet command to provide propellant settling, and insures the OMS system NZ constraints are satisfied prior to OMS ignition.

The following signals are monitored:

(a)	OMS/RCS INTERCONNECT INH/ENA CMD	V93X5348X
(b)	OMS TO RCS INTERCONNECT COMPLETE FLAG	V90X8282X
(c)	CG_TRIM_DELAY	V97U9836C
(d)	CG TRIM DELAY TIMER	(INTERNAL)
(e)	NZ	V90A5381C
(f)	OMS_NZ_LIM	V99U9697C

If (a) is true (ENABLE), proceed to monitor (b). Otherwise, if (a) is false (INHIBIT), issue (1) and proceed to monitor (c).

If (b) is true, issue (1) and proceed to monitor (c). Otherwise, if (b) is false, return to Step 1.

If (c) is ≤ (d), on first pass, proceed to monitor (e) and (f). On subsequent passes, proceed to Step 17. Otherwise, if (c) > (d), return to Step 1.

If (e) is ≤ (f), proceed to Step 17. Otherwise, if (e) is > (f), set (2) true and proceed to Step 18.

(1)	ABORT RCS + X ON CMD	V90X8314X
(2)	OMS NZ DUMP INHIBIT FLAG	(INTERNAL)

Step 17. This step initiates the contingency dumping on OMS propellant through the OMS engines in OPS 1 and OPS 6 and increments the OMS dump timer.

The following signals are monitored:

(a)	IGN PRESS DELAY INIT FLAG	(INTERNAL)
(b)	OMS–L ON CMD IND	V90X8271X
(c)	OMS–R ON CMD IND	V90X8272X
(d)	IGN_PRESS_DELAY	V97U9838C
(e)	IGN PRESS DELAY TIMER	(INTERNAL)
(f)	20 RCS NULL JETS ON CMD	V90X8317X
(g)	MAJOR MODE 102 FLAG	V90X8158X

If (a) is true, proceed to monitor (b) and (c). Otherwise, start timer (e), set (4) true, and proceed to monitor (b) and (c).

If (b) and (c) are both false, terminate (2), issue (3), and return to Step 1.

If either (b) or (c) is true, increment (1) by 80 msec and proceed to monitor (d).

If (d) ≤ (e) or (f) is true, proceed to monitor (g). Otherwise, return to Step 1.

If (g) is true, proceed to Step 19. Otherwise, proceed to Step 18.

(1)	OMS EQUIVALENT ON TIME	V90W8320C
(2)	OMS CUTOFF CMD	V90X8318X
(3)	ABORT OMS IGN CMD	V90X8319X
(4)	IGN PRESS DELAY INIT FLAG	(INTERNAL)

Step 18. This step controls the termination of the contingency dumping of OMS propellants based on OMS and/or RCS system constraints in MM602.

The following signals are monitored:

(a)	NZ	V90A5381C
(b)	OMS_NZ_LIMIT	V99U9697C
(c)	OME ONLY FLAG	V90X8051X
(d)	OMS/RCS INTERCONNECT INH/ENA CMD	V93X5348X

(e)	CONTINGENCY_NZ_LIMIT	V97U9837C
(f)	OMS EQUIVALENT ON TIME	V90W8320C
(g)	CONT_OMS_RCS_ICNCT_TERM_FU_TIME	V99U9718C
(h)	OMS NZ DUMP INHIBIT FLAG	(INTERNAL)

If | (a) | > (b) for three consecutive passes, or (h) is true, terminate (1), (3), (4), (5), and (13). Issue (2) and (6), set (7), (11), and (12) false, set (8) and (9) true, set (10) false (INHIBIT), reset (14) and (15), and proceed to Step 22. Otherwise go to the next if statement.

If (c) is true or (d) is false (INHIBIT) or [| (a) | > (e) for three consecutive passes] or (f) ≥ (g), terminate (3) through (5), issue (6), set (9) true and (10) false (INHIBIT), and proceed to Step 22. Otherwise, proceed to Step 19.

(1)	ABORT OMS IGN CMD	V90X8319X
(2)	OMS CUTOFF CMD	V90X8318X
(3)	ABORT RCS +X ON CMD	V90X8314X
(4)	20 RCS NULL JETS ON CMD	V90X8317X
(5)	OMS TO RCS INTERCONNECT CMD	V90X8312X
(6)	OMS TO RCS RETURN TO NORMAL CONFIG CMD	V90X8313X
(7)	ORBITER DUMP ENABLE	V93X6980X
(8)	ORBITER DUMP INHIBIT	V93X6981X
(9)	OME ONLY FLAG	V90X8051X
(10)	OMS/RCS INTERCONNECT INH/ENA CMD	V93X5348X
(11)	MM602 DUMP INIT FLAG	(INTERNAL)
(12)	IGN PRESS DELAY INIT FLAG	(INTERNAL)
(13)	C.G. TRIM CMD	V90X8309X
(14)	IGN PRESS DELAY TIMER	(INTERNAL)
(15)	C.G. TRIM DELAY TIMER	(INTERNAL)

Step 19. This step issues the abort dump commands and determines the proper bias and scale factor to be used based on the Manifold Jet Inhibit flags from the OMS/RCS Interconnect Sequence.

Monitor the following signals:

(a)	AFT MANIFOLD 1/2 JET INH FLAG	V90X8285X
(b)	AFT MANIFOLD 3/4/5 JET INH FLAG	V90X8286X
(c)	OMS EQUIVALENT ON TIME	V90W8320C
(d)	OMS TIME SCALE FACTOR	V94J3755C
(e)	OMS TO RCS INTERCONNECT COMPLETE FLAG	V90X8282X

If (e) is true, issue (5) and (6), and proceed to monitor (a) and (b). Otherwise, return to Step 1.

If (a) and (b) are both false, increment (c) by (1), set (d) equal to (2), and return to Step 1.

If (a) or (b) is true, increment (c) by (3), set (d) equal to (4), and return to Step 1.

(1)	RCS_24_JET_FU_BIAS	V99U9772C
(2)	RCS_24_JET_FU_SCALE	V99U9773C
(3)	RCS_10_JET_FU_BIAS	V99U9775C
(4)	RCS_10_JET_FU_SCALE	V99U9776C

(5)	ABORT RCS +X ON CMD	V90X8314X
(6)	20 RCS NULL JETS ON CMD	V90X8317X

Step 20. This step is the first step of a common routine ending at Step 22 which performs those functions associated with completion or termination of the manually selected dump for post–MECO (MM102 and 602).

The following signals are monitored:

(a)	OMS–L ON CMD IND	V90X8271X
(b)	OMS–R ON CMD IND	V90X8272X

If (a) or (b) is true, terminate (1) through (4) and (6), issue (7) and (8), set (9) true, set (5), (11), and (12) false, set (10) false (INHIBIT), reset (13) and (14), and proceed to Step 21.

If (a) and (b) are both false, proceed to Step 21.

(1)	C.G. TRIM CMD	V90X8309X
(2)	ABORT OMS IGN CMD	V90X8319X
(3)	ABORT RCS + X ON CMD	V90X8314X
(4)	20 RCS NULL JETS ON CMD	V90X8317X
(5)	ORBITER DUMP ENABLE	V93X6980X
(6)	OMS TO RCS INTERCONNECT CMD	V90X8312X
(7)	OMS CUTOFF CMD	V90X8318X
(8)	OMS TO RCS RETURN TO NORMAL CONFIG CMD	V90X8313X
(9)	ORBITER DUMP INHIBIT	V93X6981X
(10)	OMS/RCS INTERCONNECT INH/ENA CMD	V93X5348X
(11)	MM602 DUMP INIT FLAG	(INTERNAL)
(12)	IGN PRESS DELAY INIT FLAG	(INTERNAL)
(13)	IGN PRESS DELAY TIMER	(INTERNAL)
(14)	C.G. TRIM DELAY TIMER	(INTERNAL)

Step 21. This step determines if post–MECO functions are to be performed.

The following signals are monitored:

(a)	MAJOR MODE 602 FLAG	V90X8174X
(b)	NZ	V90A5381C
(c)	CONTINGENCY_NZ_LIM	V97U9837C

If (a) is true, and $|(b)| > (c)$, proceed to Step 22. Otherwise, if (a) is false or $|(b)| \leq (c)$, return to Step 1.

Step 22. This step selects the manual post–MECO RCS propellant burn timer.

The following signals are monitored:

(a)	OMS TO RCS INTERCONNECT COMPLETE FLAG	V90X8282X

If (a) is false, then one time only, set (1) equal to (2), and proceed to Step 23.

If (a) is true, return to Step 1.

(1)	AFT RCS DUMP DURATION	V93W6958C
(2)	T_RCS_REF	V97U9828C

Step 23. This step controls the RTLS post–MECO RCS propellant burn. The crew has the capability to terminate RCS propellant burn via override display.

The following signals are monitored:

(a)	MM 602 FLAG	V90X8174X
(b)	MM 603 FLAG	V93X0013X
(c)	AFT RCS DUMP COUNTER	V90W8229C
(d)	AFT RCS DUMP DURATION	V93W6958C
(e)	AFT RCS DUMP ENABLE	V93X6949X

If (a) is true and 20 seconds have elapsed since (a) was true, or (b) is true, proceed to the next if statement; otherwise, return to Step 1.

If (d) $\leq$ (c), terminate output (1), reset output (2) and return to Step 1.

If (d) > (c) and (e) is true, issue output (1), increment (c) by 80 msec and return to Step 1.

If (d) > (c) and (e) is false, terminate output (1) and return to Step 1.

(1)	ABORT RCS + X ON CMD	V90X8314X
(2)	AFT RCS DUMP ENABLE	V93X6949X

Step 24. This step initializes the ENTRY OMS FUEL BURN TIME, and determines if an OMS/RCS Interconnect is required. This step will also initiate an automatic OMS dump in a TAL abort, or a manual OMS dump by the crew via the Override display (if all constraints are satisfied), and pressurizes the OMS tanks.

The following signals are monitored:

(a)	START_DUMP_VELOCITY	V99U9573C
(b)	GND REL VEL MAGNITUDE IN M50 SYS	V95L0151C
(c)	ORBITER DUMP ENABLE	V93X6980X
(d)	OMS/RCS INTERCONNECT INH/ENA CMD	V93X5348X
(e)	OMS_RCS_INTERCON_INIT_FU_TIME	V99U9716C
(f)	OMS EQUIVALENT ON TIME	V90W8320C
(g)	OMS DELTA T COMPUTED	V90W8325C
(h)	ENTRY_OMS_FUEL_BURN_TIME	V99U9571C
(i)	FCS_ACCEPT_ICNCT	V90X8296X
(j)	ORBITER DUMP INHIBIT	V93X6981X
(k)	DUMP ENA INIT FLAG	(INTERNAL)

If (a) $\geq$ (b) proceed to Step 29. Otherwise, if (a) < (b), proceed to the next if statement.

If first pass, set (g) equal to (h) and if (e) > (f), set (15) equal to true (ENABLE), and proceed to monitor (i) and (j). Otherwise, if first pass and (e) $\leq$ (f), proceed to monitor (i) and (j). On subsequent passes, proceed to monitor (i) and (j).

If (i) is true and (j) is false, on first pass, set (c) true and proceed to monitor (c). On subsequent passes, proceed to monitor (c). Otherwise, proceed to monitor (c).

If (c) is false, proceed to Step 28. Otherwise, if (c) is true, proceed to monitor (k).

If (k) is false, issue outputs (1) through (9), set (17) true, and proceed to monitor (d) and (i). Otherwise, if (k) is true, proceed to Step 25.

If (d) is true (ENABLE) and (i) is true, issue (13), terminate (14), start timer (16), and proceed to Step 28. Otherwise, issue (10), set (11) and (18) true, set (15) false (INHIBIT), start timer (12), and proceed to Step 28.

(1)	C.G. TRIM CMD	V90X8309X
(2)	OMS L POD HE ISLN VLV A OP	V43K4180X
(3)	OMS L POD VAPOR ISLN VLV 1 OP	V43K4182X
(4)	OMS R POD HE ISLN VLV A OP	V43K5180X
(5)	OMS R POD VAPOR ISLN VLV 1 OP	V43K5182X
(6)	OMS L POD HE ISLN VLV B OP	V43K4181X
(7)	OMS L POD VAPOR ISLN VLV 2 OP	V43K4183X
(8)	OMS R POD HE ISLN VLV B OP	V43K5181X
(9)	OMS R POD VAPOR ISLN VLV 2 OP	V43K5183X
(10)	ABORT RCS + X ON CMD	V90X8314X
(11)	OME ONLY FLAG	V90X8051X
(12)	RCS 4 + X ON TIME	(INTERNAL)
(13)	OMS TO RCS INTERCONNECT CMD	V90X8312X
(14)	OMS TO RCS RETURN TO NORMAL CONFIG CMD	V90X8313X
(15)	OMS/RCS INTERCONNECT INH/ENA CMD	V93X5348X
(16)	C.G. TRIM DELAY TIMER	(INTERNAL)
(17)	DUMP ENA INIT FLAG	(INTERNAL)
(18)	TWO OME DUMP FLAG	(INTERNAL)

Step 25. This step monitors the TWO OME DUMP FLAG to determine if an OMS only dump is to be processed and will monitor the RCS 4 + X ON TIME and issue the dump commands at the proper intervals.

The following signals are monitored:

(a)	TWO OME DUMP FLAG	(INTERNAL)
(b)	RCS 4 + X ON TIMER	(INTERNAL)

If (a) is false, proceed to Step 26.

If (a) is true and (b) $\geq$ 15 seconds, one time only, issue (1), terminate (2), and proceed to the next if statement. Otherwise, proceed to the next if statement.

If (a) is true and (b) $\geq$ 20 seconds, one time only, terminate (3), and proceed to Step 28. Otherwise, proceed to Step 28.

(1)	ABORT OMS IGN CMD	V90X8319X
(2)	OMS CUTOFF CMD	V90X8318X
(3)	ABORT RCS + X ON CMD	V90X8314X

Step 26. This monitors the OMS/RCS I/C ENA/INH flag to determine if the interconnect is to terminated either by crew selection or upon burn completion or for exceedance of systems constraints in OPS 3.

The following signals are monitored:

(a)	OMS/RCS INTERCONNECT INH/ENA CMD	V93X5348X
(b)	NZ	V90A5381C
(c)	CONTINGENCY_NZ_LIM	V97U9837C
(d)	OMS EQUIVALENT ON TIME	V90W8320C
(e)	OMS_RCS_INTERCON_TERM_FU_TIME	V99U9952C
(f)	OMS TO RCS INTERCONNECT COMPLETE FLAG	V90X8282X

If [(a) is false (INHIBIT) or | (b) | > (c) continuously for more than 1 second or (d) is ≥ (e)], terminate (1), (2), and (4), issue (3), set (5) false (INHIBIT), set (6) true, and proceed to Step 27. Otherwise, proceed to monitor (f).

If (f) is true, proceed to Step 27. Otherwise, proceed to Step 28.

(1)	ABORT RCS + X ON CMD	V90X8314X
(2)	20 RCS NULL JETS ON CMD	V90X8317X
(3)	OMS TO RCS RETURN TO NORMAL CONFIG CMD	V90X8313X
(4)	OMS TO RCS INTERCONNECT CMD	V90X8312X
(5)	OMS/RCS INTERCONNECT INH/ENA CMD	V93X5348X
(6)	OME ONLY FLAG	V90X8051X

Step 27. This step initiates the OMS plus 24 RCS jet dump after the designed time delays.

The following signals are monitored:

(a)	CG_TRIM_DELAY	V97U9836C
(b)	CG TRIM DELAY TIMER	(INTERNAL)
(c)	OMS/RCS INTERCONNECT INH/ENA CMD	V93X5348X
(d)	IGN_PRESS_DELAY	V97U9838C
(e)	IGN PRESS DELAY TIMER	(INTERNAL)
(f)	AFT MANIFOLD 1/2 JET INH FLAG	V90X8285X
(g)	AFT MANIFOLD 3/4/5 JET INH FLAG	V90X8286X
(h)	OMS EQUIVALENT ON TIME	V90W8320C
(i)	OMS TIME SCALE FACTOR	V94J3755C
(j)	OMS–L ON CMD IND	V90X8271X
(k)	OMS–R ON CMD IND	V90X8272X

If (a) ≤ (b), proceed to monitor (j) and (k). Otherwise, proceed to Step 28.

If both (j) and (k) are false, issue (1), terminate (2), start timer (e), and proceed to monitor (c), (d), and (e). Otherwise, proceed to monitor (c), (d), and (e).

If (c) is true (ENABLE) and (d) ≤ (e), issue (3) and (4), and proceed to monitor (f) and (g). Otherwise, proceed to Step 28.

If (f) or (g) is true, increment (h) by (7), set (i) equal to (8), and proceed to Step 28. Otherwise, increment (h) by (5), set (i) equal to (6), and proceed to Step 28.

(1)	ABORT OMS IGN CMD	V90X8319X
(2)	OMS CUTOFF CMD	V90X8318X
(3)	ABORT RCS + X OM CMD	V90X8314X
(4)	20 RCS NULL JETS ON CMD	V90X8317X
(5)	RCS_24_JET_FU_BIAS	V99U9772C
(6)	RCS_24_JET_FU_SCALE	V99U9773C
(7)	RCS_10_JET_FU_BIAS	V99U9775C
(8)	RCS_10_JET_FU_SCALE	V99U9776C

Step 28. This step increments the OMS dump timer and terminates the OMS propellant dump by crew input, dump completion or OMS system constraints in OPS 3.

The following signals are monitored:

(a)	ORBITER DUMP INHIBIT	V93X6981X
(b)	OMS EQUIVALENT ON TIME	V90W8320C
(c)	OMS DELTA T COMPUTED	V90W8325C
(d)	NZ	V90A5381C
(e)	OMS_NZ_LIM	V99U9697C
(f)	OMS–L ON CMD IND	V90X8271X
(g)	OMS–R ON CMD IND	V90X8272X

If [(a) is true] or [(b) is $\geq$ (c)] or [| (d) | > (e) continuously for more than 1.0 sec], terminate outputs (1) through (13), issue (14) and (15) set (21) true, set (16) and (18) false and (17) false (INHIBIT), set (22) true, reset (19), (20), and (23), and return to Step 1. Otherwise, go to the next if statement.

If (f) or (g) is true, increment (b) by 80 msec, and return to Step 1. Otherwise, return to Step 1.

(1)	C.G. TRIM CMD	V90X8309X
(2)	ABORT OMS IGN CMD	V90X8319X
(3)	ABORT RCS + X ON CMD	V90X8314X
(4)	20 RCS NULL JETS ON CMD	V90X8317X
(5)	OMS TO RCS INTERCONNECT CMD	V90X8312X
(6)	OMS L POD HE ISLN VLV A OP	V43K4180X
(7)	OMS L POD VAPOR ISLN VLV 1 OP	V43K4182X
(8)	OMS R POD HE ISLN VLV A OP	V43K5180X
(9)	OMS R POD VAPOR ISLN VLV 1 OP	V43K5182X
(10)	OMS L POD HE ISLN VLV B OP	V43K4181X
(11)	OMS L POD VAPOR ISLN VLV 2 OP	V43K4183X
(12)	OMS R POD HE ISLN VLV B OP	V43K5181X
(13)	OMS R POD VAPOR ISLN VLV 2 OP	V43K5183X
(14)	OMS CUTOFF CMD	V90X8318X
(15)	OMS TO RCS RETURN TO NORMAL CONFIG CMD	V90X8313X
(16)	ORBITER DUMP ENABLE	V93X6980X
(17)	OMS/RCS INTERCONNECT INH/ENA CMD	V93X5348X
(18)	DUMP ENA INIT FLAG	(INTERNAL)
(19)	IGN PRESS DELAY TIMER	(INTERNAL)
(20)	RCS 4 + X ON TIMER	(INTERNAL)
(21)	ORBITER DUMP INHIBIT	V93X6981X
(22)	OME ONLY FLAG	V90X8051X

(23) C.G. TRIM DELAY TIMER (INTERNAL)

Step 29. This step controls the MM304 RCS propellant dump via the RCS 4 + X jets.

The following signals are monitored:

(a)	AFT RCS DUMP ENABLE	V93X6849X
(b)	AFT RCS DUMP DURATION	V93W6958C
(c)	AFT RCS DUMP COUNTER	V90W8229C
(d)	AFT RCS TTG SF	V94J3757C

If (a) is true, proceed to the next if statement. Otherwise, terminate (1), and return to Step 1.

If (b) > (c), issue (1) below, increment (c) by the product of (d) and 80 msec, and return to Step 1.

If (b) ≤ (c), terminate (1), set (a) = false, and return to Step 1.

(1) ABORT RCS + X ON CMD V90X8314C

ABORT CONTROL SEQUENCE INITIALIZATION

NOMENCLATURE	INITIAL VALUE	UNITS
BURN TIME SEL COMPLETE FLAG	FALSE	
ATO ABORT SELECTED	FALSE	
MM602 DUMP INIT FLAG	FALSE	
CG TRIM DELAY TIMER	0.0	SEC
IGN PRESS DELAY TIMER	0.0	SEC
DUMP ENA INIT FLAG	FALSE	
RCS 4 + X ON TIMER	0.0	SEC
OME ONLY FLAG	FALSE	
PREMECO ICNCT COMPLETE FLAG	FALSE	
IGN PRESS DELAY INIT	FALSE	
2 OME DUMP FLAG	FALSE	
OMS NZ DUMP INHIBIT FLAG	FALSE	
SERC FLAG	FALSE	

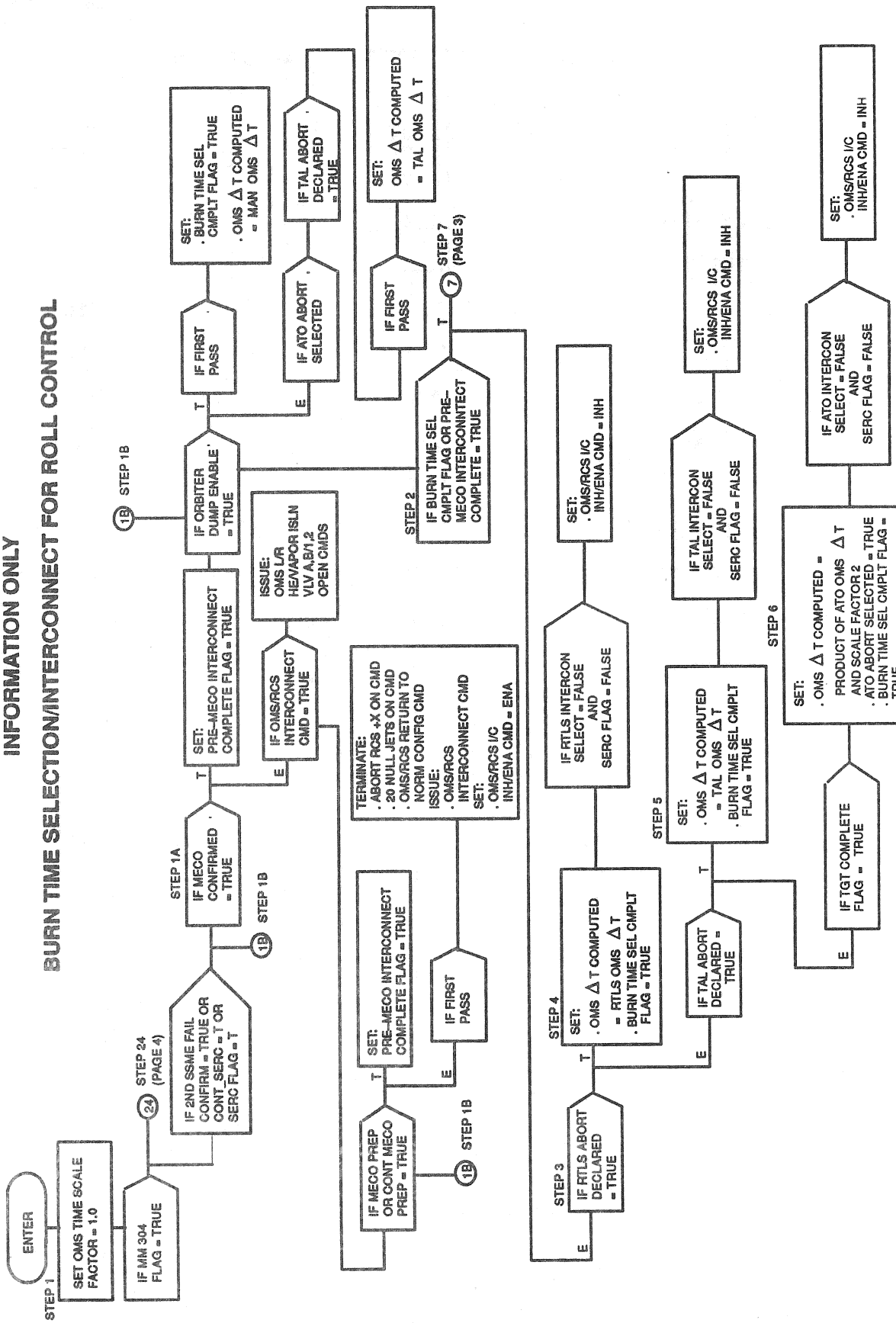

Figure 4.192. Abort Control Sequence (Sheet 1 of 7)

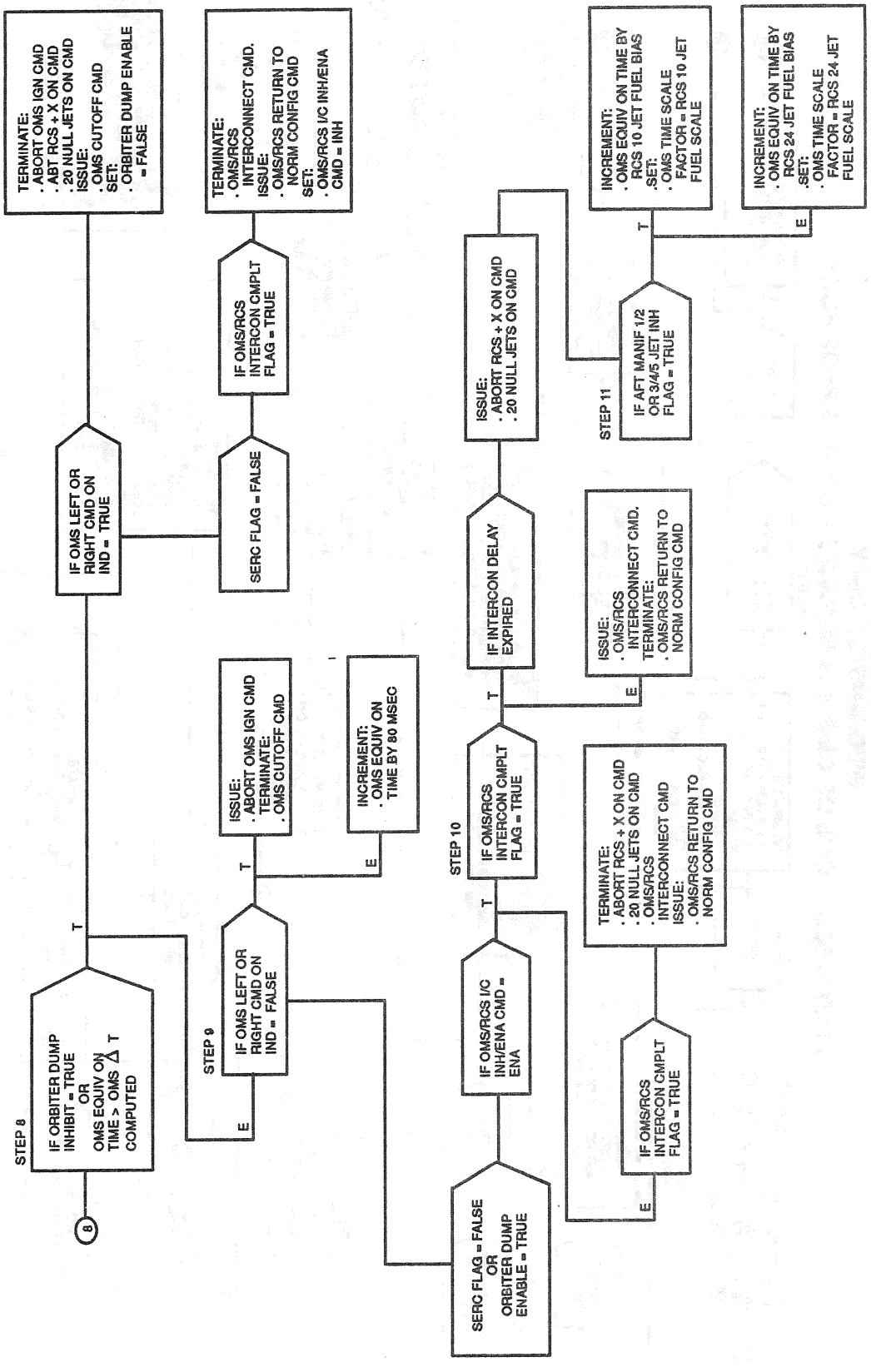

Figure 4.192. Abort Control Sequence (Sheet 2 of 7)

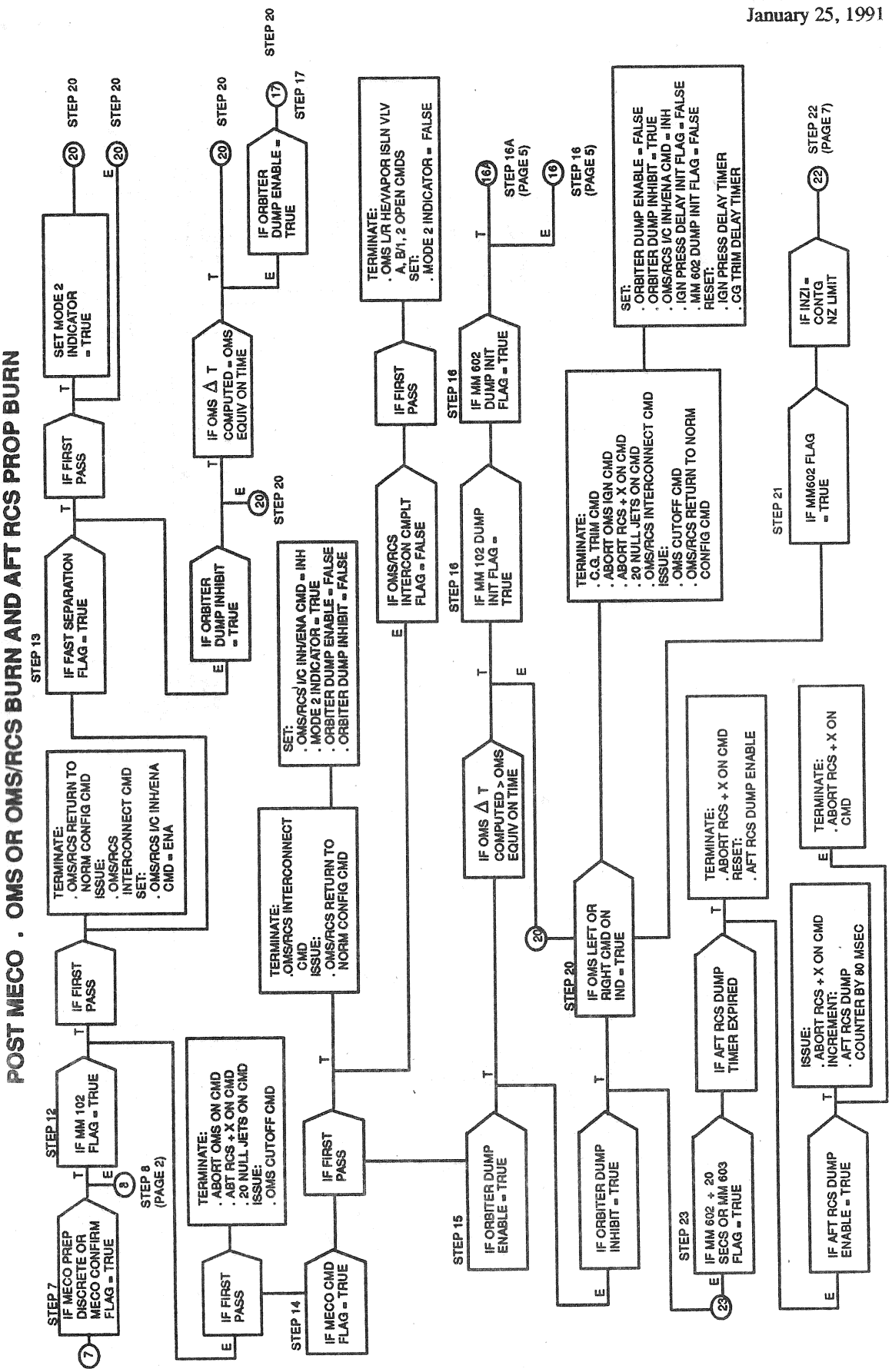

Figure 4.192. Abort Control Sequence (Sheet 3 of 7)

MAJOR MODE 304 – OMS OR OMS/RCS BURN AND AFT RCS PROP BURN

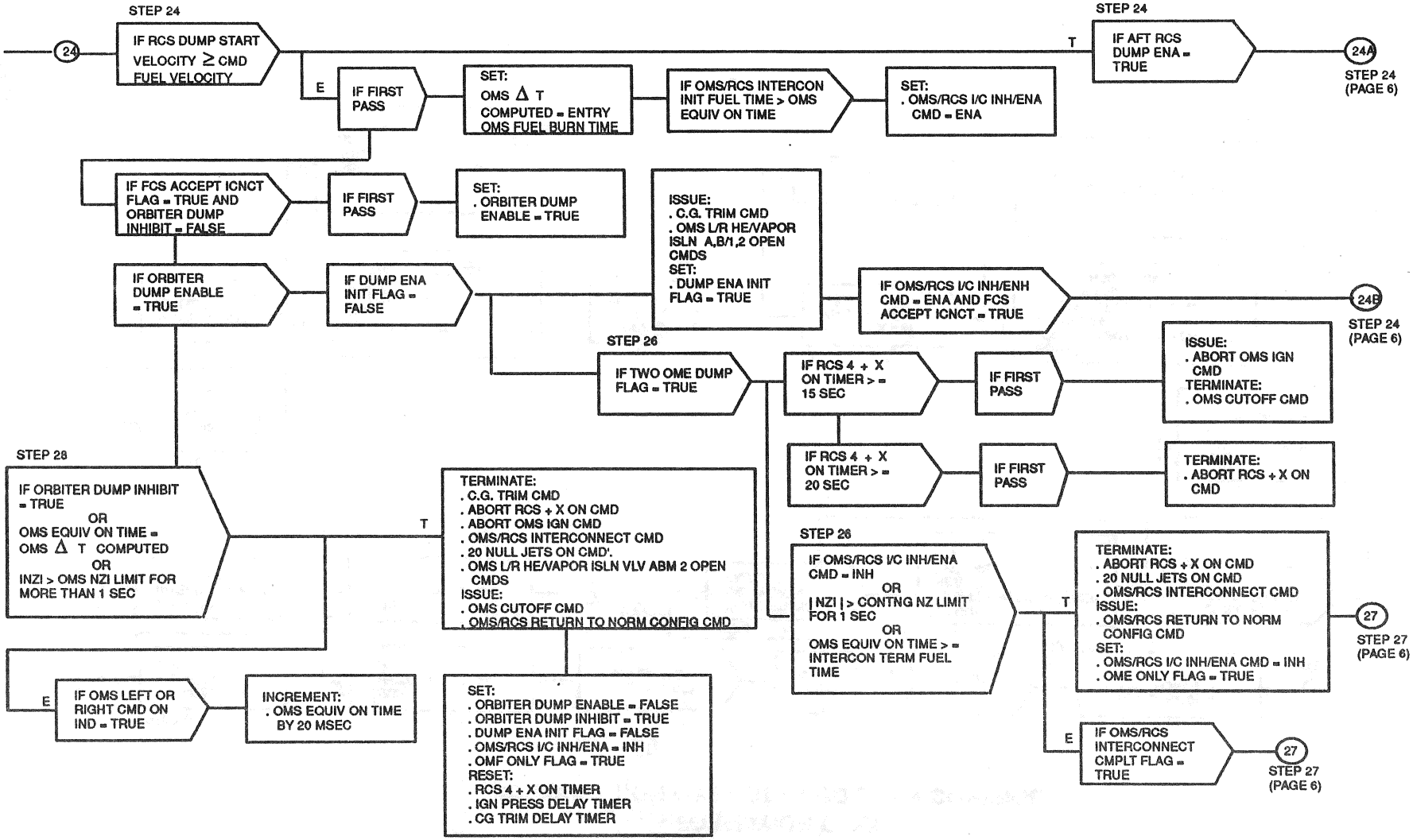

Figure 4.192. Abort Control Sequence (Sheet 4 of 7)

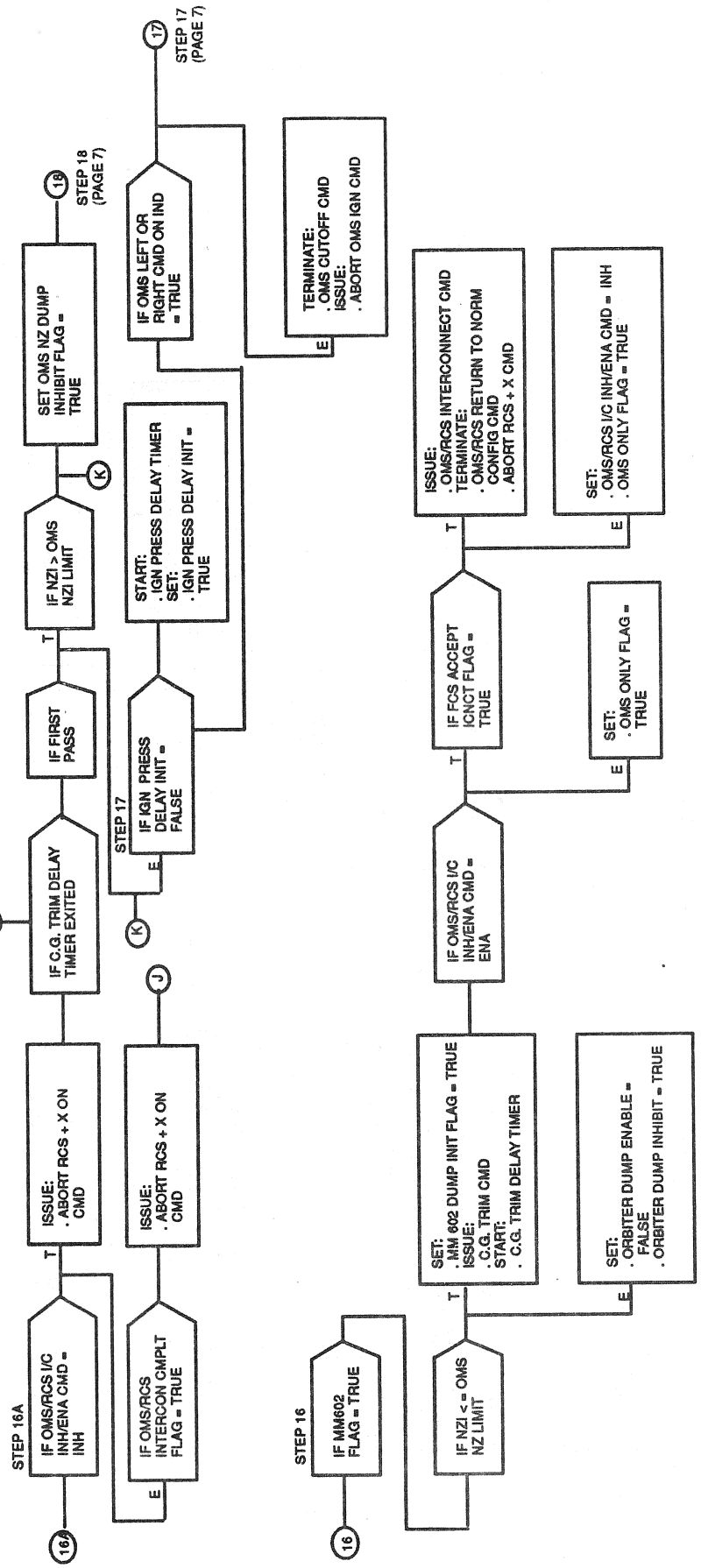

Figure 4.192. Abort Control Sequence (Sheet 5 of 7)

CONTINUATION OF MM304 BURN CONTROL

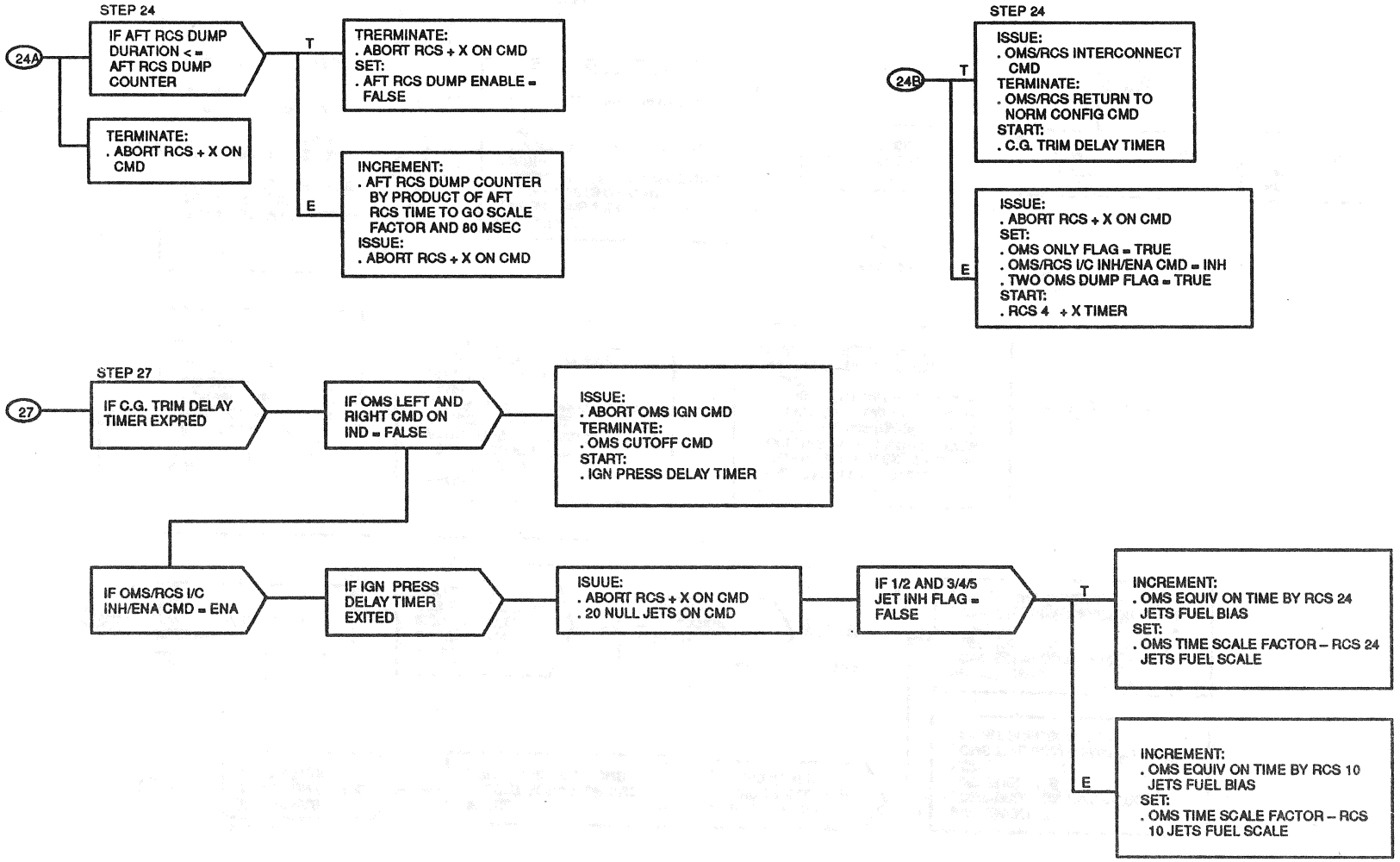

Figure 4.192. Abort Control Sequence (Sheet 6 of 7)

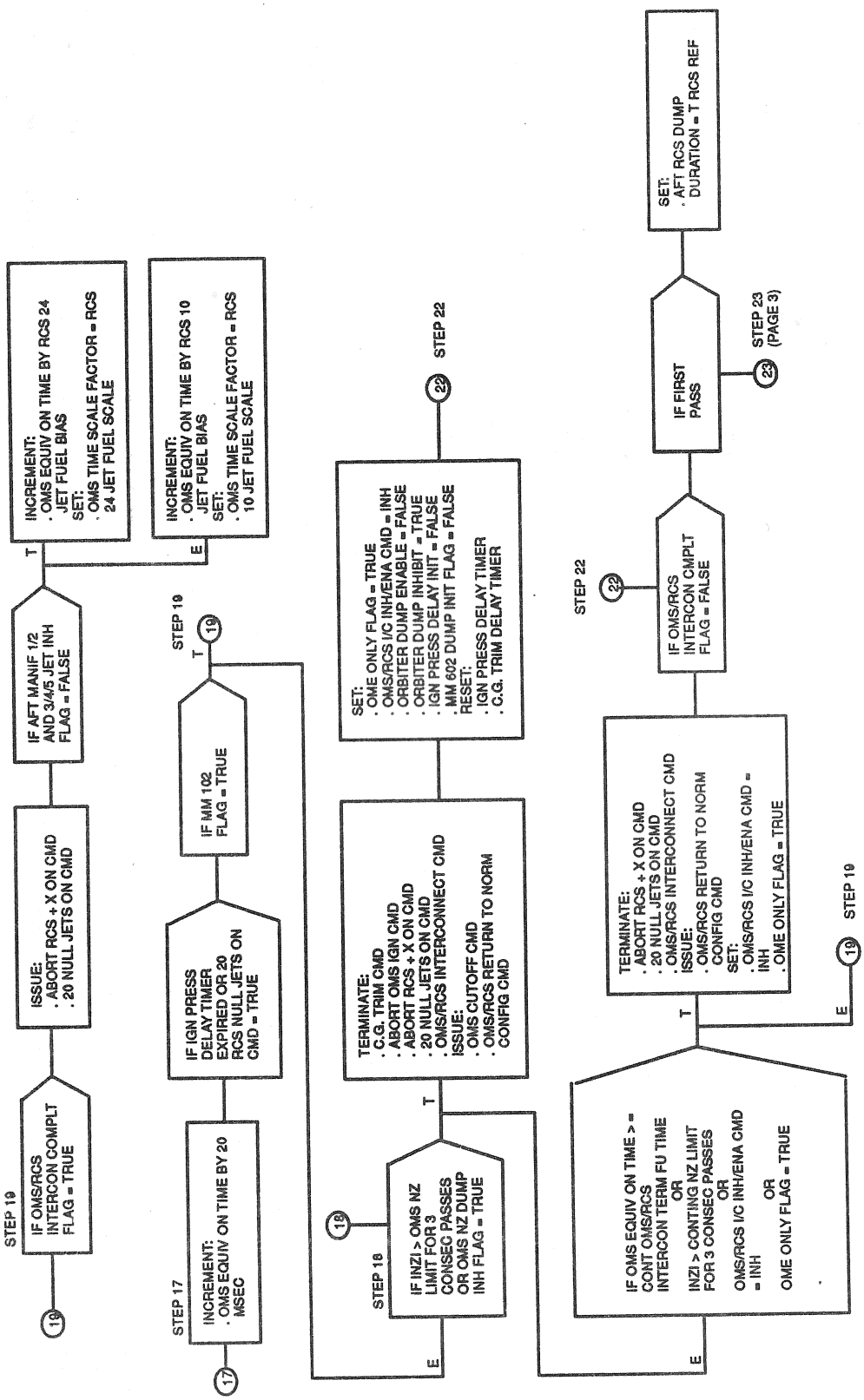

Figure 4.192. Abort Control Sequence (Sheet 7 of 7)

TABLE 4.3.1.4–1. ABORT CONTROL SEQUENCER (G4.192) INPUT/OUTPUT FUNCTIONAL PARAMETERS

DBFN: D3B027-F PN: VP707100049P00L INPUT FUNCTIONAL PARAMETERS FOR ABT CNTL SEQ

FSSR NAME	M/S ID	NOMENCLATURE	SOURCE	UNITS	DATA TYPE	PREC	LAST CRS
AFT_RCS_DUMP_ENABLE	V93X6949XA	AFT RCS DUMP ENABLE	OVERRIDE DISP		BD		90114B
							89149B
AFT_RCS_TTG_SF	V94J3757CA	AFT RCS TIME SCALE FACTOR	E/L RCS CMD SOP				90114B
CLOCK/CLOCKTIME	V91W5000C	CLOCK-COMPUTER(GMT)	FCOS	S			
CONT_MECO_PREP_FLAG	V90X8480XA	CONTINGENCY MECO PREP DISCRETE	PW RTLS GUID				90114B
CONT_MECO_PREP_FLAG	V90X8480XB	CONTINGENCY MECO PREP DISCRETE	XXXXXX TRAJ DISP				89990E
CONT_SERC	V93X6682X	CONT SINGLE ENG ROLL CNTL FLAG	XXXXXX TRAJ DISP		BD		89990E
FAST_SEP_FLAG	V90X8267X	FAST SEPARATION FLAG	ET SEP SEQ				79643A
FCS_ACCEPT_ICNCT	V90X8296XB	INTERCONNECTED DUMP CONSTRAINT	GRTLS DAP				90114B
FCS_ACCEPT_ICNCT	V90X8296XA	INTERCONNECTED DUMP CONSTRAINT	AEROJET DAP				90114B
GUID_MECO_PREP_FLAG	V90X1989XA	MECO PREPARATION DISCRETE	ASC 2STG GUID				
GUID_MECO_PREP_FLAG	V90X1989XB	MECO PREPARATION DISCRETE	PW RTLS GUID				
K2	V90J8517C	SCALE FACTOR 2	AOA/ATO TGT				
MECO_CMD	V90X8569XA	MECO COMMAND FLAG	SSME OPS				90114B
MECO_CONFIRMED	V90X8561X	MECO CONFIRMED FLAG	SSME OPS		BD		89990E
							89599C
MM_CODE_102/MM_102	V90X8158X	MAJOR MODE 102 FLAG	MSC				89990E
							90115
MM_CODE_304/MM_304	V90X8161X	MAJOR MODE 304 FLAG	MSC				89991E
MM_CODE_602/MM_602	V90X8174X	MAJOR MODE 602 FLAG	MSC				89599C
MM_CODE_603/MM_603	V90X8122X	MAJOR MODE 603 FLAG	MSC				89599C
NZ	V90A5381C	SELECTED AA NORMAL ACCEL	SF	G	SPL		89474B
OMS_L_ON_CMD_IND	V90X8271X	OMS-L ON CMD IND	OMS FIRE SEQ				90120B
							89461
OMS_R_ON_CMD_IND	V90X8272X	OMS-R ON CMD IND	OMS FIRE SEQ				90120B
							89461
ORBITER_DUMP_ENA	V93X6980XA	ORBITER DUMP ENABLE	OVERRIDE SPEC				89449
ORBITER_DUMP_ENA	V93X6980XD	ORBITER DUMP ENABLE	XXXXXX TRAJ DISP				89990E
ORBITER_DUMP_INH	V93X6981XA	ORBITER DUMP INHIBIT	OVERRIDE SPEC				89449
ORBITER_DUMP_INH	V93X6981XB	ORBITER DUMP INHIBIT	XXXXXX TRAJ DISP				89990E
REL_VEL_MAG/V	V95L0151CC	GND REL VEL MAGNITUDE IN M50 SYS	ENT UPP	FT/S			90114B
							89250B
S_ABORT_CONTROL	V90X8504X	TGT COMPLETE FLAG	AOA/ATO TGT				
SEC_ME_FL_CNFM	V90X1721X	2ND SSME FAIL CONFIRM	ASC DAP				89990E
TAL_ABORT_DECLARED	V90X8658X	TAL ABORT DECLARED	MSC				89245D
	V90X8282X	OMS TO RCS INTERCONNECT COMP FLAG	ABT OMS/RCS CONN		BD		90114B
							89561A
	V90X8285X	AFT MANIFOLD 1/2 JET INH FLAG *	ABT OMS/RCS CONN		BD		90114B
							59126H
	V90X8286X	AFT MANIFOLD 3/4/5 JET INH FLAG	ABT OMS/RCS CONN		BD		90114B
							59126H
	V90W8325CB	OMS DELTA T COMPUTED	OVERRIDE SPEC	S	SPL		90114B

TABLE 4.3.1.4–1. ABORT CONTROL SEQUENCER (G4.192) INPUT/OUTPUT FUNCTIONAL PARAMETERS

DBFN: D3B027-F PN: VP707100049P00L INPUT FUNCTIONAL PARAMETERS FOR ABT CNTL SEQ

FSSR NAME	M/S ID	NOMENCLATURE	SOURCE	UNITS	DATA TYPE	PREC	LAST CRS
	V90X8637XA	RTLS ABORT DECLARED	MSC				89991E
							89599C
	V90X8637XB	RTLS ABORT DECLARED	ET SEP SEQ				89991E
	V93X5348XA	OMS/RCS INTERCONNECT INH/ENA CMD	OVERRIDE DISP				
	V93X5348XC	OMS/RCS INTERCONNECT INH/ENA CMD	ABT OMS/RCS CONN				89210B
	V93W6958C	AFT RCS DUMP DURATION	OVERRIDE DISP	SEC			90114B
	V93W8325CB	OMS DELTA T COMPUTED	OVERRIDE SPEC				90114B

TABLE 4.3.1.4–1. ABORT CONTROL SEQUENCER (G4.192) INPUT/OUTPUT FUNCTIONAL PARAMETERS

DBFN: D3B027-F PN: VP707100049P00L OUTPUT FUNCTIONAL PARAMETERS FROM ABT CNTL SEQ

FSSR NAME	M/S ID	NOMENCLATURE	DESTINATION	UNITS	DATA TYPE	PREC	LAST CRS
AFT_RCS_DUMP_CNTR	V90W8229C	AFT RCS DUMP COUNTER	OVERRIDE SPEC	S			90114B
AFT_RCS_DUMP_ENABLE	V93X6949XB	AFT RCS DUMP ENABLE	OVERRIDE DISP		BD		89149B
OME_ONLY_FLAG	V90X8051X	OME ONLY FLAG	OVERRIDE DISP				90114B
S_OMS_CUTOFF	V90X8318XA	OMS CUTOFF CMD	ASC 2STG GUID,PW RTLS GUID,MSC, OMS FIRE SEQ,PW CONT GUID				89990E 89461
S_OMS_IGN	V90X8319X	ABORT OMS IGNITION CMD	MSC,ASC 2STG GUID,PW RTLS GUID, PW CONT GUID				89990E 89598A
S_RCS_IGN	V90X8314X	ABORT RCS +X ON CMD	ASC 2STG GUID,PW RTLS GUID, ASC RCS CMD SOP,PW CONT GUID, E/L RCS CMD SOP,TLM		BD		89990E
S_RCS_NULL20	V90X8317X	20 RCS NULL JETS ON CMD	ASC 2STG GUID,PW RTLS GUID, ASC RCS CMD SOP,PW CONT GUID, E/L RCS CMD SOP,TLM		BD		89990E
T1	V90W8320C	OMS EQUIVALENT ON TIME	AOA/ATO TGT,TLM,OVERRIDE SPEC	S	SPL		
	V43K4180XC	OMS-L POD HE ISLN VLV A OP	HDWR				
	V43K4181XC	OMS-L POD HE ISLN VLV B OP	HDWR				90114B
	V43K4182XC	OMS-L POD VAPOR ISLN VLV 1 OP	PCA A1				
	V43K4183XC	OMS-L POD VAPOR ISLN VLV 2 OP	PCA A3				90114B
	V43K5180XC	OMS-R POD HE ISLN VLV A OP	HDWR				
	V43K5181XC	OMS-R POD HE ISLN VLV B OP	HDWR				90114B
	V43K5182XC	OMS-R POD VAPOR ISLN VLV 1 OP	PCA A1				
	V43K5183XC	OMS-R POD VAPOR ISLN VLV 2 OP	PCA A3				90114B
	V90X8308X	MODE 2 INDICATOR	ABT OMS/RCS CONN				
	V90X8309X	C.G. TRIM	OMS TVC CMD SOP				
	V90X8312X	OMS TO RCS INTERCONNECT CMD	ABT OMS/RCS CONN,RCS REG SEQ, RCS/RCS XFEED,MSC,TLM		BD		89599C
	V90X8313X	OMS TO RCS RTRN TO NORM CONFIG CMD	ABT OMS/RCS CONN,MSC,TLM		BD		89599C
	V90W8325CA	OMS DELTA T COMPUTED	OVERRIDE SPEC,TLM	S	SPL		90114B
	V90X8913X	SERC FLAG	OVERRIDE DISP				89990E
	V93X5348XB	OMS/RCS INTERCONNECT INH/ENA CMD	OVERRIDE DISP,TLM				
	V94J3755C	OMS TIME SCALE FACTOR	OVERRIDE SPEC				

TABLE 4.3.1.4–2. ABORT CONTROL SEQUENCER (G4.192) I–LOADS

DBFN:0484

FSSR NAME	MSID	ENG UNIT	DT	PR	D	S	PR	FCTN	CAT
ATO_ICNCT_SEL	V99U9993C	ND	D		M	C	G4.192		AAD7
ATO_OMS_DT	V97U9798C	SEC	F	S	M	C	G4.192		AAD7
CONT_OMS_RCS_ICNCT_TERM_FU_TIME	V99U9718C	SEC	F	S	M	P	G4.192		QTO8
CONTINGENCY_NZ_LMT	V97U9837C	G	F	S	M	C	G4.192		QTO8
ENTRY_OMS_FUEL_BURN_TIME	V99U9571C	SEC	F	S	M	C	G4.192 G6.47		QTO8
ICNCT_DELAY	V99U9786C	SEC	F	S	M	C	G4.192		QID0
MANUAL_OMS_DT	V99U9717C	SEC	F	S	M	C	G4.192		QRP3
OMS_NZ_LIM	V99U9697C	G	F	S	M	C	G4.192		QTO8 QTO8
OMS_RCS_INTERCON_INIT_FU_TIME	V99U9716C	SEC	F	S	M	C	G4.192		QTO8
OMS_RCS_INTERCON_TERM_FU_TIME	V99U9952C	SEC	F	S	M	C	G4.192		QTO8
RCS_10_JET_FU_BIAS	V99U9775C	SEC	F	S	M	C	G4.192		QRD1
RCS_10_JET_FU_SCALE	V99U9776C	ND	F	S	M	C	G4.192		QRD1
RCS_24_JET_FU_BIAS	V99U9772C	SEC	F	S	M	C	G4.192		QRD1
RCS_24_JET_FU_SCALE	V99U9773C	ND	F	S	M	C	G4.192		QRD1
RTLS_ICNCT_SEL	V99U9991C	ND	D		M	C	G4.192		QRP3
RTLS_OMS_DT	V97U9780C	SEC	F	S	M	C	G4.192		QRP3
START_DUMP_VELOCITY	V99U9573C	FT/SEC	F	S	M	C	G4.192		QTR2
T_RCS_REF	V97U9828C	SEC	F	S	M	C	G4.192		QAC0
TAL_ICNCT_SEL	V99U9992C	ND	D		M	C	G4.192		QTP4
TAL_OMS_DT	V97U9786C	SEC	F	S	M	C	G4.192		QTP4

TABLE 4.3.1.4–3. ABORT CONTROL SEQUENCER (G4.192) K–LOADS

DBFN:0558

FSSR NAME DESCRIPTION	MSID	MC KLOAD VALUE		ENG UNIT	DT PR S PR FCTN	LAST CR EQTN MSID
CG_TRIM_DELAY	V97U9836C	+4.5	E+00	SEC	F S C G4.192	29551B
IGN_PRESS_DELAY	V97U9838C	+2.0	E+00	SEC	F S C G4.192	29551B

TABLE 4.3.1.4–4. ABORT CONTROL SEQUENCER (G4.192) CONSTANTS

DBFN:0558

FSSR NAME DESCRIPTION	MSID	MC	CONSTANT VALUE	ENG UNIT	DT	PR	S	PR FCTN	LAST CR
NO REQUIREMENTS									

4.3.2 Abort OMS/RCS Interconnect (4.184)

4.3.2.1 Introduction

The OMS/RCS interconnect function provides the control necessary to feed OMS propellants to RCS jets when required by an abort. In addition, after completion of the burn, controls are provided for reconfiguration to the normal RCS and OMS propellant feed from their respective tanks.

4.3.2.2 Overview

When the abort control sequence has issued a request for an interconnect, the OMS/RCS interconnect sequence performs the following functions. On the first pass, the AFT MANIFOLD JET INHIBIT 1/2 and 3/4/5 FLAGS are set false, and all affected OMS/ RCS propellant valve commands are removed to establish a known condition. The RCS 1/2 and 3/4/5 ALL JET INHIBIT FLAGS are set to true to inhibit all AFT RCS jet firings during the interconnect process. Then the RCS propellant tank isolation valves are commanded closed.

Prior to opening the RCS crossfeed valves, the status of the RCS tank isolation valves is monitored. If any of the tank isolation valves do not indicate closed, or the associated COMMFAULT status indicates true, the corresponding AFT MANIFOLD JET INHIBIT FLAG is set true to inhibit the use of jets on those manifolds for dumping OMS propellants. The RCS crossfeed valves are commanded closed and a set of RCS tank isolation valves are commanded open for those manifolds whose jets are inhibited. If any of the RCS aft crossfeed valves have been commanded opened, the OMS pod crossfeed "B" valves are commanded open.

If all the jets have been inhibited in the above process, the RCS tank isolation valves are opened, the OMS TO RCS INTERCONNECT CMD set false, the OMS TO RCS RTRN TO NORM CONFIG CMD set true, the OMS TO RCS INTERCONNECT COMPLETE FLAG is set false to allow proper sequencing of the Abort Control Sequence, and the OMS/RCS INTERCONNECT INH/ENA CMD set false (INHIBIT), and the sequence is terminated.

The sequence monitors the RCS crossfeed valves which have been commanded open. If all of the valves which were commanded open indicate open, and none of the associated COMMFAULT status indicates true, the OMS pod crossfeed valves "B" are checked and the OMS pod crossfeed "A" valves commanded open if any "B" valve fails to open. If any of the OMS pod crossfeed "A" valves do not indicate open, the OMS TO RCS INTERCONNECT CMD is set false, the OMS TO RCS RTRN TO NORM CONFIG CMD is set true, and the OMS TO RCS INTERCONNECT COMPLETE FLAG is set true to allow for the proper sequencing of the ABT CNTL sequence and the OMS/RCS INH/ENA CMD is set false (INHIBIT) and the interconnect sequence returns to begin the return to normal process. If all OMS pod crossfeed "B" or "A" valves indicate open, then the OMS TO RCS INTERCONNECT COMPLETE FLAG is set true. If any of the jets have been inhibited, the RCS crossfeed valves for that manifold are closed and after a delay of 1.5 seconds the RCS tank isolation valves are opened. Then, after another 1.5 second delay, the OMS TO RCS INTERCONNECT COMPLETE FLAG is set true, and the sequence is terminated.

When the OMS/RCS interconnect is complete and if none of the jets have been inhibited, the sequence monitors the status of the RCS tank isolation valves. If any RCS tank isolation valve closed indication is lost for three consecutive passes, an internal flag is set to indicate which manifold requires reconfiguration and the RCS crossfeed valves for the affected manifolds are commanded closed. After a delay of 1.5 seconds the RCS tank isolation valves for those manifolds are commanded open. While the valves are

being reconfigured, a flag is set to inhibit all jet firings from that manifold until the propellant feed from the RCS tanks can be established. The sequence will then be terminated. If a COMMFAULT status for the RCS tank isolation valves indicates true for three consecutive cycles, the manifold jet inhibit flag for those manifolds is set true for those manifolds, and the monitor function is terminated.

When the abort control sequence requests a return to normal configuration the following functions are performed. All affected OMS/RCS propellant valve commands are set false to establish a known condition. If a Mode 2 return to normal has not been requested, then the ALL JET INHIBIT FLAGS are set true to inhibit all aft jet firings during the return to normal process if the respective AFT MANIFOLD JET INHIBIT FLAGS are false. Then, sequentially, the OMS pod crossfeed valves are commanded closed, and the RCS tank isolation valves are commanded open. Prior to closing the RCS crossfeed valves, the 1/2 manifold RCS tank isolation valves are monitored. If any of the 1/2 tank isolation valves does not indicate open, or the associated COMMFAULT status indicates true, the RCS crossfeed valves between that manifold and the companion 3/4/5 manifold will not be closed, providing RCS propellants to the affected 1/2 manifold. Finally, as determined by the above check, those RCS crossfeed valves to be closed are commanded closed and the OMS/RCS INTERCONNECT COMPLETE FLAG, AFT MANIFOLD JET INHIBIT FLAGS, and the ALL JET INHIBIT FLAGS are set false, and the sequence is terminated.

During a Mode 2 return to normal sequence, continuous propellant flow is provided to the RCS for flight control and the ALL JET INHIBIT FLAGS remain false. The sequential order of the valve commands begins with the opening of all RCS tank isolation valves. Prior to closing the RCS crossfeed valves, the 1/2 manifold RCS tank isolation valves are monitored. If any of the 1/2 tank isolation valves do not indicate open, or the associated COMMFAULT status indicates true, the RCS crossfeed valves between that manifold and the companion 3/4/5 manifold will be commanded open providing RCS propellants to the affected 1/2 manifold. Finally, as determined by the above check, those RCS crossfeed valves are commanded closed, OMS crossfeed valves are commanded closed and the OMS/RCS INTERCONNECT COMPLETE FLAG and AFT MANIFOLD INHIBIT FLAGS are set false and the sequence is terminated.

When either an OMS/RCS interconnect or return to normal configuration has been requested by the Abort Control Sequence, the Abort OMS/RCS Interconnect Sequence will perform the requested function to completion prior to recognizing another request. RCS jet firing commands will be inhibited during an interconnect and a non–Mode 2 return to normal while the sequence is providing the requested function. This is controlled by the sequence setting RCS 1/2(3/4/5) ALL JET INHIBIT FLAGS true to be used by the Ascent and Entry/Landing RCS Command SOP.

4.3.2.3 DETAIL REQUIREMENTS

Step 1. This step determines if the OMS–to–RCS interconnect or return–to–normal process is required.

When either an OMS/RCS interconnect or return to normal configuration has been requested by the Abort Control Sequence, the Abort OMS/RCS Interconnect Sequence will perform the requested function to completion prior to recognizing another request. In this step, use is made of two internal flags to control the process, these are the OMS/RCS I/C IN PROGRESS FLAG and the OMS/RCS RTRN TO NORM IN PROGRESS FLAG. Both of these flags are initialized to the false state.

The following signals are monitored:

(a)	OMS TO RCS INTERCONNECT CMD	V90X8312X
(b)	OMS TO RCS RTRN TO NORM CONFIG CMD	V90X8313X

(c)	OMS TO RCS INTERCONNECT COMPLETE FLAG	V90X8282X
(d)	INTERCONNECT MONITOR FLAG	INTERNAL
(e)	OMS/RCS I/C IN PROGRESS FLAG	INTERNAL
(f)	OMS/RCS RTRN TO NORM IN PROGRESS FLAG	INTERNAL
(g)	MODE 2 INDICATOR	V90X8308X

If (e) is true, proceed to the next steps as required to complete the interconnect sequence, otherwise, go to the next if statement.

If (f) is true, proceed to the next steps as required to complete the return to normal configuration sequence, otherwise, go to the next if statement.

If (a) is true, and (c) is false, terminate (1) thru (76) below, upon completion of termination of all commands, change set and reset discretes for commands (63) thru (76) to false, set (77), (78), (79), and (82) false, set (80), (81), and (83) true, set (85) through (101) equal to zero, and go to Step 2. Otherwise go to the next if statement.

If (b) is true, and (c) is true, terminate (1) thru (76) below, set (79) and (82) false, set (84) true, and proceed to monitor (g). Otherwise, proceed to monitor (c) and (d).

If (g) is true, proceed to Step 12. Otherwise, set (80) and (81) true and proceed to Step 9.

If (c) and (d) are both true, proceed to Step 7. Otherwise, terminate the sequence.

(1)	OMS–L POD XFD VLVS A CMD 1 CL	V43K4283X
(2)	OMS–L POD OXDZR XFD VLV A CMD 2 CL	V43K4285X
(3)	OMS–L POD FUEL XFD VLV A CMD 2 CL	V43K4385X
(4)	OMS–L POD XFD VLVS B CMD 1 CL	V43K4287X
(5)	OMS–L POD OXDZR XFD VLV B CMD 2 CL	V43K4289X
(6)	OMS–L POD FUEL XFD VLV B CMD 2 CL	V43K4389X
(7)	OMS–R POD XFD VLVS A CMD 1 CL	V43K5283X
(8)	OMS–R POD OXDZR XFD VLV A CMD 2 CL	V43K5285X
(9)	OMS–R POD FUEL XFD VLV A CMD 2 CL	V43K5385X
(10)	OMS–R POD XFD VLVS B CMD 1 CL	V43K5287X
(11)	OMS–R POD OXDZR XFD VLV B CMD 2 CL	V43K5289X
(12)	OMS–R POD FUEL XFD VLV B CMD 2 CL	V43K5389X
(13)	RCS–L AFT XFD VLV–1/2 GPC CL A	V42K2416X
(14)	RCS–L AFT OX XFD VLV–1/2 GPC CL B	V42K2418X
(15)	RCS–L AFT FU XFD VLV–1/2 GPC CL B	V42K2422X
(16)	RCS–L AFT XFD VLV–3/4/5 GPC CL A	V42K2428X
(17)	RCS–L AFT OX XFD V–3/4/5 GPC CL B	V42K2430X
(18)	RCS–L AFT FU XFD V–3/4/5 GPC CL B	V42K2434X
(19)	RCS–R AFT XFD VLV–1/2 GPC CLOSE A	V42K3416X
(20)	RCS–R AFT OX XFD V–1/2 GPC CLOSE B	V42K3418X
(21)	RCS–R AFT FU XFD V–1/2 GPC CLOSE B	V42K3422X
(22)	RCS–R AFT XFD VLV–3/4/5 GPC CL A	V42K3428X
(23)	RCS–R AFT OX XFD V–3/4/5 GPC CL B	V42K3430X

(24)	RCS–R AFT FU XFD V–3/4/5 GPC CL B	V42K3434X
(25)	RCS–L AFT TK ISLN V–1/2 GPC CL A	V42K2353X
(26)	RCS–L AFT OX TK ISLN V1/2 GPC CL B	V42K2354X
(27)	RCS–L AFT FU TK ISLN V1/2 GPC CL B	V42K2355X
(28)	RCS–L AFT OX TK ISLN V3/4/5 A GPC CL	V42K2357X
(29)	RCS–L AFT FU TK ISLN V3/4/5 A GPC CL	V42K2358X
(30)	RCS–L AFT OX TK ISLN V3/4/5 B GPC CL	V42K2360X
(31)	RCS–L AFT FU TK ISLN V3/4/5 B GPC CL	V42K2361X
(32)	RCS–R AFT TK ISLN V–1/2 GPC CL A	V42K3353X
(33)	RCS–R AFT OX TK ISLN V–1/2 GPC CL B	V42K3354X
(34)	RCS–R AFT FU TK ISLN V–1/2 GPC CL B	V42K3355X
(35)	RCS–R AFT OX TK ISLN V3/4/5 A GPC CL	V42K3357X
(36)	RCS–R AFT FU TK ISLN V3/4/5 A GPC CL	V42K3358X
(37)	RCS–R AFT OX TK ISLN V3/4/5 B GPC CL	V42K3360X
(38)	RCS–R AFT FU TK ISLN V3/4/5 B GPC CL	V42K3361X
(39)	OMS–L POD XFD VLVS A CMD 1 OP	V43K4282X
(40)	OMS–L POD OXDZR XFD VLV A CMD 2 OP	V43K4284X
(41)	OMS–L POD FUEL XFD VLV A CMD 2 OP	V43K4384X
(42)	OMS–L POD XFD VLVS B CMD 1 OP	V43K4286X
(43)	OMS–L POD OXDZR XFD VLV B CMD 2 OP	V43K4288X
(44)	OMS–L POD FUEL XFD VLV B CMD 2 OP	V43K4388X
(45)	OMS–R POD XFD VLVS A CMD 1 OP	V43K5282X
(46)	OMS–R POD OXDZR XFD VLV A CMD 2 OP	V43K5284X
(47)	OMS–R POD FUEL XFD VLV A CMD 2 OP	V43K5384X
(48)	OMS–R POD XFD VLVS B CMD 1 OP	V43K5286X
(49)	OMS–R POD OXDZR XFD VLV B CMD 2 0P	V43K5288X
(50)	OMS–R POD FUEL XFD VLV B CMD 2 OP	V43K5388X
(51)	RCS–L AFT XFD VLV–1/2 GPC OP A	V42K2402X
(52)	RCS–L AFT OX XFD VLV–1/2 GPC OP B	V42K2403X
(53)	RCS–L AFT FU XFD VLV–1 /2 GPC OP B	V42K2404X
(54)	RCS–L AFT XFD VLV3/4/5 GPC OP A	V42K2408X
(55)	RCS–L AFT OX XFD V–3/4/5 GPC OP B	V42K2409X
(56)	RCS–L AFT FU XFD V–3/4/5 GPC OP B	V42K2410X
(57)	RCS–R AFT XFD VLV–1/2 GPC OPEN A	V42K3402X
(58)	RCS–R AFT OX XFD V–1/2 GPC OPEN B	V42K3403X
(59)	RCS–R AFT FU XFD V–1/2 GPC OPEN B	V42K3404X
(60)	RCS–R AFT XFD VLV–3/4/5 GPC OPEN A	V42K3408X
(61)	RCS–R AFT OX XFD V–3/4/5 GPC OP B	V42K3409X
(62)	RCS–R AFT FU XFD V–3/4/5 GPC OP B	V42K3410X
(63)	RCS–L AFT TK ISLN V–1/2 GPC OP A	V42K2342X
(64)	RCS–L AFT OX TK ISLN V1/2 GPC OP B	V42K2343X
(65)	RCS–L AFT FU TK ISLN V1/2 GPC OP B	V42K2344X

(66)	RCS–L AFT OX TK ISLN V3/4/5 A GPC OP	V42K2346X
(67)	RCS–L AFT FU TK ISLN V3/4/5 A GPC OP	V42K2347X
(68)	RCS–L AFT OX TK ISLN V3/4/5 B GPC OP	V42K2349X
(69)	RCS–L AFT FU TK ISLN V3/4/5 B GPC OP	V42K2350X
(70)	RCS–R AFT TK ISLN V–1/2 GPC OP A	V42K3342X
(71)	RCS–R AFT OX TK ISLN V–1/2 GPC OP B	V42K3343X
(72)	RCS–R AFT FU TK ISLN V–1/2 GPC OP B	V42K3344X
(73)	RCS–R AFT OX TK ISLN V3/4/5 A GPC OP	V42K3346X
(74)	RCS–R AFT FU TK ISLN V3/4/5 A GPC OP	V42K3347X
(75)	RCS–R AFT OX TK ISLN V3/4/5 B GPC OP	V42K3349X
(76)	RCS–R AFT FU TK ISLN V3/4/5 B GPC OP	V42K3350X
(77)	AFT MANIFOLD 1/2 JET INH FLAG	V90X8285X
(78)	AFT MANIFOLD 3/4/5 JET INH FLAG	V90X8286X
(79)	INTERCONNECT MONITOR FLAG	INTERNAL
(80)	RCS 1/2 ALL JET INHIBIT FLAG	V90X8290X
(81)	RCS 3/4/5 ALL JET INHIBIT FLAG	V90X8291X
(82)	1/2 XFD/ISO FAIL FLAG	INTERNAL
(83)	OMS/RCS I/C IN PROGRESS FLAG	INTERNAL
(84)	OMS/RCS RTRN TO NORM IN PROGRESS FLAG	INTERNAL
(85)	I/C FAIL COUNTER	INTERNAL
(86)	FA 1 COMMFAULT CYC COUNTER	INTERNAL
(87)	RCS L OX TK POSN CYC COUNTER	INTERNAL
(88)	RCS L FU TK POSN CYC COUNTER	INTERNAL
(89)	FA3 COMMFAULT CYC COUNTER	INTERNAL
(90)	RCS R OX TK POSN CYC COUNTER	INTERNAL
(91)	RCS R FU TK POSN CYC COUNTER	INTERNAL
(92)	FA 2 COMMFAULT CYC COUNTER	INTERNAL
(93)	RCS L A OX TK POSN CYC COUNTER	INTERNAL
(94)	RCS L B OX TK POSN CYC COUNTER	INTERNAL
(95)	RCS L A FU TK POSN CYC COUNTER	INTERNAL
(96)	RCS L B FU TK POSN CYC COUNTER	INTERNAL
(97)	FA 4 COMMFAULT CYC COUNTER	INTERNAL
(98)	RCS R A OX TK POSN CYC COUNTER	INTERNAL
(99)	RCS R B OX TK POSN CYC COUNTER	INTERNAL
(100)	RCS R A FU TK POSN CYC COUNTER	INTERNAL
(101)	RCS R B FU TK POSN CYC COUNTER	INTERNAL

Step 2. This step commands RCS propellant tank isolation valves closed on initiation of the interconnect sequence.

Issue the following commands and return to Step 1 until at least 1.5 seconds have elapsed. Then proceed to Step 3.

RCS–L AFT TK ISLN V–1/2 GPC CL A	V42K2353X
RCS–L AFT OX TK ISLN V1/2 GPC CL B	V42K2354X
RCS–L AFT FU TK ISLN V1/2 GPC CL B	V42K2355X
RCS–L AFT OX TK ISLN V3/4/5 A GPC CL	V42K2357X
RCS–L AFT FU TK ISLN V3/4/5 A GPC CL	V42K2358X

RCS–L AFT OX TK ISLN V3/4/5 B GPC CL	V42K2360X
RCS–L AFT FU TK ISLN V3/4/5 B GPC CL	V42K2361X
RCS–R AFT TK ISLN V–1/2 GPC CL A	V42K3353X
RCS–R AFT OX TK ISLN V–1/2 GPC CL B	V42K3354X
RCS–R AFT FU TK ISLN V–1/2 GPC CL B	V42K3355X
RCS–R AFT OX TK ISLN V3/4/5 A GPC CL	V42K3357X
RCS–R AFT FU TK ISLN V3/4/5 A GPC CL	V42K3358X
RCS–R AFT OX TK ISLN V3/4/5 B GPC CL	V42K3360X
RCS–R AFT FU TK ISLN V3/4/5 B GPC CL	V42K3361X

Step 3. This step monitors the position of the RCS tank isolation valves, opening the RCS crossfeed valves for those manifolds with all tank isolation valves configured correctly. If any tank isolation valve (1/2 or 3/4/5) indicates not closed, an I/C fail counter will be incremented for processing in Step 5 and Step 6. If any RCS crossfeed valve is commanded open, the OMS pod crossfeed valves "B" are also commanded open.

The following signals are monitored:

(a)	RCS L AFT OX TANK ISLN VLV 1/2 CL	V42X2221X
(b)	RCS L AFT FU TANK ISLN VLV 1/2 CL	V42X2321X
(c)	RCS R AFT OX TANK ISLN VLV 1/2 CL	V42X3221X
(d)	RCS R AFT FU TANK ISLN VLV 1/2 CL	V42X3321X
(e)	RCS L AFT OX TANK ISLN VLV 1/2 OP	V42X2220X
(f)	RCS L AFT FU TANK ISLN VLV 1/2 OP	V42X2320X
(g)	RCS R AFT OX TANK ISLN VLV 1/2 OP	V42X3220X
(h)	RCS R AFT FU TANK ISLN VLV 1/2 OP	V42X3320X
(i)	RCS L AFT OX TANK ISLN VLV 3/4/5 A CL	V42X2223X
(j)	RCS L AFT OX TANK ISLN VLV 3/4/5 B CL	V42X2225X
(k)	RCS L AFT FU TANK ISLN VLV 3/4/5 A CL	V42X2323X
(l)	RCS L AFT FU TANK ISLN VLV 3/4/5 B CL	V42X2325X
(m)	RCS R AFT OX TANK ISLN VLV 3/4/5 A CL	V42X3223X
(n)	RCS R AFT OX TANK ISLN VLV 3/4/5 B CL	V42X3225X
(o)	RCS R AFT FU TANK ISLN VLV 3/4/5 A CL	V42X3323X
(p)	RCS R AFT FU TANK ISLN VLV 3/4/5 B CL	V42X3325X
(q)	FA 1 INPUT PROM SEG 3, 10 STATUS	V91X2845X
(r)	FA 3 INPUT PROM SEG 3, 10 STATUS	V91X2847X
(s)	FA 2 INPUT PROM SEG 3, 10 STATUS	V91X2846X
(t)	FA 4 INPUT PROM SEG 3, 10 STATUS	V91X2848X
(u)	I/C FAIL COUNTER	INTERNAL

If (a) thru (d) are not all true, or (e) thru (h) are not all false, or (q) or (r) is true, set (1) true, increment (3) by 1, and go to the next if statement. Otherwise, issue (4) thru (9) and go to the next if statement.

If (i) thru (p) are not all true, or if (s) or (t) is true, set (2) true, increment (3) by 1, and go to the next if statement. Otherwise, issue (10) thru (15) and go to the next if statement.

If (u) > 1 proceed to Step 6. Otherwise, Issue (16) thru (21) and return to Step 1 until at least 1.5 seconds have elapsed. Then proceed to Step 4.

(1)	APT MANIFOLD 1/2 JET INH FLAG	V90X8285X
(2)	AFT MANIFOLD 3/4/5 JET INH FLAG	V90X8286X
(3)	I/C FAIL COUNTER	INTERNAL
(4)	RCS–L AFT XFD VLV–1/2 GPC OP A	V42K2402X
(5)	RCS–L AFT OX XFD VLV–1/2 GPC OP B	V42K2403X
(6)	RCS–L AFT FU XFD VLV–1/2 GPC OP B	V42K2404X
(7)	RCS–R AFT XFD VLV–1/2 GPC OP A	V42K3402X
(8)	RCS–R AFT OX XFD VLV–1/2 GPC OP B	V42K3403X
(9)	RCS–R AFT FU XFD VLV–1/2 GPC OP B	V42K3404X
(10)	RCS–L AFT XFD VLV–3/4/5 GPC OP A	V42K2408X
(11)	RCS–L AFT OX XFD VLV–3/4/5 GPC OP B	V42K2409X
(12)	RCS–L AFT FU XFD VLV–3/4/5 GPC OP B	V42K2410X
(13)	RCS–R AFT XFD VLV–3/4/5 GPC OPEN A	V42K3408X
(14)	RCS–R AFT OX XFD V–3/4/5 GPC OP B	V42K3409X
(15)	RCS–R AFT FU XFD V–3/4/5 GPC OP B	V42K3410X
(16)	OMS–L POD XFD VLVS B CMD 1 OP	V43K4286X
(17)	OMS–L POD OXDZR XFD VLV B CMD 2 OP	V43K4288X
(18)	OMS–L POD FUEL XFD VLV B CMD 2 OP	V43K4388X
(19)	OMS–R POD XFD VLVS B CMD 1 OP	V43K5286X
(20)	OMS–R POD OXDZR XFD VLV B CMD 2 OP	V43K5288X
(21)	OMS–R POD FUEL XFD VLV B CMD 2 OP	V43K5388X

Step 4. This step checks the response of the RCS crossfeed valves which have been commanded open during the interconnect sequence. If any RCS crossfeed valve (1/2 or 3/4/5) failed to open, the sequence is directed to the step which will reconfigure the system to furnish propellants to those manifolds (1/2 or 3/4/5) from the RCS tanks.

The following signals are monitored:

(a)	RCS–L AFT OX XFD VLV 1/2 OP	V42X2236X
(b)	RCS–L AFT FU XFD VLV 1/2 OP	V42X2336X
(c)	RCS–R AFT OX XFD VLV 1/2 OP	V42X3236X
(d)	RCS–R AFT FU XFD VLV 1/2 OP	V42X3336X
(e)	RCS–L OX/FU XFD VLV 1/2 OP	V42X2251X
(f)	RCS–R OX/FU XFD VLV 1/2 OP	V42X2252X

(g)	RCS L AFT OX XFD VLV 3/4/5 OP	V42X2238X
(h)	RCS L AFT FU XFD VLV 3/4/5 OP	V42X2338X
(i)	RCS R AFT OX XFD VLV 3/4/5 OP	V42X3238X
(j)	RCS R AFT FU XFD VLV 3/4/5 OP	V42X3338X
(k)	RCS L OX/FU XFD VLV 3/4/5 OP	V42X2253X
(l)	RCS R OX/FU XFD VLV 3/4/5 OP	V42X2254X
(m)	AFT MANIFOLD 1/2 JET INH FLAG	V90X8285X
(n)	AFT MANIFOLD 3/4/5 JET INH FLAG	V90X8286X
(o)	FA 3 INPUT PROM SEG 3, 10 STATUS	V91X2847X
(p)	FA 4 INPUT PROM SEG 3, 10 STATUS	V91X2848X
(q)	I/C FAIL COUNTER	INTERNAL

If [(m) is false] and [(a) or (b) or (f) is false, or (o) is true] and [(c) or (d) or (e) is false, or (p) is true], increment (2) by 1, set (1) true, and go to the next if statement. Otherwise, go to the next if statement.

If [(n) is false] and [(g) or (h) or (l) is false, or (p) is true] and [(i) or (j) or (k) is false, or (o) is true], increment (2) by 1, and go to the next if statement. Otherwise, go to the next if statement.

If (q) = 0, proceed to Step 11, otherwise go to Step 5.

(1)	1/2 XFD/ISO FAIL FLAG	INTERNAL
(2)	I/C FAIL COUNTER	INTERNAL

Step 5. This step controls the reconfiguration process for returning propellant feed from the RCS tanks for those manifolds (1/2 and/or 3/4/5) whose interconnect to the OMS tanks was unsuccessful, or those manifolds for which the monitor function had lost the indication of RCS tank isolation valve closed.

The following signals are monitored:

(a)	AFT MANIFOLD 1/2 JET INH FLAG	V90X8285X
(b)	AFT MANIFOLD 3/4/5 JET INH FLAG	V90X8286X
(c)	I/C FAIL COUNTER	INTERNAL
(d)	1/2 XFD/ISO FAIL FLAG	INTERNAL

If (c) > 1, terminate (1) thru (18) below, issue (19) thru (36), then return to Step 1 until 1.5 seconds have elapsed. Then proceed to Step 6. Otherwise go to the next if statement.

If (a) or (b) is true, proceed to Step 6. Otherwise, go to the next if statement.

If (d) = true, terminate (1) thru (6) below, issue (19) thru (24), set (37) equal true, and return to Step 1 until at least 1.5 seconds has elapsed. Then proceed to Step 6. Otherwise, proceed to the next if statement.

If (d) is false, terminate (7) thru (12) below, issue (25) thru (30), set (38) equal true, and return to Step 1 until at least 1.5 seconds has elapsed. Then proceed to Step 6.

(1)	RCS–L AFT XFD VLV–1/2 GPC OP A	V42K2402X
(2)	RCS–L AFT OX XFD VLV–1/2 GPC OP B	V42K2403X
(3)	RCS–L AFT FU XFD VLV–1/2 GPC OP B	V42K2404X
(4)	RCS–R AFT XFD VLV–1/2 GPC OPEN A	V42K3402X
(5)	RCS–R AFT OX XFD V–1/2 GPC OPEN B	V42K3403X
(6)	RCS–R AFT FU XFD V–1/2 GPC OPEN B	V42K3404X
(7)	RCS–L AFT XFD VLV–3/4/5 GPC OP A	V42K2408X
(8)	RCS–L AFT OX XFD V–3/4/5 GPC OP B	V42K2409X
(9)	RCS–L AFT FU XFD V–3/4/5 GPC OP B	V42K2410X
(10)	RCS–R AFT XFD VLV–3/4/5 GPC OPEN A	V42K3408X
(11)	RCS–R AFT OX XFD V–3/4/5 GPC OP B	V42K3409X
(12)	RCS–R AFT FU XFD V–3/4/5 GPC OP B	V42K3410X
(13)	OMS–L POD XFD VLVS B CMD 1 OP	V43K4286X
(14)	OMS–L POD OXDZR XFD VLV B CMD 2 OP	V43K4288X
(15)	OMS–L POD FUEL XFD VLV B CMD 2 OP	V43K4388X
(16)	OMS–R POD XFD VLVS B CMD 1 OP	V43K5286X
(17)	OMS–R POD OXDZR XFD VLV B CMD 2 OP	V43K5288X
(18)	OMS–R POD FUEL XFD VLV B CMD 2 OP	V43K5388X
(19)	RCS–L AFT XFD VLV–1/2 GPC CL A	V42K2416X
(20)	RCS–L AFT OX XFD VLV–1/2 GPC CL B	V42K2418X
(21)	RCS–L AFT FU XFD VLV–1/2 GPC CL B	V42K2422X
(22)	RCS–R AFT XFD VLV–1/2 GPC CLOSE A	V42K3416X
(23)	RCS–R AFT OX XFD V–1/2 GPC CLOSE B	V42K3418X
(24)	RCS–R AFT FU XFD V–1/2 GPC CLOSE B	V42K3422X
(25)	RCS–L AFT XFD VLV–3/4/5 GPC CL A	V42K2428X
(26)	RCS–L AFT OX XFD V–3/4/5 GPC CL B	V42K2430X
(27)	RCS–L AFT FU XFD V–3/4/5 GPC CL B	V42K2434X
(28)	RCS–R AFT XFD VLV–3/4/5 GPC CL A	V42K3428X
(29)	RCS–R AFT OX XFD V–3/4/5 GPC CL B	V42K3430X
(30)	RCS–R AFT FU XFD V–3/4/5 GPC CL B	V42K3434X
(31)	OMS–L POD XFD VLVS B CMD 1 CL	V43K4287X
(32)	OMS–L POD OXDZR XFD VLV B CMD 2 CL	V43K4289X
(33)	OMS–L POD FUEL XFD VLV B CMD 2 CL	V43K4389X
(34)	OMS–R POD XFD VLVS B CMD 1 CL	V43K5287X
(35)	OMS–R POD OXDZR XFD VLV B CMD 2 CL	V43K5289X
(36)	OMS–R POD FUEL XFD VLV B CMD 2 CL	V43K5389X

(37)	AFT MANIFOLD 1/2 JET INH FLAG	V90X8285X
(38)	AFT MANIFOLD 3/4/5 JET INH FLAG	V90X8286X

Step 6. This step commands the RCS tank isolation valves open in the OMS TO RCS return to normal configuration and as part of an unsuccessful attempt to accomplish the OMS/RCS interconnect sequence. If both 1/2 and 3/4/5 manifold tank isolation valves have been commanded open, the OMS/RCS interconnect is inhibited and OMS propellant burn via RCS jets will not occur.

The following signals are monitored:

(a)	OMS TO RCS RTRN TO NORM IN PROGRESS FLAG	(INTERNAL)
(b)	I/C FAIL COUNTER	(INTERNAL)
(c)	AFT MANIFOLD 1/2 JET INH FLAG	V90X8285X

If (a) is true, issue (15) thru (28) below, and return to Step 1 until at least 1.5 seconds have elapsed. Then proceed to Step 10. Otherwise, go to the next if statement.

If (b) > 1, terminate (1) thru (14), issue (15) thru (28) below, and return to Step 1 until at least 1.5 seconds have elapsed. Then proceed to Step 11. Otherwise go to the next if statement.

If (c) is true, terminate (1) thru (6), issue (15) thru (20) below and return to Step 1 until at least 1.5 seconds have elapsed. Then proceed to Step 11. Otherwise, terminate (7) thru (14), issue (21) thru (28) below and return to Step 1 until at least 1.5 seconds have elapsed. Then proceed to Step 11.

(1)	RCS–L AFT TK ISLN V–1/2 GPC CL A	V42K2353X
(2)	RCS–L AFT OX TK ISLN V1/2 GPC CL B	V42K2354X
(3)	RCS–L AFT FU TK ISLN V1/2 GPC CL B	V42K2355X
(4)	RCS–R AFT TK ISLN V–1/2 GPC CL A	V42K3353X
(5)	RCS–R AFT OX TK ISLN V–1/2 GPC CL B	V42K3354X
(6)	RCS–R AFT FU TK ISLN V–1/2 GPC CL B	V42K3355X
(7)	RCS–L AFT OX TK ISLN V3/4/5 A GPC CL	V42K2357X
(8)	RCS–L AFT FU TK ISLN V3/4/5 A GPC CL	V42K2358X
(9)	RCS–R AFT OX TK ISLN V3/4/5 A GPC CL	V42K3357X
(10)	RCS–R AFT FU TK ISLN V3/4/5 A GPC CL	V42K3358X
(11)	RCS–L AFT OX TK ISLN V3/4/5 B GPC CL	V42K2360X
(12)	RCS–L AFT FU TK ISLN V3/4/5 B GPC CL	V42K2361X
(13)	RCS–R AFT OX TK ISLN V3/4/5 B GPC CL	V42K3360X
(14)	RCS–R AFT FU TK ISLN V3/4/5 B GPC CL	V42K3361X
(15)	RCS–L AFT TK ISLN V–1/2 GPC OP A	V42K2342X
(16)	RCS–L AFT OX TK ISLN V1/2 GPC OP B	V42K2343X
(17)	RCS–L AFT FU TK ISLN V1/2 GPC OP B	V42K2344X
(18)	RCS–R AFT TK ISLN V–1/2 GPC OP A	V42K3342X
(19)	RCS–R AFT OX TK ISLN V–1/2 GPC OP B	V42K3343X

(20)	RCS–R AFT FU TK ISLN V–1/2 GPC OP B	V42K3344X
(21)	RCS–L AFT OX TK ISLN V3/4/5 A GPC OP	V42K2346X
(22)	RCS–L AFT FU TK ISLN V3/4/5 A GPC OP	V42K2347X
(23)	RCS–R AFT OX TK ISLN V3/4/5 A GPC OP	V42K3346X
(24)	RCS–R AFT FU TK ISLN V3/4/5 A GPC OP	V42K3347X
(25)	RCS–L AFT OX TK ISLN V3/4/5 B GPC OP	V42K2349X
(26)	RCS–L AFT FU TK ISLN V3/4/5 B GPC OP	V42X2350X
(27)	RCS–R AFT OX TK ISLN V3/4/5 B GPC OP	V42K3349X
(28)	RCS–R AFT FU TX ISLN V3/4/5 B GPC OP	V42K3350X

Step 7. This step monitors the status of the left RCS tank isolation valves 1/2 when the OMS to RCS interconnect has been successfully completed. If any RCS left tank isolation valve 1/2 closed status becomes false for three consecutive cycles, the RCS 1/2 ALL JET INHIBIT FLAG is set true to inhibit all 1/2 jet firings and the 1/2 XFD/ISO FAIL FLAG is set true for use in the RCS crossfeed reconfiguration process. If the COMMFAULT status for the left 1/2 tank isolation valves indicates true for three consecutive cycles, the AFT MANIFOLD 1/2 JET INHIBIT FLAG is set true to inhibit dumping through that manifold. The monitor function is then terminated.

The following signals are monitored:

(a)	FA 1 INPUT PROM SEG 3, 10 STATUS	V91X2845X
(b)	FA 1 COMMFAULT CYC COUNTER	(INTERNAL)
(c)	RCS L AFT OX TANK ISLN VLV 1/2 CL	V42X2221X
(d)	RCS L AFT FU TANK ISLN VLV 1/2 CL	V42X2321X
(e)	RCS L OX TK POSN CYC COUNTER	(INTERNAL)
(f)	RCS L FU TK POSN CYC COUNTER	(INTERNAL)

If (a) is true, increment (b) by 1, set (e) and (f) to zero, and proceed to monitor (b). Otherwise, if (a) is false, set (b) to zero, and proceed to monitor (c).

If (b) is equal to three, set (1) true, (2) false, and return to Step 1. Otherwise, proceed to Step 7A.

If (c) is false, increment (e) by 1, and proceed to monitor (e). Otherwise, set (e) to zero, and proceed to monitor (d).

If (e) is equal to three, set (2) false, (3) through (5) true, increment (6) by 1, and proceed to Step 5. Otherwise, proceed to monitor (d).

If (d) is false, increment (f) by 1, and proceed to monitor (f). Otherwise, set (f) to zero, and proceed to Step 7A.

If (f) is equal to three, set (2) false, (3) through (5) true, increment (6) by 1, and proceed to Step 5. Otherwise, proceed to Step 7A.

(1)	AFT MANIFOLD 1/2 JET INH FLAG	V90X8285X

(2)	INTERCONNECT MONITOR FLAG	(INTERNAL)
(3)	1/2 XFD/ISO FAIL FLAG	(INTERNAL)
(4)	RCS 1/2 ALL JET INHIBIT FLAG	V90X8290X
(5)	OMS/RCS I/C IN PROGRESS FLAG	(INTERNAL)
(6)	I/C FAIL COUNTER	(INTERNAL)

Step 7A. This step monitors the status of the right RCS tank isolation valves 1/2 when the OMS to RCS interconnect has been successfully completed. If any RCS right tank isolation valve 1/2 closed status becomes false for three consecutive cycles, the RCS 1/2 ALL JET INHIBIT FLAG is set true to inhibit all 1/2 jet firings and the 1/2 XFD/ISO FAIL FLAG is set true for use in the RCS crossfeed reconfiguration process. If the COMMFAULT status for the right 1/2 tank isolation valves indicates true for three consecutive cycles, the AFT MANIFOLD 1/2 JET INHIBIT FLAG is set true to inhibit dumping through that manifold. The monitor function is then terminated.

The following signals are monitored:

(a)	FA 3 INPUT PROM SEG 3, 10 STATUS	V91X2847X
(b)	FA 3 COMMFAULT CYC COUNTER	(INTERNAL)
(c)	RCS R AFT OX TANK ISLN VLV 1/2 CL	V42X3221X
(d)	RCS R AFT FU TANK ISLN VLV 1/2 CL	V42X3321X
(e)	RCS R OX TK POSN CYC COUNTER	(INTERNAL)
(f)	RCS R FU TK POSN CYC COUNTER	(INTERNAL)

If (a) is true, increment (b) by 1, set (e) and (f) to zero, and proceed to monitor (b). Otherwise, if (a) is false, set (b) to zero, and proceed to monitor (c).

If (b) is equal to three, set (1) true, (2) false, and return to Step 1. Otherwise, proceed to Step 8.

If (c) is false, increment (e) by 1, and proceed to monitor (e). Otherwise, set (e) to zero, and proceed to monitor (d).

If (e) is equal to three, set (2) false, (3) through (5) true, increment (6) by 1, and proceed to Step 5. Otherwise, proceed to monitor (d).

If (d) is false, increment (f) by 1, and proceed to monitor (f). Otherwise, set (f) to zero, and proceed to Step 8.

If (f) is equal to three, set (2) false, (3) through (5) true, increment (6) by 1, and proceed to Step 5. Otherwise, proceed to Step 8.

(1)	AFT MANIFOLD 1/2 JET INH FLAG	V90X8285X
(2)	INTERCONNECT MONITOR FLAG	(INTERNAL)
(3)	1/2 XFD/ISO FAIL FLAG	(INTERNAL)
(4)	RCS 1/2 ALL JET INHIBIT FLAG	V90X8290X
(5)	OMS/RCS I/C IN PROGRESS FLAG	(INTERNAL)
(6)	I/C FAIL COUNTER	(INTERNAL)

Step 8. This step monitors the status of the 3/4/5A RCS tank isolation valves when the OMS to RCS interconnect has been successfully completed. If any 3/4/5A RCS tank isolation valve closed status be-

comes false for three consecutive cycles, the RCS 3/4/5 ALL JET INHIBIT FLAG is set true to inhibit all 3/4/5 jet firings. If the COMMFAULT status for the 3/4/5A tank isolation valves indicates true for three consecutive cycles the AFT MANIFOLD 3/4/5 JET INHIBIT FLAG is set true to inhibit dumping through that manifold. The monitor function is then terminated.

The following signals are monitored:

(a)	FA 2 INPUT PROM SEG 3, 10 STATUS	V91X2846X
(b)	FA 2 COMMFAULT CYC COUNTER	(INTERNAL)
(c)	RCS L AFT OX TANK ISLN VLV 3/4/5 A CL	V42X2223X
(d)	RCS R AFT OX TANK ISLN VLV 3/4/5 A CL	V42X3223X
(e)	RCS L AFT FU TANK ISLN VLV 3/4/5 A CL	V42X2323X
(f)	RCS R AFT FU TANK ISLN VLV 3/4/5 A CL	V42X3323X
(g)	RCS L A OX TK POSN CYC COUNTER	(INTERNAL)
(h)	RCS R A OX TK POSN CYC COUNTER	(INTERNAL)
(i)	RCS L A FU TK POSN CYC COUNTER	(INTERNAL)
(j)	RCS R A FU TK POSN CYC COUNTER	(INTERNAL)

If (a) is true, increment (b) by 1, set (g), (h), (i), and j) to zero, and proceed to monitor (b). Otherwise, if (a) is false, set (b) to zero, and proceed to monitor (c).

If (b) is equal to three, set (1) true, (2) false, and return to Step 1. Otherwise, proceed to Step 8A.

If (c) is false, increment (g) by 1, and proceed to monitor (g). Otherwise, set (g) to zero, and proceed to monitor (d).

If (g) is equal to three, set (2) false, (3) and (4) true, increment (5) by 1, and proceed to Step 5. Otherwise, proceed to monitor (d).

If (d) is false, increment (h) by 1, and proceed to monitor (h). Otherwise, set (h) to zero, and proceed to monitor (e).

If (h) is equal to three, set (2) false, (3) and (4) true, increment (5) by 1, and proceed to Step 5. Otherwise, proceed to monitor (e).

If (e) is false, increment (i) by 1, and proceed to monitor (i). Otherwise, set (i) to zero, and proceed to monitor (f).

If (i) is equal to three, set (2) false, (3) and (4) true, increment (5) by 1, and proceed to Step 5. Otherwise proceed to monitor (f).

If (f) is false, increment (j) by 1, and proceed to monitor (i). Otherwise, set (i) to zero, and proceed to Step 8A.

If (j) is equal to three, set (2) false, (3) and (4) true, increment (5) by 1, and proceed to Step 5. Otherwise, proceed to Step 8A.

(1)	AFT MANIFOLD 3/4/5 JET INH FLAG	V90X8286X
(2)	INTERCONNECT MONITOR FLAG	(INTERNAL)
(3)	RCS 3/4/5 ALL JET INHIBIT FLAG	V90X8291X

(4)	OMS/RCS I/C IN PROGRESS FLAG	(INTERNAL)
(5)	1/C FAIL COUNTER	(INTERNAL)

Step 8A. This step monitors the status of the 3/4/5B RCS tank isolation valves when the OMS to RCS interconnect has been successfully completed. If any 3/4/5B RCS tank isolation valve closed status becomes false for three consecutive cycles, the RCS 3/4/5 ALL JET INHIBIT FLAG is set true to inhibit all 3/4/5 jet firings. If the COMMFAULT status for the 3//4/5B tank isolation valves indicates true for three consecutive cycles, the AFT MANIFOLD 3/4/5 JET INHIBIT FLAG is set true to inhibit dumping through that manifold. The monitor function is then terminated.

The following signals are monitored:

(a)	FA 4 INPUT PROM SEQ 3, 10 STATUS	V91X2848X
(b)	FA 4 COMMFAULT CYC COUNTER	(INTERNAL)
(c)	RCS L AFT OX TANK ISLN VLV 3/4/5 B CL	V42X2225X
(d)	RCS R AFT OX TANK ISLN VLV 3/4/5 B CL	V42X3225X
(e)	RCS L AFT FU TANK ISLN VLV 3/4/5 B CL	V42X2325X
(f)	RCS R AFT FU TANK ISLN VLV 3/4/5 B CL	V42X3325X
(g)	RCS L B OX TK POSN CYC COUNTER	(INTERNAL)
(h)	RCS R B OX TK POSN CYC COUNTER	(INTERNAL)
(i)	RCS L B FU TK POSN CYC COUNTER	(INTERNAL)
(j)	RCS R B FU TK POSN CYC COUNTER	(INTERNAL)

If (a) is true, increment (b) by 1, set (g), (h), (i), and (j) to zero, and proceed to monitor (b). Otherwise. if (a) is false, set (b) to zero, and proceed to monitor (c).

If (b) is equal to three, set (1) true, (2) false, and return to Step 1. Otherwise, return to Step 1.

If (c) is false, increment (g) by 1, and proceed to monitor (g). Otherwise, set (g) to zero, and proceed to monitor (d).

If (g) is equal to three, set (2) false, (3) and (4) true, increment (5) by 1, and proceed to Step 5. Otherwise, proceed to monitor (d).

If (d) is false, increment (h) by 1, and proceed to monitor (h). Otherwise, set (h) to zero, and proceed to monitor (e).

If (h) is equal to three, set (2) false, (3) and (4) true, increment (5) by 1, and proceed to Step 5. Otherwise, proceed to monitor (e).

If (e) is false, increment (i) by 1, and proceed to monitor (i). Otherwise, set (i) to zero, and proceed to monitor (f).

If (i) is equal to three, set (2) false, (3) and (4) true, increment (5) by 1, and proceed to Step 5. Otherwise, proceed to monitor (f).

If (f) is false, increment (j) by 1, and proceed to monitor (i). Otherwise, set (i) to zero, and return to Step 1.

If (j) is equal to three, set (2) false, (3) and (4) true, increment (5) by 1, and proceed to Step 5. Otherwise, return to Step 1.

(1)	AFT MANIFOLD 3/4/5 JET INH FLAG	V90X8286X
(2)	INTERCONNECT MONITOR FLAG	(INTERNAL)
(3)	RCS 3/4/5 ALL JET INHIBIT FLAG	V90X8291X
(4)	OMS/RCS I/C IN PROGRESS FLAG	(INTERNAL)
(5)	I/C FAIL COUNTER	(INTERNAL)

Step 9. This step commands the OMS pod crossfeed valves closed on initiation of the return to normal configuration sequence.

Issue the following commands and return to Step 1 until at least 1.5 seconds have elapsed. Then proceed to Step 6.

(1)	OMS–L POD XFD VLVS A CMD 1 CL	V43K4283X
(2)	OMS–L POD OXDZR XFD VLV A CMD 2 CL	V43K4285X
(3)	OMS–L POD FUEL XFD VLV A CMD 2 CL	V43K4385X
(4)	OMS–L POD XFD VLVS B CMD 1 CL	V43K4287X
(5)	OMS–L POD OXDZR XFD VLV B CMD 2 CL	V43K4289X
(6)	OMS–L POD FUEL XFD VLV B CMD 2 CL	V43K4389X
(7)	OMS–R POD XFD VLVS A CMD 1 CL	V43K5283X
(8)	OMS–R POD OXDZR XFD VLV A CMD 2 CL	V43K5285X
(9)	OMS–R POD FUEL XFD VLV A CMD 2 CL	V43K5385X
(10)	OMS–R POD XFD VLVS B CMD 1 CL	V43K5287X
(11)	OMS–R POD OXDZR XFD VLV B CMD 2 CL	V43K5289X
(12)	OMS–R POD FUEL XFD VLV B CMD 2 CL	V43K5389X

Step 10. This step monitors the response of the RCS left and right tank isolation valves on the 1/2 manifolds in the OMS/RCS return to normal configuration sequence. If any left or right 1/2 tank isolation valve fails to open, the RCS crossfeed valves between that manifold pair (OX and FU) and the corresponding 3/4/5 manifold will be left open to provide RCS propellant through the crossfeed valve.

The following signals are monitored:

(a)	RCS L AFT OX TANK ISLN VLV 1/2 OP	V42X2220X
(b)	RCS L AFT FU TANK ISLN VLV 1/2 OP	V42X2320X
(c)	RCS R AFT OX TANK ISLN VLV 1/2 OP	V42X3220X
(d)	RCS R AFT FU TANK ISLN VLV 1/2 OP	V42X3320X
(e)	RCS L AFT OX TANK ISLN VLV 1/2 CL	V42X2221X
(f)	RCS L AFT FU TANK ISLN VLV 1/2 CL	V42X2321X
(g)	RCS R AFT OX TANK ISLN VLV 1/2 CL	V42X3221X
(h)	RCS R AFT FU TANK ISLN VLV 1/2 CL	V42X3321X
(i)	FA 1 INPUT PROM SEG 3, 10 STATUS	V91X2845X
(j)	FA 3 INPUT PROM SEG 3, 10 STATUS	V91X2847X

If (a) and (b) are true, and (e), (f) and (i) are false, issue (1) thru (6) below, and go to the next if statement. Otherwise, issue (13) through (18) and go to the next if statement,

If (c) and (d) are true, and (g), (h) and (j) are false, issue (7) thru (12) below, and go to the next statement, otherwise, issue (19) through (24) and go to the next statement.

Set (25) ad (26) false and return to Step 1 until at least 1.5 seconds have elapsed and then proceed to Step 16.

(1)	RCS–L AFT XFD VLV–1/2 GPC CL A	V42K2416X
(2)	RCS–L AFT OX XFD VLV–1/2 GPC CL B	V42K2418X
(3)	RCS–L AFT FU XFD VLV–1/2 GPC CL B	V42K2422X
(4)	RCS–L AFT XFD VLV–3/4/5 GPC CL A	V42K2428X
(5)	RCS–L AFT OX XFD V–3/4/5 GPC CL B	V42K2430X
(6)	RCS–L AFT FU XFD V–3/4/5 GPC CL B	V42K2434X
(7)	RCS–R AFT XFD VLV–1/2 GPC CLOSE A	V42K3416X
(8)	RCS–R AFT OX XFD V–1/2 GPC CLOSE B	V42K3418X
(9)	RCS–R AFT FU XFD V–1/2 GPC CLOSE B	V42K3422X
(10)	RCS–R AFT XFD VLV–3/4/5 GPC CL A	V42K3428X
(11)	RCS–R AFT OX XFD V–3/4/5 GPC CL B	V42K3430X
(12)	RCS–R AFT FU XFD V–3/4/5 GPC CL B	V42K3434X
(13)	RCS–L AFT XFD VLV–1/2 GPC OP A	V42K2402X
(14)	RCS–L AFT OX XFD VLV–1/2 GPC OP B	V42K2403X
(15)	RCS–L AFT FU XFD VLV–1/2 GPC OP B	V42K2404X
(16)	RCS–L AFT XFD VLV–3/4/5 GPC OP A	V42K2408X
(17)	RCS–L AFT OX XFD V–3/4/5 GPC OP B	V42K2409X
(18)	RCS–L AFT FU XFD V–3/4/5 GPC OP B	V42K2410X
(19)	RCS–R AFT XFD VLV–1/2 GPC OPEN A	V42K3402X
(20)	RCS–R AFT OX XFD V–1/2 GPC OPEN B	V42K3403X
(21)	RCS–R AFT FU XFD V–1/2 GPC OPEN B	V42K3404X
(22)	RCS–R AFT XFD VLV–3/4/5 GPC OPEN A	V42K3408X
(23)	RCS–R AFT OX XFD V–3/4/5 GPC OPEN B	V42K3409X
(24)	RCS–R AFT FU XFD V–3/4/5 GPC OPEN B	V42K3410X
(25)	RCS 1/2 ALL JET INHIBIT FLAG	V90X8290X
(26)	RCS 3/4/5 ALL JET INHIBIT FLAG	V90X8291X

Step 11. This step completes the interconnect sequence. In addition, the interconnect monitor is requested for those interconnects which were completed with no commfaults or RCS isolation valves open or crossfeed valves closed.

The following signals are monitored:

(a)	OMS L POD OX XFD VLV B POSN OP	V43X4258X
(b)	OMS L POD FU XFD VLV B POSN OP	V43X4358X

(c)	OMS R POD OX XFD VLV B POSN OP	V43X5258X
(d)	OMS R POD FU XFD VLV B POSN OP	V43X5358X
(e)	OMS L POD OX XFD VLV A POSN OP	V43X4256X
(f)	OMS L POD FU XFD VLV A POSN OP	V43X4356X
(g)	OMS R POD OX XFD VLV A POSN OP	V43X5256X
(h)	OMS R POD FU XFD VLV A POSN OP	V43X5356X
(i)	FA 1 INPUT PROM SEG 3, 10 STATUS	V91X2845X
(j)	FA 2 INPUT PROM SEG 3, 10 STATUS	V91X2846X
(k)	OMS/RCS I/C IN PROGRESS FLAG	INTERNAL
(l)	I/C FAIL COUNTER	INTERNAL
(m)	OMS TO RCS INTERCONNECT COMPLETE FLAG	V90X8282X

If (l) > 1, set (8) = false (INHIBIT), set (9) and (11) = false, set (12) true and proceed to Step 16. Otherwise, go to the next if statement.

If [(k) is true and (m) is false], and [(a) or (b) or (c) or (d) is false, or (j) is true], issue (1) through (6), and return to Step 1 until at least 1.5 seconds have elapsed, then proceed to the next if statement. Otherwise proceed to monitor (l).

If [(e) or (f) or (g) or (h) is false] or (i) is true, set (8) = false (INHIBIT), set (9) and (11) = false, set (7) and (12) = true, and return to Step 1. Otherwise, go to the next if statement.

If (l) = 0 and (k) is true, set (7) and (10) = true, set (9), (13), and (14) = false and go to Step 7. Otherwise, go to the next statement.

Set (7) = true, set (9), (13), and (14) = false and return to Step 1.

(1)	OMS–L POD XFD VLVS A CMD 1 OP	V43K4282X
(2)	OMS–L POD OXDZR XFD VLV A CMD 2 OP	V43K4284X
(3)	OMS–L POD FUEL XFD VLV A CMD 2 OP	V43K4384X
(4)	OMS–R POD XFD VLVS A CMD 1 OP	V43K5282X
(5)	OMS–R POD OXDZR XFD VLV A CMD 2 OP	V43K5284X
(6)	OMS–R POD FUEL XFD VLV A CMD 2 OP	V43K5384X
(7)	OMS TO RCS INTERCONNECT COMPLETE FLAG	V90X8282X
(8)	OMS/RCS INTERCONNECT INH/ENA CMD	V93X5348X
(9)	OMS/RCS I/C IN PROGRESS FLAG	INTERNAL
(10)	INTERCONNECT MONITOR FLAG	INTERNAL
(11)	OMS TO RCS INTERCONNECT CMD	V90X8312X
(12)	OMS TO RCS RTRN TO NORM CONFIG CMD	V90X8313X
(13)	RCS 1/2 ALL JET INHIBIT FLAG	V90X8290X

(14) RCS 3/4/5 ALL JET INHIBIT FLAG V90X8291X

Step 12. This step is the first procedure in the execution of the Mode 2 return–to–normal for a contingency situation. The RCS tank isolation valves are commanded to the open position and then 1.5 seconds delay is satisfied before proceeding to the next step.

Issue commands (1) through (14) below and return to Step 1 until 1.5 seconds have expired, then proceed to Step 13.

(1)	RCS–L AFT TK ISLN V–1/2 GPC OP A	V42K2342X
(2)	RCS–L AFT OX TK ISLN V1/2 GPC OP B	V42K2343X
(3)	RCS–L AFT FU TK ISLN V1/2 GPC OP B	V42K2344X
(4)	RCS–R AFT TK ISLN V–1/2 GPC OP A	V42K3342X
(5)	RCS–R AFT OX TK ISLN V–1/2 GPC OP B	V42K3343X
(6)	RCS–R AFT FU TK ISLN V–1/2 GPC OP B	V42K3344X
(7)	RCS–L AFT OX TK ISLN V3/4/5 A GPC OP	V42K2346X
(8)	RCS–L AFT FU TK ISLN V3/4/5 A GPC OP	V42K2347X
(9)	RCS–R AFT OX TK ISLN V3/4/5 A GPC OP	V42K3346X
(10)	RCS–R AFT FU TK ISLN V3/4/5 A GPC OP	V42K3347X
(11)	RCS–L AFT OX TK ISLN V3/4/5 B GPC OP	V42K2349X
(12)	RCS–L AFT FU TK ISLN V3/4/5 B GPC OP	V42K2350X
(13)	RCS–R AFT OX TK ISLN V3/4/5 B GPC OP	V42K3349X
(14)	RCS–R AFT FU TK ISLN V3/4/5 B GPC OP	V42K3350X

Step 13. This step monitors the response of the left RCS tank isolation valves on the 1/2 manifolds during the Mode 2 OMS/RCS return–to–normal configuration sequence. If any left 1/2 tank isolation valve fails to open or it's associated commfault is true, the left 1/2 RCS crossfeed valves between that manifold pair (OX and FU) and the left 3/4/5 manifold will be commanded open to provide RCS propellant through the crossfeed valves. If the left 1/2 RCS tank isolation valves are open, the left 1/2 and 3/4/5 RCS crossfeed valves will be commanded closed.

Monitor the following signals:

(a)	RCS L AFT OX TANK ISLN VLV 1/2 OP	V42X2220X
(b)	RCS L AFT FU TANK ISLN VLV 1/2 OP	V42X2320X
(c)	RCS L AFT OX TANK ISLN VLV 1/2 CL	V42X2221X
(d)	RCS L AFT FU TANK ISLN VLV 1/2 CL	V42X2321X
(e)	FA 1 INPUT PROM SEG 3, 10 STATUS	V91X2845X

If [(a) and (b) are both true] and [(c), (d), and (e) are all false], issue (7) through (12) and proceed to Step 14.

If [(a) or (b) is false) or [(c) or (d) or (e) is true], issue (1) through (6) and proceed to Step 14.

(1)	RCS–L AFT XFD VLV–1/2 GPC OP A	V42K2402X
(2)	RCS–L AFT OX XFD VLV–1/2 GPC OP B	V42K2403X
(3)	RCS–L AFT FU XFD VLV–1/2 GPC OP B	V42K2404X
(4)	RCS–L AFT XFD VLV–3/4/5 GPC OP A	V42K2408X
(5)	RCS–L AFT OX XFD V–3/4/5 GPC OP B	V42K2409X
(6)	RCS–L AFT FU XFD V–3/4/5 GPC OP B	V42K2410X
(7)	RCS–L AFT XFD VLV–1/2 GPC CL A	V42K2416X
(8)	RCS–L AFT OX XFD VLV–1/2 GPC CL B	V42K2418X
(9)	RCS–L AFT FU XFD VLV–1/2 GPC CL B	V42K2422X
(10)	RCS–L AFT XFD VLV–3/4/5 GPC CL A	V42K2428X
(11)	RCS–L AFT OX XFD V–3/4/5 GPC CL B	V42K2430X
(12)	RCS–L AFT FU XFD V–3/4/5 GPC CL B	V42K2434X

Step 14. This step monitors the response of the right RCS tank isolation valves on the 1/2 manifolds during the Mode 2 OMS/RCS return–to–normal configuration sequence. If any right 1/2 tank isolation valve fails to open or it's associated commfault is true, the right 1/2 RCS crossfeed valves between that manifold pair (OX and FU) and the right 3/4/5 manifold will be commanded open to provide RCS propellant through the crossfeed valves. If the right 1/2 RCS tank isolation valves are open, the right 1/2 and 3/4/5 RCS crossfeed valves will be commanded closed.

Monitor the following signals:

(a)	RCS R AFT OX TANK ISLN VLV 1/2 OP	V42X3220X
(b)	RCS R AFT FU TANK ISLN VLV 1/2 OP	V42X3320X
(c)	RCS R AFT OX TANK ISLN VLV 1/2 CL	V42X3221X
(d)	RCS R AFT FU TANK ISLN VLV 1/2 CL	V42X3321X
(e)	FA 3 INPUT PROM SEG 3, 10 STATUS	V91X2847X

If [(a) and (b) are both true] and [(c), (d), and (e) are all false], issue (7) through (12) and return to Step 1 until 1.5 seconds has expired, then proceed to Step 15.

If [(a) or (b) is false] or [(c) or (d) or (e) is true], issue (1) through (6) and return to Step 1 until 1.5 seconds has expired, then proceed to Step 15.

(1)	RCS–R AFT XFD VLV–1/2 GPC OPEN A	V42K3402X
(2)	RCS–R AFT OX XFD VLV–1/2 GPC OPEN B	V42K3403X
(3)	RCS–R AFT FU XFD VLV–1/2 GPC OPEN B	V42K3404X
(4)	RCS–R AFT XFD VLV–3/4/5 GPC OPEN A	V42K3408X
(5)	RCS–R AFT OX XFD V–3/4/5 GPC OP B	V42K3409X
(6)	RCS–R AFT FU XFD V–3/4/5 GPC OP B	V42K3410X
(7)	RCS–R AFT XFD VLV–1/2 GPC CLOSE A	V42K3416X
(8)	RCS–R AFT OX XFD V–1/2 GPC CLOSE B	V42K3418X
(9)	RCS–R AFT FU XFD V–1/2 GPC CLOSE B	V42K3422X

(10)	RCS–R AFT XFD VLV–3/4/5 GPC CL A	V42K3428X
(11)	RCS–R AFT OX XFD V–3/4/5 GPC CL B	V42K3430X
(12)	RCS–R AFT FU XFD V–3/4/5 GPC CL B	V42K3434X

Step 15. This step commands the OMS propellant crossfeed valves closed.

Issue commands (1) through (12), and return to Step 1 until 1.5 seconds have elapsed, then proceed to Step 16.

(1)	OMS–L POD XFD VLVS A CMD 1 CL	V43K4283X
(2)	OMS–L POD OXDZR XFD VLV A CMD 2 CL	V43K4285X
(3)	OMS–L POD FUEL XFD VLV A CMD 2 CL	V43K4385X
(4)	OMS–L POD XFD VLVS B CMD 1 CL	V43K4287X
(5)	OMS–L POD OXDZR XFD VLV B CMD 2 CL	V43K4289X
(6)	OMS–L POD FUEL XFD VLV B CMD 2 CL	V43K4389X
(7)	OMS–R POD XFD VLVS A CMD 1 CL	V43K5283X
(8)	OMS–R POD OXDZR XFD VLV A CMD 2 CL	V43K5285X
(9)	OMS–R ROD FUEL XFD VLV A CMD 2 CL	V43K5385X
(10)	OMS–R POD XFD VLVS B CMD 1 CL	V43K5287X
(11)	OMS–R POD OXDZR XFD VLV B CMD 2 CL	V43K5289X
(12)	OMS–R POD FUEL XFD VLV B CMD 2 CL	V43K5389X

Step 16. This step completes the intact abort and Mode 2 return to normal sequence.

Set (1) through (6) false and return to Step 1.

(1)	RCS 1/2 ALL JET INHIBIT FLAG	V90X8290X
(2)	RCS 3/4/5 ALL JET INHIBIT FLAG	V90X8291X
(3)	AFT MANIFOLD 1/2 JET INH FLAG	V90X8285X
(4)	AFT MANIFOLD 3/4/5 JET INH FLAG	V90X8286X
(5)	OMS TO RCS INTERCONNECT COMPLETE FLAG	V90X8282X
(6)	OMS/RCS RTRN TO NORM IN PROGRESS FLAG	(INTERNAL)

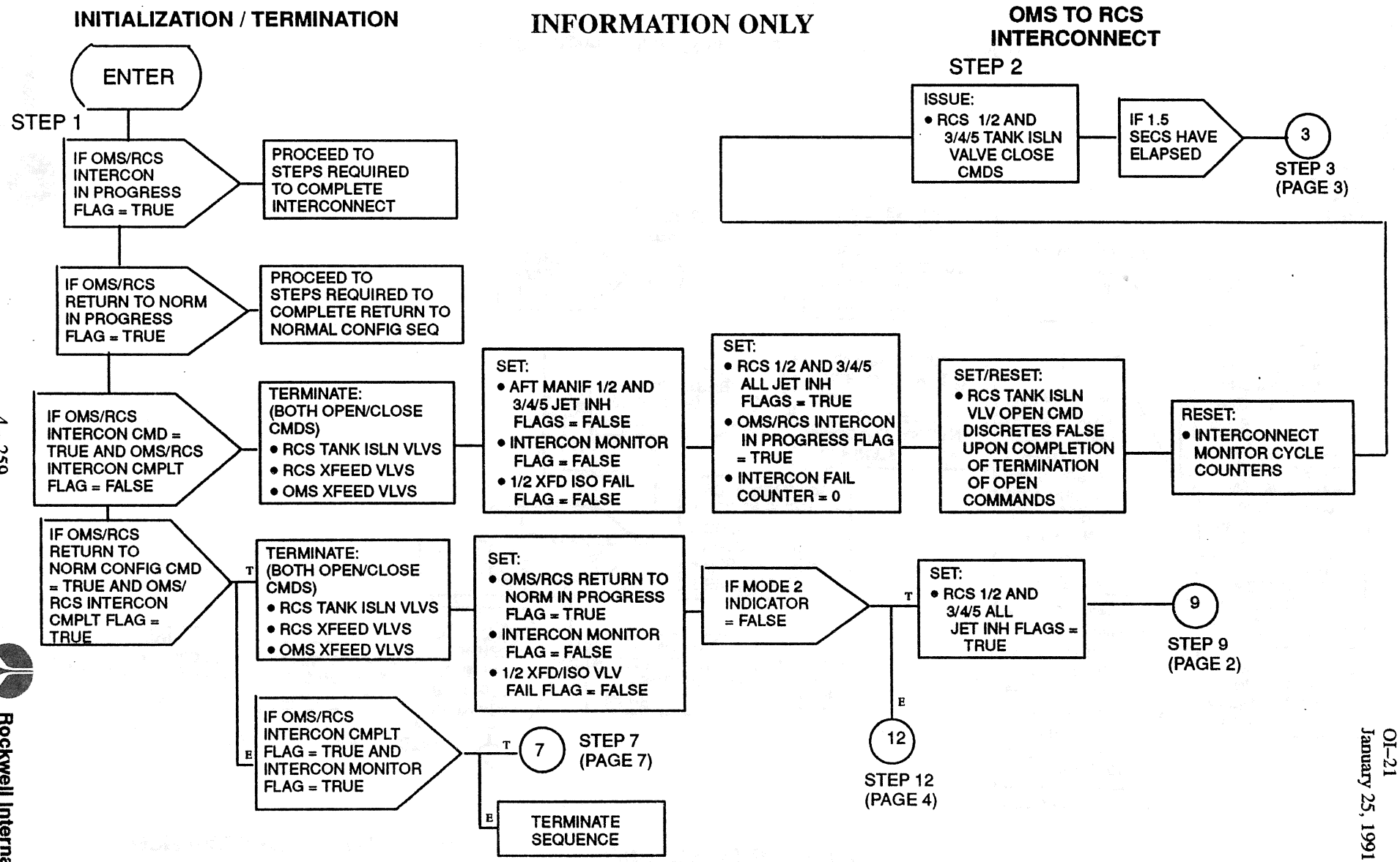

Figure 4.184. Abort OMS/RCS Interconnect Sequence (Sheet 1 of 7)

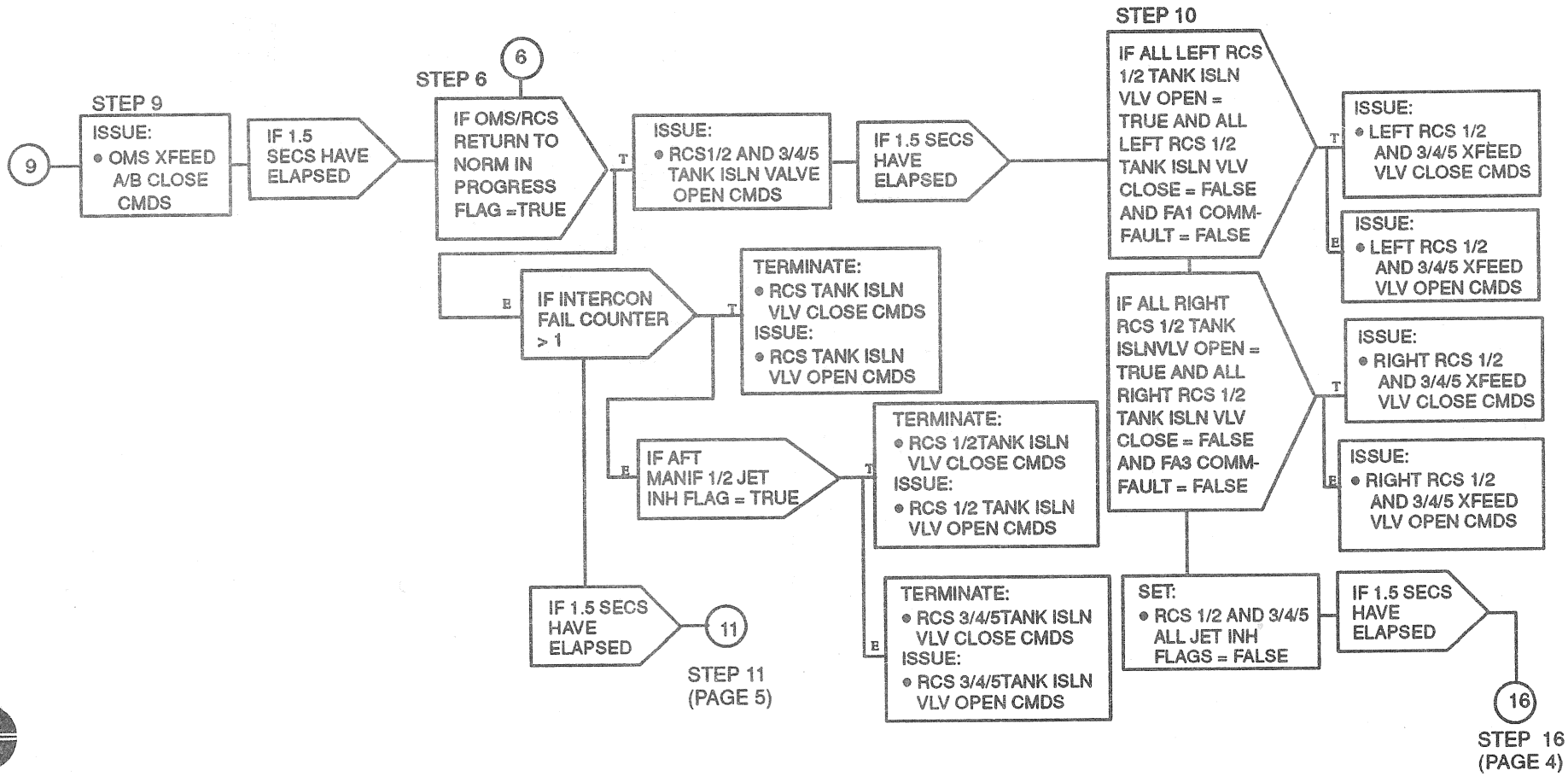

Figure 4.184. Abort OMS/RCS Interconnect Sequence (Sheet 2 of 7)

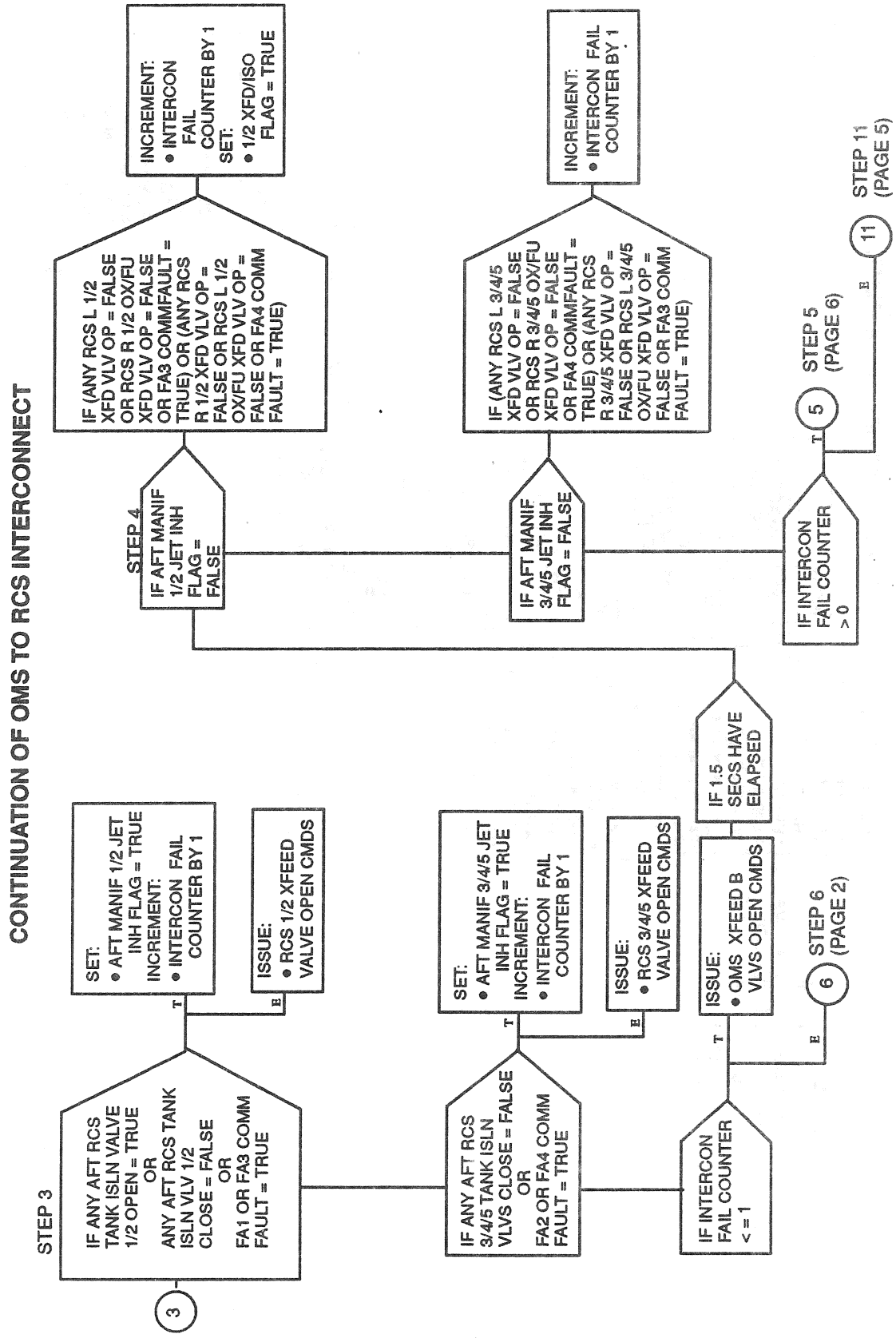

Figure 4.184. Abort OMS/RCS Interconnect Sequence (Sheet 3 of 7)

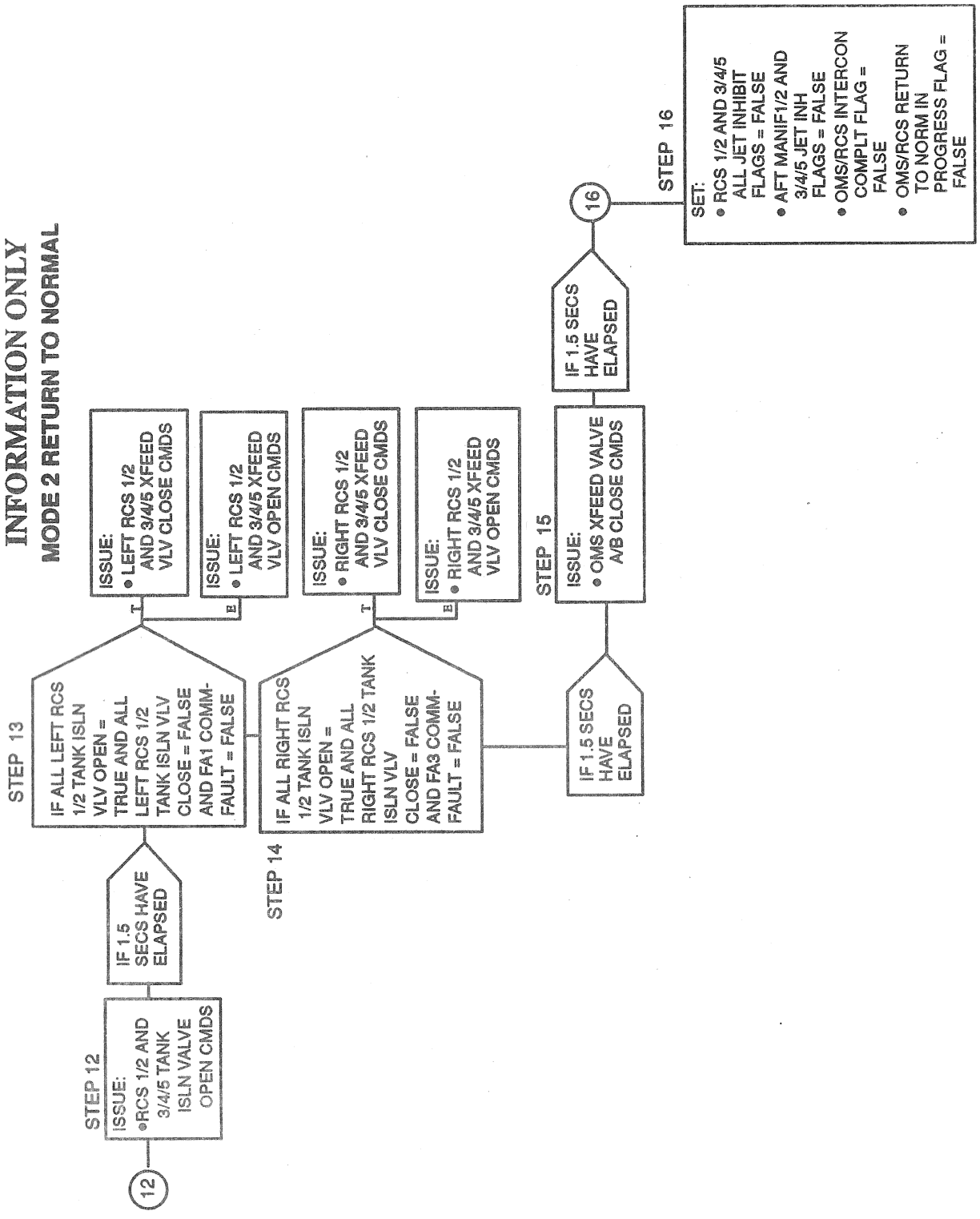

Figure 4.184. Abort OMS/RCS Interconnect Sequence (Sheet 4 of 7)

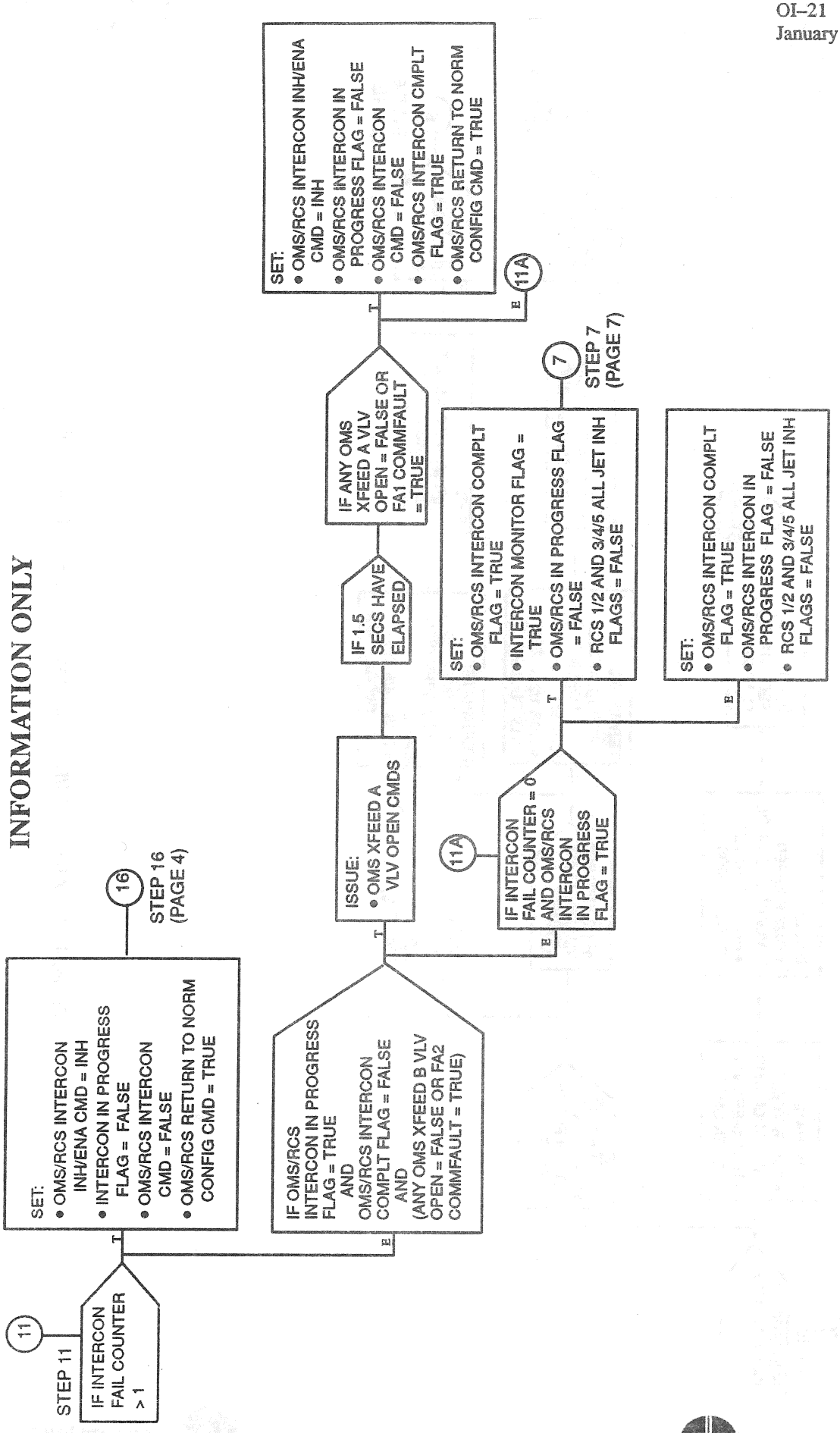

Figure 4.184. Abort OMS/RCS Interconnect Sequence (Sheet 5 of 7)

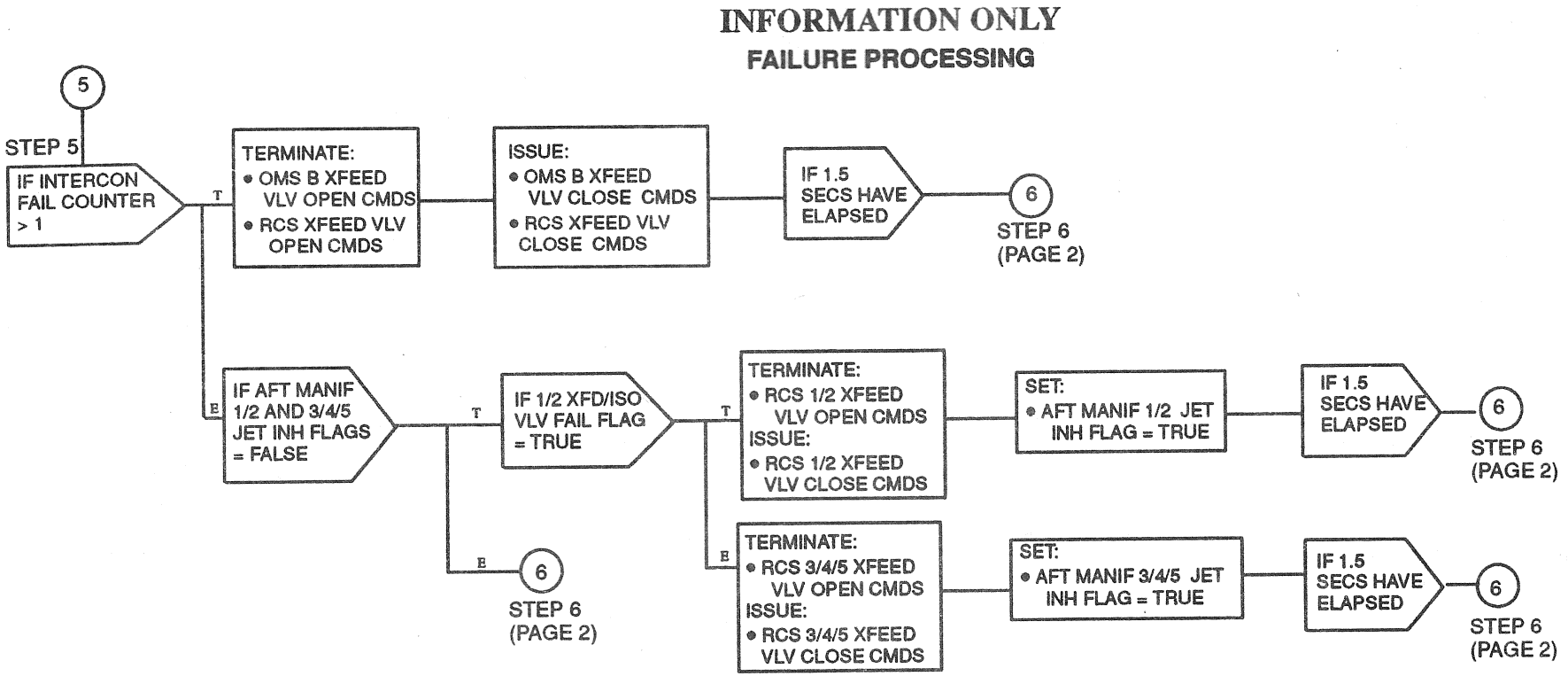

Figure 4.184. Abort OMS/RCS Interconnect Sequence (Sheet 6 of 7)

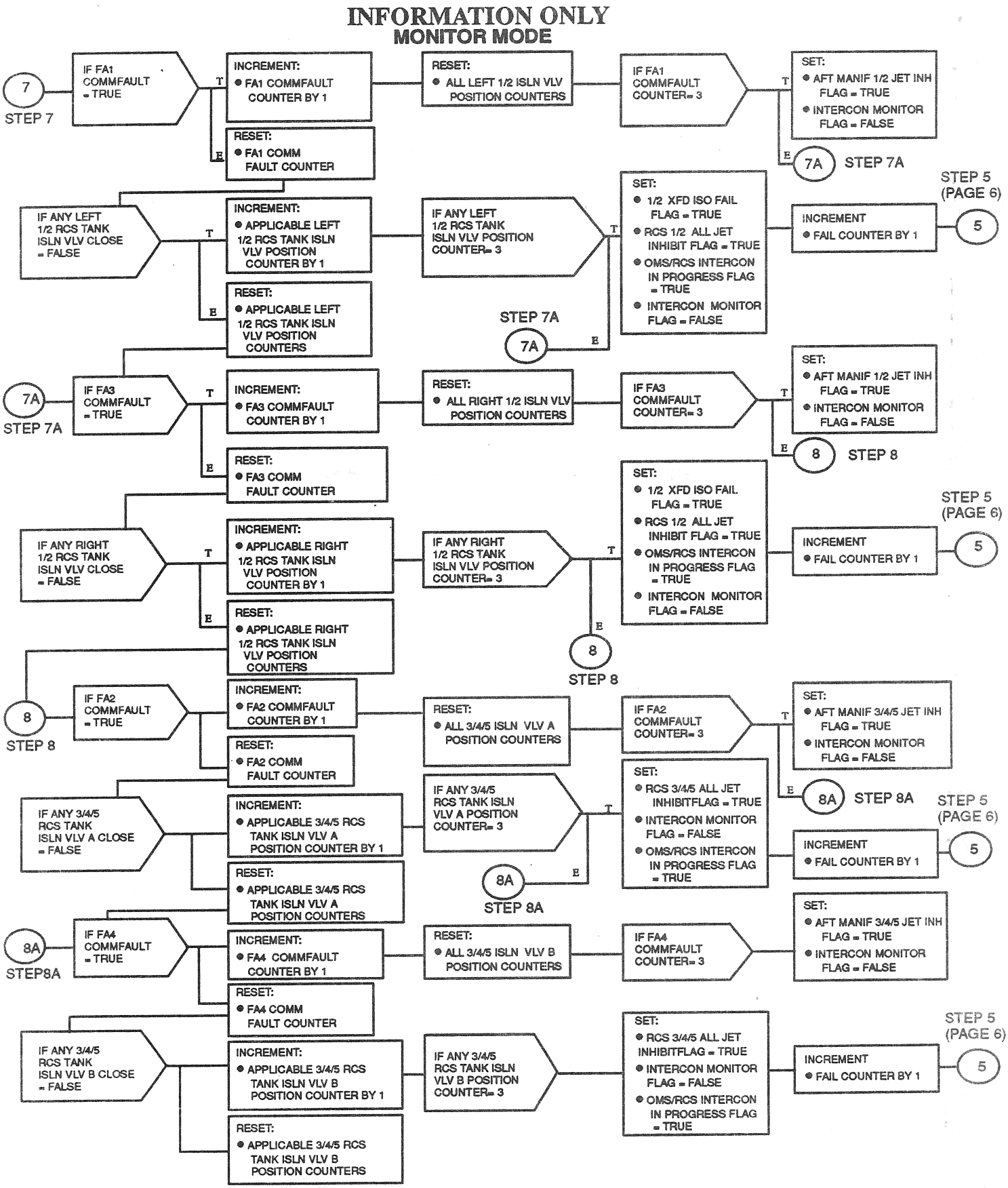

Figure 4.184. Abort OMS/RCS Interconnect Sequence (Sheet 7 of 7)

THIS PAGE INTENTIONALLY LEFT BLANK

TABLE 4.3.2.4–1. ABORT OMS/RCS INTERCONNECT FUNCTION (G4.184) INPUT/OUTPUT FUNCTIONAL PARAMETERS

DBFN: D3B027-F PN: VP707100049P00L INPUT FUNCTIONAL PARAMETERS FOR ABT OMS/RCS CONN

FSSR NAME	M/S ID	NOMENCLATURE	SOURCE	UNITS	DATA TYPE	PREC	LAST CRS
	V42X2220X	RCS-L AFT OX TANK ISLN VLV-1/2 OP	MCA A3		BD		59126H
	V42X2221X	RCS-L AFT OX TANK ISLN VLV-1/2 CL	MCA A3		BD		59126H
	V42X2223X	RCS-L AFT OX TK ISLN VLV-3/4/5A CL	MCA A1		BD		59126H
	V42X2225X	RCS-L AFT OX TK ISLN VLV-3/4/5B CL	MCA A2		BD		59126H
	V42X2236X	RCS L AFT OX XFD VLV-1/2 OP	MCA A3		BD		59126H
	V42X2238X	RCS L AFT OX XFD VLV-3/4/5 OP	MCA A2		BD		59126H
	V42X2251X	RCS L OX/FU XFD VLV 1/2 OP	MCA A3		BD		89210B
	V42X2252X	RCS R OX/FU XFD VLV 1/2 OP	MCA A3		BD		89210B
	V42X2253X	RCS L OX/FU XFD VLV 3/4/5 OP	MCA A1		BD		89210B
	V42X2254X	RCS R OX/FU XFD VLV 3/4/5 OP	MCA A1				89210B
	V42X2320X	RCS-L AFT FU TANK ISLN VLV-1/2 OP	MCA A3		BD		59126H
	V42X2321X	RCS-L AFT FU TANK ISLN VLV-1/2 CL	MCA A3		BD		59126H
	V42X2323X	RCS-L AFT FU TK ISLN VLV-3/4/5A CL	MCA A1		BD		59126H
	V42X2325X	RCS-L AFT FU TK ISLN VLV-3/4/5B CL	MCA A2		BD		59126H
	V42X2336X	RCS L AFT FU XFD VLV-1/2 OP	MCA A3		BD		59126H
	V42X2338X	RCS L AFT FU XFD VLV-3/4/5 OP	MCA A2		BD		59126H
	V42X3220X	RCS-R AFT OX TANK ISLN VLV-1/2 OP	MCA A3		BD		59126H
	V42X3221X	RCS-R AFT OX TANK ISLN VLV-1/2 CL	MCA A3		BD		59126H
	V42X3223X	RCS-R AFT OX TK ISLN VLV-3/4/5A CL	MCA A1		BD		59126H
	V42X3225X	RCS-R AFT OX TK ISLN VLV-3/4/5B CL	MCA A2		BD		59126H
	V42X3236X	RCS-R AFT OX XFD VLV-1/2 OP	MCA A3		BD		59126H
	V42X3238X	RCS R AFT OX XFD VLV-3/4/5 OP	MCA A1		BD		59126H
	V42X3320X	RCS-R AFT FU TK ISLN VLV-1/2 OP	MCA A3		BD		59126H
	V42X3321X	RCS-R AFT FU TK ISLN VLV-1/2 CL	MCA A3		BD		59126H
	V42X3323X	RCS-R AFT FU TK ISLN VLV-3/4/5A CL	MCA A1		BD		59126H
	V42X3325X	RCS-R AFT FU TK ISLN VLV-3/4/5B CL	MCA A2		BD		59126H
	V42X3336X	RCS R AFT FU XFD VLV-1/2 OP	MCA A3		BD		59126H
	V42X3338X	RCS R AFT FU XFD VLV-3/4/5 OP	MCA A1		BD		59126H
	V43X4256X	OMS-L POD OX XFD VLV A POSN OP	MCA A1		BD		90114B
							89598A
	V43X4258X	OMS-L POD OX XFD VLV B POSN OP	MCA A2		BD		89598A
	V43X4356X	OMS-L POD FU XFD VLV A POSN OP	MCA A1		BD		90114B
							89598A
	V43X4358X	OMS-L POD FU XFD VLV B POSN OP	MCA A2		BD		89598A
	V43X5256X	OMS-R POD OX XFD VLV A POSN OP	MCA A3		BD		90114B
							89598A
	V43X5258X	OMS-R POD OX XFD VLV B POSN OP	MCA A2		BD		89598A
	V43X5356X	OMS-R POD FU XFD VLV A POSN OP	MCA A3		BD		90114B
							89598A
	V43X5358X	OMS-R POD FU XFD VLV B POSN OP	MCA A2		BD		89598A
	V90X8308X	MODE 2 INDICATOR	ABT CNTL SEQ				
	V90X8312X	OMS TO RCS INTERCONNECT CMD	ABT CNTL SEQ		BD		89599C
	V90X8313X	OMS TO RCS RTRN TO NORM CONFIG CMD	ABT CNTL SEQ		BD		89599C

TABLE 4.3.2.4–1. ABORT OMS/RCS INTERCONNECT FUNCTION (G4.184) INPUT/OUTPUT FUNCTIONAL PARAMETERS

DBFN: D3B027-F PN: VP707100049P00L INPUT FUNCTIONAL PARAMETERS FOR ABT OMS/RCS CONN

FSSR NAME	M/S ID	NOMENCLATURE	SOURCE	UNITS	DATA TYPE	PREC	LAST CRS
	V91X2845X	FA1 INPUT PROM SEG3,10 STATUS(HFE)	FCOS				89991E 89598A
	V91X2846X	FA2 INPUT PROM SEG3,10 STATUS(HFE)	FCOS				89991E 89598A
	V91X2847X	FA3 INPUT PROM SEG3,10 STATUS(HFE)	FCOS				89991E 89598A
	V91X2848X	FA4 INPUT PROM SEG3,10 STATUS(HFE)	FCOS				89598A 59126H

TABLE 4.3.2.4–1. ABORT OMS/RCS INTERCONNECT FUNCTION (G4.184) INPUT/OUTPUT FUNCTIONAL PARAMETERS

DBFN: D3B027-F PN: VP707100049P00L OUTPUT FUNCTIONAL PARAMETERS FROM ABT OMS/RCS CONN

FSSR NAME	M/S ID	NOMENCLATURE	DESTINATION	UNITS	DATA TYPE	PREC	LAST CRS
	V42K2342XB	RCS-L AFT TK ISLN V-1/2 GPC OP A	MCA A3				
	V42K2343XB	RCS-L AFT OX TK ISLN V1/2 GPC OP B	MCA A3				
	V42K2344XB	RCS-L AFT FU TK ISLN V1/2 GPC OP B	MCA A3				
	V42K2346XA	RCS-L AFT OX TK ISLN V3/4/5AGPC OP	MCA A1				
	V42K2347XA	RCS-L AFT FU TK ISLN V3/4/5AGPC OP	MCA A1				
	V42K2349XA	RCS-L AFT OX TK ISLN V3/4/5BGPC OP	MCA A2				
	V42K2350XA	RCS-L AFT FU TK ISLN V3/4/5BGPC OP	MCA A2				
	V42K2353XA	RCS-L AFT TK ISLN V-1/2 GPC CL A	MCA A3				
	V42K2354XA	RCS-L AFT OX TK ISLN V1/2 GPC CL B	MCA A3				
	V42K2355XA	RCS-L AFT FU TK ISLN V1/2 GPC CL B	MCA A3				
	V42K2357XA	RCS-L AFT OX TK ISLN V3/4/5AGPC CL	MCA A1				
	V42K2358XA	RCS-L AFT FU TK ISLN V3/4/5AGPC CL	MCA A1				
	V42K2360XA	RCS-L AFT OX TK ISLN V3/4/5BGPC CL	MCA A2				
	V42K2361XA	RCS-L AFT FU TK ISLN V3/4/5BGPC CL	MCA A2				
	V42K2402XB	RCS-L AFT XFD VLV 1/2 GPC OP A	MCA A3				
	V42K2403XB	RCS-L AFT OX XFD VLV-1/2 GPC OP B	MCA A3				
	V42K2404XB	RCS-L AFT FU XFD VLV 1/2 GPC OP B	MCA A3				
	V42K2408XB	RCS-L AFT XFD VLV 3/4/5 GPC OP A	MCA A2				
	V42K2409XB	RCS-L AFT OX XFD V-3/4/5 GPC OP B	MCA A2				
	V42K2410XB	RCS-L AFT FU XFD V-3/4/5 GPC OP B	MCA A2				
	V42K2416XB	RCS-L AFT XFD VLV-1/2 GPC CL A	MCA A3				
	V42K2418XB	RCS-L AFT OX XFD VLV-1/2 GPC CL B	MCA A3				
	V42K2422XB	RCS-L AFT FU XFD VLV-1/2 GPC CL B	MCA A3				
	V42K2428XB	RCS-L AFT XFD V-3/4/5 GPC CL A	MCA A2				
	V42K2430XB	RCS-L AFT OX XFD V-3/4/5 GPC CL B	MCA A2				
	V42K2434XB	RCS-L AFT FU XFD V-3/4/5 GPC CL B	MCA A2				
	V42K3342XA	RCS-R AFT TK ISLN V-1/2 GPC OP A	MCA A3				
	V42K3343XA	RCS-R AFT OX TK ISLN V-1/2 GPC OPB	MCA A3				
	V42K3344XA	RCS-R AFT FU TK ISLN V-1/2 GPC OPB	MCA A3				
	V42K3346XA	RCS-R AFT OX TK ISLN V3/4/5AGPC OP	MCA A1				
	V42K3347XA	RCS-R AFT FU TK ISLN V3/4/5AGPC OP	MCA A1				
	V42K3349XA	RCS-R AFT OX TK ISLN V3/4/5BGPC OP	MCA A2				
	V42K3350XA	RCS-R AFT FU TK ISLN V3/4/5BGPC OP	MCA A2				
	V42K3353XA	RCS-R AFT TK ISLN V-1/2 GPC CL A	MCA A3				
	V42K3354XA	RCS-R AFT OX TK ISLN V-1/2 GPC CLB	MCA A3				
	V42K3355XA	RCS-R AFT FU TK ISLN V-1/2 GPC CLB	MCA A3				
	V42K3357XA	RCS-R AFT OX TK ISLN V3/4/5AGPC CL	MCA A1				
	V42K3358XA	RCS-R AFT FU TK ISLN V3/4/5AGPC CL	MCA A1				
	V42K3360XA	RCS-R AFT OX TK ISLN V3/4/5BGPC CL	MCA A2				
	V42K3361XA	RCS-R AFT FU TK ISLN V3/4/5BGPC CL	MCA A2				
	V42K3402XB	RCS R AFT XFD VLV-1/2 GPC OPEN A	MCA A3				
	V42K3403XB	RCS R AFT OX XFD V-1/2 GPC OPEN B	MCA A3				
	V42K3404XB	RCS R AFT FU XFD V-1/2 GPC OPEN B	MCA A3				

TABLE 4.3.2.4–1. ABORT OMS/RCS INTERCONNECT FUNCTION (G4.184) INPUT/OUTPUT FUNCTIONAL PARAMETERS

DBFN: D3B027-F PN: VP707100049P00L OUTPUT FUNCTIONAL PARAMETERS FROM ABT OMS/RCS CONN

FSSR NAME	M/S ID	NOMENCLATURE	DESTINATION	UNITS	DATA TYPE	PREC	LAST CRS
	V42K3408XB	RCS R AFT XFD VLV-3/4/5 GPC OPEN A	MCA A1				
	V42K3409XB	RCS R AFT OX XFD V-3/4/5 GPC OP B	MCA A1				
	V42K3410XB	RCS R AFT FU XFD V-3/4/5 GPC OP B	MCA A1				
	V42K3416XB	RCS R AFT XFD VLV-1/2 GPC CLOSE A	MCA A3				
	V42K3418XB	RCS R AFT OX XFD V-1/2 GPC CLOSE B	MCA A3				
	V42K3422XB	RCS R AFT FU XFD V-1/2 GPC CLOSE B	MCA A3				
	V42K3428XB	RCS R AFT XFD VLV-3/4/5 GPC CL A	MCA A1				
	V42K3430XB	RCS-R AFT OX XFD V-3/4/5 GPC CL B	MCA A1				
	V42K3434XB	RCS-R AFT FU XFD V-3/4/5 GPC CL B	MCA A1				
	V43K4282XB	OMS-L POD XFD VLVS A CMD 1 OP	MCA A1				
	V43K4283XB	OMS-L POD XFD VLVS A CMD 1 CL	MCA A1				
	V43K4284XB	OMS-L POD OXDZR XFD VLV A CMD 2 OP	MCA A1				
	V43K4285XB	OMS-L POD OXDZR XFD VLV A CMD 2 CL	MCA A1				
	V43K4286XB	OMS-L POD XFD VLVS B CMD 1 OP	MCA A2				
	V43K4287XB	OMS-L POD XFD VLVS B CMD 1 CL	MCA A2				
	V43K4288XB	OMS-L POD OXDZR XFD VLV B CMD 2 OP	MCA A2				
	V43K4289XB	OMS-L POD OXDZR XFD VLV B CMD 2 CL	MCA A2				
	V43K4384XB	OMS-L POD FUEL XFD VLV A CMD 2 OP	MCA A1				
	V43K4385XB	OMS-L POD FUEL XFD VLV A CMD 2 CL	MCA A1				
	V43K4388XB	OMS-L POD FUEL XFD VLV B CMD 2 OP	MCA A2				
	V43K4389XB	OMS-L POD FUEL XFD VLV B CMD 2 CL	MCA A2				
	V43K5282XB	OMS-R POD XFD VLVS A CMD 1 OP	MCA A3				
	V43K5283XB	OMS-R POD XFD VLVS A CMD 1 CL	MCA A3				
	V43K5284XB	OMS-R POD OXDZR XFD VLV A CMD 2 OP	MCA A3				
	V43K5285XB	OMS-R POD OXDZR XFD VLV A CMD 2 CL	MCA A3				
	V43K5286XB	OMS-R POD XFD VLVS B CMD 1 OP	MCA A2				
	V43K5287XB	OMS-R POD XFD VLVS B CMD 1 CL	MCA A2				
	V43K5288XB	OMS-R POD OXDZR XFD VLV B CMD 2 OP	MCA A2				
	V43K5289XB	OMS-R POD OXDZR XFD VLV B CMD 2 CL	MCA A2				
	V43K5384XB	OMS-R POD FUEL XFD VLV A CMD 2 OP	MCA A3				
	V43K5385XB	OMS-R POD FUEL XFD VLV A CMD 2 CL	MCA A3				
	V43K5388XB	OMS-R POD FUEL XFD VLV B CMD 2 OP	MCA A2				
	V43K5389XB	OMS-R POD FUEL XFD VLV B CMD 2 CL	MCA A2				
	V90X8282X	OMS TO RCS INTERCONNECT COMP FLAG	ABT CNTL SEQ,RCS REG SEQ, RCS/RCS XFEED,ASC RCS CMD SOP, E/L RCS CMD SOP,OVERRIDE DISP, MSC,TLM		BD		90114B 89561A
	V90X8285X	AFT MANIFOLD 1/2 JET INH FLAG	ABT CNTL SEQ,ASC RCS CMD SOP, E/L RCS CMD SOP,TLM		BD		90114B 59126H
	V90X8286X	AFT MANIFOLD 3/4/5 JET INH FLAG	ABT CNTL SEQ,ASC RCS CMD SOP, E/L RCS CMD SOP,TLM		BD		90114B 59126H
	V90X8290X	RCS 1/2 ALL JET INHIBIT FLAG	ASC RCS CMD SOP,E/L RCS CMD SOP		BD		90114B
	V90X8291X	RCS 3/4/5 ALL JET INHIBIT FLAG	ASC RCS CMD SOP,E/L RCS CMD SOP		BD		90114B

TABLE 4.3.2.4–1. ABORT OMS/RCS INTERCONNECT FUNCTION (G4.184) INPUT/OUTPUT FUNCTIONAL PARAMETERS

DBFN: D3B027-F PN: VP707100049P00L OUTPUT FUNCTIONAL PARAMETERS FROM ABT OMS/RCS CONN

FSSR NAME	M/S ID	NOMENCLATURE	DESTINATION	UNITS	DATA TYPE	PREC	LAST CRS
	V93X5348XC	OMS/RCS INTERCONNECT INH/ENA CMD	ABT CNTL SEQ,OVERRIDE DISP				89210B

TABLE 4.3.2.4–2. ABORT OMS/RCS INTERCONNECT FUNCTION (G4.184) I–LOADS

DBFN:0484

FSSR NAME	MSID	ENG UNIT	DT	PR	D	S	PR	FCTN	CAT

NO REQUIREMENTS

TABLE 4.3.2.4–3. ABORT OMS/RCS INTERCONNECT FUNCTION (G4.184) K–LOADS

DBFN:0558

FSSR NAME DESCRIPTION	MSID	MC KLOAD VALUE	ENG UNIT	DT PR S PR FCTN	LAST CR EQTN MSID
NO REQUIREMENTS					

TABLE 4.3.2.4–4. ABORT OMS/RCS INTERCONNECT FUNCTION (G4.184) CONSTANTS

DBFN:0558

FSSR NAME DESCRIPTION	MSID	MC	CONSTANT VALUE	ENG UNIT	DT	PR	S	PR FCTN	LAST CR

NO REQUIREMENTS

4.4 MECHANICAL SYSTEMS

4.4.1 Vent Doors (4.161)

4.4.1.1 Introduction

The orbiter's vent and purge system is made up of 18 active doors and is divided into the following six groups: left and right doors 1 and 2, left and right doors 3, left and right doors 5, left and right doors 4 and 7, left and right doors 6, and left and right doors 8 and 9.

All vent doors have a purge position with the exception of left and right vents 3, 4, 5, and 7.

The purge position is required to maintain a positive pressure in the orbiter's payload bay area to prevent contamination and to vent any residue gases in the orbiter and for overall vehicle thermal control during ground turnaround phase. During the ascent and entry phases, the active vent doors are open to vent/repressurize the orbiter to preclude damaging pressures across the structure. On orbit, the vent doors remain open to permit molecular venting of the vehicle cavities and insulation blankets to achieve the required low internal blanket pressure.

Operation of the vent system is controlled exclusively through software.

4.4.1.2 Overview

The sequencing of the active doors is by the software program in the redundant set computer. The doors are cycled to the open, close, or purge position as required in each mission phase. Positioning of the active doors is performed by the software based on mission times or mission events during ascent, entry, and aborts and by keyboard entry during nominal and abort entry phases. The ALL VENTS CLOSE CMD will be used for the open/close status of the vent doors on SPEC 51.

Upon receipt of a cue from the RS launch sequence, this sequence will configure the vent doors for launch. The launch configuration will be all doors in the open position. The status of the vent doors position will be all outputs to the RS launch sequence to determine that the vent doors have achieved the desired open positions. If during the pre-SRB ignition phase a launch abort has occurred, the vent door system will be reconfigured to the prelaunch configuration by LPS.

In an RTLS abort mode upon entering MM 602 or in a TAL abort at ET SEP, the vent doors are commanded to the closed position to prevent ingestion of propellant during propellant dump. In the entry phase, the vent doors are in the closed position and will be commanded to the open position when a predetermined ground relative velocity value has been attained. (This is also true for entry in abort cases.)

Upon entering MM 304, the main propulsion system LO_2 and LH_2 prevalves, LH_2 inboard and outboard fill/drain valves, LH_2 topping valve, LH_2 RTLS inboard and outboard dump valves, helium interconnect and crossover valves, and main engine oxidizer valves are commanded open to vacuum inert residual propellants. The main engine oxidizer valves will only be open during those mission phases when the EIU and main engine controllers are activated. The LO_2 inboard and outboard fill/drain valves are opened in MM 304 at a ground relative velocity of 20,000 ft/sec (Mach 20). The sequence will also perform an automatic closure of the ET umbilical doors upon entering MM 304 if a TAL abort has been declared.

Termination of commands after performing any specific vent door activity will place both A and B SET commands equal to false. For open commands, the A and B RESET command will be set equal to true,

and then the A RESET command will be set equal to false and the B RESET command will remain equal to true. For termination following closure, the A and B RESET commands will be set first to true, then to the values specified in Table 4.4-1. These configurations define the dormant state of the active vent system functional software sequence. RTC mode can only be used to control individual vent doors on orbit.

When the ground relative velocity becomes less than a predetermined velocity (K-load), a helium purge of the aft compartment, OMS pod, and ET umbilical cavity is initiated to dilute the hydrogen concentrations in these areas. The purge function is terminated upon the expiration of a purge timer (K-load).

The LH_2/LO_2 outboard fill/drain valves, LO_2 prevalves, LH_2 RTLS inboard and outboard dump valves, and main engine oxidizer valves are commanded closed, and the LH_2/LO_2 manifolds are pressurized.

4.4.1.3 Detail Requirements

This sequence controls the operation of the doors based on mission times and mission events.

Tables 4.4-1 and 4.4-2 list the commands to position the vent doors to a closed and open position.

Table 4.4-3 lists the purge 1 and 2 commands for vent group 5.

Tables 4.4-4 and 4.4-5 list the feedback signals of the vent doors closed and open configurations. Although the vent control sequence was deleted from OPS-2 after OFT-1, the parameters listed in Tables 4.4-4 and 4.4-5 are required to support telemetry requirements in MC 1, 2, and 3 for all missions.

For times that are greater than six times the process execution time (reciprocal of the execution cycle), the accuracy shall be ±1 execution time; otherwise, the accuracy shall be +1, –0 execution times.

Main engine oxidizer dump and terminate sequence output commands with corresponding binary/BCH command words will be generated in two 16-bit words for output to the EIU, in accordance with the main engine command requirements specified in Section 4.8.2.3.8 and Table 4.8.2-1 of the SSME SOP (4.181).

The following logic steps, once started, must be completed prior to starting another.

Step 1. This step determines if the vent doors are to be configured for launch.

The following signals are monitored:

(a)	CONFIGURE VENT DOOR FOR LAUNCH CMD	V90X8375X
(b)	MISSION ELAPSED TIME	V91W1990C

If (b) < 0.00 sec, monitor (a) above; otherwise proceed to Step 2.

If (a) is true, set the group 5 (vent 6) purge 1 and purge 2 A RESET CMDS equal to false (see Table 4.4-3), and proceed to Step 9; otherwise, return to Step 1.

Step 2. This step determines if the vent doors are to be automatically closed for an RTLS or TAL abort.

The following signals are monitored:

(a)	MISSION ELAPSED TIME	V91W1990C
(b)	MAJOR MODE 602 FLAG	V90X8174X
(c)	ET SEPARATION CMD FLAG	V90X8250X

(d) TAL ABORT DECLARED V90X8658X

If (a) > 100 sec and [(b) is true, or if (c) and (d) are both true], one time only set (1) equal to 0.48 sec and proceed to Step 8; otherwise proceed to Step 2a.

(1) VENT_CMDS_TIME_DELAY V97U9859C

Step 2a. This step checks for MM 304 and upon entry, if a TAL abort has been declared, provides for the automatic closure of the ET umbilical doors.

Monitor the following signals:

(a) MAJOR MODE 304 FLAG V90X8161X
(b) TAL ABORT DECLARED V90X8652X

If (a) or (b) is false, proceed to Step 3.

If (a) and (b) are both true, on first pass, start an ET umbilical door timer and set (1) through (8) below true, and proceed to Step 3. On subsequent passes, proceed to the next if statement.

If 66 seconds have elapsed since the ET umbilical door timer was started, on first pass, set (9) through (11) and (17) though (24) false, and proceed to Step 3. On subsequent passes, proceed to Step 3. Otherwise, proceed to the next if statement.

If 54 seconds have elapsed since the ET umbilical door timer was started, on first pass, set (12) through (16) false, (17) through (24) true, and proceed to Step 3. On subsequent passes, proceed to Step 3. Otherwise, proceed to the next if statement.

If 12 seconds have elapsed since the ET umbilical door timer was started, on first pass, set (1) through (8) false and proceed to Step 3. Otherwise, proceed to the next if statement.

If 6 seconds have elapsed since the ET umbilical door timer was started, on first pass, set (9) through (16) true and proceed to Step 3. On subsequent passes, proceed to Step 3. Otherwise, proceed to Step 3.

(1) ET DR CL LCH 1B1/2B2 FA1 STOW CMD V56K1271X
(2) ET DR CL LCH 1B2/2B1 FAI STOW CMD V56K1272X
(3) ET DR CL LCH 1B1/2B2 FA2 STOW CMD V56K1273X
(4) ET DR CL LCH 1B2/2B1 FA2 STOW CMD V56K1274X
(5) ET DR CL LCH 1B1/2B2 FA4 STOW CMD V56K1371X
(6) ET DR CL LCH 1B2/2B1 FA4 STOW CMD V56K1343X
(7) ET DR CL LCH 1B1/2B2 FA3 STOW CMD V56K1373X
(8) ET DR CL LCH 1B2/2B1 FA3 STOW CMD V56K1374X
(9) ET DR DRV & CL LCH DC ARM AMCA 1/2 V56K0141X
(10) ET DR DRV & CL LCH DC ARM AMCA 1/3 V56K0142X
(11) ET DR DRV & CL LCH DC ARM AMCA 2/3 V56K0143X
(12) ET UMB DR L–B2/R–B1 CLOSE CMD V56K3111X
(13) ET UMB DR R–B2 CLOSE CMD V56K3112X
(14) ET UMB DR R–B1/B2 CLOSE CMD V56K4121X
(15) ET UMB DR L–B1 CLOSE CMD V56K4122X
(16) ET UMB DR L–B1/B2 CLOSE CMD V56K0140X

(17)	ET L UMB COUT DOOR LATCH FA1 CMD	V56K3531X
(18)	ET R UMB COUT DOOR LATCH FA1 CMD	V56K3532X
(19)	ET L UMB COUT DOOR LATCH FA4 CMD	V56K3533X
(20)	ET R UMB COUT DOOR LATCH FA4 CMD	V56K3534X
(21)	ET L UMB COUT DOOR LATCH FA3 CMD	V56K4531X
(22)	ET R UMB COUT DOOR LATCH FA3 CMD	V56K4532X
(23)	ET L UMB COUT DOOR LATCH FA2 CMD	V56K4533X
(24)	ET R UMB COUT DOOR LATCH FA2 CMD	V56K4534X

Step 3. This step provides for automatic opening of the LH_2 and LO_2 prevalves, the LH_2 inboard and outboard fill and drain valves, LH_2 topping valve, LH_2 RTLS inboard and outboard dump valves, helium interconnect and crossover valves, and the main engine oxidizer valves if the EIU and main engine controllers are active, to vacuum inert residual propellant upon entry into MM 304. At Mach 20, the LO_2 inboard and outboard fill/drain valves are opened in MM 304.

The following signals are monitored:

(a)	MAJOR MODE 304 FLAG	V90X8161X
(b)	GND REL VEL MAGNITUDE IN M50 SYS	V95L0151C

If (a) is false, proceed to Step 4.

If (a) is true, on first pass, set outputs (1) through (4), (7) through (10), (14) through (18), and (34) through (60) true; generate (61) through (63); set outputs (5), (19) through (30), (32), and (33) false; and proceed to Step 4. On subsequent passes, monitor (b).

If (b) $\leq$ 20,000 ft/sec, on first pass, set outputs (11) through (13) true, set outputs (6) and (31) false, and proceed to Step 4. Otherwise proceed to Step 4.

(1)	MPS PNEU VLV HE ISLN NO. 1 OPEN CMD	V41K1607X
(2)	MPS PNEU VLV HE ISLN NO. 2 OPEN CMD	V41K1608X
(3)	MPS L HE ISOV B OP CMD A	V41K1256X
(4)	MPS L HE ISOV B OP CMD B	V41K1257X
(5)	MPS LH_2 OTBD FILL VALVE CLOSE CMD	V41K1393X
(6)	MPS LO_2 OTBD FILL VALVE CLOSE CMD	V41K1515X
(7)	MPS LH_2 OTBD FILL VALVE OPEN CMD	V41K1391X
(8)	MPS LH_2 INBD FILL VALVE OPEN CMD A	V41K1401X
(9)	MPS LH_2 INBD FILL VALVE OPEN CMD B	V41K1402X
(10)	MPS LH_2 TOPPING VALVE OPEN CMD	V41K1411X
(11)	MPS LO_2 OTBD FILL VALVE OPEN CMD	V41K1518X
(12)	MPS LO_2 INBD FILL VALVE OPEN CMD A	V41K1501X
(13)	MPS LH_2 INBD FILL VALVE OPEN CMD B	V41K1502X
(14)	MPS E1 HE INTCON OUT/OPEN CMD A	V41K1168X
(15)	MPS E3 HE INTCON OUT/OPEN CMD A	V41K1368X
(16)	MPS PNEU CROSSOVER NO. 2 OPEN CMD	V41K1613X
(17)	MPS E2 HE INTCON IN/OPEN CMD A	V41K1262X
(18)	MPS E2 HE INTCON IN/OPEN CMD B	V41K1263X
(19)	MPS E-1 LO_2 PREVALVE CLOSE CMD A	V41K1139X
(20)	MPS E-1 LO_2 PREVALVE CLOSE CMD B	V41K1140X
(21)	MPS E-1 LO_2 PREVALVE CLOSE CMD C	V41K1141X

(22)	MPS E-1 LO_2 PREVALVE CLOSE CMD D	V41K1142X
(23)	MPS E-2 LO_2 PREVALVE CLOSE CMD A	V41K1239X
(24)	MPS E-2 LO_2 PREVALVE CLOSE CMD B	V41K1240X
(25)	MPS E-2 LO_2 PREVALVE CLOSE CMD C	V41K1241X
(26)	MPS E-2 LO_2 PREVALVE CLOSE CMD D	V41K1242X
(27)	MPS E-3 LO_2 PREVALVE CLOSE CMD A	V41K1339X
(28)	MPS E-3 LO_2 PREVALVE CLOSE CMD B	V41K1340X
(29)	MPS E-3 LO_2 PREVALVE CLOSE CMD C	V41K1341X
(30)	MPS E-3 LO_2 PREVALVE CLOSE CMD D	V41K1342X
(31)	MPS LO_2 INBD FILL VALVE CLOSE CMD	V41K1512X
(32)	MPS LH_2 INBD FILL VALVE CLOSE CMD	V41K1412X
(33)	MPS E2 HE INTCON OUT/OPEN CMD A	V41K1268X
(34)	MPS E-1 LH_2 PREVALVE OPEN CMD A	V41K1119X
(35)	MPS E-1 LH_2 PREVALVE OPEN CMD B	V41K1120X
(36)	MPS E-1 LH_2 PREVALVE OPEN CMD C	V41K1121X
(37)	MPS E-2 LH_2 PREVALVE OPEN CMD A	V41K1219X
(38)	MPS E-2 LH_2 PREVALVE OPEN CMD B	V41K1220X
(39)	MPS E-2 LH_2 PREVALVE OPEN CMD C	V41K1221X
(40)	MPS E-3 LH_2 PREVALVE OPEN CMD A	V41K1319X
(41)	MPS E-3 LH_2 PREVALVE OPEN CMD B	V41K1320X
(42)	MPS E-3 LH_2 PREVALVE OPEN CMD C	V41K1321X
(43)	MPS E-1 LO_2 PREVALVE OPEN CMD A	V41K1136X
(44)	MPS E-1 LO_2 PREVALVE OPEN CMD B	V41K1137X
(45)	MPS E-1 LO_2 PREVALVE OPEN CMD C	V41K1138X
(46)	MPS E-1 LO_2 PREVALVE OPEN CMD D	V41K1143X
(47)	MPS E-2 LO_2 PREVALVE OPEN CMD A	V41K1236X
(48)	MPS E-2 LO_2 PREVALVE OPEN CMD B	V41K1237X
(49)	MPS E-2 LO_2 PREVALVE OPEN CMD C	V41K1238X
(50)	MPS E-2 LO_2 PREVALVE OPEN CMD D	V41K1243X
(51)	MPS E-3 LO_2 PREVALVE OPEN CMD A	V41K1336X
(52)	MPS E-3 LO_2 PREVALVE OPEN CMD B	V41K1337X
(53)	MPS E-3 LO_2 PREVALVE OPEN CMD C	V41K1338X
(54)	MPS E-3 LO_2 PREVALVE OPEN CMD D	V41K1343X
(55)	MPS LH_2 RTLS INBD D/V OPEN CMD A	V41K1923X
(56)	MPS LH_2 RTLS INBD D/V OPEN CMD B	V41K1924X
(57)	MPS LH_2 RTLS INBD D/V OPEN CMD C	V41K1925X
(58)	MPS LH_2 RTLS OTBD D/V OPEN CMD A	V41K1913X
(59)	MPS LH_2 RTLS OTBD D/V OPEN CMD B	V41K1914X
(60)	MPS LH_2 RTLS OTBD D/V OPEN CMD C	V41K1915X
(61)	ME-1 OXIDIZER DUMP CMD	E41K1219B
(62)	ME-2 OXIDIZER DUMP CMD	E41K2219B
(63)	ME-3 OXIDIZER DUMP CMD	E41K3219B

Step 4. This step provides an automatic He purge of the aft compartment OMS pod and ET umbilical cavity during MM 304 or MM 305. The LH_2/LO_2 outboard fill/drain valves, LO_2 prevalves, LH_2 RTLS inboard and outboard dump valves, and main engine oxidizer valves are commanded closed; and the LH_2/LO_2 manifolds are pressurized.

The following signals are monitored:

(a)	GND REL VEL MAGNITUDE IN M50 SYS	V95L0151C
(b)	HE_PURGE_VEL	V96U8958C
(c)	MAJOR MODE 304 FLAG	V90X8161X
(d)	MAJOR MODE 305 FLAG	V90X8162X
(e)	HE_PURGE_TIME	V96U8959C
(f)	HE PURGE TIMER	(INTERNAL)

If (a) > (b) or if (c) and (d) are both false, proceed to Step 5.

If (a) $\leq$ (b) and (c) or (d) is true, on first pass, set outputs (1) through (8) and (11) through (22) below true; set (9), (10), and (23) through (40) false; terminate (41) through (43); generate (44) through (46); start timer (f); and proceed to Step 5. On subsequent passes, monitor (e).

If (e) seconds have not elapsed since (f) started, proceed. Otherwise proceed to Step 5.

If (e) seconds have elapsed since (f) started, set outputs (1) and (2) false and proceed to Step 5.

(1)	MPS HE SPLY BLOWDOWN NO. 1 OPEN CMD	V41K1631X
(2)	MPS HE SPLY BLOWDOWN NO. 2 OPEN CMD	V41K1633X
(3)	MPS LH_2 OTBD FILL VALVE CLOSE CMD	V41K1393X
(4)	MPS LH_2 MANF REPRESS NO. 1 OPEN CMD	V41K1435X
(5)	MPS LH_2 MANF REPRESS NO. 2 OPEN CMD	V41K1437X
(6)	MPS LO_2 OTBD FILL VALVE CLOSE CMD	V41K1515X
(7)	MPS LO_2 MANF REPRESS NO. 1 OPEN CMD	V41K1535X
(8)	MPS LO_2 MANF REPRESS NO. 2 OPEN CMD	V41K1537X
(9)	MPS LH_2 OTBD FILL VALVE OPEN CMD	V41K1391X
(10)	MPS LO_2 OTBD FILL VALVE OPEN CMD	V41K1518X
(11)	MPS E-1 LO_2 PREVALVE CLOSE CMD A	V41K1139X
(12)	MPS E-1 LO_2 PREVALVE CLOSE CMD B	V41K1140X
(13)	MPS E-1 LO_2 PREVALVE CLOSE CMD C	V41K1141X
(14)	MPS E-1 LO_2 PREVALVE CLOSE CMD D	V41K1142X
(15)	MPS E-2 LO_2 PREVALVE CLOSE CMD A	V41K1239X
(16)	MPS E-2 LO_2 PREVALVE CLOSE CMD B	V41K1240X
(17)	MPS E-2 LO_2 PREVALVE CLOSE CMD C	V41K1241X
(18)	MPS E-2 LO_2 PREVALVE CLOSE CMD D	V41K1242X
(19)	MPS E-3 LO_2 PREVALVE CLOSE CMD A	V41K1339X
(20)	MPS E-3 LO_2 PREVALVE CLOSE CMD B	V41K1340X
(21)	MPS E-3 LO_2 PREVALVE CLOSE CMD C	V41K1341X
(22)	MPS E-3 LO_2 PREVALVE CLOSE CMD D	V41K1342X
(23)	MPS E-1 LO_2 PREVALVE OPEN CMD A	V41K1136X
(24)	MPS E-1 LO_2 PREVALVE OPEN CMD B	V41K1137X
(25)	MPS E-1 LO_2 PREVALVE OPEN CMD C	V41K1138X
(26)	MPS E-1 LO_2 PREVALVE OPEN CMD D	V41K1143X
(27)	MPS E-2 LO_2 PREVALVE OPEN CMD A	V41K1236X
(28)	MPS E-2 LO_2 PREVALVE OPEN CMD B	V41K1237X
(29)	MPS E-2 LO_2 PREVALVE OPEN CMD C	V41K1238X
(30)	MPS E-2 LO_2 PREVALVE OPEN CMD D	V41K1243X
(31)	MPS E-3 LO_2 PREVALVE OPEN CMD A	V41K1336X

(32)	MPS E-3 LO_2 PREVALVE OPEN CMD B	V41K1337X
(33)	MPS E-3 LO_2 PREVALVE OPEN CMD C	V41K1338X
(34)	MPS E-3 LO_2 PREVALVE OPEN CMD D	V41K1343X
(35)	MPS LH_2 RTLS INBD D/V OPEN CMD A	V41K1923X
(36)	MPS LH_2 RTLS INBD D/V OPEN CMD B	V41K1924X
(37)	MPS LH_2 RTLS INBD D/V OPEN CMD C	V41K1925X
(38)	MPS LH_2 RTLS OTBD D/V OPEN CMD A	V41K1913X
(39)	MPS LH_2 RTLS OTBD D/V OPEN CMD B	V41K1914X
(40)	MPS LH_2 RTLS OTBD D/V OPEN CMD C	V41K1915X
(41)	ME-1 OXIDIZER DUMP CMD	E41K1219B
(42)	ME-2 OXIDIZER DUMP CMD	E41K2219B
(43)	ME-3 OXIDIZER DUMP CMD	E41K3219B
(44)	ME-1 TERMINATE SEQUENCE CMD	E41K1218B
(45)	ME-2 TERMINATE SEQUENCE CMD	E41K2218B
(46)	ME-3 TERMINATE SEQUENCE CMD	E41K3218B

Step 5. This step determines if left vent groups 1 and 6 are to be opened in response to an open command during MM 304 and provides auto closure capability for all vent doors upon transition into MM 304.

The following signals are monitored:

(a)	ALL VENT CLOSE CMD	V93X7201X
(b)	MAJOR MODE 304 FLAG	V90X8161X
(c)	VENT DOOR SEQUENCE INIT	V95X0235X
(d)	LEFT VENTS 1 AND 6 OPEN FLAG	(INTERNAL)

If (b) is true and (c) and (d) are false, proceed to Step 8.

If (b) and (c) are true and (a) is false, issue the following groups of commands, maintaining the commands to each group for 10 seconds. Then set A and B OPEN SET CMDS = false and A and B OPEN RESET CMDS = true. Then, three minor cycles later, set A OPEN RESET CMDS = false. Set (d) = true and proceed to Step 6.

Table 4.4-2, Group 1 left vents
Table 4.4-2, Group 6 left vents

If none of the above conditions are met, proceed to Step 6.

Step 6. This step initiates the automatic vent door opening in MM 304, MM 305, MM 602, or MM 603 when the vehicle reaches a predetermined velocity.

The following signals are monitored:

(a)	ALL VENT CLOSE CMD	V93X7201X
(b)	GND REL VEL MAGNITUDE IN M50 SYS	V95L0151C
(c)	MAJOR MODE 304 FLAG	V90X8161X
(d)	MAJOR MODE 602 FLAG	V90X8174X
(e)	MAJOR MODE 305 FLAG	V90X8162X
(f)	MAJOR MODE 603 FLAG	V90X0013X
(g)	GROUND_REL_VEL_THRESHOLD	V97U9806C
(h)	VENT DOOR SEQ INIT	V95X0235X

If (b) $\leq$ (g) and [(c) or (d) or (e) or (f)] is true and (h) is false, proceed to Step 9; otherwise proceed to Step 7.

Step 7. This step provides manual control of vent door operations during OPS 3.

The following signals are monitored:

(a)	ALL VENT CLOSE CMD	V93X7201X
(b)	MAJOR MODE 304 FLAG	V90X8161X
(c)	VENT DOOR SEQ INIT	V95X0235X

If (c) is true and (a) and (b) are false, proceed to Step 9.

If (a) and (c) are true, proceed to Step 8. Otherwise return to Step 1.

Step 8. This step initiates the vent door close activities. On first entry into this step, using (a) below, do the following:

(a) VENT CMDS TIME DELAY V97U9859C

Issue the following groups of commands at intervals of (a) seconds, maintaining the commands to each group for 10 seconds. Then set the A and B CLOSE SET CMDS equal to false, and A and B CLOSE RESET CMDS equal to true. Then, three minor cycles later, set the A CLOSE RESET CMD equal to Table 4.4-1 DORMANT STATE before proceeding.

Table 4.4-1, Group 1
Table 4.4-1, Group 2
Table 4.4-1, Group 3
Table 4.4-1, Group 4
Table 4.4-1, Group 5
Table 4.4-1, Group 6

Then monitor for (b) below:

(b) MM 301 FLAG V90X8183X

If (b) is true, then issue open commands to the following groups of doors, maintaining commands to each group for 10 seconds. Then set A and B OPEN SET CMDS equal to false and A and B OPEN RESET CMDS equal to true. Then, three minor cycles later, set A OPEN RESET CMDS equal to false and return to Step 1.

Table 4.4-2, Group 1 left vents
Table 4.4-2, Group 6 left vents

If (b) is false, set ALL VENT CLOSE CMD to true and return to Step 1.

Step 9. This step initiates the vent door open activities. On first entry into this step, using (a) below, do the following:

(a) VENT CMDS TIME DELAY V97U9859C

Issue the following groups of commands at intervals of (a) seconds, maintaining the commands to each group for 10 seconds. Then set the A and B OPEN SET CMDS equal to false

and A and B OPEN RESET CMDS equal to true. Then, three minor cycles later, set A OPEN RESET CMDS equal to false before proceeding.

Table 4.4-2, Group 4
Table 4.4-2, Group 2
Table 4.4-2, Group 5
Table 4.4-2, Group 3
Table 4.4-2, Group 1
Table 4.4-2, Group 6

On the first pass, initialize the status word (b) below to all zeros, and for 5 seconds after issuing the Group 6 command above, monitor the corresponding parameters in Table 4.4-5 for status word updates. For each vent door (L,R), the status shall be set true if either one of the dual redundant status discretes is true; otherwise, the status shall be set false. If any of the commfaults (c) through (j) below occur, use the latest noncommfaulted values for subsequent status word update.

(b)	ORBITER VENT DOOR STATUS WORD 1	V90J8201C
(c)	FF1 INPUT PROM SEG 2, 6 STATUS (HFE)	V91X2288X
(d)	FF2 INPUT PROM SEG 2, 6 STATUS (HFE)	V91X2289X
(e)	FF3 INPUT PROM SEG 2, 6 STATUS (HFE)	V91X2290X
(f)	FF4 INPUT PROM SEG 2, 6 STATUS (HFE)	V91X2291X
(g)	FA1 INPUT PROM SEG 3, 10 STATUS (HFE)	V91X2845X
(h)	FA2 INPUT PROM SEG 3, 10 STATUS (HFE)	V91X2846X
(i)	FA3 INPUT PROM SEG 3, 10 STATUS (HFE)	V91X2847X
(j)	FA4 INPUT PROM SEG 3, 10 STATUS (HFE)	V91X2848X

When all commands have been issued, set the ALL VENT CLOSE CMD to false and return to step 1.

Table 4.4–1. Vent Group Close Commands

			RESET DORMANT STATE	
Vent Group 1	a	V59K3000X	0	L FWD VENTS 1&2 CLOSE CMD 1A
Left & Right	b	V59K3001X	1	L FWD VENTS 1&2 CLOSE CMD 1B
Fwd Vent	c	V59K3010X	0	L FWD VENTS 1&2 CLOSE CMD 2A
Port 1 & 2	d	V59K3011X	1	L FWD VENTS 1&2 CLOSE CMD 2B
	e	V59K4000X	0	R FWD VENTS 1&2 CLOSE CMD 1A
	f	V59K4001X	0	R FWD VENTS 1&2 CLOSE CMD 1B
	g	V59K4010X	1	R FWD VENTS 1&2 CLOSE CMD 2A
	h	V59K4011X	1	R FWD VENTS 1&2 CLOSE CMD 2B
Vent Group 2	a	V59K3200X	0	L PB VENT 3 CLOSE CMD 1A
Left & Right	b	V59K3201X	1	L PB VENT 3 CLOSE CMD 1B
Mid Fus Vent	c	V59K3210X	0	L PB VENT 3 CLOSE CMD 2A
Port 3	d	V59K3211X	1	L PB VENT 3 CLOSE CMD 2B
	e	V59K4200X	0	R PB VENT 3 CLOSE CMD 1A
	f	V59K4201X	0	R PB VENT 3 CLOSE CMD 1B
	g	V59K4210X	1	R PB VENT 3 CLOSE CMD 2A
	h	V59K4211X	1	R PB VENT 3 CLOSE CMD 2B
Vent Group 3	a	V59K3400X	1	L PB VENT 5 CLOSE CMD 1A
Left & Right	b	V59K3401X	1	L PB VENT 5 CLOSE CMD 1B
Mid Fus Vent	c	V59K3410X	1	L PB VENT 5 CLOSE CMD 2A
Port 5	d	V59K3411X	1	L PB VENT 5 CLOSE CMD 2B
	e	V59K4400X	0	R PB VENT 5 CLOSE CMD 1A
	f	V59K4401X	0	R PB VENT 5 CLOSE CMD 1B
	g	V59K4410X	0	R PB VENT 5 CLOSE CMD 2A
	h	V59K4411X	0	R PB VENT 5 CLOSE CMD 2B
Vent Group 4	a	V59K3300X	1	L PB/W VENTS 4&7 CLOSE CMD 1A
Left & Right	b	V59K3301X	1	L PB/W VENTS 4&7 CLOSE CMD 1B
Mid Fus Vent	c	V59K3310X	0	L PB/W VENTS 4&7 CLOSE CMD 2A
Port 4 & 7	d	V59K3311X	1	L PB/W VENTS 4&7 CLOSE CMD 2B
	e	V59K4300X	0	R PB/W VENTS 4&7 CLOSE CMD 1A
	f	V59K4301X	1	R PB/W VENTS 4&7 CLOSE CMD 1B
	g	V59K4310X	0	R PB/W VENTS 4&7 CLOSE CMD 2A
	h	V59K4311X	0	R PB/W VENTS 4&7 CLOSE CMD 2B

Table 4.4–1. Vent Group Close Commands

			RESET DORMANT STATE	
Vent Group 5	a	V59K3500X	0	L PB VENT 6 CLOSE CMD 1A
Left & Right	b	V59K3501X	0	L PB VENT 6 CLOSE CMD 1B
Aft Pld Vent	c	V59K3510X	0	L PB VENT 6 CLOSE CMD 2A
Port 6	d	V59K3511X	1	L PB VENT 6 CLOSE CMD 2B
	e	V59K4500X	1	R PB VENT 6 CLOSE CMD 1A
	f	V59K4501X	1	R PB VENT 6 CLOSE CMD 1B
	g	V59K4510X	0	R PB VENT 6 CLOSE CMD 2A
	h	V59K4511X	1	R PB VENT 6 CLOSE CMD 2B
Vent Group 6	a	V59K3800X	0	L AFT VENTS 8&9 CLOSE CMD 1A
Left & Right	b	V59K3801X	1	L AFT VENTS 8&9 CLOSE CMD 1B
Aft Vent	c	V59K3810X	0	L AFT VENTS 8&9 CLOSE CMD 2A
Port 8 & 9	d	V59K3811X	1	L AFT VENTS 8&9 CLOSE CMD 2B
	e	V59K4800X	1	R AFT VENTS 8&9 CLOSE CMD 1A
	f	V59K4801X	1	R AFT VENTS 8&9 CLOSE CMD 1B
	g	V59K4810X	0	R AFT VENTS 8&9 CLOSE CMD 2A
	h	V59K4811X	0	R AFT VENTS 8&9 CLOSE CMD 2B

Table 4.4–2. Vent Group Open Commands

Vent Group 1	a	V59K3050X	L FWD VENTS 1&2 OPEN CMD 1A
Left & Right	b	V59K3051X	L FWD VENTS 1&2 OPEN CMD 1B
Fwd Vent	c	V59K3060X	L FWD VENTS 1&2 OPEN CMD 2A
Port 1 & 2	d	V59K3061X	L FWD VENTS 1&2 OPEN CMD 2B
	e	V59K4050X	R FWD VENTS 1&2 OPEN CMD 1A
	f	V59K4051X	R FWD VENTS 1&2 OPEN CMD 1B
	g	V59K4060X	R FWD VENTS 1&2 OPEN CMD 2A
	h	V59K4061X	R FWD VENTS 1&2 OPEN CMD 2B
Vent Group 2	a	V59K3250X	L PB VENT 3 OPEN CMD 1A
Left & Right	b	V59K3251X	L PB VENT 3 OPEN CMD 1B
Mid Fus Vent	c	V59K3260X	L PB VENT 3 OPEN CMD 2A
Port 3	d	V59K3261X	L PB VENT 3 OPEN CMD 2B
	e	V59K4250X	R PB VENT 3 OPEN CMD 1A
	f	V59K4251X	R PB VENT 3 OPEN CMD 1B
	g	V59K4260X	R PB VENT 3 OPEN CMD 2A
	h	V59K4261X	R PB VENT 3 OPEN CMD 2B
Vent Group 3	a	V59K3450X	L PB VENT 5 OPEN CMD 1A
Left & Right	b	V59K3451X	L PB VENT 5 OPEN CMD 1B
Mid Fus Vent	c	V59K3460X	L PB VENT 5 OPEN CMD 2A
Port 5	d	V59K3461X	L PB VENT 5 OPEN CMD 2B
	e	V59K4450X	R PB VENT 5 OPEN CMD 1A
	f	V59K4451X	R PB VENT 5 OPEN CMD 1B
	g	V59K4460X	R PB VENT 5 OPEN CMD 2A
	h	V59K4461X	R PB VENT 5 OPEN CMD 2B
Vent Group 4	a	V59K3350X	L PB/W VENTS 4&7 OPEN CMD 1A
Left & Right	b	V59K3351X	L PB/W VENTS 4&7 OPEN CMD 1B
Mid Fus Vent	c	V59K3360X	L PB/W VENTS 4&7 OPEN CMD 2A
Port 4 & 7	d	V59K3361X	L PB/W VENTS 4&7 OPEN CMD 2B
	e	V59K4350X	R PB/W VENTS 4&7 OPEN CMD 1A
	f	V59K4351X	R PB/W VENTS 4&7 OPEN CMD 1B
	g	V59K4360X	R PB/W VENTS 4&7 OPEN CMD 2A
	h	V59K4361X	R PB/W VENTS 4&7 OPEN CMD 2B
Vent Group 5	a	V59K3550X	L PB VENT 6 OPEN CMD 1A
Left & Right	b	V59K3551X	L PB VENT 6 OPEN CMD 1B
Aft Pld Vent	c	V59K3560X	L PB VENT 6 OPEN CMD 2A

Table 4.4–2. Vent Group Open Commands

Port 6	d	V59K3561X	L PB VENT 6 OPEN CMD 2B
	e	V59K4550X	R PB VENT 6 OPEN CMD 1A
	f	V59K4551X	R PB VENT 6 OPEN CMD 1B
	g	V59K4560X	R PB VENT 6 OPEN CMD 2A
	h	V59K4561X	R PB VENT 6 OPEN CMD 2B
Vent Group 6	a	V59K3850X	L AFT VENTS 8&9 OPEN CMD 1A
Left & Right	b	V59K3851X	L AFT VENTS 8&9 OPEN CMD 1B
Aft Vent	c	V59K3860X	L AFT VENTS 8&9 OPEN CMD 2A
Port 8 & 9	d	V59K3861X	L AFT VENTS 8&9 OPEN CMD 2B
	e	V59K4850X	R AFT VENTS 8&9 OPEN CMD 1A
	f	V59K4851X	R AFT VENTS 8&9 OPEN CMD 1B
	g	V59K4860X	R AFT VENTS 8&9 OPEN CMD 2A
	h	V59K4861X	R AFT VENTS 8&9 OPEN CMD 2B

Table 4.4–3. Vent Group Purge Configuration Commands

Vent Group 5	a	V59K3600X	LPB VENT 6 PURGE 1 CMD 1A
Left & Right	b	V59K3700X	LPB VENT 6 PURGE 2 CMD 1A
Purge 1 and 2	c	V59K4610X	RPB VENT 6 PURGE 1 CMD 2A
Port 6	d	V59K4710X	RPB VENT 6 PURGE 2 CMD 2A
	e	V59K4600X	RPB VENT 6 PURGE 1 CMD 1A
	f	V59K4700X	RPB VENT 6 PURGE 2 CMD 1A
	g	V59K3610X	LPB VENT 6 PURGE 1 CMD 2A
	h	V59K3710X	LPB VENT 6 PURGE 2 CMD 2A

Table 4.4–4. Vent Group Close Measurements

Vent Group 1	a	V59X3005X	L FWD VENTS 1&2 CLOSED 1
Left & Right	b	V59X3015X	L FWD VENTS 1&2 CLOSED 2
Fwd Vent	c	V59X4005X	R FWD VENTS 1&2 CLOSED 1
Port 1 & 2	d	V59X4015X	R FWD VENTS 1&2 CLOSED 2
Vent Group 2	a	V59X3205X	L PB VENT 3 CLOSED 1
Left & Right	b	V59X3215X	L PB VENT 3 CLOSED 2
Mid Fus Vent	c	V59X4205X	R PB VENT 3 CLOSED 1
Port 3	d	V59X4215X	R PB VENT 3 CLOSED 2
Vent Group 3	a	V59X3405X	L PB VENT 5 CLOSED 1
Left & Right	b	V59X3415X	L PB VENT 5 CLOSED 2
Mid Fus Vent	c	V59X4405X	R PB VENT 5 CLOSED 1
Port 5	d	V59X4415X	R PB VENT 5 CLOSED 2
Vent Group 4	a	V59X3305X	L PB/W VENT 4&7 CLOSED 1
Left & Right	b	V59X3315X	L PB/W VENT 4&7 CLOSED 2
Mid Fus Vent	c	V59X4305X	R PB/W VENT 4&7 CLOSED 1
Port 4 & 7	d	V59X4315X	R PB/W VENT 4&7 CLOSED 2
Vent Group 5	a	V59X3505X	L PB VENT 6 CLOSED 1
Left & Right	b	V59X3515X	L PB VENT 6 CLOSED 2
Aft Pld Vent	c	V59X4505X	R PB VENT 6 CLOSED 1
Port 6	d	V59X4515X	R PB VENT 6 CLOSED 2
Vent Group 6	a	V59X3805X	L AFT VENTS 8&9 CLOSED 1
Left & Right	b	V59X3815X	L AFT VENTS 8&9 CLOSED 2
Aft Vent	c	V59X4805X	R AFT VENTS 8&9 CLOSED 1
Port 8 & 9	d	V59X4815X	R AFT VENTS 8&9 CLOSED 2

Table 4.4–5. Vent Group Open Measurements

Vent Group 1	a	V59X3055X	L FWD VENTS 1&2 OPEN 1
Left and Right	b	V59X3065X	L FWD VENTS 1&2 OPEN 2
Forward Vent	c	V59X4055X	L FWD VENTS 1&2 OPEN 1
Ports 1 and 2	d	V59X4065X	L FWD VENTS 1&2 OPEN 2
Vent Group 2	a	V59X3255X	L PB VENT 3 OPEN 1
Left and Right	b	V59X3265X	L PB VENT 3 OPEN 2
Mid Fuselage Vent	c	V59X4255X	R PB VENT 3 OPEN 1
Port 3	d	V59X4265X	R PB VENT 3 OPEN 2
Vent Group 3	a	V59X3455X	L PB VENT 5 OPEN 1
Left and Right	b	V59X3465X	L PB VENT 5 OPEN 2
Mid Fuselage Vent	c	V59X4455X	R PB VENT 5 OPEN 1
Port 5	d	V59X4465X	R PB VENT 5 OPEN 2
Vent Group 4	a	V59X3355X	L PB/W VENTS 4&7 OPEN 1
Left and Right	b	V59X3365X	L PB/W VENTS 4&7 OPEN 2
Mid Fuselage Vent	c	V59X4355X	R PB/W VENTS 4&7 OPEN 1
Ports 4 and 7	d	V59X4365X	R PB/W VENTS 4&7 OPEN 2
Vent Group 5	a	V59X3555X	L PB VENT 6 OPEN 1
Left and Right	b	V59X3565X	L PB VENT 6 OPEN 2
Aft Payload Vent	c	V59X4555X	L PB VENT 6 OPEN 1
Port 6	d	V59X4565X	L PB VENT 6 OPEN 2
Vent Group 6	a	V59X3855X	L AFT VENTS 8&9 OPEN 1
Left and Right	b	V59X3865X	L AFT VENTS 8&9 OPEN 2
Aft Vent	c	V59X4855X	R AFT VENTS 8&9 OPEN 1
Ports 8 and 9	d	V59X4865X	R AFT VENTS 8&9 OPEN 2

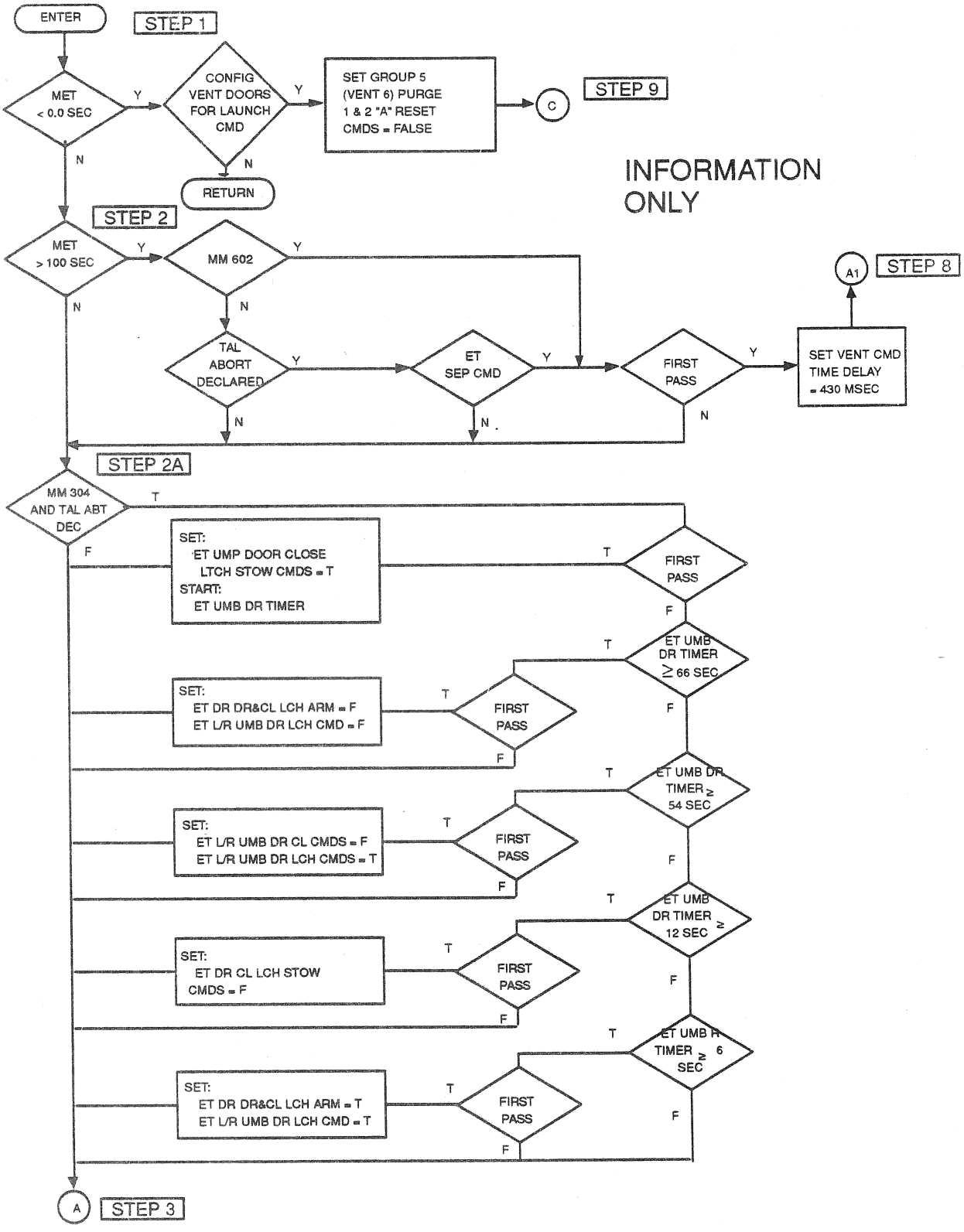

Figure 4.161. Vent Door Sequence (Sheet 1 of 7)

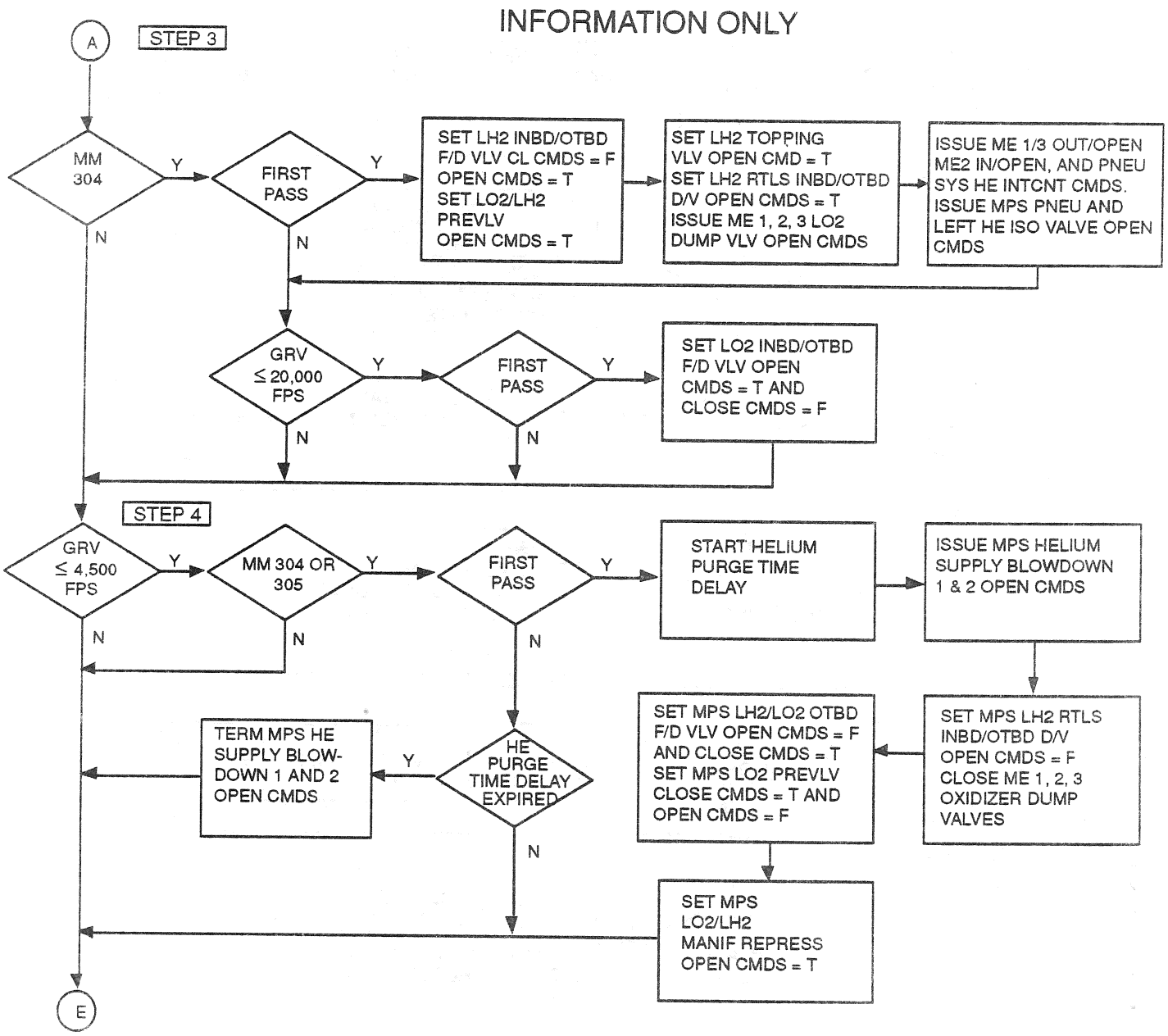

Figure 4.161. Vent Door Sequence (Sheet 2 of 7)

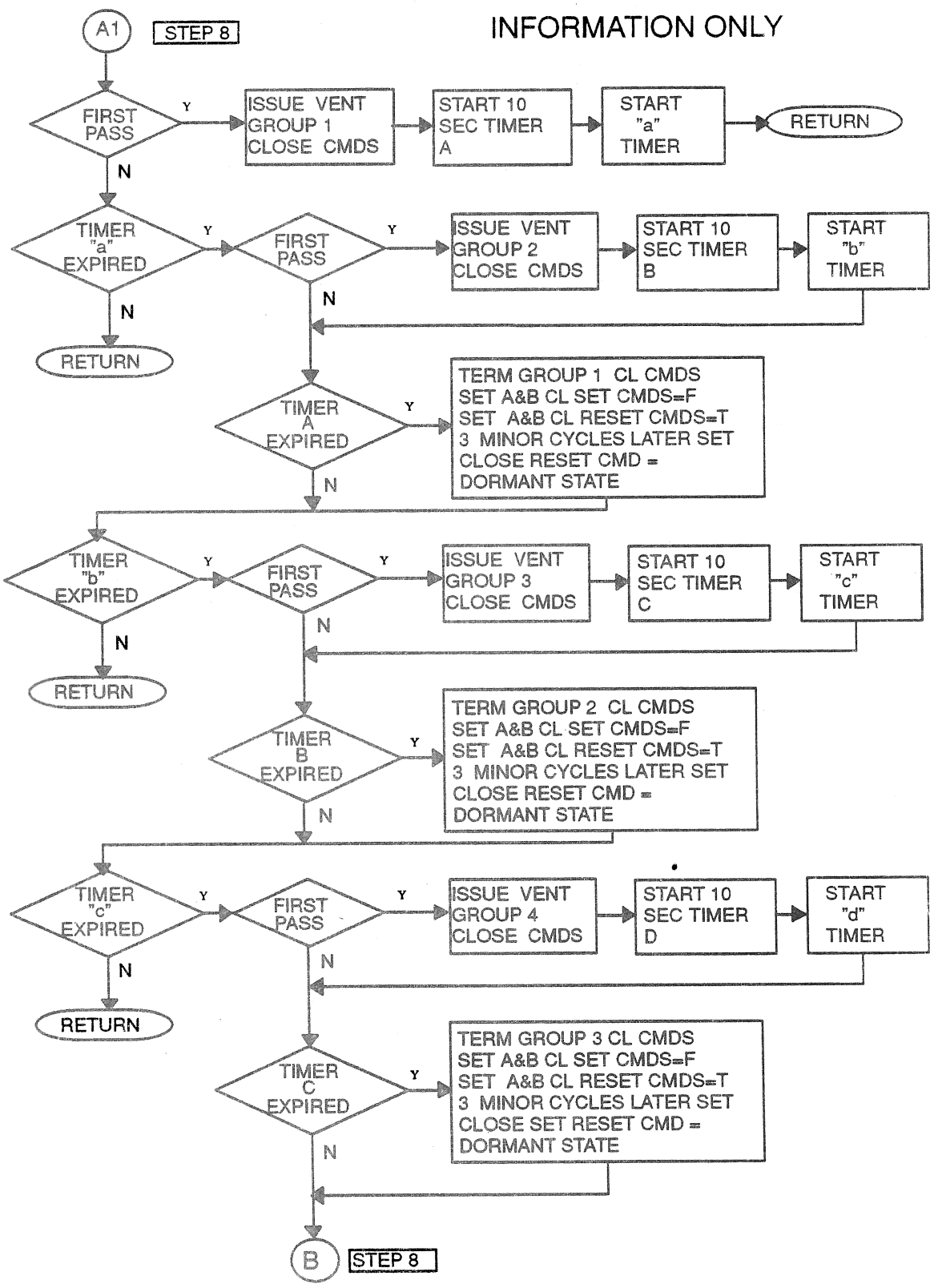

FIGURE 4.161 Vent Door Sequence (Sheet 3 of 7)

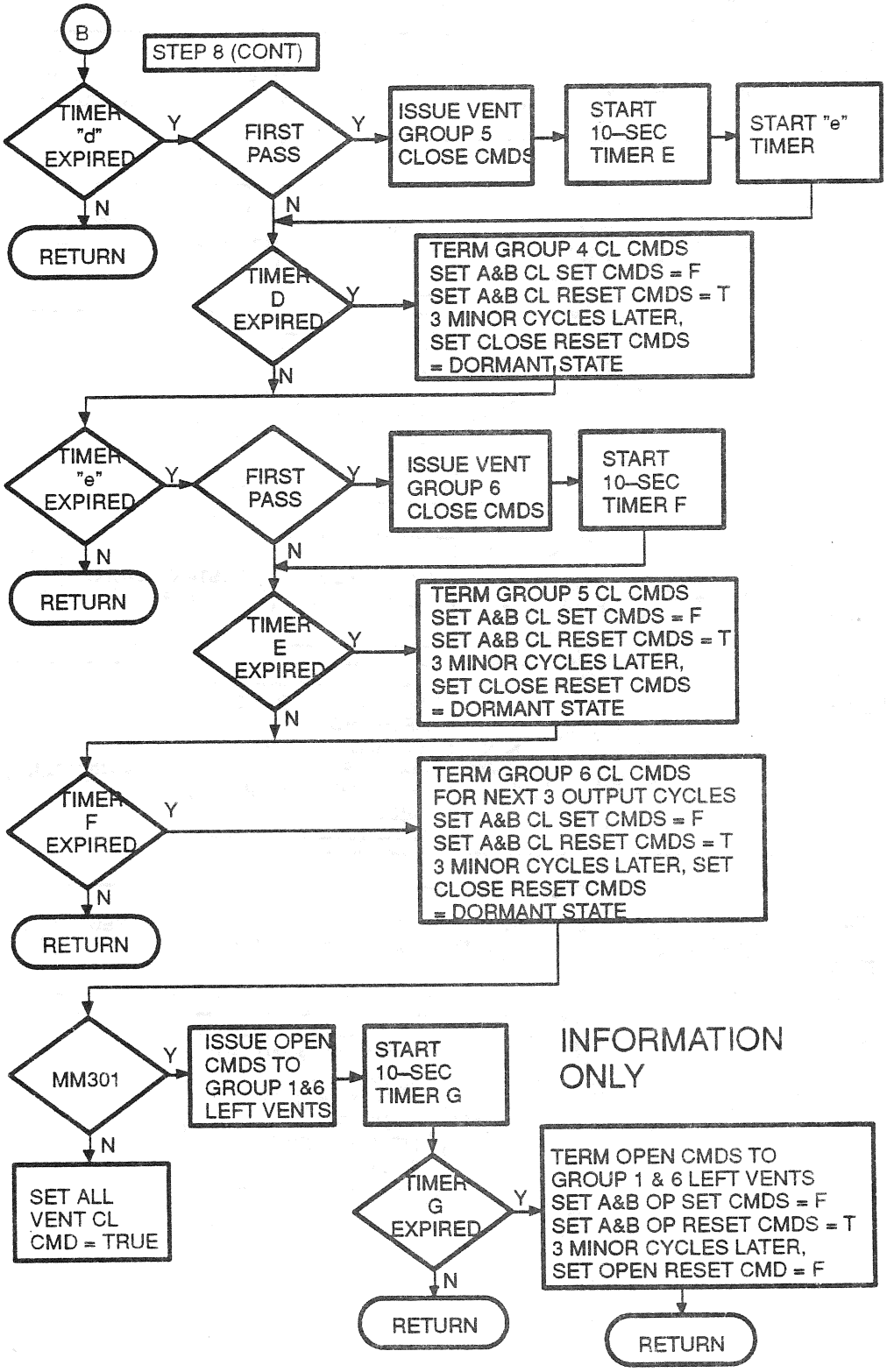

Figure 4.161. Vent Door Sequence (Sheet 4 of 7)

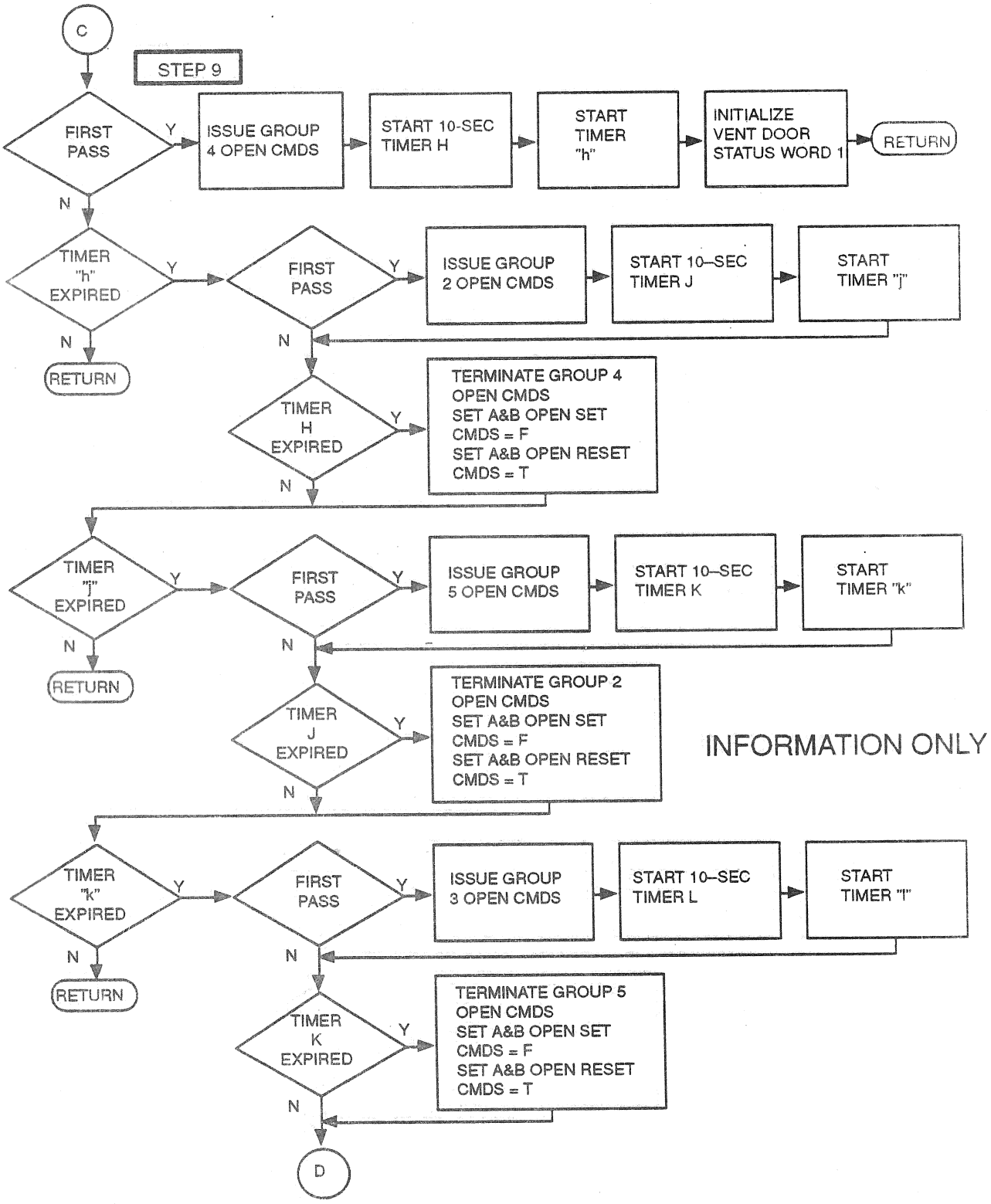

Figure 4.161. Vent Door Sequence (Sheet 5 of 7)

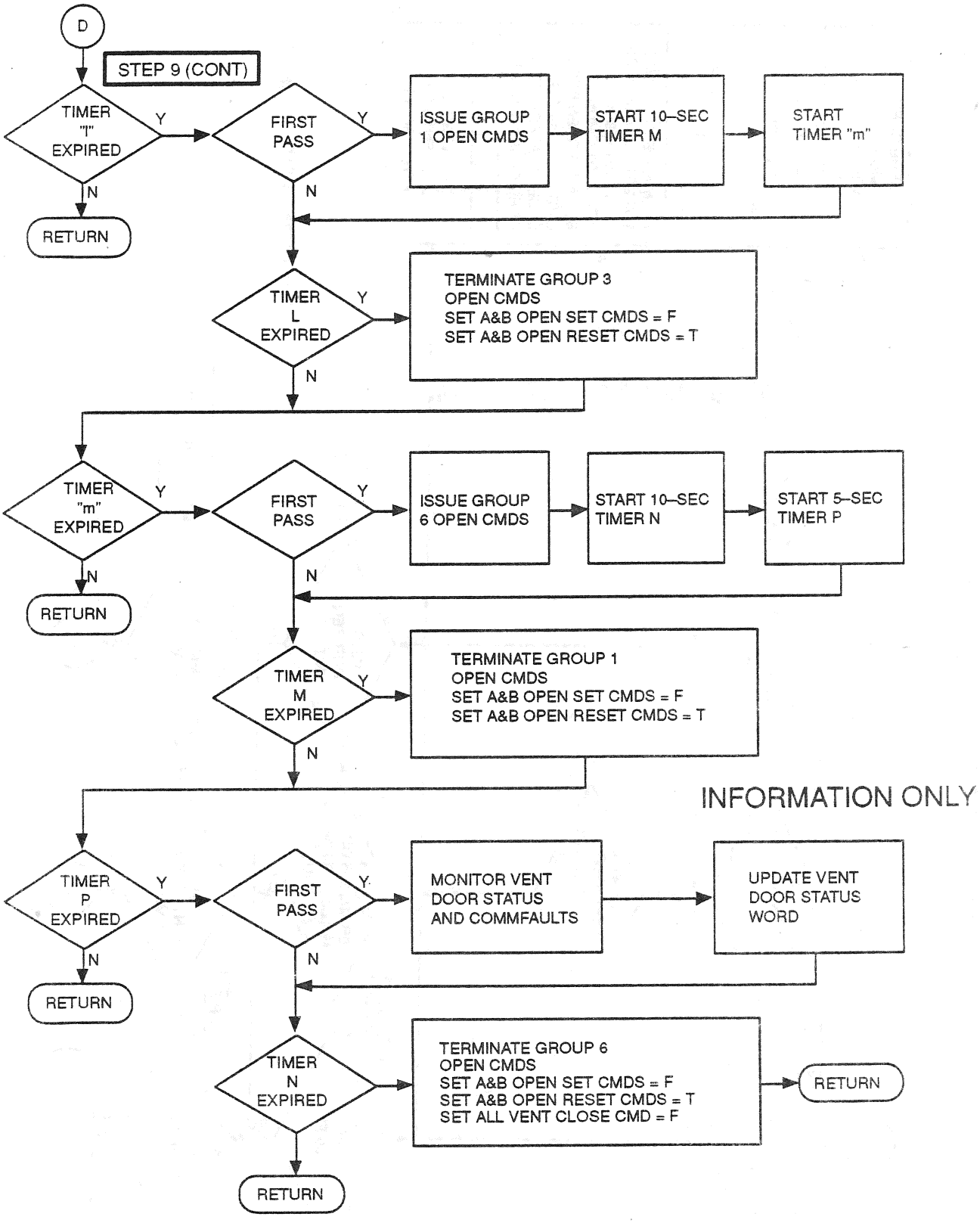

Figure 4.161. Vent Door Sequence (Sheet 6 of 7)

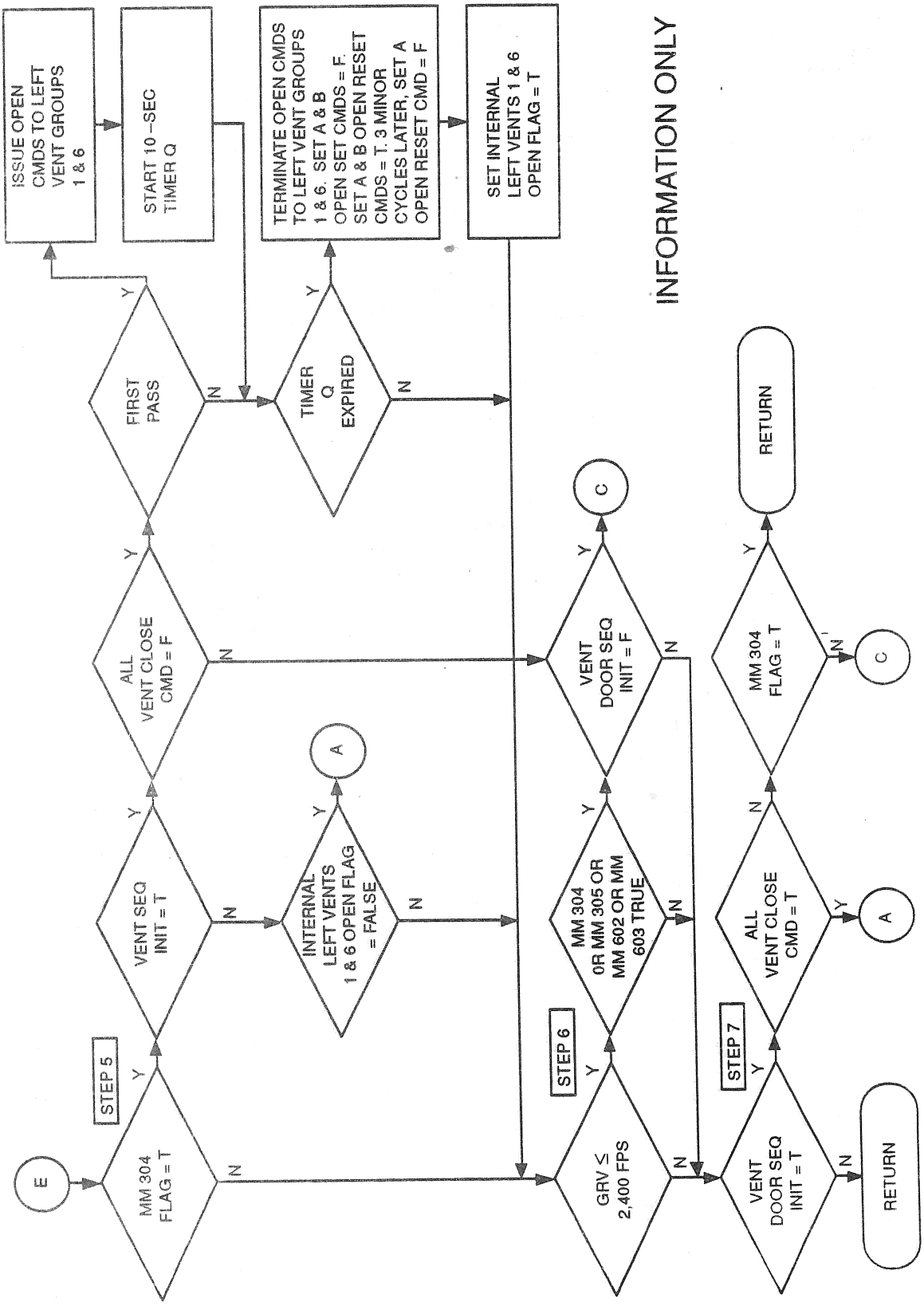

Figure 4.161. Vent Door Sequence (Sheet 7 of 7)

TABLE 4.4.1.4–1. VENT DOOR CONTROL SEQUENCER (G4.161) INPUT/OUTPUT FUNCTIONAL PARAMETERS

DBFN: D3B027-F PN: VP707100049P00L INPUT FUNCTIONAL PARAMETERS FOR VENT CNTL SEQ

FSSR NAME	M/S ID	NOMENCLATURE	SOURCE	UNITS	DATA TYPE	PREC	LAST CRS
(MT)	V91W1990C	DISPLAY MSN TIME	FCOS	S	VAR		89890E
							89598A
CLOCK/CLOCKTIME	V91W5000C	CLOCK-COMPUTER(GMT)	FCOS	S			
CONF_VENT_DOORS	V90X8375X	CONFIG VENT DOORS FOR LAUNCH CMD	R/S LCH SEQ				89599C
ET_SEP_CMD	V90X8250X	ET SEPARATION CMD FLAG	ET SEP SEQ		BD		89990E
							90054A
MM_CODE_303/MM_303	V90X8182X	MAJOR MODE 303 FLAG	MSC				89991E
							89599C
MM_CODE_304/MM_304	V90X8161X	MAJOR MODE 304 FLAG	MSC				89991E
MM_CODE_305/MM_305	V90X8162X	MAJOR MODE 305 FLAG	MSC				90102D
MM_CODE_602/MM_602	V90X8174X	MAJOR MODE 602 FLAG	MSC				89599C
MM_CODE_603/MM_603	V90X8122X	MAJOR MODE 603 FLAG	MSC				89599C
REL_VEL_MAG	V95L0151CD	GND REL VEL MAGNITUDE IN M50 SYS	TAEM UPP	FT/S			
REL_VEL_MAG/V	V95L0151CA	GND REL VEL MAGNITUDE IN M50 SYS	RTLS UPP	FT/S			89990E
							89250B
REL_VEL_MAG/V	V95L0151CC	GND REL VEL MAGNITUDE IN M50 SYS	ENT UPP	FT/S			90114B
							89250B
TAL_ABORT_DECLARED	V90X8658X	TAL ABORT DECLARED	MSC				89245D
	V59X3005X	L FWD VENTS 1&2 CLOSED 1	MCA F3		BD		
	V59X3015X	L FWD VENTS 1&2 CLOSED 2	MCA F2		BD		
	V59X3055X	L FWD VENTS 1&2 OPEN 1	MCA F3		BD		
	V59X3065X	L FWD VENTS 1&2 OPEN 2	MCA F2		BD		
	V59X3205X	L PB VENT 3 CLOSED 1	MCA M3		BD		
	V59X3215X	L PB VENT 3 CLOSED 2	MCA M2		BD		
	V59X3255X	L PB VENT 3 OPEN 1	MCA M3		BD		
	V59X3265X	L PB VENT 3 OPEN 2	MCA M2		BD		
	V59X3305X	L PB/W VENTS 4&7 CLOSED 1	MCA M2		BD		
	V59X3315X	L PB/W VENTS 4&7 CLOSED 2	MCA M4		BD		
	V59X3355X	L PB/W VENTS 4&7 OPEN 1	MCA M2		BD		
	V59X3365X	L PB/W VENTS 4&7 OPEN 2	MCA M4		BD		
	V59X3405X	L PB VENT 5 CLOSED 1	MCA M3		BD		
	V59X3415X	L PB VENT 5 CLOSED 2	MCA M1		BD		
	V59X3455X	L PB VENT 5 OPEN 1	MCA M3		BD		
	V59X3465X	L PB VENT 5 OPEN 2	MCA M1		BD		
	V59X3505X	L PB VENT 6 CLOSED 1	MCA M3		BD		
	V59X3515X	L PB VENT 6 CLOSED 2	MCA M2		BD		
	V59X3555X	L PB VENT 6 OPEN 1	MCA M3		BD		
	V59X3565X	L PB VENT 6 OPEN 2	MCA M2		BD		
	V59X3805X	L AFT VENTS 8&9 CLOSED 1	MCA A1		BD		
	V59X3815X	L AFT VENTS 8&9 CLOSED 2	MCA A2		BD		
	V59X3855X	L AFT VENTS 8&9 OPEN 1	MCA A1		BD		
	V59X3865X	L AFT VENTS 8&9 OPEN 2	MCA A2		BD		
	V59X4005X	R FWD VENTS 1&2 CLOSED 1	MCA F1		BD		

TABLE 4.4.1.4–1. VENT DOOR CONTROL SEQUENCER (G4.161) INPUT/OUTPUT FUNCTIONAL PARAMETERS

DBFN: D3B027-F PN: VP707100049P00L INPUT FUNCTIONAL PARAMETERS FOR VENT CNTL SEQ

FSSR NAME	M/S ID	NOMENCLATURE	SOURCE	UNITS	DATA TYPE	PREC	LAST CRS
	V59X4015X	R FWD VENTS 1&2 CLOSED 2	MCA F2		BD		
	V59X4055X	R FWD VENTS 1&2 OPEN 1	MCA F1		BD		
	V59X4065X	R FWD VENTS 1&2 OPEN 2	MCA F2		BD		
	V59X4205X	R PB VENT 3 CLOSED 1	MCA M1		BD		
	V59X4215X	R PB VENT 3 CLOSED 2	MCA M4		BD		
	V59X4255X	R PB VENT 3 OPEN 1	MCA M1		BD		
	V59X4265X	R PB VENT 3 OPEN 2	MCA M4		BD		
	V59X4305X	R PB/W VENTS 4&7 CLOSED 1	MCA M2		BD		
	V59X4315X	R PB/W VENTS 4&7 CLOSED 2	MCA M3		BD		
	V59X4355X	R PB/W VENTS 4&7 OPEN 1	MCA M2		BD		
	V59X4365X	R PB/W VENTS 4&7 OPEN 2	MCA M3		BD		
	V59X4405X	R PB VENT 5 CLOSED 1	MCA M1		BD		
	V59X4415X	R PB VENT 5 CLOSED 2	MCA M4		BD		
	V59X4455X	R PB VENT 5 OPEN 1	MCA M1		BD		
	V59X4465X	R PB VENT 5 OPEN 2	MCA M4		BD		
	V59X4505X	R PB VENT 6 CLOSED 1	MCA M1		BD		
	V59X4515X	R PB VENT 6 CLOSED 2	MCA M4		BD		
	V59X4555X	R PB VENT 6 OPEN 1	MCA M1		BD		
	V59X4565X	R PB VENT 6 OPEN 2	MCA M4		BD		
	V59X4805X	R AFT VENTS 8&9 CLOSED 1	MCA A3		BD		
	V59X4815X	R AFT VENTS 8&9 CLOSED 2	MCA A2		BD		
	V59X4855X	R AFT VENTS 8&9 OPEN 1	MCA A3		BD		
	V59X4865X	R AFT VENTS 8&9 OPEN 2	MCA A2		BD		
	V91X2288X	FF1 INPUT PROM SEG 2,6 STATUS(HFE)	FCOS				89598A 79933F
	V91X2289X	FF2 INPUT PROM SEG 2,6 STATUS(HFE)	FCOS				89598A 79933F
	V91X2290X	FF3 INPUT PROM SEG 2,6 STATUS(HFE)	FCOS				89598A 79933F
	V91X2291X	FF4 INPUT PROM SEG 2,6 STATUS(HFE)	FCOS				89598A 79933F
	V91X2845X	FA1 INPUT PROM SEG3,10 STATUS(HFE)	FCOS				89991E 89598A
	V91X2846X	FA2 INPUT PROM SEG3,10 STATUS(HFE)	FCOS				89991E 89598A
	V91X2847X	FA3 INPUT PROM SEG3,10 STATUS(HFE)	FCOS				89991E 89598A
	V91X2848X	FA4 INPUT PROM SEG3,10 STATUS(HFE)	FCOS				89598A 59126H
	V93X7201XB	ALL VENT CLOSE CMD	OVERRIDE DISP		BD		89599C
	V95X0235XF	VENT DOOR SEQ INIT	MSC				

TABLE 4.4.1.4–1. VENT DOOR CONTROL SEQUENCER (G4.161) INPUT/OUTPUT FUNCTIONAL PARAMETERS

DBFN: D3B027-F PN: VP707100049P00L OUTPUT FUNCTIONAL PARAMETERS FROM VENT CNTL SEQ

FSSR NAME	M/S ID	NOMENCLATURE	DESTINATION	UNITS	DATA TYPE	PREC	LAST CRS
ME1_LO2_DUMP	E41K1219BB	ME-1 OXIDIZER DUMP CMD	EIU 1				
ME1_TERM_SEQ	E41K1218BB	ME-1 TERMINATE SEQUENCE CMD	EIU 1				
ME2_LO2_DUMP	E41K2219BB	ME-2 OXIDIZER DUMP CMD	EIU 2				
ME2_TERM_SEQ	E41K2218BB	ME-2 TERMINATE SEQUENCE CMD	EIU 2				
ME3_LO2_DUMP	E41K3219BB	ME-3 OXIDIZER DUMP CMD	EIU 3				
ME3_TERM_SEQ	E41K3218BB	ME-3 TERMINATE SEQUENCE CMD	EIU 3				
	V41K1119XD	MPS E1 LH2 PREVLV (PV4) OP CMD A	PCA A1				89554A
	V41K1120XD	MPS E1 LH2 PREVLV (PV4) OP CMD B	LCA A1				89554A
	V41K1121XD	MPS E1 LH2 PREVLV (PV4) OP CMD C	LCA A2				89554A
	V41K1136XD	MPS E1 LO2 PREVLV (PV1) OP CMD A	PCA A1				89554A
	V41K1137XD	MPS E1 LO2 PREVLV (PV1) OP CMD B	LCA A1				89554A
	V41K1138XD	MPS E1 LO2 PREVLV (PV1) OP CMD C	LCA A2				89554A
	V41K1139XD	MPS E1 LO2 PREVLV (PV1) CL CMD A	PCA A1				89554A
	V41K1140XD	MPS E1 LO2 PREVLV (PV1) CL CMD B	LCA A1				89554A
	V41K1141XD	MPS E1 LO2 PREVLV (PV1) CL CMD C	LCA A2				89554A
	V41K1142XD	MPS E1 LO2 PREVLV (PV1) CL CMD D	HDWR				89554A
	V41K1143XD	MPS E1 LO2 PREVLV (PV1) OP CMD D	HDWR				89554A
	V41K1168XB	MPS E1 HE INTCN OUT(LV60) OP CMD A	HDWR				89554A
	V41K1219XD	MPS E2 LH2 PREVLV (PV5) OP CMD A	PCA A2				89554A
	V41K1220XD	MPS E2 LH2 PREVLV (PV5) OP CMD B	LCA A2				89554A
	V41K1221XD	MPS E2 LH2 PREVLV (PV5) OP CMD C	LCA A3				89554A
	V41K1236XD	MPS E2 LO2 PREVLV (PV2) OP CMD A	PCA A2				89554A
	V41K1237XD	MPS E2 LO2 PREVLV (PV2) OP CMD B	LCA A2				89554A
	V41K1238XD	MPS E2 LO2 PREVLV (PV2) OP CMD C	LCA A3				89554A
	V41K1239XD	MPS E2 LO2 PREVLV (PV2) CL CMD A	PCA A2				89554A
	V41K1240XD	MPS E2 LO2 PREVLV (PV2) CL CMD B	LCA A2				89554A
	V41K1241XD	MPS E2 LO2 PREVLV (PV2) CL CMD C	LCA A3				89554A
	V41K1242XD	MPS E2 LO2 PREVLV (PV2) CL CMD D	HDWR				89554A
	V41K1243XD	MPS E2 LO2 PREVLV (PV2) OP CMD D	HDWR				89554A
	V41K1256XB	MPS E2 HE ISO VLV B (LV4) OP CMD A	HDWR				89554A
	V41K1257XB	MPS E2 HE ISO VLV B (LV4) OP CMD B	HDWR				89554A
	V41K1262XB	MPS E2 HE INTCN IN (LV61) OP CMD A	HDWR				89554A
	V41K1263XB	MPS E2 HE INTCN IN (LV61) OP CMD B	HDWR				89554A
	V41K1268XB	MPS E2 HE INTCN OUT(LV62) OP CMD A	HDWR				89554A
	V41K1319XD	MPS E3 LH2 PREVLV (PV6) OP CMD A	PCA A3				89554A
	V41K1320XD	MPS E3 LH2 PREVLV (PV6) OP CMD B	LCA A3				89554A
	V41K1321XD	MPS E3 LH2 PREVLV (PV6) OP CMD C	LCA A1				89554A
	V41K1336XD	MPS E3 LO2 PREVLV (PV3) OP CMD A	PCA A3				89554A
	V41K1337XD	MPS E3 LO2 PREVLV (PV3) OP CMD B	LCA A3				89554A
	V41K1338XD	MPS E3 LO2 PREVLV (PV3) OP CMD C	LCA A1				89554A
	V41K1339XD	MPS E3 LO2 PREVLV (PV3) CL CMD A	PCA A3				89554A
	V41K1340XD	MPS E3 LO2 PREVLV (PV3) CL CMD B	LCA A3				89554A
	V41K1341XD	MPS E3 LO2 PREVLV (PV3) CL CMD C	LCA A1				89554A

TABLE 4.4.1.4–1. VENT DOOR CONTROL SEQUENCER (G4.161) INPUT/OUTPUT FUNCTIONAL PARAMETERS

DBFN: D3B027-F PN: VP707100049P00L OUTPUT FUNCTIONAL PARAMETERS FROM VENT CNTL SEQ

FSSR NAME	M/S ID	NOMENCLATURE	DESTINATION	UNITS	DATA TYPE	PREC	LAST CRS
	V41K1342XD	MPS E3 LO2 PREVLV (PV3) CL CMD D	HDWR				89554A
	V41K1343XD	MPS E3 LO2 PREVLV (PV3) OP CMD D	HDWR				89554A
	V41K1368XB	MPS E3 HE INTCN OUT(LV64) OP CMD A	HDWR				89554A
	V41K1391XC	MPS LH2 OTBD F/D VLV (PV11) OP CMD	LCA A2				89554A
	V41K1393XC	MPS LH2 OTBD F/D VLV (PV11) CL CMD	LCA A2				89554A
	V41K1401XB	MPS LH2 INBD F/D (PV12) OP CMD A	LCA A1				89554A
	V41K1402XB	MPS LH2 INBD F/D (PV12) OP CMD B	LCA A1				89554A
	V41K1411XB	MPS LH2 TOPPING VLV (PV13) OP,CMD	LCA A1				89554A
	V41K1412XB	MPS LH2 INBD F/D (PV12) CL CMD	LCA A1				89554A
	V41K1435XB	MPS LH2 MANF REPRSS 1(LV42) OP CMD	LCA A2				89554A
	V41K1437XB	MPS LH2 MANF REPRSS 2(LV43) OP CMD	LCA A2				89554A
	V41K1501XB	MPS LO2 INBD F/D (PV10) OP CMD A	LCA A2				89554A
	V41K1502XB	MPS LO2 INBD F/D (PV10) OP CMD B	LCA A2				89554A
	V41K1512XB	MPS LO2 INBD F/D VLV (PV10) CL CMD	LCA A2				89554A
	V41K1515XC	MPS LO2 OTBD F/D VLV (PV9) CL CMD	LCA A3				89554A
	V41K1518XC	MPS LO2 OTBD F/D VLV (PV9) OP CMD	LCA A3				89554A
	V41K1535XB	MPS LO2 MANF REPRSS 1(LV40) OP CMD	LCA A3				89554A
	V41K1537XB	MPS LO2 MANF REPRSS 2(LV41) OP CMD	LCA A3				89554A
	V41K1607XB	MPS PNEU HE ISO VLV 1 (LV7) OP CMD	HDWR				89554A
	V41K1608XB	MPS PNEU HE ISO VLV 2 (LV8) OP CMD	HDWR				89554A
	V41K1613XC	MPS REG HE XOVER VLV (LV10) OP CMD	HDWR				89554A
	V41K1631XB	MPS HE SPLY BLWDWN 1 (LV26) OP CMD	HDWR				89554A
	V41K1633XB	MPS HE SPLY BLWDWN 2 (LV27) OP CMD	HDWR				89554A
	V41K1913XC	MPS LH2 RTLS OTBD DV(PV18)OP CMD A	HDWR				89554A
	V41K1914XC	MPS LH2 RTLS OTBD DV(PV18)OP CMD B	HDWR				89554A
	V41K1915XC	MPS LH2 RTLS OTBD DV(PV18)OP CMD C	HDWR				89554A
	V41K1923XC	MPS LH2 RTLS INBD DV(PV17)OP CMD A	HDWR				89554A
	V41K1924XC	MPS LH2 RTLS INBD DV(PV17)OP CMD B	HDWR				89554A
	V41K1925XC	MPS LH2 RTLS INBD DV(PV17)OP CMD C	HDWR				89554A
	V56K0140XA	ET UMB DR L-B1/B2 CLOSE CMD	HDWR,TLM		BD		89354G
	V56K0141XA	ET DR DVR & CL LCH DC ARM A MCA1/2	HDWR		BD		89354G
	V56K0142XA	ET DR DVR & CL LCH DC ARM A MCA1/3	HDWR		BD		89354G
	V56K0143XA	ET DR DVR & CL LCH DC ARM A MCA2/3	HDWR		BD		89354G
	V56K1271XA	ET DR C/L LCH 1A1/2A2 FA1 STOW CMD	HDWR		BD		89354G
	V56K1272XA	ET DR C/L LCH 1A2/2A1 FA1 STOW CMD	HDWR		BD		89354G
	V56K1273XA	ET DR C/L LCH 1A1/2B2 FA2 STOW CMD	HDWR		BD		89354G
	V56K1274XA	ET DR C/L LCH 1B2/2B1 FA2 STOW CMD	HDWR		BD		89354G
	V56K1275XA	ET DR C/L LCH 1A1/2A2 FA1 LOCK CMD	HDWR		BD		89354G
	V56K1276XA	ET DR C/L LCH 1A2/2B1 FA1 LOCK CMD	HDWR		BD		89354G
	V56K1277XA	ET DR C/L LCH 1A1/2B2 FA2 LOCK CMD	HDWR		BD		89354G
	V56K1278XA	ET DR C/L LCH 1B2/2A1 FA2 LOCK CMD	HDWR		BD		89354G
	V56K1371XA	ET DR C/L LCH 1B1/2A2 FA4 STOW CMD	HDWR		BD		89354G
	V56K1372XA	ET DR C/L LCH 1A2/2B1 FA4 STOW CMD	HDWR		BD		89354G

TABLE 4.4.1.4–1. VENT DOOR CONTROL SEQUENCER (G4.161) INPUT/OUTPUT FUNCTIONAL PARAMETERS

DBFN: D3B027-F PN: VP707100049P00L OUTPUT FUNCTIONAL PARAMETERS FROM VENT CNTL SEQ

FSSR NAME	M/S ID	NOMENCLATURE	DESTINATION	UNITS	DATA TYPE	PREC	LAST CRS
	V56K1373XA	ET DR C/L LCH 1B1/2B2 FA3 STOW CMD	HDWR		BD		89354G
	V56K1374XA	ET DR C/L LCH 1B2/2A1 FA3 STOW CMD	HDWR		BD		89354G
	V56K1375XA	ET DR C/L LCH 1B1/2A2 FA4 LOCK CMD	HDWR		BD		89354G
	V56K1376XA	ET DR C/L LCH 1A2/2A1 FA4 LOCK CMD	HDWR		BD		89354G
	V56K1377XA	ET DR C/L LCH 1B1/2B2 FA3 LOCK CMD	HDWR		BD		89354G
	V56K1378XA	ET DR C/L LCH 1B2/2B1 FA3 LOCK CMD	HDWR		BD		89354G
	V56K3111XA	ET UMB DR L-B2/R-B1 CLOSE CMD	HDWR		BD		89354G
	V56K3112XA	ET UMB DR R-B2 CLOSE CMD	HDWR		BD		89354G
	V56K3531XA	ET L UMB COUT DOOR LATCH FA1 CMD	HDWR		BD		89354G
	V56K3532XA	ET R UMB COUT DOOR LATCH FA1 CMD	HDWR		BD		89354G
	V56K3533XA	ET L UMB COUT DOOR LATCH FA4 CMD	HDWR		BD		89354G
	V56K3534XA	ET R UMB COUT DOOR LATCH FA4 CMD	HDWR		BD		89354G
	V56K4121XA	ET UMB DR R-B1/B2 CLOSE CMD	HDWR		BD		89354G
	V56K4122XA	ET UMB DR L-B1 CLOSE CMD	HDWR		BD		89354G
	V56K4531XA	ET L UMB COUT DOOR LATCH FA3 CMD	HDWR		BD		89354G
	V56K4532XA	ET R UMB COUT DOOR LATCH FA3 CMD	HDWR		BD		89354G
	V56K4533XA	ET L UMB COUT DOOR LATCH FA2 CMD	HDWR		BD		89354G
	V56K4534XA	ET R UMB COUT DOOR LATCH FA2 CMD	HDWR		BD		89354G
	V59K3000X	L FWD VENTS 1&2 CLOSE CMD 1A	MCA F3,TLM		BD		
	V59K3001X	L FWD VENTS 1&2 CLOSE CMD 1B	MCA F3,TLM		BD		
	V59K3010X	L FWD VENTS 1&2 CLOSE CMD 2A	MCA F2,TLM		BD		
	V59K3011X	L FWD VENTS 1&2 CLOSE CMD 2B	MCA F2,TLM		BD		
	V59K3050X	L FWD VENTS 1&2 OPEN CMD 1A	MCA F3,TLM		BD		
	V59K3051X	L FWD VENTS 1&2 OPEN CMD 1B	MCA F3,TLM		BD		
	V59K3060X	L FWD VENTS 1&2 OPEN CMD 2A	MCA F2,TLM		BD		
	V59K3061X	L FWD VENTS 1&2 OPEN CMD 2B	MCA F2,TLM		BD		
	V59K3200X	L PB VENT 3 CLOSE CMD 1A	MCA M3,TLM		BD		
	V59K3201X	L PB VENT 3 CLOSE CMD 1B	MCA M3,TLM		BD		
	V59K3210X	L PB VENT 3 CLOSE CMD 2A	MCA M2,TLM		BD		
	V59K3211X	L PB VENT 3 CLOSE CMD 2B	MCA M2,TLM		BD		
	V59K3250X	L PB VENT 3 OPEN CMD 1A	MCA M3,TLM		BD		
	V59K3251X	L PB VENT 3 OPEN CMD 1B	MCA M3,TLM		BD		
	V59K3260X	L PB VENT 3 OPEN CMD 2A	MCA M2,TLM		BD		
	V59K3261X	L PB VENT 3 OPEN CMD 2B	MCA M2,TLM		BD		
	V59K3300X	L PB/W VENTS 4&7 CLOSE CMD 1A	MCA M2,TLM		BD		
	V59K3301X	L PB/W VENTS 4&7 CLOSE CMD 1B	MCA M2,TLM		BD		
	V59K3310X	L PB/W VENTS 4&7 CLOSE CMD 2A	MCA M4,TLM		BD		
	V59K3311X	L PB/W VENTS 4&7 CLOSE CMD 2B	MCA M4,TLM		BD		
	V59K3350X	L PB/W VENTS 4&7 OPEN CMD 1A	MCA M2,TLM		BD		
	V59K3351X	L PB/W VENTS 4&7 OPEN CMD 1B	MCA M2,TLM		BD		
	V59K3360X	L PB/W VENTS 4&7 OPEN CMD 2A	MCA M4,TLM		BD		
	V59K3361X	L PB/W VENTS 4&7 OPEN CMD 2B	MCA M4,TLM		BD		
	V59K3400X	L PB VENT 5 CLOSE CMD 1A	MCA M3,TLM		BD		

TABLE 4.4.1.4–1. VENT DOOR CONTROL SEQUENCER (G4.161) INPUT/OUTPUT FUNCTIONAL PARAMETERS

DBFN: D3B027-F PN: VP707100049P00L OUTPUT FUNCTIONAL PARAMETERS FROM VENT CNTL SEQ

FSSR NAME	M/S ID	NOMENCLATURE	DESTINATION	UNITS	DATA TYPE	PREC	LAST CRS
	V59K3401X	L PB VENT 5 CLOSE CMD 1B	MCA M3,TLM		BD		
	V59K3410X	L PB VENT 5 CLOSE CMD 2A	MCA M1,TLM		BD		
	V59K3411X	L PB VENT 5 CLOSE CMD 2B	MCA M1,TLM		BD		
	V59K3450X	L PB VENT 5 OPEN CMD 1A	MCA M3,TLM		BD		
	V59K3451X	L PB VENT 5 OPEN CMD 1B	MCA M3,TLM		BD		
	V59K3460X	L PB VENT 5 OPEN CMD 2A	MCA M1,TLM		BD		
	V59K3461X	L PB VENT 5 OPEN CMD 2B	MCA M1,TLM		BD		
	V59K3500X	L PB VENT 6 CLOSE CMD 1A	MCA M3,TLM		BD		
	V59K3501X	L PB VENT 6 CLOSE CMD 1B	MCA M3,TLM		BD		
	V59K3510X	L PB VENT 6 CLOSE CMD 2A	MCA M2,TLM		BD		
	V59K3511X	L PB VENT 6 CLOSE CMD 2B	MCA M2,TLM		BD		
	V59K3550X	L PB VENT 6 OPEN CMD 1A	MCA M3,TLM		BD		
	V59K3551X	L PB VENT 6 OPEN CMD 1B	MCA M3,TLM		BD		
	V59K3560X	L PB VENT 6 OPEN CMD 2A	MCA M2,TLM		BD		
	V59K3561X	L PB VENT 6 OPEN CMD 2B	MCA M2,TLM		BD		
	V59K3600X	L PB VENT 6 PURGE 1 CMD 1A	MCA M3		BD		89598A
	V59K3610X	L PB VENT 6 PURGE 1 CMD 2A	MCA M2		BD		89598A
	V59K3700X	L PB VENT 6 PURGE 2 CMD 1A	MCA M3		BD		89598A
	V59K3710X	L PB VENT 6 PURGE 2 CMD 2A	MCA M2		BD		89598A
	V59K3800X	L AFT VENTS 8&9 CLOSE CMD 1A	MCA A1,TLM		BD		
	V59K3801X	L AFT VENTS 8&9 CLOSE CMD 1B	MCA A1,TLM		BD		
	V59K3810X	L AFT VENTS 8&9 CLOSE CMD 2A	MCA A2,TLM		BD		
	V59K3811X	L AFT VENTS 8&9 CLOSE CMD 2B	MCA A2,TLM		BD		
	V59K3850X	L AFT VENTS 8&9 OPEN CMD 1A	MCA A1,TLM		BD		
	V59K3851X	L AFT VENTS 8&9 OPEN CMD 1B	MCA A1,TLM		BD		
	V59K3860X	L AFT VENTS 8&9 OPEN CMD 2A	MCA A2,TLM		BD		
	V59K3861X	L AFT VENTS 8&9 OPEN CMD 2B	MCA A2,TLM		BD		
	V59K4000X	R FWD VENTS 1&2 CLOSE CMD 1A	MCA F1,TLM		BD		
	V59K4001X	R FWD VENTS 1&2 CLOSE CMD 1B	MCA F1,TLM		BD		
	V59K4010X	R FWD VENTS 1&2 CLOSE CMD 2A	MCA F2,TLM		BD		
	V59K4011X	R FWD VENTS 1&2 CLOSE CMD 2B	MCA F2,TLM		BD		
	V59K4050X	R FWD VENTS 1&2 OPEN CMD 1A	MCA F1,TLM		BD		
	V59K4051X	R FWD VENTS 1&2 OPEN CMD 1B	MCA F1,TLM		BD		
	V59K4060X	R FWD VENTS 1&2 OPEN CMD 2A	MCA F2,TLM		BD		
	V59K4061X	R FWD VENTS 1&2 OPEN CMD 2B	MCA F2,TLM		BD		
	V59K4200X	R PB VENT 3 CLOSE CMD 1A	MCA M1,TLM		BD		
	V59K4201X	R PB VENT 3 CLOSE CMD 1B	MCA M1,TLM		BD		
	V59K4210X	R PB VENT 3 CLOSE CMD 2A	MCA M4,TLM		BD		
	V59K4211X	R PB VENT 3 CLOSE CMD 2B	MCA M4,TLM		BD		
	V59K4250X	R PB VENT 3 OPEN CMD 1A	MCA M1,TLM		BD		
	V59K4251X	R PB VENT 3 OPEN CMD 1B	MCA M1,TLM		BD		
	V59K4260X	R PB VENT 3 OPEN CMD 2A	MCA M4,TLM		BD		
	V59K4261X	R PB VENT 3 OPEN CMD 2B	MCA M4,TLM		BD		

TABLE 4.4.1.4–1. VENT DOOR CONTROL SEQUENCER (G4.161) INPUT/OUTPUT FUNCTIONAL PARAMETERS

DBFN: D3B027-F PN: VP707100049P00L OUTPUT FUNCTIONAL PARAMETERS FROM VENT CNTL SEQ

FSSR NAME	M/S ID	NOMENCLATURE	DESTINATION	UNITS	DATA TYPE	PREC	LAST CRS
	V59K4300X	R PB/W VENTS 4&7 CLOSE CMD 1A	MCA M2,TLM		BD		
	V59K4301X	R PB/W VENTS 4&7 CLOSE CMD 1B	MCA M2,TLM		BD		
	V59K4310X	R PB/W VENTS 4&7 CLOSE CMD 2A	MCA M3,TLM		BD		
	V59K4311X	R PB/W VENTS 4&7 CLOSE CMD 2B	MCA M3,TLM		BD		
	V59K4350X	R PB/W VENTS 4&7 OPEN CMD 1A	MCA M2,TLM		BD		
	V59K4351X	R PB/W VENTS 4&7 OPEN CMD 1B	MCA M2,TLM		BD		
	V59K4360X	R PB/W VENTS 4&7 OPEN CMD 2A	MCA M3,TLM		BD		
	V59K4361X	R PB/W VENTS 4&7 OPEN CMD 2B	MCA M3,TLM		BD		
	V59K4400X	R PB VENT 5 CLOSE CMD 1A	MCA M1,TLM		BD		
	V59K4401X	R PB VENT 5 CLOSE CMD 1B	MCA M1,TLM		BD		
	V59K4410X	R PB VENT 5 CLOSE CMD 2A	MCA M4,TLM		BD		
	V59K4411X	R PB VENT 5 CLOSE CMD 2B	MCA M4,TLM		BD		
	V59K4450X	R PB VENT 5 OPEN CMD 1A	MCA M1,TLM		BD		
	V59K4451X	R PB VENT 5 OPEN CMD 1B	MCA M1,TLM		BD		
	V59K4460X	R PB VENT 5 OPEN CMD 2A	MCA M4,TLM		BD		
	V59K4461X	R PB VENT 5 OPEN CMD 2B	MCA M4,TLM		BD		
	V59K4500X	R PB VENT 6 CLOSE CMD 1A	MCA M1,TLM		BD		
	V59K4501X	R PB VENT 6 CLOSE CMD 1B	MCA M1,TLM		BD		
	V59K4510X	R PB VENT 6 CLOSE CMD 2A	MCA M4,TLM		BD		
	V59K4511X	R PB VENT 6 CLOSE CMD 2B	MCA M4,TLM		BD		
	V59K4550X	R PB VENT 6 OPEN CMD 1A	MCA M1,TLM		BD		
	V59K4551X	R PB VENT 6 OPEN CMD 1B	MCA M1,TLM		BD		
	V59K4560X	R PB VENT 6 OPEN CMD 2A	MCA M4,TLM		BD		
	V59K4561X	R PB VENT 6 OPEN CMD 2B	MCA M4,TLM		BD		
	V59K4600X	R PB VENT 6 PURGE 1 CMD 1A	MCA M1		BD		89598A
	V59K4610X	R PB VENT 6 PURGE 1 CMD 2A	MCA M4		BD		89598A
	V59K4700X	R PB VENT 6 PURGE 2 CMD 1A	MCA M1		BD		89598A
	V59K4710X	R PB VENT 6 PURGE 2 CMD 2A	MCA M4		BD		89598A
	V59K4800X	R AFT VENTS 8&9 CLOSE CMD 1A	MCA A3,TLM		BD		
	V59K4801X	R AFT VENTS 8&9 CLOSE CMD 1B	MCA A3,TLM		BD		
	V59K4810X	R AFT VENTS 8&9 CLOSE CMD 2A	MCA A2,TLM		BD		
	V59K4811X	R AFT VENTS 8&9 CLOSE CMD 2B	MCA A2,TLM		BD		
	V59K4850X	R AFT VENTS 8&9 OPEN CMD 1A	MCA A3,TLM		BD		
	V59K4851X	R AFT VENTS 8&9 OPEN CMD 1B	MCA A3,TLM		BD		
	V59K4860X	R AFT VENTS 8&9 OPEN CMD 2A	MCA A2,TLM		BD		
	V59K4861X	R AFT VENTS 8&9 OPEN CMD 2B	MCA A2,TLM		BD		
	V90J8201C	ORBITER VENT DOORS STATUS WORD	R/S LCH SEQ,TLM		BSU		
	V93X7201XA	ALL VENT CLOSE CMD	OVERRIDE DISP				

TABLE 4.4.1.4–2. VENT DOOR CONTROL SEQUENCER (G4.161) I–LOADS

DBFN:0484

FSSR NAME	MSID	ENG UNIT	DT	PR	D	S	PR	FCTN	CAT
VENT_CMDS_TIME_DELAY	V97U9859C	SEC	F	D	M	C	G4.161		ZFF1 ZFF1

TABLE 4.4.1.4–3. VENT DOOR CONTROL SEQUENCER (G4.161) K–LOADS

DBFN:0558

FSSR NAME DESCRIPTION	MSID	MC KLOAD VALUE		ENG UNIT	DT	PR	S	PR FCTN	LAST CR EQTN MSID
GROUND_REL_VEL_THRESHOLD GROUND REL VEL THRESHOLD	V97U9806C	+2.4000000	E+03	FT/SEC	F	S	C	G4.161	59957
HE_PURGE_TIME	V96U8959C	+6.50	E+02	SEC	F	D	C	G4.70 G4.161	59973
HE_PURGE_VEL	V96U8958C	+4.5	E+03	FT/SEC	F	S	C	G4.70 G4.161	59973

TABLE 4.4.1.4–4. VENT DOOR CONTROL SEQUENCER (G4.161) CONSTANTS

DBFN:0558

FSSR NAME DESCRIPTION	MSID	MC	CONSTANT VALUE	ENG UNIT	DT	PR	S	PR FCTN	LAST CR
NO REQUIREMENTS									

4.5 HYDRAULICS

4.5.1 LDG VLV CNTL (4.215)

4.5.1.1 Introduction

This sequence is used during entry to provide automatic control of the three hydraulic system brake isolation valves, a hydraulic system landing gear extend isolation valve, and the three hydraulic system MPS thrust vector control valves. These valves are latching valves.

The hydraulic system 1 landing gear isolation valve is opened by the sequence at a specified ground relative velocity cue to provide hydraulic pressure to deploy the landing gear. The hydraulic system landing brake isolation valves are commanded open upon receiving a Brake Isolation Valve Open Flag from the Landing SOP. A momentary switch is provided for manual control of each hydraulic system landing brake isolation valve and hydraulic system landing gear isolation valve. The center position of the manual switch is nonfunctional but is designated GPC to remind the crew that the valves will be automatically opened during entry.

During MM 304, the sequence opens the three hydraulic system MPS thrust vector control isolation valves to allow repositioning of the SSMEs to enable deployment of the drag chute without path interference from the SSMEs. The automatic control of the three hydraulic system MPS thrust vector control isolation valves can be bypassed by a crew SSME reposition inhibit item 19 entry on the Override Spec 051.

4.5.1.2 Overview

In Nominal Entry, the sequence is initiated when the Orbiter ground relative velocity is 8000 fps. During a RTLS Entry, the sequence is initiated upon transition into MM 603.

During MM 304, the automatic control of the three MPS thrust vector control (TVC) valves is initiated when the Orbiter ground relative velocity is between 3,500 fps and 8,000 fps and the crew has not inhibited the sequence via Override Spec 051. The Auxiliary Power Units (APU's) are checked when the orbiter relative velocity has diminished to 8,000 fps. If at least two out of three APU's are operational, the sequence proceeds to command the three hydraulic system MPS thrust vector control isolation valves open simultaneously. The valves will not be opened below a orbiter relative velocity of 3500 fps. The sequence will command the MPS thrust vector control valves closed upon: completion of SSME repositioning for chute deploy; or when less than two operational APU's are available; or if less than two valves are opened when commanded open. In the event of halted repositioning, a CRT message line and a Class 3 alert light and tone is provided.

During either MM 305 or MM 603, when the Orbiter ground relative velocity has decreased to 800 fps, the hydraulic system landing gear valve is commanded open. The hydraulic system brake isolation valves are then commanded open upon receiving a Brake Isolation Valve Open Flag from the Landing SOP.

The sequence terminates the open and close commands 5 or more seconds after each isolation valve is commanded and the valve will remain latched in its commanded position.

4.5.1.3 Detailed Requirements

Step 1. In MM 304 this step opens hydraulic system 1, 2, and 3 MPS TVC isolation valves during a predefined ground relative velocity if the crew has not inhibited this function. This step also indicates a crew alert if the crew has inhibited the SSME reposition while it was in progress.

Monitor the following signals:

(a)	MAJOR MODE 304 FLAG	V90X8161X
(b)	CREW SSME REPOSITION	V93X5480X
(c)	SSME REPOSITION START FLAG	(INTERNAL)
(d)	GROUND REL VEL MAGNITUDE IN M50 SYS	V95L0151C
(e)	SSME REPOSITION STOP FLAG	V95X1623X
(f)	SSME CHUTE DEPLOY POSITION CMPLT	V95X1624X

If (a) is true, proceed to monitor (b). Otherwise, proceed to Step 8.

If (b) is true, proceed to monitor (c) and (d). Otherwise, proceed to monitor (c), (e), and (f).

If (c) is true or 8000 fps ≥ (d) ≥ 3500 fps, on first pass, set (1) through (9) true, start (12), and proceed to Step 2. On subsequent passes, proceed to Step 2. Otherwise, return to Step 1.

If (c) is true and both (e) and (f) are false, set (10) true to generate a CRT message line and Class 3 alert light and tone, set (11) false, and proceed to Step 5. Otherwise, proceed to Step 5.

(1)	HYD SYS 1 ME/TVC ISLN V OP/CL ENA A	V58K1129X
(2)	HYD SYS 1 ME/TVC ISLN V OP/CL ENA B	V58K1132X
(3)	HYD SYS 1 ME/TVC ISLN V OP	V58K1134X
(4)	HYD SYS 2 ME/TVC ISLN V OP/CL ENA A	V58K1229X
(5)	HYD SYS 2 ME/TVC ISLN V OP/CL ENA B	V58K1232X
(6)	HYD SYS 2 ME/TVC ISLN V OP	V58K1234X
(7)	HYD SYS 3 ME/TVC ISLN V OP/CL ENA	V58K1332X
(8)	HYD SYS 3 ME/TVC ISLN V OP	V58K1334X
(9)	SSME REPOSITION START FLAG	(INTERNAL)
(10)	SSME REPOSITION STOP FLAG	V95X1623X
(11)	DRAG CHUTE GIMBAL POSITION FLAG	V90X5521X
(12)	MPS TVC VLV OPEN TIMER	(INTERNAL)

Step 2. This step terminates the open commands to the hydraulic system 1, 2, and 3 MPS TVC isolation valves.

Monitor the following signals:

(a)	SSME REPOSITION STOP FLAG	V95X1623X
(b)	MPS TVC VLV OPEN TIMER	(INTERNAL)

If (a) is true or less than 5 seconds have elapsed since (b) started, proceed to Step 4.

If (a) is false and 5 or more seconds have elapsed since (b) started, on first pass, set (1) through (8) false and proceed to Step 3. On subsequent passes, proceed to Step 4.

(1)	HYD SYS 1 ME/TVC ISLN V OP/CL ENA A	V58K1129X
(2)	HYD SYS 1 ME/TVC ISLN V OP/CL ENA B	V58K1132X
(3)	HYD SYS 1 ME/TVC ISLN V OP	V58K1134X
(4)	HYD SYS 2 ME/TVC ISLN V OP/CL ENA A	V58K1229X
(5)	HYD SYS 2 ME/TVC ISLN V OP/CL ENA B	V58K1232X
(6)	HYD SYS 2 ME/TVC ISLN V OP	V58K1234X

(7)	HYD SYS 3 ME/TVC ISLN V OP/CL ENA	V58K1332X
(8)	HYD SYS 3 ME/TVC ISLN V OP	V58K1334X

Step 3. This step provides a crew alert if at least two MPS TVC isolation valves fail to open, and provides a flag for priority rate limiting and for SSME repositioning if 2 or 3 MPS TVC isolation valves are opened within 5 seconds of being commanded.

Monitor the following signals:

(a)	HYD SYS 1 ME/TVC ISLN V OP IND	V58X1136X
(b)	HYD SYS 2 ME/TVC ISLN V OP IND	V58X1236X
(c)	HYD SYS 3 ME/TVC ISLN V OP IND	V58X1336X
(d)	FA1 INPUT PROM SEG 3, 10 STATUS (HFE)	V91X2845X
(e)	FA2 INPUT PROM SEG 3, 10 STATUS (HFE)	V91X2846X
(f)	FA3 INPUT PROM SEG 3, 10 STATUS (HFE)	V91X2847X
(g)	MPS TVC ISO VLV CLOSE COUNTER	(INTERNAL)

If (a) is false or (d) is true, increment (g) by one and proceed to monitor (b) and (e). Otherwise, proceed to monitor (b) and (e).

If (b) is false or (e) is true, increment (g) by one and proceed to monitor (c) and (f). Otherwise, proceed to monitor (c) and (f).

If (c) is false or (f) is true, increment (g) by one and proceed to monitor (g). Otherwise, proceed to monitor (g).

If (g) > 1, set (1) true to generate a CRT message line and Class 3 alert light and tone, and proceed to Step 4. Otherwise, set (2) and (3) true and proceed to Step 4.

(1)	SSME REPOSITION STOP FLAG	V95X1623X
(2)	DRAG CHUTE GIMBAL POSITION FLAG	V90X5521X
(3)	PRL TVC ISO VLV OPEN FLAG	V90X5522X

Step 4. This step monitors the hydraulic good status to ensure that at least two APU's remain good. A flag will be set to initiate MPS TVC isolation valve closure and a crew alert when less than two APU's are good and the SSME repositioning has not been completed.

Monitor the following signals:

(a)	HYDR SYS GOOD STATUS	V96Q3001C
(b)	SSME CHUTE DEPLOY POSITION CMPLT	V95X1624X

If (a) < 2 and (b) is false, set (1) true to generate a CRT message line and Class 3 alert light and tone and proceed to Step 5. Otherwise, proceed to Step 5.

(1)	SSME REPOSITION STOP FLAG	V95X1623X

Step 5. This step commands MPS TVC isolation valves closed if SSME repositioning will not occur or if SSME repositioning for drag chute deploy is complete.

Monitor the following signals:

(a)	SSME CHUTE DEPLOY POSITION CMPLT	V95X1624X
(b)	SSME REPOSITION STOP FLAG	V95X1623X

If (a) or (b) is true, on first pass, set (1) through (8) true, set (9) through (11) false, start (12) and proceed to Step 6. On subsequent passes, proceed to Step 6. Otherwise, return to Step 1.

(1)	HYD SYS 1 ME/TVC ISLN V OP/CL ENA A	V58K1129X
(2)	HYD SYS 1 ME/TVC ISLN V OP/CL ENA B	V58K1132X
(3)	HYD SYS 1 ME/TVC ISLN V CL	V58K1135X
(4)	HYD SYS 2 ME/TVC ISLN V OP/CL ENA A	V58K1229X
(5)	HYD SYS 2 ME/TVC ISLN V OP/CL ENA B	V58K1232X
(6)	HYD SYS 2 ME/TVC ISLN V CL	V58K1235X
(7)	HYD SYS 3 ME/TVC ISLN V OP/CL ENA	V58K1332X
(8)	HYD SYS 3 ME/TVC ISLN V CL	V58K1335X
(9)	HYD SYS 1 ME/TVC ISLN V OP	V58K1134X
(10)	HYD SYS 2 ME/TVC ISLN V OP	V58K1234X
(11)	HYD SYS 3 ME/TVC ISLN V OP	V58K1334X
(12)	MPS TVS ISO VLV CLOSE TIMER	(INTERNAL)

Step 6. This step terminates the close commands to the hydraulic system MPS TVC isolation valves.

Monitor the following signal:

(a)	MPS TVC ISO VLV CLOSE TIMER	(INTERNAL)

If less than 5 seconds have elapsed since (a) started, return to Step 1.

If 5 or more seconds have elapsed since (a) started, on first pass, set (1) through (8) false and proceed to Step 7. On subsequent passes, return to Step 1.

(1)	HYD SYS 1 ME/TVC ISLN V OP/CL ENA A	V58K1129X
(2)	HYD SYS 1 ME/TVC ISLN V OP/CL ENA B	V58K1132X
(3)	HYD SYS 1 ME/TVC ISLN V CL	V58K1135X
(4)	HYD SYS 2 ME/TVC ISLN V OP/CL ENA A	V58K1229X
(5)	HYD SYS 1 ME/TVC ISLN V OP/CL ENA B	V58K1232X
(6)	HYD SYS 1 ME/TVC ISLN V CL	V58K1235X
(7)	HYD SYS 1 ME/TVC ISLN V OP/CL ENA B	V58K1332X
(8)	HYD SYS 1 ME/TVC ISLN V CL	V58K1335X

Step 7. This step provides a flag for priority rate limiting if all three MPS TVC isolation valves are not closed after being commanded closed.

Monitor the following signals:

(a)	HYD SYS 1 ME/TVC ISLN V OP IND	V58X1136X
(b)	HYD SYS 2 ME/TVC ISLN V OP IND	V58X1236X
(c)	HYD SYS 3 ME/TVC ISLN V OP IND	V58X1336X
(d)	FA1 INPUT PROM SEG 3, 10 STATUS (HFE)	V91X2845X
(e)	FA2 INPUT PROM SEG 3, 10 STATUS (HFE)	V91X2846X
(f)	FA3 INPUT PROM SEG 3, 10 STATUS (HFE)	V91X2847X
(g)	MPS TVC ISO VLV OPEN COUNTER	(INTERNAL)

If (a) or (d) is true, increment (g) by 1 and proceed to monitor (b) and (e). Otherwise proceed to monitor (b) and (e).

If (b) or (e) is true, increment (g) by 1 and proceed to monitor (c) and (f). Otherwise proceed to monitor (c) and (f).

If (c) or (f) is true, increment (g) by 1 and proceed to monitor (g). Otherwise proceed to monitor (g).

If (g) < 1, then set (1) and (2) false and proceed to Step 1. Otherwise set (1) true, set (2) false, and return to Step 1.

(1)	PRL TVC ISO VLV OPEN FLAG	V90X5522X
(2)	SSME REPOSITION START FLAG	(INTERNAL)

Step 8. This step opens the hydraulic system 1 isolation valve for extension of the landing gear in MM 603 and MM 305.

Monitor the following signals:

(a)	MAJOR MODE 603 FLAG	V93X0013X
(b)	MAJOR MODE 305 FLAG	V90X8162X
(c)	GROUND REL VELOCITY MAGNITUDE IN M50 SYS	V95L0151C

If (a) or (b) is true, and (c) is ≤ 800 fps, on first pass, set (1) true, start (2), and return to Step 1. On subsequent passes, proceed to Step 9. Otherwise, return to Step 1.

(1)	HYDR SYS 1 LDG GR ISLN VLV OPEN	V58K0195X
(2)	LND GEAR ISO VLV OP CMD TIMER	(INTERNAL)

Step 9. This step terminates the hydraulic system 1 landing gear isolation valve open command.

Monitor the following signal:

(a)	LND GEAR ISO VLV OP CMD TIMER	(INTERNAL)

If less than 5 seconds have elapsed since (a) started, proceed to Step 10.

If 5 or more seconds have elapsed since (a) started, set (1) false, and proceed to Step 10.

(1)	HYDR SYS 1 LDG GR ISLN VLV OPEN	V58K0195X

Step 10. This step opens the hydraulic system brake isolation valves.

Monitor the following signal:

(a)	BRAKE ISO VLV OPEN FLAG	V96X0060X

If (a) is true, on first pass, set (1), (2), and (3) true, start (4) and return to Step 1. On subsequent passes, proceed to Step 11. Otherwise, return to Step 1.

(1)	HYD SYS 1 BRAKE ISLN VLV OPEN	V58K0197X
(2)	HYD SYS 2 BRAKE ISLN VLV OPEN	V58K0295X

(3)	HYD SYS 3 BRAKE ISLN VLV OPEN	V58K0395X
(4)	BRAKE ISO VLV OP CMD TIMER	(INTERNAL)

Step 11. This step terminates the hydraulic system brake isolation valves open commands.

Monitor the following signal:

(a)	BRAKE ISO VLV OP CMD TIMER	(INTERNAL)

If less than 5 seconds have elapsed since (a) started, return to Step 1.

If 5 or more seconds have elapsed since (a) started, terminate (1), (2), and (3), and return to Step 1.

(1)	HYD SYS 1 BRAKE ISLN VLV OPEN	V58K0197X
(2)	HYD SYS 2 BRAKE ISLN VLV OPEN	V58K0295X
(3)	HYD SYS 3 BRAKE ISLN VLV OPEN	V58K0395X

LANDING GEAR VALVE CONTROL INITIATION

NOMENCLATURE	INITIAL VALUE	UNITS
SSME REPOSITION START FLAG	OFF	
MPS TVC VLV OPEN TIMER	0.0	SEC
MPS TVC ISO VLV CLOSE COUNTER	0	
MPS TVC ISO VLV CLOSE TIMER	0.0	SEC
MPS TVC ISO VLV OPEN COUNTER	0	
LND GEAR ISO VLV OP CMD TIMER	0.0	SEC
BRAKE ISO VLV OP CMD TIMER	0.0	SEC
SSME REPOSITION STOP FLAG	OFF	
DRAG CHUTE GIMBAL POSITION FLAG	OFF	
PRL TVC ISO VLV OPEN FLAG	OFF	

FOR INFO ONLY

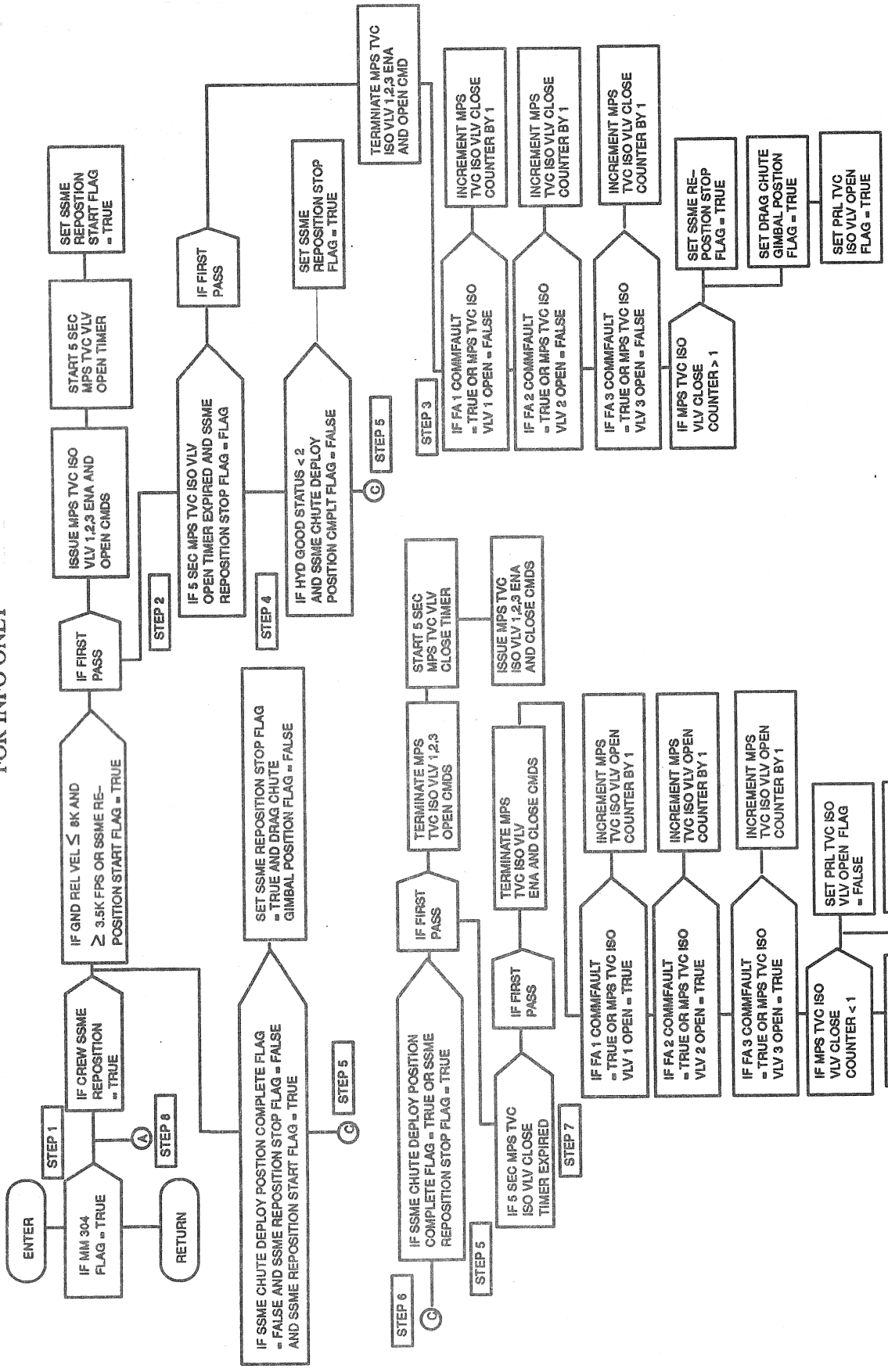

Figure 4.215. Hydraulic Systems Landing Gear Isolation Valve Control Logic (Sheet 1 of 2)

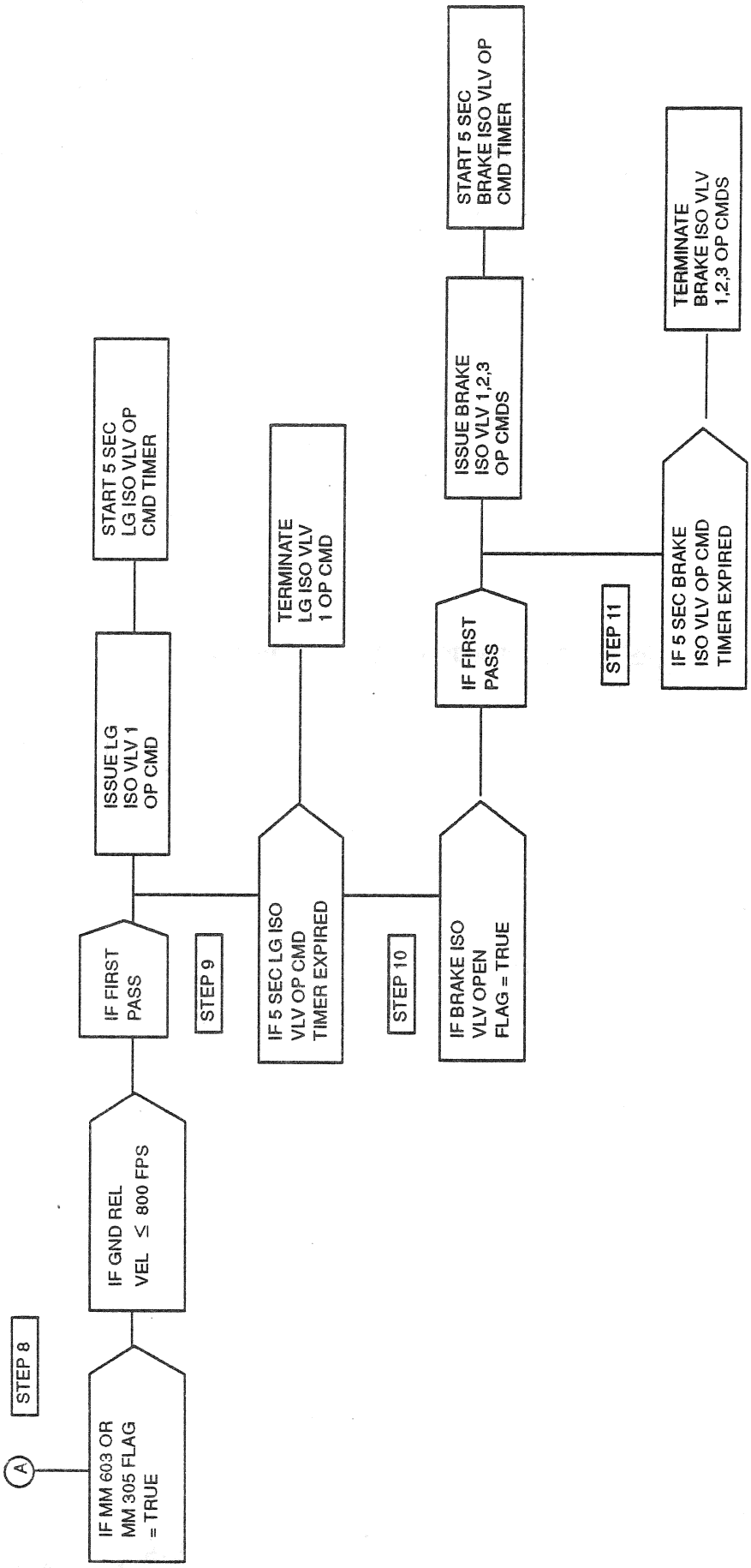

Figure 4.215 Hydraulic Systems Landing Gear Isolation Valve Control Logic (Sheet 2 of 2)

THIS PAGE INTENTIONALLY LEFT BLANK

TABLE 4.5.1.4–1. HYD SYS LANDING GEAR ISLN VLV CNTL SEQ (G4.215) INPUT/OUTPUT FUNCTIONAL PARAMETERS

DBFN: D3B027-F PN: VP707100049P00L INPUT FUNCTIONAL PARAMETERS FOR LDG GEAR VLV CNTL

FSSR NAME	M/S ID	NOMENCLATURE	SOURCE	UNITS	DATA TYPE	PREC	LAST CRS
BRK_VLV_OP	V96X0060X	BRAKE ISO VLV OPEN FLAG	LANDING SOP		BD		90102D
MM_CODE_304/MM_304	V90X8161X	MAJOR MODE 304 FLAG	MSC				89991E
MM_CODE_305/MM_305	V90X8162X	MAJOR MODE 305 FLAG	MSC				90102D
MM_CODE_603/MM_603	V90X8122X	MAJOR MODE 603 FLAG	MSC				89599C
N_HYDRAULIC_GOOD	V96Q3001C	HYDR SYS GOOD STATUS	HYD SYS SOP		HXS		89991E
REL_VEL_MAG	V95L0151CD	GND REL VEL MAGNITUDE IN M50 SYS	TAEM UPP	FT/S			
REL_VEL_MAG/V	V95L0151CA	GND REL VEL MAGNITUDE IN M50 SYS	RTLS UPP	FT/S			89990E
							89250B
REL_VEL_MAG/V	V95L0151CC	GND REL VEL MAGNITUDE IN M50 SYS	ENT UPP	FT/S			90114B
							89250B
SSME_REPOS	V93X5480X	CREW SSME REPOSITION	OVERRIDE DISP		BD		89991E
SSME_REPOS_CMPLT	V95X1624X	SSME CHUTE DEPLOY POSITION CMPLT	MPS TVC CMD SOP		BD		89991E
	V58X1136X	HYD SYS 1 ME/TVC ISLN V OP IND	HDWR				89991E
	V58X1236X	HYD SYS 2 ME/TVC ISLN V OP IND	HDWR				89991E
	V58X1336X	HYD SYS 3 ME/TVC ISLN V OP IND	HDWR				89991E
	V91X2845X	FA1 INPUT PROM SEG3,10 STATUS(HFE)	FCOS				89991E
							89598A
	V91X2846X	FA2 INPUT PROM SEG3,10 STATUS(HFE)	FCOS				89991E
							89598A
	V91X2847X	FA3 INPUT PROM SEG3,10 STATUS(HFE)	FCOS				89991E
							89598A

TABLE 4.5.1.4–1. HYD SYS LANDING GEAR ISLN VLV CNTL SEQ (G4.215) INPUT/OUTPUT FUNCTIONAL PARAMETERS

DBFN: D3B027-F PN: VP707100049P00L OUTPUT FUNCTIONAL PARAMETERS FROM LDG GEAR VLV CNTL

FSSR NAME	M/S ID	NOMENCLATURE	DESTINATION	UNITS	DATA TYPE	PREC	LAST CRS
PRL_TVC_ISOL_VLV_OP	V90X5522X	PRL TVC ISO VLV OPEN FLAG	AEROJET DAP				89991E
SSME_GMBL_FOS	V90X5521X	DRAG CHUTE GIMBAL POSITION FLAG	MPS TVC CMD SOP				89991E
SSME_REPOS_STOP	V95X1623X	SSME REPOSITION STOP FLAG	GAX				89991E
	V58K0195X	HYDR SYS 1 LDG GR ISLN VLV OPEN	HYDR SYS 1		BD		
	V58K0197X	HYDR SYS 1 BRAKE ISLN VLV OPEN	HYDR SYS 1		BD		90102D
	V58K0295X	HYDR SYS 2 BRAKE ISLN VLV OPEN	HYDR SYS 2		BD		90102D
	V58K0395X	HYDR SYS 3 BRAKE ISLN VLV OPEN	HYDR SYS 3		BD		90102D
	V58K1129X	HYD SYS1 ME/TVC ISLN V OP/CL ENA A	HYDR SYS 1				89991E
	V58K1132X	HYD SYS1 ME/TVC ISLN V OP/CL ENA B	HYDR SYS 1				89991E
	V58K1134X	HYD SYS1 ME/TVC ISLN V OP	HYDR SYS 1				89991E
	V58K1135X	HYD SYS1 ME/TVC ISLN V CL	HYDR SYS 1				89991E
	V58K1229X	HYD SYS2 ME/TVC ISLN V OP/CL ENA A	HYDR SYS 2				89991E
	V58K1232X	HYD SYS2 ME/TVC ISLN V OP/CL ENA B	HYDR SYS 2				89991E
	V58K1234X	HYD SYS2 ME/TVC ISLN V OP	HYDR SYS 2				89991E
	V58K1235X	HYD SYS2 ME/TVC ISLN V CL	HYDR SYS 2				89991E
	V58K1332X	HYD SYS3 ME/TVC ISLN V OP/CL ENA	HYDR SYS 3				89991E
	V58K1334X	HYD SYS3 ME/TVC ISLN V OP	HYDR SYS 3				89991E
	V58K1335X	HYD SYS3 ME/TVC ISLN V OP	HYDR SYS 3				89991E

TABLE 4.5.1.4–2. HYD SYS LANDING GEAR ISLN VLV CNTL SEQ (G4.215) I–LOADS

DBFN:0484

FSSR NAME	MSID	ENG UNIT	DT	PR	D	S	PR	FCTN	CAT
NO REQUIREMENTS									

TABLE 4.5.1.4–3. HYD SYS LANDING GEAR ISLN VLV CNTL SEQ (G4.215) K–LOADS

DBFN:0558

FSSR NAME DESCRIPTION	MSID	MC KLOAD VALUE	ENG UNIT	DT PR S PR FCTN	LAST CR EQTN MSID
NO REQUIREMENTS					

TABLE 4.5.1.4–4. HYD SYS LANDING GEAR ISLN VLV CNTL SEQ (G4.215) CONSTANTS

DBFN:0558

FSSR NAME DESCRIPTION	MSID	MC	CONSTANT VALUE	ENG UNIT	DT	PR	S PR FCTN	LAST CR

NO REQUIREMENTS

THIS PAGE INTENTIONALLY LEFT BLANK

4.6 REACTION CONTROL SYSTEM (RCS)

4.6.1 RCS/RCS Crossfeed and Reconfiguration (4.185)

4.6.1.1 Introduction

The RCS propellant crossfeed sequence is used during ascent/entry for contingencies where the crossfeed sequence enables propellants from one aft pod to feed the thrusters of both aft pods. The sequence is manually initiated by the crew positioning the RCS master crossfeed switch to the desired crossfeed configuration or automatically initiated by the RCS helium regulator failure protection sequence when an aft RCS helium regulator is failed closed and there is no OMS/RCS interconnect configured. The sequence is also initiated automatically by the abort OMS/RCS interconnect sequence at the completion of OMS/RCS reconnect sequencing if a crossfeed is being commanded either by the RCS master crossfeed switch or by the RCS helium regulator failure protection sequence.

The RCS propellant crossfeed reconfiguration sequence is used during ascent/entry to reconfigure the RCS propellant feed to normal after an RCS crossfeed sequence has been employed. The sequence is manually initiated by the crew positioning the master RCS crossfeed switch to OFF (center) position from one of the two crossfeed positions. RCS helium isolation valve control is a manual operation. During ascent and entry, jet firings will be limited whenever on auto crossfeed occurs except for RTLS ET separation.

On orbit, both the RCS propellant crossfeed and the RCS propellant crossfeed reconfiguration are performed manually by the crew. The crossfeed switch is monitored by SW RM to limit the number of RCS jets fired during crossfeed operation. The RCS jets are inhibited by the crew during system configuration in orbit.

4.6.1.2 Overview

The RCS crossfeed sequence initiation is dependent upon the master RCS crossfeed switch being placed in the desired crossfeed position, or upon the RCS helium regulator failure protection sequence selecting the desired crossfeed configuration automatically if the switch is in the OFF position. The RCS control switches should be in the GPC position.

The OMS crossfeed valves are commanded closed in the crossfeed portion of the sequence to prevent undesirable propellant transfer between OMS and RCS. If an OMS/RCS interconnect is in effect or being configured, the RCS/RCS crossfeed sequence will be reinitialized in order to accept future commands.

Left to Right Crossfeed. This sequence configures the aft RCS to feed the left pod propellants to both the left and right pod thrusters by performing the following functions:

(a) Close the OMS left and right crossfeed valves

(b) Open the RCS left and right crossfeed valves

(c) Open the left RCS tank isolation valves

(d) Close the right RCS tank isolation valves

Right to Left Crossfeed. This sequence configures the aft RCS to feed the right pod propellants to both the left and right pod thrusters by performing the following functions:

(a) Close the OMS left and right crossfeed valves

(b) Open the RCS left and right crossfeed valves

(c) Open the right RCS tank isolation valves

(d) Close the left RCS tank isolation valves

RCS Reconfiguration Sequence. This sequence initiation is dependent upon the master RCS crossfeed switch being in the OFF (center) position after being in one of the two crossfeed positions. All the RCS switches involved in this sequence should be in the GPC position.

The sequence reconfigures the left pod propellants to the left pod thrusters and the right pod propellants to the right pod thrusters after a crossfeed sequence has been terminated.

4.6.1.3 Detail Requirements

During ascent and entry, the scheduling and descheduling of this sequence are performed by moding, sequence, and control (MSC) based on a change in the master RCS crossfeed switch position or upon the RCS helium regulator failure protection sequence selecting the desired crossfeed configuration automatically and sequence completion flags.

Step 1. This step prevents the RCS crossfeed sequencer from running while an OMS/RCS interconnect is in effect or being configured.

The following signals are monitored:

(a)	OMS/RCS INTERCONNECT COMMAND	V90X8312X
(b)	OMS/RCS INTERCONNECT COMPLETE	V90X8282X

If (a) or (b) is true, then enable first pass indicators for subsequence A, B, and C and set (1) below true and (2) and (3) below false and return to Step 1.

If (a) and (b) are false, then proceed to Step 2.

(1)	RCS XFD RECONFIG SEQ COMPL FL	V90X1539X
(2)	RCS CROSSFEED SEQ COMPLETE FLAG	V90X1540X
(3)	POST SEQ CMD TERM FLAG	(INTERNAL)

Step 2. This step determines whether the master RCS crossfeed switch or the automatic signals from the RCS helium regulator failure protection sequence are in control of selecting which crossfeed sequence is to be performed.

The following signals are monitored:

(a)	SEL RCS MASTER CROSSFEED FROM LEFT	V90X7501X
(b)	SEL RCS MASTER CROSSFEED FROM RT	V90X7502X

If (a) or (b) is true, set (1) and (2) below false and proceed to Step 3.

If (a) and (b) are false proceed to Step 3.

(1)	FEED FROM LEFT RCS	V93X5199X
(2)	FEED FROM RIGHT RCS	V93X5200X

Step 3. This step initiates and controls the left to right RCS crossfeed.

The following signals are monitored:

(a)	SEL RCS MASTER CROSSFEED FROM LEFT	V90X7501X
(b)	FEED FROM LEFT RCS	V93X5199X

If (a) and (b) are false, proceed to Step 4.

If (a) or (b) is true and it is not first pass, proceed to Subsequence A.

If (a) or (b) is true and it is first pass, enable all first–pass indicators for Subsequences B and C, set (1) and (2) false, and proceed to Subsequence A.

(1)	RCS CROSSFEED SEQ COMPLETE FLAG	V90X1540X
(2)	RCS XFD RECONFIG SEQ COMPL FLAG	V90X1539X

Step 4. This step initiates and controls the right to left RCS crossfeed.

The following signals are monitored:

(a)	SEL RCS MASTER CROSSFEED FROM RT	V90X7502X
(b)	FEED FROM RIGHT RCS	V93X5200X

If (a) and (b) are false, proceed to Step 5.

If (a) or (b) is true and it is not first pass, proceed to Subsequence C.

If (a) or (b) is true and it is first pass, enable all first–pass indicators for Subsequences A and B, set (1) and (2) false, and proceed to Subsequence C.

(1)	RCS CROSSFEED SEQ COMPLETE FLAG	V90X1540X
(2)	RCS XFD RECONFIG SEQ COMPL FL	V90X1539X

Step 5. This step initiates and controls the reconfiguration to normal RCS propellant feed.

The following signals are monitored:

(a)	SEL RCS MASTER CROSSFEED FROM LEFT	V90X7501X
(b)	SEL RCS MASTER CROSSFEED FROM RT	V90X7502X
(c)	FEED FROM LEFT RCS	V93X5199X
(d)	FEED FROM RIGHT RCS	V93X5200X

If (a) or (b) or (c) or (d) is true, return to Step 1.

If (a) and (b) and (c) and (d) are all false, and if not first pass, proceed to Subsequence B.

If (a) and (b) and (c) and (d) are all false and it is first pass, enable first–pass indicators for Subsequences A and C, set (1) and (2) false, and proceed to Subsequence B.

(1)	RCS CROSSFEED SEQ COMPLETE FLAG	V90X1540X
(2)	RCS XFD RECONFIG SEQ COMPL FL	V90X1539X

Subsequence A

Subsequence A is the left to right RCS crossfeed sequence and is manually initiated when the crew places the master RCS crossfeed switch in the FEED FROM LEFT position or automatically initiated when the RCS helium regulator failure protection sequence selects a FEED FROM LEFT RCS due to a right RCS helium regulator being failed closed.

Step A1. This step controls the removal or termination of all required MDM outputs in preparation for subsequent use in the sequence or provides a return if the sequence has been completed.

The following signals are monitored:

(a)	RCS CROSSFEED SEQ COMPLETE FLAG	V90X1540X
(b)	POST SEQ CMD TERM FLAG	(INTERNAL)

If (a) is true and (b) is true, proceed to Subsequence E.

If (a) is true and (b) is false, return to Step 1.

If (a) is false and it is first pass, proceed to Subsequence E.

If (a) is false and it is not first pass, proceed to Step A3.

Step A2. Deleted.

Step A3. This step is used to command the OMS left and right crossfeed valves closed to prevent propellant flow between the RCS and OMS.

Issue the following commands, return to Step 1 until at least 1.5 seconds have elapsed, and proceed to Step A4.

OMS L POD XFD VLVS A CMD 1 CL	V43K4283X
OMS L POD OX XFD VLV A CMD 2 CL	V43K4285X
OMS L POD XFD VLVS B CMD 1 CL	V43K4287X
OMS L POD OX XFD VLV B CMD 2 CL	V43K4289X
OMS L POD FU XFD VLV A CMD 2 CL	V43K4385X
OMS L POD FU XFD VLV B CMD 2 CL	V43K4389X
OMS R POD XFD VLVS A CMD 1 CL	V43K5283X
OMS R POD OX XFD VLV A CMD 2 CL	V43K5285X
OMS R POD XFD VLVS B CMD 1 CL	V43K5287X
OMS R POD OX XFD VLV B CMD 2 CL	V43K5289X
OMS R POD FU XFD VLV A CMD 2 CL	V43K5385X
OMS R POD FU XFD VLV B CMD 2 CL	V43K5389X

Step A4. This step is used to command the RCS left and right crossfeed valves open.

Issue the following commands, return to Step 1 until at least 1.5 seconds have elapsed, then continue to Step A5.

RCS L AFT XFD VLV–1/2 GPC OP A	V42K2402X
RCS L AFT OX XFD V–1/2 GPC OP B	V42K2403X
RCS L AFT FU XFD V–1/2 GPC OP B	V42K2404X
RCS L AFT XFD VLV–3/4/5 GPC OP A	V42K2408X
RCS L AFT OX XFD V–3/4/5 GPC OP B	V42K2409X
RCS L AFT FU XFD V–3/4/5 GPC OP B	V42K2410X
RCS R AFT XFD VLV–1/2 GPC OP A	V42K3402X
RCS R AFT OX XFD V–1/2 GPC OP B	V42K3403X
RCS R AFT FU XFD V–1/2 GPC OP B	V42K3404X
RCS R AFT XFD VLV–3/4/5 GPC OP A	V42K3408X
RCS R AFT OX XFD V–3/4/5 GPC OP B	V42K3409X
RCS R AFT FU XFD V–3/4/5 GPC OP B	V42K3410X

Step A5. This step is used to command the left RCS propellant tank isolation valves open.

Issue the following commands, return to Step 1 until at least 1.5 seconds have elapsed, then proceed to Step A6.

RCS L AFT TK ISLN V–1/2 GPC OP A	V42K2342X
RCS L AFT OX TK ISLN V–1/2 GPC OP B	V42K2343X
RCS L AFT FU TK ISLN V–1/2 GPC OP B	V42K2344X
RCS L AFT OX TK ISLN V–3/4/5A GPC OP	V42K2346X
RCS L AFT FU TK ISLN V–3/4/5A GPC OP	V42K2347A
RCS L AFT OX TK ISLN V–3/4/5B GPC OP	V42K2349X
RCS L AFT FU TK ISLN V–3/4/5B GPC OP	V42K2350X

Step A6. This step is used to command the right tank isolation valves closed for left to right crossfeed.

Issue the following commands and return to Step 1 until at least 1.5 seconds have elapsed; then set (1) and (2) below true and return to Step 1.

RCS R AFT TK ISLN V–1/2 GPC CL A	V42K3353X
RCS R AFT OX TK ISLN V–1/2 GPC CL B	V42K3354X
RCS R AFT FU TK ISLN V–1/2 GPC CL B	V42K3355X
RCS R AFT OX TK ISLN V–3/4/5A GPC CL	V42K3357X
RCS R AFT FU TK ISLN V–3/4/5A GPC CL	V42K3358X
RCS R AFT OX TK ISLN V–3/4/5B GPC CL	V42K3360X
RCS R AFT FU TK ISLN V–3/4/5B GPC CL	V42K3361X

(1)	RCS CROSSFEED SEQUENCE COMPLETE FLAG	V90X1540X
(2)	POST SEQ CMD TERM FLAG	(INTERNAL)

Subsequence B

During ascent and entry, Subsequence B is the reconfiguration sequence and is manually initiated when the crew places the master RCS crossfeed switch in the OFF position after it has been in one of the two crossfeed positions.

Step B1. This step controls the removal or termination of a 1 required MDM outputs in preparation for subsequent use in the sequence.

The following signals are monitored:

(a)	RCS XFD RECONFIG SEQ COMPL FL	V90X1539X
(b)	POST SEQ CMD TERM FLAG	(INTERNAL)

If (a) is true and (b) is true, proceed to Subsequence E.

If (a) is true and (b) is false, return to Step 1.

If (a) is false and it is first pass, proceed to Subsequence E.

If (a) is false and it is not first pass, proceed to Step B2.

Step B2. This step is used to command the RCS left and right propellant tank isolation valves open.

Issue the following commands, return to Step 1 until at least 1.5 seconds have elapsed, then proceed to Step B3.

RCS L AFT TK ISLN V 1/2 GPC OP A	V42K2342X
RCS L AFT OX TK ISLN V 1/2 GPC OP B	V42K2343X
RCS L AFT FU TK ISLN V 1/2 GPC OP B	V42K2344X
RCS L AFT OX TK ISLN V 3/4/5A GPC OP	V42K2346X
RCS L AFT FU TK ISLN V 3/4/5A GPC OP	V42K2347X
RCS L AFT OX TK ISLN V 3/4/5B GPC OP	V42K2349X
RCS L AFT FU TK ISLN V 3/4/5B GPC OP	V42K2350X
RCS R AFT TK ISLN V 1/2 GPC OP A	V42K3342X
RCS R AFT OX TK ISLN V 1/2 GPC OP B	V42K3343X
RCS R AFT FU TK ISLN V 1/2 GPC OP B	V42K3344X
RCS R AFT OX TK ISLN V 3/4/5A GPC OP	V42K3346X
RCS R AFT FU TK ISLN V 3/4/5A GPC OP	V42K3347X
RCS R AFT OX TK ISLN V 3/4/5B GPC OP	V42K3349X
RCS R AFT FU TK ISLN V 3/4/5B GPC OP	V42K3350X

Step B3. This step is used to command the RCS left and right crossfeed valves closed.

Issue the following commands and return to Step 1 until at least 1.5 seconds have elapsed; then set (1) and (2) below true and return to Step 1.

RCS L AFT XFD V 1/2 GPC CL A	V42K2416X
RCS L AFT OX XFD V 1/2 GPC CL B	V42K2418X
RCS L AFT FU XFD V 1/2 GPC CL B	V42K2422X
RCS L AFT XFD V 3/4/5 GPC CL A	V42K2428X
RCS L AFT OX XFD V 3/4/5 GPC CL B	V42K2430X
RCS L AFT FU XFD V 3/4/5 GPC CL B	V42K2434X
RCS R AFT XFD V 1/2 GPC CL A	V42K3416X
RCS R AFT OX XFD V 1/2 GPC CL B	V42K3418X
RCS R AFT FU XFD V 1/2 GPC CL B	V42K3422X
RCS R AFT OX XFD V 3/4/5 GPC CL B	V42K3430X

RCS R AFT FU XFD V 3/4/5 GPC CL B	V42K3434X
RCS R AFT XFD V 3/4/5 GPC CL A	V42K3428X
(1) POST SEQ CMD TERM FLAG	(INTERNAL)
(2) RCS XFD RECONFIG SEQ COMPL FL	V90X1539X

Subsequence C

Subsequence C is the right to left RCS crossfeed sequence and is manually initiated when the crew places the master RCS crossfeed switch in the FEED FROM RIGHT position or automatically initiated when the RCS helium regulator protection sequence selects a FEED FROM RIGHT RCS due to a left RCS helium regulator being failed closed.

Step C1. This step controls the removal or termination of all required MDM outputs in preparation for subsequent use in the sequence or provides a return if the sequence has been completed.

The following signals are monitored:

(a)	RCS CROSSFEED SEQ COMPLETE FLAG	V90X1540X
(b)	POST SEQ CMD TERM FLAG	(INTERNAL)

If (a) is true and (b) is true, proceed to Subsequence E.

If (a) is true and (b) is false, return to Step 1.

If (a) is false and it is first pass, proceed to Subsequence E.

If (a) is false and it is not first pass, proceed to Step C3.

Step C2. Deleted.

Step C3. This step is used to command the OMS left and right crossfeed valves closed to prevent propellant flow between the RCS and OMS.

Issue the following commands, return to Step 1 until at least 1.5 seconds have elapsed, and proceed to Step C4.

OMS L POD XFD VLVS A CMD 1 CL	V43K4283X
OMS L POD OX XFD VLV A CMD 2 CL	V43K4285X
OMS L POD XFD VLVS B CMD 1 CL	V43K4287X
OMS L POD OX XFD VLV B CMD 2 CL	V43K4289X
OMS L POD FU XFD VLV B CMD 2 CL	V43K4385X
OMS L POD FU XFD VLV B CMD 2 CL	V43K4389X
OMS R POD XFD VLVS A CMD 1 CL	V43K5283X
OMS R POD OX XFD VLV A CMD 2 CL	V43K5285X
OMS R POD XFD VLVS B CMD 1 CL	V43K5287X
OMS R POD OX XFD VLV B CMD 2 CL	V43K5289X
OMS R POD FU XFD VLV A CMD 2 CL	V43K5385X
OMS R POD FU XFD VLV B CMD 2 CL	V43K5389X

Step C4. This step is used to command the RCS left and right crossfeed valves open.

Issue the following commands and return to Step 1 until at least 1.5 seconds have elapsed; then continue to Step C5.

RCS L AFT XFD VLV–1/2 GPC OP A	V42K2402X
RCS L AFT OX XFD V–1/2 GPC OP B	V42K2403X
RCS L AFT FU XFD V–1/2 GPC OP B	V42K2404X
RCS L AFT XFD VLV–3/4/5 GPC OP A	V42K2408X
RCS L AFT OX XFD V–3/4/5 GPC OP B	V42K2409X
RCS L AFT FU XFD V–3/4/5 GPC OP B	V42K2410X
RCS R AFT XFD VLV–1/2 GPC OP A	V42K3402X
RCS R AFT OX XFD V–1/2 GPC OP B	V42K3403X
RCS R AFT FU XFD V–1/2 GPC OP B	V42K3404X
RCS R AFT XFD VLV–3/4/5 GPC OP A	V42K3408X
RCS R AFT OX XFD V–3/4/5 GPC OP B	V42K3409X
RCS R AFT FU XFD V–3/4/5 GPC OP B	V42K3410X

Step C5. This step is used to command the right RCS propellant tank isolation valves open.

Issue the following commands, return to Step 1 until at least 1.5 seconds have elapsed, then proceed to Step C6.

RCS R AFT TK ISLN V–1/2 GPC OP A	V42K3342X
RCS R AFT OX TK ISLN V–1/2 GPC OP B	V42K3343X
RCS R AFT FU TK ISLN V–1/2 GPC OP B	V42K3344X
RCS R AFT OX TK ISLN V–3/4/5A GPC OP	V42K3346X
RCS R AFT FU TK ISLN V–3/4/5A GPC OP	V42K3347X
RCS R AFT OX TK ISLN V–3/4/5B GPC OP	V42K3349X
RCS R AFT FU TK ISLN V–3/4/5B GPC OP	V42K3350X

Step C6. This step is used to command the left tank isolation valves closed for right to left crossfeed.

Issue the following commands and return to Step 1 until at least 1.5 seconds have elapsed; then set (1) and (2) below true and return to Step 1.

RCS L AFT TK ISLN V–1/2 GPC CL A	V42K2353X
RCS L AFT OX TK ISLN V–1/2 GPC CL B	V42K2354X
RCS L AFT FU TK ISLN V–1/2 GPC CL B	V42K2355X
RCS L AFT OX TK ISLN V–3/4/5A GPC CL	V42K2357X
RCS L AFT FU TK ISLN V–3/4/5A GPC CL	V42K2358X
RCS L AFT OX TK ISLN V–3/4/5B GPC CL	V42K2360X
RCS L AFT FU TK ISLN V–3/4/5B GPC CL	V42K2361X

(1)	RCS CROSSFEED SEQ COMPLETE FLAG	V90X1540X
(2)	POST SEQ CMD TERM FLAG	(INTERNAL)

Subsequence D

Deleted.

Subsequence E

Step E1. This subsequence is used to establish a known configuration of the valve commands at the start of each crossfeed or reconfiguration sequence. Terminate the following commands:

RCS–L AFT TK ISLN V–1/2 GPC OP A	V42K2342X
RCS–L AFT OX TK ISLN V–1/2 GPC OP B	V42K2343X
RCS–L AFT FU TK ISLN V–1/2 GPC OP B	V42K2344X
RCS–L AFT OX TK ISLN V–3/4/5A GPC OP	V42K2346X
RCS–L AFT FU TK ISLN V–3/4/5A GPC OP	V42K2347X
RCS–L AFT OX TK ISLN V–3/4/5B GPC OP	V42K2349X
RCS–L AFT FU TK ISLN V–3/4/5B GPC OP	V42K2350X
RCS–L AFT TK ISLN V–1/2 GPC CL A	V42K2353X
RCS–L AFT OX TK ISLN V–1/2 GPC CL B	V42K2354X
RCS–L AFT FU TK ISLN V–1/2 GPC CL B	V42K2355X
RCS–L AFT OX TK ISLN V–3/4/5A GPC CL	V42K2357X
RCS–L AFT FU TK ISLN V–3/4/5A GPC CL	V42K2358X
RCS–L AFT OX TK ISLN V–3/4/5B GPC CL	V42K2360X
RCS–L AFT FU TK ISLN V–3/4/5B GPC CL	V42K2361X
RCS–L AFT XFD VLV–1/2 GPC OP A	V42K2402X
RCS–L AFT OX XFD V–1/2 GPC OP B	V42K2403X
RCS–L AFT FU XFD V–1/2 GPC OP B	V42K2404X
RCS–AFT XFD VLV–3/4/5 GPC OP A	V42K2408X
RCS–L AFT OX XFD V–3/4/5 GPC OP B	V42K2409X
RCS–L AFT FU XFD V–3/4/5 GPC OP B	V42K2410X
RCS–L AFT XFD V–1/2 GPC CL A	V42K2416X
RCS–L AFT OX XFD V–1/2 GPC CL B	V42K2418X
RCS–L AFT FU XFD V–1/2 GPC CL B	V42K2422X
RCS–L AFT XFD V–3/4/5 GPC CL A	V42K2428X
RCS–L AFT OX XFD V–3/4/5 GPC CL B	V42K2430X
RCS–L AFT FU XFD V–3/4/5 GPC CL B	V42K2434X
RCS–R AFT TK ISLN V–1/2 GPC OP A	V42K3342X
RCS–R AFT OX TK ISLN V–1/2 GPC OP B	V42K3343X
RCS–R AFT FU TK ISLN V–1/2 GPC OP B	V42K3344X
RCS–R AFT OX TK ISLN V–3/4/5A GPC OP	V42K3346X
RCS–R AFT FU TK ISLN V–3/4/5A GPC OP	V42K3347X
RCS–R AFT OX TK ISLN V–3/4/5B GPC OP	V42K3349X
RCS–R AFT FU TK ISLN V–3/4/5B GPC OP	V42K3350X
RCS–R AFT TK ISLN V–1/2 GPC CL A	V42K3353X
RCS–R AFT OX TK ISLN V–1/2 GPC CL B	V42K3354X
RCS–R AFT FU TK ISLN V–1/2 GPC CL B	V42K3355X
RCS–R AFT OX TK ISLN V–3/4/5A GPC CL	V42K3357X
RCS–R AFT FU TK ISLN V–3/4/5A GPC CL	V42K3358X
RCS–R AFT OX TK ISLN V–3/4/5B GPC CL	V42K3360X
RCS–R AFT FU TK ISLN V–3/4/5B GPC CL	V42K3361X
RCS–R AFT XFD VLV–1/2 GPC OP A	V42K3402X
RCS–R AFT OX XFD V–1/2 GPC OP B	V42K3403X
RCS–R AFT FU XFD V–1/2 GPC OP B	V42K3404X
RCS–R AFT XFD VLV–3/4/5 GPC OP A	V42K3408X
RCS–R AFT OX XFD V–3/4/5 GPC OP B	V42K3409X
RCS–R AFT FU XFD V–3/4/5 GPC OP B	V42K3410X
RCS–R AFT XFD V–1/2 GPC CL A	V42K3416X
RCS–R AFT OX XFD V–1/2 GPC CL B	V42K3418X
RCS–R AFT FU XFD V–1/2 GPC CL B	V42K3422X

RCS–R AFT XFD V–3/4/5 GPC CL A	V42K3428X
RCS–R AFT OX XFD V–3/4/5 GPC CL B	V42K3430X
RCS–R AFT FU XFD V–3/4/5 GPC CL B	V42K3434X
OMS–L POD XFD VLVS A CMD 1 OP	V43K4282X
OMS–L POD XFD VLVS A CMD 1 CL	V43K4283X
OMS–L POD OXDZR XFD VLV A CMD 2 OP	V43K4284X
OMS–L POD OXDZR XFD VLV A CMD 2 CL	V43K4285X
OMS–L POD XFD VLVS B CMD 1 OP	V43K4286X
OMS–L POD XFD VLVS B CMD 1 CL	V43K4287X
OMS–L POD OXDZR XFD VLV B CMD 2 OP	V43K4288X
OMS–L POD OXDZR XFD VLV B CMD 2 CL	V43K4289X
OMS–L POD FUEL XFD VLV A CMD 2 OP	V43K4384X
OMS–L POD FUEL XFD VLV A CMD 2 CL	V43K4385X
OMS–L POD FUEL XFD VLV B CMD 2 OP	V43K4388X
OMS–L POD FUEL XFD VLV B CMD 2 CL	V43K4389X
OMS–R POD XFD VLVS A CMD 1 OP	V43K5282X
OMS–R POD XFD VLVS A CMD 1 CL	V43K5283X
OMS–R POD OXDZR XFD VLV A CMD 2 OP	V43K5284X
OMS–R POD OXDZR XFD VLV A CMD 2 CL	V43K5285X
OMS–R POD XFD VLVS B CMD 1 OP	V43K5286X
OMS–R POD XFD VLVS B CMD 1 CL	V43K5287X
OMS–R POD OXDZR XFD VLV B CMD 2 OP	V43K5288X
OMS–R POD OXDZR XFD VLV B CMD 2 CL	V43K5289X
OMS–R POD FUEL XFD VLV A CMD 2 OP	V43K5384X
OMS–R POD FUEL XFD VLV A CMD 2 CL	V43K5385X
OMS–R POD FUEL XFD VLV B CMD 2 OP	V43K5388X
OMS–R POD FUEL XFD VLV B CMD 2 CL	V43K5389X

When all commands above have been terminated, the following signal is set false, and the sequence returns to Step 1.

(1)	POST SEQ CMD TERM FLAG	(INTERNAL)

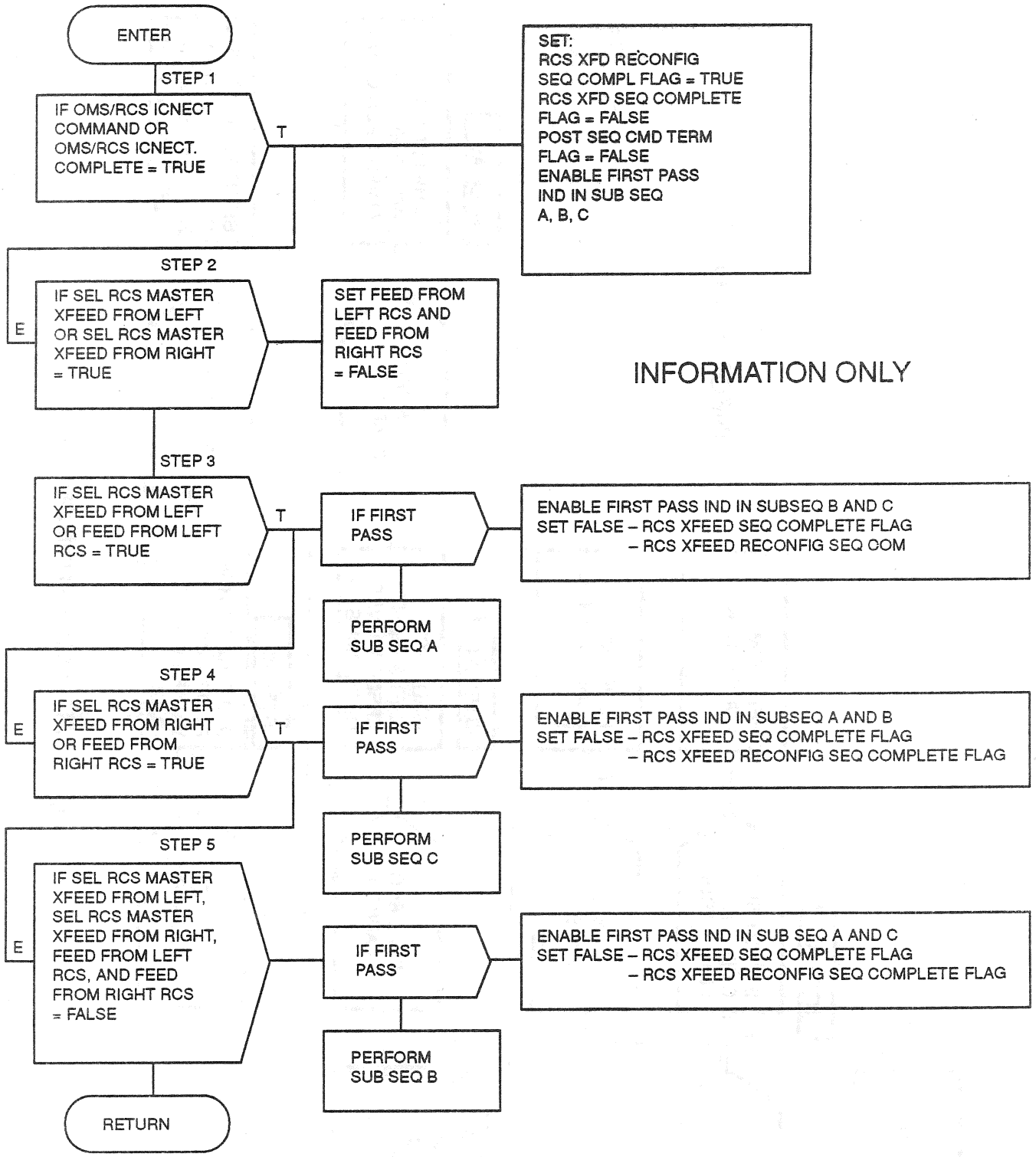

Figure 4.185. RCS/RCS XFEED (Sheet 1 of 5)

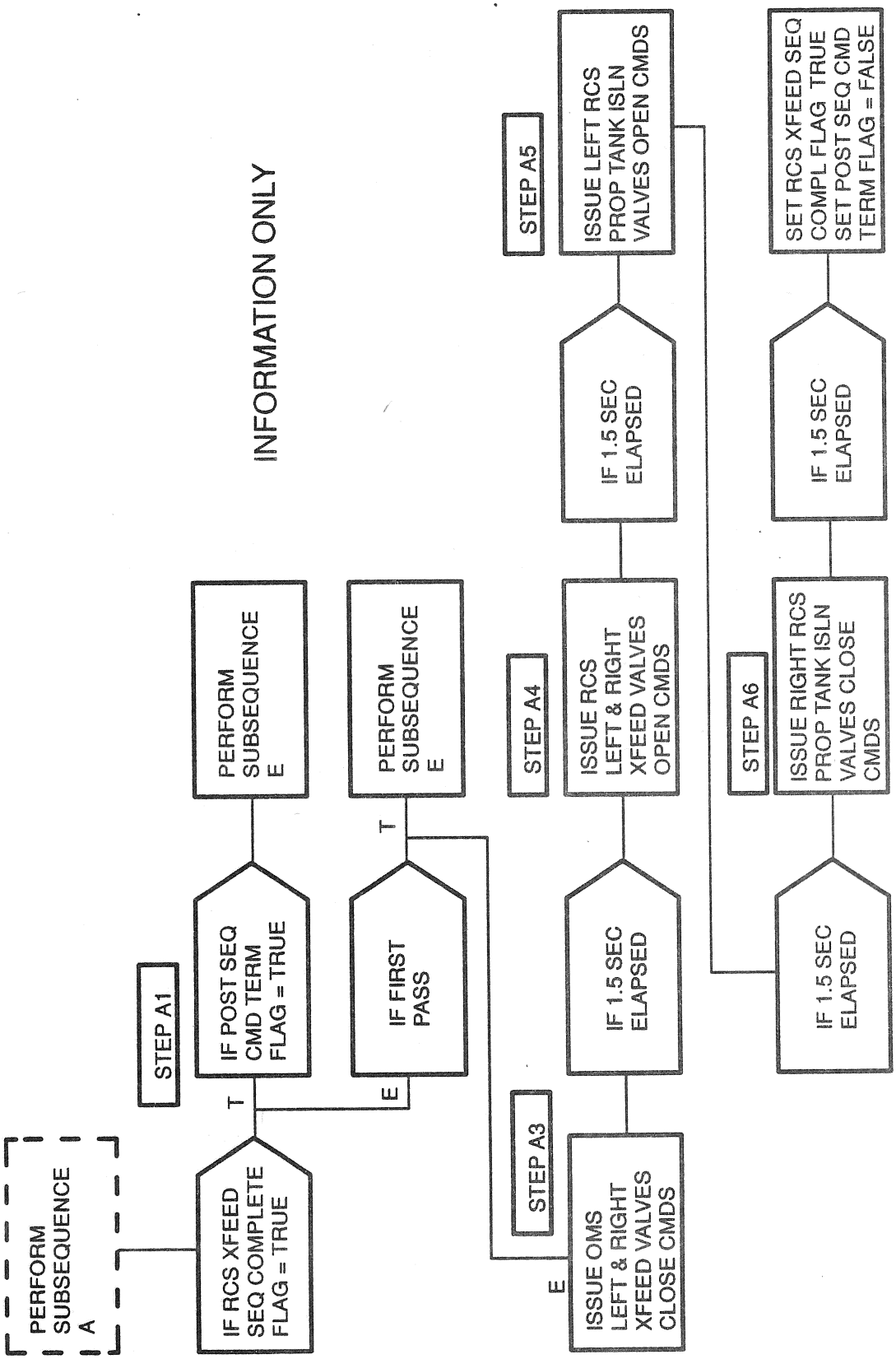

Figure 4.185. RCS/RCS XFEED (Sheet 2 of 5)

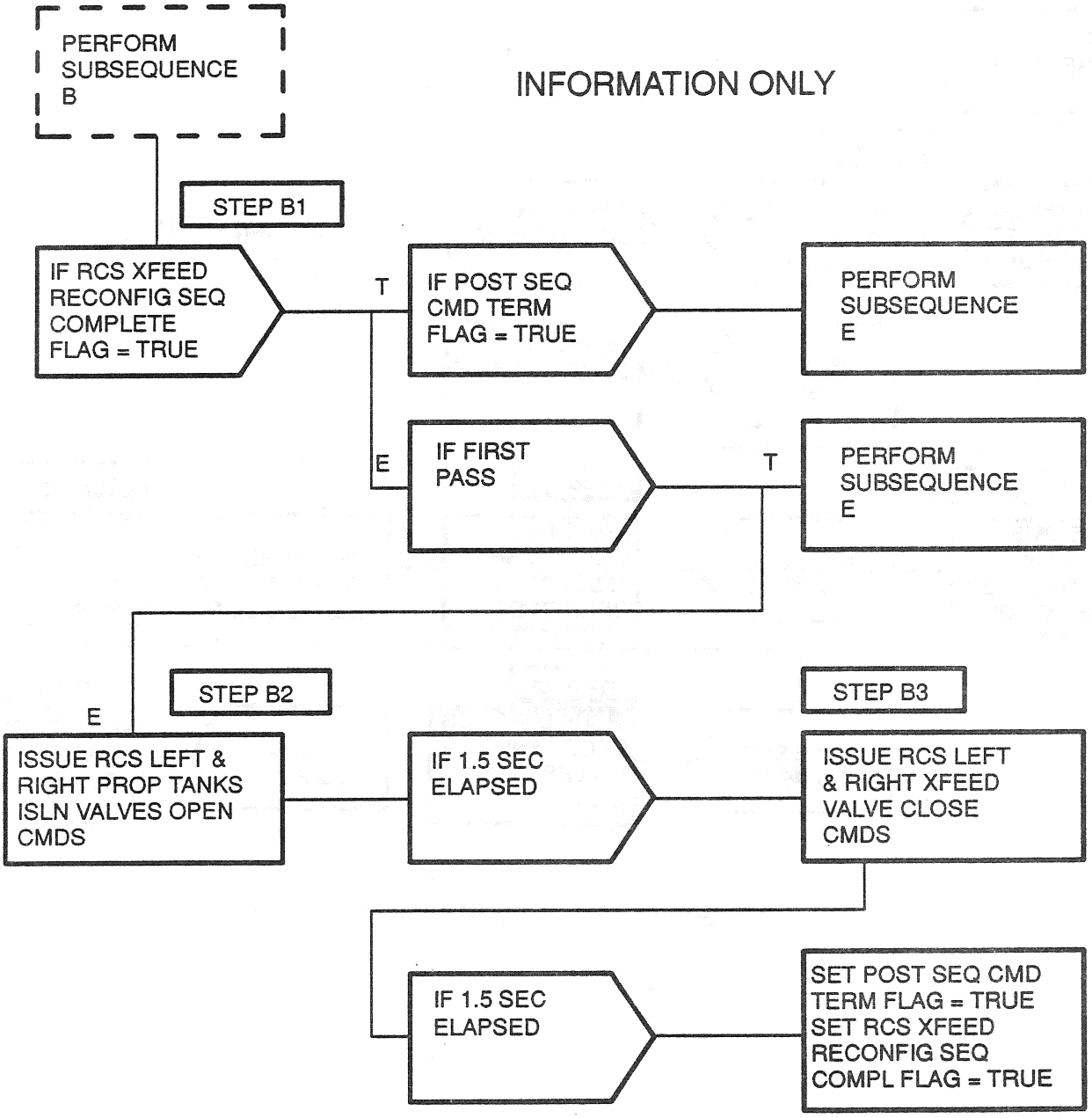

Figure 4.185. RCS/RCS XFEED (Sheet 3 of 5)

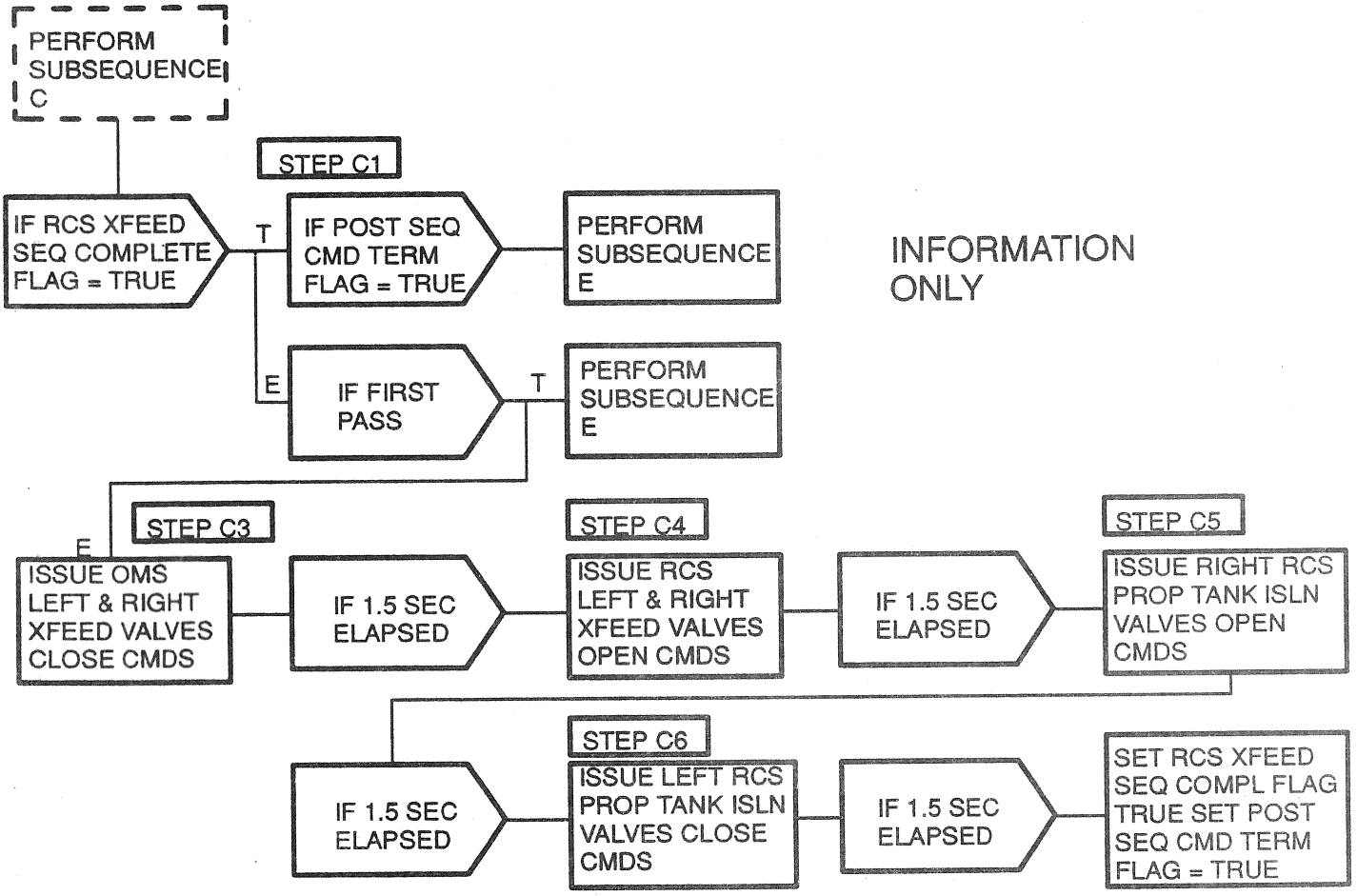

Figure 4.185. RCS/RCS XFEED (Sheet 4 of 5)

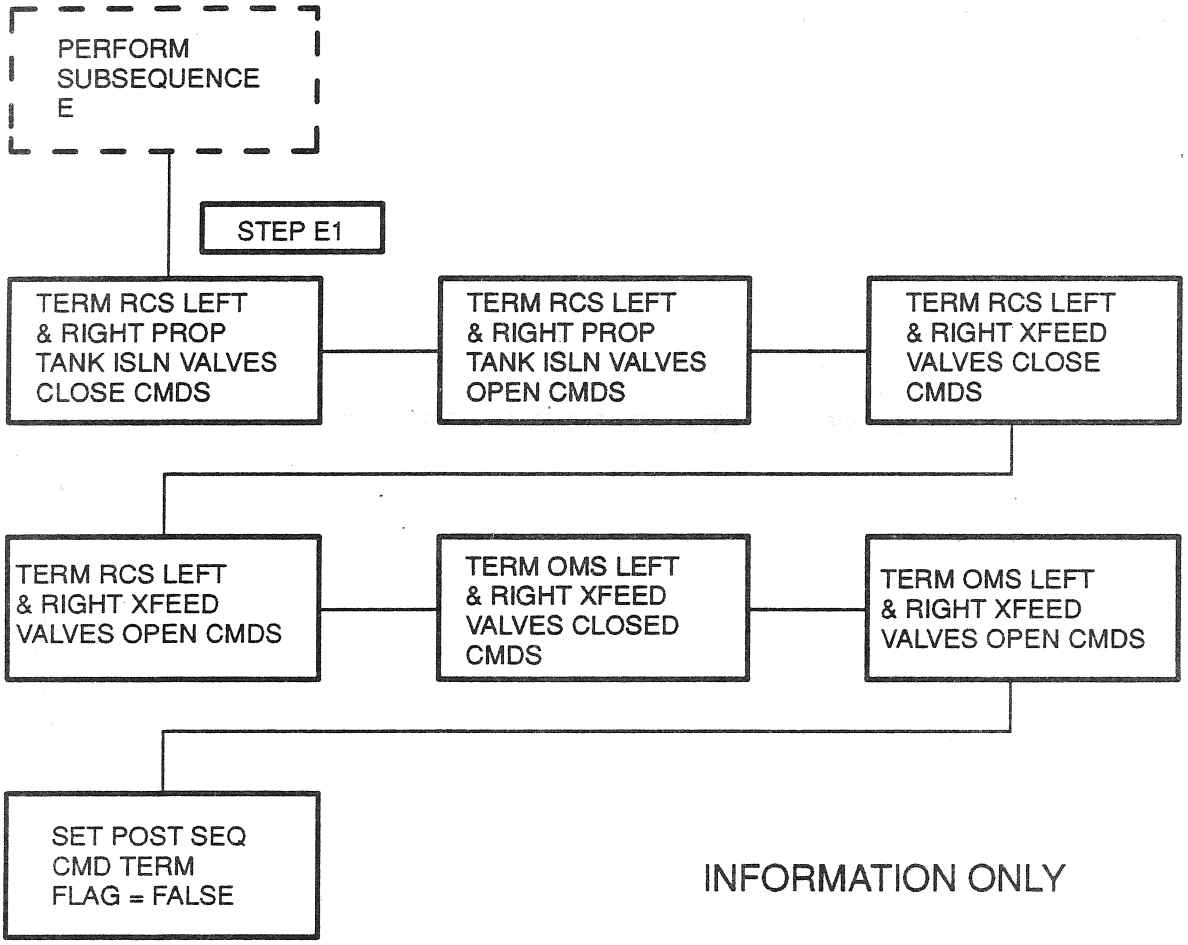

Figure 4.185. RCS/RCS XFEED (Sheet 5 of 5)

THIS PAGE INTENTIONALLY LEFT BLANK

TABLE 4.6.1.4–1. RCS/RCS CROSSFEED AND RECONFIGURATION FUNCTION (G4.185) INPUT/OUTPUT FUNCTIONAL PARAMETERS

DBFN: D3B027-F PN: VP707100049P00L INPUT FUNCTIONAL PARAMETERS FOR RCS/RCS XFEED

FSSR NAME	M/S ID	NOMENCLATURE	SOURCE	UNITS	DATA TYPE	PREC	LAST CRS
	V90X7501X	SEL RCS MASTER CROSSFEED FROM LEFT	GN&C SW RM		BD		89599C
	V90X7502X	SEL RCS MASTER CROSSFEED FROM RT	GN&C SW RM		BD		89599C
	V90X8282X	OMS TO RCS INTERCONNECT COMP FLAG	ABT OMS/RCS CONN		BD		90114B 89561A
	V90X8312X	OMS TO RCS INTERCONNECT CMD	ABT CNTL SEQ		BD		89599C
	V93X5199XA	FEED FROM LEFT RCS	RCS REG SEQ		BD		79964F
	V93X5200XA	FEED FROM RIGHT RCS	RCS REG SEQ		BD		79964F

TABLE 4.6.1.4–1. RCS/RCS CROSSFEED AND RECONFIGURATION FUNCTION (G4.185) INPUT/OUTPUT FUNCTIONAL PARAMETERS

DBFN: D3B027-F PN: VP707100049P00L OUTPUT FUNCTIONAL PARAMETERS FROM RCS/RCS XFEED

FSSR NAME	M/S ID	NOMENCLATURE	DESTINATION	UNITS	DATA TYPE	PREC	LAST CRS
CROSSFEED_OPEN	V90X1540X	RCS CROSSFEED SEQ COMPLETE FLAG	AEROJET DAP,TRANS DAP, GRTLS DAP,MSC				
RECONFIG_CMPL	V90X1539X	RCS XFD RECONFIG SEQ COMPLETE FLAG	AEROJET DAP,TRANS DAP, GRTLS DAP,MSC,TLM				89599C
	V42K2342XC	RCS-L AFT TK ISLN V-1/2 GPC OP A	MCA A3				
	V42K2343XC	RCS-L AFT OX TK ISLN V1/2 GPC OP B	MCA A3				
	V42K2344XC	RCS-L AFT FU TK ISLN V1/2 GPC OP B	MCA A3				
	V42K2346XC	RCS-L AFT OX TK ISLN V3/4/5AGPC OP	MCA A1				
	V42K2347XC	RCS-L AFT FU TK ISLN V3/4/5AGPC OP	MCA A1				
	V42K2349XC	RCS-L AFT OX TK ISLN V3/4/5BGPC OP	MCA A2				
	V42K2350XC	RCS-L AFT FU TK ISLN V3/4/5BGPC OP	MCA A2				
	V42K2353XC	RCS-L AFT TK ISLN V-1/2 GPC CL A	MCA A3				
	V42K2354XC	RCS-L AFT OX TK ISLN V1/2 GPC CL B	MCA A3				
	V42K2355XC	RCS-L AFT FU TK ISLN V1/2 GPC CL B	MCA A3				
	V42K2357XC	RCS-L AFT OX TK ISLN V3/4/5AGPC CL	MCA A1				
	V42K2358XC	RCS-L AFT FU TK ISLN V3/4/5AGPC CL	MCA A1				89598A
	V42K2360XC	RCS-L AFT OX TK ISLN V3/4/5BGPC CL	MCA A2				
	V42K2361XC	RCS-L AFT FU TK ISLN V3/4/5BGPC CL	MCA A2				
	V42K2402XA	RCS-L AFT XFD VLV 1/2 GPC OP A	MCA A3				
	V42K2403XA	RCS-L AFT OX XFD VLV-1/2 GPC OP B	MCA A3				
	V42K2404XA	RCS-L AFT FU XFD VLV 1/2 GPC OP B	MCA A3				
	V42K2408XA	RCS-L AFT XFD VLV 3/4/5 GPC OP A	MCA A2				
	V42K2409XA	RCS-L AFT OX XFD V-3/4/5 GPC OP B	MCA A2				
	V42K2410XA	RCS-L AFT FU XFD V-3/4/5 GPC OP B	MCA A2				
	V42K2416XA	RCS-L AFT XFD VLV-1/2 GPC CL A	MCA A3				
	V42K2418XA	RCS-L AFT OX XFD VLV-1/2 GPC CL B	MCA A3				
	V42K2422XA	RCS-L AFT FU XFD VLV-1/2 GPC CL B	MCA A3				
	V42K2428XA	RCS-L AFT XFD V-3/4/5 GPC CL A	MCA A2				
	V42K2430XA	RCS-L AFT OX XFD V-3/4/5 GPC CL B	MCA A2				
	V42K2434XA	RCS-L AFT FU XFD V-3/4/5 GPC CL B	MCA A2				
	V42K3342XC	RCS-R AFT TK ISLN V-1/2 GPC OP A	MCA A3				
	V42K3343XC	RCS-R AFT OX TK ISLN V-1/2 GPC OPB	MCA A3				
	V42K3344XC	RCS-R AFT FU TK ISLN V-1/2 GPC OPB	MCA A3				
	V42K3346XC	RCS-R AFT OX TK ISLN V3/4/5AGPC OP	MCA A1				
	V42K3347XC	RCS-R AFT FU TK ISLN V3/4/5AGPC OP	MCA A1				
	V42K3349XC	RCS-R AFT OX TK ISLN V3/4/5BGPC OP	MCA A2				
	V42K3350XC	RCS-R AFT FU TK ISLN V3/4/5BGPC OP	MCA A2				
	V42K3353XC	RCS-R AFT TK ISLN V-1/2 GPC CL A	MCA A3				
	V42K3354XC	RCS-R AFT OX TK ISLN V-1/2 GPC CLB	MCA A3				
	V42K3355XC	RCS-R AFT FU TK ISLN V-1/2 GPC CLB	MCA A3				
	V42K3357XC	RCS-R AFT OX TK ISLN V3/4/5AGPC CL	MCA A1				
	V42K3358XC	RCS-R AFT FU TK ISLN V3/4/5AGPC CL	MCA A1				
	V42K3360XC	RCS-R AFT OX TK ISLN V3/4/5BGPC CL	MCA A2				

TABLE 4.6.1.4–1. RCS/RCS CROSSFEED AND RECONFIGURATION FUNCTION (G4.185) INPUT/OUTPUT FUNCTIONAL PARAMETERS

DBFN: D3B027-F PN: VP707100049P00L OUTPUT FUNCTIONAL PARAMETERS FROM RCS/RCS XFEED

FSSR NAME	M/S ID	NOMENCLATURE	DESTINATION	UNITS	DATA TYPE	PREC	LAST CRS
	V42K3361XC	RCS-R AFT FU TK ISLN V3/4/5BGPC CL	MCA A2				
	V42K3402XA	RCS R AFT XFD VLV-1/2 GPC OPEN A	MCA A3				
	V42K3403XA	RCS R AFT OX XFD V-1/2 GPC OPEN B	MCA A3				
	V42K3404XA	RCS R AFT FU XFD V-1/2 GPC OPEN B	MCA A3				
	V42K3408XA	RCS R AFT XFD VLV-3/4/5 GPC OPEN A	MCA A1				
	V42K3409XA	RCS R AFT OX XFD V-3/4/5 GPC OP B	MCA A1				
	V42K3410XA	RCS R AFT FU XFD V-3/4/5 GPC OP B	MCA A1				
	V42K3416XA	RCS R AFT XFD VLV-1/2 GPC CLOSE A	MCA A3				
	V42K3418XA	RCS R AFT OX XFD V-1/2 GPC CLOSE B	MCA A3				
	V42K3422XA	RCS R AFT FU XFD V-1/2 GPC CLOSE B	MCA A3				
	V42K3428XA	RCS R AFT XFD VLV-3/4/5 GPC CL A	MCA A1				
	V42K3430XA	RCS-R AFT OX XFD V-3/4/5 GPC CL B	MCA A1				
	V42K3434XA	RCS-R AFT FU XFD V-3/4/5 GPC CL B	MCA A1				
	V43K4282XA	OMS-L POD XFD VLVS A CMD 1 OP	MCA A1				
	V43K4283XA	OMS-L POD XFD VLVS A CMD 1 CL	MCA A1				
	V43K4284XA	OMS-L POD OXDZR XFD VLV A CMD 2 OP	MCA A1				
	V43K4285XA	OMS-L POD OXDZR XFD VLV A CMD 2 CL	MCA A1				
	V43K4286XA	OMS-L POD XFD VLVS B CMD 1 OP	MCA A2				
	V43K4287XA	OMS-L POD XFD VLVS B CMD 1 CL	MCA A2				
	V43K4288XA	OMS-L POD OXDZR XFD VLV B CMD 2 OP	MCA A2				
	V43K4289XA	OMS-L POD OXDZR XFD VLV B CMD 2 CL	MCA A2				
	V43K4384XA	OMS-L POD FUEL XFD VLV A CMD 2 OP	MCA A1				
	V43K4385XA	OMS-L POD FUEL XFD VLV A CMD 2 CL	MCA A1				
	V43K4388XA	OMS-L POD FUEL XFD VLV B CMD 2 OP	MCA A2				
	V43K4389XA	OMS-L POD FUEL XFD VLV B CMD 2 CL	MCA A2				
	V43K5282XA	OMS-R POD XFD VLVS A CMD 1 OP	MCA A3				
	V43K5283XA	OMS-R POD XFD VLVS A CMD 1 CL	MCA A3				
	V43K5284XA	OMS-R POD OXDZR XFD VLV A CMD 2 OP	MCA A3				
	V43K5285XA	OMS-R POD OXDZR XFD VLV A CMD 2 CL	MCA A3				
	V43K5286XA	OMS-R POD XFD VLVS B CMD 1 OP	MCA A2				
	V43K5287XA	OMS-R POD XFD VLVS B CMD 1 CL	MCA A2				
	V43K5288XA	OMS-R POD OXDZR XFD VLV B CMD 2 OP	MCA A2				
	V43K5289XA	OMS-R POD OXDZR XFD VLV B CMD 2 CL	MCA A2				
	V43K5384XA	OMS-R POD FUEL XFD VLV A CMD 2 OP	MCA A3				
	V43K5385XA	OMS-R POD FUEL XFD VLV A CMD 2 CL	MCA A3				
	V43K5388XA	OMS-R POD FUEL XFD VLV B CMD 2 OP	MCA A2				
	V43K5389XA	OMS-R POD FUEL XFD VLV B CMD 2 CL	MCA A2				
	V93X5199XB	FEED FROM LEFT RCS	TLM		BD		89246A
	V93X5200XB	FEED FROM RIGHT RCS	TLM		BD		89246A

TABLE 4.6.1.4–2. RCS/RCS CROSSFEED AND RECONFIGURATION FUNCTION (G4.185) I–LOADS

DBFN:0484

FSSR NAME	MSID	ENG UNIT	DT PR	D	S PR	FCTN	CAT
NO REQUIREMENTS							

TABLE 4.6.1.4–3. RCS/RCS CROSSFEED AND RECONFIGURATION FUNCTION (G4.185) K–LOADS

DBFN:0558

FSSR NAME DESCRIPTION	MSID	MC KLOAD VALUE	ENG UNIT	DT PR S PR FCTN	LAST CR EQTN MSID
NO REQUIREMENTS					

TABLE 4.6.1.4–4. RCS/RCS CROSSFEED AND RECONFIGURATION FUNCTION (G4.185) CONSTANTS

DBFN:0558

FSSR NAME DESCRIPTION	MSID	MC	CONSTANT VALUE	ENG UNIT	DT	PR	S	PR FCTN	LAST CR
NO REQUIREMENTS									

4.6.3 RCS Quantity Monitor (4.102)

4.6.3.1 Introduction

The RCS quantity monitor sequence uses the GPC to calculate the percent of usable fuel and oxidizer remaining in each RCS module: forward, aft left, and aft right. The sequence also uses the calculated quantities to determine and output the lowest quantity of oxidizer or fuel for each RCS module, determine if the difference between each pair of tanks exceeds a preset tolerance to leakage detection, and provide automatic closure of the high-pressure helium isolation valves on orbit when the C&W high limit on tank outlet pressure is exceeded. The initial helium weight and the total usable propellant weight I-loads are to be uplinked prior to launch in OPS 9 or after transition into OPS 2 and will be based on propellant load data obtained prior to launch in OPS 9. These I-loads must be protected across OPS transitions between prelaunch, ascent, on orbit and entry.

4.6.3.2 Overview

RCS quantities are computed based on the PVT method, which requires that pressure and temperature measurements be combined with a unique set of constants to calculate the percent remaining in each of the six propellant tanks. Transducer failures or commfaults are accounted for by substitution of alternate measurements. If an alternate measurement cannot be selected, a crew quantity alert is provided and the calculation of quantity remaining is suspended for the particular tank involved. If the condition (transducer failure or commfault) is removed or corrected, the associated alert(s) is reset.

For each tank pair, a separate output of lowest quantity of fuel or oxidizer is also provided.

Leak detection, based on a comparison between fuel and oxidizer, will result in a C&W alert when a preset tolerance is exceeded. Sequential leaks are provided for by reset of the fuel or oxidizer level and the leak alert indicators at the time of failure detection.

For each tank, based on a C&W alert of excessive outlet pressure, the helium isolation valves are commanded closed. Should the tank outlet pressure return within limits, the close commands are removed.

4.6.3.3 Detailed Requirements

Step 1. This step performs a test to isolate transducer failure for each measurement listed in Table 4.6.3-1. The following test shall be performed.

$$\text{Lower Limit} < \text{MSID} < \text{Upper Limit}$$

Any measurement outside of the range shall be considered a failed transducer. Proceed to Step 2.

Step 2. This step selects the value, in the order listed below, to be used in the calculation of oxidizer and fuel quantities. Using Tables 4.6.3-2, 4.6.3-3, 4.6.3-4 commfaults*, and the results of Step 1, select the appropriate values from below for use in Step 3.

The parameter used in the computation is the MSID listed in the table or its substitute. If no entry is available the appropriate flag, 1 through 3, shall be set true; otherwise, set flags 1 through 3 false. If there

---

*Tenth character, an asterisk, in the MSID for commfaults and certain hardware parameters identifies measurements that are channelized on two flight critical MDM's.

is no entry for any parameter in a group, the computation in Step 3 shall not be performed and the last previous value for the propellant shall be output.

TS (1) = V42T1100C OR SUBSTITUTE
PS1 (1) = V42P1110C OR SUBSTITUTE
PS2 (1) = V42P1112C OR SUBSTITUTE
PF1 (1) = V42P1115C OR SUBSTITUTE
PF2 (1) = V42P1210C OR SUBSTITUTE
TF (1) = V42T1200C OR SUBSTITUTE
TS (2) = V42T1104C OR SUBSTITUTE
PS1 (2) = V42P1113C OR SUBSTITUTE
PS2 (2) = V42P1114C OR SUBSTITUTE
PF1 (2) = V42P1116C OR SUBSTITUTE
PF2 (2) = V42P1310C OR SUBSTITUTE
TF (2) = V42T1300C OR SUBSTITUTE
TS (3) = V42T2100C OR SUBSTITUTE
PS1 (3) = V42P2110C OR SUBSTITUTE
PS2 (3) = V42P2112C OR SUBSTITUTE
PF1 (3) = V42P2115C OR SUBSTITUTE
PF2 (3) = V42P2210C OR SUBSTITUTE
TF (3) = V42T2200C OR SUBSTITUTE
TS (4) = V42T2104C OR SUBSTITUTE
PS1 (4) = V42P2113C OR SUBSTITUTE
PS2 (4) = V42P2114C OR SUBSTITUTE
PF1 (4) = V42P2116C OR SUBSTITUTE
PF2 (4) = V42P2310C OR SUBSTITUTE
TF (4) = V42T2300C OR SUBSTITUTE
TS (5) = V42T3100C OR SUBSTITUTE
PS1 (5) = V42P3110C OR SUBSTITUTE
PS2 (5) = V42P3112C OR SUBSTITUTE
PF1 (5) = V42P3115C OR SUBSTITUTE
PF2 (5) = V42P3210C OR SUBSTITUTE
TF (5) = V42T3200C OR SUBSTITUTE
TS (6) = V42T3104C OR SUBSTITUTE
PS1 (6) = V42P3113C OR SUBSTITUTE
PS2 (6) = V42P3114C OR SUBSTITUTE
PF1 (6) = V42P3116C OR SUBSTITUTE
PF2 (6) = V42P3310C OR SUBSTITUTE
TF (6) = V42T3300C OR SUBSTITUTE

where

(1) = FWD OX
(2) = FWD FU
(3) = AFT LEFT OX
(4) = AFT LEFT FU
(5) = AFT RIGHT OX
(6) = AFT RIGHT FU

(1)	RCS-FWD QUANTITY ALERT	V90X2392X
(2)	RCS-L AFT QUANTITY ALERT	V90X2393X
(3)	RCS-R AFT QUANTITY ALERT	V90X2394X

Step 3. This step calculates the OX and FU quantities, using the parameters from Step 2.

$$RWFD = \frac{RHOF[VP - VTP - VHU] - WTP}{WFDA}\ (100) \qquad (1)$$

where

RWFD = Usable propellant quantity remaining in percent

RHOF = Propellant density

VP = Volume of the propellant system

VTP = Volume of trapped line propellant

VHU = Propellant tank ullage volume

WTP = Weight of residual tank propellant plus gaging system accuracy (6 I-loads, Table 4.6.3-6)

WFDA = Weight of total usable propellant (6 I-loads, Table 4.6.3-6)

The terms of the algorithm must be selected for each quantity calculated; that is, six sets of parameters and/or constants are used in calculating the six propellant quantities. For constants, see Table 4.6.3-5. The terms RHOF and VHU are variables and must be computed for each quantity calculation using the following:

$$RHOF_{(FU)} = E_1 - (E_2)(T_f) + (E_3)(PF)$$

$$RHOF_{(OX)} = (C_1) - (C_2)(T_f) + (C_3)(PF)$$

$$VHU = \frac{G\ [WHI - WHS](T_f)R}{PF - PFV}$$

where

E_1, E_2, and E_3 = Fuel density coefficients

T_f = Propellant tank temperature = °F + H

PF = Propellant tank pressure = $\frac{(PF_1 + PF_2)}{2}$

C_1, C_2, and C_3 = Oxidizer density coefficients

G = Helium weight coefficient

WHI = Initial helium weight in system (6 I-loads, Table 4.6.3-6)

WHS = Weight of helium in helium supply

R = Helium gas constant

PFV = Propellant vapor pressure

$$WHS = \frac{(PS)\ (VHS)}{ZS(R)\ T_S}$$

where

PS = Helium bottle pressure = $\frac{(PS_1 + PS_2)}{2}$

VHS = Helium supply system volume

ZS = Helium compressibility factor

T_S = Helium bottle temperature = °F + H

R = Helium gas constant

$VHS = VHAM\ [1 + (PS)\ (A)]^3 + VHLI$

where

VHAM = Volume of helium bottle at 0 psig and 70°F

A = Helium system volume coefficient

VHLI = Volume of helium lines

$ZS = 1 + B_1\ (PS)\ (T_S)^{-B2}$

where

B_1 and B_2 = Helium compressibility coefficients

$$PFV_{OX} = e^{+}\left[D_1 - \left(\frac{D2}{T_f}\right) + (D_3)^{T_f}\right]$$

PFV_{FU} = F at 70°F

where

D_1, D_2, and D_3 = Oxidizer vapor pressure coefficients

F = Fuel vapor pressure

The six calculated RCS quantities below are output to the dedicated cockpit meter, 5 PCM counts/1 percent, with quantities exceeding 99 percent limited to 99 percent.

RCS-FWD OX QUANTITY	V72Q1370C
RCS-FWD FUEL QUANTITY	V72Q1371C
RCS-L AFT OX QUANTITY	V72Q1374C
RCS-L AFT FUEL QUANTITY	V72Q1375C
RCS-R AFT OX QUANTITY	V72Q1378C
RCS-R AFT FUEL QUANTITY	V72Q1379C

The six calculated quantities are also output to the CRT displays as the following signals in percent remaining:

RCS-FWD OX QUANTITY REMAINING DISP	V90Q2360C
RCS-FWD FUEL QUANTITY REMAINING DISP	V90Q2361C
RCS-L AFT OX QUANTITY REMAINING DISP	V90Q2362C
RCS-L AFT FUEL QUANTITY REMAINING DISP	V90Q2363C
RCS-R AFT OX QUANTITY REMAINING DISP	V90Q2364C
RCS-R AFT FUEL QUANTITY REMAINING DISP	V90Q2365C

Proceed to Step 4.

Step 4. This step is used to compare the calculated quantity of fuel and oxidizer in each RCS module and output the lowest quantity, oxidizer or fuel, to the dedicated meter.

Compare the quantities computed in Step 3 to determine the lowest remaining between each pair of fuel/oxidizer tanks, forward, aft left, and aft right. Output the following as lowest value for each pair in volts, scaled for quantity remaining:

RCS FWD PROP QUANTITY LOWEST	V72Q1372C
RCS-L AFT PROP QUANTITY LOWEST	V72Q1376C
RCS-R AFT PROP QUANTITY LOWEST	V72Q1380C

Proceed to Step 5.

Step 5. This step performs a comparison of oxidizer versus fuel for each location, forward, aft left, and aft right, to determine if utilization is balanced within the threshold level for leak detection.

Each pair of quantities, fuel and oxidizer, in each module shall be compared to each other and the quantity difference compared to the preset leakage limits in the following algorithm.*

$$\Delta RWL = RWFD\ (OX) + OX\text{-}BIAS - [RWFD\ (FU) + FU\text{-}BIAS]$$

If $|\Delta RWIL| - |\Delta RWL| \geq 0$, no leak, proceed to Step 6.

If $|\Delta RWIL| - |\Delta RWL| < 0$, leak alert then

If $\Delta RWL > 0$, set fuel leak alert (forward, left, or right) and set FU-BIAS = FU-BIAS + ΔRWL

or if $\Delta RWL < 0$ set oxidizer leak alert forward, left, or right, and set OX-BIAS = OX - BIAS + $|\Delta RWL|$

---

* OX–BIAS = 0 and FU–BIAS = 0 at initialization.

where

RWFD = Propellant quantity remaining (FU, OX)

± ΔRWL = Difference in propellant quantities

ΔRWIL = RCS leak detection indicator limit (PCT) V97U9807C (Table 4.6.3-6)

If any of the propellant leak alert is true, issue the corresponding following outputs to generate CRT message lines, a Class 2 alert light and tone, and status indicators:

(1)	RCS-FWD OX LEAKAGE ALERT	V90X2356X
(2)	RCS-FWD OX LEAKAGE ALERT DISP	V90X2379X
(3)	RCS-FWD FUEL LEAKAGE ALERT	V90X2355X
(4)	RCS-FWD FUEL LEAKAGE ALERT DISP	V90X2378X
(5)	RCS-L AFT OX LEAKAGE ALERT	V90X2352X
(6)	RCS-L AFT OX LEAKAGE ALERT DISP	V90X2375X
(7)	RCS-L AFT FUEL LEAKAGE ALERT	V90X2351X
(8)	RCS-L AFT FUEL LEAKAGE ALERT DISP	V90X2374X
(9)	RCS-R AFT OX LEAKAGE ALERT	V90X2354X
(10)	RCS-R AFT OX LEAKAGE ALERT DISP	V90X2377X
(11)	RCS-R AFT FUEL LEAKAGE ALERT	V90X2353X
(12)	RCS-R AFT FUEL LEAKAGE ALERT DISP	V90X2376X

Proceed to Step 6.

Step 6. This step is used to provide automatic closure of the high-pressure helium isolation valve when the C&W high limit on tank outlet pressure is exceeded.

If (g) is true, monitor (a) through (f) below; otherwise return to Step 1.

The following signals are monitored:

(a)	RCS FWD TK PRESS OX HI/LO/IO STAT	V94J4342C
(b)	RCS FWD TK PRESS FU HI/LO/IO STAT	V94J4343C
(c)	RCS L TK PRESS OX HI/LO/IO STATUS	V94J4346C
(d)	RCS L TK PRESS FU HI/LO/IO STATUS	V94J4347C
(e)	RCS R TK PRESS OX HI/LO/IO STATUS	V94J435OC
(f)	RCS R TK PRESS FU HI/LO/IO STATUS	V94J4351C
(g)	OPS 2 IND	V90X8633X

For each lettered signal (a) through (f) above indicating an excess outlet pressure, HI, both of the corresponding lettered commands below will be issued.

For each pair of lettered signals (a) through (f) above (both propellants of the same location—fwd, L, and R) not indicating an excess outlet pressure, HI, both pairs of the corresponding lettered commands (a) through (f) below are terminated.

(a)	RCS FWD HE PRESS VLV A GPC CL A	V42K1154X
(b)	RCS FWD HE PRESS VLV A GPC CL A	V42K1154X
(c)	RCS L AFT HE PRESS VLV A GPC CL A	V42K2154X

(d)	RCS L AFT HE PRESS VLV A GPC CL A	V42K2154X
(e)	RCS R AFT HE PRESS VLV A GPC CL A	V42K3154K
(f)	RCS R AFT HE PRESS VLV A GPC CL A	V42K3154K
(a)	RCS FWD HE PRESS VLV B GPC CL A	V42K1156X
(b)	RCS FWD HE PRESS VLV B GPC CL A	V42K1156X
(c)	RCS L AFT HE PRESS VLV B GPC CL A	V42K2156X
(d)	RCS L AFT HE PRESS VLV B GPC CL A	V42K2156X
(e)	RCS R AFT HE PRESS VLV B GPC CL A	V42K3156X
(f)	RCS R AFT HE PRESS VLV B GPC CL A	V42K3156X

Then return to Step 1.

Table 4.6.3–1. RCS Propellant Transducer Limits

FWD RCS					
LIMITS					
OXID	UPPER	LOWER	FUEL	UPPER	LOWER
V42T1100C	175	–75	V42T1104C	175	–75
V42P1110C	4000	400	V42P1113C	4000	400
V42P1112C	4000	400	V42P1114C	4000	400
V42P1115C	380	150	V42P1116C	380	150
V42T1200C	160	0	V42T1300C	160	0
V42P1210C	380	150	V42P1310C	380	150
LEFT RCS					
LIMITS					
OXID	UPPER	LOWER	FUEL	UPPER	LOWER
V42T2100C	175	–75	V42T2104C	175	–75
V42P2110C	4000	400	V42P2113C	4000	400
V42P2112C	4000	400	V42P2114C	4000	400
V42P2115C	380	150	V42P2116C	380	150
V42T2200C	160	0	V42T2300C	160	0
V42P2210C	380	150	V42P2310C	380	150
RIGHT RCS					
LIMITS					
OXID	UPPER	LOWER	FUEL	UPPER	LOWER
V42T3100C	175	–75	V42T3104C	175	–75
V42P3110C	4000	400	V42P3113C	4000	400
V42P3112C	4000	400	V42P3114C	4000	400
V42P3115C	380	150	V42P3116C	380	150
V42T3200C	160	0	V42T3300C	160	0
V42P3210C	380	150	V42P3310C	380	150

Table 4.6.3–2. Forward RCS Propellant Quantity Primary/Substitute Parameters		
FWD		
MSID	MDM	COLUMN 1
V42T1100C	3	V42T1104C*
V42P1110C	3	V42P1112C*
V42P1112C	1	V42P1110C
V42P1115C	1	V42P1210C*
V42P1210C	3	V42P1115C
V42T1200C	1	V42T1300C*
V42T1104C	1	V42T1100C
V42P1113C	1	V42P1114C*
V42P1114C	3	V42P1113C
V42P1116C	3	V42P1310C*
V42P1310C	1	V42P1116C
V42T1300C	3	V42T1200C

Table 4.6.3–3. Aft Left RCS Propellant Quantity Primary/Substitute Parameters		
AFT LEFT		
MSID	MDM	COLUMN 1
V42T2100C	1	V42T2104C*
V42P2110C	1	V42P2112C*
V42P2112C	1	V42P2110C
V42P2115C	1	V42P2210C*
V42P2210C	1	V42P2115C
V42T2200C	1	V42T2300C*
V42T2104C	1	V42T2100C
V42P2113C	1	V42P2114C*
V42P2114C	1	V42P2113C
V42P2116C	1	V42P2310C*
V42P2310C	1	V42P2116C
V42T2300C	1	V42T2200C

Table 4.6.3–4. Aft Right RCS Propellant Quantity Primary/Substitute Parameters		
AFT Right		
MSID	MDM	COLUMN 1
V42T3100C	2	V42T3104C*
V42P3110C	2	V42P3112C*
V42P3112C	2	V42P3110C
V42P3115C	2	V42P3210C*
V42P3210C	2	V42P3115C
V42T3200C	2	V42T3300C*
V42T3104C	2	V42T3100C
V42P3113C	2	V42P3114C*
V42P3114C	2	V42P3113C
V42P3116C	2	V42P3310C*
V42P3310C	2	V42P3116C
V42T3300C	2	V42T3200C

Table 4.6.3–5. RCS Propellant Quantity Constants

Title	Value	Units
RCS–FWD TRAPPED OX LINE VOL (VTP)	725.9	$in.^3$
RCS–FWD TRAPPED FU LINE VOL (VTP)	677.5	$in.^3$
FUEL DENSITY COEFFICIENT (E1)	4.1538×10^{-2}	–
FUEL DENSITY COEFFICIENT (E2)	1.8679×10^{-5}	–
FUEL DENSITY COEFFICIENT (E3)	1.4583×10^{-7}	–
FUEL VAPOR PRESSURE (F)	0.8	psia
HELIUM WEIGHT COEFFICIENT (G)	1.008	–
HELIUM GAS CONSTANT (R)	4635	in.–lb/lb–°R
RANKIN TEMP CONVERSION COEFF (H)	459.7	–
HELIUM SYSTEM COEFFICIENT (A)	1.4972×10^{-6}	–
HELIUM COMPRESSIBILITY COEFFICIENT (B1)	9.7544×10^{-3}	–
HELIUM COMPRESSIBILITY COEFFICIENT (B2)	0.897	$in.^3$
RCS–L AFT TRAPPED OX LINE VOL (VTP)	1.1326×10^3	$in.^3$
RCS–L AFT TRAPPED FU LINE VOL (VTP)	1.2230×10^3	$in.^3$
RCS–R AFT TRAPPED OX LINE VOL (VTP)	1.1326×10^3	$in.^3$
RCS–R AFT TRAPPED FUL LINE VOL (VTP)	1.2230×10^3	$in.^3$
RCS–FWD HE BOTTLE VOLUME (VHAM)	3.043×10^3	$in.^3$
RCS–L AFT HE BOTTLE VOLUME (VHAM)	3.043×10^3	$in.^3$
RCS–R AFT HE BOTTLE VOLUME (VHAM)	3.043×10^3	$in.^3$
RCS–FWD OX HE LINE VOLUME (VHLI)	13.7	$in.^3$
RCS–FWD FU HE LINE VOLUME(VHLI)	13.7	$in.^3$
RCS–L AFT OX HE LINE VOLUME (VHLI)	23.6	$in.^3$
RCS–L AFT FU HE LINE VOLUME (VHLI)	20.7	$in.^3$
RCS–R AFT OX HE LINE VOLUME (VHLI)	23.6	$in.^3$
RCS–R AFT FU HE LINE VOLUME (VHLI)	20.7	$in.^3$
RCS–FWD OX SYSTEM VOLUME (VP)	3.1892×10^4	$in.^3$
RCS–FWD FU SYSTEM VOLUME (VP)	3.18436×10^4	$in.^3$
RCS–L AFT OX SYSTEM VOLUME (VP)	3.23156×10^4	$in.^3$
RCS–L AFT FU SYSTEM VOLUME (VP)	3.23886×10^4	$in.^3$
RCS–R AFT OX SYSTEM VOLUME (VP)	3.23156×10^4	$in.^3$
RCS–R AFT FU SYSTEM VOLUME (VP)	3.23886×10^4	$in.^3$
OXIDIZER DENSITY COEFFICIENT (C_1)	7.6027×10^{-2}	–
OXIDIZER DENSITY COEFFICIENT (C_2)	4.5162×10^{-5}	–
OXIDIZER DENSITY COEFFICIENT (C_3)	4.1667×10^{-7}	–
OXID VAPOR PRESS COEFFICIENT (D_1)	12.082	–
OXID VAPOR PRESS COEFFICIENT (D_2)	6111.0	–
OXID VAPOR PRESS COEFFICIENT (D_3)	4.03×10^{-3}	–

Table 4.6.3–6. RCS Propellant Quantity I–Loads		
MSID	Title	Nomenclature
V99U7584C	WPT	RCS FWD FU TK RESIDUAL WT
V99U7583C	WPT	RCS FWD OX TK RESIDUAL WT
V99U7586C	WPT	RCS L AFT FU TK RESIDUAL WT
V99U7585C	WPT	RCS L AFT OX TK RESIDUAL WT
V99U7588C	WPT	RCS R AFT FU TK RESIDUAL WT
V99U7587C	WPT	RCS R AFT OX TK RESIDUAL WT
V97U9817C	WFDA	RCS FWD 100 PCT USABLE FU
V97U9816C	WFDA	RCS FWD 100 PCT USABLE OX
V97U9819C	WFDA	RCS L AFT 100 PCT USABLE FU
V97U9818C	WFDA	RCS L AFT 100 PCT USABLE OX
V97U9821C	WFDA	RCS R AFT 100 PCT USABLE FU
V97U9820C	WFDA	RCS R AFT 100 PCT USABLE OX
V97U9811C	WHI	RCS FWD FU TOTAL HE WT
V97U9810C	WHI	RCS FWD OX TOTAL HE WT
V97U9813C	WHI	RCS L AFT FU TOTAL HE WT
V97U9812C	WHI	RCS L AFT OX TOTAL HE WT
V97U9815C	WHI	RCS R AFT FU TOTAL HE WT
V97U9814C	WHI	RCS R AFT OX TOTAL HE WT
V97U9807C	ΔRWIL	RCS LEAK DET IND LMT

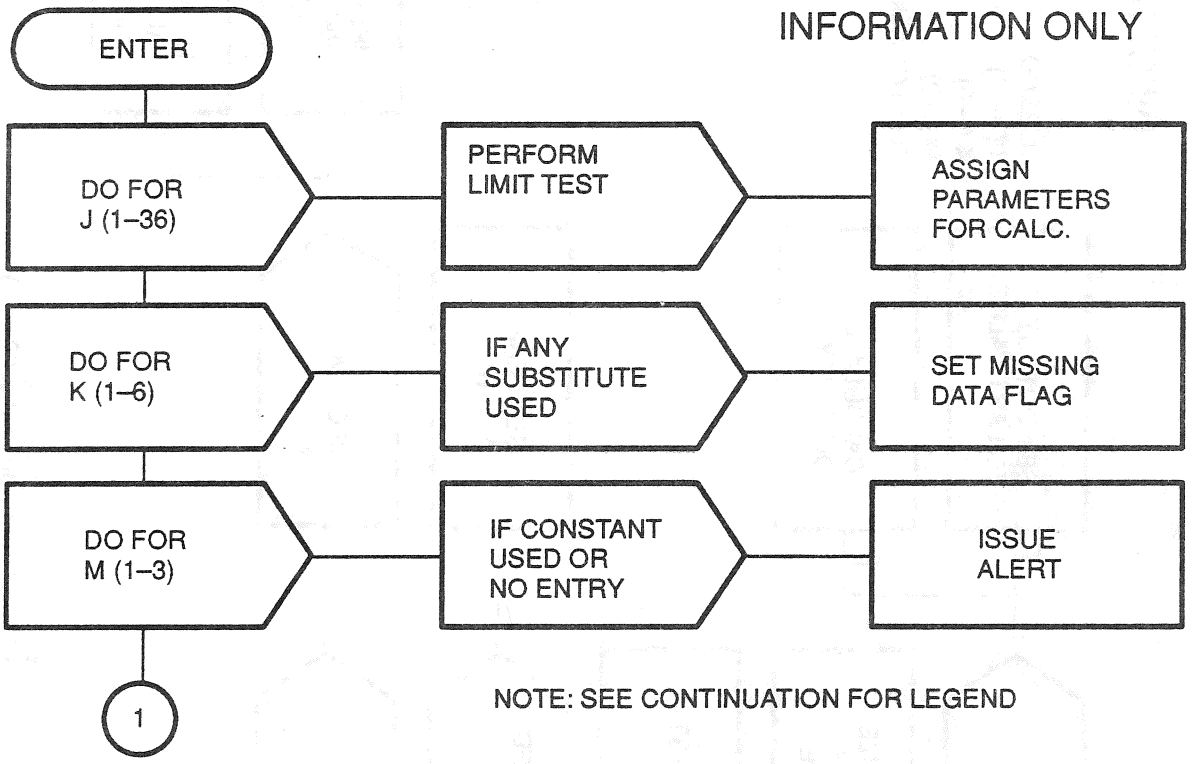

Figure 4.102. RCS Qty Mon (Sheet 1 of 2)

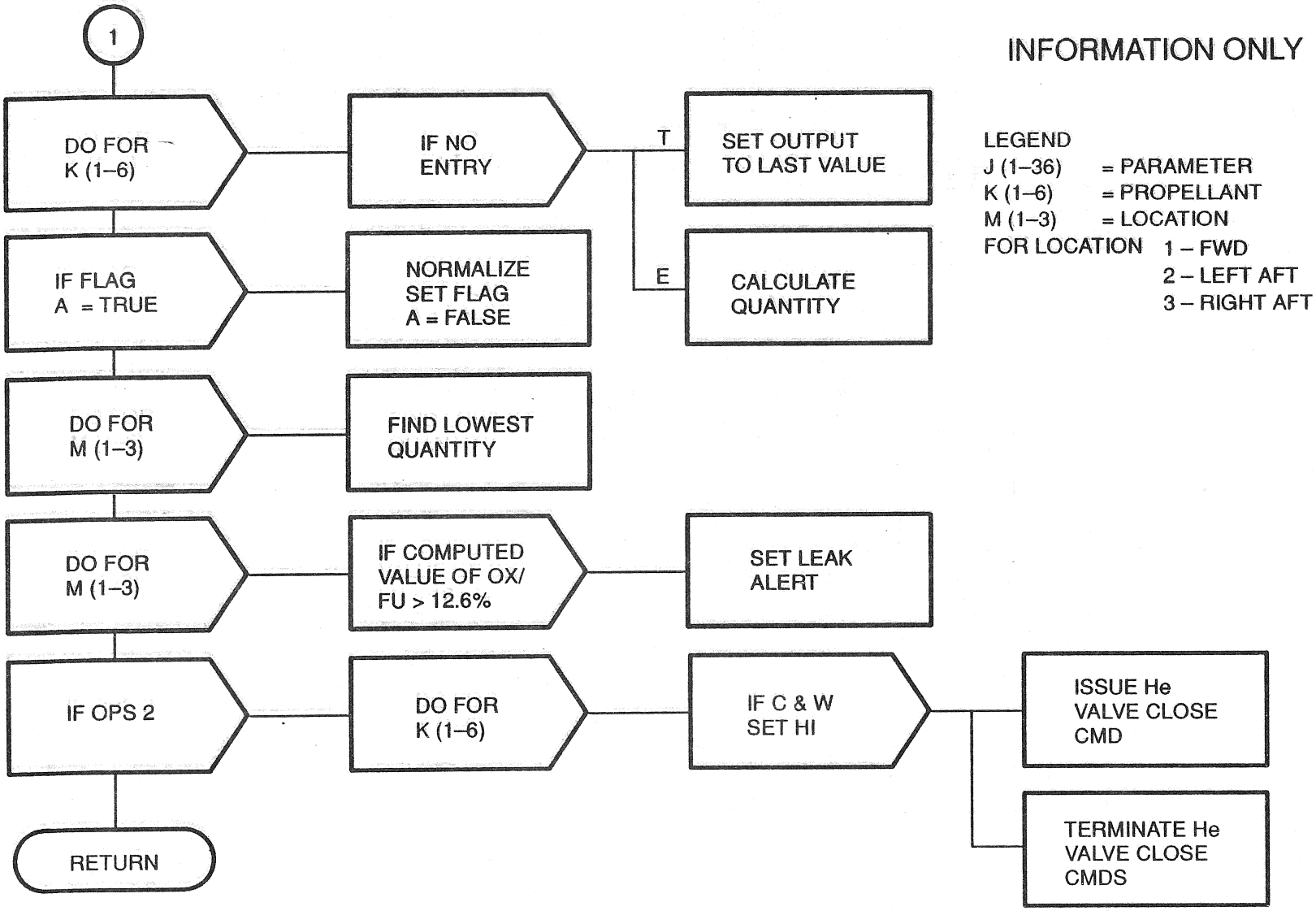

Figure 4.102. RCS Qty Mon (Sheet 2 of 2)

TABLE 4.6.3.4–1. RCS QUANTITY MONITOR (G4.102) INPUT/OUTPUT FUNCTIONAL PARAMETERS

DBFN: D3B027-F PN: VP707100049P00L INPUT FUNCTIONAL PARAMETERS FOR RCS QTY MON

FSSR NAME	M/S ID	NOMENCLATURE	SOURCE	UNITS	DATA TYPE	PREC	LAST CRS
OPS_2_INDICATOR	V90X8633X	OPS 2 IND	MSC				89599C 79933F
	V42T1100C	RCS FWD HE OX TANK TEMP-1	DSC F2	DEGF	AMU		
	V42T1104C	RCS FWD HE FU TANK TEMP-1	DSC F4	DEGF	AMU		
	V42T1104C*	RCS FWD HE FU TANK TEMP-1	DSC F4	DEGF	AMU		89648A
	V42P1110C	RCS FWD HE OX TANK PRESS-1	DSC F2	PSIA	AMU		
	V42P1112C	RCS FWD HE OX TANK PRESS-2	DSC F4	PSIA	AMU		
	V42P1112C*	RCS FWD HE OX TANK PRESS-2	DSC F4	PSIA	AMU		89595A
	V42P1113C	RCS FWD HE FU TANK PRESS-1	DSC F4	PSIA	AMU		
	V42P1114C	RCS FWD HE FU TANK PRESS-2	DSC F2	PSIA	AMU		
	V42P1114C*	RCS FWD HE FU TANK PRESS-2	DSC F2	PSIA	AMU		89595A
	V42P1115C	RCS FWD OX TANK ULLAGE PRESS	DSC F4	PSIA	AMU		
	V42P1116C	RCS FWD FU TANK ULLAGE PRESS	DSC F2	PSIA	AMU		
	V42T1200C	RCS FWD OX TANK TEMP-1	DSC F4	DEGF	AMU		
	V42P1210C	RCS FWD OX TANK OUT PRESS	DSC F2	PSIA	AMU		
	V42P1210C*	RCS FWD OX TANK OUT PRESS	DSC F2	PSIA	AMU		89595A
	V42T1300C	RCS FWD FU TANK TEMP-1	DSC F2	DEGF	AMU		
	V42T1300C*	RCS FWD FU TANK TEMP-1	DSC F2	DEGF	AMU		
	V42P1310C	RCS FWD FU TANK OUT PRESS	DSC F4	PSIA	AMU		89598A
	V42P1310C*	RCS FWD FU TANK OUT PRESS	DSC F4	PSIA	AMU		89595A
	V42T2100C	RCS L AFT HE OX TANK TEMP-1	DSC OL1	DEGF	AMU		
	V42T2104C	RCS L AFT HE FU TANK TEMP-1	DSC OL2	DEGF	AMU		
	V42T2104C*	RCS L AFT HE FU TANK TEMP-1	DSC OL2	DEGF	AMU		89648A
	V42P2110C	RCS L AFT HE OX TANK PRESS-1	DSC OL1	PSIA	AMU		
	V42P2112C	RCS L AFT HE OX TANK PRESS-2	DSC OL2	PSIA	AMU		
	V42P2112C*	RCS L AFT HE OX TANK PRESS-2	DSC OL2	PSIA	AMU		89595A
	V42P2113C	RCS L AFT HE FU TANK PRESS-1	DSC OL1	PSIA	AMU		
	V42P2114C	RCS L AFT HE FU TANK PRESS-2	DSC OL1	PSIA	AMU		
	V42P2114C*	RCS L AFT HE FU TANK PRESS-2	DSC OL1	PSIA	AMU		89595A
	V42P2115C	RCS L AFT OX TANK ULLAGE PRESS	DSC OL1	PSIA	AMU		79964F
	V42P2116C	RCS L AFT FU TANK ULLAGE PRESS	DSC OL2	PSIA	AMU		79964F
	V42T2200C	RCS L AFT OX TANK TEMP-1	DSC OL2	DEGF	AMU		
	V42P2210C	RCS L AFT OX TANK OUT PRESS	DSC OL1	PSIA	AMU		
	V42P2210C*	RCS L AFT OX TANK OUT PRESS	DSC OL1	PSIA	AMU		79964F
	V42T2300C	RCS L AFT FU TANK TEMP-1	DSC OL1	DEGF	AMU		
	V42T2300C*	RCS L AFT FU TANK TEMP-1	DSC OL1	DEGF	AMU		89595A
	V42P2310C	RCS L AFT FU TANK OUT PRESS	DSC OL2	PSIA	AMU		
	V42P2310C*	RCS L AFT FU TANK OUT PRESS	DSC OL2	PSIA	AMU		79964F
	V42T3100C	RCS R AFT HE OX TANK TEMP-1	DSC OR1	DEGF	AMU		
	V42T3104C	RCS R AFT HE FU TANK TEMP-1	DSC OR2	DEGF	AMU		
	V42T3104C*	RCS R AFT HE FU TANK TEMP-1	DSC OR2	DEGF	AMU		89648A
	V42P3110C	RCS R AFT HE OX TANK PRESS-1	DSC OR1	PSIA	AMU		
	V42P3112C	RCS R AFT HE OX TANK PRESS-2	DSC OR2	PSIA	AMU		

TABLE 4.6.3.4–1. RCS QUANTITY MONITOR (G4.102) INPUT/OUTPUT FUNCTIONAL PARAMETERS

DBFN: D3B027-F PN: VP707100049P00L INPUT FUNCTIONAL PARAMETERS FOR RCS QTY MON

FSSR NAME	M/S ID	NOMENCLATURE	SOURCE	UNITS	DATA TYPE	PREC	LAST CRS
	V42P3112C*	RCS R AFT HE OX TANK PRESS-2	DSC OR2	PSIA	AMU		89595A
	V42P3113C	RCS R AFT HE FU TANK PRESS-1	DSC OR2	PSIA	AMU		
	V42P3114C	RCS R AFT HE FU TANK PRESS-2	DSC OR1	PSIA	AMU		
	V42P3114C*	RCS R AFT HE FU TANK PRESS-2	DSC OR1	PSIA	AMU		89595A
	V42P3115C	RCS R AFT OX TANK ULLAGE PRESS	DSC OR1	PSIA	AMU		79964F
	V42P3116C	RCS R AFT FU TANK ULLAGE PRESS	DSC OR2	PSIA	AMU		79964F
	V42T3200C	RCS R AFT OX TANK TEMP-1	DSC OR2	DEGF	AMU		
	V42P3210C	RCS R AFT OX TANK OUT PRESS	DSC OR1	PSIA	AMU		
	V42P3210C*	RCS R AFT OX TANK OUT PRESS	DSC OR1	PSIA	AMU		79964F
	V42T3300C	RCS R AFT FU TANK TEMP-1	DSC OR1	DEGF	AMU		
	V42T3300C*	RCS R AFT FU TANK TEMP-1	DSC OR1	DEGF	AMU		
	V42P3310C	RCS R AFT FU TANK OUT PRESS	DSC OR2	PSIA	AMU		
	V42P3310C*	RCS R AFT FU TANK OUT PRESS	DSC OR2	PSIA	AMU		79964F
	V91X2283X	FF1 INPUT PROM SEG 1,2 STATUS(MFE)	FCOS		BD		
	V91X2284X	FF2 INPUT PROM SEG 1,2 STATUS(MFE)	FCOS		BD		
	V91X2285X	FF3 INPUT PROM SEG 1,2 STATUS(MFE)	FCOS		BD		
	V91X2287X	FF4 INPUT PROM SEG 1,2 STATUS(MFE)	FCOS		BD		
	V91X2841X	FA1 INPUT PROM SEG 1,2 STATUS(MFE)	FCOS				89846B
	V91X2842X	FA2 INPUT PROM SEG 1,2 STATUS(MFE)	FCOS				90114B
	V91X2843X	FA3 INPUT PROM SEG 1,2 STATUS(MFE)	FCOS				90114B
	V91X2844X	FA4 INPUT PROM SEG 1,2 STATUS(MFE)	FCOS		BD		89598A
	V94J4342C	RCS FWD TK PRESS OX HI/LO/IO STAT	GAX		VAR		
	V94J4343C	RCS FWD TK PRESS FU HI/LO/IO STAT	GAX		VAR		
	V94J4346C	RCS L TK PRESS OX HI/LO/IO STATUS	GAX		VAR		
	V94J4347C	RCS L TK PRESS FU HI/LO/IO STATUS	GAX		VAR		
	V94J4350C	RCS R TK PRESS OX HI/LO/IO STATUS	GAX		VAR		
	V94J4351C	RCS R TK PRESS FU HI/LO/IO STATUS	GAX		VAR		

TABLE 4.6.3.4–1. RCS QUANTITY MONITOR (G4.102) INPUT/OUTPUT FUNCTIONAL PARAMETERS

DBFN: D3B027-F PN: VP707100049P00L OUTPUT FUNCTIONAL PARAMETERS FROM RCS QTY MON

FSSR NAME	M/S ID	NOMENCLATURE	DESTINATION	UNITS	DATA TYPE	PREC	LAST CRS
RWFD (1)	V90Q2360C	RCS FWD OX QUANTITY REMAINING DISP	RM RCS DIP,GNC SYS SUMM2 DISP, TLM	PCT	VAR		
RWFD (2)	V90Q2361C	RCS FWD FU QUANTITY REMAINING DISP	RM RCS DIP,GNC SYS SUMM2 DISP, TLM	PCT	VAR		
RWFD (3)	V90Q2362C	RCS-L AFT OX QTY REMAINING DISP	RM RCS DIP,GNC SYS SUMM2 DISP, TLM	PCT	VAR		
RWFD (4)	V90Q2363C	RCS-L AFT FUEL QTY REMAINING DISP	RM RCS DIP,GNC SYS SUMM2 DISP, TLM	PCT	VAR		
RWFD (5)	V90Q2364C	RCS-R AFT OX QTY REMAINING DISP	RM RCS DIP,GNC SYS SUMM2 DISP, TLM	PCT	VAR		
RWFD (6)	V90Q2365C	RCS-R AFT FUEL QTY REMAINING DISP	RM RCS DIP,GNC SYS SUMM2 DISP, TLM	PCT	VAR		
RWFD(1)	V72Q1370C	RCS-FWD OX QUANTITY	D&C PNL,TLM	PCT	AMU		
RWFD(2)	V72Q1371C	RCS-FWD FU QUANTITY	D&C PNL,TLM	PCT	AMU		
RWFD(3)	V72Q1374C	RCS-L AFT OX QUANTITY	D&C PNL,TLM	PCT	AMU		
RWFD(4)	V72Q1375C	RCS-L AFT FU QUANTITY	D&C PNL,TLM	PCT	AMU		
WRFD(5)	V72Q1378C	RCS-R AFT OX QUANTITY	D&C PNL,TLM	PCT	AMU		
WRFD(7)	V72Q1379C	RCS-R AFT FU QUANTITY	D&C PNL,TLM	PCT	AMU		
	V42K1154X	RCS-FWD HE PRESS VLV-A GPC CL A	LCA F1		BD		
	V42K1156X	RCS-FWD HE PRESS VLV-B GPC CL A	LCA F2		BD		
	V42K2154X	RCS-L AFT HE PRESS VLV-A GPC CL A	LCA A1		BD		
	V42K2156X	RCS-L AFT HE PRESS VLV-B GPC CL A	LCA A3		BD		
	V42K3154X	RCS-R AFT HE PRESS VLV-A GPC CL A	LCA A1		BD		
	V42K3156X	RCS-R AFT HE PRESS VLV-B GPC CL A	LCA A2		BD		
	V72Q1372C	RCS-FWD LOWEST PROPELLANT QUANTITY	D&C PNL	PCT	AMU		
	V72Q1376C	RCS-L AFT LOWEST PROPELLANT QTY	D&C PNL	PCT	AMU		
	V72Q1380C	RCS-R AFT LOWEST PROPELLANT QTY	D&C PNL	PCT	AMU		
	V90X2351X	RCS L AFT FU LEAKAGE ALERT	GAX				
	V90X2352X	RCS L AFT OX LEAKAGE ALERT	GAX				
	V90X2353X	RCS R AFT FU LEAKAGE ALERT	GAX				
	V90X2354X	RCS R AFT OX LEAKAGE ALERT	GAX				
	V90X2355X	RCS FWD FU LEAKAGE ALERT	GAX				
	V90X2356X	RCS FWD OX LEAKAGE ALERT	GAX				
	V90X2374X	RCS L FU LEAKAGE ALERT DISP	GAX,RM RCS DIP				
	V90X2375X	RCS L OX LEAKAGE ALERT DISP	GAX,RM RCS DIP				
	V90X2376X	RCS R FU LEAKAGE ALERT DISP	GAX,RM RCS DIP				
	V90X2377X	RCS R OX LEAKAGE ALERT DISP	GAX,RM RCS DIP				
	V90X2378X	RCS FWD FU LEAKAGE ALERT DISP	GAX,RM RCS DIP				
	V90X2379X	RCS FWD OX LEAKAGE ALERT DISP	GAX,RM RCS DIP				
	V90X2392X	RCS-FWD QUANTITY ALERT	GAX,RM RCS DIP				
	V90X2393X	RCS-L QUANTITY ALERT	GAX,RM RCS DIP				
	V90X2394X	RCS-R QUANTITY ALERT	GAX,RM RCS DIP				

TABLE 4.6.3.4–2. RCS QUANTITY MONITOR (G4.102) I–LOADS

DBFN:0484

FSSR NAME	MSID	ENG UNIT	DT	PR	D	S	PR	FCTN	CAT
RCS_FWD_FU_TK_RESIDUAL_WT	V99U7584C	LBS	F	S	M	C	G4.102		QHE2
RCS_FWD_FU_TOTAL_HE_WT	V97U9811C	LBS	F	S	M	C	G4.102		QHE2
RCS_FWD_OX_TK_RESIDUAL_WT	V99U7583C	LBS	F	S	M	C	G4.102		QHE2
RCS_FWD_OX_TOTAL_HE_WT	V97U9810C	LBS	F	S	M	C	G4.102		QHE2
RCS_FWD_100_PCT_USABLE_FU	V97U9817C	LBS	F	S	M	C	G4.102		QHE2
RCS_FWD_100_PCT_USABLE_OX	V97U9816C	LBS	F	S	M	C	G4.102		QHE2
RCS_L_AFT_FU_TK_RESIDUAL_WT	V99U7586C	LBS	F	S	M	C	G4.102		QHE2
RCS_L_AFT_FU_TOTAL_HE_WT	V97U9813C	LBS	F	S	M	C	G4.102		QHE2
RCS_L_AFT_OX_TK_RESIDUAL_WT	V99U7585C	LBS	F	S	M	C	G4.102		QHE2
RCS_L_AFT_OX_TOTAL_HE_WT	V97U9812C	LBS	F	S	M	C	G4.102		QHE2
RCS_L_AFT_100_PCT_USABLE_FU	V97U9819C	LBS	F	S	M	C	G4.102		QHE2
RCS_L_AFT_100_PCT_USABLE_OX	V97U9818C	LBS	F	S	M	C	G4.102		QHE2
RCS_LEAK_DET_IND_LMT	V97U9807C	PCT	F	S	D	C	G4.102		QHE2
RCS_R_AFT_FU_TK_RESIDUAL_WT	V99U7588C	LBS	F	S	M	C	G4.102		QHE2
RCS_R_AFT_FU_TOTAL_HE_WT	V97U9815C	LBS	F	S	M	C	G4.102		QHE2
RCS_R_AFT_OX_TK_RESIDUAL_WT	V99U7587C	LBS	F	S	M	C	G4.102		QHE2
RCS_R_AFT_OX_TOTAL_HE_WT	V97U9814C	LBS	F	S	M	C	G4.102		QHE2
RCS_R_AFT_100_PCT_USABLE_FU	V97U9821C	LBS	F	S	M	C	G4.102		QHE2
RCS_R_AFT_100_PCT_USABLE_OX	V97U9820C	LBS	F	S	M	C	G4.102		QHE2

TABLE 4.6.3.4–3. RCS QUANTITY MONITOR (G4.102) K–LOADS

DBFN:0558

FSSR NAME DESCRIPTION	MSID	MC KLOAD VALUE	ENG UNIT	DT PR S PR FCTN	LAST CR EQTN MSID
NO REQUIREMENTS					

TABLE 4.6.3.4–4. RCS QUANTITY MONITOR (G4.102) CONSTANTS

DBFN:0558

FSSR NAME DESCRIPTION	MSID	MC	CONSTANT VALUE	ENG UNIT	DT	PR	S	PR FCTN	LAST CR
FUEL_DENSITY_COEFFICIENT_E1 FUEL DENSITY COEFFICIENT (E1)	V97U6159C		+4.1538 E-02	ND	F	D	C	G4.102	90374
FUEL_DENSITY_COEFFICIENT_E2 FUEL DENSITY COEFFICIENT (E2)	V97U6160C		+1.8679 E-05	ND	F	D	C	G4.102	90374
FUEL_DENSITY_COEFFICIENT_E3 FUEL DENSITY COEFFICIENT (E3)	V97U6161C		+1.4583 E-07	ND	F	D	C	G4.102	90374
FUEL_VAPOR_PRESSURE_F FUEL VAPOR PRESSURE (F)	V97U6162C		+8.0 E-01	PSIA	F	D	C	G4.102	90374
HE_COMPRESSIBILITY_COEFFICIENT_B1 HELIUM COMPRESSIBILITY COEFFICIENT (B1)	V97U6163C		+9.7544 E-03	ND	F	D	C	G4.102	90374
HE_COMPRESSIBILITY_COEFFICIENT_B2 HELIUM COMPRESSIBILITY COEFFICIENT (B2)	V97U6164C		+8.97 E-01	ND	F	D	C	G4.102	90374
HELIUM_GAS_CONSTANT_R HELIUM GAS CONSTANT (R)	V97U6165C		+4.635 E+03	PSIA*IN**3/LBM *DEG R	F	D	C	G4.102	90374
HELIUM_SYSTEM_COEFFICIENT_A HELIUM SYSTEM VOLUME COEFFICIENT (A)	V97U6166C		+1.4972 E-06	ND	F	D	C	G4.102	90374
HELIUM_WEIGHT_COEFFICIENT_G HELIUM WEIGHT COEFFICIENT (G)	V97U6167C		+1.008 E+00	ND	F	D	C	G4.102	90374
OXID_VAPOR_PRESS_COEFFICIENT_D1 OXID VAPOR PRESS COEFFICIENT (D1)	V97U6168C		+1.2082 E+01	ND	F	D	C	G4.102	90374
OXID_VAPOR_PRESS_COEFFICIENT_D2 OXID VAPOR PRESS COEFFICIENT (D2)	V97U6169C		+6.1110 E+03	ND	F	D	C	G4.102	90374
OXID_VAPOR_PRESS_COEFFICIENT_D3 OXID VAPOR PRESS COEFFICIENT (D3)	V97U6170C		+4.03 E+03	ND	F	D	C	G4.102	90374
OXIDIZER_DENSITY_COEFFICIENT_C1 OXIDIZER DENSITY COEFFICIENT (C1)	V97U6171C		+7.6027 E-02	ND	F	D	C	G4.102	90374
OXIDIZER_DENSITY_COEFFICIENT_C2 OXIDIZER DENSITY COEFFICIENT (C2)	V97U6172C		+4.5162 E-05	ND	F	D	C	G4.102	90374
OXIDIZER_DENSITY_COEFFICIENT_C3 OXIDIZER DENSITY COEFFICIENT (C3)	V97U6173C		+4.1667 E-07	ND	F	D	C	G4.102	90374

TABLE 4.6.3.4-4. RCS QUANTITY MONITOR (G4.102) CONSTANTS

DBFN:0558

FSSR NAME / DESCRIPTION	MSID	MC	CONSTANT VALUE		ENG UNIT	DT	PR	S	PR FCTN	LAST CR
RANKIN_TEMP_CONVERSION_COEFF_H RANKIN TEMP CONVERSION COEFF (H)	V97U6174C		+4.597	E+02	ND	F	D	C	G4.102	90374
RCS_FWD_FU_HE_LINE_VOLUME_VHLI RCS-FWD FU HE LINE VOLUME (VHLI)	V97U6175C		+1.37	E+01	IN**3	F	D	C	G4.102	90374
RCS_FWD_FU_SYSTEM_VOLUME_VP RCS-FWD FU SYSTEM VOLUME (VP)	V97U6176C		+3.18436	E+04	IN**3	F	D	C	G4.102	90374
RCS_FWD_HE_BOTTLE_VOLUME_VHAM RCS-FWD HE BOTTLE VOLUME (VHAM)	V97U6177C		+3.043	E+03	IN**3	F	D	C	G4.102	90374
RCS_FWD_OX_HE_LINE_VOLUME_VHLI RCS-FWD OX HE LINE VOLUME (VHLI)	V97U6178C		+1.37	E+01	IN**3	F	D	C	G4.102	90374
RCS_FWD_OX_SYSTEM_VOLUME_VP RCS-FWD OX SYSTEM VOLUME (VP)	V97U6179C		+3.1892	E+04	IN**3	F	D	C	G4.102	90374
RCS_FWD_TRAPPED_FU_LINE_VOL_VTP RCS-FWD TRAPPED FU LINE VOL (VTP)	V97U6180C		+6.775	E+02	IN**3	F	D	C	G4.102	90374
RCS_FWD_TRAPPED_OX_LINE_VOL_VTP RCS-FWD TRAPPED OX LINE VOL (VTP)	V97U6181C		+7.259	E+02	IN**3	F	D	C	G4.102	90374
RCS_L_AFT_FU_HE_LINE_VOLUME_VHLI RCS-L AFT FU HE LINE VOLUME (VHLI)	V97U6182C		+2.07	E+01	IN**3	F	D	C	G4.102	90374
RCS_L_AFT_FU_SYSTEM_VOLUME_VP RCS-L AFT FU SYSTEM VOLUME (VP)	V97U6183C		+3.23886	E+04	IN**3	F	D	C	G4.102	90374
RCS_L_AFT_HE_VOLUME_VHAM RCS-L AFT HE BOTTLE VOLUME (VHAM)	V97U6184C		+3.043	E+03	IN**3	F	D	C	G4.102	90374
RCS_L_AFT_OX_HE_LINE_VOLUME_VHLI RCS-L AFT OX HE LINE VOLUME (VHLI)	V97U6185C		+2.36	E+01	IN**3	F	D	C	G4.102	90374
RCS_L_AFT_OX_SYSTEM_VOLUME_VP RCS-L AFT OX SYSTEM VOLUME (VP)	V97U6186C		+3.23156	E+04	IN**3	F	D	C	G4.102	90374
RCS_L_AFT_TRAPPED_FU_LN_VOL_VTP RCS-L AFT TRAPPED FU LINE VOL (VTP)	V97U6187C		+1.2230	E+03	IN**3	F	D	C	G4.102	90374
RCS_L_AFT_TRAPPED_OX_LN_VOL_VTP RCS-L AFT TRAPPED OX LINE VOL (VTP)	V97U6188C		+1.1326	E+03	IN**3	F	D	C	G4.102	90374

TABLE 4.6.3.4–4. RCS QUANTITY MONITOR (G4.102) CONSTANTS

DBFN:0558

FSSR NAME DESCRIPTION	MSID	MC	CONSTANT VALUE		ENG UNIT	DT	PR	S	PR FCTN	LAST CR
RCS_R_AFT_FU_HE_LINE_VOLUME_VHLI RCS-R AFT FU HE LINE VOLUME (VHLI)	V97U6189C		+2.07	E+01	IN**3	F	D	C	G4.102	90374
RCS_R_AFT_FU_SYSTEM_VOLUME_VP RCS-R AFT FU SYSTEM VOLUME (VP)	V97U6190C		+3.23886	E+04	IN**3	F	D	C	G4.102	90374
RCS_R_AFT_HE_BOTTLE_VOLUME_VHAM RCS-R AFT HE BOTTLE VOLUME (VHAM)	V97U6191C		+3.043	E+03	IN**3	F	D	C	G4.102	90374
RCS_R_AFT_OX_HE_LINE_VOLUME_VHLI RCS-R AFT OX HE LINE VOLUME (VHLI)	V97U6192C		+2.36	E+01	IN**3	F	D	C	G4.102	90374
RCS_R_AFT_OX_SYSTEM_VOLUME_VP RCS-R AFT OX SYSTEM VOLUME (VP)	V97U6193C		+3.23156	E+04	IN**3	F	D	C	G4.102	90374
RCS_R_AFT_TRAPPED_FU_LN_VOL_VTP RCS-R AFT TRAPPED FU LINE VOL (VTP)	V97U6194C		+1.2230	E+03	IN**3	F	D	C	G4.102	90374
RCS_R_AFT_TRAPPED_OX_LN_VOL_VTP RCS-R AFT TRAPPED OX LINE VOL (VTP)	V97U6195C		+1.1326	E+03	IN**3	F	D	C	G4.102	90374

4.6.4 RCS Helium Regulator Failure Protection Sequence (4.189)

4.6.4.1 Introduction

The RCS helium regulator failure protection sequence will be used during OPS 1, 3, and 6 to protect the aft left and right RCS systems against helium regulator failures. If a regulator failure occurs, then the RCS/RCS crossfeed and reconfiguration sequence will be called. This sequence will operate automatically and can be overridden by manual reconfiguration of the panel 07 or 08 switches controlling the appropriate valves. The sequence is initiated by the MECO CONFIRMED event.

The RCS helium regulator failure protection sequence will detect and respond to regulator closed failures. If a failure occurs, then the sequence will auto crossfeed, and the crew will be alerted to the reconfiguration.

This sequence is designed for OPS 1, 3, and 6 only. Redundancy is built into the sequence so that reconfiguration will not occur with a single instrumentation failure, yet, following an instrumentation failure, the sequence will still protect against regulator failures.

4.6.4.2 Overview

RCS regulator failures are determined based on a comparison of selected transducer pressure readings to a low limit. Transducer failures or commfaults will be accounted for by elimination of the faulted measurement. If no instrumentation failures exist, then the sequence will use two pressure readings to check against the failure limits. If one transducer in a single system fails, the sequence will use only one transducer in order to determine a regulator failure. If an unfaulted measurement cannot be selected, the sequence will not work, and no crew annunciation will be made. The sequence will continue to look for a good pressure (i.e., unfaulted) in order to perform the intended function. If a measurement starts to work or a commfault is cleared, the sequence will start to check the pressure reading against the low limit. All of the good pressures must be out of limit for a regulator failure to be declared.

If a failed close regulator is detected, the sequence will call the RCS/RCS crossfeed and reconfiguration sequence to provide propellant from the good pod.

4.6.4.3 Detail Requirements

During ascent and entry, this sequence shall run at 1.04 Hz. Prior to the first execution of this sequence, the parameters used by this sequence shall be initialized as defined in Table 4.6.4.4–4. The values of the parameters in Table 4.6.4.4–4 shall be preserved across all OPS transitions and OPS mode recalls with the exception of a transition into OPS 2, on which the parameters should be reinitialized per Table 4.6.4.4–4.

Step 1. This step initializes the current RCS pod counter so that both aft RCS pods (aft left and aft right) will be processed by the sequence.

Set (1) below to zero and proceed to Step 2.

(1) CURRENT POD (INTERNAL)

Step 2. On each pass of the sequence, both aft RCS pods (aft left and aft right) are processed in a loop. This step defines which pod is being processed on the current pass of the loop.

Increment (a) below by one and proceed to monitor (a) below:

(a) CURRENT POD (INTERNAL)

If (a) is equal to 1, then proceed to Step 3 for the aft left RCS pod.

If (a) is equal to 2, then proceed to step 3 for the aft right RCS pod.

If (a) is greater than 2, i.e., both pods have been processed, then return to Step 1.

Step 3. This step initializes the current propellant type counter so that both propellant types (oxidizer and fuel) will be processed by the sequence for the current RCS pod.

Set (1) below to zero and proceed to Step 4.

(1) CURRENT PROPELLANT TYPE (INTERNAL)

Step 4. On each pass of the sequence for each RCS pod, both propellants (oxidizer and fuel) are processed in a loop. This step defines which propellant is being processed on the current pass of the loop.

Increment (a) below by one and proceed to monitor (a) below:

(a) CURRENT PROPELLANT TYPE (INTERNAL)

If (a) is equal to 1, then proceed to Subsequence A for the oxidizer leg.

If (a) is equal to 2, then proceed to Subsequence A for the fuel leg.

If (a) is greater than 2, i.e., both oxidizer and fuel legs have been processed, then return to Step 2.

Subsequence A

Subsequence A monitors the RCS pressures used by this sequence for commfaults and transducer failures, determines how many pressures are available for use by the sequence for the current RCS pod and propellant type, and performs regulator failure criteria limit checking on the good pressures available for use by the sequence.

All transducers are checked for commfaults and are checked against the transducer failure criteria (off–scale values) in Table 4.6.4.4–3. A dedicated signal conditioner (DSC) failure will look like a transducer failure because the reading will go to the low state (zero), which is below the offscale low failure limit.

This subsequence will monitor the tank pressure and the tank outlet pressure sequentially for the current RCS pod and propellant type. If a pressure is determined to be good, the subsequence compares the pressure against a low limit to determine if the regulator is failed closed. If the instrumentation is failed, then the regulator failure criteria limit check is bypassed and the pressure will not be used. A regulator can be considered failed closed only if all the good pressures available for use by the sequence for the current RCS pod and propellant type are at or below the low limit. A noise filter is included in the subsequence to preclude a data hit from declaring a regulator failure. If the low limit test is failed for two consecutive passes, the appropriate action is taken to respond to the failed close regulator.

Step A1. This step initializes the number of pressures out of limits and the number of good pressures to zero before transducer checks are performed for the current RCS pod and propellant type. It also initializes the current pressure indicator so that the tank pressure will be the first pressure checked.

Set (a), (b), and (c) below to zero and then proceed to Step A2.

(a)	NUMBER OF PRESSURES OUT OF LIMIT	(INTERNAL)
(b)	NUMBER OF GOOD PRESSURES	(INTERNAL)
(c)	CURRENT PRESSURE	(INTERNAL)

Step A2. On each pass of the subsequence, both tank pressure transducers (tank pressure and tank outlet pressure) for the current RCS pod and propellant type are processed in a loop. This step defines which pressure transducer is being processed on the current pass of the loop.

Increment (a) below by one and proceed to monitor (a) below:

(a)	CURRENT PRESSURE	(INTERNAL)

If (a) is equal to 1, then proceed to Step A3 to check the tank pressure.

If (a) is equal to 2, then proceed to Step A4 to check the tank outlet pressure.

If (a) is greater than 2, i.e., both pressures have been checked, then proceed to Step A7.

Step A3. This step selects the tank pressure and commfault signals for the current RCS pod and propellant type to be used to determine whether the tank pressure can be used by the sequence.

The following signals are monitored:

(a)	CURRENT POD	(INTERNAL)
(b)	CURRENT PROPELLANT TYPE	(INTERNAL)
(c)	LRCS OX TK P	V42P2115C
(d)	LRCS FU TK P	V42P2116C
(e)	RRCS OX TK P	V42P3115C
(f)	RRCS FU TK P	V42P3116C
(g)	FA1 INPUT PROM SEG 1, 2 STATUS (MFE)	V91X2841X
(h)	FA2 INPUT PROM SEG 1, 2 STATUS (MFE)	V91X2842X

If (a) is equal to 1 and (b) is equal to 1, i.e., left RCS oxidizer is now being processed, then set (1) below to (c), set (2) below to (g), and proceed to Step A5.

If (a) is equal to 1 and (b) is equal to 2, i.e., left RCS fuel is being processed, then set (1) below to (d), set (2) below to (g), and proceed to Step A5.

If (a) is equal to 2 and (b) is equal to 1, i.e., right RCS oxidizer is being processed, then set (1) below to (e), set (2) below to (h) and proceed to Step A5.

If (a) is equal to 2 and (b) is equal to 2, i.e., right RCS fuel is being processed, then set (1) below to (f), set (2) below to (h), and proceed to Step A5.

(1)	SELECTED PRESSURE	(INTERNAL)
(2)	SELECTED PRESSURE COMMFAULT	(INTERNAL)

Step A4. This step selects the tank outlet pressure and commfault signals for the current RCS pod and propellant type to be used to determine whether the tank outlet pressure can be used by the sequence.

The following signals are monitored:

(a)	CURRENT POD	(INTERNAL)
(b)	CURRENT PROPELLANT TYPE	(INTERNAL)
(c)	LRCS OX TK OUT P*	V42P2210C*
(d)	LRCS FU TK OUT P*	V42P2310C*
(e)	RRCS OX TK OUT P*	V42P3210C*
(f)	RRCS FU TK OUT P*	V42P3310P*
(g)	FA3 INPUT PROM SEG 1, 2 STATUS (MFE)	V91X2843X
(h)	FA4 INPUT PROM SEG 1, 2 STATUS (MFE)	V91X2844X

If (a) is equal to 1 and (b) is equal to 1, i.e., left RCS oxidizer is being processed, then set (1) below to (c), set (2) below to (g), and proceed to Step A5.

If (a) is equal to 1 and (b) is equal to 2, i.e., left RCS fuel is being processed, then set (1) below to (d), set (2) below to (g), and proceed to Step A5.

If (a) is equal to 2 and (b) is equal to 1, i.e., right RCS oxidizer is being processed, then set (1) below to (e), set (2) below to (h), and proceed to Step A5.

If (a) is equal to 2 and (b) is equal to 2, i.e., right RCS fuel is being processed, then set (1) below to (f), set (2) below to (h), and proceed to Step A5.

(1)	SELECTED PRESSURE	(INTERNAL)
(2)	SELECTED PRESSURE COMMFAULT	(INTERNAL)

Step A5. This step performs transducer and commfault checks on the selected pressure to determine whether the pressure can be used by the sequence. If the selected pressure is commfaulted or off scale high or off scale low, it will not be used. Otherwise, it will be used by the sequence.

The following signals are monitored:

(a)	SELECTED PRESSURE COMMFAULT	(INTERNAL)
(b)	SELECTED PRESSURE	(INTERNAL)

If (a) is true or (b) is greater than or equal to (1) below or (b) is less than or equal to (2) below, i.e., the selected pressure is bad, then return to Step A2.

If (a) is false and (b) is less than (1) below and (b) is greater than (2) below, i.e., the selected pressure is good, then increment (3) below by one and proceed to Step A6.

(1)	OFF_SCALE_HIGH_LIMIT	V99U9860C
(2)	OFF_SCALE_LOW_LIMIT	V99U9859C
(3)	NUMBER OF GOOD PRESSURES	(INTERNAL)

Step A6. This step performs the low–limit test on the selected pressure to determine whether the pressure is at or below the low limit. If the selected pressure is at or below the low limit, the number of pressures out of limit is incremented by one.

The following signals are monitored:

(a)	SELECTED PRESSURE	(INTERNAL)
(b)	RCS_TANK_LOW_PRESS_LIMIT	V99U9862C

If (a) is less than or equal to (b), i.e., the selected pressure is equal to or below the low limit, then increment (1) below by one and return to Step A2.

If (a) is greater than (b), i.e., the selected pressure is above the low limit, then return to Step A2.

(1) NUMBER OF PRESSURES OUT OF LIMIT (INTERNAL)

Step A7. This step determines whether or not a regulator may be failed closed based on the number of pressures out of limit. If all of the pressures available for use by the sequence are at or below the low limit, then the regulator may be failed closed and noise filtering must be performed to determine if a real failure exists.

The following signals are monitored:

(a) NUMBER OF GOOD PRESSURES (INTERNAL)
(b) NUMBER OF PRESSURES OUT OF LIMIT (INTERNAL)

If (a) is equal to zero, i.e., there are no good pressures available, then return to Step 4.

If (a) is not equal to zero and (a) is equal to (b), i.e., each good pressure is at or below the low limit, then proceed to Step A9 to perform noise filtering.

If (a) is not equal to zero and (a) is not equal to (b), i.e., at least one good pressure is above the low limit, then proceed to Step A8.

Step A8. This step reinitializes the failed–close first pass flag and the low noise filter count for the current RCS pod and propellant type, since the low–limit test has been passed without detecting a failed close regulator. It also resets the RCS low–pressure alert for the current RCS pod and propellant type to allow for annunciation of subsequent regulator–closed failures.

The following signals are monitored:

(a) CURRENT POD (INTERNAL)
(b) CURRENT PROPELLANT TYPE (INTERNAL)

If (a) is equal to 1 and (b) is equal to 1, i.e., left RCS oxidizer is being processed, then set (1) below true and (5) below false, set (9) below to zero, and return to Step 4.

If (a) is equal to 1 and (b) is equal to 2, i.e., left RCS fuel is being processed, then set (2) below true and (6) below false, set (10) below to zero, and return to Step 4.

If (a) is equal to 2 and (b) is equal to 1, i.e., right RCS oxidizer is being processed, then set (3) below true and (7) below false, set (11) below to zero, and return to Step 4.

If (a) is equal to 2 and (b) is equal to 2, i.e., right RCS fuel is being processed, then set (4) below true and (8) below false, set (12) below to zero, and return to Step 4.

(1) LRCS OX FIRST PASS FAILED CLOSE FLAG (INTERNAL)
(2) LRCS FU FIRST PASS FAILED CLOSE FLAG (INTERNAL)
(3) RRCS OX FIRST PASS FAILED CLOSE FLAG (INTERNAL)
(4) RRCS FU FIRST PASS FAILED CLOSE FLAG (INTERNAL)

(5)	LRCS OX LOW PRESS ALERT	V90X5794X
(6)	LRCS FU LOW PRESS ALERT	V90X5795X
(7)	RRCS OX LOW PRESS ALERT	V90X5797X
(8)	RRCS FU LOW PRESS ALERT	V90X5798X
(9)	LRCS OX LOW NOISE FILTER COUNT	(INTERNAL)
(10)	LRCS FU LOW NOISE FILTER COUNT	(INTERNAL)
(11)	RRCS OX LOW NOISE FILTER COUNT	(INTERNAL)
(12)	RRCS FU LOW NOISE FILTER COUNT	(INTERNAL)

Step A9. This step performs noise filtering for the low–limit test for the current RCS pod and propellant by incrementing the appropriate noise filter counter and then monitoring it. If the pressure has met or exceeded the low limit for two consecutive passes of the sequence, the regulator is considered failed closed and action is taken to perform an auto–crossfeed from the other RCS pod and to annunciate an alarm to the crew.

The following signals are monitored:

(a)	CURRENT POD	(INTERNAL)
(b)	CURRENT PROPELLANT TYPE	(INTERNAL)

If (a) is equal to 1 and (b) is equal to 1, i.e., the left RCS oxidizer pressure has met or exceeded the low limit for at least one pass, then increment (c) below by one and proceed to monitor (c) below.

If (a) is equal to 1 and (b) is equal to 2, i.e., the left RCS fuel pressure has met or exceeded the low limit for at least one pass, then increment (d) below by one and proceed to monitor (d) below.

If (a) is equal to 2 and (b) is equal to 1, i.e., the right RCS oxidizer pressure has met or exceeded the low limit for at least one pass, then increment (e) below by one and proceed to monitor (e) below.

If (a) is equal to 2 and (b) is equal to 2, i.e., the right RCS fuel pressure has met or exceeded the low limit for at least one pass, then increment (f) below by one and proceed to monitor (f) below.

(c)	LRCS OX LOW NOISE FILTER COUNT	(INTERNAL)
(d)	LRCS FU LOW NOISE FILTER COUNT	(INTERNAL)
(e)	RRCS OX LOW NOISE FILTER COUNT	(INTERNAL)
(f)	RRCS FU LOW NOISE FILTER COUNT	(INTERNAL)

If (a) is equal to 1, (b) is equal to 1, and (c) is greater than or equal to 2, i.e., the left RCS oxidizer pressure has met or exceeded the low limit for two consecutive passes, then proceed to Subsequence B to react to the failed close regulator. If (c) is less than 2, then return to Step 4.

If (a) is equal to 1, (b) is equal to 2, and (d) is greater than or equal to 2, i.e., the left RCS fuel pressure has met or exceeded the low limit for two consecutive passes, then proceed to Subsequence B to react to the failed close regulator. If (d) is less than 2, then return to Step 4.

If (a) is equal to 2, (b) is equal to 1, and (e) is greater than or equal to 2, i.e., the right RCS oxidizer pressure has met or exceeded the low limit for two consecutive passes, then proceed to Subsequence B to react to the failed close regulator. If (e) is less than 2, then return to Step 4.

If (a) is equal to 2, (b) is equal to 2, and (f) is greater than or equal to 2, i.e., the right RCS fuel pressure has met or exceeded the low limit for two consecutive passes, then proceed to Subsequence B to react to the failed close regulator. If (f) is less than 2, then return to Step 4.

Subsequence B

Subsequence B will be executed if a regulator is discovered to be failed close. This subsequence monitors for the failed close first pass flag for the current RCS pod and propellant type and for the OMS/RCS interconnect command and the OMS/RCS complete flags. If the appropriate failed–close first pass flag is true and an OMS/RCS interconnect is not in effect or being configured, then this subsequence will initiate an automatic crossfeed to the remaining good aft RCS system and annunciate a crew alert. The subsequence also sets the failed close first pass flag for the current RCS pod and propellant type false.

Step B1. This step determines whether action needs to be taken for a regulator failed close. If this is the first pass through this subsequence for the current RCS pod and propellant type, then the appropriate action will be taken based on the current RCS pod.

The following signals are monitored:

(a)	CURRENT POD	(INTERNAL)
(b)	CURRENT PROPELLANT TYPE	(INTERNAL)
(c)	LRCS OX FIRST PASS FAILED CLOSE FLAG	(INTERNAL)
(d)	LRCS FU FIRST PASS FAILED CLOSE FLAG	(INTERNAL)
(e)	RRCS OX FIRST PASS FAILED CLOSE FLAG	(INTERNAL)
(f)	RRCS FU FIRST PASS FAILED CLOSE FLAG	(INTERNAL)

If (a) is equal to 1 and (b) is equal to 1, i.e., left RCS oxidizer is being processed, and (c) is true, i.e., it is first pass for a left RCS oxidizer regulator failed close, then proceed to Step B2. If (c) is false, i.e., it is not first pass for a left RCS oxidizer regulator failed close, then return to Step 4.

If (a) is equal to 1 and (b) is equal to 2, i.e., left RCS fuel is being processed, and (d) is true, i.e., it is first pass for a left RCS fuel regulator failed close, then proceed to Step B2. If (d) is false, i.e., it is not first pass for a left RCS fuel regulator failed close, then return to Step 4.

If (a) is equal to 2 and (b) is equal to 1, i.e., right RCS oxidizer is being processed, and (e) is true, i.e., it is first pass for a right RCS oxidizer regulator failed close, then proceed to Step B2. If (e) is false, i.e., it is not first pass for a right RCS oxidizer regulator failed close, then return to Step 4.

If (a) is equal to 2 and (b) is equal to 2, i.e., right RCS fuel is being processed, and (f) is true, i.e., it is first pass for a right RCS fuel regulator failed close, then proceed to Step B2. If (f) is false, i.e., it is not first pass for a right RCS fuel regulator failed close, then return to Step 4.

Step B2. This step initiates an automatic crossfeed to the remaining good aft RCS system after an aft RCS regulator–closed failure has been detected, provided there is no OMS/RCS interconnect in effect or being configured.

The following signals are monitored:

(a)	OMS/RCS INTERCONNECT COMMAND	V90X8312X
(b)	OMS/RCS INTERCONNECT COMPLETE FLAG	V90X8282X
(c)	CURRENT POD	(INTERNAL)

If (a) or (b) is true, i.e., an OMS/RCS interconnect is in effect or is being configured, then proceed to Step B4.

If (a) and (b) are false, i.e., there is no OMS/RCS interconnect in effect or being configured, and (c) is equal to 1, i.e., the failure is in the left RCS pod, then set (1) below false and (2) below true to initiate an RCS/RCS crossfeed from the right RCS system and proceed to Step B3.

If (a) and (b) are false, i.e., there is no OMS/RCS interconnect in effect or being configured, and (c) is equal to 2, i.e., the failure is in the right RCS pod, then set (1) below true and (2) below false to initiate an RCS/RCS crossfeed from the left RCS system and proceed to Step B3.

(1) FEED FROM LEFT RCS	V93X5199X
(2) FEED FROM RIGHT RCS	V93X5200X

Step B3. This step performs additional actions unique to an aft RCS regulator–closed failure. An alert is issued to the crew that the current RCS pod has been reconfigured.

Monitor the following signals:

(a)	CURRENT POD	(INTERNAL)
(b)	CURRENT PROPELLANT TYPE	(INTERNAL)

If (a) is equal to 1 and (b) is equal to 1, i.e., left RCS oxidizer is being processed, then set (1) below true and proceed to Step B4.

If (a) is equal to 1 and (b) is equal to 2, i.e., left RCS fuel is being processed, then set (2) below true and proceed to Step B4.

If (a) is equal to 2 and (b) is equal to 1, i.e., right RCS oxidizer is being processed, then set (3) below true and proceed to Step B4.

If (a) is equal to 2 and (b) is equal to 2, i.e., right RCS fuel is being processed, then set (4) below true and proceed to Step B4.

(1)	LRCS OX LOW PRESS ALERT	V90X5794X
(2)	LRCS FU LOW PRESS ALERT	V90X5795X
(3)	RRCS OX LOW PRESS ALERT	V90X5797X
(4)	RRCS FU LOW PRESS ALERT	V90X5798X

Step B4. This step resets the failed–close first pass flag for the current RCS pod and propellant type and zeroes the noise filter counter for the current RCS pod and propellant type.

Monitor the following signals:

(a)	CURRENT POD	(INTERNAL)
(b)	CURRENT PROPELLANT TYPE	(INTERNAL)

If (a) is equal to 1 and (b) is equal to 1, i.e., left RCS oxidizer is being processed, then set (1) below false, set (5) below to zero, and return to Step 4.

If (a) is equal to 1 and (b) is equal to 2, i.e., left RCS fuel is being processed, then set (2) below false, set (6) below to zero, and return to Step 4.

If (a) is equal to 2 and (b) is equal to 1, i.e., right RCS oxidizer is being processed, then set (3) below false, set (7) below to zero, and return to Step 4.

If (a) is equal to 2 and (b) is equal to 2, i.e., right RCS fuel is being processed, then set (4) below false, set (8) below to zero, and return to Step 4.

(1)	LRCS OX FIRST PASS FAILED CLOSE FLAG	(INTERNAL)
(2)	LRCS FU FIRST PASS FAILED CLOSE FLAG	(INTERNAL)
(3)	RRCS OX FIRST PASS FAILED CLOSE FLAG	(INTERNAL)
(4)	RRCS FU FIRST PASS FAILED CLOSE FLAG	(INTERNAL)
(5)	LRCS OX LOW NOISE FILTER COUNT	(INTERNAL)
(6)	LRCS FU LOW NOISE FILTER COUNT	(INTERNAL)
(7)	RRCS OX LOW NOISE FILTER COUNT	(INTERNAL)
(8)	RRCS FU LOW NOISE FILTER COUNT	(INTERNAL)

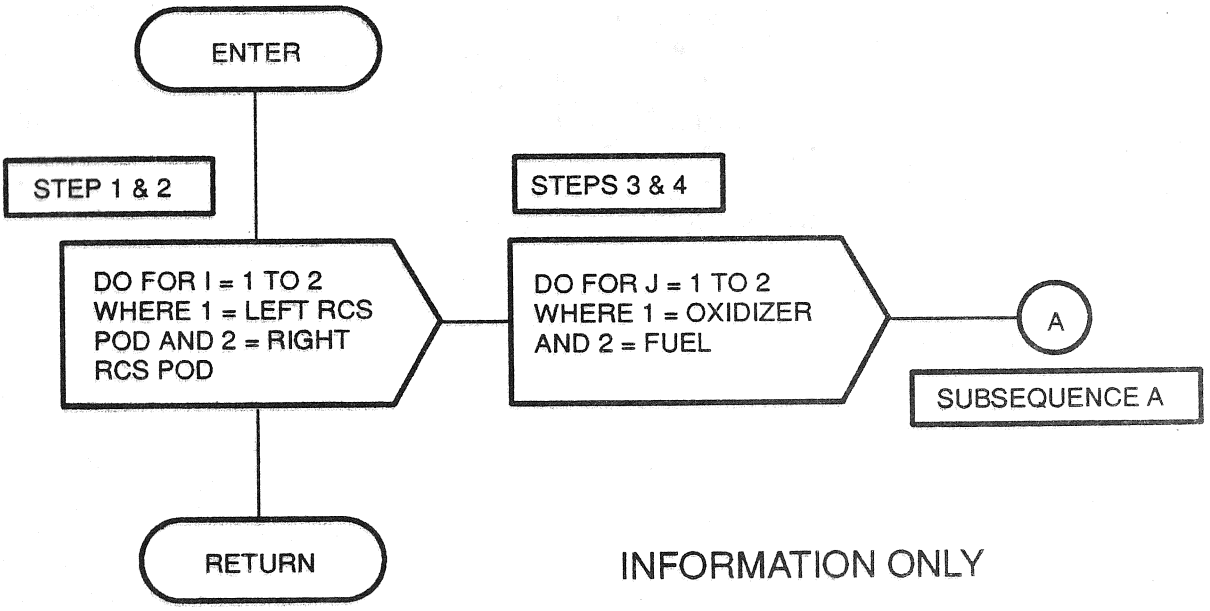

Figure 4.189. RCS He Regulator Failure Protection Sequence (Sheet 1 of 3)

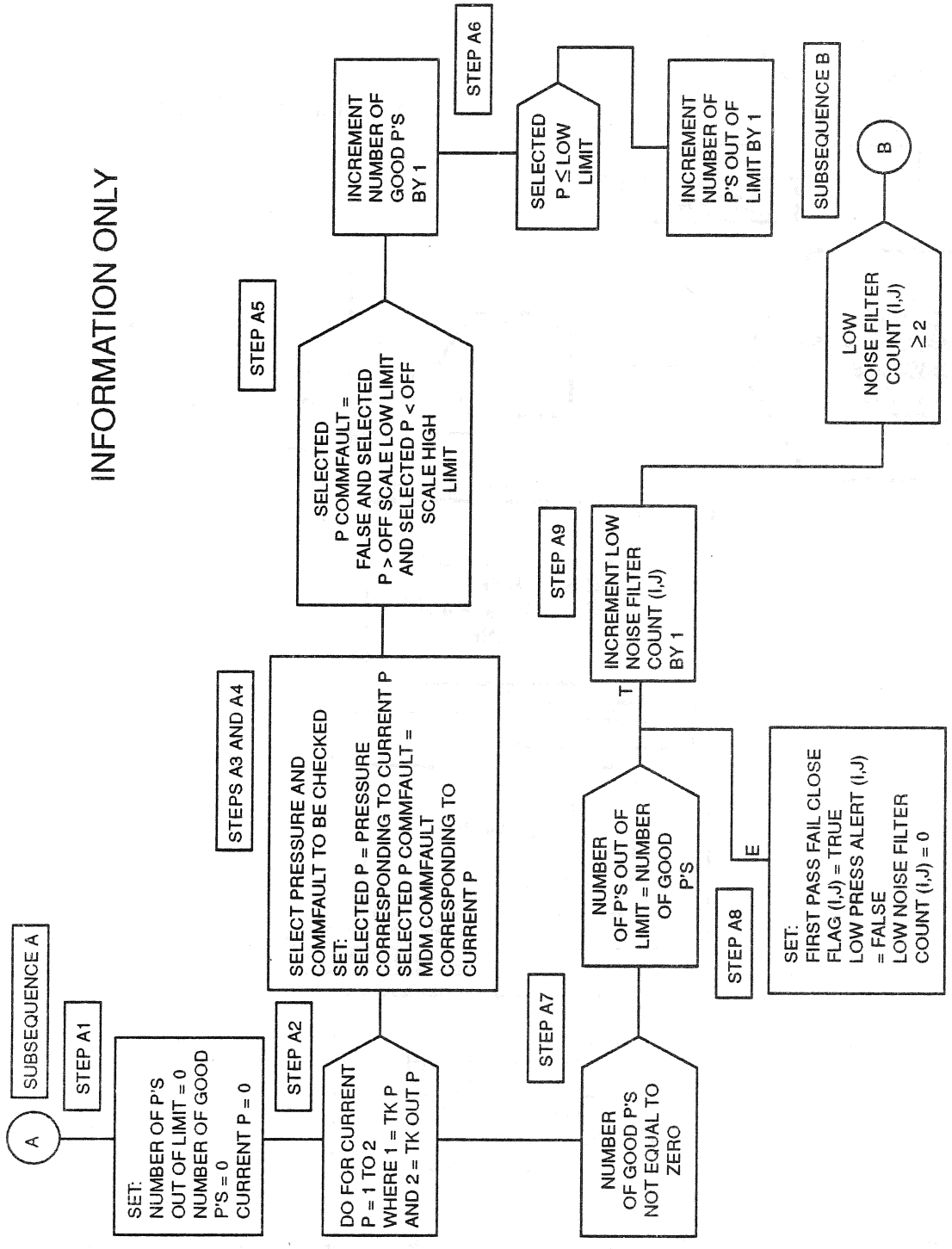

Figure 4.189. RCS He Regulator Failure Protection Sequence (Sheet 2 of 3)

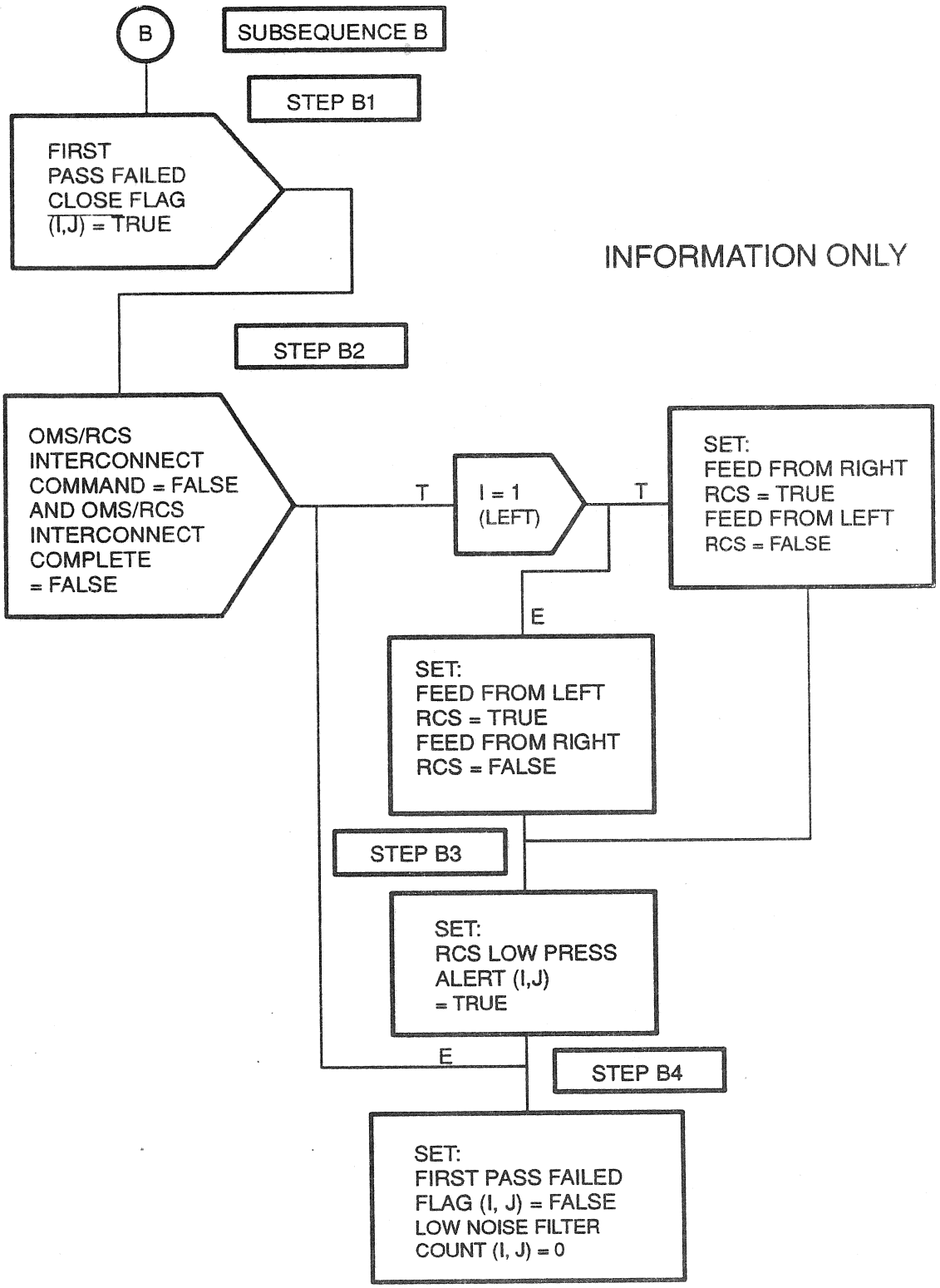

Figure 4.189. RCS Helium Regulator Failure Protection Sequence (Sheet 3 of 3)

TABLE 4.6.4.4–1. RCS HELIUM REGULATOR FAILURE PROTECTION SEQUENCER (G4.189) INPUT/OUTPUT FUNCTIONAL PARAMETERS

DBFN: D3B027-F PN: VP707100049P00L INPUT FUNCTIONAL PARAMETERS FOR RCS REG SEQ

FSSR NAME	M/S ID	NOMENCLATURE	SOURCE	UNITS	DATA TYPE	PREC	LAST CRS
	V42P2115C	RCS L AFT OX TANK ULLAGE PRESS	DSC OL1	PSIA	AMU		79964F
	V42P2116C	RCS L AFT FU TANK ULLAGE PRESS	DSC OL2	PSIA	AMU		79964F
	V42P2210C*	RCS L AFT OX TANK OUT PRESS	DSC OL1	PSIA	AMU		79964F
	V42P2310C*	RCS L AFT FU TANK OUT PRESS	DSC OL2	PSIA	AMU		79964F
	V42P3115C	RCS R AFT OX TANK ULLAGE PRESS	DSC OR1	PSIA	AMU		79964F
	V42P3116C	RCS R AFT FU TANK ULLAGE PRESS	DSC OR2	PSIA	AMU		79964F
	V42P3210C*	RCS R AFT OX TANK OUT PRESS	DSC OR1	PSIA	AMU		79964F
	V42P3310C*	RCS R AFT FU TANK OUT PRESS	DSC OR2	PSIA	AMU		79964F
	V90X8282X	OMS TO RCS INTERCONNECT COMP FLAG	ABT OMS/RCS CONN		BD		90114B
							89561A
	V90X8312X	OMS TO RCS INTERCONNECT CMD	ABT CNTL SEQ		BD		89599C
	V90X8637XA	RTLS ABORT DECLARED	MSC				89991E
							89599C
	V91X2841X	FA1 INPUT PROM SEG 1,2 STATUS(MFE)	FCOS				89846B
	V91X2842X	FA2 INPUT PROM SEG 1,2 STATUS(MFE)	FCOS				90114B
	V91X2843X	FA3 INPUT PROM SEG 1,2 STATUS(MFE)	FCOS				90114B
	V91X2844X	FA4 INPUT PROM SEG 1,2 STATUS(MFE)	FCOS		BD		89598A

TABLE 4.6.4.4–1. RCS HELIUM REGULATOR FAILURE PROTECTION SEQUENCER (G4.189) INPUT/OUTPUT FUNCTIONAL PARAMETERS

DBFN: D3B027-F PN: VP707100049P00L OUTPUT FUNCTIONAL PARAMETERS FROM RCS REG SEQ

FSSR NAME	M/S ID	NOMENCLATURE	DESTINATION	UNITS	DATA TYPE	PREC	LAST CRS
	V90X5794X	LRCS OX LOW PRESS ALERT	GAX		BD		79964F
	V90X5795X	LRCS FU LOW PRESS ALERT	GAX		BD		79964F
	V90X5797X	RRCS OX LOW PRESS ALERT	GAX		BD		79964F
	V90X5798X	RRCS FU LOW PRESS ALERT	GAX		BD		79964F
	V93X5199XA	FEED FROM LEFT RCS	RCS/RCS XFEED,MSC,TLM		BD		79964F
	V93X5200XA	FEED FROM RIGHT RCS	RCS/RCS XFEED,MSC,TLM		BD		79964F

TABLE 4.6.4.4–2. RCS HELIUM REGULATOR FAILURE PROTECTION SEQUENCER (G4.189) I–LOADS

DBFN:0484

FSSR NAME	MSID	ENG UNIT	DT	PR	D	S	PR FCTN	CAT
RCS_TANK_LOW_PRESS_LIMIT	V99U9862C	PSIA	F	S	D	P	G4.189	REG0

TABLE 4.6.4.4–3. RCS HELIUM REGULATOR FAILURE PROTECTION SEQUENCER (G4.189) K–LOADS

DBFN:0558

FSSR NAME DESCRIPTION	MSID	MC KLOAD VALUE	ENG UNIT	DT	PR	S	PR	FCTN	LAST CR EQTN MSID
OFF_SCALE_HIGH_LIMIT	V99U9860C	+3.50 E+02	PSIA	F	S	P	G4.189		89246A
OFF_SCALE_LOW_LIMIT	V99U9859C	+1.50 E+02	PSIA	F	S	P	G4.189		79964F

TABLE 4.6.4.4–4. RCS HELIUM REGULATOR FAILURE PROTECTION SEQUENCER (G4.189) CONSTANTS

DBFN:0553

FSSR NAME DESCRIPTION	MSID	MC	CONSTANT VALUE	ENG UNIT	DT	PR	S	LAST CR PR FCTN
NO REQUIREMENTS								

THIS PAGE INTENTIONALLY LEFT BLANK

4.7.2 Orbit OMS/RCS Conn (4.212)

4.7.2.1 Introduction

For missions requiring RCS propellant in excess of the available volume in the RCS tanks, a manual capability is available with an automatic OMS tank repressurization function, which is initiated when left or right OMS tank feed is selected.

4.7.2.2 Overview

After the crew has manually configured the system valves for the required propellant transfer, a keyboard entry is used to start the automatic OMS tank repressurization and the OMS/RCS quantity gaging sequences. On entering a right or left OMS feed, required valve commands are terminated to establish a known MDM condition. This allows return of all switches to the GPC position and the OMS/RCS gaging is enabled. OMS ullage pressure is maintained by periodic cycling of helium isolation and vapor isolation valves based on pressure. If any of the helium or vapor isolation valves fail to close when commanded, a crew alert is provided. When no longer required as determined by return to normal item entry, this sequence and the OMS/RCS gaging is terminated. The OMS HE Valve Miscompare Signals are reset during each pass. Setting of the Miscompare to a false state will remove the crew alert in subsequent passes if the cause of the miscompare is removed.

4.7.2.3 Detailed Requirements

Step 1. This step initiates and controls the OMS tank repressurization function and resets the OMS HE Valve Miscompare Signal.

During each pass the following signals are reset:

LT OMS HE/VAPOR ISO VLV MISCOM	V90X8274X
RT OMS HE/VAPOR ISO VLV MISCOM	V90X8275X

The following signals are monitored:

(a)	OMS PRESS ENA L	V93X5100X
(b)	OMS PRESS ENA R	V93X5101X
(c)	INTERCONNECT INITIATION FLAG	(INTERNAL)

If (a) or (b) is true and (c) is true, set (1) and (2) below true and (c) above false and proceed to Subsequence B.

If (a) or (b) is true, (c) false, and (1) below true, proceed to Subsequence B.

If (a) or (b) is true, (c) false, and (1) below false, proceed to Step 2.

If (a), (b), and (c) are all false, set (c) above true, (2) below false, terminate (3) through (10) below, and return to Step 1.

(1)	PRE–SEQ CMD TERM FLAG	(INTERNAL)
(2)	OMS/RCS GAGING FLAG	V90X8446X
(3)	OMS L POD HE ISLN VLV A OP	V43K4180X
(4)	OMS L POD HE ISLN VLV B OP	V43K4181X

(5)	OMS L POD VAPOR ISLN VLV 1 OP	V43K4182X
(6)	OMS L POD VAPOR ISLN VLV 2 OP	V43K4183X
(7)	OMS R POD HE ISLN VLV A OP	V43K5180X
(8)	OMS R POD HE ISLN VLV B OP	V43K5181X
(9)	OMS R POD VAPOR ISLN VLV 1 OP	V43K5182X
(10)	OMS R POD VAPOR ISLN VLV 2 OP	V43K5183X

Step 2. This step monitors for commfault status. The following signals are monitored:

(a)	FA 1 INPUT PROM SEG 1, 2 STATUS (MFE)	V91X2841X
(b)	FA 2 INPUT PROM SEG 1, 2 STATUS (MFE)	V91X2842X
(c)	REPRESS ACTIVE FLAG	(INTERNAL)
(d)	REPRESS_TIME_DELAY	V97U9823C

If (a) and (b) are both false, proceed to Step A1.

If (a) or (b) is true and (c) is true, then return to Step 1 until (d) has expired. Then, terminate the commands listed below, set (c) above false, and return to Step 1.

If (a) or (b) is true and (c) is false, then return to Step 1.

(1)	OMS L POD HE ISLN VLV A OP	V43K4180X
(2)	OMS L POD HE ISLN VLV B OP	V43K4181X
(3)	OMS L POD VAPOR ISLN VLV 1 OP	V43K4182X
(4)	OMS L POD VAPOR ISLN VLV 2 OP	V43K4183X
(5)	OMS R POD HE ISLN VLV A OP	V43K5180X
(6)	OMS R POD HE ISLN VLV B OP	V43K5181X
(7)	OMS R POD VAPOR ISLN VLV 1 OP	V43K5182X
(8)	OMS R POD VAPOR ISLN VLV 2 OP	V43K5183X

Subsequence A

Step A1. This step issues the commands necessary for LT/RT OMS tank pressurization.

The following signals are monitored:

(a)	OMS L POD OXDZR TANK ULLAGE PRESS	V43P4221C
(b)	OMS L POD FUEL TANK ULLAGE PRESS	V43P4321C
(c)	OMS R POD OXDZR TANK ULLAGE PRESS	V43P5221C
(d)	OMS R POD FUEL TANK ULLAGE PRESS	V43P5321C
(e)	REPRESS ACTIVE FLAG	(INTERNAL)
(f)	OMS_ULLAGE_PRESS_LOWER_LMT	V97U9822C
(g)	PRESS_TIME_DELAY	V97U9823C
(h)	OMS PRESS ENA L	V93X5100X
(i)	OMS PRESS ENA R	V93X5101X

If (a), (b), (c), and (d) are all $\geq$ (f) and (e) is false, return to Step 1.

If (e) is false and (a) or (b) is < (f) and (h) is true, issue (1) through (4), set (9) true, and return to Step 1.

If (e) is false and if (c) or (d) is < (f), and (i) is true, issue (5) through (8), set (9) true, and return to Step 1.

If (e) is true and (g) seconds have elapsed since (e) was first set true, terminate outputs (1) through (8) below and return to Step 1 until at least 1.5 seconds have elapsed since termination of outputs (1) through (8) in Step A1, then proceed to Step A2.

(1)	OMS L POD HE ISLN VLV A OP	V43K4180K
(2)	OMS L POD HE ISLN VLV B OP	V43K4181X
(3)	OMS L POD VAPOR ISLN VLV 1 OP	V43K4182X
(4)	OMS L POD VAPOR ISLN VLV 2 OP	V43K4183X
(5)	OMS R POD HE ISLN VLV A OP	V43K5180X
(6)	OMS R POD HE ISLN VLV B OP	V43K5181X
(7)	OMS R POD VAPOR ISLN VLV 1 OP	V43K5182X
(8)	OMS R POD VAPOR ISLN VLV 2 OP	V43K5183X
(9)	REPRESS ACTIVE FLAG	(INTERNAL)

Step A2. This step monitors the state of the OMS/HE/VAPOR ISLN VALVES and checks for comm-faults. If any of the following signals are true, return to Step 1.

(1)	FA 1 INPUT PROM SEG 3, 10 STATUS (HFE)	V91X2845X
(2)	FA 2 INPUT PROM SEG 3, 10 STATUS (HFE)	V91X2846X
(3)	FA 3 INPUT PROM SEG 3, 10 STATUS (HFE)	V91X2847X
(4)	FA 4 INPUT PROM SEG 3, 10 STATUS (HFE)	V91X2848X

Otherwise, monitor the following signals:

(a)	OMS L POD HE ISLN VLV A POSN OP	V43X4152X
(b)	OMS L POD HE ISLN VLV B POSN OP	V43X4154X
(c)	OMS L POD VAPOR ISLN VLV 1 POSN OP	V43X4156X
(d)	OMS L POD VAPOR ISLN VLV 2 POSN OP	V43X4158X
(e)	OMS R POD HE ISLN VLV A POSN OP	V43X5152X
(f)	OMS R POD HE ISLN VLV B POSN OP	V43X5154X
(g)	OMS R POD VAPOR ISLN VLV 1 POSN OP	V43X5156X
(h)	OMS R POD VAPOR ISLN VLV 2 POSN OP	V43X5158X
(i)	OMS PRESS ENA L	V93X5100X
(j)	OMS PRESS ENA R	V93X5101X

If (i) is true, and any signal (a) through (d) is true, then issue the following output to generate CRT message line and Class 3 Alert Light and Tone and then return to Step 1.

LT OMS HE/VAPOR ISO VLV MISCOM V90X8274X

If (j) is true, and any signal (e) through (h) is true, then issue the following output to generate CRT message line and Class 3 Alert Light and Tone and then return to Step 1.

RT OMS HE/VAPOR ISO VLV MISCOM V90X8275X

If (a) through (h) are false, set (1) below false and return to Step 1.

(1) REPRESS ACTIVE FLAG (INTERNAL)

Subsequence B

Step B1. This step terminates the following commands to establish a known signal condition.

OMS L POD XFD VLVS A CMD 1 CL	V43K4283X
OMS L POD OXDZR XFD VLV A CMD 2 CL	V43K4285X
OMS L POD FUEL XFD VLV A CMD 2 CL	V43K4385X
OMS L POD XFD VLVS B CMD 1 CL	V43K4287X
OMS L POD OXDZR XFD VLV B CMD 2 CL	V43K4289X
OMS L POD FUEL XFD VLV B CMD 2 CL	V43K4389X
OMS R POD XFD VLVS A CMD 1 CL	V43K5283X
OMS R POD OXDZR XFD VLV A CMD 2 CL	V43K5285X
OMS R POD FUEL XFD VLV A CMD 2 CL	V43K5385X
OMS R POD XFD VLVS B CMD 1 CL	V43K5287X
OMS R POD OXDZR XFD VLV B CMD 2 CL	V43K5289X
OMS R POD FUEL XFD VLV B CMD 2 CL	V43K5389X
RCS L AFT XFD VLV 1/2 GPC CL A	V42K2416X
RCS L AFT OX XFD VLV 1/2 GPC CL B	V42K2418X
RCS L AFT FU XFD VLV 1/2 GPC CL B	V42K2422X
RCS L AFT XFD V 3/4/5 GPC CL A	V42K2428X
RCS L AFT OX XFD V 3/4/5 GPC CL B	V42K2430X
RCS L AFT FU XFD V 3/4/5 GPC CL B	V42K2434X
RCS R AFT XFD VLV 1/2 GPC CL A	V42K3416X
RCS R AFT OX XFD VLV 1/2 GPC CL B	V42K3418X
RCS R AFT FU XFD VLV 1/2 GPC CL B	V42K3422X
RCS R AFT XFD V 3/4/5 GPC CL A	V42K3428X
RCS R AFT OX XFD V 3/4/5 GPC CL B	V42K3430X
RCS R AFT FU XFD V 3/4/5 GPC CL B	V42K3434X
RCS L AFT TK ISLN V 1/2 GPC CL A	V42K2353X
RCS L AFT OX TK ISLN V 1/2 GPC CL B	V42K2354X
RCS L AFT FU TK ISLN V 1/2 GPC CL B	V42K2355X
RCS L AFT OX TK ISLN V 3/4/5 A GPC CL	V42K2357X
RCS L AFT FU TK ISLN V 3/4/5 A GPC CL	V42K2358X
RCS L AFT OX TK ISLN V 3/4/5 B GPC CL	V42K2360X
RCS L AFT FU TK ISLN V 3/4/5 B GPC CL	V42K2361X
RCS R AFT TK ISLN V 1/2 GPC CL A	V42K3353X
RCS R AFT OX TK ISLN V 1/2 GPC CL B	V42K3354X
RCS R AFT FU TK ISLN V 1/2 GPC CL B	V42K3355X
RCS R AFT OX TK ISLN V–3/4/5 A GPC CL	V42K3357X
RCS R AFT FU TK ISLN V–3/4/5 A GPC CL	V42K3358X
RCS R AFT OX TK ISLN V–3/4/5 B GPC CL	V42K3360X

RCS R AFT FU TK ISLN V–3/4/5 B GPC CL	V42K3361X
OMS L POD XFD VLVS A CMD 1 OP	V43K4282X
OMS L POD OXDZR XFD VLV A CMD 2 OP	V43K4284X
OMS L POD FUEL XFD VLV A CMD 2 OP	V43K4384X
OMS L POD XFD VLVS B CMD 1 OP	V43K4286X
OMS L POD OXDZR XFD VLV B CMD 2 OP	V43K4288X
OMS L POD FUEL XFD VLV B CMD 2 OP	V43K4388X
OMS R POD XFD VLVS A CMD 1 OP	V43K5282X
OMS R POD OXDZR XFD VLV A CMD 2 OP	V43K5284X
OMS R POD FUEL XFD VLV A CMD 2 OP	V43K5384X
OMS R POD XFD VLVS B CMD 1 OP	V43K5286X
OMS R POD OXDZR XFD VLV B CMD 2 OP	V43K5288X
OMS R POD FUEL XFD VLV B CMD 2 OP	V43K5388X
RCS L AFT XFD VLV 1/2 GPC OP A	V42K2402X
RCS L AFT OX XFD VLV 1/2 GPC OP B	V42K2403X
RCS L AFT FU XFD VLV 1/2 GPC OP B	V42K2404X
RCS L AFT XFD VLV 3/4/5 GPC OP A	V42K2408X
RCS L AFT OX XFD V 3/4/5 GPC OP B	V42K2409X
RCS L AFT FU XFD V 3/4/5 GPC OP B	V42K2410X
RCS R AFT XFD VLV 1/2 GPC OP A	V42K3402X
RCS R AFT OX XFD VLV 1/2 GPC OP B	V42K3403X
RCS R AFT FU XFD VLV 1/2 GPC OP B	V42K3404X
RCS R AFT XFD VLV 3/4/5 GPC OP A	V42K3408X
RCS R AFT OX XFD V 3/4/5 GPC OP B	V43K3409X
RCS R AFT FU XFD V 3/4/5 GPC OP B	V42K3410X
RCS L AFT TK ISLN V 1/2 GPC OP A	V42K2342X
RCS L AFT OX TK ISLN V 1/2 GPC OP B	V42K2343X
RCS L AFT FU TK ISLN V 1/2 GPC OP B	V42K2344X
RCS L AFT OX TK ISLN V 3/4/5 A GPC OP	V42K2346X
RCS L AFT FU TK ISLN V 3/4/5 A GPC OP	V42K2347X
RCS L AFT OX TK ISLN V 3/4/5 B GPC OP	V42K2349X
RCS L AFT FU TK ISLN V 3/4/5 B GPC OP	V42K2350X
RCS R AFT TK ISLN V 1/2 GPC OP A	V42K3342X
RCS R AFT OX TK ISLN V 1/2 GPC OP B	V42K3343X
RCS R AFT FU TK ISLN V 1/2 GPC OP B	V42K3344X
RCS R AFT OX TK ISLN V 3/4/5 A GPC OP	V42K3346X
RCS R AFT FU TK ISLN V 3/4/5 A GPC OP	V42K3347X
RCS R AFT OX TK ISLN V 3/4/5 B GPC OP	V42K3349X
RCS R AFT FU TK ISLN V 3/4/5 B GPC OP	V42K3350X
OMS L POD TK VLVS A CMD 1 OP	V43K4270X
OMS L POD TK VLVS A CMD 1 CL	V43K4271X
OMS L POD OXDZR ISLN V A CMD 2 OP	V43K4272X

OMS L POD OXDZR ISLN V A CMD 2 CL	V43K4273X
OMS L POD TK VLVS B CMD 1 OP	V43K4274X
OMS L POD TK VLVS B CMD 1 CL	V43K4275X
OMS L POD OXDZER ISLN V B CMD 2 OP	V43K4276X
OMS L POD OXDZR ISLN V B CMD 2 CL	V43K4277X
OMS L POD FUEL ISLN VLV A CMD 2 OP	V43K4372X
OMS L POD FUEL ISLN VLV A CMD 2 CL	V43K4373X
OMS L POD FUEL ISLN VLV B CMD 2 OP	V43K4376X
OMS L POD FUEL ISLN VLV B CMD 2 CL	V43K4377X
OMS R POD TK VLVS A CMD 1 OP	V43K5270X
OMS R POD TK VLVS A CMD 1 CL	V43K5271X
OMS R POD OXDZR ISLN V A CMD 2 OP	V43K5272X
OMS R POD OXDZR ISLN V A CMD 2 CL	V43K5273X
OMS R POD TK VLVS B CMD 1 OP	V43K5274X
OMS R POD TK VLVS B CMD 1 CL	V43K5275X
OMS R POD OXDZR ISLN V B CMD 2 OP	V43K5276X
OMS R POD OXDZR ISLN V B CMD 2 CL	V43K5277X
OMS R POD FUEL ISLN VLV A CMD 2 OP	V43K5372X
OMS R POD FUEL ISLN VLV A CMD 2 CL	V43K5373X
OMS R POD FUEL ISLN VLV B CMD 2 OP	V43K5376X
OMS R POD FUEL ISLN VLV B CMD 2 CL	V43K5377X

When all commands above have been terminated, the following signal is set false and the sequence returns to Step 1.

(1) PRE–SEQ CMD TERM FLAG (INTERNAL)

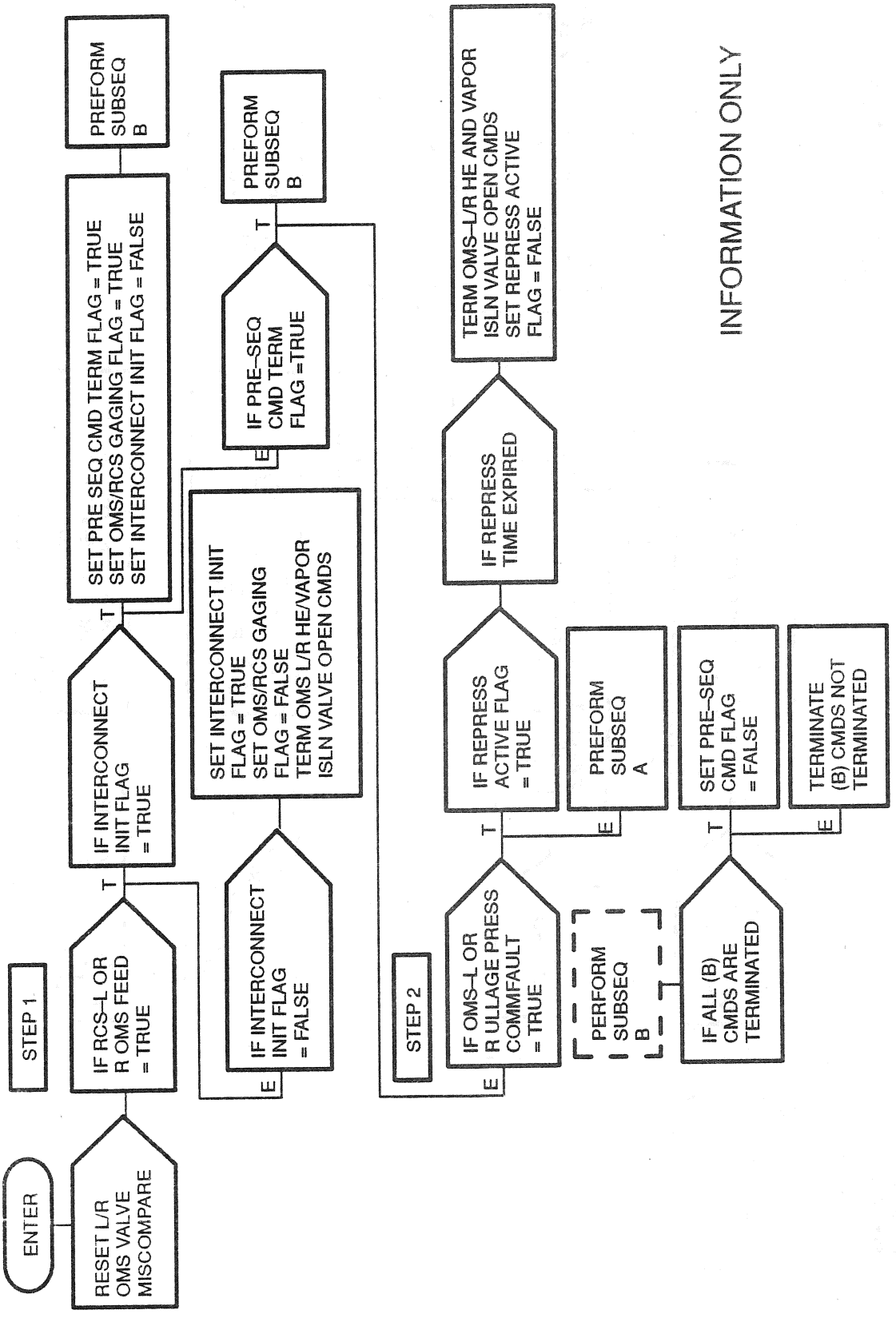

Figure 4. 212. Orbit OMS/RCS Connect (Sheet 1 of 2)

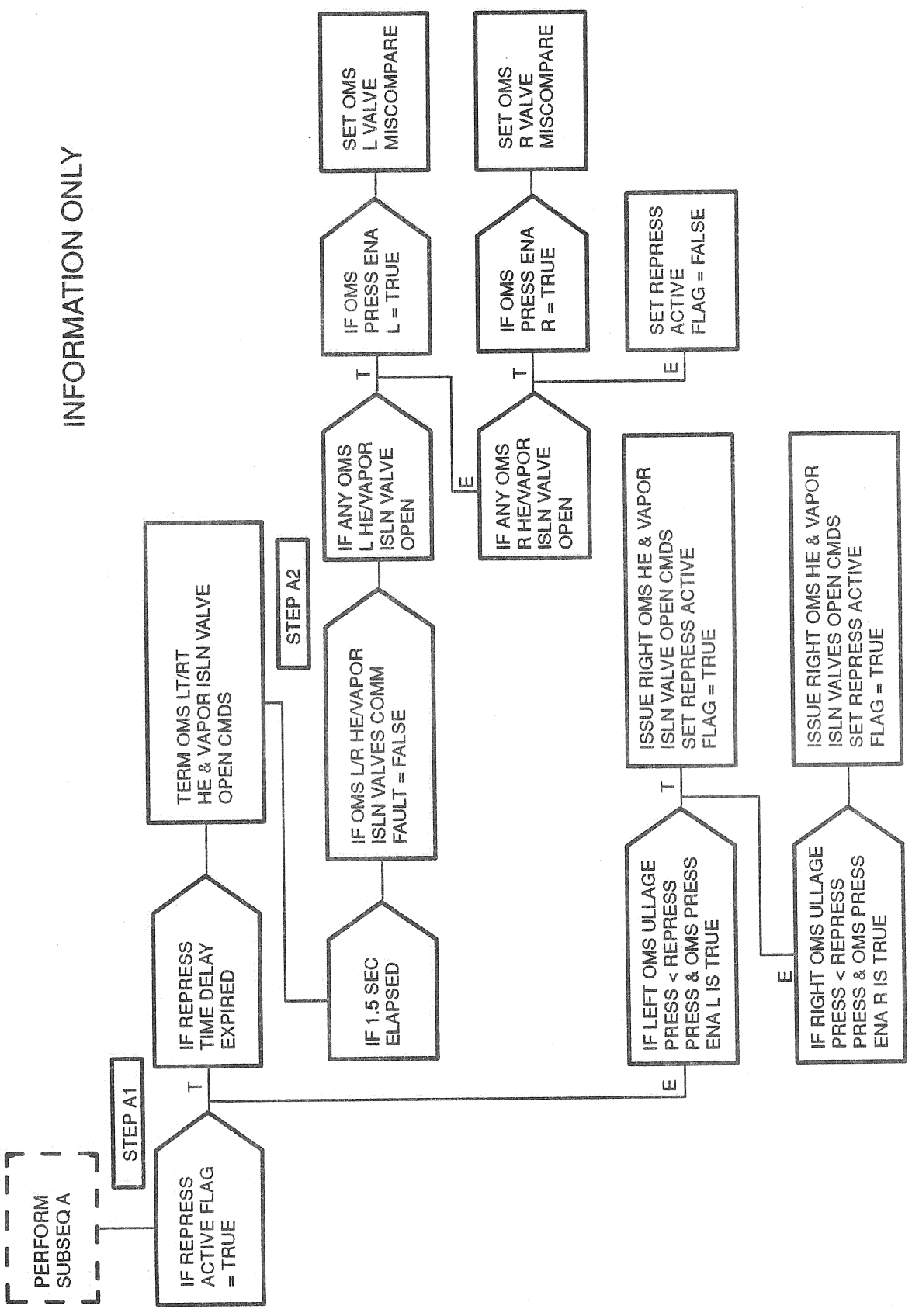

Figure 4.212. Orbit OMS/RCS Connect Subsequence A (Sheet 2 of 2)

TABLE 4.7.2.4-1. ORBIT OMS/RCS INTERCONNECT (G4.212) INPUT/OUTPUT FUNCTIONAL PARAMETERS

DBFN: D3B027-F PN: VP707100049P00L INPUT FUNCTIONAL PARAMETERS FOR ORB OMS/RCS CONN

FSSR NAME	M/S ID	NOMENCLATURE	SOURCE	UNITS	DATA TYPE	PREC	LAST CRS
	V43X4152X	OMS-L POD HE ISLN VLV A POSN OP	HDWR		BD		
	V43X4154X	OMS-L POD HE ISLN VLV B POSN OP	HDWR		BD		
	V43X4156X	OMS-L POD VAPOR ISLN VLV 1 POSN OP	HDWR		BD		
	V43X4158X	OMS-L POD VAPOR ISLN VLV 2 POSN OP	HDWR		BD		
	V43P4221C	OMS-L POD OXDZR TANK ULLAGE PRESS	DSC OL2		AMU		
	V43P4321C	OMS L POD FUEL TANK ULLAGE PRESS	DSC OL1		AMU		
	V43X5152X	OMS-R POD HE ISLN VLV A POSN OP	HDWR		BD		
	V43X5154X	OMS-R POD HE ISLN VLV B POSN OP	HDWR		BD		
	V43X5156X	OMS-R POD VAPOR ISLN VLV 1 POSN OP	HDWR		BD		
	V43X5158X	OMS-R POD VAPOR ISLN VLV 2 POSN OP	HDWR		BD		
	V43P5221C	OMS-R POD OXDZR TANK ULLAGE PRESS	DSC OR2		AMU		
	V43P5321C	OMS R POD FU TANK ULLAGE PRESS	DSC OR1		AMU		
	V91X2841X	FA1 INPUT PROM SEG 1,2 STATUS(MFE)	FCOS				89846B
	V91X2842X	FA2 INPUT PROM SEG 1,2 STATUS(MFE)	FCOS				90114B
	V91X2845X	FA1 INPUT PROM SEG3,10 STATUS(HFE)	FCOS				89991E 89598A
	V91X2846X	FA2 INPUT PROM SEG3,10 STATUS(HFE)	FCOS				89991E 89598A
	V91X2847X	FA3 INPUT PROM SEG3,10 STATUS(HFE)	FCOS				89991E 89598A
	V91X2848X	FA4 INPUT PROM SEG3,10 STATUS(HFE)	FCOS				89598A 59126H
	V93X5100X	OMS PRESS ENA L	RM RCS DISP		BD		
	V93X5101X	OMS PRESS ENA R	RM RCS DISP		BD		

TABLE 4.7.2.4–1. ORBIT OMS/RCS INTERCONNECT (G4.212) INPUT/OUTPUT FUNCTIONAL PARAMETERS

DBFN: D3B027-F PN: VP707100049P00L OUTPUT FUNCTIONAL PARAMETERS FROM ORB OMS/RCS CONN

FSSR NAME	M/S ID	NOMENCLATURE	DESTINATION	UNITS	DATA TYPE	PREC	LAST CRS
	V42K2342XA	RCS-L AFT TK ISLN V-1/2 GPC OP A	MCA A3				
	V42K2343XA	RCS-L AFT OX TK ISLN V1/2 GPC OP B	MCA A3				
	V42K2344XA	RCS-L AFT FU TK ISLN V1/2 GPC OP B	MCA A3				
	V42K2346XB	RCS-L AFT OX TK ISLN V3/4/5AGPC OP	MCA A1				
	V42K2347XB	RCS-L AFT FU TK ISLN V3/4/5AGPC OP	MCA A1				
	V42K2349XB	RCS-L AFT OX TK ISLN V3/4/5BGPC OP	MCA A2				
	V42K2350XB	RCS-L AFT FU TK ISLN V3/4/5BGPC OP	MCA A2				
	V42K2353XB	RCS-L AFT TK ISLN V-1/2 GPC CL A	MCA A3				
	V42K2354XB	RCS-L AFT OX TK ISLN V1/2 GPC CL B	MCA A3				
	V42K2355XB	RCS-L AFT FU TK ISLN V1/2 GPC CL B	MCA A3				
	V42K2357XB	RCS-L AFT OX TK ISLN V3/4/5AGPC CL	MCA A1				
	V42K2358XB	RCS-L AFT FU TK ISLN V3/4/5AGPC CL	MCA A1				
	V42K2360XB	RCS-L AFT OX TK ISLN V3/4/5BGPC CL	MCA A2				
	V42K2361XB	RCS-L AFT FU TK ISLN V3/4/5BGPC CL	MCA A2				
	V42K2402XC	RCS-L AFT XFD VLV 1/2 GPC OP A	MCA A3				
	V42K2403XC	RCS-L AFT OX XFD VLV-1/2 GPC OP B	MCA A3				
	V42K2404XC	RCS-L AFT FU XFD VLV 1/2 GPC OP B	MCA A3				
	V42K2408XC	RCS-L AFT XFD VLV 3/4/5 GPC OP A	MCA A2				
	V42K2409XC	RCS-L AFT OX XFD V-3/4/5 GPC OP B	MCA A2				
	V42K2410XC	RCS-L AFT FU XFD V-3/4/5 GPC OP B	MCA A2				
	V42K2416XC	RCS-L AFT XFD VLV-1/2 GPC CL A	MCA A3				
	V42K2418XC	RCS-L AFT OX XFD VLV-1/2 GPC CL B	MCA A3				
	V42K2422XC	RCS-L AFT FU XFD VLV-1/2 GPC CL B	MCA A3				
	V42K2428XC	RCS-L AFT XFD V-3/4/5 GPC CL A	MCA A2				
	V42K2430XC	RCS-L AFT OX XFD V-3/4/5 GPC CL B	MCA A2				
	V42K2434XC	RCS-L AFT FU XFD V-3/4/5 GPC CL B	MCA A2				
	V42K3342XB	RCS-R AFT TK ISLN V-1/2 GPC OP A	MCA A3				
	V42K3343XB	RCS-R AFT OX TK ISLN V-1/2 GPC OPB	MCA A3				
	V42K3344XB	RCS-R AFT FU TK ISLN V-1/2 GPC OPB	MCA A3				
	V42K3346XB	RCS-R AFT OX TK ISLN V3/4/5AGPC OP	MCA A1				
	V42K3347XB	RCS-R AFT FU TK ISLN V3/4/5AGPC OP	MCA A1				
	V42K3349XB	RCS-R AFT OX TK ISLN V3/4/5BGPC OP	MCA A2				
	V42K3350XB	RCS-R AFT FU TK ISLN V3/4/5BGPC OP	MCA A2				
	V42K3353XB	RCS-R AFT TK ISLN V-1/2 GPC CL A	MCA A3				
	V42K3354XB	RCS-R AFT OX TK ISLN V-1/2 GPC CLB	MCA A3				
	V42K3355XB	RCS-R AFT FU TK ISLN V-1/2 GPC CLB	MCA A3				
	V42K3357XB	RCS-R AFT OX TK ISLN V3/4/5AGPC CL	MCA A1				
	V42K3358XB	RCS-R AFT FU TK ISLN V3/4/5AGPC CL	MCA A1				
	V42K3360XB	RCS-R AFT OX TK ISLN V3/4/5BGPC CL	MCA A2				
	V42K3361XB	RCS-R AFT FU TK ISLN V3/4/5BGPC CL	MCA A2				
	V42K3402XC	RCS R AFT XFD VLV-1/2 GPC OPEN A	MCA A3				
	V42K3403XC	RCS R AFT OX XFD V-1/2 GPC OPEN B	MCA A3				
	V42K3404XC	RCS R AFT FU XFD V-1/2 GPC OPEN B	MCA A3				

TABLE 4.7.2.4–1. ORBIT OMS/RCS INTERCONNECT (G4.212) INPUT/OUTPUT FUNCTIONAL PARAMETERS

DBFN: D3B027-F PN: VP707100049P00L OUTPUT FUNCTIONAL PARAMETERS FROM ORB OMS/RCS CONN

FSSR NAME	M/S ID	NOMENCLATURE	DESTINATION	UNITS	DATA TYPE	PREC	LAST CRS
	V42K3408XC	RCS R AFT XFD VLV-3/4/5 GPC OPEN A	MCA A1				
	V42K3409XC	RCS R AFT OX XFD V-3/4/5 GPC OP B	MCA A1				
	V42K3410XC	RCS R AFT FU XFD V-3/4/5 GPC OP B	MCA A1				
	V42K3416XC	RCS R AFT XFD VLV-1/2 GPC CLOSE A	MCA A3				
	V42K3418XC	RCS R AFT OX XFD V-1/2 GPC CLOSE B	MCA A3				
	V42K3422XC	RCS R AFT FU XFD V-1/2 GPC CLOSE B	MCA A3				
	V42K3428XC	RCS R AFT XFD VLV-3/4/5 GPC CL A	MCA A1				
	V42K3430XC	RCS-R AFT OX XFD V-3/4/5 GPC CL B	MCA A1				
	V42K3434XC	RCS-R AFT FU XFD V-3/4/5 GPC CL B	MCA A1				
	V43K4180XB	OMS-L POD HE ISLN VLV A OP	HDWR				
	V43K4181XB	OMS-L POD HE ISLN VLV B OP	HDWR				
	V43K4182XB	OMS-L POD VAPOR ISLN VLV 1 OP	PCA A1				
	V43K4183XB	OMS-L POD VAPOR ISLN VLV 2 OP	PCA A3				89598A
	V43K4270X	OMS-L POD TK VLVS A CMD 1 OP	MCA A1		BD		
	V43K4271X	OMS-L POD TK VLVS A CMD 1 CL	MCA A1		BD		
	V43K4272X	OMS-L POD OXDZR ISLN V A CMD 2 OP	MCA A1		BD		
	V43K4273X	OMS-L POD OXDZR ISLN V A CMD 2 CL	MCA A1		BD		
	V43K4274X	OMS-L POD TK VLVS B CMD 1 OP	MCA A3		BD		
	V43K4275X	OMS-L POD TK VLVS B CMD 1 CL	MCA A3		BD		
	V43K4276X	OMS-L POD OXDZR ISLN V B CMD 2 OP	MCA A3		BD		
	V43K4277X	OMS-L POD OXDZR ISLN V B CMD 2 CL	MCA A3		BD		
	V43K4282XC	OMS-L POD XFD VLVS A CMD 1 OP	MCA A1				
	V43K4283XC	OMS-L POD XFD VLVS A CMD 1 CL	MCA A1				
	V43K4284XC	OMS-L POD OXDZR XFD VLV A CMD 2 OP	MCA A1				
	V43K4285XC	OMS-L POD OXDZR XFD VLV A CMD 2 CL	MCA A1				
	V43K4286XC	OMS-L POD XFD VLVS B CMD 1 OP	MCA A2				
	V43K4287XC	OMS-L POD XFD VLVS B CMD 1 CL	MCA A2				
	V43K4288XC	OMS-L POD OXDZR XFD VLV B CMD 2 OP	MCA A2				
	V43K4289XC	OMS-L POD OXDZR XFD VLV B CMD 2 CL	MCA A2				
	V43K4372X	OMS-L POD FUEL ISLN VLV A CMD 2 OP	MCA A1		BD		
	V43K4373X	OMS-L POD FUEL ISLN VLV A CMD 2 CL	MCA A1		BD		
	V43K4376X	OMS-L POD FUEL ISLN VLV B CMD 2 OP	MCA A3		BD		
	V43K4377X	OMS-L POD FUEL ISLN VLV B CMD 2 CL	MCA A3		BD		
	V43K4384XC	OMS-L POD FUEL XFD VLV A CMD 2 OP	MCA A1				
	V43K4385XC	OMS-L POD FUEL XFD VLV A CMD 2 CL	MCA A1				
	V43K4388XC	OMS-L POD FUEL XFD VLV B CMD 2 OP	MCA A2				
	V43K4389XC	OMS-L POD FUEL XFD VLV B CMD 2 CL	MCA A2				
	V43K5180XB	OMS-R POD HE ISLN VLV A OP	HDWR				
	V43K5181XB	OMS-R POD HE ISLN VLV B OP	HDWR				
	V43K5182XB	OMS-R POD VAPOR ISLN VLV 1 OP	PCA A1				
	V43K5183XB	OMS-R POD VAPOR ISLN VLV 2 OP	PCA A3				
	V43K5270X	OMS-R POD TK VLVS A CMD 1 OP	MCA A1		BD		
	V43K5271X	OMS-R POD TK VLVS A CMD 1 CL	MCA A1		BD		

TABLE 4.7.2.4–1. ORBIT OMS/RCS INTERCONNECT (G4.212) INPUT/OUTPUT FUNCTIONAL PARAMETERS

DBFN: D3B027-F PN: VP707100049P00L OUTPUT FUNCTIONAL PARAMETERS FROM ORB OMS/RCS CONN

FSSR NAME	M/S ID	NOMENCLATURE	DESTINATION	UNITS	DATA TYPE	PREC	LAST CRS
	V43K5272X	OMS-R POD OXDZR ISLN V A CMD 2 OP	MCA A1		BD		
	V43K5273X	OMS-R POD OXDZR ISLN V A CMD 2 CL	MCA A1		BD		
	V43K5274X	OMS-R POD TK VLVS B CMD 1 OP	MCA A3		BD		
	V43K5275X	OMS-R POD TK VLVS B CMD 1 CL	MCA A3		BD		
	V43K5276X	OMS-R POD OXDZR ISLN V B CMD 2 OP	MCA A3		BD		
	V43K5277X	OMS-R POD OXDZR ISLN V B CMD 2 CL	MCA A3		BD		
	V43K5282XC	OMS-R POD XFD VLVS A CMD 1 OP	MCA A3				
	V43K5283XC	OMS-R POD XFD VLVS A CMD 1 CL	MCA A3				
	V43K5284XC	OMS-R POD OXDZR XFD VLV A CMD 2 OP	MCA A3				
	V43K5285XC	OMS-R POD OXDZR XFD VLV A CMD 2 CL	MCA A3				
	V43K5286XC	OMS-R POD XFD VLVS B CMD 1 OP	MCA A2				
	V43K5287XC	OMS-R POD XFD VLVS B CMD 1 CL	MCA A2				
	V43K5288XC	OMS-R POD OXDZR XFD VLV B CMD 2 OP	MCA A2				
	V43K5289XC	OMS-R POD OXDZR XFD VLV B CMD 2 CL	MCA A2				
	V43K5372X	OMS-R POD FUEL ISLN VLV A CMD 2 OP	MCA A1		BD		
	V43K5373X	OMS-R POD FUEL ISLN VLV A CMD 2 CL	MCA A1		BD		
	V43K5376X	OMS-R POD FUEL ISLN VLV B CMD 2 OP	MCA A3		BD		
	V43K5377X	OMS-R POD FUEL ISLN VLV B CMD 2 CL	MCA A3		BD		
	V43K5384XC	OMS-R POD FUEL XFD VLV A CMD 2 OP	MCA A3				
	V43K5385XC	OMS-R POD FUEL XFD VLV A CMD 2 CL	MCA A3				
	V43K5388XC	OMS-R POD FUEL XFD VLV B CMD 2 OP	MCA A2				
	V43K5389XC	OMS-R POD FUEL XFD VLV B CMD 2 CL	MCA A2				
	V90X8274X	LT OMS HE/VAPOR ISO VLV MISCOM	GAX				
	V90X8275X	RT OMS HE/VAPOR ISO VLV MISCOM	GAX				
	V90X8446X	OMS/RCS GAUGING FLAG	ORB RCS CMD SOP,OMS/RCS GAUGING				

TABLE 4.7.2.4–2. ORBIT OMS/RCS INTERCONNECT (G4.212) I–LOADS

DBFN:0484

FSSR NAME	MSID	ENG UNIT	DT	PR	D	S	PR	FCTN	CAT
OMS_ULLAGE_PRESS_LOWER_LMT	V97U9822C	LBS/IN**2	I	S	D	P	G4.212		ZFD0
PRESS_TIME_DELAY	V97U9823C	SEC	F	D	D	P	G4.212		ZFD0

TABLE 4.7.2.4–3. ORBIT OMS/RCS INTERCONNECT (G4.212) K–LOADS

DBFN:0558

FSSR NAME DESCRIPTION	MSID	MC KLOAD VALUE	ENG UNIT	DT PR S PR FCTN	LAST CR EQTN MSID
NO REQUIREMENTS					

TABLE 4.7.2.4–4. ORBIT OMS/RCS INTERCONNECT (G4.212) CONSTANTS

DBFN:0558

FSSR NAME DESCRIPTION	MSID	MC	CONSTANT VALUE	ENG UNIT	DT	PR	S PR FCTN	LAST CR
NO REQUIREMENTS								

THIS PAGE INTENTIONALLY LEFT BLANK

4.7.6 OMS Fire Sequence (4.182)

4.7.6.1 Introduction

The OMS engine firing sequence is scheduled by MSC when an OMS burn is to be performed. This sequence provides the controls to command the engines ON/OFF and to perform the engine purge function.

4.7.6.2 Overview

The sequence will command OMS engines ON when scheduled by MSC. When directed, the OMS engine ON commands are terminated and a purge is performed at the conclusion of the burn. If an OMS engine is manually shutdown by putting the ARM/PRESS switch to OFF, then that engine is not purged. If an OMS engine fails prematurely, the failed engine ON commands are terminated by the crew putting the ARM/PRESS switch to OFF, and the engine is not purged if the switch is not returned to the ARM/PRESS position. For an engine failure, the helium isolation valve commands are not terminated since propellants are required from the failed engine pod.

The capability exists to select individual engines to be included in the planned firing.

4.7.6.3 Detailed Requirements

OMS engine firing sequence is scheduled and descheduled by moding, sequence, and control (MSC).

Step 1. This step determines if an OMS engine firing is to be terminated.

The following signal is monitored:

(a) OMS CUT–OFF COMMAND V90X8318X

If (a) is true, proceed to Step 6.

If (a) is false, terminate (1) through (4) below and proceed to Step 2.

(1)	OMS L PURGE VLV 1 OP	V43K4556X
(2)	OMS L PURGE VLV 2 OP	V43K4557X
(3)	OMS R PURGE VLV 1 OP	V43K5556X
(4)	OMS R PURGE VLV 2 OP	V43K5557X

Step 2. This step determines which engines are to be commanded ON for this firing.

The following signal is monitored:

(a) PRIME PROP SYS INDICATOR FLAG V94J3791C

If not first pass, proceed to Step 3.

If (a) has a value of one on the first pass, of the signals listed below, issue (1) through (16), set (17) and (18) true, and proceed to Step 3.

If (a) has a value of two on first pass, of the signals listed below, issue (1) through (4) and (9) through (12), set (17) true, and proceed to Step 3.

If (a) has a value of three on first pass, of the signals listed below, issue (5) through (8) and (13) through (16), set (18) true, and proceed to Step 3.

(1)	OMS L POD HE ISLN VLV A OP	V43K4180X
(2)	OMS L POD HE ISLN VLV B OP	V43K4181X
(3)	OMS L POD VAPOR ISLN VLV 1 OP	V43K4182X
(4)	OMS L POD VAPOR ISLN VLV 2 OP	V43K4183X
(5)	OMS R POD HE ISLN VLV A OP	V43K5180X
(6)	OMS R POD HE ISLN VLV B OP	V43K5181X
(7)	OMS R POD VAPOR ISLN VLV 1 OP	V43K5182X
(8)	OMS R POD VAPOR ISLN VLV 2 OP	V43K5183X
(9)	OMS L ENG CONTROL VLV 1 COIL 1 OP	V43K4583X
(10)	OMS L ENG CONTROL VLV 1 COIL 2 OP	V43K4584X
(11)	OMS L ENG CONTROL VLV 2 COIL 1 OP	V43K4585X
(12)	OMS L ENG CONTROL VLV 2 COIL 2 OP	V43K4586X
(13)	OMS R ENG CONTROL VLV 1 COIL 1 OP	V43K5583X
(14)	OMS R ENG CONTROL VLV 1 COIL 2 OP	V43K5584X
(15)	OMS R ENG CONTROL VLV 2 COIL 1 OP	V43K5585X
(16)	OMS R ENG CONTROL VLV 2 COIL 2 OP	V43K5586X
(17)	OMS L ON CMD IND	V90X8271X
(18)	OMS R ON CMD IND	V90X8272X

Step 3. This step monitors for an OMS engine failure.

The following signals are monitored:

(a)	LEFT OMS ENGINE SHUTDOWN FLAG	V90X7670X
(b)	RIGHT OMS ENGINE SHUTDOWN FLAG	V90X7671X

If (a) and (b) are false, return to Step 1.

If (a) is true and (b) is false, proceed to Step 4.

If (a) is false and (b) is true, proceed to Step 5.

If (a) and (b) are both true, set (1) below true and return to Step 1.

(1)	OMS CUTOFF COMMAND	V90X8318X

Step 4. This step terminates left OMS engine ON commands when a left OMS engine has failed.

The following signal is monitored:

(a)	PRIME PROP SYS INDICATOR FLAG	V94J3791C

If (a) has a value of two on the first pass, of the signals listed below, terminate (1) through (4), set (5) false, issue (6), and return to Step 1. If not first pass, return to Step 1.

If (a) has a value of one on the first pass, of the signals listed below, terminate (1) through (4), set (5) false, and return to Step 1. If not first pass, return to Step 1.

(1)	OMS L ENG CONTROL VLV 1 COIL 1 OP	V43K4583X
(2)	OMS L ENG CONTROL VLV 1 COIL 2 OP	V43K4584X
(3)	OMS L ENG CONTROL VLV 2 COIL 1 OP	V43K4585X
(4)	OMS L ENG CONTROL VLV 2 COIL 2 OP	V43K4586X
(5)	OMS L ON CMD IND	V90X8271X
(6)	OMS CUT–OFF COMMAND	V90X8318X

Step 5. This step terminates right OMS engine ON commands when a right OMS engine has failed.

The following signal is monitored:

(a)	PRIME PROP SYS INDICATOR FLAG	V94J3791C

If (a) has a value of three on the first pass, of the signals listed below, terminate (1) through (4), set (5) false, issue (6), and return to Step 1. If not first pass, return to Step 1.

If (a) has a value of one on the first pass, of the signals listed below, terminate (1) through (4), set (5) false, and return to Step 1. If not first pass, return to Step 1.

(1)	OMS R ENG CONTROL VLV 1 COIL 1 OP	V43K5583K
(2)	OMS R ENG CONTROL VLV 1 COIL 2 OP	V43K5584K
(3)	OMS R ENG CONTROL VLV 2 COIL 1 OP	V43K5585X
(4)	OMS R ENG CONTROL VLV 2 COIL 2 OP	V43K5586X
(5)	OMS R ON CMD IND	V90X8272X
(6)	OMS CUT–OFF COMMAND	V90X8318X

Step 6. This step terminates the OMS engines firing when directed.

OMS L POD HE ISLN VLV A OP	V43K4180X
OMS L POD HE ISLN VLV B OP	V43K4181X
OMS L POD VAPOR ISLN VLV 1 OP	V43K4182X
OMS L POD VAPOR ISLN VLV 2 OP	V43K4183X
OMS R POD HE ISLN VLV A OP	V43K5180X
OMS R POD HE ISLN VLV B OP	V43K5181X
OMS R POD VAPOR ISLN VLV 1 OP	V43K5182X
OMS R POD VAPOR ISLN VLV 2 OP	V43K5183X
OMS L ENG CONTROL VLV 1 COIL 1 OP	V43K4583X
OMS L ENG CONTROL VLV 1 COIL 2 OP	V43K4584X
OMS L ENG CONTROL VLV 2 COIL 1 OP	V43K4585X
OMS L ENG CONTROL VLV 2 COIL 2 OP	V43K4586X
OMS R ENG CONTROL VLV 1 COIL 1 OP	V43K5583X
OMS R ENG CONTROL VLV 1 COIL 2 OP	V43K5584X
OMS R ENG CONTROL VLV 2 COIL 1 OP	V43K5585X
OMS R ENG CONTROL VLV 2 COIL 2 OP	V43K5586X

If first pass, terminate the above signals, set (1) and (2) false, and proceed to Step 7. If not first pass, proceed to Step 7.

(1)	OMS L ON CMD IND	V90X8271X
(2)	OMS R ON CMD IND	V90X8272X

Step 7. This step determines if an OMS auto purge is to be performed.

The following signals are monitored:

(a)	SEL OMS L ENG ARM/PRESS CMD	V90X7540X
(b)	SEL OMS R ENG ARM/PRESS CMD	V90X7542X
(c)	OMS_PURGE_DELAY_TIME	V97U9825C
(d)	OMS_PURGE_TIME	V97U9824C

If (a) and (b) are both false, terminate (1) through (4) below and return to Step 1 until expiration of (c) + (d). At that time, the OMS fire sequence is reinitialized and the sequence can be terminated.

If (a) and (b) are true, then issue (1) through (4) below after time delay (c) has expired.

If (b) is false and (a) is true, issue (1) and (2) below after time delay (c) has expired.

If (a) is false and (b) is true, issue (3) and (4) below after time delay (c) has expired.

(1)	OMS L PURGE VLV 1 OP	V43K4556X
(2)	OMS L PURGE VLV 2 OP	V43K4557X
(3)	OMS R PURGE VLV 1 OP	V43K5556X
(4)	OMS R PURGE VLV 2 OP	V43K5557X

After expiration of OMS purge time (d), terminate the above commands and reinitialize the OMS fire sequence to allow for subsequent engine firing, including enabling of first–pass indicators and the reenabling of purge delay and OMS purge timers.

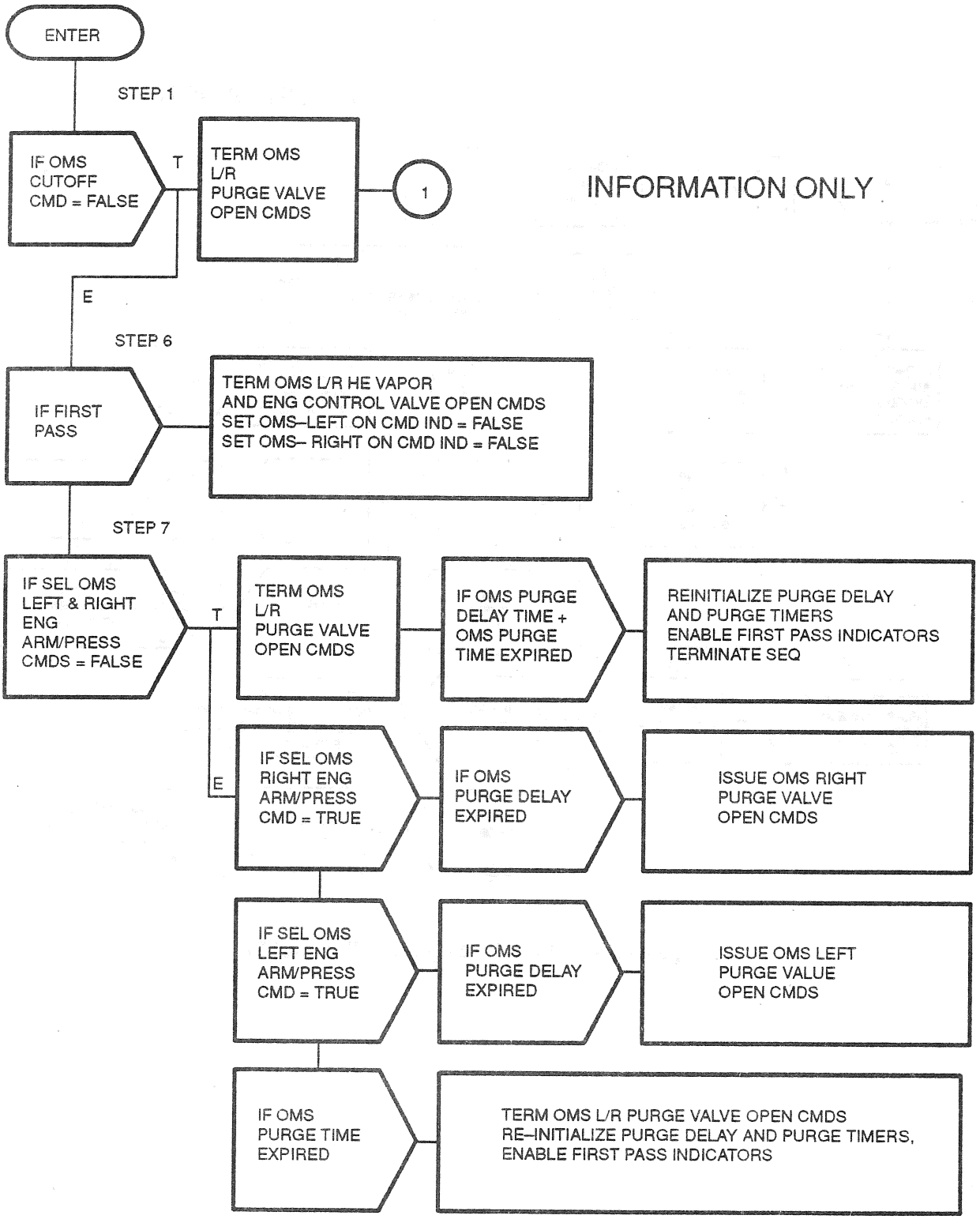

Figure 4.182. OMS Fire Sequence (Sheet 1 of 2)

INFORMATION ONLY

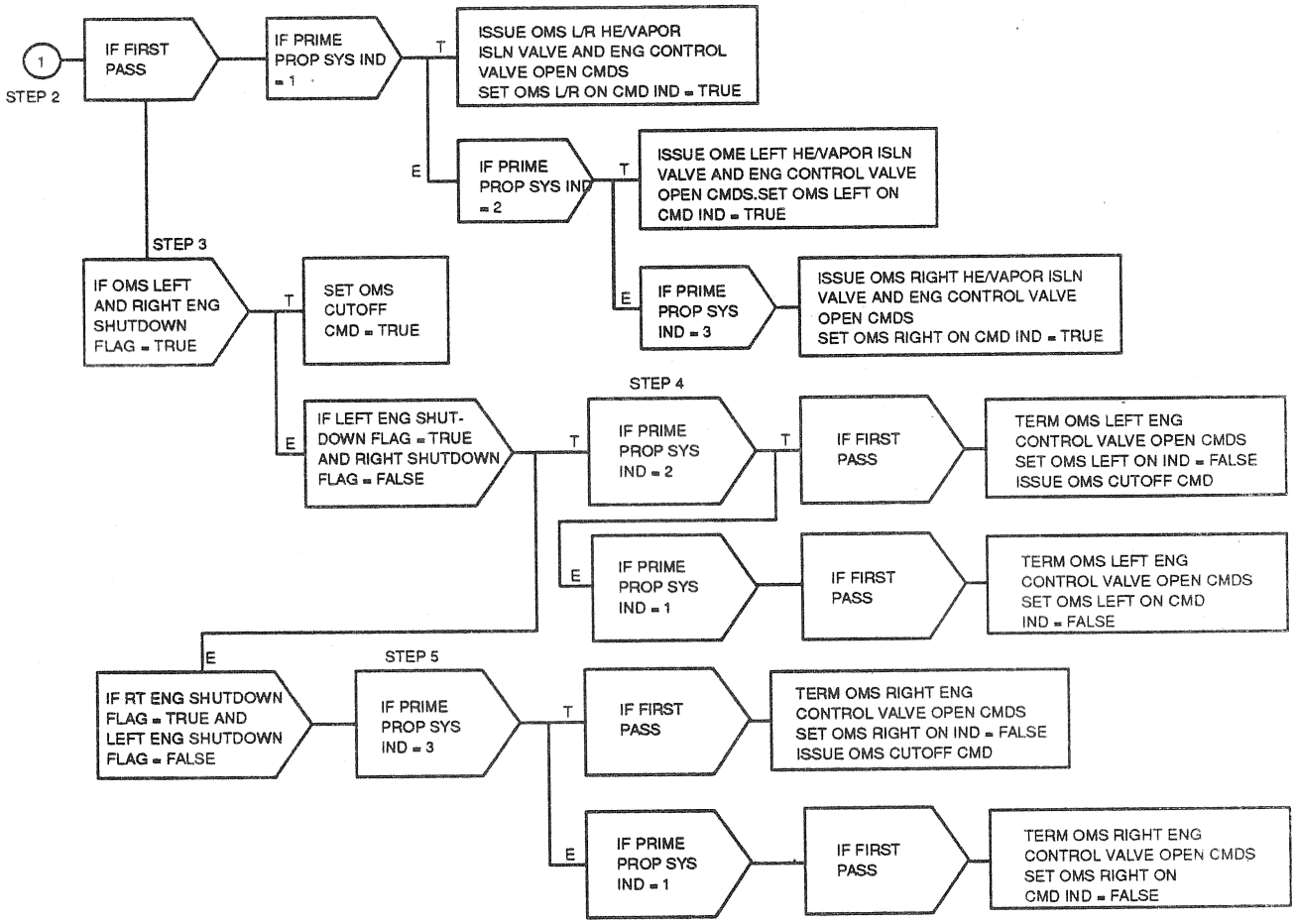

Figure 4.182. OMS Fire Sequence (Sheet 2 of 2)

TABLE 4.7.6.4–1. OMS FIRE SEQUENCER (G4.182) INPUT/OUTPUT FUNCTIONAL PARAMETERS

DBFN: D3B027-F PN: VP707100049P00L INPUT FUNCTIONAL PARAMETERS FOR OMS FIRE SEQ

FSSR NAME	M/S ID	NOMENCLATURE	SOURCE	UNITS	DATA TYPE	PREC	LAST CRS
OMS_IGNITION_CMD	V90X8190XA	OMS IGNITION COMMAND FLAG	MSC		BD		90120B
PROP_FLAG_OFS	V94J3791CA	PRIME PROP SYS INDICATOR FLAG	ASC MNVR DIP				90120B
							89461
PROP_FLAG_OFS	V94J3791CB	PRIME PROP SYS INDICATOR FLAG	ORB MNVR DIP				90120B
PROP_FLAG_OFS	V94J3791CC	PRIME PROP SYS INDICATOR FLAG	DEORB MNVR DIP				90120B
S_LOMS_FAIL	V90X7670X	LEFT OMS ENGINE SHUTDOWN FLAG	OMS RM		BD		90120B
							89461
S_OMS_CUTOFF	V90X8318XA	OMS CUTOFF CMD	ABT CNTL SEQ				89990E
							89461
S_OMS_CUTOFF	V90X8318XB	OMS CUTOFF CMD	MSC				89461
S_ROMS_FAIL	V90X7671X	RIGHT OMS ENGINE SHUTDOWN FLAG	OMS RM		BD		90120B
							89461
	V90X7540XA	SEL OMS-L ENG ARM/PRESS CMD	GN&C SW RM				90182
	V90X7542XA	SEL OMS-R ENG ARM/PRESS CMD	GN&C SW RM				90182

TABLE 4.7.6.4–1. OMS FIRE SEQUENCER (G4.182) INPUT/OUTPUT FUNCTIONAL PARAMETERS

DBFN: D3B027-F PN: VP707100049P00L OUTPUT FUNCTIONAL PARAMETERS FROM OMS FIRE SEQ

FSSR NAME	M/S ID	NOMENCLATURE	DESTINATION	UNITS	DATA TYPE	PREC	LAST CRS
OMS_L_ON_CMD_IND	V90X8271X	OMS-L ON CMD IND	ASC MNVR DIP,ORB DAP,ORB GUID, TRANS DAP,ABT CNTL SEQ, ORB MNVR DIP,DEORB MNVR DIP,GAX, ORB INS GUID,DEORB GUID, OVERRIDE SPEC,OMS RM				90120B 89461
OMS_R_ON_CMD_IND	V90X8272X	OMS-R ON CMD IND	ASC MNVR DIP,ORB DAP,ORB GUID, TRANS DAP,ABT CNTL SEQ, ORB MNVR DIP,DEORB MNVR DIP,GAX, ORB INS GUID,DEORB GUID, OVERRIDE SPEC,OMS RM				90120B 89461
S_OMS_CUTOFF	V90X8318XC	OMS CUTOFF CMD	MSC				89461
	V43K4180XA	OMS-L POD HE ISLN VLV A OP	HDWR				
	V43K4181XA	OMS-L POD HE ISLN VLV B OP	HDWR				
	V43K4182XA	OMS-L POD VAPOR ISLN VLV 1 OP	PCA A1				
	V43K4183XA	OMS-L POD VAPOR ISLN VLV 2 OP	PCA A3				89598A
	V43K4556X	OMS-L PURGE VLV 1 OP	HDWR		BD		
	V43K4557X	OMS-L PURGE VLV 2 OP	HDWR		BD		
	V43K4583X	OMS-L ENGINE CNTL VLV 1 COIL 1 OP	HDWR,TLM		BD		
	V43K4584X	OMS-L ENGINE CNTL VLV 1 COIL 2 OP	HDWR,TLM		BD		
	V43K4585X	OMS-L ENGINE CNTL VLV 2 COIL 1 OP	HDWR,TLM		BD		
	V43K4586X	OMS-L ENGINE CNTL VLV 2 COIL 2 OP	HDWR,TLM		BD		
	V43K5180XA	OMS-R POD HE ISLN VLV A OP	HDWR				
	V43K5181XA	OMS-R POD HE ISLN VLV B OP	HDWR				
	V43K5182XA	OMS-R POD VAPOR ISLN VLV 1 OP	PCA A1				
	V43K5183XA	OMS-R POD VAPOR ISLN VLV 2 OP	PCA A3				
	V43K5556X	OMS-R PURGE VLV 1 OP	HDWR		BD		
	V43K5557X	OMS-R PURGE VLV 2 OP	HDWR		BD		
	V43K5583X	OMS-R ENGINE CNTL VLV 1 COIL 1 OP	HDWR,TLM		BD		
	V43K5584X	OMS-R ENGINE CNTL VLV 1 COIL 2 OP	HDWR,TLM		BD		
	V43K5585X	OMS-R ENGINE CNTL VLV 2 COIL 1 OP	HDWR,TLM		BD		
	V43K5586X	OMS-R ENGINE CNTL VLV 2 COIL 2 OP	HDWR,TLM		BD		

TABLE 4.7.6.4–2. OMS FIRING SEQUENCER (G4.182) I–LOADS

DBFN:0484

FSSR NAME	MSID	ENG UNIT	DT PR D S PR FCTN	CAT

NO REQUIREMENTS

TABLE 4.7.6.4–3. OMS FIRING SEQUENCER (G4.182) K–LOADS

DBFN:0558

FSSR NAME DESCRIPTION	MSID	MC KLOAD VALUE		ENG UNIT	DT	PR	S	PR FCTN	LAST CR EQTN MSID
OMS_PURGE_DELAY_TIME OMS PURGE DELAY TIME	V97U9825C	+3.0	E-01	SEC	F	D	C	G4.182	59956
OMS_PURGE_TIME OMS PURGE TIME	V97U9824C	+2.0000000	E+00	SEC	F	D	C	G4.182	59956

TABLE 4.7.6.4–4. OMS FIRING SEQUENCER (G4.182) CONSTANTS

DBFN:0558

FSSR NAME DESCRIPTION	MSID	MC	CONSTANT VALUE	ENG UNIT	DT	PR	S PR FCTN	LAST CR
NO REQUIREMENTS								

THIS PAGE INTENTIONALLY LEFT BLANK

4.7.9 OMS to RCS Gaging (4.101)

4.7.9.1 Introduction

OMS to RCS propellant quantities are calculated by burn time integration. Once each cycle, the accumulated thruster cycles are used to compute the OMS propellant used since initiation of the gaging. Gaging is initiated by item entry of OMS right or OMS left PRESS ENABLE and terminated by OFF item entry.

4.7.9.2 Overview

Since the OMS to RCS interconnect may be used at different times in the mission, but only from one pod at a time, it is necessary to maintain a summation of total OMS propellant used from each pod. This means that a record must be maintained of total quantity used from the currently selected pod, as well as a separate total from the other pod. The number of RCS main and vernier thruster 80–millisecond command cycles and main thruster startup cycles are provided by the RCS CMD SOP. When the total quantity used from either OMS pod equals or exceeds a predetermined limit, an alert is issued to generate CRT message line and a Class 3 alert light and tone.

4.7.9.3 Detailed Requirements

Step 1. This step initializes OMS to RCS quantity gaging.

If first pass after each initiation, set the following quantity to zero and proceed to Step 2. If not first pass, proceed to Step 2.

(1) WPT (N–1) (INTERNAL)

Step 2. This step determines the amount of propellants used during the current operation.

The following signals are monitored:

(a)	TOTAL NO. AFT RCS MAIN THRUSTER CYCLES	V95Q1650C
(b)	TOTAL NO. AFT RCS VERNIER THRUSTER CYCLES	V95Q1651C
(c)	TOTAL NO. AFT RCS MAIN THRUSTER STARTUPS	V95Q1652C

Compute the quantity of propellants used since initiation of this operation using the following algorithm and then proceed to Step 3.

$$W_{pm} = A_1 N_m + A_2 N_S$$

$$W_{pv} = B_1 N_v$$

$$W_{pt} = W_{pm} + W_{pv}$$

where

W_{pm} = Total main jet propellant weight used

A_1 = Main jet flow rate per 80–ms cycle (A_1 = 2.50 E – 01 lb/80–ms cycle)

A_2 = Correction factor for start–up/shutdown flow found by test (A_2 = 0)

N_m = Total number of RCS main thruster cycles (a)

N_s = Total number of RCS main thruster start–ups (c)

W_{pv} = Total vernier jet propellant weight used

B_1 = Vernier jet flow rate per 80–ms cycle (B_1 = 7.20 E – 03 lb/80–ms cycle)

N_v = Number of vernier thruster cycles (b)

W_{pt} = Total prop used this operation

Step 3. This step updates the quantity used values for the selected OMS pod.*

The following signals are monitored:

(a)	OMS PRESS ENA L	V93X5100X
(b)	OMS PRESS ENA R	V93X5101X

If (a) and (b) are both false, return to Step 1.

If (a) is true, then the following summation is performed:

LEFT OMS QUANTITY USED updated = LEFT OMS QUANTITY USED previously + W_{pt} (N) – W_{pt} (N–1)

If (b) is true, then the following summation is performed.

RIGHT OMS QUANTITY USED updated = RIGHT OMS QUANTITY USED previously + W_{pt} (N) – W_{pt} (N–1)

Then proceed to Step 4.

Step 4. This step provides the scaling of the stored values of left and right OMS propellants used for CRT display.

The following values are computed:

LEFT OMS QUANTITY USED x 7.72 x 10^{-3} = left percent OMS used

RIGHT OMS QUANTITY USED x 7.72 x 10^{-3} = right percent OMS used

The following signals are available for display:

LT OMS TOTAL QUANTITY USED (%)	V90Q8535C
RT OMS TOTAL QUANTITY USED (%)	V90Q8536C

Proceed to Step 5.

Step 5. This step determines when the total quantity of propellant used from the OMS pods exceeds a predetermined limit.

The following signals are monitored:

(a)	OMS PRESS ENA L	V93X5100X
(b)	OMS PRESS ENA R	V93X5101X
(c)	Q_OMS_LIM	V97U9826C
(d)	LEFT OMS QUANTITY USED	(Internal)
(e)	RIGHT OMS QUANTITY USED	(Internal)

If (a) is true and (d) > (c), issue (1) below and return to Step 1.

If (b) is true and (e) > (c), issue (2) below and return to Step 1.

(1)	LT OMS PROP USED EXCEEDS LIMIT	V90X8531X
(2)	RT OMS PROP USED EXCEEDS LIMIT	V90X8532X

Otherwise, return to Step 1.

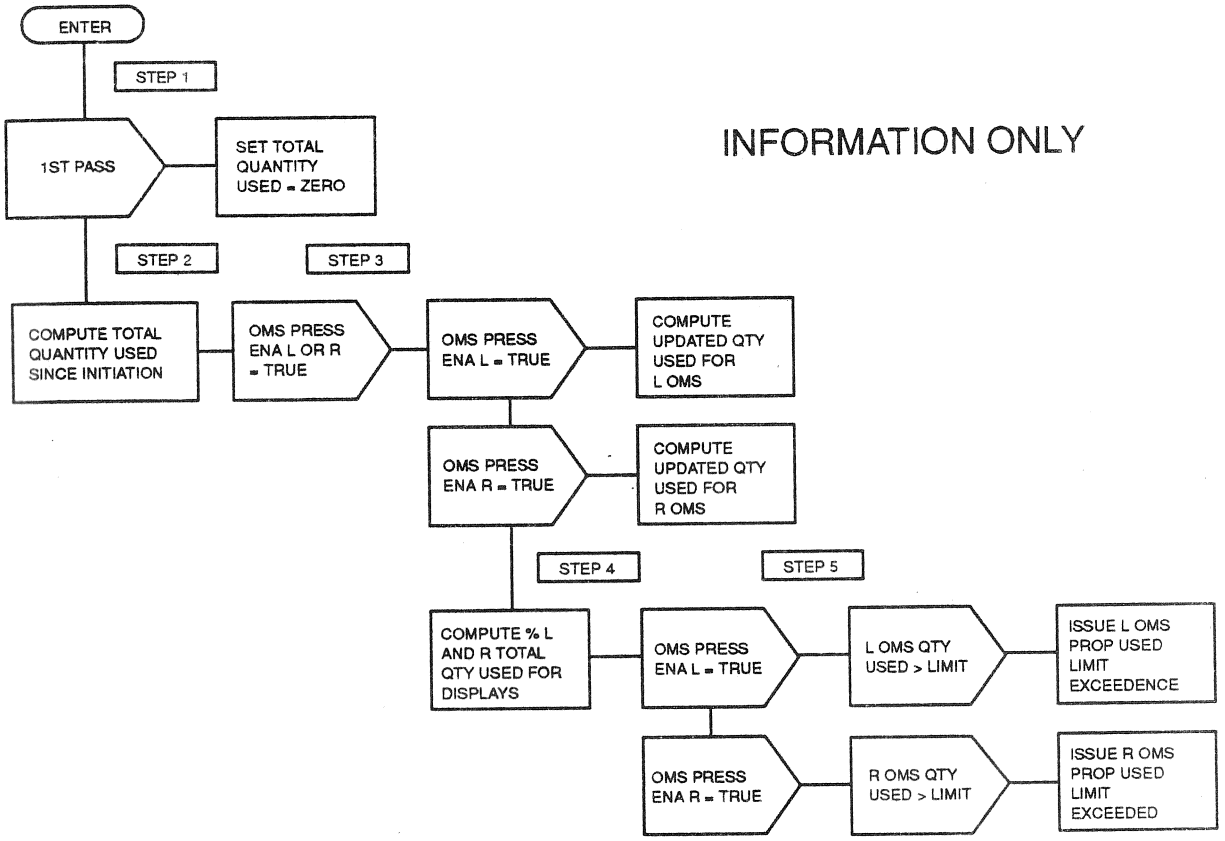

Figure 4.101. OMS to RCS Gaging

TABLE 4.7.9.4–1. OMS TO RCS QTY GAUGING (G4.101) INPUT/OUTPUT FUNCTIONAL PARAMETERS

DBFN: D3B027-F PN: VP707100049P00L INPUT FUNCTIONAL PARAMETERS FOR OMS/RCS GAUGING

FSSR NAME	M/S ID	NOMENCLATURE	SOURCE	UNITS	DATA TYPE	PREC	LAST CRS
	V90X8446X	OMS/RCS GAUGING FLAG	ORB OMS/RCS CONN				
	V93X5100X	OMS PRESS ENA L	RM RCS DISP		BD		
	V93X5101X	OMS PRESS ENA R	RM RCS DISP		BD		
	V95Q1650C	TOT NO AFT RCS MN THRUSTER CYC	ORB RCS CMD SOP				
	V95Q1651C	TOT NO AFT RCS VR THRUSTER CYC	ORB RCS CMD SOP				
	V95Q1652C	TOT NO AFT MN THRUSTER START UPS	ORB RCS CMD SOP				

TABLE 4.7.9.4–1. OMS TO RCS QTY GAUGING (G4.101) INPUT/OUTPUT FUNCTIONAL PARAMETERS

DBFN: D3B027-F PN: VP707100049P00L OUTPUT FUNCTIONAL PARAMETERS FROM OMS/RCS GAUGING

FSSR NAME	M/S ID	NOMENCLATURE	DESTINATION	UNITS	DATA TYPE	PREC	LAST CRS
	V90X8531X	LT OMS PROP USED EXCEEDS LIMIT	RM RCS DISP		BD		
	V90X8532X	RT OMS PROP USED EXCEEDS LIMIT	RM RCS DISP		BD		
	V90Q8535C	LT OMS TOTAL QUANTITY USED(%)	RM RCS DISP,TLM	PCT	SPL		
	V90Q8536C	RT OMS TOTAL QUANTITY USED(%)	RM RCS DISP,TLM	PCT	SPL		

TABLE 4.7.9.4–2. OMS TO RCS QTY GAUGING (G4.101) I–LOADS

DBFN:0484

FSSR NAME	MSID	ENG UNIT	DT	PR	D	S	PR	FCTN	CAT
QUANT_OMS_LMT	V97U9826C	LBS	F	S	D	P	G4.101		QFL0

TABLE 4.7.9.4–3. OMS TO RCS QTY GAUGING (G4.101) K–LOADS

DBFN:0558

FSSR NAME DESCRIPTION	MSID	MC KLOAD VALUE	ENG UNIT	DT PR S PR FCTN	LAST CR EQTN MSID
NO REQUIREMENTS					

TABLE 4.7.9.4–4. OMS TO RCS QTY GAUGING (G4.101) CONSTANTS

DBFN:0558

FSSR NAME DESCRIPTION	MSID	MC	CONSTANT VALUE	ENG UNIT	DT	PR	S	PR FCTN	LAST CR
MAIN_JET_FLOWRATE MAIN JET FLOWRATE (A1)	V97U6148C		+2.50 E-01	LB/80 MSEC	F	S	P	G4.101	90374
VERNIER_JET_FLOWRATE VERNIER JET FLOWRATE (B1)	V97U6149C		+7.20 E-03	LB/80 MSEC	F	S	P	G4.101	90374

THIS PAGE INTENTIONALLY LEFT BLANK

4.8.1 Master Events Controller SOP (4.228)

The purpose of the master events controller (MEC) SOP principal function is to process user function discrete commands to generate the following serial-digital signals to the MEC: MEC critical commands, MEC noncritical commands, and MEC master reset commands.

The MEC SOP shall be processed on demand as required by the R/S LCH SEQ, SRB SEP SEQ, or ET SEP SEQ. The MEC SOP interfaces are indicated in the functional block diagram in Figure 4.8.1-1. The MEC critical and noncritical commands are shown in Tables 4.8.1-1 and 4.8.1-2, respectively. The input and output parameters are shown in Tables 4.8.1-3 and 4.8.1-4, respectively. The output requirements are shown in Table 4.8.1-5.

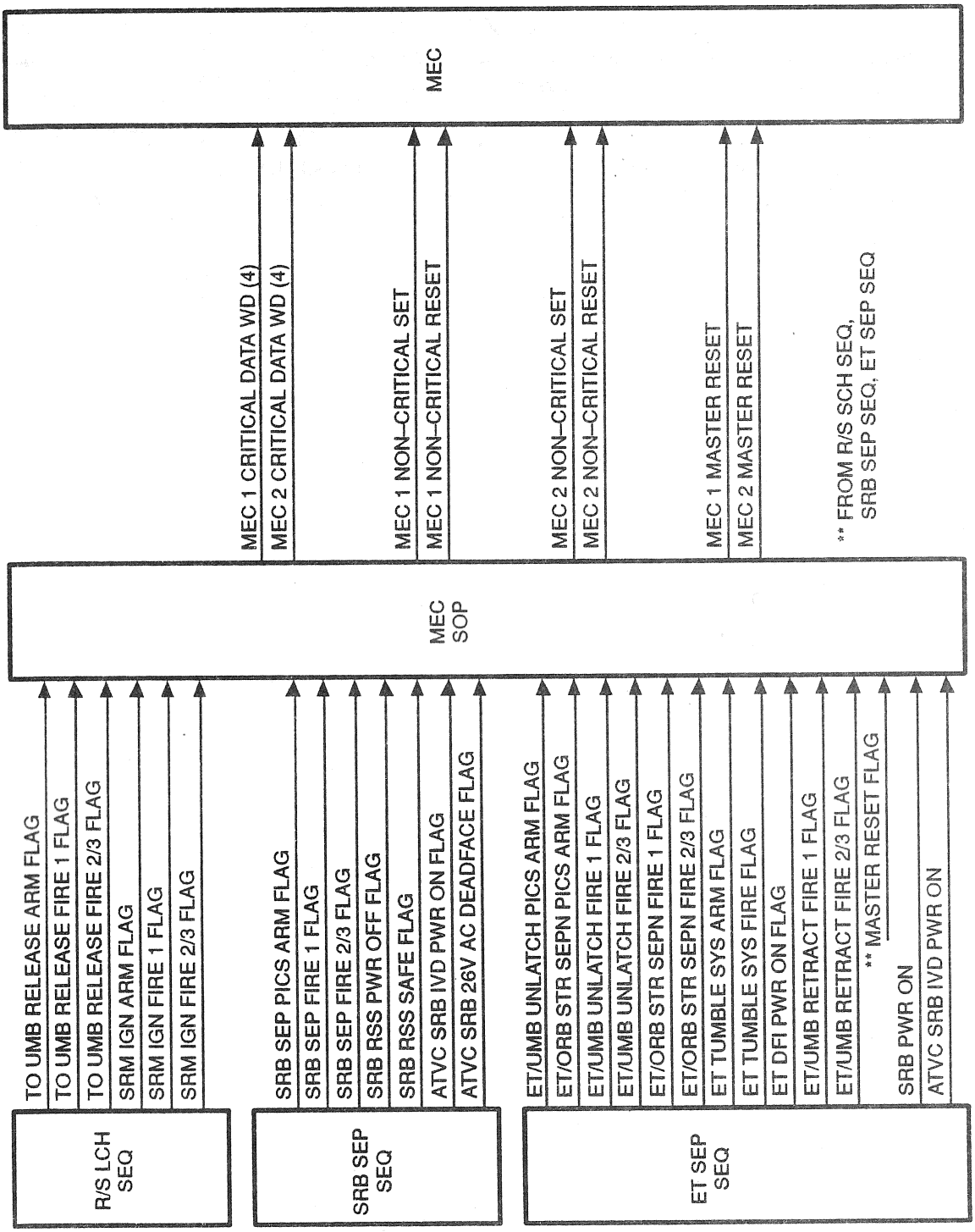

Figure 4.8.1–1. MEC SOP Functional Block Diagram

Table 4.8.1–1. MEC Critical Command Processing

Input Flag	Output – Bits 9–24 in Command Data Word			
	Parameter		CMD Constant	Hex Value
T0_UMB_ARM = 1	CRIT_CMD1 (1)	=	UMB_RLS_ARM (1)	CEDC
V90X8407X	CRIT_CMD2 (1)	=	UMB_RLS_ARM (2)	CEDC
SRM_IGN_ARM = 1	CRIT_CMD1 (2)	=	SRM_ARM (1)	3EAC
V90X8404X	CRIT_CMD2 (2)	=	SRM_ARM (2)	3EAC
SRM_IGN_FIRE1 = 1	CRIT_CMD1 (3)	=	SRM_FIRE1 (1)	3E6A
V90X8405X	CRIT_CMD2 (3)	=	SRM_FIRE1 (2)	3E6A
SRM_IGN_FIRE2/3 = 1	CRIT_CMD1 (4)	=	SRM_FIRE2 (1)	3E42
V90X8699X	CRIT_CMD2 (4)	=	SRM_FIRE2 (2)	3E42
TO_UMB_FIRE1 = 1	CRITC_CMD1 (3)	=	UMB_FIRE1 (1)	CE6A
V90X8408X	CRIT_CMD2 (3)	=	UMB_FIRE1 (2)	CE6A
TO_UMB_FIRE2/3 = 1	CRIT_CMD1 (4)	=	UMB_FIRE2 (1)	CE9A
V90X8698X	CRIT_CMD2 (4)	=	UMB_FIRE2 (2)	CE9A
SRB_SEP_ARM = 1	CRIT_CMD1 (2)	=	SRB_ARM (1)	3154
V90X8335X	CRIT_CMD2 (2)	=	SRB_ARM (2)	3154
SRB_SEP_FIRE1 = 1	CRIT_CMD1 (2)	=	SRB_FIRE1 (1)	316A
V90X8341X	CRIT_CMD2 (2)	=	SRB_FIRE1 (2)	316A
SRB_SEP_FIRE2/3 = 1	CRIT_CMD1 (3)	=	SRB_FIRE2 (1)	319B
V90X8354X	CRIT_CMD2 (3)	=	SRB_FIRE2 (2)	319B
ET_UMB_UNLCH ARM = 1	CRIT_CMD1 (2)	=	ET_UMB_ARM (1)	C121
V90X8247X	CRIT_CMD2 (2)	=	ET_UMB_ARM (2)	C121
ET_YNB_RETR_CMD1 = 1	CRIT_CMD1 (4)	=	ET_UMB_CND1 (2)	7463
V90X8263X	CRIT_CMD2 (4)	=	ET_UMB_CMD1 (2)	7463
ET_UMB_UNLCH_FIRE1 = 1	CRIT_CMD1 (3)	=	ET_UMB_FIRE1 (1)	C162

Table 4.8.1–1. MEC Critical Command Processing

Input Flag	Output – Bits 9–24 in Command Data Word			
	Parameter		CMD Constant	Hex Value
V90X8256X	CRIT_CMD2 (3)	=	ET_UMB_FIRE1 (2)	C162
ET_UMB_UNLCH_FIRE	CRIT_CMD1 (2)	=	ET_UMB_FIRE2 (1)	C193
2/3 = 1 V90X8242X	CRIT_CMD2 (2)	=	ET_UMB_FIRE2 (2)	C193
ET_UMB_RETR CMD	CRIT_CMD1 (1)	=	ET_UMB_CMD2 (1)	7498
2/3 = 1 V90X8243X	CRIT_CMD2 (1)	=	ET_UMB_CMD2 (2)	7498
ET_SEP_ARM = 1	CRIT_CMD1 (1)	=	ET_SEP_ARM (1)	E117
V90X8265X	CRIT_CMD2 (1)	=	ET_SEP_ARM (2)	E117
ET_SEP_FIRE1 = 1	CRIT_CMD1 (2)	=	SEP_ET_FIRE1 (1)	E168
V90X8244X	CRIT_CMD2 (2)	=	SEP_ET_FIRE1 (2)	E168
ET_SEP_FIRE	CRIT_CMD1 (3)	=	SEP_ET_FIRE2 (1)	E199
2/3 = 1 V90X8241X	CRIT_CMD2 (3)	=	SEP_ET_FIRE2 (2)	E199
ET_TMBL_ARM = 1	CRIT_CMD1 (3)	=	ET_TUMBLE_ARM (1)	EBC2
V90X8251X	CRIT_CMD2 (3)	=	ET_TUMBLE_ARM (2)	EBC2
SRB_RSS_SAFE = 1	CRIT_CMD1 (3)	=	RSS_SRB_SAFE1 (1)	EB68
V90X8337X	CRIT_CMD2 (3)	=	RSS_SRB_SAFE1 (2)	EB68
	CRIT_CMD1 (4)	=	RSS_SRB_SAFE2 (1)	EB95
	CRIT_CMD2 (4)	=	RSS_SRB_SAFE2 (2)	EB95
ET_TMBL_FIRE = 1	CRIT_CMD1 (4)	=	ET_TUMBLE_FIRE (1)	ECB6
V90X8252X	CRIT_CMD2 (4)	=	ET_TUMBLE_FIRE (2)	ECB6
ATVC_26V_DD_FACE = 1	CRIT_CMD1 (1)	=	ATVC_1/2_DDFC (1)	EC68
V90X8339X	CRIT_CMD2 (1)	=	ATVC_1/2_DDFC (2)	EC68
	CRIT_CMD1 (4)	=	ATVC_3/4_DDFC (1)	EC9D
	CRIT_CMD2 (4)	=	ATVC_3/4_DDFC (2)	EC9D

4.8.1.1 MEC Critical Command Processing

The MEC SOP shall monitor command flags from the user functions and shall generate critical command data words to the two MEC's for each of the user function command flags as defined in Table 4.8.1-1. The user function command flag shall then be reset. The resulting parameter command constant shall be maintained until replaced by a new parameter command constant resulting from a new user function command flag or until zeroed by the MEC 1 and 2 master reset (see Section 4.8.1.3).

MEC critical commands must comply with the following timing constraints: (1) the MEC 1 to MEC 2 timing interval shall be less than 400 milliseconds (the MEC 1 to MEC 2 timing interval refers to the interval between like commands issued to MEC 1 and MEC 2 by any single GN&C computer) and (2) a single GPC shall not issue successive commands to a MEC with less than 25 microseconds between the commands. Timing constarints that apply to MEC commands are also presented in the Level A CPDS, SS–P–0002–170, Section 4.4.2 Timing and Periodicity, Items (e), (f), (g), (h).

4.8.1.1.1 Initialization Requirements

The critical command data words, as defined in Table 4.8.1-5, shall be initialized with HEX CODE 0000 upon entry into OPS 1.

4.8.1.2 MEC Noncritical Command Processing

The MEC SOP shall monitor noncritical command flags from the user functions and shall generate noncritical set and reset command data words to the two MEC's for each of the user function command flags as defined in Table 4.8.1-2. MEC noncritical commands must comply with the following timing constraints: (1) the MEC 1 to MEC 2 timing interval shall be less than 400 microseconds (the MEC 1 to MEC 2 timming interval refers to the interval between like commands issued to MEC 1 and MEC 2 by any single GN&C computer) and (2) a single GPC shall not issue successive commands to a MEC with less than 25 microseconds between the commands, and (3) MEC noncritical commands from the redundant set GPC's must be allowed to remain at the MEC ports as a set for at less 25 microseconds before being overwritten by other MEC commands. This is to ensure that identical noncritical commands are resident in each port of the MEC for at least 25 microseconds. Timing constarints that apply to MEC commands are also presented in the Level A CPDS, SS–P–0002–170, Section 4.4.2 Timing and Periodicity, Items (e), (f), (g), and (h).

The cumulative status of both the set and reset commands shall be maintained during OPS 1. Whenever a noncritical command flag is set by the user function, the MEC SOP shall modify the cumulative set and reset command parameters as defined in Table 4.8.1-2. The user function command flag shall then be reset. The resulting parameter command constants shall be maintained until modified in response to subsequent user function command flags or, in the case of the FIRE3 commands, until reset by the MEC 1 and 2 master reset (see Section 4.8.1.3).

4.8.1.2.1 Initialization Requirements

The noncritical command data words, as defined in Table 4.8.1-5, shall be initialized with the Hex Code 607C for the SET data words and Hex Code 9F83 for the RESET data words.

During OPS 3 and OPS 8, the set command shall be initialized and maintained with Hex Code 0003 and cyclically output to MEC's 1 and 2. Additionally, the reset command may be set to FFFC and cyclically output. Output of the reset command to the MEC is not required.

Table 4.8.1–2. MEC Noncritical Command Processing

Input Flag Parameter	Name	Hex Code Bits Affected	Parameter *	Hex Code*
OPS 1 INITIALIZATION (see 4.8.1.2.1)	Initial noncritical command data words	607C = 1	NCRIT_SET(1)	607C
		607C = 1	NCRIT_SET(2)	607C
		9F83 = 1	NCRIT_RST(1)	9F83
		9F83 = 1	NCRIT_RST(2)	9F83
SRM_IGN_FIRE 2/3 = 1	IGN_SRM_FIRE3	1000 = 1	NCRIT_SET(1)	707C
	IGN_SRM_FIRE3	1000 = 1	NCRIT_SET(2)	707C
	IGN_SRM_FIRE3	1000 = 0	NCRIT_RST(1)	8F83
	IGN_SRM_FIRE3	1000 = 0	NCRIT_RST(2)	8F83
TO_UMB_FIRE 2/3 = 1	UMB_TO_FIRE3	0800 = 1	NCRIT_SET(1)	787C
	UMB_TO_FIRE3	0800 = 1	NCRIT_SET(2)	787C
	UMB_TO_FIRE3	0800 = 0	NCRIT_RST(1)	8783
	UMB_TO_FIRE3	0800 = 0	NCRIT_RST(2)	8783
MEC 1 & 2 MASTER RESET = 1	IGN_SRM_FIRE3	1000 = 0	NCRIT_SET(1)	687C
	IGN_SRM_FIRE3	1000 = 0	NCRIT_SET(2)	687C
	IGN_SRM_FIRE3	1000 = 1	NCRIT_RST(1)	9783
	IGN_SRM_FIRE3	1000 = 1	NCRIT_RST(2)	9783
	UMB_TO_FIRE3	0800 = 0	NCRIT_SET(1)	607C
	UMB_TO_FIRE3	0800 = 0	NCRIT_SET(2)	607C
	UMB_TO_FIRE3	0800 = 1	NCRIT_RST(1)	9F83
	UMB_TO_FIRE3	0800 = 1	NCRIT_RST(2)	9F83
SRB_RSS_OFF (TRUE) = 1	RSS_SRB_OFF(1 & 2)	0600 = 1	NCRIT_SET(1)	667C
	RSS_SRB_OFF(3 & 4)	0600 = 1	NCRIT_SET(2)	667C
	RSS_SRB_OFF(1 & 2)	0600 = 0	NCRIT_RST(1)	9983
	RSS_SRB_OFF(3 & 4)	0600 = 0	NCRIT_RST(2)	9983
ATVC_IVD_PWR = 1	ATVC_SRB_PWR(1 & 2)	000C = 0	NCRIT_SET(1)	6670
	ATVC_SRB_PWR(3 & 4)	000C = 0	NCRIT_SET(2)	6670
	ATVC_SRB_PWR(1 & 2)	000C = 1	NCRIT_RST(1)	998F
	ATVC_SRB_PWR(3 & 4)	000C = 1	NCRIT_RST(2)	998F
SRB_SEP_FIRE 2/3 = 1	SEP_SRB_FIRE3	0100 = 1	NCRIT_SET(1)	6770
	SEP_SRB_FIRE3	0100 = 1	NCRIT_SET(2)	6770
	SEP_SRB_FIRE3	0100 = 0	NCRIT_RST(1)	988F
	SEP_SRB_FIRE3	0100 = 0	NCRIT_RST(2)	988F
SRB_PWR_ON = 1	SRB_PWR(1,2,5 & 6)	6030 = 0	NCRIT_SET(1)	0740
	SRB_PWR(3,4,7 & 8)	6030 = 0	NCRIT_SET(2)	0740
	SRB_PWR(1,2,5 & 6)	6030 = 1	NCRIT_SET(1)	F8BF
	SRB_PWR(3,4,7 & 8)	6030 = 1	NCRIT_SET(2)	F8BF

*For information only: cumulative effects of MEC SOP response to user flags.

Table 4.8.1–2. MEC Noncritical Command Processing

Input Flag Parameter	Name	Hex Code Bits Affected	Parameter *	Hex Code*
SRB_RSS_OFF (FALSE) = 1	RSS_SRB_OFF(1 & 2)	0600 = 0	NCRIT_SET(1)	0140
	RSS_SRB_OFF(3 & 4)	0600 = 0	NCRIT_SET(2)	0140
	RSS_SRB_OFF(1 & 2)	0600 = 1	NCRIT_RST(1)	FEBF
	RSS_SRB_OFF(3 & 4)	0600 = 1	NCRIT_RST(2)	FEBF
MEC 1 & 2 MASTER RESET = 1	SEP_SRB_FIRE3	0100 = 0	NCRIT_SET(1)	0040
	SEP_SRB_FIRE3	0100 = 0	NCRIT_SET(2)	0040
	SEP_SRB_FIRE3	0100 = 1	NCRIT_RST(1)	FFBF
	SEP_SRB_FIRE3	0100 = 1	NCRIT_RST(2)	FFBF
ET_DFI = 1	ET_DFI_PWR	0040 = 0	NCRIT_SET(1)	0000
	ET_DFI_PWR	0040 = 0	NCRIT_SET(2)	0000
	ET_DFI_PWR	0040 = 1	NCRIT_RST(1)	FFFF
	ET_DFI_PWR	0040 = 1	NCRIT_RST(2)	FFFF
ET_UMB UNLCH FIRE 2/3 = 1	ET_UNLCH_UMB_FIRE3	0080 = 1	NCRIT_SET(1)	0080
	ET_UNLCH_UMB_FIRE3	0080 = 1	NCRIT_SET(2)	0080
	ET_UNLCH_UMB_FIRE3	0080 = 0	NCRIT_RST(1)	FF7F
	ET_UNLCH_UMB_FIRE3	0080 = 0	NCRIT_RST(2)	FF7F
ET_UMB_RETR_CMD 2/3 = 1	ET_RETR_UMB_CMD3	0002 = 1	NCRIT_SET(1)	0082
	ET_RETR_UMB_CMD3	0002 = 1	NCRIT_SET(2)	0082
	ET_RETR_UMB_CMD3	0002 = 0	NCRIT_RST(1)	FF7D
	ET_RETR_UMB_CMD3	0002 = 0	NCRIT_RST(2)	FF7D
ET_SEP_FIRE 2/3 = 1	SEP_ET_FIRE3	0001 = 1	NCRIT_SET(1)	0083
	SEP_ET_FIRE3	0001 = 1	NCRIT_SET(2)	0083
	SEP_ET_FIRE3	0001 = 0	NCRIT_RST(1)	007C
	SEP_ET_FIRE3	0001 = 0	NCRIT_RST(2)	007C
MEC 1 & 2 MASTER RESET 1	ET_UNLCH_UMB_FIRE3	0080 = 0	NCRIT_SET(1)	0003
	ET_UNLCH_UMB_FIRE3	0080 = 0	NCRIT_SET(2)	0003
	ET_UNLCH_UMB_FIRE3	0080 = 1	NCRIT_RST(1)	FFFC
	ET_UNLCH_UMB_FIRE3	0080 = 1	NCRIT_RST(2)	FFFC
	ET_RETR_UMB_CMD3	0002 = 0	NCRIT_SET(1)	0001
	ET_RETR_UMB_CMD3	0002 = 0	NCRIT_SET(2)	0001
	ET_RETR_UMB_CMD3	0002 = 1	NCRIT_RST(1)	FFFE
	ET_RETR_UMB_CMD3	0002 = 1	NCRIT_RST(2)	FFFE
	SEP_ET_FIRE3	0001 = 0	NCRIT_SET(1)	0000
	SEP_ET_FIRE3	0001 = 0	NCRIT_SET(2)	0000
	SEP_ET_FIRE3	0001 = 1	NCRIT_RST(1)	FFFF
	SEP_ET_FIRE3	0001 = 1	NCRIT_RST(2)	FFFF

*For information only: cumulative effects of MEC SOP response to user flags.

4.8.1.3 MEC Master Reset

The MEC SOP monitors master reset command flags from the user functions and generates master reset commands to the two MEC's as follows:

(a) The M_RESET_USER flag in the 1 state (which is master reset commanded) shall result in the issuing of the MASTER_RESET command to each MEC, zeroing the MEC critical command output buffers, and the RESET of all of the noncritical FIRE 3 commands listed in Table 4.8.1-2. This flag shall remain set for two cycles. Once two cycles have occurred, the MASTER_RESET flags shall be set to the zero state.

Table 4.8.1–3. MEC SOP Input Parameters

Name	MSID/MML	Description	Input Source	Signal Type	Range
TO_UMB_ARM	V90X8407X G48010	TO UMB RELEASE ARM FLAG (l=ARM)	R/S LCH SEQ	DISCRETE	0, 1
TO_UMB_FIRE1	V90X8408X G48011	TO UMB RELEASE FIRE 1 FLAG (1=FIRE)	R/S LCH SEQ	DISCRETE	0, 1
TO_UMB_FIRE2/3	V90X8698X	TO UMB RELEASE FIRE 2/3 FLAG (1=FIRE)	R/S LCH SEQ	DISCRETE	0, 1
SRM_IGN_ARM	V90X8404X G48013	SRM IGN ARM FLAG (1=ARM)	R/S LCH SEQ	DISCRETE	0, 1
SRM_IGN_FIRE1	V90X8405X G48014	SRM IGN FIRE 1 FLAG (1=FIRE)	R/S LCH SEQ	DISCRETE	0, 1
SRM_IGN_FIRE2/3	V90X8699X	SRM IGN FIRE 2/3 FLAG (1=FIRE)	R/S LCH SEQ	DISCRETE	0, 1
SRB_SEP_ARM	V90X8335X G4B016	SRB SEP PICS ARM FLAG (1=ARM)	SRB SEP SEQ	DISCRETE	0, 1
SRB_SEP_FIRE1	V90X8341X G48017	SRB SEP FIRE 1 FLAG (1=FIRE)	SRB SEP SEQ	DISCRETE	0, 1
SRB_SEP FIRE2/3	V90X8354X	SRB SEP FIRE 2/3 FLAG (1=FIRE)	SRB SEP SEQ	DISCRETE	0, 1
SRB_PWR_ON	V90X8343X G48019	SRB PWR ON (l=RESET)	SRB SEP SEQ ET SEP SEQ	DISCRETE	0, 1
SRB RSS OFF (TRUE/ FALSE)	V90X8336X G48020	SRB RSS PWR OFF FLAG (TRUE=1=SET OFF CMD FALSE=1=RESET OFF CMD)	SRB SEP SEQ	DISCRETE	0, 1
SRB_RSS_SAFE	V90X8337X G48021	SRB RSS SAFE FLAG (1=SAFE)	SRB SEP SEQ	DISCRETE	0, 1
ATVC_IVD_PWR	V90X8338X G48022	ATVC SRB IVD POWER ON (1=OFF)	SRB SEP SEQ ET SEP SEQ	DISCRETE	0, 1
ATVC_26V_DDFACE	V90X8339X G48023	ATVC SRB 26V AC DEADFACE FLAG (1=DEADFACE)	SRB SEP SEQ	DISCRETE	0, 1
ET_UMB_UNLCH_ARM	V90X8247X G48000	ET/UMB UNLATCH PICS ARM FLAG (1=ARM)	ET SEP SEQ	DISCRETE	0, 1
ET UMB_UNLCH FIRE1	V90X8256X G48001	ET/UMB UNLATCH FIRE 1 FLAG (1=FIRE)	ET SEP SEQ	DISCRETE	0, 1
ET UMB UNLCH FIRE2/3	V90X8242X	ET/UMB UNLATCH FIRE 2/3 FLAG (1–FIRE)	ET SEP SEQ	DISCRETE	0, 1
ET_SEP FIRE1	V90X8244X G48003	ET/ORB STR SEPN FIRE 1 FLAG (1=FIRE)	ET SEP SEQ	DISCRETE	0, 1
ET_SEP_FIRE2/3	V90X8241X	ET/ORB STR SEPN FIRE 2/3 FLAG (1=FIRE)	ET SEP SEQ	DISCRETE	0, 1
ET_TMBL_ARM	V90X8251X G48005	ET TUMBLE SYS ARM FLAG (1=ARM)	ET SEP SEQ	DISCRETE	0, 1
ET_TMBL_FIRE	V90X8252X G48006	ET TUMBLE SYS FIRE FLAG (1=FIRE)	ET SEP SEQ	DISCRETE	0, 1

Table 4.8.1–3. MEC SOP Input Parameters

Name	MSID/MML	Description	Input Source	Signal Type	Range
ET_DFI_PWR	V90X8255X G48007	ET DFI PWR ON (1=OFF)	ET SEP SEQ	DISCRETE	0, 1
M_RSET_USER	V90X8258XA V90X8258X8 V90X8258XC G48009	MEC 1&2 MASTER RESET FLAG (1=ACTIVATE)	ET SEP SEQ SRB SEP SEQ R/S LCH SEQ	DISCRETE	0, 1
ET UMB_RETR_ CMD 1	V90X8263X	ET/UMB RETRACT FIRE 1 FLAG (1=FIRE)	ET SEP SEQ	DISCRETE	0, 1
ET UMB RETR CMD 2/3	V90X8243X	ET/UMB RETRACT FIRE 2/3 FLAG (1=FIRE)	ET SEP SEQ	DISCRETE	0, 1
ET_SEP_ARM	V90X8265X	ET/ORB STR SEP PICS ARM FLAG (1=ARM)	ET SEP SEQ	DISCRETE	0, 1

4.8.1.4 Critical Pairs

The following combinations of FIRE 2 critical commands and FIRE 3 noncritical commands form critical pairs which have special output timing requirements.

MEC 1 SRM IGN FIRE 2 CMD	V76K6954B
MEC 1 SRM IGN FIRE 3 CMD	V76K6955B
MEC 2 SRM IGN FIRE 2 CMD	V76K6964B
MEC 2 SRM IGN FIRE 3 CMD	V76K6965B
MEC 1 L TO UMB RELEASE FIRE 2 CMD	V76K4611B
MEC 1 L TO UMB RELEASE FIRE 3 CMD	V76K4612B
MEC 2 R TO UMB RELEASE FIRE 2 CMD	V76K4615B
MEC 2 R TO UMB RELEASE FIRE 3 CMD	V76K4616B
MEC 1 SRB SEPN FIRE 2 CMD	V76K6959B
MEC 1 SRB SEPN FIRE 3 CMD	V76K6960B
MEC 2 SRB SEPN FIRE 2 AND RCVY ARM	V76K6969B
MEC 2 SRB SEPN FIRE 3 CMD	V76K6970B
MEC 1 ET/UMB UNLATCH FIRE 2 CMD	V76K4623B
MEC 1 ET/UMB UNLATCH FIRE 3 CMD	V76K4625B
MEC 2 ET/UMB UNLATCH FIRE 2 CMD	V76K4624B
MEC 2 ET/UMB UNLATCH FIRE 3 CMD	V76K4626B
MEC 1 ET/UMB RETR FIRE 2 CMD	V76K4656B
MEC 1 ET/UMB RETR FIRE 3 CMD	V76K4657B
MEC 2 ET/UMB RETR FIRE 2 CMD	V76K4660B
MEC 2 ET/UMB RETR FIRE 3 CMD	V76K4661B
MEC 1 ET/ORB STR SEPN FIRE 2 CMD	V76K6914B
MEC 1 ET/ORB STR SEPN FIRE 3 CMD	V76K6921B
MEC 2 ET/ORB STR SEPN FIRE 2 CMD	V76K6916B
MEC 2 ET/ORB STR SEPN FIRE 3 CMD	V76K6922B

For each critical pair listed above, the respective FIRE 2 critical command and FIRE 3 noncritical command must be issued together so that the FIRE 2 command shall not precede the FIRE 3 command by more than 4.176 milliseconds nor occur after the FIRE 3 command by more than 0.725 millisecond.

Timing constarints that apply to MEC commands are also presented in the Level A CPDS, SS–P–0002–170, Section 4.4.2 Timing and Periodicity, Items (e), (f), (g), and (h).

Table 4.8.1–4. MEC SOP Output Parameters

Name	MSID/MML	Description	Non–Crit–CMD Hex Code	Crit–CMD Hex Code	Range
RSS_SRB_OFF(1)	V76K7006B	MEC 1 RSS L SRB PWR OFF CMD	0400		
RSS_SRB_OFF(2)	V76K7007B	MEC 1 RSS R SRB PWR 0FF CMD	0200		
RSS_SRB_0FF(3)	V76K7106B	MEC 2 RSS L SRB PWR OFF CMD	0400		
RSS_SRB_0FF(4)	V76K7107B	MEC 2 RSS R SRB PWR 0FF CMD	0200		
RSS_SRB_SAFE1(1)	V76K7508B	MEC 1 RSS L SAFE 1 CMD		EB68	
RSS_SRB_SAFE1(2)	V76K7509B	MEC 1 RSS R SAFE 2 CMD		EB95	
RSS_SRB_SAFE2(3)	V76K7608B	MEC 2 RSS R SAFE 1 CMD		EB68	
RSS_SRB_SAFE2(4)	V76K7609B	MEC 2 RSS L SAFE 2 CMD		EB95	
ATVC_SRB_PWR(1)	V76K7013B	MEC 1 ATVC 2 SRB IVD A PWR 0N CMD	0008		
ATVC_SRB_PWR(2)	V76K7014B	MEC 1 ATVC 4 SRB IVD B PWR 0N CMD	0004		
ATVC_SRB_PWR(3)	V76K7114B	MEC 2 ATVC 3 SRB IVD B PWR 0N CMD	0004		
ATVC_SRB_PWR(4)	V76K7113B	MEC 2 ATVC 1 SRB IVD C PWR 0N CMD	0008		
ATVC_DDFC(1)	V76K7515B	MEC 1 ATVC 2 SRB 26V DEADFACE CMD		EC68	
ATVC_DDFC(2)	V76K7516B	MEC 1 ATVC 4 SRB 26V DEADFACE CMD		EC9D	
ATVC_DDFC(3)	V76K7615B	MEC 2 ATVC 1 SRB 26V DEADFACE CMD		EC68	
ATVC_DDFC(4)	V76K7616B	MEC 2 ATVC 3 SRB 26V DEADFACE CMD		EC9D	
SRB_PWR(1)	V76K7002B	MEC 1 L SRB PWR A CMD	4000		
SRB_PWR(2)	V76K7003B	MEC 1 R SRB PWR A CMD	2000		
SRB_PWR(3)	V76K7102B	MEC 2 L SRB PWR B CMD	4000		
SRB_PWR(4)	V76K7103B	MEC 2 R SRB PWR B CMD	2000		
SRB_PWR(5)	V76K7011B	MEC 1 L SRB PWR C CMD	0020		
SRB_PWR(6)	V76K7012B	MEC 1 R SRB PWR C CMD	0010		
SRB_PWR(7)	V76K7111B	MEC 2 L SRB PWR C CMD	0020		
SRB_PWR(8)	V76K7112B	MEC 2 R SRB PWR C CMD	0010		
TMBLSYS_ARM(1)	V76K7504B	MEC 1 ET TUMBLE SYSTEM ARM CMD		EBC2	
TMBLSYS_ARM(2)	V76K7604B	MEC 2 ET TUMBLE SYSTEM ARM CMD		EBC2	
TMBLSYS_FIRE (1)	V76K7605B	MEC 2 ET TUMBLE SYSTEM FIRE CMD		ECB6	
TMBLSYS_FIRE(2)	V76K7505B	MEC 1 ET TUMBLE SYSTEM FIRE CMD		ECB6	
UMB_RLS_ARM(1)	V76K4609B	MEC 1 L T0 UMB RELEASE ARM CMD		CEDC	
UMB_RLS_ARM(2)	V76K4613B	MEC 2 R TO UMB RELEASE ARM CMD		CEDC	
SRM_ARM(1)	V76K6951B	MEC 1 SRM IGN ARM CMD		3EAC	
SRM_ARM(2)	V76K6961B	MEC 2 SRM IGN ARM CMD		3EAC	

Table 4.8.1–4. MEC SOP Output Parameters

Name	MSID/MML	Description	Non–Crit–CMD Hex Code	Crit–CMD Hex Code	Range
SRM_FIRE1(1)	V76K6953B	MEC 1 SRM IGN FIRE 1 CMD		3E6A	
SRM_FIRE1(2)	V76K6963B	MEC 2 SRM IGN FIRE 1 CMD		3E6A	
SRM_FIRE2(1)	V76K6954B	MEC 1 SRM IGN FIRE 2 CMD		3E42	
SRM_FIRE2(2)	V76K6964B	MEC 2 SRM IGN FIRE 2 CMD		3E42	
SRM_FIRE3(1)	V76K6955B	MEC 1 SRM IGN FIRE 3 CMD	1000		
SRM_FIRE3(2)	V76K6965B	MEC 2 SRM IGN FIRE 3 CMD	1000		
UMB_FIRE1(1)	V76K4610B	MEC 1 L T0 UMB RELEASE FIRE 1 CMD		CE6A	
UMB_FIRE1(2)	V76K4614B	MEC 2 R TO UMB RELEASE FIRE 1 CMD		CE6A	
UMB_FIRE2(1)	V76K4611B	MEC 1 L TO UMB RELEASE FIRE 2 CMD		CE9A	
UMB_FIRE2(2)	V76K4615B	MEC 2 R TO UMB RELEASE FIRE 2 CMD		CE9A	
UMB_FIRE3(1)	V76K4612B	MEC 1 L TO UMB RELEASE FIRE 3 CMD	0800		
UMB_FIRE3(2)	V76K4616B	MEC 2 R TO UMB RELEASE FIRE 3 CMD	0800		
SRB_ARM(1)	V76K6956B	MEC 1 SRB SEPN ARM CMD		3154	
SRB_ARM(2)	V76K6966B	MEC 2 SRB SEPN ARM CMD		3154	
SRB_FIRE1(1)	V76K6958B	MEC 1 SRB SEPN FIRE 1 CMD		316A	
SRB_FIRE1(2)	V76K6968B	MEC 2 SRB SEPN FIRE 1 AND RCVY PWR ON		316A	
SRB_FIRE2(1)	V76K6959B	MEC 1 SRB SEPN FIRE 2 CMD		319B	
SRB_FIRE2(2)	V76K6969B	MEC 2 SRB SEPN FIRE 2 AND RCVY ARM		319B	
SRB_FIRE3(1)	V76K6960B	MEC 1 SRB SEPN FIRE 3 CMD	0100		
SRB_FIRE3(2)	V76K6970B	MEC 2 SRB SEPN FIRE 3 CMD	0100		
ET_UMB_UNLCH_ ARM(1)	V76K4617B	MEC 1 ET/UMB UNLATCH ARM CMD		C121	
ET_UMB_UNLCH_ ARM(2)	V76K4618B	MEC 2 ET/UMB UNLATCH ARM CMD		C121	
ET_UMB_RETR CMD 1 (1)	V76K4655B	MEC 1 ET/UMB RETR FIRE 1 CMD		7463	
ET_UMB_RETR CMD 1 (2)	V76K4659B	MEC 2 ET/UMB RETR FIRE 1 CMD		7463	
ET_UMB_UNLCH FIRE1(1)	V76K4619B	MEC 1 ET/UMB UNLATCH FIRE 1 CMD		C162	
ET_UMB_UNLCH_ FIRE1(2)	V76K4620B	MEC 2 ET/UMB UNLATCH FIRE 1 CMD		C162	
ET_UMB_UNLCH_ FIRE2(1)	V76K4623B	MEC 1 ET/UMB UNLATCH FIRE 2 CMD		C193	

Table 4.8.1–4. MEC SOP Output Parameters

Name	MSID/MML	Description	Non–Crit–CMD Hex Code	Crit–CMD Hex Code	Range
ET_UMB_UNLCH_ FIRE2(2)	V76K4624B	MEC 2 ET/UMB UNLATCH FIRE 2 CMD		C193	
ET_UMB_UNLCH_ FIRE3(1)	V76K4625B	MEC 1 ET/UMB UNLATCH FIRE 3 CMD	0080		
ET_UMB_UNLCH_ FIRE3(2)	V76K4626B	MEC 2 ET/UMB UNLATCH FIRE 3 CMD	0080		
ET_UMB_ RETR_CMD2(1)	V76K4656B	MEC 1 ET/UMB RETR FIRE 2 CMD		7498	
ET_UMB_ RETR_CMD2 (2)	V76K4660B	MEC 2 ET/UMB RETR FIRE 2 CMD		7498	
ET_UMB_ RETR_CMD3 (1)	V76K4657B	MEC 1 ET/UMB RETR FIRE 3 CMD	0002		
ET_UMB_ RETR_CMD3 (2)	V76K4661B	MEC 2 ET/UMB RETR FIRE 3 CMD	0002		
SEP_ET_ARM(1)	V76K6909B	MEC 1 ET/0RB STR SEPN ARM CMD		E117	
SEP_ET_ARM(2)	V76K6911B	MEC 2 ET/ORB STR SEPN ARM CMD		E117	
SEP_ET_FIRE1(1)	V76K6913B	MEC 1 ET/ORB STR SEPN FIRE 1 CMD		E168	
SEP_ET_FIRE1(2)	V76K6915B	MEC 2 ET/ORB STR SEPN FIRE 1 CMD		E168	
SEP_ET_FIRE2(1)	V76K6914B	MEC 1 ET/ORB STR SEPN FIRE 2 CMD		E199	
SEP_ET_FIRE2(2)	V76K6916B	MEC 2 ET/ORB STR SEPN FIRE 2 CMD		E199	
SEP_ET_FIRE3(1)	V76K6921B	MEC 1 ET/ORB STR SEPN FIRE 3 CMD	0001		
SEP_ET_FIRE3(2)	V76K6922B	MEC 2 ET/ORB STR SEPN FIRE 3 CMD	0001		

Table 4.8.1–5. MEC SOP Output Requirements

Name	MSID/G No.	Description	Output Destination	Signal Type	Range
CRIT_CMD1(1)		MEC 1 CRITICAL CMD DATA WORD 1	MEC 1	HEX CODE	0000 TO FFFF
CRIT_CMD1(2)		MEC 1 CRITICAL CMD DATA WORD 2	MEC 1	HEX CODE	0000 TO FFFF
CRIT_CMD1(3)		MEC 1 CRITICAL CMD DATA WORD 3	MEC 1	HEX CODE	0000 TO FFFF
CRIT_CMD1(4)		MEC 1 CRITICAL CMD DATA WORD 4	MEC 1	HEX CODE	0000 TO FFFF
CRIT_CMD2(1)		MEC 2 CRITICAL CMD DATA WORD 1	MEC 2	HEX CODE	0000 TO FFFF
CRIT_CMD2(2)		MEC 2 CRITICAL CMD DATA WORD 2	MEC 2	HEX CODE	0000 TO FFFF
CRIT_CMD2(3)		MEC 2 CRITICAL CMD DATA WORD 3	MEC 2	HEX CODE	0000 TO FFFF
CRIT_CMD2(4)		MEC 2 CRITICAL CMD DATA WORD 4	MEC 2	HEX CODE	0000 TO FFFF
NCRIT_SET(1)		MEC 1 NONCRITICAL SET DATA WORD	MEC 1	HEX CODE	0000 TO FFFF
NCRIT_SET(2)		MEC 2 NONCRITICAL SET DATA WORD	MEC 2	HEX CODE	0000 TO FFFF
NCRIT_RST(1)		MEC 1 NONCRITICAL RESET DATA WORD	MEC 1	HEX CODE	0000 TO FFFF
NCRIT_RST(2)		MEC 2 NONCRITICAL RESET DATA WORD	MEC 2	HEX CODE	0000 TO FFFF
MASTER_RESET(1)	V76K7098B	MEC 1 MASTER RESET (1=ACTIVATE)	MEC 1	DISCRETE	0,1
MASTER_RESET(2)	V76K7198B	MEC 2 MASTER RESET (1=ACTIVATE)	MEC 2	DISCRETE	0,1

THIS PAGE INTENTIONALLY LEFT BLANK

TABLE 4.8.1.4–1. MASTER EVENTS CONTROLLER(MEC) SOP (G4.228) INPUT/OUTPUT FUNCTIONAL PARAMETERS

DBFN: D3B027-F PN: VP707100049P00L INPUT FUNCTIONAL PARAMETERS FOR MEC SOP

FSSR NAME	M/S ID	NOMENCLATURE	SOURCE	UNITS	DATA TYPE	PREC	LAST CRS
ATVC_IVD_PWR	V90X8338XA	ATVC SRB IVD PWR ON FLAG	SRB SEP SEQ				89456A
ATVC_IVD_PWR	V90X8338XB	ATVC SRB IVD PWR ON FLAG	ET SEP SEQ				89456A
ATVC_26V_DDFACE	V90X8339XA	ATVC SRB 26V AC DEADFACE FLAG	SRB SEP SEQ				89456A
ET_DFI_PWR	V90X8255X	ET DFI PWR ON FLAG	ET SEP SEQ				89456A
ET_SEP_ARM	V90X8265X	ET/ORB STR SEPN PICS ARM FLAG	ET SEP SEQ				89456A
ET_SEP_FIRE1	V90X8244X	ET/ORB STR SEPN FIRE 1 FLAG	ET SEP SEQ				89456A
ET_SEP_FIRE2/3	V90X8241X	ET/ORB STR SEPN FIRE 2/3 FLAG	ET SEP SEQ				89456A
ET_TMBL_ARM	V90X8251X	ET TUMBLE SYS ARM FLAG	ET SEP SEQ				89456A
ET_TMBL_FIRE	V90X8252X	ET TUMBLE SYS FIRE FLAG	ET SEP SEQ				89456A
ET_UMB_RETR_CMD 1	V90X8263X	ET/UMB RETRACT FIRE 1 FLAG	ET SEP SEQ				89456A
ET_UMB_RETR_CMD2/3	V90X8243X	ET/UMB RETRACT FIRE 2/3 FLAG	ET SEP SEQ				89456A
ET_UMB_UNLCH FIRE1	V90X8256X	ET/UMB UNLATCH FIRE 1 FLAG	ET SEP SEQ				89456A
ET_UMB_UNLCH FIRE2/3	V90X8242X	ET/UMB UNLATCH FIRE 2/3 FLAG	ET SEP SEQ				89456A
ET_UMB_UNLCH_ARM	V90X8247X	ET/UMB UNLATCH PICS ARM FLAG	ET SEP SEQ				89456A
M_RSET_USER	V90X8258XA	MEC 1&2 MASTER RESET FLAG	ET SEP SEQ				89456A
M_RSET_USER	V90X8258XB	MEC 1&2 MASTER RESET FLAG	SRB SEP SEQ				89456A
M_RSET_USER	V90X8258XC	MEC 1&2 MASTER RESET FLAG	R/S LCH SEQ				89456A
SRB_PWR_ON	V90X8343X	SRB POWER ON	ET SEP SEQ				89456A
SRB_RSS_OFF	V90X8336X	SRB RSS PWR OFF FLAG	SRB SEP SEQ				89456A
SRB_RSS_SAFE	V90X8337X	SRB RSS SAFE FLAG	SRB SEP SEQ				89456A
SRB_SEP_ARM	V90X8335X	SRB SEP PICS ARM FLAG	SRB SEP SEQ				89456A
SRB_SEP_FIRE1	V90X8341X	SRB SEP FIRE 1 FLAG	SRB SEP SEQ				89456A
SRB_SEP_FIRE2/3	V90X8354X	SRB SEP FIRE 2/3 FLAG	SRB SEP SEQ				89456A
SRM_IGN_ARM	V90X8404X	SRM IGN ARM FLAG	R/S LCH SEQ				89456A
SRM_IGN_FIRE1	V90X8405X	SRM IGN FIRE 1 FLAG	R/S LCH SEQ				89456A
SRM_IGN_FIRE2/3	V90X8699X	SRM IGN FIRE 2/3 FLAG	R/S LCH SEQ		BD		89456A
TO_UMB_ARM	V90X8407X	T-0 UMB RELEASE ARM FLAG	R/S LCH SEQ				89456A
TO_UMB_FIRE 2/3	V90X8698X	T-0 UMB RELEASE FIRE 2/3 FLAG	R/S LCH SEQ				89599C
							89456A
TO_UMB_FIRE1	V90X8408X	T-0 UMB RELEASE FIRE 1 FLAG	R/S LCH SEQ				89456A

TABLE 4.8.1.4–1. MASTER EVENTS CONTROLLER(MEC) SOP (G4.228) INPUT/OUTPUT FUNCTIONAL PARAMETERS

DBFN: D3B027-F PN: VP707100049P00L OUTPUT FUNCTIONAL PARAMETERS FROM MEC SOP

FSSR NAME	M/S ID	NOMENCLATURE	DESTINATION	UNITS	DATA TYPE	PREC	LAST CRS
ATVC_DDFC(1)	V76K7515B	MEC 1 ATVC 2 SRB 26V DEADFACE CMD	MEC 1		BMD		
ATVC_DDFC(2)	V76K7516B	MEC 1 ATVC 4 SRB 26V DEADFACE CMD	MEC 1		BMD		
ATVC_DDFC(3)	V76K7615B	MEC 2 ATVC 1 SRB 26V DEADFACE CMD	MEC 2		BMD		
ATVC_DDFC(4)	V76K7616B	MEC 2 ATVC 3 SRB 26V DEADFACE CMD	MEC 2		BMD		
ATVC_SRB_PWR(1)	V76K7013B	MEC 1 ATVC 2 SRB IVD A PWR ON CMD	MEC 1		BD		
ATVC_SRB_PWR(2)	V76K7014B	MEC 1 ATVC 4 SRB IVD B PWR ON CMD	MEC 1		BD		
ATVC_SRB_PWR(3)	V76K7114B	MEC 2 ATVC 3 SRB IVD B PWR ON CMD	MEC 2		BD		
ATVC_SRB_PWR(4)	V76K7113B	MEC 2 ATVC 1 SRB IVD C PWR ON CMD	MEC 2		BD		
ET_UMB_RETR_CMD1(1)	V76K4655B	MEC 1 ET/UMB RETR CMD 1	MEC 1		BMD		
ET_UMB_RETR_CMD1(2)	V76K4659B	MEC 2 ET/UMB RETR CMD 1	MEC 2		BMD		
ET_UMB_RETR_CMD2(1)	V76K4656B	MEC 1 ET/UMB RETR CMD 2	MEC 1		BMD		
ET_UMB_RETR_CMD2(2)	V76K4660B	MEC 2 ET/UMB RETR CMD 2	MEC 2		BMD		
ET_UMB_RETR_CMD3(1)	V76K4657B	MEC 1 ET/UMB RETR FIRE 3 CMD	MEC 1		BD		
ET_UMB_RETR_CMD3(2)	V76K4661B	MEC 2 ET/UMB RETR FIRE 3 CMD	MEC 2		BD		
ET_UMB_UNLCH_ARM(1)	V76K4617B	MEC 1 ET/UMB UNLATCH ARM CMD	MEC 1		BMD		
ET_UMB_UNLCH_ARM(2)	V76K4618B	MEC 2 ET/UMB UNLATCH ARM CMD	MEC 2		BMD		
ET_UMB_UNLCH_FIRE1(1)	V76K4619B	MEC 1 ET/UMB UNLATCH FIRE 1 CMD	MEC 1		BMD		
ET_UMB_UNLCH_FIRE1(2)	V76K4620B	MEC 2 ET/UMB UNLATCH FIRE 1 CMD	MEC 2		BMD		
ET_UMB_UNLCH_FIRE2(1)	V76K4623B	MEC 1 ET/UMB UNLATCH FIRE 2 CMD	MEC 1		BMD		
ET_UMB_UNLCH_FIRE2(2)	V76K4624B	MEC 2 ET/UMB UNLATCH FIRE 2 CMD	MEC 2		BMD		
ET_UMB_UNLCH_FIRE3(1)	V76K4625B	MEC 1 ET/UMB UNLATCH FIRE 3 CMD	MEC 1		BD		
ET_UMB_UNLCH_FIRE3(2)	V76K4626B	MEC 2 ET/UMB UNLATCH FIRE 3 CMD	MEC 2		BD		
MASTER_RESET(1)	V76K7098B	MEC 1 MASTER RESET	MEC 1		BMD		
MASTER_RESET(2)	V76K7198B	MEC 2 MASTER RESET	MEC 2		BMD		
RSS_SRB_OFF(1)	V76K7006B	MEC 1 RSS L SRB PWR OFF CMD	MEC 1		BD		
RSS_SRB_OFF(2)	V76K7007B	MEC 1 RSS R SRB PWR OFF CMD	MEC 1		BD		
RSS_SRB_OFF(3)	V76K7106B	MEC 2 RSS L SRB PWR OFF CMD	MEC 2		BD		
RSS_SRB_OFF(4)	V76K7107B	MEC 2 RSS R SRB PWR OFF CMD	MEC 2		BD		
RSS_SRB_SAFE1(1)	V76K7508B	MEC 1 L SRB RSS SAFE 1 CMD	MEC 1		BMD		89598A
RSS_SRB_SAFE1(2)	V76K7608B	MEC 2 R SRB RSS SAFE 1 CMD	MEC 2		BMD		89598A
RSS_SRB_SAFE2(1)	V76K7509B	MEC 1 R SRB RSS SAFE 2 CMD	MEC 1		BMD		89456A
RSS_SRB_SAFE2(2)	V76K7609B	MEC 2 L SRB RSS SAFE 2 CMD	MEC 2		BMD		89456A
SEP_ET_ARM(1)	V76K6909B	MEC 1 ET/ORB STR SEPN ARM CMD	MEC 1		BMD		
SEP_ET_ARM(2)	V76K6911B	MEC 2 ET/ORB STR SEPN ARM CMD	MEC 2		BMD		
SEP_ET_FIRE1(1)	V76K6913B	MEC 1 ET/ORB STR SEPN FIRE 1 CMD	MEC 1		BMD		
SEP_ET_FIRE1(2)	V76K6915B	MEC 2 ET/ORB STR SEPN FIRE 1 CMD	MEC 2		BMD		
SEP_ET_FIRE2(1)	V76K6914B	MEC 1 ET/ORB STR SEPN FIRE 2 CMD	MEC 1		BMD		
SEP_ET_FIRE2(2)	V76K6916B	MEC 2 ET/ORB STR SEPN FIRE 2 CMD	MEC 2		BMD		
SEP_ET_FIRE3(1)	V76K6921B	MEC 1 ET/ORB STR SEPN FIRE 3 CMD	MEC 1		BD		
SEP_ET_FIRE3(2)	V76K6922B	MEC 2 ET/ORB STR SEPN FIRE 3 CMD	MEC 2		BD		
SRB_ARM(1)	V76K6956B	MEC 1 SRB SEPN ARM CMD	MEC 1		BMD		
SRB_FIRE1(1)	V76K6958B	MEC 1 SRB SEPN FIRE 1 CMD	MEC 1		BMD		
SRB_FIRE1(2)	V76K6968B	MEC 2 SRB SEP FIRE 1 & RCVY PWR ON	MEC 2		BMD		89456A

TABLE 4.8.1.4–1. MASTER EVENTS CONTROLLER(MEC) SOP (G4.228) INPUT/OUTPUT FUNCTIONAL PARAMETERS

DBFN: D3B027-F PN: VP707100049P00L OUTPUT FUNCTIONAL PARAMETERS FROM MEC SOP

FSSR NAME	M/S ID	NOMENCLATURE	DESTINATION	UNITS	DATA TYPE	PREC	LAST CRS
SRB_FIRE2(1)	V76K6959B	MEC 1 SRB SEPN FIRE 2 CMD	MEC 1		BMD		
SRB_FIRE2(2)	V76K6969B	MEC 2 SRB SEP FIRE 2 & RCVY ARM	MEC 2		BMD		89456A
SRB_FIRE3(1)	V76K6960B	MEC 1 SRB SEPN FIRE 3 CMD	MEC 1		BD		89456A
SRB_FIRE3(2)	V76K6970B	MEC 2 SRB SEPN FIRE 3 CMD	MEC 2		BD		89456A
SRB_PWR(1)	V76K7002B	MEC 1 L SRB PWR A CMD	MEC 1		BD		
SRB_PWR(2)	V76K7003B	MEC 1 R SRB PWR A CMD	MEC 1		BD		
SRB_PWR(3)	V76K7102B	MEC 2 L SRB PWR B CMD	MEC 2		BD		
SRB_PWR(4)	V76K7103B	MEC 2 R SRB PWR B CMD	MEC 2		BD		
SRB_PWR(5)	V76K7011B	MEC 1 L SRB PWR C CMD	MEC 1		BD		
SRB_PWR(6)	V76K7012B	MEC 1 R SRB PWR C CMD	MEC 1		BD		
SRB_PWR(7)	V76K7111B	MEC 2 L SRB PWR C CMD	MEC 2		BD		89456A
SRB_PWR(8)	V76K7112B	MEC 2 R SRB PWR C CMD	MEC 2		BD		89456A
SRM_ARM(1)	V76K6951B	MEC 1 SRM IGN ARM CMD	MEC 1		BMD		
SRM_ARM(2)	V76K6961B	MEC 2 SRM IGN ARM CMD	MEC 2		BMD		
SRM_ARM(2)	V76K6966B	MEC 2 SRB SEPN ARM CMD	MEC 2		BMD		
SRM_FIRE1(1)	V76K6953B	MEC 1 SRM IGN FIRE 1 CMD	MEC 1		BMD		
SRM_FIRE1(2)	V76K6963B	MEC 2 SRM IGN FIRE 1 CMD	MEC 2		BMD		
SRM_FIRE2(1)	V76K6954B	MEC 1 SRM IGN FIRE 2 CMD	MEC 1		BMD		
SRM_FIRE2(2)	V76K6964B	MEC 2 SRM IGN FIRE 2 CMD	MEC 2		BMD		
SRM_FIRE3(1)	V76K6955B	MEC 1 SRM IGN FIRE 3 CMD	MEC 1		BD		
SRM_FIRE3(2)	V76K6965B	MEC 2 SRM IGN FIRE 3 CMD	MEC 2		BD		
TMBLSYS_ARM(1)	V76K7504B	MEC 1 ET TUMBLE SYSTEM ARM CMD	MEC 1		BMD		
TMBLSYS_ARM(2)	V76K7604B	MEC 2 ET TUMBLE SYSTEM FIRE CMD	MEC 2		BMD		
TMBLSYS_FIRE(1)	V76K7605B	MEC 2 ET TUMBLE SYSTEM FIRE CMD	MEC 2		BMD		
TMBLSYS_FIRE(2)	V76K7505B	MEC 1 ET TUMBLE SYSTEM FIRE CMD	MEC 1		BMD		
UMB_FIRE1(1)	V76K4610B	MEC 1 L T-0 UMB RELEASE FIRE 1 CMD	MEC 1		BMD		
UMB_FIRE1(2)	V76K4614B	MEC 2 R T-0 UMB RELEASE FIRE 1 CMD	MEC 2		BMD		
UMB_FIRE2(1)	V76K4611B	MEC 1 L T-0 UMB RELEASE FIRE 2 CMD	MEC 1		BMD		
UMB_FIRE2(2)	V76K4615B	MEC 2 R T-0 UMB RELEASE FIRE 2 CMD	MEC 2		BMD		
UMB_FIRE3(1)	V76K4612B	MEC 1 L T-0 UMB RELEASE FIRE 3 CMD	MEC 1		BD		
UMB_FIRE3(2)	V76K4616B	MEC 2 R T-0 UMB RELEASE FIRE 3 CMD	MEC 2		BD		
UMB_RLS_ARM(1)	V76K4609B	MEC 1 L T-0 UMB RELEASE ARM CMD	MEC 1		BMD		
UMB_RLS_ARM(2)	V76K4613B	MEC 2 R T-0 UMB RELEASE ARM CMD	MEC 2		BMD		

TABLE 4.8.1.4–2. MASTER EVENTS CONTROLLER(MEC) SOP (G4.228) I–LOADS

DBFN:0484

FSSR NAME	MSID	ENG UNIT	DT	PR	D	S	PR	FCTN	CAT

NO REQUIREMENTS

TABLE 4.8.1.4–3. MASTER EVENTS CONTROLLER(MEC) SOP (G4.228) K–LOADS

DBFN:0558

FSSR NAME DESCRIPTION	MSID	MC KLOAD VALUE	ENG UNIT	DT PR S PR FCTN	LAST CR EQTN MSID
NO REQUIREMENTS					

TABLE 4.8.1.4–4. MASTER EVENTS CONTROLLER(MEC) SOP (G4.228) CONSTANTS

DBFN:0558

FSSR NAME DESCRIPTION	MSID	MC	CONSTANT VALUE	ENG UNIT	DT	PR	S	PR FCTN	LAST CR

NO REQUIREMENTS

4.8.2 Space Shuttle Main Engine SOP (4.181)

4.8.2.1 Introduction

The SSME SOP performs the function of interfacing the user functions with the SSME controller through the engine interface unit (EIU). The SSME SOP becomes active upon entry into OPS 1 and continues as the interface until completion of the propellant dumps after ET separation.

Table 4.8.2–1 SSME SOP Command Processing

Input Command	Output Command			
	CMD			BCH
K_CMD = 65%	ME1_THRUST_LEVEL	=	043400	132124
	ME2_THRUST_LEVEL	=	043400	132124
	ME3_THRUST_LEVEL	=	043400	132124
K_CMD = 66%	ME1_THRUST_LEVEL	=	044000	057330
	ME2_THRUST_LEVEL	=	044000	057330
	ME3_THRUST_LEVEL	=	044000	057330
K_CMD = 67%	ME1_THRUST_LEVEL	=	044400	046014
	ME2_THRUST_LEVEL	=	044400	046014
	ME3_THRUST_LEVEL	=	044400	046014
K_CMD = 68%	ME1_THRUST_LEVEL	=	045000	075560
	ME2_THRUST_LEVEL	=	045000	075560
	ME3_THRUST_LEVEL	=	045000	075560
K_CMD = 69%	ME1_THRUST_LEVEL	=	045400	064644
	ME2_THRUST_LEVEL	=	045400	064644
	ME3_THRUST_LEVEL	=	045400	064644
K_CMD = 70%	ME1_THRUST_LEVEL	=	046000	012610
	ME2_THRUST_LEVEL	=	046000	012610
	ME3_THRUST_LEVEL	=	046000	012610
K_CMD = 71%	ME1_THRUST_LEVEL	=	046400	003534
	ME2_THRUST_LEVEL	=	046400	003534
	ME3_THRUST_LEVEL	=	046400	003534
K_CMD = 72%	ME1_THRUST_LEVEL	=	047000	030040
	ME2_THRUST_LEVEL	=	047000	030040
	ME3_THRUST_LEVEL	=	047000	030040
K_CMD = 73%	ME1_THRUST_LEVEL	=	047400	021364
	ME2_THRUST_LEVEL	=	047400	021364
	ME3_THRUST_LEVEL	=	047400	021364
K_CMD = 74%	ME1_THRUST_LEVEL	=	050000	175146
	ME2_THRUST_LEVEL	=	050000	175146
	ME3_THRUST_LEVEL	=	050000	175146

Table 4.8.2–1 SSME SOP Command Processing

Input Command	Output Command			
	CMD			BCH
K_CMD = 75%	ME1_THRUST_LEVEL	=	050400	164262
	ME2_THRUST_LEVEL	=	050400	164262
	ME3_THRUST_LEVEL	=	050400	164262
K_CMD = 76%	ME1_THRUST_LEVEL	=	051000	157716
	ME2_THRUST_LEVEL	=	051000	157716
	ME3_THRUST_LEVEL	=	051000	157716
K_CMD = 77%	ME1_THRUST_LEVEL	=	051400	146432
	ME2_THRUST_LEVEL	=	051400	146432
	ME3_THRUST_LEVEL	=	051400	146432
K_CMD = 78%	ME1_THRUST_LEVEL	=	052000	130466
	ME2_THRUST_LEVEL	=	052000	130466
	ME3_THRUST_LEVEL	=	052000	130466
K_CMD = 79%	ME1_THRUST_LEVEL	=	052400	121742
	ME2_THRUST_LEVEL	=	052400	121742
	ME3_THRUST_LEVEL	=	052400	121742
K_CMD = 80%	ME1_THRUST_LEVEL	=	053000	112236
	ME2_THRUST_LEVEL	=	053000	112236
	ME3_THRUST_LEVEL	=	053000	112236
K_CMD = 81%	ME1_THRUST_LEVEL	=	053400	103112
	ME2_THRUST_LEVEL	=	053400	103112
	ME3_THRUST_LEVEL	=	053400	103112
K_CMD = 82%	ME1_THRUST_LEVEL	=	054000	066306
	ME2_THRUST_LEVEL	=	054000	066306
	ME3_THRUST_–LEVEL	=	054000	066306
K_CMD = 83%	ME1_THRUST_LEVEL	=	054400	077022
	ME2_THRUST_LEVEL	=	054400	077022
	ME3_THRUST_LEVEL	=	054400	077022
K_CMD = 84%	ME1_THRUST_LEVEL	=	055000	044556
	ME2_THRUST_LEVEL	=	055000	044556
	ME3_THRUST_LEVEL	=	055000	044556

Table 4.8.2–1 SSME SOP Command Processing

Input Command	Output Command			
	CMD			BCH
K_CMD = 85%	ME1_THRUST_LEVEL	=	055400	055672
	ME2_THRUST_LEVEL	=	055400	055672
	ME3_THRUST_LEVEL	=	055400	055672
K_CMD = 86%	ME1_THRUST_LEVEL	=	056000	023626
	ME2_THRUST_LEVEL	=	056000	023626
	ME3_THRUST_LEVEL	=	056000	023626
K_CMD = 87%	ME1_THRUST_LEVEL	=	056400	032502
	ME2_THRUST_LEVEL	=	056400	032502
	ME3_THRUST_LEVEL	=	056400	032502
K_CMD = 88%	ME1_THRUST_LEVEL	=	057000	001076
	ME2_THRUST_LEVEL	=	057000	001076
	ME3_THRUST_LEVEL	=	057000	001076
K_CMD = 89%	ME1_THRUST_LEVEL	=	057400	010352
	ME2_THRUST_LEVEL	=	057400	010352
	ME3_THRUST_LEVEL	=	057400	010352
K_CMD = 90%	ME1_THRUST_LEVEL	=	060000	126104
	ME2_THRUST_LEVEL	=	060000	126104
	ME3_THRUST_LEVEL	=	060000	126104
K_CMD = 91%	ME1_THRUST_LEVEL	=	060400	137220
	ME2_THRUST_LEVEL	=	060400	137220
	ME3_THRUST_LEVEL	=	060400	137220
K_CMD = 92%	ME1_THRUST_LEVEL	=	061000	104754
	ME2_THRUST_LEVEL	=	061000	104754
	ME3_THRUST_LEVEL	=	061000	104754
K_CMD = 93%	ME1_THRUST_LEVEL	=	061400	115470
	ME2_THRUST_LEVEL	=	061400	115470
	ME3_THRUST_LEVEL	=	061400	115470
K_CMD = 94%	ME1_THRUST_LEVEL	=	062000	163424
	ME2_THRUST_LEVEL	=	062000	163424
	ME3_THRUST_LEVEL	=	062000	163424

Table 4.8.2–1 SSME SOP Command Processing

Input Command	Output Command			
	CMD			BCH
K_CMD = 95%	ME1_THRUST_LEVEL	=	062400	172700
	ME2_THRUST_LEVEL	=	062400	172700
	ME3_THRUST_LEVEL	=	062400	172700
K_CMD = 96%	ME1_THRUST_LEVEL	=	063000	141274
	ME2_THRUST_LEVEL	=	063000	141274
	ME3_THRUST_LEVEL	=	063000	141274
K_CMD = 97%	ME1_THRUST_LEVEL	=	063400	150150
	ME2_THRUST_LEVEL	=	063400	150150
	ME3_THRUST_LEVEL	=	063400	150150
K_CMD = 98%	ME1_THRUST_LEVEL	=	064000	035344
	ME2_THRUST_LEVEL	=	064000	035344
	ME3_THRUST_LEVEL	=	064000	035344
K_CMD = 99%	ME1_THRUST_LEVEL	=	064400	024060
	ME2_THRUST_LEVEL	=	064400	024060
	ME3_THRUST_LEVEL	=	064400	024060
K_CMD = 100%	ME1_THRUST_LEVEL	=	065000	017514
	ME2_THRUST_LEVEL	=	065000	017514
	ME3_THRUST_LEVEL	=	065000	017514
K_CMD = 101%	ME1_THRUST_LEVEL	=	065400	006630
	ME2_THRUST_LEVEL	=	065400	006630
	ME3_THRUST_LEVEL	=	065400	006630
K_CMD = 102%	ME1_THRUST_LEVEL	=	066000	070664
	ME2_THRUST_LEVEL	=	066000	070664
	ME3_THRUST_LEVEL	=	066000	070664
K_CMD = 103%	ME1_THRUST_LEVEL	=	066400	061540
	ME2_THRUST_LEVEL	=	066400	061540
	ME3_THRUST_LEVEL	=	066400	061540
K_CMD = 104%	ME1_THRUST_LEVEL	=	067000	052034
	ME2_THRUST_LEVEL	=	067000	052034
	ME3_THRUST_LEVEL	=	067000	052034

Table 4.8.2–1 SSME SOP Command Processing

Input Command	Output Command			
	CMD			BCH
K_CMD = 105%	ME1_THRUST_LEVEL	=	067400	043310
	ME2_THRUST_LEVEL	=	067400	043310
	ME3_THRUST_LEVEL	=	067400	043310
K_CMD = 106%	ME1_THRUST_LEVEL	=	070000	117132
	ME2_THRUST_LEVEL	=	070000	117132
	ME3_THRUST_LEVEL	=	070000	117132
K_CMD = 107%	ME1_THRUST_LEVEL	=	070400	106216
	ME2_THRUST_LEVEL	=	070400	106216
	ME3_THRUST_LEVEL	=	070400	106216
K_CMD = 108%	ME1_THRUST_LEVEL	=	071000	135762
	ME2_THRUST_LEVEL	=	071000	135762
	ME3_THRUST_LEVEL	=	071000	135762
K_CMD = 109%	ME1_THRUST_LEVEL	=	071400	124446
	ME2_THRUST_LEVEL	=	071400	124446
	ME3_THRUST_LEVEL	=	071400	124446
MPS INH(1) = 1	ME1_INH_LIM_CNTL	=	104000	014416
MPS INH(2) = 1	ME2_INH_LIM_CNTL	=	104000	014416
MPS INH(3) = 1	ME3_INH_LIM_CNTL	=	104000	014416
MPS ENA(1) = 1	ME1_ENA_LIM_CNTL	=	104400	005732
MPS ENA(2) = 1	ME2_ENA_LIM_CNTL	=	104400	005732
MPS ENA(3) = 1	ME3_ENA_LIM_CNTL	=	104400	005732
MESTRTENA = 1	ME1_ST_ENA_CMD	=	107400	062442
MESTRTENA = 1	ME2_ST_ENA_CMD	=	107400	062442
MPSTRTENA = 1	ME3_ST_ENA_CMD	=	107400	062442
MESTRTCMD(1) = 1	ME1_ST_CMD	=	100400	116572
MESTRTCMD(2) = 1	ME2_ST_CMD	=	100400	116572
MPSTRTCMD(3) = 1	ME3_ST_CMD	=	100400	116572
MESHDNENA(1) = 1	ME1_SHTDN_ENA_CMD	=	105000	036246
MESHDNENA(2) = 1	ME2_SHTDN_ENA_CMD	=	105000	036246
MESHDNENA(3) = 1	ME3_SHTDN_ENA_CMD	=	105000	036246

Table 4.8.2–1 SSME SOP Command Processing

Input Command	Output Command			
	CMD			BCH
MESHDNCMD(1) = 1	ME1_SHTDN_CMD	=	116000	060100
MESHDNCMD(2) = 1	ME2_SHTDN_CMD	=	116000	060100
MESHDNCMD(3) = 1	ME3_SHTDN_CMD	=	116000	060100
MPS_L02_DUMP_START = 1	ME1_L02_DUMP	=	110400	127544
	ME2_L02_DUMP	=	110400	127544
	ME3_L02_DUMP	=	110400	127544
MPS_LH2_DUMP_START = 1	ME1_LH2_DUMP	=	111000	114030
	ME2_LH2_DUMP	=	111000	114030
	ME3_LH2_DUMP	=	111000	114030
MPS_LO2_DUMP_STOP = 1	ME1_TERM_SEQ	=	110000	136660
	ME2_TERM_SEQ	=	110000	136660
	ME3_TERM_SEQ	=	110000	136660
MPS_LH2_DUMP_STOP = 1	MEl_TERM_SEQ	=	110000	136660
	ME2_TERM_SEQ	=	110000	136660
	ME3_TERM_SEQ	=	110000	136660
ME_DCU_SW 1	ME1_DCU_SW	=	115400	016154
ME_DCU_SW 2	ME2_DCU_SW	=	115400	016154
ME_DCU_SW 3	ME3_DCU_SW	=	115400	016154

4.8.2.2 Overview

The SSME SOP principal function is to perform the following:

a. Monitoring of the engine status indications, data–path fail indicators and command path fail indications, and major component fail from the three EIU's for user functions and dedicated displays

b. Processing of the engine start enable, start, DCU switchover, shutdown enable, shutdown, dump, throttle, and limit control commands from the user functions to the three EIU's

c. Processing of the engine shutdown commands and shutdown phase indications for user functions

The SSME SOP principal function will be processed at the 25–Hz rate during Major Modes 101, 102, 103, 104, 601, and 602. The interfaces are indicated on the functional block diagram in Figure 4.181. The input and output parameters are shown in Table 4.8.2–1.

The engine data monitoring will be performed prior to redundant set launch sequence and SSME OPS.

Table 4.8.2–2 GPC Engine Status Word

BIT 0 LOAD STATUS

1	IN MEMORY LOAD CONDITION
0	NOT IN MEMORY LOAD CONDITION

BIT 1, 2 COMMAND STATUS

00	NO NEW COMMAND SINCE LAST STATUS/ RECORDER CHANNEL TRANSMISSION
01	COMMAND REJECTED (NOT VALIDATED BY BCH OR VOTING)
10	COMMAND REJECTED (INCOMPATIBLE WITH CURRENT OPERATING MODE OR NOT IN TABLE OF COMMANDS)
11	COMMAND ACCEPTED

BIT 3, 4, 5 CHANNEL STATUS

000	ALL CHANNELS OK
001	MESSAGE ERROR, CHANNEL 1
010	MESSAGE ERROR, CHANNEL 2
011	MESSAGE ERROR, CHANNELS 1 & 2
100	MESSAGE ERROR, CHANNEL 3
101	MESSAGE ERROR, CHANNELS 1 & 3
110	MESSAGE ERROR, CHANNELS 2 & 3
111	MESSAGE ERROR, CHANNEL 1, 2, & 3

BIT 6 FRT STATUS

0	NORMAL OPERATION
1	FRT

BIT 7 LIMIT CONTROL

0	INHIBIT
1	ENABLE

BIT 8, 9, 10, 11, 12, 13 PHASE/MODE

000000	NOT USED
000001	NOT USED
000010	NOT USED
000011	NOT USED
000100	NOT USED
000101	NOT USED
000110	NOT USED
000111	NOT USED
001000	NOT USED
001001	GROUND CHECKOUT/STANDBY
001010	GROUND CHECKOUT/SPARE
001011	GROUND CHECKOUT/SPARE
001100	GROUND CHECKOUT/COMPONENT CHECKOUT
001101	GROUND CHECKOUT/SPARE
001110	GROUND CHECKOUT/SPARE
001111	GROUND CHECKOUT/SPARE
010000	NOT USED
010001	START PREP/PURGE SEQ NO. 1
010010	START PREP/PURGE SEQ NO. 2

BIT 8, 9, 10, 11, 12, 13 PHASE/MODE (Cont)

010011	START PREP/PURGE SEQ NO. 3
010100	START PREP/PURGE SEQ NO. 4
010101	START PREP/SPARE
010110	START PREP/ENGINE READY
010111	START PREP/SPARE
011000	NOT USED
011001	START/START INITIATION
011010	START/MCP BUILDUP
011011	START/ELECTRONIC LOCKUP
011100	START/HYDRAULIC LOCKUP
011101	START/SPARE
011110	START/SPARE
011111	START/SPARE
100000	NOT USED
100001	MAINSTAGE/NORMAL CONTROL
100010	MAINSTAGE/SPARE
100011	MAINSTAGE/ELECTRONIC LOCKUP
100100	MAINSTAGE/HYDRAULIC LOCKUP
100101	MAINSTAGE/SPARE
100110	MAINSTAGE/SPARE
100111	MAINSTAGE/SPARE
101000	NOT USED
101001	SHUTDOWN/THROTTLE TO MPL
101010	SHUTDOWN/MLP TO ZERO MCP
101011	SHUTDOWN/PROP. VALVES CLOSED
101100	SHUTDOWN/FAIL SAFE PNEUMATIC
101101	SHUTDOWN SPARE
101110	SHUTDOWN SPARE
101111	SHUTDOWN SPARE
110000	NOT USED
110001	POST–SHUTDOWN/STANDBY
110010	POST–SHUTDOWN/OXIDIZER DUMP
110011	POST–SHUTDOWN/FUEL DUMP
110100	POST–SHUTDOWN/SPARE
110101	POST–SHUTDOWN/SPARE
110110	POST–SHUTDOWN/SPARE
110111	POST–SHUTDOWN/TERMINATE SEQ
111000	NOT USED
111001	SPARE
111010	SPARE
111011	SPARE
111100	SPARE
111101	SPARE
111110	SPARE
111111	SPARE

BIT 14, 15 SELF–TEST STATUS

00	NOT USED
01	ENGINE OK
10	MAJOR COMPONENT FAILED
11	ENGINE LIMIT EXCEEDED

4.8.2.3 Detail Requirements

4.8.2.3.1 Recycle Processing

The SSME SOP will monitor the SSME SOP RECYCLE FLAG from the RS launch sequence to determine when to reinitialize the SOP.

Monitor the following:

(a) SSME SOP RECYCLE FLAG — V90X8668X

If the SSME SOP RECYCLE FLAG = 1, then terminate the following:

(1) ME–1 CHANNEL FAIL FLAG — V95X1236X
(2) ME–2 CHANNEL FAIL FLAG — V95X1237X
(3) ME–3 CHANNEL FAIL FLAG — V95X1238X

and perform the following function:

(4) Reinitialize the SSME SOP internal flags and counters.

4.8.2.3.2 Commfault Processing

On each cycle, prior to performing the main engine status data processing of paragraph 4.8.2.3.3, the following test shall be performed:

Monitor the following signals:

(a) EIU 1/P1 Data Status (HFE input) — V91X3009X
(b) EIU 1/P4 Data Status (HFE input) — V91X2852X
(c) EIU 2/P1 Data Status (HFE input) — V91X3012X
(d) EIU 2/P4 Data Status (HFE input) — V91X2856X
(e) EIU 3/P1 Data Status (HFE input) — V91X3015X
(f) EIU 3/P4 Data Status (HFE input) — V91X2860X

For each signal path indicating a commfault, the last previous noncommfaulted input will be used for any further processing.

4.8.2.3.3 Main Engine Status Data Processing.

The SSME SOP will monitor and process the following status data from the three EIU's:

1. Main engine data identification words and main engine time reference word for data–path fail indications

2. Main engine status word data for command–path fail indications, channel fail indications, limit control status, phase and mode indications, and self–test status

3. Main engine chamber pressure data for percent of chamber pressure

Table 4.8.2–2 provides the general engine status word format and binary code indications. The processing of the main engine status data will be provided in the following subsections. The SSME SOP will

monitor both the primary and secondary data channels from each EIU. The data–path failure processing function will determine which data channel will be processed during a minor cycle (Section 4.8.2.3.4). Once a channel is selected, the SSME SOP will process the engine status data (Subsections 4.8.2.3.5 and 4.8.2.3.6) and chamber pressure (Subsection 4.8.2.3.7) from the selected data channel only.

4.8.2.3.4 Data–Path Failure Processing.

The SSME SOP will monitor both the primary and secondary data channels from each EIU. The main engine identification and time reference words for each data channel will be processed to determine which data set (if either) will be processed during that processing cycle. These same data words will be processed to generate PAD DATA–PATH FAIL, DCU–SW, and FLIGHT DATA PATH FAIL indications for each EIU as follows:

1. Engine data identification words (data words 1 and 2) are 16–bit complements. These data words will be exclusively "OR'd" together to generate a miscompare indication as follows:

   a. If A + B = 16 bits binary "1," then DATA_ID = 0 (no miscompare)

   b. if A + B ≠ 16 bits binary "1," then DATA_ID = 1 (miscompare)

   where

   A = Identification word 1

   B = Identification word 2

   DATA ID = Identification miscompare identification

2. Engine time reference data word will be compared with the previous time reference to generate an update fail indication as follows:

   a. If TIME_REF ≠ P_TIME_REF, then DATA_TIME = 0 (update data)

   b. If TIME_REF = P_TIME_REF, then DATA_TIME = 1 (old data)

   where

   TIME_REF = Current time reference data

   P_TIME_REF = Previous cycle time reference data

   DATA_TIME = Time data update fail indication

The SSME SOP will process on a single engine basis the channel identification and time reference data words. The primary channel will be processed as follows:

1. If DATA_ID_P and DATA_TIME_P = 0, then P_FAIL = 0 (primary channel good)
2. If DATA_ID_P or DATA_TIME_P = 1, then P_FAIL = 1 (primary channel failed)

   where

   DATA_ID_P = Primary channel data identification miscompare

DATA_TIME_P = Primary channel time data update fail

P_FAIL = Primary channel failure

If P_FAIL = 1, transfer the secondary channel data (6 words) into the location which provides for downlisted SSME data (6 words).

The secondary channel data will be processed as follows:

1. If DATA_ID_S and DATA_TIME_S = 0, then S_FAIL = 0 (secondary channel good)
2. If DATA_ID_S or DATA_TIME_S = 1, then S_FAIL = 1 (secondary channel failed)

where

DATA_ID_S = Secondary channel data identification miscompare

DATA_TIME_S = Secondary channel time data update fail

S_FAIL = Secondary channel failure

The primary and secondary fail flags are set to zero at the beginning of each pass.

Prior to SRB ignition, if either P_FAIL = 1 for two consecutive passes, or S_FAIL = 1 for two consecutive passes, set PAD_DATA_PATH_ FAIL = 1.

Note: The number of passes to set PAD_DATA_PATH_FAIL should be less than the number of passes to set DCU SW. This avoids the possibility of lift–off on DCU B data.

Engine status data and chamber pressure will be processed from the primary channel if it is valid; otherwise, process the secondary channel if it is valid. If neither is valid, provide previous cycle's data to user functions and proceed to command processing (Subsection 4.8.2.3.8).

1. If both P_FAIL = 1 and S_FAIL = 1 for four consecutive cycles, set DCU SW = 1 and DCU_SW_IND = 1 (internal flag).
2. If DCU_SW_IND = 1 and P_FAIL = 1 and S_FAIL = 1 for DATA_FAIL successive cycles, set and latch FLIGHT DATA PATH FAIL = 1
3. If P_FAIL = 1 and S_FAIL = 1 for two consecutive cycles or MESHDN = 1 or MESHDNENA = 1 or MESHND CMD = 1, set ME_X TVC SERVO OVRD CMD = 1 (internal flag).

After SRB ignition, the secondary data need not be processed unless the primary channel fail is set.

4.8.2.3.5 Command–Path Failure Processing.

The SSME SOP will monitor the main engine status word command status and channel status data from each EIU (Table 4.8.2–2) to generate command–path and channel fail indications.

Channel status data (bits 3, 4, and 5) will be monitored until SRB ignition. Command status data (bits 1 and 2) will be monitored, for purposes of command path failure processing, after SRB IGNITION CMD FLAG (V90X8377X) and continue until the SSME SOP is descheduled.

Engine command status data (bits 1 and 2 of each engine status word) will be monitored and compared with the command status indications from the previous two cycles and the command output flags from the pre-

vious three cycles for that engine to generate a command fail flag. The command output flag will indicate if a new engine command was generated in a previous cycle. The engine command status bits will be processed as follows:

ENGINE COMMAND STATUS DATA BITS GPC		COMMAND STATUS FLAG
1	2	
0	0	0
0	1	1
1	0	1
1	1	2
NOTE: 0 = no new command 1 = command rejected 2 = command accepted		

The SSME SOP shall maintain the command status from the present and previous two cycles as well as the command output flags from the previous three cycles. These indications shall be compared to generate the command fail flag. The command fail flag shall be set to the "1" state (command failed) for the following:

COMMAND STATUS FLAG*			COMMAND OUTPUT FLAG**			COMMAND FAIL FLAG
T_0	T_1	T_2	T_1	T_2	T_3	
1	–	–	–	–	–	1
2	–	–	0	0	0	1
0	0	0	–	–	1	1
*0 = no new command 1 = command rejected 2 = command accepted **0 = no new command 1 = new command transmitted T_0 = current cycle T_1 = one cycle old T_2 = two cycles old T_3 = three cycles old						

The command fail flag shall be initialized to zero, and shall be set to zero when the command status T_0 = 2, and previous output T_1, T_2 or T_3 = 1.

1. Before SRB ignition engine channel status data, GPC bits 3, 4, and 5 of each GPC engine status word will be monitored to generate a channel fail flag for each engine if a "1" is detected in either bit 3, 4, or 5.

2. GPC engine channel status bits 3, 4, and 5 will not be processed post–SRB ignition.

4.8.2.3.6 Engine Status Word Processing

The SSME SOP will monitor the selected primary or secondary engine status word (Table 4.8.2–2) from the three EIU's for the following indications:

1. Phase/Mode status – Bits 8, 9, 10, 11, 12, and 13 indicate phase and mode status. The code of bits 8, 9, and 10 indicates the phase status and will be processed before bits 11, 12, and 13. Bits 11, 12, and 13 indicate the mode status during a specific phase. The following processing will apply to Engine Phase Bits 8, 9, and 10 during post–SRB ignition:

   a. Shutdown phase output flag shall be set when for three or more consecutive passes:

      (1) Phase Bits 8, 9, and 10 indicate shutdown phase and

      (2) The current time in the main engine time reference word is less than 1.48 seconds.

   b. Post–shutdown phase output flag shall be set when for three or more consecutive passes:

      (1) Phase Bits 8, 9, and 10 indicate post–shutdown phase and

      (2) The current time in the main engine time reference word is less than 1.48 seconds when Phase Bits 8, 9, and 10 indicate shutdown phase.

   (Table 4.8.2–3 provides the binary code phase/mode indications and the phase and mode output flag indications.)

2. Self–Test Status – Bits 14 and 15 of the engine status word indicate self–test status and will be processed as follows:

Engine Status Word Bits		Self Test Output Flags		
14	15	Engine OK	Major Component Fail	Engine Limit Exceeded
0	0	Not used	Not used	Not used
0	1	1	0	0
1	0	0	1	0
1	1	0	0	1

4.8.2.3.7 Main Engine Chamber Pressure Data Processing

The SSME SOP will monitor main engine chamber pressure data from each of the main engines and perform data compensation to convert the measured data from psi to engineering units (percent of chamber pressure). The general compensation equations will be as follows:

$$YC = YM\,C + K$$

where

YC = Compensation engine chamber pressure (%)

YM = Measured engine chamber pressure (psia)

C = Compensation scale factor (% psia)

K = Compensation bias (%)

Format as follows:

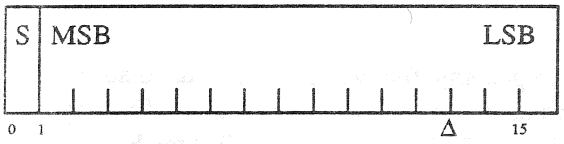

Key:

S – Sign bit
MSB – Most significant bit
LSB – Least significant bit
Δ – Fractional binary point

Fixed point half–word operand format

4.8.2.3.8 Main Engine Command Processing

The SSME SOP will process and convert GNC user function commands for the three main engines into two 16–bit words for output to the EIU's. The two 16–bit words will consist of a 16–bit command word and a 16–bit associated BCH code command word. The EIU removes the LSB of the BCH code command word and combines the two command words into a packed 31–bit word for use by the SSME. Table 4.8.2–1 provides the general octal equivalent of the binary/BCH format conversions for the following commands:

1. Start enable commands will be processed to generate start enable commands to all three main engines. When the start enable command flag indicates the "1" state (enable start), the SSME SOP will generate the corresponding binary/BCH commands to all three EIU's.

2. Start commands will be processed to generate start commands to all three main engines. When the start command flag for an engine indicates the "1" state (start commanded), the SSME SOP will generate the corresponding binary/BCH command to that EIU.

3. Limit control enable commands will be processed on an engine basis. When the limit control enable command for an engine indicates the "1" state (enable limit control), the SSME SOP will generate the corresponding binary/BCH command to the appropriate EIU.

4. Limit control inhibit commands will be processed on an engine basis. When the limit control inhibit command for an engine indicates a "1" state (inhibit limit control), the SSME SOP will generate the corresponding binary/BCH command to the appropriate EIU.

5. Throttle settings will be processed to generate thrust level commands to all three main engines. When a specific throttle setting has been commanded, the SSME SOP will generate the corresponding binary/BCH command to all three EIU's.

6. Shutdown enable commands will be processed on an engine basis. When the shutdown enable command for an engine indicates the "1" state (enable shutdown), the SSME SOP will generate the corresponding binary/BCH command to the appropriate EIU.

7. Shutdown commands will be processed on an engine basis. When the shutdown command for an engine indicates the "1" state (shutdown commanded), the SSME SOP will generate the corresponding binary/BCH command to the appropriate EIU.

8. Switch VDT will be processed on a single engine basis. When the DCU–SW command for an engine indicates the "1" state (switchover commanded), the SSME SOP will generate the corresponding binary/BCH command to the appropriate EIU.

9. Oxidizer dump start command will be processed to generate oxidizer dump commands to all three main engines. When the oxidizer dump start command indicates a "1" state (dump oxidizer), the SSME SOP will generate the corresponding binary/BCH commands to all three EIU's.

10. Fuel dump start command will be processed to generate fuel dump commands to all three main engines. When the fuel dump start command indicates a "1" state (dump fuel), the SSME SOP will generate the corresponding binary/BCH commands to all three EIU's.

11. Oxidizer dump stop command and fuel dump stop command will be processed to generate terminate sequence commands to all three main engines. When either the oxidizer dump or the fuel dump stop command indicates the "1" state (stop dump), the SSME SOP will generate the corresponding binary/BCH commands to all three EIU's.

The command output flag to be used in Section 4.8.2.3.5 will be set on an engine basis on the first transmission of any new command to that engine. When no new command to an engine has been processed, the output command flag will be set to the "zero" state. Only one command to the EIU will be transmitted per minor cycle.

The order of priority of user function commands on a single engine basis is as follows:

Shutdown enable
Shutdown
DCU–SW
Limit control inhibit
Limit control enable
Throttle settings
Start enable
Start
Oxidizer dump start
Oxidizer dump stop
Fuel dump stop
Fuel dump start

The SSME SOP output function will issue the command associated with the highest priority request and then set the flag to zero. Prior to SRB ignition each command must be transmitted to the EIU only one time, and then the output buffer must be set to zero unless an output request is pending. After SRB ignition, each command must be transmitted only one time to the output buffer and the I/O profile will continuously send the command to the EIU until replaced by another command to the output buffer.

Table 4.8.2–3 Phase Mode Processing

Engine Status Word Bits*			Phase Output Flags	Engine Status Word Bits*			Mode Output Flags
8	9	10		11	12	13	
0	1	0		0	0	1	Engine Ready = 0
				0	1	0	Engine Ready = 0
			Shutdown Phase = 0	0	1	1	Engine Ready = 0
			Post–shutdown Phase = 0	1	0	0	Engine Ready = 0
				1	1	0	Engine Ready = 1
0	1	1		0	0	1	Electronic Lockup = 0 Hydraulic Lockup = 0
				0	1	0	Electronic Lockup = 0 Hydraulic Lockup = 0
			Shutdown Phase = 0	0	1	1	Electronic Lockup = 1 Hydraulic Lockup = 0
			Post–shutdown Phase = 0	1	0	0	Electronic Lockup = 0 Hydraulic Lockup = 1
1	0	0		0	0	1	Electronic Lockup = 0 Hydraulic Lockup = 0
			Shutdown Phase = 0	0	1	1	Electronic Lockup = 1 Hydraulic Lockup = 0
			Post–shutdown Phase = 0	1	0	0	Electronic Lockup = 0 Hydraulic Lockup = 1
1	0	1					
			Shutdown Phase = 1	No mode processing required during this phase			
			Post–shutdown Phase = 0	No mode processing required during this phase			
1	1	0					
			Shutdown Phase = 0	No mode processing required during this phase			
			Post–shutdown Phase = 1	No mode processing required during this phase			

* Bit combinations not shown are either not used or spare. See Table 4.8.2–2 GPC Engine Status Word.

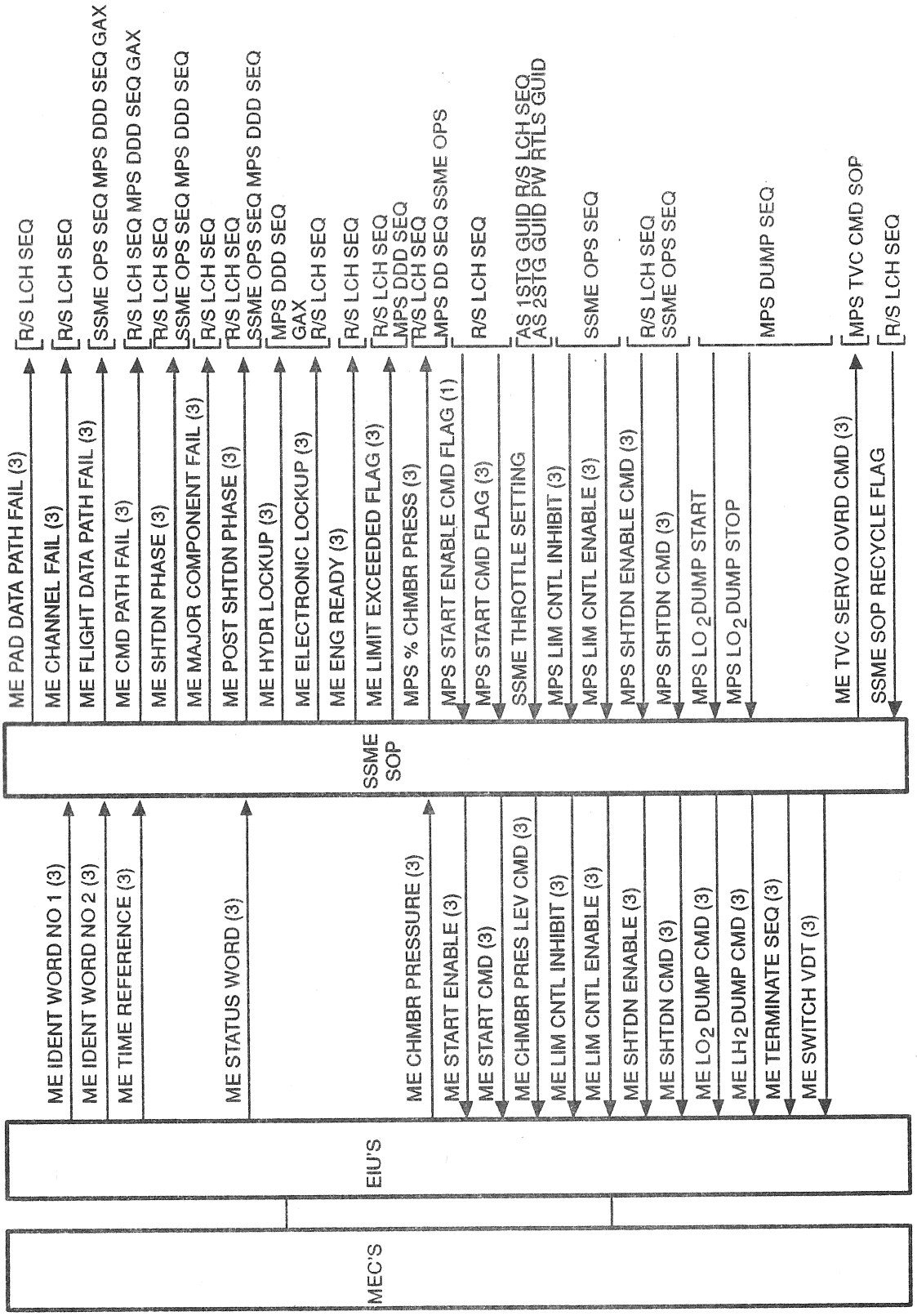

Figure 4.181.1. SSME SOP Functional Block Diagram

TABLE 4.8.2.4–1. SPACE SHUTTLE MAIN ENGINE(SSME) SOP (G4.181) INPUT/OUTPUT FUNCTIONAL PARAMETERS

DBFN: D3B027-F PN: VP707100049P00L INPUT FUNCTIONAL PARAMETERS FOR SSME SOP

FSSR NAME	M/S ID	NOMENCLATURE		SOURCE	UNITS	DATA TYPE	PREC	LAST CRS
K_CMD	V90U1948CA	COMMANDED SSME THROTTLE SETTING		ASC 2STG GUID	PCT			
K_CMD	V90U1948CB	COMMANDED SSME THROTTLE SETTING		ASC 1STG GUID	PCT			89655E
K_CMD	V90U1948CC	COMMANDED SSME THROTTLE SETTING		PW RTLS GUID	PCT			
K_CMD	V90U1948CD	COMMANDED SSME THROTTLE SETTING		R/S LCH SEQ	PCT			
K_CMD	V90U1948CE	COMMANDED SSME THROTTLE SETTING		SBTC SOP	PCT			89990E
								89655E
K_CMD	V90U1948CF	COMMANDED SSME THROTTLE SETTING		PW CONT GUID	PCT			89990E
MESHDNCMD(1)	V90X8370XA	MPS E1 SHUTDOWN CMD		R/S LCH SEQ				
MESHDNCMD(1)	V90X8370XB	MPS E1 SHUTDOWN CMD		SSME OPS				
MESHDNCMD(2)	V90X8371XA	MPS E2 SHUTDOWN CMD		R/S LCH SEQ				
MESHDNCMD(2)	V90X8371XB	MPS E2 SHUTDOWN CMD		SSME OPS				
MESHDNCMD(3)	V90X8372XA	MPS E3 SHUTDOWN CMD		R/S LCH SEQ				
MESHDNCMD(3)	V90X8372XB	MPS E3 SHUTDOWN CMD		SSME OPS				
MESHDNENA(1)	V90X8367XA	MPS E1 SHUTDOWN ENABLE CMD		R/S LCH SEQ				
MESHDNENA(1)	V90X8367XB	MPS E1 SHUTDOWN ENABLE CMD		SSME OPS				
MESHDNENA(2)	V90X8368XA	MPS E2 SHUTDOWN ENABLE CMD		R/S LCH SEQ				
MESHDNENA(2)	V90X8368XB	MPS E2 SHUTDOWN ENABLE CMD		SSME OPS				
MESHDNENA(3)	V90X8369XA	MPS E3 SHUTDOWN ENABLE CMD		R/S LCH SEQ				
MESHDNENA(3)	V90X8369XB	MPS E3 SHUTDOWN ENABLE CMD		SSME OPS				
MESTRTCMD(1)	V90X8358X	MPS E1 START CMD FLAG		R/S LCH SEQ				
MESTRTCMD(2)	V90X8359X	MPS E2 START CMD FLAG		R/S LCH SEQ				
MESTRTCMD(3)	V90X8360X	MPS E3 START CMD FLAG		R/S LCH SEQ				
MESTRTENA	V90X8361X	MPS START ENABLE CMD FLAG		R/S LCH SEQ				
ME1_STATUS	E41M1003P	ME-1 ENGINE STATUS WORD	DW03	EIU 1		HMD		89218B
ME2_STATUS	E41M2003P	ME-2 ENGINE STATUS WORD	DW03	EIU 2		HMD		89218B
ME3_STATUS	E41M3003P	ME-3 ENGINE STATUS WORD	DW03	EIU 3		HMD		89218B
MPS_ENA(1)	V90X8573X	MPS E1 LIMIT CNTL ENA		SSME OPS				
MPS_ENA(2)	V90X8574X	MPS E2 LIMIT CNTL ENA		SSME OPS				
MPS_ENA(3)	V90X8575X	MPS E3 LIMIT CNTL ENA		SSME OPS				
MPS_INH(1)	V90X8570X	MPS E1 LIMIT CNTL INH		SSME OPS				
MPS_INH(2)	V90X8571X	MPS E2 LIMIT CNTL INH		SSME OPS				
MPS_INH(3)	V90X8572X	MPS E3 LIMIT CNTL INH		SSME OPS				
MPS_LO2_DUMP_START	V90X8301X	MPS LO2 DUMP START		MPS DUMP				89598A
MPS_LO2_DUMP_STOP	V90X8302X	MPS LO2 DUMP STOP		MPS DUMP				
SRB_IGNITION_CMD	V90X8377X	SRB IGNITION CMD FLAG		R/S LCH SEQ		BD		
	E41M1001P	ME-1 IDENT WORD NO 1	DW01	EIU 1		HMD		89218B
	E41M1002P	ME-1 IDENT WORD NO 2	DW02	EIU 1		HMD		89218B
	E41W1004B	ME-1 TIME REFERENCE	DW04	EIU 1		HXU		89218B
	E41P1023B	ME-1 MCC PRESSURE (AVG)	DW06	EIU 1	PSIA	HXS		89218B
	E41X1507B	ME-1 MEMORY LOAD MODE ENABLED	P3B1	EIU 1		BD		
	E41J1508B	ME-1 COMMAND STATUS	P3B2-3	EIU 1		BMD		
	E41J1509B	ME-1 CHANNEL STATUS	P3B4-6	EIU 1		BMD		
	E41X1510B	ME-1 FRT MODULE IN CONTROL	P3B7	EIU 1		BD		
	E41X1511B	ME-1 LIMIT CONTROL ENABLED	P3B8	EIU 1		BD		
	E41J1512B	ME-1 PHASE IN EFFECT	P3B9-11	EIU 1		BMD		
	E41J1513B	ME-1 OPERATING MODE	P3B12-14	EIU 1		BMD		

TABLE 4.8.2.4–1. SPACE SHUTTLE MAIN ENGINE(SSME) SOP (G4.181) INPUT/OUTPUT FUNCTIONAL PARAMETERS

DBFN: D3B027-F PN: VP707100049P00L INPUT FUNCTIONAL PARAMETERS FOR SSME SOP

FSSR NAME	M/S ID	NOMENCLATURE		SOURCE	UNITS	DATA TYPE	PREC	LAST CRS
	E41J1514B	ME-1 SELF TEST	P3B15-16	EIU 1		BMD		
	E41M2001P	ME-2 IDENT WORD NO 1	DW01	EIU 2		HMD		89218B
	E41M2002P	ME-2 IDENT WORD NO 2	DW02	EIU 2		HMD		89218B
	E41W2004B	ME-2 TIME REFERENCE	DW04	EIU 2		HXU		89218B
	E41P2023B	ME-2 MCC PRESSURE (AVG)	DW06	EIU 2	PSIA	HXS		89218B
	E41X2507B	ME-2 MEMORY LOAD MODE ENABLED	P3B1	EIU 2		BD		
	E41J2508B	ME-2 COMMAND STATUS	P3B2-3	EIU 2		BMD		
	E41J2509B	ME-2 CHANNEL STATUS	P3B4-6	EIU 2		BMD		
	E41X2510B	ME-2 FRT MODULE IN CONTROL	P3B7	EIU 2		BD		
	E41X2511B	ME-2 LIMIT CONTROL ENABLED	P3B8	EIU 2		BD		
	E41J2512B	ME-2 PHASE IN EFFECT	P3B9-11	EIU 2		BMD		
	E41J2513B	ME-2 OPERATING MODE	P3B12-14	EIU 2		BMD		
	E41J2514B	ME-2 SELF TEST	P3B15-16	EIU 2		BMD		
	E41M3001P	ME-3 IDENT WORD NO 1	DW01	EIU 3		HMD		89218B
	E41M3002P	ME-3 IDENT WORD NO 2	DW02	EIU 3		HMD		89218B
	E41W3004B	ME-3 TIME REFERENCE	DW04	EIU 3		HXU		89218B
	E41P3023B	ME-3 MCC PRESSURE (AVG)	DW06	EIU 3	PSIA	HXS		89218B
	E41X3507B	ME-3 MEMORY LOAD MODE ENABLED	P3B1	EIU 3		BD		
	E41J3508B	ME-3 COMMAND STATUS	P3B2-3	EIU 3		BMD		
	E41J3509B	ME-3 CHANNEL STATUS	P3B4-6	EIU 3		BMD		
	E41X3510B	ME-3 FRT MODULE IN CONTROL	P3B7	EIU 3		BD		
	E41X3511B	ME-3 LIMIT CONTROL ENABLED	P3B8	EIU 3		BD		
	E41J3512B	ME-3 PHASE IN EFFECT	P3B9-11	EIU 3		BMD		
	E41J3513B	ME-3 OPERATING MODE	P3B12-14	EIU 3		BMD		
	E41J3514B	ME-3 SELF TEST	P3B15-16	EIU 3		BMD		
	V90X8668X	SSME SOP RECYCLE FLAG		R/S LCH SEQ				
	V91X2852X	EIU1/P4 DATA STATUS (HFE)		FCOS				
	V91X2856X	EIU2/P4 DATA STATUS (HFE)		FCOS				
	V91X2860X	EIU3/P4 DATA STATUS (HFE)		FCOS				
	V91X3009X	EIU1/P1 DATA STATUS (HFE)		FCOS				
	V91X3012X	EIU2/P1 DATA STATUS (HFE)		FCOS				
	V91X3015X	EIU3/P1 DATA STATUS (HFE)		FCOS				
	V99X8803X	LPS GO FOR AUTO SEQUENCE START		LPS				

TABLE 4.8.2.4–1. SPACE SHUTTLE MAIN ENGINE(SSME) SOP (G4.181) INPUT/OUTPUT FUNCTIONAL PARAMETERS

DBFN: D3B027-F PN: VP707100049P00L OUTPUT FUNCTIONAL PARAMETERS FROM SSME SOP

FSSR NAME	M/S ID	NOMENCLATURE	DESTINATION	UNITS	DATA TYPE	PREC	LAST CRS
DCU_SW(1)	V95X1220X	ME-1 SWITCH VDT	EIU 1				
DCU_SW(2)	V95X1221X	ME-2 SWITCH VDT	EIU 2				
DCU_SW(3)	V95X1222X	ME-3 SWITCH VDT	EIU 3				
ME_CMD_PATH_FAIL(1)	V95X1202X	ME-1 COMMAND PATH FAIL FLAG	GAX,MPS D/D SEQ,TLM		BD		
ME_CMD_PATH_FAIL(2)	V95X1203X	ME-2 COMMAND PATH FAIL FLAG	GAX,MPS D/D SEQ,TLM		BD		
ME_CMD_PATH_FAIL(3)	V95X1204X	ME-3 COMMAND PATH FAIL FLAG	GAX,MPS D/D SEQ,TLM		BD		
ME_ELEC_LOCKUP(1)	V95X1194X	ME-1 ELECTRONIC LOCKUP MODE FLAG	MPS D/D SEQ,GAX,R/S LCH SEQ				
ME_ELEC_LOCKUP(2)	V95X1195X	ME-2 ELECTRONIC LOCKUP MODE FLAG	MPS D/D SEQ,GAX,R/S LCH SEQ				
ME_ELEC_LOCKUP(3)	V95X1196X	ME-3 ELECTRONIC LOCKUP MODE FLAG	MPS D/D SEQ,GAX,R/S LCH SEQ				
ME_FLT_DATA_PATH_FAIL(1)	V95X1150X	ME-1 FLIGHT DATA PATH FAIL FLAG	GAX,MPS D/D SEQ,SSME OPS				
ME_FLT_DATA_PATH_FAIL(2)	V95X1151X	ME-2 FLIGHT DATA PATH FAIL FLAG	GAX,MPS D/D SEQ,SSME OPS				
ME_FLT_DATA_PATH_FAIL(3)	V95X1152X	ME-3 FLIGHT DATA PATH FAIL FLAG	GAX,MPS D/D SEQ,SSME OPS				
ME_HYD_LOCKUP(1)	V95X1198X	ME-1 HYDRAULIC LOCKUP MODE FLAG	MPS D/D SEQ,GAX,R/S LCH SEQ				
ME_HYD_LOCKUP(2)	V95X1199X	ME-2 HYDRAULIC LOCKUP MODE FLAG	MPS D/D SEQ,GAX,R/S LCH SEQ				
ME_HYD_LOCKUP(3)	V95X1200X	ME-3 HYDRAULIC LOCKUP MODE FLAG	MPS D/D SEQ,GAX,R/S LCH SEQ				
ME_LIM_EX(1)	V95X1190X	ME-1 ENGINE LIMIT EXCEEDED FLAG	MPS D/D SEQ,R/S LCH SEQ				89672A 89157A
ME_LIM_EX(2)	V95X1191X	ME-2 ENGINE LIMIT EXCEEDED FLAG	MPS D/D SEQ,R/S LCH SEQ				89672A 89157A
ME_LIM_EX(3)	V95X1192X	ME-3 ENGINE LIMIT EXCEEDED FLAG	MPS D/D SEQ,R/S LCH SEQ				89672A 89157A
ME_READY(1)	V95X1182X	MPS E-1 ENG READY IND	R/S LCH SEQ				
ME_READY(2)	V95X1183X	MPS E-2 ENG READY IND	R/S LCH SEQ				
ME_READY(3)	V95X1184X	MPS E-3 ENG READY IND	R/S LCH SEQ				
MEPSTSHDN(1)	V95X1160X	MPS E1 POST-SHUTDOWN PHASE	R/S LCH SEQ,SSME OPS, MPS D/D SEQ				
MEPSTSHDN(2)	V95X1161X	MPS E2 POST-SHUTDOWN PHASE	R/S LCH SEQ,SSME OPS, MPS D/D SEQ				
MEPSTSHDN(3)	V95X1162X	MPS E3 POST-SHUTDOWN PHASE	R/S LCH SEQ,SSME OPS, MPS D/D SEQ				
MESHDN(1)	V95X1155X	MPS E1 SHUTDOWN PHASE	R/S LCH SEQ,MPS D/D SEQ, SSME OPS				
MESHDN(2)	V95X1156X	MPS E2 SHUTDOWN PHASE	R/S LCH SEQ,MPS D/D SEQ, SSME OPS				
MESHDN(3)	V95X1157X	MPS E3 SHUTDOWN PHASE	R/S LCH SEQ,MPS D/D SEQ, SSME OPS				
ME1_CH_PRESS_FDBK	V95U1186C	MPS E-1 PERCENT CH PRESS	R/S LCH SEQ,MPS D/D SEQ, SSME OPS	PCT			
ME1_ENA_LIM_CNTL	E41K1211B	ME-1 LIMIT CONTROL ENABLE CMD	EIU 1		BMD		
ME1_INH_LIM_CNTL	E41K1210B	ME-1 LIMIT CONTROL INHIBIT CMD	EIU 1		BMD		
ME1_LH2_DUMP	E41K1220B	ME-1 FUEL DUMP CMD	EIU 1				
ME1_LO2_DUMP	E41K1219BA	ME-1 OXIDIZER DUMP CMD	EIU 1				
ME1_SHTDN_CMD	E41K1204B	ME-1 SHUTDOWN CMD	EIU 1		BMD		

TABLE 4.8.2.4–1. SPACE SHUTTLE MAIN ENGINE(SSME) SOP (G4.181) INPUT/OUTPUT FUNCTIONAL PARAMETERS

DBFN: D3B027-F PN: VP707100049P00L OUTPUT FUNCTIONAL PARAMETERS FROM SSME SOP

FSSR NAME	M/S ID	NOMENCLATURE	DESTINATION	UNITS	DATA TYPE	PREC	LAST CRS
ME1_SHTDN_ENA_CMD	E41K1212B	ME-1 SHUTDOWN ENABLE CMD	EIU 1		BMD		
ME1_ST_CMD	E41K1203B	ME-1 START CMD	EIU 1		BMD		
ME1_ST_ENA_CMD	E41K1217B	ME-1 START ENABLE CMD	EIU 1		BMD		
ME1_TERM_SEQ	E41K1218BA	ME-1 TERMINATE SEQUENCE CMD	EIU 1				
ME1_THRUST_LEVEL	E41K1201B	ME-1 MAIN CHAMBER PRESS LEVEL CMD	EIU 1	PCT			
ME2_CH_PRESS_FDBK	V95U1187C	MPS E-2 PERCENT CH PRESS	R/S LCH SEQ,MPS D/D SEQ, SSME OPS	PCT			
ME2_ENA_LIM_CNTL	E41K2211B	ME-2 LIMIT CONTROL ENABLE CMD	EIU 2		BMD		
ME2_INH_LIM_CNTL	E41K2210B	ME-2 LIMIT CONTROL INHIBIT CMD	EIU 2		BMD		
ME2_LH2_DUMP	E41K2220B	ME-2 FUEL DUMP CMD	EIU 2				
ME2_LO2_DUMP	E41K2219BA	ME-2 OXIDIZER DUMP CMD	EIU 2				
ME2_SHTDN_CMD	E41K2204B	ME-2 SHUTDOWN CMD	EIU 2		BMD		
ME2_SHTDN_ENA_CMD	E41K2212B	ME-2 SHUTDOWN ENABLE CMD	EIU 2		BMD		
ME2_ST_CMD	E41K2203B	ME-2 START CMD	EIU 2		BMD		
ME2_ST_ENA_CMD	E41K2217B	ME-2 START ENABLE CMD	EIU 2		BMD		
ME2_TERM_SEQ	E41K2218BA	ME-2 TERMINATE SEQUENCE CMD	EIU 2				
ME2_THRUST_LEVEL	E41K2201B	ME-2 MAIN CHAMBER PRESS LEVEL CMD	EIU 2	PCT			
ME3_CH_PRESS_FDBK	V95U1188C	MPS E-3 PERCENT CH PRESS	R/S LCH SEQ,MPS D/D SEQ, SSME OPS	PCT			
ME3_ENA_LIM_CNTL	E41K3211B	ME-3 LIMIT CONTROL ENABLE CMD	EIU 3		BMD		
ME3_INH_LIM_CNTL	E41K3210B	ME-3 LIMIT CONTROL INHIBIT CMD	EIU 3		BMD		
ME3_LH2_DUMP	E41K3220B	ME-3 FUEL DUMP CMD	EIU 3				
ME3_LO2_DUMP	E41K3219BA	ME-3 OXIDIZER DUMP CMD	EIU 3				
ME3_SHTDN_CMD	E41K3204B	ME-3 SHUTDOWN CMD	EIU 3		BMD		
ME3_SHTDN_ENA_CMD	E41K3212B	ME-3 SHUTDOWN ENABLE CMD	EIU 3		BMD		
ME3_ST_CMD	E41K3203B	ME-3 START CMD	EIU 3		BMD		
ME3_ST_ENA_CMD	E41K3217B	ME-3 START ENABLE CMD	EIU 3		BMD		
ME3_TERM_SEQ	E41K3218BA	ME-3 TERMINATE SEQUENCE CMD	EIU 3				
ME3_THRUST_LEVEL	E41K3201B	ME-3 MAIN CHAMBER PRESS LEVEL CMD	EIU 3	PCT			
	E41K1265B	ME-1 65 PERCENT THRUST LEVEL CMD	EIU 1		BMD		89598A
	E41K1266B	ME-1 66 PERCENT THRUST LEVEL CMD	EIU 1		BMD		89598A
	E41K1267B	ME-1 67 PERCENT THRUST LEVEL CMD	EIU 1		BMD		89598A
	E41K1268B	ME-1 68 PERCENT THRUST LEVEL CMD	EIU 1		BMD		89598A
	E41K1269B	ME-1 69 PERCENT THRUST LEVEL CMD	EIU 1		BMD		89598A
	E41K1270B	ME-1 70 PERCENT THRUST LEVEL CMD	EIU 1		BMD		89598A
	E41K1271B	ME-1 71 PERCENT THRUST LEVEL CMD	EIU 1		BMD		89598A
	E41K1272B	ME-1 72 PERCENT THRUST LEVEL CMD	EIU 1		BMD		89598A
	E41K1273B	ME-1 73 PERCENT THRUST LEVEL CMD	EIU 1		BMD		89598A
	E41K1274B	ME-1 74 PERCENT THRUST LEVEL CMD	EIU 1		BMD		89598A
	E41K1275B	ME-1 75 PERCENT THRUST LEVEL CMD	EIU 1		BMD		89598A
	E41K1276B	ME-1 76 PERCENT THRUST LEVEL CMD	EIU 1		BMD		89598A
	E41K1277B	ME-1 77 PERCENT THRUST LEVEL CMD	EIU 1		BMD		89598A
	E41K1278B	ME-1 78 PERCENT THRUST LEVEL CMD	EIU 1		BMD		89598A

TABLE 4.8.2.4–1. SPACE SHUTTLE MAIN ENGINE(SSME) SOP (G4.181) INPUT/OUTPUT FUNCTIONAL PARAMETERS

DBFN: D3B027-F PN: VP707100049P00L OUTPUT FUNCTIONAL PARAMETERS FROM SSME SOP

FSSR NAME	M/S ID	NOMENCLATURE	DESTINATION	UNITS	DATA TYPE	PREC	LAST CRS
	E41K1279B	ME-1 79 PERCENT THRUST LEVEL CMD	EIU 1		BMD		89598A
	E41K1280B	ME-1 80 PERCENT THRUST LEVEL CMD	EIU 1		BMD		89598A
	E41K1281B	ME-1 81 PERCENT THRUST LEVEL CMD	EIU 1		BMD		89598A
	E41K1282B	ME-1 82 PERCENT THRUST LEVEL CMD	EIU 1		BMD		89598A
	E41K1283B	ME-1 83 PERCENT THRUST LEVEL CMD	EIU 1		BMD		89598A
	E41K1284B	ME-1 84 PERCENT THRUST LEVEL CMD	EIU 1		BMD		89598A
	E41K1285B	ME-1 85 PERCENT THRUST LEVEL CMD	EIU 1		BMD		89598A
	E41K1286B	ME-1 86 PERCENT THRUST LEVEL CMD	EIU 1		BMD		89598A
	E41K1287B	ME-1 87 PERCENT THRUST LEVEL CMD	EIU 1		BMD		89598A
	E41K1288B	ME-1 88 PERCENT THRUST LEVEL CMD	EIU 1		BMD		89598A
	E41K1289B	ME-1 89 PERCENT THRUST LEVEL CMD	EIU 1		BMD		89598A
	E41K1290B	ME-1 90 PERCENT THRUST LEVEL CMD	EIU 1		BMD		89598A
	E41K1291B	ME-1 91 PERCENT THRUST LEVEL CMD	EIU 1		BMD		89598A
	E41K1292B	ME-1 92 PERCENT THRUST LEVEL CMD	EIU 1		BMD		89598A
	E41K1293B	ME-1 93 PERCENT THRUST LEVEL CMD	EIU 1		BMD		89598A
	E41K1294B	ME-1 94 PERCENT THRUST LEVEL CMD	EIU 1		BMD		89598A
	E41K1295B	ME-1 95 PERCENT THRUST LEVEL CMD	EIU 1		BMD		89598A
	E41K1296B	ME-1 96 PERCENT THRUST LEVEL CMD	EIU 1		BMD		89598A
	E41K1297B	ME-1 97 PERCENT THRUST LEVEL CMD	EIU 1		BMD		89598A
	E41K1298B	ME-1 98 PERCENT THRUST LEVEL CMD	EIU 1		BMD		89598A
	E41K1299B	ME-1 99 PERCENT THRUST LEVEL CMD	EIU 1		BMD		89598A
	E41K1300B	ME-1 100 PERCENT THRUST LEVEL CMD	EIU 1		BMD		89598A
	E41K1301B	ME-1 101 PERCENT THRUST LEVEL CMD	EIU 1		BMD		89598A
	E41K1302B	ME-1 102 PERCENT THRUST LEVEL CMD	EIU 1		BMD		89598A
	E41K1303B	ME-1 103 PERCENT THRUST LEVEL CMD	EIU 1		BMD		89598A
	E41K1304B	ME-1 104 PERCENT THRUST LEVEL CMD	EIU 1		BMD		89598A
	E41K1305B	ME-1 105 PERCENT THRUST LEVEL CMD	EIU 1		BMD		89598A
	E41K1306B	ME-1 106 PERCENT THRUST LEVEL CMD	EIU 1		BMD		89598A
	E41K1307B	ME-1 107 PERCENT THRUST LEVEL CMD	EIU 1		BMD		89598A
	E41K1308B	ME-1 108 PERCENT THRUST LEVEL CMD	EIU 1		BMD		89598A
	E41K1309B	ME-1 109 PERCENT THRUST LEVEL CMD	EIU 1		BMD		89598A
	E41K2265B	ME-2 65 PERCENT THRUST LEVEL CMD	EIU 2		BMD		89598A
	E41K2266B	ME-2 66 PERCENT THRUST LEVEL CMD	EIU 2		BMD		89598A
	E41K2267B	ME-2 67 PERCENT THRUST LEVEL CMD	EIU 2		BMD		89598A
	E41K2268B	ME-2 68 PERCENT THRUST LEVEL CMD	EIU 2		BMD		89598A
	E41K2269B	ME-2 69 PERCENT THRUST LEVEL CMD	EIU 2		BMD		89598A
	E41K2270B	ME-2 70 PERCENT THRUST LEVEL CMD	EIU 2		BMD		89598A
	E41K2271B	ME-2 71 PERCENT THRUST LEVEL CMD	EIU 2		BMD		89598A
	E41K2272B	ME-2 72 PERCENT THRUST LEVEL CMD	EIU 2		BMD		89598A
	E41K2273B	ME-2 73 PERCENT THRUST LEVEL CMD	EIU 2		BMD		89598A
	E41K2274B	ME-2 74 PERCENT THRUST LEVEL CMD	EIU 2		BMD		89598A
	E41K2275B	ME-2 75 PERCENT THRUST LEVEL CMD	EIU 2		BMD		89598A
	E41K2276B	ME-2 76 PERCENT THRUST LEVEL CMD	EIU 2		BMD		89598A

TABLE 4.8.2.4–1. SPACE SHUTTLE MAIN ENGINE(SSME) SOP (G4.181) INPUT/OUTPUT FUNCTIONAL PARAMETERS

DBFN: D3B027-F PN: VP707100049P00L OUTPUT FUNCTIONAL PARAMETERS FROM SSME SOP

FSSR NAME	M/S ID	NOMENCLATURE	DESTINATION	UNITS	DATA TYPE	PREC	LAST CRS
	E41K2277B	ME-2 77 PERCENT THRUST LEVEL CMD	EIU 2		BMD		89598A
	E41K2278B	ME-2 78 PERCENT THRUST LEVEL CMD	EIU 2		BMD		89598A
	E41K2279B	ME-2 79 PERCENT THRUST LEVEL CMD	EIU 2		BMD		89598A
	E41K2280B	ME-2 80 PERCENT THRUST LEVEL CMD	EIU 2		BMD		89598A
	E41K2281B	ME-2 81 PERCENT THRUST LEVEL CMD	EIU 2		BMD		89598A
	E41K2282B	ME-2 82 PERCENT THRUST LEVEL CMD	EIU 2		BMD		89598A
	E41K2283B	ME-2 83 PERCENT THRUST LEVEL CMD	EIU 2		BMD		89598A
	E41K2284B	ME-2 84 PERCENT THRUST LEVEL CMD	EIU 2		BMD		89598A
	E41K2285B	ME-2 85 PERCENT THRUST LEVEL CMD	EIU 2		BMD		89598A
	E41K2286B	ME-2 86 PERCENT THRUST LEVEL CMD	EIU 2		BMD		89598A
	E41K2287B	ME-2 87 PERCENT THRUST LEVEL CMD	EIU 2		BMD		89598A
	E41K2288B	ME-2 88 PERCENT THRUST LEVEL CMD	EIU 2		BMD		89598A
	E41K2289B	ME-2 89 PERCENT THRUST LEVEL CMD	EIU 2		BMD		89598A
	E41K2290B	ME-2 90 PERCENT THRUST LEVEL CMD	EIU 2		BMD		89598A
	E41K2291B	ME-2 91 PERCENT THRUST LEVEL CMD	EIU 2		BMD		89598A
	E41K2292B	ME-2 92 PERCENT THRUST LEVEL CMD	EIU 2		BMD		89598A
	E41K2293B	ME-2 93 PERCENT THRUST LEVEL CMD	EIU 2		BMD		89598A
	E41K2294B	ME-2 94 PERCENT THRUST LEVEL CMD	EIU 2		BMD		89598A
	E41K2295B	ME-2 95 PERCENT THRUST LEVEL CMD	EIU 2		BMD		89598A
	E41K2296B	ME-2 96 PERCENT THRUST LEVEL CMD	EIU 2		BMD		89598A
	E41K2297B	ME-2 97 PERCENT THRUST LEVEL CMD	EIU 2		BMD		89598A
	E41K2298B	ME-2 98 PERCENT THRUST LEVEL CMD	EIU 2		BMD		89598A
	E41K2299B	ME-2 99 PERCENT THRUST LEVEL CMD	EIU 2		BMD		89598A
	E41K2300B	ME-2 100 PERCENT THRUST LEVEL CMD	EIU 2		BMD		89598A
	E41K2301B	ME-2 101 PERCENT THRUST LEVEL CMD	EIU 2		BMD		89598A
	E41K2302B	ME-2 102 PERCENT THRUST LEVEL CMD	EIU 2		BMD		89598A
	E41K2303B	ME-2 103 PERCENT THRUST LEVEL CMD	EIU 2		BMD		89598A
	E41K2304B	ME-2 104 PERCENT THRUST LEVEL CMD	EIU 2		BMD		89598A
	E41K2305B	ME-2 105 PERCENT THRUST LEVEL CMD	EIU 2		BMD		89598A
	E41K2306B	ME-2 106 PERCENT THRUST LEVEL CMD	EIU 2		BMD		89598A
	E41K2307B	ME-2 107 PERCENT THRUST LEVEL CMD	EIU 2		BMD		89598A
	E41K2308B	ME-2 108 PERCENT THRUST LEVEL CMD	EIU 2		BMD		89598A
	E41K2309B	ME-2 109 PERCENT THRUST LEVEL CMD	EIU 2		BMD		89598A
	E41K3265B	ME-3 65 PERCENT THRUST LEVEL CMD	EIU 3		BMD		89598A
	E41K3266B	ME-3 66 PERCENT THRUST LEVEL CMD	EIU 3		BMD		89598A
	E41K3267B	ME-3 67 PERCENT THRUST LEVEL CMD	EIU 3		BMD		89598A
	E41K3268B	ME-3 68 PERCENT THRUST LEVEL CMD	EIU 3		BMD		89598A
	E41K3269B	ME-3 69 PERCENT THRUST LEVEL CMD	EIU 3		BMD		89598A
	E41K3270B	ME-3 70 PERCENT THRUST LEVEL CMD	EIU 3		BMD		89598A
	E41K3271B	ME-3 71 PERCENT THRUST LEVEL CMD	EIU 3		BMD		89598A
	E41K3272B	ME-3 72 PERCENT THRUST LEVEL CMD	EIU 3		BMD		89598A
	E41K3273B	ME-3 73 PERCENT THRUST LEVEL CMD	EIU 3		BMD		89598A
	E41K3274B	ME-3 74 PERCENT THRUST LEVEL CMD	EIU 3		BMD		89598A

TABLE 4.8.2.4-1. SPACE SHUTTLE MAIN ENGINE(SSME) SOP (G4.181) INPUT/OUTPUT FUNCTIONAL PARAMETERS

DBFN: D3B027-F PN: VP707100049P00L OUTPUT FUNCTIONAL PARAMETERS FROM SSME SOP

FSSR NAME	M/S ID	NOMENCLATURE	DESTINATION	UNITS	DATA TYPE	PREC	LAST CRS
	E41K3275B	ME-3 75 PERCENT THRUST LEVEL CMD	EIU 3		BMD		89598A
	E41K3276B	ME-3 76 PERCENT THRUST LEVEL CMD	EIU 3		BMD		89598A
	E41K3277B	ME-3 77 PERCENT THRUST LEVEL CMD	EIU 3		BMD		89598A
	E41K3278B	ME-3 78 PERCENT THRUST LEVEL CMD	EIU 3		BMD		89598A
	E41K3279B	ME-3 79 PERCENT THRUST LEVEL CMD	EIU 3		BMD		89598A
	E41K3280B	ME-3 80 PERCENT THRUST LEVEL CMD	EIU 3		BMD		89598A
	E41K3281B	ME-3 81 PERCENT THRUST LEVEL CMD	EIU 3		BMD		89598A
	E41K3282B	ME-3 82 PERCENT THRUST LEVEL CMD	EIU 3		BMD		89598A
	E41K3283B	ME-3 83 PERCENT THRUST LEVEL CMD	EIU 3		BMD		89598A
	E41K3284B	ME-3 84 PERCENT THRUST LEVEL CMD	EIU 3		BMD		89598A
	E41K3285B	ME-3 85 PERCENT THRUST LEVEL CMD	EIU 3		BMD		89598A
	E41K3286B	ME-3 86 PERCENT THRUST LEVEL CMD	EIU 3		BMD		89598A
	E41K3287B	ME-3 87 PERCENT THRUST LEVEL CMD	EIU 3		BMD		89598A
	E41K3288B	ME-3 88 PERCENT THRUST LEVEL CMD	EIU 3		BMD		89598A
	E41K3289B	ME-3 89 PERCENT THRUST LEVEL CMD	EIU 3		BMD		89598A
	E41K3290B	ME-3 90 PERCENT THRUST LEVEL CMD	EIU 3		BMD		89598A
	E41K3291B	ME-3 91 PERCENT THRUST LEVEL CMD	EIU 3		BMD		89598A
	E41K3292B	ME-3 92 PERCENT THRUST LEVEL CMD	EIU 3		BMD		89598A
	E41K3293B	ME-3 93 PERCENT THRUST LEVEL CMD	EIU 3		BMD		89598A
	E41K3294B	ME-3 94 PERCENT THRUST LEVEL CMD	EIU 3		BMD		89598A
	E41K3295B	ME-3 95 PERCENT THRUST LEVEL CMD	EIU 3		BMD		89598A
	E41K3296B	ME-3 96 PERCENT THRUST LEVEL CMD	EIU 3		BMD		89598A
	E41K3297B	ME-3 97 PERCENT THRUST LEVEL CMD	EIU 3		BMD		89598A
	E41K3298B	ME-3 98 PERCENT THRUST LEVEL CMD	EIU 3		BMD		89598A
	E41K3299B	ME-3 99 PERCENT THRUST LEVEL CMD	EIU 3		BMD		89598A
	E41K3300B	ME-3 100 PERCENT THRUST LEVEL CMD	EIU 3		BMD		89598A
	E41K3301B	ME-3 101 PERCENT THRUST LEVEL CMD	EIU 3		BMD		89598A
	E41K3302B	ME-3 102 PERCENT THRUST LEVEL CMD	EIU 3		BMD		89598A
	E41K3303B	ME-3 103 PERCENT THRUST LEVEL CMD	EIU 3		BMD		89598A
	E41K3304B	ME-3 104 PERCENT THRUST LEVEL CMD	EIU 3		BMD		89598A
	E41K3305B	ME-3 105 PERCENT THRUST LEVEL CMD	EIU 3		BMD		89598A
	E41K3306B	ME-3 106 PERCENT THRUST LEVEL CMD	EIU 3		BMD		89598A
	E41K3307B	ME-3 107 PERCENT THRUST LEVEL CMD	EIU 3		BMD		89598A
	E41K3308B	ME-3 108 PERCENT THRUST LEVEL CMD	EIU 3		BMD		89598A
	E41K3309B	ME-3 109 PERCENT THRUST LEVEL CMD	EIU 3		BMD		89598A
	V95X1217X	ME-1 PAD DATA PATH FAIL FLAG	R/S LCH SEQ				
	V95X1218X	ME-2 PAD DATA PATH FAIL FLAG	R/S LCH SEQ				
	V95X1219X	ME-3 PAD DATA PATH FAIL FLAG	R/S LCH SEQ				
	V95X1230X	ME-1 MAJOR COMPONENT FAIL FLAG	R/S LCH SEQ				
	V95X1231X	ME-2 MAJOR COMPONENT FAIL FLAG	R/S LCH SEQ				
	V95X1232X	ME-3 MAJOR COMPONENT FAIL FLAG	R/S LCH SEQ				
	V95X1236X	ME-1 CHANNEL FAIL FLAG	R/S LCH SEQ				
	V95X1237X	ME-2 CHANNEL FAIL FLAG	R/S LCH SEQ				

TABLE 4.8.2.4–1. SPACE SHUTTLE MAIN ENGINE(SSME) SOP (G4.181) INPUT/OUTPUT FUNCTIONAL PARAMETERS

DBFN: D3B027-F PN: VP707100049P00L OUTPUT FUNCTIONAL PARAMETERS FROM SSME SOP

FSSR NAME	M/S ID	NOMENCLATURE	DESTINATION	UNITS	DATA TYPE	PREC	LAST CRS
	V95X1238X	ME-3 CHANNEL FAIL FLAG	R/S LCH SEQ				
	V95X1240X	ME-1 TVC SERVO OVRD	MPS TVC CMD SOP				
	V95X1241X	ME-2 TVC SERVO OVRD	MPS TVC CMD SOP				
	V95X1242X	ME-3 TVC SERVO OVRD	MPS TVC CMD SOP				

TABLE 4.8.2.4–2. SPACE SHUTTLE MAIN ENGINE(SSME) SOP (G4.181) I–LOADS

DBFN:0484

FSSR NAME	MSID	ENG UNIT	DT	PR	D	S	PR	FCTN	CAT
CPRESS(1)	V97U3979C	PCT/PSIA	F	S	D	P	G4.181		ZFZ1
CPRESS(2)	V97U3980C	PCT/PSIA	F	S	D	P	G4.181		ZFZ1
CPRESS(3)	V97U3981C	PCT/PSIA	F	S	D	P	G4.181		ZFZ1
DATA_FAIL	V97U4151C	ND	F	S	D	P	G4.181		ZSZ7

TABLE 4.8.2.4–3. SPACE SHUTTLE MAIN ENGINE(SSME) SOP (G4.181) K–LOADS

DBFN:0558

FSSR NAME DESCRIPTION	MSID	MC KLOAD VALUE	ENG UNIT	DT	PR	S	PR FCTN	LAST CR EQTN MSID
KPRESS(1)	V97U4090C	+0.0 E+00	PCT	F	S	P	G4.181	29551B
KPRESS(2)	V97U4091C	+0.0 E+00	PCT	F	S	P	G4.181	29551B
KPRESS(3)	V97U4092C	+0.0 E+00	PCT	F	S	P	G4.181	29551B

TABLE 4.8.2.4–4. SPACE SHUTTLE MAIN ENGINE(SSME) SOP (G4.181) CONSTANTS

DBFN:0558

FSSR NAME DESCRIPTION	MSID	MC	CONSTANT VALUE	ENG UNIT	DT	PR	S	PR FCTN	LAST CR
NO REQUIREMENTS									

THIS PAGE INTENTIONALLY LEFT BLANK

Rockwell International
Space Systems Division

☆ U.S. GOVERNMENT PRINTING OFFICE: 1991—561-014/40080

IDENTIFICATION NUMBER SE-694D DOCUMENT NUMBER STS83-0026D

TITLE FUNCTIONAL SUBSYSTEM SOFTWARE REQUIREMENTS SEQUENCE REQUIREMENTS

DATE OF LIST 3-26-91

DISTRIBUTION:

NASA/JSC
CA4/S. Kruse
DA8/E. Henderson
DC44/Wells
DF/C. Calix
DF4/L. Hicks (2)
DF62/Library (3)
DF63/Library
DF65/Library (3)
DF7
DG66/J. Simms (3)
DG67/D. Beckman
DH4/Pointing Library
DH6/Library
DM
DM/Library
DM24/Library
DM35/E. Smith
DM4/G. Hillier
DP3/R. Murray
ED3/S. Whitehead
EG/S. Solis
EG2/H. Jackson
EG2/K. Todd
EG3/Library
EK/FDSD Library
EK2/P. Jones
EP2
EP2/L. Jenkins
EP2/D. Prevett
EP4/B. Boyd
NB2/D. Horn
NB2/Technical Library
NS5/W. Bates
VG/H. Hernandez
WG/Library
WG4/T. Kaluza

FORD/HOUSTON
F612H/SR&QA Library
F664S/D. Files
F652S/G. Vincent
F650H/J. Bacon

UNISYS
U07B-16/ K. McMurtrie
U08C/L. Morris

RSOC/HOUSTON
R12A/B. Hawkins (3)
R12B-16/D. Magnusson
R16B/B. Picka
R16B/R. Schmidgall
R16C/Prox Ops/Rndz Library
R16D/Descent Library
R16E/M. Kocen
R16E/Traj. Ops. Library
R18B/M. Vaughn
R18H-555/E. Papavasiliou
R19E-4/M. Tarbescu
030B/STSOC Library (2)

FORD AEROSPACE
CC5/D. Smith

IBM FEDERAL SYSTEMS DIVISION
6402B/Project Office (50)

ROCKWELL/HOUSTON
ZC01/R. Winkler

JM86/Remainder

NASA-MSFC
EB42/C. Horn
EP52/M. Neely
CN22D/Doc. Repository

LESC/HOUSTON
C07/B. Strassner
C07/S. Jo
C07A/A. Hockenbury (3)
C07A/K. C. Broyles
C18/E. Street
C87/B. Reitz
C87/L. Olson (3)
C87/S. Vickery
C87/R. Joa (5)

TRW
H5/R. Lee

MDAC-ENGINEERING SERVICES
MDCA215/G. Hirsch
TB2BHI/P. Swaim
T3C/R. Fisher
TA217/L. Guderian
TA123/AASC Library

INTERMETRICS
John Hanaway
1750 112th N. E.
Suite D151
Bellevue, WA 98004

INTERMET/HOUSTON
R. Reid

ROCKETDYNE
AC58/P. Seitz
Rockwell International Corp.
6633 Canoga Ave.
Canoga Park CA 91303

FOR CHANGES TO THIS DISTRIBUTION LIST, CONTACT JSC DATA MANAGEMENT/JM21 AT 713-483-4006 (FTS 52
4006). TO REQUEST A COPY, SUBMIT A JSC FORM 614 TO DISTRIBUTION OPS./JM86