DATA CHANGE NOTICE

SHUTTLE CREW OPERATIONS MANUAL

AMENDENT: PCN 2	DATE: November 1992	PAGE: 1 of 309

Replace SCOM 1.0 /1.1 pages with the revised/new PCN 2 pages. Insert the revised LOEP at the end of the manual following the Index.

APPROVED BY

William Bowers
Project Manager, SAIC

W H Bowers

Date: 11/30/92

Kenneth S. Reightler, Jr.
Flight Crew Operations Directorate

Ken Reightler

Date: 12/4/92

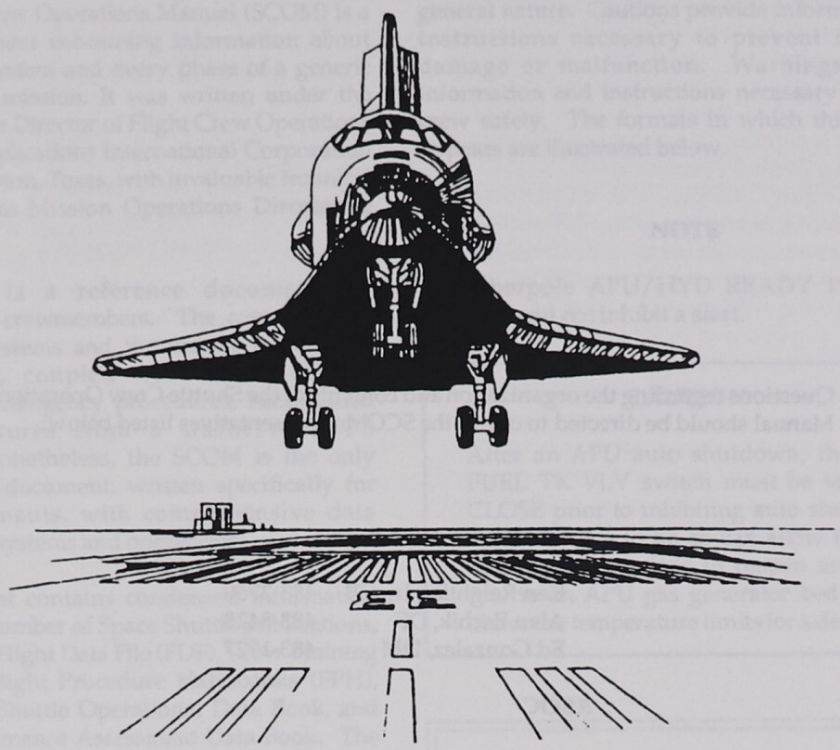

SHUTTLE CREW OPERATIONS MANUAL

PREPARED BY SCIENCE APPLICATIONS INTERNATIONAL CORPORATION
RSOC PURCHASE ORDER NO. J1W4XCL-450026, TASK ORDER 2

NOVEMBER 1992
OI-21

Questions regarding the organization and contents of the Shuttle Crew Operations Manual should be directed to one of the SCOM representatives listed below:

NASA

Ken Reightler, Jr., CB	483-2760
Alan Bachik, DF	483-8428
Ed Gonzalez, DM	483-1927

RSOC

Bill O'Keefe, DG	483-2905
Chris Hawkins, CA	483-2819

SAIC

Bill Bowers	244-3814

PREFACE

The Shuttle Crew Operations Manual (SCOM) is a unique document containing information about each Shuttle system and every phase of a generic Space Shuttle mission. It was written under the authority of the Director of Flight Crew Operations by Science Applications International Corporation (SAIC) of Houston, Texas, with invaluable technical assistance from Mission Operations Directorate personnel.

The SCOM is a reference document for Space Shuttle crewmembers. The complexity of the Shuttle systems and the unique operational environment, coupled with the numerous malfunction/emergency procedures, necessitated some departures from a Dash1/NATOPS approach. Nonetheless, the SCOM is the only single source document, written specifically for Shuttle astronauts, with comprehensive data about Shuttle systems and operations.

This document contains condensed information from a large number of Space Shuttle publications, including the Flight Data File (FDF), Crew Training workbooks, Flight Procedure Handbooks (FPH), Flight Rules, Shuttle Operational Data Book, and Shuttle Performance Assessment Data Book. The SCOM is not a replacement for any of these documents. It has been carefully reviewed by FCOD and MOD personnel to ensure accuracy of information. In all cases, should a conflict arise between the SCOM and FDF or Flight Rules, the FDF and Flight Rules will govern. If conflicts arise between the SCOM and workbooks or FPH, the conflicts should be resolved with the appropriate book manager or system representative.

Information contained in the SCOM is current as of November 1992 and OI-21. CRT displays documented in the text and in Appendix B are the CRT displays documented in the Level C Functional Subsystem Software Requirements Display and Controls Specification, STS 83-0020F dated February 13, 1991, effectivity OI-21 and subs. It should be noted that several CRT displays provided in the body of this document are for illustrative purposes only; certain CRT displays contain data combined in one illustration that do not appear simultaneously in operational use.

Additional information or clarification is presented in three formats: notes, cautions, and warnings. Notes provide amplifying information of a general nature. Cautions provide information and instructions necessary to prevent hardware damage or malfunction. Warnings provide information and instructions necessary to ensure crew safety. The formats in which this material appears are illustrated below.

NOTE

A barberpole APU/HYD READY TO START talkback will not inhibit a start.

CAUTION

After an APU auto shutdown, the APU FUEL TK VLV switch must be taken to CLOSE prior to inhibiting auto shutdown logic. Failure to do so can allow the fuel tank isolation valves to reopen and flow fuel to an APU gas generator bed that is above the temperature limits for safe restart.

WARNING

The FUEL CELL REAC switches on panel R1 are in a vertical column with FUEL CELL 1 REAC on top, FUEL CELL 3 REAC in the middle, and FUEL CELL 2 REAC on the bottom. This was done to allow the schematic to be placed on the panel. Because the switches are not in numerical order, it is possible to inadvertently close the wrong fuel cell reactant valve when shutting down a fuel cell.

The SCOM will be updated according to the process described in the Configuration Control Plan.

Configuration Control Plan

Your inputs are vital for the SCOM to remain a useful document. Changes may be submitted via the SCOM Change Request (CR) Form. Corrections, additions, deletions, or other constructive suggestions should be submitted to mail code CB-SCOM on the SCOM CR form. The form should be filled out in its entirety except for the Disposition blocks and the Control Number block. CB-SCOM will assign a control number. The initiator should clearly explain the correction or modification and list the applicable page number(s). Additional pages or annotated copies of the applicable SCOM pages may be submitted with the CR. Each CR should contain only corrections or modifications.

CRs containing recommended corrections will be verified by CB designated personnel and incorporated through pen and ink changes or page change notifications (PCNs). The CB representative will determine whether the number of verified corrections warrant a PCN prior to a semiannual review.

Semiannual reviews will be conducted by a Change Board to consider changes to the SCOM. The CB representative (or his designee) will chair the reviews. CRs recommending modifications will be reviewed and incorporated (with or without additional modification) or disapproved. Disapproved CRs will be returned to the initiator with a brief explanation. Initiators may resubmit the CR at a future review. Approved changes will be promulgated via PCNs subsequent to the reviews or at the direction of CB. Revisions (Rev's) will be published at the direction of CB if substantial changes to the manual are made.

CONTENTS

PREFACE iii
CONFIGURATION CONTROL PLAN iv
PROGRAM DOCUMENTATION vi

1. GENERAL DESCRIPTION 1-1

1.1 Overview 1.1-1

Space Shuttle Requirements 1.1-1
Nominal Mission Profile 1.1-2
Launch and Landing Sites 1.1-5
Orbiter Ground Turnaround 1.1-5
Space Shuttle Coordinate Reference System 1.1-7
Location Codes 1.1-8

1.2 Orbiter Structure 1.2-1

Forward Fuselage 1.2-1
Crew Compartment 1.2-3
Forward Fuselage and Crew Compartment Windows 1.2-7
Wing 1.2-8
Midfuselage 1.2-10
Aft Fuselage 1.2-11
Orbital Maneuvering System/Reaction Control System Pods 1.2-13
Body Flap 1.2-14
Vertical Tail 1.2-15
Orbiter Passive Thermal Control 1.2-16
Thermal Protection System 1.2-16

1.3 External Tank 1.3-1

Liquid Oxygen Tank 1.3-2
Intertank 1.3-2
Liquid Hydrogen Tank 1.3-3
Thermal Protection System 1.3-3
Hardware and Instrumentation 1.3-3
Range Safety System 1.3-4

1.4 Solid Rocket Boosters 1.4-1

Hold-Down Posts 1.4-3
SRB Ignition 1.4-4
Electrical Power Distribution 1.4-5
Hydraulic Power Units 1.4-5
Thrust Vector Control 1.4-6
SRB Rate Gyro Assemblies 1.4-6
SRB Separation 1.4-6
Range Safety System 1.4-7
SRB Descent and Recovery 1.4-8

2. SYSTEMS 2-1

2.1 Auxiliary Power Unit/Hydraulics (APU / HYD) 2.1-1

Description 2.1-1
Fuel System 2.1-2
Gas Generator and Turbine 2.1-5
Lubricating Oil 2.1-5
Electronic Controller 2.1-6
Injector Cooling System 2.1-10
APU Heaters 2.1-11
Water Spray Boilers 2.1-12
Main Hydraulic Pump 2.1-16
Hydraulic Reservoir 2.1-18
Hydraulic Accumulator 2.1-18
Circulation Pump and Heat Exchanger 2.1-19
Hydraulic Heaters 2.1-21
Operations 2.1-21

2.2 Caution and Warning System (C/W) 2.2-1

Description 2.2-1
Alarms 2.2-2
Smoke Detection and Fire Suppression 2.2-5
Rapid Cabin Depressurization 2.2-10
Operations 2.2-11
SPEC 60, SM Table Maintenance 2.2-14
F7 Light Summary 2.2-20
Fault Message Summary 2.2-23

2.3 Closed Circuit Television (CCTV) 2.3-1

Description 2.3-1
Video Control Unit (VCU) 2.3-1
Camera 2.3-4
Lenses 2.3-9
Monitors 2.3-10
Video Tape Recorder (VTR) 2.3-11
Accessories 2.3-13
Operations 2.3-14

2.4 Communications 2.4-1

Description 2.4-1
S-Band Phase Modulation 2.4-2
S-Band Frequency Modulation 2.4-10
Ku-Band System 2.4-12
Payload Communication System 2.4-20
Ultrahigh Frequency System 2.4-23
Audio Distribution System 2.4-25
Instrumentation 2.4-35

Teleprinter 2.4-40
Text and Graphics System 2.4-41

2.5 Crew Systems 2.5-1

Description 2.5-1
Crew Clothing/Worn Equipment 2.5-1
Personal Hygiene Provisions 2.5-1
Sleeping Provisions 2.5-2
Exercise Equipment 2.5-5
Housekeeping Equipment 2.5-6
Restraints and Mobility Aids 2.5-6
Reach and Visibility Aids 2.5-7
Photographic Equipment 2.5-10
Sighting Aids 2.5-12
Window Shades, Filters, and EMI Shields 2.5-12
Shuttle Orbiter Medical System 2.5-13
Operational Bioinstrumentation System 2.5-14
G-Suit 2.5-17
Radiation Equipment 2.5-18
Acoustics Provisions 2.5-19
Air Sampling System 2.5-20

2.6 Data Processing System (DPS) 2.6-1

Description 2.6-1
General Purpose Computers 2.6-2
Data Bus Network 2.6-7
Multiplexers/Demultiplexers 2.6-11
Mass Memory Units 2.6-13
Multifunction CRT Display System 2.6-14
Master Timing Unit 2.6-15
Software 2.6-19
Operations 2.6-25

2.7 Dedicated Display Systems 2.7-1

Description 2.7-1
Display Driver Unit 2.7-2
Attitude Director Indicator 2.7-5
Horizontal Situation Indicator 2.7-7
Alpha/Mach Indicator 2.7-13
Altitude/Vertical Velocity Indicator 2.7-15
Surface Position Indicator 2.7-17
Flight Control System Push Button Indicators 2.7-19
Reaction Control System Command Lights 2.7-20
G-Meter 2.7-20
Head-Up Display 2.7-21

2.8 Electrical Power System (EPS) 2.8-1

Description 2.8-1
Power Reactants Storage and Distribution System 2.8-1
Fuel Cell System 2.8-10
Electrical Power Distribution and Control 2.8-20
Operations 2.8-30

2.9 Environmental Control and Life Support System (ECLSS) 2.9-1

Description 2.9-1
Pressure Control System 2.9-4
Atmospheric Revitalization System 2.9-12
Active Thermal Control System 2.9-22
Supply and Waste Water Systems 2.9-33
Operations 2.9-42

2.10 Escape Systems 2.10-1

Description 2.10-1
Launch Pad Egress Systems 2.10-1
Launch/Entry Suit 2.10-4
Personal Parachute Assembly 2.10-5
Crew Escape System Pyrotechnics 2.10-13
Egress Pole System 2.10-14
Emergency Egress Slide 2.10-16
Secondary Emergency Egress 2.10-16
Procedures for Bailout, Water Survival, and Rescue 2-10-20

2.11 Extravehicular Activity 2.11-1

Description 2.11-1
Extravehicular Mobility Unit 2.11-3
Airlock 2.11-11
EVA Support Equipment 2.11-15
Manned Maneuvering Unit 2.11-17
Operations 2.11-19

2.12 Galley/Food 2.12-1

Description 2.12-1
Water Dispenser 2.12-1
Food Warmer 2.12-2
Food 2.12-2
Repackaged Galley 2.12-3

2.13 Guidance, Navigation, and Control (GNC) 2.13-1

Description 2.13-1
Navigation Hardware 2.13-5
Flight Control System Hardware 2.13-24
Digital Autopilot 2.13-44
Operations 2.13-50

2.14 Landing/Deceleration System 2.14-1
Description 2.14-1
Landing Gear 2.14-1
Drag Chute 2.14-5
Main Landing Gear Brakes 2.14-6
Nose Wheel Steering 2.14-10
Operations 2.14-11

2.15 Lighting System 2.15-1
Description 2.15-1
Interior Lighting 2.15-1
Exterior Lighting 2.15-12

2.16 Main Propulsion System (MPS) 2.16-1
Description 2.16-1
Space Shuttle Main Engines (SSMEs) 2.16-3
Space Shuttle Main Engine Controllers 2.16-8
Propellant Management System (PMS) 2.16-14
Helium System 2.16-20
MPS Hydraulic Systems 2.16-24
Malfunction Detection 2.16-26
Operations 2.16-29

2.17 Mechanical Systems 2.17-1
Description 2.17-1
Active Vent System 2.17-2
External Tank Umbilical Doors 2.17-4
Payload Bay Door System 2.17-9
Drag Chute ..... (see 2.14-5)

2.18 Orbital Maneuvering System (OMS) 2.18-1
Description 2.18-1
Engines 2.18-3
Helium System 2.18-10
Propellant Storage and Distribution 2.18-12
Thermal Control 2.18-20
Thrust Vector Control (TVC) 2.18-21
Fault Detection and Identification 2.18-22
Operations 2.18-23

2.19 Payload Deployment and Retrieval System (PDRS) 2.19-1
Description 2.19-1
Remote Manipulator System (RMS) 2.19-1
Manipulator Positioning Mechanism 2.19-11
Payload Retention Mechanisms 2.19-14
Operations 2.19-18

2.20 Reaction Control System (RCS) 2.20-1
Description 2.20-1
Jet System 2.20-3
Propellant System 2.20-5
Helium System 2.20-10
Thermal Control 2.20-12
RCS Redundancy Management 2.20-14
Operations 2.20-18

2.21 Spacelab 2.21-1
Description 2.21-1
Module 2.21-3
Pallet 2.21-5
Instrument Pointing Subsystem 2.21-5
Flight Deck Interfaces 2.21-6
Electrical Power 2.21-6
Command and Data Management System 2.21-11
Module Environmental Control and Life Support 2.21-14

2.22 Stowage 2.22-1
Description 2.22-1
Rigid Containers 2.22-1
Flexible Containers 2.22-4
Middeck Accommodations Rack 2.22-6

2.23 Waste Management System (WMS) 2.23-1
Description 2.23-1
Operations 2.23-5

3. FLIGHT DATA FILE 3-1
3.1 Control Documents 3.1-1
Ascent Checklist 3.1-1
Post Insertion Book 3.1-1
Flight Plan 3.1-1
Deorbit Preparation Book 3.1-1
Entry Checklist 3.1-2

3.2 Support Documents 3.2-1
Orbit Operations Checklist 3.2-1
Photo/TV Checklist 3.2-1
Payload Deployment and Retrieval System Operations Checklist 3.2-1
Extravehicular Activity Checklists 3.2-1
Rendezvous Book 3.2-1
Payload Operations Checklist 3.2-2
Deploy Checklist 3.2-2
Additional Support Documents 3.2-2

5.3 Orbit 5.3-1
Orbit Operations 5.3-1
OMS (RCS) Burns 5.3-1
Rendezvous 5.3-4
Proximity Operations 5.3-4
Last Full On-Orbit Day 5.3-9
Last Full On-Orbit Day 5.3-9

5.4 Entry 5.4-1
Deorbit Preparation 5.4-1
Deorbit Burn 5.4-3
Entry Interface 5.4-5
Terminal Area Energy Management 5.4-7
Approach and Landing 5.4-8

5.5 Post Landing 5.5-1

6.EMERGENCY PROCEDURES 6-1
6.1 Launch Abort Modes and Rationale 6.1-1
Mode 1 - Unaided Egress/Escape 6.1-1
Mode 2 - Aided Escape 6.1-1
Mode 3 - Aided Escape 6.1-2
Mode 4 - Aided Escape 6.1-2

6.2 Ascent Aborts 6.2-1
Performance Aborts 6.2-1
Systems Aborts 6.2-3
Range Safety 6.2-4

6.3 Return To Launch Site 6.3-1
Powered RTLS 6.3-2
Gliding RTLS 6.3-6

6.4 Transoceanic Abort Landing 6.4-1
Nominal Transoceanic Abort Landing 6.4-1
Post MECO Transoceanic Abort Landing 6.4-4

6.5 Abort Once Around 6.5-1
Powered Flight 6.5-1
OMS-1 ..... 6.5-1
OMS-2 ..... 6.5-3
Entry 6.5-4

6.6 Abort to Orbit 6.6-1
Powered Flight 6.6-1
OMS-1 ..... 6.6-1
OMS-2 ..... 6.6-1

6.7 Contingency Abort 6.7-1
Powered Flight 6.7-1
ET Separation 6.7-2
Entry 6.7-2

6.8 Systems Failures 6.8-1
APU/Hydraulics 6.8-2
Communications 6.8-5
Cryo 6.8-6
Data Processing System 6.8-6
Environmental Control and Life Support System 6.8-8
Electrical Power System 6.8-9
Gudiance, Navigation, and Control 6.8-12
Mechanical 6.8-12
Main Propulsion System 6.8-12
Orbital Maneuvering System/Reaction Control System 6.8-14

6.9 Multiple Failure Scenarios 6.9-1
MPS He Leak with APC/ALC Failures 6.9-1
MPS He Leak with Degraded/Failed SSME 6.9-1
Set Splits/MPS 6.9-1
Stuck Throttle in the Bucket 6.9-1
Second Hydraulic Failure and 1 SSME Failed 6.9-2
Two APUs/Hydraulic Systems 6.9-2
APU 1 and Multiple Prox Box Failures 6.9-2
Two Freon/Water Loops 6.9-2
Total Loss of FES with BFS Failure 6.9-2
Two Fuel Cells 6.9-2
Both OMS 6.9-3
OMS/RCS Leak with DPS/EPS Failures 6.9-3
Cryo Leak with Failed Manifold Valve 6.9-3
BFS Self Engage 6.9-3

6.10 Switch and Panel Cautions 6.10-1
MPS Switches 6.10-1
Fuel Cell Reactant Valves 6.10-1
CRT Power Switch 6.10-1
GPC/MDMs 6.10-1
PLB Mech Power/Enable 6.10-1
HYD Press and APU Controller Power Switches 6.10-1
OMS Kit 6.10-1

Upon its return to the OPF at KSC, the orbiter is safed (ordnance devices safed), the payload (if any) is removed, and the orbiter payload bay is reconfigured for the next mission. Any required maintenance and inspections are also performed while the orbiter is in the OPF. A payload for the orbiter's next mission may be installed in the orbiter's payload bay in the OPF or when the orbiter is at the launch pad.

The spacecraft is then towed to the Vertical Assembly Building and mated to the external tank. The external tank and SRBs are stacked and mated on the mobile launcher platform while the orbiter is being refurbished. Space Shuttle orbiter connections are made, the integrated vehicle is checked, and ordnance is installed.

The mobile launcher platform moves the entire Space Shuttle system on a crawler transporter to the launch pad, where connections are made, and servicing and checkout activities begin. If the payload was not installed in the OPF, it is installed at the launch pad followed by prelaunch activities.

KSC Launch Operations has responsibility for all mating, prelaunch testing, and launch control ground activities until the Space Shuttle vehicle clears the launch pad tower. Responsibility is then turned over to NASA's Johnson Space Center Mission Control Center. Mission Control's responsibility includes ascent, on-orbit operations, entry, approach, and landing until crew egress, at which time the orbiter is handed over to the postlanding operations at the landing site for turnaround and relaunch. At the launch site, the SRBs and ET are processed for launch, and the SRBs are recycled for reuse.

Space Shuttle Coordinate Reference System

The Space Shuttle coordinate reference system is a means of locating specific points on the orbiter. The system is measured in inches and decimal places; X_o designates the longitudinal axis, Y_o the lateral axis, and Z_o the vertical axis. The subscript "o" indicates orbiter; similar reference systems are used for the ET (T), SRB (B), and overall Space Shuttle system (S).

In each coordinate system, the X-axis zero point is located forward of the nose tip; that is, the orbiter nose tip location is 236 inches aft of the zero point (at $X_o = 236$), the ET nose cap tip location is at $X_T = 322.5$, and the SRB nose tip location is at $X_B = 200$. In the orbiter, the horizontal X_o, Y_o reference plane is located at $Z_o = 400$, which is 336.5 inches above the external tank horizontal X_T, Y_T reference plane located at $Z_T = 400$. The solid rocket booster horizontal X_B, Y_B reference plane is located at $Z_B = 0$ and coincident with the external tank horizontal plane at $Z_T = 400$. The solid rocket booster vertical

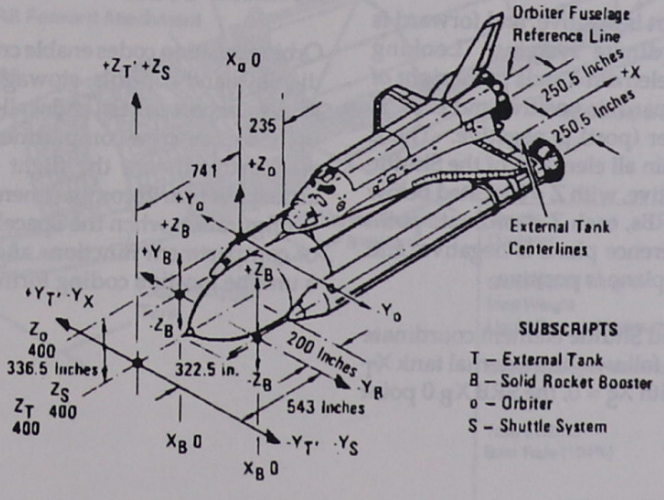

Space Shuttle Coordinate Systems

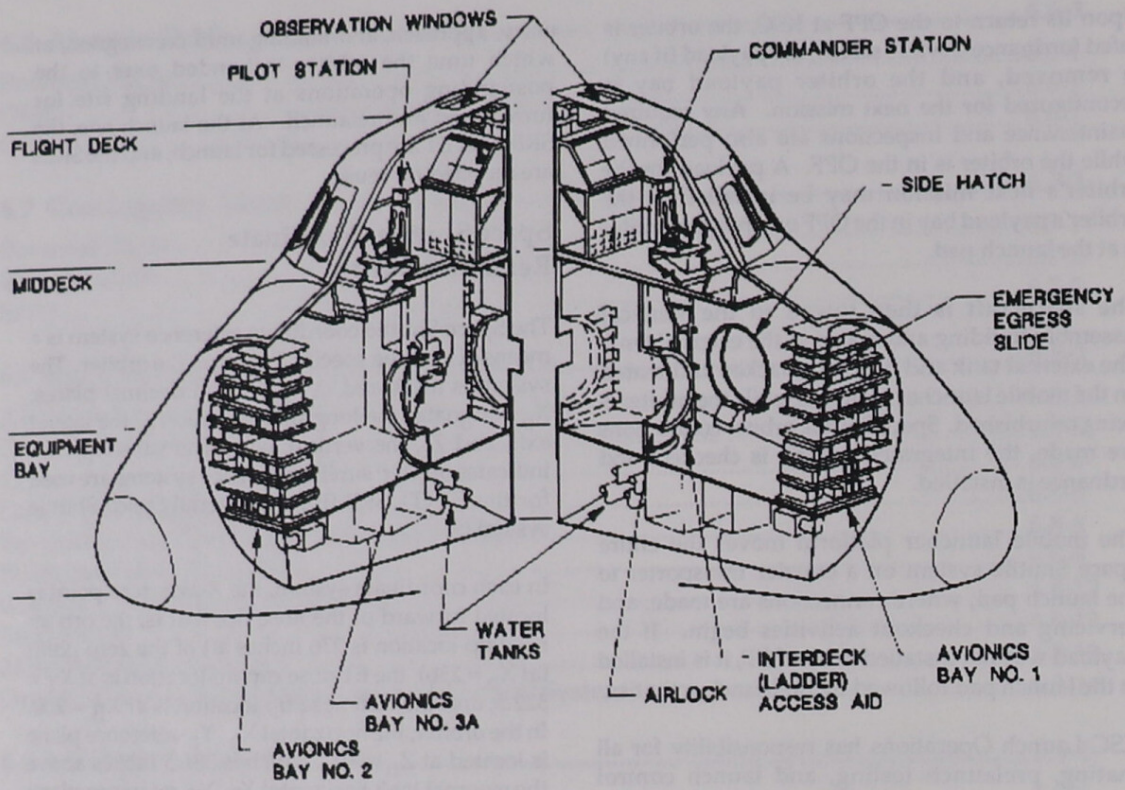

Crew Cabin (Cutaway View)

X_B, Z_T planes are located at + Y_S = 250.5 and -Y_S = 250.5. Also, the orbiter, external tank, and Shuttle system center X, Z planes coincide.

From the X = 0 point, aft is positive, and forward is negative for all coordinate systems. Looking forward, each Shuttle element Y-axis point right of the center plane (starboard) is positive and each Y-axis point left of center (port) is negative. The Z axis of each point within all elements of the Shuttle except the SRBs is positive, with Z = 0 located below the element. In the SRBs, each Z-coordinate point below the X_B, Y_B reference plane is negative, and each point above that plane is positive.

The Shuttle system and Shuttle element coordinate systems are related as follows: the external tank X_T = 0 point coincides with X_S = 0, the SRB X_B 0 point is located 543 inches aft, and the Y_O, Z_O reference plane is 741 inches aft of X_S = 0.

Location Codes

Orbiter location codes enable crewmembers to locate displays and controls, stowage compartments and lockers, access panels, and wall-mounted equipment in the orbiter crew compartments. The orbiter crew compartments are the flight deck, middeck, and airlock. A fourth compartment becomes part of the configuration when the Spacelab is flown. Because of compartment functions and geometry, each has a unique location coding format.

1.3 EXTERNAL TANK

CONTENTS

Liquid Oxygen Tank 1.3-2
Intertank 1.3-2
Liquid Hydrogen Tank 1.3-3
Thermal Protection System 1.3-3
Hardware and Instrumentation 1.3-3
Range Safety System 1.3-4

The external tank (ET) contains the liquid hydrogen fuel and liquid oxygen oxidizer and supplies them under pressure to the three SSMEs in the orbiter during lift-off and ascent. When the SSMEs are shut down, the ET is jettisoned, enters the Earth's atmosphere, breaks up, and impacts in a remote ocean area. It is not recovered. ET impact zones for direct and standard insertion are discussed in Section 1.1.

The largest and heaviest (when loaded) element of the Space Shuttle, the ET has three major components: the forward liquid oxygen tank, an unpressurized intertank that contains most of the electrical components, and the aft liquid hydrogen tank.

Beginning with the STS-6 mission, a lightweight ET was introduced. Although future tanks may vary slightly, each will weigh approximately 66,000 pounds inert. (The last heavyweight tank, flown on STS-7, weighed approximately 77,000 pounds inert.)

The ET is attached to the orbiter at one forward attachment point and two aft points. In the aft attachment area, there are also umbilicals that carry fluids, gases, electrical signals, and electrical power between the tank and the orbiter. Electrical signals and controls between the orbiter and the two SRBs also are routed through those umbilicals.

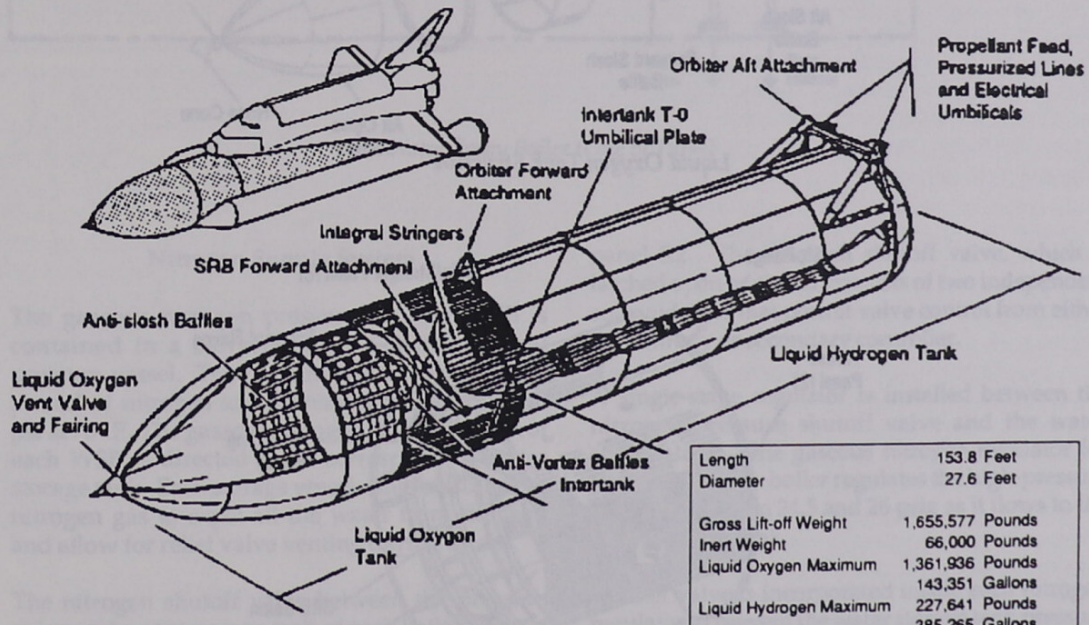

Length	153.8	Feet
Diameter	27.6	Feet
Gross Lift-off Weight	1,655,577	Pounds
Inert Weight	66,000	Pounds
Liquid Oxygen Maximum	1,361,936	Pounds
	143,351	Gallons
Liquid Hydrogen Maximum	227,641	Pounds
	385,265	Gallons
Total LO2/H2	528,616	Gallons
Burn Rate (104%)	64,957	Gallons/Min
	1,083	Gallons/Sec

(All Weights/Rates Approximate)

Lightweight External Tank

Liquid Oxygen Tank

The liquid oxygen tank is an aluminum monocoque structure composed of a fusion-welded assembly of preformed, chem-milled gores, panels, machined fittings, and ring chords. It operates in a pressure range of 20 to 22 psig. The tank contains anti-slosh and anti-vortex provisions to minimize liquid residuals and damp fluid motion. The tank feeds into a 17-inch-diameter feed line that conveys the liquid oxygen through the intertank, then outside the ET to the aft right-hand ET/orbiter disconnect umbilical. The 17-inch-diameter feed line permits liquid oxygen to flow at approximately 2,787 pounds per second with the SSMEs operating at 104 percent or permits a maximum flow of 17,592 gallons per minute. The liquid oxygen tank's double-wedge nose cone reduces drag and heating, contains the vehicle's ascent air data system (for nine tanks only) and serves as a lightning rod. The liquid oxygen tank's volume is 19,563 cubic feet. It is 331 inches in diameter, 592 inches long and weighs 12,000 pounds empty.

Intertank

The intertank is a steel/aluminum semimonocoque cylindrical structure with flanges on each end for joining the liquid oxygen and liquid hydrogen tanks. The intertank houses ET instrumentation components and provides an umbilical plate that interfaces with the ground facility arm for purge gas supply, hazardous gas detection, and hydrogen gas boiloff during ground operations. It consists of

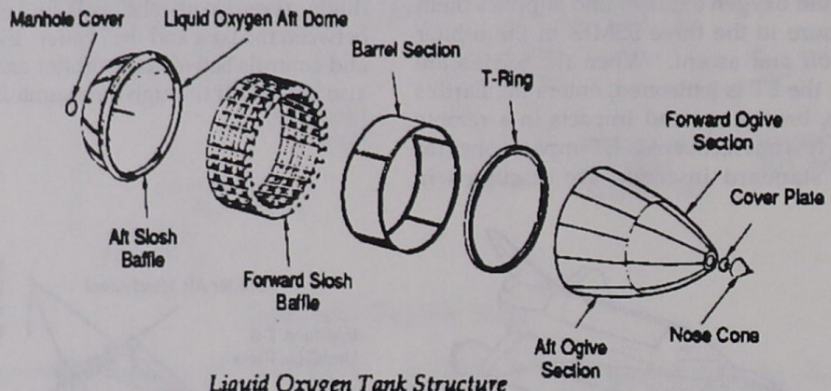

Liquid Oxygen Tank Structure

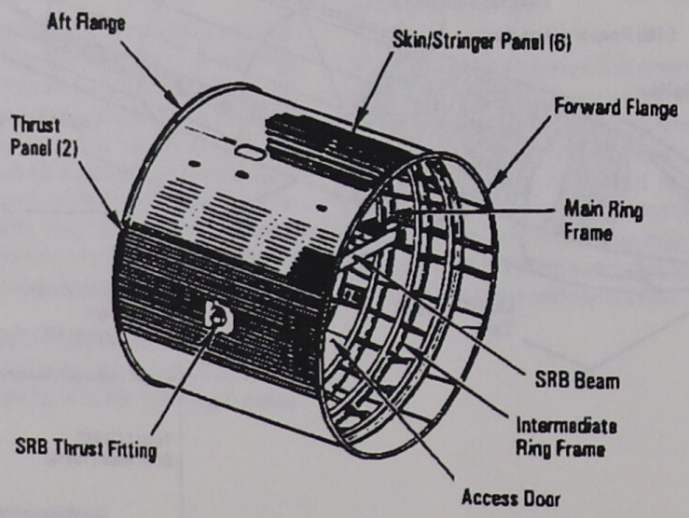

Intertank Structure

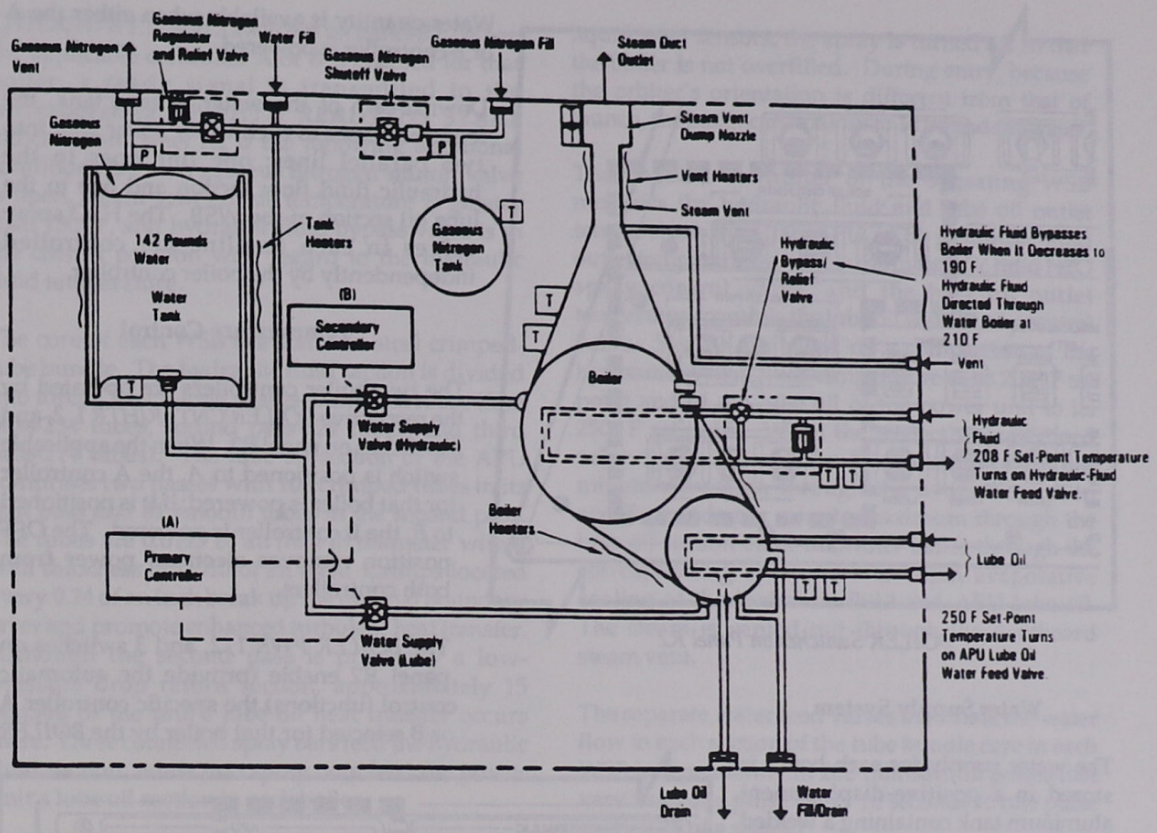

Water Spray Boiler (One of Three)

Nitrogen Supply System

The gaseous nitrogen pressure for each WSB is contained in a corresponding 6-inch spherical pressure vessel. The pressure vessel contains 0.77 pound of nitrogen at a nominal pressure of 2,400 psi at 70° F. The gaseous nitrogen storage system of each WSB is directed to its corresponding water storage tank. Each storage vessel contains sufficient nitrogen gas to expel all the water from the tank and allow for relief valve venting during ascent.

The nitrogen shutoff valve between the pressure valve and water storage tank of each boiler permits the pressure to reach the nitrogen regulator and water tank or isolates the nitrogen supply from the water tank. Each nitrogen valve is controlled by its respective *BOILER N2 SUPPLY 1*, 2, or 3 switch on panel R2. The nitrogen shutoff valve, which is latched open or closed, consists of two independent solenoid coils that permit valve control from either the primary or secondary controller.

A single-stage regulator is installed between the nitrogen pressure shutoff valve and the water storage tank. The gaseous nitrogen regulator for each water spray boiler regulates the high-pressure nitrogen between 24.5 and 26 psig as it flows to the water storage tank.

A relief valve is incorporated inside each nitrogen regulator to prevent the water storage tank pressure from exceeding 33 psig. The gaseous nitrogen relief valve opens between 30 to 33 psig.

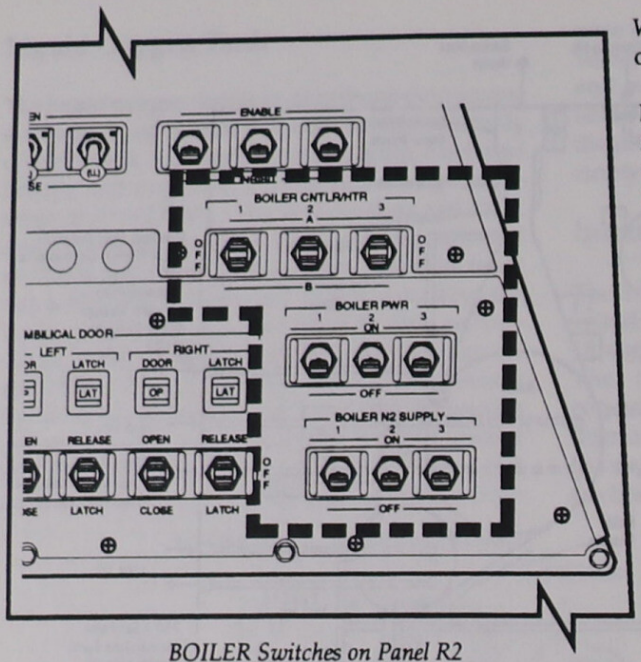

BOILER Switches on Panel R2

Water Supply System

The water supply for each boiler is stored in a positive-displacement aluminum tank containing a welded metal bellows separating the stored water inside the bellows from the nitrogen expulsion gas.

Redundant pressure and temperature sensors located downstream from the gaseous nitrogen pressure vessel and on the water tank for each boiler transmit the pressures and temperatures through each controller to the systems management general-purpose computer. The computer computes the water tank quantity from the pressure, volume, and temperature, and transmits the water tank quantity to panel F8 for each boiler. The switch below the meter on panel F8 is positioned to H_2O to allow the water quantity of each boiler to be displayed on the APU FUEL/H2O QTY 1, 2, or 3 meter.

Water quantity is available when either the A or B controller is powered.

Downstream of the water storage tank, the feedwater lines to each water boiler split into two parallel lines: one line goes to the hydraulic fluid flow section and one to the lube oil section of the WSB. The H2O spray valves in each feedline are controlled independently by the boiler controller.

Temperature Control

The two boiler controllers are operated by the respective *BOILER CNTLR/HTR 1, 2,* and 3 switches on panel R2. When the applicable switch is positioned to *A*, the A controller for that boiler is powered; if it is positioned to *B*, the B controller is powered. The *OFF* position removes electrical power from both controllers.

The *BOILER PWR 1, 2,* and 3 switches on panel R2 enable (provide the automatic control functions) the specific controller A or B selected for that boiler by the *BOILER*

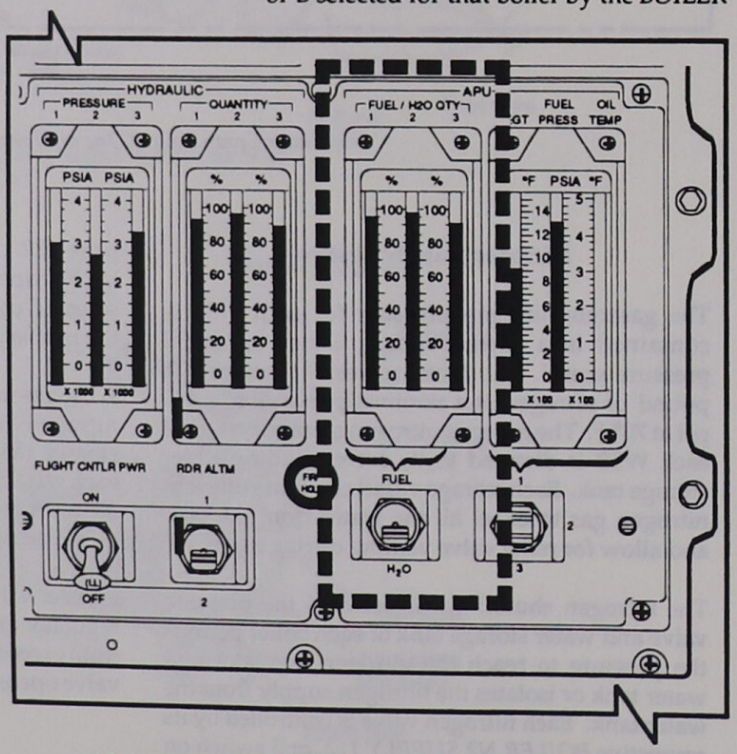

APU FUEL/H2O QTY Meter and Switch on Panel F8

CNTLR/HTR 1, 2, and *3* switches on panel R2. When the applicable controller A or B is enabled for that boiler, a ready signal is transmitted to the corresponding *APU/HYD READY TO START* indicator on panel R2 if the following additional conditions are met: gaseous nitrogen shutoff valve is open, steam vent nozzle temperature is greater than 130° F, and hydraulic fluid bypass valve is in the correct position with regard to the hydraulic fluid temperature.

The core of each WSB is a stainless steel crimped-tube bundle. The hydraulic fluid section is divided into three 17-inch-long passes of smooth tubes (first pass-234 tubes, second pass-224 tubes, and third pass-214 tubes). The lube oil section of the APU comprises two passes with 103 crimped tubes in its first pass and 81 smooth tubes in the second pass. The tubes are 0.0125 of an inch in diameter with a wall thickness of 0.010 of an inch. Crimps located every 0.24 of an inch break up the internal boundary layer and promote enhanced turbulent heat transfer. Although the second pass is primarily a low-pressure drop return section, approximately 15 percent of the unit's lube oil heat transfer occurs there. Three connected spray bars feed the hydraulic fluid section, while two spray bars feed the power unit's lube oil section in each boiler.

When the orbiter is in the vertical position on the launch pad, each boiler is loaded with up to 3.5 pounds of water, which is referred to as "pool mode" operation. When each APU/hydraulic system and WSB are in operation 5 minutes before lift-off, the APU lube oil tube bundle is immersed in the boiler water precharge. Liquid level sensors in each water boiler prevent the water feed valves from pulsing to avoid water spillage or loss. As the vehicle ascends during launch, the lube oil system of the APU heats up, eventually the boiler water precharge boils off, and the boiler goes into the spray mode about 8 minutes after launch. The hydraulic fluid usually does not heat up enough during ascent to require spray cooling.

When the APU/hydraulic combination is started for atmospheric entry, the hydraulic fluid and power unit lube oil flow commences, fluid temperatures rise, and spraying is initiated as required. During the lower part of entry, when the boiler temperature reaches 188° F, the water spray boiler returns to the pool mode. The spray bars begin discharging excess water to fill the boiler. When the water reaches the liquid level sensors, the spray is turned off so that the boiler is not overfilled. During entry, because the orbiter's orientation is different from that of launch, the boiler can hold up to 14 pounds of water.

The enabled controller of the operating WSB monitors the hydraulic fluid and lube oil outlet temperature from the APU. The hydraulic fluid outlet temperature controls the hydraulic fluid H2O spray control valve, and the lube oil outlet temperature controls the lube oil water spray control valve. Signals are based on a comparison of the hydraulic system fluid temperature to its 208° F set point and of the lube oil of the power unit to its 250° F set point. When the respective water feed valve opens, instantaneous flows of 10 pounds per minute maximum through the hydraulic section and 5 pounds per minute maximum through the lube oil section enter the water boiler through the corresponding spray bars to begin evaporative cooling of the hydraulic fluid and APU lube oil. The steam is vented out through the overboard steam vent.

The separate water feed valves modulate the water flow to each section of the tube bundle core in each WSB independently in 200-millisecond pulses that vary from one pulse every 10 seconds to one pulse every 0.25 of a second.

Because of the unique hydraulic system fluid flows, control valves are located in the hydraulic system fluid line section of each WSB. Normally, hydraulic system fluid flows at up to 21 gallons per minute; however, the hydraulic system experiences 1- to 2-second flow spikes at up to 63 gallons per minute. If these spikes were to pass through the boiler, pressure drop would increase ninefold and the boiler would limit the flow of the hydraulic system. To prevent this, a relief function is provided by a spring- loaded poppet valve that opens when the hydraulic fluid pressure drop exceeds 48 psi and is capable of flowing 43 gallons per minute at a differential pressure of 50 psi across the boiler. A temperature controller bypass valve allows the hydraulic fluid to bypass the boiler when the fluid temperature decreases to 190° F. At 210° F, the controller commands the bypass valve to direct the fluid through the boiler. When the hydraulic fluid cools to 190° F, the controller again commands the valve to route the fluid around the boiler. Bypass

valve (BYP VLV) status is available on the following displays: SM SYS SUMM 2 (PASS AND BFS) and PASS DISP 86 APU/HYD.

Heaters

Each water boiler, water tank, and steam vent is equipped with electrical heaters to prevent freeze-up in orbit. The water tank and boiler electrical heaters are activated by the corresponding *BOILER CNTLR/HTR 1, 2,* and *3* switches on panel R2. The *A* or *B* position of each switch selects the A or B heater system and is automatically controlled by the corresponding A or B controller. The steam vent heaters are also activated by the *BOILER CNTLR/HTR 1, 2* and *3* switches but only if the *BOILER PWR 1, 2* or *3* switch on panel R2 is *ON*. The water tank and boiler heaters are cycled on at 50° F and off at 55° F. The steam vent heaters are not operated continuously in orbit; they are activated approximately two hours before APU startup. The steam vent heaters are cycled on at 150° F and cycled off at 175° F.

Main Hydraulic Pump

The main hydraulic pump for each hydraulic system is a variable displacement type. Each operates at approximately 3,900 rpm when driven by the corresponding APU.

Each main hydraulic pump has an electrically operated depressurization valve. The depressurization valve for each pump is controlled by its corresponding *HYD MAIN PUMP PRESS 1, 2,* or *3* switch on panel R2. When the switch is positioned to *LOW*, the depressurization valve is energized to reduce the main hydraulic pump discharge pressure from its nominal range of 2,900 to 3,100 psi output to a nominal range of 500 to 1,000 psi to reduce the APU torque requirements during the start of the APU. "APU Press Low" is one of the inputs required to get a gray *READY TO START* talkback.

NOTE

An APU cannot be successfully started with *HYD MAIN PUMP PRESS* positioned to *NORM*.

After an APU has been started, the corresponding *HYD MAIN PUMP PRESS* switch is positioned from *LOW* to *NORM*. This de-energizes the respective depressurization valve, allowing that hydraulic pump to increase its outlet pressure from 500 to 1,000 psi to 2,900 to 3,100 psi. Each hydraulic pump is a variable displacement type that provides 0 to 63 gallons per minute at 3,000 psi nominal with the APU at normal speed and 69.6 gallons per minute at 3,000 psi nominal with the APU at high speed.

Main pump outlet pressure (HYD PRESS) can be seen by the crew on the BFS SM SYS SUMM 2 or PASS DISP 86 APU/HYD displays. A high-pressure relief valve in the filter module for each hydraulic system also relieves the hydraulic pump supply line pressure into the return line in the event the supply line pressure exceeds 3,850 psid.

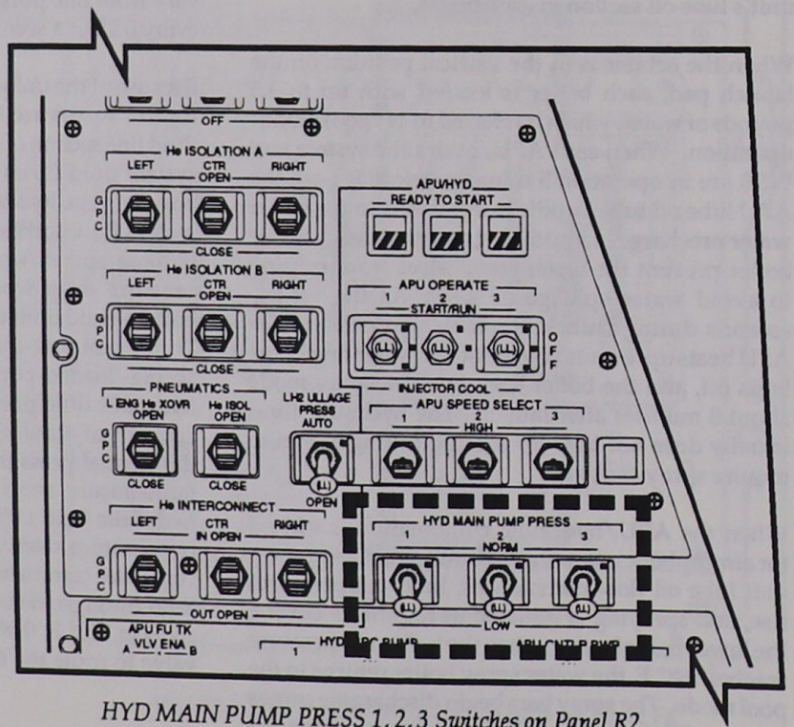

HYD MAIN PUMP PRESS 1, 2, 3 Switches on Panel R2

2.2 CAUTION AND WARNING SYSTEM (C/W)

CONTENTS

Description 2.2-1
Alarms 2.2-2
Smoke Detection and Fire Suppression 2.2-5
Rapid Cabin Depressurization 2.2-10
Operations 2.2-11
SPEC 60, SM Table Maintenance 2.2-14
F7 Light Summary 2.2-20
Fault Message Summary 2.2-23

Description

The caution and warning system warns the crew of conditions that may create a hazard to orbiter operation and/or crew. Under certain circumstances, the system also alerts the crew to situations that require time-critical (under 5 minutes) procedures to correct them. The system uses data such as temperature, pressure, flow rates, and switch positions to determine whether an alarm situation exists.

The system consists of software and electronics that provide the crew with visual and aural cues when a system exceeds predefined operating limits. Visual cues consist of four red *MASTER ALARM* lights, a 40-light array on panel F7, a 120-light array on panel R13U, and CRT messages. The aural cue is sent to the communications system for distribution to flight crew headsets or speaker boxes.

The crew interfaces with the C/W system through panel R13U, panel C3, CRT displays, panel F7, panel L1, and the four red *MASTER ALARM* push button indicators on panels F2, F4, A7, and MO52J.

The C/W system interfaces with the auxiliary power units, data processing system, environmental control and life support system, electrical power system, flight control system, guidance and navigation, hydraulics, main propulsion system, reaction control system, orbital maneuvering system, and payloads.

Inputs enter the software C/W logic circuitry from the onboard computers through multiplexers/demultiplexers (MDMs) to activate alarm tones and the *BACKUP C/W ALARM*. Some of these are used to turn on the *BACKUP C/W ALARM* light on panel F7 while crew input resets the *MASTER ALARM* lights and tones.

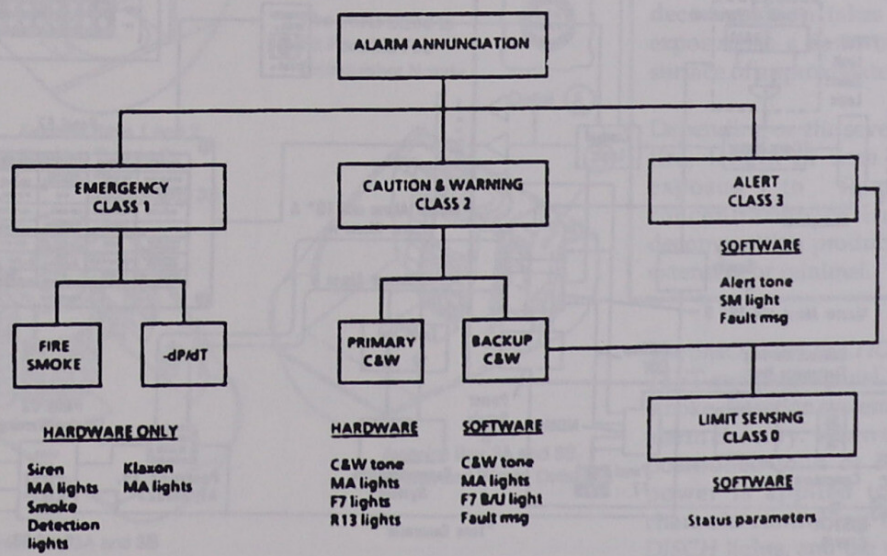

Caution and Warning Diagram

Alarms

Four alarm classes constitute the C/W system.

Class 1 – Emergency

There are two alarms in this class: (1) smoke detection/fire suppression and (2) rapid cabin depressurization. (These systems are discussed in more detail later in this section.) Class 1 is a hardware system only; its input is not processed by any MDMs or software. The system uses hardware, such as hard-wired sensors, to monitor parameters and to issue alarms. Because of the nature of the class 1 alarms, they always receive the highest priority for resolution.

The emergency (class 1) aural alarms consist of a siren (activated by the smoke detection system) and a klaxon (activated by the delta pressure/delta time sensor that recognizes a rapid loss of cabin pressure), and they are annunciated by hardware. The siren's frequency varies from 666 to 1,470 hertz and returns at a five-second-per-cycle rate. The klaxon is a 2,500-hertz signal with an on/off cycle of 2.1 milliseconds on and 1.6 milliseconds off, mixed with a 270-hertz signal with a cycle of 215 milliseconds on and 70 milliseconds off.

The emergency alarm visual cues consist of illumination of the four *MASTER ALARM* pushbutton indicators on panels F2, F4, A7, and MO52J. The smoke detection system also illuminates *SMOKE DETECTION* lights on panel L1, displays information on the SM SYS SUMM 1 display (SMOKE), and issues a backup C/W "smoke alarm" message. Similarly, cabin pressure information can be seen on the SM SYS SUMM 1 display (CABIN).

Class 2 – C/W

This class also consists of two subclasses: primary C/W, which is a hardware system, and backup (B/U) C/W, which is a software system.

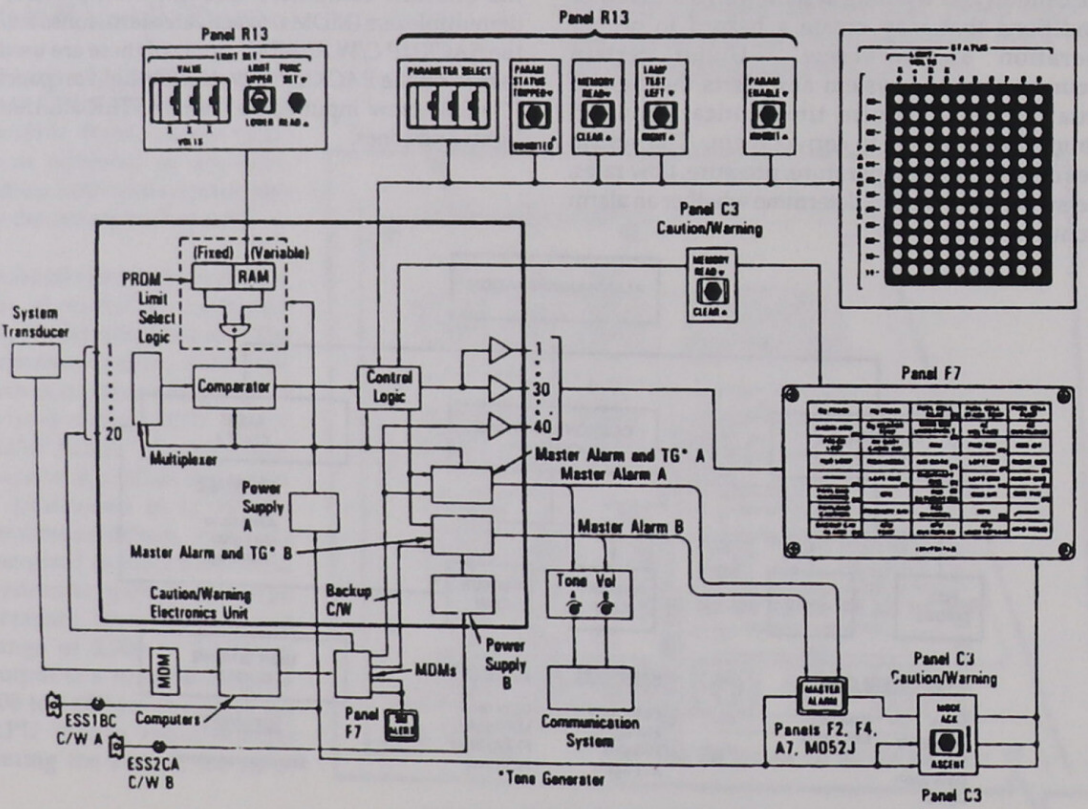

Caution and Warning System Overview

Halon 1301

Halon 1301 is used as the extinguishing agent for all fire suppression devices. It is colorless and odorless. Discharge of the agent may create a light mist in the vicinity of the discharge nozzle. Therefore, visibility is not adversely affected. Once the Halon is discharged into an enclosure, it is difficult to detect its presence through normal human senses.

Exposure to Halon in the 5 to 7 percent range produces little, if any, noticeable effect. At levels between 7 and 10 percent, mild central nervous system effects such as dizziness and tingling in the extremities have been reported. Above 10 percent, some subjects report a feeling of impending unconsciousness after a few minutes, although test subjects exposed to up to 14 percent for 5 minutes have not actually lost consciousness. These types of effects were completely reversible upon removal from exposure.

It is considered good practice to avoid all unnecessary exposure to Halon 1301 and to limit exposures to the following times:

- 7 percent and below: 15 minutes
- 7 to 10 percent: 1 minute
- 10 to 15 percent: 30 seconds
- Above 15 percent: prevent exposure.

Anyone suffering from toxic effects of Halon 1301 should immediately move or be moved to fresh air. In treating persons suffering toxic effects, the use of epinephrine (adrenaline) and similar drugs must be avoided. These drugs may produce cardiac arrhythmias, including ventricular fibrillation.

Although Halon 1301 has a low toxicity, its decomposition can be hazardous. These products have a characteristically sharp acrid odor, even in minute concentrations of only a few parts per million. This smell provides a warning system but at the same time creates a noxious, irritating atmosphere.

The accepted theory is that Halon must decompose before it is effective in suppressing fire. The decomposition takes place on exposure to a flame or to a hot surface of approximately 900° F.

Depending on the severity of the fire, length of time Halon is exposed to flame, and concentration of Halon, the decomposition products may be extensive or minimal.

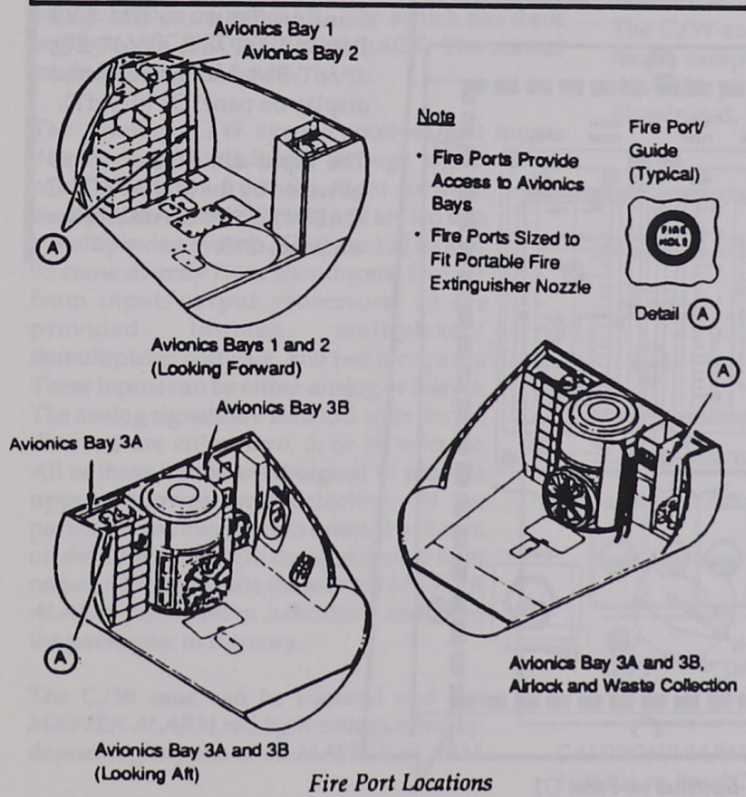

Fire Port Locations

The *SMOKE DETECTION CIRCUIT TEST* switch on panel L1 tests the smoke detection system, lights, and alarm circuitry. When the switch is positioned to *A* or *B*, electrical power is applied to the ACA channels controlling the *AGENT DISCH* lights, and the white lights are illuminated. Two tests are

completed for both the A and the B circuits to test the complete logic circuitry of the smoke detection system. In the first test, after approximately a 20-second delay, the *SMOKE DETECTION A* or *B* lights are illuminated, and the siren is triggered. In the second test, the *SMOKE DETECTION CIRCUIT TEST* switch is turned off in 5 to 10 seconds, bypassing the 20-second time delay and immediately annunciating a siren and a *SMOKE DETECTION* light (A or B).

Once the alarm system has been triggered, it remains latched until the *SMOKE DETECTION SENSOR* switch on panel L1 is positioned to *RESET*. When the system is latched, the emergency alarm system will not activate an alarm in case of another fire in the same or any other avionics bay.

Various parameters of the smoke detection system and remote fire extinguishing agent system are provided to telemetry.

Rapid Cabin Depressurization

The cabin pressurization rate, dP/dT, senses the rate at which atmospheric pressure is changing in the orbiter (in psi/min). There will be an alarm issued only for a rapid cabin depressurization. If a dP/dT alarm was issued, it would indicate that air was leaking at a rate much higher than normal. The system alerts the crew to a rapid pressure change with respect to time by annunciation of the four MASTER ALARM push button indicators and sounding of the klaxon (class 1 alarm).

A dP/dT alarm will be issued if the change in pressure versus change in time decreases at a rate of 0.08 psi per minute or greater. The normal cabin dP/dT is zero psi per minute (±0.01 psi for all normal operations.

In addition, a class 3 alarm will annunciate for a decrease in pressure greater than or equal to 0.12 psi per minute, based on equivalent dP/dT or backup dP/dT.

Values for dP/dT can be monitored on the SM SYS SUMM 1 (dP/dT, dP/dT-EQ, dP/dT-BU), and the dedicated display on panel O1 (dP/dT).

The rapid dP/dT detector is powered by the MN B PPO2 C CABIN DP/DT circuit breaker on panel O15.

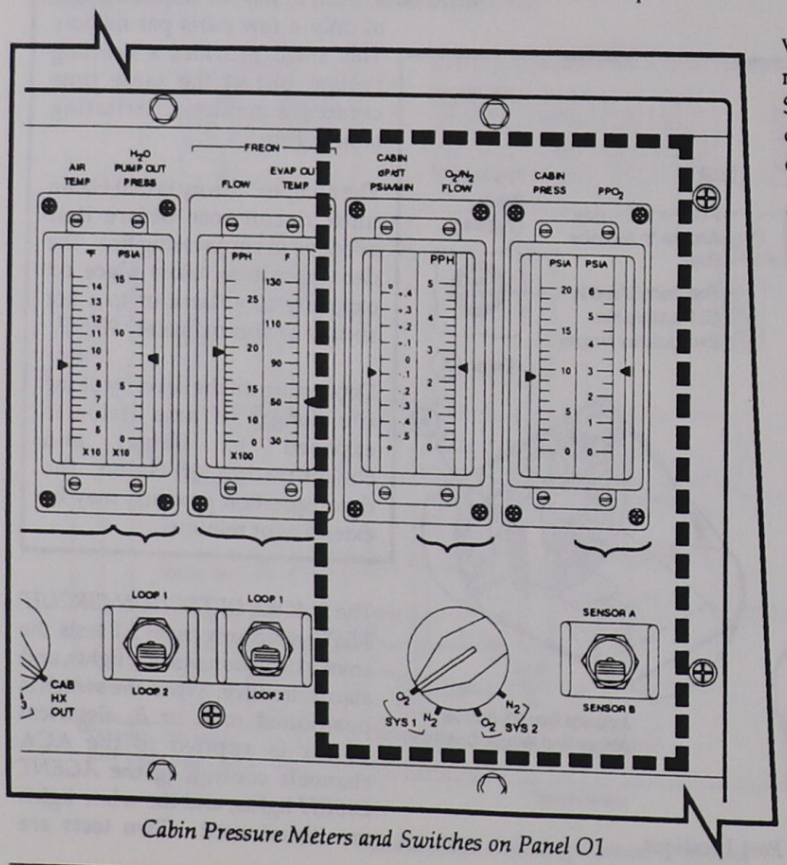

Cabin Pressure Meters and Switches on Panel O1

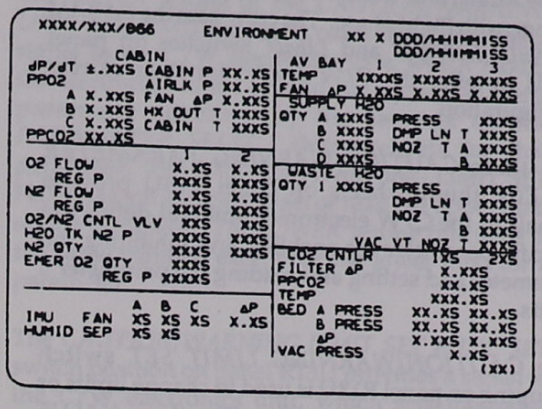

ENVIRONMENT Display (DISP 66)

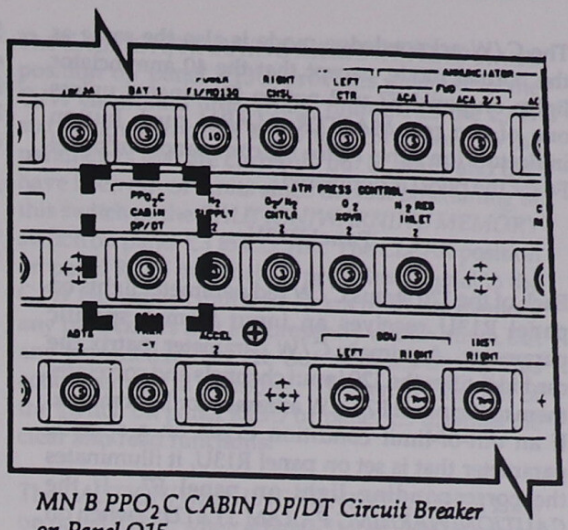

MN B PPO_2C CABIN DP/DT Circuit Breaker on Panel O15

Operations

Primary C/W System

The primary C/W system has three modes of operation: ascent, normal, and acknowledge. These modes are controlled by the *CAUTION/WARNING MODE* switch on panel C3. The switch has three settings: *ASCENT*, *NORM*, and *ACK*. The normal mode is discussed first.

The primary C/W system receives 120 inputs directly from transducers through signal conditioners, or from the flight forward multiplexer/demultiplexers, and are fed into a multiplexing system. Of these 120 inputs, 95 come directly from transducers, five are from input/output processors, 18 are provided through multiplexer/demultiplexer software, and two are spares. These inputs can be either analog or bilevel. The analog signals are zero to 5 volts dc; the discretes are either zero, 5, or 28 volts dc. All of these inputs are designed to provide upper or lower limit detection. If the parameter has exceeded its limits, it will turn on the C/W tone, light the appropriate light on panel F7, illuminate the four red *MASTER ALARM* push button indicators, and store the parameter in memory.

The C/W tone can be silenced and the *MASTER ALARM* red light extinguished by depressing any one of the *MASTER ALARM* push button indicators; however, the C/W light on panel F7 will remain illuminated until the out-of-tolerance condition is corrected. Any one of the *MASTER ALARM* push button indicators will reset all tones, including the systems management tone.

The C/W ascent mode is the same as the normal mode, except that the commander's red *MASTER ALARM* push button indicator will not be illuminated.

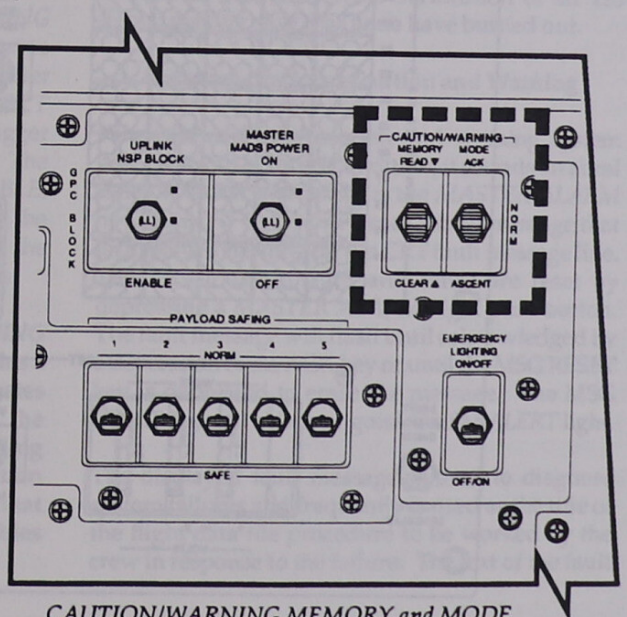

CAUTION/WARNING MEMORY and MODE Switches on Panel C3

The C/W acknowledge mode is also the same as the normal mode, except that the 40 annunciator lights on panel F7 will not be illuminated unless one of the red *MASTER ALARM* push button indicators (on panel F2 for the commander or panel F4 for the pilot) is depressed.

Panel R13U

Each of the 120 status C/W red parameter lights on panel R13U receives an input from a specific parameter. A primary C/W parameter matrix cue card identifies the 120 input channels and correlates them to the panel F7 C/W annunciator light matrix. If an out-of-limit condition exists on a specific parameter that is set on panel R13U, it illuminates the corresponding light on panel F7. If the *CAUTION/WARNING PARAM STATUS* switch on panel R13U is held in the *TRIPPED* position when an out-of-limit parameter light on panel F7 is illuminated, the corresponding light on panel R13U will also be illuminated.

Some limits, and the list of parameters monitored, change with flight phase. The crew uses the *PARAM ENABLE/INHIBIT* and *LIMIT* switches on panel R13U to tailor the C/W system for their current configuration.

The three *CAUTION/WARNING PARAMETER SELECT* thumbwheels on panel R13U provide signals to the C/W electronics unit and define the specific parameter for enabling and inhibiting the parameter and setting and reading the parameter's limits.

The *CAUTION/WARNING LIMIT SET* switch grouping on panel R13U is used to change limits or to read a parameter's limits. The three *VALUE* thumbwheels provide the signals to the C/W unit, defining the voltage value setting of a parameter's upper or lower limit, *X.XX*.

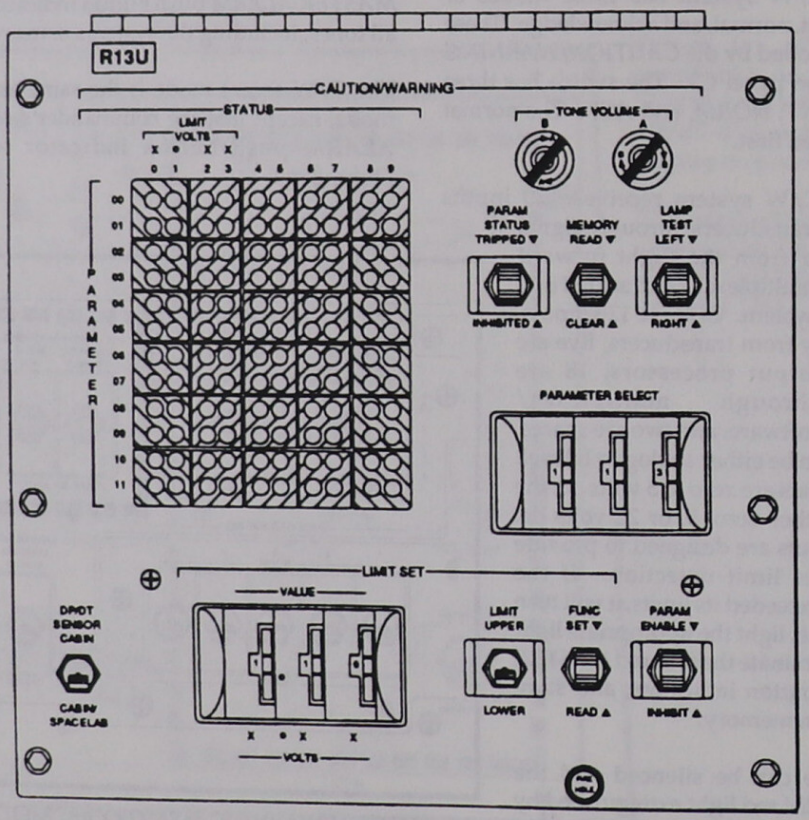

Panel R13U

The *UPPER* setting of the *CAUTION/WARNING LIMIT SET LIMIT* switch on panel R13U provides a signal to the C/W electronics unit, which modes the electronics to set or read the upper limit of a parameter specified by the settings on the *PARAMETER SELECT* thumbwheels for that parameter. The *CAUTION/WARNING LIMIT SET FUNC* switch is cycled to set or read the upper limit of that parameter. The *LOWER* setting functions in the same manner, except for the lower limit for a parameter.

The *CAUTION/WARNING LIMIT SET FUNC SET* switch position on panel R13U provides a signal to the C/W electronics unit, which sets the value specified by the *LIMIT SET VALUE* thumbwheels into the parameter as specified by the *PARAMETER SELECT* thumbwheels and *LIMIT SET LIMIT* switch. The *LIMIT SET FUNC READ* switch position on panel R13U provides a signal to the C/W electronics unit, which illuminates the lights under the *STATUS LIMIT VOLTS X.XX* columns on panel R13U that correspond to the voltage parameter limit specified by the *PARAMETER SELECT* thumbwheels and the *LIMIT SET LIMIT* switch. The value read corresponds to the parameter's full-scale range on a scale of zero to 5 volts dc. The *LIMIT SET FUNC* switch center position disables the set and read functions.

The *ENABLE* position of the *CAUTION/WARNING PARAM* switch on panel R13U provides a signal to the C/W electronics unit to enable the parameter indicated on the *PARAMETER SELECT* thumbwheels, which allows the parameter to trigger the primary C/W alarm when out of limits. The *INHIBIT* position operates the same as *ENABLE*, except it inhibits the parameter from triggering the primary C/W alarm. The center position of the switch disables the enable and inhibit functions.

The *TRIPPED* position of the *CAUTION/WARNING PARAM STATUS* switch on panel R13U provides a signal to the C/W electronics unit, which illuminates the C/W status lights that correspond to the parameters that are presently out of limits, including those that are inhibited. The *INHIBITED* position illuminates those C/W lights on panel R13U that have been inhibited. The center position disables the tripped and inhibited functions.

The *CAUTION/WARNING MEMORY READ* switch position on panel R13U provides a signal to the C/W electronics unit, which illuminates the C/W status lights on panel R13U that correspond to the parameters that are currently out of limits and that have been out of limits since the last positioning of this switch or the *CAUTION/WARNING MEMORY* switch on panel C3 to *CLEAR*. The *CLEAR* position on panel R13U or panel C3 provides a signal to the C/W electronics unit that clears from the memory any parameters that are presently within limits, but any parameters that are out of limits during this action remain in memory. The center position of the switch on panel R13U or panel C3 disables the clear and read functions.

The *CAUTION/WARNING TONE VOLUME A* knob on panel R13U, when adjusted clockwise, increases the system A siren, klaxon, C/W, and SM tone generator output signals to the audio central control unit. The *B* switch functions the same as the *A* switch for system B tone generators.

The *CAUTION/WARNING LAMP TEST* switch on panel R13U, when positioned to *LEFT*, provides a signal to the C/W electronics unit, which illuminates the left five columns of the C/W status matrix lights on panel R13U. The *RIGHT* position functions the same as the *LEFT*, except for the right five columns of lights. This allows the verification of all 120 lights, making sure that none have burned out.

Software (Backup) Caution and Warning

When the software caution and warning system detects an out of limits condition, it sounds an aural tone or master alarm, lights the *MASTER ALARM* or *SM ALERT* light, and issues a fault message that is displayed flashing on the CRT fault message line. The master alarm light and tones are reset by depressing a *MASTER ALARM* light push button. The fault message will flash until acknowledged by a depression of the ACK key or until the MSG RESET key is depressed to erase the message. The MSG RESET key will also extinguish the *SM ALERT* light.

The displayed fault message is used to diagnose system failures and frequently is used as the title of the flight data file procedure to be worked by the crew in response to the failure. The text of the fault

message identifies the system where limits are being exceeded. A list of individual fault messages is presented in the summary at the end of this section.

For some general classes of fault messages, the first part of the text contains the SPEC number to be consulted to determine the specific parameter that is out of limits. The GPCs declaring the fault are enumerated after the message text. In parentheses at the end of the fault message, software will display the number of other fault messages generated while the current message was being displayed. To view these messages and the time at which they were annunciated, the crew must look at the fault summary page, or scroll through them using the *ACK* key.

After reset of the displayed fault message, the message line will be blank until another new message is generated by the software. To avoid missing messages in a multi-failure scenario, crews should occasionally review all messages on the fault summary page and try to reset messages on the fault line as quickly as possible after reviewing them.

Fault messages for some parameters are issued every time the software completes the required number of data counts with the parameter out of limits. This can result in a steady stream of fault messages and *MASTER ALARMS* that may obscure other important fault messages. If this situation is encountered, the crew or Mission Control can inhibit the affected parameter to prevent nuisance messages and alarms in OPS 2 or OPS 4. In OPS 1, 6, or 3, the crew generally has to tolerate the extra alarms/ fault messages and pay extra close attention to the fault summary display.

In order to clear messages from the fault summary page, the crew enters a SPEC 99 PRO on the keyboard. If the fault summary (DISP 99) is called up using a SPEC 99 PRO instead of the FAULT SUMM key, the fault summary page will appear, and then immediately clear itself.

Software caution and warning limits for some parameters change depending on the phase of flight. These changes can be entered by the crew via the SPEC 60 TABLE MAINTENANCE display or uplinked from the ground. The ground uplink for limits changes is called a Table Maintenance Block Uplink (TMBU).

SPEC 60, SM Table Maintenance

The primary avionics software system (PASS) includes three types of applications software, called major functions. The first, systems management (SM), is the function that is active on orbit. The second, guidance, navigation, and control (GNC), is active during all flight phases. The third, payload software, provides operations support to payloads. The backup flight system (BFS), normally used only during ascent and entry, also contains both SM and GNC software.

Modules within both SM and GNC software monitor parameters and initiate alarms. To change the characteristics of the PASS GNC, BFS GNC, and BFS SM parameters, the crew would have to perform a GPC memory read/write procedure. (This procedure is described in the DPS HW/SW 2102 Training Manual.)

However, PASS SM parameters can be accessed directly by the crew. Within PASS SM is a module called fault detection and annunciation. This module monitors the backup C/W and alert parameters and initiates alarms.

SPEC 60 SM TABLE MAINT is the crew interface with the PASS SM parameters. Using SPEC 60, the crew can read and change the following for each PASS SM backup C/W or alert parameters: (1) lower and upper limits, (2) noise filter value, and (3) enable/inhibit status. Additionally, the crew can read and change SM program constants, initiate a checkpoint, and enable or inhibit the entire fault detection and annunciation software module.

SPEC 60, which is a PASS SM SPEC, is available during SM OPS 2 and SM OPS 4. When the SM TABLE MAINT display is called up by its SPEC number (SPEC 60 PRO), each field will be blank except CHECKPT time and FDA ENA. When SPEC 60 is called by pressing RESUME, the fields that were previously in use will retain their data. When a legal item entry is made, the new data will be displayed in the appropriate field and will overwrite any previous data.

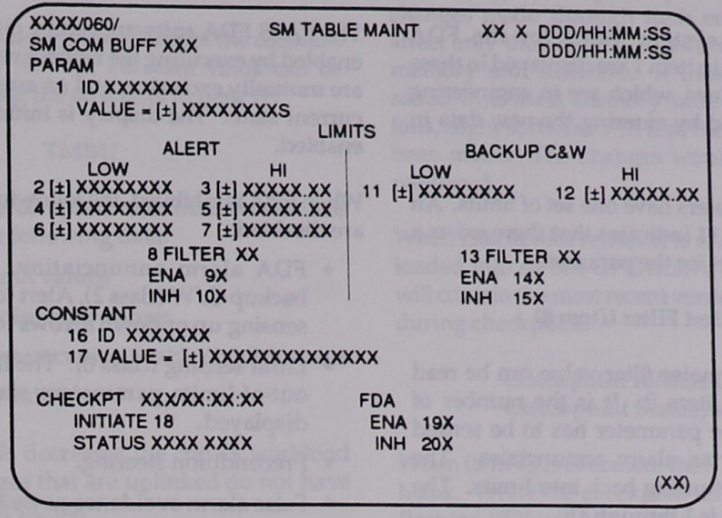

SM TABLE MAINT CRT (SPEC 60)

Any backup C/W parameter may be accessed by entering its software ID number (see page 2.2-4) in item 1 of the SM TABLE MAINT display. The limits, noise filter value, and enable/inhibit status of alert parameters may be changed with items 2 through 10. The same characteristics of backup C/W parameters are available through items 11 through 15. These CRT parameters are discussed in more detail below.

PARAM ID (Item 1) and PARAM Value

The software ID number for the desired fault detection and annunciation (FDA) parameters is entered in item 1. The software IDs are located in the C/W and FDF TABLE of the Flight Data File Reference Data Book.

When a valid ID is entered, the ID number will be displayed in the PARAM ID space, and the current value of the parameter will be displayed in the PARAM VALUE field. The status of the parameter is indicated by the presence or absence of an up or down arrow. The appropriate ALERT or BACKUP C/W data will appear in the LIMITS portion (items 2 through 10 or items 11 through 15 respectively). If the parameter is monitored by both the Alert and B/U C/W systems, then both sections will contain the proper data. Otherwise, one of the LIMITS sections will be blank.

If the PARAM ID is not valid, all associated data fields will be blank, and an ILLEGAL ENTRY message will be displayed.

Limits Alert Low and Hi (Items 2 through 7)

These fields contain the upper and lower alert limits of the FDA parameter identified in item 1. The limit values are displayed in engineering units and can be changed by entering the desired data in the appropriate items.

Alert parameters that are preconditioned may have two or three limits sets. All other alert parameters have only one limit set. The SM software selects which set of limits is currently active and places an asterisk next to that set (before item 2, 4, or 6). (There is no item entry that allows the crew to move the asterisk to directly select which set of limits is active. This is done exclusively by software.) If only one set of limits exists for the parameter, this set will be displayed in the first limit set location, and the asterisk will be placed by item 2. If a value is entered in a limit set that does not exist for the selected parameter, an illegal entry message will be displayed.

Limits Backup C/W Low and Hi (Items 11 and 12)

The backup C/W system limits for the FDA parameter identified in item 1 are displayed in these fields. The limit values, which are in engineering units, can be changed by entering the new data in the desired item.

Backup C/W parameters have one set of limits. An asterisk next to item 11 indicates that there exists a backup C/W limit set for the parameter.

Limits Alert Filter (Item 8)

The Alert parameter noise filter value can be read or changed through item 8. It is the number of consecutive times the parameter has to be sensed out of limits before an alarm annunciates. The reverse is true for returning back into limits. The range of valid values is 1 through 15.

Limits Backup C/W Filter (Item 13)

The backup C/W filter functions similarly to the Alert filter (item 8).

Limits Alert ENA or INH (Items 9 and 10)

The annunciation of an out-of-limits Alert parameter may be either enabled or inhibited by executing the respective item. The items are mutually exclusive, and an asterisk indicates the current annunciation status by appearing after the more recently selected item.

The class 0 status indicators (up and down arrows) and transducer data symbols (H, L, M, ?) are not affected by this item.

Limits Backup C/W ENA or INH (Items 14 and 15)

These backup C/W items operate similarly to the Alert items 9 and 10.

FDA ENA or INH (Items 19 and 20)

The PASS FDA software can be either inhibited or enabled by executing the respective item. The items are mutually exclusive, and an asterisk denotes the current state. The display is initialized with FDA enabled.

When FDA is inhibited, the following FDA functions are disabled:

- FDA alarm annunciation. This includes backup C/W (class 2), Alert (class 3), and limit sensing up or down arrows (class 0).
- Limit sensing (class 0). The last value of each out-of-limits parameters status indicator is displayed.
- Precondition steering.
- False alarm avoidance noise filters.

Other parameter status indicators (H, L, M, ?) are not affected because they are not generated by the FDA software.

Constants

SM constants may be accessed through items 16 and 17. These constants are primarily involved in SM special processes such as water loop pump cycling, alert preconditioning, and payload deployment.

Constant ID (Item 16)

When a constant ID number is entered in item 16, both the CONSTANT ID and VALUE fields are filled. If the ID was illegal, both data fields are blanked.

The constant IDs and values are not typically carried onboard the orbiter, although various malfunction procedures contain occasional constants. If a constant must be changed, Mission Control will either provide the crew with the data or directly change the constant through a TMB Uplink. (See TMBU description in this section.)

Constant Value (Item 17)

This field contains the current value of the constant identified in item 16. The constant value can be changed by entering the new data in item 17.

TMBU

TMBU is the type of uplink that Mission Control uses to change the following data:

- Parameter limit values
- Parameter noise filter values
- Parameter annunciation enable/inhibit status
- SM constant values.

The use of TMBUs decreases the crew's workload because the changes that are uplinked do not have to be entered on SPEC 60.

SPEC 60 operations and TMBUs are interlocked such that TMBU loads are rejected if SPEC 60 is active. If a TMBU is in progress when SPEC 60 is called, the flashing words UPLINK and UL will be displayed on the display, and all item entries will be prohibited by an ILLEGAL ENTRY message.

Uplink

The flashing word UPLINK is displayed in the top center of SPEC 60 to indicate that a TMBU is in progress.

UL

When any two-stage command (including a TMBU) is uplinked, a flashing UL is displayed in the upper right corner of all CRTs associated with the GPC(s) that are being commanded.

Checkpoints

When a checkpoint is performed, the following information is saved in a mass memory unit:

- Parameter limit values
- Parameter noise filter values
- Parameter annunciation enable/inhibit status
- SM constant values
- Checkpoint timetags.

The checkpoint capability is valuable because changes made through item entries on SPEC 60 affect only the SM GPC software and not the mass memory unit software. If these changes are not saved in a mass memory unit, and the SM GPC fails, flight software will lose the changes that have been made. The changes would then have to be reentered.

When checkpoint retrieval is enabled, the software loaded into an SM GPC from a mass memory unit will contain the most recent version of changes saved during checkpoint.

Checkpoint Initiate (Item 18), Checkpoint Status, and Time

When item 18 is executed, the STATUS field will go blank. While the checkpoint is being performed, a flashing BSY will be displayed next to SM COMM BUFF at the top left of SPEC 60. This indicates that the SM communications buffer is in use. When the checkpoint is completed, the CHECK PT STATUS field will contain GOOD. If the SM common buffer was not available, CHECK PT STATUS will be FAIL, and item 18 should be executed again.

The mission elapsed time (MET) of the most recent successful checkpoint will be displayed as DD/HH:MM:SS, in the checkpoint time field.

SM COMM BUFF – BSY, or RDY

Either a flashing BSY or a status RDY is displayed after SM COMM BUFF to indicate the status of the SM Common Buffer. BSY (busy) indicates that the SM COMM BUFF is being used; RDY (ready) means the buffer is available.

Keypad entries are rejected if BSY is flashing.

CKPT RETRV ENA (SPEC 1, Item 12)

Executing this item will alternately select or deselect CKPT RETRV ENA. An asterisk appears next to item 12 when checkpoint retrieval is enabled.

MMU Assignment
(DPS Utility – SPEC 1, Items 3 and 4)

A checkpoint saves the changes in the mass memory unit assigned to the SM software by item 3 or 4. In order to save the checkpoint in both, two checkpoints must be performed.

C/W Summary Data

- The C/W system consists of four alarm classes: emergency (class 1), C/W (class 2), alert (class 3), and limit sensing (class 0).
- Emergency alarms cover two situations: smoke detection/fire suppression and cabin pressure.
- Smoke detection and fire suppression capabilities are provided in the crew cabin avionics bays, the crew cabin, and the Spacelab pressurized module.
- Increased smoke particle concentration will illuminate *SMOKE DETECTION* lights on panel L1, illuminate four red *MASTER ALARM* lights on panels F2, F4, A7, and MO52J, and sound the siren in the crew cabin.
- Fire suppression in the crew cabin avionics bay is provided by one permanent Halon extinguisher bottle in avionics bays 1, 2, and 3A. The bottle is operated by switches on panel L1.
- Three portable hand-held extinguishers in the crew cabin are operated by inserting them into fire holes located in several display and control panels.
- A class 1 alarm (four *MASTER ALARM* pushbutton indicators and the sounding of the klaxon) is triggered when there is a rapid change in cabin pressure with respect to time.
- Class 2 alarms include primary (hardware) and backup (software) systems. The crew interfaces with the system primarily through the 40-light annunciator matrix on panel F7 and a 120-parameter monitor on panel R13U.
- Class 3 alerts warn the crew of a situation leading up to a class 2 alarm or of one that may require a long procedure.
- Class 0, a software system, consists of up and down arrows displayed on the CRT displays next to a parameter.
- The SPEC 60 TABLE MAINT display allows the crew to change limits, noise filter values, and status of backup C/W or alert system parameters.
- C/W information can be seen on the SM SYS SUMM 1 (DISP 78), and ENVIRONMENT (DISP 66) displays.
- Pressing the *MASTER ALARM* light will silence the alarm and reset the light.
- Pressing the ACK key will stop the fault messages from flashing. Subsequent pressing of ACK key will scroll through fault messages.
- Pressing the MSG RESET key will erase fault messages and extinguish the *SM ALERT* light.

C/W Rules of Thumb

- *The SENSOR RESET* switch on panel L1 shourld be pressed when smoke concentration goes below 1.8. This prevents masking of alarms.
- When panel R13U is not in use, the *PARAMETER SELECT* thumbwheels should be set to a value greater than 119.
- Crewmembers should reser fault messages as quickly as possible after review to avoid covering other messages.
- The fault summary should be reviewed regularly to avoid missed fault messages.

F7 Light Summary

NOTE

A Class 2 audible tone and *MASTER ALARM* lights accompany the appropriate C/W light. Most lights are hardware-driven, but many parameters are also software-sensed by the PASS or BFS GPCs. The software provides a CRT message and illuminates the *BACKUP C/W ALARM* light. The hardware channels listed below are the same as the channels on the C/W STATUS light matrix on panel R13U. The color of each light is indicated by (R) for red and (Y) for yellow.

O_2 PRESS (Y): Indicates an O2 tank 1, 2, 3, or 4 pressure or the O2 kit (Tank 5) pressure out of limits. The hardware channels are 0, 10, 20, 30, and 40 for Tanks 1, 2, 3, 4, and 5, respectively.

H_2 PRESS (Y): Indicates either an H2 Tank 1, 2, 3, or 4 pressure or the H2 kit (Tank 5) pressure out of limits. The hardware channels are 50, 60, 70, 80, and 90 for Tanks 1, 2, 3, 4, and 5, respectively.

FUEL CELL REAC (R): Indicates an O2 or H2 Fuel Cell 1, 2, or 3 reactant valve is closed. The hardware channels are 2, 22, 32, 42, and 52 for FC 1, 2, and 3 O2 and H2 respectively.

FUEL CELL STACK TEMP (Y): Indicates a Fuel Cell 1, 2, or 3 stack temperature out of limits. The hardware channels are 62, 72, and 82 for FC 1, 2, and 3, respectively.

FUEL CELL PUMP (Y): Indicates a Fuel Cell 1, 2, or 3 pump ΔP out of limits. The hardware channels are 92, 102, and 112 for FC 1, 2, and 3 respectively.

CABIN ATM (R): Indicates either cabin pressure, PPO2, O2 flow rate, or N2 flow rate out of limits. The hardware channels are 4, 14, 24, 34, 44, 54, and 64 for cabin press, O2 SYS 1 and 2 flow rate, PPO2 A and B, and N2 SYS 1 and 2 flow rate respectively.

O_2 HEATER TEMP (Y): Indicates an O2 Tank 1, 2, 3, or 4 heater temp or O2 kit (Tank 5) heater temp out of limits. The hardware channels are 1, 11, 21, 31, 41, 51, 61, 71, and 81 for O2 Tank 1 HTR 1 and 2, Tank 2 HTR 1 and 2, Tank 3 HTR 1 and 2, Tank 4 HTR 1 and 2, and Tank 5 respectively.

O_2 PRESS	H_2 PRESS	FUEL CELL REAC (R)	FUEL CELL STACK TEMP	FUEL CELL PUMP
CABIN ATM (R)	O_2 HEATER TEMP	MAIN BUS UNDERVOLT (R)	AC VOLTAGE	AC OVERLOAD
FREON LOOP (R)	AV BAY/ CABIN AIR	IMU	FWD RCS (R)	RCS JET
H_2O LOOP	RGA/ACCEL	AIR DATA	LEFT RCS (R)	RIGHT RCS (R)
———	LEFT RHC (R)	RIGHT/AFT RHC (R)	LEFT OMS (R)	RIGHT OMS (R)
PAYLOAD WARNING (R)	GPC	FCS SATURATION (R)	OMS KIT	OMS TVC (R)
PAYLOAD CAUTION	PRIMARY C/W	FCS CHANNEL	MPS (R)	———
BACKUP C/W ALARM (R)	APU TEMP	APU OVERSPEED	APU UNDERSPEED	HYD PRESS

Caution and Warning Light Matrix on Panel F7

all data, attached or detached, are routed through input 5. The PDI has four decommutators that can process up to four payload data streams. The PDI ships the payload telemetry to the PCMMU, where it can be accessed by the SM GPC for display, and combined with orbiter telemetry for transmission to the ground. The *PL DATA INTLVR POWER* switch is on panel A1L.

Ultrahigh Frequency System

The UHF system is used as a backup for the S-band PM and Ku-band voice communications, and is primary during EVA operations. For communications with MCC through the STDN or SGLS ground stations, the UHF system operates in a simplex mode, which means that the orbiter flight crew can transmit or receive, but cannot do both simultaneously. The UHF system may also be used for air traffic control and two-way voice with chase aircraft during landing operations.

The UHF transceiver takes the voice signal from the audio central control unit and routes it through the external UHF antenna on the bottom of the orbiter forward fuselage for transmission to the ground station. The incoming UHF signal goes through the external antenna to the UHF transceiver, which demodulates it and routes it as an audio signal it to the audio central control unit for distribution in the orbiter.

Part of the UHF configuration is controlled through three two-position toggle switches on panel O6 labeled *XMIT FREQ*, *SPLX PWR AMPL*, and *SQUELCH*. The *XMIT FREQ* switch selects one of the two UHF frequencies, 296.8 MHz primary or 259.7 MHz secondary, for external transmission. The *SPLX PWR AMPL* switch enables or inhibits the UHF power amplifier circuit. When the switch is positioned to *ON*, the UHF system transmits 10 watts of power through the antenna. When the switch is positioned to *OFF*, the power transmission is reduced to 0.25 watts by bypassing the power amplifier circuit. (An airlock antenna is used by EVA astronauts in extravehicular mobility units to check out their transceivers before exiting the airlock.) The *SQUELCH* switch permits *ON* or *OFF* selection of UHF squelch.

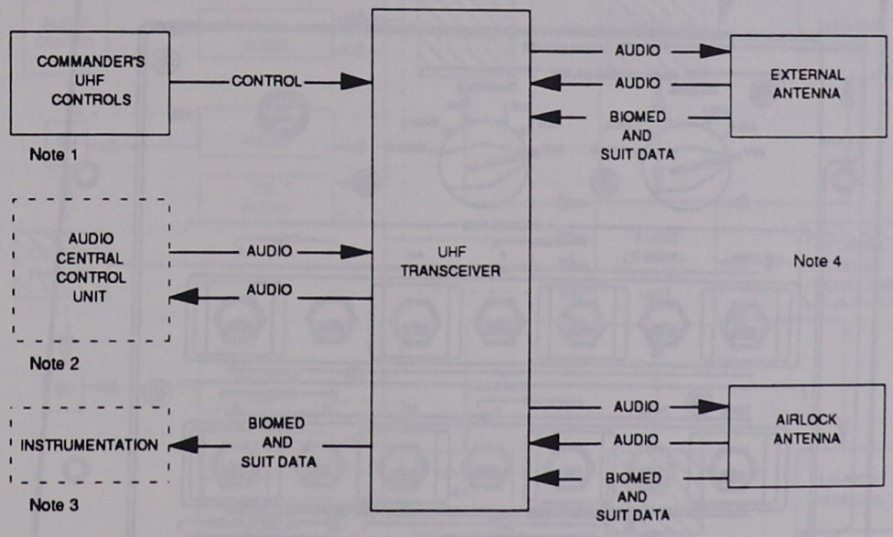

Note 1 — Selects UHF mode, XMT FREQ, power, and squelch
Note 2 — May be either A/G-1, A/G-2, or A/A
Note 3 — Biomed/suit data received from EVA backpacks and routed to the orbiter instrumentation system
Note 4 — External antenna is for communication with locations external to orbiter
— Airlock antenna is for communication with EMUs in airlock

UHF Subsystem Functional Block Diagram

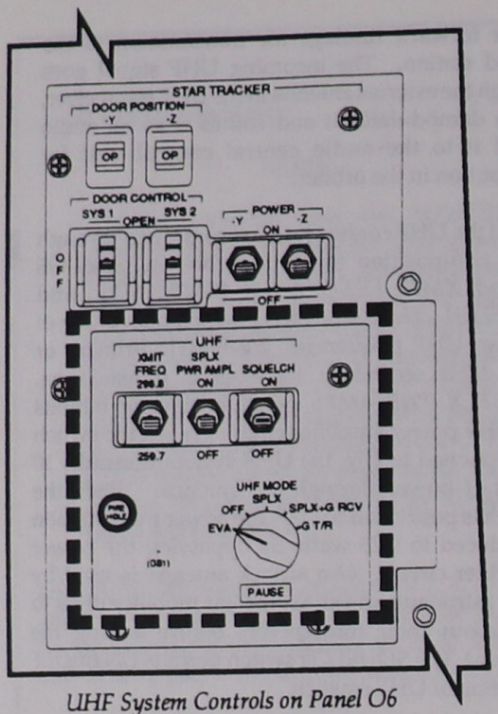

UHF System Controls on Panel O6

A five-position *UHF MODE* rotary switch on panel O6 activates power to the UHF transceiver and selects any of the following modes of UHF transmission. When the rotary switch is positioned to *EVA*, EVA transmissions are made on one frequency selected by the *XMIT FREQ* switch, and the message is received on two other frequencies. The *OFF* position removes all electrical power. When the rotary switch is positioned to *SPLX*, transmission and reception are both on the frequency selected by the *XMIT FREQ* switch. Positioned to *SPLX + G RCV*, transmission and reception are the same as in simplex except that reception of the UHF guard (emergency) frequency (243.0 MHz) also is possible. In the *G T/R* position, transmission and reception are both on the UHF guard (emergency) frequency.

Three two-position *UHF* toggle switches located on the bottom of the *AUDIO CENTER* portion of panel A1R control routing of audio from the audio central control unit to the UHF transceiver. The switches are labeled *T/R* for transmit/receive, *OFF* for

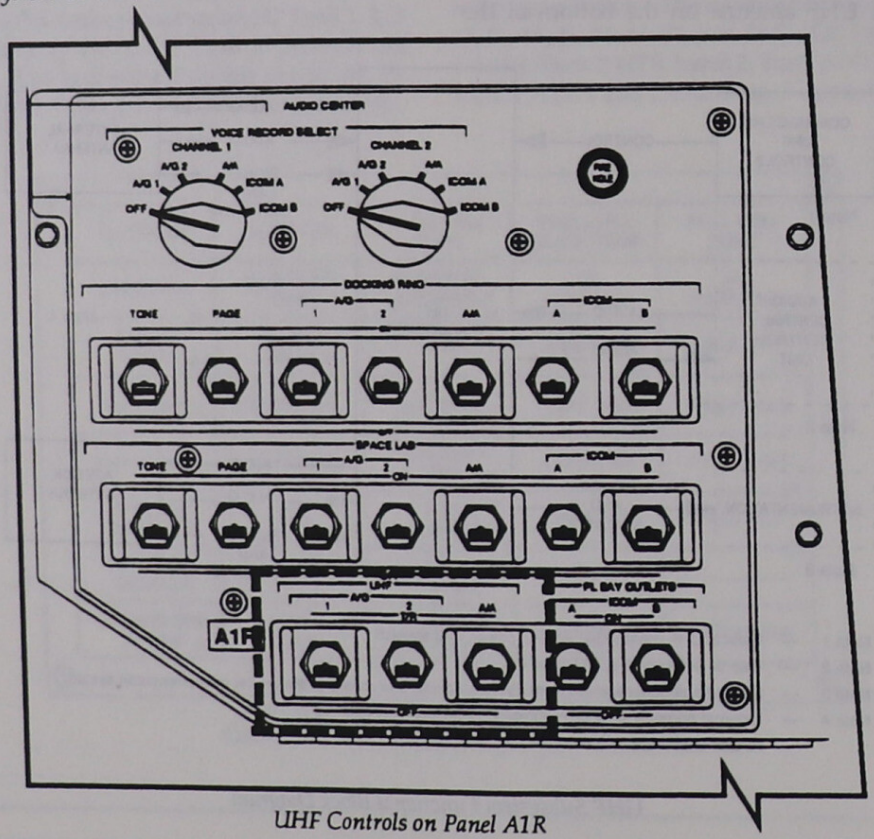

UHF Controls on Panel A1R

blocking UHF audio to or from the UHF transceiver, *A/G* for the air-to-ground channels, and *A/A* for the air-to-air channel.

For normal EVA operations, the orbiter transmits 296.8 MHz and receives 259.7 MHz and 279.0 MHz. The EVA astronauts are transmitting voice and biomedical/suit data on their respective frequencies. The astronaut configured for mode A transmits on 259.7 MHz. The astronaut configured for mode B transmits on 279.0 MHz. Each of the two EVA astronauts receives the other on the respective transmitted frequencies. Every 2 minutes, biomedical data are replaced with suit telemetry data for 15 seconds. EVA conversations are routed to Mission Control via the S-band PM or Ku-band system on A/G 1 or A/G 2, depending on the configuration of the *UHF A/G 1* and *A/G 2* switches on panel A1R. As a backup procedure only when the orbiter is over a UHF ground station, the EVA astronauts, orbiter, and ground can switch to the 259.7-MHz UHF, simplex.

The UHF system may be used after entry during the approach and landing phase of the mission. UHF air-to-ground voice communications may take place between the orbiter, the landing site control tower, and chase planes (if used).

Audio Distribution System

The audio distribution system gathers audio signals from multiple sources and routes them throughout the orbiter. It provides the means by which crew members communicate with each other and with external locations, such as Mission Control, through the S-band PM, Ku-band, and UHF systems. It also interfaces with the caution and warning system for reception of C/W (tone) signals and with the three tactical air navigation (TACAN) sets for monitoring the TACAN audio identification codes. The external communications are facilitated by routing AG1/2 through the network signal processor. The audio distribution system outputs audio for one or both of the AG loops to the network signal processor

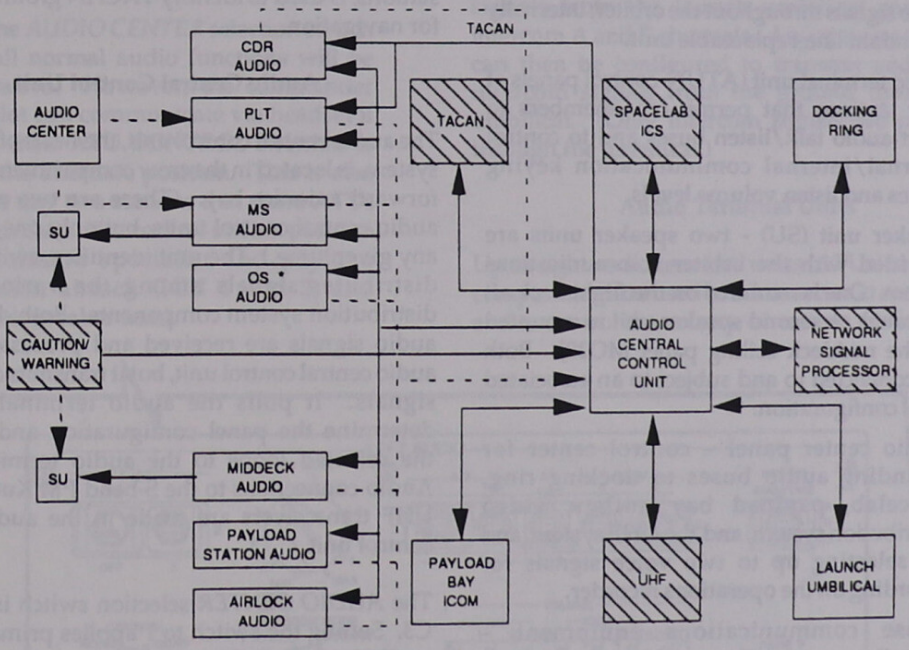

Audio Loops and System Interface

where it is digitized and sent to the S-band PM and Ku-band systems for downlink to MCC. Uplink digitized AG audio is routed through the S-band PM or Ku-band systems and the Network signal processor where it is converted to analog for use in the audio distribution system. This system also provides connections to the UHF transceiver via the AA loop for external communications with MCC through ground base sites which support UHF. As previously stated, UHF is also used as prime voice communications with EVA crewmembers. In the EVA mode AG1, AG2, and AA loops may be routed to and from the audio distribution system. The audio distribution system routes audio signals to an on-board Spacelab module, docking ring, operations recorder, payload bay stations, and the video distribution system under control of switches on panel A1R.

The major elements of the audio distribution system include:

1. Audio central control unit (ACCU) – acts as central "switchboard" to gather and route audio signals throughout the orbiter; internally redundant line-replaceable unit.
2. Audio terminal unit (ATU) – control panels at crew stations that permit crewmembers to select audio talk/listen buses and to control external/internal communication keying modes and listen volume levels.
3. Speaker unit (SU) - two speaker units are provided with the orbiter communications system. One is mounted on the flight deck aft A2 panel. A second speaker unit in mounted on the middeck ceiling panel MO29J. Both are connected to and subject to an associated ATU configuration.
4. Audio center panel – control center for extending audio buses to docking ring, Spacelab, payload bay outlets, video distribution system, and the UHF system, and for selecting up to two voice signals for recording on the operations recorder.
5. Loose communications equipment – miscellaneous small, stowable items such as the headset interface unit (HIU), headset/helmet cables, and wireless crew communications unit (WCCU).
6. Crew communications umbilical (CCU) jack – individual panel-mounted jacks at crew stations where mating headset plugs give the crew access to audio buses. At each CCU location is an associated *ON/OFF* switch to control power to the headset interface unit or wireless communications unit utilizing that jack.

The eight loops in the audio system are (1) air-to-ground 1, (2) air-to-ground 2, (3) air-to-air, (4) intercom A, (5) intercom B, (6) paging, (7) C/W, and (8) TACAN. A/G 1 and A/G 2 are used to communicate with the ground through the S-band PM and Ku-band systems. (In the low-data-rate mode or while the teleprinter is being used, A/G 2 is not available for voice communications.) A/A is used, by convention, to communicate with the ground and with EVA astronauts through the UHF system. Intercoms A and B are used to communicate from station to station within the orbiter and Spacelab. The paging loop allows one crewmember to send voice transmissions to all active stations. The C/W loop sounds different tones for different malfunctions or emergencies. The TACAN loop, accessible only at the commander's and pilot's stations, is used to identify TACAN ground stations for navigation.

Audio Central Control Unit

The audio central control unit, the heart of the audio system, is located in the crew compartment middeck forward avionics bay. (There are two redundant audio central control units, but only one is used at any given time.) The unit identifies, switches, and distributes signals among the various audio distribution system components. Both digital and audio signals are received and processed by the audio central control unit, but it transmits only audio signals. It polls the audio terminal units to determine the panel configuration and connects the selected loops to the audio terminal units. Audio connections to the S-band PM Ku-band and UHF transceivers are made in the audio central control unit.

The *AUDIO CENTER* selection switch is on panel C3. Setting the switch to *1* applies primary power to the control center unit from the *ESS 2CA AUD CTR 1* circuit breaker on panel R15. Selecting *2* applies power to the secondary unit electronics from *MN C AUD CTR 2* circuit breaker on panel R15. *OFF* removes all power from the audio central control unit.

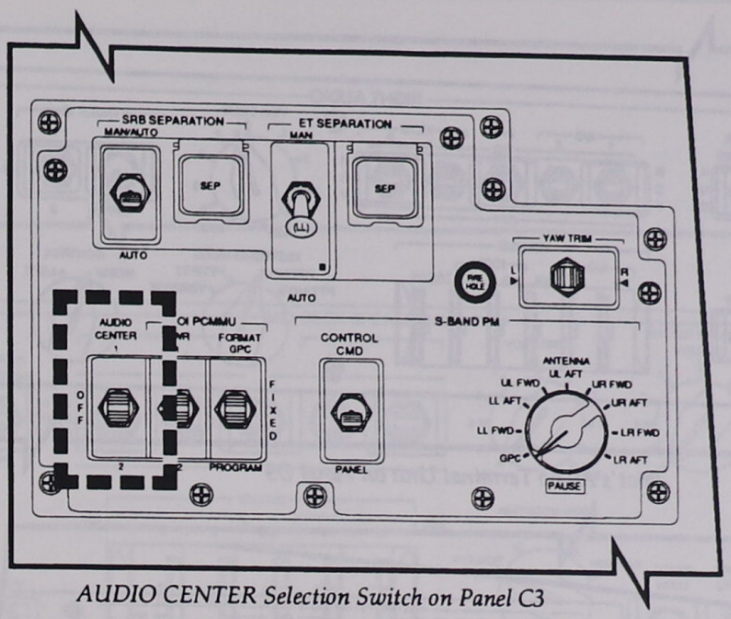

AUDIO CENTER Selection Switch on Panel C3

NOTE

With the *AUDIO CENTER* selection switch *OFF*, all normal audio functions will be inoperative. However, the commander and pilot can communicate via headset if one of their ATU *CONTROL* switches is set to the alternate position. This is also true for any two stations that share ATUs through the audio control switch position (i.e., mission specialist and payload specialist, airlock CCU 1 and 2, and middeck speaker unit).

The audio central control unit circuitry activates signals from the launch umbilical connection intercom A and B channels. Any crew station ATU can then be configured to transmit and receive intercom signals from the ground through the umbilical. (Only intercom signals are processed through the umbilical.)

Audio Terminal Units

Up to eight audio terminal units (ATUs) in the crew compartment are used to select access at each station and to control the volume of various audio signals.

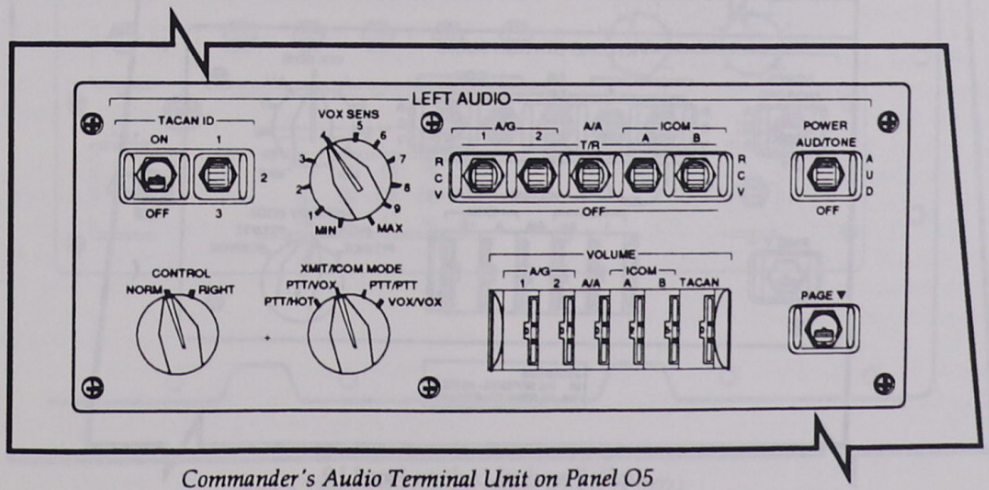

Commander's Audio Terminal Unit on Panel O5

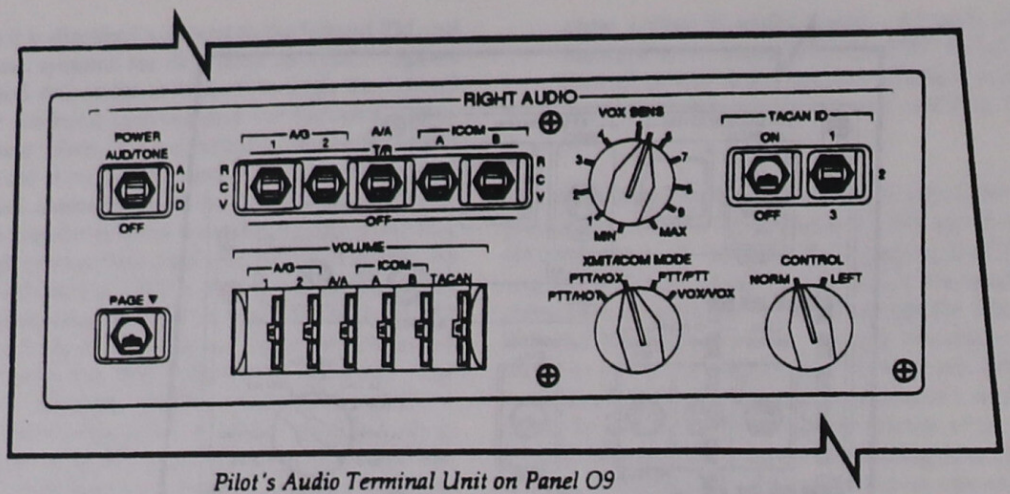

Pilot's Audio Terminal Unit on Panel O9

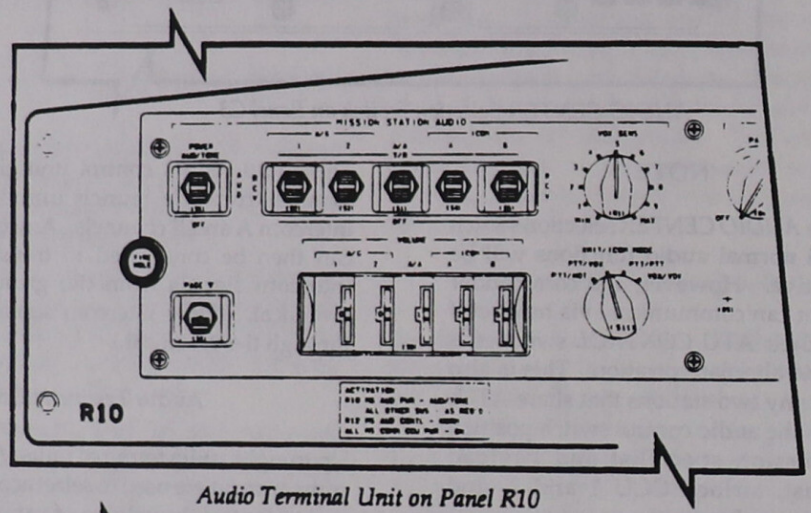

Audio Terminal Unit on Panel R10

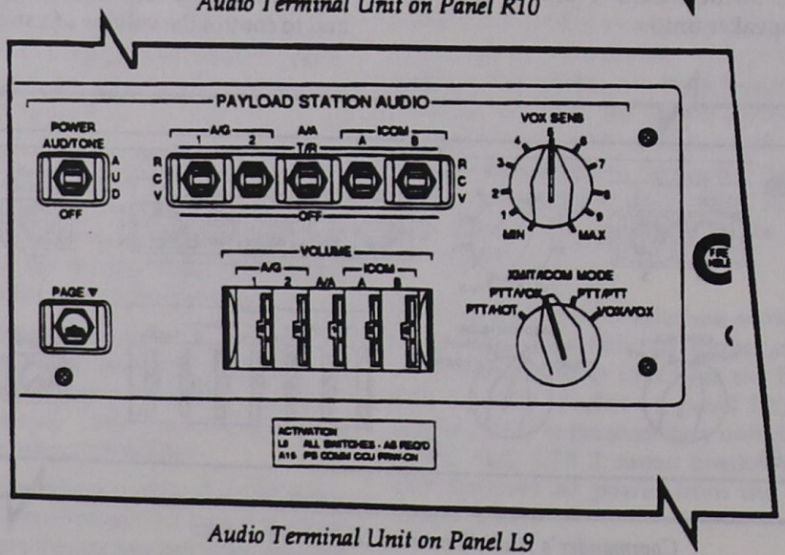

Audio Terminal Unit on Panel L9

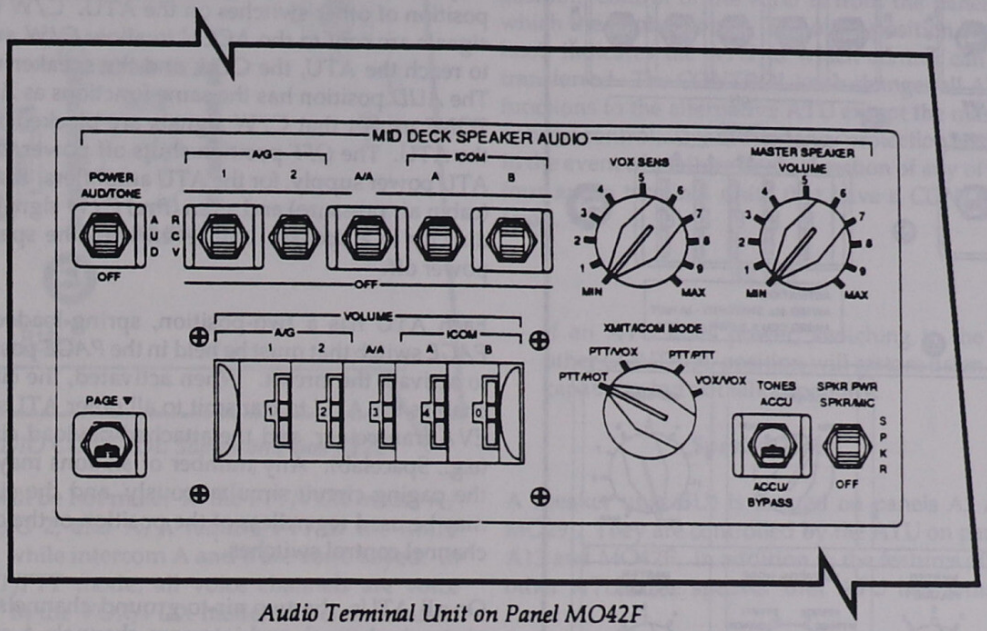

Audio Terminal Unit on Panel MO42F

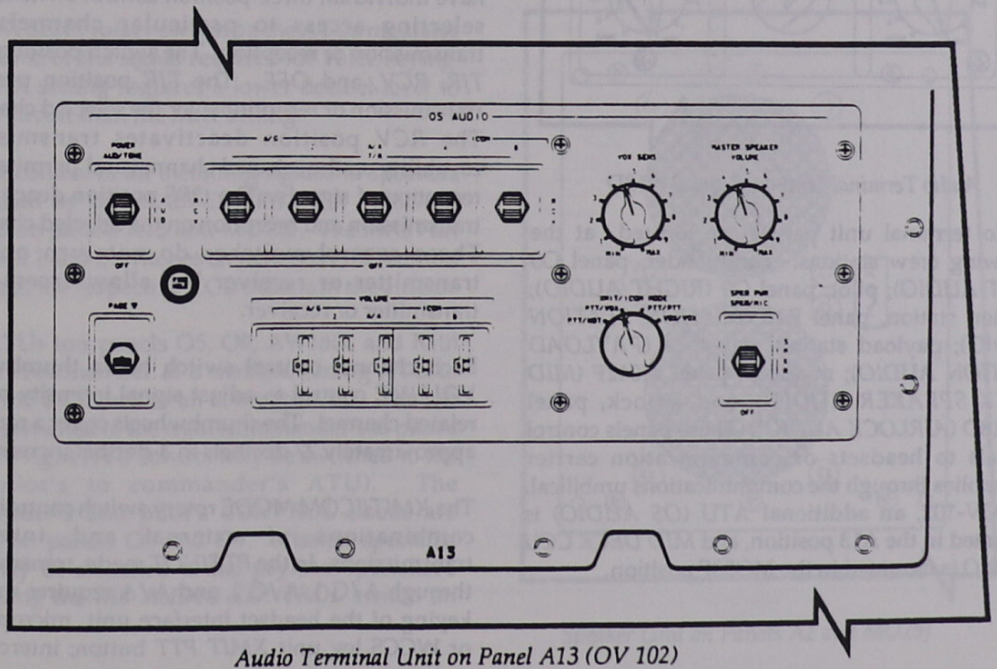

Audio Terminal Unit on Panel A13 (OV 102)

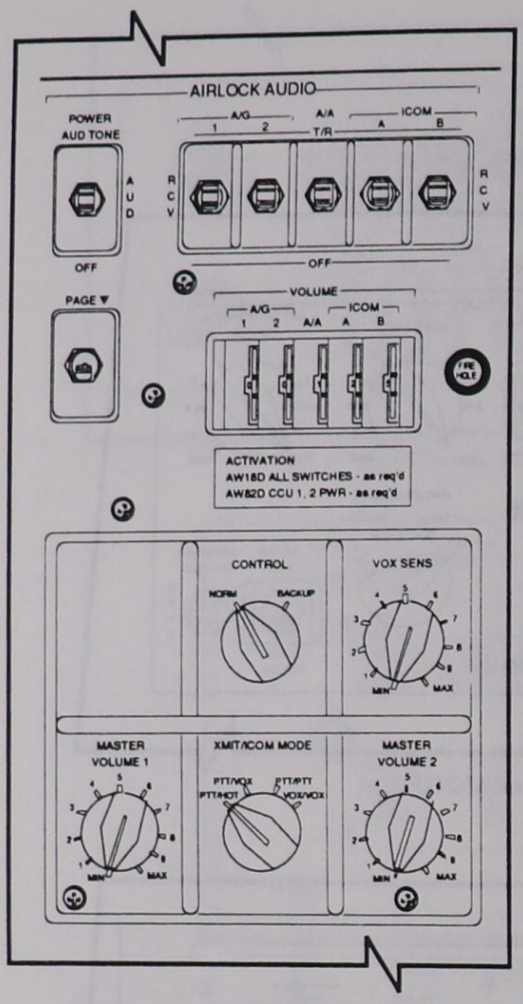

Audio Terminal Unit on Panel AW18D

Audio terminal unit panels are located at the following crew stations: commander, panel O5 (*LEFT AUDIO*); pilot, panel O9 (*RIGHT AUDIO*); mission station, panel R10 (*MISSION STATION AUDIO*); payload station, panel L9 (*PAYLOAD STATION AUDIO*); middeck, panel M042F (*MID DECK SPEAKER AUDIO*); and airlock, panel AW18D (*AIRLOCK AUDIO*). These panels control signals to headsets or communication carrier assemblies through the communications umbilical. On OV-102, an additional ATU (*OS AUDIO*) is mounted in the A13 position, and *MID DECK CCU AUDIO* is mounted in the MO58F position.

Each ATU has a three-position power switch to control all signals to or from the ATU. The switch positions are *AUD/TONE*, *AUD*, and *OFF*. In the *AUD/TONE* position, all available functions of the ATU are armed, and transmission and receptions may be made through the ATU, depending on the position of other switches on the ATU. C/W tone signals are sent to the ACCU to allow C/W audio to reach the ATU, the CCU, and the speaker unit. The *AUD* position has the same functions as *AUD/TONE* except that C/W signals are blocked from the ATU. The *OFF* position shuts off power to the ATU power supply, for the ATU amplifiers. Klaxon (cabin air pressure) and siren (fire) C/W signals go directly to a speaker unit, even with the speaker power off.

Each ATU has a two-position, spring-loaded-off *PAGE* switch that must be held in the *PAGE* position to activate the circuit. When activated, the circuit enables the ATU to transmit to all other ATUs, the EVA transceiver, and the attached payload circuit (e.g., Spacelab). Any number of stations may use the paging circuit simultaneously, and the circuit may be used regardless of the position of the other channel control switches.

On all ATUs, the two air-to-ground channels, the air-to-air channel, and intercom channels A and B have individual three-position control switches for selecting access to particular channels for transmission or reception. The switch positions are *T/R*, *RCV*, and *OFF*. The *T/R* position permits transmission or reception over the selected channel. The *RCV* position deactivates transmission capability on the selected channel and permits only reception of signals. The *OFF* position deactivates transmission and reception on the selected channel. These control switches do not turn on any transmitter or receiver but allow access to a transmitter or receiver.

Each channel control switch has a thumbwheel *VOLUME* control to adjust signal intensity on the related channel. The thumbwheels cover a range of approximately 27 decibels in 3-decibel increments.

The *XMIT/ICOM MODE* rotary switch controls four combinations of external and intercom transmissions. In the *PTT/HOT* mode, transmission through A/G 1, A/G 2, and A/A requires manual keying of the headset interface unit, microphone, or WCCS leg unit *XMIT PTT* button; intercom A

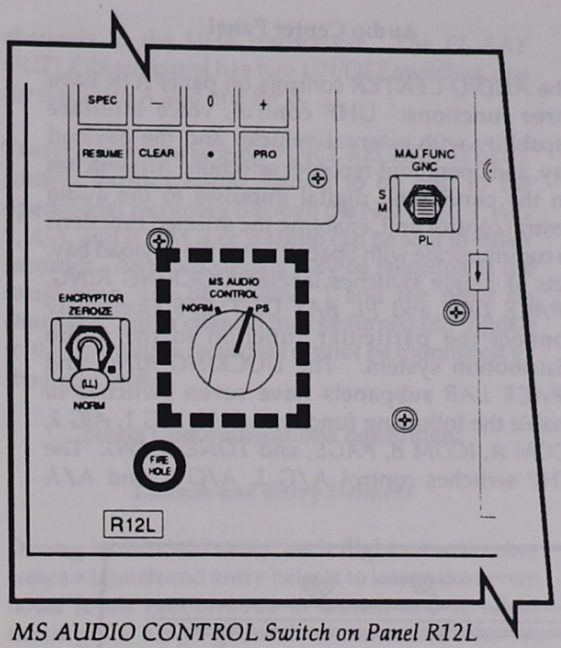

MS AUDIO CONTROL Switch on Panel R12L

and B will be hot mike. In the *PTT/VOX* mode, A/G 1, A/G 2, and A/A require PTT of the XMIT button, while intercom A and B are voice keyed. In the *PTT/PTT* mode, all voice channels are voice keyed. In the *VOX/VOX* mode, all voice channels are voice keyed.

The *VOX SENS* rotary switch on the ATUs regulates the volume of the signal required for voice keying. The *MAX* setting requires a lower decibel level to key the circuit than the *MIN* setting.

Volume control of all incoming signals to speakers is adjusted by the *MASTER SPEAKER VOLUME* controls on panels A13 and MO42F. The *MASTER VOLUME 1* and 2 switches on panel AW18D control volume to the respective CCU outlets in the airlock.

Four ATUs (on panels O5, O9, AW18D, and R10) allow a crewmember at a malfunctioning ATU to switch the CCU jack to an alternate ATU. The left may be switched to the right (commander's to pilot's ATU), or right ATU control may be switched to the left (pilot's to commander's ATU). The commander's and pilot's *CONTROL* knobs are located on panels O5 and O9. Mission specialist ATU may be switched to the payload specialist's ATU using the *MS AUDIO CONTROL* switch on panel R12L. Airlock ATU control may be switched to the middeck and payload specialist's ATUs using the *CONTROL* rotary switch on panel AW18D.

When the *CONTROL* switch is in the *NORM* position, control of the ATU is from the panel to which the knob belongs. The other position of the knob indicates the ATU to which control can be transferred. The *CONTROL* knob changes all ATU functions to the alternative ATU except the master volume control. This redundancy protection is used in the event of a failure or malfunction of any of the four audio terminal units that have a *CONTROL* knob.

NOTE

If an ATU loses power, switching to the other *CONTROL* position will restore listen capability but not talk capability.

Speaker Units

A speaker unit (SU) is located on panels A2 and MO29J. They are controlled by the ATU on panels A13 and MO42F. In addition to the features of the other ATUs, the speaker unit ATU has a three-

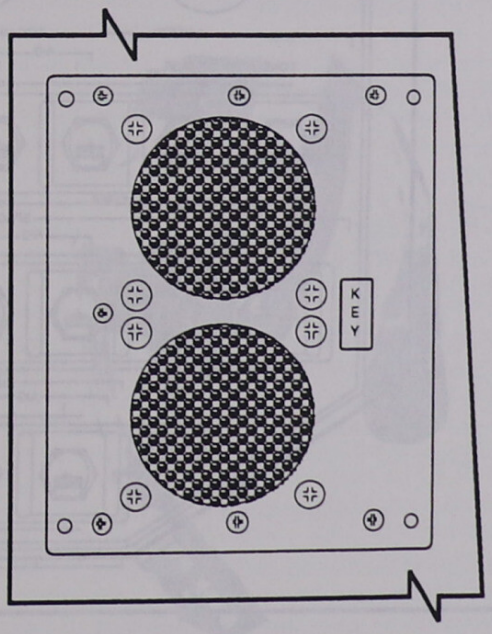

Speaker Unit on Panels A2 and MO29J

position *SPKR PWR* switch. Only the *OFF* and *SPKR* positions are used. In the *OFF* position, no signals except the klaxon and siren C/W signals go through the ATU. In the *SPKR* position, audio selected on the associated ATU and klaxon/C/W sirens are enabled. The *SPKR/MIC* position is not used. The top speaker is used for audio and the bottom is dedicated to the klaxon/siren.

The KEY light illuminates when a microphone routed through an SU's associated ATU is keyed (PTT, VOX, etc.)

Audio Center Panel

The *AUDIO CENTER* controls on panel A1R have three functions: UHF control, voice interface capability with external vehicles and the payload bay, and operations recorder selection. All switches on the panel send digital impulses to the audio central control unit, enabling the selected functions to communicate with Spacelab and the payload bay. Sets of toggle switches labeled *DOCKING RING*, *SPACE LAB*, and *PL BAY OUTLETS* electrically connect the particular function to the audio distribution system. The *DOCKING RING* and *SPACE LAB* subpanels have seven switches to enable the following functions: *A/A*, *A/G 1*, *A/G 2*, *ICOM A*, *ICOM B*, *PAGE*, and *TONE* (C/W). The UHF switches control A/G 1, A/G 2, and A/A

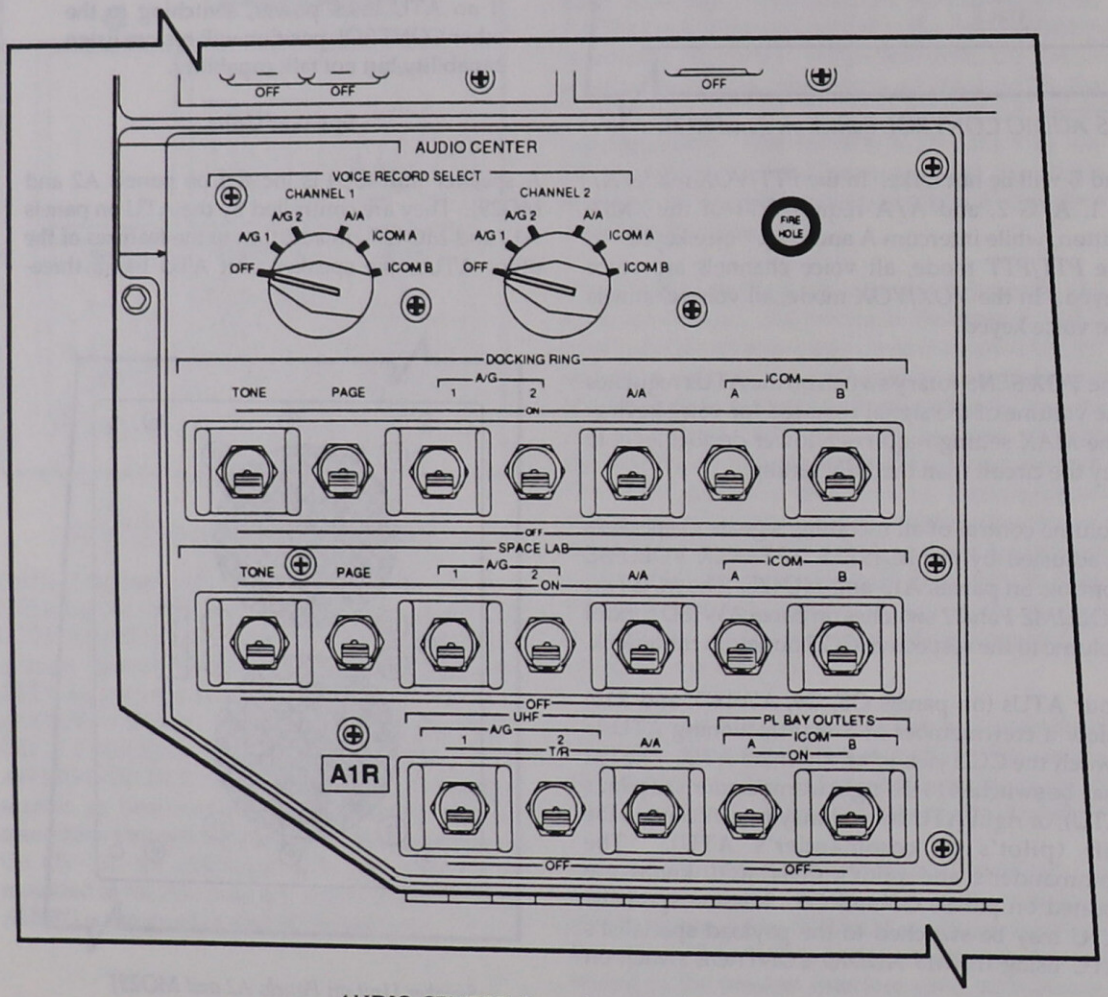

AUDIO CENTER Controls on Panel A1R

channels to the UHF transceiver. The *PL BAY OUTLETS* subpanel has two *ON/OFF* switches, one for intercom A and one for B.

Two rotary knobs labeled *VOICE RECORD SELECT* control various audio signals to be sent to the operational recorders through the NSP. *A/G 1*, *A/G 2*, *A/A*, and *ICOM A* or *B* audio can be sent to either recorder. Any two signals may be recorded at the same time, one on channel 1 and the other on channel 2. Either channel may be turned off. Signals to the operations recorders cannot be monitored by the flight crew.

Loose Communications Equipment

Launch and Entry Helmets

During launch and entry, each flight crewmember wears a launch and entry helmet to lessen the severe noise levels encountered at launch and to allow intelligible air-to-ground communications. A headset containing microphones and earphones fits over the crewmember's head, and a connector and cable interface with the headset interface unit, connected through communications cables to respective audio terminal units. The microphones can be positioned to suit the individual crewmember. For emergency egress, a pull-away connection is used between the communications carrier assembly and headset interface unit, in addition to the standard communications carrier assembly/headset interface unit twist-on connector.

The helmets have redundant noise-canceling microphones and electrically isolated earphones. When air is inhaled, the demand breathing regulator shuts off the microphones to avoid transmitting breathing sounds.

NOTE

An improper face seal will cause enough oxygen flow to cut off microphones.

Headset Interface Unit

The headset interface unit has separate push-to-talk (PTT) buttons for transmit and intercom modes and a volume control that determines the level of sound heard through the earphone (microphone sound level is determined by automatic gain control circuitry within the audio terminal unit). (Push-to-talk means that a push button must be depressed to allow a crewmember to talk through the system.) The *XMIT* push button allows access to intercom and external circuits, while the *ICOM* push button is for intercom only. The volume control knob acts in series with the volume controls on the associated audio terminal unit. In addition, the commander and pilot have PTT switches on their rotational hand controllers for the transmit mode.

The headset interface unit provides volume control and push-to-talk capabilities to the communications carrier assembly used for EVA, to the communications carrier assembly, and to the wireless crew communication unit as a backup. The headset interface unit has a clip that attaches to the crew's flight suits.

Cables

The communication cables vary in configuration depending on seat location. Each seat has two 4-foot communication cables or a 14-foot length, as required. One 4-foot cable is flown as a spare. The cables connect to crewman communications umbilical (CCU) outlets at various locations in the

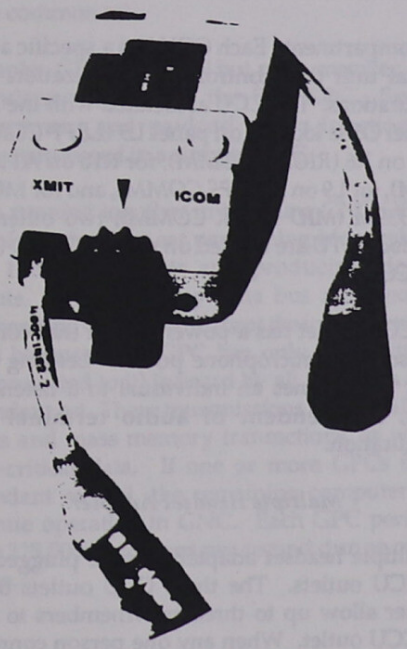

Headset Interface Unit

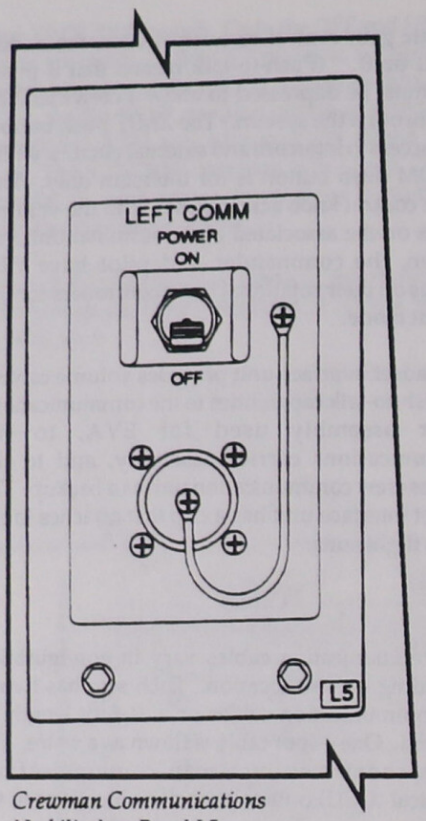

Crewman Communications Umbilical on Panel L5

crew compartment. Each CCU has a specific audio terminal unit that controls communication loop configurations. The CCU associated with the ATU on panel O5 is located on panel L5 (*LEFT COMM*); for O9 on R6 (*RIGHT COMM*); for R10 on A11 (*MS COMM*), for L9 on A15 (*PS COMM*), and for MO42F on MO39M (*MID DECK COMM*); two others for the airlock ATU are located on panel AW82D (*CCU 1* and *CCU 2*).

Each CCU outlet has a power switch that controls the associated microphone power. Leaving CCU power off confines an individual to a listen-only mode, independent of audio terminal unit configuration.

Multiple Headset Adapter

A multiple headset adapter may be plugged into the CCU outlets. The three CCU outlets on the adapter allow up to three crewmembers to share one CCU outlet. When any one person connected to a multiple headset adapter keys (in PTT mode) or activates the voice-operated transmitter, all three individuals' microphones will be keyed, and individuals sharing the multiple headset adapter will hear each other talking only on side tone.

Wireless Communications Units

On orbit, the crew may use wireless communication units in place of headsets or communication cables. A wireless unit consists of one wall unit (audio interface unit) and two leg units (crew remote units) worn by crewmembers during orbital operations. The wall unit connects to a CCU outlet and remains attached to the crew compartment wall. Each wall unit transmits on a unique pair of UHF frequencies. Leg units may be configured to work with any wall unit. Each wall unit is identified by a letter enclosed in a box. Each unit is stowed with its cabling attached. The wall unit has a 23-inch cable to interface with the CCU outlet, and the leg unit has a 22-inch cable attached to a lightweight headset.

NOTE

A loud squeal may occur during voice transmissions if two leg units are set to use the same frequency.

When the wireless unit is unstowed, part of the assembly necessary is to insert and tighten the flexible antenna in the bottom of each wall and leg unit. The wall unit receives power from the CCU outlet. The *MASTER VOL CONTROL* is set to full volume. All other switches are set as required; typically, the individual communication loops are used. The leg unit is stowed with battery pack installed and is attached to the crewmember's leg with a wraparound elastic strap. The rotary *ON/OFF/VOLUME* knob (unlabeled) is turned clockwise past the *ON/OFF* detent, and the volume is set as desired. Batteries are changed by depressing the battery pack latch push button lever (unlabeled) and sliding the battery pack off the unit. Expected use from one battery is 3 days (with the unit turned off during sleep periods). Sliding the new battery pack into the unit causes both the electrical connector and mechanical connector to latch.

XXXX/XXX/006 GPC/BUS STATUS XX X DDD/HH:MM:SS
DDD/HH:MM:SS

GPC		1S	2S	3S	4S	5S
MODE		XXXX	XXXX	XXXX	XXXX	XXXX
OPS		XX	XX	XX	XX	XX
STRING	1 FF	XS	XS	XS	XS	XS
	FA	XS	XS	XS	XS	XS
	2 FF	XS	XS	XS	XS	XS
	FA	XS	XS	XS	XS	XS
	3 FF	XS	XS	XS	XS	XS
	FA	XS	XS	XS	XS	XS
	4 FF	XS	XS	XS	XS	XS
	FA	XS	XS	XS	XS	XS
PL	1	XS	XS	XS	XS	XS
	2	XS	XS	XS	XS	XS
LAUNCH	1	XS	XS	XS	XS	XS
	2	XS	XS	XS	XS	XS
CRT	1	XS	XS	XS	XS	XS
	2	XS	XS	XS	XS	XS
	3	XS	XS	XS	XS	XS
	4	XS	XS	XS	XS	XS

(XX)

GPC/BUS STATUS Display (DISP 6)

The *INITIAL PROGRAM LOAD* push button for a GPC on panel O6 activates the initial program load command discrete input when depressed. When the input is received, that GPC initiates an initial program load (IPL) from the MMU specified by the *IPL SOURCE* switch on panel O6. The talkback indicator above the *MODE* switch for that GPC indicates *IPL*.

During non-critical periods in orbit, only one or two GPCs are used for GNC tasks, and another is used for systems management and payload operations.

A GPC on-orbit can also be "freeze-dried"; that is, it can be loaded with the software for a particular memory configuration and then moded to *HALT*. Before an OPS transition to the loaded memory configuration, the freeze-dried GPC can be moded back to *RUN* and the appropriate OPS requested.

NOTE

Because all BFS software is loaded into the BFS GPC at the same time, the BFS GPC is sometimes referred to as being freeze-dried on-orbit when it is placed in *HALT*. The BFS GPC can be moded to *RUN* prior to entry and will begin processing entry software following the OPS 3 request without having to access a mass memory unit.

GPC Modes of Operation

GPC modes of operation are redundant set, common set, and simplex. Redundant set operations refer to the mode in which two or more GPCs are concurrently receiving the same inputs, executing the same GNC software, and producing the same outputs. This mode uses a maximum amount of intercomputer communications, and the GPCs must maintain a high level of synchronization (called redundant set synchronization).

During redundant set operations, each GPC outputs only certain portions of its total software output to its interfacing hardware. Therefore, although each GPC "thinks" it is performing all its operations, only the GPC responsible for supporting a specific group of hardware will be able to actually transmit its data and commands. The redundant set GPCs compare all calculations to ensure that individual outputs are the same.

Common set operations occur when two or more GPCs communicate with one another while they are performing their individual tasks. They do not have to be performing the same major function (although they can be), but they do maintain common set synchronization. Any GPC operating as a member of the redundant set is also a member of the common set.

A simplex GPC is in *RUN* but not a member of the redundant set, such as the BFS GPC. Systems management and payload major functions are always processed in a simplex GPC.

GPCs running together in the same GNC OPS are part of a redundant set performing identical tasks from the same inputs and producing identical outputs. Therefore, any data bus assigned to a commanding GNC GPC (except the instrumentation buses because each GPC has only one dedicated bus connected to it) is heard by all members of the redundant set. These transmissions include all CRT inputs and mass memory transactions, as well as flight-critical data. If one or more GPCs in the redundant set fail, the remaining computers can continue operating in GNC. Each GPC performs about 325,000 operations per second during critical phases.

Each computer in a redundant set operates in synchronized steps and cross-checks results of processing about 440 times per second. Synchronization refers to the software scheme used to ensure simultaneous intercomputer communications of necessary GPC status information among the PASS computers. If a GPC operating in a redundant set fails to meet two redundant synchronization points in a row, the remaining computers will vote it out of the redundant set. If a GPC has a problem with one of its multiplexer interface adapter receivers during two successive reads of response data, or does not receive data while other members of the redundant set do receive data, the GPC with the problem will fail-to-sync. A failed GPC is either powered *OFF* or moded to *HALT* as soon as possible by the crew.

GPC Failure Indications

GPC failure votes are annunciated in a number of ways. Each GPC has discrete output lines for fail votes against each of the other GPCs that go to the other GPCs and the GPC status matrix. A GPC FAIL detection will cause a class 2 GPC FAULT message with illumination of the *MASTER ALARM*.

Error indications may be displayed on DISP 18 GNC SYS SUMM 1 and DISP 6 GPC/BUS STATUS displays.

XXXX/XXX/018 GNC SYS SUMM 1 XX X DDD/HH:MM:SS DDD/HH:MM:SS

RCS MANF	JET FAIL	ISOL VLV
F1	XXX	XXS
2	XXX	XXS
3	XXX	XXS
4	XXX	XXS
5	XXX	XXS
L1	XXX	XXS
2	XXX	XXS
3	XXX	XXS
4	XXX	XXS
5	XXX	XXS
R1	XXX	XXS
2	XXX	XXS
3	XXX	XXS
4	XXX	XXS
5	XXX	XXS

SURF	POS	MOM
L OB	XXX.XS	XXS
IB	XXX.XS	XXS
R IB	XXX.XS	XXS
OB	XXX.XS	XXS
AIL	XXX.X	
RUD	XXX.X	
SPD BRK	XXX.X	
BDY FLP	XXX.X	
	XXXXXX	

CNTLR		1	2	3
RHC	L	S	S	S
	R	S	S	S
	A	S	S	S
THC	L	S	S	S
	A	S	S	S
SBTC	L	S	S	S
	R	S	S	S

DPS		1	2	3	4	5
	GPC	S	S	S	S	S
MDM	FF	S	S	S	S	
	FA	S	S	S	S	

FCS CH	1	2	3	4
	S	S	S	S

NAV	1	2	3	4
IMU	S	S	S	
ACC	S	S	S	S
RGA	S	S	S	S
TAC	S	S	S	
MLS	S	S	S	
ADTA	S	S	S	S

(XX)

DPS Parameters on GNC SYS SUMM 1 Display (DISP 18)

The *GPC STATUS* matrix on panel O1 is a 5-by-5 matrix of lights. Each light corresponds to a GPC's fail vote against another GPC or itself. For example, if GPC 2 sends out a failure vote against GPC 3, the second white light in the third column is illuminated. The off-diagonal votes are votes against other GPCs. The yellow diagonal lights from upper left to lower right are self-failure votes. Whenever a GPC receives

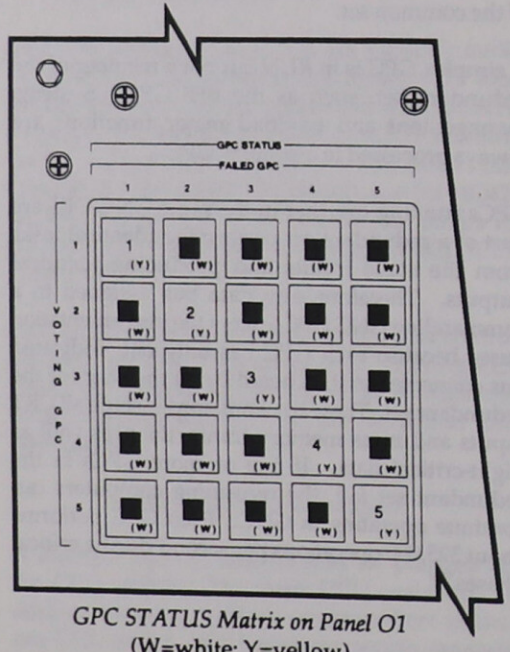

GPC STATUS Matrix on Panel O1
(W=white; Y=yellow)

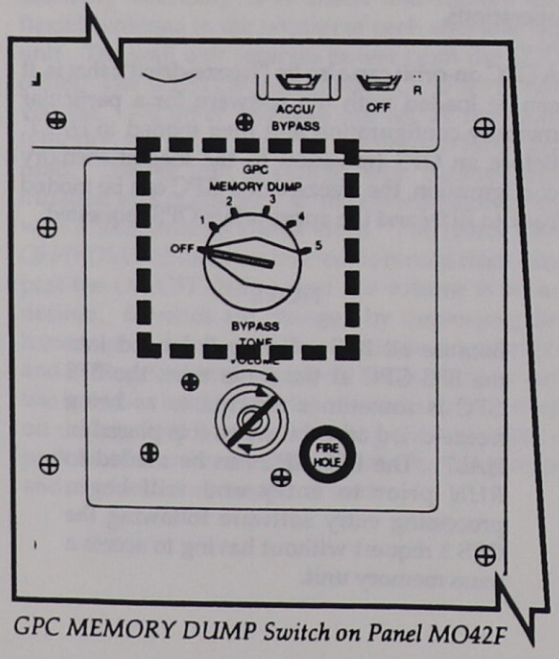

GPC MEMORY DUMP Switch on Panel MO42F

operational sequences, master timing unit, internal GPC time, system-level display information, uplink data, and state vectors.

All GPCs processing PASS exchange status information over the IC data buses. During launch, ascent, and entry, GPCs 1, 2, 3, and 4 are usually assigned to perform GNC tasks, operating as a redundant set, with GPC 5 as the backup flight system. One of the PASS GPCs acts as a commander of a given IC data bus in the flight control scheme and initiates all data bus transactions.

The four PASS GPCs are loaded with the same software. Interconnecting the four IC buses to the four PASS GPCs allows each GPC access to the status of data received or transmitted by the other GPCs so that identical results among the four PASS GPCs can be verified. Each IC bus is assigned to one of the four PASS GPCs in the command mode, and the remaining GPCs operate in the listen mode for the bus. Each GPC can receive data with the other three GPCs, pass data to the others, request data from the others, and perform any other tasks required to operate the redundant set.

Multiplexers/Demultiplexers (MDMs)

The MDMs convert and format (demultiplex) serial digital GPC commands into separate parallel discrete, digital, and analog commands for various vehicle hardware systems. The MDMs also convert and format (multiplex) the discrete, digital, and analog data from vehicle systems into serial digital data for transmission to the GPCs. Each MDM has two redundant multiplexer interface adapters (MIAs) connected to two data buses. The MDM's other functional interface is its connection to the appropriate vehicle system hardware by hard-wired lines.

There are 23 MDMs aboard the orbiter; 16 are part of the DPS, connected directly to the GPCs and named and numbered according to their location in the vehicle and hardware interface. The remaining seven MDMs are part of the vehicle instrumentation system and send vehicle instrumentation data to the PCMMUs. (They are termed operational instrumentation (OI) MDMs.)

The DPS MDMs consist of flight-critical forward (FF) MDMs 1 through 4, flight-critical aft (FA) MDMs 1 through 4, payload (PL) MDMs 1 and 2, SRB launch left (LL) MDMs 1 and 2, launch right (LR) MDMs 1 and 2, and GSE/LPS launch forward (LF) 1 and launch aft (LA) 1. One or two flex MDMs (FMDMs) may also be connected to the PL data buses, depending on the payload needs for a particular flight.

Of the seven operational instrumentation MDMs, four are located forward (OF1, OF2, OF3, and OF4), and three are located aft (OA1, OA2, and OA3).

The system software in each redundant set of GPCs activates a GNC executive program and issues commands to the bus and MDM to provide a set of input data. Each MDM receives the command from the GPC assigned to it, acquires the requested data from the GNC hardware wired to it, and sends the data to the GPCs.

Each FC data bus is connected to a flight forward and flight aft MDM. Each MDM has two MIAs, or ports, and each port has a channel through which the GPCs can communicate with an MDM; however, the FC data buses can interface with only one MIA port at a time. Port moding is the software method used to control the MIA port that is used in an MDM. Initially, these MDMs operate with port 1; if a failure occurs in port 1, the flight crew can select port 2. Since port moding involves a pair of buses, both MDMs must be ported at the same time. The control of all other units connected to the affected data buses is unaffected by port moding.

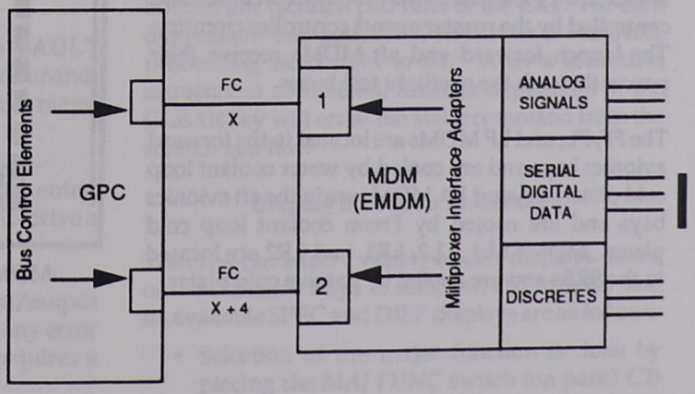

GPC/MDM Interfaces

Payload data bus 1 is normally connected to the primary MIA port of payload MDM 1, and payload data bus 2 is connected to the primary port of payload MDM 2. Payload data bus 1 can be connected to the secondary MIA port of payload MDM 2, and payload data bus 2 can be connected to the secondary port of payload MDM 1 by flight crew selection.

The two launch data buses are also connected to dual launch MDM multiplexer interface adapter ports. The flight crew cannot switch these ports; however, if an input/output error is detected on LF1 or LA1 during ascent, an automatic switchover occurs.

The hardware controls for the MDMs are the *MDM PL1, PL2, PL3, FLT CRIT AFT,* and *FLT CRIT FWD* power switches on panel O6. These *ON/OFF* switches provide or remove power for the four aft and four forward flight-critical MDMs and PL1 and PL2 MDMs. The *PL3* switch is unwired and is not used. There are no flight crew controls for the SRB MDMs.

Each MDM is redundantly powered by two main buses. The power switches control bus power for activation of a remote power controller for main power bus to an MDM. The main buses power separate power supplies in the MDM. Loss of either the main bus or MDM power supply does not cause a loss of function because each power supply powers both channels in the MDM. Turning power to an MDM off resets all the commands to subsystems.

The SRB MDMs receive power through SRB buses A and B; they are tied to the orbiter main buses and controlled by the master events controller circuitry. The launch forward and aft MDMs receive their power through the preflight test buses.

The FF, PL, and LF MDMs are located in the forward avionics bays and are cooled by water coolant loop cold plates. LA and FA MDMs are in the aft avionics bays and are cooled by Freon coolant loop cold plates. MDMs LL1, LL2, LR1, and LR2 are located in the SRBs and are cooled by passive cold plates.

Modules and cards in an MDM depend on the hardware components accessed by that type of MDM. A flight-critical forward and aft MDM are not interchangeable. However, one flight-critical MDM may be interchanged with another or one payload MDM with another.

Each MDM is 13 by 11 by 7 inches and weighs 38.5 pounds. MDMs use less than 80 watts of power

Enhanced MDMs (EMDMs) were installed in OV 105. EMDMs will be installed in the other vehicles only as MDMs require replacement. The presence of EMDMs is transparent to the crew except in the case of an MDM OUTPUT message. With MDMs, the message means there is a problem with an MDM or a GPC. An MDM OUTPUT message with EMDMs means there is a GPC problem. Crews flying MDMs and EMDMs will receive assistance from flight controllers in interpreting an MDM OUTPUT message.

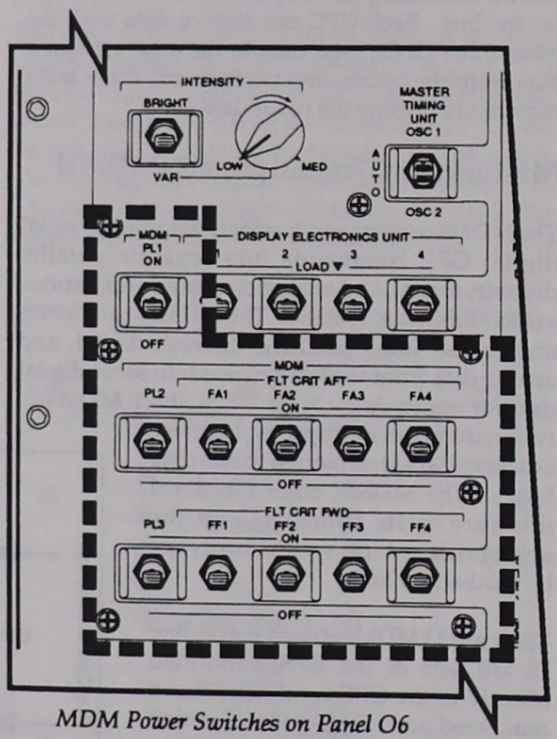

MDM Power Switches on Panel O6

- One decimal point key for use in entering data with decimal notation
- Thirteen special function keys: some of these keys are single stroke commands, and some are keys that start or finish a multi-stroke command sequence. A key that starts a command sequence is a command initiator and requires a command terminator key to be depressed to tell the DEU the keyboard entry is complete.

Each of these keys is discussed below.

ACK acknowledges receipt of a fault message on the fault message line by causing the message to become static and by extinguishing the *SM ALERT* light and software controlled tones. If multiple messages are indicated on the CRT, each subsequent press of the ACK key will bring up the next oldest unacknowledged message and clear out the last acknowledged one.

MSG RESET operates as a single keystroke command that clears both the currently annunciated fault message and the buffer message indicator (if any) from the fault message line. The fault message line is the second to the last line on the CRT. Depressing this key will also extinguish all software-driven caution and warning annunciators, software-controlled tones, and the *SM ALERT* light. An illegal entry message can only be cleared with the MSG RESET key.

SYS SUMM is used to invoke SYS SUMM display. The particular display called is determined by the selected major function and active OPS.

FAULT SUMM is used to invoke the FAULT display. It operates as a single keystroke command. The FAULT display can be accessed in every major function and OPS.

GPC/CRT initiates a multistroke keyboard entry, allowing the selection of a particular GPC to drive a DEU/DU set.

I/O RESET attempts to restore a GPC's input/output configuration to its original status prior to any error detection. It is a command initiator and requires a terminator keystroke.

ITEM is used as a multi-keystroke command initiator for changing the value of defined parameters or implementing configuration changes on a given display (OPS or SPEC).

EXEC acts as a multi-keystroke terminator to command the execution of the action specified on the scratch pad line. It is the terminator for the initiators above it (GPC/CRT, I/O RESET, and ITEM keys). EXEC may also be a single keystroke command to enable an OMS burn.

OPS serves as a multi-keystroke initiator to load a desired OPS load from mass memory into one or more GPCs. It is also used to transition from major mode to major mode within an OPS.

SPEC acts as a multi-keystroke initiator to select a defined SPEC or DISP display within a given OPS. In addition, this key provides the capability to freeze a display on the CRT. A single depression of the SPEC key freezes the display so it may be statically viewed. The display will remain frozen until another key (other than ACK, MSG RESET, or another SPEC) is entered.

PRO (Proceed) serves as a terminator to the OPS and SPEC keys. The completed command sequence initiates the selection of a desired OPS, SPEC, or DISP display.

RESUME is used to terminate a displayed SPEC or DISP. CRT control is restored to the underlying display upon depression of this key.

CLEAR clears the last echoed keystroke from the bottom line (scratch pad line) of the CRT. For each depression, one additional keystroke is removed, proceeding from right to left. After a command sequence is completed, a single depression of the CLEAR key will erase the static command from the scratch pad line.

Display Selection Procedures

The crew can select a variety of CRT displays. Some of the different ways to select an OPS display and its available SPEC and DISP displays are as follows:

- Selection of the major function is done by placing the *MAJ FUNC* switch (on panel C2) associated with the CRT in use in the *GNC*, *SM*, or *PL* position.

- An OPS is loaded from the MMU via a three-step keyboard entry. A new OPS is called from mass memory by its first major mode. The OPS is loaded into the GPC that is currently driving the DEU/DU on which the keyboard entry is done. Once the OPS is loaded, access is provided to all major modes in that OPS. Major mode displays are advanced by the same keyboard command. The steps for selecting an OPS display are as follows:

  1. *Depress the OPS key.*
  2. *Key in the three numbers of the desired OPS.* The first digit defines the OPS and the next two digits specify the major mode.
  3. *Depress the PRO key.* Once the OPS is loaded into one or more GPCs, that software can be accessed at any time through any CRT in the proper major function.

Selection of a major mode does not involve a mass memory access. Advancing major modes is done by the same keyboard command as loading an OPS. The first digit will be the same as the OPS number, but the last two digits specify the major mode. For example, to go to GNC MM 202, enter OPS 2 0 2 PRO.

Within each OPS, certain SPEC and DISP displays are available. The steps for selecting a SPEC or a DISP are as follows:

1. *Depress the SPEC key.* The SPEC key is used in calling both SPEC and DISP displays.
2. *Key in the SPEC or DISP number omitting all leading zeros.* SPEC and DISP numbers have three digits. They are differentiated by their numbering scheme. The display is a DISP only if the first digit is a 9, or if the last digit is a 6 through 9. To illustrate the method for keying in SPEC and DISP numbers, DISP number 106 would be keyed in as "106"; SPEC number 034 would be keyed "34"; DISP number 066 would be keyed "66"; and SPEC number 001 would be keyed "1."
3. *Depress the PRO key.*

OPS and Major Mode Transitions

Transitions from major mode to major mode or to another OPS are accomplished by either automatic transitions or proper command entry.

- Automatic transitions: Some major mode transitions occur automatically, usually as a function of some mission event. Examples of automatic transitions are between major modes 101 and 102 (SRB ignition) and between major modes 102 and 103 (SRB separation). Selection of an RTLS abort also results in an automatic OPS transition.
- Command entry: Proper command entry (OPS XXX PRO) is always used to transition from one OPS to another. In most cases, it is also a legal transition operation for proceeding from one major mode to the next (e.g., 301 to 302).

Display Sequencing, Overlaying, and Retention

Certain rules have been established for proceeding from one display to another. These can be categorized into treatment of proper display sequencing, the overlaying of current displays by new displays, and the display retention hierarchy.

SPEC and DISP Displays

The hierarchy of overlaying SPECs and DISPs makes sense if one remembers that a SPEC allows crew interaction and control of specialized operations, whereas a DISP provides display information only. Both SPECs and DISPs overlay the current major mode display when called.

A SPEC need not be selected to call a DISP. If a DISP is on the CRT, and another SPEC or DISP is called, the current DISP is terminated. The terminated DISP can only be viewed again by entering its calling command once more.

If a SPEC is selected, and a DISP is called to overlay it, the SPEC is retained underneath the DISP. If another SPEC is then selected, the underlying SPEC as well as the DISP over it is terminated. The terminated SPEC can only be viewed again if it is recalled.

The RESUME key is used as a single keystroke entry to terminate the SPEC or DISP currently being displayed and to restore the underlying display. If the display being terminated is a DISP, CRT control will be restored to the underlying SPEC, or to the OPS display if no SPEC has been selected. If a SPEC display is terminated, CRT control is restored to the major mode display. It is advisable to press

indicator ball, with roll, pitch, and yaw arranged just as the rate pointers are. Like the rate indicators, each error needle has an arc-shaped background scale with graduation marks that allow the flight crew to read the magnitude of the attitude error. The errors are displayed with respect to the body-axis coordinate system and, thus, are independent of the selected reference frame of the attitude display.

The attitude director indicator error needles are driven by flight control outputs that show the difference between the required and current vehicle attitude. These needles are also "fly to," meaning that the flight crew must maneuver in the direction of the needle to null the needle. For example, if the pitch error needle points down, the flight crew must manually pitch down to null the pitch attitude error. The amount of needle deflection indicating the number of degrees of attitude error depends upon the position of the *ADI ERROR RATE* switch for each attitude director indicator and the flight phase. For ascent, orbit, and transition, in the *HIGH* position, the error needles represent 10 degrees, *MED* represents 5 degrees, and *LOW* represents 1 degree. For entry, the needles signify different errors in different phases (see table below).

MISSION PHASE	ROLL	PITCH	YAW
(101-106, 601) Ascent/ (201, 202, 801) On-orbit/ (301, 303) Transition	(Deg)	(Deg)	(Deg)
High	10	10	10
Medium	5	5	5
Low	1	1	1
ENTRY (MM 304, 602)	(Deg)	(Deg)	(Deg)
High	25	10	2.5
Medium	25	5	2.5
Low	10	1	2.5
MM 603 IPH = 4,6			
TAEM (MM 305, 603)	(Deg)	(g's)	(Deg)
High	25	1.25	2.5
Medium	25	1.25	2.5
Low	10	0.5	2.5
IPH ≠ 4,5 WOWLON = 0			
WOWLON = 1 Rollout (MM 305, 603)	(Deg)	(Deg/s)	(Deg)
High	20	10	2.5
Medium	5	5	2.5
Low	1	1	2.5

ADI Error Switch vs. Full Range Deflection

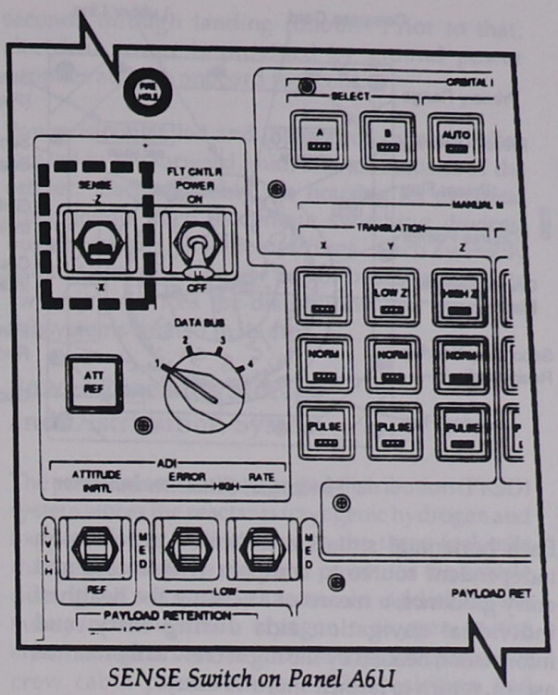

SENSE Switch on Panel A6U

The *SENSE* switch on panel A6U allows the flight crew to use the aft attitude director indicator, rotational hand controller, and translational hand controller in a minus X or minus Z control axis sense. These two options of the aft attitude director indicator and hand controllers correspond to the visual data out of the aft viewing (negative X) or overhead viewing (negative Z) windows.

Each attitude director indicator has a single flag labeled *OFF* on the left side of the display whenever any attitude drive signal is invalid. There are no flags for the rate and error needles; these indicators are driven out of view when they are invalid.

Horizontal Situation Indicator (HSI)

The horizontal situation indicator for the commander (panel F6) and pilot (panel F8) displays a pictorial view of the vehicle's position with respect to various navigation points and shows a visual perspective of certain guidance, navigation, and control parameters, such as direction, distance, and course/glide path deviation. The flight crew uses this information to control or monitor vehicle performance. The horizontal situation indicators are active during the entry and landing and ascent/return to launch site phases.

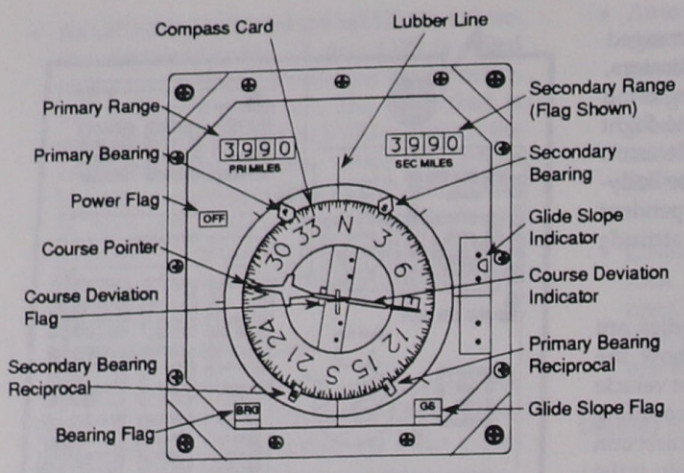

Horizontal Situation Indicator

Each horizontal situation indicator provides an independent source to compare with ascent and entry guidance, a means of assessing the health of individual navigation aids during entry, and information needed by the flight crew to fly manual ascent, return to launch site, and entry.

HSI Ascent Displays

During ascent major modes 102 and 103 (first and second stage) and return to launch site, the horizontal situation indicator provides information about the target insertion orbit. The compass card displays heading with respect to target insertion orbit, and north on the compass card points along the target insertion orbit plane. The heading of the body plus X axis with respect to the target insertion orbit is read at the lubber line.

The course pointer provides the heading of the Earth-relative velocity vector with respect to the target insertion orbit plane. The course deviation indicator deflection indicates the estimated sideslip angle, the angle between the body X axis and the relative velocity vector.

The primary bearing pointer during major modes 102 and 103 (pre-TAL abort) is fixed on the compass card at a predetermined value to provide a turnaround heading in the event of a return to launch site (RTLS) abort. During RTLS major mode 601, or post-TAL abort, MM103, the pointer indicates the heading to the landing site runway. The secondary bearing provides the heading of the inertial velocity vector with respect to the target insertion orbit plane.

HSI Entry Displays

The commander's horizontal situation indicator switches are on panel F6, and the pilot's are on panel F8. The *HSI SELECT MODE* switch selects the mode: *ENTRY*, *TAEM*, or *APPROACH*. These Area Navigation modes are different from the Guidance phases with virtually identical names (Entry, TAEM, and Approach and Landing). The *ENTRY* position enables HSI mode auto switching from Entry through Approach. The *HSI SELECT SOURCE* switch selects TACAN, navigation, or microwave scanning beam landing system (MLS); the *1, 2, 3* switch selects one of the three TACAN or MLS units. When the *HSI SELECT SOURCE* switch is positioned to *NAV*, the HSI is supplied with data from the navigation processor, and the *1, 2, 3* switch is not used. In

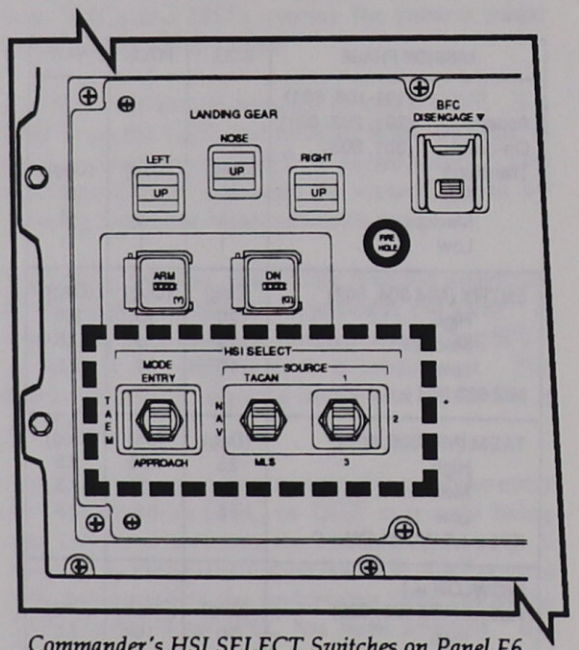

Commander's HSI SELECT Switches on Panel F6

2.8 ELECTRICAL POWER SYSTEM (EPS)

CONTENTS

Description 2.8-1
Power Reactants Storage and Distribution System 2.8-1
Fuel Cell System 2.8-10
Electrical Power Distribution and Control 2.8-20
Operations 2.8-30

Description

The electrical power system (EPS) consists of the equipment and reactants that produce electrical power for distribution throughout the orbiter vehicle, and fulfill all the orbiter external tank, solid rocket booster, and payload power requirements when not connected to ground support equipment. The EPS operates during all flight phases. For nominal operations, very little flight crew interaction is required by the EPS.

The EPS is functionally divided into three subsystems: power reactants storage and distribution, three fuel cell power plants (fuel cells), and electrical power distribution and control.

Through a chemical reaction, the three fuel cells generate all 28-volt direct-current electrical power for the vehicle from launch minus 3 minutes and 30 seconds through landing rollout. Prior to that, electrical power is provided by ground power supplies and the onboard fuel cells.

Power is controlled and distributed by assemblies located in the forward, mid, and aft sections of the orbiter. Each assembly is a housing for electrical components such as remote switching devices, buses, resistors, diodes, and fuses. Each assembly usually contains a power bus or buses and remote switching devices for distributing bus power to subsystems located in its area.

Power Reactants Storage and Distribution System

The power reactants storage and distribution (PRSD) system stores the reactants (cryogenic hydrogen and oxygen) and supplies them to the three fuel cells that generate all the electrical power for the vehicle during all mission phases. In addition, the subsystem supplies cryogenic oxygen to the environmental control and life support system for crew cabin pressurization. The hydrogen and oxygen are stored in tanks at cryogenic temperatures (-285° F for liquid oxygen and -420° F for liquid hydrogen) and supercritical pressures (above 731 psia for oxygen and above 188 psia for hydrogen).

The PRSD system components are located in the orbiter midbody underneath the payload bay or on a payload bay pallet for 10+ day missions in Extended Duration Orbiter (EDO) vehicles. The system stores the reactants hydrogen and oxygen in double-walled, thermally insulated spherical tanks with a vacuum annulus between the inner pressure vessel and outer tank shell. Each tank has

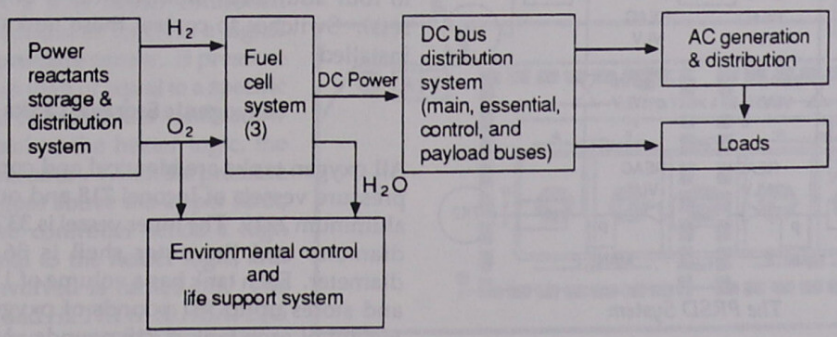

The Electrical Power System

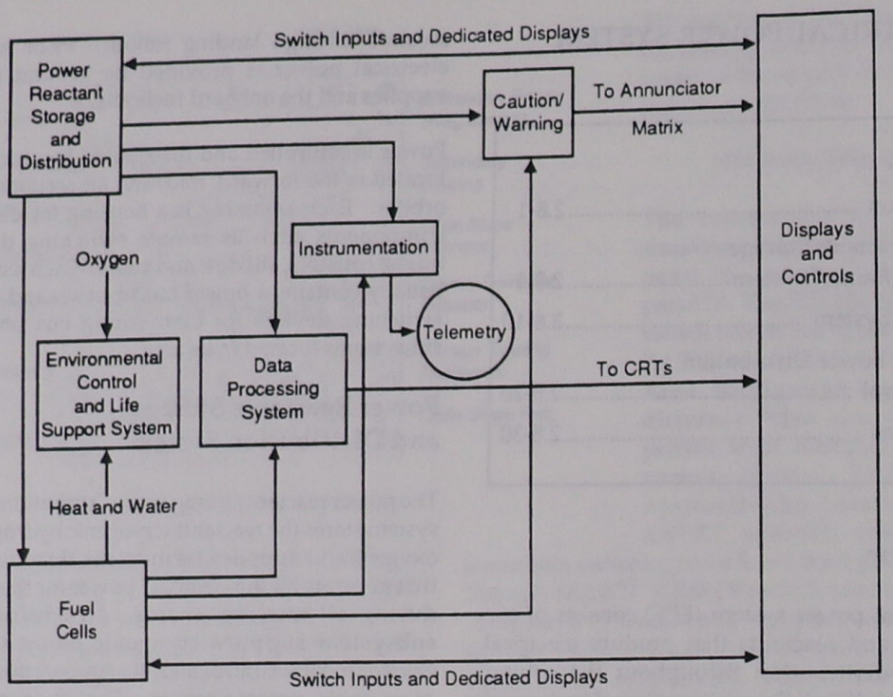

Electrical Power System Interfaces

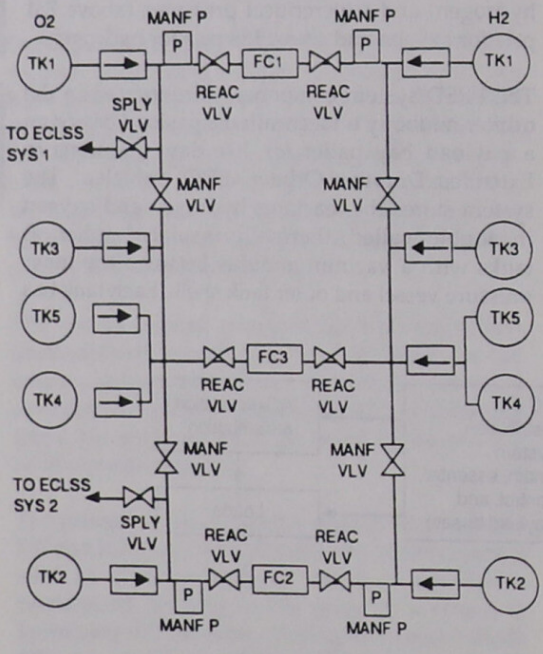

The PRSD System

heaters to add energy to the reactants during depletion to control pressure. Each tank is capable of measuring quantity remaining.

The tanks are grouped in sets of one hydrogen and one oxygen tank. The number of tank sets installed depends on the specific mission requirement and vehicle. Up to five tank sets can be installed in the midfuselage under the payload bay liner of OVs 102, 104 and 105 (four sets maximum for OV 103). Up to four additional tank sets can be flown on the EDO pallet in the payload bay of these vehicles. OV 105 may be configured at a later date to fly up to four additional tank sets (total of 8 additional sets). Switches to control these tanks are already installed

Cryogenic Storage Tanks

All oxygen tanks are identical and consist of inner pressure vessels of Inconel 718 and outer shells of aluminum 2219. The inner vessel is 33.435 inches in diameter and the outer shell is 36.8 inches in diameter. Each tank has a volume of 11.2 cubic feet and stores up to 781 pounds of oxygen. The dry weight of each tank is 215 pounds. Maximum fill time is 45 minutes.

All hydrogen tanks also are identical. Both the inner pressure vessel and the outer shell are constructed of aluminum 2219. The inner vessel's diameter is 41.51 inches and the outer shell's is 45.5 inches. The volume of each tank is 21.39 cubic feet, and each stores up to 92 pounds of hydrogen. Each tank weighs 227 pounds dry. Maximum fill time is 45 minutes.

The inner pressure vessels are kept supercold by minimizing conductive, convective, and radiant heat transfer. Twelve low-conductive supports suspend the inner vessel within the outer shell. Radiant heat transfer is reduced by a shield between the inner vessel and outer shell (hydrogen tanks only), and convective heat transfer is minimized by maintaining a vacuum between the vessel and shell. During ground operations, a vacuum ion pump maintains the required vacuum level and is also used as a vacuum gauge to determine the vacuum's integrity. The pump consists of an electrical power supply and an anode, which absorbs free ions between the tank walls.

Cryogenic Tank Heaters

Each hydrogen tank has one heater probe with two elements; each oxygen tank has two heater probes with two elements on each probe. As the reactants are depleted, the heaters add heat energy to maintain a constant pressure in the tanks.

The heaters operate in automatic and manual modes. In the automatic mode, the heater is controlled by a tank heater controller. Each heater controller receives a signal from a tank pressure sensor. If pressure in a tank is less than or equal to a specific pressure, and the controller sends a low pressure signal to the heater logic, the heater is powered on. When the pressure in the tanks goes above the upper limit, the respective controller sends a high pressure signal to the heater logic, and the heater involved is turned off. The *O2 TK1 (2,3)* and *H2 TK1 (2,3) HEATERS* switches (*AUTO, ON, OFF*) for tanks 1, 2, and 3 are located on panel R1; switches for the oxygen and hydrogen tank 4 heaters (tanks 4/5 on OV 102) are on panel A11. (On OV 102, the oxygen and hydrogen tank 4 B heaters are disconnected, and the logic and power are used for the tank 5 A heaters.) OVs 104 and 105 heater switches for tank set 5 are on panel A15. The heater switches for EDO pallet tanks 6-9 are located on panel A15 in all

Heater controller psia		
Pressure limits (psia)	Low	High
H_2 tank 1, 2	200-206	220-226
H_2 tank 3, 4	217-223	237-243
O_2 tank 1, 2	803-819	838-854
O_2 tank 3, 4	832-848	867-883

Tank Pressure Limits

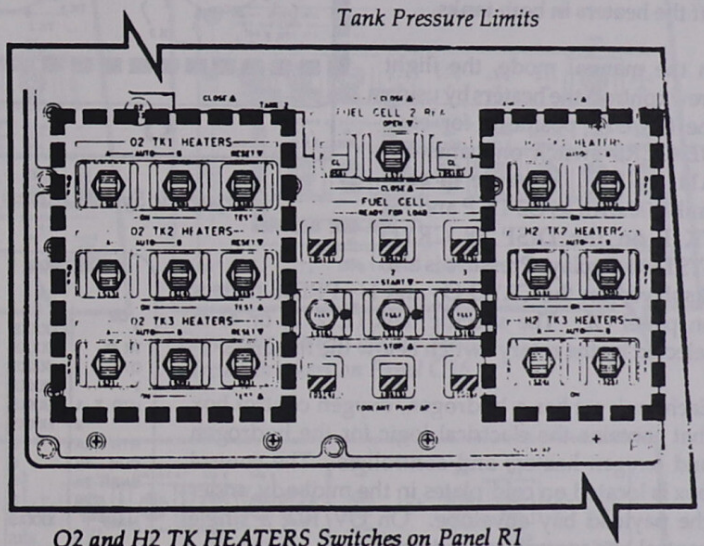

O2 and H2 TK HEATERS Switches on Panel R1

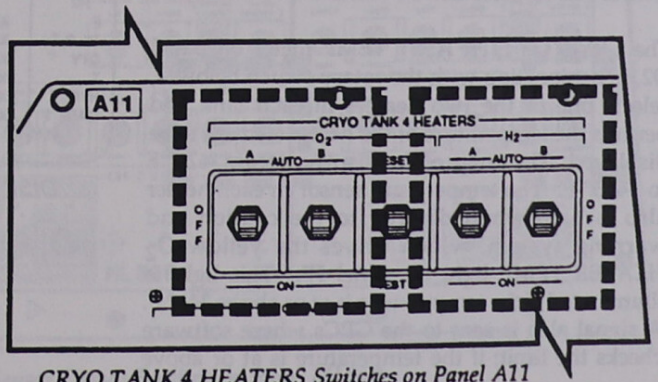

CRYO TANK 4 HEATERS Switches on Panel A11

are located on panel A15 in all three EDO vehicles. OV 105 also has heater switches for tank sets 10-13 on panel A15 for the future use of a second EDO pallet.

Dual-mode heater operation is available for pairs of oxygen and hydrogen tanks. If the heaters of both tanks 1 and 2, or tanks 3 and 4, are placed in the automatic mode, the tank heater logic is interconnected. In this case, the heater controllers of both tanks must send a low pressure signal to the heater logic before the heaters will turn on. Once the heaters are on, a high pressure signal from either tank will turn off the heaters in both tanks.

In the manual mode, the flight crew controls the heaters by using the *ON/OFF* positions for each *HEATERS* switch on panel R1, A11, or A15. Pressure in each tank is shown as O2 TK P and H2 TK P on the DISP 68 CRYO SYSTEM display. Pressure is also displayed on the CRYO O_2 and H_2 PRESS meters on panel O2. The specific tank (1, 2, 3, or 4) is selected by the rotary switch below the meters.

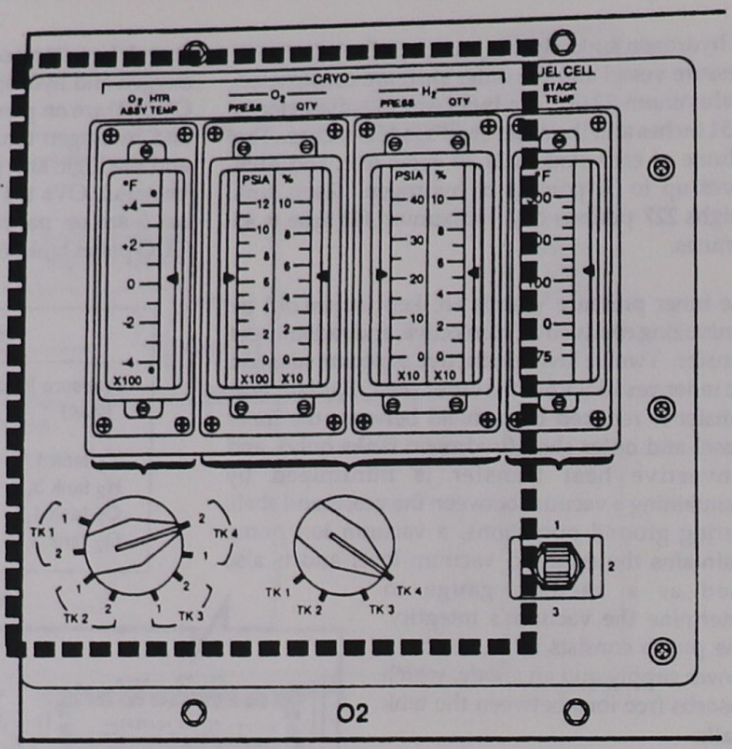

Cryogenic System Meters and Switches on Panel O2

Each tank set has a hydrogen/oxygen control box that contains the electrical logic for the hydrogen and oxygen heaters and controllers. The control box is located on cold plates in the midbody under the payload bay envelope. On OV 102, a single control box controls tanks 4 and 5.

The CRYO O_2 HTR ASSY TEMP meter on panel O2, in conjunction with the rotary switch below it, selects one of the two heaters in each tank and permits the temperature of the heater element to be displayed. The range of the display is from -425° F to +475° F. The temperature sensor in each heater also is hard-wired directly to the caution and warning system, which drives the yellow O_2 *HEATER TEMP* light on panel F7. This light is illuminated if the temperature is at or above 344° F. A signal also is sent to the GPCs where software checks the limit; if the temperature is at or above

XXXX/XXX/068	CRYO SYSTEM				XX X DDD/HH:MM:SS DDD/HH:MM:SS
	TK				
O2	1	2	3	4	5
P	XXXXS	XXXXS	XXXXS	XXXXS	
TK P	XXXXS	XXXXS	XXXXS	XXXXS	XXXXS
QTY	XXXS	XXXS	XXXS	XXXS	XXXS
T	±XXXS	±XXXS	±XXXS	±XXXS	±XXXS
HTR T 1	±XXXS	±XXXS	±XXXS	±XXXS	±XXXS
2	±XXXS	±XXXS	±XXXS	±XXXS	±XXXS
HTR 1A	S	S	S	S	S
CUR 1B	S	S	S	4/5S	S
SNSR 2A	S	S	S	S	S
2B	S	S	S	4/5S	S
MANF P	XXXXS	XXXXS			
VLV	XXS	XXS			
H2					
P	XXXS	XXXS	XXXS		XXXS
TK P	XXXS	XXXS	XXXS	XXXS	XXXS
QTY	XXXS	XXXS	XXXS	XXXS	±XXXS
T	±XXXS	±XXXS	±XXXS	±XXXS	±XXXS
HTR T	±XXXS	±XXXS	±XXXS	±XXXS	
MANF P	XXXS	XXXS			
VLV	XXS	XXS			

(XX)

DISP 68 CRYO SYSTEM Display (onorbit)

349° F, the *BACKUP C/W ALARM* light on panel F7 is illuminated. This signal also is displayed on DISP 68 CRYO SYSTEM and transmitted to the ground.

Two current level detectors are built into the circuit of each oxygen tank heater to interrupt power in case of electrical shorts. The second detector is redundant. Each detector is divided into A and B detectors, which monitor the heater A current and

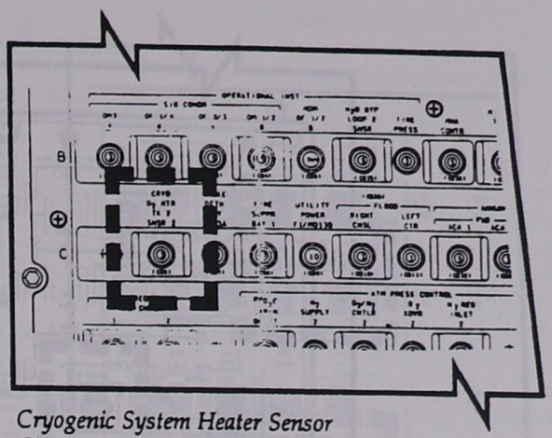

Cryogenic System Heater Sensor Circuit Breaker on Panel O15

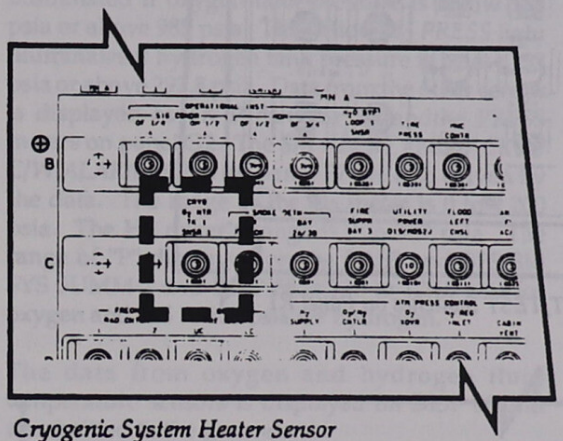

Cryogenic System Heater Sensor Circuit Breaker on Panel O14

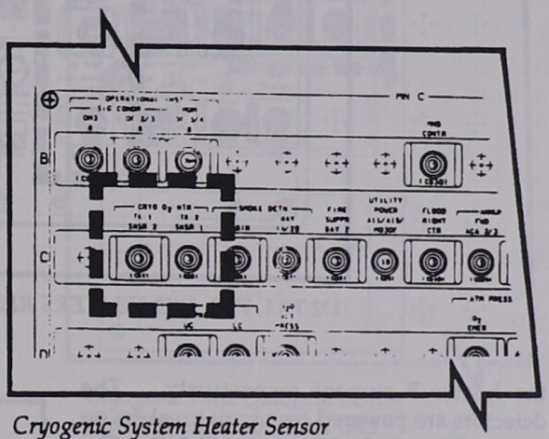

Cryogenic System Heater Sensor Circuit Breakers on Panel O16

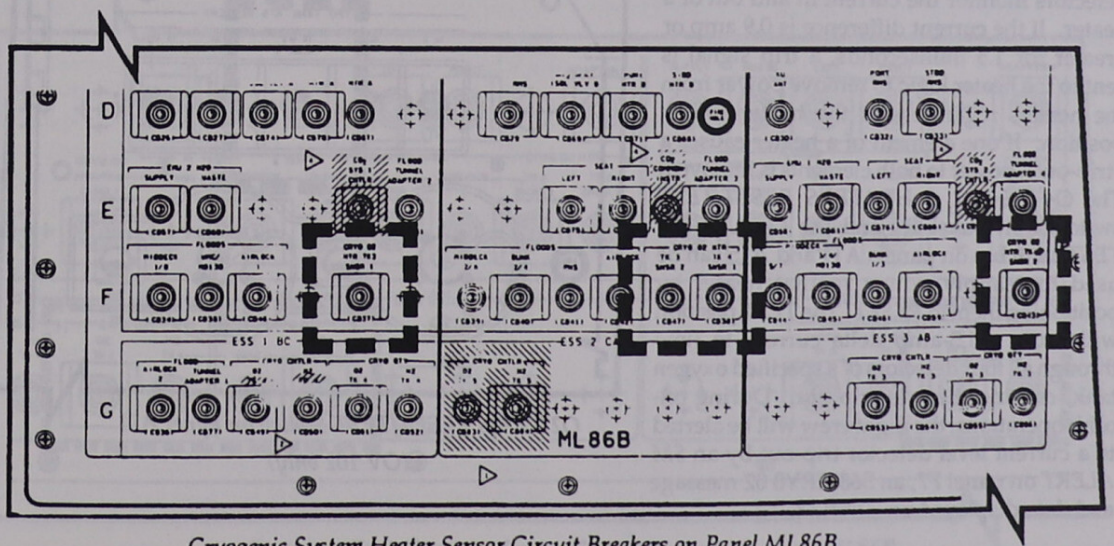

Cryogenic System Heater Sensor Circuit Breakers on Panel ML86B

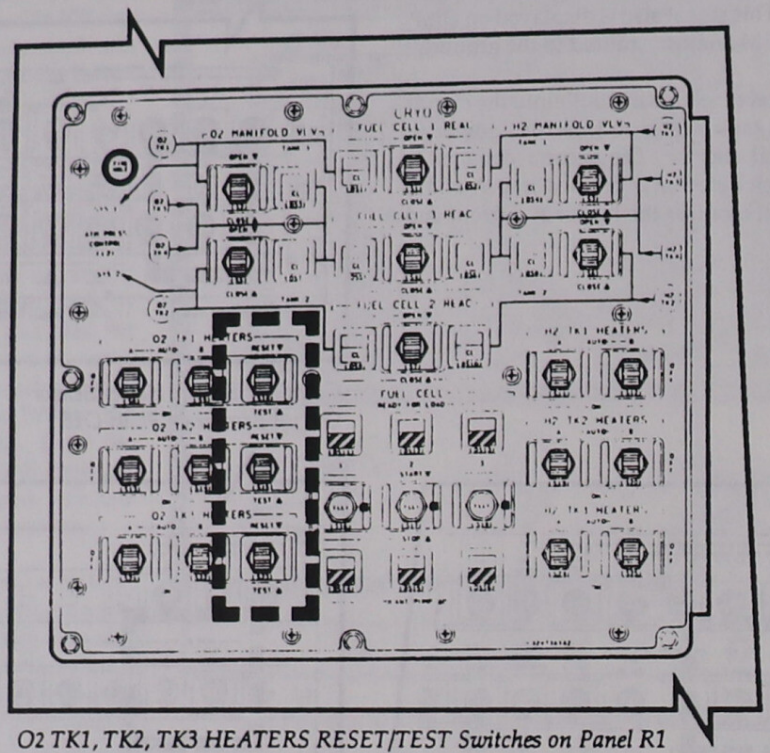

O2 TK1, TK2, TK3 HEATERS RESET/TEST Switches on Panel R1

the heater B current respectively. The detectors are powered by circuit breakers on panels O14, O15, O16, and ML86B. The detectors monitor the current in and out of a heater. If the current difference is 0.9 amp or greater for 1.5 milliseconds, a trip signal is sent to the heater logic to remove power from the heaters regardless of the heater switch position. If one element of a heater causes a "trip-out," power to both elements is removed. The O_2 *TK 1, 2, 3 HEATERS RESET/TEST* switches on panel R1 and the O_2 *RESET/TEST* switches on panels A11 and A15 can be used to reapply power to that heater by positioning them to *RESET*. The *TEST* position will cause a 1.5-amp delta current to flow through all four detectors of a specified oxygen tank, causing them to trip out. During on-orbit operations, the flight crew will be alerted to a current level detector trip-out by an *SM ALERT* on panel F7, an S68 CRY0 02 message and data displayed on DISP 68.

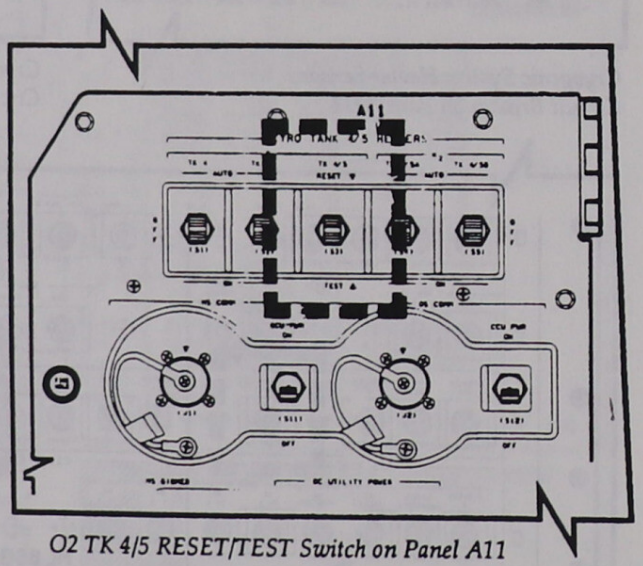

O2 TK 4/5 RESET/TEST Switch on Panel A11

(OV 102 only)

Each oxygen and hydrogen tank has a quantity sensor powered by a circuit breaker. These are identified on panel O13 as *CRYO QTY* O_2 (or H_2) *TK 1* and *TK 2* and on panel ML86B as *CRYO QTY* O_2 (or H_2) *TK 3*, *TK 4*, and *TK 5*. Data from the quantity sensors are sent to panel O2, where the rotary switch below the meters is used to select the tank for display on the CRYO O_2 (or H_2) QTY meters. The range of the meters is zero to 100 percent. The data are also displayed on DISP 68.

There are two tank pressure sensors for each oxygen and hydrogen tank. One sensor transmits its data to the tank heater controllers, the caution and warning matrix on panel F7, and is displayed as "P" on DISP 68. The yellow O_2 *PRESS* light is illuminated if oxygen tank pressure is below 540 psia or above 985 psia. The yellow H_2 *PRESS* light illuminates if hydrogen tank pressure is below 153 psia or above 293.8 psia. Data from the other sensor is displayed as TK P on DISP 68 andthe PRESS meters on panel O2. The *SM ALERT* and *BACKUP C/W ALARM* lights on panel F7 are also driven by the data. The range of the O_2 meter is 0 to 1,200 psia. The H_2 meter's range is 0 to 400 psia. The range of "P" displayed on the PASS and BFS SM SYS SUMM 1 and DISP 68 is 515 to 1,215 psia for oxygen and 145 to 305 psia for hydrogen.

The data from oxygen and hydrogen fluid temperature sensors is displayed on DISP 68 and transmitted to the ground.

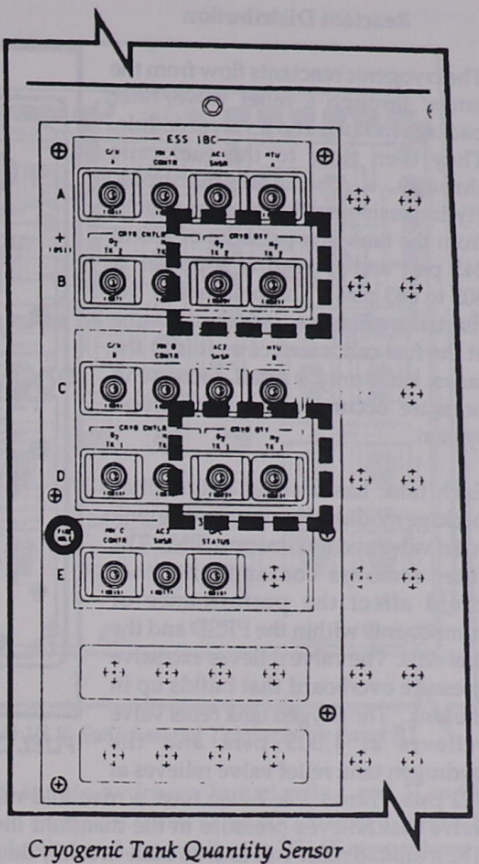

Cryogenic Tank Quantity Sensor Circuit Breakers on Panel O13

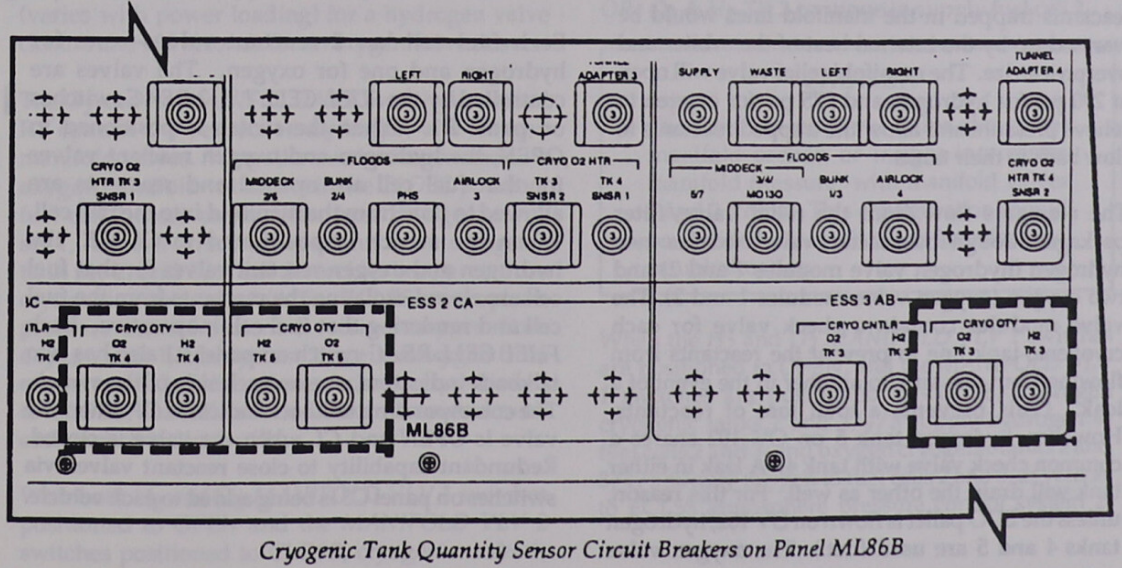

Cryogenic Tank Quantity Sensor Circuit Breakers on Panel ML86B

Reactant Distribution

The cryogenic reactants flow from the tanks through a relief valve/filter package module and a valve module. They then flow to the fuel cells through a common manifold. Hydrogen is supplied to the manifold from the tank at a pressure of 200 to 243 psia and oxygen is supplied at 803 to 883 psia. The pressure of the reactants will be essentially the same at the fuel cell interface as it is in the tanks, since only a small decrease in pressure occurs in the distribution system.

Each tank has a relief valve/filter package module that contains the tank relief valve and a 12-micron filter. The filter removes contaminants that could affect the performance of components within the PRSD and the fuel cells. The valve relieves excessive pressure overboard that builds up in the tank. The oxygen tank relief valve relieves at 1,005 psia and the hydrogen tank relief valve relieves at 302 psia. Tanks 1 & 2 also have a manifold relief valve that relieves pressure in the manifold lines. The manifold relief valves are a built-in safety device in the event a manifold valve and fuel cell reactant valve are closed because of a malfunction. The reactants trapped in the manifold lines would be warmed up by the internal heat of the orbiter and overpressurize. The manifold relief valve will open at 290 psi for hydrogen and 975 psi for oxygen to relieve pressure and allow the trapped reactants to flow back to their tanks.

The reactants flow from the relief valve/filter packages through four reactant valve modules: two hydrogen (hydrogen valve modules 1 and 2) and two oxygen (oxygen valve modules 1 and 2). The valve modules contain a check valve for each cryogenic tank line to prevent the reactants from flowing from one tank to another in the event of a leak. (This prevents a total loss of reactants. However, hydrogen tank 5 on OV 102 shares a common check valve with tank 4. A leak in either tank will drain the other as well. For this reason, unless the EDO pallet is flown on OV 102, hydrogen tanks 4 and 5 are used first.) The oxygen valve modules also contain the environmental control and life support system atmosphere pressure control system 1 and 2 oxygen supply valves. Each module also contains a manifold valve and fuel cell reactant valves.

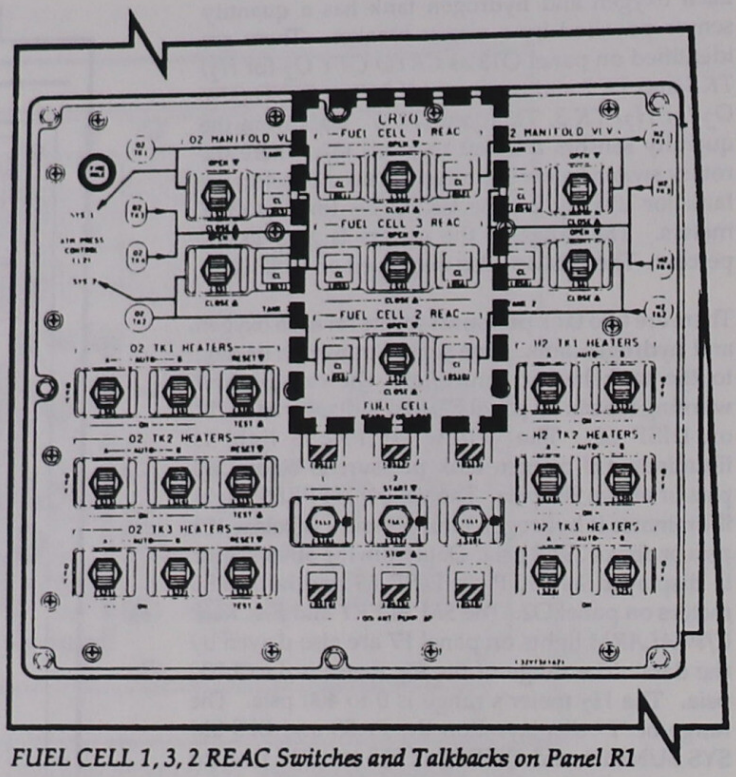

FUEL CELL 1, 3, 2 REAC Switches and Talkbacks on Panel R1

Each fuel cell has 2 reactant valves—one for hydrogen and one for oxygen. The valves are controlled by the *FUEL CELL 1, 3, 2 REAC* switches on panel R1. When the switch is positioned to *OPEN*, the hydrogen and oxygen reactant valves for that fuel cell are opened and reactants are allowed to flow from the manifold into the fuel cell. When the switch is positioned to *CLOSE*, the hydrogen and oxygen reactant valves for that fuel cell are closed, isolating the reactants from the fuel cell and rendering that fuel cell inoperative. Each *FUEL CELL REAC* switch on panel R1 also has two talkback indicators, one on each side of the switch. The corresponding talkback indicates *OP* when the valve is *OPEN* and *CL* when the valve is closed. Redundant capability to close reactant valves via switches on panel C3 is being added to each vehicle.

WARNING

The *FUEL CELL REAC* switches on panel R1 are in a vertical column with *FUEL CELL 1 REAC* on top, *FUEL CELL 3 REAC* in the middle, and *FUEL CELL 2 REAC* on the bottom. This was done to allow the schematic to be placed on the panel. Because the switches are not in numerical order, it is possible to inadvertently close the wrong fuel cell reactant valve when shutting down a fuel cell.

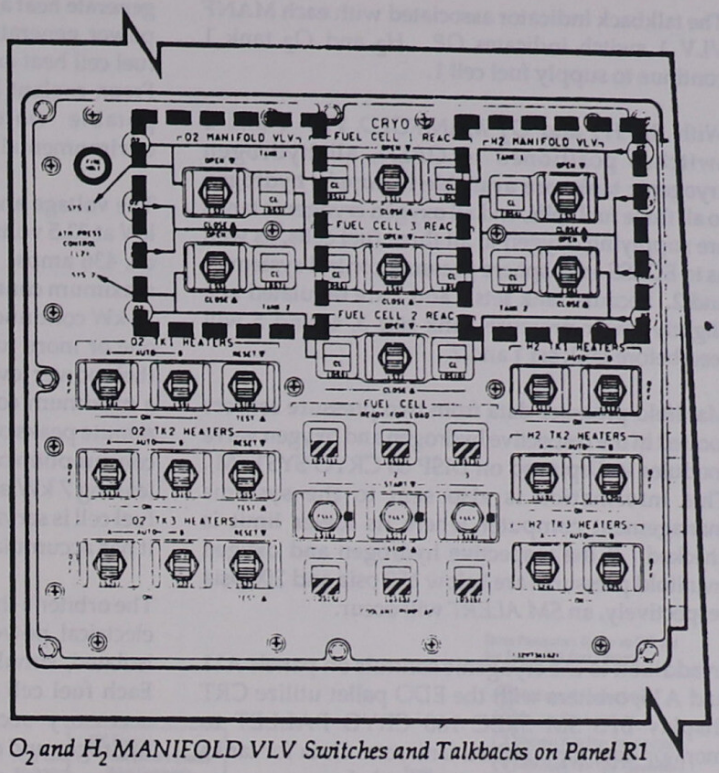

O_2 and H_2 MANIFOLD VLV Switches and Talkbacks on Panel R1

It is critical to have reactants available to the fuel cells. When any fuel cell reactant valve is closed, the red *FUEL CELL REAC* light on panel F7 is illuminated and a caution/warning tone is sounded. The computers sense the closed valve, which causes the *BACKUP C/W ALARM* light on panel F7 to be illuminated, an *SM ALERT* to occur, and a closed indication to be displayed on DISP 68 and SM SYS SUMM 1. This alerts the flight crew that the fuel cell will be inoperative within approximately 20 to 30 seconds (varies with power loading) for a hydrogen valve closure and 130 seconds for an oxygen valve closure.

The O_2 and H_2 *MANIFOLD VLV* switches on panel R1 control the respective hydrogen and oxygen manifold valves. When the two hydrogen and two oxygen manifold valves are in the *CLOSE* position, fuel cell 1 receives reactants from cryogenic tank set 1, fuel cell 2 receives reactants from cryogenic tank set 2, and fuel cell 3 receives reactants from cryogenic tank sets 3/4/5. ECLSS atmosphere pressure control system 1 receives oxygen from oxygen tank 1, and system 2 receives oxygen from oxygen tank 2. When the switches are positioned to *CLOSE*, the talkback indicator associated with each switch indicates *CL*.

With both H_2 and O_2 *MANIFOLD VLV 1* switches positioned to *OPEN* and the *MANIFOLD VLV 2* switches positioned to *CLOSE*, cryogenic tanks 1, 3/4/5 supply hydrogen to fuel cells 1 and 3, and oxygen cryogenic tanks 1 and 3/4/5 supply oxygen to fuel cells 1 and 3, as well as to ECLSS atmosphere pressure control system 1. The talkback indicator associated with each MANF VLV 1 switch indicates *OP*. O_2 & H_2 TK 2 continue to supply fuel cell 2.

CAUTION

There is no relief valve for the center manifold section or insight into center manifold pressure with manifold valves 1 and 2 closed. This configuration should be avoided except for leak isolation and troubleshooting.

When the H_2 and O_2 *MANIFOLD VLV 2* switches are positioned to *OPEN*, and the *MANIFOLD VLV 1* switches are positioned to *CLOSE*, hydrogen cryogenic tanks 2 and 3/4/5 supply hydrogen to fuel cells 2 and 3, and oxygen cryogenic tanks 2 and 3/4/5 supply oxygen to fuel cells 2 and 3, as well as to ECLSS atmosphere pressure control system 2.

The talkback indicator associated with each MANF VLV 1 switch indicates *OP*. H_2 and O_2 tank 1 continue to supply fuel cell 1.

With the H_2 and O_2 *MANIFOLD VLV 1* and 2 switches positioned to *OPEN*, all hydrogen cryogenic tanks are available to supply hydrogen to all three fuel cells, and all oxygen cryogenic tanks are supplying oxygen to all three fuel cells, as well as to ECLSS atmosphere pressure control systems 1 and 2. Because tank sets 1 and 2 are regulated at a slightly lower pressure, tank sets 3, 4, and 5 will feed before tank set 1 and 2.

Manifold pressure data from two pressure sensors located in the respective hydrogen and oxygen valve modules is displayed on DISP 68 CRYO SYSTEM . This information is also sent to the systems management computer where its lower limit is checked. If the respective hydrogen and oxygen manifold pressures are below 150 psia and 200 psia respectively, an *SM ALERT* will occur.

In addition to the cryogenic controls on panels A11 and A15, orbiters with the EDO pallet utilize CRT display BFS SM SPEC 168 CRYO PALLET to monitor data for installed tank sets. Data for tanks not installed will appear as off scale low.

Fuel Cell System

The three fuel cells are located under the payload bay area in the forward portion of the orbiter's midfuselage. Each fuel cell is 14 inches high, 15 inches wide, 40 inches long, and weighs 255 pounds. Each fuel cell is reusable and restartable.

The three fuel cells are individually coupled to the reactant (hydrogen and oxygen) distribution subsystem, the heat rejection subsystem, the potable water storage subsystem, and the electrical power distribution and control subsystem. The fuel cells generate heat and water as by-products of electrical power generation. The excess heat is directed to fuel cell heat exchangers, where it is rejected to the Freon coolant loops. The water is directed to the potable water storage subsystem for the environmental control and life support system.

ACCESSORIES	POWER
• Reactant flow monitor • Heat rejection • Water rejection • Thermal control • Cell performance monitor • Electrical control unit	96 cells Converts H_2 & O_2 into: • Power • Potable water • Heat

Fuel Cell Block Diagram

The voltage and current range of each fuel cell is 2 kW at 32.5 volts dc, 61.5 amps to 12 kW at 27.5 volts dc, 436 amps. Each is capable of supplying 7 kW maximum continuous power in nominal situations, 10 kW continuously in off-nominal situations (with one or more fuel cells failed), and up to 16 KW at their power level. The three fuel cells are capable of a maximum continuous output of 21 kW with 15-minute peaks of 36 kW. The average on-orbit power consumption of the orbiter is approximately 14 kW, leaving 7 kW average available for payloads. Each fuel cell is serviced between flights and reused until it has accumulated 2,000 hours of on-line service.

The orbiter's three fuel cells operate as independent electrical power sources, each supplying its own isolated, simultaneously operating 28-volt dc bus. Each fuel cell consists of a power section and an accessory section. The power section, where hydrogen and oxygen are transformed into electrical power, water, and heat, consists of 96 cells contained in three substacks. Manifolds run the length of these substacks and distribute hydrogen, oxygen, and coolant to the cells. The cells contain an oxygen electrode (cathode), and a hydrogen electrode (anode) that are separated by a porous matrix saturated with potassium hydroxide electrolyte.

The accessory section monitors the reactant flow, removes waste heat and water from the chemical reaction, and controls the temperature of the stack. The accessory section consists of the hydrogen and oxygen flow system, the coolant loop, and the electrical control unit.

The fuel cell generates power through an electrochemical reaction of hydrogen and oxygen. At the hydrogen electrode (anode), hydrogen is oxidized according to the following reaction:

$$2H_2 + 4OH^- \longrightarrow 4H_2O + 4e^-$$

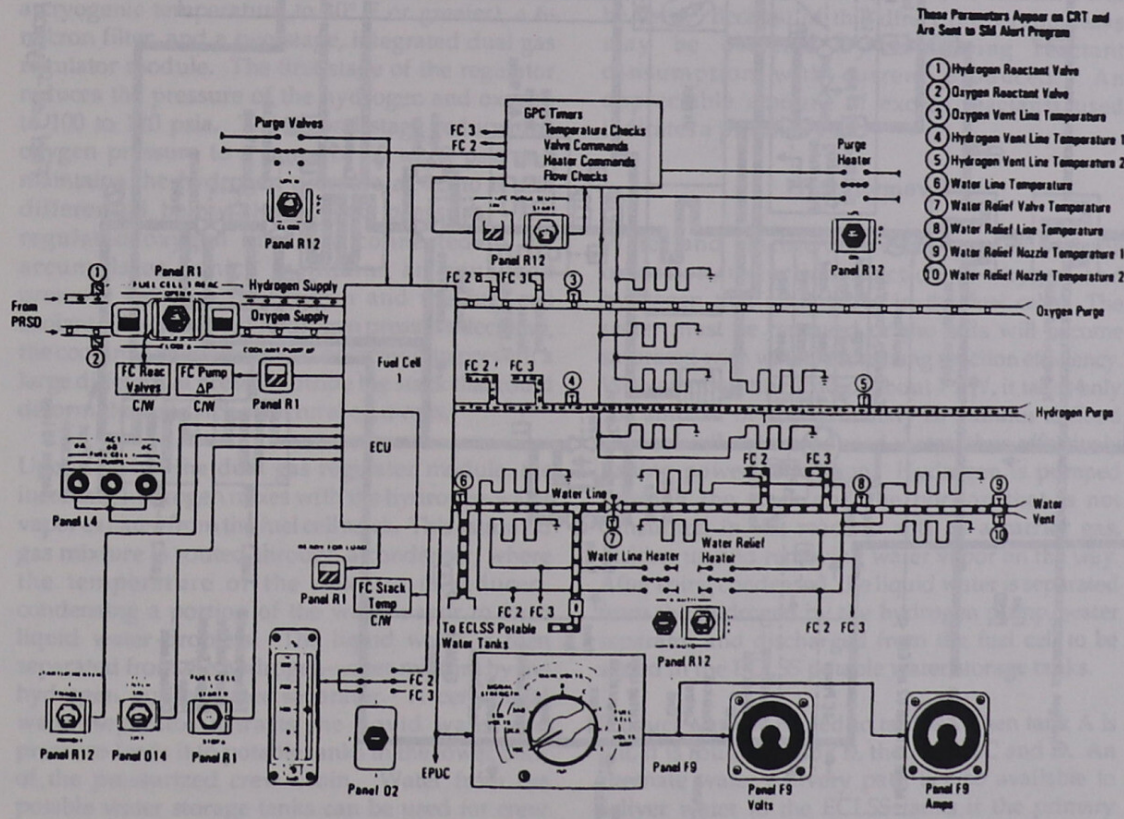

Fuel Cell 1 Typical Displays and Controls

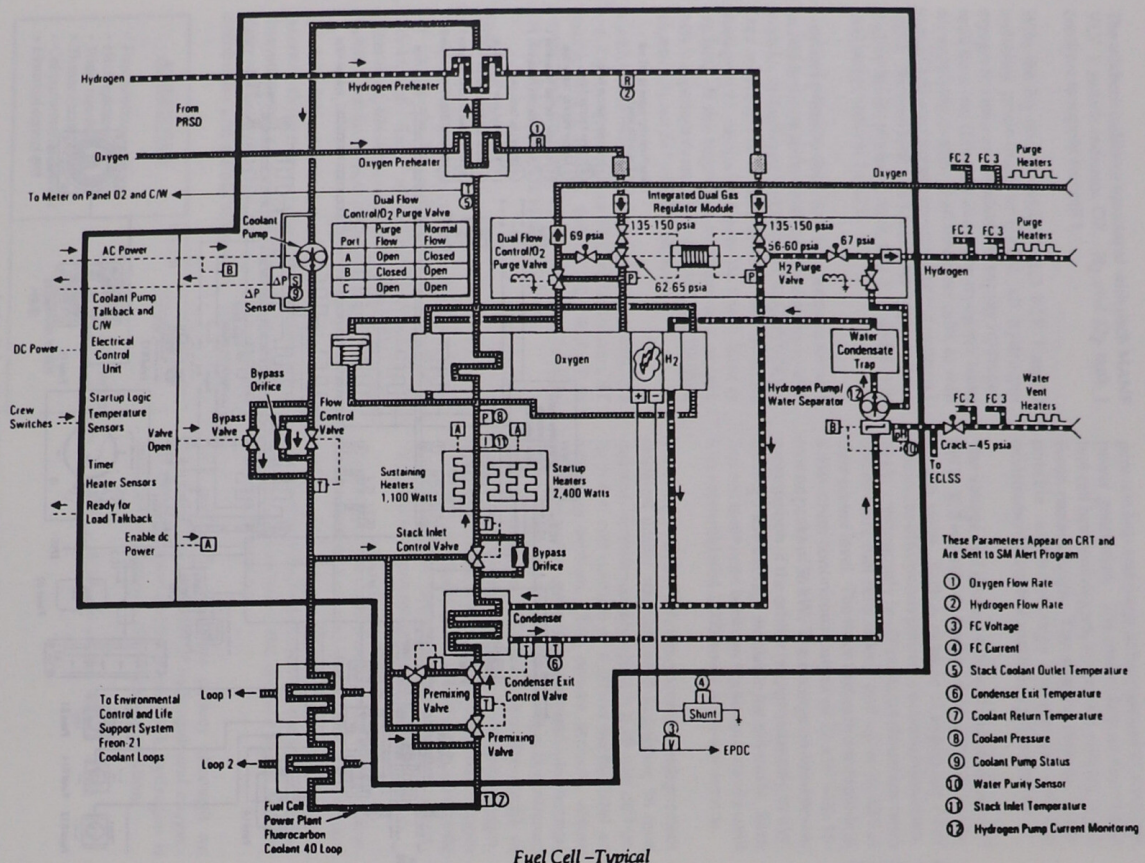

Fuel Cell –Typical

forming water and releasing electrons. At the oxygen electrode (cathode), oxygen is reduced in the presence of water. It forms hydroxyl ions according to the following relationship:

$$O_2 + 2H_2O + 4e^- \longrightarrow 4OH^-$$

The net reaction consumes one oxygen molecule and 2 hydrogen atoms in the production of two water molecules, with electricity and heat formed as by-products of the reaction.

The fuel cell coolant system circulates a liquid fluorinated hydrocarbon and transfers the waste heat from the cell stack through the fuel cell heat exchanger to the Freon coolant loop system in the midfuselage. Internal control of the circulating fluid maintains the cell stack at a load-dependent operating temperature of approximately 200° F.

When the reactants enter the fuel cells, they flow through a preheater (where they are warmed from a cryogenic temperature to 40° F or greater), a 6-micron filter, and a two-stage, integrated dual gas regulator module. The first stage of the regulator reduces the pressure of the hydrogen and oxygen to 100 to 120 psia. The second stage reduces the oxygen pressure to a range of 60 to 62 psia and maintains the hydrogen pressure at 4.5 to 6 psia differential below the oxygen pressure. The regulated oxygen lines are connected to the accumulator, which maintains an equalized pressure between the oxygen and the fuel cell coolant. If oxygen and hydrogen pressure decrease, the coolant's pressure is also decreased to prevent a large differential pressure inside the stack that could deform the cell stack structural elements.

Upon leaving the dual gas regulator module, the incoming hydrogen mixes with the hydrogen-water vapor exhaust from the fuel cell stack. This saturated gas mixture is routed through a condenser, where the temperature of the mixture is reduced, condensing a portion of the water vapor to form liquid water droplets. The liquid water is then separated from the hydrogen-water mixture by the hydrogen pump/water separator. A centrifugal water separator extracts the liquid water and pressure-feeds it to potable tanks in the lower deck of the pressurized crew cabin. Water from the potable water storage tanks can be used for crew consumption and for cooling the Freon loops by feeding the flash evaporator system.

The hydrogen pump uses three-phase ac power to circulate the hydrogen gas back to the fuel cell stack, where some of the hydrogen is consumed in the reaction. The remainder flows through the fuel cell stack, removing the product water vapor formed at the hydrogen electrode. The hydrogen-water vapor mixture then combines with the regulated hydrogen from the dual gas generator module and the loop begins again. The performance at the pump is monitored via the H_2 pump status voltage display on DISP 69.

The oxygen from the dual gas regulator module flows directly through two ports into a closed-end manifold in the fuel cell stack, achieving optimum oxygen distribution in the cells. All oxygen that flows into the stack is consumed, except during purge operations.

Reactant consumption is directly related to the electrical current produced: if there are no internal or external loads on the fuel cell, no reactants will be used. Because of this direct proportion, leaks may be detected by comparing reactant consumption with current produced. An appreciable amount of excess reactants used indicates a probable leak.

Water Removal

Water and electricity are the products of the oxidation/reduction reaction of oxygen and hydrogen that takes place in the fuel cells. The water must be removed or the cells will become saturated with water, decreasing reaction efficiency. With an operating load of about 7 kW, it takes only 100 amp/hr or approximately 20 minutes to flood the fuel cell with produced water, thus effectively halting power generation. Hydrogen is pumped through the stack and the portion that is not consumed in the reaction acts as a carrier gas, picking up and removing water vapor on the way. After being condensed, the liquid water is separated from the hydrogen by the hydrogen pump/water separator and discharged from the fuel cell to be stored in the ECLSS potable water storage tanks.

Product water is routed to tank A; when tank A is full, it is routed to tank B, then tanks C and D. An alternate water delivery path is also available to deliver water to the ECLSS tanks if the primary path is lost. If water tanks are full, or there is line

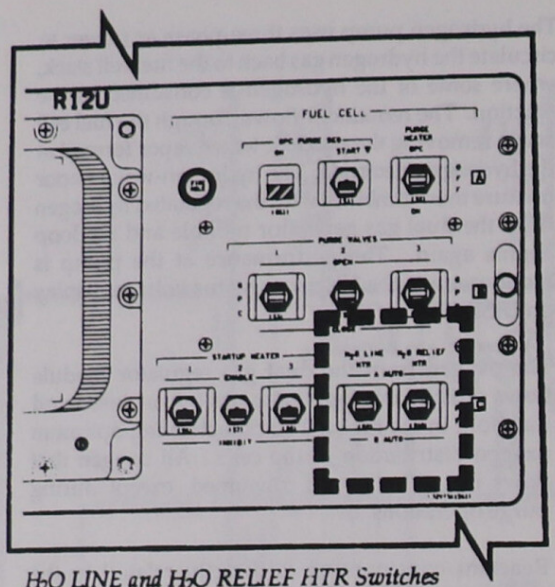

H_2O LINE and H_2O RELIEF HTR Switches on Panel R12U

located on the fuel cell water discharge line, relief valve, relief line, and vent nozzle are displayed on the DISP 69 FUEL CELLS .

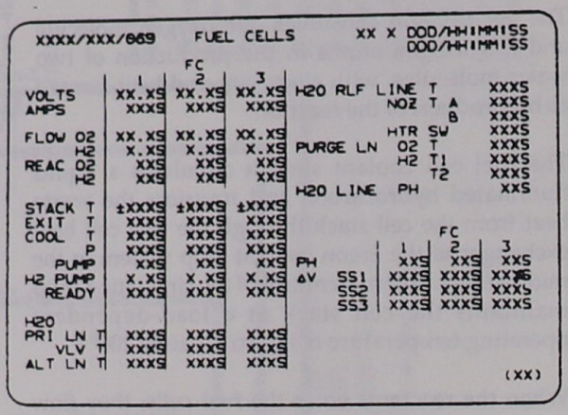

FUEL CELLS CRT Display (DISP 69)

blockage, the water relief valves open at 45 psia to allow the water to vent overboard through the water relief line and nozzle. Check valves prevent water tanks from discharging through an open relief valve.

For redundancy, two thermostatically activated heaters are wrapped around the discharge and relief lines to prevent blockage caused by the formation of ice in the lines. Two switches on panel R12U, *H_2O LINE HTR* and *H_2O RELIEF HTR*, provide the flight crew with the capability to select either *A AUTO* or *B AUTO* for the fuel cell water discharge line heaters and the water relief line and vent heaters respectively.

Thermostatically controlled heaters will maintain the water line temperature above 53° F when required. The normal temperature of product water is approximately 140° to 150° F. Thermostatically controlled heaters also maintain the water relief valve's temperature when in use between 70° to 100° F.

Fuel cell 1, 2, or 3 dc voltage and current can be monitored on the DC VOLTS and DC AMPS/ SIG STR meters on panel F9, using the rotary switch below the meters to select a specific fuel cell, and on DISP 69. Temperature sensors

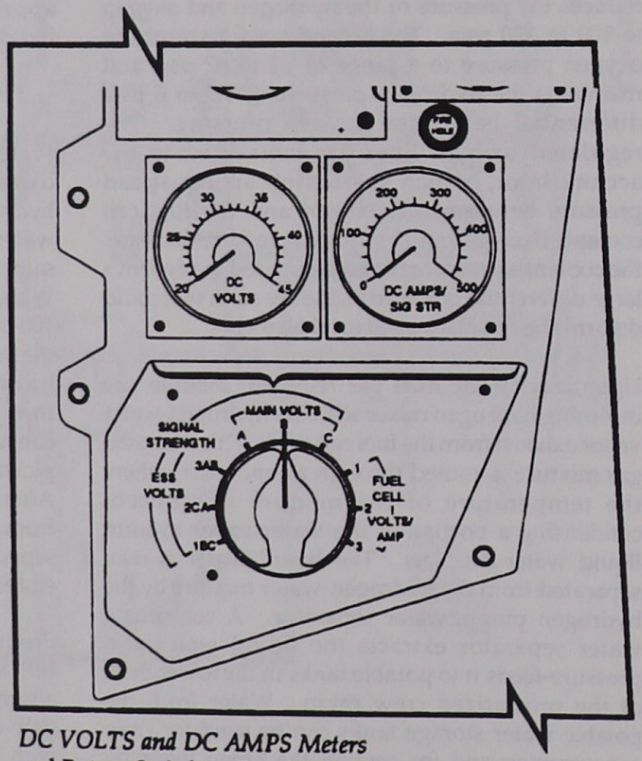

DC VOLTS and DC AMPS Meters and Rotary Switch on Panel F9

If the potassium hydroxide electrolyte in any fuel cell migrates into the product water, a pH sensor located downstream of the hydrogen pump/water separator will sense the presence of the electrolyte and alert the crew via an *SM ALERT* and display on DISP 69. A common pH sensor is located downstream of the interface between each fuel cell's primary water path, prior to entering the ECLSS.

Fuel Cell Purge

During normal fuel cell operation, the reactants are present in a closed-loop system and either consumed in the production of electricity or recirculated through the stack. Any inert gases or other contaminants will accumulate in and around the porous electrodes in the cells and reduce the reaction efficiency and electrical load support capability. Purging is required at least twice daily to cleanse the cells. The purge sequence can be controlled manually by the crew, automatically by flight software, or via commands sent by Mission Control. When a purge is initiated by opening the purge valves, the oxygen and hydrogen systems become open-loop systems; increased flows allow the reactants to circulate through the stack, pick up the contaminants, and blow them overboard through the purge lines and vents. Electrical power is produced throughout the purge sequence. No more than 10 kilowatts should be required from a fuel cell being purged because of the increased reactant flow and preheater limitations.

Fuel cell purge can be activated automatically or manually by the use of switches on panel R12U. At the initiation of either an auto or manual purge, the purge line heaters are turned on to heat the purge lines and ensure that the reactants will not freeze in the lines. The hydrogen reactant is the more likely to freeze because it is saturated with water vapor. Depending on the orbit trajectory and vehicle orientation, the heaters may require 27 minutes to heat the lines to the required temperatures. Due to limitations on the hydrogen and oxygen preheaters in the fuel cells, the crew checks the fuel cell current to ensure each fuel cell has a load of less than 350 amps. As the current output of the fuel cell increases, the reactant flow rates increase and the preheaters raise the temperature of the reactants to a minimum of 40° F in order to prevent the seals in the dual gas regulator from freezing prior to purging. At loads greater than 350 amp, additional flow during a purge would exceed the maximum flow the preheaters are capable of warming. The crew also checks that the fuel cell is not shut down, that time to deorbit is more than 3 hours, and, for an automatic purge, that an SM OPS transition is not scheduled within the next hour. An SM OPS transition will halt the automatic purge sequence.

The purge lines from all three fuel cells are manifolded together downstream of their purge valves and associated check valves. The line leading to the purge outlet is sized to permit unrestricted flow from only one fuel cell at a time.

NOTE

If more than one fuel cell is purged simultaneously, back pressure may build in the purge line. Due to the sizing of the hydrogen and oxygen purge lines, the back pressure in the H_2 line can cause the hydrogen pressure to rise above the oxygen pressure. Although the dual gas regulator is designed to prevent this from happening, it would not be advisable to expose all three fuel cells to this condition at the same time. If there is a generic problem with the dual gas regulator, this could cause all three fuel cells to fail simultaneously.

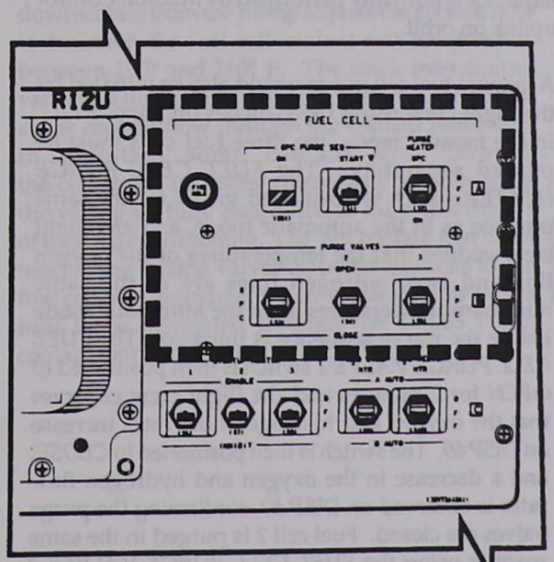

FUEL CELL Purge Switches on Panel R12U

For an automatic purge, the FUEL CELL PURGE heater switch is positioned to GPC and the *FUEL CELL PURGE VALVES 1, 2,* and 3 switches on panel R12U are positioned to *GPC*. The *FUEL CELL GPC PURGE SEQ* switch is then positioned to *START* and must be held until 3 seconds after the talkback indicator beside the switch indicates gray. The automatic purge sequence will not begin if the indicator indicates barberpole. First, the GPC turns the purge line heaters on and monitors the temperature of the lines. The one oxygen line temperature sensor must register at least 69° F and the two hydrogen line temperature sensors 79° and 40° F respectively, before the purge valves will open. If the temperatures are not up to the minimum limit after 27 minutes, the GPC will issue an *SM ALERT*, display the data on DISP 69, and stop the auto sequence. When the proper temperatures have been attained, the GPC will open the hydrogen and oxygen purge valves for fuel cell 1 for 2 minutes and then close them, and repeat the process for fuel cells 2 and 3. Thirty minutes after the fuel cell 3 purge valves have been closed (to ensure that the purge lines have been totally evacuated of water vapor by the heaters), the GPC will turn off the purge line heaters. This provides sufficient time and heat to bake out any remaining water vapor. If the heaters are turned off before 30 minutes have elapsed, water vapor left in the lines may freeze. The GPC purge sequence start can also be initiated using the SPEC 60 SM TABLE MAINT display. The sequence is normally performed by Mission Control uplink on orbit.

A manual fuel cell purge would also be initiated by the flight crew using the switches on panel R12U. In the manual mode, the three fuel cells must be purged separately. The *FUEL CELL PURGE HEATER* switch is positioned to *ON* for the same purpose as in the automatic mode, and the flight crew verifies that the temperatures of the oxygen line and two hydrogen lines are at the same minimum temperatures as in the automatic mode before the purge sequence is initiated. The *FUEL CELL PURGE VALVE 1* switch is then positioned to *OPEN* for 2 minutes and the flight crew observes that the oxygen and hydrogen flow rates increase on DISP 69. The switch is then positioned to *CLOSE*, and a decrease in the oxygen and hydrogen flow rates is observed on DISP 69, confirming the purge valves are closed. Fuel cell 2 is purged in the same manner using the *FUEL CELL PURGE VALVES 2* switch. Fuel cell 3 is then purged in the same manner using the *FUEL CELL PURGE VALVES 3* switch. After the 30-minute line bakeout period, the *FUEL CELL PURGE HEATER* switch is positioned to *OFF*. Manual purges use different heaters than automatic purges.

Fuel Cell Cooling/Temperature Control

In order to cool the fuel cell stack during its operations, distribute heat during fuel cell start-up, and warm the cryogenic reactants entering the stack, the fuel cell circulates fluorinated hydrocarbon throughout the fuel cell. The fuel cell coolant loop and its interface with the ECLSS Freon coolant loops are identical in fuel cells 1, 2, and 3.

The temperature of the coolant returning from the Freon coolant loops is sensed before it enters the fuel cell. This is displayed as COOL T on DISP 69. It then enters the fuel cell and passes through a 75-micron filter. After the filter, two temperature-controlled mixing valves allow some of the hot coolant to mix with the cool returning coolant to prevent the condenser exit control valve from oscillating. The control valve adjusts the flow of the coolant through the condenser to maintain the hydrogen-water vapor exiting the condenser at a temperature between 148° and 153° F.

The stack inlet control valve maintains the temperature of the coolant entering the stack between 177° and 187° F. The accumulator interfaces with the oxygen cryogenic reactant to maintain an equalized pressure between the oxygen and the coolant (the oxygen and hydrogen pressures are controlled at the dual gas regulator) to preclude a high pressure differential in the stack. The pressure in the coolant loop is sensed before the coolant enters the stack and is displayed as COOL P on DISP 69.

The coolant is circulated through the fuel cell stack to absorb the waste heat from the hydrogen/oxygen reaction occurring in the individual cells. After the coolant leaves the stack, its temperature is sensed and the data is displayed on the FUEL CELL STACK TEMP meter through the three-position switch located below the meter on panel O2 and on the DISP 69 display as STACK T. The yellow *FUEL CELL STACK TEMP*, the red *BACKUP C/W ALARM* light, and the *SM ALERT* light on panel F7 will be illuminated if fuel cell and stack temperatures exceed upper or lower limits. The hot coolant from

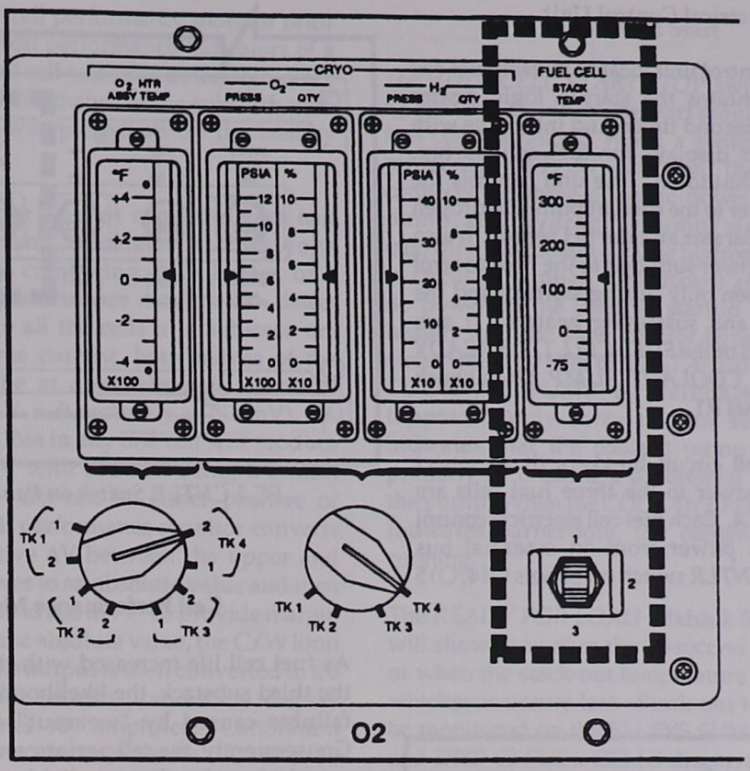

FUEL CELL STACK TEMP Meter and FUEL CELL 1, 2, 3 Switch on Panel O2

the stack flows through the oxygen and hydrogen preheaters where it warms the cryogenic reactants before they enter the stack.

The coolant pump utilizes three-phase ac power to circulate the coolant through the loop. The differential pressure sensor senses a pressure differential across the pump to determine the status of the pump. The *FUEL CELL PUMP* light on panel F7 will be illuminated if fuel cell 1, 2, or 3 coolant pump delta pressure is lost and a fault message will be sent to the CRT. If the coolant pump for fuel cell 1, 2, or 3 is off, the *BACKUP C/W ALARM* light will be illuminated and a fault message and a $\Delta P\downarrow$ will be displayed.

The temperature-actuated flow control valve downstream from the pump adjusts the coolant flow to maintain the fuel cell coolant exit temperature between 190° and 210° F. The stack inlet control valve and flow control valve have bypass orifices to allow coolant flow through the coolant pump and to maintain some coolant flow through the condenser for water condensation, even when the valves are fully closed due to the requirements of thermal conditioning. The hot coolant that is not used at the mixing valves exits the fuel cells to the fuel cell heat exchanger where it transfers its excess heat to be dissipated through the ECLSS Freon coolant loop systems in the midfuselage.

Electrical Control Unit

The electrical control unit located in each fuel cell power plant contains the startup logic, heater thermostats, 30-second timer, and interfaces with the controls and displays for fuel cell startup, operation, and shutdown. The unit controls the supply of ac power to the coolant pump, hydrogen pump/water separator and the pH sensor. It also controls the dc power supplied to the flow control bypass valve (open only during startup) and the internal startup and sustaining heaters. It also controls the status of the *FUEL CELL 1, 2, 3 READY FOR LOAD* and *COOLANT PUMP ΔP* talkback indicators on panel R1.

The nine fuel cell circuit breakers that connect three-phase ac power to the three fuel cells are located on panel L4. Each fuel cell electrical control unit receives its power from an essential bus through the *FC CNTLR* switch on panels O14, O15 and O16.

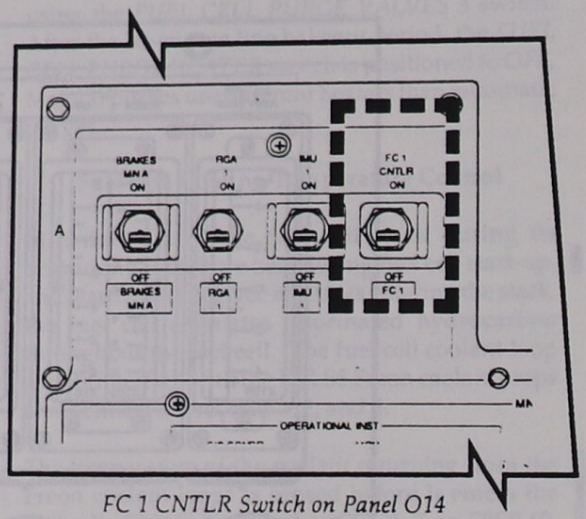

FC 1 CNTLR Switch on Panel O14

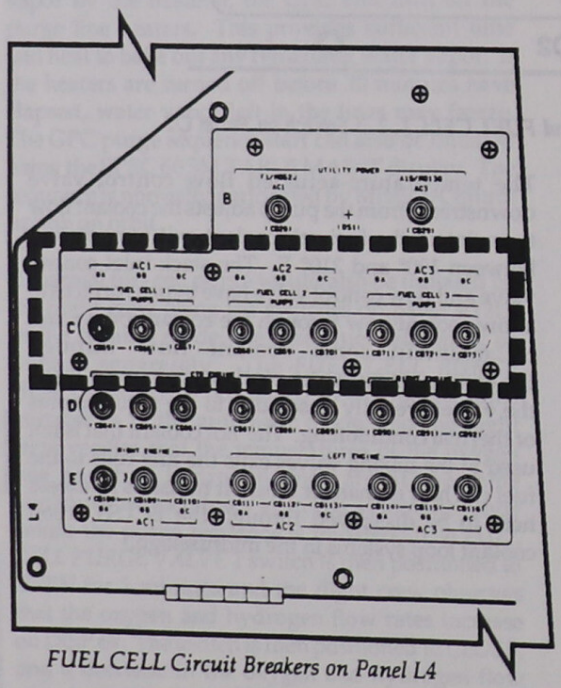

FUEL CELL Circuit Breakers on Panel L4

Cell Performance Monitor

As fuel cell life increased with the introduction of the third substack, the likelihood of individual cell failures caused by "wearout" or age increased. Consequently, the cell performance monitor (CPM) was designed to detect individual cell performance problems or imminent failures such as cell crossover.

Crossover is defined as an uncontrolled mixing of the reactants that results in the generation of excessive product heat. The combination of hydrogen and oxygen requires little heat to explode. During normal fuel cell operation, hydrogen and oxygen are diffusely mixed to produce electricity. The matrix, a fibrous asbestos blotter device within each cell, holds the KOH electrolyte and limits the H_2/O_2 mixing. A crossover occurs when the matrix fails to do its job. A manufacturing flaw in the matrix or an impurity in the matrix fibers may cause a pin hole to develop after hours and hours of exposure to the caustic KOH in the presence of the waste heat within the cell.

As the direct combination of the reactant molecules occurs at the pin hole, increased waste heat may cause the pin hole to burn and enlarge allowing more reactants to combine. If this action continues, it might uncontrollably propagate and possibly result in a violent explosion. A crossover may proceed rapidly or gradually. Before the

introduction of the cell performance monitor prior to STS-9, the electrical performance indicators of a crossover-distressed cell were not detectable, since the lost electrical performance of the substack with the degraded cell was picked up by the healthy substacks.

The cell performance monitor compares each half substack voltage and calculates a delta volts measurement. By comparing both halves of a substack, the cell performance monitor can detect cell changes. Since all the cells in a substack are producing the same current, both halves of the substack should be at approximately identical voltages. Thus $\Delta V = 0$ (actually $\pm$ 50 mV). A significant voltage loss in any one cell will produce a change in the ΔV with 300 mV being a critical performance loss. ΔV can be either positive or negative, so the cell performance monitor converts the positive/negative ΔV between the upper and lower substack halves to an absolute value and then outputs that value (0 to 500 mV). To provide margin and accommodate the absolute value, the C/W limit is set at 150 mV. The output is then converted to a 0 to 5 V dc signal for telemetry and crew display systems by a "times 10" amplifier. Calibration curves rescale this to electronic units (EU) (0 to 50 mV).

Every 7.5 minutes the cell performance monitor performs a self-test to ensure data accuracy and to prevent fuel cell shutdown due to faulty data. During the self-test period:

- The voltage measurement of the substack halves ceases.
- A test signal of 50 mV is input to the voltage measurement logic.
- The output of the "times 10" amplifier is examined for 425 to 575 mV.
- If the test fails, the output voltage is driven to 5 volts until the next self-test is performed 7 $\pm$ 1 minute later. A test voltage of 50 mV is introduced and the sequence repeats itself.
- If the self-test is passed, the unit resumes substack half voltage measurements.

Fuel Cell Start

The *FUEL CELL START/STOP* switches on panel R1 are used to initiate the start sequence or stop the fuel cell operation. When a switch is held in its momentary *START* position, the control unit connects the three-phase ac power to the coolant pump and hydrogen pump/water separator (allowing the coolant and the hydrogen-water vapor to circulate through these loops) and connects the dc power to the internal startup and sustaining heaters and the flow control bypass valve. The switch must be held in the *START* position until the *COOLANT PUMP* ΔP talkback shows gray (approximately three to four seconds), which indicates that the coolant pump is functioning properly by creating a differential pressure across the pump. When the *COOLANT PUMP* ΔP talkback indicates barberpole, the coolant pump is not running.

The *READY FOR LOAD* talkback for each fuel cell will show gray after the 30-second timer times out or when the stack-out temperature is above 187° F, whichever occurs last. Stack-out temperature can be monitored on the SM SYS SUMM 1 (STACK T) and DISP 69 FUEL CELLS displays (STACK T). It can also be monitored on the FUEL CELL STACK OUT TEMP meter on panel O2, using the switch

XXXX/XXX/078 SM SYS SUMM 1 XX X DDD/HH:MM:SS
BFS DDD/HH:MM:SS

SMOKE	1/A	2/B
CABIN	XX.XS	
L/R FD	XX.XS	XX.XS
AV BAY 1	XX.XS	XX.XS
2	XX.XS	XX.XS
3	XX.XS	XX.XS
CABIN		
PRESS	XX.XS	
dP/dT	±.XXS	±.XXS
BU/EQ	±.XXS	
PPO2	X.XXS	X.XXS
FAN ΔP	X.XXS	
HX OUT T	XXXS	
O2 FLOW	X.XS	X.XS
N2 FLOW	X.XS	X.XS
IMU FAN ΔP		X.XXS

ΔV	FC1	FC2	FC3
SS1	XXXS	XXXS	XXXS
SS2	XXXS	XXXS	XXXS
SS3	XXXS	XXXS	XXXS
TOTAL AMPS	XXXXS		
KW	XXS		

DC VOLTS	1/A	2/B	3/C
FC	XX.XS	XX.XS	XX.XS
MAIN	XX.XS	XX.XS	XX.XS
CNTL AB	XX.XS	XX.XS	XX.XS
BC	XX.XS	XX.XS	XX.XS
CA	XX.XS	XX.XS	XX.XS
ESS	XX.XS	XX.XS	XX.XS
AC			
VOLT ϕ A	XXXS	XXXS	XXXS
ϕ B	XXXS	XXXS	XXXS
ϕ C	XXXS	XXXS	XXXS
AMPS ϕ A	XX.XS	XX.XS	XX.XS
ϕ B	XX.XS	XX.XS	XX.XS
ϕ C	XX.XS	XX.XS	XX.XS
FUEL CELL PH	XXS	XXS	XXS
AMPS	XXXS	XXXS	XXXS
REAC VLV	XXS	XXS	XXS
STACK T	± XXXS	± XXXS	± XXXS
EXIT T	XXXS	XXXS	XXXS
COOL P	XXXS	XXXS	XXXS
PUMP	XXS	XXS	XXS
			(XX)

SM SYS SUMM 1 (DISP 78)

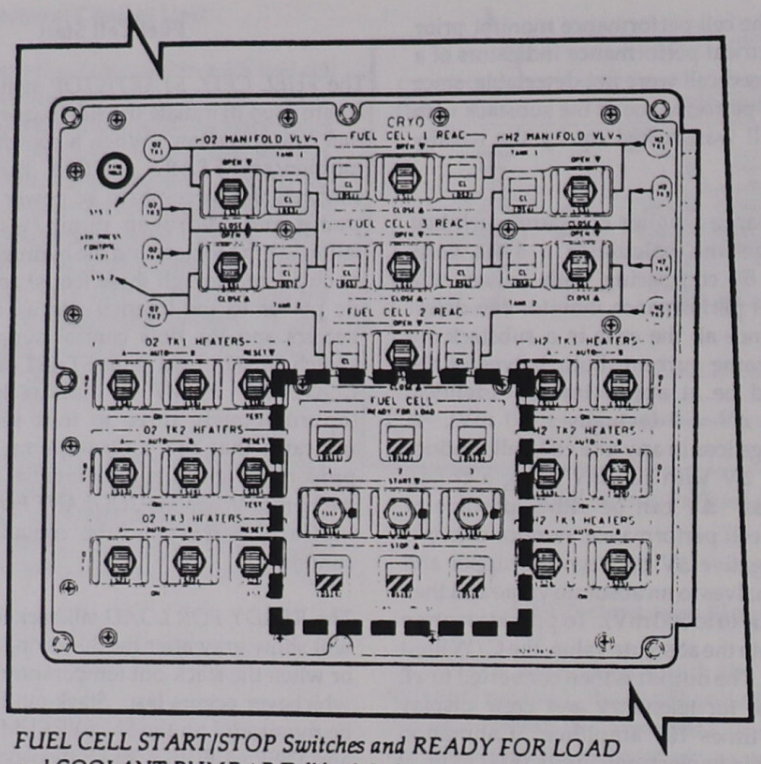

FUEL CELL START/STOP Switches and READY FOR LOAD and COOLANT PUMP ΔP Talkback Indicators on Panel R1

beneath the meter to select the fuel cell. When the *READY FOR LOAD* talkback shows gray, the fuel cell is up to the proper operating temperature and is ready for loads to be attached to it. It should not take longer than 25 minutes for the fuel cell to warm up and become fully operational; the actual time depends on the fuel cell's initial temperature. The *READY FOR LOAD* indicator remains gray until the *FUEL CELL START/STOP* switch for each fuel cell is placed to *STOP*, the *FC CNTLR* switch on the overhead panel is placed to *OFF* or the essential bus power is lost to the electrical control unit.

Electrical Power Distribution and Control

The electrical power distribution and control subsystem controls and distributes ac and dc electrical power to the orbiter subsystems, the solid rocket boosters, the external tank, and payloads. The 28 volts dc generated by each of the three fuel cells is distributed to a main dc bus. The three main dc buses (MN A, MN B, and MN C) are the prime sources of power for the vehicle's dc loads. Each of the three dc main buses supplies power to three solid-state (static), single-phase inverters, each of which powers one three-phase alternating-current bus; thus, the nine inverters convert dc power to 117 +3. -1 volt rms, 400-hertz ac power for distribution to three ac buses (AC 1, AC 2, and AC 3) for the vehicle's ac loads.

Bus System

The three main dc buses are main A (MN A), main B (MN B), and main C (MN C). Three ac buses, AC 1, AC 2, and AC 3, supply ac power to the ac loads. Three essential buses, ESS1BC, ESS2CA, and ESS3AB, supply dc power to selected flight crew controls and electrical loads that are deemed essential. Nine control buses – CNTL AB 1, 2, 3; CNTL BC 1, 2, 3; and CNTL CA 1, 2, 3 – are used to supply control power to flight crew controls. Two preflight buses, PREFLT 1 and PREFLT 2, are used only during ground operations.

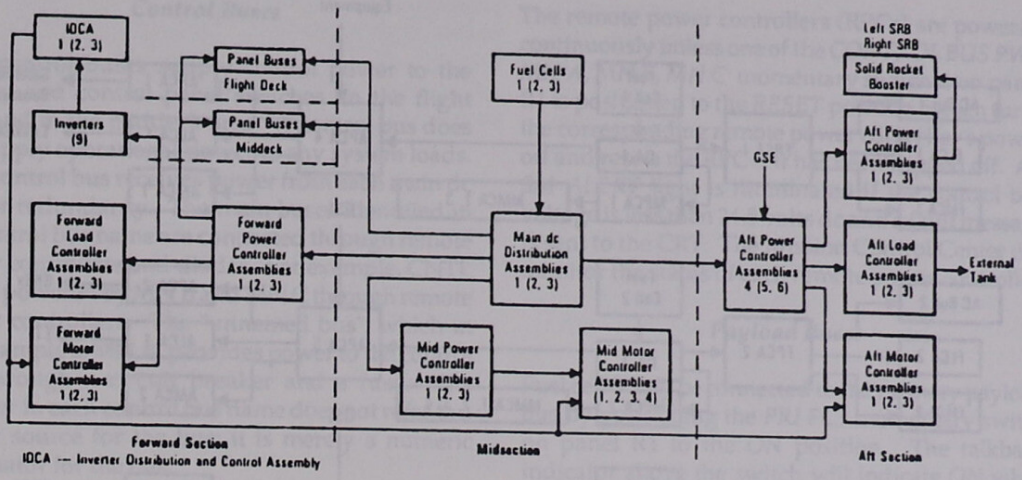

Electrical Power Distribution Block Diagram

Depending on the criticality of orbiter electrical equipment, some electrical loads may receive redundant power from two or three main buses. If an electrical load receives power from two or three sources, it is for redundancy only and not for total power consumption.

DC Power

Main Buses

The main buses distribute dc electrical power from the fuel cells to locations throughout the orbiter. Distribution assemblies handle the routing of main bus power.

Essential Buses

Essential buses supply power to switches that are necessary to restore power to a failed main dc or ac bus and to essential electrical loads and switches. In some cases, essential buses are used to power switching discretes to multiplexers/demultiplexers. Examples of the selected flight crew switches and loads are the EPS switches, GPC switches, TACAN, radar altimeter and microwave scan beam landing system power switches, the caution and warning system, emergency lighting, audio control panel, and master timing unit.

Three essential buses, ESS1BC, ESS2CA, and ESS3AB receive power from three redundant sources. For example, ESS1BC receives dc power from fuel cell 1 through the *ESS BUS SOURCE FC 1* switch on panel R1 via a fuse when the switch is positioned to *ON*, and from main dc buses B and C through remote power controllers when the *ESS BUS SOURCE MN B/C* switch on panel R1 is positioned to *ON*. Electrical power is then distributed from the essential bus in distribution assembly 1 through fuses to the corresponding controller assemblies and to the flight and middeck panels.

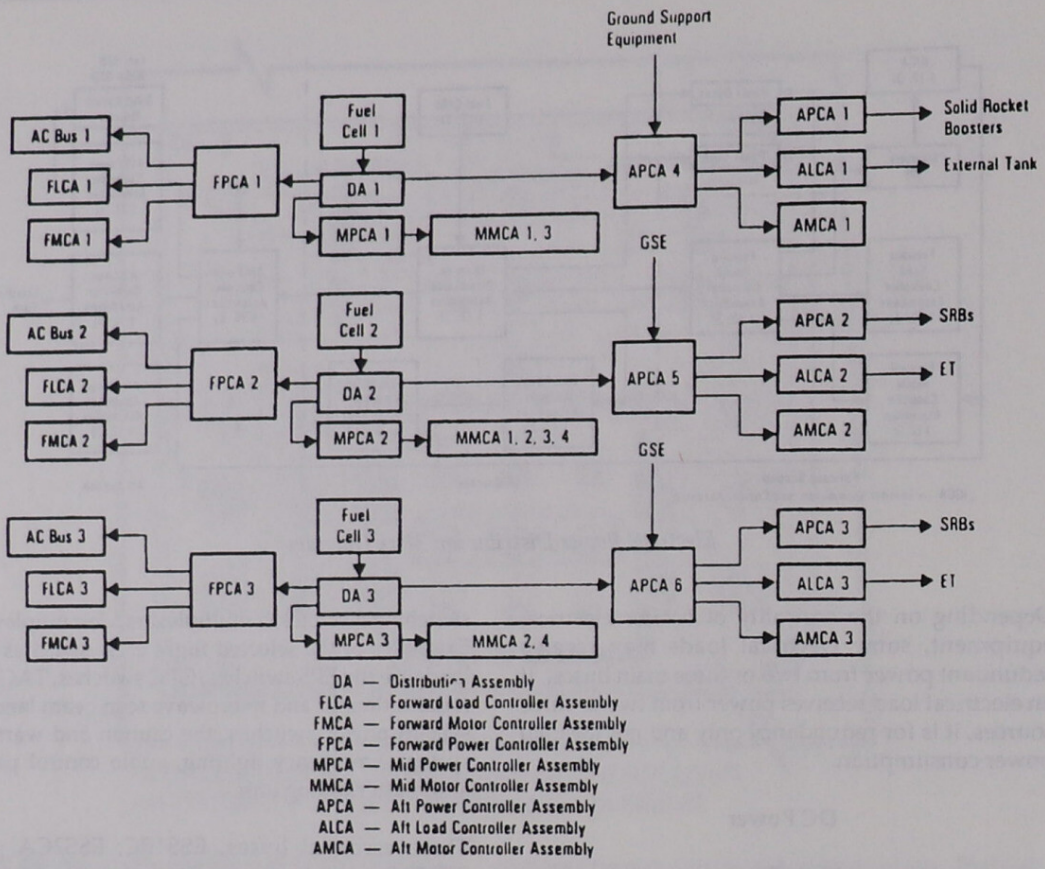

Direct Current Power Distribution Diagram

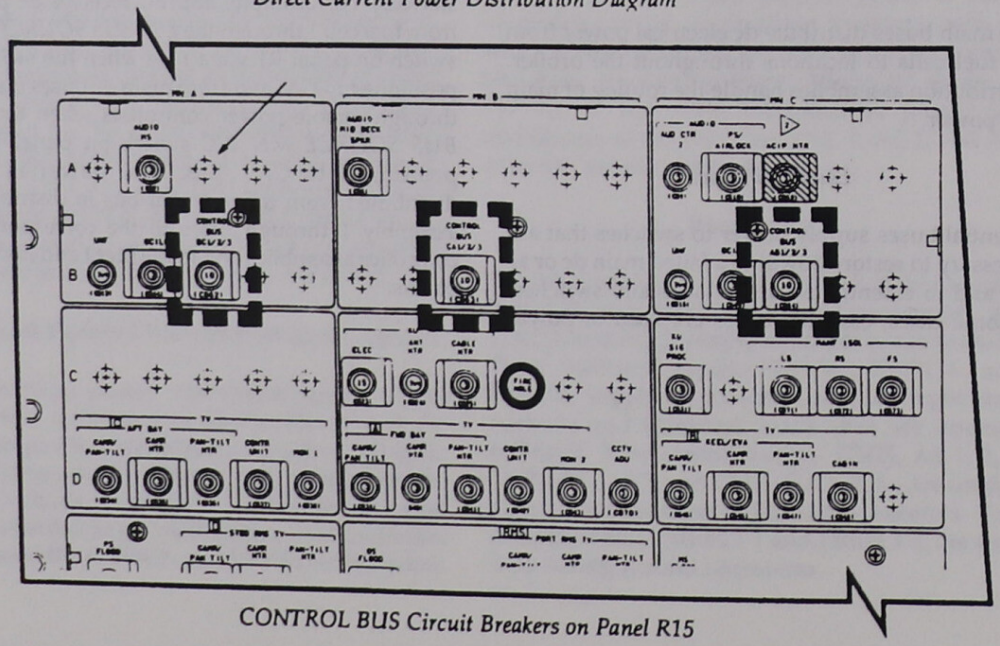

CONTROL BUS Circuit Breakers on Panel R15

Control Buses

Nine control buses supply control power to the display and control panel switches on the flight deck and in the middeck area. A control bus does not supply operational power to any system loads. Each control bus receives power from each main dc bus for redundancy. The main buses identified in the control bus name are connected through remote power controllers and diodes. For example, CNTL BC1 is powered by MN B and MN C through remote power controllers. The "unnamed bus", which in this example is MN A, provides power to the control bus through a circuit breaker and a fuse. The number in each control bus name does not refer to a power source for the bus; it is merely a numeric designator for the bus.

The control buses are enabled by the CONTROL BUS PWR MN A, MN B, and MN C switches on panel R1 and the MN A CONTROL BUS BC1/2/3, the MN B CONTROL BUS CA1/2/3 and the MN C CONTROL BUS AB1/2/3 circuit breakers on panel R15.

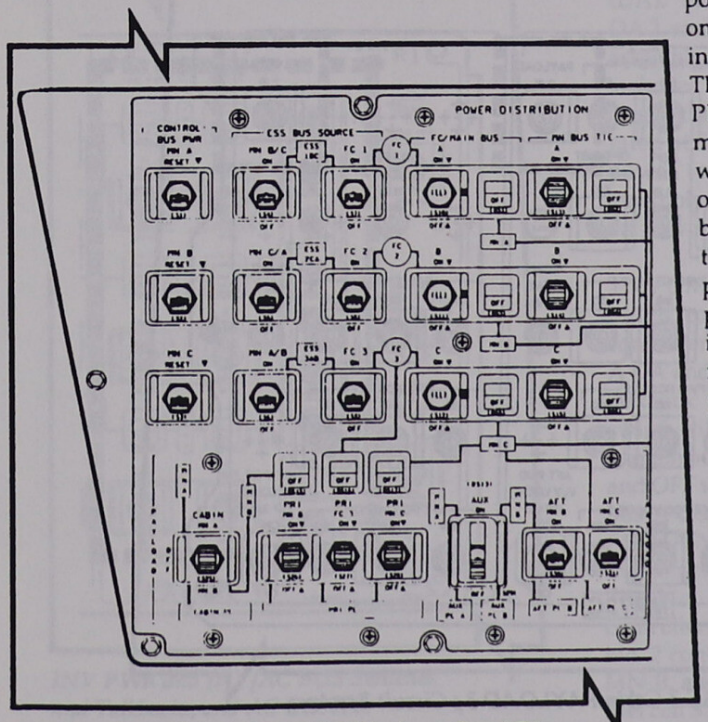

Bus Control Switches and Talkbacks on Panel R1

The remote power controllers (RPCs) are powered continuously unless one of the *CONTROL BUS PWR MN A, MN B, MN C* momentary switches on panel R1 is positioned to the *RESET* position, which turns the corresponding remote power controller's power off and resets the RPC if it has been tripped off. An *SM ALERT* light is illuminated if the control bus voltage is less than 24.5 volts dc and a fault message is sent to the CRT. The Mission Control Center can monitor the status of each remote power controller.

Payload Buses

Fuel cell 3 may be connected to the primary payload bus by positioning the *PRI FC3* momentary switch on panel R1 to the *ON* position. The talkback indicator above the switch will indicate *ON* when fuel cell 3 is connected to the PRI PL bus. The PRI PL bus is the prime bus for supplying power to the payloads. Fuel cell 3 may be disconnected from the payload bus by positioning the *PRI FC3* switch to the *OFF* position. The talkback indicator above the switch will indicate *OFF*.

A second source of electrical power for the PRI PL bus may be supplied from the MN B bus by positioning the *PRI MN B* momentary switch on panel R1 to the *ON* position. The talkback indicator above this switch will indicate *ON*. The MN B bus may be removed from the PRI PL bus by positioning the switch momentarily to *OFF*. The talkback indicator will indicate *OFF*. A third possible source of electrical power for the PRI PL bus may be supplied from the MN C bus through the *PRI MN C* switch on panel R1, positioned momentarily to the *ON* position. The talkback indicator will indicate *ON*. The MN C bus may be removed from the PRI PL bus by positioning the switch momentarily to *OFF*. The talkback indicator will indicate *OFF*.

NOTE

Main buses B and C can be tied via the PRI PL bus. This is referred to as a "backdoor bus tie."

Two additional payload buses are located in the aft section of the payload

bay at the aft bulkhead station. The aft payload B bus may be powered up by positioning the *AFT MN B* switch on panel R1 to *ON*. The aft payload C bus may be powered up by positioning the *AFT MN C* switch on panel R1 to *ON*. The *OFF* position of each switch removes power from the corresponding aft payload bus.

The *AUX* switch on panel R1 permits main bus A and main bus B power to be supplied to the AUX PL A and AUX PL B buses when the switch is positioned to *ON*. The auxiliary payload buses provide power for emergency equipment or controls associated with payloads. The *OFF* position removes power from the AUX PL A and PL B buses. The two auxiliary payload buses may be dioded together to form one bus for redundancy.

The *CABIN* switch on panel R1 provides MN A or MN B power to patch panels located behind the payload specialist and mission specialist stations on the aft flight deck. These patch panels supply power to the payload-related equipment located on panels at these stations. Two three-phase circuit breakers, *AC 2 PAYLOAD 3φ* and *AC 3 PAYLOAD 3φ* on panel MA73C, provide ac power to the payload patch panels.

AC Power Generation

Alternating-current power is generated and made available to system loads by the electrical power distribution and control subsystem using three independent ac buses, AC 1, AC 2, and AC 3. The ac power system includes the ac inverters for dc conversion to ac and inverter distribution and control assemblies containing the ac buses and the ac bus sensors. The ac power is distributed from the inverter distribution and controller assemblies to the flight and middeck display and control panels and from the motor controller assemblies to the three-phase motor loads.

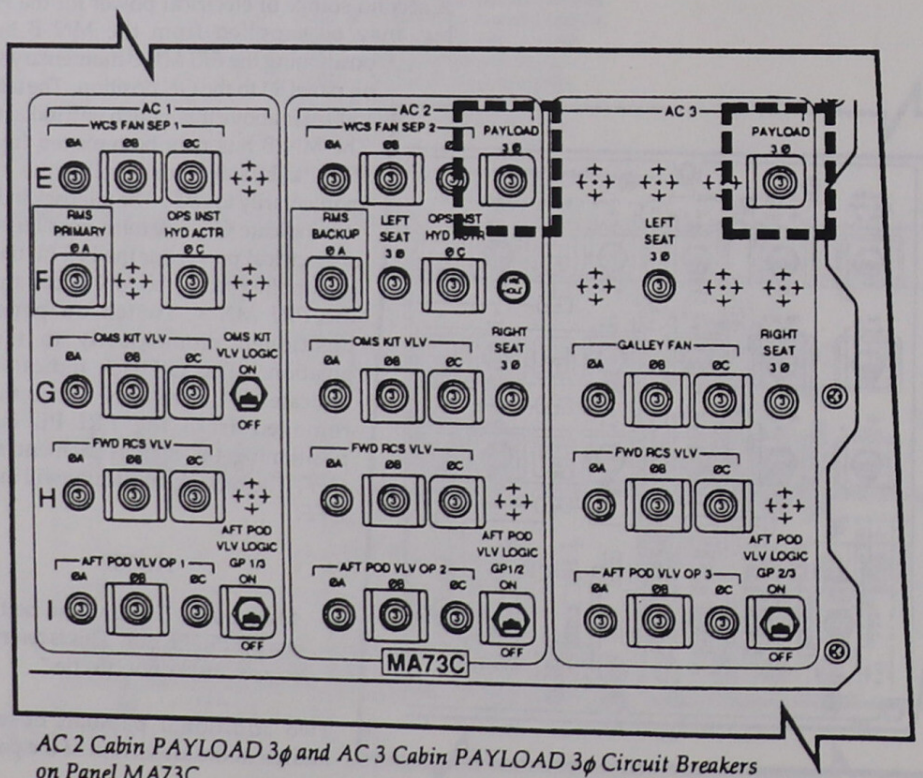

AC 2 Cabin PAYLOAD 3φ and AC 3 Cabin PAYLOAD 3φ Circuit Breakers on Panel MA73C

Each ac bus consists of three separate phases connected in a three-phase array. Static inverters, one for each phase, are located in the forward avionics bays. Each inverter has an output voltage of 116 to 120 volts rms at 400 hertz, ± 7 hertz.

Input power to the inverters is controlled by the *INV PWR 1, 2, 3* switches on panel R1. *INV PWR 1* routes power to AC 1 from MN A, *INV PWR 2* to AC 2 from MN B, and *INV PWR 3* to AC 3 from MN C. All three inverters of AC 1 receive MN A bus power when the *INV PWR 1* switch is positioned to *ON*, and all three must be in operation before the talkbacks above the switches indicate *ON*. The indicators will show *OFF* when main bus power is not connected to the inverters.

The *INV/AC BUS 1, 2, 3* switches on panel R1 are used to apply each inverter's output to its respective ac bus. An indicator above each switch shows its status, and all three inverters must be connected to their respective ac buses before the indicators show *ON*. The talkback indicators will show *OFF* when any of the phases are not connected to their respective ac bus.

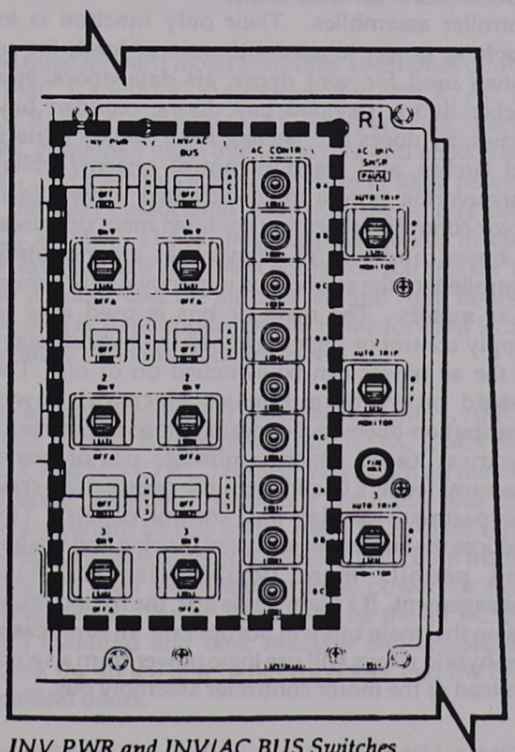

INV PWR and INV/AC BUS Switches and Talkbacks, and AC CONTR Circuit Breakers on Panel R1

The *INV PWR* and *INV/AC BUS* switches and talkbacks must have control power from the *AC CONTR* circuit breakers on panel R1 in order to operate. Once ac power has been established, these circuit breakers are opened to prevent any inadvertent disconnection, whether by switch failure or accidental movement of the *INV PWR* or *INV/AC BUS* switches.

Electrical Power Distribution and Control Assemblies

Electrical power is controlled and distributed by assemblies. Each assembly (main distribution assembly, power controller assembly, load controller assembly, and motor controller assembly) is in an electrical equipment container.

Distribution Assemblies

The dc power generated by each of the fuel cells is supplied to a corresponding distribution assembly (DA). Fuel cell 1 powers DA 1, fuel cell 2 powers DA 2, and fuel cell 3 powers DA 3. Each distribution assembly contains remotely controlled motor-driven switches called power contactors used for loads larger than 125 amps. The power contactors are rated at 500 amps. They control and distribute dc power to a corresponding mid power controller assembly, forward power controller assembly, and aft power controller assembly.

The *FC MAIN BUS A* switch on panel R1 positioned to *ON* connects fuel cell 1 to the MN A DA and controllers and disconnects fuel cell 1 from the MN A DA and controllers when positioned to *OFF*. The talkback indicator next to the *FC MAIN BUS A* switch will indicate *ON* when fuel cell 1 is connected to main bus A distribution assembly and controllers, and *OFF* when fuel cell 1 is disconnected from main bus A distribution assembly and controllers. The *FC MAIN BUS B* and *C* switches and talkback indicators on panel R1 function in the same manner. The No. 1 distribution assembly and all No. 1 controllers go with fuel cell 1 and MN A bus, all No. 2 controllers and DA 2 go with fuel cell 2 and MN B, and all No. 3 controllers and DA 3 go with fuel cell 3 and MN C.

Power Controllers

Power contactors are also located in the aft power controller assemblies to control and distribute ground-supplied 28-volt dc power to the orbiter through the T-0 umbilical before the fuel cells take over the supply of orbiter dc power.

Each of the mid, forward, and aft power controller assemblies supplies and distributes dc power to a corresponding motor controller assembly and dc power to the orbiter through the T-0 umbilical before the fuel cells take over the supply of orbiter dc power.

Each of the mid, forward, and aft power controller assemblies supplies and distributes dc power to a corresponding motor controller assembly and dc power to activate the corresponding ac power system.

Remote Power Controllers

Each power controller assembly contains remote power controllers and relays. The remote power controllers are solid-state switching devices used for loads requiring current in a range of 3 to 20 amps. The remote power controllers are current protected by internal fuses and also have the capability to limit the output current to a maximum of 150 percent of rated value for 2 to 3 seconds. Within 3 seconds, the remote power controller will trip out, removing the output current. To restore power to the load, the remote power controller must be reset. This is accomplished by cycling a control switch. If multiple control inputs are required before a remote power controller is turned on, hybrid drivers are usually used as a logic switch, which then drives the control input of the remote power controller.

Load Controllers

Each load controller assembly contains hybrid drivers, which are solid-state switching devices (no mechanical parts) used as logic switches and for low-power electrical loads of less than 5 amps. When the drivers are used as a logic switch, several control inputs are required to turn on a load. Hybrid drivers are also used in the mid power controller assemblies. The hybrid drivers are current protected by internal fuses. Hybrid relays requiring multiple control inputs are used to switch three-phase ac power to motors.

Relays are also used for loads between 20 amps and 135 amps in power controller assemblies and motor controller assemblies.

In the midbody, there are no load controller assemblies; therefore, the mid power controller assemblies contain remote power controllers, relays, and hybrid drivers.

Aft power controller assemblies 4, 5, and 6 were added to accommodate additional electrical loads in the aft section. Assemblies 4, 5, and 6 are powered by fuel cell 1/MN A, fuel cell 2/MN B, and fuel cell 3/MN C respectively.

Motor Controllers

There are 10 motor controller assemblies used on the orbiter: three are in the forward area, four are in the midbody area, and three are in the aft area. Panel MA73C contains the controls for the motor controller assemblies. Their only function is to supply ac power to noncontinuous ac loads for ac motors used for vent doors, air data doors, star tracker doors, payload bay doors, payload bay latches, ET doors and latches, RMS deploy motors and latches, and reaction control system/orbital maneuvering system motor-actuated valves. Each motor controller assembly contains main dc buses, ac buses, and hybrid relays that are remotely controlled for the application or removal of ac power to ac motors. The main dc bus is used only to supply control or logic power to the hybrid relays so the ac power can be switched on or off. The hybrid relays permit major electrical power distribution buses to be located close to the major electrical loads, which minimizes use of heavy electrical feeders to and from the pressurized crew compartment display and control panels. This reduces the amount of spacecraft wiring and weight, and permits more flexible electrical load management. If a main bus is lost, the hybrid relays using that main bus will not operate. In some cases, the hybrid relays will use logic power from a switch instead of the motor controller assembly bus.

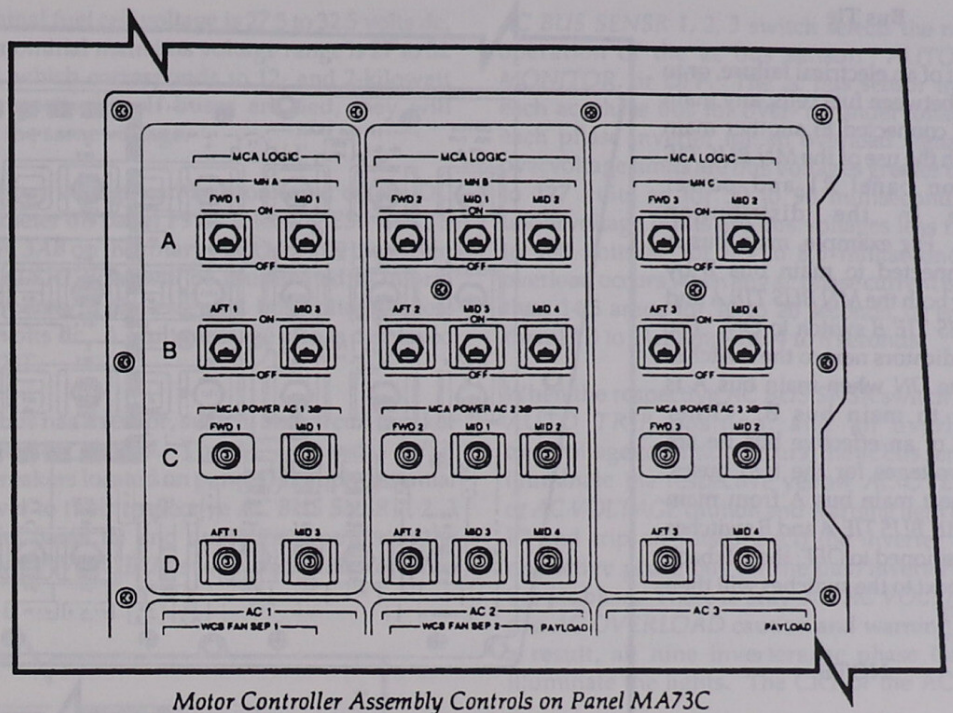

Motor Controller Assembly Controls on Panel MA73C

The three forward motor controller assemblies (FMC 1, FMC 2, and FMC 3) correspond to MN A/AC 1, MN B/AC 2, and MN C/AC 3 respectively. Each FMC contains a main bus, an ac bus, and an RCS ac bus. The main bus supplies control or logic power to the relays associated with both the ac bus and RCS ac bus. The ac bus supplies power to the forward left and right vent doors, the star tracker Y and Z doors, and the air data left and right doors. The RCS ac bus supplies power to the forward RCS manifold and tank isolation valves.

The aft motor controller assemblies (AMC 1, AMC 2, and AMC 3) correspond to MN A/AC 1, MN B/AC 2, and MN C/AC 3 respectively. Each aft motor controller assembly contains a main bus and its corresponding ac bus and a main RCS/OMS bus and its corresponding RCS/OMS ac bus. Both main buses are used for control or logic power for the hybrid relays. The ac bus is used by the aft RCS/OMS manifold and tank isolation and crossfeed valves, the aft left and right vent doors, and the ET umbilical doors.

The mid motor controller assemblies (MMC 1, MMC 2, MMC 3, and MMC 4) contain two main dc buses and two corresponding ac buses. MMC 1 contains main bus A and B and their corresponding buses, AC 1 and AC 2. MMC 2 contains MN B and C and AC 2 and AC 3 buses. MMC 3 contains the same buses as MMC 1, and MMC 4 contains the same buses as MMC 2. Loads for the main buses/ac buses are vent doors, payload bay doors and latches, radiator panel deployment actuator and latches, RMS deploy motors and latches, and payload retention latches.

Component Cooling

The electrical components in the midbody are mounted on cold plates and cooled by the Freon coolant loops. The power controller assemblies, load controller assemblies, motor controller assemblies, and inverters located in forward avionics bays 1, 2, and 3 are mounted on cold plates and cooled by the water coolant loops. The inverter distribution assemblies in forward avionics bays 1, 2, and 3 are air-cooled. The load controller assemblies, power controller assemblies, and motor controller assemblies located in the aft avionics bays are mounted on cold plates and cooled by the Freon system coolant loops.

Bus Tie

In the event of an electrical failure, or to load share between fuel cells, any main bus can be connected to another main bus through the use of the *MN BUS TIE* switches on panel R1 and power contactors in the distribution assemblies. For example, main bus A can be connected to main bus B by positioning both the *MN BUS TIE A* and the *MN BUS TIE B* switch to *ON*. The talkback indicators next to the switches will indicate *ON* when main bus A is connected to main bus B. Other indications of an effective bus tie are matching voltages for the two buses. To disconnect main bus A from main bus B, the *MN BUS TIE A* and *B* switches must be positioned to *OFF*; the talkback indicators next to the switches will then indicate *OFF*.

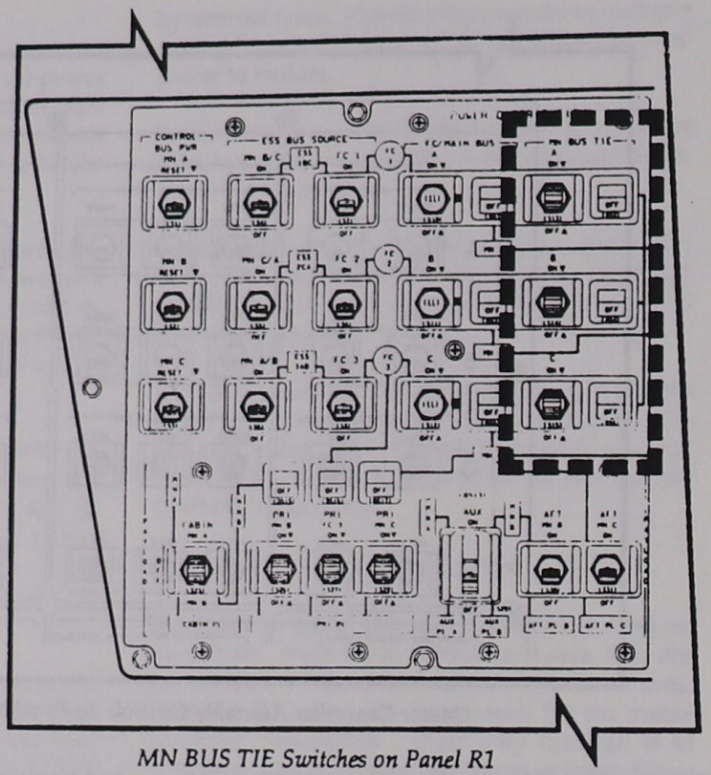

MN BUS TIE Switches on Panel R1

NOTE

It is also possible to tie the main buses B and C together via the *PRI* switches. This is done by connecting each main bus to the primary payload bus.

Instrumentation and System Monitoring

Main bus A, B, or C voltages can be displayed on the DC VOLTS meter on panel F9 by selecting *MAIN VOLTS A, B,* or *C* on the rotary switch beneath the meter. The *MAIN BUS UNDERVOLT* red caution and warning light on panel F7 will be illuminated if main bus A, B, or C voltage is ≤26.4 volts dc, informing the crew that the minimum equipment operating voltage limit of 24 volts dc is being approached. A *BACKUP C/W ALARM* light will also be illuminated at 26.4 volts dc. An *SM ALERT* light will be illuminated at 27 volts dc or less, alerting the flight crew to the possibility of a future low-voltage problem. A fault message also is transmitted to the CRT.

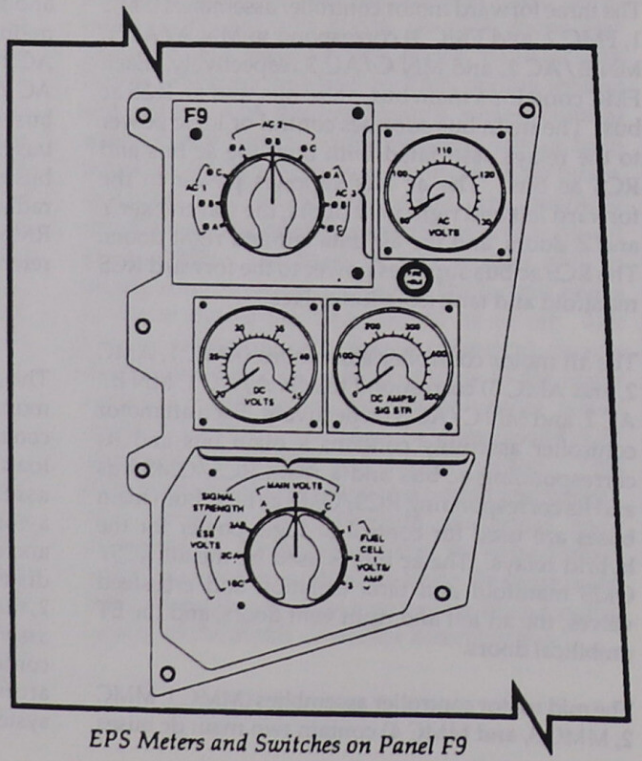

EPS Meters and Switches on Panel F9

The nominal fuel cell voltage is 27.5 to 32.5 volts dc, and the nominal main bus voltage range is 27 to 32 volts dc, which corresponds to 12- and 2-kilowatt loads respectively. If buses are tied, they will indicate the same voltage.

The ESS bus voltage can be monitored on the DC VOLTS meter on panel F9 by selecting *ESS VOLTS 1BC, 2CA, 3AB* on the rotary switch below the meter. An *SM ALERT* light will be illuminated to inform the flight crew if the essential bus voltage is less than 25 volts dc. A fault message also is displayed on the CRT.

Each ac bus has a sensor, switch, and circuit breaker for flight crew control. The *AC 1, 2,* and *3 SNSR* circuit breakers located on panel O13 apply essential bus power to their respective *AC BUS SNSR 1, 2, 3* switch on panel R1 and operational power to the respective *INV/AC BUS* switch and indicator. The *AC BUS SENSR 1, 2, 3* switch selects the mode of operation of the ac bus sensor: *AUTO TRIP, MONITOR,* or *OFF*. The ac bus sensor monitors each ac phase bus for over- or undervoltage, and each phase inverter for an overload signal. The overvoltage limits are bus voltages greater than 123 to 127 volts ac for 50 to 90 milliseconds. The undervoltage limits are bus voltages less than 102 to 108 volts ac for 6.5 to 8.5 milliseconds. An overload occurs when any ac phase current is greater than 14.5 amps for 10 to 20 seconds, or is greater than 17.3 to 21.1 amps for 4 to 6 seconds.

When the respective *AC BUS SNSR* switch is in the *AUTO TRIP* position, and an overload or overvoltage condition occurs, the ac bus sensor will illuminate the respective yellow *AC OVERLOAD* or *AC VOLTAGE* caution and warning light on panel F7 and trip off (disconnect) the inverter from its respective phase bus for the bus/inverter causing the problem. There is only one *AC VOLTAGE* and one *AC OVERLOAD* caution and warning light; as a result, all nine inverters/ac phase buses can illuminate the lights. The CRT or the AC VOLTS

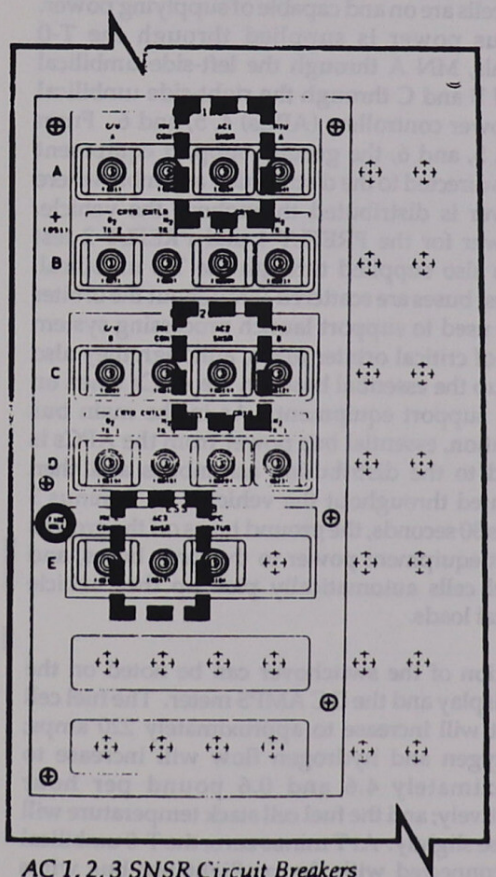

AC 1, 2, 3 SNSR Circuit Breakers on Panel O13

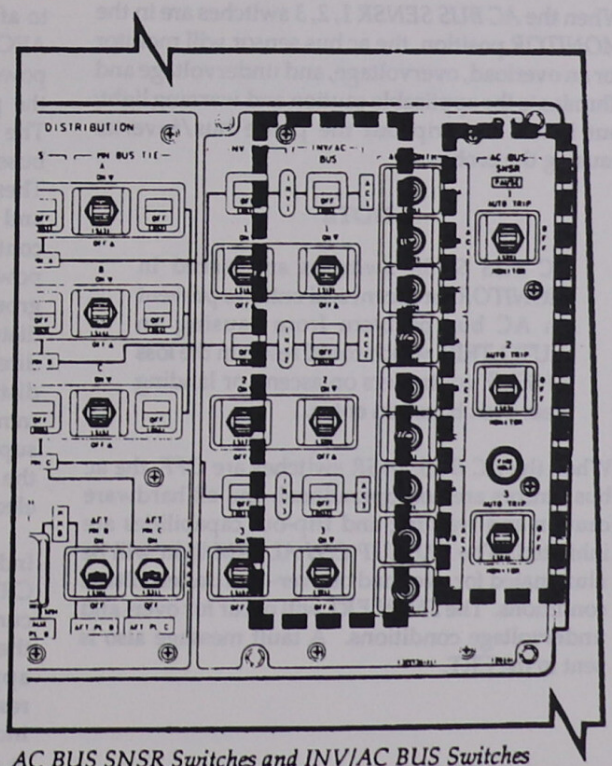

AC BUS SNSR Switches and INV/AC BUS Switches and Talkback Indicators on Panel R1

meter and rotary switch beside it on panel F9 would be used to determine which inverter or phase bus caused the light to illuminate. The phase causing the problem would approach 0 amps after the bus sensor disconnects the inverter from the bus. Because of the various three-phase motors throughout the vehicle, there will be an induced voltage on the disconnected phase if only one phase has loss of power.

Before power can be restored to the tripped bus, the trip signal to the *INV/AC BUS* switch must be removed by positioning the *AC BUS SNSR* switch to *OFF*, then back to the *AUTO TRIP* position, which extinguishes the caution and warning light. The *INV/AC BUS* switch is then positioned to *ON*, restoring power to the failed bus. If the problem is ·l present, the sensor trip sequence will be ·peated.

If an undervoltage exists, the yellow *AC VOLTAGE* caution and warning light on panel F7 will be illuminated, but the inverter will not be disconnected from its phase bus.

When the *AC BUS SENSR 1, 2, 3* switches are in the *MONITOR* position, the ac bus sensor will monitor for an overload, overvoltage, and undervoltage and illuminate the applicable caution and warning light; but it will not trip out the phase bus/inverter causing the problem.

NOTE

AC BUS SNSR switches are placed in *MONITOR* for ascent and entry to prevent an AC bus problem from causing an AUTO-TRIP, which could result in the loss of SSME controllers on ascent, or landing gear prox boxes on entry.

When the *AC BUS SNSR* switches are *OFF*, the ac bus sensors are non-operational, and all hardware caution and warning and trip-out capabilities are inhibited. The *BACKUP C/W ALARM* light will be illuminated for overload or over- and undervoltage conditions. The *SM ALERT* will occur for over- and undervoltage conditions. A fault message also is sent to the CRT.

Operations

Prelaunch

During prelaunch operations, the onboard fuel cell reactants (oxygen and hydrogen) are supplied by ground support equipment to assure a full load of onboard reactants before lift-off. At T minus 2 minutes 35 seconds, the ground support equipment filling operation is terminated. The ground support equipment supplies hydrogen and oxygen to the PRSD manifold at pressures greater than the tank heater control range pressures (approximately 280 psia for hydrogen and 960 psia for oxygen). The ground support equipment supply valves close automatically to transfer to onboard reactants.

The fuel cells will be on when the crew boards the vehicle. Until T minus 3 minutes and 30 seconds, power to the orbiter is load shared with the fuel cells and ground support equipment, even though the fuel cells are on and capable of supplying power. Main bus power is supplied through the T-0 umbilicals, MN A through the left-side umbilical and MN B and C through the right-side umbilical to aft power controllers (APCs) 4, 5, and 6. From APCs 4, 5, and 6, the ground support equipment power is directed to the distribution assembly where the power is distributed throughout the vehicle. The power for the PREFLT 1 and PREFLT 2 test buses is also supplied through the T-0 umbilical. These test buses are scattered throughout the orbiter and are used to support launch processing system control of critical orbiter loads, although they also power up the essential buses in the APCs when on ground support equipment. As in the main bus distribution, essential bus power from the APCs is directed to the distribution assemblies and then distributed throughout the vehicle. At T minus 3 minutes 30 seconds, the ground turns off the ground support equipment power to the main buses, and the fuel cells automatically pick up the vehicle electrical loads.

Indication of the switchover can be noted on the CRT display and the DC AMPS meter. The fuel cell current will increase to approximately 220 amps; the oxygen and hydrogen flow will increase to approximately 4.6 and 0.6 pound per hour respectively; and the fuel cell stack temperature will increase slightly. At T minus zero, the T-0 umbilical is disconnected with the preflight test bus wires live.

Prelaunch and On Orbit Tank Heater Management

Before lift-off, the *O2 TK1 HEATERS A*, *O2 TK2 HEATERS A*, *H2 TK1 HEATERS A*, and *H2 TK 2 HEATERS A* switches on panel R1 are set on *AUTO*. As part of the Post OMS 1 Burn procedures, all the switches on O2 and H2 tanks 1 & 2 are positioned to *AUTO*, while the other tank heaters remain *OFF*. On orbit, the cryo tank heaters are managed to provide for tank quantity balancing. When hydrogen tanks 4 and 5 are installed on OV 102, they are depleted first due to their common check valve. Because the tank 3 and 4/5 heater controller pressure limits are higher than those of tanks 1 and 2, tanks 3 and 4/5 supply the reactants to the fuel cells when all tank heaters are set to *AUTO*. For entry, tanks 1 and 2 supply the reactants to the fuel cells.

Fuel Cell Operating Modes

Fuel cell standby consists of removing the electrical loads from a fuel cell but continuing operation of the fuel cell pumps, controls, instrumentation, and valves, while electrical power is supplied by the remaining fuel cells. A small amount of reactants is used to generate power for the fuel cell internal heaters. If the temperature in the fuel cell compartment beneath the payload bay is lower than 40° F, the fuel cell should be left in *STANDBY* instead of being shut down to prevent it from freezing.

Fuel cell shutdown, after standby, consists of stopping the coolant pump and hydrogen pump/water separator by positioning that *FUEL CELL START/STOP* switch on panel R1 to the *STOP* position.

Fuel cell safing consists of closing the fuel cell reactant valves and consuming the reactants inside the fuel cell by either leaving the fuel cell connected to its main bus or by keeping the pump package operating.

EPS Caution and Warning Summary

- The *SM ALERT* will illuminate if a cryo heater current level sensor detects a short on a heater circuit.
- The yellow *O_2 PRESS* and the red BACKUP C/W ALARM lights illuminate if oxygen tank pressure is below 540 psia or above 985 psia.
- The yellow *H_2 PRESS* and the red *BACKUP C/W ALARM* lights illuminate if hydrogen tank pressure is below 153 psia or above 293.8 psia.
- When any fuel cell reactant valve is closed, the red *FUEL CELL REAC* light is illuminated, a tone is sounded and the *BACKUP C/W ALARM* is illuminated.
- The yellow *FUEL CELL STACK TEMP* light will illuminate if fuel cell and stack temperatures are below 170.7° F or above 241.9° F. The red *BACKUP C/W ALARM* and blue *SM ALERT* will also light for similar limits.
- The yellow *FUEL CELL PUMP* light will illuminate if fuel cell 1, 2, or 3 coolant pump delta pressure is lost. If the coolant pump for fuel cell 1, 2, or 3 is off, the *BACKUP C/W ALARM* will be illuminated.
- The yellow *O_2 HEATER TEMP* light on panel F7 illuminates if the temperature sensor senses the oxygen tank temperature is at or above 344° F. Software checks the limit; if it is above 349°F, the *BACKUP C/W ALARM* light illuminates as well.
- The red *MAIN BUS UNDERVOLT* light and the *BACKUP C/W ALARM* illuminate if main bus A, B, or C voltage is ≤ 26.4 volts dc.
- The yellow *AC VOLTAGE* light illuminates for an overvoltage or undervoltage condition in the ac bus. The red *BACKUP C/W ALARM* will also illuminate.
- The yellow *AC OVERLOAD* light illuminates for an overload condition in the ac bus.

O_2 PRESS	H_2 PRESS	FUEL CELL REAC (R)	FUEL CELL STACK TEMP	FUEL CELL PUMP
CABIN ATM (R)	O_2 HEATER TEMP	MAIN BUS UNDERVOLT (R)	AC VOLTAGE	AC OVERLOAD
FREON LOOP (R)	AV BAY/ CABIN AIR	IMU	FWD RCS (R)	RCS JET
H_2O LOOP	RGA/ACCEL	AIR DATA (R)	LEFT RCS (R)	RIGHT RCS (R)
———	LEFT RHC (R)	RIGHT/AFT RHC (R)	LEFT OMS (R)	RIGHT OMS (R)
PAYLOAD WARNING (R)	GPC	FCS SATURATION (R)	OMS KIT	OMS TVC (R)
PAYLOAD CAUTION	PRIMARY C/W	FCS CHANNEL	MPS (R)	———
BACKUP C/W ALARM (R)	APU TEMP	APU OVERSPEED	APU UNDERSPEED	HYD PRESS

EPS Caution and Warning Lights on Panel F7

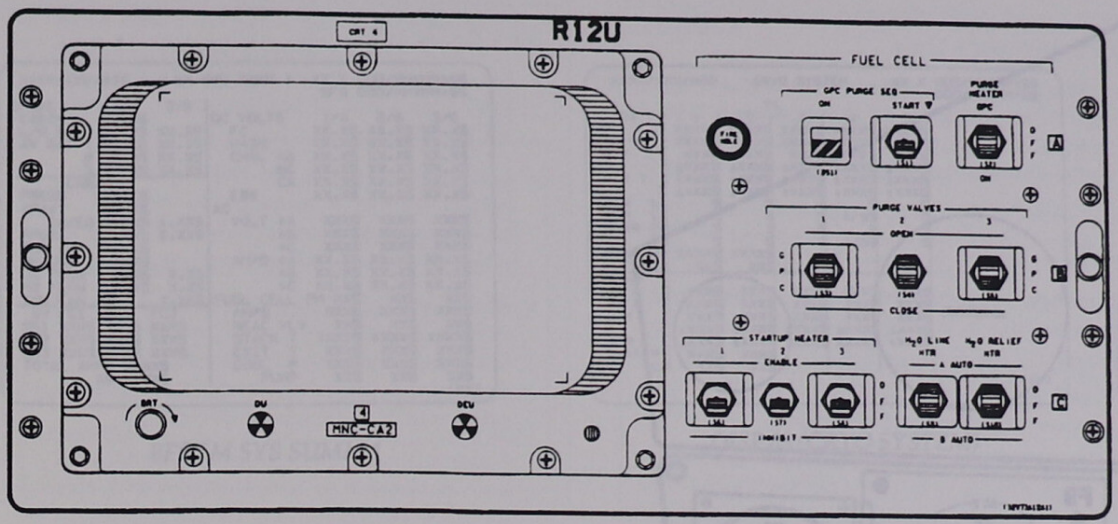

Panel R12U

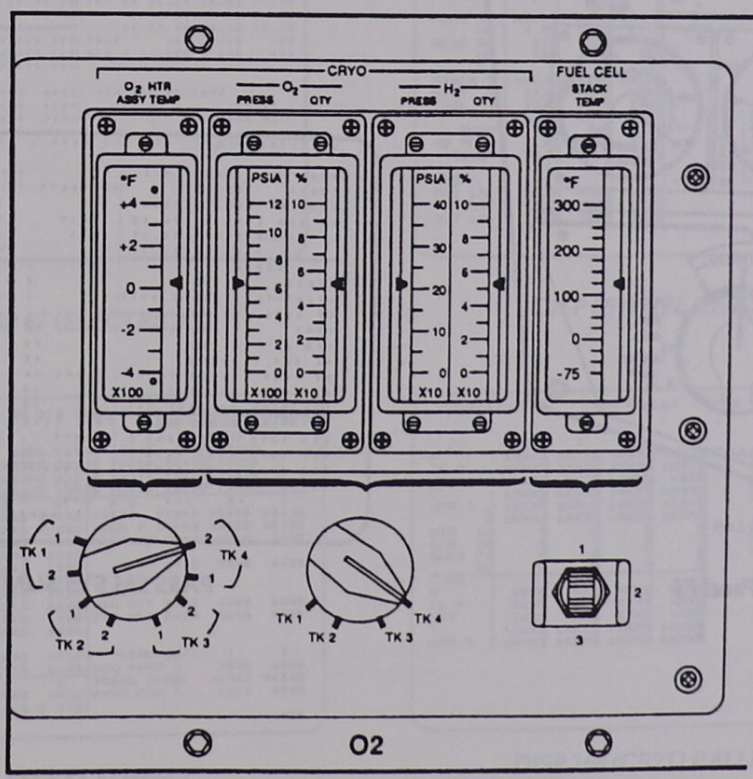

Panel O2

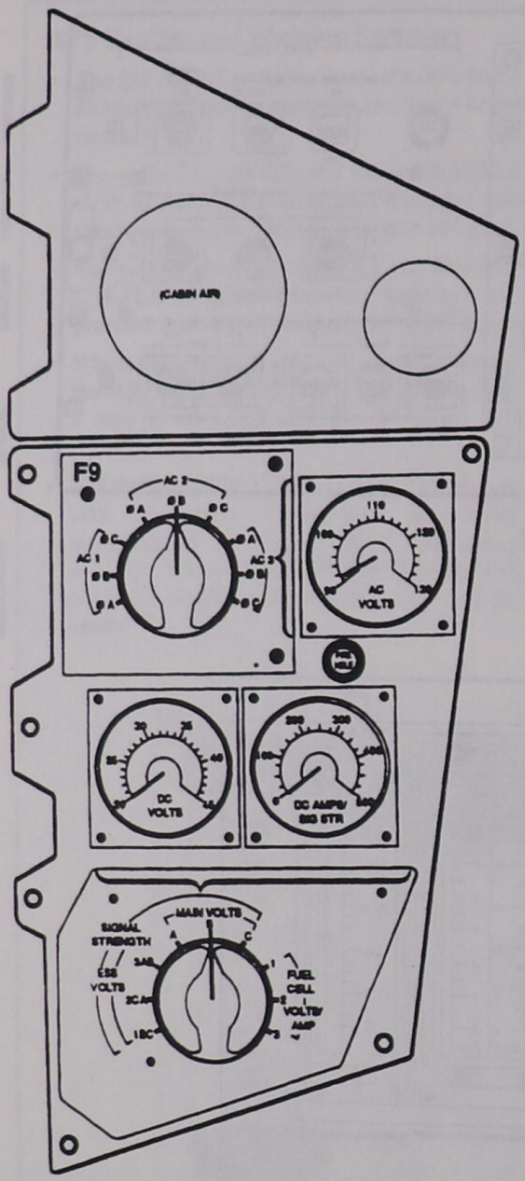

Panel F9

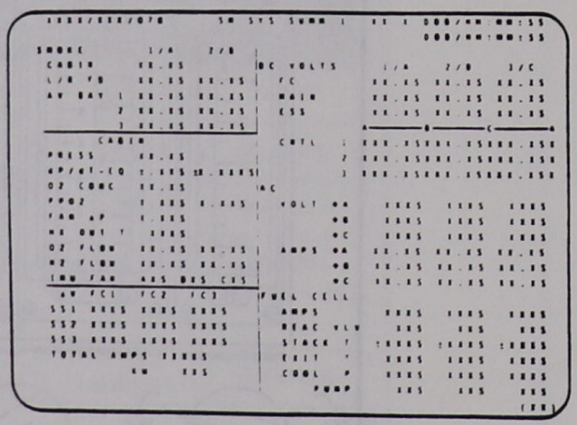

PASS SM SYS SUMM 1

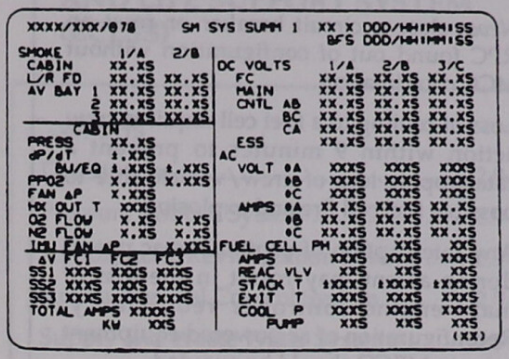

BFS SM SYS SUMM 1

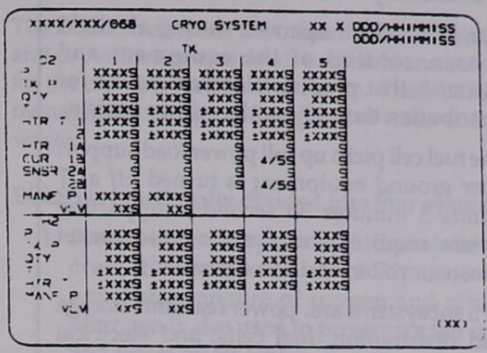

DISP 68 (CRYO SYSTEM)

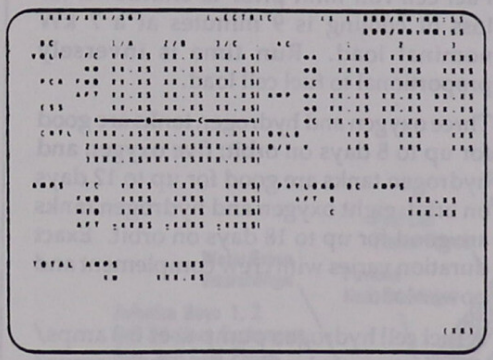

DISP 67 (ELECTRIC)

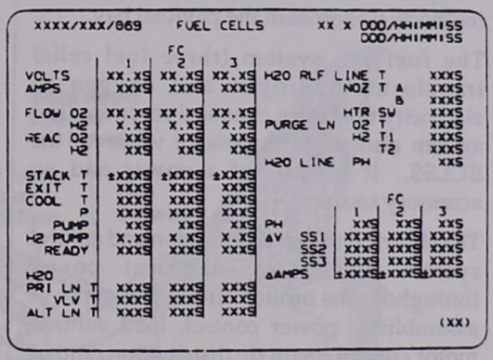

DISP 69 (FUEL CELLS)

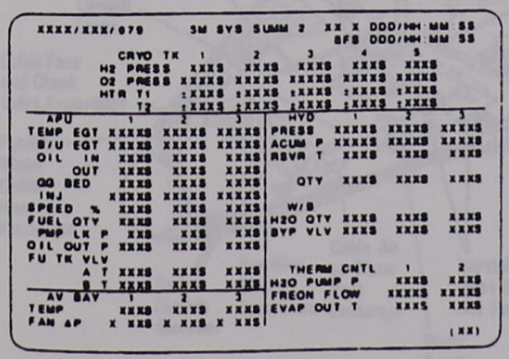

BFS SM SYS SUMM 2

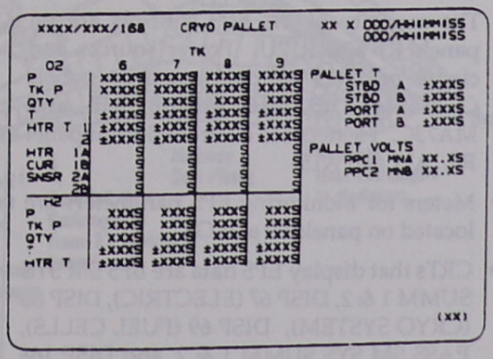

DISP 168 (CRYO PALLET)

EPS Summary Data

- The EPS, which operates during all flight phases, consists of the equipment and reactants that produce electrical power for distribution throughout the orbiter vehicle.
- The fuel cell picks up full power load support after ground equipment is turned off at T minus 3 minutes 30 seconds, supporting power requirements for the solid rocket booster, orbiter, and some payloads.
- EPS subsystems are: power reactants storage and distribution, fuel cells, and electrical power distribution and control.
- The power reactants storage and distribution system stores cryogenic hydrogen and oxygen and supplies them to the fuel cells. It also supplies oxygen to the ECLSS. The components are located in the orbiter midbody underneath the payload bay.
- The fuel cell system (three fuel cells) transforms hydrogen and oxygen to electricity through a chemical reaction. The system also supplies potable water to the ECLSS. It consists of a power and an accessory section.
- The electrical power distribution and control system distributes electrical power throughout the orbiter. It has five types of assemblies: power control, load control, motor control, main dc distribution, and ac distribution and control.
- The EPS requires very little flight crew interaction during nominal operations.
- The majority of the EPS controls are on panels R1 and R12U. Power sources and circuit breakers are distributed on panels O13, O14, O15, O16, ML86B, R15, and MA73C. Heaters are controlled from panel R1, A11 and A15.
- Meters for monitoring EPS parameters are located on panels F9 and O2.
- CRTs that display EPS data are BFS SM SYS SUMM 1 & 2, DISP 67 (ELECTRIC), DISP 68 (CRYO SYSTEM), DISP 69 (FUEL CELLS), PASS SM SYS SUMM 1 & 2, and DISP 168 (CRYO PALLET).

EPS Rules of Thumb

- *Never* close a circuit breaker or reset an RPC found out of configuration without MCC coordination.
- Loss of cooling to a fuel cell requires crew action within 9 minutes to prevent a catastrophic loss of crew/vehicle due to possible fuel cell fire and explosion.
- Any interruption of continuous ac power during ascent may result in the loss of main engine controller redundancy. Reconfiguration of ac powered equipment prior to MECO should be avoided.
- *Never* connect or reconnect power to a known shorted or failed component; this includes switch throws, circuit protection device resets, or bus ties.
- Fuel cell run limit prior to shutdown for loss of cooling is 9 minutes at a 7 kW nominal load. Run time is inversely proportional to fuel cell load.
- Three oxygen and hydrogen tanks are good for up to 8 days on orbit; five oxygen and hydrogen tanks are good for up to 12 days on orbit; eight oxygen and hydrogen tanks are good for up to 18 days on orbit. Exact duration varies with crew complement and power load.
- A fuel cell hydrogen pump uses 0.3 amps/AC phase; a coolant pump uses 0.5 amps/AC phase.

2.9 ENVIRONMENTAL CONTROL AND LIFE SUPPORT SYSTEM (ECLSS)

CONTENTS

Description 2.9-1
Pressure Control System 2.9-4
Atmospheric Revitalization System 2.9-12
Active Thermal Control System 2.9-22
Supply and Waste Water Systems 2.9-33
Operations 2.9-42

Description

The ECLSS maintains the orbiter's thermal stability and provides a pressurized, habitable environment for the crew and onboard avionics. The ECLSS also manages the storage and disposal of water and crew waste.

ECLSS is functionally divided into four systems:

1. **Pressure control system**, which maintains the crew compartment at 14.7 psia with a breathable mixture of oxygen and nitrogen. Nitrogen is also used to pressurize the supply and waste water tanks.
2. **Atmospheric revitalization system**, which uses air circulation and water coolant loops to remove heat, control humidity, and clean and purify cabin air.

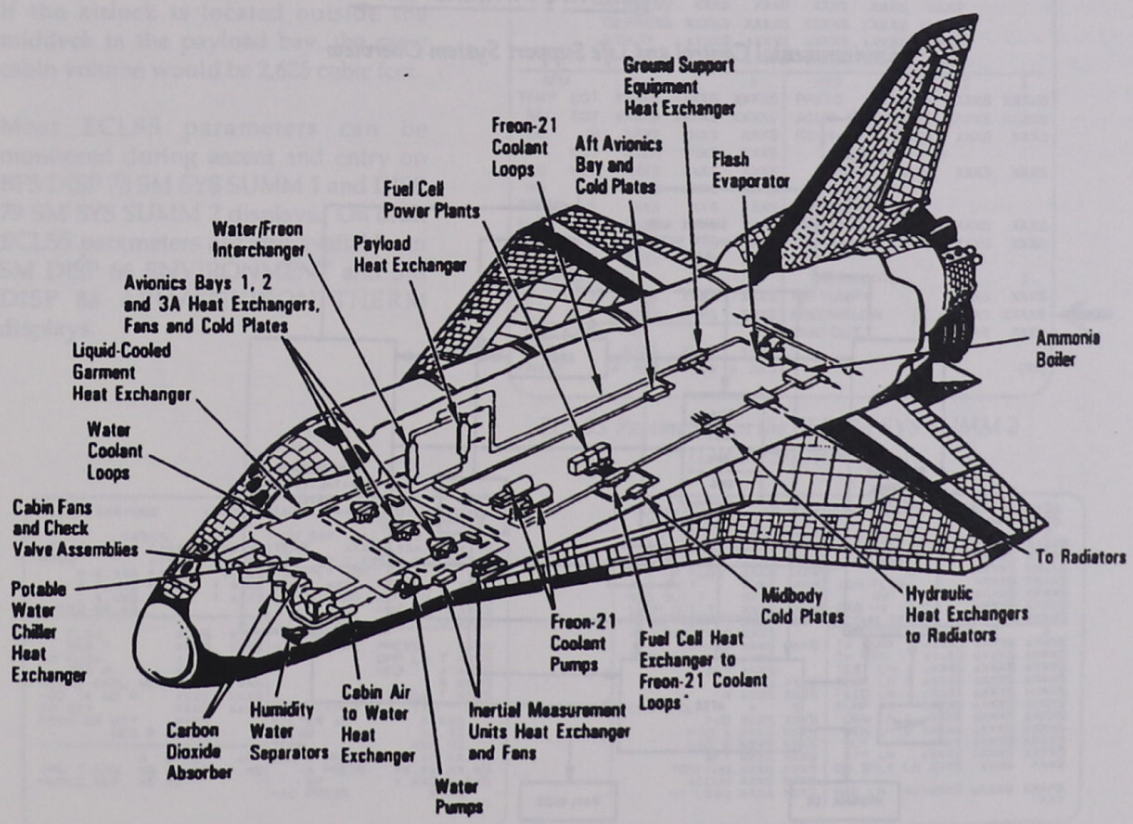

Environmental Control and Life Support System

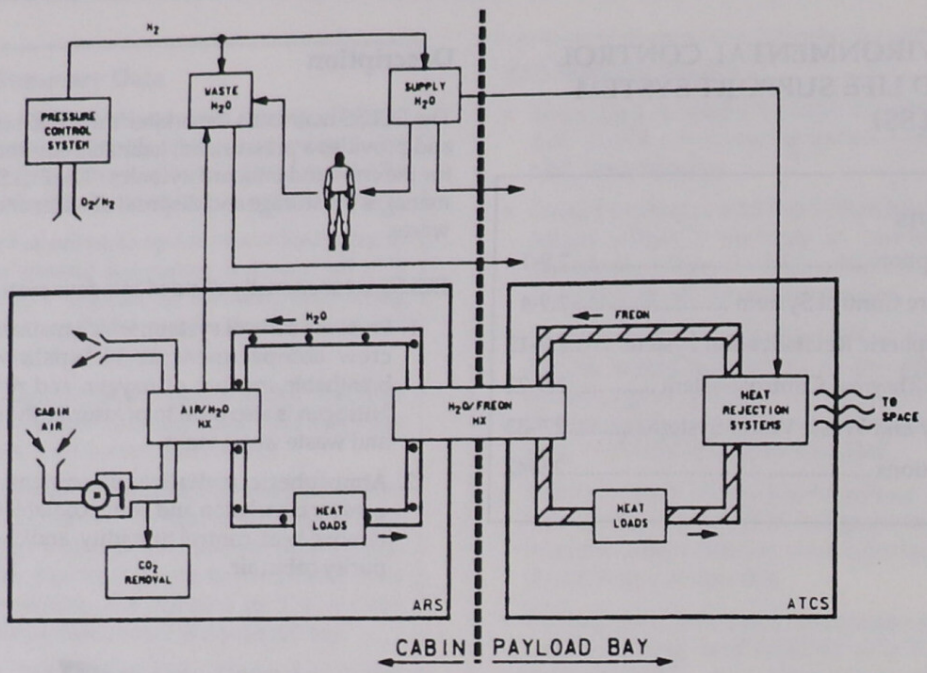

Environmental Control and Life Support System Overview

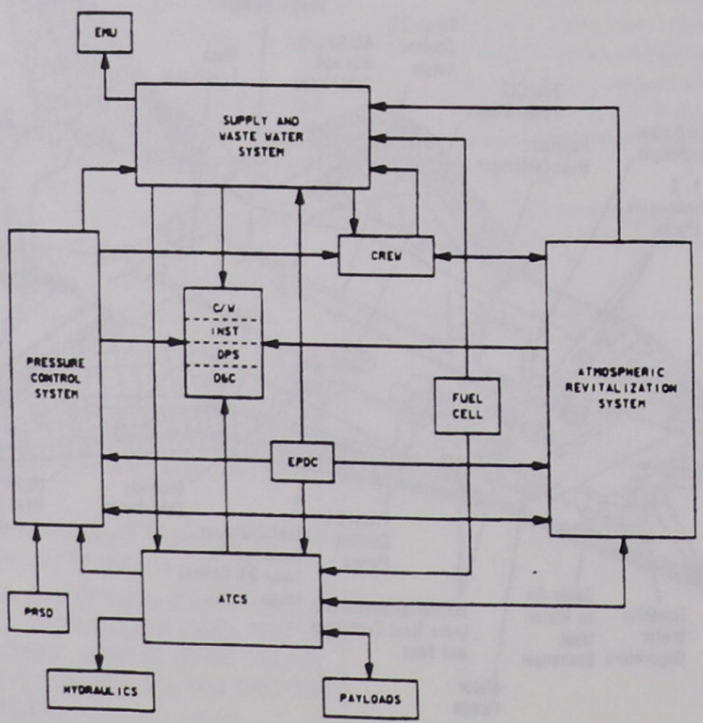

Environmental Control and Life Support System Interfaces

3. **Active thermal control system**, which consists of two Freon loops that collect waste heat from orbiter systems and transfer the heat overboard.
4. **Supply and waste water system.** The supply water system stores water produced by the fuel cells for drinking, personal hygiene, and orbiter cooling. The waste water system stores crew liquid waste and waste water from the humidity separator. The system also has the capability to dump supply and waste water overboard.

The orbiter crew compartment provides a life-sustaining environment for the flight crew. The crew cabin volume with the airlock inside the middeck is 2,325 cubic feet. For EVA, the airlock is depressurized and repressurized. Under normal circumstances, the cabin may be depressed to 10.2 psia to ease prebreathe requirements prior to an EVA. If the airlock is located outside the middeck in the payload bay, the crew cabin volume would be 2,625 cubic feet.

Most ECLSS parameters can be monitored during ascent and entry on BFS DISP 78 SM SYS SUMM 1 and DISP 79 SM SYS SUMM 2 displays. On orbit ECLSS parameters are also available on SM DISP 66 ENVIRONMENT and SM DISP 88 APU/ENVIRON THERM displays.

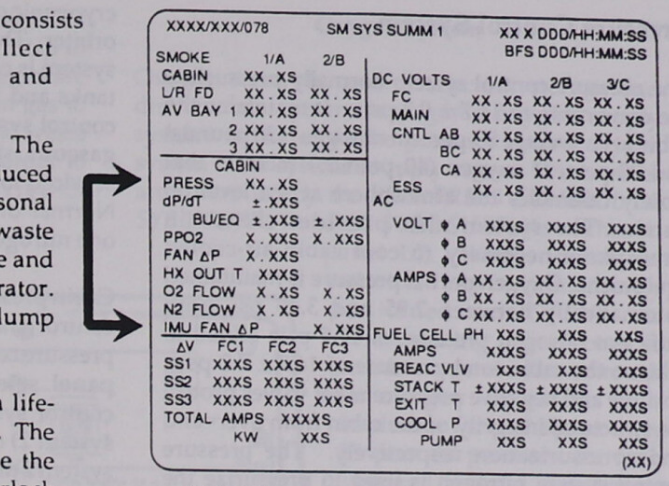

ECLSS Parameters on the SM SYS SUMM 1 (DISP 78) Display

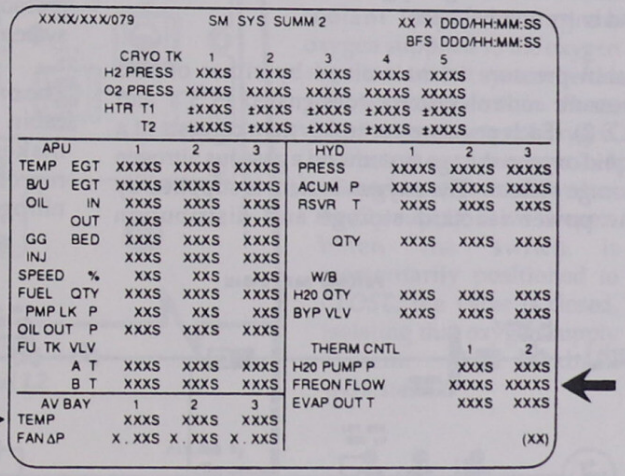

ECLSS Parameters on the BFS SM SYS SUMM 2 (DISP 79) Display

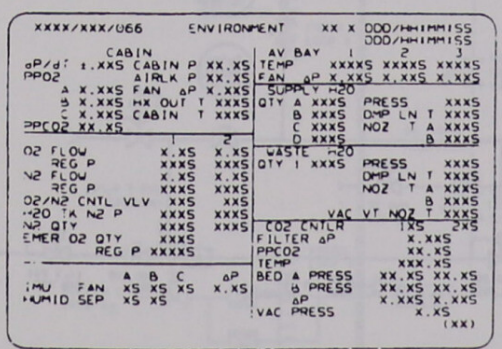

ENVIRONMENT Display (DISP 66)

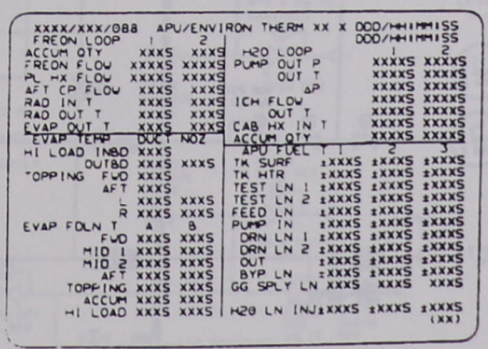

APU/ENVIRON THERM Display (DISP 88)

Pressure Control System

The pressure control system normally pressurizes the crew cabin to 14.7 ± 0.2 psia. It maintains the cabin at an average 80-percent nitrogen (130 pounds) and 20-percent oxygen (40 pounds) mixture that closely resembles the atmosphere at sea level on Earth. The system also provides the cabin atmosphere necessary to cool cabin-air-cooled equipment. Oxygen partial pressure is maintained automatically between 2.95 and 3.45 psi, with sufficient nitrogen pressure of 11.5 psia added to achieve the cabin total pressure of 14.7 ± 0.2 psia. Positive and negative pressure relief valves protect the structural integrity of the cabin from over- and underpressurization respectively. The pressure control system nitrogen is used to pressurize the supply and waste water tanks. The system also provides breathing oxygen directly to the launch and entry suit helmets.

Cabin pressure is maintained by either of two pressure control systems (designated PCS 1 and PCS 2). Each pressure control system consists of a liquid oxygen storage system and a gaseous nitrogen storage system. The oxygen system is supplied by the power reactant storage and distribution cryogenic oxygen systems in the midfuselage of the orbiter. The cryogenic supercritical oxygen storage system is controlled by electrical heaters within the tanks and supplies oxygen to the ECLSS pressure control system at a pressure of 803 to 882 psia in a gaseous state. The nitrogen storage tanks are serviced to a nominal pressure of 2,964 psia at 80° F. Normal on-orbit operations use one oxygen and one nitrogen supply system.

Cabin pressure is controlled by the nitrogen/oxygen control and supply panels, the PPO_2 sensor, and pressure relief valves. The nitrogen/oxygen control panel selects and regulates primary (pressure control system 1) or secondary (pressure control system 2) oxygen and nitrogen. The system 1 and system 2 nitrogen/oxygen supply panels are located in the lower forward portion of the midfuselage. Both O_2 and N_2 supply systems 1 and 2 have a crossover capability. This allows the respective systems to be tied together.

The oxygen supply system provides the "makeup" cabin oxygen gas for flight crew consumption, makeup for cabin leakage, and airlock repressurization. The nitrogen system provides nitrogen for pressurizing the cabin and the potable

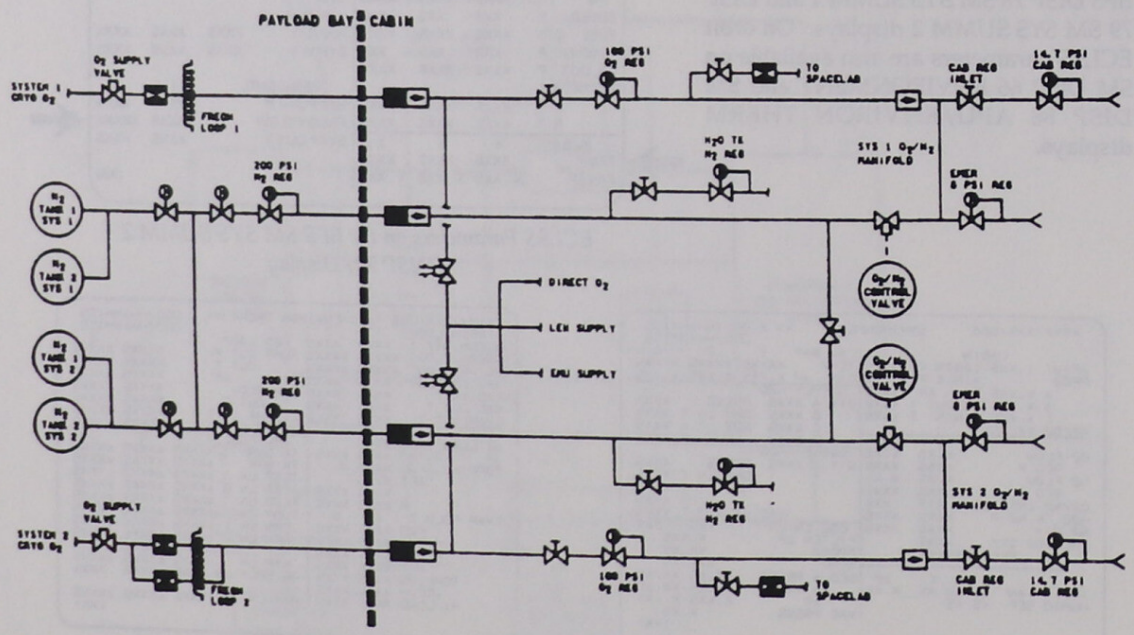

Pressure Control System

and waste water tanks. Each crew member uses an average of 1.76 pounds of oxygen per day. Up to 7.7 pounds of nitrogen and 9 pounds of oxygen are used per day for normal loss of crew cabin gas to space and metabolic usage. The potable and waste water tanks are pressurized to 17 psig in order to expel water from the tanks for use by the crew or dumping overboard.

Oxygen System

Oxygen from the power reactant storage and distribution system (cryogenic oxygen supply system) is routed to the pressure control oxygen system 1 and system 2 supply valves. These valves are controlled by the *ATM PRESS CONTROL O2 SYS 1 SUPPLY* and *O2 SYS 2 SUPPLY* switches on panel L2. When one of the switches is momentarily positioned to *OPEN*, the corresponding valve opens to permit oxygen to flow through an oxygen restrictor at a maximum flow of approxately 25 pounds per hour for both system 1 and 2. The Oxygen restrictor also functions as a heat exchanger with the Freon coolant loop, warming the oxygen supplied to the oxygen regulator of that system before it flows into the cabin. Freon loop 1 warms system 1 oxygen, and loop 2 warms system 2. A talkback indicates *OP* when the O_2 supply valve is open. When the switch is momentarily positioned to *CLOSE*, the valve is closed, isolating that oxygen supply system. The talkback indicates *CL*.

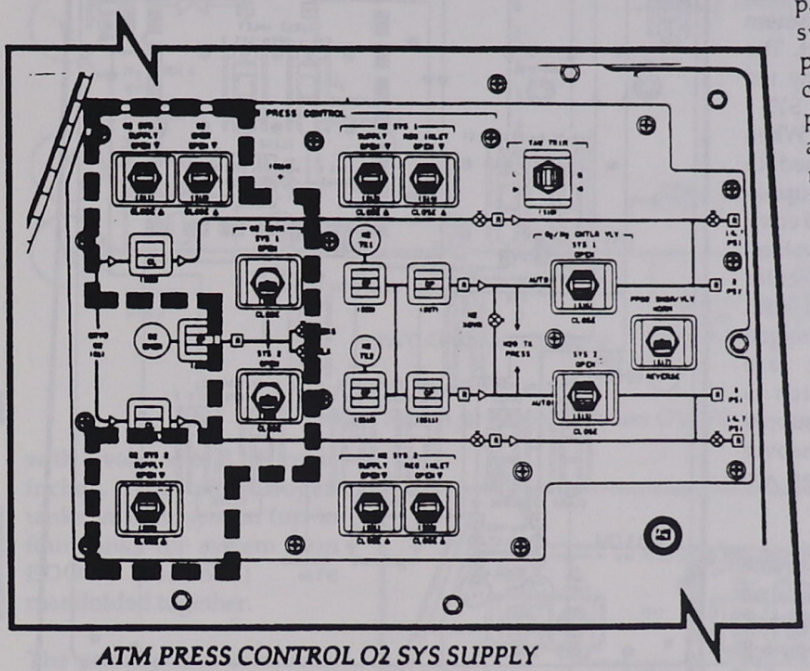

ATM PRESS CONTROL O2 SYS SUPPLY and XOVR Switches and Talkbacks on Panel L2

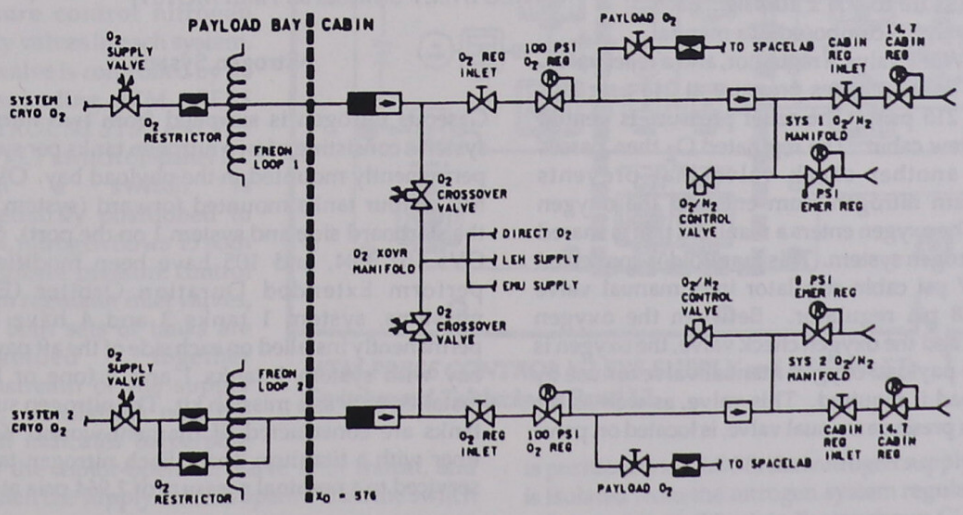

Oxygen System

Next, the oxygen piping penetrates the bulkhead and enters the crew compartment. A check valve downstream of the Freon loop heat exchanger prevents oxygen from flowing from one supply source to the other when the crossover valves are open. Downstream of the oxygen check valve, oxygen systems 1 and 2 are connected by a crossover valve that permits system 1 and system 2 to be interconnected. The crossover valves are controlled by the *ATM PRESS CONTROL O2 XOVR SYS 1* and *SYS 2* switches on panel L2. When one of the switches is positioned to *OPEN*, the associated oxygen supply system is directed to the launch and entry helmet O_2 supply 1 and 2 manual valves, airlock oxygen 1 and 2 extravehicular mobility unit, and direct O_2. If both switches are positioned to *OPEN*, oxygen supply systems 1 and 2 are interconnected. When a switch is positioned to *CLOSE*, that oxygen supply system is isolated from the crossover feature. The crossover valves are normally open.

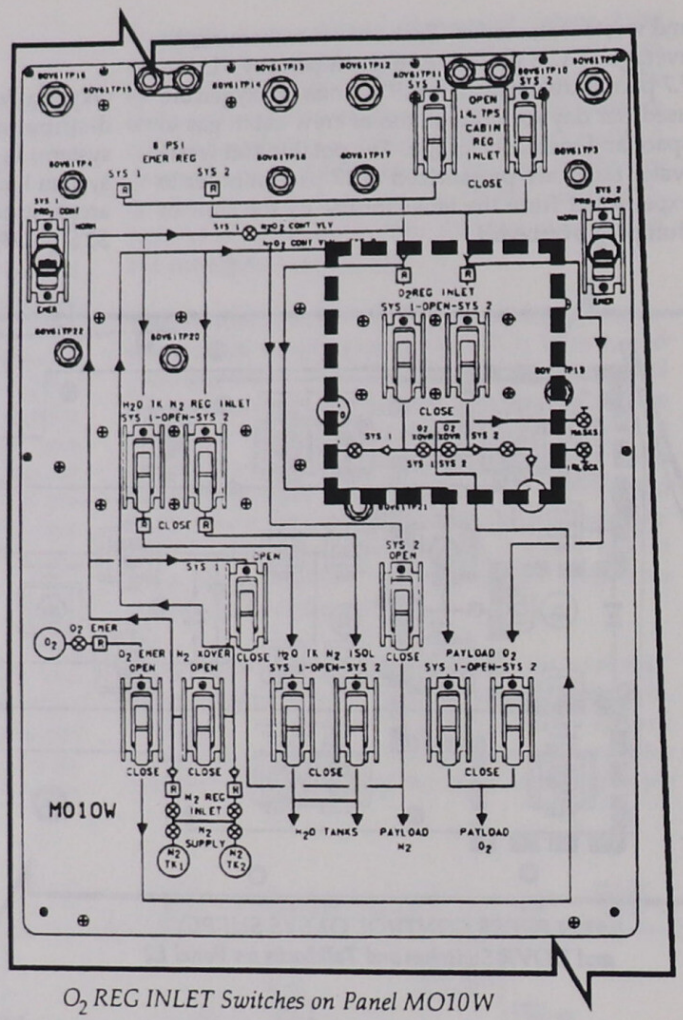

O_2 REG INLET Switches on Panel MO10W

Downstream of the oxygen crossover line is an oxygen regulator inlet manual valve. When the valve is manually positioned to *OPEN* by the *O_2 REG INLET* switch on panel MO10W, oxygen is directed to a regulator, which reduces the oxygen supply pressure to 100 ± 10 psig. Each regulator valve is composed of a manual toggle ON/OFF valve, a regulator, and a relief valve. The relief valve relieves pressure at 245 psig and reseats at 215 psig. The relief pressure is vented into the crew cabin. The regulated O_2 then passes through another check valve that prevents downstream nitrogen from entering the oxygen system. The oxygen enters a manifold that is shared by the nitrogen system. This manifold is connected to its 14.7 psi cabin regulator inlet manual valve and the 8 psi regulator. Between the oxygen regulator and the oxygen check valve, the oxygen is fed to the payload oxygen manual valve for use by the payload if required. This valve, as well as the 14.7 cabin pressure manual valve, is located on panel MO10W.

Nitrogen System

Gaseous nitrogen is supplied from two nitrogen systems consisting of two nitrogen tanks per system permanently mounted in the payload bay. OV 103 has its four tanks mounted forward (system 2 on the starboard side and system 1 on the port). Since OVs 102, 104, and 105 have been modified to perform Extended Duration Orbiter (EDO) missions, system 1 tanks 3 and 4 have been permanently installed on each side of the aft payload bay with system 1 tanks 1 and 2 (one or both) installed only as a mission kit. The nitrogen supply tanks are constructed of filament-wound Kevlar fiber with a titanium liner. Each nitrogen tank is serviced to a nominal pressure of 2,964 psia at 80° F

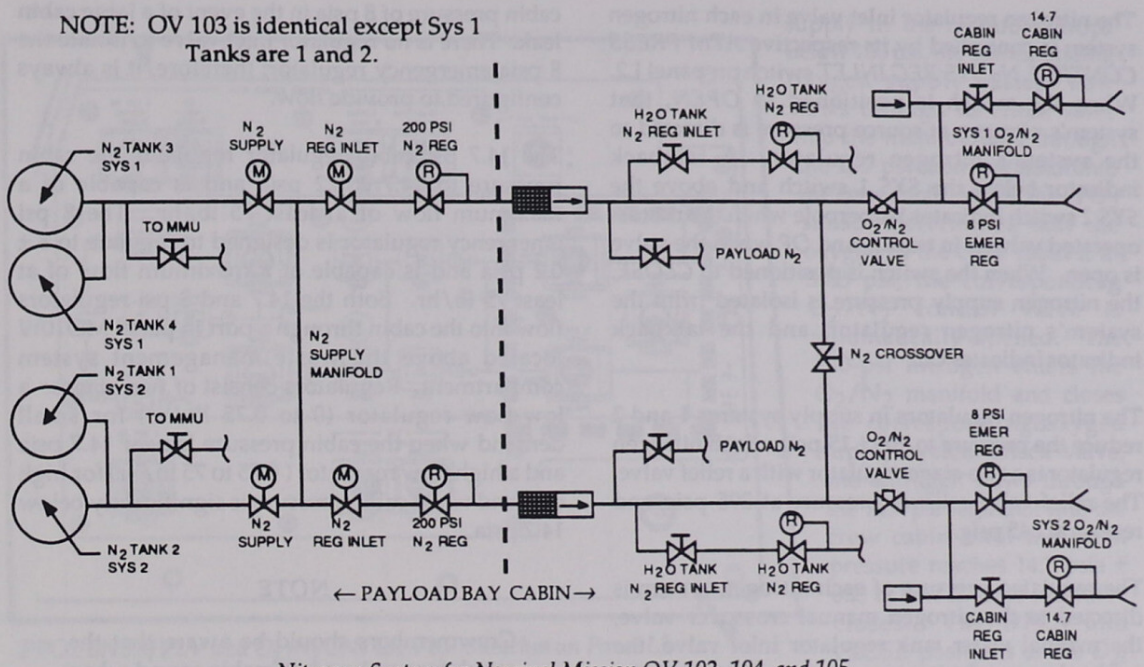

Nitrogen System for Nominal Mission OV 102, 104, and 105

with a volume of 8,181 cubic inches. The two nitrogen tanks in each system (up to four tanks for system 1 on EDO missions) are manifolded together.

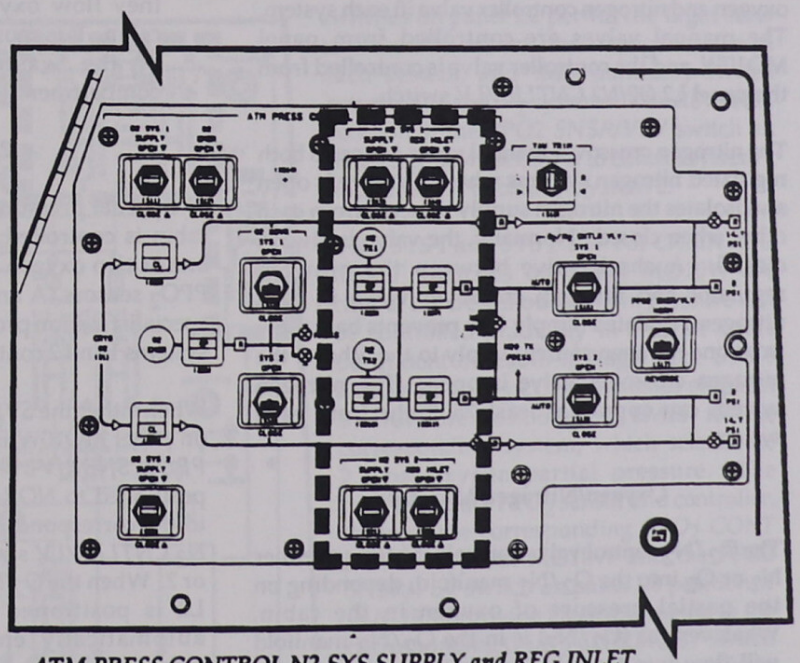

ATM PRESS CONTROL N2 SYS SUPPLY and REG INLET Switches and Talkbacks on Panel L2

The primary and secondary nitrogen supply systems are controlled by the atmosphere pressure control nitrogen supply valves in each system. Each valve is controlled by its corresponding *ATM PRESS CONTROL N2 SYS 1* and *SYS 2 SUPPLY* switch on panel L2. When a switch is momentarily positioned to *OPEN*, nitrogen flows to both atmosphere pressure control system regulator inlet valves, since both sets of tanks are manifolded together downstream of the supply valve. A talkback near the switch indicates barberpole when the motor-operated valve is in transit, and *OP* when the supply valve is open. When the switch is positioned to *CLOSE*, that nitrogen supply system is isolated from the nitrogen system regulator inlet valve, and the talkback indicator shows *CL*.

The nitrogen regulator inlet valve in each nitrogen system is controlled by its respective *ATM PRESS CONTROL N_2 SYS REG INLET* switch on panel L2. When the switch is positioned to *OPEN*, that system's nitrogen at source pressure is directed to the system's nitrogen regulator. A talkback indicator below the *SYS 1* switch and above the *SYS 2* switch indicates barberpole when the motor-operated valve is in transit, and *OP* when the valve is open. When the switch is positioned to *CLOSE*, the nitrogen supply pressure is isolated from the system's nitrogen regulator, and the talkback indicator indicates *CL*.

The nitrogen regulators in supply systems 1 and 2 reduce the pressure to 200 ± 15 psig. Each nitrogen regulator is a two-stage regulator with a relief valve. The relief valve relieves pressure at 295 psig and reseats at 245 psig.

The regulated pressure of each nitrogen system is directed to the nitrogen manual crossover valve, the manual water tank regulator inlet valve, the payload manual nitrogen supply valve, and the oxygen and nitrogen controller valve in each system. The manual valves are controlled from panel MO10W, and the controller valve is controlled from the panel L2 *O2/N2 CNTLR VLV* switch.

The nitrogen crossover manual valve connects both regulated nitrogen systems when the valve is open and isolates the nitrogen supply systems from each other when closed. Normally, the valve is always closed. A check valve between the nitrogen regulator and nitrogen crossover valve in each nitrogen-regulated supply line prevents back flow from one nitrogen source supply to the other if the nitrogen crossover valve is open. The nitrogen system can supply at least 75 lb/hr from each system.

Oxygen/Nitrogen Manifold

The O_2/N_2 control valve controls the flow of either N_2 or O_2 into the O_2/N_2 manifold, depending on the partial pressure of oxygen in the cabin. Whatever gas (O_2/N_2) is in the O_2/N_2 manifold will flow into the cabin when the cabin pressure drops below 14.7 psia, and the 14.7 regulator valve is open. This "makeup" flow will continue as long as the cabin pressure is less than 14.7. An 8 psia emergency regulator provides flow to maintain a cabin pressure of 8 psia in the event of a large cabin leak. There is no regulator inlet valve to isolate the 8 psia emergency regulator; therefore, it is always configured to provide flow.

The 14.7 psi cabin regulator regulates the cabin pressure to 14.7 ± 0.2 psia and is capable of a maximum flow of at least 75 lb/hr. The 8 psi emergency regulator is designed to regulate to 8 ± 0.2 psia and is capable of a maximum flow of at least 75 lb/hr. Both the 14.7 and 8 psi regulators flow into the cabin through a port in panel MO10W located above the waste management system compartment. Regulators consist of two stages: a low-flow regulator (0 to 0.75 lb/hr) for small demand when the cabin pressure is near 14.7 psia and a high flow regulator (0.75 to 75 lb/hr) for high demand when cabin pressure is significantly below 14.7 psia.

NOTE

Crewmembers should be aware that the regulators make a noticeable sound when they flow oxygen or nitrogen into the cabin. It is most noticeable in the vicinity of the waste management system compartment.

PPO_2 Control

The partial pressure of oxygen (PPO_2) in the crew cabin is controlled automatically during orbit by one of two oxygen and nitrogen controllers. Two PPO_2 sensors (A and B) located under the mission specialist station provide inputs to the PPO_2 control systems 1 and 2 controller and switches respectively.

When either the *SYS 1* or *SYS 2 PPO_2 CONT* switch on panel MO10W is positioned to *NORM*, and the *PPO2 SNSR/VLV* switch on panel L2 is also positioned to *NORM*, electrical power is supplied to the corresponding *ATM PRESS CONTROL O_2/N_2 CNTLR VLV* switches on panel L2 for system 1 or 2. When the *O_2/N_2 CNTLR VLV* switch on panel L2 is positioned to *AUTO*, electrical power automatically energizes or deenergizes the corresponding O_2/N_2 control valve.

When the corresponding PPO_2 sensor determines that oxygen is required in the crew cabin to maintain the level above 2.95 psi, the nitrogen supply valve is automatically closed. When the 200-psi nitrogen

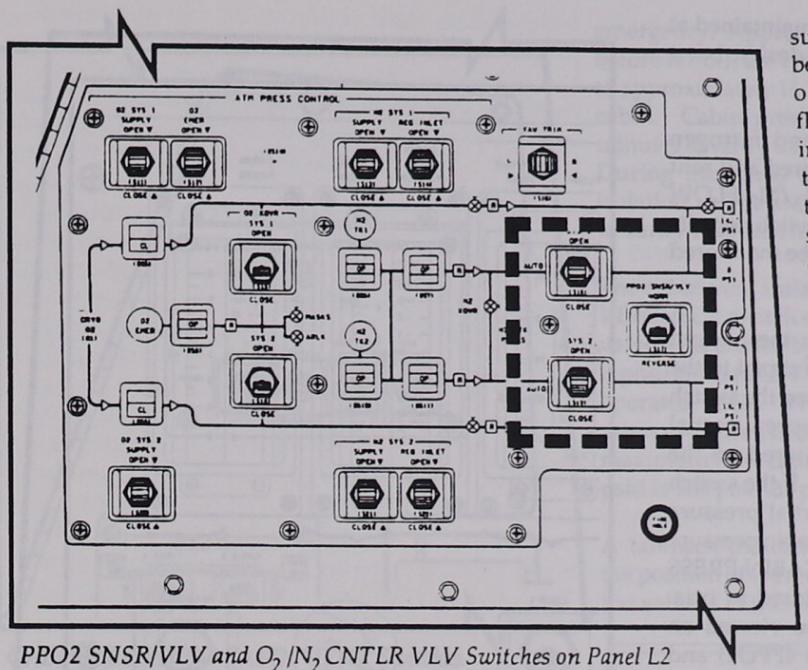

PPO2 SNSR/VLV and O_2 /N_2 CNTLR VLV Switches on Panel L2

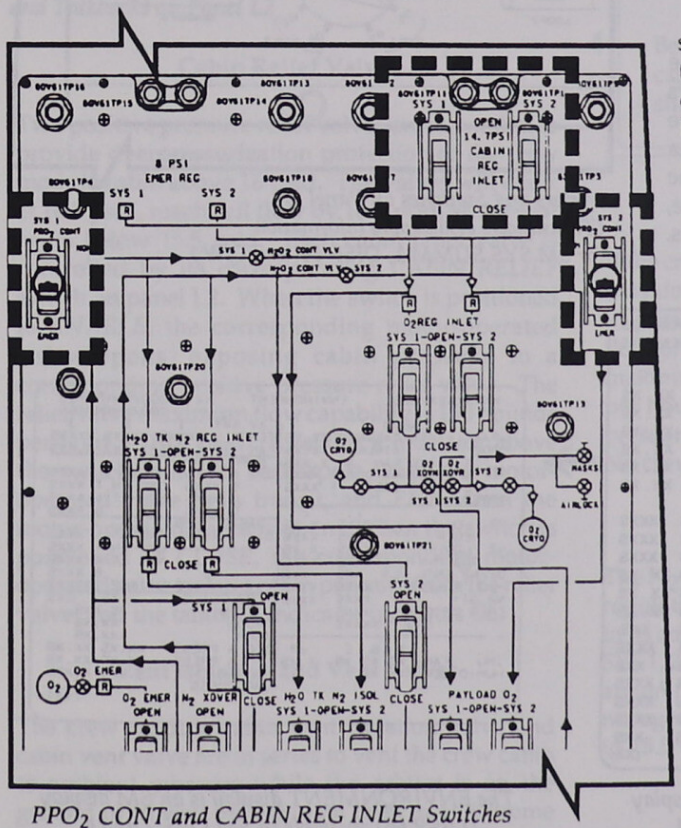

PPO_2 CONT and CABIN REG INLET Switches on Panel MO10W

supply in the manifold drops below 100 psi, the corresponding oxygen supply system now flows through its check valve into the manifold and through the 14.7 psi cabin regulator into the crew cabin. When the PPO_2 sensor determines that the oxygen in the crew cabin is at 3.45 psi, the corresponding O_2/N_2 control valve is automatically opened. The 200-psi nitrogen enters the O_2/N_2 manifold and closes the corresponding oxygen supply system check valve, and nitrogen flows through the 14.7 psi regulator into the crew cabin until the cabin pressure reaches 14.7 psia ± 0.2, at which time the valve closes. The *OPEN* and *CLOSE* positions of the *O_2/N_2 CNTLR VLV SYS 1* and *SYS 2* switches on panel L2 permit the flight crew to manually control the nitrogen valve in each system, and thus manually switch between O_2 and N_2 systems. The *REVERSE* position of the *PPO2 SNSR/VLV* switch on panel L2 allows sensor B to control system 1 and sensor A to control system 2.

If the *SYS 1* and *SYS 2 14.7 PSI CABIN REG INLET* switches on panel MO10W are closed, the crew module cabin pressure will be controlled gradually to 8 psi at a rate dependent on cabin leakage. The *SYS 1* and *SYS 2 PPO_2 CONT* switches on panel MO10W are positioned to *EMER* for the corresponding system, which selects the 2.2 psi oxygen partial pressure. The corresponding PPO_2 sensor and controller, through the corresponding *PPO_2 CONT* switch on panel MO10W and the *PPO2 SNSR/VLV* switch on panel L2 positioned to *NORM*, provide electrical inputs to the corresponding *O_2/N_2 CNTLR VLV* switch on panel L2. The electrical output from the applicable *O_2/N_2 CNTLR VLV* switch controls the nitrogen valve in that supply system in the same manner as in the 14.7 psi mode except that the crew module

cabin oxygen partial pressure is maintained at 2.2 psi. This is part of the original design, but it has never been used.

The oxygen systems 1 and 2 and nitrogen systems 1 and 2 flows are monitored and sent to the rotary switch below the O_2/N_2 FLOW meter on panel O1. The rotary switch permits the flow of the selected system to be monitored on the meter in pounds per hour.

PPO_2 sensors A and B monitor the oxygen partial pressure and transmit the signal to the *SENSOR* switch on panel O1. When the switch is positioned to *SENSOR A*, oxygen partial pressure from sensor A is monitored on the PPO_2 meter on panel O1 in psia. If the switch is set on *SENSOR B*, oxygen partial pressure from sensor B is monitored. The cabin pressure sensor transmits directly to the CABIN PRESS meter on panel O1 and is monitored in psia. All these parameters can also be viewed on CRT displays SM SYS SUMM 1 (PPO2) and DISP 66, ENVIRONMENT (PPO2 A, B, C).

A klaxon will sound in the crew cabin, and the *MASTER ALARM* push button light indicators will be illuminated if the change in pressure versus change in time (dP/dT) decreases at a rate of 0.08 psi per minute or greater. The normal cabin dP/dT is zero psi per minute, plus or minus 0.01 psi, for all normal operations.

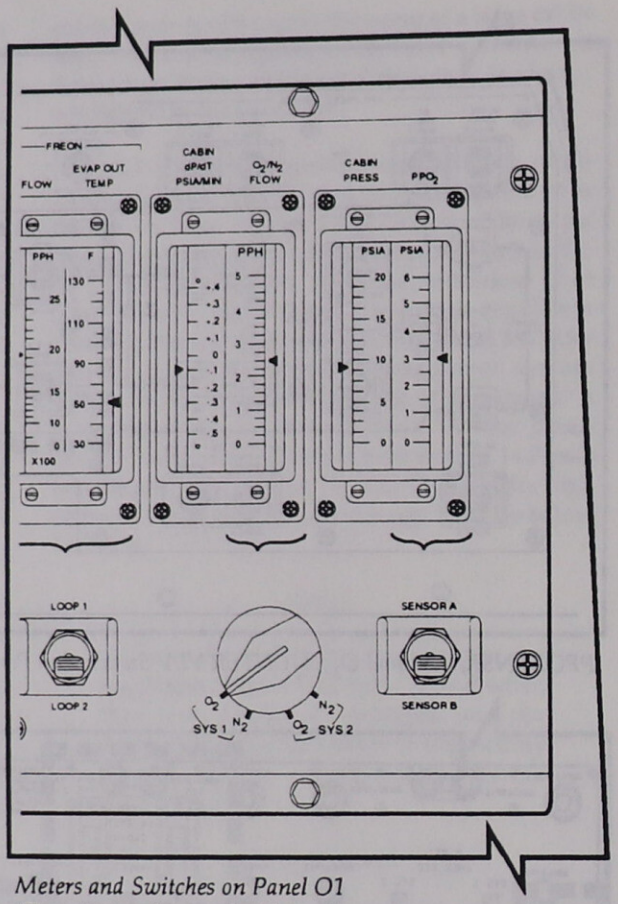

Meters and Switches on Panel O1
(Transducers also supply information for SM SYS SUMM 1, DISP 66, and C/W.)

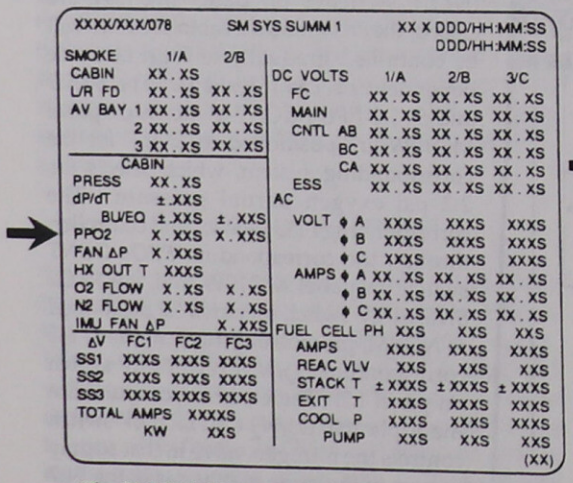

The SM SYS SUMM 1 display is an SM display (DISP 78) available in SM OPS 2 and 4.

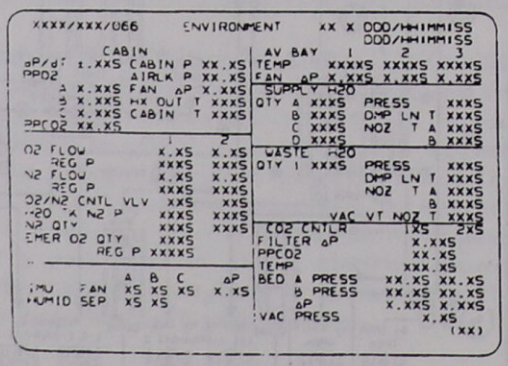

The ENVIRONMENT display is an SM display (DISP 66) available in SM OPS 2 and 4.

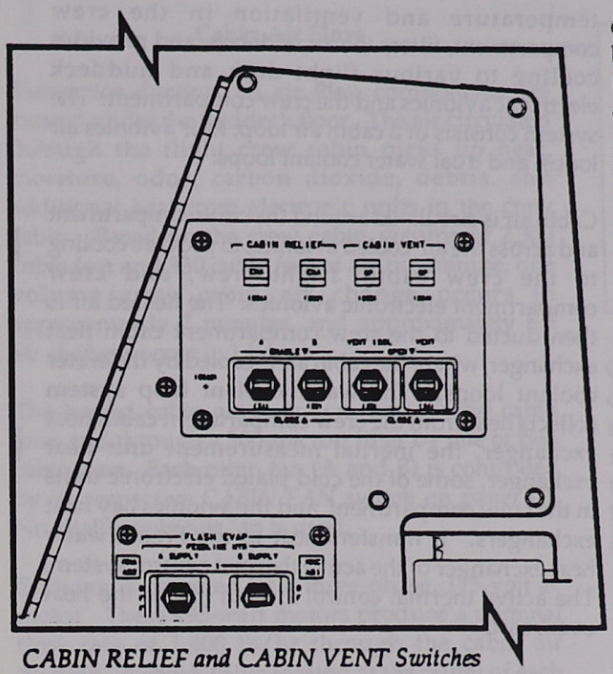

CABIN RELIEF and CABIN VENT Switches and Talkbacks on Panel L2

Cabin Relief Valves

Two positive pressure relief valves are in parallel to provide overpressurization protection of the crew module cabin above 16 psid. The valves will crack at 16.0 psid, reach full flow by 16.8 psid, and reseat again below 15.5 psid. Each cabin relief valve is controlled by its corresponding *CABIN RELIEF* switch on panel L2. When the switch is positioned to *ENABLE*, the corresponding motor-operated valve opens, exposing cabin pressure to a corresponding positive pressure relief valve. The relief valve maximum flow capability is 150 pounds per hour at 16.0 psid. A talkback indicator above the switch indicates barberpole when the motor-operated valve is in transit, and *ENA* when the motor-operated valve is open. When the switch is positioned to *CLOSE*, the corresponding motor-operated valve isolates cabin pressure from the relief valve, and the talkback indicator indicates *CL*.

Vent Isolation and Vent Valves

The crew module cabin vent isolation valve and cabin vent valve are in series to vent the crew cabin to ambient pressure while the orbiter is on the ground or to vent the cabin on orbit in an extreme emergency. Approximately 1 hour and 30 minutes before lift-off, the crew module cabin is pressurized to approximately 16.7 psi for leak checks of the crew cabin. Cabin pressure is then monitored for 35 minutes to verify that no pressure decay is occurring. During this time, the cabin vent and cabin vent isolation valves are alternately opened and closed to verify that each holds pressure.

The cabin vent isolation valve is controlled by the *VENT ISOL* switch on panel L2, and the cabin vent valve is controlled by the *VENT* switch. Each switch is positioned to *OPEN* to control its respective motor-operated valve. When both valves are open, the cabin pressure is vented into the midfuselage. The maximum flow capability through the valves at 0.2 psid is 900 pounds per hour.

A talkback indicator above each switch indicates the position of the respective valve: barberpole when the valve is in transit, and *OP* when it is open.

> **WARNING**
>
> Because of the high flow capability of the cabin vent isolation valves, these valves should never be opened after lift-off.

Negative Pressure Relief Valves

If the crew cabin pressure is lower than the pressure outside the cabin, two negative pressure relief valves in parallel will open at 0.2 to 0.7 psid, permitting flow of ambient pressure into the crew cabin. The maximum flow rate at 0.5 psid is zero to 654 pounds per hour. Caps over each valve provide a positive pressure seal and will pop off when the valve opens. No crew controls are necessary.

Water Tank Regulator Inlet Valve

The H_2O TK N_2 REG INLET valve in each nitrogen-regulated supply system permits nitrogen to flow to its corresponding regulator and H_2O TK N_2 ISOL SYS 1, 2 valve. The inlet and isolation manual valves are on panel MO10W. The water regulator in each nitrogen system reduces the 200 psi supply pressure to 15.5 to 17.0 psig. Each regulator is a two-stage

regulator with the second stage relieving pressure into the crew cabin at a differential pressure of 18.5 ± 1.5 psig.

Airlock Depressurization and Equalization Valves

The airlock pressure is maintained equal with cabin pressure using the dual equalization valves located on the cabin/airlock hatch. The airlock depressurization valve is used to depressurize the cabin to 10.2 psia and to depressurize the airlock for EVA.

Atmospheric Revitalization System

The atmospheric revitalization system circulates air and water through the crew compartment to control relative humidity, typically between 30 and 65 percent. The system maintains carbon dioxide and carbon monoxide at non-toxic levels, controls temperature and ventilation in the crew compartment, filters the air of debris, and provides cooling to various flight deck and middeck electronic avionics and the crew compartment. The system consists of a cabin air loop, four avionics air loops, and dual water coolant loops.

Cabin air is circulated around the crew compartment and across the air-cooled avionics, to provide cooling to the crew cabin, flight crew, and crew compartment electronic avionics. The heated air is then ducted to the crew compartment cabin heat exchanger, where the cabin air is cooled by the water coolant loops. The water coolant loop system collects heat from the crew compartment cabin heat exchanger, the inertial measurement unit heat exchanger, some of the cold plated electronic units in the crew compartment, and the avionics bay heat exchangers. It transfers heat to the Freon/water heat exchanger of the active thermal control system. The active thermal control system expels the heat overboard.

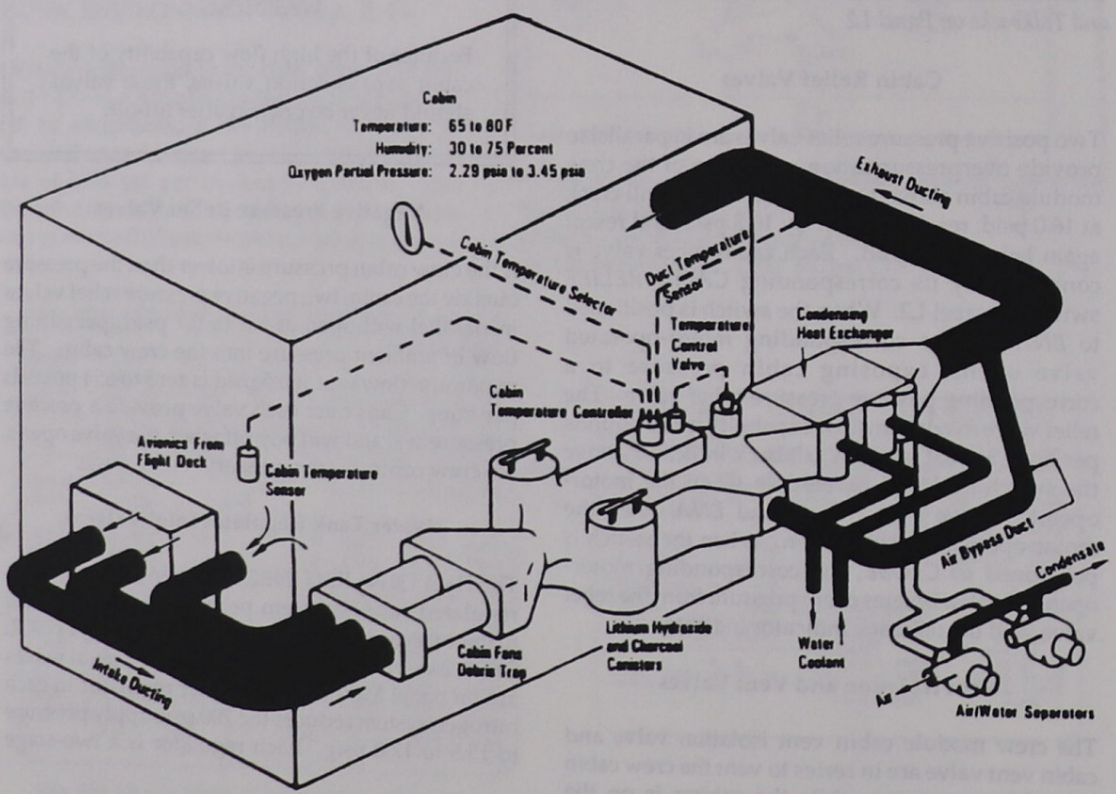

Cabin Air

Cabin Air Flow

Except for ducting, all air loop components are located under the middeck floor. The air circulated through the flight crew cabin picks up heat, moisture, odor, carbon dioxide, debris, and additional heat from electronic units in the crew cabin. Based on the crew cabin volume of 2,300 cubic feet and 330 cubic feet of air per minute, one volume crew cabin air change occurs in approximately 7 minutes, and approximately 8.5 air changes occur in 1 hour.

The heated cabin air is drawn through the cabin loop and through a 300-micron filter by one of two cabin fans. Each cabin fan (A and B) is controlled by its respective *CABIN FAN* switch on panel L1. Normally, only one fan is used.

Each fan is powered by a three-phase, 115-volt ac motor. These 495-watt motors produce a nominal flow rate of 1,400 lb/hr through the cabin air ducting. A check valve located at the outlet of each fan prevents air from backflowing through the nonoperating fan. This flapper-type check valve will open if there is a 2 inch H_2O (.0723 psi) differential pressure across the valve. A cabin fan will not start on two phases of ac. However, if the cabin fan is already operating when a phase of ac is lost, the fan will continue to run on two phases of ac. A cabin fan can be started on 2-1/2 phases of ac, with the extra half phase provided by the induced voltage generated by other rotating equipment (that is, fans and pumps) running on that ac bus. If a phase of ac is lost with a short, then the induced voltage will not be usable, and starting the cabin fan will not be possible.

Lithium Hydroxide Canisters

The cabin air leaves the cabin fan at a rate of about 1,400 lb/hr. An orifice in the duct directs approximately 120 lb/hr to each of two lithium hydroxide canisters, where carbon dioxide is removed, and activated charcoal removes odors and trace contaminants. The canisters are changed periodically on a predetermined schedule, generally one or two times a day, through an access door. (For larger crews, the canisters are changed more frequently.) Each canister is rated at 48 man-hours. Up to 30 spare canisters are stored under the middeck floor in a locker between the cabin heat exchanger and water tanks.

CAUTION

During lithium hydroxide canister changeout, both cabin fans should be turned off. Dust from the canisters kicked up by the cabin fan has caused eye and nose irritation. Lithium hydroxide dust may also be a contributing factor to humidity separator failures.

OV 102 utilizes lithium hydroxide canisters only during launch and landing. On orbit, the regenerable carbon dioxide system (RCRS), incorporated as part of the EDO modifications, is the primary system. LiOH canisters also provide backup to the RCRS on this vehicle. OV 105 is also capable of supporting the RCRS, but currently the system is not installed. OVs 103 and 104 are not configured for RCRS and have only the LiOH system for carbon dioxide removal. Current major modifications to OV 104 do not include inclusion of the RCRS.

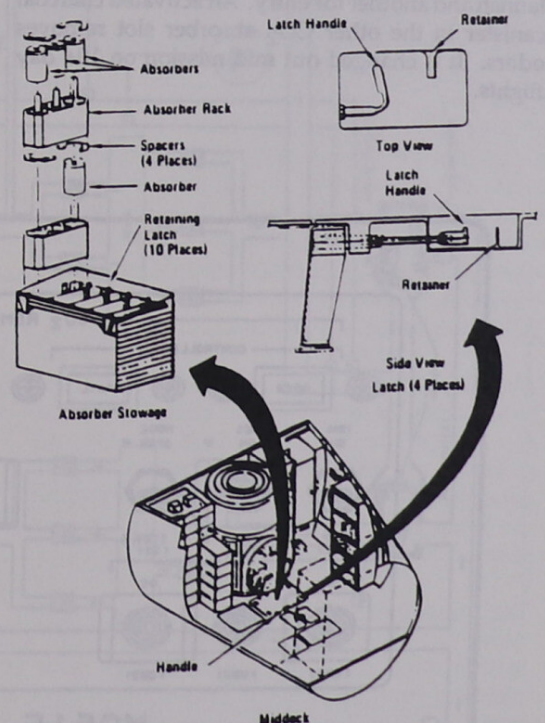

Carbon Dioxide Absorbers

Regenerable Carbon Dioxide Removal System

The ability to use the RCRS in the EDO orbiters solved a major weight and volume stowage problem encountered when attempting to conduct 10 to 16 day duration missions for a crew of up to seven astronauts. Carbon dioxide removal is accomplished by passing cabin air through one of two identical solid amine resin beds. The resin consists of a polyethylenimine (PEI) sorbent coating on a porous polymeric substrate. Upon exposure to carbon dioxide laden cabin air, the resin combines with water vapor in the air to form a hydrated amine which reacts with carbon dioxide to form a weak bicarbonate bond. Water is required for the process since dry amine cannot react with the carbon dioxide directly. While one bed adsorbs carbon dioxide, the other bed regenerates with thermal treatment and vacuum venting. This latter requirement prevents the use of the RCRS during ascent or entry. The adsorption/regeneration process runs continuously with the beds automatically alternating processes every 13 minutes. A full cycle is made up of two 13 minute cycles. An RCRS configured vehicle uses a single LiOH canister for launch and another for entry. An activated charcoal canister in the other CO_2 absorber slot removes odors. It is changed out mid mission on 10+ day flights.

The RCRS is located in volume D under the middeck floor. In addition to the two chemical beds, the major components of the RCRS include a set of vacuum cycle and pressure equalization valves, an RCRS fan, an airflow control valve, an ullage-save compressor, and two redundant controllers (1 and 2). The airflow control valve is set prelaunch for either a crew size of 4 to 5 or 6 to 7 crewmembers. These two positions select airflow through the RCRS of 67 or 92 lb/hr respectively. The control switches for the RCRS are located on panel MO51F. Both ac and dc power for the 1 and 2 controllers are operated from this panel. Each controller has a three position momentary switch for selection of *OPER* or *STBY*. This panel also has status lights for each controller which illuminate *OPER* or *FAIL* as appropriate. Crew insight into RCRS operation is found on SPEC 66 ENVIRONMENT in OPS 2 or 4.

The scrubbed air is then forced through the rest of the ARS. Cabin air is then directed to the crew cabin heat exchanger where heat is transferred to the water coolant loop. Humidity condensation that forms in the heat exchanger is pushed by the air flow to the slurper. One of two humidity separators draws air and water from the slurper. In the humidity separator, centrifugal force separates the water from the air. The fan separator removes up to approximately 4 pounds of water per hour. The water is routed to the waste water tank, and the air is ducted through the exhaust for return to the cabin.

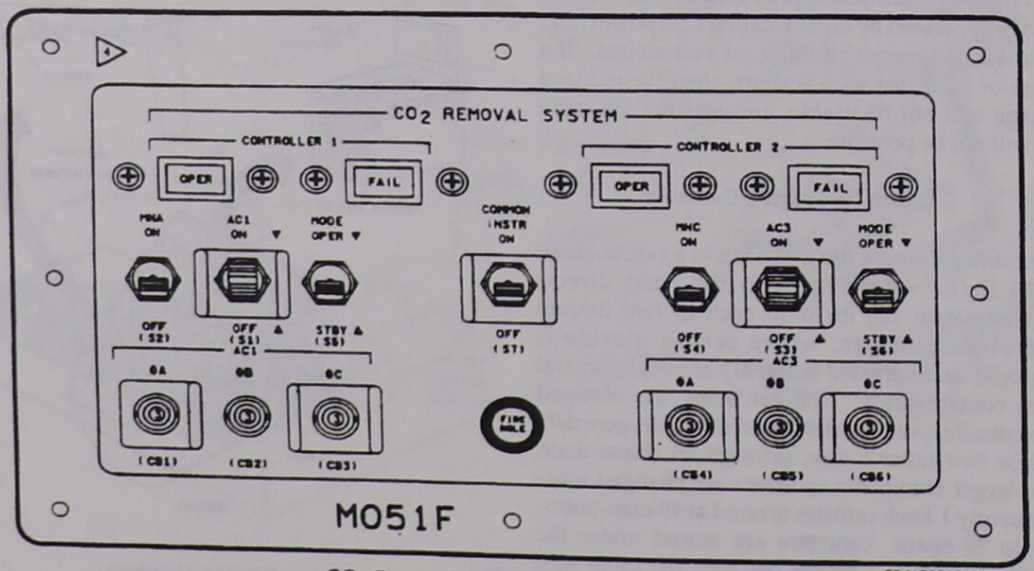

CO_2 Removal System Panel MO5IF

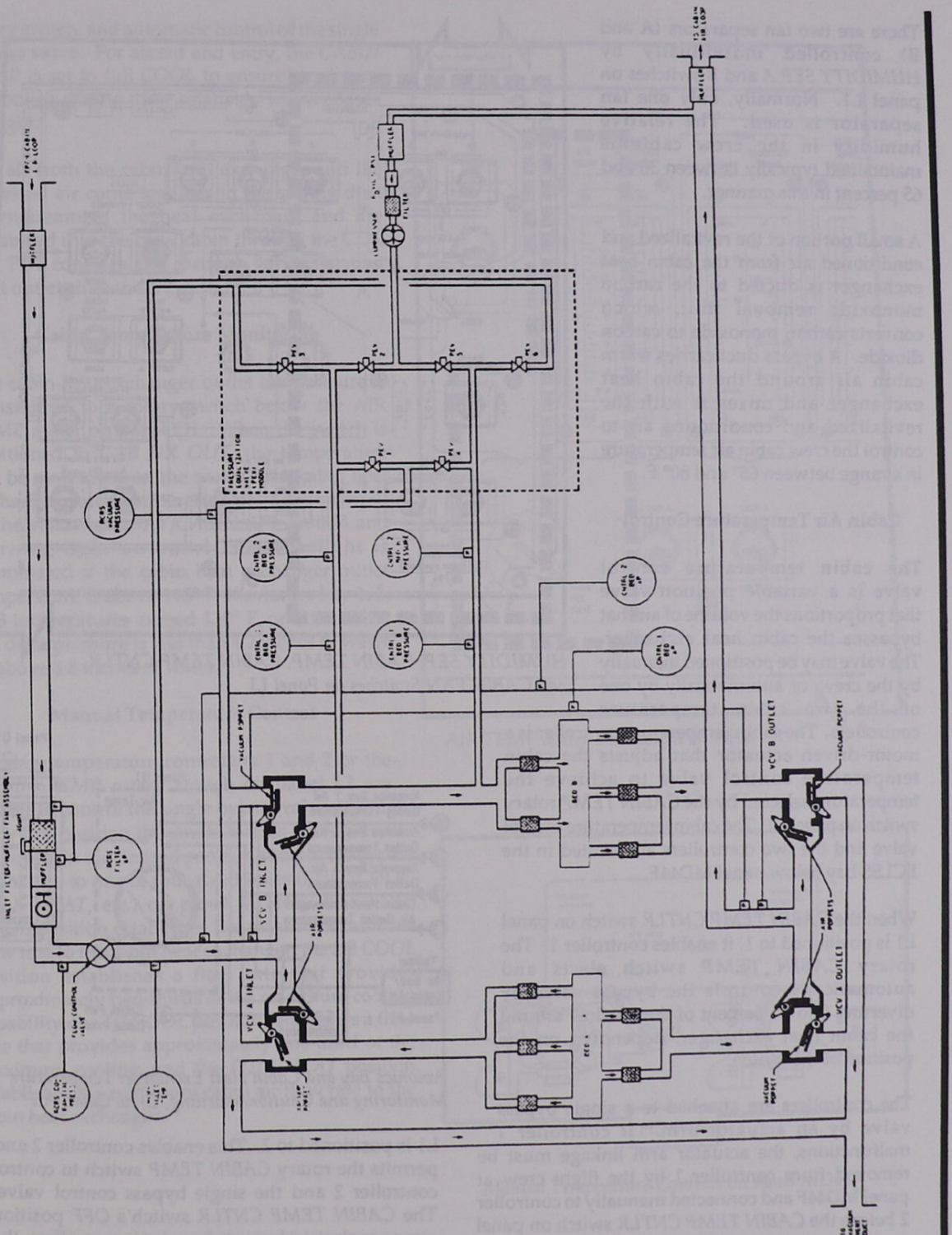

Regenerable Carbon Dioxide Removal System (RCRS)

There are two fan separators (A and B) controlled individually by *HUMIDITY SEP A* and *B* switches on panel L1. Normally, only one fan separator is used. The relative humidity in the crew cabin is maintained typically between 30 and 65 percent in this manner.

A small portion of the revitalized and conditioned air from the cabin heat exchanger is ducted to the carbon monoxide removal unit, which converts carbon monoxide to carbon dioxide. A bypass duct carries warm cabin air around the cabin heat exchanger and mixes it with the revitalized and conditioned air to control the crew cabin air temperature in a range between 65° and 80° F.

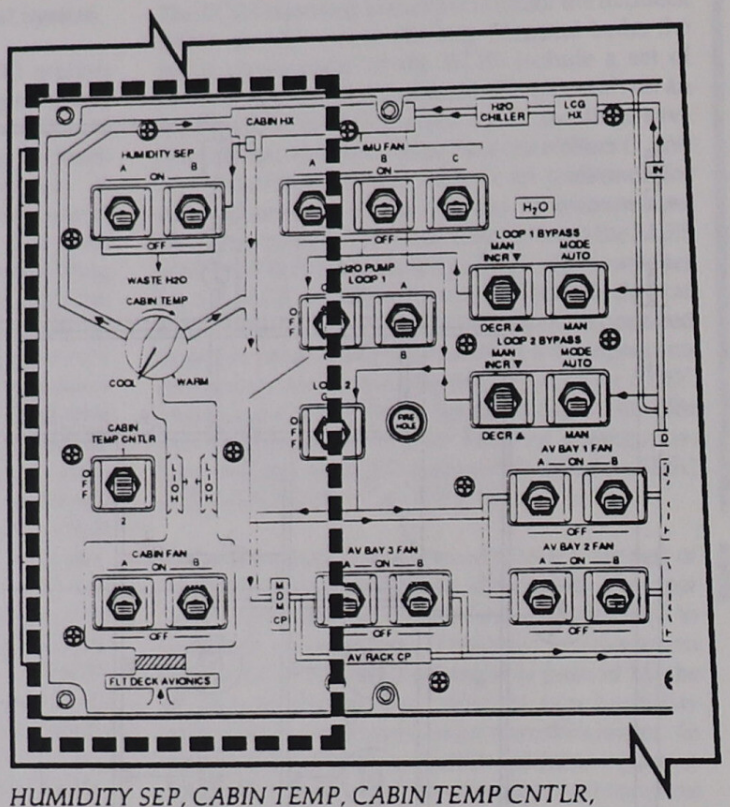

HUMIDITY SEP, CABIN TEMP, CABIN TEMP CNTLR, and CABIN FAN Switches on Panel L1

Cabin Air Temperature Control

The cabin temperature control valve is a variable position valve that proportions the volume of air that bypasses the cabin heat exchanger. The valve may be positioned manually by the crew, or automatically by one of the two cabin temperature controllers. The cabin temperature controller is a motor-driven actuator that adjusts the cabin temperature control valve to achieve the temperature selected by the *CABIN TEMP* rotary switch on panel L1. The cabin temperature control valve and the two controllers are located in the ECLSS bay below panel MD44F.

When the *CABIN TEMP CNTLR* switch on panel L1 is positioned to 1, it enables controller 1. The rotary *CABIN TEMP* switch elects and automatically controls the bypass valve by diverting 0 to 70 percent of the air flow around the cabin heat exchanger, depending on the position of the switch.

The controllers are attached to a single bypass valve by an actuator arm. If controller 1 malfunctions, the actuator arm linkage must be removed from controller 1 by the flight crew at panel MD44F and connected manually to controller 2 before the *CABIN TEMP CNTLR* switch on panel

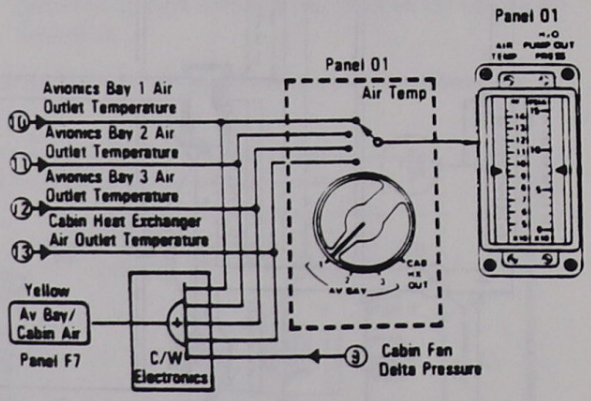

Avionics Bay and Cabin Heat Exchanger Temperature Monitoring and Caution/Warning, Crew Cabin Air

L1 is positioned to 2. This enables controller 2 and permits the rotary *CABIN TEMP* switch to control controller 2 and the single bypass control valve. The *CABIN TEMP CNTLR* switch's *OFF* position removes electrical power from both controllers, the

rotary switch, and automatic control of the single bypass valve. For ascent and entry, the *CABIN TEMP* is set to full *COOL* to ensure maximum air cooling during these relatively warm phases of flight.

The air from the cabin heat exchanger and the bypassed air come together in the supply duct downstream of the heat exchanger and are exhausted into the crew cabin through the CDR and PLT consoles and through various station duct outlets into the crew cabin.

Cabin Temperature Monitoring

The cabin heat exchanger outlet temperature is transmitted to a rotary switch below the AIR TEMP meter on panel O1. When the switch is positioned to *CAB HX OUT*, the temperature can be monitored on the meter. The cabin heat exchanger outlet temperature provides an input to the yellow *AV BAY/CABIN AIR* caution and warning light on panel F7. The light is illuminated if the cabin heat exchanger outlet temperature is above 145° F, if avionics bay 1, 2, or 3 temperatures exceed 130° F, or if the cabin fan delta pressure is less than 4.2 inches of water or above 6.8 inches of water.

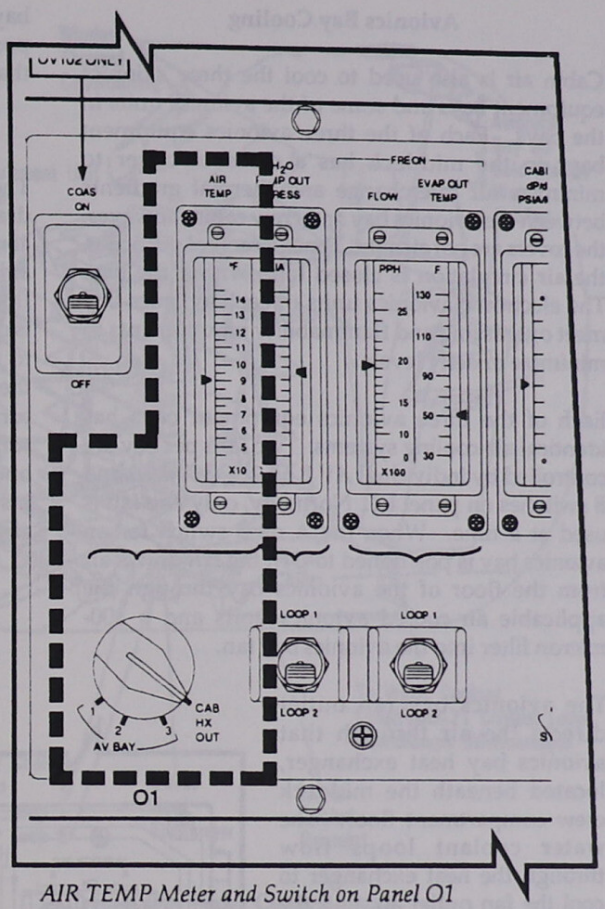

AIR TEMP Meter and Switch on Panel O1

Manual Temperature Control

If cabin temperature controllers 1 and 2 or the *CABIN TEMP* rotary switch on panel L1 are unable to control the single bypass valve, the flight crew can position the single bypass valve actuator drive arm to the desired position and pin the bypass valve arm to one of four fixed holes (*FULL COOL, FULL HEAT*, etc.) on panel MD44F. The *FULL COOL* position establishes the maximum cabin air flow rate to the cabin heat exchanger, the *2/3 COOL* position establishes a flow rate that provides approximately two-thirds of the maximum cooling capability, the *1/3 COOL* position establishes a flow rate that provides approximately one-third of the maximum cooling, and the *FULL HEAT* position establishes the minimum cabin air flow rate to the cabin heat exchanger.

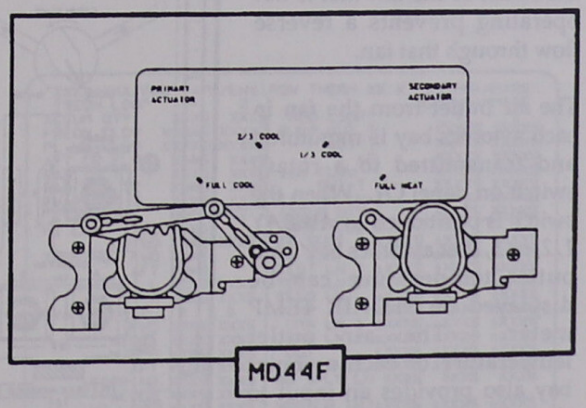

Manual Temperature Controls on Panel MD44F

Avionics Bay Cooling

Cabin air is also used to cool the three avionics equipment bays and some of the avionics units in the bays. Each of the three avionics equipment bays in the middeck has a closeout cover to minimize air interchange and thermal gradients between the avionics bay and crew cabin; however, the covers are not airtight. For all practical purposes, the air circulation is closed loop within the bay. The electronic avionics units in each avionics bay meet outgassing and flammability requirements to minimize toxicity levels.

Each of the three avionics equipment bays has identical air-cooling systems. Two fans per bay are controlled by individual *AV BAY 1, 2, 3 FAN A* and *B* switches on panel L1. Normally, only one fan is used at a time. When the A or B switch for an avionics bay is positioned to *ON*, the fan draws air from the floor of the avionics bay through the applicable air-cooled avionics units and a 300-micron filter into the avionics bay fan.

The avionics bay fan outlet directs the air through that avionics bay heat exchanger, located beneath the middeck crew compartment floor. The water coolant loops flow through the heat exchanger to cool the fan outlet air, and the cooled air is returned to the avionics bay. A check valve in the outlet of the fan that is not operating prevents a reverse flow through that fan.

The air outlet from the fan in each avionics bay is monitored and transmitted to a rotary switch on panel O1. When the switch is positioned to *AV BAY 1, 2,* or *3*, that avionics bay's fan outlet temperature can be displayed on the AIR TEMP meter. The air outlet temperature of each avionics bay also provides an input to the yellow *AV BAY/CABIN AIR* caution and warning light on panel F7. This light is illuminated if any of the avionics bay outlet temperatures are above 130° F. The *OFF* position of the *A* or *B* switch removes power from that avionics bay fan.

Inertial Measurement Unit (IMU) Cooling

The three IMUs are cooled by one of three fans drawing cabin air through a 300-micron filter and across the three IMUs. The fans are located in avionics bay 1. The fan outlet air flows through the IMU heat exchanger located on the flight deck and is cooled by the water coolant loops before returning to the crew cabin. Each IMU fan is controlled by the *IMU FAN* switches on panel L1. The *ON* position turns the corresponding fan on, and the *OFF* position turns it off. Normally, one fan is sufficient because one fan cools all three IMUs. A check valve is installed on the outlet of each fan to prevent a reverse air flow through the fans that are not operating.

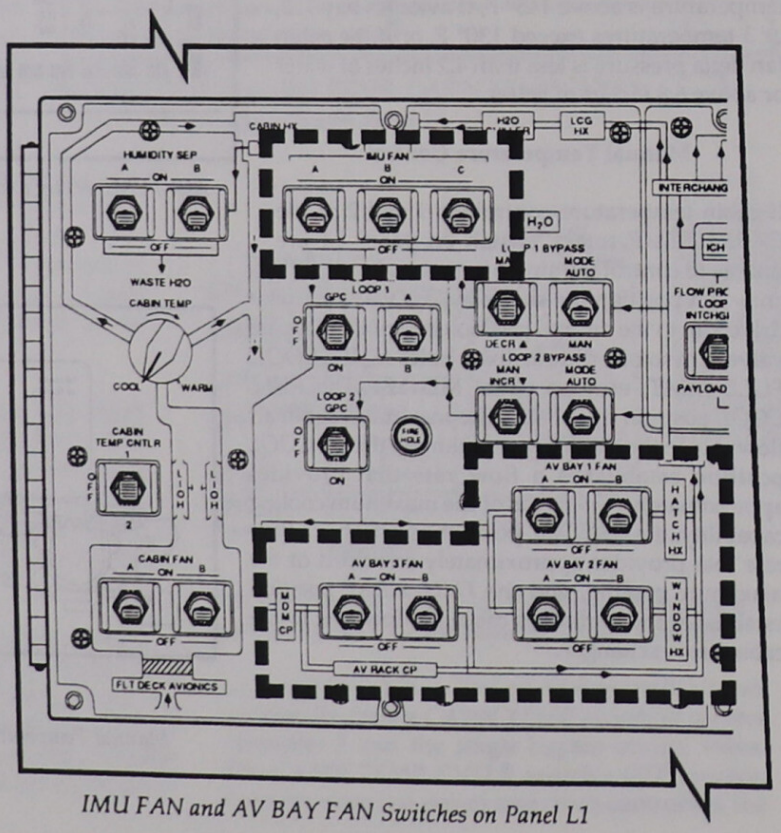

IMU FAN and AV BAY FAN Switches on Panel L1

Spacelab Air Revitalization

If the payload bay contains the Spacelab module, a kit is installed to provide ducting for the flow of cabin air from the middeck through the airlock and tunnel to the module. Information about the kit and its operation is provided in Section 2.21.

Water Coolant Loop System

The water coolant loops circulate water through the crew compartment to collect excess heat and transfer it to the Freon coolant loops. Two complete, separate water coolant loops flow side by side and can operate at the same time, although only one is active at any given time. Loop 2 is normally the active loop. The only difference between loops 1 and 2 is that loop 1 (the backup) has two water pumps, and loop 2 has one pump. The water pumps are located in the ECLSS bay below the forward lockers. The pumps are powered by three-phase, 115-volt ac motors.

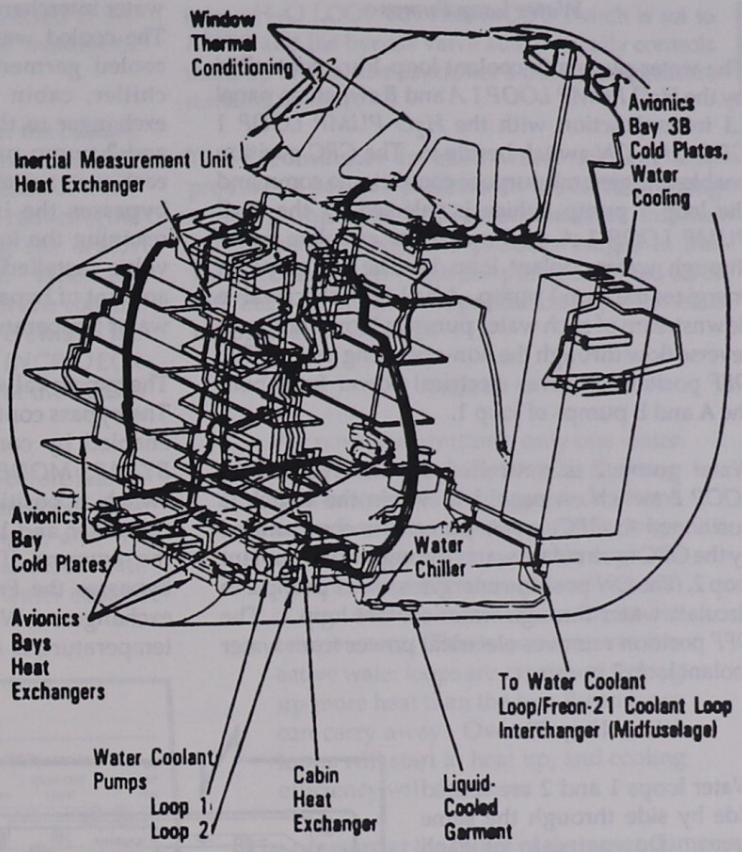

Crew Cabin Water Coolant Loops

Some electronic units in each of the avionics equipment bays and in the cabin are mounted on cold plates. The water coolant loops flow through the cold plates, and the heat generated by the electronics unit is transferred to the cold plate and then to the water coolant loop, which carries heat from the electronic unit. The cold plates mounted on the shelves in each avionics equipment bay are connected in a series-parallel arrangement with respect to the water coolant loop flow.

Status of the water loops can be monitored on the APU/ENVIRON THERM display (DISP 88), which is available in SM OPS 2 and 4. The information is found in the items under H2O LOOP.

XXXX/XXX/088 APU/ENVIRON THERM XX X DOD/HHIMMISS
DOD/HHIMMISS

FREON LOOP	1	2
ACCUM QTY	XXXS	XXXS
FREON FLOW	XXXXS	XXXXS
PL HX FLOW	XXXXS	XXXXS
AFT CP FLOW	XXXS	XXXS
RAD IN T	XXXS	XXXS
RAD OUT T	XXXS	XXXS
EVAP OUT T	XXXS	XXXS

EVAP TEMP	DUCT NO2	
HI LOAD INBD	XXXS	
OUTBD	XXXS	XXXS
TOPPING FWD	XXXS	
AFT	XXXS	
L	XXXS	XXXS
R	XXXS	XXXS

EVAP FDLN T	A	B
FWD	XXXS	XXXS
MID 1	XXXS	XXXS
MID 2	XXXS	XXXS
AFT	XXXS	XXXS
TOPPING	XXXS	XXXS
ACCUM	XXXS	XXXS
HI LOAD	XXXS	XXXS

H2O LOOP		1	2
PUMP	OUT P	XXXXS	XXXXS
	OUT T	XXXXS	XXXXS
	ΔP	XXXXS	XXXXS
ICH FLOW		XXXXS	XXXXS
	OUT T	XXXXS	XXXXS
CAB HX IN T		XXXXS	XXXXS
ACCUM QTY		XXXXS	XXXXS

APU FUEL T	1	2	3
TK SURF	±XXXS	±XXXS	±XXXS
TK HTR	±XXXS	±XXXS	±XXXS
TEST LN 1	±XXXS	±XXXS	±XXXS
TEST LN 2	±XXXS	±XXXS	±XXXS
FEED LN	±XXXS	±XXXS	±XXXS
PUMP IN	±XXXS	±XXXS	±XXXS
DRN LN 1	±XXXS	±XXXS	±XXXS
DRN LN 2	±XXXS	±XXXS	±XXXS
OUT	±XXXS	±XXXS	±XXXS
BYP LN	±XXXS	±XXXS	±XXXS
GG SPLY LN	XXXS	XXXS	XXXS
H2O LN INJ	±XXXS	±XXXS	±XXXS (XX)

APU/ENVIRON THERM Display (DISP 88)

Water Loop Pumps

The water pumps in coolant loop 1 are controlled by the *H_2O PUMP LOOP 1 A* and *B* switch on panel L1 in conjunction with the *H_2O PUMP LOOP 1 GPC, OFF, ON* switch beside it. The *GPC* position enables the general-purpose computer to command the loop 1 pump, which is selected by the *H_2O PUMP LOOP 1 A* or *B* switch, to circulate water through water coolant loop 1. The *ON* position energizes the loop 1 pump. A ball-type check valve downstream of each water pump in loop 1 prevents reverse flow through the non-operating pump. The *OFF* position removes electrical power from both the A and B pumps of loop 1.

Water pump 2 is controlled by the *H_2O PUMP LOOP 2* switch on panel L1. When the switch is positioned to *GPC*, water pump 2 is commanded by the GPC to circulate water through water coolant loop 2. The *ON* position energizes water pump 2 to circulate water through water coolant loop 2. The *OFF* position removes electrical power from water coolant loop 2 pump.

Water Loop Flow

Water loops 1 and 2 are routed side by side through the same areas. Downstream of each water pump, water flow splits into three parallel paths. One is through the avionics bay 1 air/water heat exchanger and cold plates. A second is through the avionics bay 2 air/water heat exchanger and cold plates, payload bay floodlight cold plates, and thermal conditioning of the crew cabin windows. A third is through the crew cabin MDM flight deck cold plates, the avionics bay 3A air/water heat exchanger and cold plates, and the avionics bay 3B cold plates. The three parallel paths in each coolant loop then rejoin upstream of the Freon/water heat interchanger. The flow path splits again with one parallel path in each water coolant loop flowing through the Freon/water interchanger, where the water loop is cooled. The cooled water then flows through the liquid-cooled garment heat exchanger, potable water chiller, cabin heat exchanger, and IMU heat exchanger to the respective water coolant loop 1 and 2 pump package. The other parallel path in each water coolant loop, containing warm water, bypasses the interchanger and heat exchanger, rejoining the loop at the loop pump package. A valve installed in the bypass path controls the amount of bypass flow, thus controlling the mixed water temperature out of the pump package.

The bypass valve is controlled by bypass controllers. The bypass controller in each water coolant loop is enabled by corresponding *H_2O LOOP 1* and *2 BYPASS MODE* switches on panel L1. When the switch is positioned to *AUTO*, the water bypass controller and bypass valve automatically control the amount of water in the coolant loop that bypasses the Freon/water interchanger and heat exchangers. When the bypass controller's outlet temperature is 65.5° F, the loop's bypass valve is

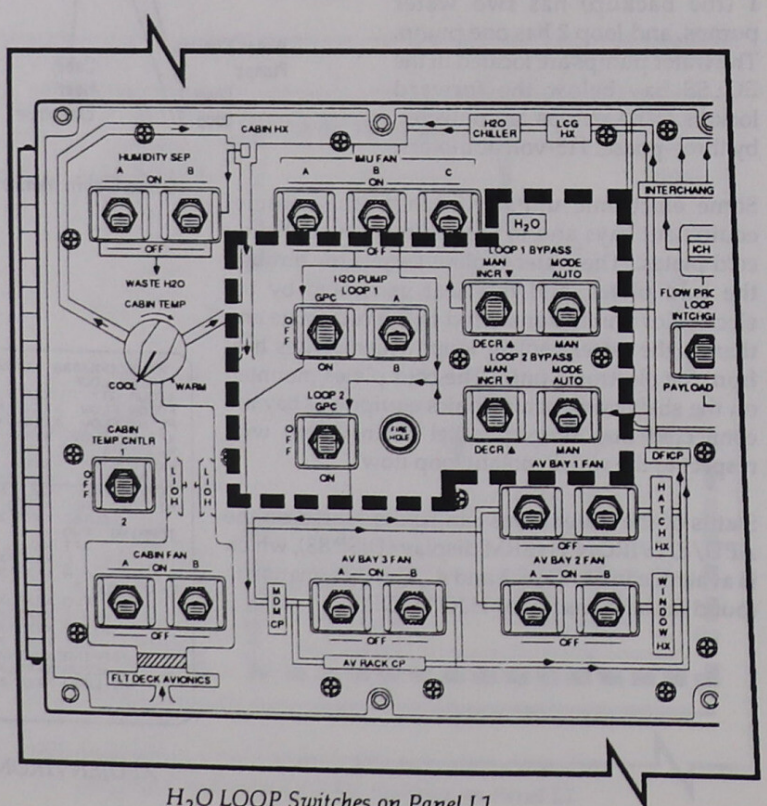

H_2O LOOP Switches on Panel L1

fully closed, and all the loop flow is directed to the Freon/water interchanger to provide maximum cooling.

When the bypass controller senses that the coolant loop water pump's outlet temperature is 60.5° F, the controller bypasses a maximum amount of water around the Freon/water interchanger, reducing the heat rejection rate and increasing the water temperature out of the pump outlet. When the *H_2O LOOP BYPASS MODE* switch for the coolant loop is positioned to *MAN*, the flight crew sets the corresponding *H_2O LOOP MAN INCR/DECR* switch on panel L1 to manually control the bypass valve in that water coolant loop.

The bypass valve is manually adjusted before launch to provide a flow of 900 to 1,000 pounds per hour through the Freon/water interchanger, and the control system remains in the manual mode until post insertion. On orbit, the active water coolant loop's H_2O LOOP BYPASS MODE switch is set to AUTO and the bypass valve automatically controls the loop so that the controller's outlet temperature remains at 63°.F.

The accumulator in each water coolant loop provides a positive pressure on the corresponding water pump inlet and accommodates thermal expansion and dampens pressure surges in that water coolant loop when the pump is turned on or off. Each accumulator is pressurized with gaseous nitrogen at 19 to 35 psi.

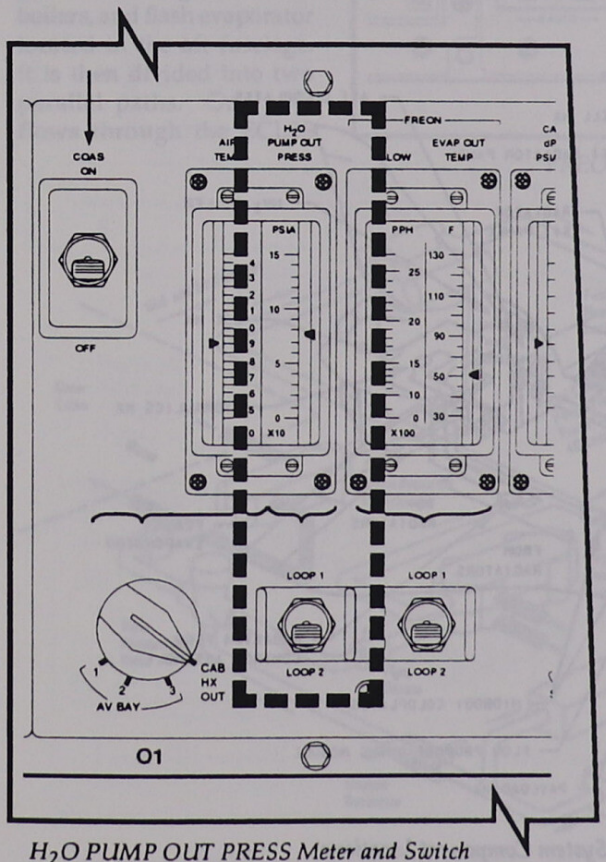

H_2O PUMP OUT PRESS Meter and Switch on Panel O1 (The same transducer feeds SM DISP 88)

NOTE

For normal operations, only one water loop is active (usually loop 2). Running two water loops for long periods of time is undesirable. Two operating loops will flow too much water through the Freon/water interchanger and result in a significant increase in the cabin temperature. This occurs because two active water loops are capable of picking up more heat than the two Freon loops can carry away. Over time, the water loops will start to heat up, and cooling efficiency will decrease.

The pressure at the outlet of the water pump in each water coolant loop is monitored and transmitted to the H_2O PUMP OUT PRESS meter on panel O1. The appropriate loop is selected by the switch below the meter. When the switch is positioned to *LOOP 1* or *LOOP 2*, the corresponding water coolant loop's pressure in psia is monitored on the meter.

The yellow *H_2O LOOP* caution and warning light on panel F7 will be illuminated if the outlet pressure of the water coolant loop 1 pump is less than 19.5 psia or greater than 79.5 psia, or if the outlet pressure of the loop 2 pump is less than 45 psia or greater than 81 psia. The pump inlet and outlet pressure of each coolant loop are monitored and transmitted to the systems management GPC for CRT readout on the DISP 88 APU/ENVIRON THERM display (PUMP OUT P).

Active Thermal Control System

The active thermal control system provides orbiter heat rejection during all phases of the mission. The system consists of two complete, identical Freon coolant loop systems, cold plate networks for cooling avionics units, liquid/liquid heat exchangers, and three heat sink systems: radiators, flash evaporator, and ammonia boiler.

Freon Loops

Two Freon coolant loops transport excess heat from the water/Freon interchanger, fuel cell heat exchangers, payload heat, and midbody and aft avionics electronic units. The Freon loops then deliver the heat to the heat sinks. Each loop has a pump package consisting of two pumps and an accumulator. The pump package is located in the midbody of the orbiter below the payload bay liner. One pump in each loop is active at all times. The metal bellows-type accumulator in each loop is pressurized with gaseous nitrogen to provide a positive suction pressure on the pumps and permit thermal expansion in that coolant loop. When the accumulator bellows is fully extended, approximately 80 lb of Freon are in the accumulator (normally only 20 to 30 percent of this amount is used). A ball check valve downstream of the pumps in each coolant loop prevents a reverse flow through the non-operating pump in the loops. The pumps in each coolant loop are controlled individually by the *FREON PUMP* switches on panel L1. When either switch is positioned to *A* or *B*, the corresponding Freon pump in that loop operates. The *OFF* position of each switch prohibits either Freon pump in that coolant loop from operating.

When a Freon pump is operating, Freon is routed in parallel through the three fuel cell heat exchangers and the midbody cold plate network to cool electronic avionics units. The Freon coolant reunites in a series flow path before entering the hydraulics heat exchanger.

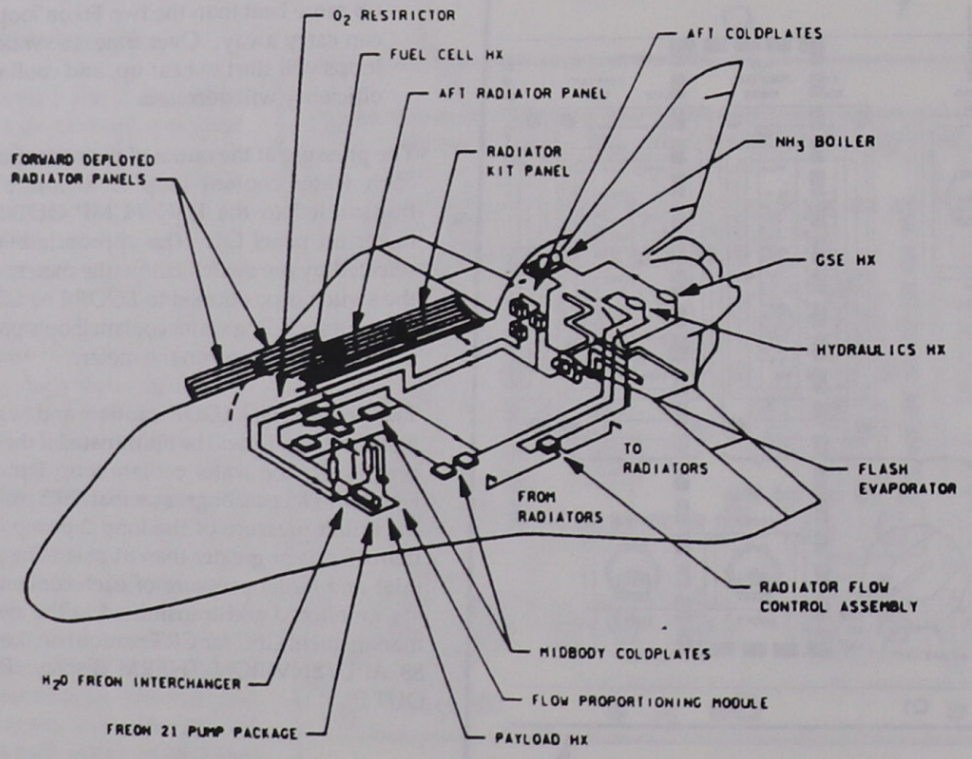

Active Thermal Control System Component Locations

The Freon flows from the hydraulic fluid heat exchanger to the radiators, which are bypassed through a bypass valve during ascent and entry unless cold soak cooling from the radiators is being used. The warmest portion of the Freon loop is at the outlet of the hydraulic system heat exchanger.

When the payload bay doors are opened on orbit, radiators located on the inside of the payload bay doors are used for heat rejection to space. The Freon coolant flows through the ground support equipment heat exchanger used for ground cooling, ammonia boilers, and flash evaporator located in the aft fuselage. It is then divided into two parallel paths. One path flows through the ECLSS

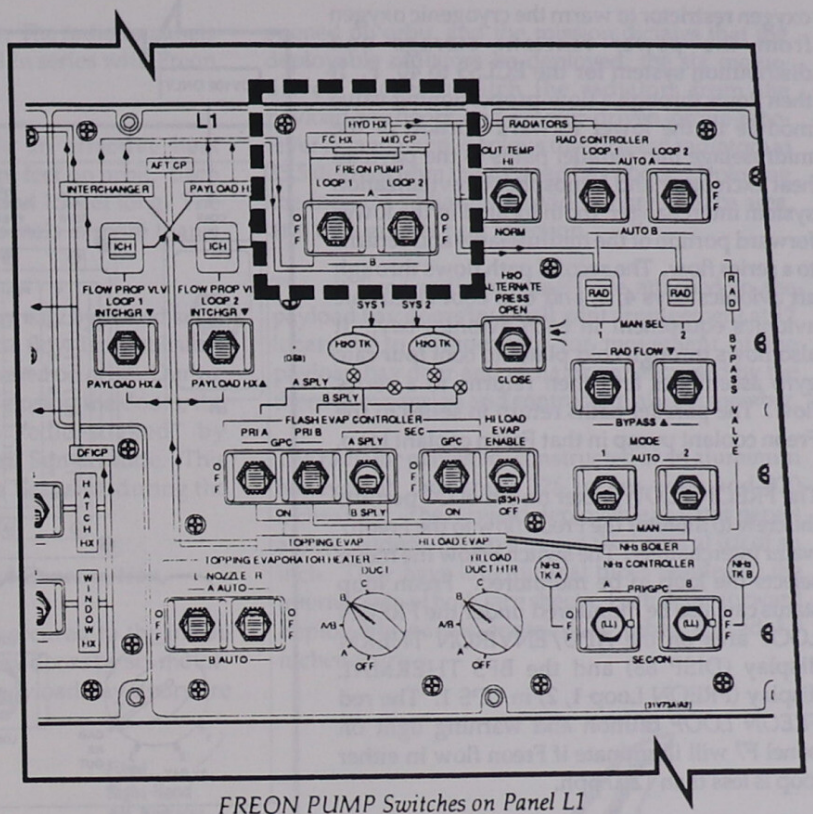

FREON PUMP Switches on Panel L1

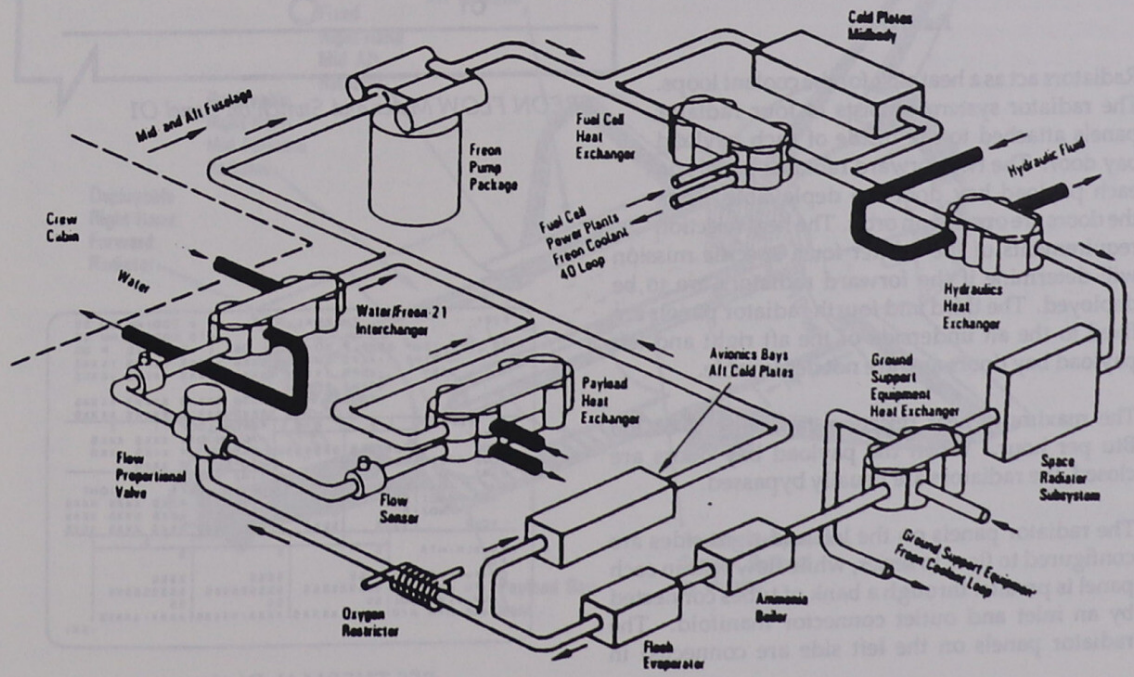

Freon Coolant Loop

oxygen restrictor to warm the cryogenic oxygen from the power reactant storage and distribution system for the ECLSS to 40° F. It then flows through a flow-proportioning valve module in the lower forward portion of the midfuselage into parallel paths to the payload heat exchanger and atmospheric revitalization system interchanger (both located in the lower forward portion of the midfuselage) and returns to a series flow. The second path flows through aft avionics bays 4, 5, and 6 to cool electronic avionics equipment in each avionics bay. It also flows through cold plates to cool four rate gyro assemblies and then returns to a series flow. The parallel paths return in series to the Freon coolant pump in that Freon coolant loop.

The FREON FLOW meter on panel O1 permits the crew to monitor the Freon flow to the Freon/water interchanger. The switch below the meter selects the loop to be monitored. Freon loop status can also be monitored under the FREON LOOP area on the APU/ENVIRON THERM display (DISP 88) and the BFS THERMAL display (FREON Loop 1, 2) in OPS 1. The red *FREON LOOP* caution and warning light on panel F7 will illuminate if Freon flow in either loop is less than 1200 pph.

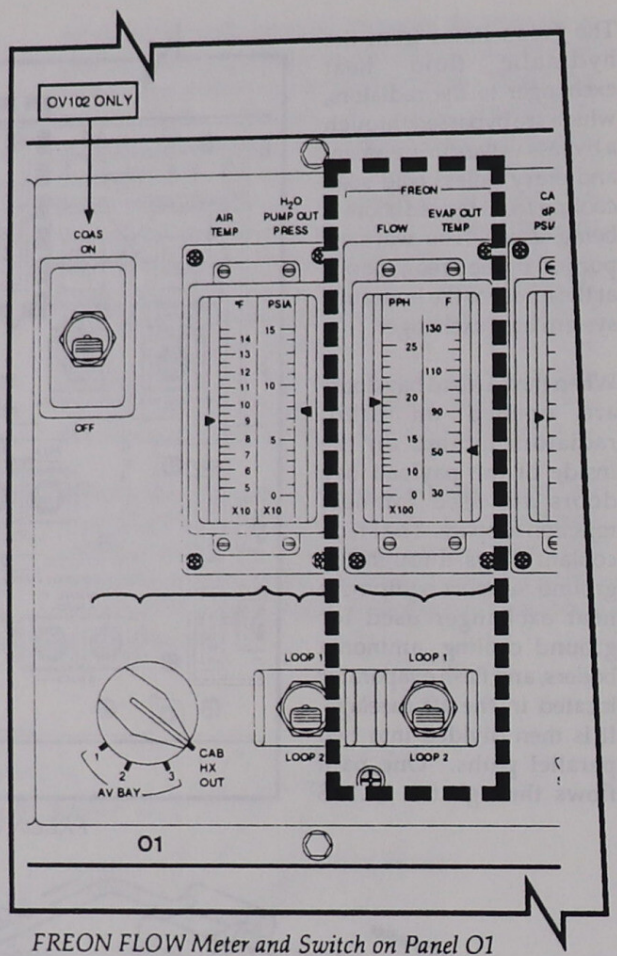

FREON FLOW Meter and Switch on Panel O1

Radiators

Radiators act as a heat sink for the coolant loops. The radiator system consists of four radiator panels attached to the inside of each payload bay door. The two forward radiator panels on each payload bay door are deployable when the doors are opened on orbit. The heat rejection requirements of the orbiter for a specific mission will determine if the forward radiators are to be deployed. The third and fourth radiator panels are fixed to the aft underside of the aft right and left payload bay doors and are not deployable.

The maximum heat rejection capability is 61,100 Btu per hour. When the payload bay doors are closed, the radiators are usually bypassed.

The radiator panels on the left and right sides are configured to flow in series, while flow within each panel is parallel through a bank of tubes connected by an inlet and outlet connector manifold. The radiator panels on the left side are connected in

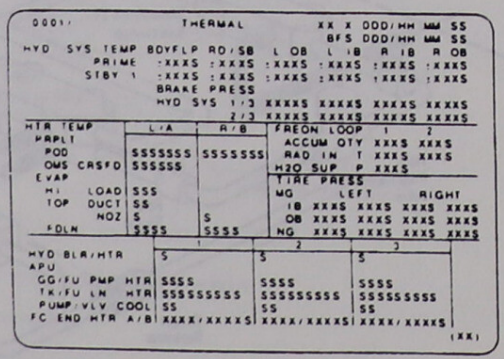

BFS THERMAL Display

series with Freon coolant loop 1. The radiator panels on the right side are connected in series with Freon coolant loop 2.

The radiator panels provide an effective heat dissipation area of 1,195 square feet on orbit. Each radiator panel is 10 feet wide and 15 feet long. The Freon tubing in the radiator panels is more than 1 mile long.

For ascent, the radiators are normally bypassed since the doors are closed. Radiator flow is established shortly before the doors are opened on orbit. During deorbit preparations, prior to closing the doors, the Freon in the radiators is "cold-soaked" by positioning the orbiter in a tail Sun attitude. This cold soak is saved for use as a heat sink during the latter stages of entry.

Radiator Mounting and Construction

The deployable radiators are secured to the inside of the right and left payload bay doors by six motor-operated latches. When the payload bay doors are opened on orbit, and the mission dictates that the deployable radiators be deployed, the six motor-driven latches unlatch the radiators from the payload bay doors, and a motor-driven torque-tube-lever arrangement deploys the forward radiators at 35.5 degrees from the payload bay doors. Deploying the forward radiators provides more surface area, and thus greater heat rejection.

The aft fixed radiator panels are attached to the payload bay doors by a ball joint arrangement at 12 locations to compensate for movement of the payload bay door and radiator panel caused by the thermal expansion and contraction of each member.

The radiator panels are constructed of an aluminum honeycomb face sheet 126 inches wide and 320 inches long. The forward deployable radiator panels are two-sided and have a core thickness of 0.9 of an inch. They have longitudinal tubes bonded to the internal side of both face sheets. Each of the forward deployable panels contains 68 tubes spaced 1.9 inches apart.

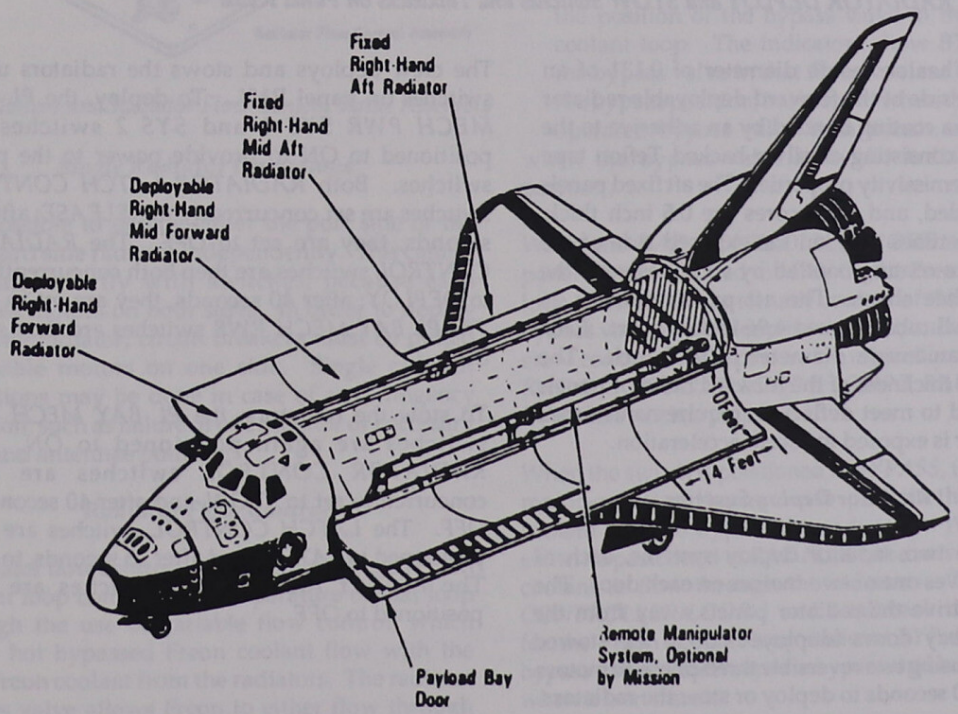

Payload Bay Radiators

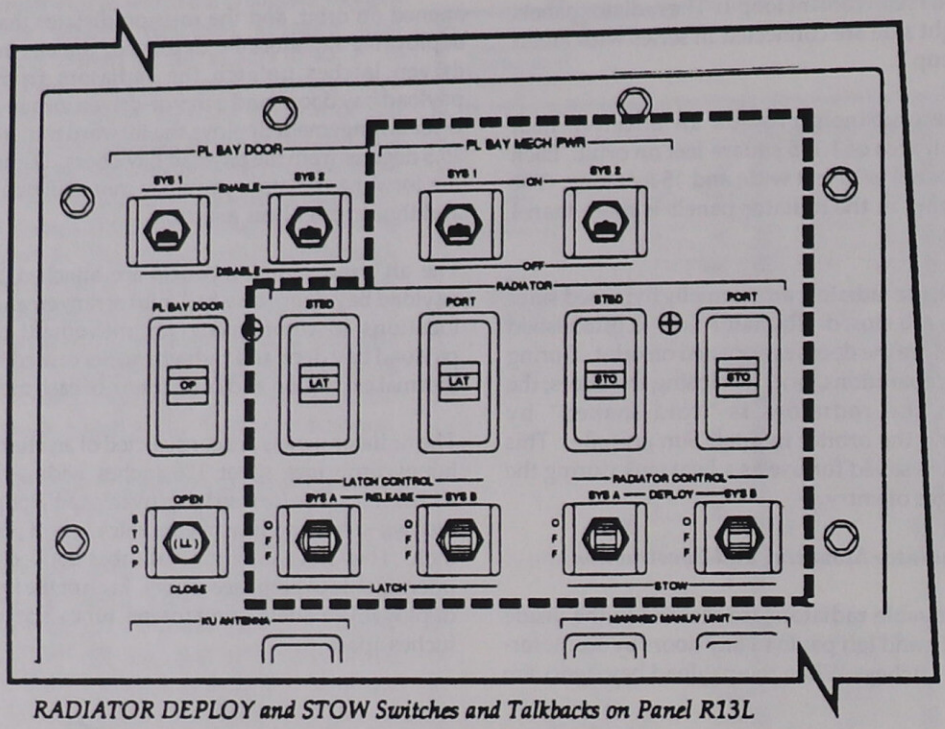

RADIATOR DEPLOY and STOW Switches and Talkbacks on Panel R13L

Each tube has an inside diameter of 0.131 of an inch. Each side of the forward deployable radiator panels has a coating bonded by an adhesive to the face sheet consisting of silver-backed Teflon tape for proper emissivity properties. The aft fixed panels are one-sided, and their cores are 0.5 inch thick. They have tubes only on the exposed side of the panel and a coating bonded by an adhesive to the exposed face sheet. The aft panels contain 26 longitudinal tubes spaced 4.96 inches apart. Each tube has an inside diameter of 0.18 inch. The additional thickness of the forward radiator panels is required to meet deflection requirements when the orbiter is exposed to ascent acceleration.

Radiator Deploy Systems

There are two radiator deploy systems, each of which drives one of two motors on each door. The systems drive the radiator panels away from the payload bay doors (deployed) or to the stowed position, using two reversible three-phase ac motors. It takes 40 seconds to deploy or stow the radiators.

The crew deploys and stows the radiators using switches on panel R13L. To deploy, the *PL BAY MECH PWR SYS 1* and *SYS 2* switches are positioned to *ON* to provide power to the panel switches. Both *RADIATOR LATCH CONTROL* switches are set concurrently to *RELEASE*; after 25 seconds, they are set to *OFF*. The *RADIATOR CONTROL* switches are then both concurrently set to *DEPLOY*; after 40 seconds, they are set to *OFF*. The *PL BAY MECH PWR* switches are then set to *OFF*.

To stow the radiators, the *PL BAY MECH PWR* switches are again positioned to *ON*. The *RADIATOR CONTROL* switches are both concurrently set to *STOW*, and after 40 seconds to *OFF*. The *LATCH CONTROL* switches are then positioned to *LATCH*, and after 25 seconds, to *OFF*. The *PL BAY MECH PWR* switches are then positioned to *OFF*.

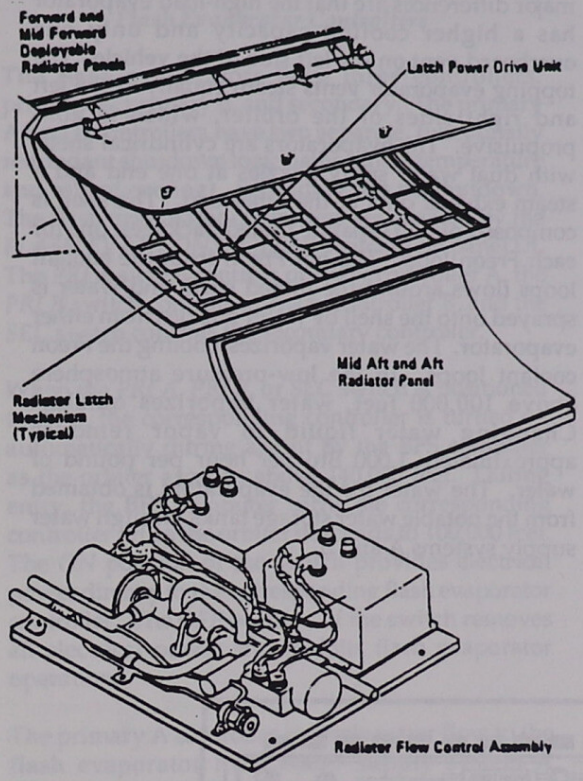

Radiators and Radiator Flow Control Valve Assembly

Single Radiator Operations

It is possible to deploy either the port side or the starboard side radiator independently. This cannot be done directly with switches, because each controls motors on both sides. In order to deploy only one radiator, circuit breakers must be pulled to disable motors on one side. Single radiator operations may be done in case of a contingency situation, such as failure of one radiator or necessary Ku-Band antennae pointing.

Radiator Flow Control

A radiator flow control valve assembly in each Freon coolant loop controls the temperature of that loop through the use of variable flow control, which mixes hot bypassed Freon coolant flow with the cold Freon coolant from the radiators. The radiator bypass valve allows Freon to either flow through the radiator or bypass the radiator completely.

In the automatic mode, the *RAD CONTROLLER LOOP 1* and *LOOP 2* switches on panel L1 are positioned to *AUTO A* or *AUTO B* to apply electrical power to the corresponding radiator flow controller assembly. The *RAD CONTROLLER MODE* switch is positioned to *AUTO*, and the *RAD CONTROLLER OUT TEMP* switch on panel L1 is positioned to *NORM* or *HI*.

With the *RAD CONTROLLER OUT TEMP* switch on panel L1 positioned to *NORM*, the radiator outlet temperature in Freon coolant loops 1 and 2 is automatically controlled at 38° F (± 2°); in *HI*, the temperature is automatically controlled at 57° F (± 2°).

NOTE

The flash evaporator is activated automatically when the radiator outlet temperature exceeds 41° F to supplement the radiators' ability to reject excess heat.

The talkback indicators below the *RAD CONTROLLER* switches on panel L1 indicate the position of the bypass valve in that Freon coolant loop. The indicators show *BYP* when the bypass valve in that Freon coolant loop is in the bypass position, barberpole when the motor-operated bypass valve is in transit, and *RAD* when the bypass valve is in the radiator flow position.

When the *RAD CONTROLLER MODE* switch on panel L1 is positioned to *MAN* for the Freon coolant loop selected, the automatic control of the radiator bypass valve in that loop is inhibited, and the flight crew controls the bypass valve manually using the *RAD CONTROLLER LOOP 1, LOOP 2, RAD FLOW/ BYPASS* switches on panel L1.

When the switch is positioned to *BYPASS*, the loop's motor-operated bypass valve permits that Freon coolant loop to bypass the radiators. When the switch is positioned to *RAD FLOW*, the valve permits coolant to flow through the radiators. The *RAD CONTROLLER LOOP 1* and *2* talkback indicators for the Freon coolant loop indicate *BYP* when the bypass valve in that loop is in bypass, and barberpole when it is in transit.

NOTE

The flow control valve cannot be controlled manually; it can only be controlled automatically using the controller. The bypass valve, however, can be operated manually or automatically.

Flash Evaporator System

The flash evaporators reject heat loads from Freon coolant loops 1 and 2 by evaporating supply water in a vacuum. The flash evaporators are used during ascent above 140,000 feet, and they supplement the radiators on orbit if required. They also reject heat loads during deorbit and entry to an altitude of approximately 100,000 feet.

The flash evaporators are located in the aft fuselage of the orbiter. There are two evaporators, a high-load evaporator and a topping evaporator. Two major differences are that the high-load evaporator has a higher cooling capacity and only one overboard vent on the left side of the vehicle. The topping evaporator vents steam equally to the left and right sides of the orbiter, which is non-propulsive. The evaporators are cylindrical shells with dual water spray nozzles at one end and a steam exhaust duct at the other end. The shell is composed of two separate finned packages, one for each Freon loop. The hot Freon from the coolant loops flows around the finned shell, and water is sprayed onto the shell by water nozzles from either evaporator. The water vaporizes, cooling the Freon coolant loops. In the low-pressure atmosphere above 100,000 feet, water vaporizes quickly. Changing water liquid to vapor removes approximately 1,000 Btu per hour per pound of water. The water for the evaporators is obtained from the potable water storage tanks through water supply systems A and B.

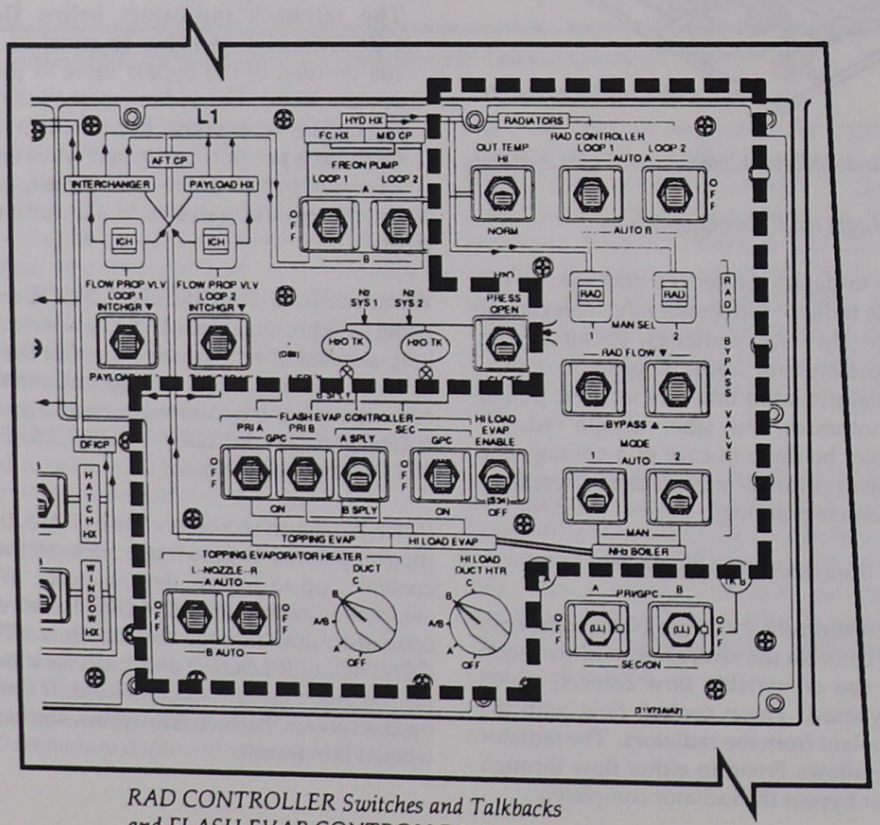

RAD CONTROLLER Switches and Talkbacks and FLASH EVAP CONTROLLER Switches on Panel L1

Flash Evaporator Controllers

The flash evaporators have three controllers: primary A, primary B, and secondary. The primary A and B controllers have two separate, functionally redundant shutdown logic paths (undertemperature and rate of cooling). Secondary has no shutdown. The flash evaporator controllers are enabled by the *FLASH EVAP CONTROLLER* switches on panel L1. The *PRI A* switch controls primary controller A, the *PRI B* switch controls primary controller B, and the *SEC* switch controls the secondary controller.

When the *PRI A*, *PRI B*, or *SEC* switch is positioned to *GPC*, the corresponding controller is turned on automatically during ascent by the BFS computer as the orbiter ascends above 140,000 feet. During entry, the BFS computer turns the corresponding controller off as the orbiter descends to 100,000 feet. The *ON* position of the switch provides electrical power directly to the corresponding flash evaporator controller. The *OFF* position of the switch removes all electrical power and inhibits flash evaporator operation.

The primary A controller controls water flow to the flash evaporator from water supply system A through water feed line A. The primary B controller controls water flow to the flash evaporator from water supply system B through water feed line B.

NOTE

When a primary controller is enabled, both evaporators can be used simultaneously.

The secondary controller controls water flow to the high load flash evaporator from water supply system A through feed line A if the *FLASH EVAP CONTROLLER SEC* switch on panel L1 is in the *A SPLY* position, and if the *HI LOAD EVAP* switch is in the *ENABLE* position. If the switch is in the *B SPLY* position, and the *HI LOAD EVAP* switch is in the *ENABLE* position, the secondary controller controls water flow to the flash evaporator from water supply system B through feed line B. When the secondary controller is used, and the *HI LOAD EVAP* switch is *OFF*, both the A and B water supply systems will feed the topping evaporator in an alternate pulsing fashion. When the secondary controller is used, and the *HI LOAD EVAP* switch is in the *ENABLE* position, the topping evaporator is disabled.

The primary A and B controllers modulate the water spray in the evaporator to keep the Freon coolant loops' evaporator outlet temperature stable at 39° F. The secondary controller modulates the water spray in the evaporator to control the Freon coolant loops' evaporator outlet temperature at 62° F. The temperature sensors are located at the outlets of both evaporators.

The applicable flash evaporator controller pulses water into the evaporators, cooling the Freon. The steam generated in the topping evaporator is ejected through two sonic nozzles at opposing sides of the orbiter aft fuselage to reduce payload water vapor pollutants on orbit and to minimize venting thrust effects on the orbiter's guidance, navigation, and control system.

The high-load evaporator is used in conjunction with the topping evaporator during ascent and entry when higher Freon coolant loop temperatures impose a greater heat load that requires a higher heat rejection. The *HI LOAD EVAP* switch on panel L1 must be in the *ENABLE* position for high-load evaporator operation. After leaving the high-load evaporator, Freon flows through the topping evaporator for additional cooling. The steam generated by the high-load evaporator is ejected through a single sonic nozzle on the left side of the orbiter aft fuselage. The high-load evaporator would not normally be used on orbit because it has a propulsive vent and might pollute a payload.

NOTE

Norm jets are required to control vehicle attitude when the FES high load is used on orbit.

FES Auto Shutdown

Each primary controller has an automatic shutdown capability to protect the evaporator from over- or undertemperature conditions. The evaporator's outlet temperature is monitored to determine whether a thermal shutdown of the evaporator is warranted. If the evaporator outlet temperature goes below 37° F for 20 seconds or more, an undertemperature shutdown of the evaporator occurs. If the evaporator outlet temperature is greater than 41° F for 55 seconds, an overtemperature shutdown of the evaporator

occurs. If the evaporator is shut down, electrical power to the affected controller must be recycled to reenable operations.

Temperature Monitoring

The evaporator outlet temperature of Freon coolant loops 1 and 2 is transmitted to panel O1. When the switch below the FREON meter on panel O1 is positioned to *LOOP 1* or *LOOP 2*, the evaporator outlet temperature of Freon coolant loops 1 or 2 can be monitored in degrees Fahrenheit on the FREON EVAP OUT TEMP meter or on the DISP 79 SM SYS SUMM 2 display (EVAP OUT T). If the outlet temperature drops below 32.2° F or rises above 64.8° F, the red *FREON LOOP* caution and warning light on panel F7 will be illuminated. (The upper limit for ascent is 115° F.)

FES Heaters

Electrical heaters are employed on the topping and high-load flash evaporators' steam ducts to prevent freezing. The *HI LOAD DUCT HTR* rotary switch on panel L1 selects the electrical heaters. Switch positions *A* and *B* provide electrical power to the corresponding thermostatically controlled heaters on the high-load evaporator steam duct and steam duct exhaust. The *A/B* position provides electrical power to both thermostatically controlled heaters. The C position provides electrical power to both thermostatically controlled C heaters. The *OFF* position removes electrical power from all the heaters.

The *TOPPING EVAPORATOR HEATER DUCT* rotary switch on panel L1 selects the thermostatically controlled electrical heaters on the topping evaporator. Positions *A* and *B* provide electrical power to the corresponding heaters, while *A/B* provides electrical power to both A and B heaters. The C position provides power to the C heaters and part of the B heaters. The *OFF* position removes electrical power from all the heaters.

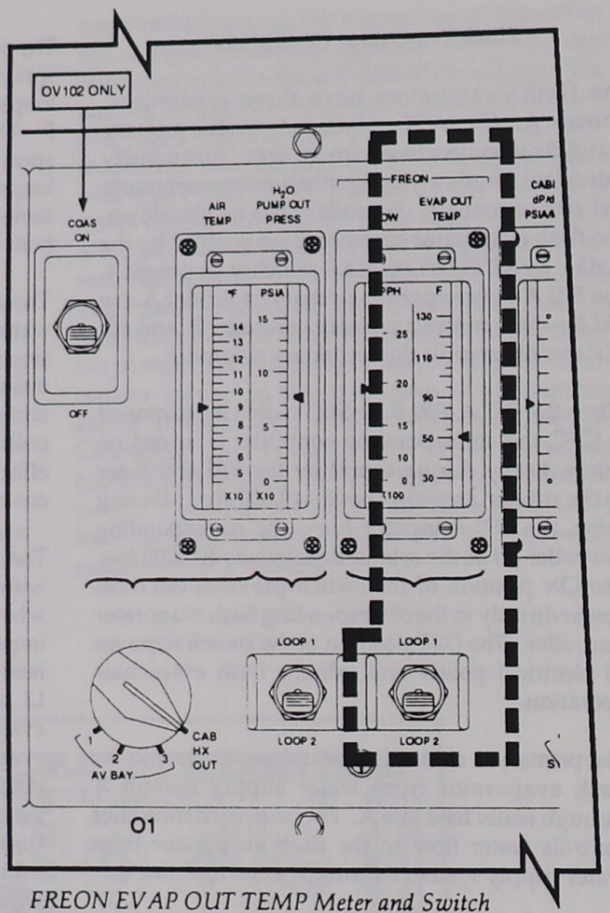

FREON EVAP OUT TEMP Meter and Switch on Panel O1

XXXX/XXX/079		SM SYS SUMM 2			XX X DDD/HH:MM:SS BFS DDD/HH:MM:SS	
CRYO TK	1	2	3	4	5	
H2 PRESS	XXXS	XXXS	XXXS	XXXS	XXXS	
O2 PRESS	XXXXS	XXXXS	XXXXS	XXXXS	XXXXS	
HTR T1	±XXXS	±XXXS	±XXXS	±XXXS	±XXXS	
T2	±XXXS	±XXXS	±XXXS	±XXXS	±XXXS	

APU	1	2	3	HYD	1	2	3
TEMP EGT	XXXXS	XXXXS	XXXXS	PRESS	XXXXS	XXXXS	XXXXS
B/U EGT	XXXXS	XXXXS	XXXXS	ACUM P	XXXXS	XXXXS	XXXXS
OIL IN	XXXS	XXXS	XXXS	RSVR T	XXXS	XXXS	XXXS
OUT	XXXS	XXXS	XXXS				
GG BED	XXXS	XXXS	XXXS	QTY	XXXS	XXXS	XXXS
INJ	XXXS	XXXS	XXXS				
SPEED %	XXS	XXS	XXS	W/B			
FUEL QTY	XXXS	XXXS	XXXS	H20 QTY	XXXS	XXXS	XXXS
PMP LK P	XXS	XXS	XXS	BYP VLV	XXXS	XXXS	XXXS
OIL OUT P	XXXS	XXXS	XXXS				
FU TK VLV				THERM CNTL		1	2
A T	XXXS	XXXS	XXXS	H20 PUMP P		XXXS	XXXS
B T	XXXS	XXXS	XXXS	FREON FLOW		XXXXS	XXXXS
AV BAY	1	2	3	EVAP OUT T		XXXS	XXXS
TEMP	XXXS	XXXS	XXXS				
FAN ΔP	X.XXS	X.XXS	X.XXS				(XX)

The SM SYS SUMM 2 display is an SM display (DISP 79) available in the BFS and in PASS SM OPS 2 and 4.

The topping evaporator's left and right nozzle heaters are controlled by the *TOPPING EVAPORATOR HEATER L NOZZLE R* switches on panel L1. When the switches are positioned to *A AUTO* or *B AUTO*, electrical power is provided to the corresponding left and right nozzle heaters, and the corresponding nozzle temperature is maintained between 40° and 70° F. The *OFF* position removes electrical power from both heater systems.

FES Water Dumps

The flash evaporator topping evaporator can be used to dump excess potable water from the potable water storage tanks, if required, on orbit. When the *RAD CONTROLLER OUT TEMP* switch on panel L1 is placed in *HI*, the radiator flow control valve assembly controls that radiator outlet at 57° F. Since the topping evaporator controls to 39° F, water is used up at a rate of about 25 lb/hr, thus dumping excess water.

Ammonia Boilers

The ammonia boiler system acts as a heat sink by using the low boiling point of ammonia to cool the Freon coolant loops when the orbiter is below 400,000 feet during entry or on the ground after landing. The resultant superheated vapor is vented overboard. Two complete, individual ammonia storage and control systems feed one common boiler containing ammonia passages and the individual Freon coolant loops 1 and 2. Each system consists of a storage tank, an isolation valve, an overboard relief valve, two control valves, a controller, three temperature sensors, and a feedline to the boiler.

The ammonia boiler is a shell-and-tube system with a single pass of ammonia on the ammonia side and two passes of each Freon coolant loop through the boiler. The ammonia flows in the ammonia tubes and the Freon coolant loop flows over the tubes, cooling the Freon coolant loops. When the ammonia flows over the warm Freon coolant lines in the boiler, it immediately vaporizes, and the heat and boiler exhaust are vented overboard in the upper aft fuselage of the orbiter next to the bottom right side of the vertical tail.

The ammonia system is normally used during entry if the radiators have not been cold-soaked. If radiator cooling is used during entry, the ammonia system is activated post-landing when radiator outlet temperatures reach 75.5° F. The ammonia boiler operations are used post-landing until a ground cooling cart is connected to the ground support equipment heat exchanger.

Storage Tanks

Each ammonia boiler storage tank contains a total of 49 pounds of ammonia, all of which may be used for cooling. Each tank is pressurized with gaseous helium at a maximum operating pressure of 550 psia. Downstream of each ammonia storage tank to the common boiler are three control valves: a normally closed isolation valve, a normally open secondary control valve, and a normally open primary control valve. A relief valve in each ammonia boiler storage system provides overpressurization protection of that ammonia storage tank.

Primary Ammonia Boiler Controller

The primary controller in the ammonia system controller energizes the ammonia system isolation valve, permitting ammonia to flow to two motor-operated controller valves. The controller also commands the primary motor-operated valve to regulate the flow to the ammonia boiler. Ammonia boiler supply systems A and B are enabled by the corresponding *NH_3 CONTROLLER* switches on panel L1. When one of the switches (usually *B*) is positioned to *PRI/GPC* before entry, it enables the GPC to control electrical power to the primary and secondary controllers within the ammonia controllers. When the orbiter descends through 120,000 feet, the backup flight system computer commands the selected ammonia system controller on.

Ammonia Boiler Control Sensors

Three temperature sensors are located on each Freon coolant loop. One sensor is associated with the primary controller and its motor-operated valve to regulate ammonia system A flow to maintain Freon coolant loop 1 and 2 temperatures at the outlet of the ammonia boiler at 34° F, ± 3° F. A second sensor is associated with the ammonia system A controller fault detection logic. If the Freon coolant loop 1 temperature drops below 31.25° F for longer than 10 seconds, the fault detection logic automatically inhibits the primary controller, which removes power from the ammonia system A isolation valve

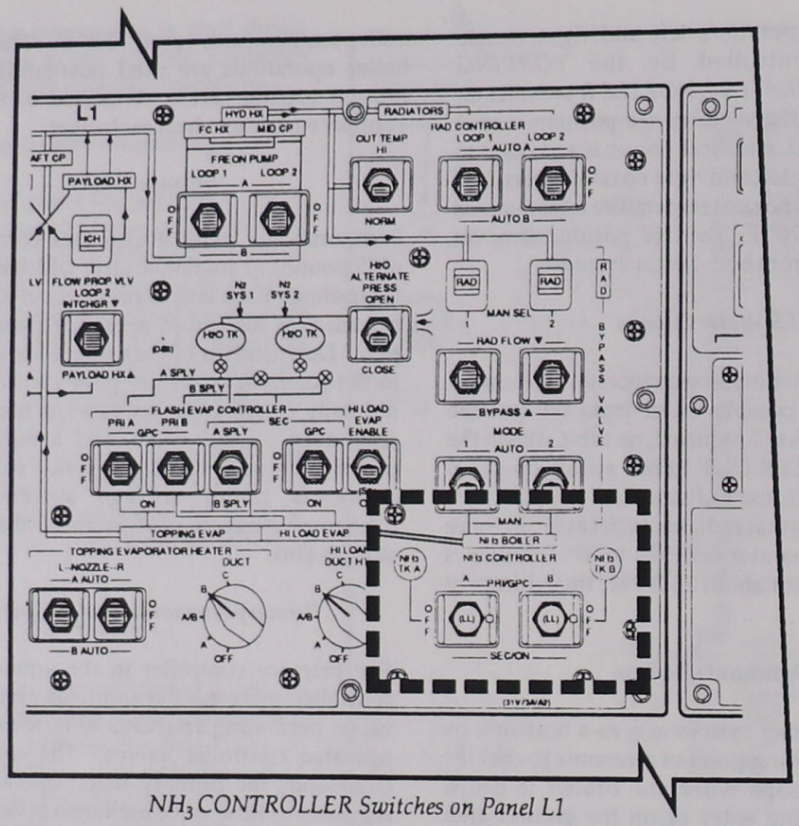

NH_3 CONTROLLER Switches on Panel L1

and the primary control valve. The logic switches to the secondary controller in the ammonia system A controller, which energizes a redundant coil in the ammonia system supply A isolation valve and closes the secondary control valve. It commands the isolation valve to full open and allows the secondary controller to control the secondary control valve to regulate the ammonia A flow to the ammonia boiler.

The third sensor is associated with the secondary controller and secondary motor-operated valve. It regulates ammonia supply system A flow to maintain the Freon coolant loop 1 and 2 temperatures at the outlet of the ammonia boiler at 34° F. This automatic switchover is only from the primary to the secondary.

Secondary Controller

When the *NH_3 CONTROLLER A* or *B* switch on panel L1 is positioned to *SEC/ON*, the A or B ammonia system controller is electrically powered and enabled directly (no computer command is required). The primary controller in the ammonia system controller energizes the system's isolation valve open, permitting ammonia to flow to two motor-operated controller valves. The primary controller commands the secondary controller's motor-operated valve to the open position and the primary controller's motor-operated valve to regulate the ammonia flow to the ammonia boiler. The three temperature sensors on each Freon coolant loop operate and control Freon coolant loop 1 and 2 temperature in the same manner as in the *PRI/GPC* mode. Fault detection logic does not exist in the secondary controller.

The *OFF* position of the *NH_3 CONTROLLER* switches removes all electrical power from the ammonia system controller, rendering the ammonia system inoperative.

Supply and Waste Water Systems

The supply water system provides water for flash evaporator system cooling, crew consumption, and hygiene. The supply water system stores water generated by the fuel cells, and the waste water system stores waste from the crew cabin humidity separator and from the flight crew. Four supply water tanks and one waste water tank are located beneath the crew compartment middeck floor.

Data on the supply and waste water system can be monitored on the ENVIRONMENT display (DISP 66) under H2O SUPPLY and WASTE items and on the BFS THERMAL display (H_20 SUP P).

Supply Water System

The supply water system consists of four water tanks that are pressurized with nitrogen from the pressure control system. Each of the four potable water tanks has a usable capacity of 168 pounds, is 35.5 inches in length and 15.5 inches in diameter, and weighs 39.5 pounds dry.

The three fuel cells generate a maximum of 25 pounds of potable water per hour (about 0.81 pound of water per kilowatt hour). The product water from all three fuel cells flows to a single water relief control panel. The water can be directed to potable water tank A or to the fuel cell water relief nozzle. Normally, the water is directed to water tank A.

The product water lines from all three fuel cells were modified to incorporate a parallel (redundant) path of product water to potable water tank B in the event of a blockage of the primary water path to the tanks. If such a blockage were to occur, pressure would build up and relieve through the redundant paths to potable water tank B.

Instrumentation

Temperature sensors are installed on each of the redundant paths; in addition, a pressure sensor is transmitted to telemetry and can be monitored on the BFS THERMAL display. A pH sensor is located at the common product water outlet of the water relief panel. It provides a redundant measurement of fuel cell health and water purity. A single measurement of water purity in each fuel cell is also provided. If a single fuel cell pH sensor indicated high, the flight crew would be required to sample the potable water to verify the proper pH.

Hydrogen Separators

The hydrogen-enriched water from the fuel cells flows through the single water relief panel through two hydrogen separators to potable water tank A. The separator removes 85 percent of the excess hydrogen. The hydrogen separators consist of a matrix of silver palladium tubes, which have an

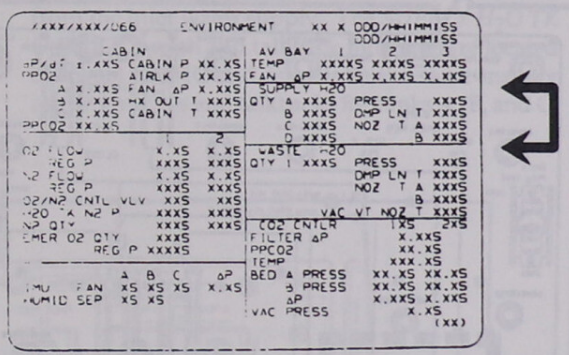

H_2O System Parameters on the ENVIRONMENT Display (DISP 66)

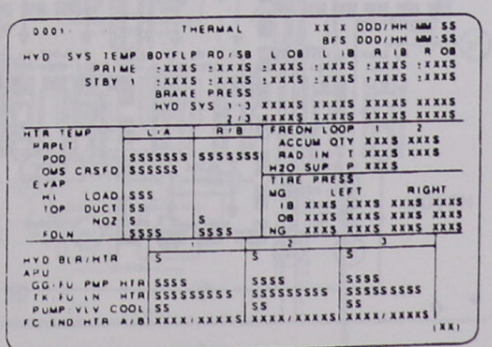

BFS THERMAL Display

affinity for hydrogen. The hydrogen is dumped overboard through a vacuum vent. The redundant water line to tank B does not pass through the hydrogen separator. Water passing through the hydrogen separators can be stored in all four potable water tanks: A, B, C, and D.

Microbial Filter

The water entering tank A, which is sterilized before launch, passes through a microbial filter that adds approximately one-half parts per million iodine to the water to prevent microbial growth. The water stored in tank A is normally used for flight crew consumption; tanks B, C, and D are used for flash evaporator cooling. The water from the microbial check valve is also directed to a galley supply valve.

If the water tank A inlet valve is closed, or tank A is full, water is directed to tank B through a 1.5 psid check valve where it branches off to tank B. If the tank B inlet valve is closed, or tank B is full of water, the water is directed through another 1.5 psid check valve to the inlets to tanks C and D.

Each potable water tank has an inlet and outlet valve that can be opened or closed selectively to use water; however, the tank A outlet valve normally remains closed to isolate the treated water from the untreated water in the other tank.

Tank Pressurization

Each potable water and waste water tank is pressurized with gaseous nitrogen from the crew compartment nitrogen supply system. The nitrogen and water are separated by a metal bellows. Nitrogen supply systems 1 and 2 can be used individually to pressurize the water tanks with nitrogen at 15.5 to 17.0 psig. Nitrogen supply system 1 is controlled by the *H_2O TK N_2 REG INLET* and *H_2O TK N_2 ISOL SYS 1* manual valves on panel MO10W. Nitrogen supply system 2 is controlled by the *SYS 2* manual valves on panel MO10W. The regulator in each nitrogen supply system controls the nitrogen pressure to the tanks at 15.5 to 17 psig, and a relief valve in each nitrogen supply system will relieve into the crew cabin if the nitrogen supply increases to 18.5 ± 1.5 psig, to protect the tanks from overpressurization.

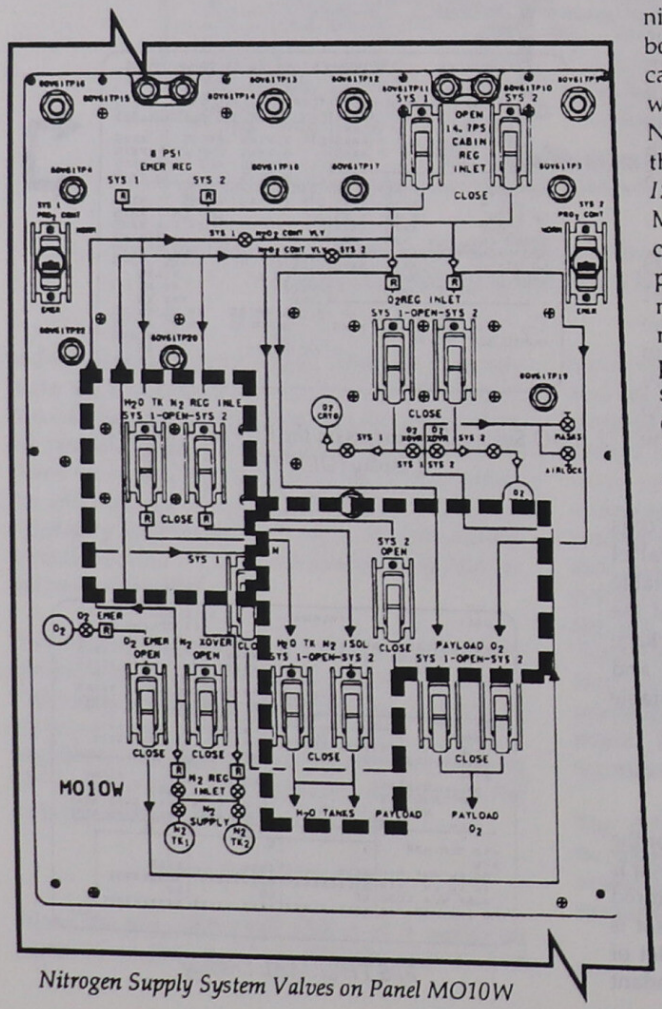

Nitrogen Supply System Valves on Panel MO10W

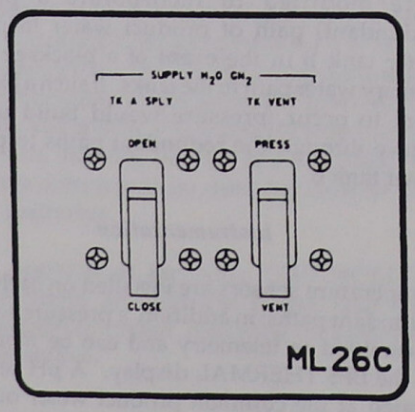

Manual Valves on Panel ML26C

Tank Depressurization

All the tanks can be vented to cabin pressure, but tank A is normally depressed for ascents, as described here. For only tank A, inlet nitrogen pressure is controlled by the *SPLY H_2O GN_2 TK A SPLY* and *TK VENT* manual valves on panel ML26C. When the tank A supply valve is closed, the tank is isolated from the nitrogen supply. When the tank A valve is opened, the tank is pressurized by the crew cabin atmosphere. For launch, the tank A supply valve is closed, and the tank vent is opened, which lowers tank A pressure. The fuel cell water head pressure is lower to help prevent flooding of the fuel cells during ascent. On orbit, the tank A supply valve is opened, and the tank A vent to the cabin is closed, allowing nitrogen supply pressure to tank A.

Alternate Water Pressurization

If neither nitrogen supply system 1 nor 2 can be used to pressurize the water tanks, the *H_2O ALTERNATE PRESS* switch on panel L1 can be positioned to *OPEN*, which would apply the crew cabin pressure to the water tanks. Normally, this switch is positioned to *CLOSE* to isolate the cabin pressurization system from the water tank pressurization system.

Supply Water Tank Inlet Valves

Potable water tank A, B, and C valves are controlled from panel R12L, and tank D valves are controlled from panel ML31C. When the *SUPPLY H2O TK A INLET, TK B INLET,* or *TK C INLET* switch on panel R12L is positioned to *OPEN*, the inlet valve for the tank permits water into that tank. A talkback indicator above the corresponding switch indicates *OP* when the corresponding valve is open, barberpole when the valve is in transit, and *CL* when that valve is closed. When the switch is positioned to *CLOSE*, the water inlet to that tank is isolated from the inlet water supply. The *SUPPLY H_2O TK D INLET* switch and talkback indicator are located on panel ML31C and operate in the same manner as the switches and talkbacks for tanks A, B, and C.

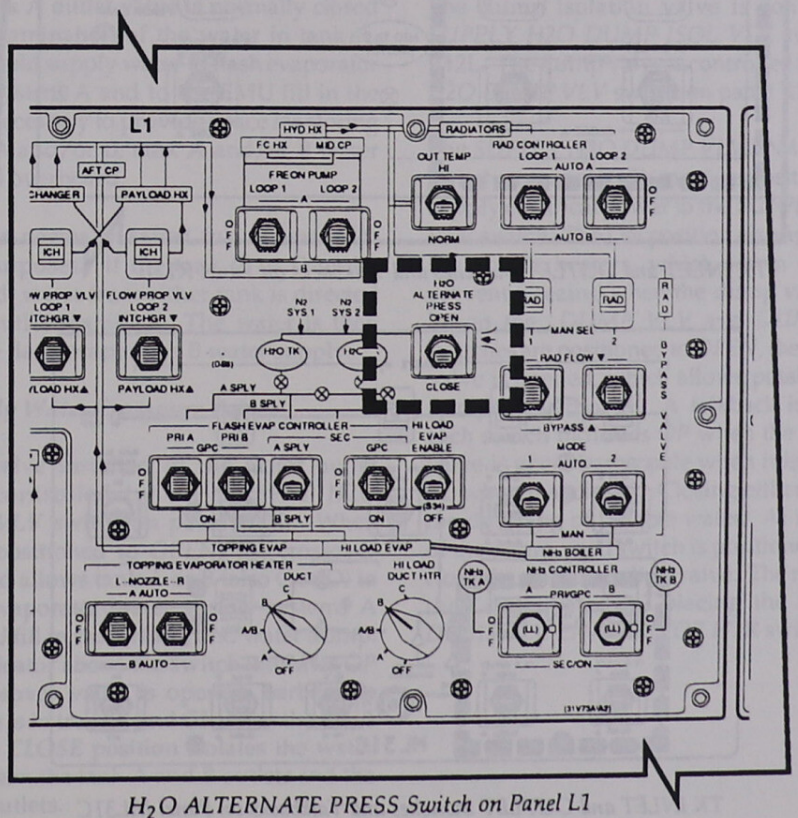

H_2O ALTERNATE PRESS Switch on Panel L1

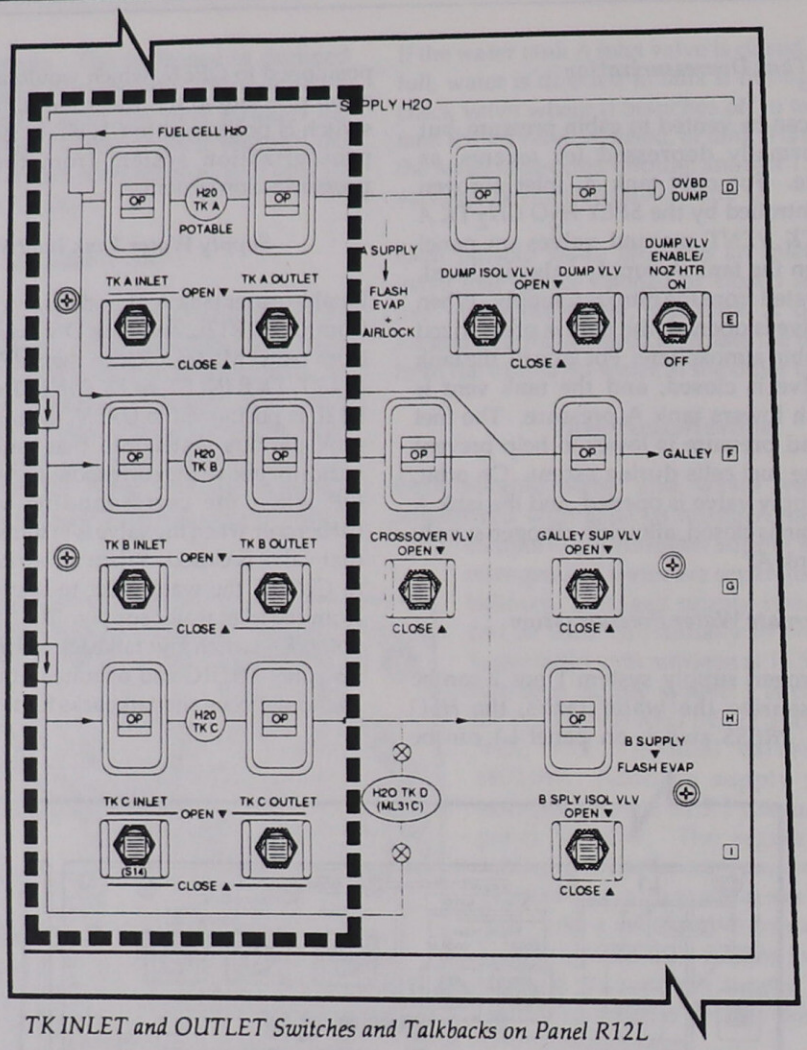

TK INLET and OUTLET Switches and Talkbacks on Panel R12L

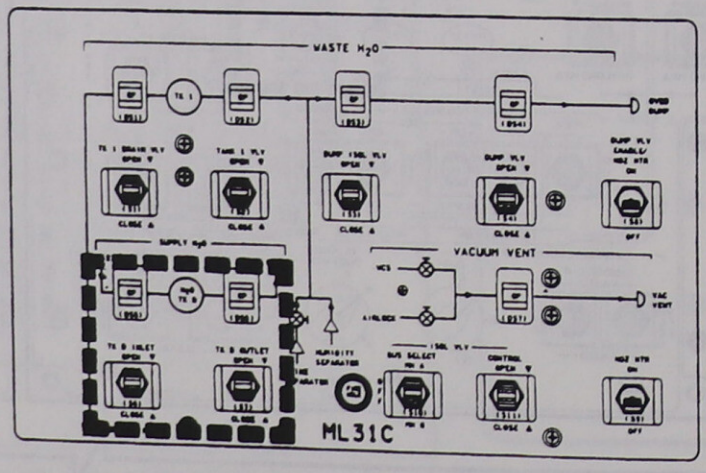

TK INLET and OUTLET Switches and Talkbacks on Panel ML31C

Tank Outlet Valves

Positioning the *SUPPLY H2O TK A, B,* or *C OUTLET* switch on panel R12L to *OPEN* permits water from the corresponding tank to flow from the tank into the water outlet manifold due to the tank nitrogen pressurization system. A talkback indicator above the switch would indicate *OP* when that valve is open, barberpole when it is in transit, and *CL* when it is closed. The *CLOSE* position of each switch isolates that water tank from the water outlet manifold. The *SUPPLY H_2O TK D OUTLET* switch and talkback indicator are located on panel ML31C and operate in the same manner as the tank A, B, and C switches and talkback indicators on panel R12L.

If the potable water tank B outlet valve is opened (normally tank A is used only for crew consumption), water from the corresponding tank is directed to the water outlet manifold. The tank A and B water is then available to the extravehicular mobility unit fill in the airlock, to the flash evaporator water supply system A, and to the water dump. The tank A outlet valve is normally closed to prevent contamination of the water in tank A. Thus, tank B would supply water to flash evaporator water supply system A and to the EMU fill in the airlock. If it is necessary to provide space for storing water in tank A and/or B, tank A and/or B water can be dumped overboard.

Tank C or D is normally saved full of water for contingency purposes. If the tank C or D outlet valve is opened, water from either tank is directed to the water outlet manifold. The water is then available to the flash evaporator B water supply.

Supply Water Crossover Valves

A crossover valve installed in the water outlet manifold is controlled by the *SUPPLY H2O CROSSOVER VLV* switch on panel R12L. When the switch is positioned to *OPEN*, the crossover valve opens and allows tank A or B (also C or D) to supply flash evaporator water supply systems A and B, the EMU fill in the airlock, and water dump. A talkback indicator above the switch indicates *OP* when the crossover valve is opened, barberpole when the valve is in transit, and *CL* when the valve is closed. The *CLOSE* position isolates the water manifold between the tank A and B outlets and the tank C and D outlets.

Supply Isolation Valve

Water from supply system A is routed directly to the flash evaporator. Water from system B is routed to an isolation valve in the system. The valve is controlled by the *SUPPLY H2O B SPLY ISOL VLV* switch on panel R12L. When the switch is positioned to *OPEN*, water from supply system B is directed to the flash evaporator. A talkback above the switch indicates *OP* when the valve is opened, barberpole when it is in transit, and *CL* when the valve is closed. The *CLOSE* position isolates water supply system B from the flash evaporator.

Supply Water Dumps

Potable water from all the tanks can be dumped overboard, if necessary, through a dump isolation valve and a dump valve. Potable water from tank C or D can also be dumped overboard, if necessary, through the crossover valve and through the dump isolation valve and dump valve. The overboard dump isolation valve is located in the crew cabin, and the dump valve is located in the midfuselage. The dump isolation valve is controlled by the *SUPPLY H2O DUMP ISOL VLV* switch on panel R12L. The dump valve is controlled by the *SUPPLY H2O DUMP VLV* switch on panel R12L.

The *SUPPLY H2O DUMP VLV ENABLE/NOZ HTR* switch on panel R12L must be positioned to *ON* to supply electrical power to the *SUPPLY H2O DUMP VLV* switch. The *ON* position also applies power to the nozzle heaters, which warm the nozzles to prevent freezing when the dump valve is opened. When the *DUMP VLV* and *DUMP ISOL VLV* switches are positioned to *OPEN*, the corresponding valve is opened, which allows potable water to be dumped overboard. A talkback indicator above each switch indicates *OP* when the corresponding valve is open, barberpole when it is in transit, and *CL* when it is closed. Closing either valve inhibits the dumping of potable water. At the completion of the dump, each switch is positioned to *CLOSE* to close the corresponding valve. The nozzle heater is then deactivated by placing the *SUPPLY H2O DUMP VLV ENABLE/NOZ HTR* switch to *OFF*.

Contingency Crosstie

A contingency crosstie connection exists in the supply water overboard dump line between the dump isolation valve and dump valve. A corresponding crosstie connection exists in the waste water overboard dump line between the dump isolation valve and dump valve. These crosstie connections permit the joining of the waste water system through a flexible hose to the supply water system for emergency dumping of waste water through the supply water dump (and vice versa).

Dump Nozzle Heaters

The potable supply water dump nozzle employs a heater to prevent freezing of the supply water dump nozzle at the midfuselage. The dump nozzle heater is powered when the *SUPPLY H2O DUMP VLV ENABLE/NOZ HTR* switch on panel R12L is positioned to *ON*. When the switch is positioned to *OFF*, it removes electrical power from the nozzle heater, as well as the *SUPPLY H2O DUMP VLV* switch, which causes the dump valve to close.

The potable supply water line upstream of the water dump nozzle has electrical heaters on the line to prevent supply water from freezing. The A and B heaters on the line are thermostatically controlled and are powered by the H_2O *LINE HTR A* and *B* circuit breakers on panel ML86B. (These circuit

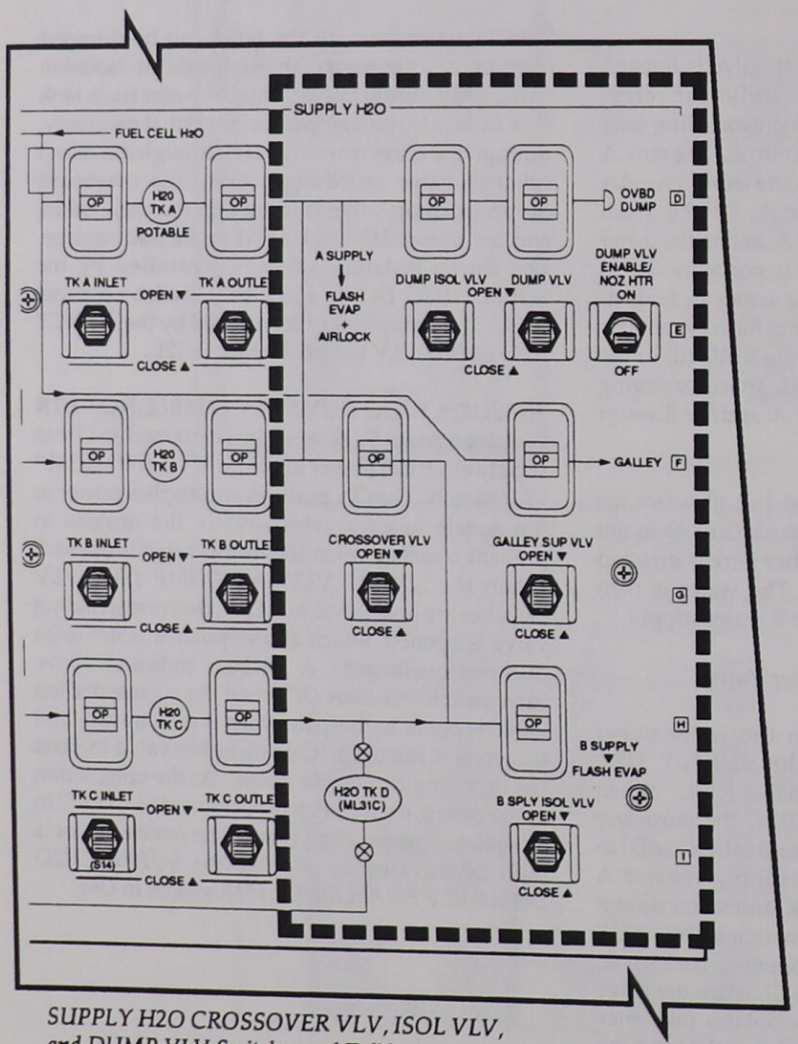

SUPPLY H2O CROSSOVER VLV, ISOL VLV, and DUMP VLV Switches and Talkbacks on Panel R12L

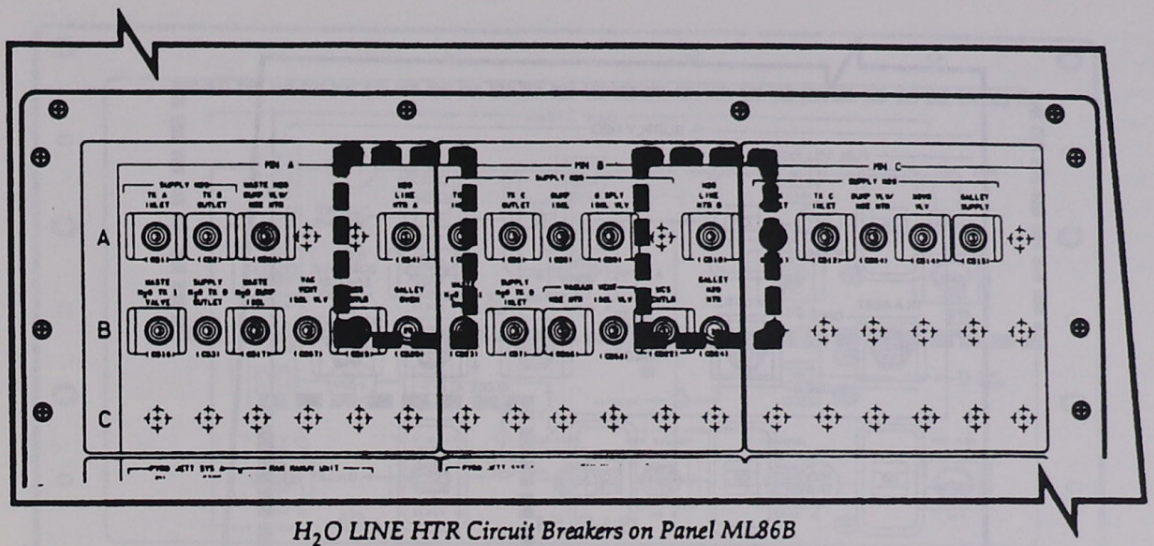

H_2O LINE HTR Circuit Breakers on Panel ML86B

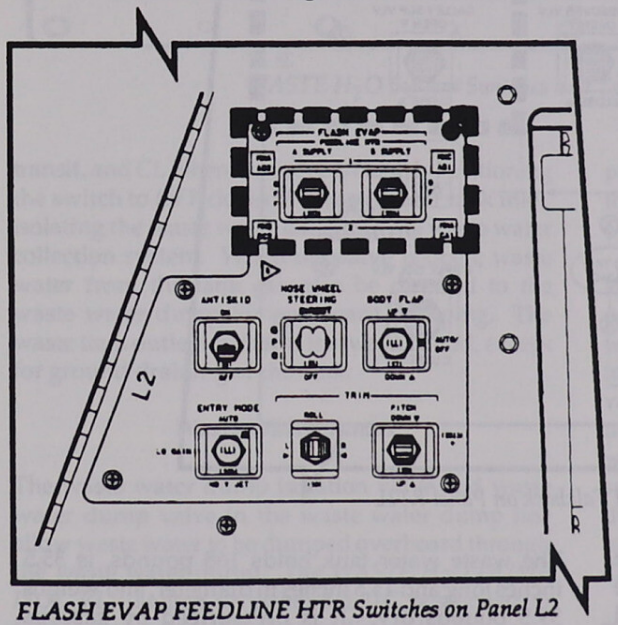

FLASH EVAP FEEDLINE HTR Switches on Panel L2

breakers also provide power to thermostatically controlled heaters on the waste water line and the waste collection system vacuum vent line.)

The potable supply water feed lines to the flash evaporators are approximately 100 feet long. To prevent the water in the lines from freezing, redundant heaters are installed along the length of the water lines. The heaters are controlled by the *FLASH EVAP FEEDLINE HTR A SUPPLY* and *B SUPPLY* switches on panel L2. When a switch is positioned to *1*, it enables the thermostatically controlled heaters on the corresponding supply line to automatically control the temperature on that line. When a switch is positioned to 2, it enables the redundant thermostatically controlled heater system on the corresponding supply line. The *OFF* position of each switch inhibits heater operation on the corresponding supply line.

Galley Water Supply

The galley supply valve in the supply water line from the microbial filter or tank A permits or isolates the supply water from the galley or water dispenser. When the *SUPPLY H2O GALLEY SUP VLV* switch on panel R12L is positioned to *OPEN*, supply water is routed through parallel paths: one path flows through the atmospheric revitalization system water coolant loop water chiller for cooling of the supply water, and the other path bypasses the water chiller with ambient temperature water. A talkback indicator above the switch indicates *OP* when the valve is open, barberpole when the valve is in transit, and *CL* when the valve is closed. The *CLOSE* position of the switch isolates the potable supply water from the middeck ECLSS supply water panel.

If the galley is installed in the middeck of the crew cabin, the water supply is directed to the galley. If a payload is installed in the middeck in lieu of the

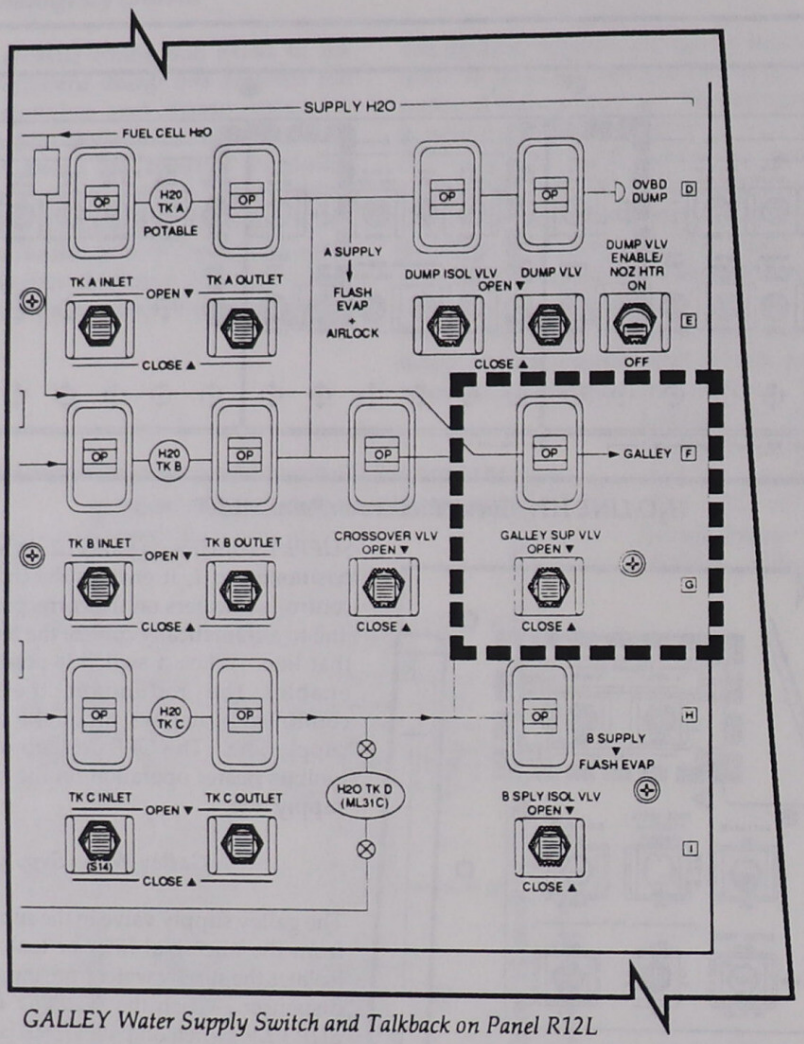

GALLEY Water Supply Switch and Talkback on Panel R12L

galley, the chilled water and ambient water are connected to an Apollo water dispenser to dispense ambient and chilled water for drinking and food reconstitution.

Waste Water System

A single waste water tank receives waste water from the humidity separator and the waste management system. The tank is located beneath the crew compartment middeck floor next to the potable water tanks.

The waste water tank holds 168 pounds, is 35.5 inches long and 15.5 inches in diameter, and weighs 39.5 pounds dry. It is pressurized by gaseous nitrogen from the same source as the potable water tanks.

Waste water is directed to the waste water tank 1 inlet valve, which is controlled by the *WASTE H_2O TANK 1 VLV* switch on panel ML31C. When the switch is positioned to *OPEN*, waste water is directed to the waste water tank. A talkback indicator above the switch indicates *OP* when the valve is open, barberpole when the valve is in

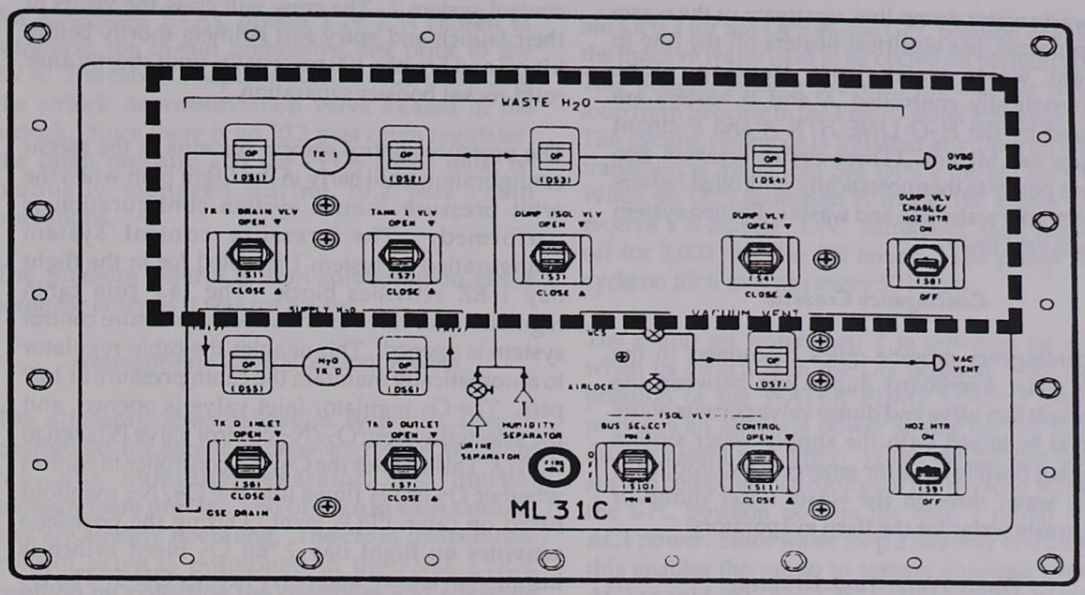

WASTE H_2O System Switches and Talkbacks on Panel ML31C

transit, and *CL* when the valve is closed. Positioning the switch to *OFF* closes the waste water tank inlet, isolating the waste water tank from the waste water collection system. When the valve is open, waste water from the tank can also be directed to the waste water dump for overboard dumping. The waste tank outlet (or drain) is always closed, except for ground draining of the tank.

Waste Water Dumps

The waste water dump isolation valve and waste water dump valve in the waste water dump line allow waste water to be dumped overboard through the waste water dump. The *WASTE H_2O DUMP ISOL VLV* switch on panel ML31C positioned to *OPEN* allows waste water to be directed to the waste water dump valve. A talkback indicator above the switch indicates *OP* when the valve is open, barberpole when the valve is in transit, and *CL* when the valve is closed.

In order for waste water to be dumped overboard, the waste water dump valve must be opened. It is controlled by the *WASTE H_2O DUMP VLV ENABLE/NOZ HTR* and *WASTE H_2O DUMP VLV* switches on panel ML31C. When the *WASTE H_2O DUMP VLV ENABLE/NOZ HTR* switch is positioned to *ON*, electrical power is supplied to the waste water dump heaters and the *WASTE H_2O DUMP VLV* switch.

When the *WASTE H_2O DUMP VLV* switch is positioned to *OPEN*, the dump valve allows waste water to be dumped overboard. A talkback indicator above the switch indicates *OP* when the valve is open, barberpole when the valve is in transit, and *CL* when the valve is closed. If waste water is dumped overboard, the *DUMP ISOL VLV* switch is positioned to *CL* upon completion of the dump. The *WASTE H_2O DUMP VLV* is positioned to *CLOSE*, and the *WASTE H_2O DUMP VLV ENABLE/NOZ HTR* switch is set to *OFF*.

CAUTION

If the *DUMP VLV ENABLE/NOZ HTR* switch is positioned to *OFF* before the *DUMP VLV* switch is positioned to *CLOSE*, the dump valve will remain open. The heaters at the waste water dump prevent waste water from freezing at the overboard dump.

The waste water dump line, upstream of the waste dump nozzle, has electrical heaters on the line to prevent waste water from freezing. The thermostatically controlled A and B heaters are powered by the *H_2O LINE HTR A* and *B* circuit breakers on ML86B. (These circuit breakers also provide power to thermostatically controlled heaters on the supply water line and waste collection system vacuum vent line.)

Contingency Crosstie

The contingency crosstie quick disconnect in the waste water overboard dump line between the dump isolation valve and dump valve permits waste water to be joined with the supply water system through a flexible hose for emergency dumping of supply water through the waste water dump or using waste water for the flash evaporators.

Waste Water Tank Draining

The waste water tank 1 drain valve controls the draining of the waste water tank during ground operations through the ground support equipment flush and drain. When the *WASTE H_2O TK 1 DRAIN VLV* switch on panel ML31C is positioned to *OPEN*, the valve permits the draining and flushing of the waste water tank. The drain line is capped during flight. A talkback indicator above the switch indicates *OP* when the valve is open, barberpole when the valve is in transit, and *CL* when the valve is closed.

Operations

Pressure Control System

For ascent, both 14.7 psia cabin regulator inlet valves are closed to isolate the 14.7 psia cabin regulators. If a cabin leak develops, this configuration conserves nitrogen by not allowing any makeup flow into the cabin until the cabin pressure drops below 8 psia. The O_2 regulator inlet valves are closed, directing all the O_2 to the O_2 crossover manifold to supply the launch and entry suit helmets. The O_2/N_2 control valve on pressure control system 1 is open to allow N_2 to pressurize the O_2/N_2 manifold. The O_2/N_2 control valve on pressure control system 2 is closed. This would normally allow oxygen to flow to the O_2/N_2 manifold, but since the oxygen regulators are closed, nothing is configured to flow through the emergency 8 psia regulators on pressure control system 2. The crew will close the visors of their launch and entry suit helmets shortly before lift-off and breathe 100 percent O_2 until shortly after solid rocket booster separation.

The pressure control system remains in the ascent configuration until early in the flight plan when the orbit pressure control system configuration is performed. The pressure control system configuration to system 1 is called for in the flight day 1 EZ activities block. The 14.7 psia cabin regulator inlet valve on the selected pressure control system is opened. This enables the cabin regulator to automatically maintain the cabin pressure at 14.7 psia. The O_2 regulator inlet valve is opened, and the selected system O_2/N_2 control valve is taken to *AUTO*. This enables the O_2/N_2 controller to control whether O_2 or N_2 flows into the O_2/N_2 manifold based on cabin PPO_2 level. During the postsleep activities on flight day 2, an O_2 bleed orifice is installed in launch and entry helmet QD-5. The O_2 bleed orifice is sized based on number of crew and compensates for the crew's metabolic O_2 usage by flowing O_2 directly into the cabin. This helps keep the PPO_2 level stable when the cabin pressure is greater than 14.7 psia and the cabin regulators are not flowing. A reconfiguration to pressure control system 2 is performed halfway through the mission.

A 10.2 psia cabin protocol was developed by the flight surgeons to minimize the risk of decompression sickness (bends) for crewmembers preparing for an EVA. The EVA crewmembers must prebreathe pure O_2 before they go EVA to help flush N_2 out of their body tissue. The following 10.2 cabin protocol options have been developed:

- Option 1
  - 60-minute initial prebreathe on launch and entry suit helmet
  - 12 hours at 10.2 psia cabin pressure
  - 75-minute final prebreathe in suit
- Option 2
  - 60-minute initial prebreathe on launch and entry suit helmet
  - 24 hours at 10.2 psia cabin pressure
  - 40-minute final prebreathe in suit
- Option 3
  - 4-hour prebreathe in suit

For scheduled EVAs, option 1 or 2 is chosen to minimize the in-suit prebreathe just prior to the EVA. The cabin is depressurized to 10.2 psia using the airlock depressurization valve located in the airlock. Since there is no 10.2 psia cabin regulator, the cabin pressure and the PPO_2 levels must be manually managed during 10.2 psia cabin operations.

The pressure control system configuration is the same for entry as it was for ascent.

Atmospheric Revitalization System

The atmospheric revitalization system is already configured for ascent at crew ingress. One cabin fan, one humidity separator, one inertial measurement unit fan, and one fan in each avionics bay are already operating. The cabin temperature control valve is positioned in the *FULL COOL* position by powering the controller and adjusting the rotary switch to the *COOL* position. Once the *FULL COOL* position is reached, cabin temperature controller 1 is unpowered. The humidity separators and the IMU fan signal conditioners are unpowered to protect against an ac to ac bus short, which could cause loss of a main engine controller. (The wire bundle that carries power to these signal conditioners did short on STS-6.) Water loop 2 is on, and water loop 1 is off during ascent. Both water bypass valves are positioned to flow approximately 950 lb/hr through the Freon/water interchanger.

If no failures occur during ascent, then no actions are required to manage the atmospheric revitalization system in OVs 103 and 104 (OV 105 if flown without the RCRS) with the exception of scheduled LiOH canister change outs. During the post insertion period for RCRS configured vehicles, the crew will activate the system. Every 13 minutes the RCRS will automatically switch chemical beds between regeneration and adsorption as part of a 26 minute full regeneration cycle with no further crew actions for nominal operations. Mid-mission (on 10+ day flights) the activated charcoal canister will be changed out. The cabin fans should be turned off for removal and installation of canisters.

The orbit fan and pump configuration is the same on orbit as for ascent, except water loop 1 is set to the *GPC* position and the BYPASS controller for water loop 2 is set to the AUTO position. While in SM OPS 2 (or SM OPS 4), the *GPC* position enables the inactive water loop to be cycled on periodically. This periodic cycling prevents the inactive water loop from freezing in the Freon/water interchanger. The cycling sequence is initiated any time an OPS transition is made into SM OPS 2 (or SM OPS 4). When an OPS transition is made, the pump will receive a 6-minute *"ON"* command, then remain off for 3,000 minutes (50 hours). The pump will cycle on for 6 minutes every 50 hours.

The pump on water loop 2 is powered by AC3 when its switch is in the *ON* position. The *GPC* position of the *WATER PUMP LOOP 2* switch provides an alternate power source for the pump during ascent and entry. When the backup flight system computer has control of the payload MDMs, the *GPC* position powers the loop 2 pump with AC1 power. Since water loop 2 has only one pump, this enables the pump to remain powered even if AC3 should fail. The *GPC* position of the *WATER LOOP 1 PUMP* switch has no special function during ascent and entry; it acts just like the *OFF* position.

If the situation arises where no PASS SM or BFS computers are available, the water loop pumps can still be commanded on in the *GPC* position using real-time commands. The real time commands can be issued by a ground uplink or crew inputs on DPS UTILITY SPEC 1. The real-time commands must be issued through the computer that has control of the payload MDMs. It would take a severe loss of system redundancy for the use of real-time commands to ever be required.

Cooling Management

Depending on the mission phase, the Freon cooling loops are cooled four different ways. Prior to launch, cooling is provided by the ground support equipment. After lift-off, there is no active means of cooling until after solid rocket booster separation. It takes the orbiter slightly more than 2 minutes to reach an altitude where water evaporation provides effective cooling. Until that time, sufficient "thermal inertia" is in the Freon loops to limit the temperature increase so that no active heat rejection is required.

At solid rocket booster separation, the flash evaporator system receives a GPC "ON" command from the BFS and begins providing active cooling. The flash evaporator system continues to be the primary cooling source through the ascent phase

and on into the post insertion timeframe. During the Post Insertion checklist procedures, flow is initiated through the radiators, the payload bay doors are opened, and the radiators become the primary source of cooling. The topping flash evaporator system may be left on to provide supplemental cooling when necessary. If the orbiter is in a warm attitude, the radiator panels may not be effective enough to provide the desired cooling. The flash evaporator system can provide the additional cooling necessary to achieve the desired Freon loop temperatures.

During the deorbit prep procedures, the radiators are "cold soaked" for use later during entry. The radiator coldsoak process stores cool Freon in the radiator panels. This is accomplished by changing the radiator control temperature from 38° to 57° F. The flash evaporator system is reactivated to cool the Freon loops from 57° to 39° F. Since less cool Freon from the radiator panels is required to achieve the 57° F RAD OUT temperature, the Freon stays in the radiator panels longer and becomes even cooler. After being in this configuration for a little over an hour, the radiators are bypassed, and the flash evaporator system begins providing all the cooling. The flash evaporator system provides the cooling during the rest of the deorbit, through entry interface, and on down to V = 12k (approximately 175,000 ft). Additionally, during deorbit prep for RCRS configured vehicles, the crew will replace the LiOH canister, and deactivate the RCRS. The cabin fans should be turned off during this procedure.

At V = 12k, the radiators are put through their auto startup sequence, and radiator flow is reinitiated. Below 100,000 ft, the atmospheric pressure is too high for the flash evaporator system to cool effectively. The radiator coldsoak is used as the primary source of cooling from this point through rollout.

Once the orbiter is on the ground, and the radiator coldsoak is depleted, the ammonia boilers are used as the primary cooling source until the ground support equipment cooling cart hookup is complete. Then the ammonia cooling is deactivated, and ground support equipment cooling is initiated.

For ascent aborts, the thermal management of the Freon cooling is somewhat different. The flash evaporator system still provides the cooling after solid rocket booster separation. The cooling management during the entry portion changes. The ammonia boilers provide the cooling during the lower stages of the abort entry. The ammonia is used for cooling during the entry phase of an ascent abort because the orbiter lifts off without a radiator coldsoak, and the flash evaporator system functions normally only at low atmospheric pressure (above 100,000 ft).

For a transoceanic abort landing or an abort once around, the ammonia boiler receives a GPC "ON" command from the BFS at MM 304 and 120,000 ft. For a return to launch site abort, the ammonia boiler receives a GPC "ON" command from the BFS at external tank separation (MM 602). The ammonia boiler will provide the cooling from this point through landing. The ammonia boilers can provide cooling for approximately 1 hour.

ECLSS Caution and Warning Summary

- The red *CABIN ATM* caution and warning light on panel F7 is illuminated for any of the following monitored parameters: (1) cabin pressure below 13.8 psia or above 15.2 psia, (2) PPO_2 below 2.7 psia or above 3.6 psia, (3) oxygen flow rate above 4.9 pounds per hour, and (4) nitrogen flow rate above 4.9 pounds per hour.
- The yellow *AV BAY/CABIN AIR* C/W light will illuminate for the following conditions: any avionics bay temperature higher than 130° F, the heat exchanger out temperature higher than 145° F, or cabin fan delta P below 4.2 inches of water or greater than 6.8 inches.
- The yellow *H_2O LOOP* C/W light will illuminate if the outlet pressure of water coolant loop pump 1 is less than 19.5 psia or greater than 79.5 psia, or if pump 2 pressure is less than 45 psia or greater than 81 psia.
- The red *FREON LOOP* light will illuminate if Freon flow in either coolant loop is less than 1200 pph, or if either loop's evap out temperature is less than 32.2° F or greater than 64.8° F (upper limit for ascent is 115° F.)

O_2 PRESS	H_2 PRESS	FUEL CELL REAC (R)	FUEL CELL STACK TEMP	FUEL CELL PUMP
CABIN ATM (R)	O_2 HEATER TEMP	MAIN BUS UNDERVOLT (R)	AC VOLTAGE	AC OVERLOAD
FREON LOOP (R)	AV BAY/ CABIN AIR	IMU	FWD RCS (R)	RCS JET
H_2O LOOP	RGA/ACCEL	AIR DATA (R)	LEFT RCS (R)	RIGHT RCS (R)
———	LEFT RHC (R)	RIGHT/AFT RHC (R)	LEFT OMS (R)	RIGHT OMS (R)
PAYLOAD WARNING (R)	GPC	FCS SATURATION (R)	OMS KIT	OMS TVC (R)
PAYLOAD CAUTION	PRIMARY C/W	FCS CHANNEL	MPS (R)	———
BACKUP C/W ALARM (R)	APU TEMP	APU OVERSPEED	APU UNDERSPEED	HYD PRESS

ECLSS Caution and Warning Lights on Panel F7

ECLSS Summary Data

- The functions of the ECLSS are to maintain the orbiter's thermal stability, provide a pressurized, habitable environment for the crew and onboard avionics, and store water and liquid waste.
- The four components of the ECLSS are the pressure control, atmospheric revitalization, active thermal control, and supply and waste water systems.
- The pressure control system pressurizes the crew cabin at 14.7 psia, pressurizes the supply and waste water tanks, and provides breathing oxygen directly to the launch and entry suit helmets.
- The main components of the pressure control system are oxygen and nitrogen systems, tanks, and valves.
- The atmospheric revitalization system circulates air through the crew compartment to control relative humidity between 30 and 65 percent, maintain carbon dioxide and carbon monoxide at non-toxic levels, control temperature and ventilation in the crew compartment, and provide avionics cooling. The water loop provides cooling for the crew and avionics.
- The atmospheric revitalization system consists of cabin air loops, water coolant loops, fans, and heat exchangers and interchangers.
- The active thermal control system provides orbiter heat rejection during all phases of the mission.
- The active thermal control system consists of two complete, identical Freon coolant loop systems, cold plate networks for cooling avionics units, liquid/liquid heat exchangers, and radiators, flash evaporators, and ammonia boilers.
- The supply water system stores potable water generated by the fuel cells. The supply water is used for flash evaporator system cooling, crew consumption, and hygiene.
- The waste water system stores waste from the crew cabin humidity separator and from the crew.
- Four supply water tanks and one waste water tank are located beneath the crew compartment middeck floor.
- Panels that control the major portion of ECLSS functions are panels L1, L2, MO10W, and R12L. Panels ML31C, ML86B, R13L, MO51F, and MD44F also control ECLSS functions.
- ECLSS status can be monitored on panel O1 and on the following CRT displays: ENVIRONMENT (DISP 66), SM SYS SUMM 1, SM SYS SUMM 2, APU/ENVIRON THERM (DISP 88), and BFS THERMAL.

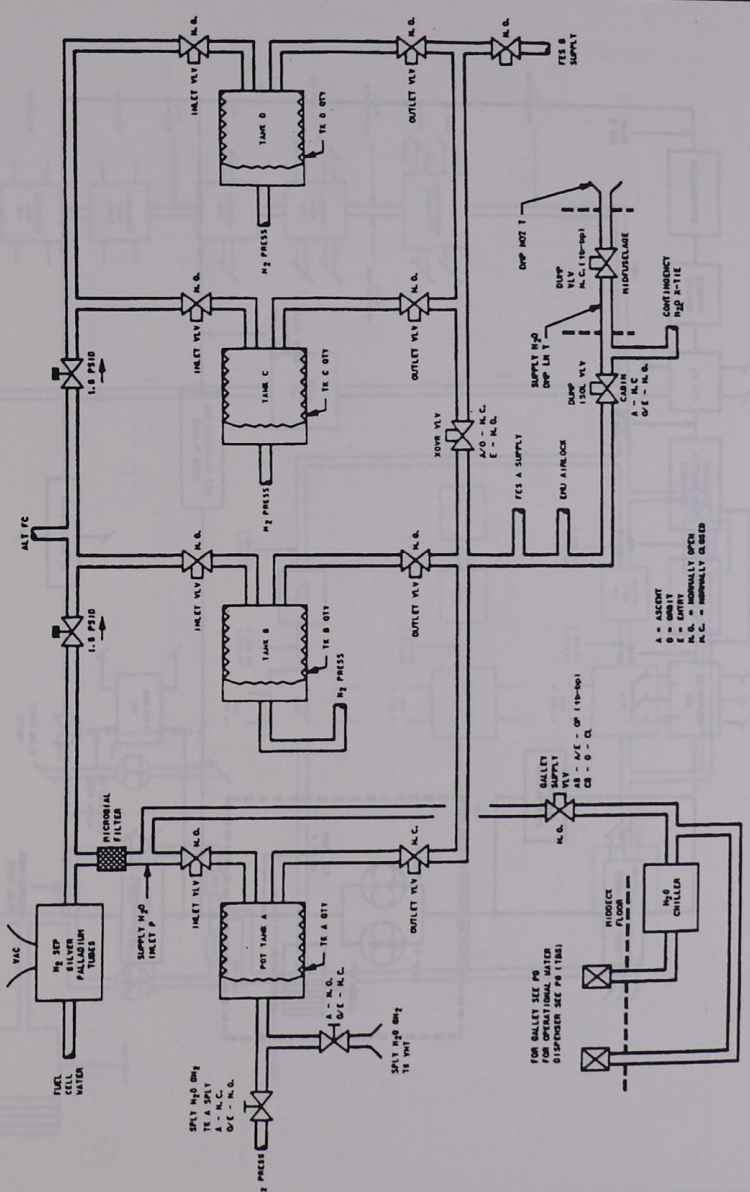

Supply Water Storage System

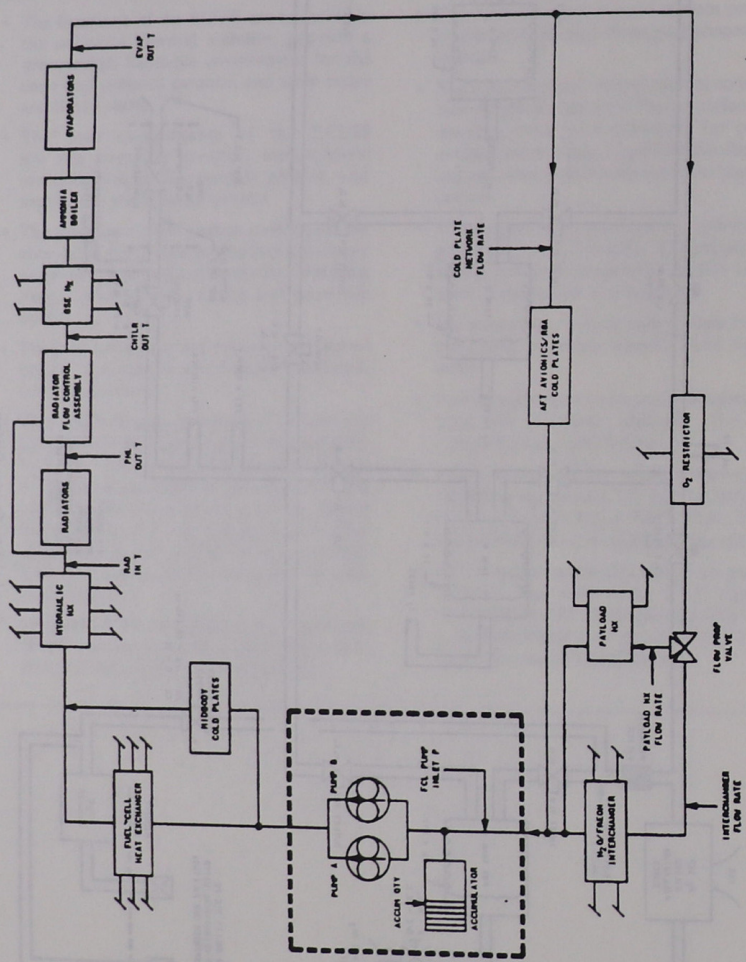
EVAP OUT T
EVAPORATORS
AMMONIA BOILER
GSE HX
CHILL OUT T
RADIATOR FLOW CONTROL ASSEMBLY
FHL OUT T
RADIATORS
RAD IN T
HYDRAULIC HX
AFT AVIONICS/RMA COLD PLATES
COLD PLATE NETWORK FLOW RATE
O2 RESTRICTOR
PAYLOAD HX
FLOW PROP VALVE
PAYLOAD HX FLOW RATE
INTERCHANGER FLOW RATE
H2O/FREON INTERCHANGER
FUEL CELL HEAT EXCHANGER
AVIONICS COLD PLATES
PUMP B
PUMP A
FCL PUMP INLET P
ACCUM OUT P
ACCUMULATOR

Freon Flow

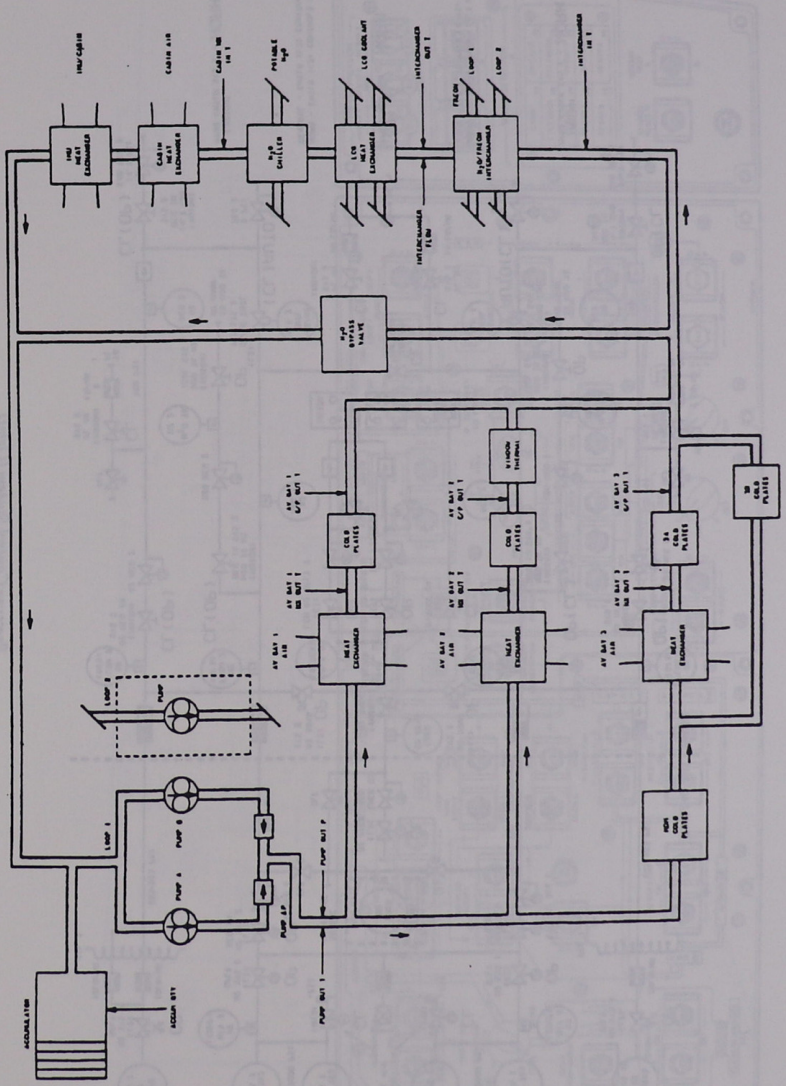

Water Loops

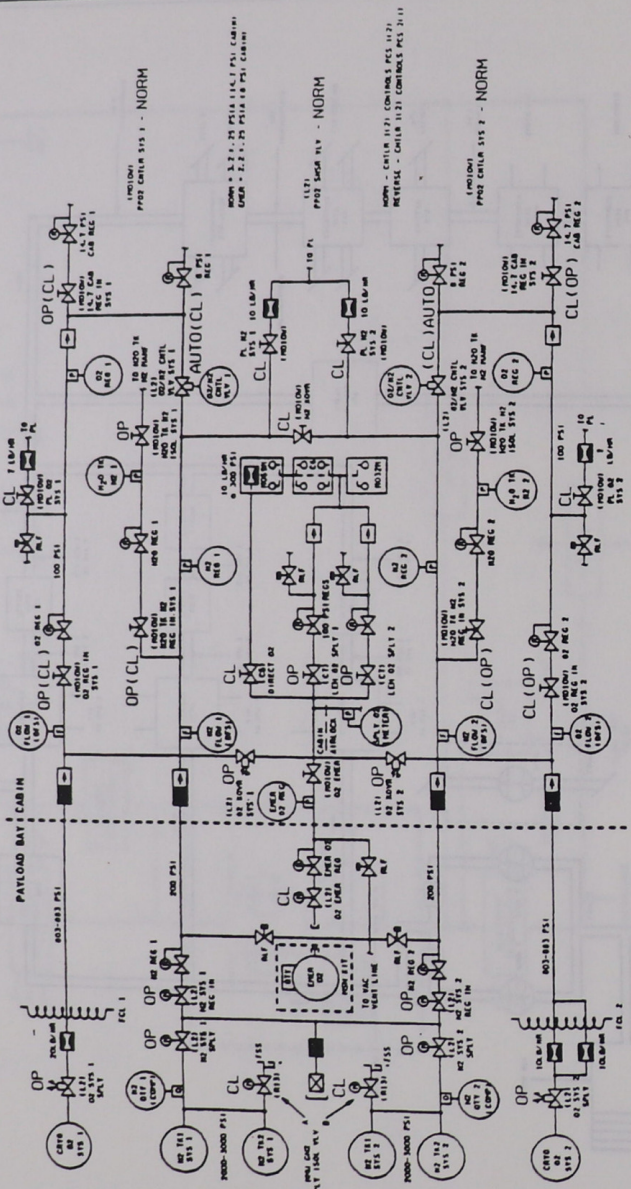

Pressure Control System (Orbit)

L1
CABIN HX
H2O CHILLER
LGG HX
HUMIDITY SEP
WASTE H2O
CABIN TEMP
COOL
WARM
CABIN TEMP CNTLR
CABIN FAN
FLT DECK AVIONICS
AV RACK CP
AV BAY 3 FAN
AV BAY 2 FAN
AV BAY 1 FAN
H2O PUMP
LOOP 1 BYPASS
LOOP 2 BYPASS
INTERCHANGER
AFT CP
PAYLOAD HX
FLOW PROP VLV
HYD HX
FC HX
MID CP
FREON PUMP
RADIATORS
RAD CONTROLLER
OUT TEMP
NORM
AUTO A
AUTO B
MAN SEL
RAD FLOW
BYPASS A
MODE
BYPASS VALVE
H2O ALTERNATE PRESS OPEN
CLOSE
N2 SYS 1
N2 SYS 2
H2O TK
A SPLY
B SPLY
FLASH EVAP CONTROLLER
PRI A
PRI B
SEC
HI LOAD EVAP
ENABLE
TOPPING EVAP
TOPPING EVAPORATOR HEATER
L NOZZLE -R
DUCT
HI LOAD DUCT HTR
NH3 BOILER
NH3 CONTROLLER
NH3 TK A
NH3 TK B
PRI/SEC
BEG/ON
FIRE SUPPRESSION
AV BAY 1
AV BAY 2
AV BAY 3
ARM
SAFE
AGENT DISCH
SMOKE DETECTION
CABIN
PAYLOAD
L FLT DECK
R FLT DECK
SENSOR RESET
CIRCUIT TEST

Panel L1

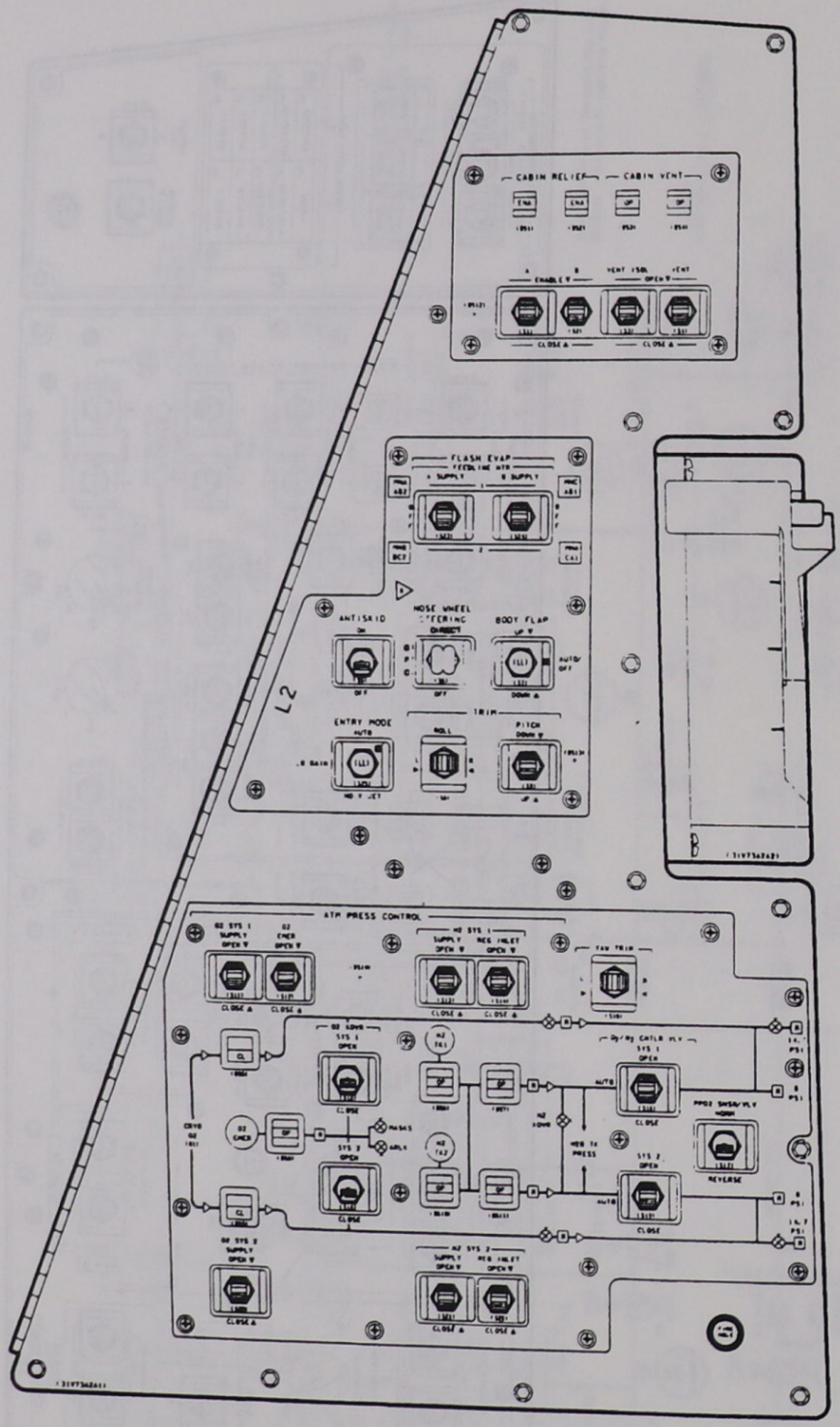
CABIN RELIEF
CABIN VENT
FLASH EVAP
ANTISKID
NOSE WHEEL STEERING
BODY FLAP
ENTRY MODE
ROLL
PITCH
TRIM
L2
ATM PRESS CONTROL

Panel L2

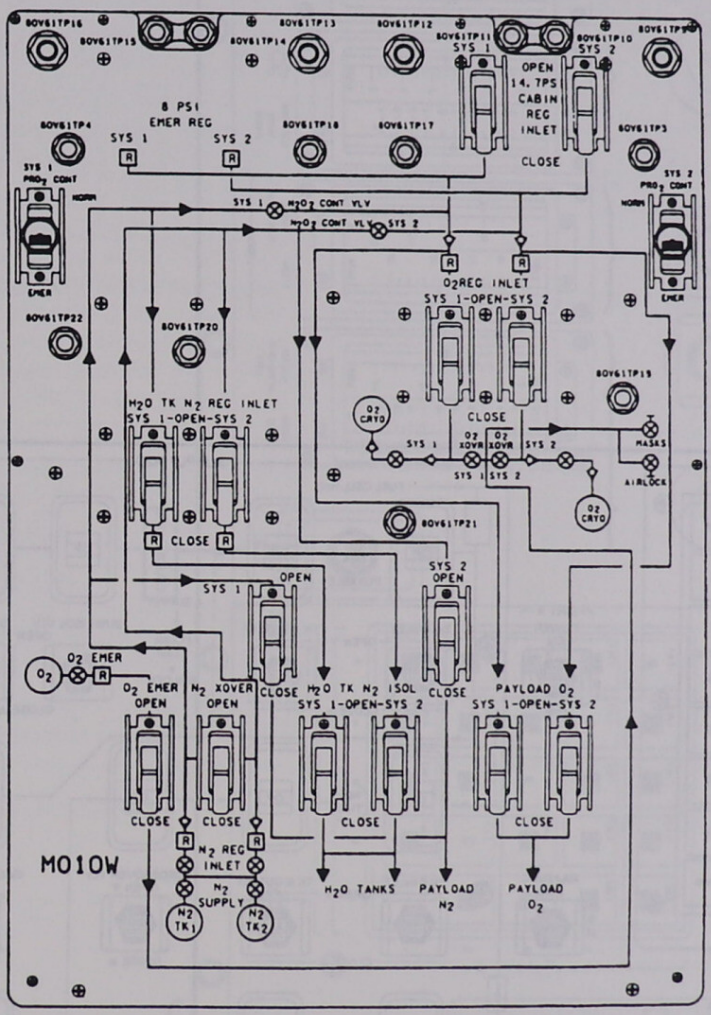
8 PSI
EMER REG
SYS 1
SYS 2
OPEN
14.7PS
CABIN
REG
INLET
CLOSE
SYS 1
SYS 2
EMER
HORN
SYS 1 H_2O_2 CONT VLV
H_2O_2 CONT VLV SYS 2
O_2REG INLET
SYS 1-OPEN-SYS 2
H_2O TK N_2 REG INLET
SYS 1-OPEN-SYS 2
CLOSE
O_2 CRYO
O_2 XOVR
MASS
AIRLOCK
OPEN
SYS 2 OPEN
O_2 EMER
O_2 EMER OPEN
N_2 XOVER OPEN
CLOSE
H_2O TK N_2 ISOL
SYS 1-OPEN-SYS 2
PAYLOAD O_2
SYS 1-OPEN-SYS 2
N_2 REG INLET
N_2 SUPPLY
N_2 TK1
N_2 TK2
H_2O TANKS
PAYLOAD N_2
PAYLOAD O_2
MO10W

Panel MO10W

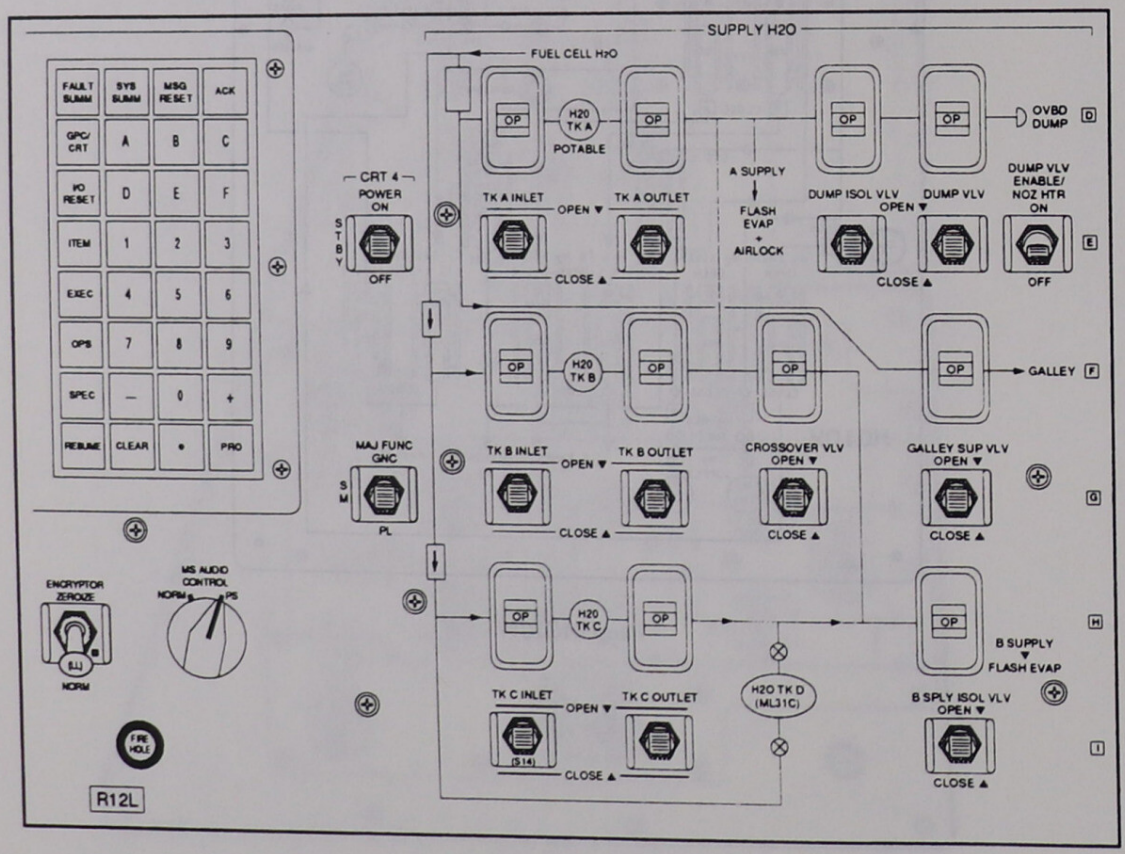
SUPPLY H2O
FUEL CELL H2O
FAULT SUMM
SYS SUMM
MSG RESET
ACK
GPC/ CRT
A
B
C
I/O RESET
D
E
F
ITEM
1
2
3
EXEC
4
5
6
OPS
7
8
9
SPEC
—
0
+
RESUME
CLEAR
•
PRO
CRT 4
POWER ON
STBY
OFF
H2O TK A
POTABLE
TK A INLET
OPEN
TK A OUTLET
CLOSE
A SUPPLY
FLASH EVAP + AIRLOCK
DUMP ISOL VLV
OPEN
DUMP VLV
CLOSE
DUMP VLV ENABLE/ NOZ HTR ON
OFF
OVBD DUMP
D
E
H2O TK B
GALLEY
F
MAJ FUNC GNC
S M
PL
TK B INLET
OPEN
TK B OUTLET
CLOSE
CROSSOVER VLV
OPEN
CLOSE
GALLEY SUP VLV
OPEN
CLOSE
G
H2O TK C
H
TK C INLET
OPEN
TK C OUTLET
CLOSE
S14
H2O TK D (ML31C)
B SUPPLY
FLASH EVAP
B SPLY ISOL VLV
OPEN
CLOSE
I
ENCRYPTOR ZEROIZE
NORM
MS AUDIO CONTROL
NORM
PS
FIRE HOLE
R12L

Panel R12L

NOT ON OV102
OV102 ONLY
COAS
ON
OFF
FIRE
HOLE
GPC STATUS
FAILED GPC
VOTING GPC
COAS
ON
OFF
AIR TEMP
H_2O PUMP OUT PRESS
FREON
FLOW
EVAP OUT TEMP
CABIN dP/dT PSIA/MIN
O_2 N_2 FLOW
CABIN PRESS
PPO_2
PSIA
PPH
LOOP 1
LOOP 2
CAB HX OUT
AV BAY
SENSOR A
SENSOR B
SYS 1
SYS 2
O1

Panel O1

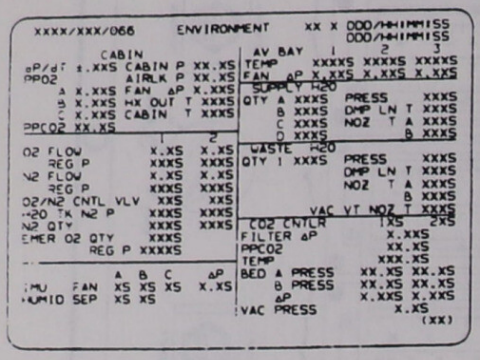

ENVIRONMENT (DISP 66)

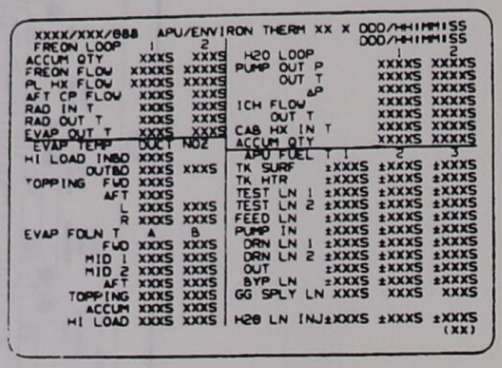

APU/ENVIRON THERM (DISP 88)

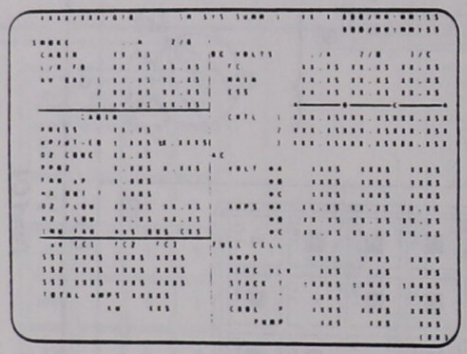

SM SYS SUMM 1

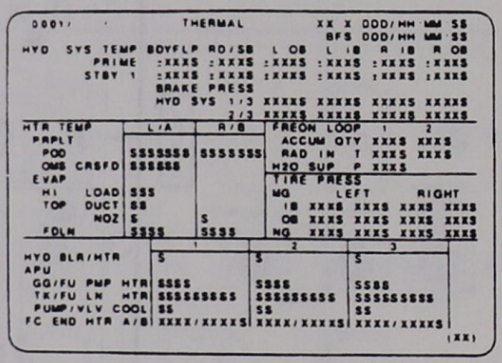

BFS THERMAL

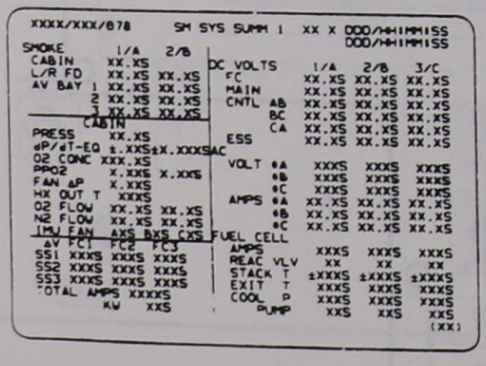

SM SYS SUMM 2

ECLSS Rules of Thumb

NOTE

Numbers presented here are for typical orbit power and heat loads and may vary significantly depending on attitude and power loading.

- Supply water tanks fill at about 1.5 percent per hour depending on fuel cell load (.8 lb/kW hr + 16 lb over 1%; 14 kW typical orbit power load).
- Water tanks empty at about 100 percent per hour for a water dump, about 50 percent per hour when using the FES high load evaporator for cooling with payload bay doors closed, and about 16 percent per hour when using the FES topping evaporator for supply water dumps on orbit with the doors open.
- On-orbit cold soak is good for 20 to 30 minutes of cooling. Prelaunch Freon conditioning is good for 2 to 3 minutes of cooling.
- NH_3 boiler supply is good for 25 minutes of ground cooling.
- A single cryo O_2 tank is good for about 2 to 3 days of orbit usage depending on crew size and power level. H2 tanks are sized to match O2 usage.
- A single LiOH canister is usable for about 48 man-hours.

2.12 GALLEY/FOOD

CONTENTS

Description 2.12-1
Water Dispenser 2.12-1
Food Warmer 2.12-2
Food 2.12-2
Repackaged Galley 2.12-3

Description

The middeck of the orbiter is equipped with facilities for food stowage, preparation, and dining. The food supply is categorized as either menu food, pantry food, or fresh food. Menu food consists of three daily meals per crewmember and provides an average energy intake of approximately 2,700 calories per crewmember per day. The pantry food is a 2-day contingency food supply that also contains food for snacks and beverages between meals and for individual menu changes. Pantry food provides an average energy intake of 2,100 calories per crewmember per day. Fresh food items consist of perishable items such as fruits and tortillas. The types of food include fresh, thermostabilized, rehydratable, irradiated, intermediate-moisture, and natural-form food and beverages.

Three 1-hour meal periods are scheduled for each day of the mission. This hour includes actual eating time and the time required to clean up. Breakfast, lunch, and dinner are scheduled as close to the usual hours as possible. Dinner is scheduled at least 2 to 3 hours before crewmembers begin preparations for their sleep period.

If a payload or the middeck accommodation rack is installed in the middeck, the repackaged galley will be manifested. The primary components (galley oven, rehydration station, hot water tank) are taken from the existing galley inventory, and have been repackaged to occupy less space. These operate in the same manner as on the larger galley. The repackaged galley is first scheduled to be manifested on STS-49, and will eventually be manifested on all flights, thus permanently replacing the larger galley. The menu trays, housed in the upper compartment of the larger galley, will be relocated to middeck lockers.

If a galley is not manifested, the food preparation system components are a water dispenser, a food warmer, food trays, and food system accessories. The probability of this system being manifested again in the future is slim.

Water Dispenser

The water dispenser provides the flight crew with ambient and chilled water for drinking and reconstituting food. The dispenser consists of a housing assembly, rehydration station, hygiene water quick disconnect, and water lines.

Three positions for water flow are *OFF*, *CHD*, and *AMB*. The *OFF* position prevents water from flowing to the rehydration station (it does not shut off water flow to a personal hygiene water outlet quick disconnect). The *CHD* water position provides chilled water to the rehydration station. The *AMB* water position provides ambient water between 65° and 75° F to the rehydration stations. Depressing the hygiene water valve handle allows a constant flow of ambient water. Releasing the handle

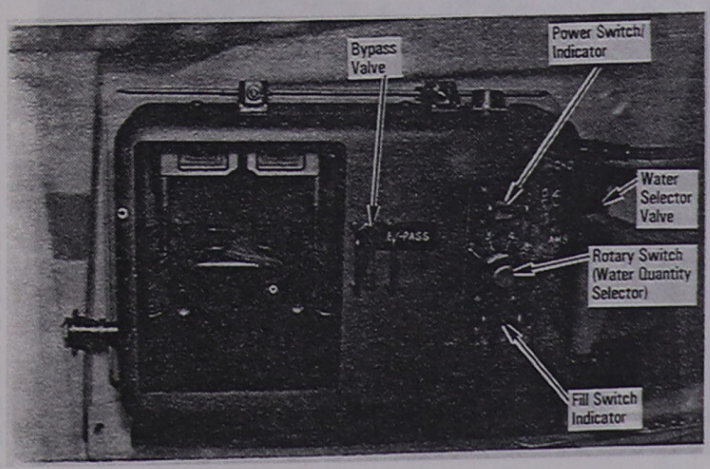

Water Dispenser

prevents water flow. The locked-open position allows a constant flow of ambient water without holding the handle.

The water dispenser includes a rehydration station, which is an electronic dispensing system that interfaces directly with food and beverage packages to provide rehydration capability and drinking water for flight crewmembers. The system dispenses 2, 3, 4, and 8 ounces of water through a replaceable needle when the *PWR* push button is depressed. The system is deactivated by depressing the push button a second time. This push button illuminates during water dispense and goes out when the package has been filled with the selected quantity of water. A spare needle is stowed at the rear of the rehydration unit, and another is stowed in the in-flight maintenance middeck locker. The needles are removed and installed with a 3/8-inch open-end wrench.

Food Warmer

The food warmer is a portable heating unit that can warm a meal for at least four crewmembers within 1 hour. It is stowed in a middeck locker at launch and is removed and installed during meal preparation activity. (If stowage allows, two food warmers will be flown to expedite food preparation.) The food is heated by thermal conduction on a hot plate (element).

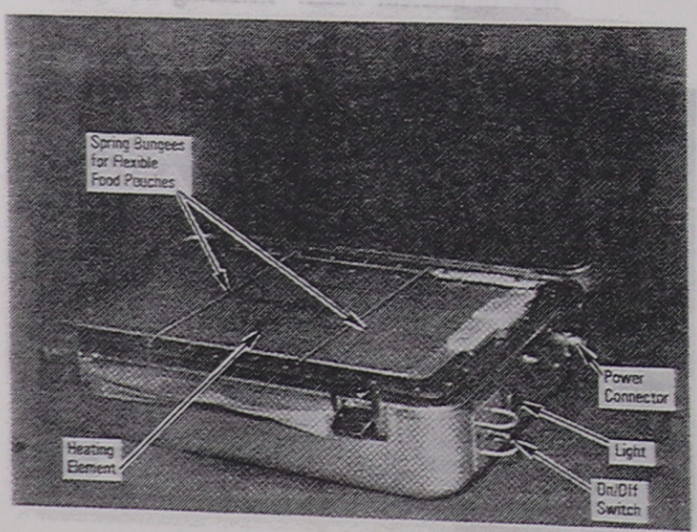

Food Warmer Components

The exterior contains controls and displays, a power connector that interfaces with the power cable, and a Velcro attachment. A hinged element is sandwiched between two aluminum plates and contained by a fiberglass frame. The aluminum plates have spring-bungee restraints for foil-backed food packages on one side. An *ON/OFF* switch provides two-phase ac power to the unit, and a light indicates the warmer is operating. The power cable attaches to a middeck ac utility outlet and is stowed inside the case at launch.

Food

Food trays are kept in the galley or a middeck stowage locker (if a payload or middeck accommodation rack is manifested) at launch and are removed and installed in the use locations during preparations for the first meal. The tray is an anodized aluminum sheet that restrains food and accessories during dining. The trays are color-coded for each crewmember. Velcro on the bottom of the food trays allows them to be attached to the front of the middeck lockers (or the galley door, if installed) for food preparation or dining. The straps will also hold the trays on the crewmember's leg for dining. A cutout on the tray allows three rehydratable food packages to be secured to the tray. Another cutout with rubber strips adapts to various-sized food packages, including cans, pouches, and rehydratable food packages. Two magnetic strips hold eating utensils, and two 0.75-inch-wide binder clips on the tray retain such things as condiment packets and wipes. Accessories used during food preparation and dining include condiments, gum and candy, vitamins, wet wipes, dry wipes, galley adaptor, drinking straws, utensils, and a re-entry kit that contains salt tablets, long straws, and empty drink containers.

Condiments include salt, pepper, taco sauce, hot pepper sauce, catsup, mayonnaise, and mustard. The salt and pepper are liquids stored in small plastic squeeze bottles. The remaining condiments are packaged in individual, sealed, flexible plastic pouches. Vitamin tablets supplement dietary requirements.

Wet wipes are packaged in 21 individual packets per dispenser for cleaning utensils after dining. A light spring action retains and positions wipes for dispensing. Approximately five to 10 different color-coded straws are provided for each crewmember (depending on the flight's duration) for drinking beverages and water. Additional straws are kept in the pantry beverages and various menu locker trays. Color-coded utensils include a knife, two spoons (large and small), a fork, a pair of scissors, and a can opener for each crewmember. They are stowed with a soft plastic holder that has a Velcro snap cover. Dry wipes are packaged in a 30-wipe container that can be attached to the crew cabin wall with Velcro for cleanup after dining.

The re-entry kit consists of one package containing drink containers and salt tablets for entry fluid loading. Two salt tablets are to be taken with 8 ounces of water or other beverage by each crewmember four times before entry. The re-entry kit will be stowed with the pantry beverages.

Repackaged Galley

The repacked galley (hereafter referred to as the galley) is a multipurpose facility that provides a centralized location for one individual to handle all food preparation activities for a meal. The galley has facilities for heating food, rehydrating food, and stowing food system accessories. The galley consists of a rehydration station, oven, and associated controls.

Oven

The oven is divided into two principal compartments: an upper compartment designed for heating at least 14 rehydratable food containers inserted on tracks, and a lower compartment designed to accept up to seven flexible packages. An oven fan *ON/OFF* switch enables/disables power to three oven fans. These fans circulate warm air over a heat sink, thus providing forced convection heating for the rigid packages. The flexible packages are held against the heat sink by three spring-loaded plates, and warmed by conduction. The oven has a heating range of 160° to 185° F. The oven door is operated by "squeeze" latch requiring only 3 lb of pressure to open the door.

Rehydration Station Dispensing System

The galley rehydration station dispensing system interfaces directly with food and beverage packages to provide rehydration capability and drinking water for crewmembers.

When both WATER HEATER switches are turned on, 145° - 160 ° water is available for rehydration. The *VOLUME/OUNCES* switch selects the volume of water to be dispensed by the rehydration station in 0.5-ounce increments from 0.5 of an ounce to 8 ounces. The yellow *HOT* push button indicator allows hot water to be dispensed when it is depressed and is illuminated when energized. When the selected volume of water has been dispensed, the push button will begin to flash on and off. The light will be extinguished when the food package is retracted, releasing the rehydration station lever *ARM/LIMIT* switch.

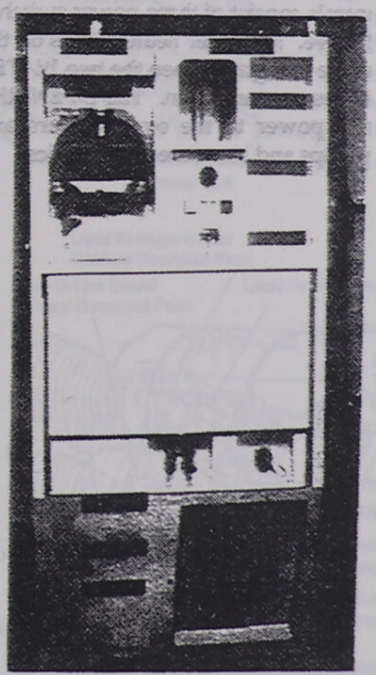

Repackaged Galley

The rehydration station lever ARM/LIMIT switch serves as an interlock so water can be dispensed only when a food package is connected to the needle. The food package makes contact with the rehydration station lever, which activates the LIMIT switch (note that the flight crew does not physically actuate the lever).

The blue *COLD* push button indicator allows cold water to be dispensed when it is depressed and is illuminated when energized. When the selected volume of water has been dispensed, the push button will begin to flash on and off. The light will be extinguished when the food package is retracted, releasing the rehydration station lever ARM/LIMIT switch.

Food System Accessories

Individual wet wipe packets are stowed above the rehydration water quantity selector preflight. Liquid salt and pepper plus individual packets of catsup, mayonnaise, mustard, and taco sauce are stowed in a middeck food locker.

Galley Controls

The galley controls consist of three power switches and the MV2 valve. Six water heater strips on the hot water tank are energized when the two *WATER HEATER* switches are turned on. The *OVEN/RHS* switch controls power to the oven heaters and rehydration pumps and associated electronics.

On the lower right-hand side of the galley (above the MV2) is an auxiliary port water quick disconnect (QD) that allows the crewmembers to obtain ambient potable water when a 12-foot flex line and water dispensing valve are attached to the QD. Located below the AUX PORT QD is the MV2 valve knob. It allows the crew to mix hot water with the ambient supply water used for crew hygiene. The galley also has a test port (under the rehydration station) and a canon plug (by the oven latch) that are used for ground operations.

2.16 MAIN PROPULSION SYSTEM (MPS)

CONTENTS

Description 2.16-1
Space Shuttle Main Engines (SSMEs) 2.16-3
Space Shuttle Main Engine Controllers .. 2.16-8
Propellant Management System (PMS) .. 2.16-14
Helium System 2.16-20
MPS Hydraulic Systems 2.16-24
Malfunction Detection 2.16-26
Operations 2.16-29

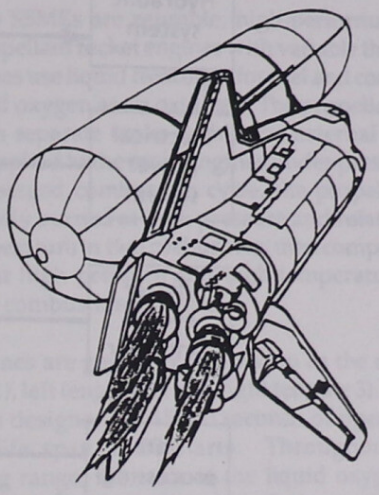

Description

The main engines, assisted by two solid rocket motors during the initial phases of the ascent trajectory, provide the vehicle acceleration from lift-off to main engine cutoff (MECO) at a predetermined velocity.

The MPS has critical interfaces with the orbiter hydraulic system, electrical power system, master events controller, and data processing system. The hydraulic system supplies hydraulic pressure to operate the main engine valves and gimbal actuators. The electrical power system furnishes ac power to operate the main engine controllers and dc power to operate the valves and transducers in the propellant management and helium systems. The master events controller initiates firings of pyrotechnic devices for separating the solid rocket boosters from the external tank and the external tank from the orbiter. The data processing system controls most of the MPS functions during ascent and entry.

The MPS consists of three Space Shuttle Main Engines (SSMEs), three SSME controllers, the external tank, the orbiter MPS propellant management system and helium subsystem, four ascent thrust vector control units, and six SSME hydraulic TVC servoactuators. (The external tank is described in detail in Section 1.3.) Most of the MPS is located in the aft fuselage beneath the vertical stabilizer.

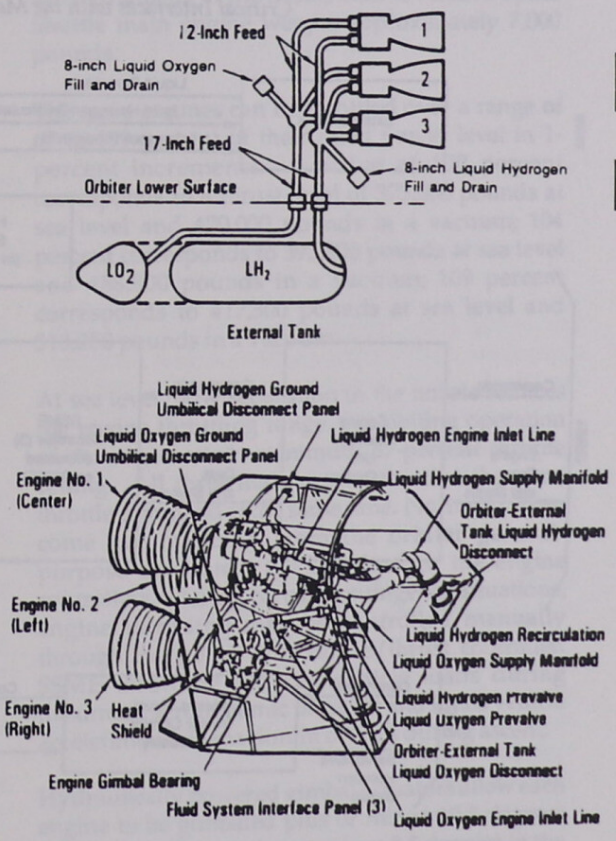

Main Propulsion System

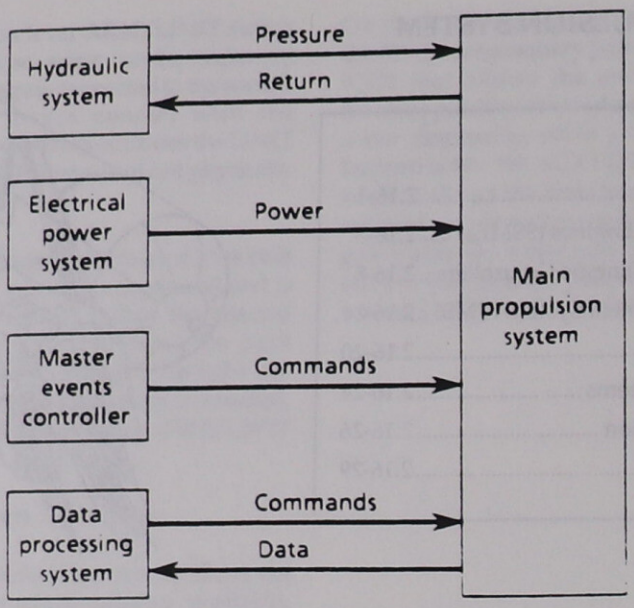

Critical Interfaces with the Main Propulsion System

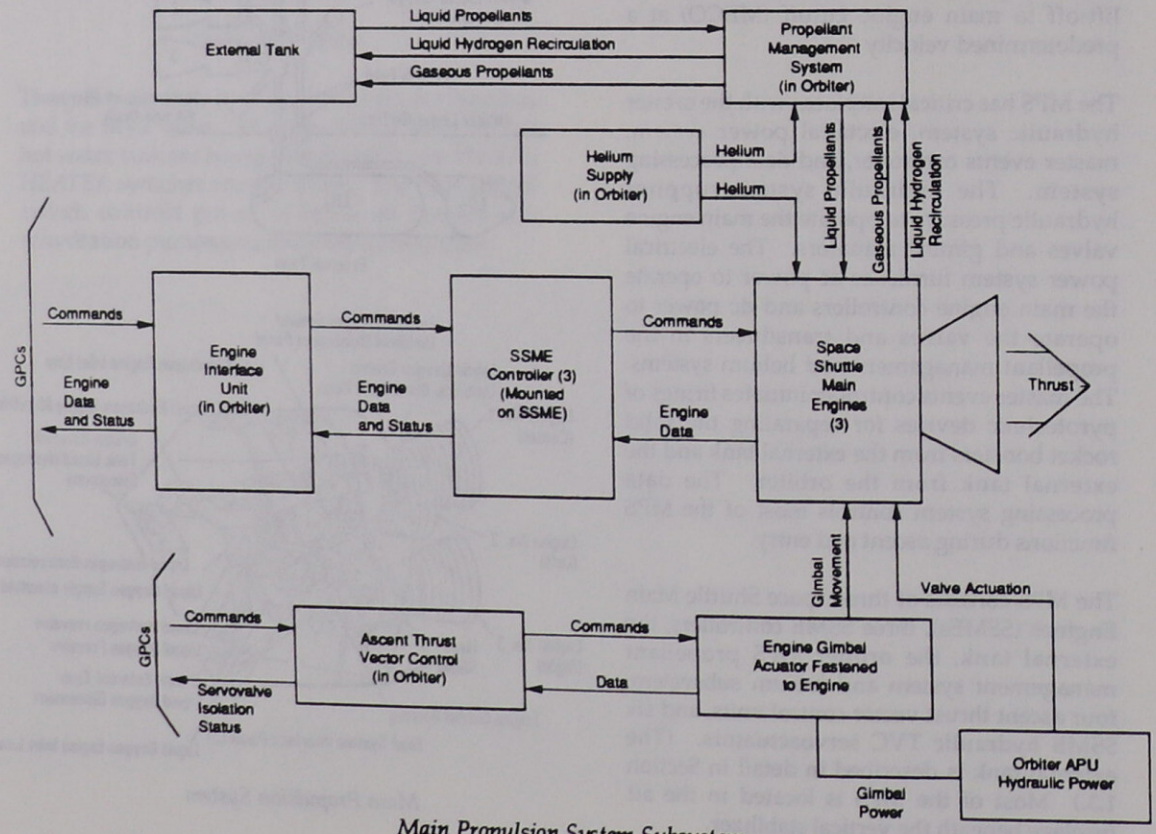

Main Propulsion System Subsystem

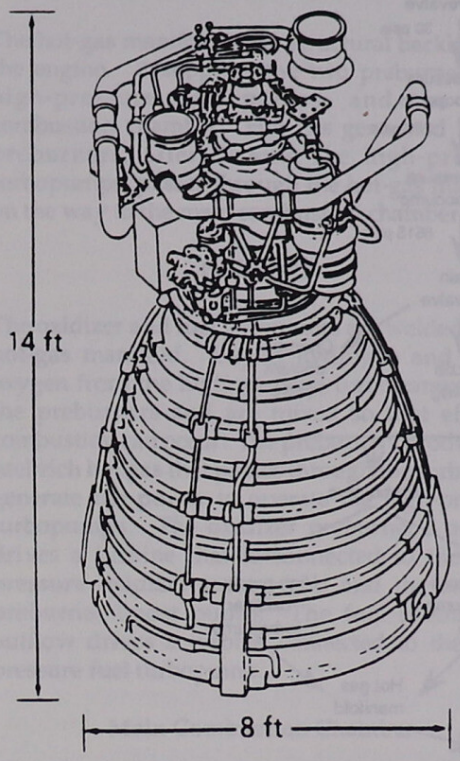

Space Shuttle Main Engine

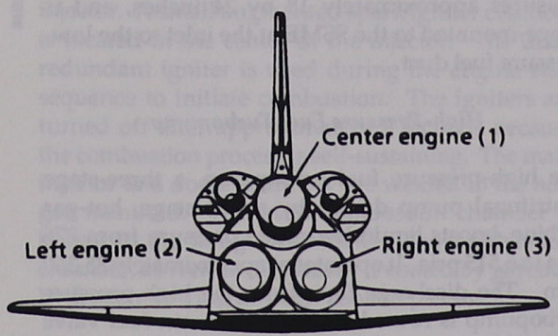

Aft view of Orbiter

Main Engine Numbering System

Space Shuttle Main Engines (SSMEs)

The three SSMEs are reusable, high-performance, liquid propellant rocket engines with variable thrust. The engines use liquid hydrogen for fuel and cooling and liquid oxygen as an oxidizer. The propellant is carried in separate tanks within the external tank and is supplied to the main engines under pressure. Using a staged combustion cycle, the propellants are partially burned at high pressure and relatively low temperature in two preburners, then completely burned at high pressure and high temperature in the main combustion chamber.

The engines are generally referred to as the center (engine 1), left (engine 2), and right (engine 3). Each engine is designed for 15,000 seconds of operation over a life span of 30 starts. Throughout the throttling range, the ratio of the liquid oxygen to liquid hydrogen mixture is 6:1. Each nozzle area ratio is 77.5:1. The engines are 14 feet long and 7.5 feet in diameter at the nozzle exit. Overall, a Space Shuttle main engine weighs approximately 7,000 pounds.

The main engines can be throttled over a range of 67 to 109 percent of their rated power level in 1-percent increments. A value of 100 percent corresponds to a thrust level of 375,000 pounds at sea level and 470,000 pounds in a vacuum; 104 percent corresponds to 393,800 pounds at sea level and 488,800 pounds in a vacuum; 109 percent corresponds to 417,300 pounds at sea level and 513,250 pounds in a vacuum.

At sea level, flow separation in the nozzle reduces the engine throttling range, prohibiting operation of the engine at its minimum 67-percent throttle setting. All three main engines receive the same throttle command at the same time. Normally, these come automatically from the orbiter general-purpose computers (GPCs) through the engine controllers. During certain contingency situations, engine throttling may be controlled manually through the pilot's speedbrake/thrust controller. SSME throttling reduces vehicle loads during maximum aerodynamic pressure and limits vehicle acceleration to a maximum of 3 g's during ascent.

Hydraulically powered gimbal actuators allow each engine to be gimbaled plus or minus 10.5 degrees in the yaw axis and plus or minus 8.5 degrees in the pitch axis for thrust vector control.

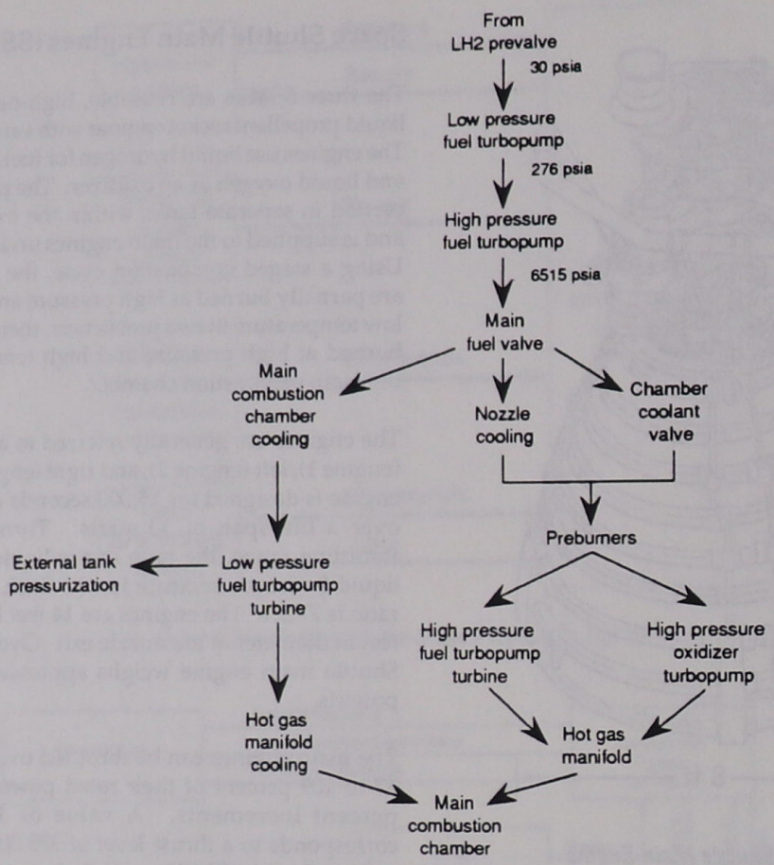

Main Engine Fuel Flow

The SSME major components are the fuel and oxidizer turbopumps, preburners, a hot gas manifold, main combustion chamber, nozzle, oxidizer heat exchanger, and propellant valves.

Fuel Turbopumps

Low-Pressure Fuel Turbopump

The low-pressure fuel turbopump is an axial-flow pump driven by a two-stage axial flow turbine powered by gaseous hydrogen. It boosts liquid hydrogen pressure from 30 psia to 276 psia and supplies the high-pressure fuel turbopump. During engine operation, this pressure increase allows the high-pressure fuel turbopump to operate at high speeds without cavitating. The low-pressure fuel turbopump operates at approximately 16,185 rpm, measures approximately 18 by 24 inches, and is flange-mounted to the SSME at the inlet to the low-pressure fuel duct.

High-Pressure Fuel Turbopump

The high-pressure fuel turbopump, a three-stage centrifugal pump driven by a two-stage, hot-gas turbine, boosts liquid hydrogen pressure from 276 psia to 6,515 psia. It operates at approximately 35,360 rpm. The discharge flow from the high-pressure turbopump is routed through the main fuel valve and then splits into three flow paths. One path is through the jacket of the main combustion chamber, where the hydrogen is used to cool the chamber walls, and then to the low-pressure fuel turbopump to drive its turbine. The second flow path, through the chamber coolant valve, supplies liquid hydrogen

Hot Gas Manifold

The hot-gas manifold is the structural backbone of the engine. It supports the two preburners, the high-pressure turbopumps, and the main combustion chamber. Hot gas generated by the preburners, after driving the high-pressure turbopumps, passes through the hot-gas manifold on the way to the main combustion chamber.

Preburners

The oxidizer and fuel preburners are welded to the hot-gas manifold. Liquid hydrogen and liquid oxygen from the high-pressure turbopumps enter the preburners and are mixed so that efficient combustion can occur. The preburners produce the fuel-rich hot gas that passes through the turbines to generate the power to operate the high-pressure turbopumps. The oxidizer preburner's outflow drives a turbine that is connected to the high-pressure oxidizer turbopump and the oxidizer preburner boost pump. The fuel preburner's outflow drives a turbine connected to the high-pressure fuel turbopump.

Main Combustion Chamber

Each engine main combustion chamber receives fuel-rich hot gas from the fuel and oxidizer preburners. The high pressure oxidizer turbopump supplies liquid oxygen to the combustion chamber where it is mixed with fuel-rich gas by the main injector. A small augmented spark igniter chamber is located in the center of the injector. The dual-redundant igniter is used during the engine start sequence to initiate combustion. The igniters are turned off after approximately 3 seconds because the combustion process is self-sustaining. The main injector and dome assembly are welded to the hot-gas manifold. The main combustion chamber is bolted to the hot-gas manifold. The combustion chamber, as well as the nozzle, is cooled by gaseous hydrogen flowing through coolant passages.

The nozzle assembly is bolted to the main combustion chamber. The nozzle is 113 inches long, with an exit plane of 94 inches. The physical dimension of the nozzle creates a 77.5:1 expansion ratio. A support ring welded to the forward end of the nozzle is the engine attach point to the engine heat shield. Thermal protection is provided for the nozzles to protect them from the high heating rates experienced during the launch, ascent, on-orbit, and entry phases. The insulation consists of four layers of metallic batting covered with a metallic foil and screening.

Oxidizer Heat Exchanger

The oxidizer heat exchanger converts liquid oxygen to gaseous oxygen for tank pressurization and pogo suppression. The heat exchanger receives its liquid oxygen from the high-pressure oxidizer turbopump discharge flow.

Pogo Suppression System

A pogo suppression system prevents the transmission of low-frequency flow oscillations into the high-pressure oxidizer turbopump and, ultimately, prevents main combustion chamber pressure (engine thrust) oscillation. Flow oscillations transmitted from the vehicle are suppressed by a partially filled gas accumulator, which is attached by flanges to the high-pressure oxidizer turbopump's inlet duct.

The system consists of a 0.6-cubic-foot accumulator with an internal standpipe, helium precharge valve package, gaseous oxygen supply valve package, and four recirculation isolation valves.

During engine start, the accumulator is charged with helium 2.4 seconds after the start command to provide pogo protection until the engine heat exchanger is operational, and gaseous oxygen is available. The accumulator is partially chilled by liquid oxygen during the engine chill-down operation. It fills to the overflow standpipe line inlet level, which is sufficient to preclude gas ingestion at engine start. During engine operation, the accumulator is charged with a continuous gaseous oxygen flow.

The liquid level in the accumulator is controlled by an internal overflow standpipe, which is orificed to regulate the gaseous oxygen overflow at varying engine power levels. The system is sized to provide sufficient supply of gaseous oxygen at the minimum flow rate and to permit sufficient gaseous oxygen overflow at the maximum pressure transient in the low-pressure oxidizer turbopump discharge duct. Under all other conditions, excess gaseous and liquid oxygen are recirculated to the low-pressure oxidizer turbopump inlet through the engine

oxidizer bleed duct. The pogo accumulator is also pressurized at engine shutdown to provide a positive pressure at the high-pressure oxidizer turbopump inlet. The post-charge prevents turbine overspeed in the zero-gravity environment.

> **CAUTION**
>
> Insufficient helium supply for engine shutdown could result in engine damage during shutdown. A pre-MECO manual shutdown may be required if a leak develops in the helium system.

Valves

Each engine has five propellant valves (oxidizer preburner oxidizer, fuel preburner oxidizer, main oxidizer, main fuel, and chamber coolant) that are hydraulically actuated and controlled by electrical signals from the engine controller. They can be fully closed by using the MPS engine helium supply system as a backup actuation system.

High-pressure oxidizer turbopump and high-pressure fuel turbopump turbine speed depends on the position of the oxidizer and fuel preburner oxidizer valves. The engine controller uses the preburner oxidizer valves to control engine thrust by regulating the flow of liquid oxygen to the preburners. The oxidizer and fuel preburner oxidizer valves increase or decrease the liquid oxygen flow into the preburner, thereby increasing or decreasing preburner chamber pressure and high-pressure oxidizer turbopump and high-pressure fuel turbopump turbine speed. This directly affects liquid oxygen and gaseous hydrogen flow into the main combustion chamber, which in turn can increase or decrease engine thrust. The fuel preburner oxidizer valve is used to maintain a constant 6:1 propellant mixture ratio.

The main oxidizer valve controls liquid oxygen flow into the engine combustion chamber. The main fuel valve controls the total liquid hydrogen flow into the engine cooling circuit, the preburner supply lines, and the low-pressure fuel turbopump turbine. When the engine is operating, the main valves are fully open.

A chamber coolant valve on each engine combustion chamber coolant bypass duct regulates the amount of gaseous hydrogen allowed to bypass the nozzle coolant loop to control engine temperature. The chamber coolant valve is 100 percent open before engine start, and at power levels between 100 and 109 percent. For power levels between 67 and 100 percent, the valve's position will range from 68.3 to 100 percent open.

Propellant Dump

The main oxidizer valve is opened to allow residual liquid oxygen to be dumped overboard through the engine nozzle after engine shutdown. Both liquid hydrogen fill/drain valves, as well as the fuel bleed valve, are opened after engine shutdown to allow residual liquid hydrogen to drain overboard.

Space Shuttle Main Engine Controllers

The controller is a pressurized, thermally conditioned electronics package attached to the thrust chamber and nozzle coolant outlet manifolds on the low-pressure fuel turbopump side of the engine. Each controller contains two redundant digital computer units, referred to as units A and B. Normally, A is in control, and unit B electronics are active, but not in control. Instructions to the engine control elements are updated 50 times per second (every 20 milliseconds). Engine reliability is enhanced by a dual-redundant system that allows normal digital computer unit operation after the first failure and a fail-safe shutdown after a second failure. High-reliability electronic parts are used throughout the controller. The digital computer is programmable, allowing engine control equations and constants to be modified by changing the software.

The controller is packaged in a sealed, pressurized chassis and is cooled by convection heat transfer through pin fins as part of the main chassis. The electronics are distributed on functional modules with special thermal and vibration protection.

Operating in conjunction with engine sensors, valves, actuators, and spark igniters, the controllers form a self-contained system for engine control, checkout, and monitoring. The controller provides engine flight readiness verification, engine start and

shutdown sequencing, closed-loop thrust and propellant mixture ratio control, sensor excitation, valve actuator and spark igniter control signals, engine performance limit monitoring, and performance and maintenance data. The controller also provides onboard engine checkout, response to vehicle commands, and transmission of engine status.

Controller power is supplied by the three ac buses in a manner that protects their redundancy. Each computer unit within a controller receives its power from a different bus. The buses are distributed among the three controllers such that the loss of any two buses will result in the loss of only one engine. The digital computer units require all three phases of an ac bus to operate. There are two *MPS ENGINE POWER* switches on panel R2 for each engine controller (*LEFT, CTR, RIGHT*); the top switch is for digital computer unit A, and the bottom switch is for digital computer unit B. Cycling an *MPS ENGINE POWER* switch to *OFF* and back to *ON* will cause the affected digital computer unit to stop processing.

The *MAIN PROPULSION SYSTEM ENGINE CNTLR HTR LEFT, CTR, RIGHT* switches on panel R4 are non-functional. The heaters were not installed in Block II controllers due to analysis that showed the Block I heaters were not required.

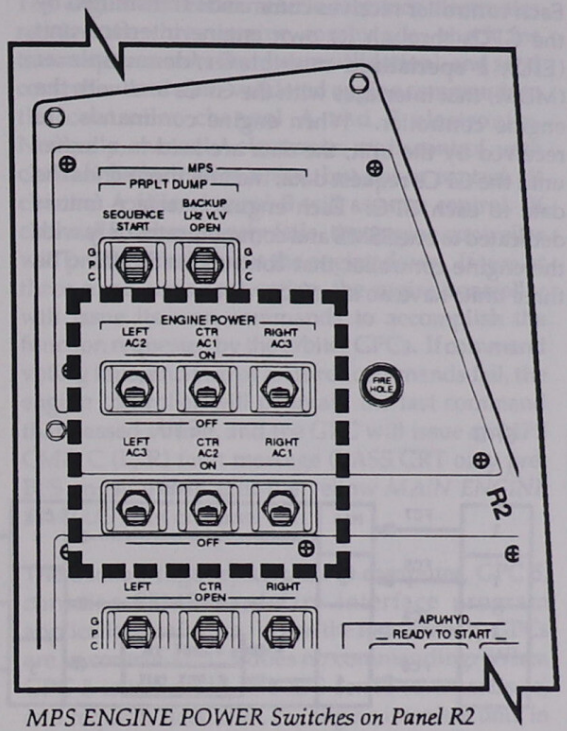

MPS ENGINE POWER Switches on Panel R2

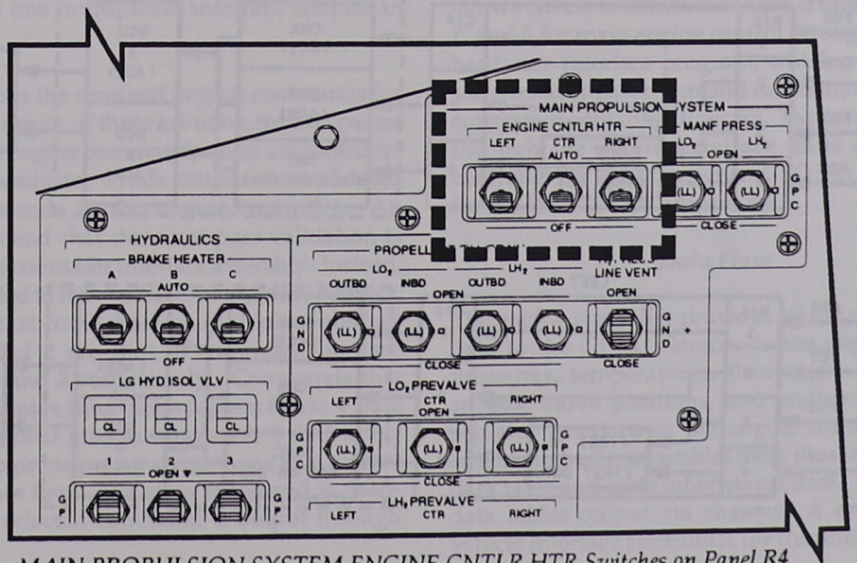

MAIN PROPULSION SYSTEM ENGINE CNTLR HTR Switches on Panel R4

Command and Data Flow

Command Flow

Each controller receives commands transmitted by the GPCs through its own engine interface unit (EIU), a specialized multiplexer/demultiplexer (MDM) that interfaces with the GPCs and with the engine controller. When engine commands are received by the unit, the data are held in a buffer until the GPCs request data; the unit then sends the data to each GPC. Each engine interface unit is dedicated to one SSME and communicates only with the engine controller that controls its SSME. The three units have no interface with each other.

The engine interface units are powered through the *EIU* switches on panel O17. If a unit loses power, its corresponding engine cannot receive any throttle, shut down, or dump commands, and will not be able to communicate with the GPCs. As a result, the controller will maintain the last valid command until it is shut down manually via the *MPS ENGINE POWER* switches on panel R2.

Each orbiter GPC, operating in a redundant set, issues engine commands from resident SSME subsystem operating programs to the EIUs for transmission to their corresponding engine controllers. Engine commands are output over the GPC's assigned flight-critical data bus (a total of

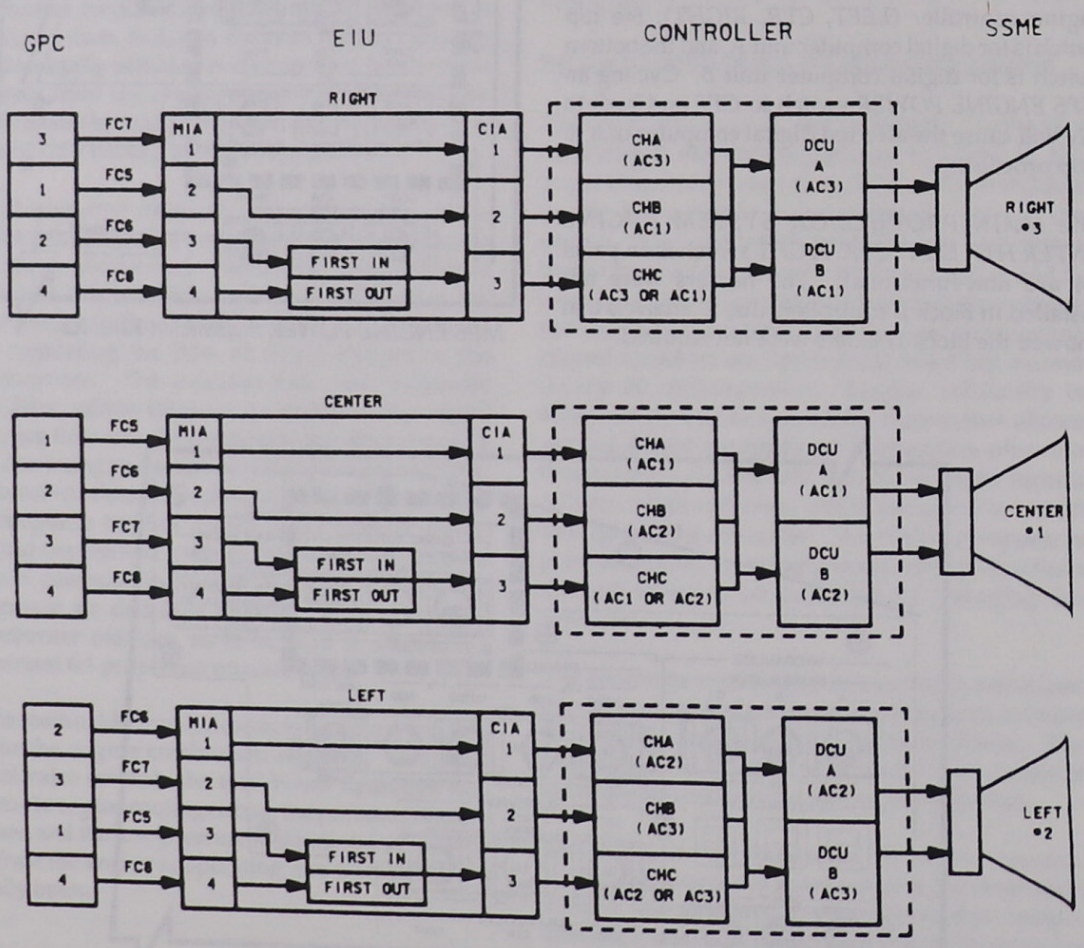

Main Engine Command Flow

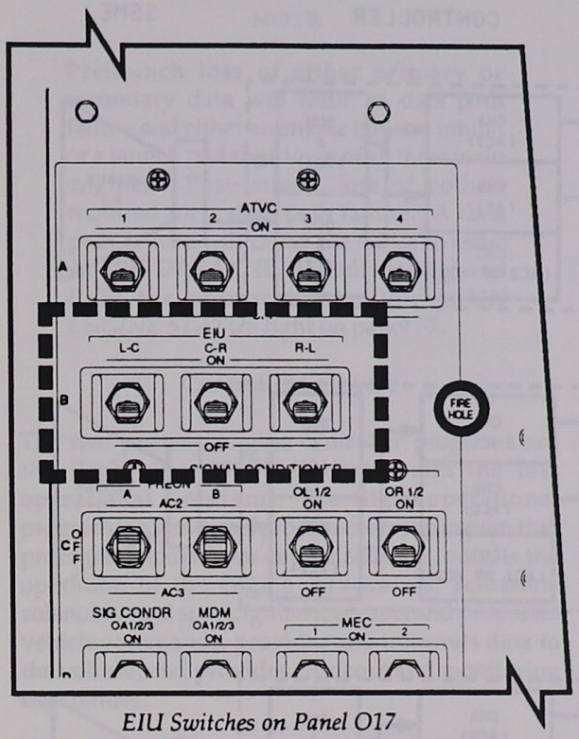

EIU Switches on Panel O17

four GPCs outputting over four flight-critical data buses). Therefore, each EIU will receive four commands. The nominal ascent configuration has GPCs 1, 2, 3, and 4 outputting on flight-critical data buses 5, 6, 7, and 8 respectively. Each data bus is connected to one multiplexer interface adapter in each EIU.

The EIU checks the received engine commands for transmission errors. If there are none, the EIU passes the validated engine commands on to the controller interface assemblies, which output the validated engine commands to the engine controller. An engine command that does not pass validation is not sent to the controller interface assembly. Instead, it is dead-ended in the multiplexer interface adapter. Commands that come through multiplex interface adapters 1 and 2 are sent to controller interface assemblies 1 and 2 respectively. Commands that come to multiplex interface adapters 3 and 4 pass through controller interface assembly 3 data-select logic. This logic outputs the command that arrives at the interface first. The other command is dead-ended. The selected command is output through controller interface assembly 3. In this manner, the EIU reduces the four input commands to three output commands.

The engine controller vehicle interface electronics receive the three engine commands, check for transmission errors (hardware validation), and send controller hardware-validated engine commands to the controller channel A and B electronics. Normally, channel A electronics are in control, with channel B electronics active, but not in control. If channel A fails, channel B will assume control. If channel B subsequently fails, the engine controller will pneumatically shut the engine down. If two or three commands pass voting, the engine controller will issue its own commands to accomplish the function requested by the orbiter GPCs. If command voting fails, and two or all three commands fail, the engine controller will maintain the last command that passed voting, and the GPC will issue an MPS CMD C (L, R) fault message (PASS CRT only pre-BFS engage) and light the yellow *MAIN ENGINE STATUS* light on panel F7.

The backup flight system (BFS) computer, GPC 5, contains SSME hardware interface program applications software. When the four primary GPCs are in control, GPC 5 does no commanding. When GPC 5 is in control, the BFS sends commands to, and requests data from, the engine interface unit; in this configuration, the four primary GPCs neither command nor listen. The BFS, when engaged, allows GPC 5 to command flight-critical buses 5, 6, 7, and 8 for main engine control through the SSME hardware interface program, which performs the same main engine command functions as the SSME subsystem operating program. The command flow through the engine interface units and engine controllers is the same when GPC 5 is engaged as for the four-GPC redundant set.

Data Flow

The engine controller provides all the main engine data to the GPCs. Sensors in the engine supply pressures, temperatures, flow rates, turbopump speeds, valve positions, and engine servovalve actuator positions to the engine controller. The engine controller assembles these data into a vehicle data table and adds other status data. The vehicle data tables output via channels A and B to the vehicle interface electronics for transmission to the

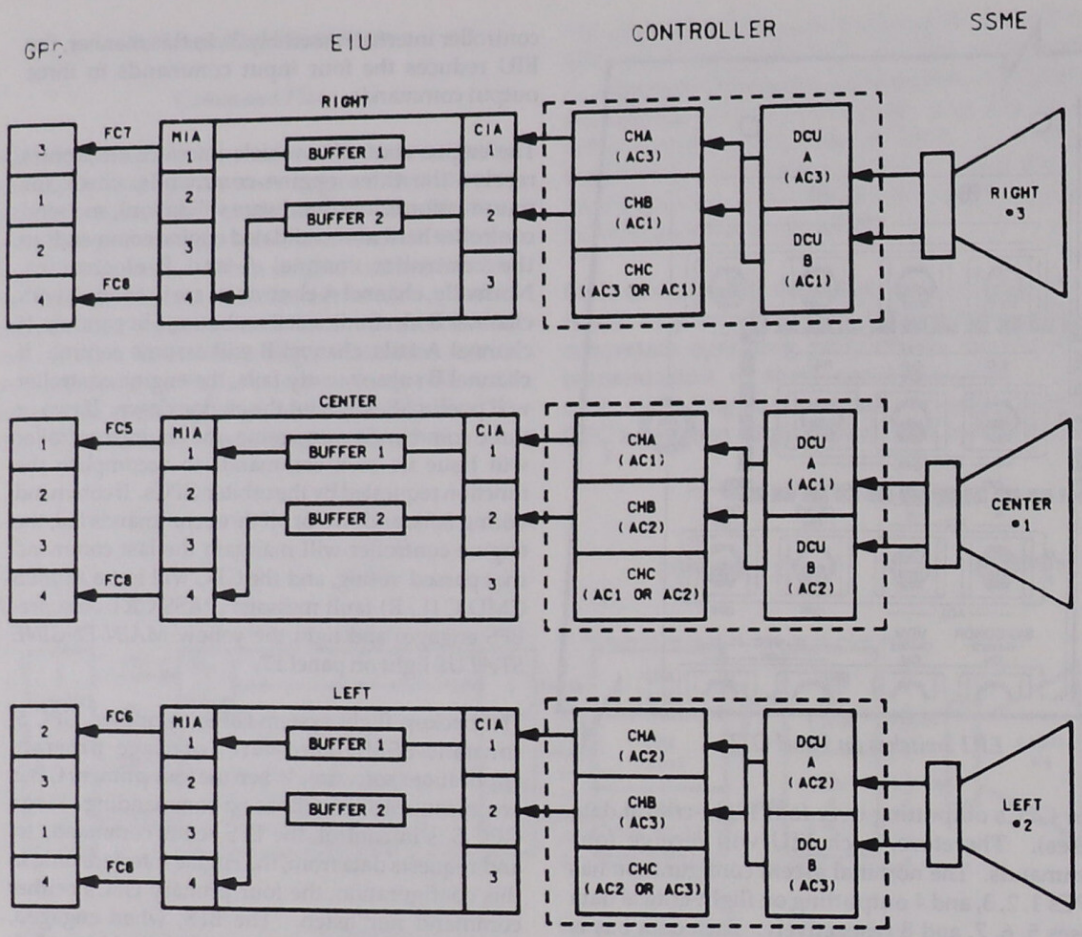

Main Engine Data Flow

engine interface units. The vehicle interface electronics output data over both the primary and secondary data paths.

The vehicle data table is sent by the controller to the engine interface unit. There are only two data paths versus three command paths between the engine controller and the engine interface unit. The data path that interfaces with controller interface assembly 1 is called primary data. Primary data consist of the first 32 words of the SSME vehicle data table. Secondary data is the path that interfaces with controller interface assembly 2. Secondary data consist of the first six words of the vehicle data table. Primary and secondary data are held in buffers until the GPCs send a primary and secondary data request command to the engine interface units. Primary data are output only through multiplex interface adapter 1 on each engine interface unit. Secondary data are output only through multiplex interface adapter 4 on each engine interface unit.

At T minus zero, the orbiter GPCs request both primary and secondary data from each engine interface unit. For no failures, only primary data are looked at. If there is a loss of primary data (which can occur between the engine controller channel A electronics and the SSME subsystem operating procedure), only the secondary data are transmitted to the GPCs.

NOTE

Prelaunch loss of either primary or secondary data will result in data path failure and either an engine ignition inhibit or a launch pad shutdown of all three main engines. Post-launch, loss of both is required for a data path failure. A data path failure will cause the GPCs to issue an MPS DATA C (L, R) fault message and light the appropriate yellow *MAIN ENGINE STATUS* light on panel F7.

Controller Software

The two primary engine controller programs are the flight operational program and the test operational program. The flight operational program is a real-time, process-control program that processes inputs from engine sensors, controls the operation of the engine servovalves, actuators, solenoids, and spark igniters, accepts and processes vehicle commands, provides and transmits data to the vehicle, and provides checkout and monitoring capabilities.

The test operational program supports engine testing prior to launch. Functionally, it is similar to the flight operational program but differs in implementation. The programs are modular and are defined as computer program components. Each consists of a data base organized into tables. During application of the computer program components, the programs perform data processing for failure detection and status of the vehicle. As system operation progresses through an operating phase, combinations of control functions are operative at different times. These combinations within a phase are defined as operating modes.

The checkout phase initiates active control monitoring or checkout. The standby mode in this phase puts the controller on pause while active control sequence operations are in process. Monitoring functions that do not affect engine hardware status are continually active during this mode. Such functions include processing vehicle commands, updating engine status, and self-testing the controller. During checkout, data and instructions can be loaded into the engine controller's computer memory, permitting updates to the software and data as necessary to proceed with engine-firing or checkout operations. Component checkout is also performed during this mode.

The start preparation phase consists of system purges and propellant conditioning in preparation for engine start. Purge sequence 1 mode is the first. It includes oxidizer system and intermediate seal purge operation. Purge sequence 2 mode is the second purge sequence, including fuel system purge operation and the continuation of purges initiated during purge sequence 1. Purge sequence 3 mode includes propellant recirculation (bleed valve operation). Purge sequence 4 mode includes fuel system purges and indicates that the engine is ready to enter the start phase. The engine-ready mode occurs when proper engine thermal conditions for start have been attained, and other criteria for start have been satisfied, including a continuation of the purge sequence 4 mode.

The start phase covers engine ignition operations and scheduled open-loop operation of the propellant valves. The start initiation mode includes all functions before ignition confirm and the closing of the thrust control loop. During thrust buildup, the main combustion chamber pressure is monitored to verify closed-loop sequencing is in progress.

Main stage is automatically entered upon successful completion of the start phase. Mixture ratio control and thrust control are active.

The shutdown phase covers operations to reduce main combustion chamber pressure and drive all valves closed to effect full engine shutdown.

The post-shutdown phase is entered upon completion of SSME shutdown. During the terminate sequence, all propellant valves are closed, and all solenoid and torque motor valves are de-energized.

Propellant Management System (PMS)

Liquid hydrogen and liquid oxygen pass from the ET to the propellant management system. The PMS consists of manifolds, distribution lines, and valves. It also contains lines needed to transport gases from the engines to the external tank for pressurization.

During prelaunch activities, this subsystem is used to load liquid oxygen and liquid hydrogen into the external tank. After MECO, the PMS is used to complete a liquid oxygen and liquid hydrogen dump and vacuum inerting. It is also used for manifold repressurization during entry.

Propellant Manifolds

Two 17-inch-diameter MPS propellant feedline manifolds are located in the orbiter aft fuselage, one for liquid oxygen and one for liquid hydrogen. Each manifold interfaces with its respective line on the ET. Both manifolds interface with an 8-inch fill/drain line containing an inboard and outboard fill/drain valve in series. Inside the orbiter, the manifolds diverge into three 12-inch SSME feedlines, one for each engine.

Fluid pressures within the oxygen and hydrogen feedline manifolds can be monitored on the two MPS PRESS ENG MANF meters on panel F7 or on the BFS GNC SYS SUMM 1 display (MANF P LH2, LO2).

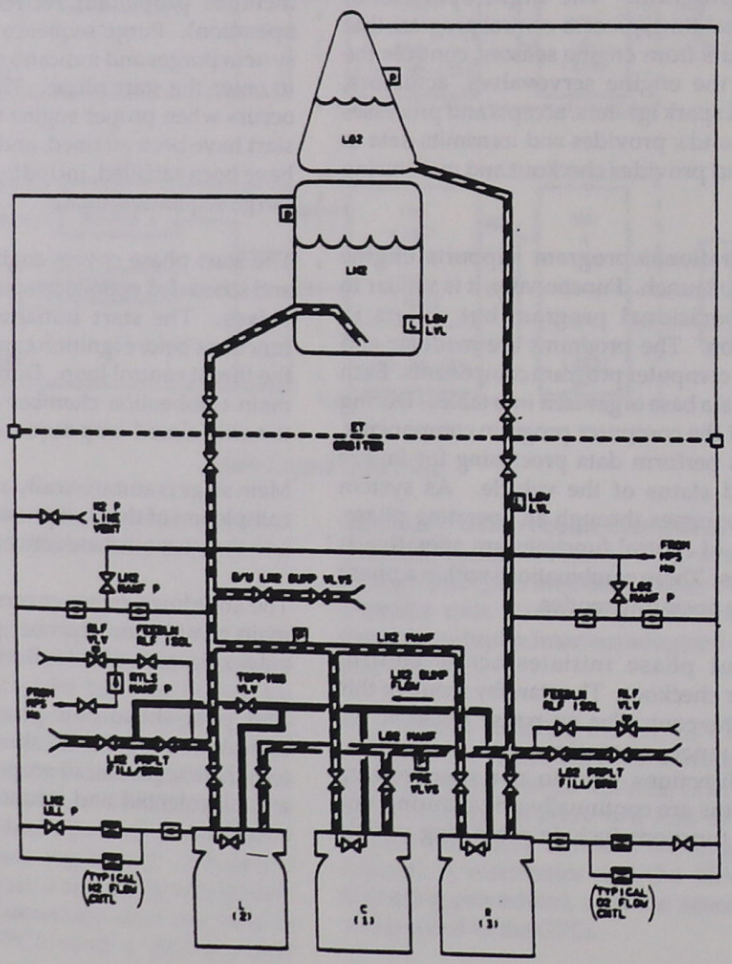

MPS Propellant Management System Schematic from the Ascent Pocket Checklist

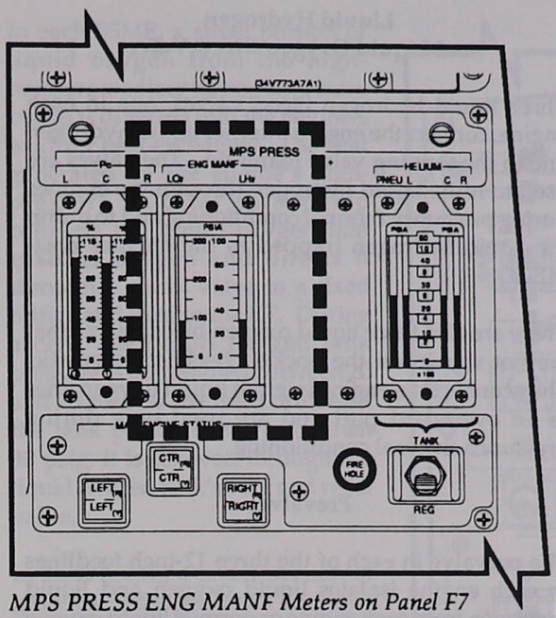

MPS PRESS ENG MANF Meters on Panel F7

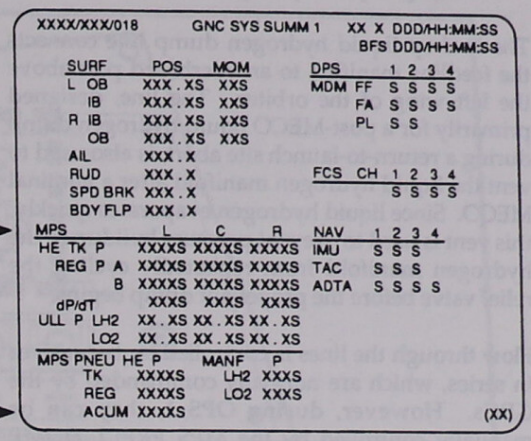

MPS Parameters on BFS GNC SYS SUMM 1 Display (DISP 18)

Feedline Disconnect Valves

Two disconnect valves are found in each feedline where the orbiter meets the external tank. One is on the orbiter side of the manifold, and the other is on the external tank side. All four are closed automatically prior to external tank separation.

Fill/Drain Valves

Two (outboard and inboard) 8-inch-diameter liquid oxygen and liquid hydrogen fill/drain valves are connected in series. They are used to load the external tank before launch and to vacuum inert the feedline manifolds after the post-MECO MPS propellant dump. The valves can be manually controlled by the *PROPELLANT FILL/DRAIN* LO_2, LH_2 *OUTBD, INBD* switches on panel R4. Each switch has *OPEN, GND,* and *CLOSE* positions.

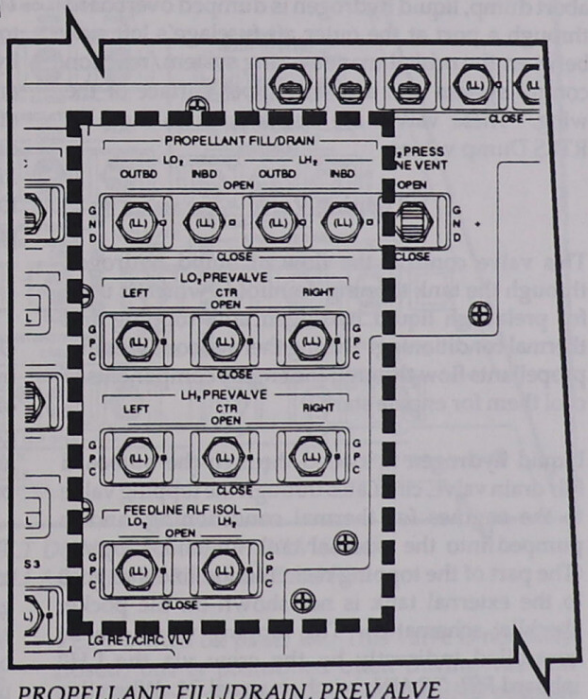

PROPELLANT FILL/DRAIN, PREVALVE and FEEDLINE RLF ISOL Switches on Panel R4

Relief Valves

Each 8-inch liquid hydrogen and liquid oxygen manifold has a 1-inch-diameter line that is routed to a feedline relief isolation valve and then to a feedline relief valve. When the feedline relief isolation valve is opened automatically after MECO, the corresponding manifold can relieve excessive pressure overboard through its relief valve. The relief isolation valves can also be manually controlled by the *MAIN PROPULSION SYSTEM FEEDLINE RLF ISOL* LO_2 and LH_2 switches on panel R4. The switches have *OPEN, GPC,* and *CLOSE* positions.

Backup Liquid Hydrogen Dump Valves

The backup liquid hydrogen dump line connects the feedline manifold to an overboard port above the left wing of the orbiter. The line, designed primarily for a post-MECO liquid hydrogen dump during a return-to-launch site abort, is also used to vent the liquid hydrogen manifold after a nominal MECO. Since liquid hydrogen evaporates quickly, this vent is used to prevent pressure buildup in the hydrogen manifold from repeatedly cycling the relief valve before the propellant dump begins.

Flow through the lines is controlled by two valves in series, which are normally commanded by the GPCs. However, during OPS 1, they can be manually controlled by the *MPS PRPLT DUMP BACKUP LH_2 VLV* switch on panel R2, which has *OPEN, GPC,* and *CLOSE* positions. In an RTLS abort dump, liquid hydrogen is dumped overboard through a port at the outer aft fuselage's left side between the orbital maneuvering system/reaction control system pod and the upper surface of the wing. These valves are also known as the LH2 RTLS Dump valves.

Topping Valve

This valve controls the flow of liquid hydrogen through the tank topping manifold, which is used for prelaunch liquid hydrogen tank topping and thermal conditioning. During thermal conditioning, propellants flow through the engine components to cool them for engine start.

Liquid hydrogen is loaded through the outboard fill/drain valve, circulates through the topping valve to the engines for thermal conditioning, and is pumped into the external tank for tank topping. (The part of the topping recirculation line that goes to the external tank is not shown on the pocket checklist schematic.) The topping valve can be controlled indirectly by the crew via the LH2 inboard *FIIL DRAIN* switch on panel R4. When this switch is taken to OPEN, both the LH2 inboard fill drain and topping valves open.

There is no topping valve for liquid oxygen. Since liquid oxygen is harmless in the atmosphere, it is not circulated back to the external tank during thermal conditioning. Rather, it is dumped overboard through the engine liquid oxygen bleed valves and out the overboard bleed valve.

Liquid Hydrogen and Liquid Oxygen Bleed Valves

Three liquid hydrogen bleed valves, one in each engine, connect the engine internal liquid hydrogen line to the topping valve manifold. The valves are used to route liquid hydrogen through the engines during prelaunch thermal conditioning and to dump the liquid hydrogen trapped in the engines post-MECO.

There are also three liquid oxygen bleed valves that are not shown on the pocket checklist schematic. They connect the engine internal liquid oxygen lines to an overboard port and are used only during prelaunch thermal conditioning.

Prevalves

The prevalve in each of the three 12-inch feedlines to each engine isolates liquid oxygen and liquid hydrogen from each engine or permits liquid oxygen and liquid hydrogen to flow to each engine. Most of the prevalve functions are automatic, but they can also be controlled by the LO_2 and LH_2 *PREVALVE, LEFT, CTR, RIGHT* switches on panel R4. Each switch has *OPEN, GPC,* and *CLOSE* positions.

Ullage Pressure System

Ullage refers to the space in each tank not occupied by propellants. The ullage pressure system consists of the sensors, lines, and valves needed to route gaseous propellants from the three main engines and supply them to the external tank to maintain propellant tank pressure during engine operation.

There are two external tank pressurization manifolds, one for gaseous oxygen and one for gaseous hydrogen. During prelaunch, the manifolds are used to supply ground support pressurization of the ET using helium routed through the T-0 umbilical. Self-sealing quick disconnects are provided at the T-0 umbilical for separation at lift-off.

Each manifold contains three 0.63-inch-diameter pressurization lines, one from each engine. The three lines join in a common manifold prior to entering the ET.

In each SSME, a small portion of liquid oxygen from the high-pressure oxidizer turbopump main pump is diverted into the engine's oxidizer heat exchanger. The heat generated by the engine's high-pressure oxidizer turbopump converts the liquid oxygen into gaseous oxygen and directs it through a check valve to a fixed orifice and then to the ET. During ascent, the liquid oxygen tank pressure is maintained between 20 and 25 psig by the fixed orifice. If the tank pressure is greater than 30 psig, it is relieved through the liquid oxygen tank's vent and relief valve.

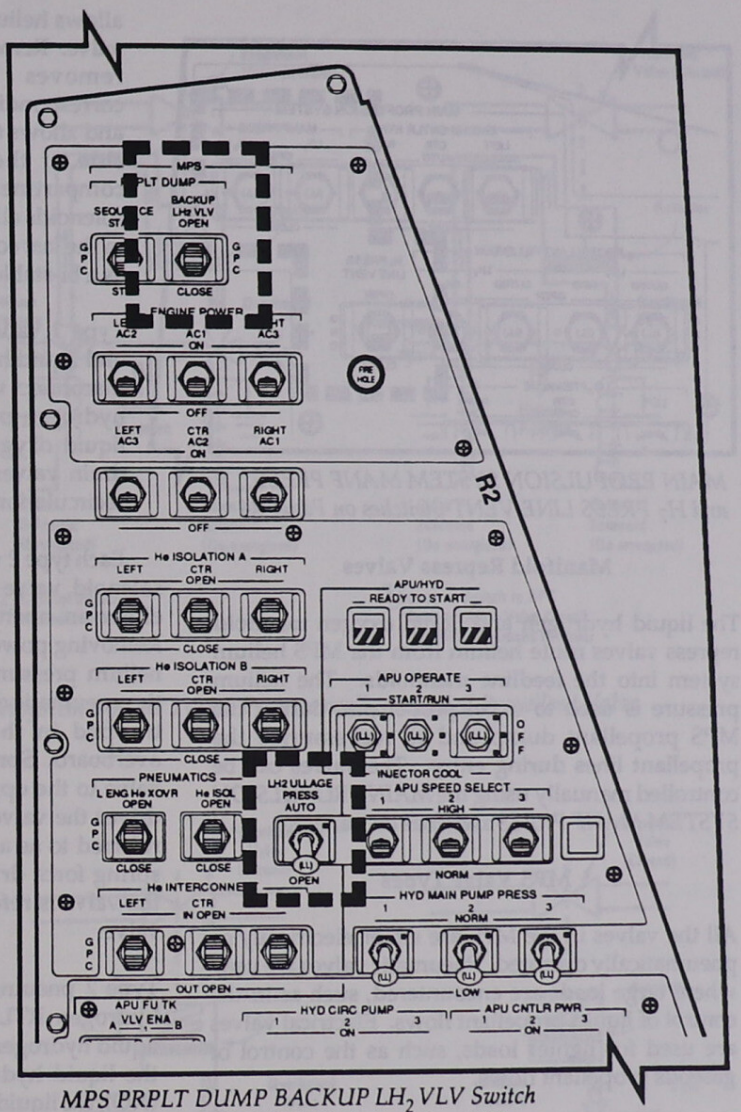

MPS PRPLT DUMP BACKUP LH_2 VLV Switch and LH_2 ULLAGE PRESS Switch on Panel R2

In each SSME, a small portion of gaseous hydrogen from the low-pressure fuel turbopump is directed through two check valves, two orifices, and a flow control valve before entering the ET. During ascent, the liquid hydrogen tank's pressure is maintained between 32 and 34 psia using both a variable and a fixed orifice in each SSME supply system. The active flow control valve is controlled by one of three liquid hydrogen pressure transducers. When the tank pressure decreases below 32 psia, the valve opens; when the tank pressure increases to 33 psia, the valve closes. If the tank pressure exceeds 35 psia, the pressure is relieved through the liquid hydrogen tank's vent and relief valve. If the pressure falls below 32 psia, the *LH2 ULLAGE PRESS* switch on panel R2 is positioned from *AUTO* to *OPEN*, causing all three flow control valves to go to full open.

The three liquid hydrogen and three liquid oxygen ullage pressures are displayed on the BFS GNC SYS SUMM 1 display (ULL P).

The SSME/ET liquid hydrogen pressurization system also contains a line that is used to vent the liquid hydrogen pressurization manifold during inerting. It is controlled by the *H_2 PRESS LINE VENT* switch on panel R4. This valve is normally closed, but is positioned open during vacuum inerting for a one minute period. The *GND* position allows the launch processing system to control the valve during ground operations.

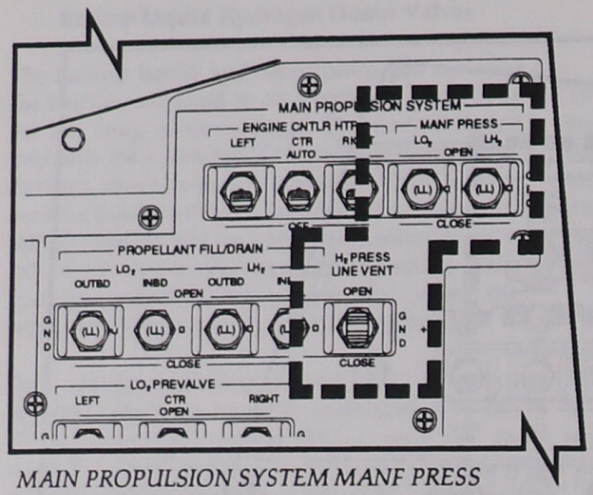

MAIN PROPULSION SYSTEM MANF PRESS and H_2 PRESS LINE VENT Switches on Panel R4

Manifold Repress Valves

The liquid hydrogen and liquid oxygen manifold repress valves route helium from the MPS helium system into the feedline manifolds. The helium pressure is used to expel propellants during the MPS propellant dump and to repressurize the propellant lines during entry. The valves can be controlled manually using the *MAIN PROPULSION SYSTEM MANF PRESS* switches on panel R4.

MPS Valve Types

All the valves in the MPS are either electrically or pneumatically operated. Pneumatic valves are used where large loads are encountered, such as in the control of liquid propellant flows. Electrical valves are used for lighter loads, such as the control of gaseous propellant flows.

The pneumatically actuated valves are divided into two types: type 1, which requires pneumatic pressure to open and close the valve, and type 2, which is spring-loaded to one position and requires pneumatic pressure to move to the other position.

Each type 1 valve actuator is equipped with two electrically actuated solenoid valves, which control helium pressure to an "open" or "close" port on the actuator. Energizing the solenoid valve on the open port allows helium pressure to open the pneumatic valve. Energizing the solenoid on the close port allows helium pressure to close the pneumatic valve. Removing power from a solenoid valve removes helium pressure from the corresponding port of the pneumatic actuator and allows the helium pressure trapped in that side of the actuator to vent into the aft compartment. Removing power from both solenoids allows the pneumatic valve to remain in the last commanded position. This is known as a bi-stable valve.

Type 1 valves are used for the liquid oxygen and liquid hydrogen feedline 17-inch umbilical disconnect valves, the liquid oxygen and liquid hydrogen prevalves, the liquid hydrogen and liquid oxygen inboard and outboard fill and drain valves, and the liquid hydrogen 4-inch recirculation disconnect valves.

Each type 2 valve is a single electrically actuated solenoid valve that controls helium pressure to either an open or a close port on the actuator. Removing power from the solenoid valve removes helium pressure from the corresponding port of the pneumatic actuator and allows helium pressure trapped in that side of the actuator to vent overboard. Spring force takes over and drives the valve to the opposite position. If the spring force drives the valve to the open position, the valve is referred to as a normally open (NO) valve. If the spring force drives the valve to a closed position, the valve is referred to as a normally closed (NC) valve.

Type 2 pneumatic valves are used for the liquid hydrogen RTLS inboard dump valve (NC), the liquid hydrogen RTLS outboard dump valve (NC), the liquid hydrogen feedline relief shutoff valve (NO), the liquid oxygen feedline relief shutoff valve (NO), the three liquid hydrogen engine recirculation valves (NC), the two liquid oxygen pogo recirculation valves (NO), the liquid hydrogen topping valve (NC), the liquid hydrogen high-point bleed valve (NC), and the liquid oxygen overboard bleed valve (NO).

The electrically actuated solenoid valves are spring-loaded to one position and move to the other position when electrical power is applied. These valves also are referred to as either normally open or normally closed, depending on their position in the de-energized state. Electrically actuated solenoid valves are the gaseous hydrogen

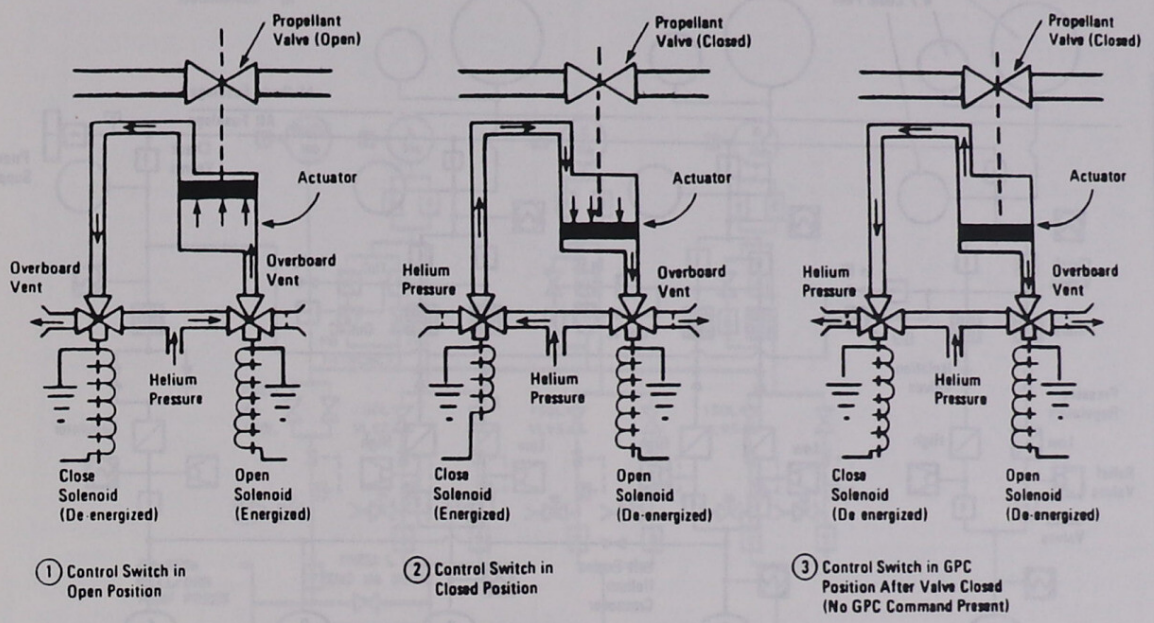

Propellant Management Subsystem Typical Type 1 Pneumatically Actuated Propellant Valve

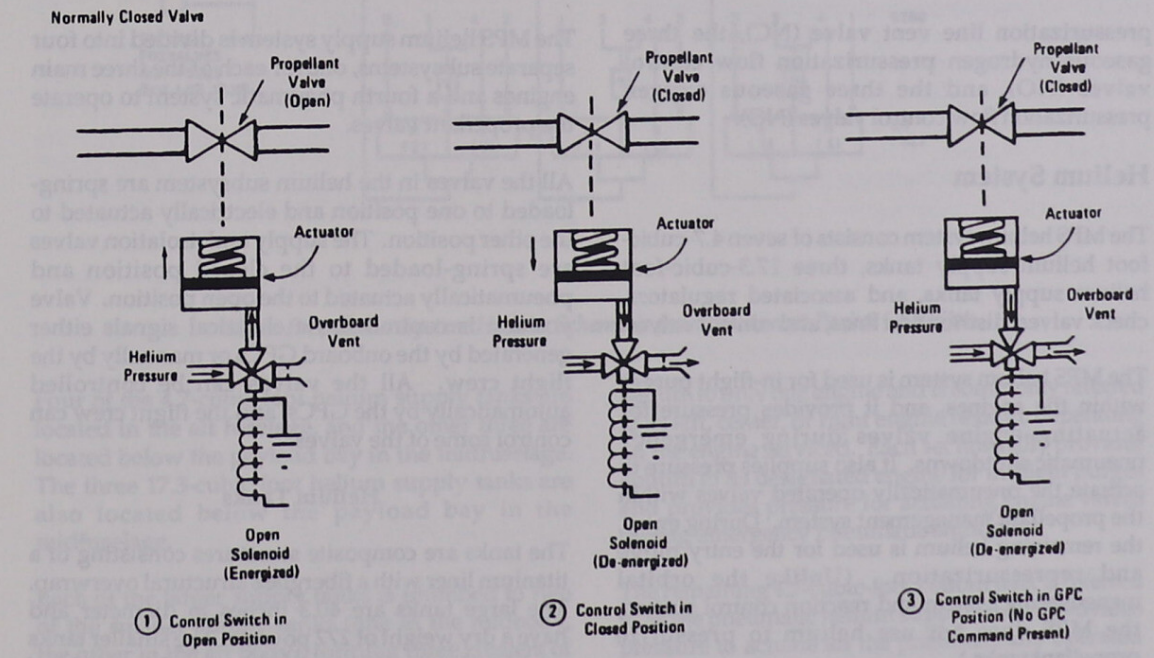

Propellant Management Subsystem Typical Type 2 Pneumatically Actuated Propellant Valve

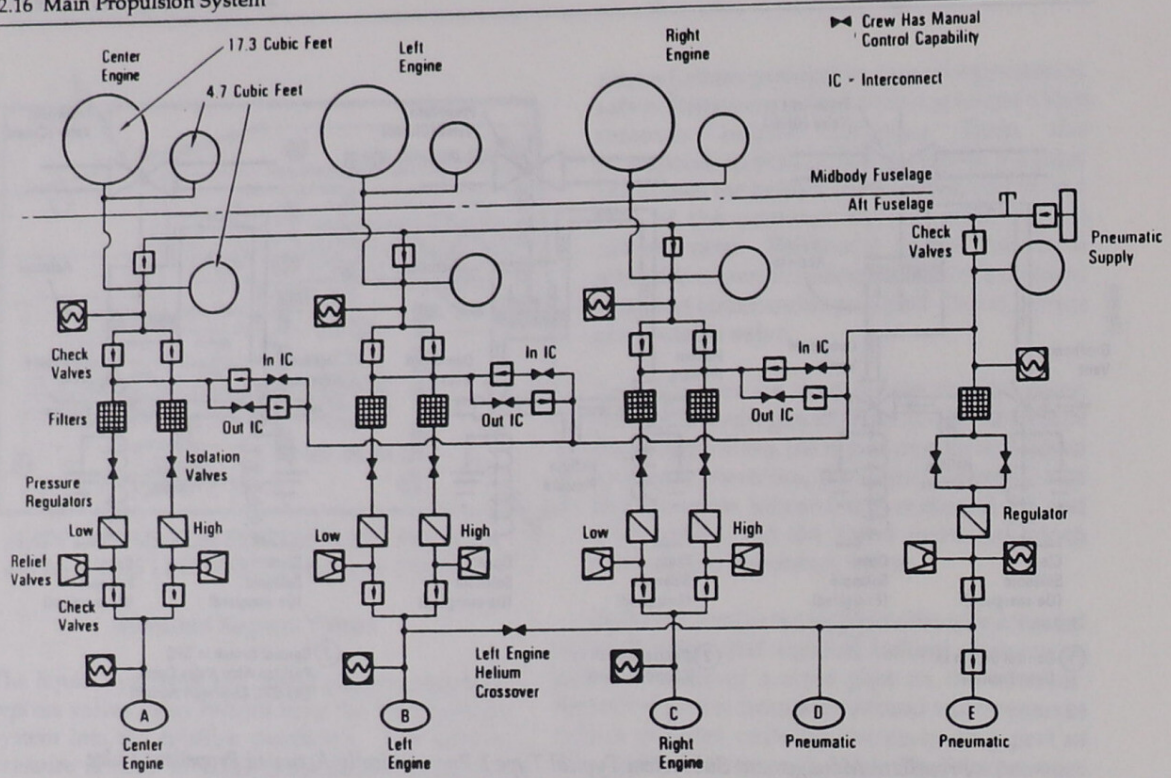

Helium System Storage and Supply

pressurization line vent valve (NC), the three gaseous hydrogen pressurization flow control valves (NO), and the three gaseous oxygen pressurization flow control valves (NO).

Helium System

The MPS helium system consists of seven 4.7-cubic-foot helium supply tanks, three 17.3-cubic-foot helium supply tanks, and associated regulators, check valves, distribution lines, and control valves.

The MPS helium system is used for in-flight purges within the engines, and it provides pressure for actuating engine valves during emergency pneumatic shutdowns. It also supplies pressure to actuate the pneumatically operated valves within the propellant management system. During entry, the remaining helium is used for the entry purge and repressurization. (Unlike the orbital maneuvering system and reaction control system, the MPS does not use helium to pressurize propellant tanks.)

The MPS helium supply system is divided into four separate subsystems, one for each of the three main engines and a fourth pneumatic system to operate the propellant valves.

All the valves in the helium subsystem are spring-loaded to one position and electrically actuated to the other position. The supply tank isolation valves are spring-loaded to the closed position and pneumatically actuated to the open position. Valve position is controlled via electrical signals either generated by the onboard GPCs or manually by the flight crew. All the valves can be controlled automatically by the GPCs, and the flight crew can control some of the valves.

Helium Tanks

The tanks are composite structures consisting of a titanium liner with a fiberglass structural overwrap. The large tanks are 40.3 inches in diameter and have a dry weight of 272 pounds. The smaller tanks are 26 inches in diameter and have a dry weight of 73 pounds. The tanks are serviced before lift-off to a pressure of 4,100 to 4,500 psi.

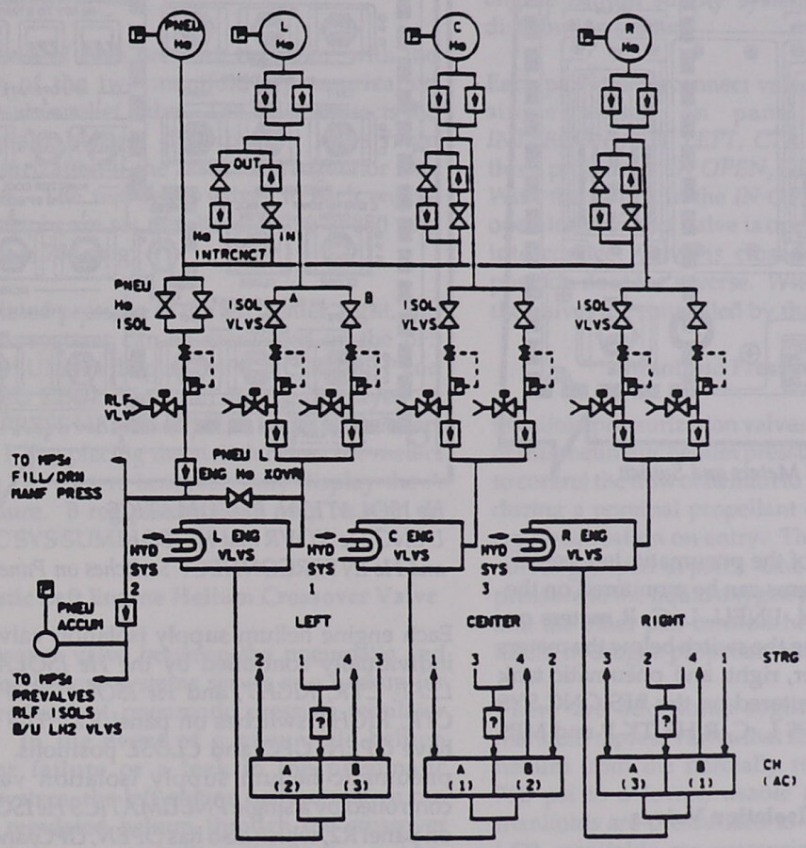

Main Propulsion System Helium Schematic from the Ascent Pocket Checklist

Four of the 4.7-cubic-foot helium supply tanks are located in the aft fuselage, and the other three are located below the payload bay in the midfuselage. The three 17.3-cubic-foot helium supply tanks are also located below the payload bay in the midfuselage.

Each of the larger supply tanks is plumbed to two of the smaller supply tanks (one in the midbody, the other in the aft body), forming three clusters of three tanks. Each set of tanks normally provides helium to only one engine and is commonly referred to as left, center, or right engine helium, depending on the engine serviced. Each set normally provides helium to its designated engine for in-flight purges and provides pressure for actuating engine valves during emergency pneumatic shutdown.

The remaining 4.7-cubic-foot helium tank is referred to as the pneumatic helium supply tank. It provides pressure to actuate all the pneumatically operated valves in the propellant management subsystem.

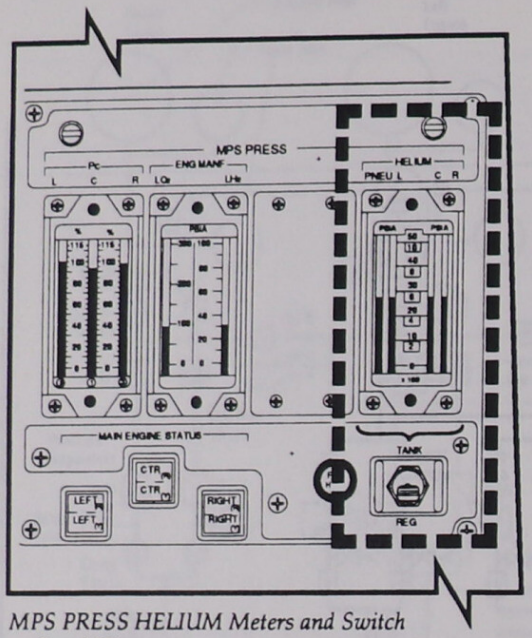

MPS PRESS HELIUM Meters and Switch on Panel F7

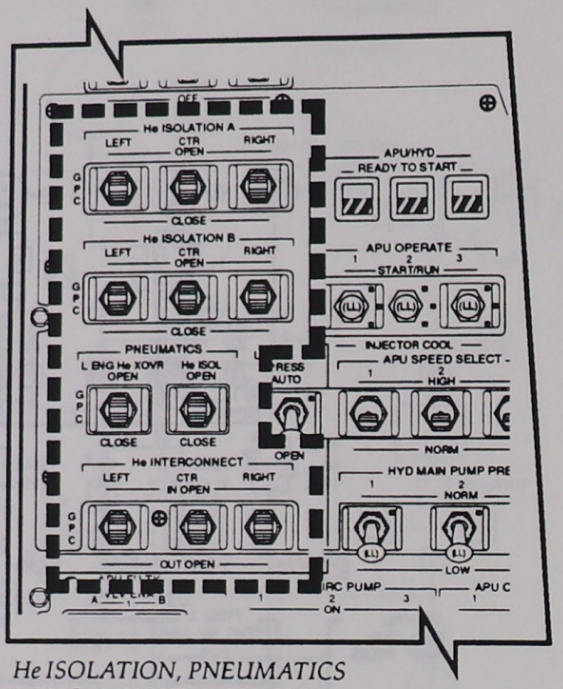

He ISOLATION, PNEUMATICS L ENG He XOVR and He ISOL, and He INTERCONNECT Switches on Panel R2

The helium pressure of the pneumatic, left, center, and right supply systems can be monitored on the MPS PRESS HELIUM, PNEU, L, C, R meters on panel F7 by positioning the switch below the meters to *TANK*. Left, center, right, and pneumatic tank pressures can be monitored on the BFS GNC SYS SUMM 1 display (MPS L, C, R HE TK P and MPS PNEU HE P TK).

Helium Isolation Valves

Eight helium supply tank isolation valves grouped in pairs control the flow of helium from the tanks. One pair of valves is connected to each of the three tank clusters, and one pair is connected to the pneumatic supply tank. In the engine helium supply tank system, each pair of isolation valves is connected in parallel, with each valve in the pair controlling helium flow through one leg of a dual-redundant helium supply circuit. Each helium supply circuit contains two check valves, a filter, an isolation valve, a regulator, and a relief valve.

The two isolation valves connected to the pneumatic supply tanks are also connected in parallel. The rest of the pneumatic supply system consists of a filter, the two isolation valves, a regulator, a relief valve, and a single check valve.

Each engine helium supply isolation valve can be individually controlled by the *He ISOLATION A LEFT, CTR, RIGHT*, and *He ISOLATION B LEFT, CTR, RIGHT* switches on panel R2. The switches have *OPEN*, *GPC*, and *CLOSE* positions. The two pneumatic helium supply isolation valves are controlled by a single *PNEUMATICS He ISOL* switch on panel R2, which also has *OPEN*, *GPC*, and *CLOSE* positions.

Helium Pressure Regulators

Each engine helium supply tank has two pressure regulators operating in parallel. Each regulator controls pressure to within 730 to 785 psia in one leg of a dual-redundant helium supply circuit and is capable of providing all the helium needed by the main engines.

The pressure regulator for the pneumatic helium supply system is not redundant and regulates outlet pressure between 715 to 770 psig. Downstream of the pneumatic regulator are the liquid hydrogen manifold pressure regulator and the liquid oxygen manifold pressure regulator. These regulators are used only during MPS propellant dumps and

manifold pressurization. Both regulators are set to provide outlet pressure between 20 and 25 psig. Flow through the regulators is controlled by the appropriate set of two normally closed manifold pressurization valves.

Downstream of each pressure regulator, with the exception of the two manifold repressurization regulators, is a relief valve. The valve protects the downstream helium distribution lines from overpressurization if the associated regulator fails fully open. The two relief valves in each engine helium supply are set to relieve at 790 to 850 psig and reseat at 785 psig.

The regulated pressure of the left, center, right, and pneumatic systems can be monitored on the BFS GNC SYS SUMM 1 display (MPS L, C, R REG P and MPS PNEU REG). They can also be displayed on the MPS PRESS HELIUM PNEU, L, C, and R meters on panel F7 by placing the switch below the meters to *REG*. The meters however, only display the A reg pressure. B reg pressure can only be seen on BFS GNC SYS SUMM 1.

Pneumatic Left Engine Helium Crossover Valve

The crossover valve between the pneumatic and left engine helium systems serves as a backup for the nonredundant pneumatic pressure regulator system. In the event of a pneumatic helium regulator failure or a leak in the pneumatic helium system, the left engine helium system can provide regulated helium through the crossover valve to the pneumatic helium distribution system. The *PNEUMATICS L ENG He XOVR* switch is on panel R2.

Helium Interconnect Valves

Normally, each of the four helium supply systems operates independently until after MECO. Each engine helium supply has two interconnect (crossover) valves associated with it, and each valve in the pair of interconnect valves is connected in series with a check valve. The check valves allow helium to flow through the interconnect valves in one direction only. One check valve associated with one interconnect valve controls helium flow in one direction, and the other interconnect valve and its associated check valve permit helium flow in the opposite direction. The in/open interconnect valve controls helium flow into the associated engine helium distribution system from the pneumatic distribution system. The out/open interconnect valve controls helium flow out of the associated engine helium supply system to the pneumatic distribution system.

Each pair of interconnect valves is controlled by a single switch on panel R2. Each *He INTERCONNECT LEFT, CTR, RIGHT* switch has three positions: *IN OPEN, GPC,* and *OUT OPEN*. With the switch in the *IN OPEN* position, the in/open interconnect valve is open, and the out/open interconnect valve is closed. The *OUT OPEN* position does the reverse. With the switch in *GPC*, the valves are controlled by the orbiter software.

Manifold Pressurization

Manifold pressurization valves located downstream of the pneumatic helium pressure regulator are used to control the flow of helium to propellant manifolds during a nominal propellant dump and manifold repressurization on entry. There are four of these valves grouped in pairs. One pair controls helium pressure to the liquid oxygen propellant manifolds, and the other pair controls helium pressure to the liquid hydrogen propellant manifold.

There are additional regulators just past the manifold repress valves that regulate the pneumatic helium from the normally regulated pressure of 750 psi to a lower, usable pressure. The LH2 manifolds are pressurized to 17 to 30 psig and the LO2 manifolds are pressurized to 20 to 25 psig during the MPS dump and entry manifold repressurization.

Although the RTLS dump pressurization valves were designed to assist (with the manifold repress valves) in removing LH2 from the manifolds during RTLS aborts, they are no longer used but are depicted on the propellant management system schematic.

Pneumatic Control Assemblies

There is one pneumatic control assembly on each SSME. The assembly is essentially a manifold pressurized by one of the engine helium supply systems and contains solenoid valves to control and direct pressure to perform various essential functions. The valves are energized by discrete ON/OFF commands from the output electronics of the SSME controller. Functions controlled by the pneumatic control assembly include the high-pressure oxidizer turbopump intermediate seal cavity and preburner oxidizer dome purge, pogo system postcharge, and pneumatic shutdown.

MPS Hydraulic Systems

Hydraulic System Operation

The three orbiter hydraulic systems (see Section 2.1 for details on the hydraulic system) supply hydraulic pressure to the SSME to provide thrust vector control and actuate engine valves on each SSME. The three hydraulic supply systems are distributed to the thrust vector control (TVC) valves. These valves are controlled by *HYDRAULICS MPS/TVC ISOL VLV* switches (one for each of the three hydraulic systems) on panel R4. A valve is opened by positioning its switch to *OPEN*. The talkback indicator above each switch indicates *OP* when the valve is open and *CL* when it is closed.

When the three MPS TVC hydraulic isolation valves are opened, hydraulic pressure is applied to the five hydraulically actuated engine valves. These valves are the main fuel valve, the main oxidizer valve, the fuel preburner oxidizer valve, the oxidizer preburner oxidizer valve, and the chamber coolant valve. All hydraulically actuated engine valves on an engine receive hydraulic pressure from the same hydraulic system. The left engine valves are actuated by hydraulic system 2, the center engine valves are actuated by hydraulic system 1, and the right engine valves are actuated by hydraulic system 3. Each engine valve actuator is controlled by dual-redundant signals: channel A/engine servovalve 1 and channel B/engine servovalve 2 from that engine's controller electronics. As a backup, all the hydraulically actuated engine valves on an engine are supplied with helium pressure from the helium subsystem left, center, and right engine helium tank supply system.

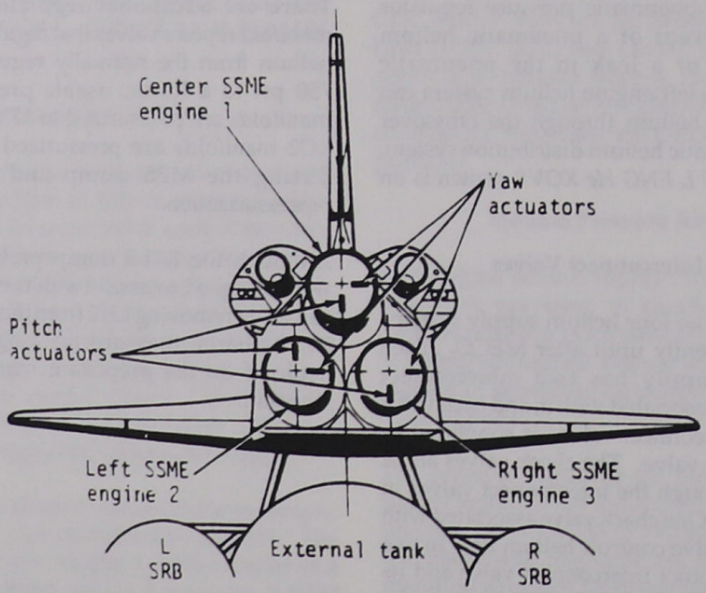

Main Engine Gimbal Actuators

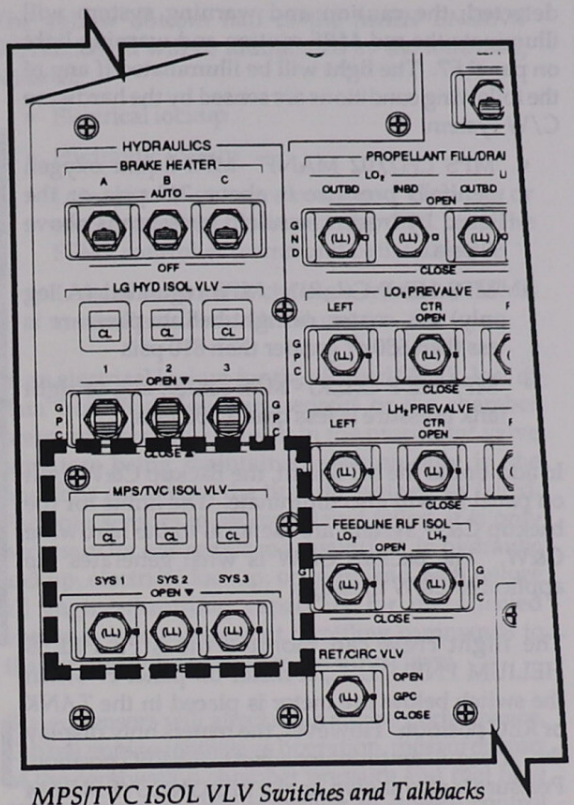

MPS/TVC ISOL VLV Switches and Talkbacks on Panel R4

Hydraulic Lockup

Hydraulic lockup is a condition in which all the propellant valves on an engine are hydraulically locked in a fixed position. This is a built-in protective response of the SSME valve actuator/control circuit. It takes effect any time low hydraulic pressure or loss of control of one or more of the five hydraulically actuated main engine valves renders closed-loop control of engine thrust or propellant mixture ratio impossible. Hydraulic lockup allows an engine to continue to burn in a safe condition. The affected engine will continue to operate at the approximate power level in effect at the time hydraulic lockup occurred. Once an engine is in a hydraulic lockup, any subsequent shutoff commands, whether nominal or premature, will cause a pneumatic engine shutdown. Hydraulic lockup does not affect the capability of the engine controller to monitor critical operating parameters or issue an automatic shutdown if an operating limit is out of tolerance, but the engine shutdown would be accomplished pneumatically.

Thrust Vector Control

The three MPS thrust vector control valves must also be opened to supply hydraulic pressure to the six main engine TVC actuators. There are two servoactuators per SSME: one for yaw and one for pitch. Each actuator is fastened to the orbiter thrust structure and to the powerheads of the three SSMEs.

Two actuators per engine provide attitude control and trajectory shaping by gimbaling the SSMEs in conjunction with the solid rocket boosters during first-stage and without the solid rocket boosters during second-stage ascent. Each SSME servoactuator receives hydraulic pressure from two of the three orbiter hydraulic systems; one system is the primary system, and the other is a standby system. Each servoactuator has its own hydraulic switching valve. The switching valve receives hydraulic pressure from two of the three orbiter hydraulic systems and provides a single source to the actuator.

Normally, the primary hydraulic supply is directed to the actuator; however, if the primary system were to fail and lose hydraulic pressure, the switching valve would automatically switch over to the standby system, and the actuator would continue to function. The left engine's pitch actuator uses hydraulic system 2 as the primary and hydraulic system 1 as the standby. The engine's yaw actuator uses hydraulic system 1 as the primary and hydraulic system 2 as the standby. The center engine's pitch actuator uses hydraulic system 1 as the primary and hydraulic system 3 as the standby, and the yaw actuator uses hydraulic system 3 as the primary and hydraulic system 1 as the standby. The right engine's pitch actuator uses hydraulic system 3 as the primary and hydraulic system 2 as the standby. Its yaw actuator uses hydraulic system 2 as the primary and hydraulic system 3 as the standby.

The SSME servoactuators change each main engine's thrust vector direction as needed during the flight sequence. The three pitch actuators gimbal the engine up or down a maximum of 10.5 degrees from the installed null position. The three yaw actuators gimbal the engine left or right a maximum of 8.5 degrees from the installed position. The installed null position for the left and right main engines is 10 degrees up from the X axis in a negative Z direction and 3.5 degrees outboard from the

engine centerline parallel to the X axis. The center engine's installed null position is 16 degrees above the X axis for pitch and on the X axis for yaw. When any engine is installed in the null position, the other engines do not come in contact with it.

There are three actuator sizes for the main engines. The piston area of the center engine upper pitch actuator is 24.8 square inches, its stroke is 10.8 inches, it has a peak flow of 50 gallons per minute, and it weighs 265 pounds. The piston area of the two lower pitch actuators is 20 square inches, their stroke is 10.8 inches, their peak flow is 45 gallons per minute, and they weigh 245 pounds. All three yaw actuators have a piston area of 20 square inches, a stroke of 8.8 inches, a peak flow of 45 gallons per minute, and weigh 240 pounds. The minimum gimbal rate is 10 degrees per second; the maximum rate is 20 degrees per second.

Detailed information about ascent thrust vector control is provided in Section 2.13.

Hydraulic System Isolation On Orbit

The *HYDRAULICS MPS/TVC ISOL VLV SYS 1, SYS 2,* and *SYS 3* switches on panel R4 are positioned to *CLOSE* during on-orbit operations to protect against hydraulic leaks downstream of the isolation valves. In addition, there is no requirement to gimbal the main engines from the stow position. During on-orbit operations when the MPS TVC valves are closed, the hydraulic pressure supply and return lines within each MPS TVC component are interconnected to enable hydraulic fluid to circulate for thermal conditioning.

Malfunction Detection

There are three separate means of detecting malfunctions within the MPS: the engine controllers, the hardware caution and warning system, and the software C/W system.

The SSME controller, through its network of sensors, has access to numerous engine operating parameters. A group of these parameters has been designated critical operating parameters, and special limits defined for these parameters are monitored by the main engine controller. Several MPS parameters are monitored by hardware and software. If a violation of any hardware limit is detected, the caution and warning system will illuminate the red *MPS* caution and warning light on panel F7. The light will be illuminated if any of the following conditions are sensed by the hardware C/W system:

- "MPS LH2/02 MANF" -MPS liquid oxygen manifold pressure is above 249 psia or the liquid hydrogen manifold pressure is above 60 psia
- "MPS HE P C(L,R)" - MPS regulated (A leg only) left, center, or right helium pressure is less than 680 or greater than 810 psia
- "MPS HE P C(L,R) - MPS center, left, or right tank pressure is less than 1,150 psia

In additionto the MPS light, the Backup C&W light on panel F7 will also illuminate. The limits for the backup C&W system are identical to the hardware C&W. The backup C&W is what generates the applicable C&W message.

The flight crew can monitor the MPS PRESS HELIUM PNEU, L, C, R meter on panel F7 when the switch below the meter is placed in the *TANK* or *REG* position. However, the meters only display the "A" regulator pressure when in the REG position. Pressure is also shown on the BFS GNC SYS SUMM 1 display. The MPS PRESS ENG MANF LO_2, LH_2 meter can also be monitored on panel F7. A number of conditions will require crew action. For example, an ET ullage pressure low message will require the flight crew to pressurize the external liquid hydrogen tank by setting the *LH_2 ULLAGE PRESS* switch on panel R2 to *OPEN*. A low helium tank pressure may require the flight crew to interconnect the pneumatic helium tank to an engine supply using the *MPS He INTERCONNECT LEFT, CTR,* and *RIGHT* switches on panel R2.

MAIN ENGINE STATUS LEFT, CTR, RIGHT lights on panel F7 are divided into two parts: the top half lights red and the bottom half lights yellow . The top half is illuminated for SSME shutdown and redline exceedances.

The yellow bottom half of the *MAIN ENGINE STATUS* light will be illuminated by the following failures:

- Electrical lockup
- Hydraulic lockup
- Loss of two or more command channels or command reject between the GPC and the SSME controller (command path failure)
- Loss of both data channels from one SSME controller (data path failure).

In an electrical lockup for the affected SSME, loss of data from fuel flow rate sensors or the chamber pressure sensors will result in the propellant valve actuators being maintained electronically in the positions existing at the time the last sensor failed. For both sensors to be considered failed, it is only necessary for one sensor to actually fail. In hydraulic lockup, electrical lockup, or command path failure all engine-throttling capability for the affected engine is lost; subsequent throttling commands to that engine will not change the thrust level.

Biased sensors will affect main engine performance. During engine mainstage operation, measurements of the combustion chamber pressure and fuel flow rate are used by the controller to closely control power level and mixture ratio.

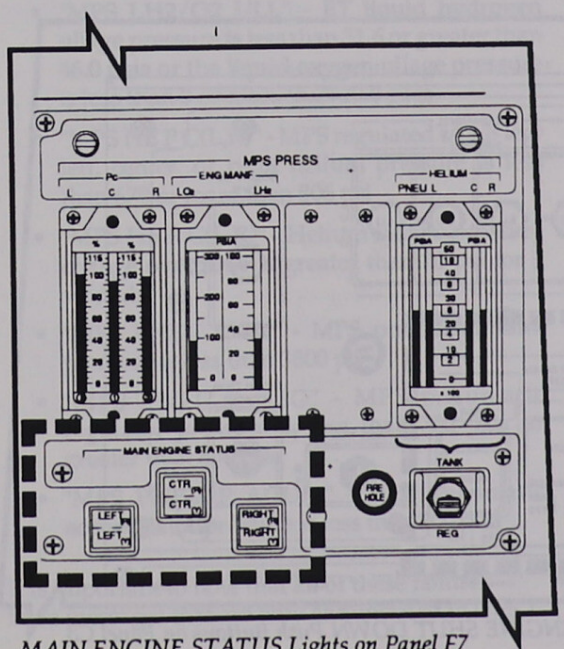

MAIN ENGINE STATUS Lights on Panel F7

There are two chamber pressure transducers on each SSME (an "A" and a "B"). Each consists of two bridges (Wheatstone-type strain gauges) for a total of four controller measurements (an A1, A2 pair and a B1, B2 pair). Each of these measurements is monitored for reasonableness before being used by the controller.

The fuel flow meter is located in the duct between the low and high pressure liquid hydrogen pumps. Two measurements (A and B) come from the flow meter for use by the controller, after each passes reasonableness checks.

Biases of either the flow meter or chamber pressure transducers can cause off-nominal engine operation. Essentially, the crew has no insight into this type of failure and must rely on Mission Control for assistance. The controller will adjust the engine valves to maintain the commanded power level as seen by the chamber pressure transducers, and this is what is displayed to the crew.

The red upper half of the *MAIN ENGINE STATUS LEFT, CTR, RIGHT* lights on panel F7 will be illuminated for an engine in shutdown or post-shutdown phase or for the following redline exceedances with limits inhibited:

- The corresponding engine's high-pressure oxidizer turbine's discharge temperature is above 1,760° R or below 720°R
- The main combustion chamber's pressure is 400 psig below the reference chamber pressure
- The high-pressure oxidizer turbopump's intermediate seal purge pressure is below 170 psia
- The high-pressure oxidizer turbopump's secondary seal purge pressure is above 100 psia
- High-pressure fuel turbopump discharge temperature channel A > 1,850° R, channel B > 1,960° R
- High-pressure fuel turbopump liner pressure greater than controller-calculated limit (~3675 psig @ 104%)

Because of the rapidity with which it is possible to exceed these limits, the engine controller has been programmed to sense the limits and automatically shut down the engine if the limits are exceeded.

Although a shutdown as a result of violating operating limits is normally automatic, the flight crew can, if necessary, inhibit an automatic shutdown by using the *MAIN ENGINE LIMIT SHUT DN* switch on panel C3. The switch has three positions: *ENABLE*, *AUTO*, and *INHIBIT*. The *ENABLE* position allows any engine that violates operating limits to be shut down automatically. The *AUTO* position allows only the first engine that violates operating limits to be shut down automatically. If either of the two remaining engines subsequently violates operating limits, it would be inhibited from automatically shutting down. Should a remaining engine violate operating limits, it will not be shut down automatically unless the switch is manually taken to *ENABLE* and then to *AUTO*. The *INHIBIT* position inhibits all automatic shutdowns. The *MAIN ENGINE SHUT DOWN LEFT, CTR, RIGHT* push buttons on panel C3 have spring-loaded covers (guards). When the guard is raised, and the push button is depressed, the corresponding engine shuts down immediately, provided the engine command is operational.

WARNING

Failure of an engine with limit shutdown inhibited will probably result in engine and controller damage, which will prevent detection of the engine failure by the GPCs.

The software caution and warning processing of the orbiter GPC's can detect certain specified out-of-limit or fault conditions of the MPS. Th SM alert light on panel F7 is illuminated, a fault message appears on the PASS and/or BFS CRT displays, and an audio tone sounds if:

PASS and BFS generated fault messages

- "MPS DATA C(L,R)" - Data path failures occur due to loss of both primary and secondary data from the main engine
- "MPS CMD C(L,R)" - Command path failures occur due to loss or rejection of GPC commands to the main engine controller (PASS only pre-engage)

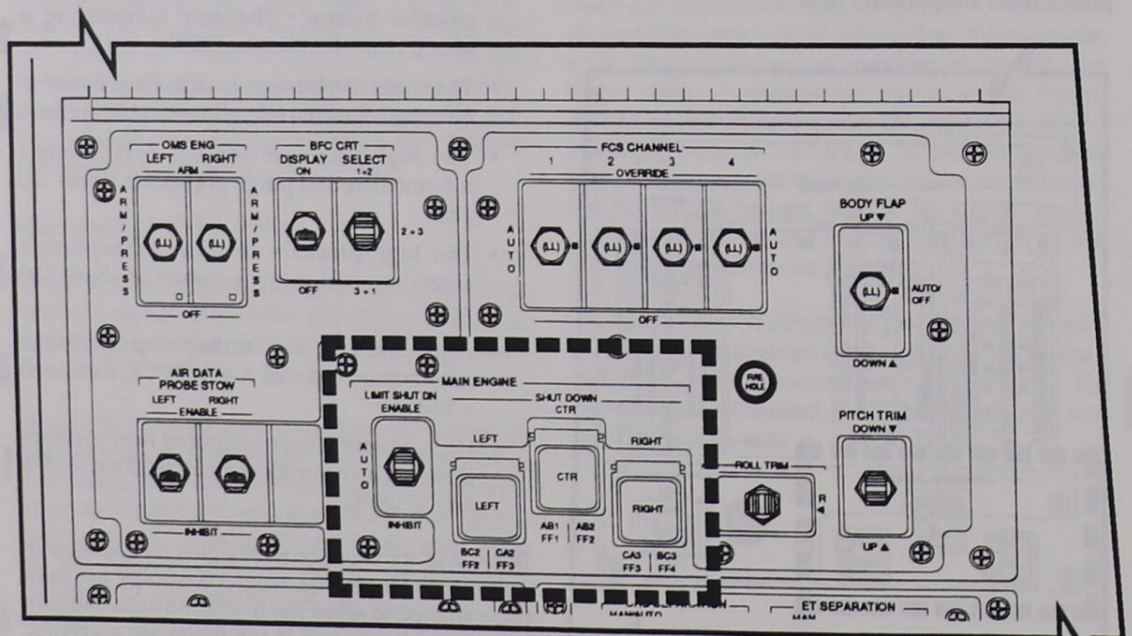

MAIN ENGINE LIMIT SHUT DN Switch and MAIN ENGINE SHUT DOWN Push Buttons on Panel C3

- "MPS HYD C(L,R)" - Hydraulic lockups occur due to the failure of any one of the five hydraulically actuated valves from achieving its commanded position
- "MPS ELEC C(L,R)" Electric lockups occur due to the loss of all Pc data or all fuel flow rate data from the engine
- "ET SEP-INH" - ET separation inhibits occur due to feedline disconnect failures or excessive vehicle rates(>0.7 deg/sec in any axis)
- "SSME FAIL C(L,R)" - Premature main engine shutdown (Backup C&W light and master alarm only, no MPS light)

PASS only generated fault messages

- "ET SEP-MAN" or "ET SEP SEP-AUT" - ET separation switch failures (PASS annunciated only) occur when the GPCs can't determine the position of the ET SEPARATION switch on panel C3
- "ME SHDN SW C(L,R)" - Main engine pushbutton failures (PASS annunciated only occur when there is a failure of one of the two contacts on an SSME shutdown pushbutton resulting in a switch dilemma)

BFS only generated fault messages

- "MPS LH2/O2 ULL" - ET liquid hydrogen ullage pressure is less than 31.6 or greater than 46.0 psia or the liquid oxygen ullage pressure is less than 0 or more than 29.0 psig
- "MPS HE P C(L,R)" - MPS regulated (A&B leg) left, center, or right helium pressure is less than 679 or more than 806 psi
- "MPS HE P C(L,R)" - Helium system pressure change over time is greater than 20 psi for 3 seconds
- "MPS PNEU P TK" - MPS pneumatic tank pressure is less than 3800 psi
- "MPS PNEU P REG" - MPS pneumatic regulator pressure is less than 700 psia or greater than 806 psia
- "MPS PNEU P ACUM" - MPS pneumatic accumulator pressure is less than 700 psia

It is important to note that all of these failures have messages that are only annunciated in OPS 1 and 6. Also, the BFS does all processing of the MPS helium and ullage pressure systems. In OPS 3, the MPS parameters on the BFS SYS SUMM 1 will be blanked, ie., no available MPS information. Therefore, the only insight into MPS parameters ("A" regulator pressures in particular) in OPS 3 is on the F7 meters. In OPS 2 or OPS 3 there is no software caution and warning for the MPS. Therefore, if either manifold pressure (LO2 or LH2) violates limits while on orbit, the only indication the crew will see is hardware caution and warning (MPS light and master alarm.) There will be no message on the CRT.

Operations

Pre-Launch

At T minus 5 hours 50 minutes, the launch processing system initiates the SSME liquid hydrogen chill-down sequence in preparation for liquid hydrogen loading. At T minus 5 hours 15 minutes, the fast-fill portion of the liquid oxygen and liquid hydrogen loading sequence begins, and the liquid hydrogen recirculation pumps are started shortly thereafter. At T minus 3 hours 45 seconds, the fast fill of the liquid hydrogen tank to 98 percent is complete, and a slow topping off process that stabilizes to 100 percent begins. At T minus 3 hours 30 minutes, the liquid oxygen fast fill is complete. At T minus 3 hours 15 minutes, liquid hydrogen replenishment begins, and liquid oxygen replenishment begins at T minus 3 hours 10 minutes.

During prelaunch, the pneumatic helium supply provides pressure to operate the liquid oxygen and hydrogen prevalves and outboard and inboard fill and drain valves. The three engine helium supply systems are used to provide anti-icing purges.

The MPS helium tanks are pressurized from 2,000 psi to their full pressure at T minus 3 hours 20 minutes. This process is gradual to prevent excessive heat buildup in the supply tank. Regulated helium pressure is between 715 and 775 psi.

At this time, the *MPS He ISOLATION A* and *B* switches, the *MPS PNEUMATICS L ENG He XOVR* and *He ISOL* switches, and the *MPS He INTERCONNECT LEFT, CTR, RIGHT* switches on panel R2 are in the *GPC* position. With the switches

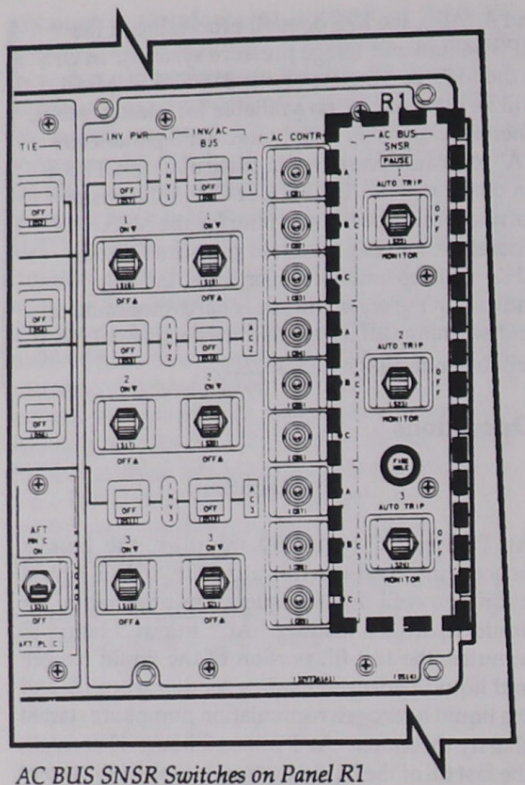

AC BUS SNSR Switches on Panel R1

in this position, the eight helium isolation valves are open, and the left engine crossover and the six helium interconnect valves are closed.

At T minus 16 minutes, one of the first actions by the flight crew (the pilot) is to place the six *MPS He ISOLATION A* and *B* switches and the *MPS PNEUMATICS He ISOL* switch on panel R2 in the *OPEN* position. This procedure will not change the position of the helium isolation valves, which were already open, but it inhibits launch processing system control of valve position.

During prelaunch, liquid oxygen from ground support equipment is loaded through the ground support equipment liquid oxygen T-0 umbilical and passes through the liquid oxygen outboard fill and drain valve, the liquid oxygen inboard fill and drain valve, and the orbiter liquid oxygen feedline manifold. The liquid oxygen exits the orbiter at the liquid oxygen feedline umbilical disconnect and enters the liquid oxygen tank in the external tank.

During loading, the liquid oxygen tank's vent and relief valves are open to prevent pressure buildup in the tank due to liquid oxygen loading. The *MAIN PROPULSION SYSTEM PROPELLANT FILL/DRAIN LO_2 OUTBD* and *INBD* switches on panel R4 are in the *GND* (ground) position, which allows the launch processing system to control the positions of these valves. Just prior to lift-off, the launch processing system will first command the liquid oxygen inboard fill and drain valve to close. The liquid oxygen in the line between the inboard and outboard fill and drain valves is then allowed to drain back into the ground support equipment, and the launch processing system commands the outboard fill and drain valve to close.

Also during prelaunch, liquid hydrogen supplied through the ground support equipment liquid hydrogen T-0 umbilical passes through the liquid hydrogen outboard fill and drain valve, the liquid hydrogen inboard fill and drain valve, and the liquid hydrogen feedline manifold. The liquid hydrogen then exits the orbiter at the liquid hydrogen feedline umbilical disconnect and enters the liquid hydrogen tank in the external tank. During loading, the liquid hydrogen tank's vent valve is left open to prevent pressure buildup in the tank due to boiloff. The *MAIN PROPULSION SYSTEM PROPELLANT FILL/DRAIN LH_2 OUTBD* and *INBD* switches on panel R4 are in the *GND* position, which allows the launch processing system to control the position of these valves.

During the T minus 3 hour hold the pilot positions the three *AC BUS SNSR* switches on panel R1 to *MONITOR*. These sensors are not part of the MPS, but the procedure protects the SSMEs. Each engine controller is powered by two of the three ac buses, one for each digital computer unit. Therefore, the loss of one bus will result in a loss of controller redundancy on two engines, and the loss of any two buses will cause the associated engine to shut down. With the switches positioned to *MONITOR*, the sensors will provide caution and warning for an over/undervoltage or overload condition, but they will not trip a bus off line.

Engine Start

At T minus 4 minutes, the fuel system purge begins. It is followed at T minus 3 minutes 25 seconds by the beginning of the engine gimbal tests, during

which each gimbal actuator is operated through a canned profile of extensions and retractions. If all actuators function satisfactorily, the engines are gimbaled to a predefined position at T minus 2 minutes 15 seconds. The engines remain in this position until engine ignition.

At T minus 2 minutes 55 seconds, the launch processing system closes the liquid oxygen tank vent valve, and the tank is pressurized to 21 psig with ground support equipment-supplied helium. The liquid oxygen tank's pressure can be monitored on the BFS GNC SYS SUMM 1 CRT (MANF P LO2). The 21-psig pressure corresponds to a liquid oxygen engine manifold pressure of 105 psia.

At T minus 1 minute 57 seconds, the launch processing system closes the liquid hydrogen tank's vent valve, and the tank is pressurized to 42 psig with ground support equipment-supplied helium. The pressure is monitored on the BFS GNC SYS SUMM 1 CRT display (MANF P LH2).

At T minus 31 seconds, the onboard redundant set launch sequence is enabled by the launch processing system. From this point on, all sequencing is performed by the orbiter GPCs in the redundant set, based on the onboard clock time. The GPCs still respond, however, to hold, resume count, and recycle commands from the launch processing system.

At T minus 16 seconds, the GPCs begin to issue arming commands for the solid rocket booster ignition pyro initiator controllers, the hold-down release pyro initiator controllers, and the T-0 umbilical release pyro initiator controllers.

At T minus 9.5 seconds, the engine chill-down sequence is complete, and the GPCs command the liquid hydrogen prevalves to open (the liquid oxygen prevalves are open during loading to permit engine chill-down). The *MAIN PROPULSION SYSTEM* LO_2 and LH_2 *PREVALVE LEFT, CTR, RIGHT* switches on panel R4 are in the *GPC* position.

At T minus 6.6 seconds, the GPCs issue the engine start command, and the main fuel valve in each engine opens. Between the opening of the main fuel valve and MECO, liquid hydrogen flows out of the external tank/orbiter liquid hydrogen disconnect valves into the liquid hydrogen feedline manifold. From this manifold, liquid hydrogen is distributed to the engines through the three engine liquid hydrogen feedlines. In each line, liquid hydrogen passes through the prevalve and enters the main engine at the inlet to the low-pressure fuel turbopump.

When the GPCs issue the engine start command, the main oxidizer valve in each engine also opens. Between the opening of the main engine oxidizer valve and MECO, liquid oxygen flows out of the external tank and through the external tank/orbiter liquid oxygen umbilical disconnect valves into the liquid oxygen feedline manifold. From this manifold, liquid oxygen is distributed to the engines through the three engine liquid oxygen feedlines. In each line, liquid oxygen passes through the prevalve and enters the main engine at the inlet to the low-pressure oxidizer turbopump.

If all three SSMEs reach 90 percent of their rated thrust by T minus 3 seconds, then at T minus 0, the GPCs will issue the commands to fire the solid rocket booster ignition pyro initiator controllers, the hold-down release pyro initiator controllers, and the T-0 umbilical release pyro initiator controllers. Lift-off occurs almost immediately because of the extremely rapid thrust buildup of the solid rocket boosters. The 3 seconds to T minus zero allow the vehicle base bending loads to return to minimum by T minus 0.

If one or more of the three main engines do not reach 90 percent of their rated thrust at T minus 3 seconds, all SSMEs are shut down, the solid rocket boosters are not ignited, and a pad abort condition exists.

Ascent

Beginning at T minus 0, the SSME gimbal actuators, which were locked in their special preignition position, are first commanded to their null positions for solid rocket booster start and then are allowed to operate as needed for thrust vector control.

Between lift-off and MECO, as long as the SSMEs perform nominally, all MPS sequencing and control functions are executed automatically by the GPCs. During this period, the flight crew monitors MPS

performance, backs up automatic functions, if required, and provides manual inputs in the event of MPS malfunctions.

During ascent, the liquid hydrogen tank's pressure is maintained between 32 and 34 psig by the orifices in the two lines and the action of the flow control valve.

The liquid oxygen tank's pressure is maintained between 20 and 25 psig by fixed orifices in the ET to SSME pressurization lines. A pressure greater than 30 psig will cause the tank to relieve through its vent and relief valve.

The SSME thrust level depends on the flight: it is usually 104 percent, but the maximum setting of 109 percent may be required for emergency situations. This is known as max throttle. Percent of thrust that would be commanded (T) by the BFS is displayed on the BFS ASCENT TRAJ 1 and 2 displays, and actual thrust levels are read on the three MPS PRESS P_c meters on panel F7. As dynamic pressure rises, the GPCs throttle the engines to a lower power level (minimum 67 percent) to minimize structural loading while the orbiter is passing through the region of maximum aerodynamic pressure. This is called the "thrust bucket" because of the way the thrust plot appears on the graph. Although the bucket duration and thrust level vary, a typical bucket runs from about 30 to 65 seconds, mission elapsed time (MET). The solid rocket booster propellant is also shaped to reduce thrust. At approximately 65 seconds MET, the engines are once again throttled up to the appropriate power level (104 percent) and remain at that setting for a normal mission until 3-g throttling is initiated.

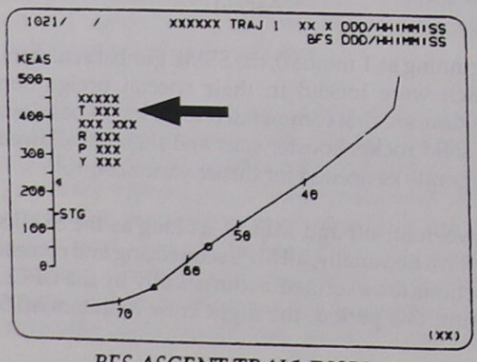

BFS ASCENT TRAJ 1 DISPLAY
(percent of thrust commanded by the BFS)

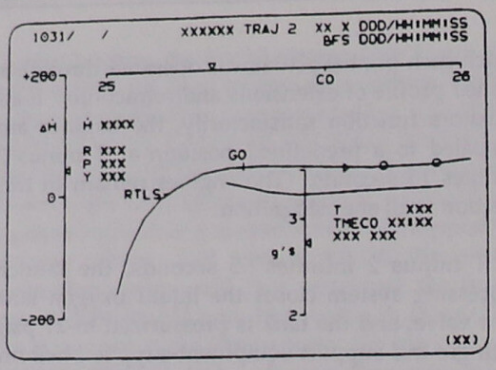

BFS ASCENT TRAJ 2 DISPLAY

SRB separation is the next major event on ascent. The SRBs burn out after about two minutes of flight. Appearance of an overbright "Pc < 50" (chamber pressure in the SRBs in psi) on the trajectory display indicates to the crew that the SRB separation sequence has begun. Actual separation occurs about five seconds later to allow for SRB thrust tailoff. SRB separation is automatic but the crew has the capability, in off-nominal situations, to command a manual separation with the SRB SEPARATION switch located on panel C3.

Liquid oxygen manifold pressure is greatly affected by acceleration from the SRBs, but because of its low density, liquid hydrogen is not. At SRB separation, the liquid oxygen manifold pressure will drop from well over 100 psia to approximately 50 psia. Pressure rises again as the vehicle approaches 3 g's. The crew can monitor the manifold pressures on the BFS GNC SYS SUMM 1 display (MANF P) and on the MPS PRESS ENG MANF meters on panel F7.

Beginning at approximately 7 minutes 40 seconds MET, the engines are throttled back to maintain vehicle acceleration at 3 g's or less. Three g's is an operational limit devised to prevent excessive physical stress on the flight crew and vehicle. Approximately 6 seconds before main engine cutoff, the engines are throttled back to 67 percent in preparation for shutdown.

Main Engine Cutoff (MECO)

Although MECO is based on the attainment of a specified velocity, the engines can also be shut down due to the depletion of liquid oxygen or liquid hydrogen before the specified velocity of MECO is

reached. Liquid oxygen depletion is sensed by four sensors in the orbiter liquid oxygen feedline manifold. Liquid hydrogen depletion is sensed by four sensors in the bottom of the liquid hydrogen tank. If any two of the four sensors in either system indicate a dry condition, the GPCs will issue a MECO command to the engine controller (provided they go dry after the arming mass is reached).

Once MECO has been confirmed at approximately 8 minutes 30 seconds MET, the GPCs execute the external tank separation sequence. The sequence takes approximately 18 seconds to complete and includes opening the feedline relief isolation valves, arming the external tank separation pyro initiator controllers, closing the liquid hydrogen and liquid oxygen feedline 17-inch disconnect valves, turning the external tank signal conditioners' power off (deadfacing), firing the umbilical unlatch pyrotechnics, retracting the umbilical plates hydraulically, and gimbaling the SSMEs to the MPS dump sequence position.

At this point, the computers check for external tank separation inhibits. If the vehicle's pitch, roll, and yaw rates are greater than 0.7 degree per second, or the feedline disconnect valves fail to close, automatic external tank separation is inhibited. If these inhibit conditions are met, the GPCs issue the commands to the external tank separation pyrotechnics. As with the SRBs, the crew has the capability to override the external tank separation with the ET SEPARATION switch located on panel C3. In crew-initiated external tank separation or RTLS aborts, the inhibits are overridden.

At orbiter/external tank separation, the gaseous oxygen and gaseous hydrogen feedlines are sealed at the umbilicals by self-sealing quick disconnects.

In the cockpit, the crew observes MECO through the illumination of the three red *MAIN ENGINE STATUS* lights on panel F7. In addition, the Pc meters on panel F7 drop to 0 percent. Four of the *ORBITAL DAP* push button lights on panel C3 illuminate when the MECO CONFIRMED software flag has been set. This flag must be set to enter the ET separation sequence. Remember, the DAP lights will not illuminate on an RTLS abort since the trans DAP is not entered at MECO as it is uphill or on a TAL abort.

Post-MECO

Ten seconds after main engine cutoff, the RTLS liquid hydrogen dump valves are opened for 80 seconds to ensure that the liquid hydrogen manifold pressure does not result in operation of the liquid hydrogen feedline relief valve.

After MECO confirmed plus 20 seconds, the GPCs interconnect the pneumatic helium and engine helium supply system by opening the three out/open interconnect valves if the *MPS He INTERCONNECT LEFT, CTR, RIGHT* switches on panel R2 are in the *GPC* position. This connects all 10 helium supply tanks to a common manifold, and it ensures that sufficient helium is available to perform the liquid oxygen and liquid hydrogen propellant dumps.

After external tank separation, approximately 1,700 pounds of propellant are still trapped in the SSMEs, and an additional 3,700 pounds of propellant remain trapped in the orbiter's MPS feedlines. This 5,400 pounds of propellant represents an overall center-of-gravity shift for the orbiter of approximately 7

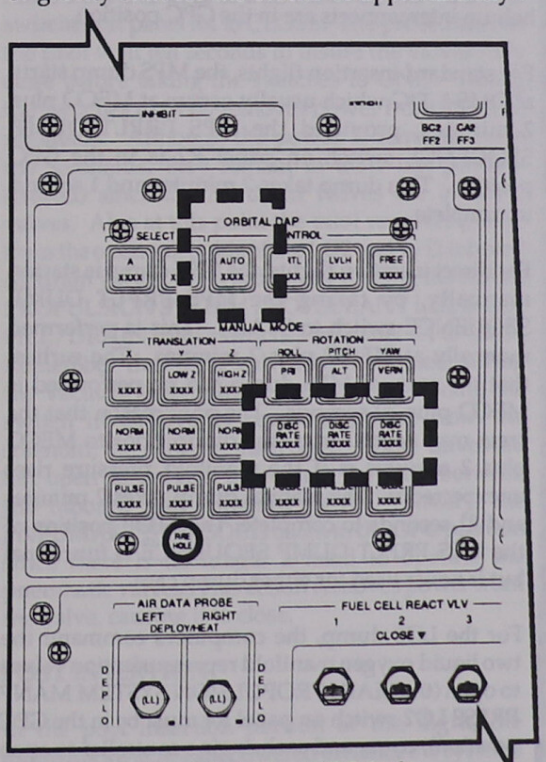

ORBITAL DAP CONTROL AUTO Light on Panel C3

inches. Non-nominal center-of-gravity locations can create major guidance problems during entry. The residual liquid oxygen, by far the heavier of the two propellants, poses the greatest impact on center-of-gravity travel.

A hazard from the trapped liquid hydrogen occurs during entry, when any liquid or gaseous hydrogen remaining in the propellant lines may combine with atmospheric oxygen to form a potentially explosive mixture. In addition, if the trapped propellants are not dumped overboard, they will sporadically outgas through the orbiter liquid oxygen and liquid hydrogen feedline relief valves, causing slight vehicle accelerations.

The MPS propellent dumps (LO2 and LH2) occur simultaneously. The method of initiating the dump depends on the type of mission. Both dumps are completely automatic once initiated. The helium subsystem is used during the MPS dump to help expel the propellants from the manifolds. To support this, the GPCs command the left, center, and right helium interconnects to out/open at MECO plus 20 seconds. This occurs provided the helium interconnects are in the GPC position.

For standard insertion flights, the MPS dump starts at OMS-1 TIG which usually occurs at MECO plus 2 minutes, provided the MPS PRPLT DUMP SEQUENCE switch on panel R2 is in the GPC position. This dump takes 2 minutes and 1 second to complete.

For direct insertion flights, the MPS dump is started manually, by taking the MPS PRPLT DUMP SEQUENCE switch to START. This is performed manually at MECO plus 2 minutes. The earliest that the manual MPS dump can be performed is MECO plus 20 seconds. The only reason that the crew may need to start the dump prior to MECO plus 2 minutes is if the manifold pressure rises unexpectedly. The manual dump takes 2 minutes and 21 seconds to complete. The STOP position of the MPS PRPLT DUMP SEQUENCE is functional but is never used for either dump case.

For the LO2 dump, the computers command the two liquid oxygen manifold repressurization valves to open (the MAIN PROPULSION SYSTEM MANF PRESS LO2 switch on panel R4 must be in the GPC position), command each engine controller to open its SSME main oxidizer valve (MOV), and command the three liquid oxygen prevalves to open (the LO2 PREVALVE LEFT, CTR, RIGHT switches on panel R4 must be in the GPC position). The liquid oxygen trapped in the feedline manifolds is expelled under pressure from the helium subsystem through the nozzles of the SSMEs. This is propulsive and typically provides about 9-11 feet-per-second of delta V.

The pressurized liquid oxygen dump continues for 90 seconds. At the end of this period, the GPCs automatically terminate the dump by closing the two liquid oxygen manifold repressurization valves, wait 30 seconds, and then command the engine controllers to close their SSME main oxidizer valve. The three liquid oxygen prevalves remain open during the orbit phase of the flight.

Concurrent with the liquid oxygen dump, the GPCs automatically initiate the MPS liquid hydrogen dump. The computers command the two liquid hydrogen manifold repressurization valves to open (the MAIN PROPULSION SYSTEM MANF PRESS LH2 switch on panel R4 must be in the GPC position) and command the two liquid hydrogen fill and drain valves (inboard and out board) to open.

The liquid hydrogen trapped in the orbiter feedline manifold is expelled overboard under pressure from the helium subsystem through the liquid hydrogen fill and drain valves for 6 seconds. The inboard fill and drain valve is then closed, the three liquid hydrogen prevalves are opened, and liquid hydrogen flows through the topping valve, between the inboard and outboard fill and drain valves, and overboard through the outboard fill and drain for approximately 88 seconds. The GPCs automatically terminate the dump by closing the two liquid hydrogen manifold repressurization valves and 21 seconds later closing the liquid hydrogen topping and outboard fill and drain valves.

At the end of the liquid oxygen and liquid hydrogen dumps, the GPCs close the helium out/open interconnect valves provided the He INTERCONNECT LEFT, CTR, RIGHT switches on panel R2 are in the GPC position. After the MPS dump is complete, the SSMEs are gimballed to their entry stow position with the engine nozzles moved inward (toward one another) to reduce aerodynamic heating. Although the gimbals move to an MPS

dump position during the external tank separation, the I-loads are currently the same as the entry stow position. At this time, the BODY FLAP lights on panel F2 and F4 turn off. This is the crew's indication that the MPS dump is complete.

In the post OMS-1 procedures, the pilot positions all six *MPS ENGINE POWER* switches on panel R2 to *OFF*, which removes all power to the main engine controllers. Once power is removed from the controllers, the main oxidizer valves, which are necessary for the liquid oxygen portion of the dump, can no longer be operated.

The pilot also positions the six *He ISOLATION* switches to *GPC* at this time. When this is done, the helium isolation valves automatically close. The *PNEUMATIC HE ISOL* switch is left in the OPEN position to operate the pneumatic valves during the vacuum inert.

NOTE

After the helium isolation valves are closed, multiple *MASTER ALARMS* are annunciated as the helium pressure in the regulators bleeds down.

Vacuum Inerting

Approximately 19 minutes into the mission and after the MPS dump, the flight crew initiates the procedure for vacuum inerting the orbiter's liquid oxygen and liquid hydrogen lines. Vacuum inerting allows any traces of liquid oxygen or liquid hydrogen trapped in the propellant lines after the propellant dumps to be vented into space.

NOTE

The procedure calls for the crew to wait 5 minutes between dump completion and vacuum inerting to allow propellants to completely sublimate.

The liquid oxygen vacuum inerting is accomplished by opening the liquid oxygen inboard and the outboard fill and drain valves. They are opened by placing the *MAIN PROPULSION SYSTEM PROPELLANT FILL/DRAIN LO_2 OUTBD, INBD* switches on panel R4 to the *OPEN* position.

For liquid hydrogen vacuum inerting, the liquid hydrogen inboard and outboard fill and drain valves are opened by placing the *MAIN PROPULSION SYSTEM PROPELLANT FILL/DRAIN LH_2 OUTBD, INBD* switches on panel R4 to *OPEN*. The external tank gaseous hydrogen pressurization manifold is also vacuum inerted by opening the hydrogen pressurization line vent valve by placing the *MAIN PROPULSION SYSTEM H_2 PRESS LINE VENT* switch on panel R4 to *OPEN*.

After a one minute inert period, the switch is taken back to the GND position, which closes the valve. The hydrogen pressurization vent line valve is electrically activated; however, it is normally closed (spring loaded to the close position), and removing power from the valve solenoid closes the valve.

The liquid oxygen and hydrogen lines are inerted simultaneously. Approximately 18 minutes is allowed for vacuum inerting. At the end of the 18 minutes (OMS-2 TIG minus five minutes), the pilot closes the LO2 and LH2 outboard fill drain valves by placing the MAIN PROPULSION SYSTEM PROPELLANT LH2 & LO2 FILL/DRAIN OUTBD switches on panel R4 to CLOSE. The procedure has the pilot wait ten seconds to insure the valves fully close before taking the switches to GND. Taking the switches to GND removes power from the close solenoids. Although the power is removed from the solenoids, they remain in their last position (closed) since the fill drain valves are bi-stable valves. Also at this point the pilot removes power from the open solenoids of the LO2 and LH2 inboard fill drain valves. This is done by placing the MAIN PROPULSION SYSTEM PROPELLANT LH2 & LO2 FILL/DRAIN INBD switches on panel R4 to GND. Remember that these valves were opened during the vacuum inert initiate procedure. Placing the switch in GND only removes power from the solenoid; the valves remain open. These valves are left open to prevent a pressure buildup between the inboard and outboard valves. Finally, the PNEUMATICS He ISOL is taken to the GPC position since there is no longer a need to operate the pneumatic valves. This action removes power from the valve, causing it to close.

POST INSERTION

In the post insertion portion of the flight, the following switches are powered off since the systems are no longer used: Ascent thrust vector control 1,

2, 3, and 4, EIUs L-C, C-R, R-L, and MECs 1 and 2, all of which are on panel O17. The hardware caution and warning system is reconfigured to inhibit caution and warning on the left, center, and right helium tank pressures and the "A" regulators since the helium system is secured and no longer used. Remember, only the "A" regulators have caution and warning. The LH2 and LO2 manifold pressure caution and warning left enabled to alert the crew to a possible high manifold pressure while on orbit. The engine controller heaters, which are not used, are located on R4 and should remain in the OFF position for the entire mission.

ORBIT

All main propulsion systems have been secured by the time post insertion is complete. The MPS orbit procedures deal with off-nominal manifold pressures and are not normally performed. The concern on orbit is possible high manifold pressures due to an incomplete vacuum inert or MPS dump. If high manifold pressures were detected during orbit, the MCC would advise the crew to perform a second vacuum inert. This is essentially the same procedure that was performed during the post OMS-1 timeframe. If the MCC were not available, the manifold pressure caution and warning parameter (left enabled during post insertion) would alert the crew of the high manifold pressure and the malfunction procedure would be performed, relieving the pressure or deducing a manifold pressure transducer failure.

DEORBIT PREP

During the deorbit prep timeframe, the MPS hardware caution and warning is reconfigured in preparation for entry. Specifically, the MPS helium "A" regulators are re-enabled since the "A" leg will be providing the helium for the entry purge and manifold repressurization. With the caution and warning enabled, an "A" regulator failed high would alert the crew to the problem and possible over-pressurization of the aft compartment. The manifold pressure caution and warning is inhibited at this time since the manifolds are at a vacuum state and do not need to be monitored during entry. Lastly, the ATVC switches are powered back on to allow the main engine nozzles to return to their entry stow positions, since they typically drift while on orbit.

ENTRY

At deorbit TIG minus 25 minutes, the crew manually reconfigures the MPS helium system in preparation for the entry repressurization and purge. This is done by the following steps: take the MPS He ISOLATION A LEFT, CTR, RIGHT on panel R2 to OPEN, MPS He ISOLATION B LEFT, CTR, RIGHT and the PNEUMATICS He ISOL switches on R2 to the CLOSE position. Also at this time, the MAIN PROPULSION SYSTEM PROPELLENT FILL/ DRAIN LH2 & LO2 OUTBD switches on panel R4 are taken to the CLOSE position to inhibit them from opening during the entry. These valves are commanded open during OPS 3 to support th TAL MPS dump, but for the nominal entry this is not necessary. hence the switch is taken to close to override the GPC open command.

NOTE

Expect possible transient master alarms as the "A" regulator pressures initially come up. If the regulator pressure remains greater than 800 psi, the affected MPS He ISOLATION "A" switch should be closed to prevent over-pressurization of the aft compartment.

Once MM 304 is entered, the GPCs command the PNEUMATIC L ENG He XOVR to OPEN provided the switch is in the GPC position. At the same time, the MPS He INTERCONNECTS CTR and RIGHT are commanded out/open, while the MPS He INTERCONNECT LEFT is commanded in/open. This feeds all the MPS helium through the left engine and through the PNEUMATICS L ENG He XOVR. Also at this time, the LH2 RTLS dump valves go open to insure the LH2 manifold is completely vented prior to entry.

At a ground relative velocity of 4,500 feet-per-second (between 130,000 and 110,000 feet altitude, depending on the entry trajectory), the helium blowdown valves open which allows helium to continuously purge the aft compartment, OMS pods, and the LH2 umbilical cavity area. There is no manual control of the blowdown valves. The blowdown purge continues for 650 seconds and typically ends a few minutes after touchdown. At the same time, the MAIN PROPULSION SYSTEM MANF PRESS LH2 & LO2 valves are commanded OPEN provided the switches on panel R4 are in the

GPC position. This allows the LH2 and LO2 manifolds to be pressurized, preventing contaminates from entering the manifolds during entry. Removing contamination from the manifolds or feedlines can be a long and costly process since it involves disassembly of the affected parts. The manifold repress continues until the ground crews install the throat plugs in the main engine nozzles. The LH2 RTLS dump valves also go closed at the 4,5000 feet-per-second velocity.

RTLS ABORT PROPELLENT DUMP SEQUENCE

If MECO is preceded by an RTLS abort, the subsequent MPS propellent dump will differ from the nominal dump.

During the RTLS dump, liquid oxygen is initially dumped through the main oxidizer valve (MOV) in the SSMEs with a subsequent venting through the liquid oxygen fill and drain valves. This dump is done without helium pressurization and relies on the self-boiling properties of the liquid oxygen. In the RTLS liquid oxygen dump, the GPCs terminate the dump whenever the ground relative velocity drops below 3,800 feet-per-second. The liquid oxygen system is repressurized when the 3,800 feet-per-second velocity is attained, and repressurization continues as in a nominal entry.

The hydrogen dump is initiated when the BACKUP LH2 VLVs are automatically opened at MECO plus 10 seconds. The liquid hydrogen trapped in the feedline manifold is expelled in this manner until ground relative velocity of 3,800 feet-per-second at which time the valves are closed. It is important to note that these valves are referred to by two names; the backup LH2 dump valves and the RTLS dump valves. Also, the LH2 outboard and inboard fill drain valves open post MECO allowing the LH2 to be expelled similarly to the nominal LH2 dump. The outboard fill drain closes once the ground relative velocity of 3,800 feet-per-second is attained.

The entry repressurization and aft compartment purge also occurs during the RTLS. The helium blowdown valves are opened at Vrel 4,500 feet-per-second followed by the manifold repress valves opening at 3,800 feet-per-second. As with the nominal entry, the blowdown valves remain open until a few minutes after landing.

TAL ABORT PROPELLENT DUMP SEQUENCE

The MPS dump that is accomplished on a TAL starts when MM 304 is entered. At MM 304 transition, the LH2 is dumped out of the outboard and inboard fill and drains provided the switches on panel R4 are in the GND position. The RTLS dump valves are also opened to provide additional dump capability at this time.

The LO2 is also dumped at the MM 304 transition through the LO2 prevalves and then out the MOVs, just as in the nominal and RTLS dumps. To assist in removing the LO2 propellants, the LO2 inboard and outboard fill drains are opened at a Vrel of 20,000 feet-per-second. At a Vrel of 4,500 feet-per-second the propellant dumps are completed and the repressurization and purges begin. The LO2 dump is completed by closing the LO2 prevalves, MOVs, and LO2 outboard fill and drain. The LH2 dump is terminated by closing the LH2 out board fill and drain valve and the backup LH2 dump valves. At this point the manifold re-pressurization valves open, repressurizing the LO2 and LH2 manifolds. The entry purges also begin at this point since the GPCs command the blowdown valves to open.

MPS Caution and Warning Summary

- **Data path failure** is the loss of both the primary and secondary data paths from an engine. Data path failure indications include an *SM ALERT* light and audio tone, a yellow *MAIN ENGINE STATUS* light on panel F7, the engine Pc meter on panel F7 driven to zero, and an MPS DATA L (C, R) message.
- **Command path failure** is the loss or rejection of GPC commands to the main engine controller. The engine will no longer throttle or accept commands. Indications include an *SM ALERT* light on panel F7 and audio tone, yellow *MAIN ENGINE STATUS* light on panel F7, no change in the Pc meter during throttling, and an MPS CMD L (C, R) message. This message will only annunciate on the PASS pre-BFS engage.
- **Hydraulic lockup** occurs when any of the five hydraulically actuated engine valves fails to achieve its commanded position; the engine does not throttle. Indications are an *SM ALERT* light and audio tone, a yellow *MAIN ENGINE STATUS* light on panel F7, no change in Pc meter during throttling, and an MPS HYD L (C, R) message.
- **Electrical lockup** occurs when the controller loses all Pc or all fuel flow rate data from the engine. Indications are *SM ALERT* light and audio tone, a yellow *MAIN ENGINE STATUS* light on panel F7, no change in Pc meter during throttling, and MPS ELEC L (C, R) message .
- **Engine failure** indications are a visual and audible *MASTER ALARM*, a red *MAIN ENGINE STATUS* light, engine Pc meter reading of zero, a Backup C&W Alarm light on the F7 C/W matrix and an SSME FAIL L (C, R) message on the CRT. A drop in acceleration will also occur, but may not be detectable in MM 102.
- **ET SEP** switch failures are indicated by an SM alert light and an ET SEP MAN or ET EP AUTO message. EP SEP MAN is the default software position for OPS 1 and ET SEP AUTO for OPS 6. This is annunciated by the PASS only since BFS has no switch RM.
- Main engine shutdown pushbutton failures result in an ME SHDN SW C(L,R) message and an SM alert light and tone. This is annunciated by the PASS only since BFS has no switch RM.
- **Liquid hydrogen ullage pressure below 31.6** psia is indicated by an *SM ALERT* light and audio tone, one or more down arrows by the LH2 pressure readings on the BFS GNC SYS SUMM 1 display, and an MPS LH2/O2 ULL message on the BFS CRT.
- **High liquid hydrogen or liquid oxygen manifold pressure** indications are: a visual and audible *MASTER ALARM*, an up arrow by the applicable MANF P reading on the BFS GNC SYS SUMM 1 display, and an MPS LH2/LO2 MANF message on the CRT. The limits are 249 psia for liquid oxygen, and 60 psia for liquid hydrogen.
- **Helium tank leaks** or regulator failure are indicated by an *SM ALERT* light and audio tone, an up arrow by the applicable dP/dT or regulator on the BFS GNC SYS SUMM 1 display, and an MPS He P C (L, R) message .
- **ET separation inhibit** is indicated by an *SM ALERT* light and audio tone and an ET SEP INH message.
- The *MPS* light on panel F7 will illuminate (red) if liquid hydrogen manifold pressure exceeds 60 psia on orbit or liquid oxygen manifold pressure exceeds 249 psia on orbit. A *MASTER ALARM* also illuminates, an audio alarm sounds, and the red *BACKUP C/W ALARM* on panel F7 illuminates as well. The light will also illuminate for helium pressure below 1,150 psia or regulated helium pressure below 680 or above 810 psia on the "A" regulators only.
- **The red upper half of the *MAIN ENGINE STATUS*** lights on panel F7 will be illuminated for an engine in shutdown or post-shutdown phase or exceeding redline limits with limits inhibited.
- **MPS** pneumaitc system anomalies are annunciated by an SM alert light and audio tone, and an applicable message on the BFS CRT. The following pneumatic system messages will be annunicated along with an SM alert light and audio tone for the given condition. MPS PNEU TK, pneumatic tank pressure drops below 3800 psi. MPS PNEU ACUM, pneumatic accumulator pressure drops below 700 psi. MPS PNEU REG, pneumatic regulator pressure drops below 700 psi or goes above 806 psi.

MPS Caution and Warning Summary (continued)

O_2 PRESS	H_2 PRESS	FUEL CELL REAC (R)	FUEL CELL STACK TEMP	FUEL CELL PUMP
CABIN ATM	O_2 HEATER TEMP	MAIN BUS UNDERVOLT (R)	AC VOLTAGE	AC OVERLOAD
FREON LOOP (R)	AV BAY/ CABIN AIR	IMU	FWD RCS (R)	RCS JET
H_2O LOOP	RGA/ACCEL	AIR DATA (R)	LEFT RCS (R)	RIGHT RCS (R)
———	LEFT RHC (R)	RIGHT/AFT RHC (R)	LEFT OMS (R)	RIGHT OMS (R)
PAYLOAD WARNING (R)	GPC	FCS SATURATION (R)	OMS KIT	OMS TVC (R)
PAYLOAD CAUTION	PRIMARY C/W	FCS CHANNEL	MPS (R)	———
BACKUP C/W ALARM (R)	APU TEMP	APU OVERSPEED	APU UNDERSPEED	HYD PRESS

MPS Caution and Warning Lights on Panel F7

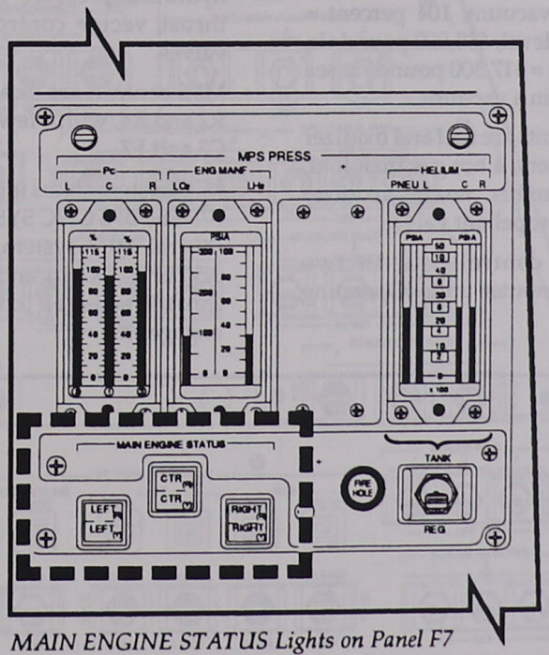

MAIN ENGINE STATUS Lights on Panel F7

MPS Summary Data

- The main engines, assisted by two solid rocket motors during the initial phases of the ascent trajectory, provide the vehicle acceleration from lift-off to MECO at a predetermined velocity.
- Most of the MPS is located at the aft end of the orbiter beneath the vertical stabilizer.
- The MPS consists of three SSMEs and controllers, the external tank, propellant management and helium systems, four ascent thrust vector control units, and six hydraulic servoactuators.
- The SSMEs are reusable, high-performance engines that use liquid hydrogen for fuel and cooling and liquid oxygen as an oxidizer.
- Hydraulically powered gimbal actuators allow each engine to be gimbaled plus or minus 10.5 degrees in the yaw axis and plus or minus 8.5 degrees in the pitch axis for thrust vector control.
- The SSMEs can be throttled 67 to 109 percent in 1 percent increments. Thrust level values are: 100 percent = 375,000 pounds at sea level, 470,000 pounds in a vacuum; 104 percent = 393,800 pounds at sea level, 488,000 pounds in a vacuum; 109 percent = 417,300 pounds at sea level, 513,250 pounds in a vacuum.
- Major SSME components are fuel and oxidizer turbopumps, preburners, a hot gas manifold, main combustion chamber, nozzle, oxidizer heat exchanger, and propellant valves.
- Each SSME has a controller with two redundant digital computer units. Operating in conjunction with engine sensors, valves, actuators, and spark igniters, the controllers form a self-contained system for engine control, checkout, and monitoring.
- The propellant management system consists of manifolds, distribution lines, and valves that transport propellant from the external tank to the three main engines for combustion, and gases from the engines to the external tank for pressurization.
- The helium system consists of 10 supply tanks and associated regulators, check valves, distribution lines, and control valves.
- The helium system is used for: (1) in-flight engine purges, (2) pressure for emergency closing of engine valves, (3) pressure to actuate pneumatically operated propellant valves, (4) expelling the propellants during the MPS dump and (5) entry purge and repressurization.
- There is one helium system per engine, plus a fourth pneumatic system to operate the propellant valves.
- The three orbiter hydraulic systems supply hydraulic pressure to the MPS to provide thrust vector control and actuate engine valves.
- MPS controls are located primarily on panels R2 and R4, with a few on panels O17, R1, and C3 and F7.
- MPS system status indicators appear on panel F7. The BFS GNC SYS SUMM 1 CRT displays several MPS system parameters. The BFS ASCENT TRAJ 1 and 2 CRT displays engine throttling level (commanded by BFS, if engaged).

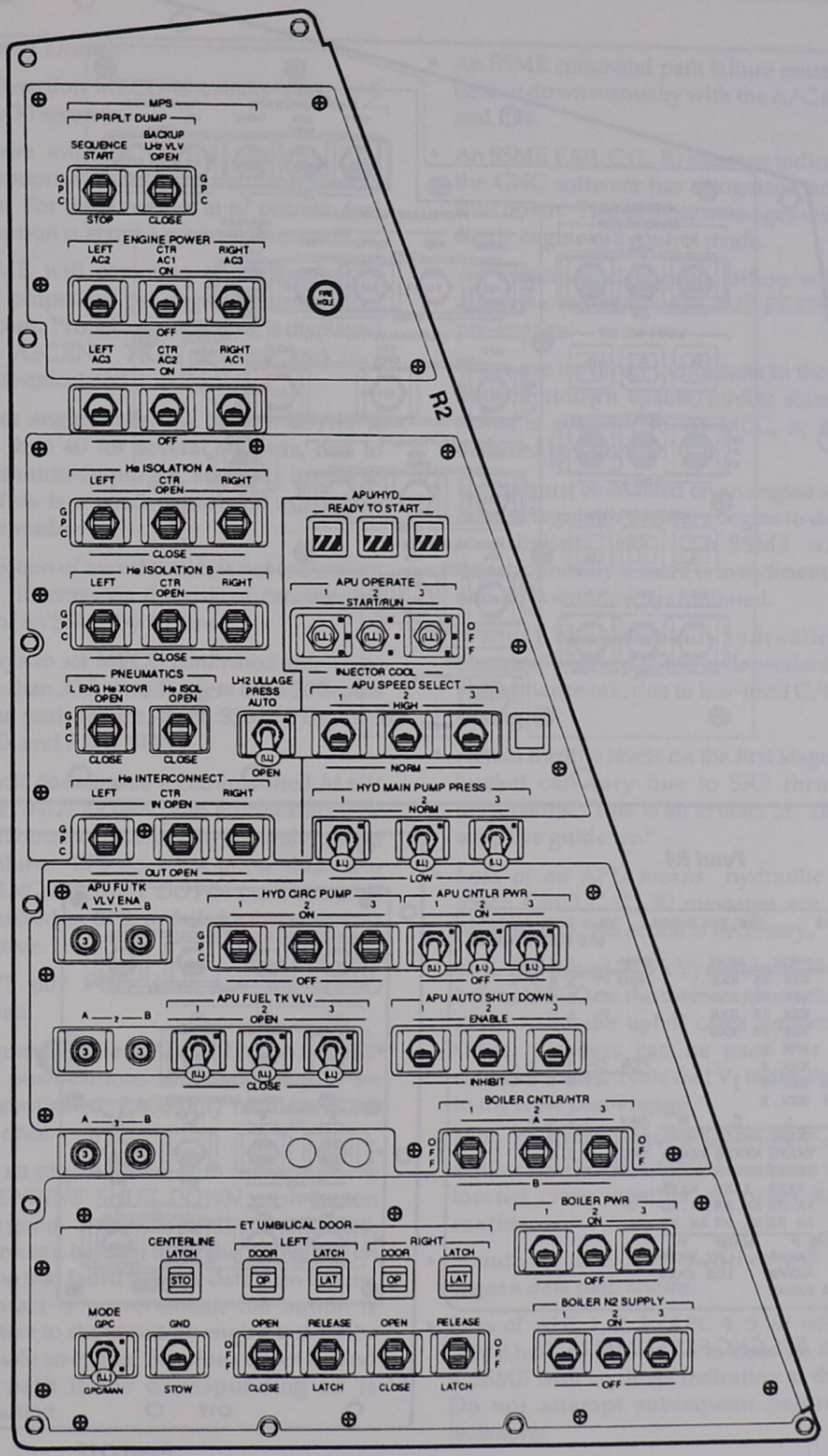
R2
MPS
PRPLT DUMP
SEQUENCE START
BACKUP LH2 VLV OPEN
GPC
STOP
CLOSE
ENGINE POWER
LEFT AC2
CTR AC1
RIGHT AC3
ON
OFF
LEFT AC3
CTR AC2
RIGHT AC1
He ISOLATION A
LEFT
CTR
RIGHT
OPEN
CLOSE
He ISOLATION B
APU/HYD
READY TO START
APU OPERATE
START/RUN
OFF
PNEUMATICS
L ENG He XOVR
He ISOL
LH2 ULLAGE PRESS
AUTO
INJECTOR COOL
APU SPEED SELECT
HIGH
NORM
He INTERCONNECT
IN
HYD MAIN PUMP PRESS
LOW
OUT
APU FU TK VLV ENA
A
B
HYD CIRC PUMP
APU CNTLR PWR
APU FUEL TK VLV
APU AUTO SHUT DOWN
ENABLE
INHIBIT
BOILER CNTLR/HTR
ET UMBILICAL DOOR
CENTERLINE LATCH
LEFT DOOR
LATCH
RIGHT DOOR
STO
OP
LAT
BOILER PWR
MODE GPC
GND
OPEN
RELEASE
GPC/MAN
STOW
LATCH
BOILER N2 SUPPLY

Panel R2

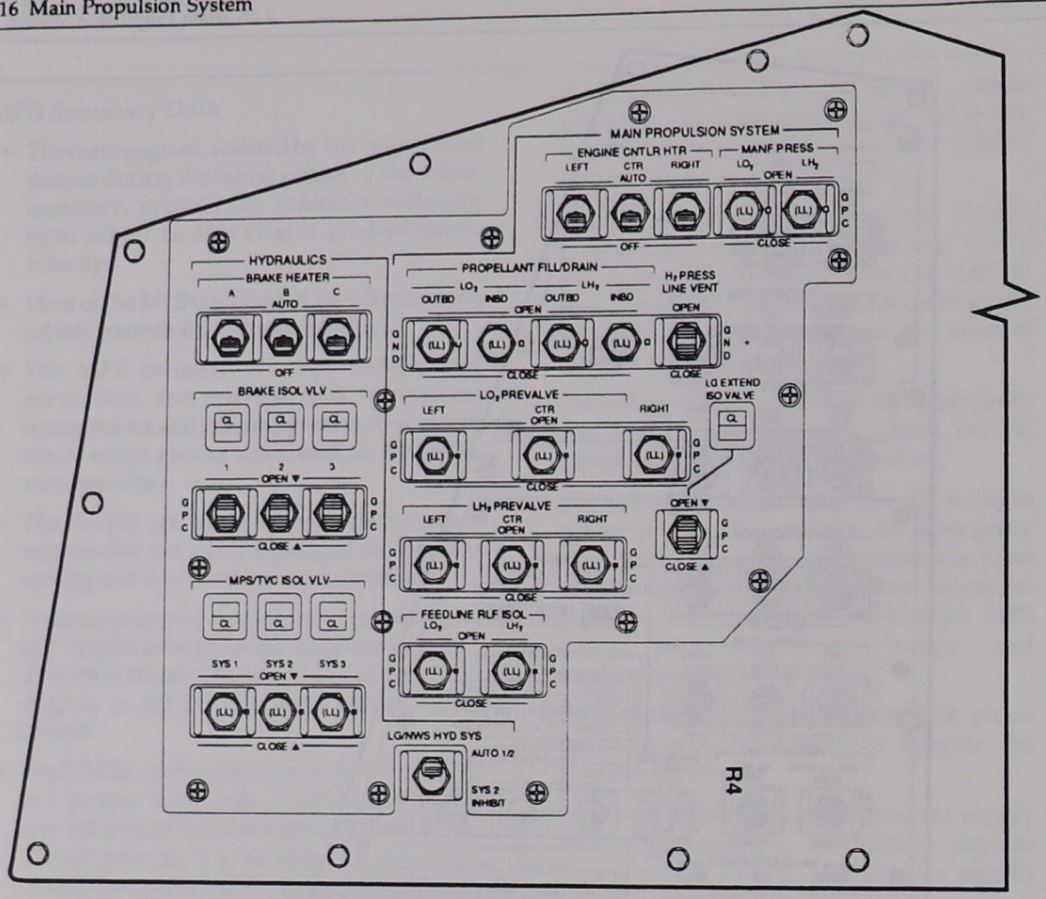

Panel R4

```
XXXX/XXX/018        GNC SYS SUMM 1      XX X DDD/HH:MM:SS
                                        BFS DDD/HH:MM:SS

   SURF      POS      MOM          DPS      1 2 3 4
   L OB      XXX.XS   XXS          MDM FF   S S S S
     IB      XXX.XS   XXS              FA   S S S S
   R IB      XXX.XS   XXS              PL   S S
     OB      XXX.XS   XXS
   AIL       XXX.X
   RUD       XXX.X                 FCS CH   1 2 3 4
   SPD BRK   XXX.X                          S S S S
   BDY FLP   XXX.X

MPS              L        C        R      NAV      1 2 3 4
HE TK P       XXXXS    XXXXS    XXXXS     IMU      S S S
   REG P A    XXXXS    XXXXS    XXXXS     TAC      S S S
          B   XXXXS    XXXXS    XXXXS     ADTA     S S S S
   dP/dT      XXXS     XXXS     XXXS
ULL P LH2     XX.XS    XX.XS    XX.XS
      LO2     XX.XS    XX.XS    XX.XS

MPS PNEU HE P        MANF P
      TK   XXXXS       LH2 XXXS
      REG  XXXXS       LO2 XXXS
      ACUM XXXXS

                                                    (XX)
```

BFS GNC SYS SUMM 1

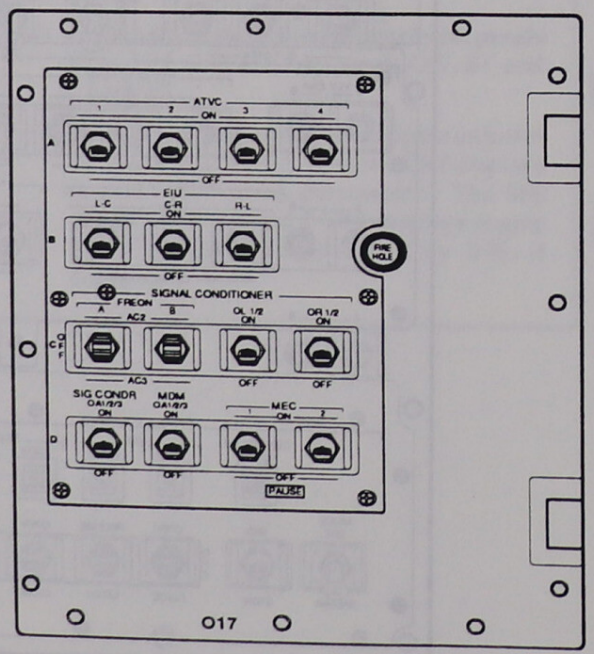

Panel O17

MPS Rules of Thumb

- Direct insertion MECO is usually close to 8 minutes 30 seconds.
- For three engines at 104 percent, fuel consumption is about 1 percent propellant/5 seconds. For three engines at 67 percent, fuel consumption is about 1 percent/8 seconds.
- An SSME will consume approximately 4 percent propellant per engine per minute at 104 percent. Propellant remaining is displayed on the ASCENT TRAJ display and is a guidance-calculated number.
- When an engine fails, the helium dP/dT is greater than 40 for several seconds, due to engine shutdown purges, and then it goes to zero. This is a good crosscheck to confirm engine shutdown.
- The selection of max throttles is not to be taken lightly. It increases the risk of catastrophic failure of an SSME by 10 times.
- Five ways to set MECO confirmed are: three P_cs less than 30%, two P_cs less than 30% plus one data path failure, three SSME PBs, OPS 104 PRO, and FAST SEP.
- PASS will downmode a commfaulted *MAIN ENGINE SHUT DOWN* push button and allow the push button to safe an engine under a data path failure. BFS does not allow this. If a *MAIN ENGINE SHUT DOWN* push button is commfaulted in BFS, or failed otherwise, it is inoperative.
- An OPS 602 PRO does not set MECO confirmed.
- BFS requires all three *MAIN ENGINE SHUT DOWN* push buttons simultaneously to set MECO confirmed; PASS only requires to see the PBs once.
- To shut an engine down, both contacts on the *MAIN ENGINE SHUT DOWN* push button must be good. If one contact is commfaulted, the button can be used to set the safing flag on an engine that failed under a data path failure. If a contact is power-failed, the button is inoperative to shutdown an engine but can be used to safe an engine that shuts down behind a data path if the corresponding FF is commfaulted.
- An SSME command path failure must always be shut down manually with the A/C switches and PBs.
- An SSME FAIL C (L, R) message indicates that the GNC software has recognized an engine shut down. Two of these messages will enable single engine roll control mode.
- An engine in data path failure will never display a red *MAIN ENGINE STATUS* light, pre-engage.
- There are no direct indications to the crew of limit shutdown enable/inhibit status. The status is available to the MCC, or it can be deduced by the crew.
- Limits must be enabled on an engine when the helium regulator pressure begins to decay due to a helium leak. An SSME will fail catastrophically if there is insufficient helium, and limit shutdown is inhibited.
- Manual shutdown of hydraulically or electrically locked SSME is dependent on the performance call, due to low-level C/O sensor timing.
- Actual throttle levels on the first stage throttle bucket can vary due to SRB thrust level dispersions. This is an artifact of "first stage adaptive guidance."
- Loss of an APU means hydraulic lockup. SSME CMD C (L, R) messages are possible post-MECO. No action is necessary.
- 23 k, 22.5 k, and 24.5 k V_I are about 30 seconds before MECO on the three-engine uphill, TAL, and two-engine uphill cases respectively so these numbers can be used for engine shutdown cues. Note that V_I indication is lost to the crew post-engage.
- *MPS ENGINE POWER* switches look very similar to *He ISOLATION* switches and are located close together on panel R2. ***Use caution.***
- Shutdown with A/C switches will always cause a data path failure.
- Loss of ALC 1, 2, 3 (APC 4, 5, 6) will cause SSME helium isolation A to close on the C, L, R SSME with no direct indication to the pilot. Do not attempt subsequent helium leak isolations.

2.19 PAYLOAD DEPLOYMENT AND RETRIEVAL SYSTEM (PDRS)

CONTENTS

Description 2.19-1
Remote Manipulator System (RMS) 2.19-1
Manipulator Positioning Mechanism ... 2.19-11
Payload Retention Mechanisms 2.19-14
Operations 2.19-18

Description

The PDRS consists of the hardware, software, and interfaces required to remotely hold and control the movements of a specified object, usually a payload, and to remotely observe or monitor objects or activities.

The PDRS includes the remote manipulator system, the manipulator positioning mechanisms, and manipulator retention latches. The PDRS also interfaces with other orbiter systems, such as the SM GPC, the electrical power distribution system (EPDS), and the closed-circuit television.

Remote Manipulator System (RMS)

The RMS is the mechanical arm portion of the PDRS. The arm maneuvers a payload from the payload bay to its deployment position, and then releases it. The RMS can also grapple a free-flying payload, maneuver it to the payload bay, and then berth it in the orbiter. Other operations do not require payload deployment or retrieval, just payload maneuvering, and some involve only arm maneuvering with no payload attached.

The RMS is capable of deploying or retrieving payloads weighing up to 65,000 pounds. The RMS can also provide a mobile extension ladder for EVA crewmembers for work stations or foot restraints, and be used as an inspection aid to allow the flight crewmembers to view the orbiter or payload surfaces through one or two television cameras on the RMS.

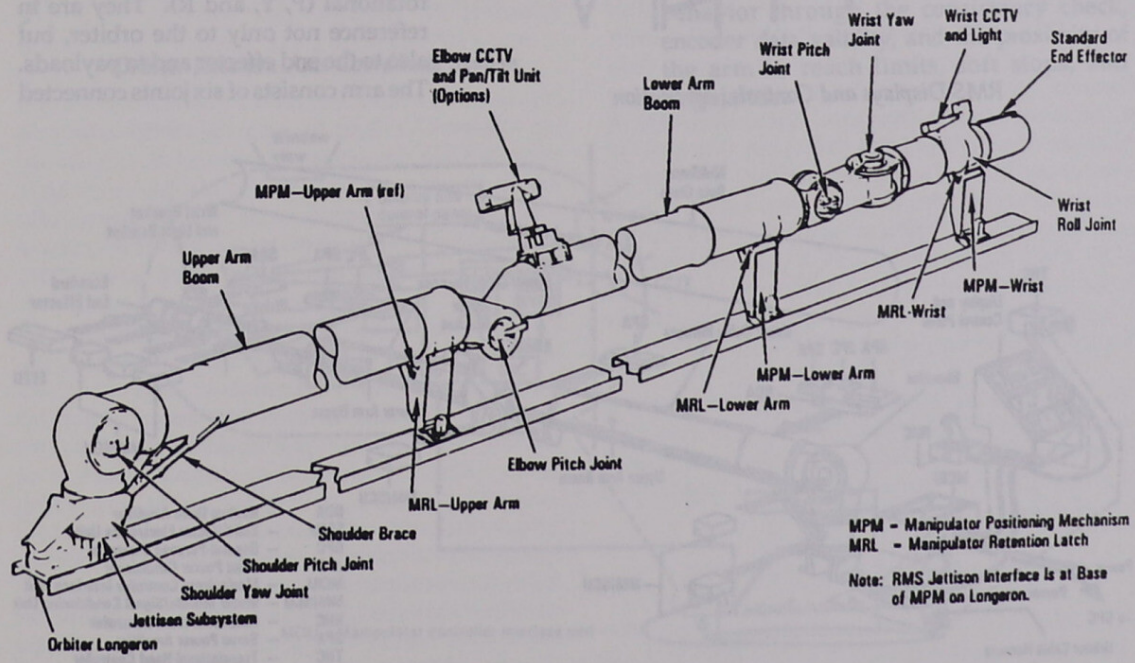

RMS–Stowed Position and General Arrangement

The basic RMS configuration consists of a manipulator arm, an RMS display and control panel, including rotational and translational hand controllers at the orbiter port aft flight deck crew station, and a manipulator controller interface unit that interfaces with the orbiter SM GPC. The RMS itself is installed on the port longeron of the payload bay for those missions requiring it. Some payloads carried aboard the orbiter for deployment do not require the RMS.

NOTE

Original concepts called for an optional second arm to be placed along the starboard longeron. It is no longer under consideration; however, residual references to the starboard arm still exist on orbiter panels and controls.

The RMS structure is attached to a manipulator positioning mechanism (MPM) that attaches to the orbiter longeron. When cradled, the arm rests on three MPM pedestals that contain manipulator retention latches (MRLs) for securing the arm during launch, entry, and periods of arm inactivity. During launch, entry, and any other times the payload bay doors are closed, the MPM is in the rolled in, or stowed, position. After the doors are opened on orbit, the MPM must be rolled out, or deployed, so as to not interfere with payload clearances.

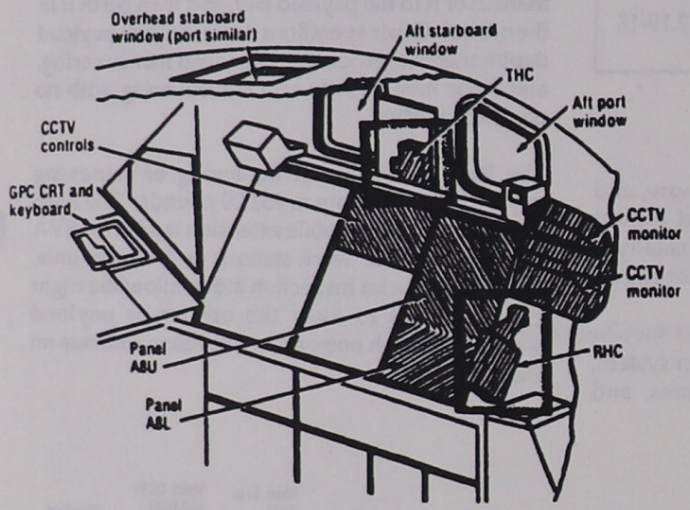

RMS Displays and Controls, Aft Station

The RMS arm is 50 feet 3 inches long and 15 inches in diameter. The arm has 6 degrees of freedom: three translational (X, Y, and Z) and three rotational (P, Y, and R). They are in reference not only to the orbiter, but also to the end effector and to payloads. The arm consists of six joints connected

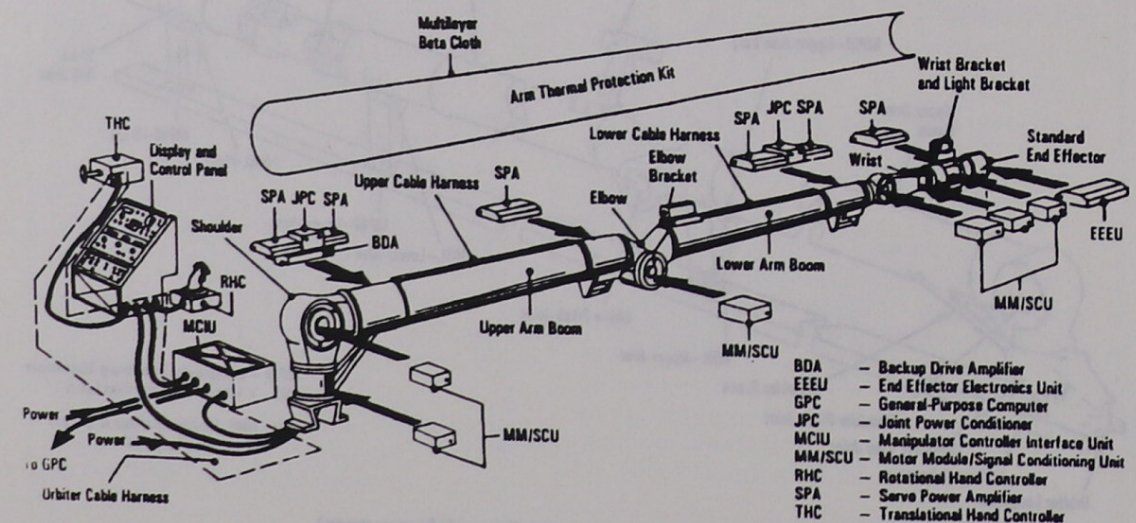

RMS Components

via structural members and has a payload capturing device on the end. It weighs 905 pounds, and the total system weighs 994 pounds.

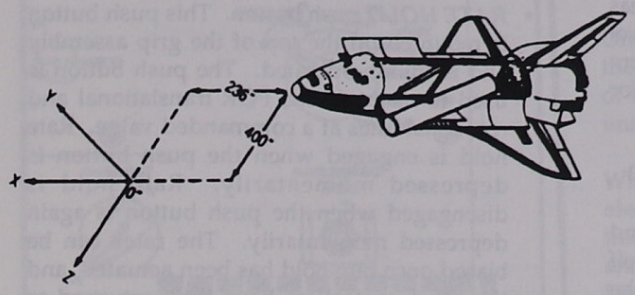

Orbiter Body Axis Coordinate System

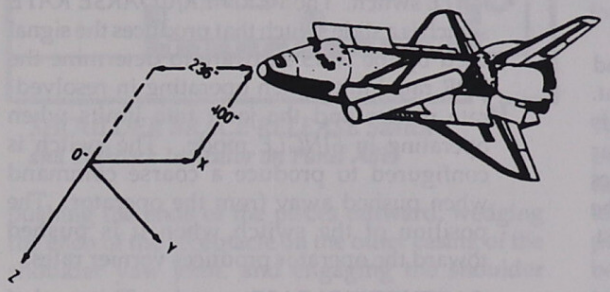

Orbiter Rotation Axis Coordinate System

On-orbit RMS operations are always performed by a team of two arm operators who equally divide each RMS task. The arm operator who controls the actual RMS trajectories is stationed on the port aft flight deck. The other operator is stationed on the starboard aft flight deck and controls CRT inputs, payload retention latch assemblies (PRLAs), and cameras.

The RMS has a built-in test capability to detect and display critical failures. It monitors the arm-based electronics (ABE), displays and controls (D & C), and the manipulator controller interface unit (MCIU) firmware checks. Failures are displayed on a light matrix on panel A8U and on the CRT and are available for downlink through orbiter telemetry.

All the major systems of the arm-based electronics are monitored. The MCIU checks the integrity of the communications link between itself and the arm-based electronics, displays and controls, and the orbiter SM GPC. The MCIU also monitors end effector functions, thermistor circuit operation, and its own internal integrity. The computer checks include an overall check of each joint's behavior through the consistency check, encoder data validity, and the proximity of the arm to reach limits, soft stops, and singularities.

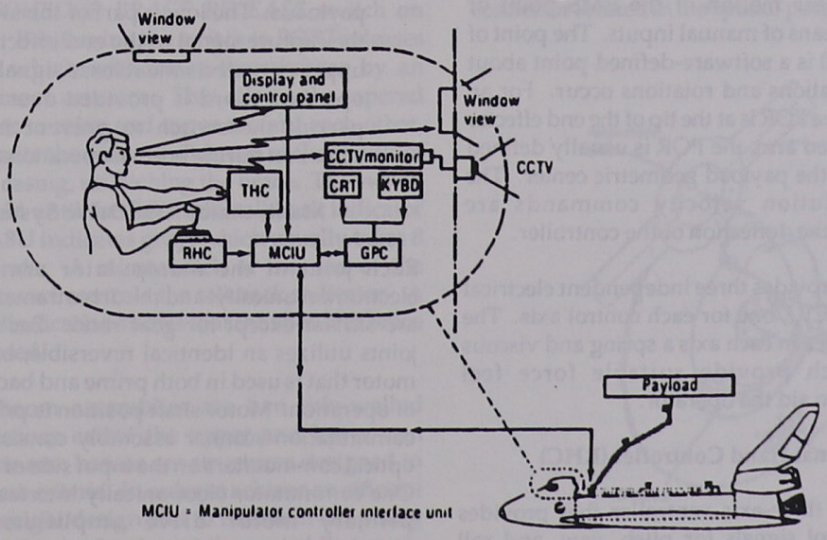

Shuttle RMS

The RMS can only be operated in a weightless environment, since the arm dc motors are unable to move the arm's weight under the influence of Earth's gravity. Each of the six joints has an extensive range of motion, allowing the arm to reach across the payload bay, over the crew compartment, or to areas on the undersurface of the orbiter. Arm joint travel limits are annunciated to the flight crew arm operator before the actual mechanical hard stop for a joint is reached.

Manipulator Controller Interface Unit (MCIU)

The principal function of the MCIU is to handle and evaluate the exchange of information between itself and the SM GPC, the displays and controls, and the RMS. The MCIU manipulates data, analyzes and responds to failure conditions, and controls the end effector auto capture/release and rigidization/derigidization sequence logic.

A spare MCIU is usually flown on RMS flights and can be changed out with a failed MCIU in flight. The MCIU is located behind panel L17; the spare is currently stowed in a middeck locker. In the near future the space MCIU will be stowed in avionics bay 1, 2, or 3. Procedures for changing out the MCIU are contained in the All Vehicle IFM Checklist.

Translational Hand Controller (THC)

The THC allows an operator to control the three-dimensional linear motion of the RMS point of resolution by means of manual inputs. The point of resolution (POR) is a software-defined point about which all translations and rotations occur. For an unloaded arm, the POR is at the tip of the end effector (EE). For a loaded arm, the POR is usually defined to be at or near the payload geometric center. The point of resolution velocity commands are proportional to the deflection of the controller.

The controller provides three independent electrical inputs to the MCIU, one for each control axis. The THC incorporates in each axis a spring and viscous damper, which provide suitable force feel characteristics to aid the operator.

Rotational Hand Controller (RHC)

The RHC is a three-axis controller that provides electrical control signals for pitch, yaw, and roll control of the RMS. Control signals are proportional to manual input displacements in each of the three mutually perpendicular axes. The RHC also provides additional RMS controls through three switches located on the handgrip. The three switches are:

- *RATE HOLD* push button. This push button is mounted on the top of the grip assembly and is thumb-operated. The push button is used to maintain the POR translational and rotational rates at a commanded value. Rate hold is engaged when the push button is depressed momentarily. Rate hold is disengaged when the push button is again depressed momentarily. The rates can be biased once rate hold has been actuated, and the hand controllers have been returned to detent by deflecting a hand controller a second time.
- *RATE* switch. The *VERNIER/COARSE RATE* switch is a slide switch that produces the signal used by the RMS software to determine the POR rate limits when operating in resolved-rate modes and the joint rate limits when operating in *SINGLE* mode. The switch is configured to produce a coarse command when pushed away from the operator. The position of the switch when it is pushed toward the operator produces vernier rates.
- *CAPTURE/RELEASE* switch. This rocker switch is mounted on the aft part of the grip assembly and is used to capture and release payloads. The lower part of the switch sends the capture signal to the end effector, and the upper part sends the release signal. A finger-operated guard is provided over the release part of the switch to prevent inadvertent actuation during normal operation of the RHC.

Manipulator Arm Drive System

Each joint of the manipulator arm is driven electromechanically, and the drive trains for all joints are similar except for gear ratio. Each of the six joints utilizes an identical reversible, brushless dc motor that is used in both prime and backup modes of operation. Motor shaft position is provided by a commutation scanner assembly consisting of two optical commutators on the input side of each motor. One commutator electronically interfaces with the primary motor drive amplifier, and one electronically interfaces with the backup drive amplifier.

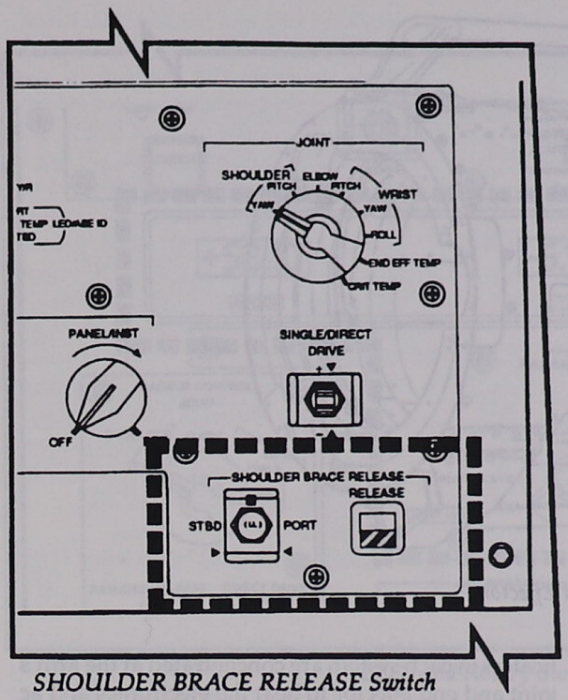

SHOULDER BRACE RELEASE Switch and Talkback Indicator on Panel A8U

pushing the ends of the pieces outward, wedging the ends of the receptacle on the outer casing of the shoulder yaw joint, and engaging the shoulder brace.

Shoulder brace release is controlled by the lever-locked *SHOULDER BRACE RELEASE* switch on panel A8U. Positioning the switch to *PORT* releases the brace, which withdraws the plunger by an electrical linear actuator. This allows the tapered metal pieces to relax and move toward each other, which permits the brace to slide out of the shoulder yaw outer casing, unlatching the brace. The switch must be held until the *RELEASE* talkback indicator on panel A8U indicates gray, which usually takes 8 to 10 seconds. A microswitch at the end of the plunger's travel controls the talkback indicator. A barberpole indication shows that the shoulder brace is not released.

The arm boom assemblies are two thin-walled tubular sections called the upper and lower arm booms. The arm booms are structures designed to meet stiffness criteria. In order to achieve an efficient stiffness/weight design and to maintain simplicity of construction, a circular section graphite/epoxy composite design is implemented. End flanges are made of aluminum alloy and are bonded and bolted to the graphite/epoxy tubular sections. Provisions are made for the installation of electrical cable harness assemblies along the length of each arm.

On top of the lower arm and immediately below the elbow joint interface is a mount for installation of an optional elbow CCTV camera and pan/tilt unit.

Wire arm cable harnesses are designed to minimize electrical cross-talk and electromagnetic interference. They are of a weight-efficient design and are installed on the outside of the upper and lower arm booms, utilizing a lightweight mounting technique with adhesive Kapton tape. Sufficient slack is allowed for relative thermal expansion and contraction between the cables and arm booms and for movement of the joints.

End Effectors

The RMS can operate with standard or special-purpose end effectors. The standard end effector can grapple a payload, keep it rigidly attached as long as required, and then release it. Special-purpose end effector designs are available and can be built and installed on the RMS during ground turnaround in place of the standard end effector. A male plug on the optional electrical flight grapple fixture can receive electrical power through a female connector located in the special purpose end effector.

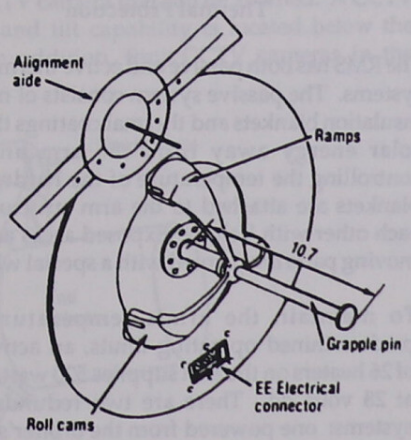

Electrical Flight Grapple Fixture

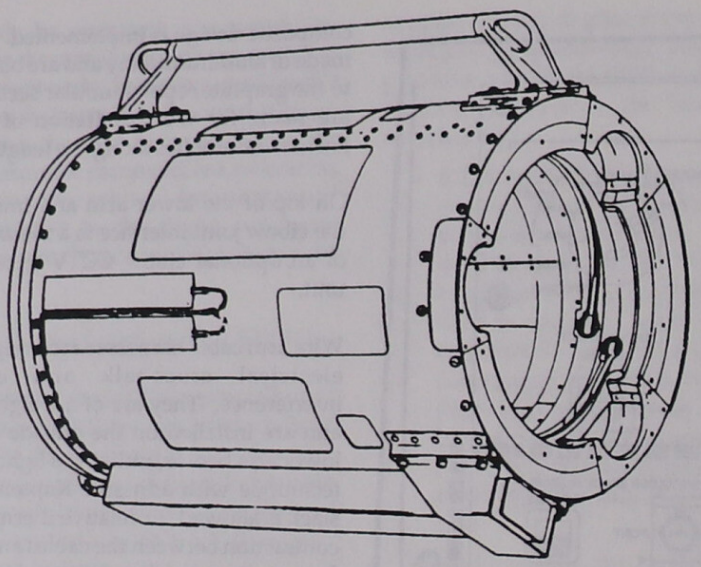

Standard End Effector

The standard end effector drive system captures or releases a payload using a rotating ring at the open end of the unit to close three wire snares around the payload-mounted grapple fixture. The entire snare ring is then pulled into the end effector until the grapple fixture base plate is flush against the tip of the end effector. This process is called rigidizing the end effector. To release a payload, the carriage is extended or derigidized to a point where there is no axial tension on the grapple fixture-probe, and the snares are then opened.

Thermal Protection

The RMS has both passive and active thermal control systems. The passive system consists of multilayer insulation blankets and thermal coatings that reflect solar energy away from the arm and aid in controlling the temperature of the hardware. The blankets are attached to the arm structure and to each other with Velcro. Exposed areas around the moving parts are painted with a special white paint.

To maintain the arm's temperature within predetermined operating limits, an active system of 26 heaters on the arm supplies 520 watts of power at 28 volts dc. There are two redundant heater systems: one powered from the orbiter's MN A dc bus, and the other from the MN B dc bus. Only one system is required for proper thermal control. The heaters in each system are concentrated at the arm's joint and end effector to heat the electronics and ac motor modules. The heaters are enabled by the *PORT RMS HEATER A* and *B* guarded switches on panel A8L. When the switches are positioned to

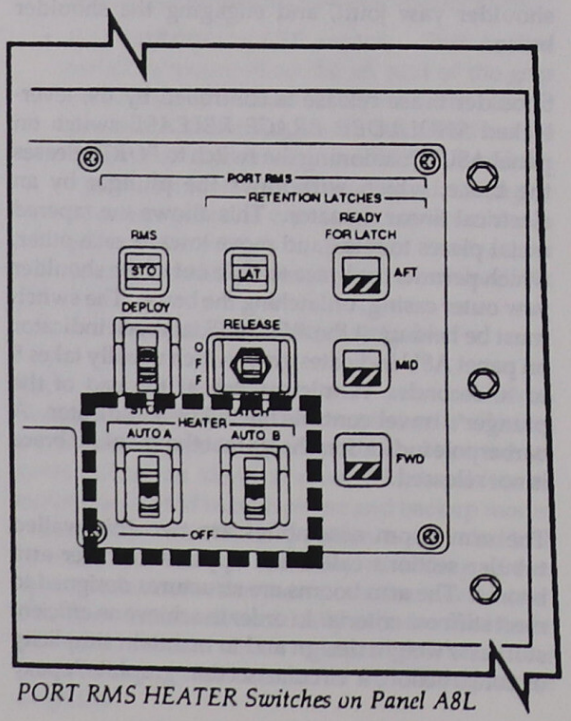

PORT RMS HEATER Switches on Panel A8L

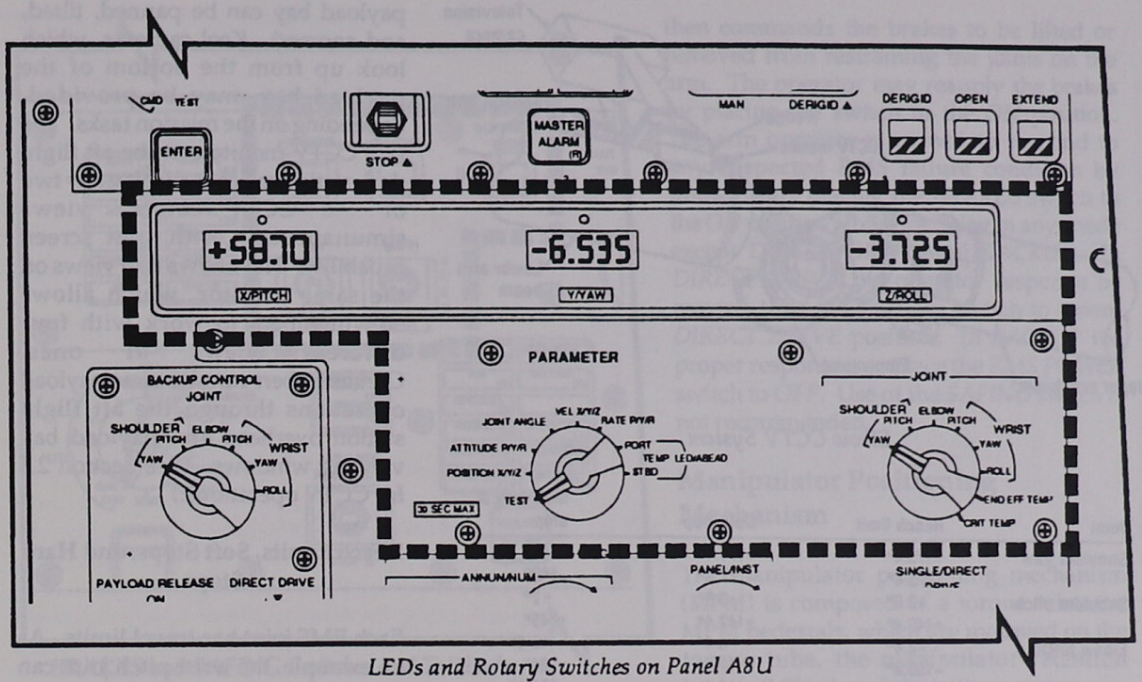

LEDs and Rotary Switches on Panel A8U

AUTO, the heaters are thermostatically controlled by 12 thermistors located along the arm. The heaters are automatically turned on at 14° F and off at 43° F.

LED numerical displays 1, 2, and 3 in the middle of panel A8U can be used in conjunction with the *JOINT* and *PARAMETER* rotary switches to display arm temperatures in degrees Fahrenheit along with identification numbers. For example, when the *JOINT* switch is positioned to *END EFF TEMP*, and the *PARAMETER* switch is positioned to *PORT TEMP*, LED 1 displays the commutator's temperature, LED 2 displays the end effectorelectronics' temperature, and LED 3 identifies the location of the thermistor to be in the end effector.

CCTV

The orbiter's CCTV aids the flight crew in monitoring PDRS operations. The arm has provisions on the wrist joint for a viewing light and a fixed CCTV camera that can be zoomed. A CCTV with pan and tilt capability is located below the elbow. In addition, four CCTV cameras in the

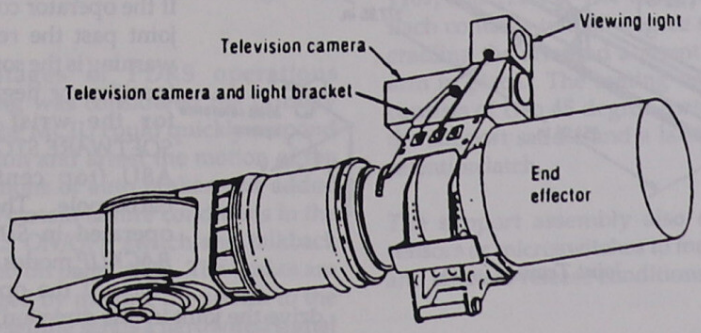

Wrist CCTV and Light Configuration

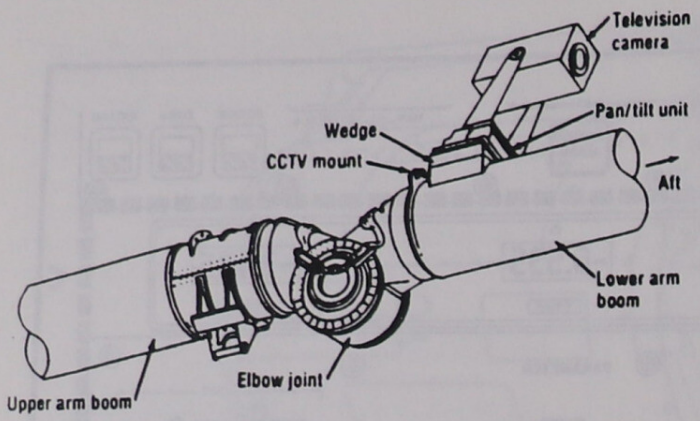

Elbow CCTV System

Joint	Reach limit	Soft stop	Mechanical stop
Shoulder yaw	+175.4°	+177.4°	+180°
	-175.4°	-177.4°	-180°
Shoulder pitch	+2.6°	+0.6°	-2°
	+140.4°	+142.4°	+145°
Elbow pitch	-2.4°	-0.4°	+2.4°
	-155.6°	-157.6°	-161°
Wrist pitch	-114.4°	-116.4°	-121.4°
	+114.4°	+116.4°	+121.4°
Wrist yaw	-114.6°	-116.6°	-121.3°
	+114.6°	+116.6°	+121.3°
Wrist roll	-440.0°	-442°	-447°
	+440.0°	+442°	+447°

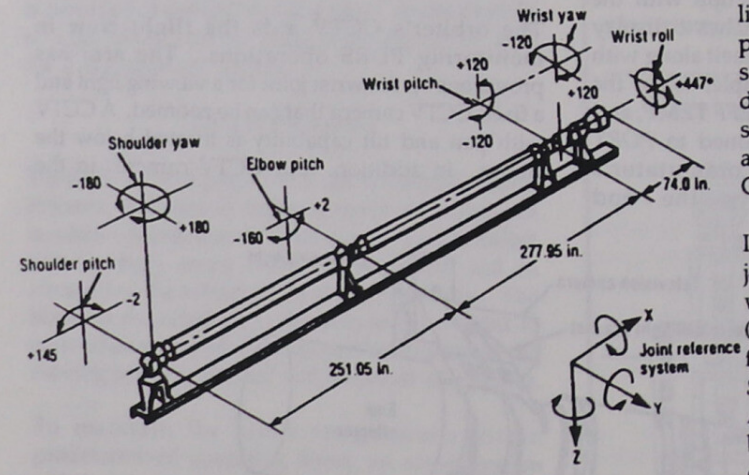

Joint Travel Limits

payload bay can be panned, tilted, and zoomed. Keel cameras, which look up from the bottom of the payload bay, may be provided, depending on the mission tasks. The two CCTV monitors at the aft flight deck station can each display any two of the CCTV camera views simultaneously with split screen capability. This shows two views on the same monitor, which allows crewmembers to work with four different views at once. Crewmembers can also view payload operations through the aft flight station overhead and payload bay viewing windows. (See Section 2.3 for CCTV operations.)

Reach Limits, Soft Stops, and Hard Stops

Each RMS joint has travel limits. As an example, the wrist pitch joint can be physically moved positive or negative 121.4 degrees to the mechanical hard stop. At positive or negative 114.4 degrees, software warns the RMS operator that the arm is approaching its end of travel by activating the yellow *REACH LIM* light and the red *MASTER ALARM* push button indicator on panel A8U, sounding the master alarm, displaying a computer fault message, sounding an SM tone, and displaying a REACH LIMIT indication on the CRT.

If the operator continues driving the joint past the reach limit, the next warning is the soft stop. At this point (positive or negative 116.4 degrees for the wrist pitch joint), the *SOFTWARE STOP* talkback on panel A8U (top center) will indicate barberpole. The arm can only be operated in *SINGLE*, *DIRECT*, or *BACKUP* modes once it reaches a soft stop. If the operator continues to drive the joint in this direction, motion will stop at positive or negative 121.4 degrees. All joint angles equal 0 degrees when the arm is cradled.

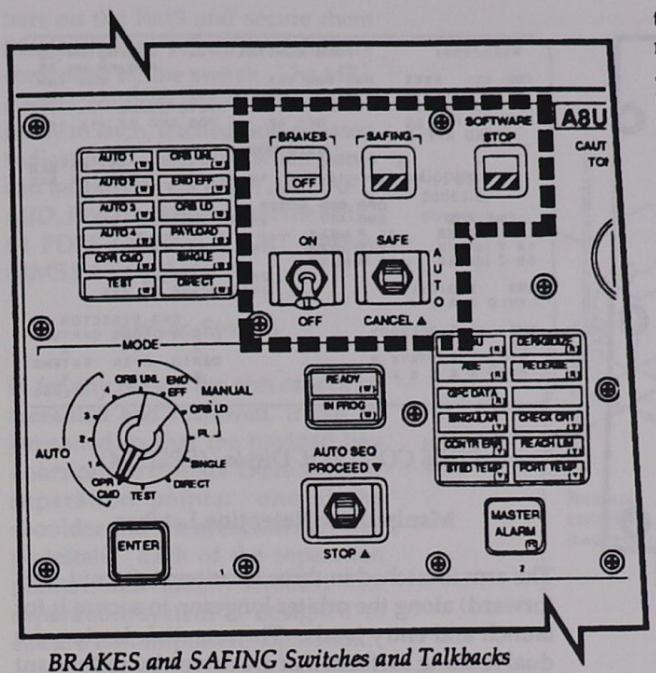

BRAKES and SAFING Switches and Talkbacks and SOFTWARE STOP Talkback on Panel A8U

Safing and Braking

Safing and braking are the two methods available for bringing the arm to rest. Safing can be accomplished by positioning the *SAFING* switch at the top of panel A8U to *SAFE*, which brings the arm to rest using the servocontrol loops. When the switch is positioned to *AUTO*, safing is initiated by the MCIU when certain critical built-in test equipment failures are detected. The *CANCEL* position removes the safing state. The *SAFING* talkback indicator indicates gray when safing is not in progress and barberpole when safing is in progress.

In the initial stages of PDRS operations development, safing was considered the primary method whereby the MCIU could quickly respond to a failure condition and arrest the motion of the arm. MCIU initiations of auto brakes was added later to respond to certain failure conditions in the SPA. The *BRAKES ON/OFF* switch and talkback indicator are located on panel A8U. The brakes are manually disengaged by moving the switch to the *OFF* position. This setting sends a hardwired signal to the brake logic function in the MCIU. The MCIU then commands the brakes to be lifted or removed from restraining the joints on the arm. The operator may reapply the brakes by placing the switch in the *ON* position. The arm operator is trained to respond to any suspected *RMS* failure condition by immediately placing the *BRAKES* switch to the *ON* position while operating in any mode except *DIRECT DRIVE* and *BACKUP*. In *DIRECT DRIVE* the operator responds by moving the *MODE* rotary switch to a non-*DIRECT DRIVE* position. In *BACKUP* the proper response is to place the *RMS POWER* switch to *OFF*. Use of the *SAFING* switch is not recommended.

Manipulator Positioning Mechanism

The manipulator positioning mechanism (MPM) is composed of a torque tube, the MPM pedestals, which are mounted on the torque tube, the manipulator retention latches (MRLs), and the jettison system.

MPM Pedestals

The pedestals house the separation system and are the cradling units upon which the arm rests in the cradled position. There are four support assemblies. One is a shoulder attach point located at an orbiter X-value of 679.5. The support assembly at the shoulder attach point is unique. Since the RMS is attached to the orbiter at this point, it does not contain an MRL, but does contain a separation system that is part of the MPM.

Three pedestals are located at X-values of 911.05, 1189, and 1256.5. The three pedestals are similar. Each contains two 45 degree saddle interfaces for cradling the arm and a retention latch to lock the arm in place. The mating hardware for the arm consists of two 45 degree mating plates to rest on the support saddle and a latch striker held by the retention latch.

The support assembly also contains redundant sensors or microswitches to indicate ready-to-latch and latched/release conditions.

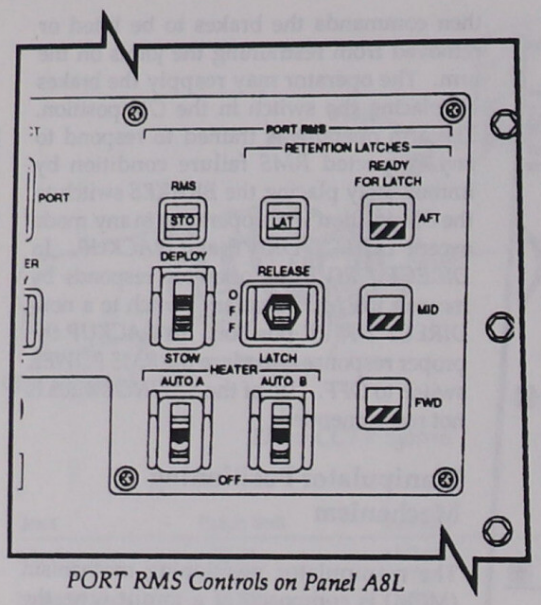

PORT RMS Controls on Panel A8L

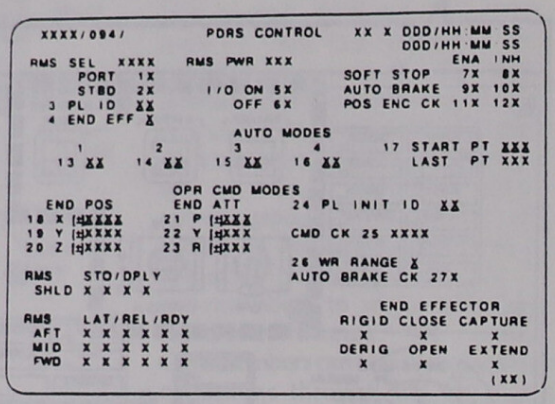

PDRS CONTROL Display (SPEC 94)

MPM Torque Tube

The MPM drive system consists of dual redundant motors rotating a torque tube that in turn drives the rotary actuators that move the RMS pedestals. The torque tube rotates the arm from its stowed position to its operational position outside the payload bay. The drive mechanism has two overcenter lock components, one of which locks in the deployed position and the other which locks in the stowed position. The drive system contains microswitches needed for stow/deploy indications. Current flight rules prohibit loaded arm operations from the stowed configuration.

The *PORT RMS DEPLOY/STOW* switch is located on panel A8L. The talkback above the switch indicates *STO* when the MPMs are in the stowed position, *DEP* when they are deployed, and barberpole in transit. Status of the shoulder MPM can be monitored on the SPEC 94 PDRS CONTROL display (RMS STO/DPLY SHLD).

Manipulator Retention Latches

The arm is latched in three locations (aft, mid, and forward) along the orbiter longeron to secure it for launch and entry loads. The retention latches are dual rotating surfaces that are driven by redundant motors. When the three ready-to-latch indications are received, the operator positions the *PORT RMS RETENTION LATCHES* switch on panel A8L to *LATCH*, and the retention hooks catch the striker

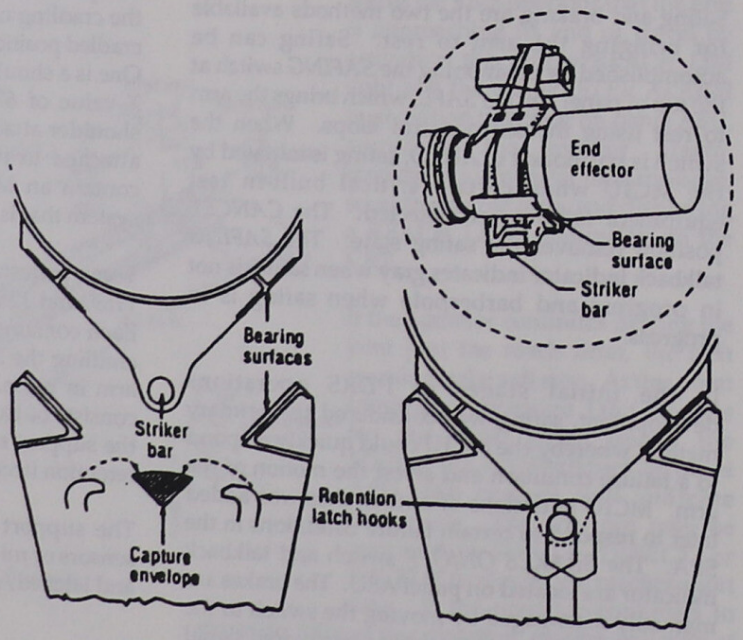

RMS Retention Mechanism

bars on the RMS and secure them firmly in place. All three latches are controlled by the switch. The MRL system contains microswitches for ready to latch, latched, and released indications. The microswitch status can be viewed via panel A8L (*AFT, MID, FWD*) talkbacks and the SPEC 94 PDRS CONTROL CRT display (RMS LAT/REL/RDY).

Jettison System

If for any reason the arm cannot be recradled and restowed, it can be jettisoned so that the payload bay doors can be closed. There are four separation points: one at the shoulder and one at each of the three pedestals. Each of the separation points is individually actuated. The separation system is designed to cause a non-impulsive separation.

The shoulder attach point has a wire bundle that must be separated prior to shoulder support separation. The wire bundle is severed by a redundant pyro-operated guillotine prior to the activation of the support jettison system.

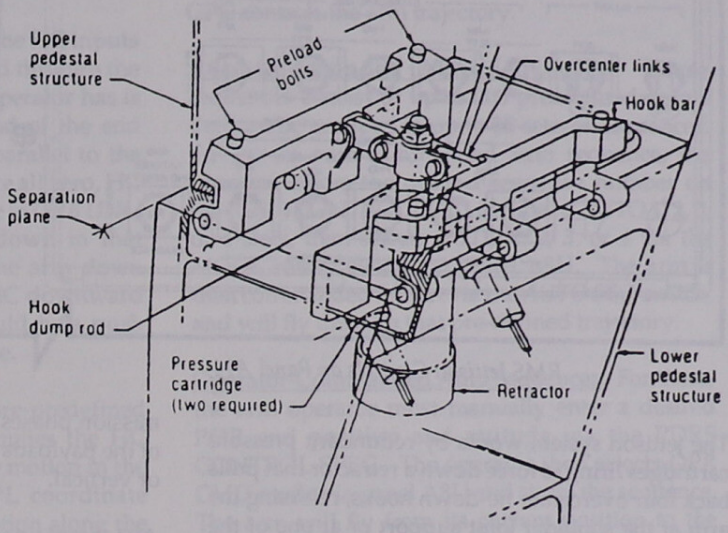

Jettison System

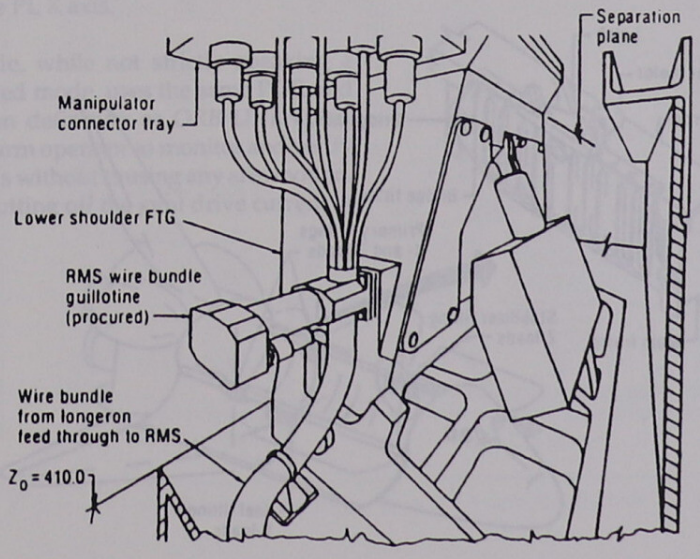

RMS Shoulder Wire Bundle

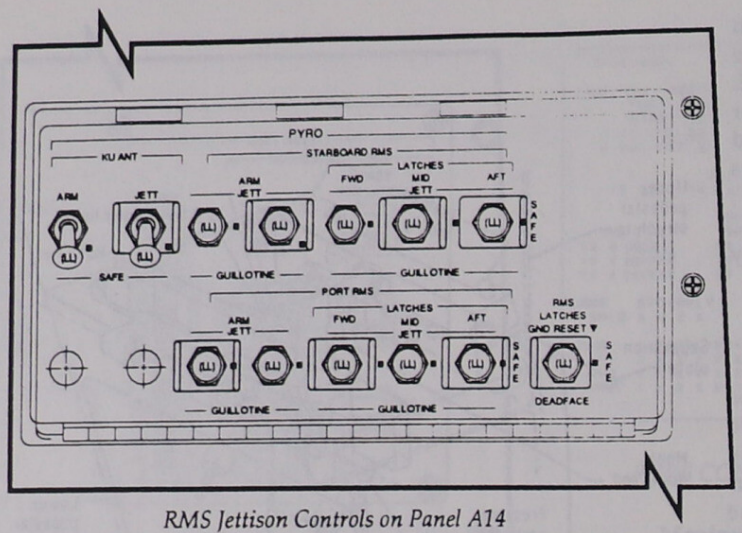

RMS Jettison Controls on Panel A14

The jettison system works by redundant pressure cartridges firing to force down a retractor that pulls back four overcenter tie-down hooks, releasing the arm at the shoulder joint support or at one of the arm retention supports, depending upon which switch is activated.

The *GUILLOTINE* switches for the RMS are located on panel A14.

Payload Retention Mechanisms

Non-deployable payloads are retained by bolted passive retention devices, and deployable payloads are secured by motor-driven, active retention devices. Payloads are secured in the orbiter payload bay with the payload retention system or are equipped with their own unique retention systems. The orbiter payload retention system provides three-axis support for up to three payloads per flight. The payload retention mechanisms secure the payloads during all mission phases and allow installation and removal of the payloads when the orbiter is either horizontal or vertical.

Attachment points in the payload bay are in 3.933-inch increments along the left- and right-side longerons and along the bottom centerline of the bay. Of the potential 172 attach points on the longerons, 48 are unavailable because of the proximity of spacecraft hardware. The remaining

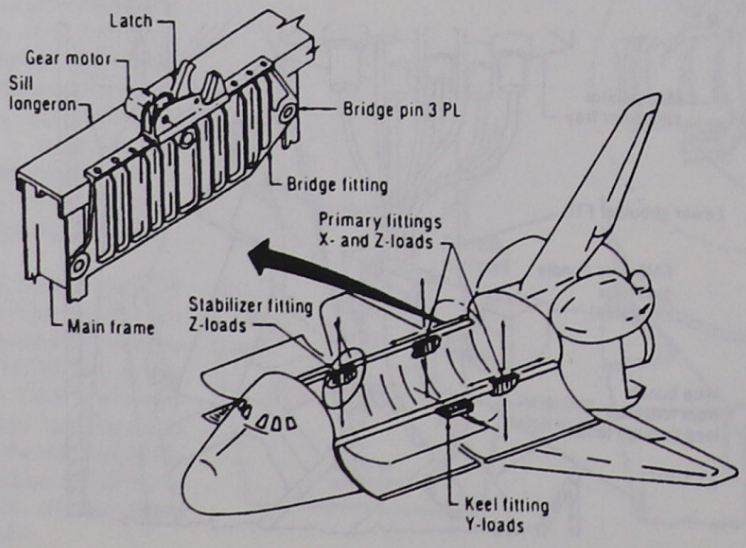

Active Payload Retention System

ORB LD. Orbiter loaded mode is usually used for a loaded arm. The HC inputs in orbiter loaded mode are identical to those in *ORB UNL*; however, the POR is defined to be at a point within the grappled payload.

END EFF. End effector mode allows the HC inputs to reflect motion desired when viewed through the end effector camera. The sense the operator has is that he or she is "sitting" on the end of the end effector. When the arm is aligned parallel to the longeron, and the wrist joint angles are all zero, HC inputs in *END EFF* coincide with those in *ORB UNL/LD*. If the wrist is then pitched down in that configuration, the motion to take the arm down into the payload bay would be a THC downward deflection in *ORB UNL/LD*, but would be a push inward on the THC in *END EFF* mode.

PL. Payload mode uses the software-predefined POR and coordinate system and applies the HC inputs as follows: THC-in will cause motion in the +X axis of the software-defined PL coordinate system; THC-out corresponds to motion along the -X axis of the PL coordinate system. THC-right will cause motion along the PL +Y axis, while THC-left will cause motion along the PL -Y axis. THC-down will cause motion along the PL +Z axis, and THC-up will cause motion in the PL -Z axis. RHC P will cause motion about the PL Y axis, RHC Y will cause rotation about the PL Z axis, and RHC R will cause rotation about the PL X axis.

TEST. Test mode, while not strictly speaking a manual-augmented mode, uses the same POR and coordinate system definition as *ORB UNL*. Test mode allows the arm operator to monitor and verify the HC commands without causing any arm motion. This is done by cutting off the joint drive current at each joint.

AUTO Modes

There are two types of auto modes: auto-commanded auto sequences and operator-commanded auto sequences. In either case, the SM GPC controls the arm trajectory.

Auto-Commanded Auto Sequences. These sequences consist of up to 200 pre-defined points that can be grouped in up to 20 sets, or sequences. To use an auto-commanded auto sequence, the operator enters the desired sequence number on the PDRS CONTROL SPEC for one of AUTO 1, 2, 3, or 4 slots, then selects *AUTO 1*, 2, 3, or 4 via the *MODE* rotary switch on panel A8U. The arm is then commanded to start via the *AUTO SEQ* switch, and will fly through that pre-defined trajectory.

Operator-Commanded Auto Sequences. For these, the arm operator must manually enter a desired POR end position and attitude via the PDRS CONTROL SPEC. The operator then selects *OPR CMD* mode via panel A8U and starts the sequence. The arm will fly from its current position to the desired end point and then stop. Should another sequence be desired, the operator would have to enter the new end point on the SPEC.

PDRS Caution and Warning Summary

- The RMS has a separate C/W matrix on panel A8U. This system is not associated with the orbiter's C/W system.
- The red *MCIU* light indicates that the MCIU has failed a self-test.
- The red *DERIGIDIZE* light indicates that the end effector has derigidized without command.
- The red *ABE* light indicates that a failure has occurred in the ABE of any joint.
- The red *RELEASE* light indicates that the end effector has released the grapple fixture without command.
- The red *GPC DATA* light indicates invalid data transmitted from the orbiter computer to the MCIU and detected by the MCIU BITE.
- The yellow *CHECK CRT* light indicates an RMS failure message is on the orbiter CRT.
- The yellow *CONTR ERR* light indicates the presence of abnormal conditions in an arm-joint that may not be detected by BITE and may cause a joint runaway (software automatically applies the brakes when such a condition occurs).
- The yellow *REACH LIM* light indicates that one of the joints is close to its travel limit.
- The yellow *PORT TEMP* light indicates that the temperature of the port arm has exceeded its predetermined caution threshold.
- The yellow *SINGULAR* light indicates that the arm is in one of three singularity configurations.
- The red *MASTER ALARM* signals the RMS operator that an RMS C/W light was activated. The light and tone are cancelled by depressing the push button.
- The RMS C/W tone volume may be adjusted by the *CAUTION/WARNING TONE VOLUME* knob.

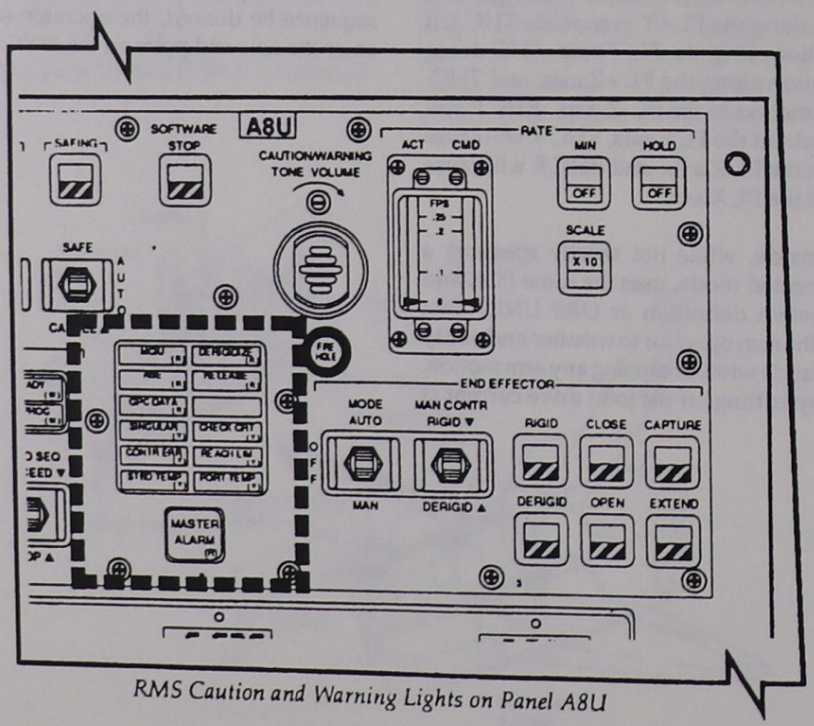

RMS Caution and Warning Lights on Panel A8U

PDRS Summary Data

- The PDRS is used to maneuver itself or an attached payload in orbit. It consists of the RMS, MPM, and MRLs, and interfaces with other orbiter systems such as the SM GPC, the EPDS, and the CCTV.
- The RMS consists of the arm itself and the controls and interfaces needed to maneuver it. It is located on the port longeron.
- The MPM consists of the torque tube, the pedestals, the MRLs, and the jettison system. The MPM must be stowed whenever the payload bay doors are closed and must be deployed for any loaded operations.
- The pedestals contain the MRLs and the jettison electronics and mechanics and are the supports on which the RMS rests while it is cradled.
- The MRLs latch the arm to the MPM and restrain it during periods of RMS inactivity.
- The jettison allows the arm, the arm and pedestals, or the arm/payload combination to be non-impulsively separated from the orbiter if the arm cannot be cradled and stowed prior to payload door closure.
- The on-orbit arm operations fall into six categories: contingency-only unloaded operations, unloaded operations, loaded operations, deploy operations, retrieve operations, and deploy and retrieve operations.
- The arm has three basic modes of operation: single joint modes, manual-augmented modes, and auto modes.
- All RMS operations involve a two-person operator team. Each member is vital to the success of the mission.
- The PDRS controls are located primarily on panels A8L, MA73C, and A8U. Other panels that affect the RMS are ML86B, A14, A7U, A6, and R13.
- The major PDRS CRT display is PDRS CONTROL, SPEC 94. PDRS OVERRIDE SPEC 95, and PDRS STATUS DISP 96, also control and monitor the RMS. DISP 97, PL RETENTION, monitors payload retention device status.

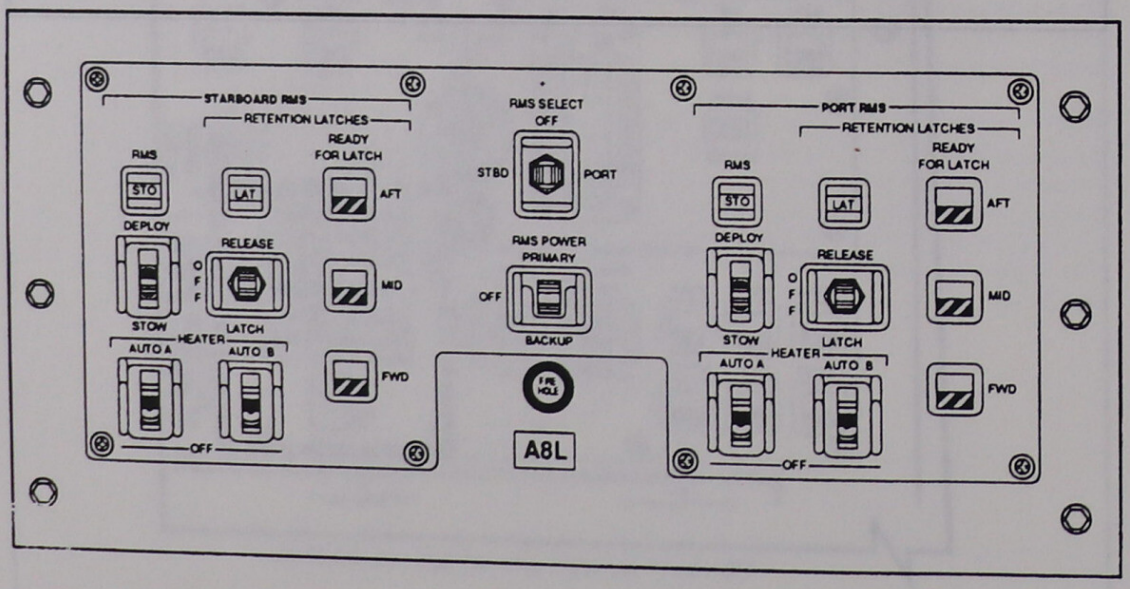
STARBOARD RMS
RETENTION LATCHES
RMS
STO
LAT
READY FOR LATCH
AFT
DEPLOY
RELEASE
OFF
MID
STOW
LATCH
HEATER
AUTO A
AUTO B
FWD
OFF
RMS SELECT
OFF
STBD
PORT
RMS POWER
PRIMARY
OFF
BACKUP
A8L
PORT RMS
RETENTION LATCHES
RMS
STO
LAT
READY FOR LATCH
AFT
DEPLOY
RELEASE
OFF
MID
STOW
LATCH
HEATER
AUTO A
AUTO B
FWD
OFF

Panel A8L

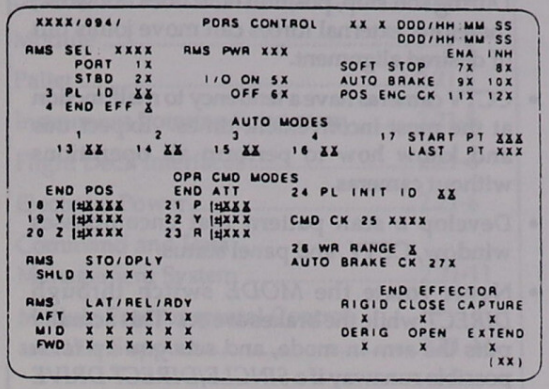

SPEC 94 PDRS CONTROL Display

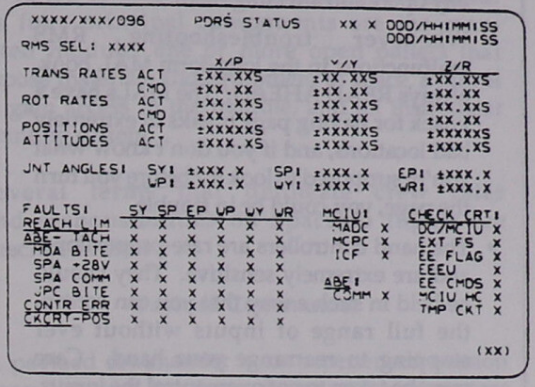

DISP 96 PDRS STATUS Display

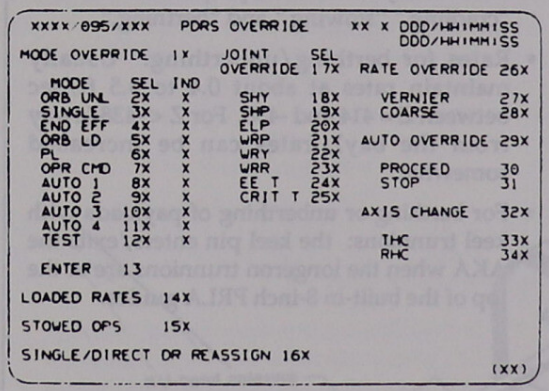

SPEC 95 PDRS OVERRIDE Display

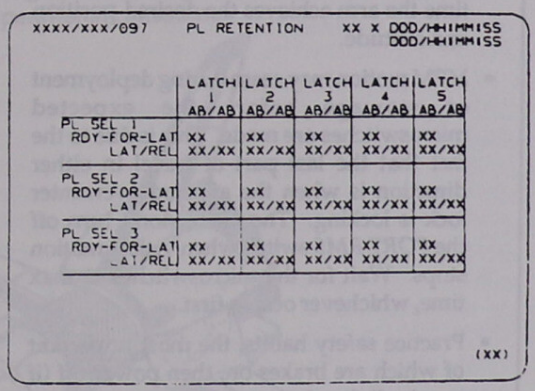

DISP 97 PL RETENTION Display

PDRS Rules of Thumb

- Whenever there are both talkbacks and CRT displays that reflect microswitch status, they should ALWAYS both be checked during any operation affecting them.
- Whenever troubleshooting RMS malfunctions in the long-form MAL book, always READ AHEAD. The MALs have a knack for having page breaks in extremely bad locations, and if you don't know what you're supposed to look for before you turn the page, you could be in trouble.
- The hand controllers are rate-proportional and are extremely sensitive. They should be held in such a way that you can control the full range of inputs without ever stopping to rearrange your hand. Care must be taken to not overcontrol the inputs. A good practice is to slowly and steadily input a desired command, wait patiently until you see the reactions of that command on the arm, and as the desired motion is achieved, slowly back off the input. Ideally, you should reach the axis detent at the same time the arm achieves the desired position and attitude.
- MPM motion may cease during deployment or stowage before the expected microswitches are made. This is due to the fact that the last part of travel in either direction is when the affected overcenter lock is locking. Therefore, don't turn off the *PORT RMS* switch when visible motion stops. Wait for the microswitches or max time, whichever occurs first.
- Practice safety habits, the most important of which are brakes on, then power off (if required) for abnormal joint response and use EE CC for abnormal EE ops during the specified conditions.
- During arm cradling, periodically check all joint angles to make sure that joints that you have already aligned to 0 have not moved. During soft stop, position hold does not work; therefore, external forces can move joints out of desired alignment.
- CCTV cameras have a tendency to malfunction at the most inconvenient times. Expect this and know how to perform all operations without cameras.
- Develop a scan pattern that encompasses window, CCTV, and panel status.
- Never rotate the *MODE* switch through *DIRECT* while the brakes are on. This actually puts the arm in mode, and sets you up for a possible runaway if a *SINGLE/DIRECT DRIVE* switch failure occurs or is present.
- Verify the *RATE* switch setting by feel and talkback status. This should be done EVERY TIME prior to moving the arm, regardless of mode.
- Make sure you know the proper definitions of "cradling," "stowing," and "berthing."
- Rates for berthing/unberthing: Usually maintain rates at about 0.4 to 0.5 ft/sec between Z = 414 and -438. For Z < -438 (away from the bay), rates can be increased somewhat.
- For berthing or unberthing of payloads with keel trunnions: the keel pin enters/exits the AKA when the longeron trunnions are at the top of the built-in 8-inch PRLA guides.

2.21 SPACELAB

CONTENTS

Description 2.21-1
Module 2.21-3
Pallet 2.21-5
Instrument Pointing Subsystem 2.21-5
Flight Deck Interfaces 2.21-6
Electrical Power 2.21-6
Command and Data Management System 2.21-11
Module Environmental Control and Life Support 2.21-14

Description

Spacelab is a mission-specific, non-deployable payload that is carried in the orbiter's payload bay. Spacelab was developed to be modular, and it can be varied to meet specific mission requirements. Its four principal components are the man-rated module, one or more open pallets that expose materials and equipment to space, a tunnel to gain access to the module, and an instrument pointing system.

Several terms that delineate crew roles and responsibilities on Spacelab flights are described below.

Payload Commander

A payload commander is an experienced mission specialist who has been designated to represent FCOD and the Astronaut Office on a Spacelab or complex payload flight. This individual will have full authority to work with the payload mission managers to identify and resolve issues associated with payload assignment and integration, training, crewmember qualification, and operational constraints.

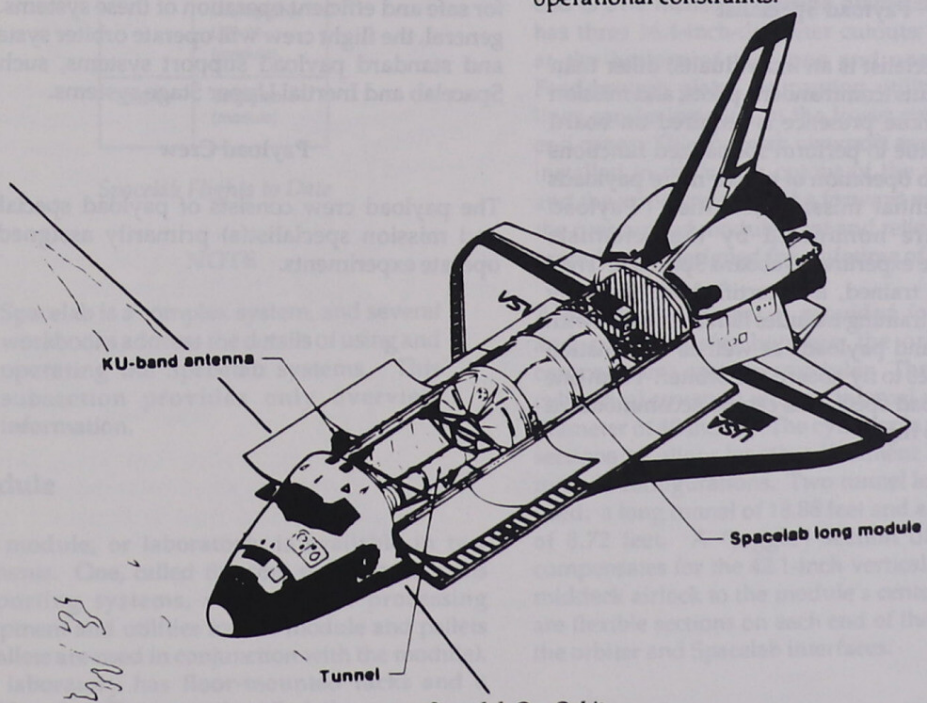

Spacelab On-Orbit

Mission Specialist

A mission specialist is a career NASA astronaut trained and skilled in the operation of Space Shuttle systems related to payload operations and thoroughly familiar with the operational requirements and objectives of the payloads with which the mission specialist will fly. The mission specialist, when designated for a flight, will participate in the planning of the mission and will be responsible for the coordination of the overall payload/Space Shuttle interaction. The mission specialist will direct the allocation of Space Shuttle and crew resources to the accomplishment of the combined payload objectives during the payload operations phase of the flight in accordance with the approved flight plan. The mission specialist will have prime responsibility for experiments for which no payload specialist is assigned and will assist the payload specialist when appropriate.

Science Mission Specialist

A science mission specialist is a career NASA astronaut assigned as an additional crewmember on a science intensive mission.

Payload Specialist

A payload specialist is an individual(s) other than NASA astronauts (commanders, pilots, and mission specialists) whose presence is required on board the Space Shuttle to perform specialized functions with respect to operation of one or more payloads or other essential mission activities. Payload specialists are nominated by the scientists sponsoring the experiments aboard Spacelab. They are accepted, trained, and certified for flight by NASA. Their training includes familiarization with experiments and payloads as well as information and procedures to fly aboard the orbiter. From one to three payload specialists can be accommodated for a Spacelab flight.

Space Flight Participant

A space flight participant is an individual selected from outside the career NASA astronaut corps whose presence on board is not required for primary payload mission success, but is determined by the Administrator of NASA to contribute to other approved NASA objectives or to be in the national interest.

Crew

The crew includes all personnel authorized to fly on a Space Shuttle flight (commander, pilot, mission specialist(s), payload specialist(s), space flight participant(s), and others as defined by specific NASA agreements).

Flight Crew

The flight crew normally consists of the commander, pilot, and mission specialist(s). The responsibility for on-orbit management of orbiter systems and attached payload support systems and for extravehicular activity and payload manipulation with the remote manipulator system will rest with the flight crew since extensive training is required for safe and efficient operation of these systems. In general, the flight crew will operate orbiter systems and standard payload support systems, such as Spacelab and Inertial Upper Stage systems.

Payload Crew

The payload crew consists of payload specialists and mission specialist(s) primarily assigned to operate experiments.

Spacelab Mission Summary

The Spacelab missions flown to date are summarized in the table below.

FLIGHT	PAYLOAD
STS-9	Spacelab 1 (module)
STS-51B	Spacelab 3 (module)
STS-51F	Spacelab 2 (pallet)
STS-61A	German D-1 (module)
STS-35	Astro-1 (pallet)
STS-40	Spacelab Life Sciences 1 (module)
STS-42	International Microgravity Lab-01 (module)
STS-50	US Microgravity Lab-01 (module)
STS-47	Spacelab-J (module)

Spacelab Flights to Date

NOTE

Spacelab is a complex system, and several workbooks address the details of using and operating the Spacelab systems. This subsection provides only overview information.

Module

The module, or laboratory, is available in two segments. One, called the core segment, contains supporting systems, such as data processing equipment and utilities for the module and pallets (if pallets are used in conjunction with the module). The laboratory has floor-mounted racks and a workbench. The second, called the experiment segment, provides more working laboratory space and contains only floor-mounted racks. When only one segment is needed, the core segment is used. Each segment is a pressurized cylinder 13.5 feet in outside diameter and 9 feet long. When both segments are assembled with end cones, their maximum outside length is 23 feet.

The module is structurally attached to the orbiter payload bay by four attach fittings consisting of three longeron fitting sets (two primary and one stabilizing) and one keel fitting. Because of the orbiter's center-of-gravity requirements, the module cannot be installed at the forward end of the payload bay. The module is covered with a passive thermal control insulation.

The ceiling skin panel of each segment contains a 51.2-inch-diameter opening for mounting a viewport adapter assembly. If the assembly is not used, the openings are closed with cover plates that are bolted in place. The module shell is made from 2219-T851 aluminum. Forward and aft cones are bolted to the cylinder segments. The end cones are 30.8-inch-long truncated cones whose large end is 161.9 inches in outside diameter and whose small end is 51.2 inches in outside diameter. Each cone has three 16.4-inch-diameter cutouts: two located at the bottom of the cone and one at the top. Feedthrough plates for routing utility cables and lines can be installed in the lower cutouts of both end cones. The Spacelab viewport assembly can be installed in the upper cutout of the aft end cone, and the upper cutout of the forward end cone is for the pressurized module vent and relief valves. The modules are designed for a lifetime of 50 missions.

A pressurized tunnel is provided for equipment and crew transfer between the orbiter's crew compartment and the module. The tunnel is a cylindrical structure with an internal unobstructed diameter of 40 inches. The cylinder is assembled in sections to allow length adjustment for different module configurations. Two tunnel lengths can be used: a long tunnel of 18.88 feet and a short tunnel of 8.72 feet. A "joggle" section of the tunnel compensates for the 42.1-inch vertical offset of the middeck airlock to the module's centerline. There are flexible sections on each end of the tunnel near the orbiter and Spacelab interfaces.

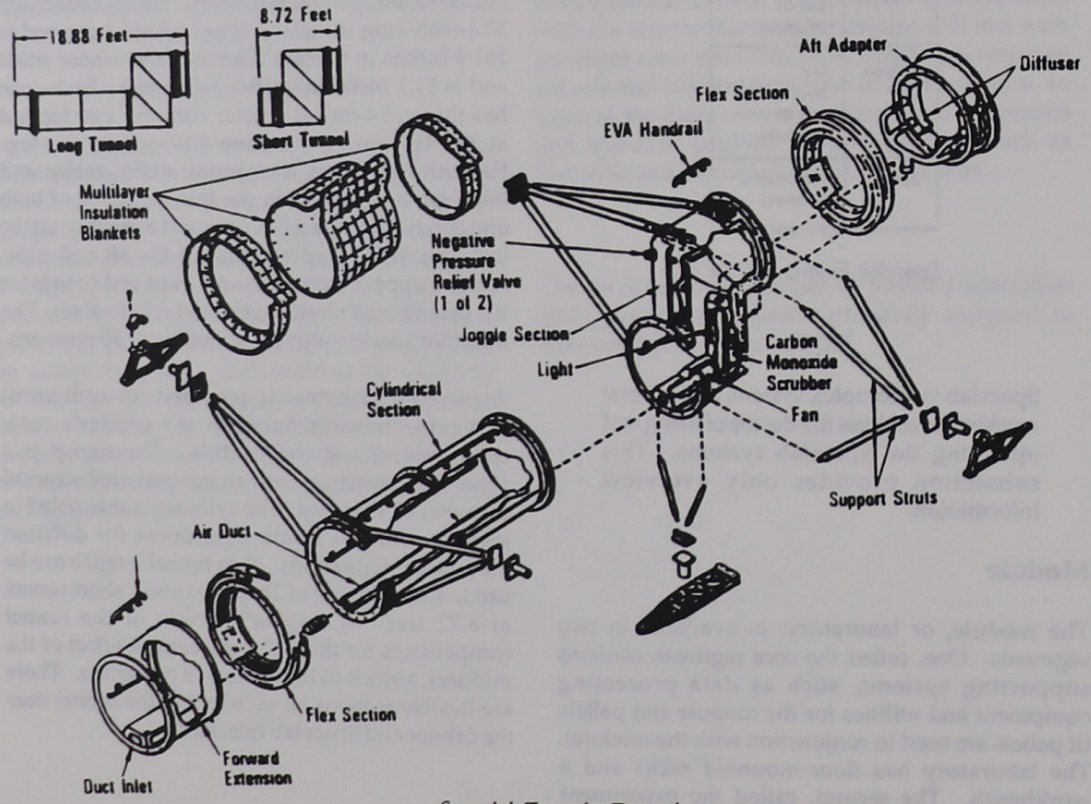

Spacelab Transfer Tunnel

The airlock, tunnel adapter, tunnel, and module are at ambient pressure before launch. The tunnel adapter permits crewmembers outfitted for EVA to transfer from the middeck airlock to the payload bay without depressurizing the orbiter crew compartment and module. If an EVA is required, no crewmembers are permitted in the Spacelab tunnel or module.

Pallet

Each pallet is more than a platform for mounting instrumentation; with an igloo attached, it can also cool equipment, provide electrical power, and furnish connections for commanding and acquiring data from experiments. When only pallets are used, the Spacelab pallet portions of essential systems required for supporting experiments (power, experiment control, data handling, communications, etc.) are protected in a pressurized, temperature-controlled igloo housing.

The pallets are designed for large instruments, experiments requiring direct exposure to space, or systems needing unobstructed or broad fields of view, such as telescopes, antennas, and sensors (e.g., radiometers and radars). The U-shaped pallets are covered with aluminum honeycomb panels. A series of hard points attached to the main pallet structure is provided for mounting heavy payload equipment. Up to five segments can be flown on a single mission. Each pallet train is held in place in the payload bay by a set of five attach fittings, four longeron sill fittings, and one keel fitting. Pallet-to-pallet joints are used to connect the pallets to form a single rigid structure called a pallet train. Twelve joints are used to connect two pallets.

Cable ducts and cable support trays can be bolted to the forward and aft frame of each pallet to support and route electrical cables to and from the experiments and subsystem equipment mounted on the pallet. All ducts mounted on the starboard side of the pallet are used to route subsystem cables, and all ducts on the port side carry experiment utility cables. The ducts and cable trays are made of aluminum alloy sheet metal. In addition to basic utilities, some special accommodations are available for pallet-mounted experiments.

The igloo is attached vertically to the forward end frame of the first forward pallet. Its outer dimensions are approximately 7.9 feet in height and 3.6 feet in diameter. The igloo is a closed cylindrical shell made of aluminum alloy. A removable cover allows full access to the interior. The igloo houses subsystems and equipment in a pressurized, nitrogen environment at 14.7 psia. The igloo is covered with multilayer insulation.

Instrument Pointing Subsystem (IPS)

Some Spacelab mission research requires that instruments be pointed with very high accuracy and stability at stars, the Sun, the Earth, or other targets of observation. The IPS provides precision pointing for instruments of diverse sizes and weights (up to 15,432 pounds) and can point them to within 2 arc seconds and hold them on target to within 1.2 arc seconds.

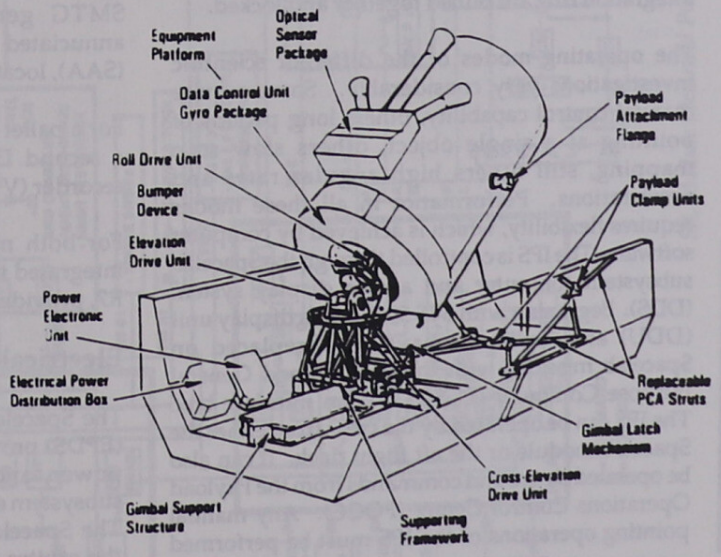

Instrument Pointing System

The IPS consists of a three-axis gimbal system mounted on a gimbal support structure, and a control system. The control system is based on the inertial reference of a three-axis gyro package and operated by a gimbal-mounted minicomputer.

The basic structural hardware is the gimbal system, which includes three bearing/drive units, a payload/gimbal separation mechanism, a replaceable extension column, an emergency jettisoning device, a support structure and rails, and a thermal control system. The gimbal structure itself is minimal, consisting only of a yoke, an inner gimbal, and an outer gimbal to which the payload is attached by the payload-mounted integration ring.

The three identical drive units are arranged so that their axes intersect at one point. From pallet to payload, the order of the axes is elevation, cross-elevation, and roll. Each drive assembly includes three wet-lubricated ball bearings, two brushless dc-torquers, and two single-speed/multispeed resolvers.

The gimbal/payload separation mechanism is located between the outer gimbal and the payload integration ring. This device prevents the payload and the pointing mechanism from exerting excessive loads on each other during launch and landing. For orbital operations, the outer gimbal and integration ring are pulled together and locked.

The operating modes of the different scientific investigations vary considerably. Some require manual control capability, others long periods of pointing at a single object, others slow scan mapping, still others high angular rates and accelerations. Performance in all these modes requires flexibility, which is achieved by computer software. The IPS is controlled through the Spacelab subsystem computer and a data display system (DDS). Beginning with STS 50 the data display unit (DDU) and keyboard have been replaced on Spacelab missions with the Payload and General Purpose Computer (PGSC) and an interface box. The IPS can be operated by the crew from either the Spacelab module or the aft flight deck. It can also be operated by ground commands from the Payload Operations Control Center (POCC). Any manual pointing operations of the IPS must be performed by the crew using the Manual Pointing Controller (MPC). The POCC cannot manually point the IPS but can enable the MPC.

An optical sensor package (OSP) consists of one boresighted fixed-head star tracker (FHST) and two skewed FHSTs. Each FHST operates as an independent unit during IPS pointing operations and is used to null IPS inertial platform attitude and rate errors resulting from gyro drifts and scale factors. For solar observations, the boresight tracker is equipped with a four quadrant sunlight beam-splitter which produces a negative star image that is tracked. For earth observations, a stellar or solar observation is required to establish the gyro drift computation.

Flight Deck Interfaces

There are several Spacelab interfaces located in the mission station (MS), or starboard side of the aft flight deck, and the payload station (PS), or the port side of the aft flight deck.

For a module configuration, a data display system (DDS) will be in the L11 position, a standard switch panel will be in L12, and a power control panel will be in L14. In the avionics bay behind these panels is a subsystem remote acquisition unit (RAU) and the systems management tone generator (SMTG). The SMTG generates message tones which are annuciated through the Spacelab aural annuciator (SAA), located behind panel L14.

For a pallet configuration, in addition to the above, a second DDS will be in R12 and a video tape recorder (VTR) will be in R11.

For both module and pallet configurations, the integrated module control panel (IMCP), located in R7, provide control of many Spacelab subsystems.

Electrical Power

The Spacelab electrical power distribution system (EPDS) provides primary dc power, emergency dc power, and three phase ac power to Spacelab subsystem equipment and to Space lab experiments. The Spacelab main bus in normally powered via the orbiter primary payload bus MN C feed. The primary payload bus may also be powered by the

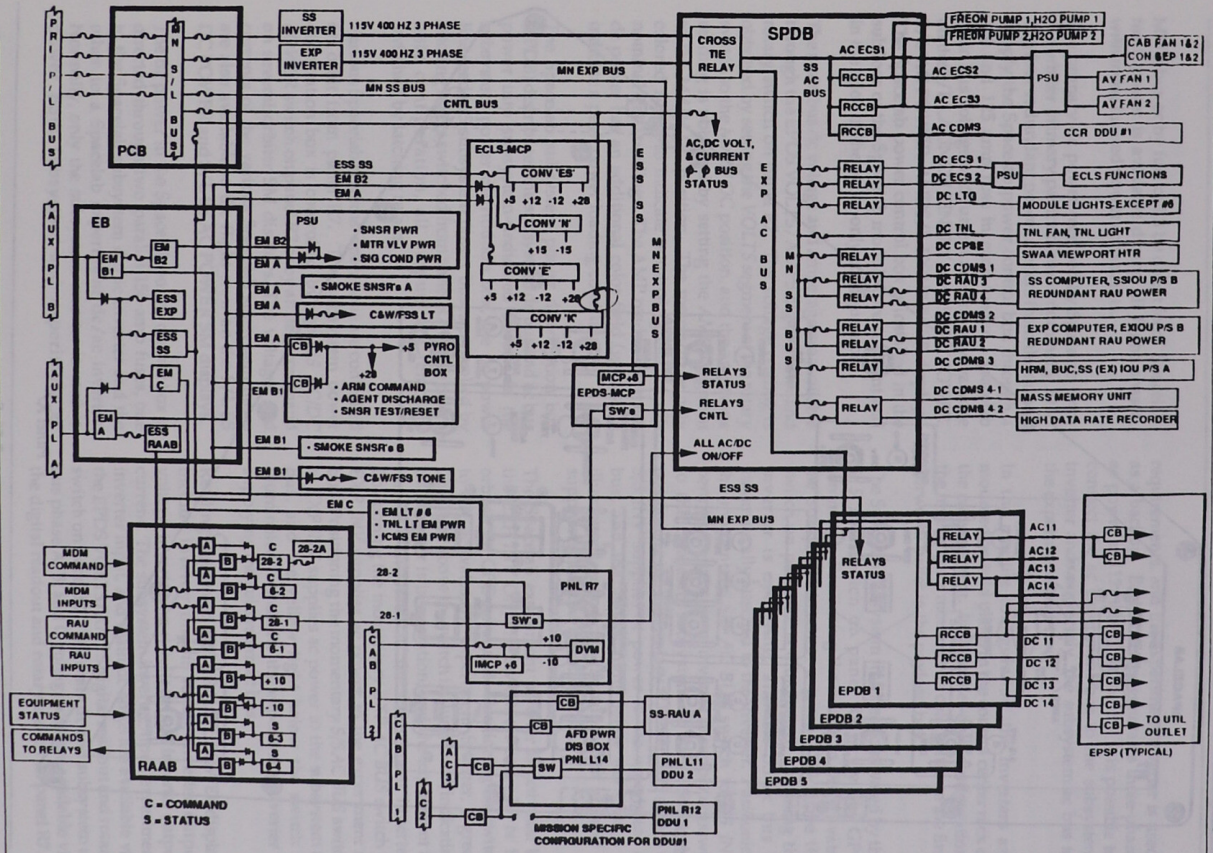

S/L Module Electrical Power Distribution Functional Diagram (1/10/91)

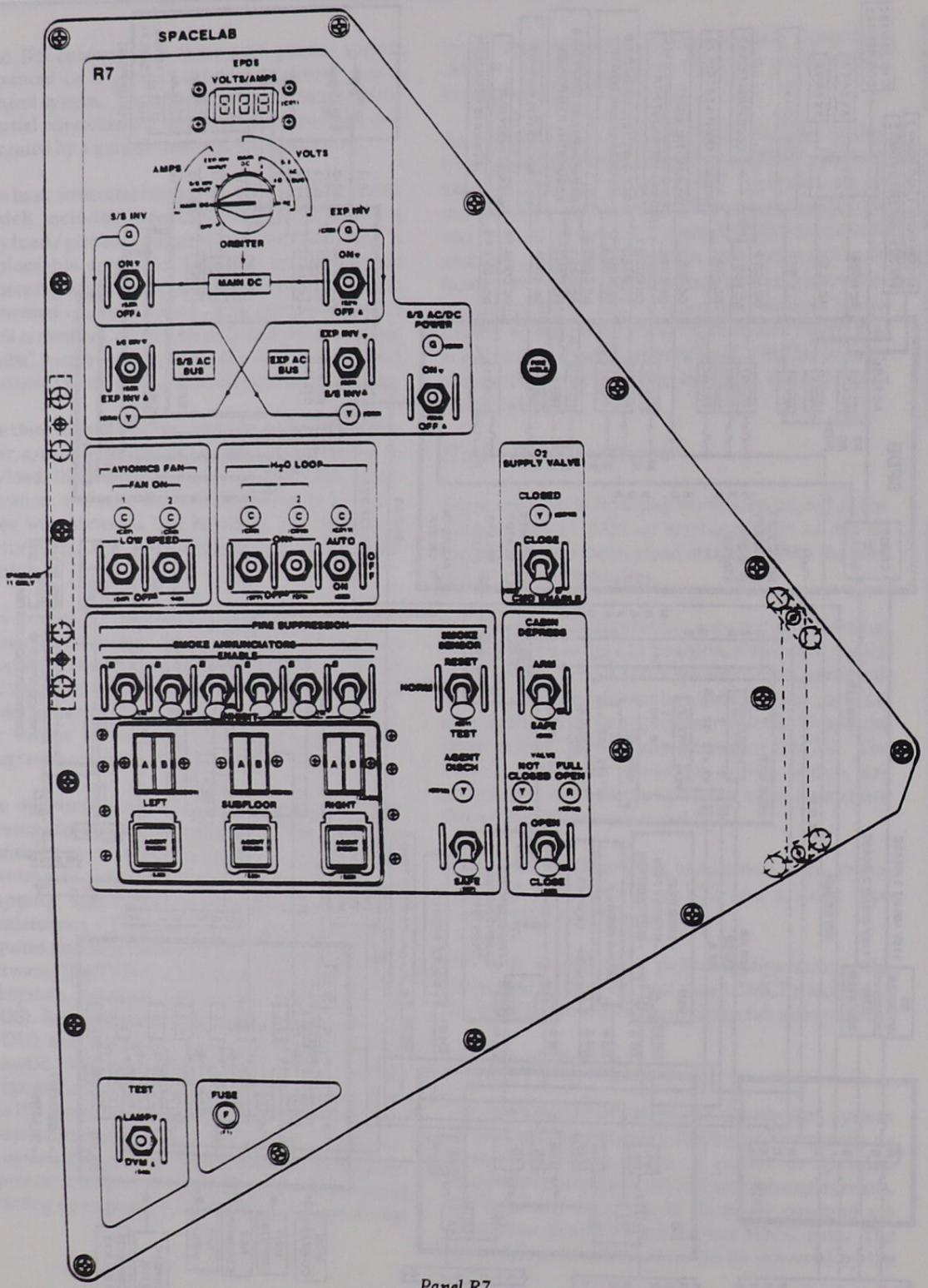
SPACELAB
R7
EPDS
VOLTS/AMPS
AMPS
VOLTS
ORBITER
S/S INV
EXP INV
MAIN DC
ON
OFF
S/S AC BUS
EXP AC BUS
S/S AC/DC POWER
AVIONICS FAN
FAN ON
LOW SPEED
H2O LOOP
AUTO
O2 SUPPLY VALVE
CLOSED
CLOSE
FIRE SUPPRESSION
SMOKE ANNUNCIATORS ENABLE
SMOKE SENSOR
RESET
NORM
TEST
AGENT DISCH
LEFT
SUBFLOOR
RIGHT
SAFE
CABIN DEPRESS
ARM
NOT CLOSED
FULL OPEN
OPEN
TEST
LAMPS
DVM
FUSE

Panel R7

MN B bus or by fuel cell 3 by direct feed. Spacelab main power is available during all flight phases, with some limited power constraints.

The primary dc power received by Spacelab from the orbiter primary payload bus is nominally 30 V. The four redundant power feeders from the orbiter supply the Spacelab power control box through a 200 and 125 amp fuse in each feeder. Spacelab main bus voltage and current reading are available on the S/L LAUNCH/ENTRY, A/L SS DC POWER, S/L AC POWER, ANDS/L EXP POWER displays. The Spacelab power control box is installed in the subfloor of the Spacelab module core segment and in the igloo of the pallet-only configuration.

The main bus dc voltage and amperage are available through the EPDS VOLTS/AMPS digital meter and rotary switch on panel R7. The voltage reading is obtained by setting the *VOLTS* segment of the rotary switch to the *MAIN DC* position, and the amperage reading is obtained by setting the *AMPS* segment to the *MAIN DC* position. The meters have only colored zones to indicate nominal (green) or off-nominal (red) readings. The AMP readout for main dc power has an additional color field (yellow) to indicate a peak power loading condition.

The Spacelab subsystem power distribution box (SPDB) distributes the subsystem dc bus and ac bus power into subsystem-dedicated buses. In the subsystem power distribution box, the dc power line feeds 15 subsystem power buses controlled by latching relays switched from panel R7. In the pallet-only configuration, all outputs are remotely switched by latching relays.

Various Spacelab systems' operations are controlled on orbit from panel R7. The subsystem power distribution box is controlled by the *S/S AC/DC POWER* switch on panel R7 or by an item command on several orbiter SM displays. The voltages and currents of the various Spacelab subsystem buses are also available to the flight crew on the S/L SS DC POWER and S/L SS AC POWER SM displays.

The dc power in the Spacelab power control box is directed through two parallel 150-amp fuses, one to the Spacelab subsystem dc/ac inverter and the other to a Spacelab experiment dc/ac inverter. Normally, only the subsystem inverter is used to power both subsystem and experiment ac requirements, and the experiment inverter is used as a backup. Each inverter generates three-phase ac power at 112/120 V, 400 hertz. It is possible to connect the ac experiment bus to the subsystem inverter and, conversely, the subsystem ac bus to the experiment inverter.

In the module configuration, the inverters are mounted on cold plates in the control center rack of the core segment. In the pallet-only configuration, the inverters are mounted on cold plates on the first (forward) pallet in the payload bay.

The Spacelab subsystem inverter is activated by the *S/S INV* switch on panel R7 or by SM GPC command. Positioning the switch to *ON* activates the subsystem inverter, a green LED above the switch on panel R7 is illuminated, indicating the inverter is operating, and the SS ac bus is automatically attached to the inverter. Positioning the momentary *S/S AC BUS* switch to *S/S INV* permits the subsystem inverter to supply ac power to the Spacelab subsystem ac bus. Similarly, positioning the momentary *EXP AC BUS* switch to *S/S INV* supplies ac power to the experiment ac bus, and the yellow light below the switch is illuminated to indicate the subsystem inverter is supplying the experiment ac bus.

The Spacelab experiment inverter is activated by the *EXP INV ON/OFF* switch on panel R7 or by orbiter SM GPC command. Positioning the switch to *ON* activates the experiment inverter, a green LED light above the switch is illuminated, indicating the inverter is in operation, and the experiment ac bus is transferred to the experiment inverter. Positioning the momentary *EXP AC BUS* switch to *EXP INV* supplies ac power to the experiment ac bus. Positioning the momentary *S/S AC BUS* switch to *EXP INV* supplies ac power to the subsystem ac bus, and the yellow light below the switch is illuminated to indicate the experiment inverter is supplying the subsystem ac bus.

Readings presented on the S/L AC POWER display include inverter on/off status, inverter output voltage, inverter input voltage, and inverter output current. The subsystem inverter input, experiment inverter input, and main dc amps are available via the EPDS VOLTS/AMPS digital readout and rotary switch on panel R7. The main dc and subsystem ac bus phase A, B, and C voltage also are available via the digital readout and rotary switch on panel R7.

In the module configuration, the subsystem power distribution box ac bus feeds several Spacelab subsystem power buses controlled by switches on the Spacelab EPDS panel. All functions on this panel can be initiated simultaneously by the *S/S AC/DC POWER* switch on panel R7 or by item commands from orbiter SM displays. The status of the commanded relays is available via orbiter SM displays and indicated by the green LED light above the respective switch on panel R7

In the pallet-only configuration, subsystem ac bus power feeds several Spacelab subsystems' power buses, which can be initiated by the *S/S AC/DC POWER* switch on orbiter panel R7 or by item commands from the SM displays. The status of the commanded relays is available via SM displays and the green LED light above the respective switches on panel R7.

The Spacelab experiment power distribution box (EPDB) receives dc power from the power control box, ac power from the SPDB, and then distributes the bus power to Spacelab experiments. Each EPDB provides four dc buses protected by 60-amp-rated circuit breakers. Outputs 3 and 4 are protected by the same circuit breaker. The number of EPDBs flown is mission dependent, with a maximum of five (three in the module and one on each of two pallets). EPDB 3 may be used to provide power to an experiment support structure, exterior to the module. EPDB dc power is routed to experiments via experiment power switching panels (EPSPs). A maximum of 10 EPSPs may be flown. EPSPs also provide power to rack-mounted experiment remote acquisition units (RAUs). The EPDBs also power four ac buses. In the module, the inputs of these EPDB ac buses may be distributed to EPSPs, each of which provides two three-phase ac buses.

Emergency and essential dc power for the module configuration is provided by the orbiter auxiliary payload buses A and B to the Spacelab emergency box. The Spacelab emergency box supplies emergency and essential power for Spacelab critical environmental control subsystem sensors and valves, fire and smoke suppression equipment, ECS water line heaters, module emergency lighting, tunnel emergency lighting, the Spacelab intercom system, and the Spacelab caution and warning panel. The outputs are protected by fuses. One separately fused outlet, an experiment essential bus, is dedicated to experiments. This power is available during all flight phases and when degraded power is delivered to Spacelab. The Spacelab emergency box is located in the subfloor of the core segment.

Emergency and essential dc power for the pallet-only configuration is also provided by orbiter auxiliary payload buses A and B, which send dc power to the Spacelab emergency box located in the igloo. The Spacelab emergency box provides emergency or essential power to Spacelab subsystem equipment. The outputs are protected by fuses. One separately fused outlet, an experiment essential bus, is dedicated to experiments. This power is available during all flight phases and when degraded power is delivered to Spacelab.

In the module configuration, experiment power distribution boxes provide distribution, control, and monitoring facilities for the experiment electrical power distribution system. The experiment electrical power distribution system consists of a nominal redundant 28-volt experiment main dc supply and a 115-volt, 400-hertz ac experiment supply. One distribution box (EPDB 1) is located under the core segment floor on a support structure; for the long module configuration, two additional units (EPDBs 2 and 3) are installed. In the pallet-only configuration, the experiment power distribution box is mounted on a cold plate that is fitted to a support structure and attached to the pallet.

The orbiter SM displays present emergency and essential bus current, voltages for auxiliary buses A and B, output voltages for Spacelab subsystem emergency buses, output voltage for the Spacelab subsystem essential bus, and output voltage for the RAAB essential bus. The SM displays for activation/deactivation, subsystem dc power, and system summary indicate an undervoltage condition for auxiliary buses A and B. Nominal auxiliary bus amperage from the orbiter can be monitored on the EPDS VOLTS/AMPS meter (color zone only) on panel R7.

In the pallet-only configuration, the orbiter SM displays include emergency and essential bus current, voltages for auxiliary buses A and B, output voltages for Spacelab subsystem emergency buses, output voltage for the Spacelab subsystem essential bus, and output voltage for the RAAB

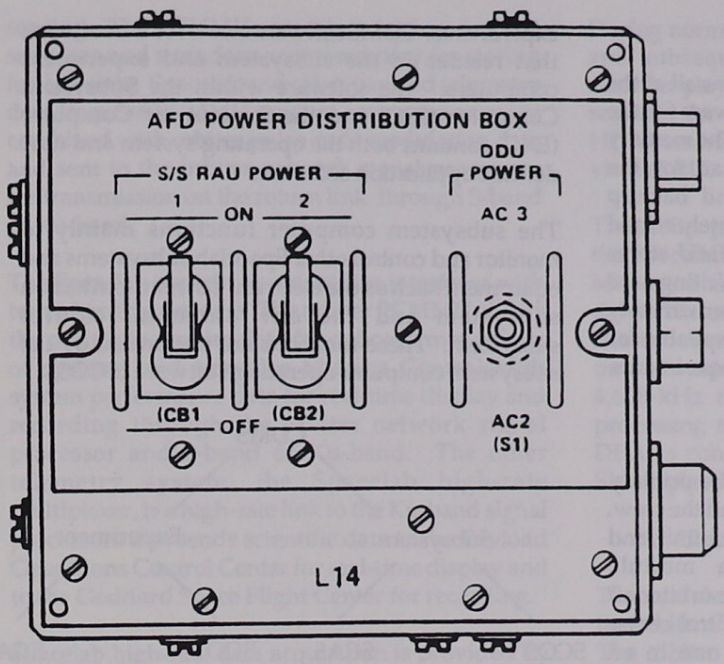

Panel L14

essential bus. The orbiter SM displays will indicate an undervoltage condition for auxiliary buses A and B.

The aft flight deck (AFD) power distribution box (L14) distributes dc power to the Spacelab subsystem remote acquisition unit (RAU) located in the avionics bay behind panel L14. This dc power comes from orbiter fuel cell 1 main bus A through cabin payload bus 1 and 2 or from orbiter fuel cell 2 main bus B. This power is not affected by the *KILL* switch of the primary payload bus. The AFD power distribution panel L14 *S/S RAU POWER 1 ON/OFF* and *S/S RAU POWER 2 ON/OFF* circuit breakers are used to feed power to the RAU from either bus.

Command and Data Management System

The Spacelab command and data management system (CDMS) provides a variety of services to Spacelab experiments and subsystems. Most of the CDMS commands are carried out through the use of the computerized system aboard Spacelab, called the data processing assembly (DPA). The DPA formats telemetry data and transfers the information to the orbiter for transmission, receives command data from the orbiter and distributes them to Spacelab subsystems, transfers data from the orbiter to experiments, and distributes timing signals from the orbiter to experiments.

The CDMS includes three identical IBM AP 101-SL computers and assorted peripherals. One computer is dedicated to Spacelab experiments, one supports Spacelab subsystems, and the third is a backup that can function in place of either. The flight crew monitors and operates Spacelab subsystems and payload experiments through data display and keyboard units. The computers have a main memory capacity of 512k 16-bit words. The experiment computer activates, controls, and monitors payload operations and provides experiment data acquisition and handling. The subsystem computer provides control and data management for basic Spacelab experiment support services, such as electrical power distribution and equipment cooling.

An input/output unit buffers all communications between the computer and the rest of the subsystem. The experiment computer also has at least one RAU (and as many as 20, depending on the payload) for interfacing between experiments and the subsystem. The subsystem computer may have as many as nine RAUs, depending on the Spacelab configuration.

The experiment and subsystem computers and their associated input/output units (SS10 and EX10 respectively), as well as the backup computer, are located in the workbench rack (opposite the control center rack) of the module core segment. In the pallet-only configuration, they are located in the igloo.

Mass Memory Unit (MMU)

The MMU is a tape recorder that contains all of the operating system and applications software for the subsystem and experiment computers. The memory unit provides the initial program load for the Spacelab subsystem, experiment, and backup computers; it can also be used to completely reload computer memory if required. The MMU stores various files, time lines, and displays. Writing onto the unit during flight is possible. Approximately half of the unit's storage capability is available for software and data supporting Spacelab experiments.

Data Display Systems

The data display systems (DDSs) are the primary onboard interface between the CDMS and the crew. Each DDS consists of a PGSC, an interface unit, and DDS emulation software. In a module configuration, one DDS is located in the orbiter aft flight deck station (L11), one in the control center rack in the module, and, possibly, one in an experiment rack in the module. In the pallet-only configuration, two DDSs can be located in the crew compartment aft flight deck station (L11 and R11).

STS 50 was the first Spacelab mission utilizing the PGSC as a replacement for the data display unit (DDU). PGSC is a Gridcase 1530, 386-based laptop personal computer with an electroluminescent monochrome display. The PGSC communicates with the CDMS through the interface unit, which performs protocol translation between the PGSC and CDMS. The DDS emulation software performs function key mapping and display formatting.

The DDSs are connected to the experiment and subsystem input/output units. Each can present information from both computers simultaneously, for monitoring purposes, although each DDS can communicate with only one computer at a time. Crewmembers can use the DDS to call various displays onto the screen for subsystem and experiment monitoring and control.

CDMS software consists of experiment software and subsystem software, each of which includes operating systems and applications. Within the experiment computer, both the operating system and the application software are wholly dedicated to the direct support of Spacelab payload experiments. CDMS software consist of the software that resides in the subsystem and experiment computers. The software within the Subsystem Computer (SSC) and the Experiment Computer (EXC) contains both the operating system and user defined application software.

The subsystem computer functions mainly to monitor and control other Spacelab subsystems and equipment such as the electrical power distribution subsystem and the environmental control subsystem. These functions are performed by the subsystem computer operating software (SCOS).

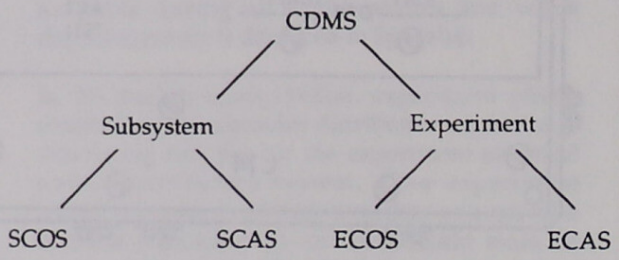

The SCOS is dedicated to monitoring and control of the Spacelab and its subsystems. Subsystem computer application software (SCAS) is available for use by any Spacelab application but to date the only user has been the Instrument Pointing System (IPS). SCAS is used for Spacelab thermal control, system monitoring, IPS activation/deactivation,and IPS attitude control associated with stellar, solar and earth pointing operations.

The experiment computer operating system (ECOS) provides general services for experiments such as activation/deactivation and experiment system monitoring. Experiment computer application software (ECAS) is dedicated to the direct support of Spacelab payload experiments and provides experiment control, data handling, and experiment data downlink.

Orbiter payload multiplexers/demultiplexers (MDMs) PF1 and PF2 are used for data communications between the orbiter GPCs and the Spacelab CDMS computers. The payload MDMs are under orbiter GPC control. The orbiter pulse code modulation master units (PCMMUs) can access Spacelab data for performance monitoring and limit

sensing. The PCMMUs contain a fetch command sequence and a random-access memory for storing fetched data. Spacelab and other payload telemetry data from the PCMMU random access memory are combined with orbiter pulse code modulation data and sent to the orbiter network signal processors for transmission on the return link through S-band or Ku-band.

The Spacelab experiment computer interfaces with two telemetry systems. The orbiter PCMMU allows the orbiter to acquire data for onboard monitoring of systems and provides Mission Control with system performance data for real-time display and recording through the orbiter network signal processor and S-band or Ku-band. The other telemetry system, the Spacelab high-rate multiplexer, is a high-rate link to the Ku-band signal processors that sends scientific data to the Payload Operations Control Center for real-time display and to the Goddard Space Flight Center for recording.

Spacelab high-rate data acquisition is provided by a high-rate multiplexer (HRM) and a high-data-rate recorder (HDRR). The HRM multiplexes up to 16 experiment channels, each with a maximum of 16 Mbps, two direct-access channels with data rates up to 50 Mbps, data from the Spacelab subsystem computer, from the Spacelab experiment computer, and up to three analog voice channels from the Spacelab intercom master station in the module configuration. The three digitized channels are premultiplexed onto a single 128-kbps channel for interleaving in the format along with Greenwich Mean Time (GMT) signals from the orbiter master timing unit. This composite output data stream is routed to the Ku-band signal processor for transmission on Ku-band or is sent to the HDRR or orbiter payload recorder. The HRM is located on the control center rack in the pressurized module and in the igloo for the pallet-only configuration.

In the module, the HDRR is located next to the DDS; in the pallet-only configuration, it is pallet mounted. It records real-time, multiplexed data, or data from two direct-access channels, and stores the information at rates from 1 to 32 Mbps during mission periods with no downlink capability or degraded downlink capability for playback when the capability is available. The HDRR is dumped in the reverse direction at 2, 4, 8, 12, 16, 24, or 32 Mbps. At a rate of 32 Mbps, a tape runs for 20 minutes. During normal HDRR operations, data is recorded and subsequently dumped to the ground via recorder playback. Tape changeout would only be required for a damaged or broken tape. A space HDRR can be flown to substitute for a failed recorder via an LRU.

The orbiter payload recorder serves as a backup for the Spacelab HDRR for data rates from 0.125 to 1 Mbps and can record only real-time, multiplexed data. The orbiter payload timing buffer provides mission elapsed time and GMT. The master timing unit provides 100-hertz, 1-kHz, 1,024-kHz, and 4,608-kHz timing signals to the Spacelab data processing assembly. Activation of the Spacelab DPA is controlled and monitored from orbiter SM displays.

Closed-Circuit Television (CCTV)

The module has its own CCTV that interfaces with the orbiter CCTV and the Ku-band signal processor. The orbiter CCTV system can accept three video inputs from the Spacelab system. A sync signal is provided by the orbiter, and Spacelab cameras can be commanded and controlled through the orbiter CCTV system. The orbiter also has one video output to the Spacelab CCTV system. The Spacelab accommodates a video switching unit and the video analog switches (VAS) that provides routing and control functions. The Spacelab analog/video output is directed to the orbiter Ku-band signal processor channel 3, payload analog input. Also included as part of the Spacelab CCTV system are different types of video/analog recorders. Data downlinked on Ku-band channel 3 are time-shared by the orbiter's CCTV system, the Spacelab TV/analog output, and the Spacelab high-rate multiplexer data.

Module Intercom

The Spacelab intercom master station interfaces with the orbiter audio central control unit (ACCU) for communications through orbiter duplex (simultaneous talk and listen) audio channels. ACCU loops that can be routed to Spacelab include air-to-ground(A/G) 1 and 2, air-to-air (A/A), intercom (ICOM) A and B, C&W tones, and page. Another selection is an internal voice loop which provides an intercom for Spacelab only.

Each orbiter loop, with the exception of page, may be selected on any of three Spacelab channels using rotary switches on the Spacelab intercom master station. One Spacelab channel may in turn be monitored at each intercom remote station. With the addition of audio channel interface units (ACIU) and Spacelab audio ground isolators (SAGI), channels from two intercom remote stations can be monitored simultaneously and individual channels selectively keyed from a single headset. During normal Spacelab operations, the orbiter A/G 1 loop is used for air-to-ground communications with the Payload Operations Control Center (POCC), A/G 2 is used for orbiter to Mission Control communications and either ICOM A or ICOM B is used for orbiter to module communications. The page channel can be used for general address and calling purposes, but voice does not go to the ground. Page signals can originate in the orbiter, the Spacelab, or both.

The Spacelab talk and listen lines are also routed to voice digitizers in the HRM to provide a redundant downlink only path for the three Spacelab channels.

Module Environmental Control and Life Support (ECLS)

The ECLS consists of the atmosphere storage and control subsystem (ASCS), the atmosphere revitalization system (ARS), and the active thermal control system (ATCS).

The ASCS receives gaseous oxygen from the orbiter power reactant storage and distribution system and gaseous nitrogen from a tank located on the module's exterior. The system regulates the gaseous oxygen and nitrogen pressure and flow rates to provide a shirt-sleeve environment for the module compatible with the orbiter cabin atmosphere.

Gaseous oxygen enters the module through the lower feedthrough plate in the Spacelab forward end cone at 100 psi and a maximum flow rate of 7 pounds per hour (nominal 0.5 lbs/hr). A motor-controlled valve in the module controls the flow of gaseous oxygen. This valve, operated by Spacelab RAU commands, opens when the O_2 *SUPPLY VALVE* switch on panel R7 is in the *CMD ENABLE* position, and an item 13 is executed on SPEC 223. It closes when the switch is in the *CLOSE* position, when an item 14 is executed on SM SPEC 223, or for fire in the Spacelab module. A yellow LED above the switch on panel R7 is illuminated to indicate that the valve is closed. The oxygen supply valve receives 28 V from the Spacelab emergency buses (EMA + EMB2 redundantly).

The gaseous nitrogen is stored in a tank outside the module on the forward end cone. The capacity of the nitrogen tank is sufficient to support a nominal 7-day mission. The GN_2 tank is pressurized to approximately 2300 psi. The GN_2 enters the module via the forward end cone feedthrough via a flow restrictor that restricts the flow to a maximum of 90 pounds per hour. Pressure regulators then regulate the pressure down to 215 psi. Pressure regulators on the Spacelab O_2/N_2 control panel regulate the air pressure in the cabin to 14.7 psi. This sytem also utlizes PPO_2 measurements to maintain the proper balance of O_2 and N_2 in the cabin.

The Spacelab cabin depressurization assembly is primarily for contingency venting to vacuum of Spacelab cabin atmosphere in case of fire that cannot be handled by the Spacelab fire suppression system. The depressurization assembly consists of a vent with two filters, a manual shutoff valve, and a motor-driven shutoff valve. The motor-driven shutoff valve is powered by the Spacelab emergency buses and controlled by the *CABIN DEPRESS VALVE OPEN/CLOSE* switch and a *CABIN DEPRESS ARM/SAFE* switch. The *CABIN DEPRESS ARM* switch arms the Spacelab cabin depressurization motor-driven valve; and when the *CABIN DEPRESS VALVE* switch is positioned to *OPEN*, the Spacelab cabin depressurization assembly in the Spacelab forward end cone opens, depressurizing the module at 0.4 pound per second. The red LED above the switch on panel R7 is illuminated to indicate that the motor-operated depressurization valve is fully open. The yellow LED above the switch on panel R7 is illuminated to indicate that the Spacelab cabin depressurization valve is not closed. If this indication is received without a full OPEN indication, the valve has not completed its full travel.

The ARS is composed of these three air loops: cabin, tunnel, and avionics. The cabin air loop contains breathing air in the module. This loop is responsible for removing heat, humidity, odors, and carbon dioxide from the air before it is returned to the module. Once the hatch between Spacelab and the orbiter is opened, air is allowed to interchange

between the two via the tunnel air loop. This loop removes any carbn monoxide from the module air. The avionics air loop is used to remove heat from subsystem and experiment equipment located in the module.

Air in the Spacelab avionics air loop is circulated by one of two dual-redundant fans, with check valves to prevent recirculation through the inactive fan and a filter upstream to protect both fans.

The fans are designed to operate in low speed and high speed modes. Airflow and power consumption in low speed is 639 pounds per hour and 110 watts. In high speed these values climb to 1,923 pounds per hour and 643 watts. The two fans, powered by separate 115-volt ac buses, are activated and deactivated by the *AVIONICS FAN* switches on panel R7. Each switch has a yellow LED that is illuminated above the respective switch to indicate that the respective fan is activated. The fans' on/off status is also available on orbiter displays and the DDU avionics power/cooling display.

The Spacelab avionics fans can also be activated in the low-speed mode by commands from the orbiter CRT keyboard. The fans are activated in the high-speed mode by commands from the orbiter CRT keyboards. The orbiter MDM deactivation command deactivates both fans simultaneously, and the Spacelab RAU deactivation command turns off each fan separately. The high-speed status of the Spacelab avionics fans is available on an orbiter SM display and a DDU display.

Cabin/Tunnel Air Loop

When the middeck airlock hatch and the Spacelab hatch are open, the orbiter air revitalization system provides air at 48 cubic feet per minute through a duct that branches off the orbiter cabin air loop downstream of the orbiter cabin heat exchanger and enters the tunnel adapter. In the tunnel adapter, the duct can be controlled by a manual shutoff valve before it passes into the transfer tunnel itself. For the transfer tunnel to be entered, the Spacelab hatch must be opened. The tunnel air duct passes through the structure below the Spacelab hatch. The fan located in the transfer tunnel draws additional air into the duct through an air inlet located just on the tunnel side of the Spacelab hatch.

The fan draws in additional air from the tunnel at a rate of 77 cubic feet per minute for a total nominal duct flow of 125 cubic feet per minute. This flow rate is delivered to the Spacelab cabin. The return air passes through the transfer tunnel itself, initially at 125 cubic feet per minute. However, 77 cubic feet per minute of air is sucked into the duct inlet at the Spacelab side of the Spacelab hatch, and 48 cubic feet per minute of air enters the orbiter cabin through the middeck airlock hatch. A scrubber in the tunnel duct removes carbon monoxide. The scrubber, located parallel to the tunnel fan, produces an air flow of 1.5 to 4 cubic feet per minute.

The switch for the fan located in the transfer tunnel cannot be accessed until the Spacelab hatch is opened, and the flight crew initially transfers to the Spacelab from the orbiter.

The tunnel fan receives dc power from the Spacelab electrical power distribution subsystem. A delta pressure sensor located in the tunnel provides telemetry data for calculating air flow.

Active Thermal Control System

The Spacelab active thermal control subsystem consists of a water loop to remove heat from the Spacelab module and a Freon loop to remove heat from equipment on any pallets that may be flown with the module. The water loop is normally active only during on-orbit flight phases. The need to cool experiments during ascent and descent requires operation of the water loop in a reduced performance mode during these phases.

The Spacelab water loop is circulated by a water pump package consisting of dual-redundant pumps (primary and backup) with inlet filters, manually (ground) adjustable bypass valves, check valves to prevent recirculation through the inactive pump, and an accumulator assembly to compensate for thermal expansion within the loop and maintain a positive pump inlet pressure.

The pump package is contained in a housing and mounted on the outside of the module's forward end cone. The nominal flow rate is 500 pounds per hour.

The Spacelab water pumps are powered by separate 115-volt buses. The pumps are activated and deactivated by the *H_2O LOOP PUMP* switches on

panel R7 or by commands from the orbiter SM GPC. The green LED above each switch on panel R7 is illuminated to indicate that the pump is in operation. The on/off status of the Spacelab water pumps is also shown on the orbiter SM displays.

The Spacelab Freon coolant loop removes heat from any pallets that may be flown with the module and transfers the heat of the interloop heat exchanger to the Spacelab water loop system. The flow rate is approximately 3,010 pounds per hour. From the Spacelab water loop system, the water passes through the orbiter payload heat exchanger, which transfers all the heat it has collected to the orbiter Freon coolant loops.

Caution and Warning

The orbiter receives caution and warning inputs from Spacelab through the orbiter payload MDMs. Four channels in the Spacelab systems are dedicated to sending payload warning signals to the orbiter, and four channels in the Spacelab systems send payload caution signals to the orbiter. These channels cause illumination of the *PAYLOAD CAUTION*, *PAYLOAD WARNING*, and *BACKUP C/W ALARM* lights on panel F7. The two *PAYLOAD* lights can be inhibited via panel R13U. Fifteen remaining caution and warning input channels to the orbiter payload MDMs are available for Spacelab experiment limit sensing in the orbiter GPCs. These can feed up to four channels in the caution and warning electronics unit on panel R13U. The orbiter provides a maximum of 36 safing commands for use in response to Spacelab caution and warning conditions with 22 reserved for experiment safing commands. All safing commands are initiated at the orbiter CRT and keyboard.

The orbiter GPC can obtain data from the Spacelab CDMS through the orbiter PCMMU as an alternative source for caution and warning.

Emergency Conditions

There are two categories of Spacelab emergency conditions: fire/smoke in the module, and rapid module depressurization. The orbiter and Spacelab annunciate these conditions and can issue safing commands if they occur. These signals are available during all flight phases.

Redundant Spacelab fire/smoke inputs are generated by two ionization chamber smoke sensors at three locations in the Spacelab. The six fire/smoke discrete signals are hard-wired to six annunciator indicators located on panel R7. These indicators are divided into three pairs labeled *LEFT A* and *B*, *SUBFLOOR A* and *B*, and *RIGHT A* and *B*. The six *SMOKE ANNUNCIATORS* switches on panel R7 can be used to inhibit each fire/smoke sensor's output individually. The *SMOKE SENSOR* switch on panel R7 is used to reset or test all six sensors simultaneously.

O_2 PRESS	H_2 PRESS	FUEL CELL REAC (R)	FUEL CELL STACK TEMP	FUEL CELL PUMP
CABIN ATM (R)	O_2 HEATER TEMP	MAIN BUS UNDERVOLT (R)	AC VOLTAGE	AC OVERLOAD
FREON LOOP (R)	AV BAY/ CABIN AIR	IMU	FWD RCS (R)	RCS JET
H_2O LOOP	RGA/ACCEL	AIR DATA	LEFT RCS (R)	RIGHT RCS (R)
———	LEFT RHC (R)	RIGHT/AFT RHC (R)	LEFT OMS (R)	RIGHT OMS (R)
PAYLOAD WARNING (R)	GPC	FCS SATURATION (R)	OMS KIT	OMS TVC (R)
PAYLOAD CAUTION	PRIMARY C/W	FCS CHANNEL	MPS (R)	———
BACKUP C/W ALARM (R)	APU TEMP	APU OVERSPEED	APU UNDERSPEED	HYD PRESS

Payload Caution and Warning Lights on Panel F7

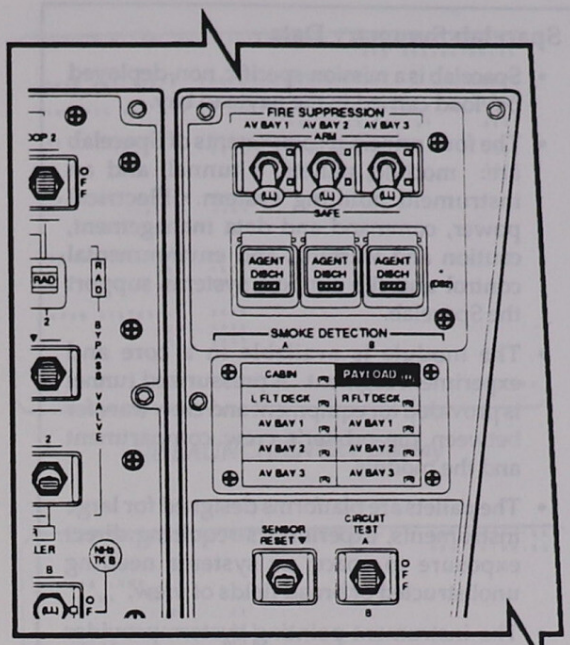

Payload Fire/Smoke Detection Light on Panel L1

Three signals, each from a different sensor location, are run through an OR gate and connected to orbiter panel L1, which has a *PAYLOAD* fire/smoke detection light. The three remaining signals are treated in the same manner.

When a Spacelab fire/smoke signal is detected, an emergency tone (siren) generated by the orbiter caution and warning circuitry is transmitted by the orbiter audio central control unit and announced in the Spacelab module by the loudspeaker, and the Spacelab *MASTER ALARM* light is illuminated. The six fire/smoke signals are also connected to six orbiter MDM inputs for display as emergency alert parameters on the orbiter CRT and for telemetry.

Two methods are provided for extinguishing a fire in the Spacelab module: discharging a fire suppressant into the affected area or dumping the Spacelab cabin atmosphere, when appropriate. The fire suppressant system (FSS) consists of 15 orbiter-common fire suppression bottles, each filled with the Halon 1301 suppressant agent.

The *AGENT DISCHARGE ARM/SAFE* switch on panel R7 or the Spacelab C/W/FSS panel in the C/W/FSS module is used to arm or safe the FSS. Each panel has a yellow indicator light that is illuminated when the FSS is armed. Arming the FSS also shuts off the module cabin fans to avoid diluting the suppressant's concentration.

The agent can be discharged from either orbiter panel R7 or the C&W/FSS panel by three identical sets of *AGENT DISCH* buttons, one each for the left, subfloor, and right areas. The buttons on the C&W/FSS panel are protected by individual guards. Depressing one of these buttons completely discharges the contents of all suppressant bottles in the indicated area of the Spacelab module.

In addition, the module O_2 *SUPPLY VALVE CLOSE/CMD ENABLE* switch on panel R7 can be used to close off the oxygen supply from the orbiter oxygen system to deprive the fire of oxygen. Module atmosphere dumping is controlled by the *CABIN DEPRESS ARM/SAFE* and *VALVE OPEN/CLOSE* switches on orbiter panel R7. The Spacelab motor-controlled cabin dump valve's status is indicated by the yellow *NOT CLOSED* and the red *FULL OPEN* indicators on panel R7, as well as by orbiter SM displays. In addition, the manual cabin depressurization valve on panel F6D must be opened to allow cabin depressurization. The motorized and manual cabin depressurization valves are in series; both must be opened.

Pallet-Only Environmental Control Subsystem

The environmental control subsystem provides thermal control of Spacelab experiments and subsystems. The Spacelab Freon coolant loop services the pallet systems and collects heat dissipated by the subsystem and experiment equipment. The coolant loop collects heat from the pallet-mounted subsystems and experiments through cold plates, some of which have thermal capacitors to store peak heat loads. The cold plates in the Freon loop are bolted to an intermediate support structure that is attached to the pallet. A maximum of eight cold plates can be used on the pallets for a particular mission.

The subsystem equipment mounted in the igloo is also serviced by the Freon loop, which interfaces directly with the orbiter's payload heat exchanger. The Freon pump package is mounted on the front frame of the first pallet (forward) in the orbiter payload bay. Thermal coatings are applied to

minimize heat leakage and the effects of solar radiation. A special paint is used to reduce the hot-case temperature of the pallet structure itself. An insulated shield installed between the pallet-mounted cold plates and the pallet structure reduces radiation exchange between them. Multilayer insulation thermal tents also protect pallet-mounted subsystems; any unused tents are available for experiments.

Spacelab Summary Data

- Spacelab is a mission-specific, non-deployed payload carried in the payload bay.
- The four principal components of Spacelab are: module, pallets, a tunnel, and an instrument pointing system. Electrical power, command and data management, caution and warning, and environmental control and life support systems support the Spacelab.
- The module is available in a core and experiment segment. A pressurized tunnel is provided for equipment and crew transfer between the orbiter's crew compartment and the module.
- The pallets are platforms designed for large instruments, experiments requiring direct exposure to space, or systems needing unobstructed or broad fields of view.
- The instrument pointing system provides precision pointing for a wide range of payloads, including large single instruments, clusters of instruments, or single small-rocket-class instruments.
- The Spacelab electrical power distribution subsystem controls and distributes main, essential, and emergency dc and ac power to Spacelab subsystems and experiment equipment.
- The Spacelab command and data management system of three identical computers and assorted peripherals provides a variety of services to Spacelab experiments and subsystems.
- Spacelab has a separate environmental and thermal control system.
- The majority of Spacelab controls are on panel R7, flown only when Spacelab is flown.
- Spacelab-specific CRT displays include: S/L LAUNCH/ENTRY, S/L COOLING LOOPS, S/L AIR LOOPS, S/L ATMOSPHERE, SL SS DC POWER, SL AC POWER, S/L DPA, S/L DPA PERIPHERAL, S/L LINK MGMT, S/L EXP RAUS, S/L COMM, and S/L EXP POWER.

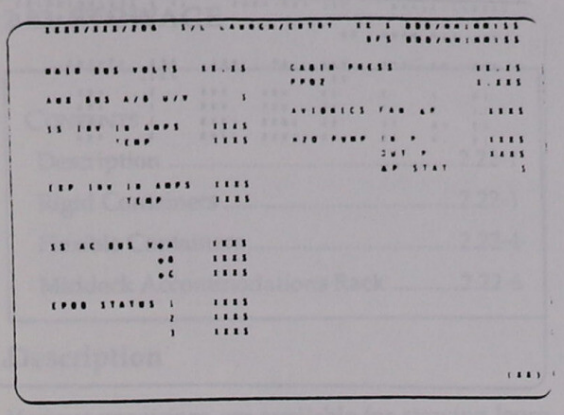

S/L LAUNCH/ENTRY Display

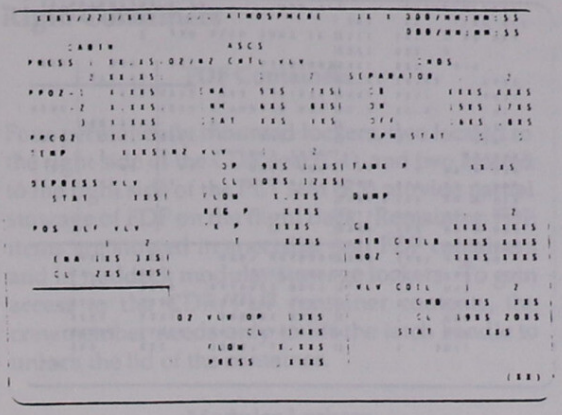

S/L ATMOSPHERE Display

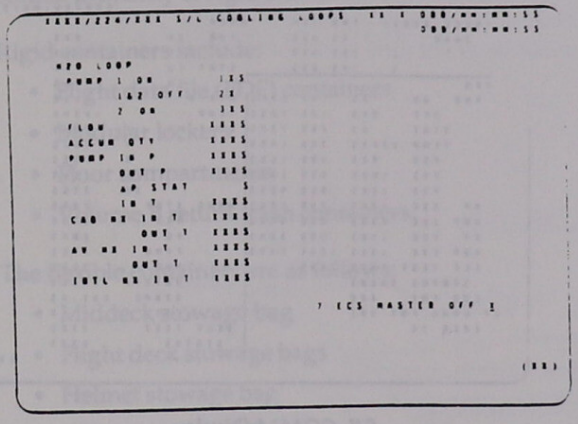

S/L COOLING LOOPS Display

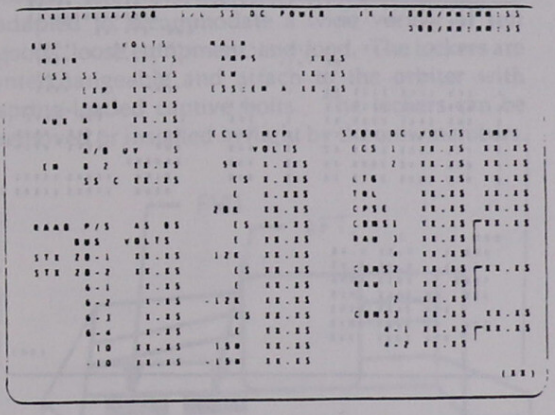

S/L SS DC POWER Display

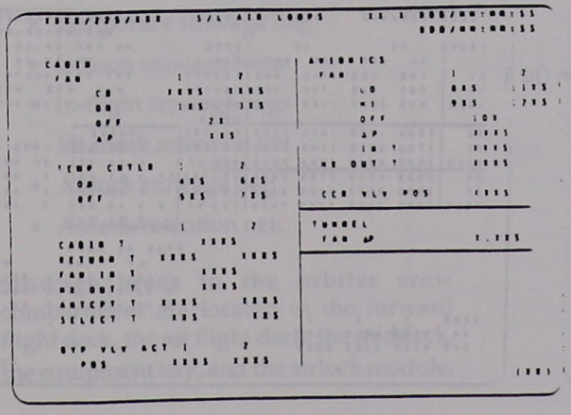

S/L AIR LOOPS Display

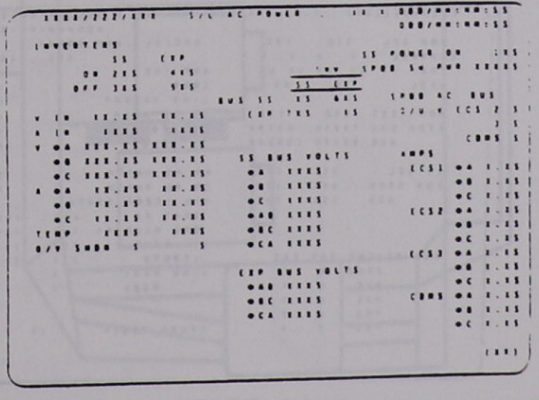

SL AC POWER Display

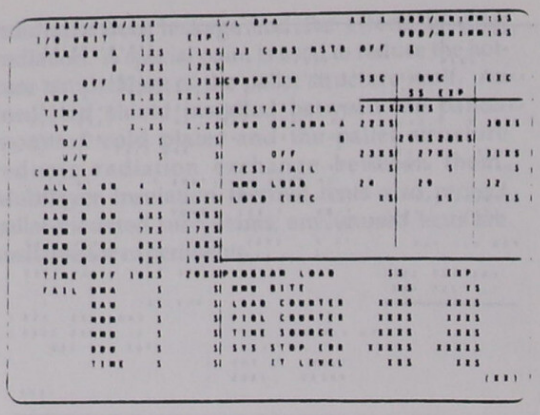

S/L DPA Display

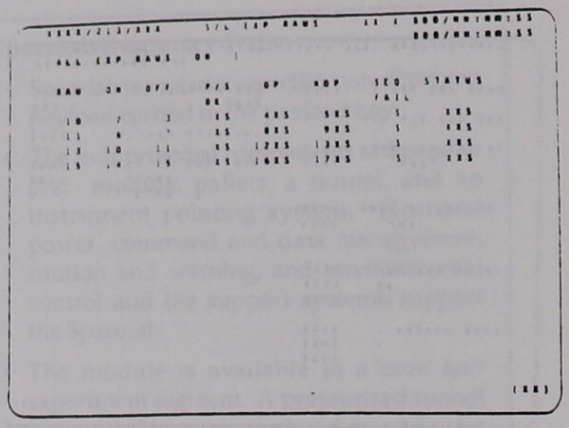

S/L EXP RAUS Display

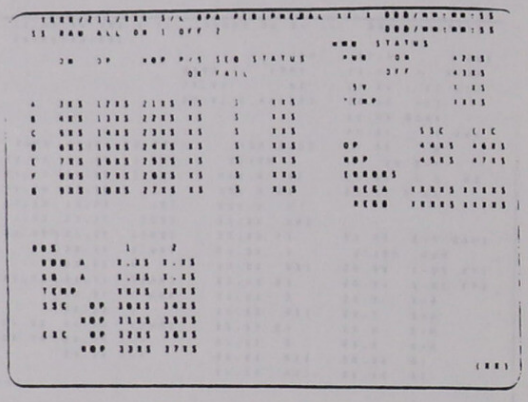

S/L DPA PERIPHERAL Display

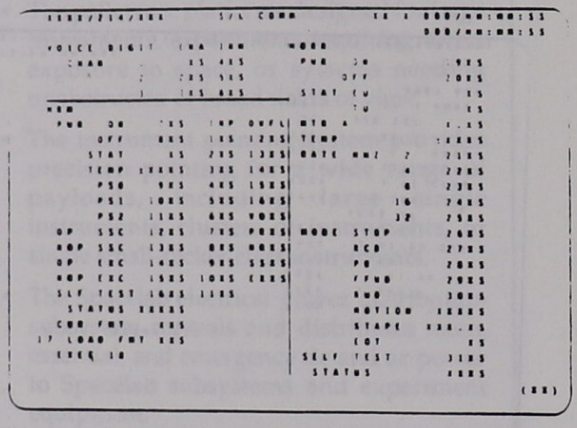

S/L COMM Display

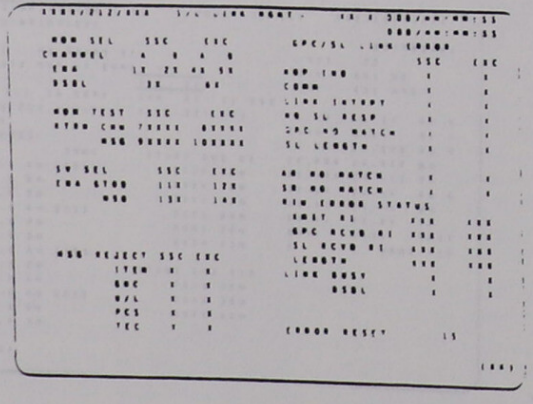

S/L LINK MGMT Display

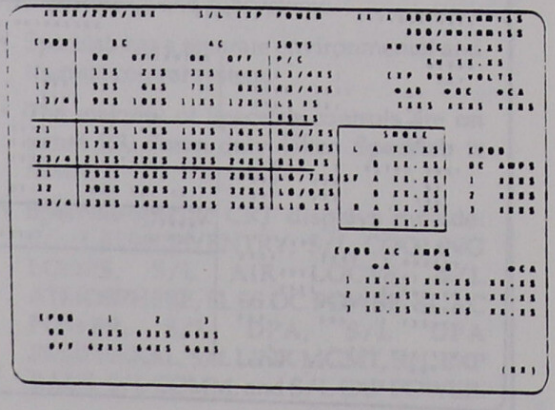

S/L EXP POWER Display

2.22 STOWAGE

CONTENTS

Description 2.22-1
Rigid Containers 2.22-1
Flexible Containers 2.22-4
Middeck Accommodations Rack 2.22-6

Description

Various provisions are available for stowing loose onboard equipment and trash/waste materials during different phases of the flight. Provisions consist primarily of rigid and flexible containers.

Rigid containers include:

- Flight data file (FDF) containers
- Modular lockers
- Floor compartments
- Volume B return trash containers.

The flexible containers are as follows:

- Middeck stowage bag
- Flight deck stowage bags
- Helmet stowage bag
- Specialist seat FDF containers
- Soft stowage containers
- Trash containers
- Temporary stowage bag
- Jettison stowage bags
- In-flight stowage bags
- Middeck retention net
- Airlock stowage bag
- Airlock retention net.

Stowage areas in the orbiter crew compartment are located in the forward flight deck, the aft flight deck, the middeck, the equipment bay, and the airlock module.

Rigid Containers

FDF Containers

Four permanently mounted lockers, two located to the right side of the CDR seat (C4), and two located to the right side of the PLT seat (R3) provide partial stowage of FDF on the flight deck. Remaining FDF items are stowed in specialist seat FDF containers and in middeck modular stowage lockers. To gain access to the CDR/PLT container contents, the crewmember needs only to lift the latch handle to unlock the lid of the container.

Modular Lockers

Some equipment on board the orbiter is stowed in lockers with insertable trays. The trays can be adapted to accommodate a wide variety of soft goods, loose equipment, and food. The lockers are interchangeable and attach to the orbiter with spring-loaded captive bolts. The lockers can be removed or installed in flight by the crewmembers.

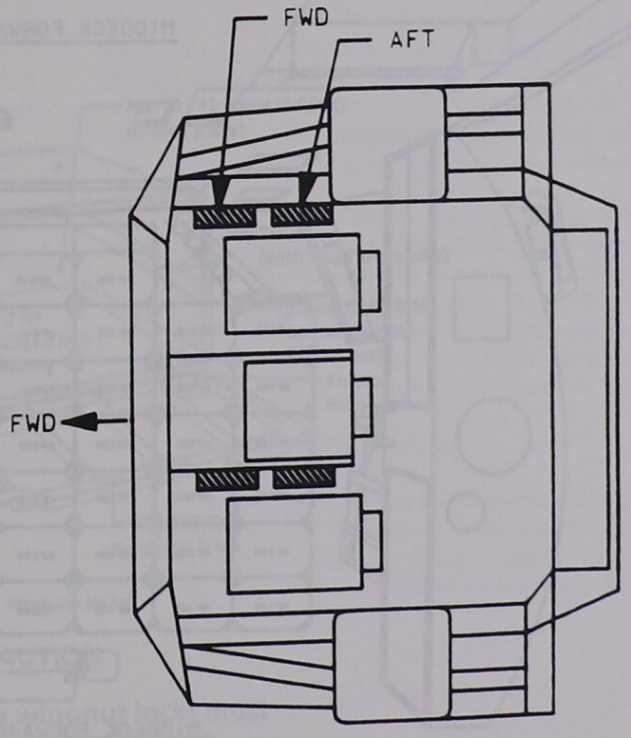

Flight Deck FDF Containers

(▨ = Containers)

There are four sizes of trays: a single tray (two of which fit inside a locker), a double tray, a half-length single tray (four of which fit inside a locker), and a half-length double tray. Approximately 150 cubic feet of stowage space is available, almost 95 percent of it on the middeck.

The lockers are made of either epoxy- or polyimide-coated Kevlar honeycomb material joined at the corners with aluminum channels. Inside dimensions are approximately 11 by 18 by 21 inches. The honeycomb material is approximately 0.25 inch thick, and was chosen for its strength and light weight. The lockers contain about 2 cubic feet of space and can hold up to 66 pounds.

Foam inserts are used in the trays to provide a friction fit for zero-g retention. In addition, straps, snaps, and mesh retention nets are used in some trays. Soft containers are used in orbiter spaces too small for the fixed lockers.

The trays are packed with gear so that no item covers another type of gear. This method of packing reduces confusion usually associated with finding loose equipment and maintaining a record of the equipment.

In the aft flight deck, stowage lockers are located below the rear payload control panels in the center of the deck. A trash container is nominally mounted on the port side of the flight deck, near the interdeck access opening. A temporary stowage bag is nominally located on the starboard side in approximately the same location. These side containers are interchangeable.

In the middeck, container modules can be attached to the forward avionics bay. Provisions for 33 containers are available in this area. In addition, there is an area to the starboard side of the airlock module where nine containers can be attached.

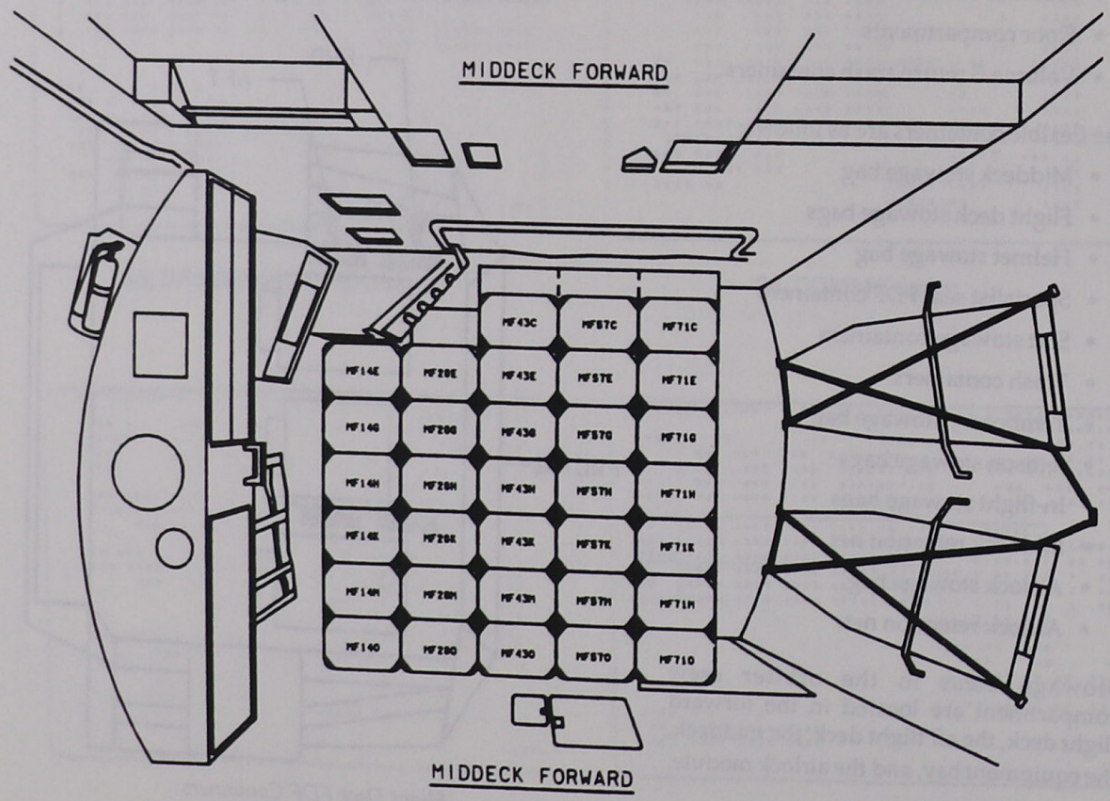

Middeck Forward Modular Lockers and Floor Compartment

To obtain access to the locker interior, the crewmember needs to rotate two quarter-turn, self-aligning ball latches inboard to release the locker door. For on-orbit operations, the door is held closed by double magnetic latches.

The crewmember can open the door a full 180 degrees. By using the standard hole pattern of the locker, straps and brackets can be attached to the locker faces via pip pins for restraining equipment.

In addition, a crewmember can remove lockers in flight in order to gain access to the floor compartments or the avionics bays.

In the event the locker door cannot be closed or latched due to misalignment problems, the crewmembers can remove the locker and use turnbuckles to provide structural support.

Floor Compartments

Six floor compartments are available. Volume F (MD76M), the wet trash compartment, provides 8 ft^3 of stowage under the middeck floor. The CO_2 absorbers are manifested at MD52M, with the in-use position at MD54G. Two other compartments (volumes G (MD80R) and H (MD23R)) are used to store contingency hygiene equipment and EVA accessories respectively. The remaining floor compartment, volume E (MD76C), is used primarily to store official flight kits and personal preference kits.

Wet Trash Compartment

To deposit any trash or waste materials into the wet trash compartment, the crewmember merely lifts the latch handle and opens the circular door,

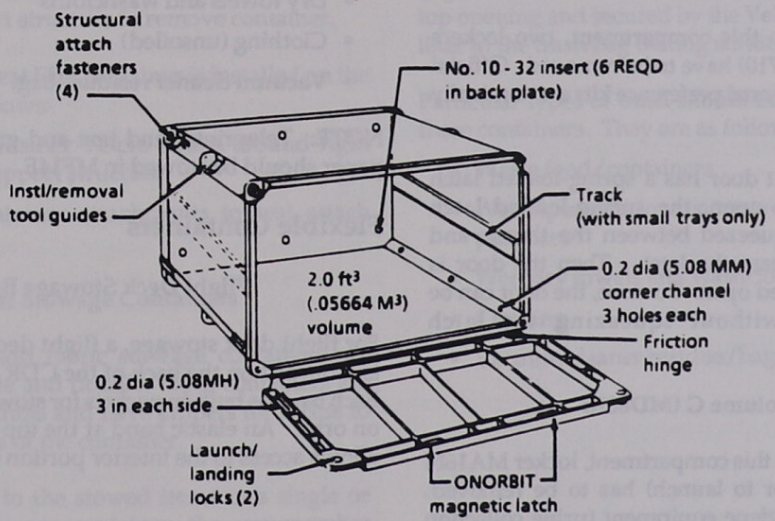

Modular locker

CAUTION

Two captive wingnut locks must be secured for entry/landing.

Schematic of Modular Lockers

deposits the material through a rubber grommet into the trash bag, and closes the door. Wet trash is vented overboard at the rate of approximately 3 lb/day.

NOTE

The WCS vacuum vent valve must be opened to allow the waste gases to be vented overboard.

The types of wet trash to be stowed in the compartment are:

- Polaroid film packs
- Medical kit items
- Emesis bags
- Urine collection devices
- Fecal bags
- WCS odor/bacteria filter
- Excessive leftover food items, such as fresh food, that can cause odors.

Volume E (MD76C)

To gain access to this compartment, two lockers (MF71M and MF710) have to be removed. Official flight kits and personal perference kits are nominally stowed here.

The compartment door has a spring-loaded latch mechanism. To open, the spring-loaded latch mechanism is squeezed between the thumb and forefinger to release the latch. Then the door is subsequently lifted open. To close, the door can be pushed shut without squeezing the latch mechanism.

Volume G (MD80R)

To gain access to this compartment, locker MA16N (if installed prior to launch) has to be removed. Contingency hygiene equipment (urine collection devices, urinal assemblies, Apollo fecal bags, wet wipes, etc.) is stowed here. The compartment door has the same type of spring-loaded latch mechanism used in volume E.

Volume H (MD23R)

This floor compartment has the same type of spring-loaded latch mechanism as used in volumes E and G. EVA accessories (liquid-cooled ventilation garments, EMU batteries and lights, tools, etc.) are manifested in this compartment.

Volume B Return Trash Containers

The containers consist of two rigid compartments providing stowage of approximately 7 ft^3 of dry trash. The compartments are located on the starboard side of the middeck.

To deposit any dry trash into the upper/lower compartment, the crewmember simply inserts the dry trash material through a spring-loaded door.

The types of dry trash that can be stowed in either compartment are:

- Dry towels and washcloths
- Clothing (unsoiled)
- Vacuum cleaner residue/bag.

NOTE: Teleprinter and text and graphics system paper should be stowed in MF14E.

Flexible Containers

Flight Deck Stowage Bag

For flight deck stowage, a flight deck stowage bag is mounted on the back of the CDR and PLT seats. Each bag has built-in pockets for stowing loose items on orbit. An elastic band at the top of each pocket allows access to the interior portion of the pocket.

Helmet Stowage Bag

A polybenzine imidazole-mesh bag with a draw string is provided for stowing unnecessary FDF material or other onboard loose equipment on orbit. The bag is located in the CDR's FDF stowage container. In addition, one helmet stowage bag is manifested for each crewmember and is utilized for stowing the launch/entry suit helmet on orbit.

The task of inserting desired FDF items into the mesh bag consists of simply opening the bag, placing items in the bag, and drawing the string tight to close.

Specialist Seat FDF Containers

A soft fabric container is available for each specialist seat for storing FDF or other small loose items.

To remove the container from the seat requires the following steps:

- Pull up on container release handle to disengage the container attachments from seat.
- Unwrap the container Velcro straps from seat leg support structure to remove container.

The specialist seat FDF container is installed on the right side as follows:

- Attach container Velcro straps around right side leg support structure.
- Insert container attachments to seat attach point.

Soft Stowage Containers

Two types of soft fabric stowage containers are available: single and double. Both containers are restrained by straps and have zippers for access to the internal area of the container.

To gain access to the stowed items in a single or double soft stowage container, the crewmember simply unhooks the container restraining straps and opens the zippers. Stowing of dry, non-odor-producing loose items should be limited to these containers to minimize crew compartment environment contamination.

NOTE

Soft stowage containers normally are not flown unless required.

Trash Containers

Three trash containers are flown. Two containers are mounted in the middeck area, one on the inside surface of the waste management compartment door, and one below the text and graphics system compartment door. The third container is located on the port flight deck. Each container contains a disposable trash bag plastic liner, with spares located in the bottom of the container (outside the installed liner).

The crewmember deposits trash into the container disposable plastic liner through the alligator clamp opening. Once the plastic liner is full, the top of the trash bag liner is closed with its Velcro closure. The trash bag zipper is opened, and the full liner is removed through the side opening. The top of the liner can be further rolled and secured with gray tape. The liner is then stowed in a jettison stowage bag. A new liner is inserted through the trash bag top opening and secured by the Velcro strips on the liner to the trash bag mating surfaces.

Particular types of trash should be stowed only in these containers. They are as follows:

- Waste food/containers
- Wet wipes used for nonwaste collection system purposes
- Wet/dry towels and washcloths
- Clothing
- Vacuum cleaner residue/bag.

NOTE

Absolutely *no* human waste materials (fecal, urine, or emesis) are to be stowed in these trash bags/liners. Any teleprinter or text and graphics system paper should be stowed in MF14E.

Temporary Stowage Bag

One temporary stowage bag is flown on the starboard flight deck, and a spare is stowed in a middeck locker. The bag is used to hold loose equipment for temporary restraining, stowage, or transporting on orbit.

The temporary stowage bag can be snapped or attached with Velcro to the crew station. The bag has an inside pocket to hold small items.

Loose equipment is inserted into the bag through the alligator clamp opening. Small items are stowed in the bag inside pocket.

NOTE

No wet/odor-producing waste materials are to be stowed in this bag.

Jettison Stowage Bags

Teflon-coated Nomex cloth bags are provided to stow waste/trash materials on orbit. Each bag has a drawstring for sealing the opening of the bag.

At least one of these bags is used as a return-to-Houston bag. It contains items (such as videocassettes, audio cassettes, film, and notes) that must be flown to Houston immediately following a mission.

In-Flight Stowage Bags

Polybenzine imidazole brown-colored mesh bags of the same approximate dimensions as the jettison stowage bags are stowed in a middeck stowage locker. The bags are used for stowing the crewmembers' launch equipment such as launch/entry suits, boots, and parachute packs. Each bag has a drawstring for sealing the opening of the bag.

Middeck Retention Net

The middeck retention net, a polybenzine imidazole brown-colored mesh net with caribiners, is manifested on nonsleepstation flights. This net is used to restrain items such as seats, launch/entry suits, boots, and helmets on orbit. It is located on the starboard forward middeck and attaches to the MF71 row of lockers and the starboard wall.

Airlock Stowage Bag

The airlock stowage bag, when manifested, is mounted to the third EMU adapter plate. This bag is made of white Nomex material and provides an alternate stowage location primarily for crewmembers' clothing.

Airlock Retention Net

The airlock retention net, when manifested, is utilized to restrain equipment in the airlock. It is a brown polybenzine imidazole mesh net that resembles two triangles joined at their apexes.

Middeck Accommodations Rack

The Middeck Accommodations Rack (MAR) permits the integration of supplemental small payloads and experiments into the middeck of the orbiter. The MAR is installed just forward of the side hatch in the are previously occupied by the galley. The blue anodized structure provides approximately 15 cubic feet of internal volume with a maximum payload weight of about 340 lb. The MAR can be used for stowage or as an experiment rack with electrical power and thermal control.

Orbiter 28 vdc and 115 vac (three phase, 400 cycle power can be distributed to the MAR by the Middeck Utility Panel (MUP) which is located at ML85E, just above the repackaged galley. The MUP receives, controls, and distributes power to MAR payloads. It can also distribute power to middeck experiments external to the MAR, if required.

Thermal control for payloads in the MAR may be provided by either a water-to-air heat exchanger or water circulation through cold plates. These NASA provided designs can dissipate heat loads of up to 1000 watts. An approved payload unique system, located in the MAR, that connects to the orbiter heat exchange loop may also be used.

Middeck Accomodations Rack (MAR) Locker Tray Assembly

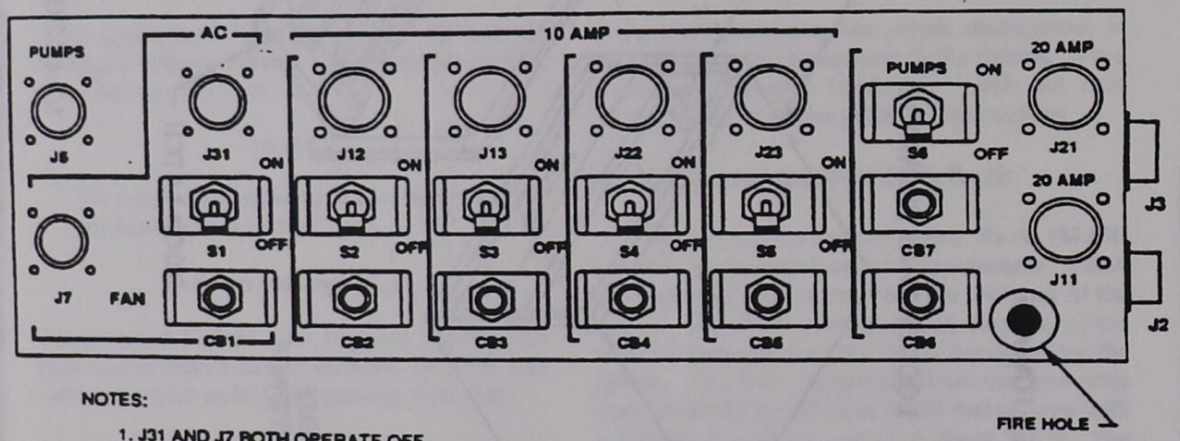

NOTES:

1. J31 AND J7 BOTH OPERATE OFF SWITCH S1.
2. CB1 ONLY CUTS OFF J7. J31 USES THE ML86B PANEL BREAKER
3. ALL DC POWER FROM MAIN B.
4. FRONT PANEL DESIGNED TO ACCEPT OVERLAYS.

ML85E Middeck Utility Panel (MUP)

4.12 WEATHER LIMITATIONS

Weather limitations for launch, abort landing, and end of mission landing are presented in the table on the right.

CONSTRAINT	LAUNCH	RTLS / TAL	EOM / AOA
PRECIPATION – VISIBLE RAIN/VIRGA – PRECIP ECHO ON RDR – CUMULONIMBUS OR TOWERING CU	NONE IN FLT PATH	NONE W/ 20 NM OF SITE NOR 10 NM LATERALLY &2 NM VERT (RTLS) TO 30 NM RNG	NONE W/ 30 NM OF SITE NOR 2 NM VERT AT 30 NM RNG
VISIBLE LIGHTNING	NONE W/ 10 NM OF SITE OR FLT PATH	"	"
THUNDERSTORMS (INCL ANVIL)	"	"	"
DETACHED OPAQUE ANVILS (< 3 HRS OLD)	NOT THRU	NONE W/ 10 NM OF SITE NOR 5 NM LATERALLY TO 30 NM RNG	NONE W/ 20 NM OF SITE NOR 20 NM LAT TO 30 NM RNG
CUMULUS CLOUDS Tops higher than +5°C level Tops higher than -10°C level Tops higher than -20°C level	– NOT THRU – AVOID BY 5 NM – AVOID BY 10 NM		
CB DEBRIS CLOUDS	NOT THRU		
VERT CONT LAYER > 4500 FT thick and any part between 0°C and -20°C levels	NOT THRU		
TOPS HIGHER THAN 0°C LEVEL ASSOC WITH DISTURBED WX W/5 NM OF PLT PATH	NOT THRU		
FIELD MILL	1 MIN AVE > 1 KV/M W 15 MIN 5 NM		

* **EXCEPTION:** RTLS MAY BE GO IF WX FRCST & JUDGEMENT – SUPPORTED BY CONTINUOUS RADAR & AIRCRAFT INDICATE ALL:

1. ISOL OR WIDELY SCATTERED LT RAIN (TOPS < 20 KFT)
2. HORIZ MOVEM IS STABLE & NO SIGNIF CONVECTIVE DEVELOP EXPECTED
3. BOTH APPROACHES TO OTHER RNWY MEET ALL LNDG CRIT
4. VERT CLEARANCE OF 2 NM W/ 10 NM LATERALLY OF APPROACH PATH EXISTS & IS EXPECT TO EXIST THRU LANDING

CONSTRAINT	LAUNCH	RTLS / TAL / AOA / NEXT PLS / EOM (NON–KSC)	KSC EOM
CEILING	8000 FT (RANGE SAFETY)	* NO MLS : 10000 FT * MLS : 8000 FT (WITH WX RECON)	10000 FT (CLOUDS < 10000 MUST BE ≤ 0.2 OBSERVED AT GO/ NO GO)
VISIBILITY	5 MI (RANGE SAFETY)	* NO MLS : 7 SM * MLS : 5 SM (IF PAPI VISIBLE FROM 8000 FT TO PREFLARE, & BALL BAR VISIBLE FROM PREFLARE TO FINAL FLARE)	
TURBULENCE	N/A	≤ MODERATE	≤ MODER

				EDO (> 10 FD)	1 APU DOWN	KSC EOM
SURFACE WINDS	RTLS: 15 XW LCC: SEE COMPASS ROSE (NOTE 3)	HW: ≤ 25 KT XW: ≤ 15 KT INCL GUST GUST ≤ 10 KT TW: ≤ 15 KT ≤ 10 AVE (225 KT TIRE SPEED)	HW: ≤ 25 XW: ≤ 12 INCL GUST GUST ≤ 10 KT TW: ≤ 15 KT ≤ 10 AVE (225 KT TIRE SP)	12 XW	10 XW (LIGHT TURB)	MAX PEAK ≤20 KTS ANY DIRECTION

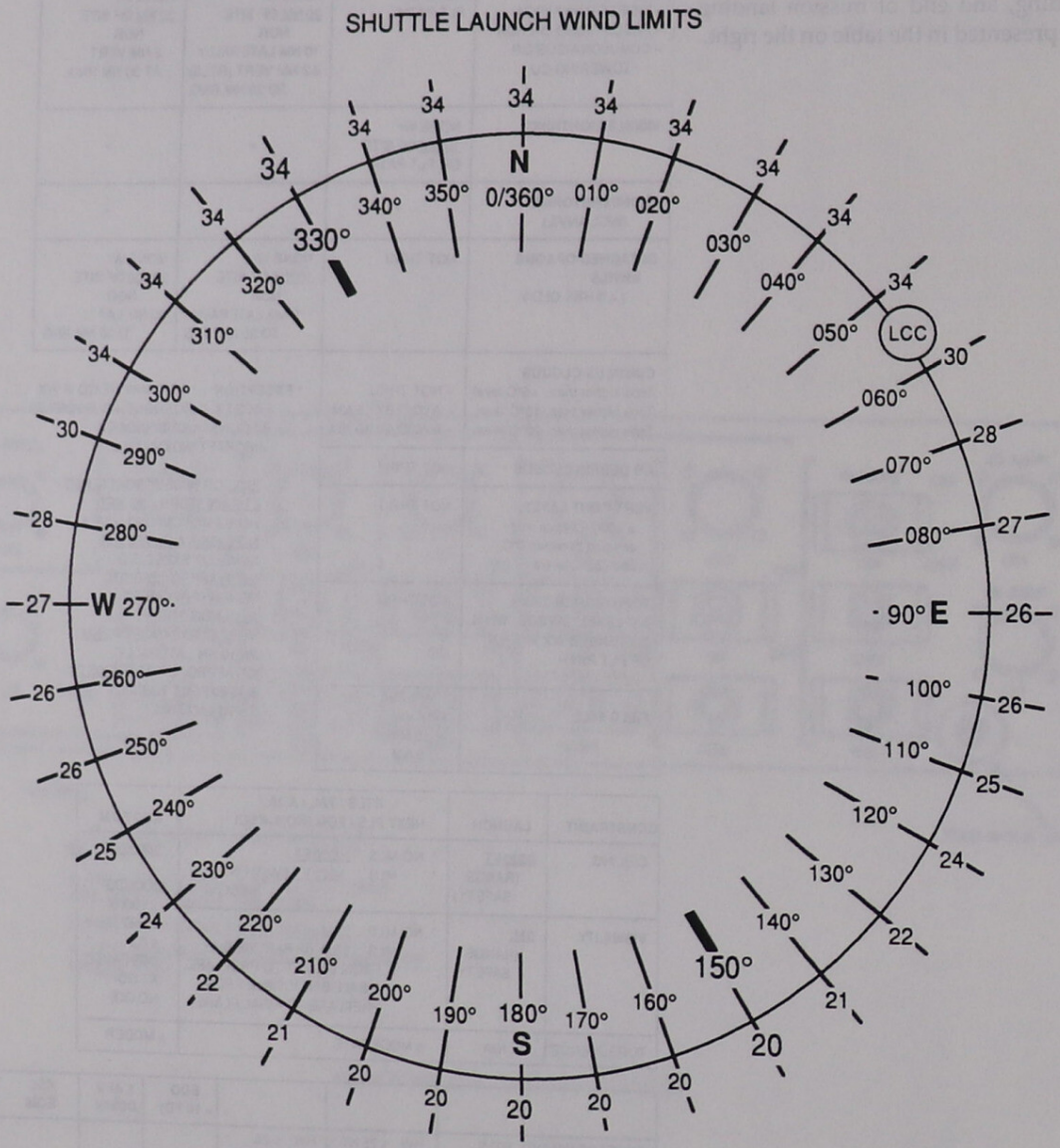

Launch Commit Constraint (60-ft winds at the pad)

+ = Time from EI
– = Time to touchdown
Min:Sec (approx)

+19:49 -12:25 V_{REL}=10:4 k fps	Orbiter enters transition phase where a linear drag profile is flown. Ranging is controlled by changes to the slope of drag profile.
+20:03 -12:11 V_{REL}=10 k fps	Speedbrake opens to 81 percent.
+21:15 -10:59 V_{REL} = 7.8 k fps	GPC opens landing gear hydraulic isolation valve 2.
+21:34 -10:40 V_{REL}=7.5 k fps	MCC has sufficient tracking for state vector update. This time can vary depending on ground track and tracking station performance.
+21:41 -10:33 V_{REL}=7.3 k fps	First TACAN acquisition.
+22:00 -10:14 V_{REL}=7 k fps	MCC and the crew compare TACAN data to NAV. If acceptable, MCC tells the crew to take TACAN. GNC 50 HORIZ SIT display is used to check TACAN errors and accept TACAN data for use by the NAV filter.
+22:41 -09:33 V_{REL}=6 k fps	PASS and BFS ENTRY TRAJ displays mode to GNC ENTRY TRAJ 5.
+23:30 -08:44 V_{REL} = M5	At approximately 115,000 ft the air data probes are deployed. CDR, PLT begin aileron and rudder trim monitoring. The crew can check for good probe deploy discretes by noting the absence of OFF flags on the AMI and AVVI tapes when the *AIR DATA* select switch is taken from NAV to LEFT then RIGHT. Air data information will not be valid until Mach is <3.4.
+24:24 -07:50 V_{REL} = M4	CDR, PLT begin H-dot monitoring at Mach 4, verifying descent rate < -500 fps.
+25:00 -07:14 V_{REL} = M3.4	Using GNC 51 OVRD, GNC 50 HORIZ SIT, and instrument tapes the crew checks air data is close to NAV. MCC will give a GO to take air data to NAV and/or GNC using Items 25 and 28 on GNC 50 HORIZ SIT.
+25:30 -06:44 V_{REL} = M2.6	PLT verifies APUs operating nominally. CDR, PLT activate HUDs.

Terminal Area Energy Management (TAEM)

+25:40 -06:34 V_{REL} = M2.5	PLT verifies air data incorporated into guidance. If not, the CDR must take CSS control to avoid a transient when air data is incorporated. Software transitions automatically to OPS 305. Guidance enters TAEM phase. PASS and BFS ENTRY TRAJ displays are replaced with VERT SIT 1 displays.
+25:55 -06:19 V_{REL} = M2.4	Fuselage vents open.

+ = Time from EI
– = Time to touchdown
Min:Sec (approx)

+26:50
-05:24
V_{REL} = M2.0 — Air data must be incorporated to Guidance and Control or the crew must stay within theta limits as shown on the VERT SIT display.

+27:53
-04:21
V_{REL} = M1.0 — RCS yaw jets are deactivated.

+28:17
-03:57
V_{REL} =M0.9 — CDR selects pitch, roll, and yaw (R/Y) CSS. Speed brake "commanded" versus "actual" position is verified (manual as required). PLT flight controller is verified ON. Nose wheel steering (NWS) is verified in GPC. PLT may take control for brief flying qualities evaluation prior to the HAC at the CDR's discretion.

+29:00
-03:14
V_{REL} = M0.7
Alt = 32 k ft — PLT verifies landing gear hydraulic isolation valves (2) are open. PASS and BFS VERT SIT displays transition to VERT SIT 2. PLT and CDR monitor PASS and BFS GNC 50 HORIZ SIT for Heading Alignment Cone (HAC) acquisition.

+30:00
-02:14
V_{REL} = 280 KEAS
Alt = 15 k ft — MS2 monitors MLS acquisition. TACAN residuals and ratios disappear from PASS GNC 50 HORIZ SIT upon MLS acquisition. CDR and PLT check PAPIs and HUD overlays on runway to evaluate NAV state. Declutter HUDs as required. Crew starts landing comm protocol.

Approach and Landing

+31:00
-1:14
V_{REL} = 300 KEAS (17°)/290 KEAS (19°)
Alt = 12 k ft — CDR and PLT monitor outer glide slope (OGS). At 10,000 ft crew verifies Approach and Landing guidance (flashing A/L on VERT SIT display), body flap to TRAIL, and LES visors down (KSC).

+31:20
-0:54
V_{REL} = 300/290 KEAS
Alt = 5 k ft — PLT compares radar ALT 1 vs. 2.

+31:30
-0:44
V_{REL} = 300/290 KEAS
Alt = 3 k ft — MS2 checks speedbrake command %.

+31:47
-0:27
V_{REL} = 300/290 KEAS
Alt = 2 k ft — CDR initiates preflare and transitions onto ball bar. PLT arms landing gear on call from CDR.

+31:59
-00:15
V_{REL} = 297/287 KEAS
Alt = 500 ft — MS2 checks speedbrake command %.

+32:00
-0:14
V_{REL} = 288/278 KEAS
Alt = 300 ft — Pilot deploys the landing gear on call from CDR. PLT/MS2 check gear indicates down.

+32:06
-0:08
V_{REL} = 261 KEAS
Alt = 30-80 ft — Final flare begins.

+32:14
-00:00
V_{REL} = 195 to 205 KEAS

Main gear touchdown (195 KEAS GW < 220,000 lb). CDR controls drift with rudder, maintains wings level with RHC. (If abort landing or rollout margin is reduced, deploy drag chute after safely on the runway). PLT manually backs up auto speedbrake to 100%. MS checks speedbrake opening. PLT checks HUD display for WOWLON (velocity vector disappears).

+32:22
V_{REL}=175 to 185 KEAS

CDR begins derotation at 2 to 3 degrees/sec. (175 KEAS concrete, 185 lakebed.) Ramp in the derotation command over a period of one second or more. PLT deploys drag chute on call from CDR.

+32:28
V_{REL} = 160 to 170 KEAS

Nose gear touchdown. PLT selects *SRB SEP* to *AUTO/MAN* or *ET SEP* to *MAN* and depresses the corresponding push button to backup automatic discretes for elevon load relief, NWS, and anti-skid circuitry. CDR maintains and/or corrects to centerline with NWS. MS checks elevons down and *NWS FAIL* and anti-skid fail lights off. MS calls "NWS FAIL" as necessary. (If no load relief, RHC full forward. If *NWS FAIL* light comes on, steer with rudder, RHC, and brakes. NWS2 may be available.)

+32:40

CDR checks ground speed and decel on HUD. CDR applies brakes at 140 knots ground speed (KGS) or 5 thousand feet runway remaining, whichever occurs first.

If 140 KGS is reached first, nominal braking profile is used This deceleration profile is typically 8 to 10 ft/sec^2. At 5 thousand feet of runway remaining, if groundspeed is greater than 140 knots, CDR applies maximum braking.

+32:50
V_{REL} = 60 KGS (+/- 20 kts)

PLT jettisons drag chute on CDR call.

+33:00
V_{REL} = 40 KGS

CDR reduces braking to less than 6 ft/sec^2 until wheels stop. At wheels stop, speedbrake is closed.

+33:10

Orbiter stops; CDR reports "wheels stop" to MCC. Crew transitions to Post Landing Procedures in the Entry Checklist.

safely execute an abort. Therefore, the Flight Director (FD) and Flight Dynamics Officer (FDO) are in voice communication with the Flight Control Officer (FCO) (formerly Range Safety Officer) during ascent. If the FCO detects a violation, the FDO and FD are immediately informed. The FD must determine whether the Shuttle is controllable or uncontrollable, and inform the FCO. As long as the FD declares the Shuttle controllable, the FCO takes no action to terminate the flight for trajectory deviations alone.

Range Safety Limit Avoidance

A deviation from nominal trajectory that is large enough to warrant FCO action must be corrected. First stage options are:

- State vector update
- Select CSS (after 90 seconds MET)
- Engage BFS.

In second stage, the options are:

- State vector update
- ATO selection
- Select CSS
- TAL or RTLS selection
- Engage BFS
- SSME manual cutoff. For loss of comm, FCO will send the ARM command as a cue for manual MECO.

Options are listed in order of priority. The priorities are established such that higher priority options preserve lower priority options and involve fewer new dangers to the crew and Shuttle when possible.

6.3 RETURN TO LAUNCH SITE

CONTENTS

Powered RTLS 6.3-2
Gliding RTLS 6.3-6

RTLS abort is designed to provide intact abort capability for a suborbital return of the Shuttle to the KSC Shuttle Landing Facility (SLF). An RTLS abort may be declared for an engine failure after liftoff and prior to NEGATIVE RETURN.

In order to reach the SLF, the Shuttle must reverse course and fly back the way it came. The turn to reverse course is called powered pitch around (PPA). Timing of this maneuver is critical. Engines must be shut down when the Shuttle has exactly enough speed and altitude to glide to the SLF runway. Also, for safe separation, the ET must have no more than 2% propellant remaining. Excessive propellant will slosh and could cause the ET and Shuttle to collide.

Selection of an RTLS abort is driven by several factors. Heat loading on the ET restricts RTLS selection to no earlier than 2 minutes and 30 seconds (2+30) after lift-off. For RTLS systems aborts, selection occurs at 3 minutes and 40 seconds. Abort overlap allows either an RTLS or a TAL to be selected. When RTLS/TAL overlap exists, TAL may be the preferred mode, since a second engine failure can be accepted much earlier and still make the runway. Also, the powered flight phase of RTLS is several minutes longer, causing more exposure to some types of MPS/SSME failures. An RTLS however, gets the orbiter back on the ground sooner and is not as thermally stressful as a TAL.

Once the decision is made to initiate an RTLS abort, MCC will direct the crew to "Abort RTLS." The FD will also turn on the *ABORT* light on panel F6, using a switch on his console, as a backup to the voice call. On-board, moving the *ABORT MODE* rotary switch to *RTLS* and depressing the Abort push button reconfigures GNC software to RTLS. As a backup, the crew can enter OPS 601 PRO on any PASS keyboard.

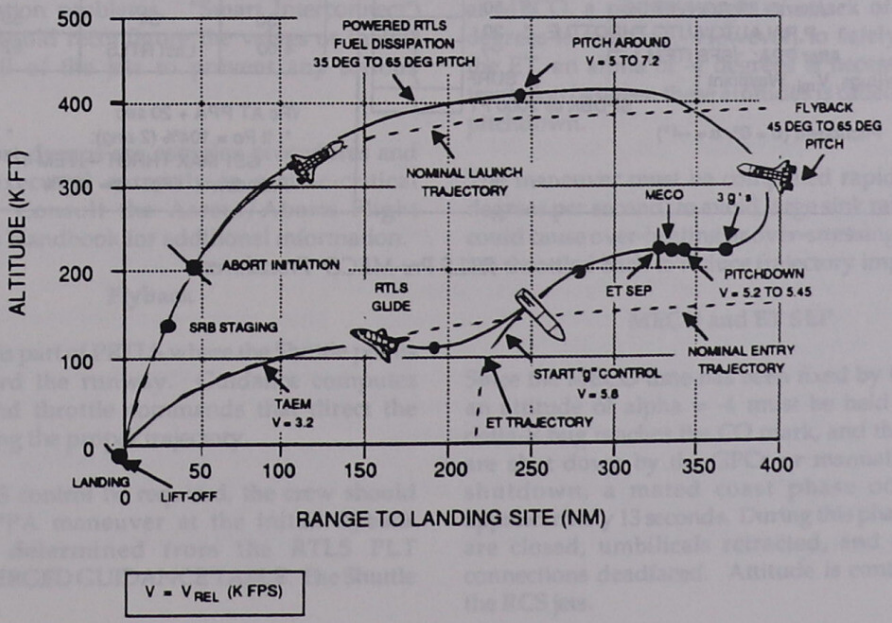

Typical RTLS Profile

Powered RTLS

Powered RTLS (PRTLS) begins when the abort is initiated and terminates at MECO. PRTLS guidance is designed to deliver the Shuttle to a MECO location at the proper altitude (I-load), flight path angle, and speed (function of range).

Guidance during PRTLS is closed loop. Computed MECO conditions are compared to desired MECO targets to determine a miss vector. This vector is then used to compute corrections in steering and throttle commands.

The crew monitors guidance using cue cards and CRT displays.

Should guidance not converge, the crew will see "GUID INHB" on the RTLS TRAJ display. MCC, in conjunction with the crew, will request CSS takeover if guidance does not converge within a reasonable time.

RTLS CDR

Abort initiated:
after 2:30 (2 eng)
at 3:40 (3 eng)

ABORT RTLS
• No Joy •
• OPS 601 PRO •

√GUIDANCE STATUS on RTLS TRAJ
Expect PPA when GUID % to go = 0
• If GUID 'INHIB': •
• √UNCONVERGED GUID TABLE •
• MAN PPA per PRPLT •
• REMAINING •
• After GUID CONVERGE: •
• P,R/Y AUTO/AUTO THROTTLE •
After PPA: √BFS ITEM 1 (*)
√Bugs, V_{rel}, Waypoint 1
Pitchdown (ß = 0°, α = –4°)

	WINDS
50K	/
40	/
30	/
20	/
7	/
SURF	/
SPDBK @ 3000 FT	/

RTLS PLT

If CSS: Man Throttle
Man MECO
√Pc = 104% (2 eng) / 69% (3 eng)
√DUMP

UNCONVERGED GUIDANCE TABLE

ENG OUT	OUTBOUND INITIAL θ	PITCHAROUND at % (10°/sec)	FLYBACK INITIAL θ
Liftoff	60°	44%	64°
:30	56°	47%	63°
1:00	57°	47%	63°
:30	56°	48%	62°
2:00	49°	51%	61°
:30	42°	51%	52°
3:00	38°	52%	50°
:30	34°	53%	48°
4:00	Last RTLS	52%	46°

√Pc AT PPA + 20 sec
• If Pc = 104% (2 eng): •
• G51 MAX THROT – ITEM 4 •
Pitchdown: √Pc → 65%

RTLS Pre-MECO Procedures

placing the *ARM/PRESS* switch in *OFF*. The entire dump can be terminated by executing a DUMP STOP on the OVERRIDE display (SPEC 51).

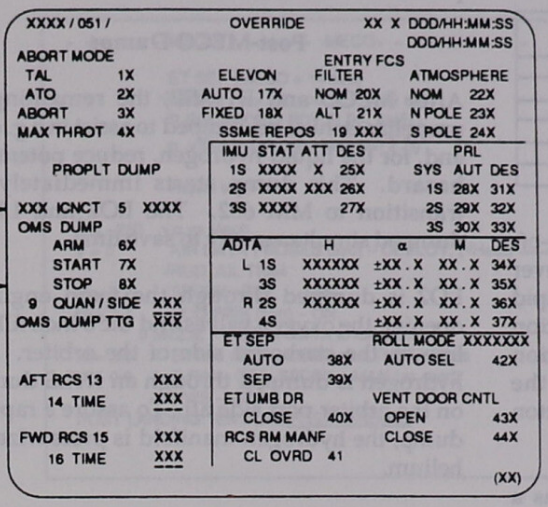

Dump time-to-go (TTG) counts down to zero during RTLS dumps. Interconnect can be inhibited or enabled by toggling ITEM 5.

Onboard failures, such as electrical or DPS problems, can cause serious OMS/RCS valve reconfiguration problems. "Smart Interconnect" Software should reconfigure the valves or inhibit some or all of the jets to prevent any serious problems.

Shuttle abort dumps are complex procedures and must be executed correctly in a time-critical situation. Consult the Ascent/Aborts Flight Procedures Handbook for additional information.

Flyback

This phase is part of PRTLS where the Shuttle points back toward the runway. Guidance computes steering and throttle commands that direct the Shuttle along the proper trajectory.

Should CSS control be required, the crew should stop the PPA maneuver at the initial flyback theta, as determined from the RTLS PLT UNCONVERGED GUIDANCE TABLE. The Shuttle pitch attitude must then be adjusted to fly back along or parallel to the guidelines on the RTLS TRAJ display.

CAUTION

Do not allow the predictors to fall below the lower guideline during flyback. Recovery from this low altitude condition may be impossible.

In the area of high q-bar, the guidelines are very important to avoid structural overload or ET SEP problems. As the predictors reach the left edge of the display, control theta to fly between the guidelines until the delta-R bug begins to move. When the bug reaches the appropriate pitch down mark (PD3 or PD), the Shuttle should be pitched down at 5 to 8 degrees per second to alpha = -4 degrees. At this point the crew should null beta. Simultaneously, the engines are manually throttled to 67 percent. These procedures are summarized on the RTLS CDR & PLT cue cards.

Powered Pitchdown

To satisfy altitude and flight path angle constraints at MECO, a positive angle of attack of about 30 degrees is required. However, to safely separate the ET, an alpha of -4 degrees is necessary. The transition between these attitudes is called powered pitchdown.

The maneuver must be completed rapidly (5 to 8 degrees per second) to avoid large sink rates, which could cause over-heating or over-stressing. Engines are throttled back to reduce trajectory impact.

MECO and ET SEP

Since the MECO time has been fixed by the GPCs, an attitude of alpha = -4 must be held until the delta-R bug reaches the CO mark, and the engines are shut down by the GPCs or manually. After shutdown, a mated coast phase occurs for approximately 13 seconds. During this phase, valves are closed, umbilicals retracted, and electrical connections deadfaced. Attitude is controlled by the RCS jets.

These limits prevent separation in an unsafe attitude which might cause Shuttle/ET collision. If the parameters are not within limits, an ET SEP inhibit

	DESIGN TARGET	DESIGN TOLERANCES	VEHICLE LIMITS, DEG/SEC
Roll rate, P	0°/sec	±1.25°/sec	5 > P > -5
Pitch rate, Q	-.25°/sec	±0.5°/sec	+ .25 > Q > -5
Yaw rate, R	0°/sec	±.05°/sec	+ .5 > R > -.5
Angle of attack, α	-4°	±2°	-2° > α > -89° *
Side slip angle, β	0	±2°	2° > β > -2° *
Roll angle Ø	0	±5°	None

* Limits, deg.

suspends the separation sequence until the out-of-limits is corrected or 6 seconds expire, whichever occurs first. The timer is necessary due to rapid q-bar buildup which makes a safe separation impossible regardless of attitude. Separation can be commanded manually using the ET *SEPARATION* switch and *ET SEP* push button on panel C3.

Immediately after ET SEP, the DAP performs a translation and pitch maneuver to fly the Shuttle away from the ET. This is accomplished by firing all of the Shuttle's downfiring jets. The combination of four forward and six aft downfiring jets results in a simultaneous translation and rotation, which moves the Shuttle up and away from the ET. Once the Shuttle achieves an alpha ≥ +10 degrees and time from ET SEP ≥ 10 seconds, the GPCs mode to MM 602 and the glide portion of RTLS (GRTLS) begins.

In CSS and manual throttle, a manual MECO must be performed using the *MAIN ENGINE SHUT DOWN* push buttons on panel C3. The alpha = -4 degree attitude must be maintained until ET SEP. This will require a small negative pitch rate due to H-dot increase, which causes alpha to become more positive. The -Z translation maneuver will occur automatically unless the CDR intervenes by moving the THC out of detent. If this is done, a manual -Z maneuver should be performed to ensure safe separation, and the pitch up manuever to alpha ≥ +10 degrees must also be manually performed. Generally, it is preferable to allow the DAP to perform these maneuvers automatically.

Gliding RTLS

The gliding portion of RTLS is very similar to the final portions of entry, which are discussed in detail in Section 7. Only significant differences are presented here.

Post-MECO Dumps

After MECO and ET SEP, the remaining MPS propellants must be dumped to assist in c.g. control and, for the liquid hydrogen, reduce potential fire hazard. This dump starts immediately upon transition to MM 602. The LO2 and LH2 are dumped simultaneously to save time.

LO2 is dumped through the main engines by opening the oxygen valves and the 8 inch fill/drain line on the starboard side of the orbiter. Liquid hydrogen is dumped through an RTLS dump line on the orbiter port side aft. To assure a rapid LH2 dump, the hydrogen manifold is pressurized with helium.

The onboard software also allows a post-MECO dump of RCS propellant through the RCS jets to satisfy maximum tank landing weight constraints and cg control.

Guidance

During GRTLS, guidance manages the Shuttle's energy state to arrive at the runway with sufficient energy to complete a safe landing. GRTLS guidance is divided into five phases:

- Alpha Recovery
- N_z Hold
- Alpha Transition
- S-Turn
- GRTLS TAEM.

These phases provide for transition from a ballistic trajectory, through hypersonic gliding flight, to an energy management scheme designed to make the runway.

The crew monitors guidance or manually controls the Shuttle using cue cards and CRT displays.

Alpha Recovery

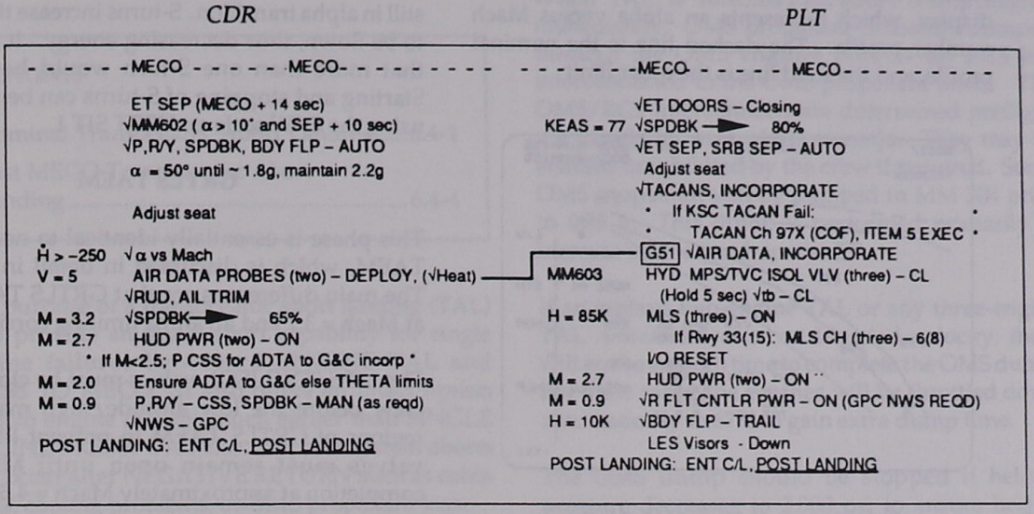

RTLS Post-MECO Procedures

Alpha Recovery

Pullout from the ET SEP attitude must be accomplished quickly before aerodynamic forces build up to uncontrollable levels. To accomplish this, the Shuttle maneuvers to a high (alpha = 50 degrees) angle of attack using both RCS jets and aerodynamic controls.

Increasing dynamic pressure caused by the Shuttle falling into the atmosphere causes more lift to be generated by the wings. The resultant lift produces a Z–axis acceleration (N_z). At about 1.65 g, the DAP starts to reduce alpha to hold an N_z of 2.2 g's. The Shuttle N_z limit for RTLS is 2.2 – 2.5 g's (based on the vehicle's weight).

Roll jets are secured at q-bar = 10. Pitch jets are secured at q-bar = 40. Yaw jets are required until Mach = 1.0. When q-bar = 20, the speed brake is ramped open to about 80 percent to enhance lateral stability by allowing the elevons to be trimmed down. Below Mach = 0.95, the speed brake position is modulated by GRTLS TAEM guidance.

N_z Hold

Alpha is smoothly decreased to maintain the 2.2 g limit until H-dot is greater than -320 ft/sec. Excessive g-loading could cause structural damage and also dissipate excessive energy. The ADI pitch error needle displays N_z error during this phase.

Alpha Transition

Upon termination of N_z hold, alpha is changed to conform to a profile that is a function of Mach number. This profile provides the best vehicle control until active ranging begins in GRTLS TAEM. Also, a bank maneuver is performed, either to null any heading errors to the heading alignment cone (HAC) tangency point, or to dissipate excess energy by turning (S-turn) away from the HAC. The maximum bank angle is 45 degrees. The ADI pitch error needle displays alpha error during alpha transition phase. Guidance can downmode to the straight-in or Minimum Entry Point (MEP) HAC if required due to low energy.

To fly the alpha transition in CSS, the display in the upper left corner of VERT SIT 1 is used. The Shuttle symbol initially appears in this portion of the display, which represents an alpha versus Mach number profile. The dashed line is the nominal profile, and the solid line is the q-bar limit

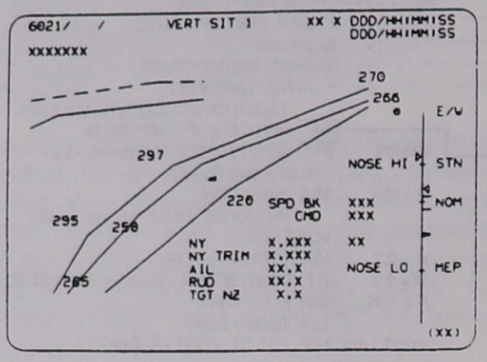

GRTLS Vertical Situation 1 Display

The ENTRY ALPHA cue card can also be used for alpha transition. Since there are no procedures to initiate S-turns manually, ranging is accomplished by exercising the OTT options described in Section 7. The MCC can also request a GCA and accomplish S-turns by asking the crew to fly appropriate headings.

S-Turn

An S-turn can be initiated in GRTLS TAEM or while still in alpha transition. S-turns increase the distance to be flown, thus decreasing energy. It is possible that more than one S-turn would be required. Starting and stopping of S-turns can be monitored using the E/W scale on VERT SIT 1.

GRTLS TAEM

This phase is essentially identical to normal entry TAEM, which is discussed in detail in Section 7. The main differences are that GRTLS TAEM starts at Mach = 3.2 and an alpha limiting corridor exists.

The MPS/TVC ISOL valves must be closed by the crew before the low altitude/high maneuvering regions of GRTLS TAEM to prevent PRL. These valves must remain open until MPS dump completion at approximately Mach = 4.5.

To conserve power during ascent, the MLS LRUs are powered off. They must be turned on and communication established (I/O RESET) at about 85 k ft during GRTLS.

Post landing procedures are the same as nominal end of mission, except that the hydraulic load test is not performed.

6.4 TRANSOCEANIC ABORT LANDING

CONTENTS

Nominal Transoceanic Abort Landing 6.4-1
Post MECO Transoceanic Abort Landing 6.4-4

The purpose of a transoceanic abort landing (TAL) is to provide an intact abort capability for single engine failures between 2 ENGINE TAL and PRESS TO MECO. It also offers an intact option for two engine failures much earlier than SINGLE ENGINE PRESS. TAL also supports system aborts that occur after NEGATIVE RETURN such as cabin leaks, cooling problems, or OMS propellant loss.

During a TAL abort, the Shuttle flies an entry trajectory across the ocean to land on a mission-specific runway. Landing occurs approximately 35 minutes after launch. Powered flight guidance has the capability to target ten different landing sites, which are selected based on runway length, weather, and orbital inclination. Landing sites near the nominal ascent ground-track are more efficient since crossranging requirements are reduced. Typically, only three TAL sites are supported for possible use on each mission.

Nominal Transoceanic Abort Landing

TAL is selected prior to MECO by placing the *ABORT MODE* rotary switch on panel F6 in *TAL* and pressing the *ABORT* push button. Item entries on the OVERRIDE display (SPEC 51) may also be used to select TAL should the *ABORT MODE* switch fail. The crew should note the title of the ASCENT TRAJ display changes to TAL TRAJ. The Shuttle indicator (triangle) and predictors should follow the lower trajectory line on BFS TAL TRAJ 2.

Abort Dump

When TAL is selected, an abort dump begins immediately. OMS propellant is usually dumped through the OMS engines plus 24 aft RCS jets interconnected to the OMS propellant tanks. The OMS/RCS interconnects are determined preflight via I-loads for each abort scenario. They may be enabled or inhibited by the crew if required. Some OMS propellant will be dumped in MM 304 prior to 0.05 g. This dump is performed primarily to increase separation from the ET.

If an inplane two-engine TAL or any three-engine TAL is initiated after an I-loaded velocity, there will not be enough time to complete the OMS dump. For these cases, the engines will be throttled down automatically to 67% to gain extra dump time.

The OMS dump should be stopped if helium pressure decreases to 2,000 psi to ensure helium will not be ingested into the RCS lines.

Guidance

At abort selection, TAL guidance begins steering the Shuttle toward the selected landing site plane. Variable I-Y steering is used to bring crossrange to the TAL site within acceptable limits (500 nm) at MECO.

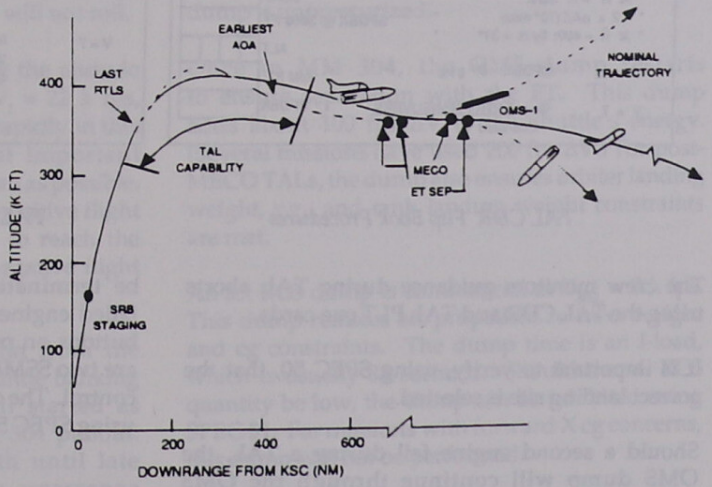

TAL versus Nominal Ascent

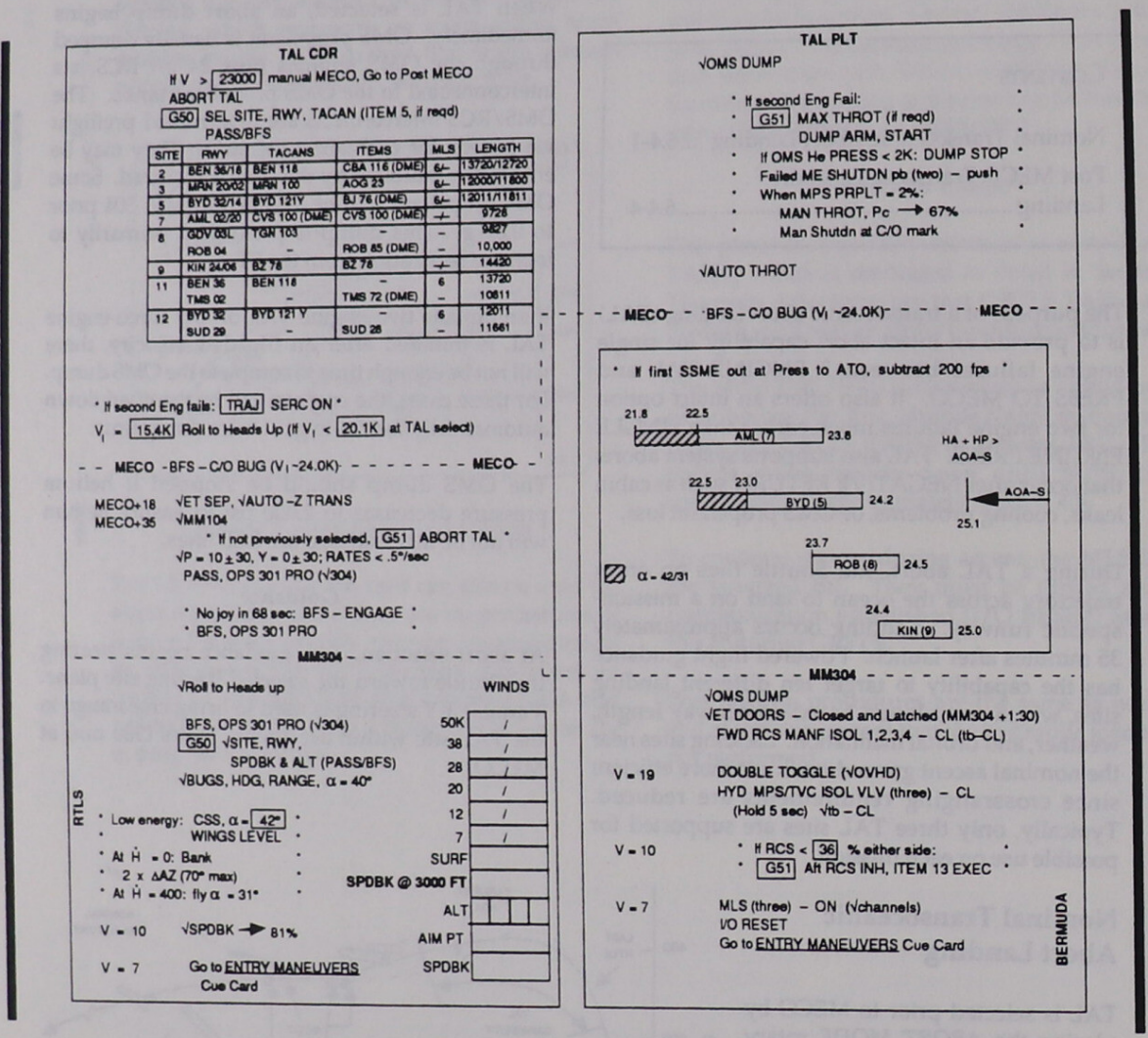

TAL CDR Flip Book Procedures

TAL PLT Flip Book Procedures

The crew monitors guidance during TAL aborts using the TAL CDR and TAL PLT cue cards.

It is important to verify, using SPEC 50, that the correct landing site is selected.

Should a second engine fail during a TAL, the OMS dump will continue through the OMS engines, but the dump through the RCS will be terminated. The crew must push the two failed engine *MAIN ENGINE SHUT DOWN* push buttons on panel C3 to notify guidance that there are two SSMEs out and establish single engine roll control. The contingency dump must also be started using SPEC 51.

CAUTION

Ensuring guidance recognizes two engines have failed is time-critical to enable single-engine roll control. Loss of control is likely in powered flight on one SSME without single-engine roll control.

Trajectory droop, along with guidance convergence and main engine performance, are the deciding factors in defining the earliest single engine TAL capability. Drooping below the 265 k ft limit will result in either an explosion due to ET heating or a loss of control. If two engines fail near the DROOP 109 boundary, the crew should throttle up to 109 percent. It will be necessary to pitch up to 60 degrees on the ADI if guidance is unconverged until the thrust-to-weight ratio improves. This will minimize sink rate and enable the Shuttle to remain above 265 k ft. When thrust-to-weight is greater than 1, the Shuttle will begin to climb and accelerate downrange.

To lessen ET heating effects and to put the Shuttle in the correct entry attitude at ET SEP, a roll to heads up is performed at an I-loaded reference velocity greater than 15,400 fps. If TAL is selected after this velocity, but before a velocity of approximately 20,200 fps, guidance will roll the Shuttle immediately. The roll is performed at about 5 degrees per second. After 20,200 fps until last pre-MECO TAL, the Shuttle will not roll.

After the roll, it is important to have the altitude and altitude rate under control by V_I = 22 k fps, because the Shuttle accelerates very rapidly in this region. Altitude rate is the most important parameter, and should be as close to zero as possible. It is far better to have a zero or small positive flight path angle and a low altitude than to reach the target altitude exactly with a large negative flight path angle.

TAL MECO occurs about 2,800 nm from the landing site. For inplane sites, very little banking for azimuth control is necessary if started as soon as possible after the first MM 304 pullout. Waiting to null out delta azimuth until late in the entry can severely reduce crossrange capability.

The MCC will recommend the best approach to the field. An overhead approach is preferred.

OPS Transition

TAL is a unique abort in that it requires transition to OPS 3 after MECO and ET SEP, which is time-critical. The PASS computers obtain this software from upper memory.

CAUTION

To prevent loss of control, engage BFS and key in OPS 301 PRO if the PASS does not mode into OPS 3 within 68 seconds.

About 3 minutes are available to complete the OPS transition between ET SEP and the start of dynamic pressure buildup depending on the altitude, flight path angle, and velocity at MECO. This period is critical. The Shuttle is entering the atmosphere, and the TRANS DAP is not designed for atmospheric flight. All procedures must be completed quickly and accurately. Ignore all systems problems unless they are extremely critical until correct entry flight control is available.

Post-MECO Dumps

An MPS dump similar to the RTLS dump begins automatically at MM 304. The TAL LH2 MPS dump is unpressurized.

Once in MM 304, the OMS dump restarts to ensure separation with the ET. This dump adds about 100 fps ΔV to the Shuttle's energy. (Several missions have used 200 fps ΔV.) For post-MECO TALs, the dump also ensures orbiter landing weight, c.g., and tank landing weight constraints are met.

An aft RCS dump is commenced at V_{REL} = 8 k fps. This dump reduces aft propellant to meet weight and cg constraints. The dump time is an I-load, which is usually 88 seconds. Should the aft RCS quantity be low, the dump can be inhibited using SPEC 51. For missions with forward X cg concerns, this dump will not be performed.

Entry

MM 304 is very similar to a normal end-of-mission entry which is discussed in detail in Section 7.

The shortfield speed brake option is automatically selected for TAL. Should nominal speed brake be desired, an ITEM 39 (S/B) on SPEC 50 will be required.

Post MECO Transoceanic Abort Landing

An intact abort capability is available between V_I ~ 21.5 to 23 k fps (mission specific) and AOA capability by using the TAL entry software. The abort is declared after MECO. For late systems problems after last pre-MECO TAL, the crew performs a manual MECO at the specified velocity using the *MAIN ENGINE SHUT DOWN* push buttons.

NOTE

For high inclination missions, a crew-initiated (MAN MECO) post-MECO TAL is not an option. This is because, for high inclination missions, the post-MECO TAL landing sites are ELSs, and the program has decided to try for an AOA rather than land at an ELS.

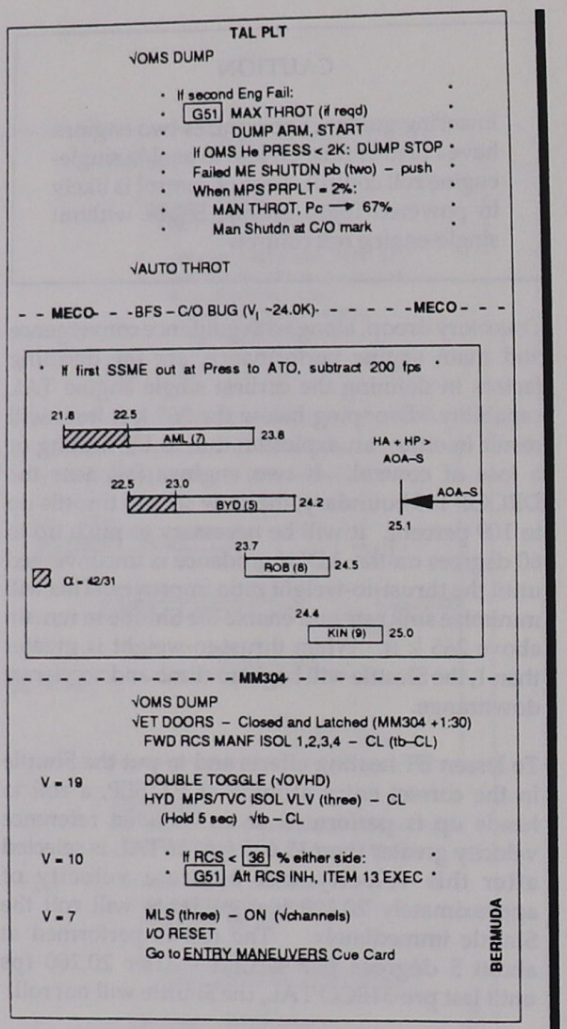

TAL PLT Flip Book Procedures

6.7 CONTINGENCY ABORT

CONTENTS

Powered Flight 6.7-1
ET Separation 6.7-2
Entry 6.7-2

Contingency aborts are performed when the orbiter's thrust to weight ratio is less than that needed to achieve a safe orbit or an intact abort. The purpose of a contingency abort is to guide the orbiter to a safe gliding flight condition where bailout or a landing can be performed. Presently, two engine out contingency aborts are automated for both powered flight and the entry pullout. The three engine out contingency aborts must be flown manually through external tank sepration (ET SEP) and alpha recovery attitude, at which time they can be completed in auto. Contingency abort procedures are very dynamic flight modes that take the orbiter to the limits of its structural and flight control envelope. A great deal of training is required to properly execute a contingency abort. For certain cases, especially high altitude and low velocity, the resultant entry may not be survivable.

Contingency abort procedures are outlined on the contingency abort cue cards. These procedures are designed to protect the orbiter from exceeding certain limits:

- c.g. - aft of 1,115 in
- q-bar - 800 psf
- N_z - 3.5 g
- Thermal
- ET SEP - q-bar < 2 psf -4°/sec sep
  q-bar > 2 psf α = -4° sep.

The procedures are separated into CONTINGENCY ABORT and RTLS CONTINGENCY cue cards. They are further subdivided into event timelines and color-coded for easier use. For detailed procedures, the Ascent/Aborts Flight Procedures Handbook or the FCOD OI-21 Contingency Aborts Manual should be used. This section describes the basic information applicable to all contingency aborts, and is divided into three major phases: Powered Flight, ET Separation, and Entry.

The PASS is moded to OPS 6 (RTLS) during most contingency abort procedures. OPS 6 provides the OMS/RCS dump capability and entry flight control needed for contingency abort. The BFS does not support contingency aborts since single engine roll control is not available in BFS.

Powered Flight

If any thrust is available, the orbiter is maneuvered to minimize entry sink rate and rolled to a heads-up attitude.

Should two SSMEs fail, the remaining thrust is used to reduce entry sink rate. To do this, the thrust vector is directed to lower the orbiter's altitude and bring the flight path angle to zero before ET separation.

To accomplish this objective, different procedures are used, depending on when the engine failure occurs. At an inertial velocity between 7,000 fps and droop, a vertical thrust vector is used. For earlier failures, when the orbiter has a large positive H-dot, the thrust vector is pointed toward the horizon to prevent further lofting. This increases velocity and helps reduce severity of the entry pullout. However, it may increase heat loads. At inertial velocities greater than DROOP, the orbiter may have enough energy to continue to a downrange site.

If two engines fail prior to the droop boundary while the orbiter is within a pre-determined velocity envelope, yaw steering of 45 degrees can be performed for an East Coast Abort Landing (ECAL) or Bermuda (BDA) landing. High inclination missions would utilize ECAL procedures, while low inclination missions use BDA procedures. ECAL and BDA landing sites are available during certain portions of ascent, should a contingency abort be required. The ECAL landing sites are Myrtle Beach Air Force Base (AFB), Marine Corps Air Station Cherry Point, Naval Air Station Oceana, Dover AFB, Otis ANGB, and Pease AFB. These sites are available on missions with inclinations greater than 50 degrees. On missions with inclinations less than 40 degrees Bermuda is available. For due east missions, there is no capability to land at Bermuda unless the vehicle is already on a TAL abort to Ben Guerir or Moron. The yaw steering that occurs on these TALs provides the plane change required to reduce the entry cross range to Bermuda. The velocity

and BDA are mission dependent but generally range from 9k fps to 12k fps for BDA and 6k fps to 12k fps for ECAL. Yaw steering is open loop. There is no range-velocity (R-V) target line being attempted, just a reduction in cross range to the site. Yaw steering generally increases entry pullout loads by approximately 0.1 g.

Powered flight is also used to dump OMS propellant. This reduces weight and moves the c.g. forward. Reducing weight decreases the peak q-bar during pullout, while more forward c.g.'s reduce elevon and body flap deflection required for pullout. This helps prevent aerosurface saturation and possible actuator stall.

The heads up roll orients the bottom of the orbiter/ET into the velocity vector, which is the proper attitude for ET SEP, and entry.

ET Separation

Safe ET SEP is a function of alpha and q-bar. As the Shuttle descends during powered flight, q-bar increases and ET SEP must be performed prior to 10 psf.

At pressures above 10 psf, the ET may recontact the orbiter. Between 2 and 10 psf, the Shuttle must be at a small negative (about -4 degrees) angle of attack to ensure successful separation. This is the same technique used for RTLS ET SEP. At less than 2 psf, larger angles of attack are acceptable, but the -Z translation must be increased to prevent recontact.

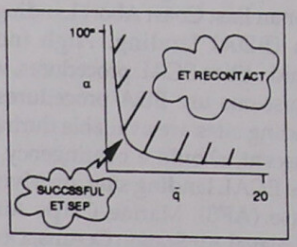

High sink rates during many contingency abort scenarios result in rapid entry into the atmosphere and therefore a rapid q-bar buildup. In most of these cases, there is not enough time for an RTLS-type PPD and a normal mated coast separation sequence. A fast SEP is performed instead, which takes about 5 seconds. This fast SEP can be performed in one of three ways, depending on the vehicle attitude and q-bar at the time SEP is required. The first is the immediate fast SEP where no time is available to maneuver to a better attitude. The second is an alpha -4 fast SEP where there is time to achieve the attitude before q-bar exceeds 10 psf. The third is rate fast SEP where the separation is commanded while at a high angle of attack and a -4 degrees per second pitch rate. This technique allows separation to be delayed as long as possible and extends the time available for powered flight. It is initiated when EAS is greater than 7 and increasing (q-bar of about 0.7 psf). The ET SEP occurs prior to the 2 psf limit for high alpha separations. Since the Shuttle is near the alpha required for entry, the -4 degrees per second pitch rate needs only to be slowed as the proper alpha is reached. Maneuvering the Shuttle to a negative alpha for separation would require a second pitch maneuver to recover back to the entry alpha.

The pitch rate used for fast SEP is a compromise between a rapid pitchdown and the need to maintain control and slow the rate after SEP.

CAUTION

Simulations have shown that pitch rates greater than -6 deg/sec may result in loss of control.

The GPCs will automatically mode to MM 602 10 seconds after structural separation, provided alpha is greater than 10 degrees. After MM 602 transition, V_{REL} is displayed as Mach number on the AMI.

Entry

The powered flight and ET SEP portions of contingency aborts are designed to deliver the Shuttle at acceptable entry conditions without loss of control. Entry phases include:

- Alpha recovery
- N_z hold/pullout
- Alpha-Mach
- ECAL/BDA landing or bailout

In general, reducing ET SEP altitude and H-dot will improve entry conditions. Any errors occurring in powered flight or ET SEP will result in more stressful entry.

Alpha Recovery

Upon ET SEP completion, the orbiter is maneuvered to an alpha that maximizes lift and drag in a manner similar to GRTLS. The appropriate alpha is a function of Mach number and trim but lies the range of 20 to 58 degrees.

In some cases, alpha recovery is accomplished by stopping the -4 degrees per second pitch rate at the appropriate alpha. Since the alpha tape on the AMI pegs at 60 degrees, a maximum alpha of 58 degrees is used.

The body flap and speed brake are set during the alpha recovery phase before the critical pullout begins. The speed brake and body flap affect hinge moment loads on the elevons. A body flap versus mach schedule is developed for each mission as a function of vehicle weight, cg and OMS load. The speed brake is left in auto unless the N_z hold is entered below mach three. If below mach three, the crew opens the speed brake to 65%.

N_z Hold/Pullout

Shuttle H-dot will continue to increase throughout alpha recovery until sufficient q-bar and the resultant lift are developed for equilibrium flight. As lift increases, N_z will also increase. When N_z = 1.0, the Shuttle is developing enough lift to support its own weight, and H-dot will begin to decrease. The maximum negative H-dot is a good indicator of the severity of the entry. It is also used to calculate N_z required for pullout, using the equation:

$$N_z \text{ target} = \text{-H-dot}/1000 + 0.65 \text{ at } N_z = 1.0.$$

This N_z target is calculated by the GPCs and displayed on VERT SIT. The N_z hold/pullout is flown in AUTO, which significantly increases chances of survival. N_z target is a compromise between structural limits and q-bar limits. The structural load factor limit is actually a function of orbiter weight and wing root bending moment, but the software currently will not target more than 4.0 g. Simulator tests show that q-bar over 800 psf often leads to loss of control. However, this limit is scenario and mission dependent.

Load factor continues to increase until within approximately 0.4 g of N_z target. A pitchdown is then initiated to hold N_z target. The AMI acceleration tape is scaled in g's in MM 602, with 10 = 1 g, 20 = 2 g, and 30 = 3 g. As alpha is reduced while holding a constant g, q-bar will continue to increase until the sink rate is stopped. When H-dot is positive, pullout is complete, and g load is reduced. The crew can then mode the body flap to AUTO and monitor the alpha/mach schedule.

The N_z hold/pullout is the most critical phase of contingency aborts. Even if flown perfectly, some profiles will exceed structural, temperature, or flight control limits. Target N_z must be maintained tightly.

Most regions of the contingency abort profile have adequate flight control margins. However, there are some regions where even flying the maximum structural load factor limit during N_z hold will not prevent q-bar from exceeding 800 psf, possibly stalling the elevons, and losing control.

Loss of control results from a number of factors. In some cases, aerodynamic moments are so large that the orbiter rates cannot be controlled, even at maximum aerosurface deflection and with maximum jet firings. Additionally, in some cases the aerosurface loads are so large that the actuators cannot drive the surfaces. This is called actuator stall. Flight control gains were designed for a maximum q-bar of 375 psf. Sometimes these control problems can be avoided by flying a higher g-level during pullout, but the best technique is to follow the contingency abort procedures explicitly and engage the AUTO system where it has the capability to execute critical maneuvers.

Alpha-Mach

The crew monitors the alpha-mach phase by making sure the vehicle is at the proper alpha for the Mach number. This information is in a table on the Contingency Abort Entry cue card.

ECAL/BDA Landing

When attempting to land at an ECAL or BDA site, the crew takes over manually once through the entry pullout. Manual control is used to take out the

often large crossrange while flying the low energy procedures to reach the landing site. If nominal energy is achieved, the crew can return to auto control. If the low energy procedures do not get the vehicle to the landing site, then the crew has the option to bailout.

Bailout

An attitude hold mode in MM 603 allows the crew to stabilize the orbiter in gliding flight using the AUTO DAP functions. It is activated when Mach is less than 1.0, the *ABORT MODE* rotary switch is placed to *ATO*, and the *ABORT* push button is pressed.

Guidance snapshots current airspeed and roll angle and attempts to hold both constant. The crew should stabilize the orbiterat 185 to 195 KEAS and zero roll angle, then abort ATO and select *PITCH* and *ROLL/YAW AUTO*. If a new airspeed or roll attitude is desired, select CSS, fly to the appropriate parameters, and reselect AUTO.

Once attitude hold is established, a middeck MS depressurizes the crew module using the emergency vent handle. When cabin pressure is equalized, the hatch is jettisoned, the escape pole is extended, and bailout is commenced.

- Pc goes to zero
- Change in acceleration
- Guidance transient
- Reduced helium flow. (Helium flow increases during shutdown and then decreases to zero post shutdown).
- MCC call

The most important step following an engine failure is to ensure the GPCs know that an engine has failed. If the SSME FAIL message has not been annunciated, the crew must push the appropriate *MAIN ENGINE SHUT DOWN* push button to mode guidance. Failure of a second engine with limits inhibited requires shutdown buttons to be pushed to enable single engine roll control.

For any SSME failure, the PLT places the *AC BUS SENSOR* switches to the off position. This protects against other electrical failures causing an engine shutdown. AC Bus sensors are also taken off for AC power problems during ascent and entry, and for loss of main engine controller redundancy.

Helium Leak

- *MASTER ALARM*
- MPS HE message
- HE dP/dT > 20
- Down arrow on BFS GNC SYS SUMM 1
- HE tank pressure lower than other engine tanks
- HE Reg A↑ or B↑ (may be present)

Early in ascent, a cue card isolation procedure is used to secure one He leg at a time. If the leak is isolated, the bad valve is kept closed and MCC evaluates He remaining to determine if a safe shutdown will occur at MECO. It may be necessary to interconnect the pneumatic helium system. Failures later in ascent may require a shutdown using the shut down push button only if there is insufficient time for leak isolation. A push button shutdown requires less Helium than a pneumatic shutdown, since hydraulic pressure is used to actuate some SSME valves.

If a leak cannot be isolated, helium from a previously failed engine may be used as a source of additional helium to prevent a second engine failure. The engine will fail when helium is depleted. Limits must be enabled to ensure a safe shutdown. An early crew-initiated shutdown could also be required, depending on leak rate. MCC will analyze leak rate and recommend action if comm is available. Without comm, the crew uses the procedures on the MPS cue card.

Data Path Failure

- Engine Pc goes to zero
- *MASTER ALARM*
- SSME DATA message
- Yellow *MAIN ENGINE STATUS* light on panel F7
- Acceleration cues
- Helium flow
- MCC call

The onboard software automatically inhibits limits for a data path failure. If the engine is still running, the crew re-enables limits and continues monitoring ascent. If the engine has failed, the shutdown push button must be pressed to mode guidance for the engine failure.

Stuck Throttle

- *MASTER ALARM*
- Yellow *MAIN ENGINE STATUS* light on panel F7
- Static engine Pc
- SSME CMD (HYD, ELEC) message
- MCC call

SSME Pc is frozen in its last position for command path failure, loss of a hydraulic system, computer or sensor failures, and drifting valves. Procedures

for these malfunctions are found on the MPS CMD/HYD/ELEC cue card. Engines with command path failures must always be shut down manually using the MPS controller ac power switches. After shutdown, the shutdown push button is depressed to set discretes that allow software to recognize an engine failure. This is called an AC/PB shutdown. A single engine with a hydraulic or electric lockup will be shut down only if first stage performance is low, and three engines are running.

For single stuck throttle, shutdown time varies for nominal ascent, TAL, and RTLS. The engine is usually shut down shortly before normal MECO to preserve the maximum amount of performance.

If two SSME throttles are stuck due to command path failures, they are shut down one at a time near MECO. The MPS *ENGINE POWER* switches (*AC 1, 2, and 3*) must be used for shutdown, followed by the *MAIN ENGINE SHUT DOWN* push buttons (AC/PB shutdown).

Two hydraulic or two electric lockups will cause the orbiter to exceed three g's in the latter part of ascent. One engine is shut down per the cue card or MCC call to prevent vehicle overstress.

Mixed failures require one engine to be shut down near MECO according to the following failure priority:

1. Command
2. Hydraulic
3. Electric.

ET SEP Inhibit

- *MAIN ENGINE STATUS* lights remain on panel F7
- *SM ALERT*
- SEP INH message

This malfunction can be caused by excessive rates or a feedline disconnect failure. If rates are the problem, the crew damps them manually and allows the automatic separation sequence to occur. Feedline disconnect failures require the crew to close the MPS manifold repress valves to prevent loss of Helium, then execute a manual separation 6 minutes after MECO. For performance problems or aborts, a manual separation may be performed immediately.

***ET SEP* Switch**

- *SM ALERT*
- ET SEP MAN message
- ET SEP AUTO message (RTLS)

The software automatically defaults to a crew-initiated ET SEP if this switch fails to *MANUAL*, except for RTLS aborts where the default is *AUTO*. The switch is overridden using an item number on SPEC 51.

MECO Confirm

- No auto ET SEP
- Glareshield DAP lights remain on
- Panel C3 *ORBITAL DAP* lights remain off
- No software mode transition

A failure of the software to confirm MECO prevents an auto ET SEP. The crew can set a MECO confirm flag in the software by simultaneously pushing all three engine shutdown push buttons, providing no other failures have occurred. The MECO confirm flag may also be set by manually moding the software via an OPS 104 PRO. For multiple failures, there are additional methods to set MECO confirm.

Orbital Maneuvering System/ Reaction Control System

Failures in the OMS/RCS are handled using procedures tailored for the current flight phase. For ascent, achieving a safe orbit while maintaining deorbit propellant margins is the primary concern. On orbit, maintaining at least two deorbit capabilities drive the procedures. During entry, vehicle control is paramount.

Leaks

- Helium pressure decrease, propellant quantity decrease
- MCC call
- *MASTER ALARM*

Automatic program test inputs (PTIs) may be included as part of entry trajectories to obtain flight data from which aerodynamic coefficients can be extracted postflight. These data are used to further define the aerodynamic characteristics of the Shuttle, help expand the operational envelope, and reduce aero data base uncertainty. PTIs are executed automatically by the entry DAP and are input into the flight controls downstream of gains and filters so that a known control deflection or jet firing can be made. The crew enables PTIs on SPEC 50, and flight control must be in AUTO. Execution of PTIs is monitored on the SPI and GNC SYS SUMM 1 for control deflections, by the RCS activity lights for jet firings, and by data on the PTI Monitor Cue Card. Normal vehicle performance parameters must be continuously monitored also to ensure there is no degradation introduced due to PTIs.

Takeover

The entry trajectory is normally flown in AUTO until subsonic, when the crew downmodes to CSS. Upon moding the GPCs to MM 304, dedicated displays and ENTRY TRAJ CRT displays become available. DAP controls for the AEROJET DAP are located on each eyebrow panel. Manual takeover can be executed using the push buttons or by moving the RHC more than 7 degrees out of detent.

NOTE

During entry, downmoding to CSS is separate for the pitch axis and roll/yaw axes. It is possible to be in CSS pitch control and AUTO roll/yaw or vice versa.

PTI WINDOW (OPEN - CLOSE)	% RCS EACH SIDE*	PULSE SUMMARY	
$\bar{q}$ = 1	TBD	First RCS quantity check	
V = 15-13K		PTI 1 - R_J $R\Leftarrow_A$ R_A P_E $P\Uparrow_E$	
V = 12.6K		Prior to V = 12.5K	PLT: BF - MAN
V = 12.5-11K		PTI 2 - R_J $R\Leftarrow_A$ P_E $P\Uparrow_E$	
		PTI 2 complete, perform Body Flap sweep if: before (after) first RR and $\lvert \Delta Az \rvert < 5$ (11) or decreasing	
		CDR	PLT
		PTI 1 complete R/Y - CSS Zero err needles R/Y - AUTO Enable PTIs - (G50, ITEM 1 EXEC)	BF - UP (3 sec) - DN (3 sec) - AUTO
V = 10.5K	TBD	Second RCS quantity check	
V = 10-8.5K		PTI 3 - R_J $R\Leftarrow_A$ $P\Uparrow_E$ P_E	
V = 7.5-6K		PTI 4 - $R\Leftarrow_R$ $R\Leftarrow_A$ R_J P_E $P\Uparrow_E$	
V = 5.5K	TBD	Third RCS quantity check	
V = 5-3.5K		PTI 5 - R_J $R\Leftarrow_A$ $R\Leftarrow_R$ P_E $P\Uparrow_E$	
V = 3-1.5K		PTI 6 - R_A $R\Leftarrow_R$ R_R P_E $P\Uparrow_E$	

* If % RCS on either side is lower than shown:
1. Inhibit PT is (SPEC 50 ITEM 1 EXEC)
2. At next check, if % RCS on each side is shown above:
Enable PTIs (SPEC 50, ITEM 1 EXEC)

NOTE

MA – 'FCS SAT POS' possible during PTIs

PTI Monitor Cue Card

Drag Error

The flight rule criterion for CSS takeover for drag error is actual drag minus drag command greater than 3 ft/sec^2. There are several indications of off-nominal drag presented on the TRAJ displays. If actual drag is larger than reference drag, the triangle will be above the arrow on the drag scale, and the guidance box will be behind the Shuttle symbol, showing a negative range potential. If this error were allowed to continue, the Shuttle trailers would indicate the vehicle dropping below the nominal guideline toward the 0 degree bank boundary. The drag error must be corrected before the target moves outside the vehicle footprint. In this case, take CSS and decrease the bank angle to cause drag to decrease toward reference drag.

As bank angle changes, so does altitude acceleration. As an approximation, 1 degree change in bank produces 0.7 ft/sec^2 change in H-double dot. Large bank errors cause corresponding errors in H-dot, allowing a phugoid to develop more quickly. The crew should closely monitor H-double dot when flying entry in CSS.

If actual drag is less than reference drag, the triangle will be below the arrow on the drag scale and the guidance square will move ahead of the Shuttle symbol, showing a positive range potential. The trailers will indicate the vehicle moving to the left toward the thermal limit boundary. The correction in this case would be to increase bank. A deviation of this type could be expected if the first roll command is not executed when commanded by guidance. Prompt execution of roll commands at the proper rate will minimize the bank angle required to establish the entry profile.

If both pitch and roll/yaw are in CSS, the task of maintaining drag equal to reference drag becomes more difficult due to angle of attack and bank angle interaction. Oscillations in alpha cause drag transients, which cause bank oscillations. A 1 degree change in alpha produces a 1.7 ft/sec^2 drag change, which is equal to an 8 degree roll change.

Low L/D

Using the ENTRY TRAJ display, if ROLL REF displays a down arrow (a fault message will also be generated) prior to the first bank reversal, this is an indication of a low L/D condition. Since the orbiter uses drag modulation for ranging, L/D control is a major factor in the ranging problem. To protect against TAEM interface targets moving out of the entry footprint, the crew should select R/Y CSS and initiate the first bank reversal when DEL AZ = 5 degrees. AUTO flight control may be reengaged after completion of the first bank reversal.

Ground Controlled Approach

NAV errors detected by Mission Control that result in trajectory dispersions uncorrectable by AUTO guidance by Mach = 4 or in greater than 10 nm range error at TAEM interface require the crew to downmode to CSS and manually correct the trajectory. In extreme cases, a ground controlled approach (GCA) may be required. Redesignating to another runway or to the straight-in heading alignment cone (HAC) may also solve the problem. MCC will evaluate the entry trajectory to ensure it is within the orbiter's capability to reach an acceptable runway during TAEM.

Failed Yaw Jets

Failure of three yaw jets on the same side after the first roll reversal requires the crew to perform subsequent roll reversals in CSS.

WARNING

Abrupt maneuvers may exceed reduced yaw jet control margin and result in loss of vehicle control.

Undesirable Transients

Prior to any event capable of introducing an unwanted transient into the flight control system, such as a delta state update that includes a velocity component, the crew should select CSS to prevent undesirable transients. Automatic flight control may be reengaged upon completion of the event and reconvergence of the guidance needles.

RCS Critical Entry (No Yaw Jet)

7.4 TERMINAL AREA ENERGY MANAGEMENT AND APPROACH, LANDING, AND ROLLOUT

CONTENTS

Definition and Overview 7.4-1
Terminal Area Energy Management 7.4-2
Heading Alignment Cone 7.4-7
Outer Glide Slope 7.4-9
Preflare 7.4-13
Inner Glide Slope 7.4-14
Touchdown 7.4-16
Derotation 7.4-17
Rollout 7.4-18
Handling Qualities 7.4-20
Wind Effects on Trajectory 7.4-22
Backup Flight System 7.4-23
Off-Nominal Approaches 7.4-23
Sensory Cues 7.4-24
Autoland 7.4-24

Definition and Overview

This section presents information required to pilot the orbiter from a velocity of 2,500 feet per second, where terminal area energy management (TAEM) begins, all the way through approach, landing, and rollout on the runway. TAEM guidance provides information to the pilot and guides the orbiter until the transition to approach/landing guidance at an altitude of 5,000 to 10,000 feet. Derotation and rollout logic take over after the orbiter touches down on the runway. Procedural information for the TAEM and approach/landing guidance phases are contained in the Entry Checklist and cue cards. Pilots often refer to the flight phase from .95 Mach to touchdown as the approach and landing phase of flight. This is the phase of flight in which the crew normally controls the vehicle manually (CSS) and in which the Shuttle Training Aircraft operates. By this definition, the approach and landing portion of the trajectory includes both subsonic TAEM guidance and the approach/landing guidance regions.

TAEM and approach/landing guidance trajectories allow the orbiter to handle a large variety of dispersions. Certain specified ground rules and constraints such as weight, c.g., aerodynamic limits, distance past runway threshold, velocity, altitude rates, lateral rates, and energy margin must be observed to ensure guidance is capable of directing the orbiter to a safe landing. Mission Control monitors these limits closely. Carefully following guidance commands will generally provide the crew the best chance for coping with environmental dispersions.

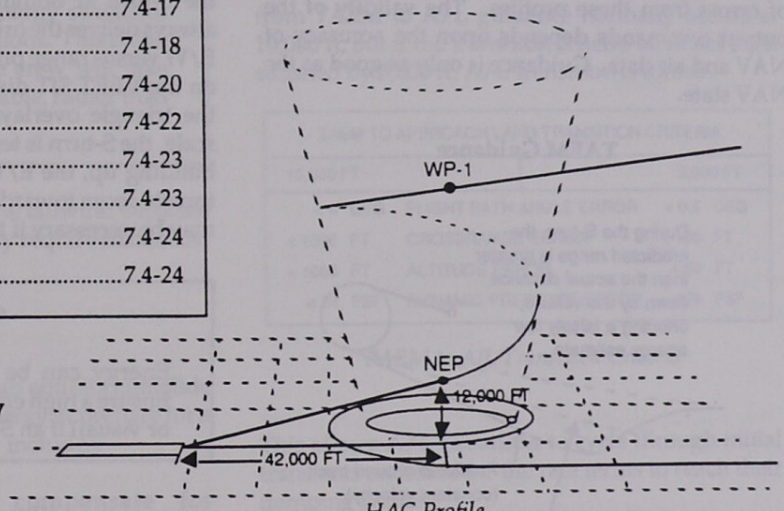

HAC Profile

TAEM is divided into four segments: s-turn, acqusition, heading alignment, and prefinal. Approach and landing trajectories are divided into five segments: trajectory capture, outer glide slope (OGS), preflare and inner glide slope (IGS), final flare, and touchdown. TAEM and approach and landing regions are jointly designed to allow the orbiter to land safely.. This section presents information for monitoring and takeover during the early portions of TAEM and then details the manual flying tasks during each segment of the trajectory.

General information on handling qualities, flight control surfaces, priority rate limiting (PRL), winds, limits, BFS, sensory cues, and autoland is presented at the end of this section.

Terminal Area Energy Management

Monitoring

TAEM guidance is initiated automatically as the orbiter decelerates through Mach 2.5. This normally occurs at about 82,000 ft altitude and about 60 nm from the runway. The crew should note transition to MM 305 and appearance of the VERT SIT displays. Head-up display (HUD) symbology also appears at TAEM interface. TAEM guidance controls glide range by tracking and flying three profiles simultaneously: altitude vs range, dynamic pressure vs range, and energy vs range.

The outputs of TAEM guidance, N_z command, roll command, and speed brake command, are functions of errors from these profiles. The validity of the output commands depends upon the accuracy of NAV and air data. Guidance is only as good as the NAV state.

TAEM Guidance

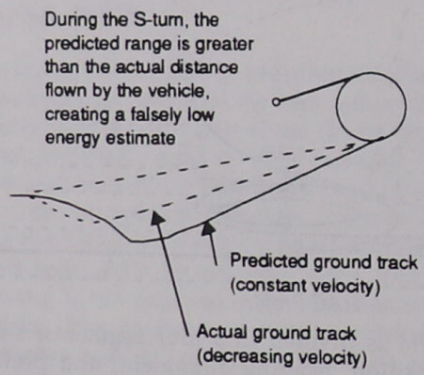

TAEM guidance operates by phases. Phase 0 (S-Turn), if required, dissipates energy by turning away from the HAC until energy conditions allow a nominal approach. Phase 1 (Acquisition) turns the orbiter until its ground track is tangent to the applicable HAC.

S-Turn Profile

Phase 2 (Heading Alignment) follows the HAC until the orbiter is near the runway centerline. Phase 3 leaves the HAC and acquires the runway centerline. Outputs of TAEM guidance are:

- N_z command
- Roll command
- Speed brake command.

In Phase 1, if vehicle energy is too high, an S-turn will be commanded (sets Phase to 0). Low or nominal energy conditions bypass Phase 0. During the S-turn, the range predictor assumes that the orbiter will fly a constant bank angle of 30 degrees for end-of-mission (45 degrees for return to launch site) and a constant airspeed turn until energy decreases to nominal E/W + 10,000 ft. Acquisition phase is then resumed, and the orbiter turns back toward the HAC tangency point.

Obviously, energy dissipation rate during an S-turn depends on geometry. For high DEL AZ, ending the S-turn at nominal E/W + 10,000 ft may not always deliver the orbiter precisely onto the nominal E/W versus range profile. Monitor the E/W triangle on the VERT SIT display during an S-turn. When the triangle overlays the + 8,000 ft mark on the scale, the S-turn is terminated. If a large DEL AZ is building up, the E/W triangle will accelerate as it travels down toward nominal. Manual intervention may be necessary if the dissipation rate is too large.

CAUTION

Energy can be dissipated very rapidly. Ensure a high energy condition exists (MCC or visual) if an S-turn is triggered.

Tracking the HAC

Guidance uses an algorithm for roll command that is a function of vehicle error with respect to HAC radius (ΔR) and the rate of change of distance to the center of the HAC (Δ R-dot). Primary and secondary bearing pointers are referenced to the HAC tangency point and HAC center respectively as computed by Area Nav. Wind magnitude affects HAC tracking, as does the arc length around the HAC, since relative wind angle change during HAC tracking is large. Flying the guidance commands and monitoring energy status will normally result in smooth tracking. Routine energy status calls will be made by the CAPCOM at 90 degree intervals around the HAC. This information, which is based on ground tracking, should be integrated with the onboard energy status displayed on the CRTs, ADI, and HSI.

If using default air data and flying theta limits on the HAC, Mach may be less than 1.0 while V_{REL} (true ground speed) is still greater than 1,000 fps if a tailwind is present. In this situation, default Mach will be greater than 1.0, and a 30 degree bank angle limit is imposed by guidance. Following guidance in this case will result in being blown off the HAC, creating an extremely low energy situation. If in AUTO speed brake, energy may be further degraded since the high q-bar based on high V_{REL} in default air data will deploy the speed brake as the vehicle is blown outside the HAC.

CAUTION

Default air data and a tailwind combination can rapidly cause a low energy situation, requiring aggressive corrections. This is one of the situations where the crew will take the last ADTA data, if available, rather than fly theta limits.

Continuing around the HAC, the tailwind becomes a headwind on final, which may require maximum L/D to make the runway.

Outer Glide Slope

The outer glide slope (OGS) is an equilibrium glide path that provides sufficient energy at preflare for a safe landing. Sufficient energy includes:

- Enough energy to compensate for deceleration between preflare and touchdown
- Providing the pilot with adequate time on the IGS to make final corrections
- Allowing a minimum of 5 seconds of stable flight time on the IGS.

In order to provide sufficient energy at preflare, the OGS design must handle both high and low energy dispersions over the entire weight span of the orbiter. The OGS is a sloped-line segment that intercepts the ground at the aim point.

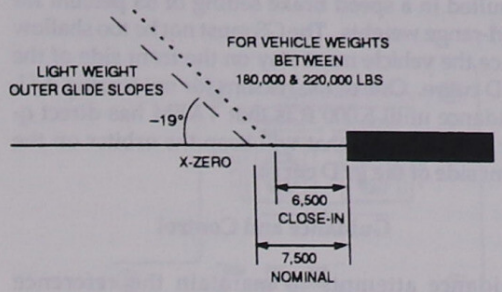

OGS Profile

Time to correct trajectory dispersions is provided by the altitude at which the OGS is acquired. Nominally, this occurs at 12,000 ft. Transition from TAEM to A/L guidance normally occurs at 10,000 ft, but if the transition criteria have not been satisfied by 5,000 ft, A/L transition is forced.

TAEM TO APPROACH/LAND TRANSITION CRITERIA		
10,000 FT		5,000 FT
< 4 DEG	FLIGHT PATH ANGLE ERROR	< 0.5 DEG
< 1000 FT	CROSSRANGE ERROR	< 100 FT
< 1000 FT	ALTITUDE ERROR	< 50 FT
< 24 PSF	DYNAMIC PRESSURE ERROR	< 24 PSF

TAEM to A/L Transition Criteria

This allows A/L equations to cycle through initial transients and time for the rate terms to reach their damping values.

Reference velocity on the OGS is 290 KEAS for lightweight vehicles (less than or equal to 220 k lbs) and 300 KEAS for heavyweight vehicles (more than 220 k lbs). This velocity is required to compensate for the expected deceleration on the IGS. The design goal is to fly as fast as possible while remaining within maximum q-bar limits (340 psf for 15 sec).

A 19 degree OGS is used for lightweight vehicles, and a 17 degree OGS is used for heavyweight vehicles. The design goal was to fly as shallowly as possible while maintaining sufficient speed brake reserve to cope with winds and trajectory dispersions. Since both high and low energy

dispersions are possible, GSs were selected that resulted in a speed brake setting of 65 percent for mid-range weights. The GS must not be too shallow since the vehicle must stay on the front side of the L/D curve. One of the reasons for not forcing A/L guidance until 5,000 ft is that TAEM has direct q-bar control limits that will keep the orbiter on the front side of the L/D curve.

Guidance and Control

Guidance attempts to maintain the reference airspeed /GS of 300 KEAS/17 degree (heavyweight vehicles) or 290 KEAS/19 degree reference by computing a normal acceleration command to guide the orbiter along the OGS trajectory. The N_z command is converted to a pitch command and displayed on the ADI and HUD. If the pitch command results in a velocity that is different than 300/290 KEAS, the speed brake responds to correct the velocity error.

Leaving the speed brake in AUTO allows guidance to reposition it, as required, to maintain the reference velocity.

The body flap, if in AUTO, is commanded to retract to the trail position (0 degrees) on the first A/L guidance pass.

Navigation

Upon receiving good data from the ground-based microwave landing system (MLS), preland navigation is begun. Unlike entry NAV, preland NAV maintains only one state vector, but executes twice as fast (every 1.92 sec vs 3.84 sec).

The MLS provides extremely accurate azimuth, range, and elevation, which correct the onboard NAV state. Allowable errors are about 5 ft altitude, 21 ft downtrack, and 17 ft crosstrack when processing MLS data.

NOTE

Both range and azimuth data "good" flags are required to process MLS data. Without an elevation data "good" flag, azimuth and range will still be processed, but if either the azimuth or the range data "good" indicator is lost, all MLS processing will cease.

If MLS data are lost for any reason (above 1,500 ft) after processing has begun, TACAN and ADTA information will again become available to NAV until 1,500 ft and 500 ft respectively. If MLS data are lost below 1,500 ft, ADTA altitude processing is not possible.

NOTE

With TACAN data in FORCE mode, MLS data cannot be processed.

Smart Speed Brake Logic

To control orbiter touchdown energy, the speed brake is retracted at 3,000 ft to a value calculated by onboard guidance that will target the remaining velocity profile to a fixed touchdown energy. The calculated speed brake position is a function of:

- Wind speed
- Vehicle weight
- Velocity error
- Density altitude
- Aimpoint (if applicable)
- Short field (if applicable).

This position is maintained until 500 ft where the A/L guidance calculates an adjustment to the retract angle. This adjustment is based on any changes in winds and predicted density altitude since the 3,000 ft calculation. No more adjustments are made until touchdown. The 500 ft adjustment altitude was selected because the time to fly from 3,000 to 500 ft is approximately the same time it takes to fly from 500 ft to touchdown. This allows time for the adjustment to have an effect on the vehicle energy state.

When the close-in aim point is selected, 1,000 ft are directly added to the downrange total. The idea is to keep the same touchdown energy target even though the geometry has been shifted in by 1,000 ft. This lets the vehicle respond to atmospheric conditions that required the close-in aim point.

Selecting the short field option on SPEC 50 also adds 1,000 ft to the downrange total. However, in this case, the target touchdown energy is changed. The short field option is used to subtract energy from the trajectory and will decrease rollout distances by 1,000 ft. This option is usually selected

Barrier

The barrier system is similar to systems used aboard aircraft carriers to recover damaged airplanes. It consists of a net, positioning system, and energy absorbers. The net is made of vertical nylon straps that are bundled together at the top and bottom. The orbiter nose passes through the vertical straps, which then catch on the wings, pulling the net down from the positioning stanchions. The straps spread out uniformly over the wings and provide a distributed retarding load.

On each side of the runway, two spools of nylon tape are attached to the side of the net. As the orbiter pulls the net, the spools unwind, paying out tape. The spools are mounted on water turbines that convert kinetic energy into heat. The system is capable of stopping a 260,000 lb orbiter that engages the net at 100 KEAS.

Barriers are placed about 800 ft from the end of the runway overruns on short abort runways (less than 12,000 ft).

Some damage will occur to gear doors, probes, and tiles during barrier engagement. The crew module and fluid systems will remain intact.

Barrier systems are portable and can be transported via C-130 aircraft and stored at landing sites. Set up time is about 6 hours, using an eight person crew. The stanchions can be raised or lowered in about 10 sec.

To engage the barrier, try to be as slow as possible and as close to the runway centerline as possible. Nose wheel steering or differential braking may be required to keep the vehicle on the runway.

Techniques

Nose wheel steering (NWS) should be used for directional control and brakes used for stopping unless differential braking is required. NWS operations in *NWS 1(2)* are crisp and responsive with no tendency to overshoot or overcontrol.

The *NOSE WHEEL STEERING* switch on panel L2 has an extension device mounted on the shaft to make it easier to locate.

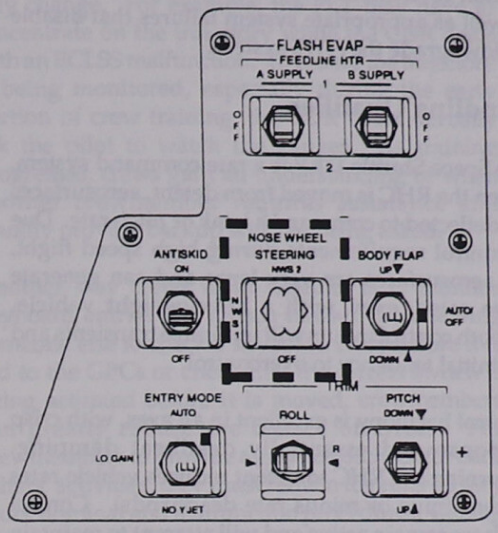

NOSE WHEEL STEERING Switch on Panel L2

If NWS 1 fails during fallout, NWS 2 may be susceptible to the same failure and inoperative. NWS 2 may still be selected in extreme cases such as runway departure.

With NWS in *NWS 1 (2)* , the orbiter will tend to turn into a crosswind during rollout. With NWS in caster (*OFF*), the orbiter will tend to turn away from a crosswind.

If a tire failure occurs during rollout, the orbiter will turn toward the failed tire. When the turning moments due to crosswind and tire failure are in the same direction, large control inputs will be required to maintain runway centerline. When the turning moments are in opposite directions, smaller control inputs will be required, and pilots must be careful not to overcontrol.

Rollout performance is best demonstrated in the Vertical Motion Simulator (VMS) at NASA Ames Research Center. NWS and tire failures are realistically modeled, allowing crewmembers to experience actual orbiter dynamics while making corrections. Crew coordination and skills are

practiced in the Shuttle Mission Simulator (SMS). Crewmembers should ensure that different rolling friction coefficients and wind conditions are seen, as well as appropriate system failures that disable or downgrade the NWS system.

Handling Qualities

The Space Shuttle DAP is a rate command system. When the RHC is moved from detent, aerosurfaces are deflected to command a bank or pitch rate. Due to control requirements during high speed flight, the aerosurfaces are very large and can generate large rates, even with a heavyweight vehicle. Smooth control inputs will minimize transients and the initial tendency to overcontrol.

Control harmony is excellent in all axes, with crisp response and essentially deadbeat damping. Returning the RHC to detent reduces vehicle rates to zero (plus or minus rate deadbands). Control surfaces remain active and will attempt to maintain attitude.

The Shuttle Training Aircraft (STA) is an extremely accurate simulator of orbiter flying qualities below 35,000 ft altitude. Training for high and low energy cases in the STA will prepare crewmembers to handle the actual vehicle from about the 180 degree point on the HAC. The STA also has the capability to demonstrate navigation state errors up to 6,500 ft short, 2,000 ft long, and 1,200 ft laterally from the desired touchdown point.

Elevons

During subsonic flight, all four elevons are commanded up and down simultaneously for pitch control. For roll control, the elevons are commanded differentially, similar to ailerons on a conventional aircraft.

Body Flap

The body flap is used to trim the elevons during entry and TAEM. When guidance transitions to the A/L phase, the body flap is commanded to trail. Normally, the body flap is operated in AUTO. If the body flap is not in AUTO, the crew should return to AUTO or manually position the body flap to trail at A/L transition.

CAUTION

The body flap is a large control surface and exerts a powerful pitching moment on the vehicle. Proper positioning is required to ensure adequate control margins.

Speed Brake

Although energy is controlled primarily by bank angle and the resulting drag in hypersonic and supersonic flight, the speed brake is the primary energy control device in subsonic flight. A/L guidance modulates the speed brake to control q-bar, when operated in AUTO. Speed brake position is constrained to a lower limit of 15 degrees to prevent physical binding of mechanical linkages when the rudder is deflected.

It is important to take manual control of the speed brake if guidance or NAV is questionable. For example, erroneous air data could cause flight control to generate erroneous position commands, resulting in high or low energy or a flight control transient at a critical moment. At 3,000 ft AGL, the speed brake is closed automatically to a computed value based on wind, weight, density altitude, velocity error, and short field option. At 500 ft AGL, guidance can command a final adjustment of the speed brake position based on density altitude and wind velocity.

The speed brake is normally operated in AUTO throughout Approach and Landing. Speed brake position and command are displayed on the surface position indicator (SPI) and the HUD.

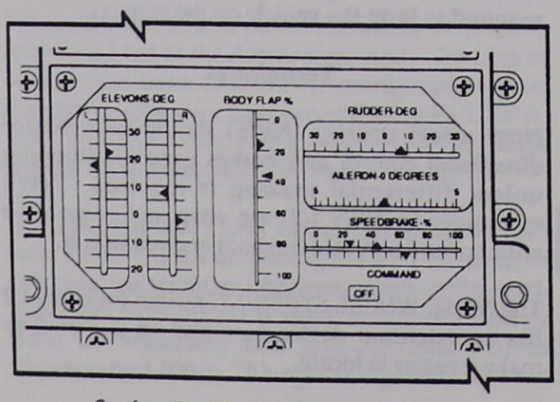

Surface Position Indicator on Panel F7

8.1 FLIGHT CREW DUTIES AND COORDINATION

CONTENTS

Dynamic Flight Phases 8.1-1
Orbit Phase 8.1-1
Intercom Protocol 8.1-2

Dynamic Flight Phases

For a Shuttle flight crew to work well together, each crewmember needs to have his or her job clearly defined. This definition includes the tasks assigned and when they are to be performed. Individual responsibilities will be assigned by the mission commander based on mission requirements. One way in which duties might be divided for dynamic flight phases is summarized in the following table.

POSITION	PRIMARY	SECONDARY
CDR	Trajectory/Nav Abort Boundaries * DPS ECLSS Nominal Timeline Navaids ** Mission Success Mission Safety Voice Transmissions to MCC	Communications Flight Control Channels OMS RCS Contingency Abort Boundaries *
PLT	MPS EPS APU/HYD OMS RCS Flight Control Channels	Trajectory/Nav Navaids ** Mission Success Mission Safety Voice Transmissions to MCC
MS2	Overhead Panels Overhead Gauges Communications	Abort Boundaries * Navaids ** Nominal Timeline Reference Data
MS1	Contingency Abort Boundaries * Photography Reference Data	Nominal Timeline Overhead Panels Overhead Gauges
MS3	Stowage Middeck Panels/Actions	Photography

* Ascent only
** Entry only

Flight Crew Duties for Dynamic Flight Phases

It is critical for the crew to lay out responsibilities early during training and follow their plan. As malfunctions occur, the division of responsibilities may change. For example, the PLT may have to concentrate on the trajectory while the CDR deals with an ECLSS malfunction. To ensure the trajectory is being monitored, especially during the early portion of crew training, the CDR could verbally ask the pilot to watch the gauges. As training progresses, crews gain an understanding of when another crewmember requires assistance and usually provide backup without being asked.

Another way crews work together is to monitor keyboard entries and switch throws. By allowing someone else to check a keyboard entry before it is fed to the GPCs or check that the correct switch is being actuated before it is moved, crewmembers can greatly reduce the chance of errors. For crewmembers to provide a good crosscheck for each others' activities, they must remain together as they work nominal and malfunction procedures. Calling out page numbers, procedural titles, and step numbers will help everyone follow through the procedures.

During dynamic flight phases, or any time when dealing with several malfunctions, it may be best to divide into groups or detail individuals to separate tasks to successfully deal with all problems in a timely manner. The CDR usually takes the lead in assigning tasks. As the proficiency of crews increases, crewmembers often assume responsibility without being formally assigned by the CDR. Whenever groups/individuals begin working separate problems, they should attempt to periodically update the other members of the crew on their progress. This is especially critical when the problems being worked are interrelated. The CDR and PLT must exercise care to ensure that at least one member of the crew monitors the vehicle trajectory and maintains awareness of the nominal timeline when their attention is drawn to different problems.

Orbit Phase

On orbit tasks are usually less time critical and responsibilities are redistributed as necessary. It is important that more than one crewmember is trained for each flight task to protect for the occasion when the prime crewmember might be ill or busy

with another task. Mission specialists usually assume the prime responsibility for major payload activities. For Spacelab flights, the senior mission specialist will be assigned as the Payload Commander and charged with successful payload operations. The following table lists a sample division of duties for the orbit phase.

POSITION	CDR	PLT	MS1	PS1	MS2	MS3	PS2
EVA 1					X		
EVA 2						X	
IVA		X					
MEDIC	2				1		
IFM		1			2		
EARTH OBS		2			1		
PHOTO/TV		2			1		
Prime Payload	2	1					
Secondary Payloads			X	X			
DTO XXX	1					2	
DSO XXX						1	2

1 Prime
2 Backup

On-Orbit Division of Responsibilities

Intercom Protocol

During ascent or entry most crews have a standard protocol of voice callouts to help them keep track of mission events. Typical callouts and associated displays for ascent and entry are listed in the following tables.

MET	EVENT	CALLOUT
00:00	SRB Ignition	CDR: Lift-off/102
00:30	Throttle Bucket	PLT: Throttle down
01:00	Throttle Up	PLT: Three at 104
02:12	SRB Sep	CDR: Pc < 50, Sep, 103, TMECOs converged
03:00		MS2: EVAP OUT T coming down
08:00	MECO -30 sec	CDR: Coming up on MECO
08:32	MECO	CDR: MECO, MECO confirm, ET sep, 104, check targets
10:32	MECO +2:00	PLT: Dump/start

Ascent Displays and Callouts

EVENT	CREWMEMBER	CALL
MLS to state vector	MS	MLS
A/L	MS	Approach & Land, BF trail
~5 K ft	PLT	Radar Altimeter, 1 & 2 check good
4K ft	PLT	4,000
3K ft	PLT	3000
	MS	Boards ___%
2K ft	PLT	2,000, Preflare next
	CDR	Preflare, arm the gear
	PLT	Gear is armed
1K ft	PLT	1,000 ft ___kts(PLT call max EAS in preflare)
500 ft	PLT	500
400 ft	PLT	400
300 ft	CDR	Gear down
	PLT	Gear coming
	MS	Boards ___%, gear is down
300 200 100 70 50 - - ft 40 30 20 10 5	PLT	___ ft, ____ knots (steady rhythm)
TD	PLT	Touchdown
	CDR	Drag chute (if abort landing or high energy.)
WOWLON	PLT	WOWLON (Call WOWLON when it occurs, HUD format changes.)
165kts (Lakebed) 175 kts (Concrete)	PLT	185/175 Derotate (Even without WOWLON)
Drag Chute Deploy	CDR	Drag Chute
Derotation	PLT	Pitch rate ___ (Repeat at a regular cadence during derotation. Target 1-2 degrees per sec concrete on 2-3 degrees per sec lakebed).
Nosegear TD	PLT	WOW set (Manual by depressing ET SEP or SRB SEP PB)
	MS	Load relief (or no load relief) NWS fail - (if NWS light is on)
Midfield	PLT	Midfield
5K ft remaining	PLT	5,000 ft remaining
140 130 120 110 100 - - ft 90 80 70 60 50	PLT	___kts, ___ (Decel reading) (Target 6-8 ft/sec^2)
60 kts (±20)	CDR	Jettison (Drag Chute)
40 kts	PLT	40 kts, ease off
Wheels Stopped	CDR	Wheels Stopped

Landing Comm Protocol

9.3 ENTRY

CONTENTS

Downrange/Crossrange 9.3-1
Trajectory 9.3-2
Entry History 9.3-2
Entry RCS Data 9.3-4
Rollout/Braking 9.3-4
Rollout History 9.3-6

Downrange/Crossrange

TAL, emergency deorbit, or a waveoff to the secondary landing site can result in mission critical assessments of the orbiter's downrange and crossrange capabilities. Once the orbiter has committed to its descent, only a carefully flown profile can put it on the runway safely.

The orbiter begins entry at EI (400,000 ft) on average 4,176 nm from the landing site. Given a crossrange situation of about 500 nm (414 nm being the average), the vehicle has the ability to stretch the descent approximately 800 nm downrange by flying a lower drag profile. TPS thermal constraints prevent the use of lower angles of attack. The orbiter remains in the equilibrium glide phase longer, likely bypassing the constant drag phase altogether. If the crossrange requirement is reduced below this arbitrary (but realistic) number, the downrange can be increased slightly.

The downrange can be reduced by approximately 1,100 nm (again given a 500 nm crossrange) by flying higher drag profile. This results in higher temperatures on the TPS as the vehicle descends more quickly into the atmosphere. TPS thermal constraints are the initial limiting factor in this profile. During the descent, as the vechicle's mach and alpha decrease, maximum drag is limited by "g" (~ Mach 16) and eventually q-bar (~ Mach 5), thereby limiting downrange reduction.

In the event of an emergency deorbit, the orbiter's crossrange capability becomes a significant factor. The following charts list the dispersed and undispersed crossrange limits for 28.5 and 57 degree missions at the stated entry weights. The dispersed crossrange limits protect for 3 sigma entry dispersions. However, for an emergency deorbit, the crew could deorbit to a landing site that is within the undispersed crossrange limit if there were no site within the dispersed limit.

APPROACH DIRECTION	RANGE NM
Ascending, left	753
Descending, left	753

Dispersed Crossrange Limits 28.5 Degree, 160 nm Orbit, 197 k lb

APPROACH DIRECTION	RANGE NM
Ascending, left	815
Descending, left	815

Undispersed Crossrange Limits 28.5 Degree, 160 nm Orbit, 197 k lb

APPROACH DIRECTION	RANGE NM
Ascending, left	774
Ascending, right	828
Descending, left	781
Descending, right	818

Dispersed Crossrange Limits 57 Degree, 160 nm Orbit, 217 k lb

APPROACH DIRECTION	RANGE NM
Ascending, left	850
Ascending, right	904
Descending, left	857
Descending, right	894

Undispersed Crossrange Limits 57 Degree, 160 nm Orbit, 217 k lb

Trajectory

The following chart plots nominal performance in terms of altitude, V_{REL}, q-bar, flight path angle, g, and alpha against time from EI.

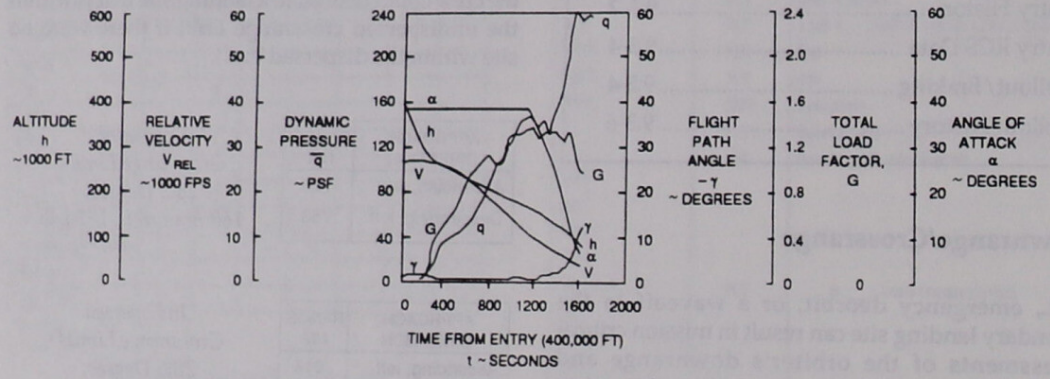

Orbiter Entry Trajectory

Entry History

The following table lists flight history performance and performance related data for the first 43 Space Shuttle missions.

MISS. SEQ. NO.	STS NO.	ORB. OV	ORBIT INCL/ALT (DEG/NM)	ENTRY INTERFACE				CROSS RANGE (NM)	MAX. LOAD FACTOR (g)	MAX. DYN. PRESS. (PSF)	FIRST ROLL REV. VEL. (FPS)	TERM. AREA ENERGY MGMT			APPROACH AND LANDING			
				WT (K LB)	VELOCITY (FPS)	FLIGHT PATH ANGLE (DEG)	RANGE (NM)					INTER-FACE RANGE (NM)	LOAD FACTOR (g)	MAX. DYN. PRESS. (PSF)	INTER-FACE ALT. (FT)	GLIDE SLOPE (DEG)	VEL. (KEAS)	
																	MAX.	OVER THLD
1	1	102	40/145	197	25,731	−1.19	4,372	228	1.60	217	18,310	58.9	1.70	286	10,000	20	315	250
2	2	102	38/137	207	25,726	−1.17	4,474	63	1.61	215	20,297	59.7	1.93	280	5,000	19	276	206
3	3	102	38/128	209	25,659	−1.13	4,136	276	1.62	220	17,784	59.1	1.54	295	10,000	19	302	232
4	4	102	28.5/160	211	25,797	−1.28	3,817	581	1.77	241	11,461	59.4	1.46	278	10,000	19	295	215
5	5	102	28.5/160	204	25,758	−1.24	4,036	580	1.59	219	11,397	59.8	1.59	280	10,000	19	298	216
6	6	099	28.5/153	191	25,755	−1.24	4,045	378	1.53	207	15,808	59.9	1.41	257	10,000	19	293	213
7	7	099	28.5/160	205	25,771	−1.25	4,040	738	1.59	220	7,143	59.8	1.65	305	8,834	19	295	232
8	8	099	28.5/160	205	25,649	−1.12	4,037	519	1.54	223	12,900	58.9	1.56	281	5,000	19	309	226
9	9	102	57/135	221	25,969	−1.18	4,349	69	1.60	243	21,581	59.9	1.52	280	10,000	17	295	203
10	41B	099	28.5/165	203	25,752	−1.20	4,137	524	1.57	220	12,957	59.4	1.59	289	10,000	19	292	218
11	41C	099	28.5/190 x 250	198	25,998	−1.52	4,089	381	1.54	216	16,208	59.4	1.43	293	10,000	19	313	234
12	41D	103	28.5/160	203	25,776	−1.26	4,112	474	1.54	206	14,072	60.0	1.42	265	10,000	19	299	227
13	41G	099	57/190	204	25,684	−1.12	4,308	614	1.54	241	11,927	60.2	1.40	285	10,000	19	296	216
14	51A	103	28.5/160	209	25,869	−1.35	4,141	486	1.56	225	14,063	60.5	1.48	285	10,000	19	299	217
15	51C	103	28.5/185	197	25,855	−1.32	4,144	380	1.54	211.8	16,118	60.1	1.50	281	10,000	19	293	223
16	51D	103	28.5/245 x 160	200	25,955	−1.45	4,064	518	1.59	211.1	13,573	60.9	1.40	294	10,000	19	301	215
17	51B	099	57/109	214	25,857	−1.26	4,264	274	1.57	241.6	18,500	59.1	1.50	282	10,000	19	300	219
18	51G	103	28.5/190	206	25,850	−1.34	4,050	694	1.58	217.7	8,680	59.3	1.60	218	5,000	19	301	—
19	51F	099	50/106 x 170	218	25,813	−1.19	4,221	603	1.58	235.6	11,537	59.7	1.54	290	10,000	19	306	244
20	51I	103	28.5/190	198	25,829	−1.31	4,004	692	1.58	215.3	8,626	59.7	1.56	274	10,000	19	307	204
21	51J	104	28.5/254	192	26,023	−1.55	3,986	432	1.54	—	—	—	1.9	312	5,000	19	296	—
22	61A	099	57/175	215	25,830	−1.19	4,345	69	1.55	241	22,257	59.8	1.3	319	10,000	19	303	231
23	61B	104	28.5/190	206	24,882	−1.35	4,106	533	1.54	232	13,172	59.1	1.4	286	10,000	19	293	224
24	61C	102	28.5/175	211	25,815	−1.31	4,154	661	1.56	224	9,480	59.2	1.43	292	10,000	19	311	233
25	51L	099	—	—	—	—	—	—	—	—	—	—	—	—	—	—	—	—
26	26	103	28.5/160	194	25,790	−1.25	4,117	383	1.56	203	15,774	60.0	1.3	288	10,000	19	297	219
27	27	104	57/240	192	25,121	−1.50	4,220	520	1.61	206	14,564.6	60.2	1.4	294	10,000	19	297	211
28	29	103	28.5/160	195	25,787	−1.23	4,163	384	1.54	207	15,852	60.1	1.6	287	10,000	19	307	218
29	30	104	28.85/160	193	25,788	−1.22	4,155	350	1.56	207	16,452	60.08	1.50	287	9,957	19	295	206
30	28	102	57/160	201	25,803	−1.11	4,332	186	1.54	213	19,494	58.8	1.6	295	10,000	19	299	224
31	34	104	34.3/160	196	25,784	−1.19	4,156	496	1.54	219	13,653	60.1	1.7	286	10,000	19	305	220
32	33	103	28.5/302 x 126	195	25,998	−1.48	4,068	226	1.52	215	16,988	60.2	1.5	301	10,000	19	300	211
33	32	102	28.5/175	230	25,823	−1.25	4,317	372	1.62	253	16,293	58.8	1.7	295	10,000	17	300	230
34	36	104	62/115 x 132	188	25,713	−1.18	4,338	255	1.57	204	18,520	59.5	1.9	325	5,000	19	298	218
35	31	103	28.5/330	190	26,120	−1.61	4,121	420	1.60	205	15,905	60.2	1.54	279	10,000	19	299	194
36	41	103	28.45/160	198	25,762	−1.20	4,147	492	—	212.7	13,639	60.0	1.67	291	9,777	19	306	224
37	38	104	28.5/115 x 142	191	25,729	−1.16	4,146	3	1.57	207	20,816	60.3	1.42	273	9,819	19	301	218
38	35	102	28.45/190	226	25,858	−1.32	4,266	426	1.58	245.8	15,406	59.15	1.59	279	8,052	17	300	217
39	37	104	28.5/243	191	24,612	−1.40	4,175	375	1.57	205	16,455	59.0	1.66	276	5,048	19	288	161
40	39	103	57/140	212	25,765	−1.06	4,502	616	1.57	246.5	11,543	60.2	1.50	295	9,862	19	302	222.1
41	40	102	39/146 x 157	228	25,772	−1.23	4,339	211	1.56	245.4	18,904	58.9	1.70	298	10,014	17	311	218.6
42	43	104	28.5/160	TBS								→	1.40	294	9813	19	295	TBS
43	48	103	57/292	TBS								→	1.50	286	9956	19	297	TBS

Orbiter Entry Trajectory

Entry RCS Use Data

Typically, the orbiter deorbits with approximately 50 percent aft RCS (ARCS) propellant in each pod (~ 1,100 lbs). RCS propellant use during entry averages about 13 percent (600 lbs) of full ARCS tanks. Certain missions are selected to conduct Program Test Inputs (PTIs) which are modifications to flight control software to collect entry performance data. In addition to nominal RCS use, other jet firings are used to collect RCS PTI data or to correct for aerosurface PTIs. Missions conducting PTIs will typically use in excess of 23 percent (1,000 lbs) of full ARCS tanks during entry. The chart on the right shows the predicted ARCS usage and the actual flight usage for selected missions. Analysis of actual versus predicted use is underway.

FLT	INCLINATION	PREDICTED ARCS USAGE (LB)	ACTUAL FLIGHT ARCS USAGE (LB)	PERCENT AFRCS	PTI ARCS/ FRCS
32	28.5	827.4	1340	30	ARCS
31	28.5	1113.0	1095	25	ARCS
41	28.5	488.5	855	19	FRCS
35	28.5	1157.6	1036	24	ARCS
37	28.5	876.9	1240	28	ARCS
39	57	846.9	1070	24	ARCS
40	39	756.1	870	20	ARCS
43	28.5	441.6	1020	23	FRCS
48	57	405.4	553	13	FRCS

Rollout/Braking

The design rollout chart depicts a nominal touchdown to wheels stop profile for a 15 k ft runway.

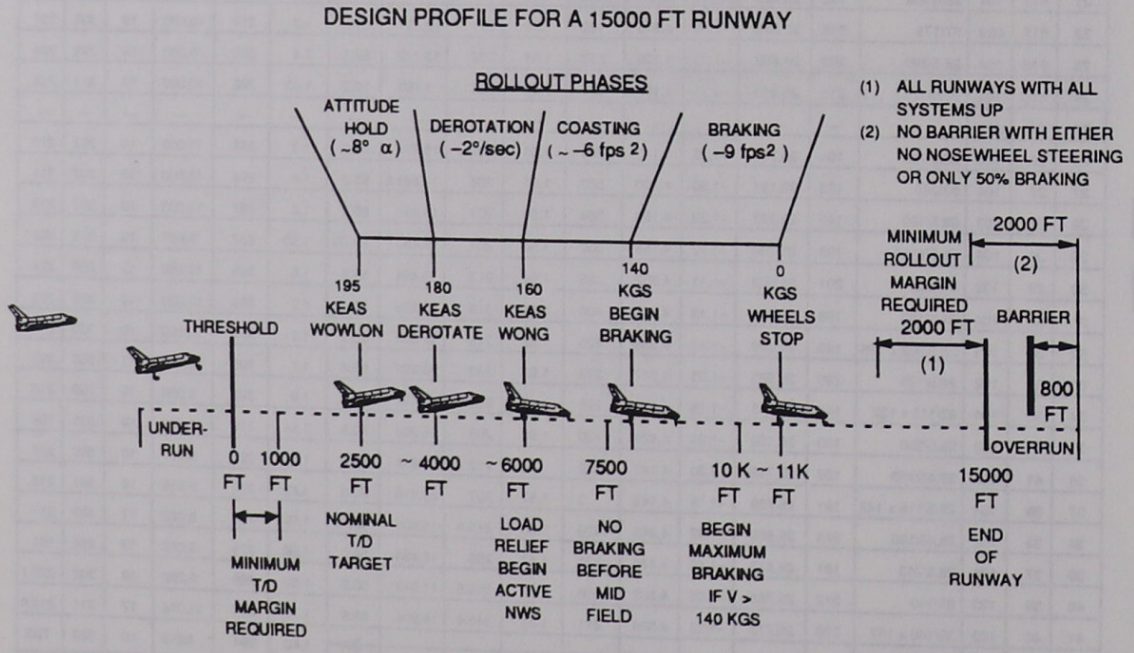

Design Rollout Phases

APPENDIX C: STUDY NOTES

CONTENTS

APU/HYD C-2
Comm-Voice Data C-4
Cryo C-5
DPS C-6
ECLSS C-7
EPS C-8
GNC C-10
Instrumentation C-14
Mechanical Systems C-14
MPS C-14
OMS C-17
RCS C-19

This appendix contains a set of study notes originally developed by Ron Grabe in September 1989. They have been extensively modified and updated by several crewmembers and reviewed for technical content by the Training Division.

The purpose of these notes is to provide crewmembers with a set of critical "need-to-know" items that can be reviewed in their entirety at one sitting. The notes are directed at the PLT crew position, but should be useful for other crewmembers as well.

The Study Notes are organized alphabetically by major system. Under each system heading, notes on critical subsystems and malfunctions are presented. The text is written in Flight Data File shorthand using switch nomenclature and CRT display terminology, which results in a somewhat cryptic format. Although directed primarily toward Generic and Flight-Specific training, they should be readily understood by crewmembers who have progressed through at least part of Pilot Pool training.

Preparation for Shuttle Mission Simulator (SMS) training sessions is difficult due to the complexity of the Space Shuttle and the many flight phases that crewmembers are required to understand. A quick review of these Study Notes prior to SMS sessions should help make training more productive.

APU/HYD

General

- Ascent: all APUs will be kept running through MECO if possible.
  - Loss of one APU means hydraulic lock on one engine.
  - Loss of two APUs means 2 SSMEs in hydraulic lock plus loss of TVC for one SSME.
- Entry
  - Pre-TAEM, a sick APU (high oil temperature, high hydraulic temperature, pump leak P, H_2O leak) may be manually shut down, cooled down, and restarted near Mach 1 to support landing.
  - Post-TAEM, APUs will generally be kept running except for high oil temperature. An APU will be shut down for high oil temperature if Mach > 1. A gearbox failure for high oil temperature is not catastrophic.

Auto Shutdown

- Controller will issue an auto shutdown command, if auto shutdown is enabled, for RPM less than 80% or above 129% (auto shutdown is inhibited for the first 9.5 seconds after start to allow turbine spinup).
- Auto shutdown closes secondary fuel control valve and fuel tank valves.
- An APU with an underspeed shutdown is a candidate for cooldown and restart.
- APUs with overspeed shutdown will not be restarted.
- If auto shutdown inhibited and APU speed is confirmed above 129%, manual shutdown is required as soon as possible.

Single APU Loss

- APU 1 means loss of nose wheel steering (OI-21 and subs, hydraulic system 2 can also be used for nose wheel steering).
- Single APU loss will not affect braking (loss of APU 3 plus either 1 or 2 means half brakes).

Switching Valves

- Supply either primary or one of two back-up hydraulic systems to the aerosurface actuators.
- Valve status only visible on SPEC 86 (SM OPS 2).
- During FCS checkout, check active hydraulic system selected.

Fuel Tank

- Supply supports about 110 minutes of operations (AOA).
- Nitrogen pre-charge required for start-up.
- Pressure displayed on panel F8 meter.
- Quantity (CRT and meter) is a PVT calculation.
- Isolation valves must be closed (de-powered) when APU is not running. No fuel cooling of solenoid valves.
  - Post APU shutdown, if fuel tank valve temperature high, pull circuit breakers.
  - Solenoid short may overtemp valves while APU is still running. Pull circuit breaker for second valve in parallel. Will keep APU running.

Fuel Pump

- Gear driven pump delivers fuel under pressure post start.
- "APU PUMP LK P" shows build-up of leaking oil or fuel in catch bottle. Bottle relieves overboard.

- For prop fail, consider engine lost. Use cue card to determine proper course of action.
- If both engines down, complete burn with RCS.
  - Interconnect good OMS prop to RCS, note OMS helium pressure, convert to burn time, and time RCS burn.
  - FA failures may cause only 2 +X jets available. Required burn time is almost doubled.
  - OMS gauging not active without an OMS engine burning.
  - Must protect RCS system from helium ingestion at OMS prop depletion.
  - For any prop failure, isolate bad prop from crossfeed lines.

Leaks

- Tank leaks must be confirmed with decreasing inlet pressure.
  - Tank leaks may be isolated by closing tank isolation valves.
  - If inlet pressures goes to zero and tank stable, inlet line leak.

Gimbals

- Trim for 2 engine burns has parallel thrust vectors.
- Single engine burn trim is through CG.
- Gimbals move to trim position 15 seconds prior to TIG.

Nitrogen System

- Used to open ball valves and supply purge post burn.
- If N_2 tank fail, but good reg P available, save engine for deorbit.
- If reg P fails, ball valves will close and engine will fail.

OMS Dumps

- Time the dump. System failures can prevent automatic cutoff.

RCS

General

- Talkbacks get hardware fuel and oxidizer inputs (no MDMs involved).
  - Inputs must agree for open or close indication.
  - Miscompare results in barberpole.
  - RCS helium isolation valves are magnetically latched open. A and B valves are mounted next to each other at various helium tanks. Occasionally the vibration of operating a valve can jar the adjacent valve out of the open position. Crew procedures account for this. A momentary barberpole talkback may occur when an adjacent valve is operated.
- Quantity calculations are PVT determination based on helium in prop tank.
  - PASS calculation allows for substitution of inputs.
  - If any helium leakage, prop calculation will be erroneous.

Crossfeed

- Master crossfeed available in PASS OPS 1, 3, and 6.
  - *TANK ISOL* and *CROSSFEED* switches must always be returned to *GPC* to protect master crossfeed sequence.
  - Master crossfeed selection valves have simo jet firing limit, even if auto crossfeed not used (all OPS, both PASS and BFS).
- Auto crossfeed sequence in PASS OPS 1, 3, and 6.

- Initiates crossfeed in response to low pressure in prop tank.
- Protects against helium reg fail low (primarily for ET SEP).

Dumps

- OMS prop interconnected dumps
  - Smart interconnect handles FA MDM and EPS failures for intact dumps.
  - Dump time compensated for inactive manifolds.
  - No smart interconnect for contingency dump or single engine roll control until OI-21.
  - If second engine fails with intact dump underway, do not start contingency dump. Leave smart interconnect configuration as is.
- ATO dump
  - Interconnect inhibit may be required before abort selection. Time the dump. System failures can prevent automatic OMS cutoff.

Heaters

- Pod heater, crossfeed line heaters, and jet thruster heaters (by manifold) on panel A14.
- Turned on post insertion. Some heaters redundant and switchable.

Interconnect

- RCS crossfeed requires check of left to right tank pressures.
- OMS to RCS interconnect requires low delta pressure and OMS tank pressure higher than RCS tank pressure.
- OMS PRES ENABLE must be toggled off when breaking interconnect. Computation assumes OMS prop feeding when L or R OMS has *.

Jet Availability

- Monitor on SPEC 23.
- Software considers a jet available (no DES*) unless:
  - Deselected by RM.
  - Manifold status in software = closed.
  - Manual DES item entry.
- RM will not deselect more than jet deselect limit.
  - Intialized at 2 per pod.
  - Limit does not apply to manual deselect or vernier jets.

Jet RM

- BFS RM is inactive (display and PASS monitor), unless engaged.
- Any detected RCS fault lights RCS JET caution and warning light.
- For jet fail ON, RM does not auto deselect.
- Jet fail OFF, RM does auto deselection (PASS). Only if first fail OFF and not previous fail ON (BFS).
- Fail LEAK results in PASS auto deselect. Not available in BFS.

Leaks

- Isolation during ascent and entry
  - Always confirm decreasing helium pressure (CRT and meter) before isolating.
  - Confirm talkbacks reflect switch throws.
  - Reselect *GPC* position of *TANK ISOL* and *XFEED* switches.
  - Monitor prop remaining. Crossfeed before quantity reaches zero.

  - Helium leaks invalidate quantity computations.

  - Auto crossfeed may be used to open/close valves if manual switch functions lost due to control bus failures.

- Confirmed jet fail LEAK, do not reselect jet since leaking prop will probably freeze in jet.

- RCS secure for leak isolation performed from manifolds up. When re-opening, must ensure prop supply before manifolds opened.

Manifold RM

- Software looks at open and close discretes.

- Any indeterminate combination results in "CL?".

- Crew can override manifold status on SPEC 23.

- SPEC 51, ITEM 7 overrides all manifolds in hardware "?" to open. No effect on manifold with commfaults.

- RCS RM loss occurs with "BCE STRG X B" (forward), or "BCE STRG X D" (aft). Manifold goes CL?.

Manual Reselection

- ITEM entry to remove * in DES column.

- Will not work if deselect due to manifold closure.

- Does not reset RM. Jet will not RM fail for same fault.

- DES INH item reprioritizes jets and disables RM auto deselect. Does not reselect jet.

- Double DES INH resets jet RM (toggling RM).

- ITEM 45 resets RM of all available jets at once. No effect on deselected jets.

On Orbit Burns

- Normally 2 jet burns.

- Will downmode to 1 jet burn if no jets available on one side.

OPS 1 and 3 Burns

- Aft RCS burns use 4 jets and downmode to 3, 2, and 1.

- Forward RCS burns use 3 jets and downmode to 2 and 1.

- Asymmetric +X burns require a lot of propellant for attitude control.

Tank Press High

- Indication of helium reg failure.

  - Close both helium regs to minimize helium loss.

  - Monitor low prop tank pressure and repress to protect manifold pressure. Jets will fail OFF if manifold pressure < 190.

Valves

- Prop valves are AC with control bus for switch power. Will operate on 2 phases if 1 phase lost.

- Helium valves are DC with control bus for switch power.

Vernier Jets

- Two side-firing forward jets.

- Two side-firing aft, two down-firing aft.

- Only aft side-firing jet can be lost and still have vernier mode (may still be lost for RMS loaded operations).

A

AA 2.13-25
Abort Mode Boundaries 6.2-1, 9.1-9
AC Power Generation 2.8-24
Acceleration Limitations 4.11-1
ACCU 2.4-26
Active Vent System 2.17-2
  Location 2.17-3
  Operations 2.17-2
Active Thermal Control System 2.9-22
  Location 2.17-3
  Ammonia Boilers 2.9-31
  Component Locations 2.9-22
  Flash Evaporator System 2.9-28
  Freon Loops 2.9-22
  Radiators 2.9-24
ADI 2.7-5, 7.1-3
Aerojet DAP 2.13-48
Aft Fuselage 1.2-11
Aim Points 7.4-11
Air
  Data System 2.13-19
  Sampling System 2.5-20
Air-to-Ground Voice Calls 8.2-3
Airlock
  Depress Valve 2.9-12
  Hatches 2.11-11
  Retention Net 2.22-6
  Stowage Bag 2.22-6
  Subsystems 2.11-13
Airspeed Limitations 4.3-1
Alarms 2.2-2
Alpha Recovery 6.3-7, 6.7-3
Alpha Transition 6.3-8
Alternate Water Pressurization 2.9-35
AMI 2.7-13, 4.1-1
Ammonia
  Boilers 2.9-31
  Controllers 2.9-31, 2.9-32
  Sensors 2.9-31
  Storage Tanks 2.9-31
Annunciator Lights 2.15-10
Anti-Skid 2.14-6
AOA 6.5-1
  Entry 6.5-4
  OMS-1 ..... 6.5-1
  OMS-2 ..... 6.5-3
  Powered Flight 6.5-1
Approach and Landing 5.4-8
  Airspeed Limitations 4.3-1
  Alpha Limitations 4.4-1
  Crosswind Limitations 4.7-1
  Dynamic Pressure Limitations 4.6-1
ASA 2.13-38
Ascent
  Aborts 6.2-1
  Acceleration Limitations 4.11-1
  Airspeed Limitations 4.3-1
  Backup Flight System 7.1-8
  Cue Cards 3.1-1
  Checklist 3.1-1
  CRT Displays 7.1-1
  Dedicated Displays 7.1-2
  Displays and Callouts 8.1-2
  Dynamic Pressure Limitations 4.6-1
  Flight Crew 8.5-1
  GNC 2.13-50
  Manual Control 7.1-7
  Mission Control Center 8.5-1
  Monitoring 7.1-4
  OMS Burns 5.2-2
  Performance Aborts 6.2-1
  Post Insertion 5.2-4
  Powered Flight 5.2-1, 7.1-1
  Procedures 5.2-1
  Range Safety 6.2-4
  Rules of Thumb 7.1-11
  Sensory Cues 7.1-9
  Systems Aborts 6.2-4
  Takeover Criteria 7.1-5
Ascent/Entry System Procedures Book 3.3-1
Atmosperic Revitalization System 2.9-12
  Avionics Bay Cooling 2.9-18
  Cabin
    Air Flow 2.9-16
    Manual Temperature Control 2.9-17
    Temperature Control 2.9-16
    Temperature Monitoring 2.9-17
  IMU Cooling 2.9-18
  Spacelab Air Revitalization 2.9-19
  Water Coolant Loop System 2.9-19
  Water Loop
    Flow 2.9-20
    Pumps 2.9-20
ATO 6.6-1
  Powered Flight 6.6-1
  OMS-1 ..... 6.6-1
  OMS-2 ..... 6.6-1
Attitude Control 7.2-1
ATU 2.4-27
ATVC 2.13-41
Audio
  Center Panel 2.4-32
  Central Control Unit 2.4-26

Distribution System 2.4-25
Loops and System Interface 2.4-25
Loose Communications Equipment 2.4-33
Speaker/Michrophone Units 2.4-31
Terminal Units 2.4-27
Autoland 7.4-24
Auxiliary Power Unit 2.1-1
Auto Shutdown 2.1-7
Caution and Warning Summary 2.1-23
Circulation Pump 2.1-19
Cooling 2.1-10
Injector 2.1-10
Fuel Pump/Gas Generator Valve Module 2.1-10
Description 2.1-1
Electronic Controller 2.1-6
Failure 6.8-2
Fuel
Control Valves 2.1-5
Isolation Valves 2.1-4
Leak 6.8-3
Pump 2.1-4
Schematic 2.1-3
System 2.1-2
Tank 2.1-2
Valve Overtemp 6.8-4
Gas Generator and Turbine 2.1-5
Heat Exchanger 2.1-19
Heaters 2.1-11
Hydraulic
Accumulator 2.1-18
Reservoir 2.1-18
Improved APU 2.1-2, 2.1-4, 2.1-6
Injector Cooling System 2.1-10
Location 2.1-2
Lubricating Oil 2.1-5
Overtemp 6.8-4
Main Pump 2.1-16
Meters 4.1-6
Nitrogen Leak 6.8-3
Operations 2.1-21
Overspeed/Underspeed Detection 2.1-9
Overview Drawing 2.1-25
Rules of Thumb 2-1-24
Second Failure 6.9-2
Speed Control ..... 2.1-7 , 6.8-3
Start 2.1-6
Summary Data 2.1-24
Water Spray Boiler 2.1-12
Heaters 2.1-16
Nitrogen Supply System 2.1-13
Quantity Low 6.8-3
Temperature Control 2.1-14
Supply System 2.1-14

Avionics Bay Cooling 2.9-18
AVVI 2.7-15

B

Backup LH2 Dump Valves 2.16-16
Bailout ..... 2.10-20 , 6.7-4
Ball Bar 7.4-15
Barrier 7.4-19
BFC CRT Switches 2.6-42
BFS 2.6-21
Deorbit 7.3-18
Engage Pushbutton ..... 2.6-43 , 6.8-8
Entry 7.3-18
Failure 6.8-8
Fault Messages 2.6-46
Self Engage 6.9-3
Special Operations and Displays 2.6-45
Bioinstrumentation System 2.5-14
Bipropellant Valve Assembly 2.18-3
Bleed Valves 2.16-16
Body
Axis Coordinate System 2.13-3
Flap 1.2-14, 7.4-20
Switches 2.13-35
Braking 2.14-5, 7.4-19
Anti-Skid 2.14-7
Controls 2.14-15
Hydraulic Power 2.14-7
Temperature Control 2.14-9
Uncommanded Pressure 6.8-4
Bridge Fittings 2.19-15
Bus System 2.8-20
AC Power Generation 2.8-24
DC Power 2.8-21
Control 2.8-23
Essential 2.8-21
Main 2.8-21
Payload 2.8-23
Losses 6.8-10
Short 6.8-10
Tie 2.8-28

C

Cabin
Air Flow 2.9-13
PPO_2 Meter 4.1-12
Pressure
Failure 6.8-8
Meter 4.1-12

Temperature Control 2.9-16
Relief Valves 2.9-11
CCTV 2.3-1
Accessories 2.3-13
ADU 2.3-13
Light Shades 2.3-13
Mounts 2.3-13
Power Cables 2.3-13
Photoflood 2.3-13
Camera 2.3-4
Camcorder 2.3-8
EMU 2.3-7
Pan & Tilt Unit 2.3-7
Spacelab 2.3-6
Description 2.3-1
Lenses 2.3-9
Closeup 2.3-13
Monitors 2.3-10
Color 2.3-10
Viewfinder 2.3-11
Operations 2.3-14
Overview 2.3-1
Rules of Thumb 2.3-22
Summary Data 2.3-20
Video Control Unit 2.3-1
Video Tape Recorder 2.3-11
Rapid Cabin Depressurization 2.2-10
Caution and Warning 2.2-1
Alarms 2.2-2
Alert 2.2-5
C/W 2.2-2
Emergency 2.2-2
Limit Sensing 2.2-5
Cabin Pressure 2.2-10
CRT Power Switch 6.10-1
Description 2.2-1
F7 Light Summary 2.2-20
Fault Message Summary 2.2-23
Fire
Extinguishers 2.2-7
Ports 2.2-9
Supression 2.2-5
Fuel Cell Reactant Switches 6.10-1
GPC/MDM Switches 6-10-1
Hardware Table 2.2-4
MPS Switches 6.10-1
Operations 2.2-11
Overview 2.2-2
Rules of Thumb 2.2-19
SM Table Maintenance 2.2-14
Smoke Detection 2.2-5
Summary Data 2.2-19
Center of Gravity Limitations 4.10-1
Clothing 2.5-1
COAS 2.13-14
Commode 2.23-6
Communications 2.4-1, 8.2-3
Audio Distribution System 2.4-25
Description 2.4-1
ICOM Lost 6.8-5
Instrumentation 2.4-35
Ku-Band System 2.4-12
Lost 6.8-5
Payload 2.4-20
Rules of Thumb 2.4-52
S-Band
Frequency Modulation 2.4-10
Phase Modulation 2.4-2
Signal Strength Meter 4.1-8
System Summary 2.4-42
Teleprinter 2.4-40
Text and Graphics 2.4-41
UHF 2.4-23
Lost 6.8-5
Contingency
Abort 6.7-1
Entry 6.7-2
ET Separation 6.7-2
Powered Flight 6.7-1
Crosstie 2.9-38
Deorbit Prep Book 3.3-2
EVA Checklist 3.3-2
Rendezvous Book 3.3-2
Control
Bus 2.8-23
Documents 3.1-1
Oscillations 7.3-13
Cooling
Loss 6.8-9
Management 2.9-41
Coordinate Reference Systems 1.1-7, 2.13-2, 3
Body Axis 2.13-3
LVLH 2.13-4
M50 ..... 2.13-3
Runway 2.13-4
Starball 2.13-3
Crew 2.21-2
Crew Compartment 1.2-3
Crew Systems 2.5-1
Acoustics Provisions 2.5-19
Air Sampling System 2.5-20
Clothing/Worn Equipment 2.5-1
Description 2.5-1
Exercise Equipment 2.5-5
G-Suit 2.5-17
Housekeeping Equipment 2.5-6

Operational Bioinstrumentation System 2.5-14
Personal Hygiene Provisions 2.5-1
Photographic Equipment 2.5-10
Radiation Equipment 2.5-18
Reach and Visility Aids 2.5-7
Restraints and Mobility Aids 2.5-6
Shuttle Orbiter Medical System 2.5-13
Sighting Aids 2.5-12
Sleeping Provisions 2.5-2
Window
EMI Shields 2.5-12
Filters 2.5-12
Shades 2.5-12
Cross-Coupling Effects 7.2-10
Crossfeed ..... 2.18-15 , 6.8-15
Crossrange Performance 9.3-1
Crosswind Limitations 4.7-1
CRT
Displays B-1
Power Switch 6.10-1
Cryo
Heaters 2.8-3, 6.8-6
Leaks 6.8-5, 6.9-3
Meters 4.1-13, 4.1-14
Reactant Distribution 2.8-8
Storage Tanks 2.8-2
System Diagram 2.8-33
Cue Card Placement
Ascent 3.2-2

D

DAP 2.13-44
Aerojet 2.13-48
OMS TVC 2.13-48
Orbit 2.13-47, 7.2-2
RCS 2.13-47
Transition 2.13-46
Data Bus Network 2.6-7
Flight-Critical 2.6-8
Intercomputer Communication 2.6-10
Payload 2.6-9
Launch 2.6-9
Mass Memory 2.6-9
Display/Keyboard 2.6-9
PCMMU 2.6-9
Data Path Failure 6.8-13
DDU 2.7-2
Dedicated Displays 2.7-1
ADI 2.7-5, 7.1-3
AMI 2.7-13, 4.1-1
AVVI 2.7-15
DDU 2.7-2
Description 2.7-1
FCS Push Button Indicators 2.7-19
G-Meter 2.7-20
HSI 2.7-7, 7.4-5
HUD 2.7-21
RCS Command Lights 2.7-20
SPI 2.7-17
Systems Summary Data 2.7-24
Default Air Data 7.4-8
Deorbit
Burn 5.4-3
Cue Card 7.3-2
Flight Rules 7.3-3
GNC 2.13-54
Manual Control 7.3-5
Monitoring 7.3-1
Preparation 5.4-1
Preparation Book 3.1-1
Takeover 7.3-4
Deploy Checklist 3.2-2
Derotation 7.4-17
Techniques 7.4-18
Descent Rate Limitations 4.9-1
Display
Characteristics 2.6-31
DISP 2.6-30
Hierarchy 2.6-27
Keyboard Data Buses 2.6-9
Sequencing, Overlaying, and Retention . 2.6-30
SPEC 2.6-30
Distribution Assemblies 2.8-25
Documents
Control 3.1-1
Flight-Specific 3-2
Generic 3-2
Off-Nominal 3.3-1
Operational Use 3.5-1
Reference 3.4-1
Standby Supplements 3-2
Support 3.2-1
Downrange Performance 9.3-1
DPS 2.6-1
BFS
Engage 6.8-8
Failure 6.8-8
Data Bus Network 2.6-7
Description 2.6-1
Dictionary 3.4-1
GPC 2.6-2
Failure Signatures 6.8-7
Functional Block Diagram 2.6-2
Interfacing Hardware 2.6-1

Mass Memory Units 2.6-13
MCDS 2.6-14
MDM 2.6-11
MTU 2.6-15
Operations 2.6-25
Rules of Thumb 2.6-51
Set Splits ..... 6.8-8 , 6.9-1
Software 2.6-19
Summary Data 2.6-47
Switches 6.10-1
Drag 9.2-1
Error 7.3-11
Drag Chute 2.14-5, 2.14-14
Droop 6.2-2
DSC 2.4-37
Dual Gas Regulator Failure 6.8-11
Dump Nozzle Heaters 2.9-36
Dumps
AOA 6.5-1
RTLS
Pre-MECO 6.3-4
Post-MECO 6.3-6
TAL
Pre-MECO 6.4-1
Post-MECO 6.4-3
Dynamic
Flight Phases 8.1-1
Pressure Limitations 4.6-1

E

ECLSS 2.9-1
Active Thermal Control System 2.9-22
Atmosphere Revitalization System 2.9-12
Cabin Pressure Failure 6.8-8
Caution and Warning Summary 2.9-45
Cooling Loss 6.8-9
Description 2.9-1
dP/dT Meter 4.1-11
Fan Failures 6.8-9
Fire 6.8-9
Freon Leaks 6.8-9
Meters 4.1-8, 4.1-10
Operations 2.9-42
Pressure Control System 2.9-4
Pump Failures 6.8-9
Rules of Thumb 2.9-57
Summary Data 2.9-46
Supply and Waste Water Systems 2.9-33
Water Leaks 6.8-9
ECU 2-8-18
Egress Pole 2.10-14
Electromechanical Actuators 2.17-1
Electrode Location 2.5-16
Elevons 7.4-20
Emergency Procedures 6-1
Abort Once Around 6.5-1
Abort to Orbit 6.6-1
Ascent Aborts 6.2-1
Contingency Abort 6.7-1
Launch Abort Modes and Rationale 6.1-1
Multiple Failure Scenarios 6.9-1
Return To Launch Site 6.3-1
Switch and Panel Cautions 6.10-1
Systems Failures 6.8-1
Summary 6.11-1
Transoceanic Abort Landing 6.4-1
EMU
Ancillary Equipment 2.11-10
Life Support System 2.11-6
Space Suit Assembly 2.11-3
Engine
AC Power 4.2-2
APC/ALC Failure 6.9-1
Data Path Failure 6.8-13
Failure 6.8-12
Helium Pressure 4.2-1
Hydraulics 4.2-2
Nozzle Position 4.2-1
Pc Meter 4.1-3
Power 4.2-1
Propellant Pressure 4.2-1
Start 2.16-30
Stuck Throttle 6.8-13, 6.9-1
Temperature 4.2-1
Entry
Acceleration Limitations 4.11-1
Airspeed Limitations 4.3-1
Alpha Limitations 4.4-1
Approach and Landing 5.4-8
Backup Flight System 7.3-18
Bailout 6.7-4
NZ Hold/Pullout 6.7-3
Braking Performance 9.3-4
Checklist 3.1-2
Contingency Abort 6.7-2
Alpha-Mach 6.7-3
Alpha Recovery 6.7-3
Crossrange Performance 9.3-1
Cue Cards 3.1-2, 7.3-7, 7.3-10
Deorbit Burn 5.4-3, 7.3-1
Deorbit Preparation 5.4-1
Descent Rate Limitations 4.9-1
Downrange Performance 9.3-1
Dynamic Pressure Limitations 4.6-1
Entry Interface 5.4-5

Flight Crew 8.7-1
Flying Tasks Overview 7.3-1
GCA 7.3-11, 7.3-18
GNC 2.13-55
History 9.3-3, 9.3-6
Manual Control 7.3-1, 7.3-14
Mission Control Center 8.7-1
Monitoring 7.3-1, 7.3-6
Procedures 5.4-1
RCS Use Data 9.3-4
Rollout Performance 9.3-4, 9.3-7
Rules of Thumb 7.3-20
Sensory Cues 7.3-18
TAEM 5.4-7
Takeover 7.3-1, 7.3-11
Trajectory 9.3-1
EPDS
Bus
Losses 6.8-10
System 2.8-20
Tie 2.8-28
Component Cooling 2.8-27
DC Power 2.8-21
Distribution Assemblies 2.8-25
Load Controllers 2.8-26, 6.9-1
Meters 4.1-7
Motor Controllers 2.8-26
Power Controllers 2.8-26, 6.9-1
Powerdowns 6.8-12
Remote Power Controllers 2.8-26
EPS 2.8-1
Bus Loss Signatures 6.8-10
Caution and Warning Summary 2.8-32
Description 2.8-1
Electrical Power Distribution and Control 2.8-20
Fuel Cell System 2.8-10
Meters 4.1-7
Operations 2.8-30
Powerdowns 6.8-12
PRSD 2.8-1
Reactant Valve Failure 6.8-11
Rules of Thumb 2.8-38
Shorts 6.8-10
Summary Data 2.8-38
Escape System 2.10-1
Bailout Procedures 2.10-20
Description 2.10-1
Egress Pole 2.10-14
Emergency Egress Slide 2.10-16
Launch Pad Egress 2.10-1
LES 2.10-4
Personal Parachute 2.10-5
Pryotechnics 2.10-13
Secondary Emergency Egress 2.10-16
Summary Data 2.10-22
Essential Bus 2.8-21
ET SEP
Inhibit 6.8-14
Switch Failure 6.8-14
EVA 2.11-1
Airlock 2.11-11
Checklist 3.2-1
Chronology 2.11-1
Description 2.11-1
EMU 2.11-3
Manned Maneuvering Unit 2.11-17
Operations 2.11-19
Rules of Thumb 2.11-22
Summary Data 2.11-22
Support Equipment 2.11-15
Exercise Equipment 2.5-5
Exterior Lights 2.15-12
External Tank 1.3-1
Hydrogen Tank 1.3-3
Impact 9.1-8
Instrumentation 1.3-3
Intertank 1.3-2
LOX Tank 1.3-2
Range Safety System 1.3-4
Separation 6.7-2
Inhibit 6.8-14
Switch Failure 6.8-14
Thermal Protection System 1.3-3
Umbilical Doors 2.17-4

F

F7 C&W Light Summary 2.2-20
Failed Yaw Jets 7.3-12
Failure Summary 6.11-1
Fan
Failures 6.8-9
Separator 2.23-5
Fault
Detection and Annunciation 2.6-39
Message Summary 2.2-23
Messages 2.6-40
Summary Display 2.6-41
FCS
Channel Failures 6.8-12
Checkout 5.3-7
Hardware 2.13-24
AA 2.13-25
ASA 2.13-38
ATVC 2.13-41

Body Flap Switches 2.13-35
Orbiter RGA 2.13-26
RHC 2.13-28
RPTA 2.13-33
SBTC 2.13-34
SRB RGA 2.13-28
THC 2.13-31
Trim Switches 2.13-36
Push Button Indicators 2.7-19
Feedline Disconnect Valves 2.16-15
FES 2.9-28
Auto Shutdown 2.9-29
Controllers 2.9-29
Heaters 2.9-30
Temperature Monitoring 2.9-30
Total Failure 6.9-2
Water Dumps 2.9-31
Fill/Drain Valves 2.16-15
Final Flare 7.4-14
Fire Suppression ..... 2.2-5 , 6.8-9
Flight Characteristics 7-1
Flight Controller Data 8.2-1
Flight Crew 2.21-2
Duties and Coordination 8.1-1
Dynamic Flight Phases 8.1-1
Intercom Protocol 8.1-2
Orbit Phase 8.1-1
Flight-Critical Data Buses 2.6-8
Flight Data File 3-1
Basic 3.5-1
Containers 2.22-1
Fabrication 3.5-1
Final 3.5-3
Preliminary 3.5-1
Structure 3-3
Symbols 3.5-1
Use 3.5-4
482 ..... 3.5-2
Flight Deck 1.2-4
Stowage Bag 2.22-4
Flight Plan 3.1-1
Floodlights 2.15-1
Flyback RTLS 6.3-5
Food 2.12-2
Accessories 2.12-4
Warmer 2.12-2
Freon
Flow Diagram 2.9-48
Leaks 6.8-9
Loops 2.9-22
Second Failure 6.9-2
Fuel Cell
Block Diagram 2.8-10
Cooling Loss 6.8-11
Cooling/Temperature Control 2.8-16
Crossover 6.8-11
Displays and Controls 2.8-11
Dual Gas Regulator Failure 6.8-11
Electrical Control Unit 2.8-18
Internal Short 6.8-11
Performance Monitor 2.8-18
Purge 2.8-15
Reactant Valve
Caution 6.10-1
Failure 6.8-11
Second Failure 6.9-2
Shutdown 6.8-11
Stack Temp Meter 4.1-15
Start 2.8-19
Water Removal 2.8-13
Fuel Dissipation 6.3-4
Fuselage
Aft 1.2-11
Forward 1.2-1
Mid 1.2-10

G

Galley
Controls 2.12-4
Description 2.12-1
Oven 2.12-3
Rehydration Station Dispenser 2.12-3
Repackaged 2.12-3
Water
Dispenser 2.12-1
Supply 2.9-39
G-Meter 2.7-20
G-Suit 2.5-17
GCA 7.3-12, 7.3-19
GCIL Interface Logic 2.4-1
Gimbal Failure 6.8-16
Gliding RTLS 6.3-6
GNC 2.13-1
Caution and Warning Summary 2.13-59
Control
Modes 2.13-5
Software 2.13-5
Description 2.13-1
Digital Autopilot 2.13-44
Dilemmas 6.8-12
Flight Control System Hardware 2.13-24
FCS Channel Failure 6.8-12
Navigation Hardware 2.13-5

Operations 2.13-50
Ascent 2.13-50
Deorbit 2.13-54
Entry 2.13-55
Insertion 2.13-52
Orbit 2.13-53
Rules of Thumb 2.13-66
Sensor Failures 6.8-12
Summary Data 2.13-60
GPC 2.6-2
Controls 2.6-3
Failure Indication 2.6-6
Modes of Operation 2.6-5
GPC/CRT Assignment 2.6-35
GPC/MDM Switches 6.10-1
GRTLS 6.3-6
Alpha Recovery 6.3-7
Alpha Transition 6.3-7
Guidance 6.3-7
NZ Hold 6.3-7
Post-MECO Dumps 6.3-6
S-Turn 6.3-8
TAEM 6.3-8
Guidance
GRTLS 6.3-6
TAL 6.4-1

H

HAINS IMU 2.13-11
Halon 2.2-9
Handling Qualities 7.4-20
Hard Stop 2.19-10
Heading Alignment Cone 7.4-7
Helium System 2.16-20
Interconnect Valves 2.16-23
Isolation Valves 2.16-22
Leak
OMS/RCS 6.8-14
SSME 6.8-13
Manifold Pressurization 2.16-23
Pneumatic
Control Assemblies 2.16-24
Left Engine Crossover 2.16-23
Pressure Regulators 2.16-22
Schematic 2.16-21
Storage and Supply 2.16-20
Tanks 2.16-20
Helmet Stowage Bag 2.22-5
High Energy Recovery 7.3-12
HIU 2.4-33
Hold-Down Posts 1.4-3
Housekeeping Equipment 2.5-6
HSI 2.7-7, 7.4-5
Ascent Displays 2.7-8
Display Parameters 2.7-9
Entry Displays 2.7-8
HUD 2.7-21
Hydraulic
Accumulator 2.1-18
Brake Power 2.14-5
Circulation Pump 2.1-19
Failure ..... 6.8-2 , 6.9-1
Fluid Overtemp 6.8-4
Heaters 2.1-21
Main Pump 2.1-16
Leak 6.8-3
MPS System 2.16-24
Isolation On Orbit 2.16-26
Lockup 2.16-25
Operation 2.16-24
TVC 2.16-25
Power Units 1.4-5
Pressure Meter 4.1-5
PRL 6.8-4
Quantity Meter 4.1-5
Reservoir 2.1-18
Second Failure 6.9-2
Switching Valve Failure 6.8-4
System Failure 6.8-2
Operations 2.1-21
Overview Drawing 2.1-25
Rules of Thumb 2.1-24
Uncommanded Brake Pressure 6.8-4
Hydrogen Separators 2.9-33
Hydrogen Tank 1.3-3
Hygiene Provisions 2.5-1

I

ICC Data Buses 2.6-10
ICOM Lost 6.8-5
IFM Checklist 3.3-1
Ignition 1.4-4
IMU 2.13-6
Cooling 2.9-18
HAINS 2.13-11
Platform Assembly 2.13-7
In-Flight
Failures 6.11-1
Stowage Bag 2.22-6
Injector Plate 2.18-4
Inner Glide Slope 7.4-14
Techniques 7.4-15

Instrument
Lights 2.15-7
Markings 4.1-1
Instrumentation 2.4-35
Dedicated Signal Conditioners 2.4-37
Master Timing Unit 2.4-38
MDM 2.4-37
Operations Recorders 2.4-38
Payload Recorder 2.4-40
PCMMU 2.4-38
System Overview 2.4-36
Integrated Operations 8.1
Ascent 8.5-1
Entry 8.7-1
Flight Crew Duties and Coordination 8.1-1
Dynamic Flight Phases 8.1-1
Intercom Protocol 8.1-2
Orbit Phase 8.1-1
Launch 8.4-1
Orbit 8.6-1
Post-Landing 8.8-1
Pre-Launch 8.3-1
Working with Mission Control Center 8.2-1
Intercomm Protocol 8.1-2
Interconnect 2.18-15
Intertank 1.3-2
Instrument Pointing System 2.21-5
ITEM
Configuration Change 2.6-34
Multiple Data Entries 2.6-34
Operations 2.6-33

J

Jet Fail 6.8-15
Leak 2.20-14
Off 2.20-14
On 2.20-14
Jets
Primary 2.20-3
Vernier 2.20-3
Jettison
Stowage Bag 2.22-6
System 2.19-13

K

Keyboard 2.6-28
Data Buses 2.6-9
Ku-Band System 2.4-12
Antenna Deployment and Stowage 2.4-16
Deployed Assembly 2.4-15
Rendezvous Radar 2.4-18

L

Landing
Comm Protocol 8.1-2
Deceleration System 2.14-1
Brakes 2.14-6
Description 2.14-1
Drag Chute.... ..... 2.14-5, 2.14-14
Interfaces 2.14-1
Nose Wheel Steering 2.14-10
Operations 2.14-11
Rules of Thumb 2.14-18
Summary Data 2.14-18
Gear 2.14-1, 7.4-14
Deployment 2.14-3
Doors 2.14-1
Ground Reset 2.14-13
Retraction 2.14-2
Shock Struts 2.14-4
Wheels and Tires 2.14-4
Sink Rate Limitations 4.9-1
Sites 1.1-5, 7.4-26
Weight Limitations 4.8-1
Last
Full On-Orbit Day 5.3-7
Pre-MECO TAL 6.2-3
TAL 6.2-3
Latches 2.19-16
Launch
Abort Modes and Rationale 6.1-1
Data Buses 2.6-9
Flight Crew 8.4-1
Launch Control Center 8.4-2
Mission Control Center 8.4-1
Pad Egress System 2.10-1
Sites 1.1-5
Wind Limits 4.12-2
Window 9.1-2
LES
Helmet 2.4-33
Suit 2.5-2, 2.10-4
Lighting System 2.15-1
Description 2.15-1
Exterior 2.15-12
Interior 2.15-1
Annunciator 2.15-10
Flood 2.15-1
Instrument 2.15-7
Numeric 2.15-8
Panel 2.15-6
Rules of Thumb 2.15-15
Summary Data 2.15-15
Limitations 4-1

LiOH 2.9-13
Load Controllers 2.8-26
Location Codes 1.1-8
Locker 2.5-15, 2.22-1
Loose Communications Equipment
Cables 2.4-33
Handheld Microphone 2.4-35
HIU 2.4-33
Launch and Entry Helmets 2.4-33
Multiple Headset Adapter 2.4-34
Wireless Communications Units 2.4-34
Very Lightweight Headset 2.4-35
Low Energy Recovery 7.3-17
LOX Tank 1.3-2
LVLH Coordinate System 2.13-4

M

M50 Coordinate System 2.13-3
Main Bus 2.8-21
Main Propulsion System 2.16-1
Caution and Warning Summary 2.16-39
Description 2.16-1
Engine Manifold Meter 4.1-4
Failures 6.8-12, 6.9-1
Helium
Leak ..... 6.8-13 , 6.9-1
Press Meter 4.1-4
System 2.16-20
Hydraulic Systems 2.16-24
Malfunction Detection 2.16-26
Operations 2.16-29
Ascent 2.16-31
Deorbit Prep 2.16-36
Engine Start 2.16-30
Entry 2.16-36
MECO 2.16-32
Orbit 2.16-36
Post-MECO 2.16-33
Pre-Launch 2.16-29
RTLS Propellant Dump 2.16-37
Vacuum Inerting 2.16-35
Propellant Management System 2.16-14
Rules of Thumb 2.16-43
SSME 2.16-3
Controllers 2.16-8
Data Path Failure 6.8-13
Engine Failure 6.8-12
Limitations 4.2-1
MECO Confirm Failure 6.8-14
Pc Meter 4.1-3
Stuck Throttle 6.8-13, 6.9-1
Summary Data 2.16-40
Switch Cautions 6.10-1
Malfunction 8.2-1
Book 3.3-1
Maneuver Display 2.18-2
Manifold
Pressurization 2.16-23
Repress Valves 2.16-18
Manned Maneuvering Unit 2.11-17
Manual
Attitude Control 7.2-4
Temperature Control 2.9-17
Maps and Charts Book 3.4-1
Mass Memory Data Buses 2.6-9
MCDS 2.6-14
MDM 2.6-11
Mechanical Systems 2.17-1
Active Vent System 2.17-2
Description 2.17-1
External Tank Umbilical Doors 2.17-4
Indicator Failures 6.8-12
Motor Failures 6.8-12
Payload Bay Door System 2.17-9
Rules of Thumb 2.17-20
Summary Data 2.17-17
MECO 2.16-32
Confirm Failure 6.8-14
Targets 9.1-7
Medical Checklist 3.3-2
Memory Configurations 2.6-35
Microbial Filter 2.9-34
Middeck 1.2-5
Retention Net 2.22-6
Accommodations Rack 2.22-6
Midfuselage 1.2-10
Minimum Safe Orbit 9.1-10
Mission Specialist 2.21-2
MLS 2.13-22
MMU 2.6-13
Assignment 2.6-37
Mode 1 Unaided Egress/Escape 6.1-1
Mode 2 Aided Escape 6.1-1
Mode 3 Aided Escape 6.1-2
Mode 4 Aided Escape 6.1-2
Monitors (CCTV) 2.3-10
Motor
Controllers 2.8-26
Failures 6.8-12
MPM 2.19-11
Jettison System 2.19-13
Pedestals 2.19-11
Retention Latches 2.19-12
Torque Tube 2.19-12
MTU 2.4-38, 2.6-15

Multiple
Failure Scenarios 6.9-1
Headset Adapter 2.4-34

N

Nav Aids Table 7.4-26
Navigation Hardware 2.13-5
Air Data System 2.13-19
COAS 2.13-14
HAINS IMU 2.13-11
IMU 2.13-6
MLS 2.13-22
Radar Altimeters 2.13-24
Star Trackers 2.13-11
TACAN 2.13-15
Negative
Pressure Relief Valves 2.9-11
Return 6.2-2
Nitrogen System 2.9-6
OMS 2.18-6
No Comm Mode Boundaries Card 6.2-1
No Yaw Jet Entry 7.3-12, 7.3-16
Nominal Mission Profile 1.1-2
Normal Procedures Summary 5-1
Ascent 5.2.1
Entry 5.4-1
Orbit 5.3-1
Post Landing 5.5-1
Pre-Launch 5.1-1
Nose Gear Touchdown Limitations 4.9-1
Nose Wheel Steering 2.14-10, 2.14-16, 7.4-19
GPC 2.14-16
NSP/COMSEC Link Functions 2.4-9
Numeric Lights 2.15-8
NZ Hold 6.3-7, 6.7-3

O

Off Nominal
Approaches 7.4-23
Documents 3.3-1
OI MDM 2.4-37
OMS 2.18-1
AOA 6.5-1
ATO 6.5-3, 6.6-1
Caution and Warning Summary 2.18-25
Crossfeed Failures 6.8-15
Description 2.18-1
Engines 2.18-3
Ball Valve Actuation 2.18-9
Bipropellant Valve Assembly 2.18-3
Chamber Pressure 4.2-2
Failure 6.8-15
Injector Plate 2.18-4
Nitrogen Pressure 4.2-3
Nozzle Position 4.2-3
Operations 4.2-2
Propellant 4.2-3
Purge 2.18-9
Second Failure 6.9-2
Temperature 4.2-2
Thrust Chamber 2.18-5
Nitrogen System 2.18-6
Fault Detection and Identification 2.18-22
Engine 2.18-22
Gimbal 2.18-23, 6.8-16
Helium System 2.18-10
Leaks 6.8-14
Meters 4.1-16
Pressure Regulators 2.18-11
Tanks 2.18-10
Valves 2.18-11
Insertion Burns 7.1-7
Interconnect Failures 6.8-15
Leaks ..... 6.8-14 , 6.9-3
Limitations 4.2-2
Maneuver Display 2.18-2
Manual Control 7.1-8
Monitoring 7.1-7
N2/He Tank Meter 4.1-2
Operations 2.18-23
Pc Meter 4.1-2
Pods 1.2-13
Propellant Storage and Distribution 2.18-12
Actuators 2.18-19
Crossfeed ..... 2.18-15 , 6.8-15
Failure 6.8-15
Interconnect ..... 2.18-15 , 6.8-15
Isolation Valves 2.18-15
Leaks 6.8-14
Press Meters 4.1-16
Quantity Gauging 2.18-13
Regulator Failure 6.8-15
Sniff Lines 2.18-19
Tanks 2.18-12
RTLS Dump 6.3-4
Rules of Thumb 2.18-32
Schematic 2.18-26
Summary Data 2.18-32
Switches 6.10-1
Targeting Cue Card 6.5-2
Thermal Control 2.18-10
TVC 2.18-21
DAP 2.13-48
Operating Limitations 4-1

Operational Use 3.5-1
OPS
  Recorders 2.4-38
  Transitions 2.6-30, 6.4-3
Orbit
  Attitude Control 7.2-1
  Common Attitudes 7.2-1
  Control 7.2-2
  DAP 2.13-47
    Configuration 7.2-2
    Panel 2.13-44
  Displays 7.2-2
  Drag 9.2-1
  Flight Crew 8.6-1
  GNC 2.13-53
  Last Full On-Orbit Day 5.3-7
  Manual Control 7.2-4
  Mission Control Center 8.6-1
  OMS (RCS) Burns 5.3-3
  Operations 5.3-1
    Checklist 3.2-1
  Period 9.2-1
  Perturbations 9.2-1
  Phase 8.1-1
  Procedures 5.3-1
  Propellant Use 9.2-3
  Rendezvous 5.3-4, 7.2-5
  Rules of Thumb 7.2-12
  Translation 7.2-5
  Universal Pointing 7.2-2
Orbiter
  Ground Turnaround 1.1-5
  Malfunctions 8.2-1
  Structure 1.2-1
Outer Glide Slope 7.4-9
  Techniques 7.4-12
  Visual Aids 7.4-11
Oxygen System 2.9-5

P

Pallet 2.21-5
Panel
  Drawings A-1
  Lights 2.15-6
PAPI Lights 7.4-12
PASS 2.6-19
Passive Thermal Control 1.2-16
Payload
  Bus 2.8-23
  CIU 2.4-22
  Commander 2.21-1
  Communication System 2.4-20
  Crew 2.21-2
  Data Buses 2.6-9
  Data Interleaver 2.4-22
  Guides 2.19-16
  Interrogator 2.4-21
  Operations Checklist 3.2-2
  Performance 9.1-1
  Retention System Controls 2.19-16
  Scuff Plates 2.19-16
  Signal Processor 2.4-21
  Systems Data Book 3.3-2
  Recorder 2.4-40
PCMMU 2.4-38
  Data buses 2.6-9
Parachute Assembly 2.10-5
Payload Bay Doors 2.17-9
  Closing 2.17-16
  Opening 2.17-14
PDRS 2.19-1
  Caution and Warning Summary 2.19-22
  Checklist 3.2-1
  Description 2.19-1
  MPM 2.19-11
    Jettison System 2.19-13
    Pedestals 2.19-11
    Retention Latches 2.19-12
    Torque Tube 2.19-11
  Operations 2.19-18
    Checkout 2.19-19
    Deactivation 2.19-19
    Initialization 2.19-18
    Powerdown 2.19-19
    Powerup 2.19-18
  PRLA 2.19-14
    Bridge Fittings 2.19-15
    Controls 2.19-16
    Latches 2.19-16
    Payload Guides 2.19-16
    Trunnions 2.19-16
  RMS 2.19-1
    Braking 2.19-11
    CCTV 2.19-9
    Components 2.19-2
    Displays and Controls 2.19-2
    End Effectors 2.19-7
    Hard Stop 2.19-10
    Manipulator Arm Drive System 2.19-4
    MCIU 2.19-4
    Mechanical Arm Assembly 2.19-6
    Reach Limits 2.19-10
    RHC 2.19-4
    Safing 2.19-11
    Soft Stop 2.19-10

THC 2.19-4
Thermal Protection 2.19-8
Rules of Thumb 2.19-28
Summary Data 2.19-23
Performance 9-1
Aborts 6.2-1
Ascent 9.1-1
Abort Mode Boundaries 9.1-9
Altitude. Velocity, Dynamic Pressure 9.1-5
ET Impact 9.1-8
Launch Window 9.1-2
Main Engines 9.1-5
MECO Targets 9.1-7
Minimum Safe Orbit 9.1-10
Payload 9.1-1
Squatcheloids 9.1-4
Entry 9.2-1
Orbit 9.3-1
Rules of Thumb 9.3-8
Period 9.2-1
Personal Hygiene Provisions 2.5-1
Perturbations 9.2-1
Phase Elapsed Time 5.3-4
Photo/TV Checklist 3.2-1
Photographic Equipment 2.5-10
Plume Impingement 7.2-6
Pneumatic
Control Assemblies 2.16-24
Left Engine Helium Crossover Valve 2.16-23
Pocket Checklists 3.3-1
Pogo Suppression System 2.16-7
Pole 2.10-14
Post Insertion Book 3.1-1
Post Landing 5.5-1
Flight Crew 8.8-1
Launch Contol Center 8.8-1
Mission Control Center 8.8.1
Post-MECO RTLS Dump 6.3-6
Post-Sleep Activities 5.3-2
Power Controllers 2.8-26
Powerdowns 6.8-12
Powered
Pitch Around 6.3-4
Pitchdown 6.3-6
PPO_2
Control 2.9-8
Meter 4.1-12
Prefinal 7.4-3
Preflare 7.4-13
Techniques 7.4-14
Pre-Launch
Flight Crew 8.3-1
Launch Control Center 8.3-1
Mission Control Center 8.3-1
Procedures 5.1-1
Pre-Sleep Activities 5.3-1
Press to ATO 6.2-2
Press to MECO 6.2-2
Prevalves 2.16-16
Pressure Control System 2.9-4
Airlock Depress Valve 2.9-12
Cabin Relief Valves 2.9-11
Diagram 2.9-4
Manifold 2.9-8
Negative Pressure Relief Valves 2.9-11
Nitrogen System 2.9-6
Operations 2.9-42
Oxygen System 2.9-5
PPO2 Control 2.9-8
Schematic 2.9-50
Vent Valves 2.9-11
Water Tank Regulator Inlet Valve 2.9-11
Primary Jet 2.20-4
Priority Rate Limiting 7.4-21
PRLA 2.19-14
Bridge Fittings 2.19-15
Controls 2.19-16
Latches 2.19-16
Payload Guides 2.19-16
Trunnions 2.19-16
Propellant Failure 6.8-15
Propellant Management System 2.16-14
Backup LH2 Dump Valves 2.16-16
Bleed Valves 2.16-16
Feedline Disconnect Valves 2.16-15
Fill/Drain Valves 2.16-15
Manifolds 2.16-14
Prevalves 2.16-16
Relief Valves 2.16-15
Repress Valves 2.16-18
Topping Valve 2.16-16
Ullage Pressure System 2.16-16
Prox Box Failures 6.9-2
Proximity Operations 5.3-7, 7.2-5
PRSD 2.8-1
Cryo Tanks 2.8-2
Reactant Distribution 2.8-8
Tank Heaters 2.8-3
Pullout (Contingency Abort) 6.7-3
Purge 2.18-9

Q

Quantity Gauging
OMS 2.18-13

R

Radar Altimeter 2.13-24
Radiation Equipment 2.5-18
Radiators 2.9-24
Deploy System 2.9-26
Flow Control 2.9-27
Mounting and Construction 2.9-25
Single Radiator Operations 2.9-27
Range Safety System 6.2-4
Controllability 6.2-4
ET 1.3-4
Limit Avoidance 6.2-5
SRB 1.4-7
RCRS ..... 2.9-14 ,15, 43, 44
RCS 2.20-1
Caution and Warning Summary 2.20-20
DAP 2.13-47
Description 2.20-1
Command Lights 2.7-20
Crossfeed 6.8-15
Helium System 2.20-10
Check Valves 2.20-12
Isolation Valves 2.20-11
Leaks 6.8-14
Limitations 4.2-2
Pressure Regulators 2.20-12
Relief Valve 2.20-12
Tanks 2.20-10
Hot Fire 5.3-8
Interconnect 6.8-15
Jet
Failures 6.8-15
Operations 4.2-3
System 2.20-3
Leaks 6.8-14, 6.9-3
Operations 2.20-18
Pods 1.2-13
Propellant System 2.20-5
Crossfeed Valves 2.20-10, 6.8-15
Interconnect 6.8-15
Isolation Valves 2.20-7
Leaks 6.8-14
Limitations 4.2-3
Quantity 2.20-6
Regulator Failure 6.8-15
Tanks 2.20-5
Redundancy Management 2.20-14
Dilemma 2.20-17
Failures 2.20-14
Fire Indication 2.20-18
Manifold RM 2.20-16
Pod Limit 2.20-16
Power Fail 2.20-17
Schematic 2.20-15
Selection 2.20-17
Regulator Failed High 6.8-15
Rules of Thumb 2.20-26
Schematic 2.20-21
Summary Data 2.20-26
Thermal Control 2.20-12
Reach and Visibility Aids 2.5-7
Reach Limits 2.19-10
Reactant Valve
Caution 6.10-1
Failure 6.8-11
Reference
Data Book 3.4-1
Documents 3.4-1
Regulator Failed High 6.8-15
Relief Valves 2.16-15
Remote Power Controllers 2.8-26
Rendezvous
Book 3.2-2
Operations 7.2-5
Radar 2.4-18
Rescue 2.10-20
Restraint and Mobility Aids 2.5-6
Return To Launch Site Abort 6.3-1
RGA
Orbiter 2.13-26
SRB 1.4-6, 2.13-28
RHC 2.13-28
RMS 2.19-1
Braking 2.19-11
CCTV 2.19-9
Checkout 2.19-19
Components 2.19-2
Deactivation 2.19-19
Deploy Operations 2.19-19
Displays and Controls 2.19-2
End Effectors 2.19-7
Hard Stop 2.19-10
Initialization 2.19-18
Jettison 2.19-19
Loaded Operations 2.19-19
Manipulator Arm Drive System 2.19-4
MCIU 2.19-4
Mechanical Arm Assembly 2.19-6
Operating Modes 2.19-20
Auto 2.19-21
Manual Augmented 2.19-20
Single Joint 2.19-20

Powerdown 2.19-19
Powerup 2.19-18
Reach Limits 2.19-10
Retrieve Operations 2.19-19
RHC 2.19-4
Safing 2.19-11
Soft Stop 2.19-10
THC 2.19-4
Thermal Protection 2.19-8
Unloaded Operations 2.19-19
Rollout 7.4-18
Braking Performance 9.3-4
Coast 7.4-18
History 9.3-6
RPTA 2.13-33
RTLS 6.3-1
Alpha Recovery 6.3-7
Alpha Transition 6.3-7
ET SEP 6.3-5
Gliding 6.3-6
Guidance 6.3-7
MECO 6.3-5
NZ Hold 6.3-7
Post-MECO Procedures 6.3-6
Powered RTLS 6.3-2
Pre-MECO Procedures 6.3-2
Propellant Dump 2.16-36
S-Turn 6.3-8
TAEM 6.3-8
Rudder 7.4-21
Rules of Thumb D-1
Runway Coordinate System 2.13-4

S

S-Band
DOD Links 2.4-4
Forward Link 2.4-2
Frequency Modulation 2.4-10
Antennas 2.4-10
System Block Diagram 2.4-11
Phase Modulation 2.4-2
Antennas 2.4-4
Communications Security 2.4-9
Network Signal Processors 2.4-8
Power Amplifiers 2.4-7
Power Modes 2.4-4
Preamplifiers 2.4-6
Transponders 2.4-7
Return Link 2.4-3
System Interfaces and Data Flow 2.4-3
SBTC 2.13-34
Safing 2.19-11
Science Mission Specialist 2.21-2
Sensor Failure/Dilemmas 6.8-12
Separation
ET SEP Inhibit 6.8-14
Maneuver 7.2-9
SRB 1.4-6
Switch Failure 6.8-14
Set Splits 6.8-8
Shock Struts 2.14-5
Shorts 6.8-10
Sideslip Limitations 4.5-1
Sighting Aids 2.5-12
Single
Engine TAL 6.2-2
Engine Press 6.2-3
Joint Mode 2.19-20
Sleeping Provisions 2.5-2
Slide 2.10-16
Smart Speed Brake Logic 7.4-10
Smoke Detection 2.2-5
Soft Stop 2.19-10
Software
BFS 2.6-21
PASS 2.6-19
Solid Rocket Boosters 1.4-1
Descent and Recovery 1.4-8
Electrical Power Distribution 1.4-5
Exploded View 1.4-4
Hold-Down Posts 1.4-3
Hydraulic Power Units 1.4-5
Ignition 1.4-4
Range Safety System 1.4-7
RGA 1.4-6
Separation 1.4-6
Thrust Vector Control 1.4-6
SOMS 2.5-13
Space Flight Participant 2.21-2
Spacelab 2.21-1
Air Revitalization 2.9-17
Command and Data Management System 2.21-11
CCTV 2.21-13
Data Display System 2.21-12
Mass Memory Unit 2.21-12
Module Intercom 2.21-13
Redundancy 2.21-22
Description 2.21-1
ECLS 2.21-14
Active Thermal Control System 2.21-15
Cabin Air Loop 2.21-21
Caution and Warning 2.21-16
Coolant Loops 2.21-20

Emergency Conditions 2.21-16
Pallet-Only 2.21-17
Tunnel Air Loop 2.21-15
Electrical Power 2.21-6
Flight Deck Interfaces 2.21-6
IPS 2.21-5
Mission Summary 2.21-3
Module 2.21-3
Orbiter Interface 2.21-19
Pallet 2.21-5
Summary Data 2.21-18
Transfer Tunnel 2.21-4
Space Shuttle Requirements 1.1-1
Speed Brake 7.4-20
SPI 2.7-17
Spiral Adjust 7.3-7
Squatcheloids 9.1-4
SSME 2.16-3
Bellows 2.16-6
Controllers 2.16-8
Command and Data Flow 2.16-10
Software 2.16-13
Data Path Failure 6.8-13
Engine Failure ..... 6.8-12 , 6.9-1
Helium Leak ..... 6.8-13 , 6.9-1
Hot Gas Manifold 2.16-7
Main Combustion Chamber 2.16-7
Oxidizer Heat Exchanger 2.16-7
Performance 9.1-5
Pogo Suppression System 2.16-7
Propellant Dump 2.16-8
Preburners 2.16-7
Set Split/MPS 6.9-1
Stuck Throttle ..... 6.8-13 , 6.9-1
Turbopumps 2.16-4
Fuel 2.16-4
Oxidizer 2.16-5
Star Trackers 2.13-11
Starball Coordinate System 2.13-3
State Vector 2.13-1
Stationkeeping 7.2-6
Statistics 1.1-1
Stowage 2.22-1
Description 2.22-1
Flexible Containers 2.22-4
Middeck Accommodations Rack 2.22-6
Rigid Containers 2.22-1
FDF 2.22-1
Floor Compartments 2.22-3
Lockers 2.22-1
Wet Trash Compartment 2.22-3
Stuck
Speed Brake 7.4-24
Throttle 6.8-13, 6.9-1
Study Notes C-1
Supply and Waste Water Systems 2.9-33
Alternate Water Pressurization 2.9-35
Contingency Crosstie 2.9-38
Crossover Valves 2.9-37
Dumps 2.9-37
Galley 2.9-39
Hydrogen Separators 2.9-33
Instrumentation 2.9-33
Isolation Valve 2.9-37
Microbial Filter 2.9-34
Nozzle Heaters 2.9-38
Tank
Depressurization 2.9-35
Inlet Valves 2.9-35
Outlet Valves 2.9-37
Pressurization 2.9-34
Support Documents 3.2-1
Survival 2.10-20
Switch and Panel Cautions 6.10-1
Systems
Aborts 6.2-3
AOA Book 3.3-1
Data Book 3.4-1
Failures ..... 6.8-1 , 6.11-1

T

Table Maintenance (SPEC 60) 2.2-14
TACAN 2.13-15
TAEM
Definition and Overview 7.4-1
Displays 7.4-3
Guidance 7.4-2
Manual Control 7.4-6
Monitoring 7.4-2
Pitch and Roll Commands 7.4-3
Prefinal 7.4-3
Procedures 5.4-7
Rules of Thumb 7.4-27
Takeover 7.4-6
Tracking the HAC 7.4-2
Tailscrape 7.4-16
TAL 6.4-1
Abort Dump 6.4-1
Entry 6.4-4
Guidance 6.4-1
Ops Transition 6.4-3
Post-MECO Dumps 6.4-3
Procedures 6.4-2
Redesignation Card 6.2-3

Tanks
OMS Propellant 2.18-12
Teleprinter 2.4-40
Temporary Stowage Bag 2.22-6
Text and Graphics System 2.4-41
THC 2.13-31
Thermal Protection System 1.2-16
Theta Limits 7.4-8
Thrust Vector Control
SRB 1.4-6
Thruster
Primary 2.20-3
Vernier 2.20-3
Tires 2.14-5
Topping Valve 2.16-16
Touchdown 7.4-16
Trajectory Management 7-1
High Energy Recovery 7.3-16
Low Energy Recovery 7.3-17
Trajectory Performance 9.3-1
TRANS DAP 2.13-46
Transients 7.3-12
Translation 7.2-5
Transoceanic Abort Landing 6.4-1
Trash Containers 2.22-5
Trim 7.4-21
Saturation 7.3-13
Switches 2.13-36
Trunnions 2.19-16
Turbopumps 2.16-4
Fuel 2.16-4
Oxidizer 2.16-5
TVC
MPS 2.16-25
Two-Engine TAL 6.2-2

U

UHF 2.4-23
Functional Block Diagram 2.4-23
Lost 6.8-5
Ullage Pressure System 2.16-16
Umbilical Doors 2.17-4
Universal Pointing 7.2-2
Uncommanded Brake Pressure 6.8-4

V

Vacuum
Inerting 2.16-35
Vent Isolation Valve 2.23-7
Vapor Isolation Valves 2.18-12
Vent
Location 2.17-3
Operations 2.17-2
Valves 2.9-11
Vernier Jet 2.20-3
Vertical Tail 1.2-15
Video
Control Unit 2.3-1
Tape Recorder 2.3-11
Visual Aids 7.4-11
Aim Points 7.4-11
Ball Bar 7.4-15
PAPI Lights 7.4-12
Vn Diagram 4.11-1

W

Waste Management System 2.23-1
Controls 2.23-5
Commode 2.23-3
Description 2.23-1
Fan Separator 2.23-3
Heaters 2.23-7
Operation 2.23-5
Schematic 2.23-2
Vacuum Vent Isolation Valve 2.23-7
Waste Water
Contingency Crosstie 2.9-42
Dumps 2.9-41, 2.23-6
System 2.9-40
Tank Draining 2.9-42
Water
Coolant Loop System 2.9-19
Dispenser 2.12-1
Leaks 6.8-9
Loop
Diagram 2.9-49
Pumps 2.9-20
Second Failure 6.9-2
Storage System Diagram 2.9-47
Tank Regulator Inlet Valve 2.9-11
WCCU 2.4-34
Weather Limitations 4.12-1
Weight On Wheels 7.4-17
Wet Trash Compartment 2.22-3
Wheels 2.14-5
Wind Effects on Trajectory 7.4-22
Working With Mission Control 8.2-1
Communications 8.2-3
Flight Controller Data 8.2-1
Orbiter Malfunctions 8.2-1
Worn Equipment 2.5-1
Windows 1.2-7
Shades/Filters/Shields 2.5-12
Wing 1.2-8

LOEP

1.0 (Original) 11/91
1.1 (PCN 1) 7/92
1.2 (PCN 2) 11/92

NOTE: "B" = *This page intentionally left blank.*

Cover 1.2
ii 1.2
CONTENTS
iii 1.2
iv 1.0
v 1.0
vi 1.0
vii 1.0
viii 1.0-B
ix.....1.0
x.....1.2
xi.....1.1
xii 1.2
xiii 1.1
xiv 1.2
xv 1.0
xvi 1.0
xvii 1.2
xviii 1.2
xix.....1.1
xx.....1.1
xxi.....1.1
xxii 1.1-B
1-1 .....1.0
1-2 .....1.0-B
1.1-1 .....1.0
1.1-2 .....1.0
1.1-3 .....1.0
1.1-4 .....1.0
1.1-5 .....1.1
1.1-6 .....1.0
1.1-7 .....1.2
1.1-8 .....1.0
1.1-9 .....1.0
1.1-10 .....1.0
1.1-11 .....1.0
1.1-12 .....1.0
1.1-13 .....1.0
1.1-14 .....1.0
1.1-15 .....1.0
1.1-16 .....1.0
1.1-17 .....1.0
1.1-18 .....1.0
1.1-19 .....1.0
1.1-20 .....1.0-B
1.2-1 .....1.0
1.2-2 .....1.0
1.2-3 .....1.0
1.2-4 .....1.0
1.2-5 .....1.0
1.2-6 .....1.0
1.2-7 .....1.0
1.2-8 .....1.0
1.2-9 .....1.0
1.2-10 .....1.0
1.2-11 .....1.0
1.2-12 .....1.0
1.2-13 .....1.0
1.2-14 .....1.0
1.2-15 .....1.0
1.2-16 .....1.0
1.2-17 .....1.0
1.2-18 .....1.0-B
1.3-1 .....1.2
1.3-2 .....1.0
1.3-3 .....1.0
1.3-4 .....1.0
1.3-5 .....1.0
1.3-6 .....1.0
1.4-1 .....1.1
1.4-2 .....1.1
1.4-3 .....1.1
1.4-4 .....1.0
1.4-5 .....1.1
1.4-6 .....1.0
1.4-7 .....1.1
1.4-8 .....1.0
1.4-9 .....1.0
1.4-10 .....1.0-B
2-1 .....1.0
2-2 .....1.0
2.1-1 .....1.1
2.1-2 .....1.1
2.1-3 .....1.1
2.1-4 .....1.1
2.1-5 .....1.1
2.1-6 .....1.1
2.1-7 .....1.1
2.1-8 .....1.1
2.1-9 .....1.1
2.1-10 .....1.1
2.1-11 .....1.1
2.1-12 .....1.1
2.1-13 .....1.2
2.1-14 .....1.2
2.1-15 .....1.2
2.1-16 .....1.2
2.1-17 .....1.1
2.1-18 .....1.1
2.1-19 .....1.1
2.1-20 .....1.1
2.1-21 .....1.1
2.1-22 .....1.1
2.1-23 .....1.1
2.1-24 .....1.1
2.1-25 .....1.1
2.1-26 .....1.1
2.1-27 .....1.1
2.1-28 .....1.1
2.1-29 .....1.1
2.1-30 .....1.1
2.2-1 .....1.2
2.2-2 .....1.0
2.2-3 .....1.0
2.2-4 .....1.0
2.2-5 .....1.0
2.2-6 .....1.0
2.2-7 .....1.0
2.2-8 .....1.0
2.2-9 .....1.0
2.2-10 .....1.2
2.2-11 .....1.2
2.2-12 .....1.2
2.2-13 .....1.2
2.2-14 .....1.2
2.2-15 .....1.2
2.2-16 .....1.2
2.2-17 .....1.2
2.2-18 .....1.2
2.2-19 .....1.2
2.2-20 .....1.0
2.2-21 .....1.0
2.2-22 .....1.0
2.2-23 .....1.0
2.2-24 .....1.0
2.2-25 .....1.0
2.2-26 .....1.0
2.2-27 .....1.0
2.2-28 .....1.0
2.2-29 .....1.0
2.2-30 .....1.0
2.2-31 .....1.0
2.2-32 .....1.0
2.2-33 .....1.0
2.2-34 .....1.0
2.2-35 .....1.0
2.2-36 .....1.0
2.2-37 .....1.0
2.2-38 .....1.0
2.2-39 .....1.0
2.2-40 .....1.0
2.3-1 .....1.0
2.3-2 .....1.0
2.3-3 .....1.0
2.3-4 .....1.0
2.3-5 .....1.0
2.3-6 .....1.0
2.3-7 .....1.0
2.3-8 .....1.0
2.3-9 .....1.0
2.3-10 .....1.0
2.3-11 .....1.0
2.3-12 .....1.0
2.3-13 .....1.0
2.3-14 .....1.0
2.3-15 .....1.0
2.3-16 .....1.0
2.3-17 .....1.0
2.3-18 .....1.0
2.3-19 .....1.0
2.3-20 .....1.0
2.3-21 .....1.0
2.3-22 .....1.0
2.4-1 .....1.0
2.4-2 .....1.0
2.4-3 .....1.0
2.4-4 .....1.0
2.4-5 .....1.0
2.4-6 .....1.0
2.4-7 .....1.0
2.4-8 .....1.0
2.4-9 .....1.0
2.4-10 .....1.0
2.4-11 .....1.0
2.4-12 .....1.0
2.4-13 .....1.0
2.4-14 .....1.0
2.4-15 .....1.0
2.4-16 .....1.0
2.4-17 .....1.0
2.4-18 .....1.0
2.4-19 .....1.0
2.4-20 .....1.0
2.4-21 .....1.0
2.4-22 .....1.0
2.4-23 .....1.2
2.4-24 .....1.0
2.4-25 .....1.2
2.4-26 .....1.2
2.4-27 .....1.2
2.4-28 .....1.0
2.4-29 .....1.0
2.4-30 .....1.2
2.4-31 .....1.2
2.4-32 .....1.2
2.4-33 .....1.2
2.4-34 .....1.0
2.4-35 .....1.1
2.4-36 .....1.0
2.4-37 .....1.0
2.4-38 .....1.0
2.4-39 .....1.0
2.4-40 .....1.0

2.4-41 .....1.0
2.4-42 .....1.1
2.4-43 .....1.0
2.4-44 .....1.0
2.4-45 .....1.0
2.4-46 .....1.0
2.4-47 .....1.0
2.4-48 .....1.1
2.4-49 .....1.1
2.4-50 .....1.1
2.4-51 .....1.1
2.4-52 .....1.1

2.5-1 .....1.0
2.5-2 .....1.0
2.5-3 .....1.0
2.5-4 .....1.0
2.5-5 .....1.0
2.5-6 .....1.0
2.5-7 .....1.0
2.5-8 .....1.0
2.5-9 .....1.0
2.5-10 .....1.0
2.5-11 .....1.0
2.5-12 .....1.0
2.5-13 .....1.0
2.5-14 .....1.0
2.5-15 .....1.0
2.5-16 .....1.0
2.5-17 .....1.0
2.5-18 .....1.0
2.5-19 .....1.0
2.5-20 .....1.0

2.6-1 .....1.0
2.6-2 .....1.0
2.6-3 .....1.1
2.6-4 .....1.0
2.6-5 .....1.0
2.6-6 .....1.2
2.6-7 .....1.1
2.6-8 .....1.0
2.6-9 .....1.0
2.6-10 .....1.0
2.6-11 .....1.1
2.6-12 .....1.2
2.6-13 .....1.0
2.6-14 .....1.0
2.6-15 .....1.0
2.6-16 .....1.0
2.6-17 .....1.0
2.6-18 .....1.0
2.6-19 .....1.0
2.6-20 .....1.1
2.6-21 .....1.0
2.6-22 .....1.0
2.6-23 .....1.0
2.6-24 .....1.0
2.6-25 .....1.0
2.6-26 .....1.0
2.6-27 .....1.0
2.6-28 .....1.0
2.6-29 .....1.2
2.6-30 .....1.2
2.6-31 .....1.0
2.6-32 .....1.0
2.6-33 .....1.0
2.6-34 .....1.0
2.6-35 .....1.1
2.6-36 .....1.1
2.6-37 .....1.1
2.6-38 .....1.1
2.6-39 .....1.1
2.6-40 .....1.1
2.4-41 .....1.1
2.6-42 .....1.1
2.6-43 .....1.1
2.6-44 .....1.0
2.6-45 .....1.0
2.6-46 .....1.0
2.6-47 .....1.1
2.6-48 .....1.0
2.6-49 .....1.0
2.6-50 .....1.0
2.6-51 .....1.1
2.6-52 .....1.0-B

2.7-1 .....1.0
2.7-2 .....1.0
2.7-3 .....1.0
2.7-4 .....1.0
2.7-5 .....1.0
2.7-6 .....1.0
2.7-7 .....1.0
2.7-8 .....1.2
2.7-9 .....1.1
2.7-10 .....1.1
2.7-11 .....1.0
2.7-12 .....1.1
2.7-13 .....1.1
2.7-14 .....1.1
2.7-15 .....1.0
2.7-16 .....1.0
2.7-17 .....1.0
2.7-18 .....1.0
2.7-19 .....1.0
2.7-20 .....1.0
2.7-21 .....1.1
2.7-22 .....1.1
2.7-23 .....1.0
2.7-24 .....1.0
2.7-25 .....1.0
2.7-26 .....1.0
2.7-27 .....1.0
2.7-28 .....1.0-B

2.8-1 .....1.2
2.8-2 .....1.2
2.8-3 .....1.2
2.8-4 .....1.2
2.8-5 .....1.2
2.8-6 .....1.2
2.8-7 .....1.2
2.8-8 .....1.2
2.8-9 .....1.2
2.8-10 .....1.2
2.8-11 .....1.0
2.8-12 .....1.2
2.8-13 .....1.2
2.8-14 .....1.2
2.8-15 .....1.2
2.8-16 .....1.2
2.8-17 .....1.2
2.8-18 .....1.2
2.8-19 .....1.2
2.8-20 .....1.2
2.8-21 .....1.2
2.8-22 .....1.0
2.8-23 .....1.2
2.8-24 .....1.2
2.8-25 .....1.2
2.8-26 .....1.2
2.8-27 .....1.0
2.8-28 .....1.2
2.8-29 .....1.2
2.8-30 .....1.2
2.8-31 .....1.2
2.8-32 .....1.2
2.8-33 .....1.0
2.8-34 .....1.0
2.8-35 .....1.0
2.8-36 .....1.2
2.8-37 .....1.2
2.8-38 .....1.2

2.9-1 .....1.2
2.9-2 .....1.0
2.9-3 .....1.2
2.9-4 .....1.2
2.9-5 .....1.2
2.9-6 .....1.2
2.9-7 .....1.2
2.9-8 .....1.2
2.9-9 .....1.2
2.9-10 .....1.2
2.9-11 .....1.0
2.9-12 .....1.2
2.9-13 .....1.2
2.9-14 .....1.2
2.9-15 .....1.2
2.9-16 .....1.2
2.9-17 .....1.2
2.9-18 .....1.2
2.9-19 .....1.2
2.9-20 .....1.2
2.9-21 .....1.2
2.9-22 .....1.2
2.9-23 .....1.2
2.9-24 .....1.2
2.9-25 .....1.2
2.9-26 .....1.2
2.9-27 .....1.2
2.9-28 .....1.2
2.9-29 .....1.2
2.9-30 .....1.2
2.9-31 .....1.2
2.9-32 .....1.2
2.9-33 .....1.2
2.9-34 .....1.2
2.9-35 .....1.2
2.9-36 .....1.2
2.9-37 .....1.2
2.9-38 .....1.2
2.9-39 .....1.2
2.9-40 .....1.2
2.9-41 .....1.2
2.9-42 .....1.2
2.9-43 .....1.2
2.9-44 .....1.2
2.9-45 .....1.2
2.9-46 .....1.2
2.9-47 .....1.2
2.9-48 .....1.2
2.9-49 .....1.2
2.9-50 .....1.2
2.9-51 .....1.2
2.9-52 .....1.2
2.9-53 .....1.2
2.9-54 .....1.2
2.9-55 .....1.2
2.9-56 .....1.2
2.9-57 .....1.2
2.9-58 .....1.2

2.10-1 .....1.0
2.10-2 .....1.0
2.10-3 .....1.0
2.10-4 .....1.0
2.10-5 .....1.0
2.10-6 .....1.0
2.10-7 .....1.0
2.10-8 .....1.0
2.10-9 .....1.0
2.10-10 ....1.0
2.10-11 ....1.0
2.10-12 ....1.0
2.10-13 ....1.0
2.10-14 ....1.0
2.10-15 ....1.0
2.10-16 ....1.0
2.10-17 ....1.0
2.10-18 ....1.0
2.10-19 ....1.0
2.10-20 ....1.0
2.10-21 ....1.0
2.10-22 ....1.0-B

2.11-1 .....1.0
2.11-2 .....1.0
2.11-3 .....1.0
2.11-4 .....1.0
2.11-5 .....1.0
2.11-6 .....1.0
2.11-7 .....1.0
2.11-8 .....1.0
2.11-9 .....1.0
2.11-10 ....1.0
2.11-11 ....1.0
2.11-12 ....1.0
2.11-13 ....1.0
2.11-14 ....1.0
2.11-15 ....1.0
2.11-16 ....1.0
2.11-17 ....1.0
2.11-18 ....1.0
2.11-19 ....1.0
2.11-20 ....1.0
2.11-21 ....1.0
2.11-22 ....1.0

2.12-1 .....1.2
2.12-2 .....1.0
2.12-3 .....1.2
2.12-4 .....1.2

2.13-1 .....1.0
2.13-2 .....1.0
2.13-3 .....1.0
2.13-4 .....1.1
2.13-5 .....1.0
2.13-6 .....1.0
2.13-7 .....1.0
2.13-8 .....1.0
2.13-9 .....1.0
2.13-10 ....1.0
2.13-11 ....1.0
2.13-12 ....1.0
2.13-13 ....1.0
2.13-14 ....1.0
2.13-15 ....1.0
2.13-16 ....1.0
2.13-17 ....1.0
2.13-18 ....1.0
2.13-19 ....1.0
2.13-20 ....1.0
2.13-21 ....1.0
2.13-22 ....1.0
2.13-23 ....1.0
2.13-24 ....1.0
2.13-25 ....1.0
2.13-26 ....1.0
2.13-27 ....1.0
2.13-28 ....1.0
2.13-29 ....1.0
2.13-30 ....1.0
2.13-31 ....1.0
2.13-32 ....1.0
2.13-33 ....1.0
2.13-34 ....1.0
2.13-35 ....1.0
2.13-36 ....1.0
2.13-37 ....1.0
2.13-38 ....1.0
2.13-39 ....1.0
2.13-40 ....1.0
2.13-41 ....1.0
2.13-42 ....1.0
2.13-43 ....1.0
2.13-44 ....1.0
2.13-45 ....1.0
2.13-46 ....1.0
2.13-47 ....1.0
2.13-48 ....1.1
2.13-49 ....1.1
2.13-50 ....1.1
2.13-51 ....1.1
2.13-52 ....1.0
2.13-53 ....1.0
2.13-54 ....1.0
2.13-55 ....1.1
2.13-56 ....1.0
2.13-57 ....1.1
2.13-58 ....1.1
2.13-59 ....1.0
2.13-60 ....1.0
2.13-61 ....1.0
2.13-62 ....1.0
2.13-63 ....1.0
2.13-64 ....1.0
2.13-65 ....1.0
2.13-66 ....1.0

2.14-1 .....1.1
2.14-2 .....1.1
2.14-3 .....1.1
2.14-4 .....1.1
2.14-5 .....1.1
2.14-6 .....1.1
2.14-7 .....1.1
2.14-8 .....1.1
2.14-9 .....1.1
2.14-10 ....1.1
2.14-11 ....1.1
2.14-12 ....1.1
2.14-13 ....1.1
2.14-14 ....1.1
2.14-15 ....1.1
2.14-16 ....1.1
2.14-17 ....1.1
2.14-18 ....1.1

2.15-1 .....1.0
2.15-2 .....1.0
2.15-3 .....1.0
2.15-4 .....1.0
2.15-5 .....1.0
2.15-6 .....1.0
2.15-7 .....1.0
2.15-8 .....1.0
2.15-9 .....1.0
2.15-10 ....1.0
2.15-11 ....1.0
2.15-12 ....1.0
2.15-13 ....1.0
2.15-14 ....1.0
2.15-15 ....1.0
2.15-16 ....1.0-B

2.16-1 .....1.2
2.16-2 .....1.0
2.16-3 .....1.2
2.16-4 .....1.0
2.16-5 .....1.0
2.16-6 .....1.0
2.16-7 .....1.1
2.16-8 .....1.2
2.16-9 .....1.2
2.16-10 ....1.0
2.16-11 ....1.2
2.16-12 ....1.0
2.16-13 ....1.0
2.16-14 ....1.2
2.16-15 ....1.2
2.16-16 ....1.2
2.16-17 ....1.2
2.16-18 ....1.2
2.16-19 ....1.0
2.16-20 ....1.2
2.16-21 ....1.2
2.16-22 ....1.0
2.16-23 ....1.2
2.16-24 ....1.2
2.16-25 ....1.2
2.16-26 ....1.2
2.16-27 ....1.2
2.16-28 ....1.2
2.16-29 ....1.2
2.16-30 ....1.2
2.16-31 ....1.2
2.16-32 ....1.2
2.16-33 ....1.2
2.16-34 ....1.2
2.16-35 ....1.2
2.16-36 ....1.2
2.16-37 ....1.2
2.16-38 ....1.2
2.16-39 ....1.2
2.16-40 ....1.2
2.16-41 ....1.2
2.16-42 ....1.2
2.16-43 ....1.2
2.16-44 ....1.2-B

2.17-1 .....1.1
2.17-2 .....1.0
2.17-3 .....1.1
2.17-4 .....1.1
2.17-5 .....1.0
2.17-6 .....1.0
2.17-7 .....1.0
2.17-8 .....1.0
2.17-9 .....1.0
2.17-10 ....1.0
2.17-11 ....1.0
2.17-12 ....1.0
2.17-13 ....1.0
2.17-14 ....1.0
2.17-15 ....1.0
2.17-16 ....1.0
2.17-17 ....1.0
2.17-18 ....1.1
2.17-19 ....1.0
2.17-20 ....1.0

2.18-1 .....1.0
2.18-2 .....1.0
2.18-3 .....1.0
2.18-4 .....1.0
2.18-5 .....1.0
2.18-6 .....1.0
2.18-7 .....1.0
2.18-8 .....1.0
2.18-9 .....1.1
2.18-10 ....1.0
2.18-11 ....1.0
2.18-12 ....1.0
2.18-13 ....1.0
2.18-14 ....1.0
2.18-15 ....1.0
2.18-16 ....1.0
2.18-17 ....1.0
2.18-18 ....1.0
2.18-19 ....1.0
2.18-20 ....1.0
2.18-21 ....1.0
2.18-22 ....1.0
2.18-23 ....1.0
2.18-24 ....1.0
2.18-25 ....1.0
2.18-26 ....1.0
2.18-27 ....1.0
2.18-28 ....1.0
2.18-29 ....1.0
2.18-30 ....1.0
2.18-31 ....1.0
2.18-32 ....1.0

2.19-1 .....1.2
2.19-2 .....1.2
2.19-3 .....1.2
2.19-4 .....1.2
2.19-5 .....1.0
2.19-6 .....1.0
2.19-7 .....1.2
2.19-8 .....1.0
2.19-9 .....1.2
2.19-10 ....1.2
2.19-11 ....1.2
2.19-12 ....1.2
2.19-13 ....1.2
2.19-14 ....1.2
2.19-15 ....1.0
2.19-16 ....1.0
2.19-17 ....1.0
2.19-18 ....1.0
2.19-19 ....1.0
2.19-20 ....1.0
2.19-21 ....1.2
2.19-22 ....1.0
2.19-23 ....1.2
2.19-24 ....1.0
2.19-25 ....1.0
2.19-26 ....1.0
2.19-27 ....1.0
2.19-28 ....1.2

2.20-1 .....1.0
2.20-2 .....1.0
2.20-3 .....1.0
2.20-4 .....1.0
2.20-5 .....1.0
2.20-6 .....1.0
2.20-7 .....1.0
2.20-8 .....1.0
2.20-9 .....1.0
2.20-10 ....1.0
2.20-11 ....1.0
2.20-12 ....1.0
2.20-13 ....1.0
2.20-14 ....1.0
2.20-15 ....1.0
2.20-16 ....1.0
2.20-17 ....1.0
2.20-18 ....1.0
2.20-19 ....1.0
2.20-20 ....1.0
2.20-21 ....1.0
2.20-22 ....1.0
2.20-23 ....1.0
2.20-24 ....1.0
2.20-25 ....1.1
2.20-26 ....1.1
2.20-27 ....1.1
2.20-28 ....1.1

2.21-1 .....1.2
2.21-2 .....1.2
2.21-3 .....1.2
2.21-4 .....1.2
2.21-5 .....1.2

2.21-6 .....1.2
2.21-7 .....1.0
2.21-8 .....1.2
2.21-9 .....1.2
2.21-10 ....1.2
2.21-11 ....1.2
2.21-12 ....1.2
2.21-13 ....1.2
2.21-14 ....1.2
2.21-15 ....1.2
2.21-16 ....1.2
2.21-17 ....1.2
2.21-18 ....1.0
2.21-19 ....1.0
2.21-20 ....1.0
2.21-21 ....1.0
2.21-22 ....1.0
2.21-23 ....1.0
2.21-24 ....1.0
2.21-25 ....1.2
2.21-26 ....1.2

2.22-1 .....1.2
2.22-2 .....1.0
2.22-3 .....1.0
2.22-4 .....1.2
2.22-5 .....1.2
2.22-6 .....1.2
2.22-7 .....1.2
2.22-8 .....1.2

2.23-1 .....1.0
2.23-2 .....1.0
2.23-3 .....1.0
2.23-4 .....1.0
2.23-5 .....1.0
2.23-6 .....1.0
2.23-7 .....1.0
2.23-8 .....1.0

3-1 .....1.0
3-2 .....1.0
3-3 .....1.0
3-4 .....1.0-B

3.1-1 .....1.0
3.1-2 .....1.0

3.2-1 .....1.0
3.2-2 .....1.0

3.3-1 .....1.0
3.3-2 .....1.0

3.4-1 .....1.0
3.4-2 .....1.0

3.5-1 .....1.0
3.5-2 .....1.0
3.5-3 .....1.0
3.5-4 .....1.0

4-1 .....1.0
4-2 .....1.0-B

4.1-1 .....1.0
4.1-2 .....1.0
4.1-3 .....1.0
4.1-4 .....1.0
4.1-5 .....1.0
4.1-6 .....1.0
4.1-7 .....1.0
4.1-8 .....1.0
4.1-9 .....1.0
4.1-10 .....1.0
4.1-11 .....1.0
4.1-12 .....1.0
4.1-13 .....1.0
4.1-14 .....1.0
4.1-15 .....1.0
4.1-16 .....1.0

4.2-1 .....1.0
4.2-2 .....1.0
4.2-3 .....1.0
4.2-4 .....1.0

4.3-1 .....1.0
4.3-2 .....1.0

4.4-1 .....1.0
4.4-2 .....1.0

4.5-1 .....1.0
4.5-2 .....1.0

4.6-1 .....1.0
4.6-2 .....1.0

4.7-1 .....1.0
4.7-2 .....1.0

4.8-1 .....1.0
4.8-2 .....1.0

4.9-1 .....1.0
4.9-2 .....1.0

4.10-1 .....1.0
4.10-2 .....1.0

4.11-1 .....1.0
4.11-2 .....1.0

4.12-1 .....1.2
4.12-2 .....1.1

5-1 .....1.0
5-2 .....1.0-B

5.1-1 .....1.0
5.1-2 .....1.0
5.1-3 .....1.0
5.1-4 .....1.0-B

5.2-1 .....1.0
5.2-2 .....1.1
5.2-3 .....1.1
5.2-4 .....1.0
5.2-5 .....1.0
5.2-6 .....1.0
5.2-7 .....1.0
5.2-8 .....1.0-B

5.3-1 .....1.0
5.3-2 .....1.1
5.3-3 .....1.1
5.3-4 .....1.0
5.3-5 .....1.0
5.3-6 .....1.0
5.3-7 .....1.0
5.3-8 .....1.0
5.3-9 .....1.0
5.3-10 .....1.0

5.4-1 .....1.0
5.4-2 .....1.0
5.4-3 .....1.0
5.4-4 .....1.0
5.4-5 .....1.0
5.4-6 .....1.0
5.4-7 .....1.0
5.4-8 .....1.2
5.4-9 .....1.2
5.4-10 .....1.0-B

5.5-1 .....1.0
5.5-2 .....1.0-B

6-1 .....1.0
6-2 .....1.0

6.1-1 .....1.0
6.1-2 .....1.0

6.2-1 .....1.0
6.2-2 .....1.1
6.2-3 .....1.1
6.2-4 .....1.0
6.2-5 .....1.2
6.2-6 .....1.0-B

6.3-1 .....1.2
6.3-2 .....1.0
6.3-3 .....1.0
6.3-4 .....1.0
6.3-5 .....1.2
6.3-6 .....1.1
6.3-7 .....1.2
6.3-8 .....1.2

6.4-1 .....1.2
6.4-2 .....1.1
6.4-3 .....1.2
6.4-4 .....1.1
6.4-5 .....1.1
6.4-6 .....1.0-B

6.5-1 .....1.0
6.5-2 .....1.0
6.5-3 .....1.0
6.5-4 .....1.0

6.6-1 .....1.0
6.6-2 .....1.0-B

6.7-1 .....1.2
6.7-2 .....1.2
6.7-3 .....1.2
6.7-4 .....1.2

6.8-1 .....1.0
6.8-2 .....1.0
6.8-3 .....1.0
6.8-4 .....1.0
6.8-5 .....1.0
6.8-6 .....1.0
6.8-7 .....1.0
6.8-8 .....1.0
6.8-9 .....1.0
6.8-10 .....1.0
6.8-11 .....1.0
6.8-12 .....1.0
6.8-13 .....1.2
6.8-14 .....1.0
6.8-15 .....1.1
6.8-16 .....1.0

6.9-1 .....1.0
6.9-2 .....1.0
6.9-3 .....1.0
6.9-4 .....1.0-B

6.10-1 .....1.0
6.10-2 .....1.0-B

6.11-1 .....1.1
6.11-2 .....1.1

7-1 .....1.0
7-2 .....1.0-B

7.1-1 .....1.0
7.1-2 .....1.0
7.1-3 .....1.0
7.1-4 .....1.0
7.1-5 .....1.0
7.1-6 .....1.0
7.1-7 .....1.0
7.1-8 .....1.0
7.1-9 .....1.0
7.1-10 .....1.0
7.1-11 .....1.0
7.1-12 .....1.0-B

7.2-1 .....1.0
7.2-2 .....1.1
7.2-3 .....1.1
7.2-4 .....1.1
7.2-5 .....1.1
7.2-6 .....1.1
7.2-7 .....1.1
7.2-8 .....1.0
7.2-9 .....1.0
7.2-10 .....1.0
7.2-11 .....1.0
7.2-12 .....1.0
7.2-13 .....1.0
7.2-14 .....1.0

7.3-1 .....1.1
7.3-2 .....1.0
7.3-3 .....1.0

7.3-4 .....1.0
7.3-5 .....1.0
7.3-6 .....1.1
7.3-7 .....1.0
7.3-8 .....1.0
7.3-9 .....1.0
7.3-10 .....1.1
7.3-11 .....1.2
7.3-12 .....1.1
7.3-13 .....1.1
7.3-14 .....1.1
7.3-15 .....1.1
7.3-16 .....1.1
7.3-17 .....1.1
7.3-18 .....1.1
7.3-19 .....1.1
7.3-20 .....1.1

7.4-1 .....1.2
7.4-2 .....1.1
7.4-3 .....1.1
7.4-4 .....1.1
7.4-5 .....1.0
7.4-6 .....1.0
7.4-7 .....1.1
7.4-8 .....1.1
7.4-9 .....1.1
7.4-10 .....1.2
7.4-11 .....1.1
7.4-12 .....1.0
7.4-13 .....1.1
7.4-14 .....1.1
7.4-15 .....1.1
7.4-16 .....1.1
7.4-17 .....1.1
7.4-18 .....1.1
7.4-19 .....1.2
7.4-20 .....1.2
7.4-21 .....1.1
7.4-22 .....1.1
7.4-23 .....1.1
7.4-24 .....1.1
7.4-25 .....1.1
7.4-26 .....1.0
7.4-27 .....1.1
7.4-28 .....1.0-B

8-1 .....1.0
8-2 .....1.0-B

8.1-1 .....1.0
8.1-2 .....1.2

8.2-1 .....1.0
8.2-2 .....1.1
8.2-3 .....1.0
8.2-4 .....1.0-B

8.3-1 .....1.0
8.3-2 .....1.0

8.4-1 .....1.1
8.4-2 .....1.0

8.5-1 .....1.0
8.5-2 .....1.0-B

8.6-1 .....1.0
8.6-2 .....1.0-B

8.7-1 .....1.0
8.7-2 .....1.0-B

8.8-1 .....1.0
8.8-2 .....1.0-B

9-1 .....1.0
9-2 .....1.0-B

9.1-1 .....1.0
9.1-2 .....1.0
9.1-3 .....1.0
9.1-4 .....1.0
9.1-5 .....1.0
9.1-6 .....1.0
9.1-7 .....1.0
9.1-8 .....1.0
9.1-9 .....1.0
9.1-10 .....1.0

9.2-1 .....1.0
9.2-2 .....1.0
9.2-3 .....1.0
9.2-4 .....1.0-B

9.3-1 .....1.2
9.3-2 .....1.1
9.3-3 .....1.2
9.3-4 .....1.0
9.3-5 .....1.1
9.3-6 .....1.1
9.3-7 .....1.0
9.3-8 .....1.1

APPENDICES

A-1 .....1.0
A-2 .....1.1
A-3 .....1.0
A-4 .....1.0
A-5 .....1.0
A-6 .....1.0
A-7 .....1.0
A-8 .....1.0
A-9 .....1.0
A-10 .....1.0
A-11 .....1.0
A-12 .....1.0
A-13 .....1.0
A-14 .....1.0
A-15 .....1.0
A-16 .....1.0
A-17 .....1.0
A-18 .....1.1
A-19 .....1.1
A-20 .....1.0
A-21 .....1.0
A-22 .....1.0
A-23 .....1.0
A-24 .....1.0
A-25 .....1.0
A-26 .....1.0
A-27 .....1.0
A-28 .....1.0
A-29 .....1.0
A-30 .....1.0
A-31 .....1.1
A-32 .....1.1
A-33 .....1.0
A-34 .....1.0
A-35 .....1.0
A-36 .....1.0
A-37 .....1.0
A-38 .....1.0
A-39 .....1.0
A-40 .....1.0
A-41 .....1.0
A-42 .....1.0
A-43 .....1.0
A-44 .....1.0
A-45 .....1.0
A-46 .....1.0
A-47 .....1.0
A-48 .....1.0
A-49 .....1.1
A-50 .....1.1
A-51 .....1.0
A-52 .....1.0
A-53 .....1.0
A-54 .....1.0
A-55 .....1.0
A-56 .....1.0
A-57 .....1.0
A-58 .....1.0
A-59 .....1.0
A-60 .....1.0
A-61 .....1.0
A-62 .....1.0
A-63 .....1.0
A-64 .....1.0
A-65 .....1.0
A-66 .....1.0

B-1 .....1.0
B-2 .....1.0
B-3 .....1.0
B-4 .....1.0
B-5 .....1.0
B-6 .....1.0
B-7 .....1.0
B-8 .....1.0
B-9 .....1.0
B-10 .....1.0
B-11 .....1.0
B-12 .....1.0
B-13 .....1.0
B-14 .....1.0
B-15 .....1.0
B-16 .....1.0
B-17 .....1.0
B-18 .....1.0-B

C-1 .....1.2
C-2 .....1.0
C-3 .....1.0
C-4 .....1.0
C-5 .....1.0
C-6 .....1.0
C-7 .....1.0
C-8 .....1.0
C-9 .....1.0
C-10 .....1.0
C-11 .....1.0
C-12 .....1.0
C-13 .....1.0
C-14 .....1.0
C-15 .....1.0
C-16 .....1.0
C-17 .....1.0
C-18 .....1.0
C-19 .....1.2
C-20 .....1.2
C-21 .....1.2
C-22 .....1.0-B

D-1 .....1.0
D-2 .....1.0
D-3 .....1.0
D-4 .....1.0
D-5 .....1.0
D-6 .....1.0
D-7 .....1.0
D-8 .....1.0
D-9 .....1.0
D-10 .....1.0
D-11 .....1.0
D-12 .....1.0-B

INDEX

I-1 .....1.2
I-2 .....1.2
I-3 .....1.2
I-4 .....1.2
I-5 .....1.2
I-6 .....1.2
I-7 .....1.2
I-8 .....1.2
I-9 .....1.2
I-10 .....1.2
I-11 .....1.2
I-12 .....1.2
I-13 .....1.2
I-14 .....1.2
I-15 .....1.2
I-16 .....1.2
I-17 .....1.2
I-18 .....1.1-B

SCOM DISTRIBUTION
FINAL, PCN-2
December 18, 1992

FCOD
CA/Hawley
Leestma
Neu
CA3/Finney
CA4/Library (Wright)
Major
CA42/Webb
CA43/Hawkins
Mastracchio (3)
CA44/Bertrand (3)
CB/All astronauts (120)
Brice (PS) (10)
Colgan
Ream
Sanchez
Extras (36)
CC/Baker

FCOD Total: 184

MOD
DA/Kranz
DA2/Stone
DA3/Bales
Holkan
Vowell
DA4/Bourgeois
DA5/Mason
Petersen
DA6/Dell'Osso (2)
DA8/Library (17)
DA82/SPAN (C. Marrs)
DE/Webb (2)
DF/Fitts
Floyd
Knight
DF2/Clancy
DF22/Section Head (5)
DF24/Elsner (5)
DF4/Neal
DF42/Farris
DF43/Bachik
Dye (5)
DF44/Pallesen (5)
DF6/Kamman
DF62/Shannon (5)
DF63/Jackson (5)
DF65/Section Head (5)
DF7/Saultz
DF72/Dingell (5)
DF73/Joyce (5)
DG/Dell'Osso
Merritt
Wegener
Weitenhagen
DG4/Richmond
DG45/Bush (5)
DG46/Sanchez
DG47/James (5)
DG48/Beckman (5)
DG6/Andrews
Brown
DG65/Herzog (6)
DG66/O'Keefe
Sims (5)
DG67/Moede (5)
DH/Pavelka
Pippert
Whiteley
DH12/Reeves
DH4/Bearley (5)
Khatri (5)
Nute
Woodbury
DH43/Hurt (5)
DH44/Ferguson (6)
DH45/LeBlanc (5)
DH6/Clement
Ops Integ Mgr
DH62/Kirasich (5)
DH64/Pawkett (4)
DH65/Gauthier (5)
DH69/Meinhardt (5)
DI/Thompson
DJ/Seyl
DK/Epps
Russell
DK2/Kane
DM/Deputy
Fields
Gonzalez
Harpold
Library (C. Wood)
DM2/Davis
DM22/Ricks (3)
DM23/Anderson (3)
DM24/Lowes (3)
DM3/Smith
DM32/Siders (5)
DM33/Gavin (5)
DM34/Evans (5)
DM4/Collins
Hilty
DM42/Pearson (5)
DM43/Epp (5)
DM46/Oliver (4)
DP/Bull
DT/Hughes (4)

STSOC
B32B-5/Garza
Woodford
B32D-5/Daugherty
Turner
B33B-555/OSD Doc
Control (S. Sharp)
O55B-226/MOD SSFP
Library (V. Betts)
R07A/Toole
R10A/Draughon
R11C/Conrad
R19A/Bores (13)
Fowler (2)
R19J-331/Fullmer
(Extras) (32)
R19L/Chiquelin
R19R-4/Angeley
R21A/Sparks (6)
U05A/Adigun (4)
Gilotti
U05B/Hope (4)
U05C/Thomas (4)

MOD/STSOC Total: 311

Other Non-MOD
AB/Weitz
AR/Puddy
GA/Space Shuttle
Progam Off (5)
GM/Mgmt Integ Office
NS4/Safety Division
Safety Div Library
VG/Orbiter Avionics
Sys Office
(M. Severance)
HQ Code M/Pearson

Rockwell International
Attn: AD60/W. A. Wadell
12214 Lakewood Blvd.
Downey, CA 90241

SPAN HQ
Attn: C. Ryan
P.O. Box 910
San Luis Obispo, CA 93406

Space Center Houston
Attn: B. Scurlock
P.O. Box 580653
Houston, TX 77258-0653

Non-MOD Total: 15

Grand Total: 510