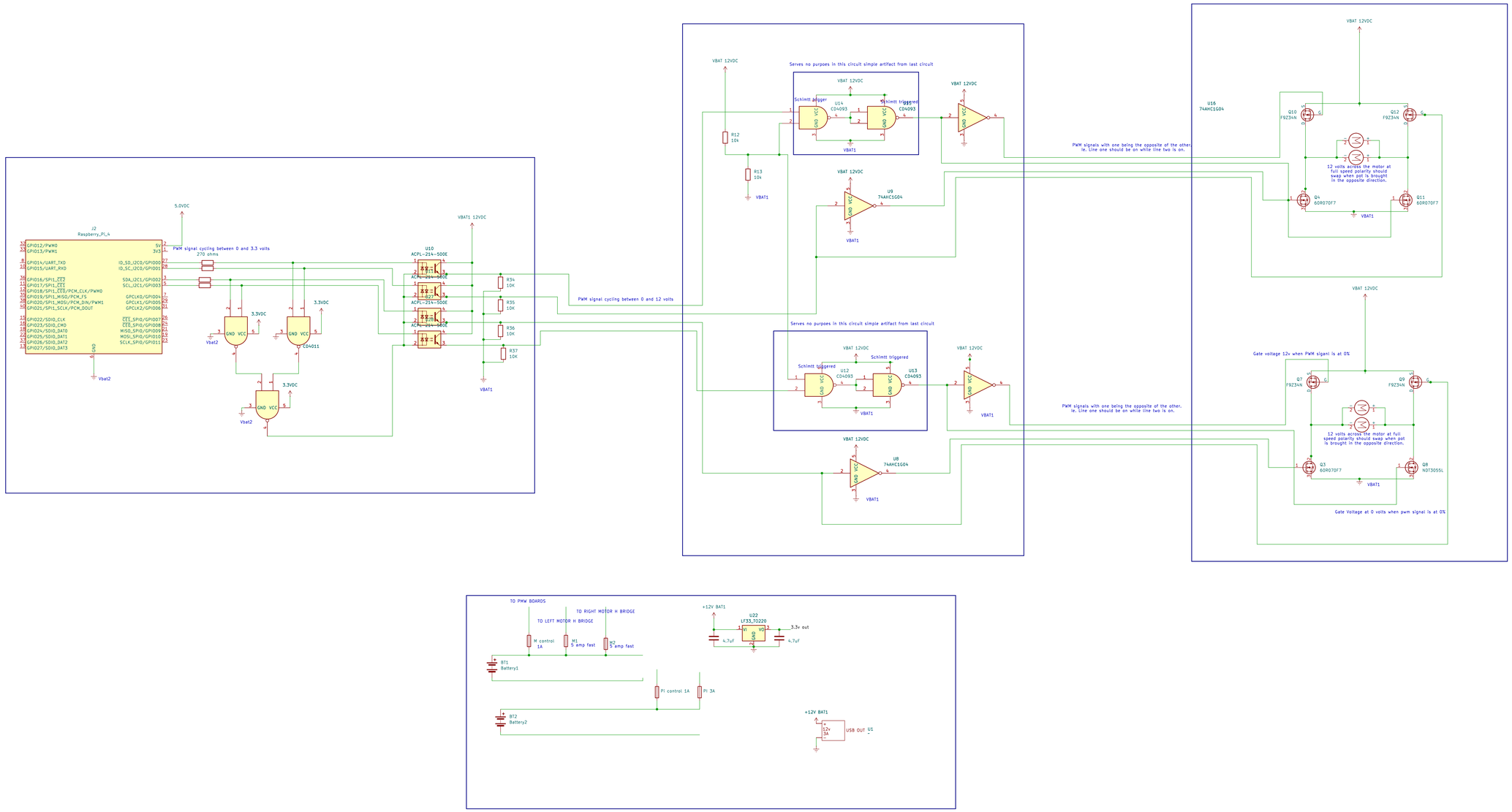

Sheet: /
File: 20251205_WiFi_robot_schematic_Kobe_Wessels.kicad_sch

Title:

Size: A1	Date:	Rev:
KiCad E.D.A. 9.0.8		Id: 1/1