# Station power wiring diagram
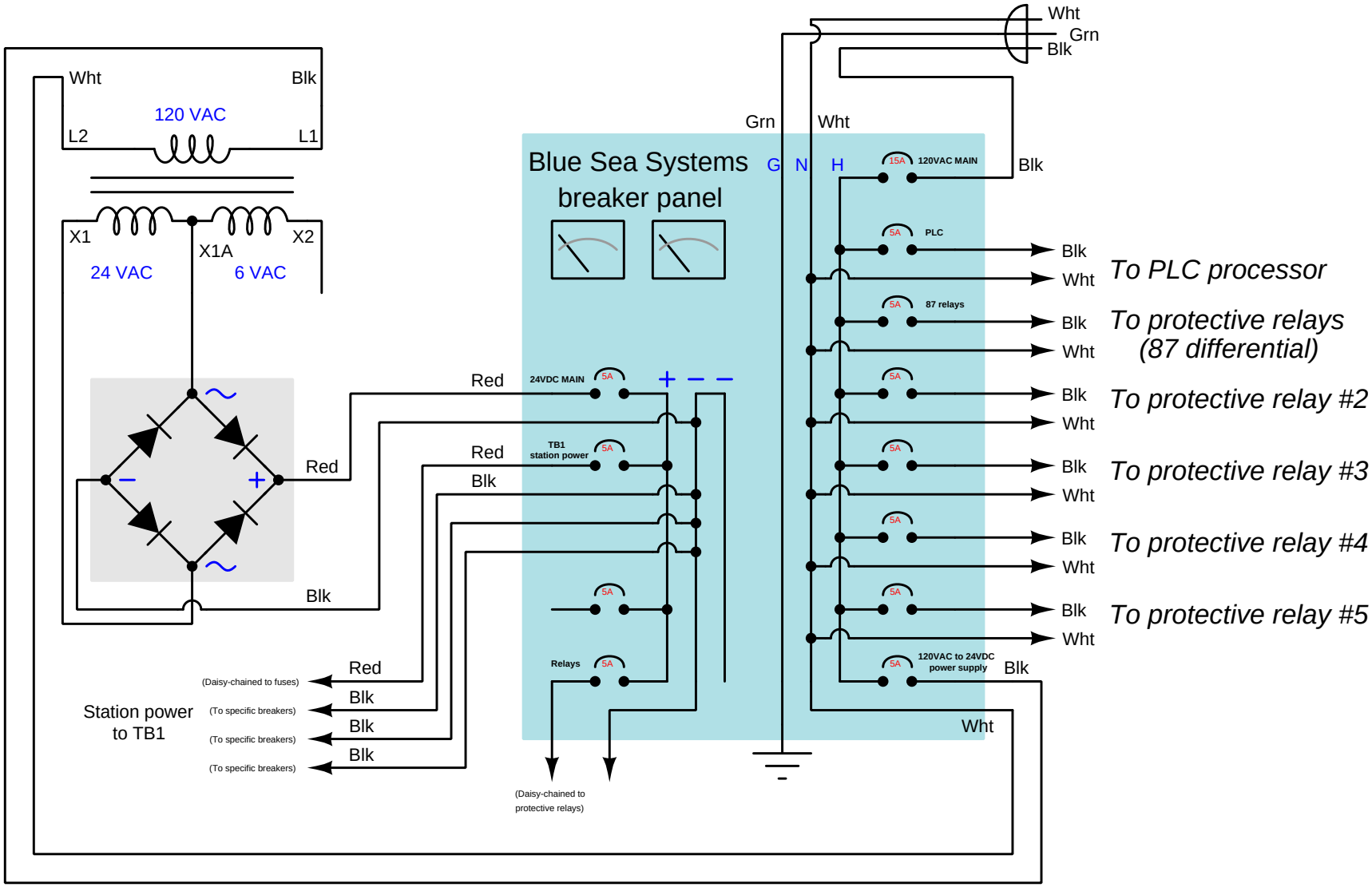
Revised August 19, 2015